GROUP TAB LOCATOR

IN	Introduction
0	Lubrication & Maintenance
2	Suspension
3	Differential & Driveline
5	Brakes
6	Clutch
7	Cooling
7a	Cooling - 2.5L Turbo Diesel
8A	Audio
8B	Chime/Buzzer
8E	Electronic Control Modules
8Ea	Electronic Control Modules
8F	Engine Systems
8Fa	Engine Systems
8G	Heated Systems
8H	Horn
8I	Ignition Control
8Ia	Ignition Control
8J	Instrument Cluster
8L	Lamps
8M	Message Systems
8N	Power Systems
8O	Restraints
8P	Speed Control
8Q	Vehicle Theft Security
8R	Wipers/Washers
8W	Wiring
9	Engine
9a	Engine
11	Exhaust System
11a	Exhaust System and Turbocharger
13	Frame & Bumpers
14	Fuel System
14a	Fuel System
19	Steering
21	Transmission
22	Tires/Wheels
23	Body
24	Heating & Air Conditioning
25	Emissions Control
25a	Emissions Control 2.5L Turbo Diesel
	Service Manual Comment Forms

INTRODUCTION

TABLE OF CONTENTS

page

BODY CODE PLATE
DESCRIPTION 1
FASTENER IDENTIFICATION
DESCRIPTION 2
FASTENER USAGE
DESCRIPTION
DESCRIPTION - FASTENER USAGE 5
DESCRIPTION - THREADED HOLE REPAIR . . 5
INTERNATIONAL SYMBOLS
DESCRIPTION 5
METRIC SYSTEM
DESCRIPTION 6

page

TORQUE REFERENCES
DESCRIPTION 8
VEHICLE IDENTIFICATION NUMBER
DESCRIPTION 9
VEHICLE SAFETY CERTIFICATION LABEL
DESCRIPTION 11
E-MARK LABEL
DESCRIPTION 11
VECI LABEL
DESCRIPTION 11
MANUFACTURER PLATE
DESCRIPTION 11

BODY CODE PLATE

DESCRIPTION

The Body Code Plate (Fig. 1) is located in the engine compartment on the radiator closure panel crossmember. There are seven lines of information on the body code plate. Lines 4, 5, 6, and 7 are not used to define service information. Information reads from left to right, starting with line 3 in the center of the plate to line 1 at the bottom of the plate.

BODY CODE PLATE – LINE 3

DIGITS 1 THROUGH 12

Vehicle Order Number

DIGITS 13 THROUGH 17

Open Space

DIGITS 18 AND 19

Vehicle Shell Line

- RS

DIGIT 20

Carline

FWD

- K = Dodge
- Y = Chrysler

AWD

- C = Chrysler
- D = Dodge

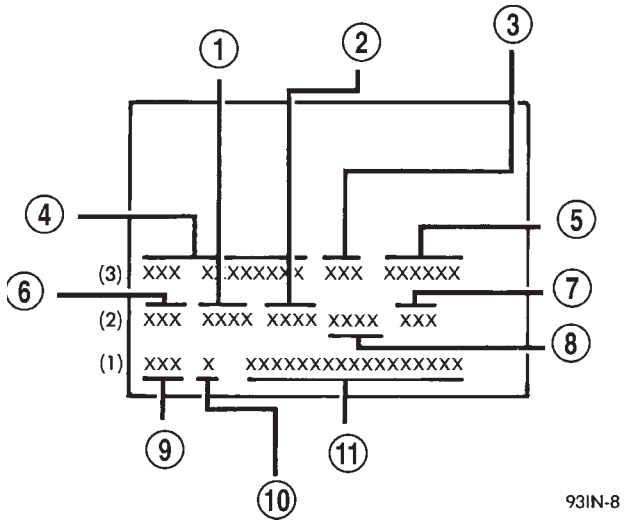

Fig. 1 BODY CODE PLATE

1 - PRIMARY PAINT
2 - SECONDARY PAINT
3 - VINYL ROOF
4 - VEHICLE ORDER NUMBER
5 - CAR LINE SHELL
6 - PAINT PROCEDURE
7 - ENGINE
8 - TRIM
9 - TRANSMISSION
10 - MARKET
11 - VIN

BODY CODE PLATE (Continued)

DIGIT 21

Price Class
- H = Highline
- L = Lowline
- P = Premium
- S = Luxury
- X = Premium

DIGITS 22 AND 23

Body Type
- 52 = Short Wheel Base
- 53 = Long Wheel Base

BODY CODE PLATE LINE 2

DIGITS 1, 2 AND 3

Paint Procedure

DIGIT 4

Open Space

DIGITS 5 THROUGH 7

Primary Paint (Refer to 23 - BODY/PAINT - SPECIFICATIONS).

DIGIT 8 AND 9

Open Space

DIGITS 10 THROUGH 12

Secondary Paint

DIGIT 13 AND 14

Open Space

DIGITS 15 THROUGH 18

Interior Trim Code

DIGIT 19

Open Space

DIGITS 20, 21, AND 22

Engine Code
- EDZ = 2.4L 4 cyl. 16-Valve DOHC Gasoline (MPI)
- EGA = 3.3L 6 cyl. Gasoline (SMPI)
- EGH = 3.8L 6 cyl. Gasoline (SMPI)
- EGM = 3.3L 6 cyl. Ethanol Flexible Fuel
- ENJ = 2.5L 4 cyl. 16-Valve Turbo Diesel

DIGIT 23

Open Space

BODY CODE PLATE LINE 1

DIGITS 1, 2, AND 3

Transaxle Codes
- DGC = 31TH 3-Speed Automatic Transaxle
- DGL = 41AE/TE 4-Speed Electronic Automatic
- DDR = T850 5-Speed Manual Transaxle

DIGIT 4

Open Space

DIGIT 5

Market Code
- C = Canada
- B = International
- M = Mexico
- U = United States

DIGIT 6

Open Space

DIGITS 7 THROUGH 23

Vehicle Identification Number
- Refer to Vehicle Identification Number (VIN) paragraph for proper breakdown of VIN code.

IF TWO BODY CODE PLATES ARE REQUIRED

The last code shown on either plate will be followed by END. When two plates are required, the last code space on the first plate will indicate (CTD)

When a second plate is required, the first four spaces of each line will not be used due to overlap of the plates.

FASTENER IDENTIFICATION

DESCRIPTION

The SAE bolt strength grades range from grade 2 to grade 8. The higher the grade number, the greater the bolt strength. Identification is determined by the line marks on the top of each bolt head. The actual bolt strength grade corresponds to the number of line marks plus 2. The most commonly used metric bolt strength classes are 9.8 and 10.9. The metric strength class identification number is imprinted on the head of the bolt. The higher the class number, the greater the bolt strength. Some metric nuts are imprinted with a single-digit strength class on the nut face. Refer to the Fastener Identification and Fastener Strength Charts (Fig. 2) and (Fig. 3).

FASTENER IDENTIFICATION (Continued)

Bolt Markings and Torque - Metric

Commercial Steel Class

Bolt Head Markings

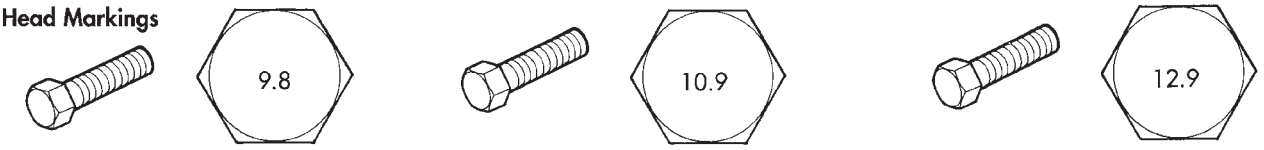

Body Size	Torque				Torque				Torque			
Diam.	Cast Iron		Aluminum		Cast Iron		Aluminum		Cast Iron		Aluminum	
mm	N•m	ft-lb	N•m	ft-lb	N•m	ft-lb	N•m	ft-lb	N•m	ft-lb	N•m	ft-lb
6	9	5	7	4	14	9	11	7	14	9	11	7
7	14	9	11	7	18	14	14	11	23	18	18	14
8	25	18	18	14	32	23	25	18	36	27	28	21
10	40	30	30	25	60	45	45	35	70	50	55	40
12	70	55	55	40	105	75	80	60	125	95	100	75
14	115	85	90	65	160	120	125	95	195	145	150	110
16	180	130	140	100	240	175	190	135	290	210	220	165
18	230	170	180	135	320	240	250	185	400	290	310	230

Bolt Markings and Torque Values - U.S. Customary

SAE Grade Number 5 8

Bolt Head Markings
These are all SAE Grade 5 (3) line



Body Size	Bolt Torque - Grade 5 Bolt				Bolt Torque - Grade 8 Bolt			
	Cast Iron		Aluminum		Cast Iron		Aluminum	
	N•m	ft-lb	N•m	ft-lb	N•m	ft-lb	N•m	ft-lb
1/4 - 20	9	7	8	6	15	11	12	9
- 28	12	9	9	7	18	13	14	10
5/16 - 18	20	15	16	12	30	22	24	18
- 24	23	17	19	14	33	24	25	19
3/8 - 16	40	30	25	20	55	40	40	30
- 24	40	30	35	25	60	45	45	35
7/16 - 14	60	45	45	35	90	65	65	50
- 20	65	50	55	40	95	70	75	55
1/2 - 13	95	70	75	55	130	95	100	75
- 20	100	75	80	60	150	110	120	90
9/16 - 12	135	100	110	80	190	140	150	110
- 18	150	110	115	85	210	155	170	125
5/8 - 11	180	135	150	110	255	190	205	150
- 18	210	155	160	120	290	215	230	170
3/4 - 10	325	240	255	190	460	340	365	270
- 16	365	270	285	210	515	380	410	300
7/8 - 9	490	360	380	280	745	550	600	440
- 14	530	390	420	310	825	610	660	490
1 - 8	720	530	570	420	1100	820	890	660
- 14	800	590	650	480	1200	890	960	710

80bdbd8c

Fig. 2 FASTENER IDENTIFICATION

FASTENER IDENTIFICATION (Continued)

HOW TO DETERMINE BOLT STRENGTH

	Mark	Class
Hexagon head bolt	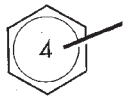 Bolt head No. 4 — 4T 5 — 5T 6 — 6T 7 — 7T 8 — 8T 9 — 9T 10 — 10T 11 — 11T	
	 No mark	4T
Hexagon flange bolt w/washer hexagon bolt	 No mark	4T
Hexagon head bolt	 Two protruding lines	5T
Hexagon flange bolt w/washer hexagon bolt	 Two protruding lines	6T
Hexagon head bolt	 Three protruding lines	7T
Hexagon head bolt	 Four protruding lines	8T

	Mark	Class
Stud bolt	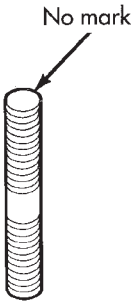	4T
	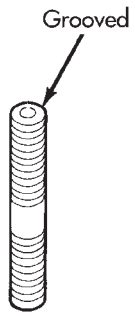	6T
Welded bolt	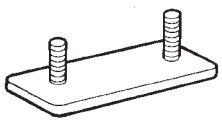	4T

95IN-4

Fig. 3 FASTENER STRENGTH

FASTENER USAGE

DESCRIPTION

DESCRIPTION - FASTENER USAGE

WARNING: USE OF AN INCORRECT FASTENER MAY RESULT IN COMPONENT DAMAGE OR PERSONAL INJURY.

Fasteners and torque specifications references in this Service Manual are identified in metric and SAE format.

During any maintenance or repair procedures, it is important to salvage all fasteners (nuts, bolts, etc.) for reassembly. If the fastener is not salvageable, a fastener of equivalent specification must be used.

DESCRIPTION - THREADED HOLE REPAIR

Most stripped threaded holes can be repaired using a Helicoil®. Follow the vehicle or Helicoil® recommendations for application and repair procedures.

INTERNATIONAL SYMBOLS

DESCRIPTION

The graphic symbols illustrated in the following International Control and Display Symbols Chart (Fig. 4) are used to identify various instrument controls. The symbols correspond to the controls and displays that are located on the instrument panel.

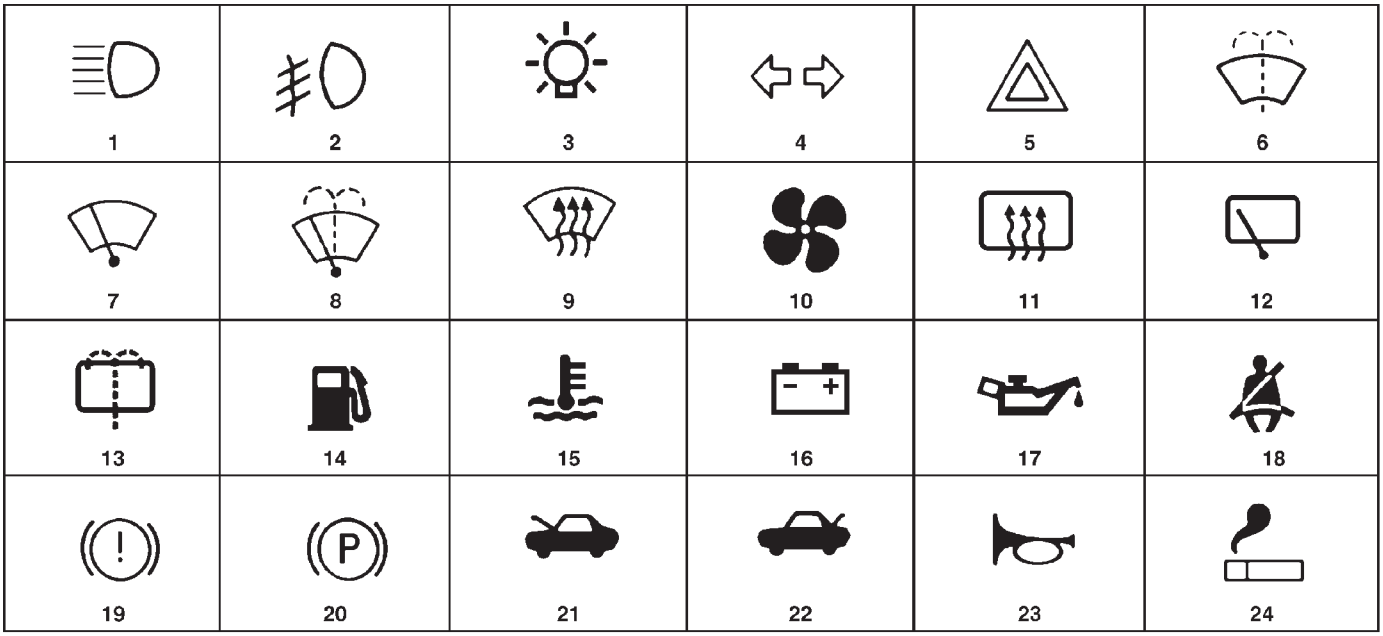

Fig. 4 INTERNATIONAL CONTROL AND DISPLAY SYMBOLS

1	High Beam	13	Rear Window Washer
2	Fog Lamps	14	Fuel
3	Headlamp, Parking Lamps, Panel Lamps	15	Engine Coolant Temperature
4	Turn Warning	16	Battery Charging Condition
5	Hazard Warning	17	Engine Oil
6	Windshield Washer	18	Seat Belt
7	Windshield Wiper	19	Brake Failure
8	Windshield Wiper and Washer	20	Parking Brake
9	Windscreen Demisting and Defrosting	21	Front Hood
10	Ventilating Fan	22	Rear hood (Decklid)
11	Rear Window Defogger	23	Horn
12	Rear Window Wiper	24	Lighter

METRIC SYSTEM

DESCRIPTION

The metric system is based on quantities of one, ten, one hundred, one thousand and one million.

The following chart will assist in converting metric units to equivalent English and SAE units, or vise versa.

CONVERSION FORMULAS AND EQUIVALENT VALUES

MULTIPLY	BY	TO GET	MULTIPLY	BY	TO GET
in-lbs	x 0.11298	= Newton Meters (N·m)	N·m	x 8.851	= in-lbs
ft-lbs	x 1.3558	= Newton Meters (N·m)	N·m	x 0.7376	= ft-lbs
Inches Hg (60° F)	x 3.377	= Kilopascals (kPa)	kPa	x 0.2961	= Inches Hg
psi	x 6.895	= Kilopascals (kPa)	kPa	x 0.145	= psi
Inches	x 25.4	= Millimeters (mm)	mm	x 0.03937	= Inches
Feet	x 0.3048	= Meters (M)	M	x 3.281	= Feet
Yards	x 0.9144	= Meters	M	x 1.0936	= Yards
mph	x 1.6093	= Kilometers/Hr. (Km/h)	Km/h	x 0.6214	= mph
Feet/Sec	x 0.3048	= Meters/Sec (M/S)	M/S	x 3.281	= Feet/Sec
mph	x 0.4470	= Meters/Sec (M/S)	M/S	x 2.237	= mph
Kilometers/Hr. (Km/h)	x 0.27778	= Meters/Sec (M/S)	M/S	x 3.600	Kilometers/Hr. (Km/h)

COMMON METRIC EQUIVALENTS

1 inch = 25 Millimeters	1 Cubic Inch = 16 Cubic Centimeters
1 Foot = 0.3 Meter	1 Cubic Foot = 0.03 Cubic Meter
1 Yard = 0.9 Meter	1 Cubic Yard = 0.8 Cubic Meter
1 Mile = 1.6 Kilometers	

Refer to the Metric Conversion Chart to convert torque values listed in metric Newton- meters (N·m). Also, use the chart to convert between millimeters (mm) and inches (in.) (Fig. 5).

METRIC SYSTEM (Continued)

in-lbs to N•m

in- lb	N•m	in-lb	N•m	in-lb	N•m	in-lb	N•m	in-lb	N•m
2	.2260	42	4.7453	82	9.2646	122	13.7839	162	18.3032
4	.4519	44	4.9713	84	9.4906	124	14.0099	164	18.5292
6	.6779	46	5.1972	86	9.7165	126	14.2359	166	18.7552
8	.9039	48	5.4232	88	9.9425	128	14.4618	168	18.9811
10	1.1298	50	5.6492	90	10.1685	130	14.6878	170	19.2071
12	1.3558	52	5.8751	92	10.3944	132	14.9138	172	19.4331
14	1.5818	54	6.1011	94	10.6204	134	15.1397	174	19.6590
16	1.8077	56	6.3270	96	10.8464	136	15.3657	176	19.8850
18	2.0337	58	6.5530	98	11.0723	138	15.5917	178	20.1110
20	2.2597	60	6.7790	100	11.2983	140	15.8176	180	20.3369
22	2.4856	62	7.0049	102	11.5243	142	16.0436	182	20.5629
24	2.7116	64	7.2309	104	11.7502	144	16.2696	184	20.7889
26	2.9376	66	7.4569	106	11.9762	146	16.4955	186	21.0148
28	3.1635	68	7.6828	108	12.2022	148	16.7215	188	21.2408
30	3.3895	70	7.9088	110	12.4281	150	16.9475	190	21.4668
32	3.6155	72	8.1348	112	12.6541	152	17.1734	192	21.6927
34	3.8414	74	8.3607	114	12.8801	154	17.3994	194	21.9187
36	4.0674	76	8.5867	116	13.1060	156	17.6253	196	22.1447
38	4.2934	78	8.8127	118	13.3320	158	17.8513	198	22.3706
40	4.5193	80	9.0386	120	13.5580	160	18.0773	200	22.5966

N•m to in-lbs

N•m	in-lb	N•m	in-lb	N•m	in-lb	N•m	in-lb	N•m	in-lb
.2	1.7702	4.2	37.1747	8.2	72.5792	12.2	107.9837	16.2	143.3882
.4	3.5404	4.4	38.9449	8.4	74.3494	12.4	109.7539	16.4	145.1584
.6	5.3107	4.6	40.7152	8.6	76.1197	12.6	111.5242	16.6	146.9287
.8	7.0809	4.8	42.4854	8.8	77.8899	12.8	113.2944	16.8	148.6989
1	8.8511	5	44.2556	9	79.6601	13	115.0646	17	150.4691
1.2	10.6213	5.2	46.0258	9.2	81.4303	13.2	116.8348	17.2	152.2393
1.4	12.3916	5.4	47.7961	9.4	83.2006	13.4	118.6051	17.4	154.0096
1.6	14.1618	5.6	49.5663	9.6	84.9708	13.6	120.3753	17.6	155.7798
1.8	15.9320	5.8	51.3365	9.8	86.7410	13.8	122.1455	17.8	157.5500
2	17.7022	6	53.1067	10	88.5112	14	123.9157	18	159.3202
2.2	19.4725	6.2	54.8770	10.2	90.2815	14.2	125.6860	18.5	163.7458
2.4	21.2427	6.4	56.6472	10.4	92.0517	14.4	127.4562	19	168.1714
2.6	23.0129	6.6	58.4174	10.6	93.8219	14.6	129.2264	19.5	172.5970
2.8	24.7831	6.8	60.1876	10.8	95.5921	14.8	130.9966	20	177.0225
3	26.5534	7	61.9579	11	97.3624	15	132.7669	20.5	181.4480
3.2	28.3236	7.2	63.7281	11.2	99.1326	15.2	134.5371	21	185.8736
3.4	30.0938	7.4	65.4983	11.4	100.9028	15.4	136.3073	22	194.7247
3.6	31.8640	7.6	67.2685	11.6	102.6730	15.6	138.0775	23	203.5759
3.8	33.6342	7.8	69.0388	11.8	104.4433	15.8	139.8478	24	212.4270
4	35.4045	8	70.8090	12	106.2135	16	141.6180	25	221.2781

ft-lbs to N•m

ft-lb	N•m	ft-lb	N•m	ft-lb	N•m	ft-lb	N•m	ft-lb	N•m
1	1.3558	21	28.4722	41	55.5885	61	82.7049	81	109.8212
2	2.7116	22	29.8280	42	56.9444	62	84.0607	82	111.1770
3	4.0675	23	31.1838	43	58.3002	63	85.4165	83	112.5328
4	5.4233	24	32.5396	44	59.6560	64	86.7723	84	113.8888
5	6.7791	25	33.8954	45	61.0118	65	88.1281	85	115.2446
6	8.1349	26	35.2513	46	62.3676	66	89.4840	86	116.6004
7	9.4907	27	36.6071	47	63.7234	67	90.8398	87	117.9562
8	10.8465	28	37.9629	48	65.0793	68	92.1956	88	119.3120
9	12.2024	29	39.3187	49	66.4351	69	93.5514	89	120.6678
10	13.5582	30	40.6745	50	67.7909	70	94.9073	90	122.0236
11	14.9140	31	42.0304	51	69.1467	71	96.2631	91	123.3794
12	16.2698	32	43.3862	52	70.5025	72	97.6189	92	124.7352
13	17.6256	33	44.7420	53	71.8583	73	98.9747	93	126.0910
14	18.9815	34	46.0978	54	73.2142	74	100.3316	94	127.4468
15	20.3373	35	47.4536	55	74.5700	75	101.6862	95	128.8026
16	21.6931	36	48.8094	56	75.9258	76	103.0422	96	130.1586
17	23.0489	37	50.1653	57	77.2816	77	104.3980	97	131.5144
18	24.4047	38	51.5211	58	78.6374	78	105.7538	98	132.8702
19	25.7605	39	52.8769	59	79.9933	79	107.1196	99	134.2260
20	27.1164	40	54.2327	60	81.3491	80	108.4654	100	135.5820

N•m to ft-lbs

N•m	ft-lb	N•m	ft-lb	N•m	ft-lb	N•m	ft-lb	N•m	ft-lb
1	.7376	21	15.9888	41	30.2400	61	44.9913	81	59.7425
2	1.4751	22	16.2264	42	30.9776	62	45.7289	82	60.4801
3	2.2127	23	16.9639	43	31.7152	63	46.4664	83	61.2177
4	2.9502	24	17.7015	44	32.4527	64	47.2040	84	61.9552
5	3.6878	25	18.4391	45	33.1903	65	47.9415	85	62.6928
6	4.4254	26	19.1766	46	33.9279	66	48.6791	86	63.4303
7	5.1629	27	19.9142	47	34.6654	67	49.4167	87	64.1679
8	5.9005	28	20.6517	48	35.4030	68	50.1542	88	64.9545
9	6.6381	29	21.3893	49	36.1405	69	50.8918	89	65.6430
10	7.3756	30	22.1269	50	36.8781	70	51.6293	90	66.3806
11	8.1132	31	22.8644	51	37.6157	71	52.3669	91	67.1181
12	8.8507	32	23.6020	52	38.3532	72	53.1045	92	67.8557
13	9.5883	33	24.3395	53	39.0908	73	53.8420	93	68.5933
14	10.3259	34	25.0771	54	39.8284	74	54.5720	94	69.3308
15	11.0634	35	25.8147	55	40.5659	75	55.3172	95	70.0684
16	11.8010	36	26.5522	56	41.3035	76	56.0547	96	70.8060
17	12.5386	37	27.2898	57	42.0410	77	56.7923	97	71.5435
18	13.2761	38	28.0274	58	42.7786	78	57.5298	98	72.2811
19	14.0137	39	28.7649	59	43.5162	79	58.2674	99	73.0187
20	14.7512	40	29.5025	60	44.2537	80	59.0050	100	73.7562

in. to mm

in.	mm	in.	mm	in.	mm	in.	mm	in.	mm
.01	.254	.21	5.334	.41	10.414	.61	15.494	.81	20.574
.02	.508	.22	5.588	.42	10.668	.62	15.748	.82	20.828
.03	.762	.23	5.842	.43	10.922	.63	16.002	.83	21.082
.04	1.016	.24	6.096	.44	11.176	.64	16.256	.84	21.336
.05	1.270	.25	6.350	.45	11.430	.65	16.510	.85	21.590
.06	1.524	.26	6.604	.46	11.684	.66	16.764	.86	21.844
.07	1.778	.27	6.858	.47	11.938	.67	17.018	.87	22.098
.08	2.032	.28	7.112	.48	12.192	.68	17.272	.88	22.352
.09	2.286	.29	7.366	.49	12.446	.69	17.526	.89	22.606
.10	2.540	.30	7.620	.50	12.700	.70	17.780	.90	22.860
.11	2.794	.31	7.874	.51	12.954	.71	18.034	.91	23.114
.12	3.048	.32	8.128	.52	13.208	.72	18.288	.92	23.368
.13	3.302	.33	8.382	.53	13.462	.73	18.542	.93	23.622
.14	3.556	.34	8.636	.54	13.716	.74	18.796	.94	23.876
.15	3.810	.35	8.890	.55	13.970	.75	19.050	.95	24.130
.16	4.064	.36	9.144	.56	14.224	.76	19.304	.96	24.384
.17	3.318	.37	9.398	.57	14.478	.77	19.558	.97	24.638
.18	4.572	.38	9.652	.58	14.732	.78	19.812	.98	24.892
.19	4.826	.39	9.906	.59	14.986	.79	20.066	.99	25.146
.20	5.080	.40	10.160	.60	15.240	.80	20.320	1.00	25.400

mm to in.

mm	in.	mm	in.	mm	in.	mm	in.	mm	in.
.01	.00039	.21	.00827	.41	.01614	.61	.02402	.81	.03189
.02	.00079	.22	.00866	.42	.01654	.62	.02441	.82	.03228
.03	.00118	.23	.00906	.43	.01693	.63	.02480	.83	.03268
.04	.00157	.24	.00945	.44	.01732	.64	.02520	.84	.03307
.05	.00197	.25	.00984	.45	.01772	.65	.02559	.85	.03346
.06	.00236	.26	.01024	.46	.01811	.66	.02598	.86	.03386
.07	.00276	.27	.01063	.47	.01850	.67	.02638	.87	.03425
.08	.00315	.28	.01102	.48	.01890	.68	.02677	.88	.03465
.09	.00354	.29	.01142	.49	.01929	.69	.02717	.89	.03504
.10	.00394	.30	.01181	.50	.01969	.70	.02756	.90	.03543
.11	.00433	.31	.01220	.51	.02008	.71	.02795	.91	.03583
.12	.00472	.32	.01260	.52	.02047	.72	.02835	.92	.03622
.13	.00512	.33	.01299	.53	.02087	.73	.02874	.93	.03661
.14	.00551	.34	.01339	.54	.02126	.74	.02913	.94	.03701
.15	.00591	.35	.01378	.55	.02165	.75	.02953	.95	.03740
.16	.00630	.36	.01417	.56	.02205	.76	.02992	.96	.03780
.17	.00669	.37	.01457	.57	.02244	.77	.03032	.97	.03819
.18	.00709	.38	.01496	.58	.02283	.78	.03071	.98	.03858
.19	.00748	.39	.01535	.59	.02323	.79	.03110	.99	.03898
.20	.00787	.40	.01575	.60	.02362	.80	.03150	1.00	.03937

J901N-10

Fig. 5 METRIC CONVERSION CHART

TORQUE REFERENCES

DESCRIPTION

Individual Torque Charts appear within many or the Groups. Refer to the Standard Torque Specifications Chart for torque references not listed in the individual torque charts (Fig. 6).

SPECIFIED TORQUE FOR STANDARD BOLTS

Class	Diameter mm	Pitch mm	Specified torque					
			Hexagon head bolt			Hexagon flange bolt		
			N•m	kgf-cm	ft-lbf	N•m	kgf-cm	ft-lbf
4T	6	1	5	55	48 in.-lbf	6	60	52 in.-lbf
	8	1.25	12.5	130	9	14	145	10
	10	1.25	26	260	19	29	290	21
	12	1.25	47	480	35	53	540	39
	14	1.5	74	760	55	84	850	61
	16	1.5	115	1,150	83	—	—	—
5T	6	1	6.5	65	56 in.-lbf	7.5	75	65 in.-lbf
	8	1.25	15.5	160	12	17.5	175	13
	10	1.25	32	330	24	36	360	26
	12	1.25	59	600	43	65	670	48
	14	1.5	91	930	67	100	1,050	76
	16	1.5	140	1,400	101	—	—	—
6T	6	1	8	80	69 in.-lbf	9	90	78 in.-lbf
	8	1.25	19	195	14	21	210	15
	10	1.25	39	400	29	44	440	32
	12	1.25	71	730	53	80	810	59
	14	1.5	110	1,100	80	125	1,250	90
	16	1.5	170	1,750	127	—	—	—
7T	6	1	10.5	110	8	12	120	9
	8	1.25	25	260	19	28	290	21
	10	1.25	52	530	38	58	590	43
	12	1.25	95	970	70	105	1,050	76
	14	1.5	145	1,500	108	165	1,700	123
	16	1.5	230	2,300	166	—	—	—
8T	8	1.25	29	300	22	33	330	24
	10	1.25	61	620	45	68	690	50
	12	1.25	110	1,100	80	120	1,250	90
9T	8	1.25	34	340	25	37	380	27
	10	1.25	70	710	51	78	790	57
	12	1.25	125	1,300	94	140	1,450	105
10T	8	1.25	38	390	28	42	430	31
	10	1.25	78	800	58	88	890	64
	12	1.25	140	1,450	105	155	1,600	116
11T	8	1.25	42	430	31	47	480	35
	10	1.25	87	890	64	97	990	72
	12	1.25	155	1,600	116	175	1,800	130

Fig. 6 TORQUE SPECIFICATIONS

VEHICLE IDENTIFICATION NUMBER

DESCRIPTION

The Vehicle Identification Number (VIN) can be viewed through the windshield at the upper left corner of the instrument panel, near the left windshield pillar (Fig. 7). The VIN consists of 17 characters in a combination of letters and numbers that provide specific information about the vehicle. Refer to VIN Code Breakdown Chart for decoding information.

To protect the consumer from theft and possible fraud the manufacturer is required to include a Check Digit at the ninth position of the vehicle identification number. The check digit is used by the manufacturer and government agencies to verify the authenticity of the vehicle and official documentation. The formula to use the check digit is not released to the general public.

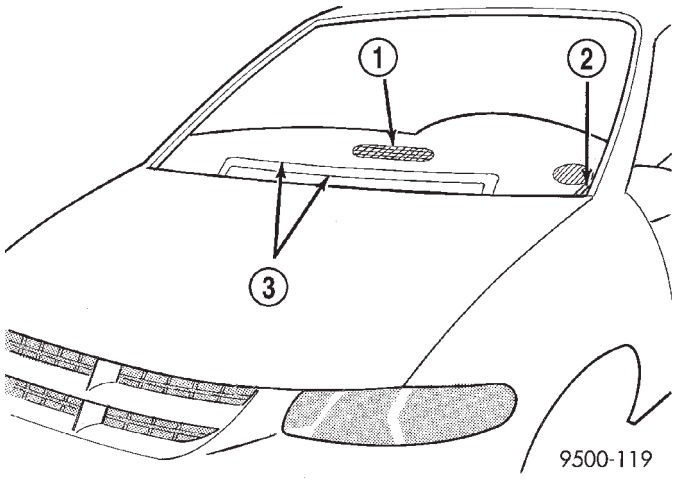

Fig. 7 VEHICLE IDENTIFICATION NUMBER (VIN)

1 - DEFROSTER OUTLET
2 - VEHICLE IDENTIFICATION NUMBER
3 - HEATED WINDSHIELD GRID

VIN CODE BREAKDOWN CHART

POSITION	INTERPRETATION	CODE = DESCRIPTION
1	Country of Origin	1 = Built in the United States by DaimlerChrysler 2 = Built in Canada by DaimlerChrysler Canada Inc.
2	Make	B = Dodge C = Chrysler
3	Vehicle Type	4 = Multipurpose Pass. Vehicle Less Side Air Bags 8 = Multipurpose Pass. Vehicle With Side Air Bags
4	Gross Vehicle Weight Rating	G = 2268 - 2721 kg. (5001 - 6000 lbs.)
5	Car Line	P = Chrysler, Town & Country - FWD P = Dodge, Caravan/Grand Caravan - FWD T = Chrysler, Town & Country - AWD T = Dodge, Grand Caravan - AWD J = Chrysler, Voyager/Grand Voyager - FWD Y = Voyager/Grand Voyager - FWD Left Hand Drive C = Voyager/Grand Voyager - AWD Left Hand Drive H = Voyager/Grand Voyager - FWD Right Hand Drive K = Voyager/Grand Voyager - AWD Left Hand Drive

VEHICLE IDENTIFICATION NUMBER (Continued)

POSITION	INTERPRETATION	CODE = DESCRIPTION
6	Series	2 = Low Line 4 = High Line 5 = Premium 6 = Sport 7 = Special
6 - Export	Series	B = 4-Speed Automatic Transaxle N = 5-Speed Manual Transaxle
7	Body Style	4 = Long Wheel Base 5 = Short Wheel Base
7 - Export	Body Style	1 = EURO Wagon-Long Wheelbase RG-53-S Series 2 = EURO Wagon-Short Wheelbase RG-52-H Series 3 = EURO Wagon-Short Wheelbase RG-52-P Series 4 = EURO Wagon-Long Wheelbase RG-53-P Series 5 = EURO Wagon-Long Wheelbase RG-53-H Series 6 = Comercial Van-Short Wheelbase with-CYX Less AS8 7 = Comercial Van-Short Wheelbase with AS8 8 = Comercial Van-Long Wheelbase Highline with-CYX 9 = Comercial Van-Long Wheelbase Premium Line with-CYX CYX = No Rear Seat Package AS8 = Interior Delete Group
8	Engine	B = 2.4L 4 cyl. 16-Valve Gasoline DOHC (MPI) L = 3.8L 6 cyl. Gasoline (SMPI) R = 3.3L 6 cyl. Gasoline (SMPI) 3 = 3.3L 6 cyl. Enthanol Flex Fuel 7 = 2.5L 4 cyl. 16 Valve Turbo Diesel
9	Check Digit	See explanation in this section.
10	Model Year	2= 2002
11	Assembly Plant	B = St. Louis Assembly South R = Windsor Assembly U = Graz Assembly
12 through 17	Sequence Number	A six digit number assigned by assembly plant.

VEHICLE SAFETY CERTIFICATION LABEL

DESCRIPTION

A vehicle safety certification label is attached to the rear shutface of the driver's door (Fig. 8). This label indicates date of manufacture (month and year), Gross Vehicle Weight Rating (GVWR), Gross Axle Weight Rating (GAWR) front, Gross Axle Weight Rating (GAWR) rear and the Vehicle Identification Number (VIN). The Month, Day and Hour of manufacture is also included.

All communications or inquiries regarding the vehicle should include the Month-Day-Hour and Vehicle Identification Number.

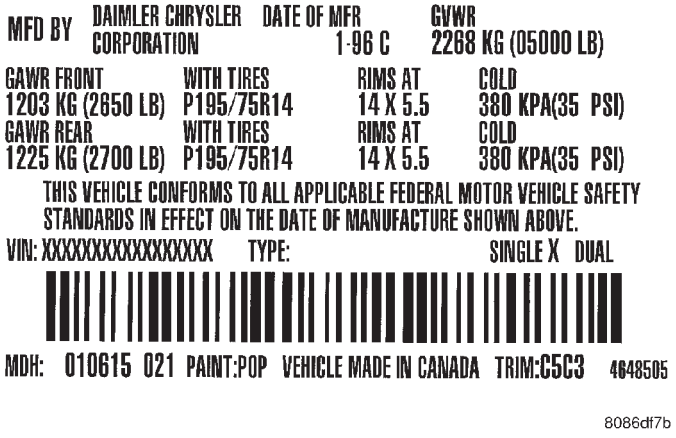

Fig. 8 VEHICLE SAFETY CERTIFICATION LABEL - TYPICAL

E-MARK LABEL

DESCRIPTION

An E-mark Label (Fig. 9) is located on the rear shut face of the driver's door. The label contains the following information:

- Date of Manufacture
- Month-Day-Hour (MDH)
- Vehicle Identification Number (VIN)
- Country Codes
- Regulation Number
- Regulation Amendment Number
- Approval Number

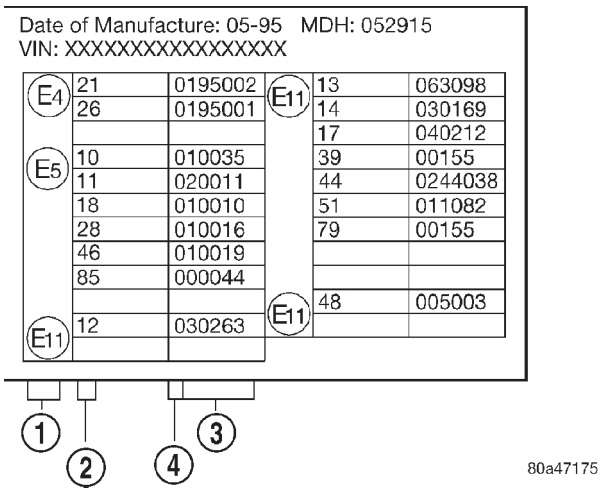

Fig. 9 E-Mark Label

1 - COUNTRY CODE
2 - REGULATION NUMBER
3 - APPROVAL NUMBER
4 - AMENDMENT NUMBER

VECI LABEL

DESCRIPTION

All models have a Vehicle Emission Control Information (VECI) Label. Chrysler permanently attaches the label in the engine compartment. It cannot be removed without defacing information and destroying the label.

The label contains the vehicle's emission specifications and vacuum hose routings. All hoses must be connected and routed according to the label.

MANUFACTURER PLATE

DESCRIPTION

The Manufacturer Plate (Fig. 10) is located in the engine compartment on the passenger side rear corner of the hood. The plate contains five lines of information:

1. Vehicle Identification Number (VIN)
2. Gross Vehicle Mass (GVM)
3. Gross Train Mass (GTM)
4. Gross Front Axle Rating (GFAR)
5. Gross Rear Axle Rating (GRAR)

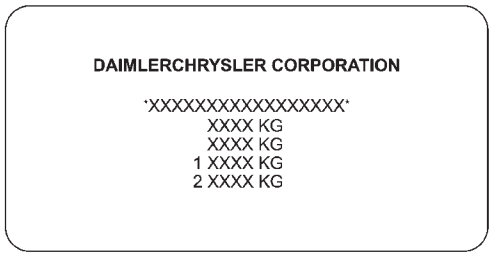

Fig. 10 MANUFACTURER PLATE

LUBRICATION & MAINTENANCE

TABLE OF CONTENTS

page

LUBRICATION & MAINTENANCE
SPECIFICATIONS - FLUID CAPACITIES 1
INTERNATIONAL SYMBOLS
DESCRIPTION 2
FLUID TYPES
DESCRIPTION
DESCRIPTION - ENGINE OIL AND LUBRICANTS 2
DESCRIPTION - ENGINE COOLANT 3
DESCRIPTION - FLEXIBLE FUEL ENGINE OIL 3
DESCRIPTION - AUTOMATIC TRANSMISSION FLUID 4
DESCRIPTION - FUEL REQUIREMENTS 4
DESCRIPTION - FUEL REQUIREMENTS - DIESEL ENGINE 6
DESCRIPTION - ENGINE OIL - DIESEL ENGINES 6
FLUID FILL/CHECK LOCATIONS
DESCRIPTION 6
LUBRICATION POINTS
DESCRIPTION 6
MAINTENANCE SCHEDULES
DESCRIPTION 6
HOISTING
STANDARD PROCEDURE - HOISTING 6
JUMP STARTING
STANDARD PROCEDURE - JUMP STARTING . . 7
TOWING
STANDARD PROCEDURE - TOWING 8

LUBRICATION & MAINTENANCE

SPECIFICATIONS - FLUID CAPACITIES

DESCRIPTION	SPECIFICATION
Fuel Tank (Gas)	75 L (20 gal.)
Fuel Tank (Diesel)	75 L (20 gal.)
Engine Oil* - 2.4 L	4.7 L (5.0 qts.)
Engine Oil* - 3.3/3.8 L	4.0 L (4.5 qts.)
Engine Oil* - 2.5 L (Diesel)	6.0 L (6.3 qts.)
Cooling System** - 2.4 L	10.7 L (11.4 qts.)
Cooling System** - 2.5 L Turbo Diesel with Auxiliary Heater	13.8 L (14.6 qts.)
Cooling System** - 3.3/3.8 L without Auxiliary Heater	12.6 L (13.4 qts.)
Cooling System** - 3.3/3.8 L with Auxiliary Heater	15.4 L (16.3 qts.)
Automatic Transaxle - Service Fill	3.8 L (4.0 qts.)
Automatic Transaxle - 31TH Overhaul Fill	8.6 L (9.1 qts.)
Automatic Transaxle - 41TE Overhaul Fill	9.2 L (9.7 qts.)
Manual Transaxle (T850 5-Speed)	2.4-2.7 L (2.5-2.9 qts.)
AWD Power Transfer Unit	1.15 L (2.4 pts.)
Power Steering	1.2 L (2.5 pts.)
AWD Bi-directional Overrunning Clutch	0.575 L (1.22 pts.)
AWD Rear Carrier	0.7 L (1.48 pts.)
* (includes oil filter)	
** (includes heater and recovery/reserve bottle)	

INTERNATIONAL SYMBOLS

DESCRIPTION

DaimlerChrysler Corporation uses international symbols to identify engine compartment lubricant and fluid inspection and fill locations (Fig. 1).

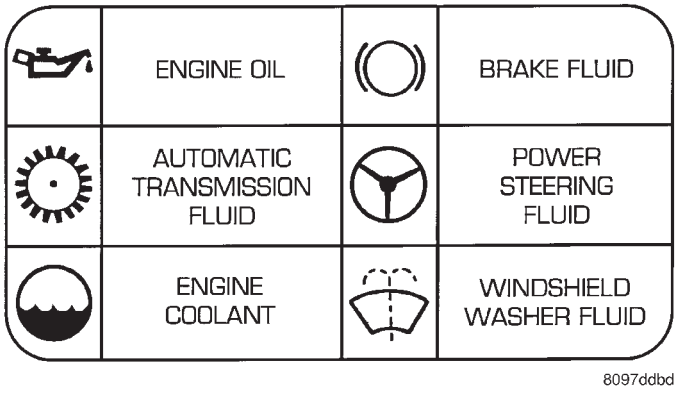

Fig. 1 INTERNATIONAL SYMBOLS

FLUID TYPES

DESCRIPTION

DESCRIPTION - ENGINE OIL AND LUBRICANTS

WARNING: NEW OR USED ENGINE OIL CAN BE IRRITATING TO THE SKIN. AVOID PROLONGED OR REPEATED SKIN CONTACT WITH ENGINE OIL. CONTAMINANTS IN USED ENGINE OIL, CAUSED BY INTERNAL COMBUSTION, CAN BE HAZARDOUS TO YOUR HEALTH. THOROUGHLY WASH EXPOSED SKIN WITH SOAP AND WATER. DO NOT WASH SKIN WITH GASOLINE, DIESEL FUEL, THINNER, OR SOLVENTS, HEALTH PROBLEMS CAN RESULT. DO NOT POLLUTE, DISPOSE OF USED ENGINE OIL PROPERLY. CONTACT YOUR DEALER OR GOVERNMENT AGENCY FOR LOCATION OF COLLECTION CENTER IN YOUR AREA.

When service is required, DaimlerChrysler Corporation recommends that only Mopar® brand parts, lubricants and chemicals be used. Mopar® provides the best engineered products for servicing DaimlerChrysler Corporation vehicles.

Only lubricants bearing designations defined by the following organization should be used.

- Society of Automotive Engineers (SAE)
- American Petroleum Institute (API)
- National Lubricating Grease Institute (NLGI)

API SERVICE GRADE CERTIFIED

Use an engine oil that is API Certified. MOPAR® provides engine oils, that meet or exceed this requirement.

SAE VISCOSITY

An SAE viscosity grade is used to specify the viscosity of engine oil. Use only engine oils with multiple viscosities such as 5W-30 or 10W-30. These are specified with a dual SAE viscosity grade which indicates the cold-to-hot temperature viscosity range. Select an engine oil that is best suited to your particular temperature range and variation (Fig. 2).

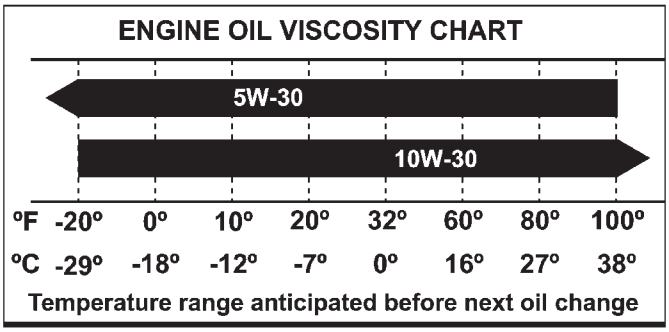

Fig. 2 TEMPERATURE/ENGINE OIL VISCOSITY

ENERGY CONSERVING OIL

An Energy Conserving type oil is recommended for gasoline engines. The designation of ENERGY CONSERVING is located on the label of an engine oil container.

CONTAINER IDENTIFICATION

Standard engine oil identification notations have been adopted to aid in the proper selection of engine oil. The identifying notations are located on the front label of engine oil plastic bottles and the top of engine oil cans (Fig. 3).

This symbol means that the oil has been certified by the American Petroleum Institute (API). DiamlerChrysler only recommend API Certified engine oils. Use Mopar® engine oil or equivalent.



Fig. 3 API SYMBOL

FLUID TYPES (Continued)

GEAR LUBRICANTS

SAE ratings also apply to multigrade gear lubricants. In addition, API classification defines the lubricants usage. Such as API GL-5 and SAE 75W-90.

LUBRICANTS AND GREASES

Lubricating grease is rated for quality and usage by the NLGI. All approved products have the NLGI symbol (Fig. 4) on the label. At the bottom of the NLGI symbol is the usage and quality identification letters. Wheel bearing lubricant is identified by the letter “G”. Chassis lubricant is identified by the letter “L”. The letter following the usage letter indicates the quality of the lubricant. The following symbols indicate the highest quality.

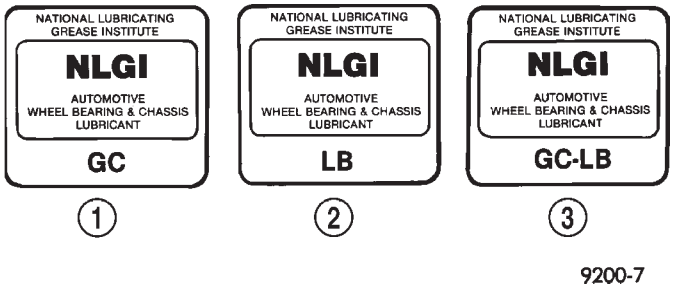

Fig. 4 NLGI SYMBOL

1 - WHEEL BEARINGS
2 - CHASSIS LUBRICATION
3 - CHASSIS AND WHEEL BEARINGS

SPECIALIZED LUBRICANTS AND OILS

Some maintenance or repair procedures may require the use of specialized lubricants or oils. Consult the appropriate sections in this manual for the correct application of these lubricants.

DESCRIPTION - ENGINE COOLANT

WARNING: ANTIFREEZE IS AN ETHYLENE GLYCOL BASE COOLANT AND IS HARMFUL IF SWALLOWED OR INHALED. IF SWALLOWED, DRINK TWO GLASSES OF WATER AND INDUCE VOMITING. IF INHALED, MOVE TO FRESH AIR AREA. SEEK MEDICAL ATTENTION IMMEDIATELY. DO NOT STORE IN OPEN OR UNMARKED CONTAINERS. WASH SKIN AND CLOTHING THOROUGHLY AFTER COMING IN CONTACT WITH ETHYLENE GLYCOL. KEEP OUT OF REACH OF CHILDREN. DISPOSE OF GLYCOL BASE COOLANT PROPERLY, CONTACT YOUR DEALER OR GOVERNMENT AGENCY FOR LOCATION OF COLLECTION CENTER IN YOUR AREA. DO NOT OPEN A COOLING SYSTEM WHEN THE ENGINE IS AT OPERATING TEMPERATURE OR HOT UNDER PRESSURE, PERSONAL INJURY CAN RESULT. AVOID RADIATOR COOLING FAN WHEN ENGINE COMPARTMENT RELATED SERVICE IS PERFORMED, PERSONAL INJURY CAN RESULT.

CAUTION: Use of Propylene Glycol based coolants is not recommended, as they provide less freeze protection and less boiling protection.

The cooling system is designed around the coolant. The coolant must accept heat from engine metal, in the cylinder head area near the exhaust valves and engine block. Then coolant carries the heat to the radiator where the tube/fin radiator can transfer the heat to the air.

The use of aluminum cylinder blocks, cylinder heads, and water pumps requires special corrosion protection. Mopar® Antifreeze/Coolant, 5 Year/100,000 Mile Formula (MS-9769), or the equivalent ethylene glycol base coolant with hybrid organic corrosion inhibitors (called HOAT, for Hybrid Organic Additive Technology) is recommended. This coolant offers the best engine cooling without corrosion when mixed with 50% Ethylene Glycol and 50% distilled water to obtain a freeze point of -37°C (-35°F). If it loses color or becomes contaminated, drain, flush, and replace with fresh properly mixed coolant solution.

The green coolant **MUST NOT BE MIXED** with the orange or magenta coolants. When replacing coolant the complete system flush must be performed before using the replacement coolant.

CAUTION: Mopar® Antifreeze/Coolant, 5 Year/100,000 Mile Formula (MS-9769) may not be mixed with any other type of antifreeze. Doing so will reduce the corrosion protection and may result in premature water pump seal failure. If non-HOAT coolant is introduced into the cooling system in an emergency, it should be replaced with the specified coolant as soon as possible.

DESCRIPTION - FLEXIBLE FUEL ENGINE OIL

The information in this section is for Flexible Fuel Vehicles (FFV) only. These vehicles can be identified by the unique Fuel Filler Door Label that states Ethanol (E-85) or Unleaded Gasoline Only. This section only covers those subjects that are unique to these vehicles. Please refer to the other sections of this manual for information on features that are common between Flexible Fuel and gasoline only powered vehicles.

ETHANOL FUEL (E-85)

E-85 is a mixture of approximately 85% fuel ethanol and 15% unleaded gasoline.

FLUID TYPES (Continued)

WARNING: Ethanol vapors are extremely flammable and could cause serious personal injury. Never have any smoking materials lit in or near the vehicle when removing the fuel filler tube cap (gas cap) or filling the tank. Do not use E-85 as a cleaning agent and never use it near an open flame.

FUEL REQUIREMENTS

The vehicle will operate on both unleaded gasoline with an octane rating of 87, or E-85 fuel, or any mixture of these two.

For best results, a refueling pattern that alternates between E-85 and unleaded gasoline should be avoided. When you do switch fuels, it is recommended that

- you do not switch when the fuel gauge indicates less than 1/4 full
- you do not add less than 5 gallons when refueling
- you operate the vehicle immediately after refueling for a period of at least 5 minutes

Observing these precautions will avoid possible hard starting and/or significant deterioration in driveability during warm up.

FFV STARTING

The characteristics of E-85 fuel make it unsuitable for use when ambient temperatures fall below 0°F. In the range of 0°F to 32°F, you may experience an increase in the time it takes for your engine to start, and a deterioration in driveability (sags and/or hesitations) until the engine is fully warmed up.

Engine Operating on E-85 Fuel

If vehicle operates on E-85 fuel either full or part-time, use only Mopar® Flexible Fuel 5W-30 engine oil or an equivalent that meets DaimlerChrysler Standard MS-9214. Equivalent commercial Flexible Fuel engine oils may be labeled as Multi-Fuel, Variable Fuel, Flexible Fuel, etc. These engine oils may be satisfactory if they meet the DaimlerChrysler Standard.

SAE 5W-30 engine oil is preferred for use in Flexible Fuel engines.

CAUTION: If Flexible Fuel engine oil is not used when using E-85 fuel, engine wear or damage may result.

CRUISING RANGE

Because E-85 fuel contains less energy per gallon than gasoline, you will experience an increase in fuel consumption. You can expect your MPG and your driving range to decrease by about 30% compared to gasoline operation.

DESCRIPTION - AUTOMATIC TRANSMISSION FLUID

NOTE: Refer to the maintenance schedules for the recommended maintenance (fluid/filter change) intervals for this transaxle.

NOTE: All transaxles have a common transmission and differential sump. Filling the transaxle accommodates the differential as well.

TRANSMISSION FLUID

Mopar® ATF+4 (Automatic Transmission Fluid-Type 9602) is required in the 41TE automatic and T850 manual transaxles. Substitute fluids can induce torque converter clutch shudder.

Mopar® ATF+4 (Automatic Transmission Fluid-Type 9602) when new is red in color. The ATF is dyed red so it can be identified from other fluids used in the vehicle such as engine oil or antifreeze. The red color is not permanent and is not an indicator of fluid condition. As the vehicle is driven, the ATF will begin to look darker in color and may eventually become brown. **This is normal.** ATF+4 also has a unique odor that may change with age. Consequently, **odor and color cannot be used to indicate the fluid condition or the need for a fluid change.**

FLUID ADDITIVES

DaimlerChrysler strongly recommends against the addition of any fluids to the transmission, other than those automatic transmission fluids listed above. Exceptions to this policy are the use of special dyes to aid in detecting fluid leaks.

Various “special” additives and supplements exist that claim to improve shift feel and/or quality. These additives and others also claim to improve converter clutch operation and inhibit overheating, oxidation, varnish, and sludge. These claims have not been supported to the satisfaction of DaimlerChrysler and these additives **must not be used.** The use of transmission “sealers” should also be avoided, since they may adversely affect the integrity of transmission seals.

DESCRIPTION - FUEL REQUIREMENTS

Your engine is designed to meet all emissions regulations and provide excellent fuel economy and performance when using high quality unleaded gasoline having an octane rating of 87. The use of premium gasoline is not recommended. The use of premium gasoline will provide no benefit over high quality regular gasoline, and in some circumstances may result in poorer performance.

FLUID TYPES (Continued)

Light spark knock at low engine speeds is not harmful to your engine. However, continued heavy spark knock at high speeds can cause damage and immediate service is required. Engine damage resulting from operation with a heavy spark knock may not be covered by the new vehicle warranty.

Poor quality gasoline can cause problems such as hard starting, stalling and hesitations. If you experience these symptoms, try another brand of gasoline before considering service for the vehicle.

Over 40 auto manufacturers world-wide have issued and endorsed consistent gasoline specifications (the Worldwide Fuel Charter, WWFC) to define fuel properties necessary to deliver enhanced emissions, performance and durability for your vehicle. We recommend the use of gasolines that meet the WWFC specifications if they are available.

REFORMULATED GASOLINE

Many areas of the country require the use of cleaner burning gasoline referred to as "reformulated" gasoline. Reformulated gasoline contain oxygenates, and are specifically blended to reduce vehicle emissions and improve air quality.

We strongly support the use of reformulated gasoline. Properly blended reformulated gasoline will provide excellent performance and durability for the engine and fuel system components.

GASOLINE/OXYGENATE BLENDS

Some fuel suppliers blend unleaded gasoline with oxygenates such as 10% ethanol, MTBE, and ETBE. Oxygenates are required in some areas of the country during the winter months to reduce carbon monoxide emissions. Fuels blended with these oxygenates may be used in your vehicle.

CAUTION: DO NOT use gasoline containing METHANOL. Gasoline containing methanol may damage critical fuel system components.

MMT IN GASOLINE

MMT is a manganese-containing metallic additive that is blended into some gasoline to increase octane. Gasoline blended with MMT provide no performance advantage beyond gasoline of the same octane number without MMT. Gasoline blended with MMT reduce spark plug life and reduce emission system performance in some vehicles. We recommend that gasoline free of MMT be used in your vehicle. The MMT content of gasoline may not be indicated on the gasoline pump; therefore, you should ask your gasoline retailer whether or not his/her gasoline contains MMT.

It is even more important to look for gasoline without MMT in Canada because MMT can be used at levels higher than allowed in the United States. MMT is prohibited in Federal and California reformulated gasoline.

SULFUR IN GASOLINE

If you live in the northeast United States, your vehicle may have been designed to meet California low emission standards with Cleaner-Burning California reformulated gasoline with low sulfur. If such fuels are not available in states adopting California emission standards, your vehicles will operate satisfactorily on fuels meeting federal specifications, but emission control system performance may be adversely affected. Gasoline sold outside of California is permitted to have higher sulfur levels which may affect the performance of the vehicle's catalytic converter. This may cause the Malfunction Indicator Lamp (MIL), Check Engine or Service Engine Soon light to illuminate. We recommend that you try a different brand of unleaded gasoline having lower sulfur to determine if the problem is fuel related prior to returning your vehicle to an authorized dealer for service.

CAUTION: If the Malfunction Indicator Lamp (MIL), Check Engine or Service Engine Soon light is flashing, immediate service is required; see on-board diagnostics system section.

MATERIALS ADDED TO FUEL

All gasoline sold in the United States and Canada are required to contain effective detergent additives. Use of additional detergents or other additives is not needed under normal conditions.

FUEL SYSTEM CAUTIONS

CAUTION: Follow these guidelines to maintain your vehicle's performance:

- The use of leaded gas is prohibited by Federal law. Using leaded gasoline can impair engine performance, damage the emission control system, and could result in loss of warranty coverage.
- An out-of-tune engine, or certain fuel or ignition malfunctions, can cause the catalytic converter to overheat. If you notice a pungent burning odor or some light smoke, your engine may be out of tune or malfunctioning and may require immediate service. Contact your dealer for service assistance.
- When pulling a heavy load or driving a fully loaded vehicle when the humidity is low and the temperature is high, use a premium unleaded fuel to help prevent spark knock. If spark knock persists, lighten the load, or engine piston damage may result.

FLUID TYPES (Continued)

- The use of fuel additives which are now being sold as octane enhancers is not recommended. Most of these products contain high concentrations of methanol. Fuel system damage or vehicle performance problems resulting from the use of such fuels or additives is not the responsibility of DaimlerChrysler Corporation and may not be covered under the new vehicle warranty.

NOTE: Intentional tampering with emissions control systems can result in civil penalties being assessed against you.

DESCRIPTION - FUEL REQUIREMENTS - DIESEL ENGINE

WARNING: DO NOT USE ALCOHOL OR GASOLINE AS A FUEL BLENDING AGENT. THEY CAN BE UNSTABLE UNDER CERTAIN CONDITIONS AND HAZARDOUS OR EXPLOSIVE WHEN MIXED WITH DIESEL FUEL.

Use good quality diesel fuel from a reputable supplier. For most year-round service, number 2 diesel fuel meeting ASTM specification D-975 will provide good performance. If the vehicle is exposed to extreme cold (below -18°C/0°F) or is required to operate at colder than normal conditions for prolonged periods, use climatize No. 2 diesel fuel or dilute the No. 2 diesel fuel with 50% No. 1 diesel fuel. This will provide better protection from fuel gelling or wax plugging of the fuel filters.

Diesel fuel is seldom completely free of water. To prevent fuel system trouble, including fuel line freezing in winter, drain the accumulated water from the fuel/water separator using the fuel/water separator drain provided. If you buy good quality fuel and follow the cold weather advice above, fuel conditioners should not be required in your vehicle. If available in your area, a high cetane “premium” diesel fuel may offer improved cold starting and warm up performance.

DESCRIPTION - ENGINE OIL - DIESEL ENGINES

Use only Diesel Engine Oil meeting standard **MIL-2104C** or API Classification **CD or higher** or **CCML D4, D5**.

SAE VISCOSITY GRADE

CAUTION: Low viscosity oils must have the proper API quality or the CCMC G5 designation.

To assure of properly formulated engine oils, it is recommended that SAE Grade 10W-40 engine oils that meet Chrysler material standard MS-6395, be used. European Grade 10W-40 oils are also acceptable.

Oils of the SAE 5W-40 or 8W-80 grade number are preferred when minimum temperatures consistently fall below -12°C.

FLUID FILL/CHECK LOCATIONS

DESCRIPTION

The fluid check/fill point locations are located in each applicable service manual section.

LUBRICATION POINTS

DESCRIPTION

Lubrication point locations are located in each applicable Sections.

MAINTENANCE SCHEDULES

DESCRIPTION

″Maintenance Schedule Information not included in this section, is located in the appropriate Owner’s Manual.″

HOISTING

STANDARD PROCEDURE - HOISTING

Refer to Owner’s Manual provided with vehicle for proper emergency jacking procedures.

WARNING: THE HOISTING AND JACK LIFTING POINTS PROVIDED ARE FOR A COMPLETE VEHICLE. WHEN THE ENGINE OR REAR SUSPENSION IS REMOVED FROM A VEHICLE, THE CENTER OF GRAVITY IS ALTERED MAKING SOME HOISTING CONDITIONS UNSTABLE. PROPERLY SUPPORT OR SECURE VEHICLE TO HOISTING DEVICE WHEN THESE CONDITIONS EXIST.

CAUTION: Do not position hoisting device on any suspension component, including the front suspension crossmember, the rear leaf springs, and the rear axle. Do not hoist on the front and rear bumpers, the lower liftgate crossmember, the lower radiator crossmember, the down standing flanges on the sill or the front engine mount.

FOR PROPER HOIST PLACEMENT REFER TO (Fig. 5).

HOISTING (Continued)

The hoisting points are identified by S.A.E. inverted triangle hoisting symbols (Fig. 5). The front hoisting points are at the bottom of the font rail below the hoisting symbol approximately 250 mm behind the front suspension crossmember. When using outboard lift hoists, verify that the hoist lift pads have been properly adjusted to eliminate contact between the hoist arm and the down standing flange on the sill. The rear hoisting points are the leaf spring front mounting brackets. The hoist pad must be positioned to pick up the flanges on the bracket, not the leaf spring.

When servicing the leaf springs or the leaf spring mounting brackets, special provisions are required to support the rear of the vehicle. Position the rear hoist pads under the horizontal surface on the bottom of the sill, inboard adjacent to the flange and centered fore/aft between the jacking indicator tabs on the lower flange. **DO NOT HOIST ON THE FLANGE.** Place a soft pad between the hoist and the painted surface on the sill to avoid scratching the finish.

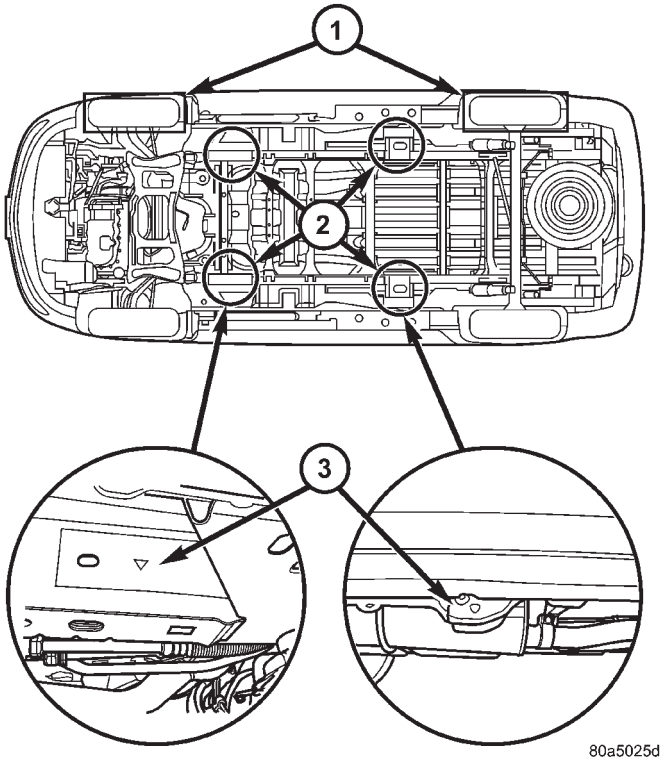

Fig. 5 HOISTING AND JACKING POINTS

1- DRIVE ON LIFT
2 - FRAME CONTACT LIFT (SINGLE POST)
2 - CHASSIS LIFT (NON-AXLE DUAL POST)
2 - OUTBOARD LIFT (DUAL POST)
2 - FLOOR JACK
3 - S.A.E. HOISTING SYMBOLS

JUMP STARTING

STANDARD PROCEDURE - JUMP STARTING

WARNING: REVIEW ALL SAFETY PRECAUTIONS AND WARNINGS. (Refer to 8 - ELECTRICAL/BATTERY SYSTEM/BATTERY - STANDARD PROCEDURE).

WARNING: DO NOT JUMP START A FROZEN BATTERY, PERSONAL INJURY CAN RESULT.

WARNING: DO NOT JUMP START WHEN MAINTENANCE FREE BATTERY INDICATOR DOT IS BRIGHT COLOR.

WARNING: DO NOT ALLOW JUMPER CABLE CLAMPS TO TOUCH EACH OTHER WHEN CONNECTED TO A BOOSTER SOURCE.

WARNING: DO NOT USE OPEN FLAME NEAR BATTERY

WARNING: REMOVE METALLIC JEWELRY WORN ON HANDS OR WRISTS TO AVOID INJURY BY ACCIDENTAL ARCING OF BATTERY CURRENT.

WARNING: WHEN USING A HIGH OUTPUT BOOSTING DEVICE, DO NOT ALLOW BATTERY VOLTAGE TO EXCEED 16 VOLTS.

WARNING: REFER TO INSTRUCTIONS PROVIDED WITH DEVICE BEING USED.

CAUTION: DO NOT ATTEMPT TO PUSH OR TOW THE VEHICLE TO START IT. THE VEHICLE CANNOT BE STARTED THIS WAY. PUSHING WITH ANOTHER VEHICLE MAY DAMAGE THE TRANSAXLE OR THE REAR OF THE VEHICLE.

(1) Raise hood on disabled vehicle and visually inspect engine compartment for:

- Battery cable clamp condition, clean if necessary.
- Frozen battery.
- Clear or bright color test indicator, if equipped.
- Generator drive belt condition and tension.
- Fuel fumes or leakage, correct if necessary.

CAUTION: If the cause of starting problem on disabled vehicle is severe, damage to booster vehicle charging system can result.

JUMP STARTING (Continued)

(2) When using another vehicle as a booster source, park the booster vehicle within cable reach. Turn off all accessories, set the parking brake, place the automatic transmission in PARK or the manual transmission in NEUTRAL and turn the ignition OFF.

(3) On disabled vehicle, place gear selector in park or neutral and set park brake. Turn off all accessories.

(4) Connect jumper cables to booster battery. RED clamp to positive terminal (+). BLACK clamp to negative terminal (-). DO NOT allow clamps at opposite end of cables to touch, electrical arc will result. Review all warnings in this procedure.

(5) On disabled vehicle, connect RED jumper cable clamp to positive (+) terminal. Connect BLACK jumper cable clamp to engine ground as close to the ground cable attaching point as possible (Fig. 6). (Refer to 8 - ELECTRICAL/BATTERY SYSTEM/BATTERY - STANDARD PROCEDURE).

(6) Start the engine in the vehicle which has the booster battery, let the engine idle a few minutes, then start the engine in the vehicle with the discharged battery.

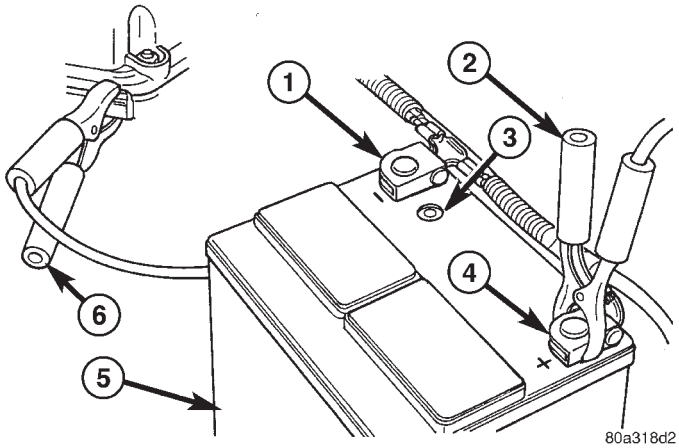

Fig. 6 JUMPER CABLE CLAMP CONNECTIONS

1 - BATTERY NEGATIVE TERMINAL
2 - POSITIVE JUMPER CABLE
3 - TEST INDICATOR (IF EQUIPPED)
4 - BATTERY POSITIVE TERMINAL
5 - BATTERY
6 - NEGATIVE JUMPER CABLE

CAUTION: Do not crank starter motor on disabled vehicle for more than 15 seconds, starter may overheat and could fail.

(7) If engine does not start within 15 seconds, stop cranking engine and allow starter to cool (15 minutes), before cranking again.

DISCONNECT CABLE CLAMPS AS FOLLOWS:

- Disconnect BLACK cable clamp from engine ground on disabled vehicle.
- When using a Booster vehicle, disconnect BLACK cable clamp from battery negative terminal. Disconnect RED cable clamp from battery positive terminal.
- Disconnect RED cable clamp from battery positive terminal on disabled vehicle.

TOWING

STANDARD PROCEDURE - TOWING

WARNINGS AND CAUTIONS

WARNING: DO NOT ALLOW TOWING ATTACHMENT DEVICES TO CONTACT THE FUEL TANK OR LINES, FUEL LEAK CAN RESULT.
DO NOT LIFT OR TOW VEHICLE BY FRONT OR REAR BUMPER.
DO NOT GO UNDER A LIFTED VEHICLE IF NOT SUPPORTED PROPERLY ON SAFETY STANDS.
DO NOT ALLOW PASSENGERS TO RIDE IN A TOWED VEHICLE.
USE A SAFETY CHAIN THAT IS INDEPENDENT FROM THE TOWING ATTACHMENT DEVICE.

CAUTION: Do not damage brake lines, exhaust system, shock absorbers, sway bars, or any other under vehicle components when attaching towing device to vehicle.
Do not secure vehicle to towing device by the use of front or rear suspension or steering components.
Remove or secure loose or protruding objects from a damaged vehicle before towing.
Refer to state and local rules and regulations before towing a vehicle.
Do not allow weight of towed vehicle to bear on lower fascia, air dams, or spoilers.

RECOMMENDED TOWING EQUIPMENT

To avoid damage to bumper fascia and air dams use:

- FWD vehicles, use of a flat bed towing device or a wheel lift is recommended (Fig. 7).
- AWD vehicles, a flat bed towing device or a wheel lift and towing dolly is recommended (Fig. 7).

When using a wheel lift towing device, be sure the disabled vehicle has at least 100 mm (4 in.) ground clearance. If minimum ground clearance cannot be reached, use a towing dolly. If a flat bed device is used, the approach angle should not exceed 15 degrees.

TOWING (Continued)

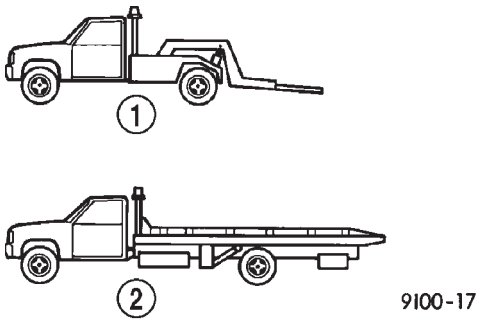

Fig. 7 RECOMMENDED TOWING

1 - WHEEL LIFT
2 - FLAT BED

GROUND CLEARANCE

CAUTION: If vehicle is towed with wheels removed, install lug nuts to retain brake drums or rotors.

A towed vehicle should be raised until the lifted wheels are a minimum 100 mm (4 in.) from the ground. Be sure there is at least 100 mm (4 in.) clearance between the tail pipe and the ground. If necessary, remove the wheels from the front end of the vehicle and lower the front end closer to the ground, to increase the ground clearance at the rear of the vehicle. Install lug nuts on wheel attaching studs to retain brake drums or rotors.

LOCKED VEHICLE TOWING

When a locked vehicle must be towed with the front wheels on the ground, use a towing dolly or flat bed hauler.

FLAT TOWING WITH TOW BAR

- Three speed automatic transaxle vehicles can be flat towed at speeds not to exceed 40 km/h (25 mph) for not more than 25 km (15 miles). The steering column must be unlocked and gear selector in neutral.
- Four speed electronic automatic transaxle vehicles can be flat towed at speeds not to exceed 72 km/h (44 mph) for not more than 160 km (100 miles). The steering column must be unlocked and gear selector in neutral.
- AWD models should not be flat towed. For additional information, refer to **RECOMMENDED TOWING EQUIPMENT** in this section.

FLAT BED TOWING TIE DOWNS

CAUTION: Do not tie vehicle down by attaching chains or cables to suspension components or engine mounts, damage to vehicle can result.

The vehicle can be tied to a flat bed device using the two pair of front slots on the bottom surface of the rails, behind the front wheels. The two pair of rear slots on the bottom of the rail between the bumper extension bolts and on the bottom of the rail just rearward of the jounce bumper. Vehicles equipped with a rear sway bar have brackets at this location.

TOWING – FRONT WHEEL LIFT

If the vehicle is being towed from the front, whenever possible ensure at least 10 inches road clearance to the tires.

TOWING – REAR WHEEL LIFT

If a vehicle cannot be towed with the front wheels lifted, the rear wheels can be lifted provided the following guide lines are observed.

CAUTION: Do not use steering column lock to secure steering wheel during towing operation.

- On AWD vehicles, all four wheels must be free to rotate. Use towing dollies at unlifted end of vehicle.
- Unlock steering column and secure steering wheel in straight ahead position with a clamp device designed for towing.
- Three speed automatic transaxle vehicles can be flat towed at speeds not to exceed 40 km/h (25 mph) for not more than 25 km (15 miles). The steering column must be unlocked and gear selector in neutral.
- Four speed electronic automatic transaxle vehicles can be flat towed at speeds not to exceed 72 km/h (44 mph) for not more than 160 km (100 miles). The steering column must be unlocked and gear selector in neutral.

SUSPENSION

TABLE OF CONTENTS

page

FRONT SUSPENSION 1
REAR SUSPENSION 26
WHEEL ALIGNMENT 46

FRONT SUSPENSION

TABLE OF CONTENTS

page

FRONT SUSPENSION
DESCRIPTION - FRONT SUSPENSION 2
OPERATION - FRONT SUSPENSION 2
STANDARD PROCEDURE - LUBRICATION 2
SPECIFICATIONS
FRONT SUSPENSION FASTENER TORQUE . . 3
SPECIAL TOOLS
FRONT SUSPENSION 3
BUSHINGS
REMOVAL - STABILIZER BAR CUSHION 4
INSTALLATION - STABILIZER BAR CUSHION . . . 4
HUB / BEARING
DESCRIPTION 4
OPERATION 4
DIAGNOSIS AND TESTING - HUB AND BEARING 5
REMOVAL 5
INSTALLATION 6
KNUCKLE
DESCRIPTION 6
OPERATION 6
REMOVAL - STEERING KNUCKLE 7
INSPECTION - STEERING KNUCKLE 8
INSTALLATION - STEERING KNUCKLE 9
LOWER BALL JOINT
DESCRIPTION 10
OPERATION 10
DIAGNOSIS AND TESTING - LOWER BALL JOINT 10
LOWER BALL JOINT SEAL BOOT
DESCRIPTION - EXPORT 10
REMOVAL
REMOVAL - BALL JOINT SEAL BOOT 11
REMOVAL - EXPORT 11
INSTALLATION
INSTALLATION - BALL JOINT SEAL BOOT . . 11
INSTALLATION - EXPORT 12
LOWER CONTROL ARM
DESCRIPTION 12
OPERATION 12
REMOVAL - LOWER CONTROL ARM 12
DISASSEMBLY
DISASSEMBLY - LOWER CONTROL ARM (REAR BUSHING - STANDARD) 13
DISASSEMBLY - LOWER CONTROL ARM (REAR BUSHING - HYDRO) 13
INSPECTION - LOWER CONTROL ARM 14
ASSEMBLY
ASSEMBLY - LOWER CONTROL ARM (REAR BUSHING - STANDARD) 14
ASSEMBLY - LOWER CONTROL ARM (REAR BUSHING - HYDRO) 15
INSTALLATION - LOWER CONTROL ARM 15
STABILIZER BAR
DESCRIPTION 16
OPERATION 16
REMOVAL 17
INSPECTION 17
INSTALLATION 18
STRUT
DESCRIPTION - STRUT ASSEMBLY 19
OPERATION - STRUT ASSEMBLY 19
DIAGNOSIS AND TESTING - STRUT ASSEMBLY 20
REMOVAL - STRUT ASSEMBLY 20
DISASSEMBLY - STRUT ASSEMBLY 22
ASSEMBLY - STRUT ASSEMBLY 23
INSTALLATION - STRUT ASSEMBLY 25

FRONT SUSPENSION

DESCRIPTION - FRONT SUSPENSION

This vehicle has a MacPherson Strut type front suspension (Fig. 1).

OPERATION - FRONT SUSPENSION

The front suspension allows each wheel on a vehicle to adapt to different road surfaces and conditions without greatly affecting the opposite wheel and the ability to control the vehicle. Each side of the front suspension is allowed to pivot so the vehicle can be steered in the direction preferred.

A strut assembly is used in place of the front suspension upper control arm and upper ball joint. When a vehicle strikes a bump, the force is transferred through the hub, bearing, and knuckle, into the strut assembly to absorb the force and dampen it. The top of the strut is mounted directly to the strut tower of the vehicle. During steering maneuvers, the strut assembly (through a pivot bearing in the upper strut mount) and steering knuckle (through the lower ball joint) turn as an assembly.

STANDARD PROCEDURE - LUBRICATION

There are no serviceable lubrication points on the front suspension. The ball joints are sealed-for-life and require no maintenance. The lower ball joints have special grease fitting caps that prevent normal grease gun attachment. This has been done to eliminate the possibility of over-filling, damaging the non-vented seal. Do not attempt to remove the special grease fitting cap and replace it with a normal grease zirc fitting.

CAUTION: No attempt should be made to replace the ball joint grease fitting cap with a normal zirc fitting or fill the ball joint with grease. Damage to the grease seal can result.

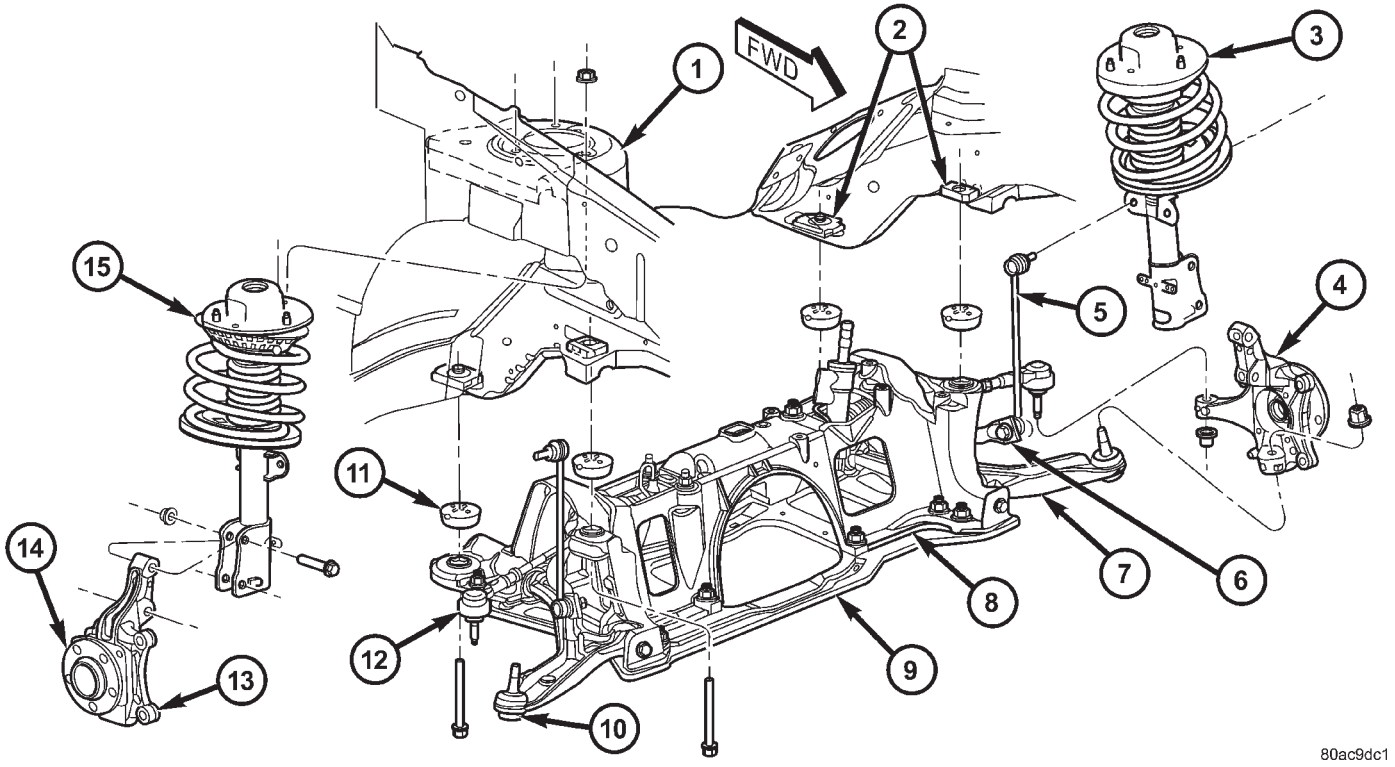

Fig. 1 Front Suspension

1 - TOWER
2 - CROSSMEMBER TAPPING PLATES
3 - LEFT STRUT ASSEMBLY
4 - LEFT STEERING KNUCKLE (WITH HUB AND BEARING)
5 - STABILIZER BAR LINK
6 - STABILIZER BAR
7 - LEFT LOWER CONTROL ARM
8 - CRADLE/CROSSMEMBER
9 - CRADLE/CROSSMEMBER REINFORCEMENT
10 - BALL JOINT
11 - ISOLATOR BUSHING
12 - STEERING GEAR TIE ROD
13 - RIGHT STEERING KNUCKLE
14 - RIGHT HUB AND BEARING
15 - RIGHT STRUT ASSEMBLY

SPECIFICATIONS

FRONT SUSPENSION FASTENER TORQUE

DESCRIPTION	N·m	Ft. Lbs.	In. Lbs.
Ball Joint Nut	108	80	—
Cradle Crossmember Mounting Bolts	163	120	—
Cradle Crossmember Reinforcement Bolts - Size M-14	153	113	—
Cradle Crossmember Reinforcement Bolt - Size M-12	106	78	—
Cradle Crossmember Reinforcement Bolts - Size M-10	61	45	—
Disc Brake Adapter Mounting Bolts	169	125	—
Hub And Bearing Mounting Bolts	65	45	—
Hub And Bearing Axle Hub Nut	244	180	—
Lower Control Arm Pivot Bolt	183	135	—
Stabilizer Bar Bushing Retainer Bolts	68	50	—
Stabilizer Bar Link Nuts	88	65	—
Strut Body/Tower Mounting Nuts	28	21	250
Strut Clevis-to-Knuckle Nuts	81 + 90° turn	60 + 90° turn	—
Strut Shaft Nut	100	75	—
Tie Rod Adjuster Jam Nut	75	55	—
Tie Rod Steering Arm Nut	75	55	—
Wheel Mounting (Lug) Nuts	135	100	—

SPECIAL TOOLS

FRONT SUSPENSION

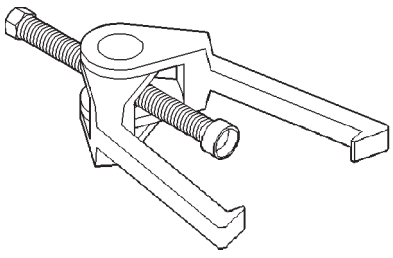

Puller C-3894A

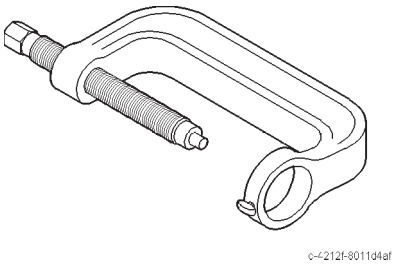

Press, Ball Joint C-4212F

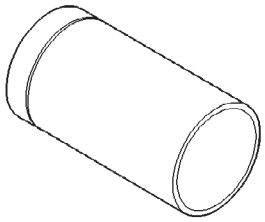

Installer, Ball Joint 6758

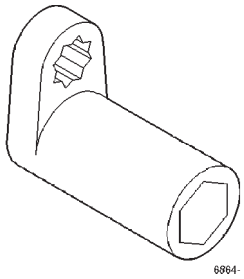

Wrench, Strut Rod Nut 6864

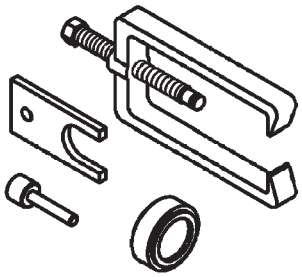

REMOVER/INSTALLER, BUSHING 8460



REMOVER/INSTALLER, BALL JOINT 8490

BUSHINGS

REMOVAL - STABILIZER BAR CUSHION

(1) Raise Vehicle. Refer to Hoisting in Lubrication and Maintenance.

(2) Remove the 2 bolts fastening the emission leak detection pump to the cradle crossmember reinforcement.

(3) Move the leak detection pump to the side allowing access to the stabilizer bar cushion retainers.

(4) Remove the nut and bolt securing each stabilizer bar cushion retainer to the cradle crossmember (Fig. 2) and remove the retainers.

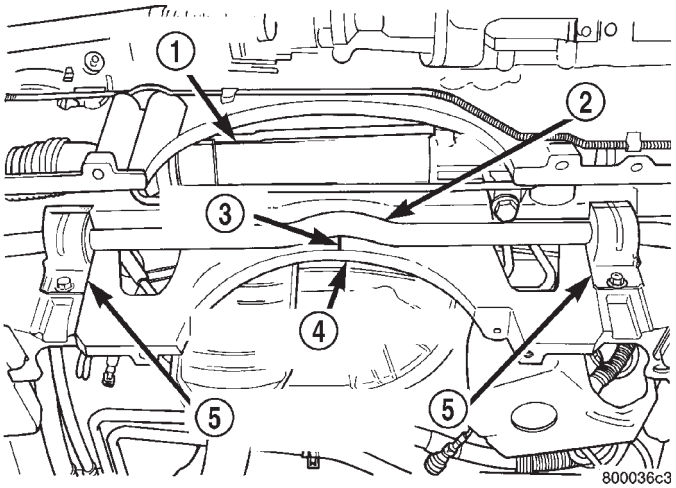

Fig. 2 Front Stabilizer Bar Cushion Retainers

1 - STEERING GEAR
2 - STABILIZER BAR
3 - RAISED BEAD
4 - FRONT CRADLE CROSSMEMBER
5 - RETAINERS

(5) Remove each stabilizer bar cushion from the stabilizer bar by opening the slit in the cushion and peeling it off the stabilizer bar.

INSTALLATION - STABILIZER BAR CUSHION

(1) Install each new cushion on stabilizer bar by spreading cushion at slit and forcing it onto stabilizer bar.

NOTE: Cushions must be installed on stabilizer bar so the square corner of the bushing will be down and slit in cushion will be facing the rear of the vehicle when the stabilizer bar is installed (Fig. 3).

(2) Place stabilizer bar into mounted position with cushions properly aligned.

(3) Hook each retainer into cradle crossmember mounting hole and over cushion.

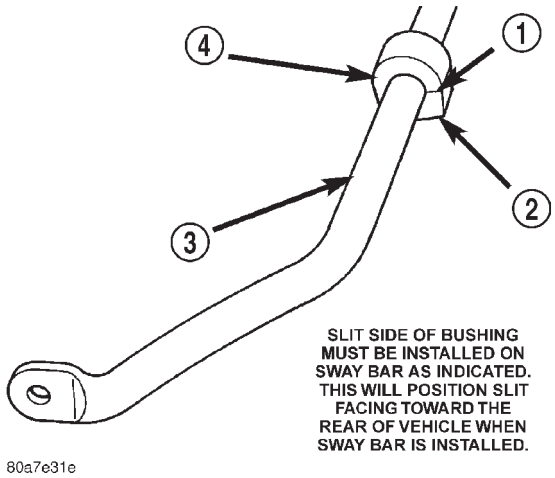

Fig. 3 Correctly Installed Stabilizer Bar Cushion

1 - SLIT IN SWAY BAR BUSHING.
2 - SQUARE CORNER
3 - SWAY BAR
4 - SWAY BAR ISOLATOR BUSHING

(4) Install each mounting bolt from rear of cradle crossmember through retainer. Install the two nuts and tighten to 68 N·m (50 ft. lbs.) torque.

(5) Reattach emission leak detection pump to cradle crossmember reinforcement with two mounting bolts.

(6) Lower the vehicle.

HUB / BEARING

DESCRIPTION

The front wheel bearing and front wheel hub of this vehicle are a hub and bearing unit type assembly (Unit III). This unit combines the front wheel mounting hub (flange) and the front wheel bearing into a sealed one-piece unit. The hub and bearing is mounted to the center of the steering knuckle (Fig. 1). It is retained by four mounting bolts accessible from the inboard side of the steering knuckle. The hub flange has five wheel mounting studs.

The wheel mounting studs used to mount the tire and wheel to the vehicle are the only replaceable components of the hub and bearing assembly. Otherwise, the hub and bearing is serviced only as a complete assembly.

OPERATION

The hub and bearing has internal bearings that allow the hub to rotate with the driveshaft, along with the tire and wheel. The five wheel mounting studs mount the tire and wheel, and brake rotor to the vehicle.

HUB / BEARING (Continued)

DIAGNOSIS AND TESTING - HUB AND BEARING

The condition of the front hub and bearing assembly is diagnosed using the inspection and testing procedure detailed below.

The bearing contained in the Unit III front hub/bearing assembly will produce noise and vibration when worn or damaged. The noise will generally change when the bearings are loaded. A road test of the vehicle is normally required to determine the location of a worn or damaged bearing.

Find a smooth level road surface and bring the vehicle up to a constant speed. When vehicle is at a constant speed, swerve the vehicle back and forth from the left and to the right. This will load and unload the bearings and change the noise level. When bearing damage is slight, the noise is sometimes noticeable at lower speeds and at other times is more noticeable at speeds above 105 km/h (65 mph).

REMOVAL

NOTE: Replacement of the Unit III front hub/bearing assembly can be normally done without having to remove the steering knuckle from the vehicle. In the event that the hub/bearing is frozen in the steering knuckle and cannot be removed by hand, it will have to be pressed out of the steering knuckle. The steering knuckle will require removal from the vehicle to allow the hub/bearing assembly to be pressed out of the steering knuckle. (Refer to 2 - SUSPENSION/FRONT/KNUCKLE - REMOVAL)

(1) Raise vehicle. (Refer to LUBRICATION & MAINTENANCE/HOISTING - STANDARD PROCEDURE)

(2) Remove wheel lug nuts, and front tire and wheel assembly.

(3) Remove the cotter pin, nut lock and spring washer from the stub axle (Fig. 4).

(4) With aid of a helper applying the brakes to keep the front hub from turning, remove the hub nut (Fig. 4).

(5) Remove disc brake caliper and adapter as an assembly from knuckle as shown (Fig. 5). Hang assembly out of the way using a bungee cord or wire. **Do not allow caliper hang by brake hose.**

(6) Remove brake rotor from hub and bearing (Fig. 5).

(7) Push in on end of driveshaft stub shaft, pushing its splines out of the hub splines.

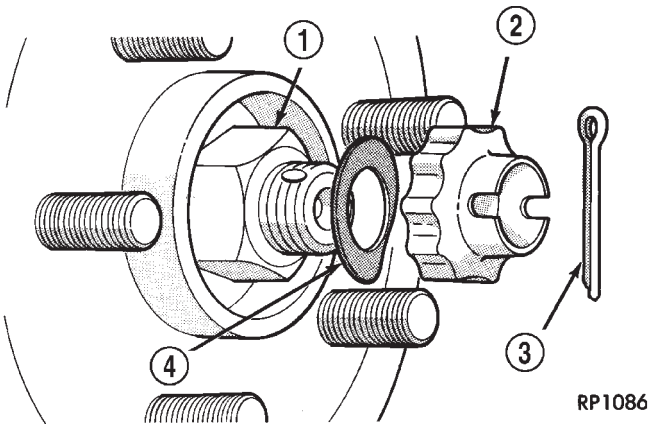

Fig. 4 Hub Nut

1 - HUB NUT
2 - NUT LOCK
3 - COTTER PIN
4 - SPRING WASHER

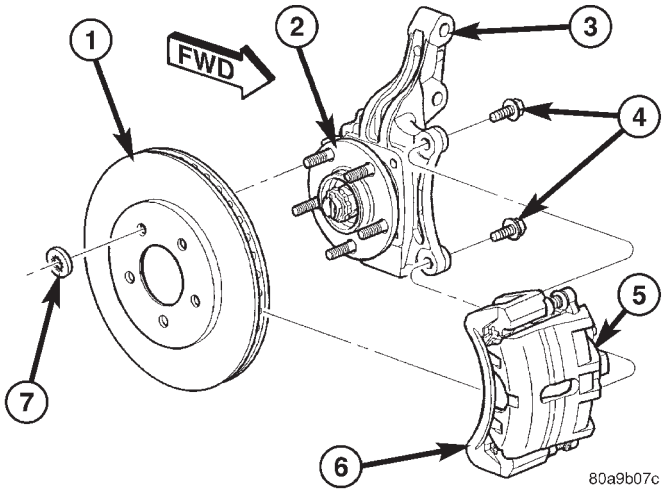

Fig. 5 Front Brake Mounting

1 - BRAKE ROTOR
2 - HUB AND BEARING
3 - STEERING KNUCKLE
4 - ADAPTER MOUNTING BOLTS
5 - BRAKE CALIPER
6 - ADAPTER
7 - CLIP

(8) Remove the four hub and bearing mounting bolts from the rear of steering knuckle (Fig. 6). **Use care not to come in contact with and damage the ABS tone wheel on the driveshaft stub shaft upon bolt removal.**

(9) Remove the hub and bearing assembly from the steering knuckle.

HUB / BEARING (Continued)

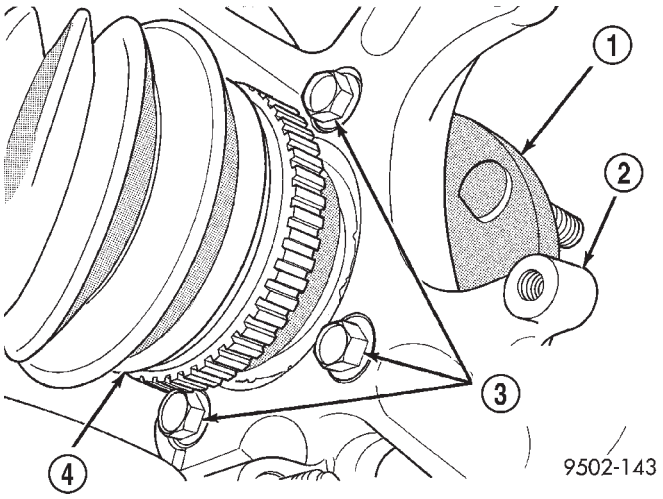

Fig. 6 Hub And Bearing Mounting Bolts

1 - HUB
2 - STEERING KNUCKLE
3 - MOUNTING BOLTS (4)
4 - DRIVESHAFT

INSTALLATION

CAUTION: Hub and bearing assembly mounting surfaces on the steering knuckle and stub axle (Fig. 7) must be smooth and completely free of foreign material or nicks prior to installing hub and bearing assembly.

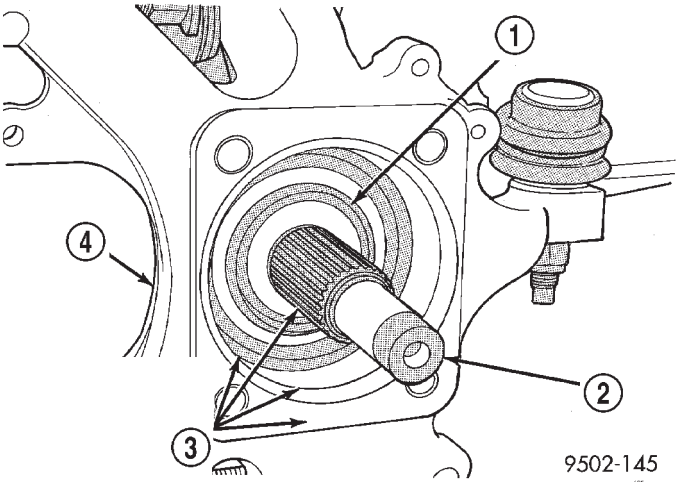

Fig. 7 Mounting Surfaces (Typical)

1 - BEARING SEAL
2 - STUB AXLE
3 - THESE SURFACES MUST BE CLEAN AND FREE OF NICKS BEFORE INSTALLING BEARING ASSEMBLY
4 - STEERING KNUCKLE

CAUTION: When installing hub and bearing into steering knuckle, be careful not to damage the bearing seal (Fig. 7) on the outer C/V joint.

(1) Install hub and bearing onto stub axle and into steering knuckle until squarely seated on the face of the steering knuckle.

(2) Install the 4 hub and bearing mounting bolts from the rear of the knuckle. Equally tighten all 4 mounting bolts in a criss-cross pattern until hub/bearing assembly is squarely seated against front of steering knuckle. Tighten mounting bolts to a torque of 65 N·m (45 ft. lbs.)

(3) Install the brake rotor on the hub and bearing (Fig. 5).

(4) Install brake caliper and adapter assembly back over brake rotor and align with mounting holes on steering knuckle (Fig. 5). Install the mounting bolts and tighten to 169 N·m (125 ft. lbs.) torque.

(5) Install the hub nut on the end of the stub axle (Fig. 4). With aid of a helper applying the brakes to keep the front hub from turning, tighten the hub nut to Install the mounting bolts and tighten to 244 N·m (180 ft. lbs.) torque.

(6) Install wheel and tire assembly on vehicle. Tighten the wheel mounting stud nuts in proper sequence until all nuts are torqued to half specification. Then repeat the tightening sequence to the full specified torque of 135 N·m (100 ft. lbs.).

(7) Lower vehicle to the ground.

(8) Check the front wheel alignment toe setting and reset if not within specifications. (Refer to 2 - SUSPENSION/WHEEL ALIGNMENT - STANDARD PROCEDURE)

KNUCKLE

DESCRIPTION

The steering knuckle is a single **aluminum** casting with legs machined for attachment of the strut assembly, steering linkage, disc brake caliper adapter, lower control arm ball joint and steering linkage (Fig. 1). The hub and bearing assembly is mounted in the center of the steering knuckle using 4 bolts. The driveshaft's constant velocity (C/V) stub axle is splined through the center of the hub and bearing and is held in place using a nut, nut lock and cotter pin.

Service replacement of the front hub and bearing assembly can be done with the steering knuckle remaining on the vehicle.

OPERATION

The steering knuckle pivots with the strut assembly between the lower ball joint and the pivot bearing in the strut assembly. The steering gear outer tie rod end connects to the trailing end of each knuckle, allowing the vehicle to be steered.

KNUCKLE (Continued)

The center of the knuckle supports the hub and bearing and axle shaft.

REMOVAL - STEERING KNUCKLE

(1) Raise vehicle. (Refer to LUBRICATION & MAINTENANCE/HOISTING - STANDARD PROCEDURE)

(2) Remove the wheel and tire assembly from the vehicle.

(3) Remove the cotter pin, nut lock and spring washer from the end of the stub axle and hub nut (Fig. 8).

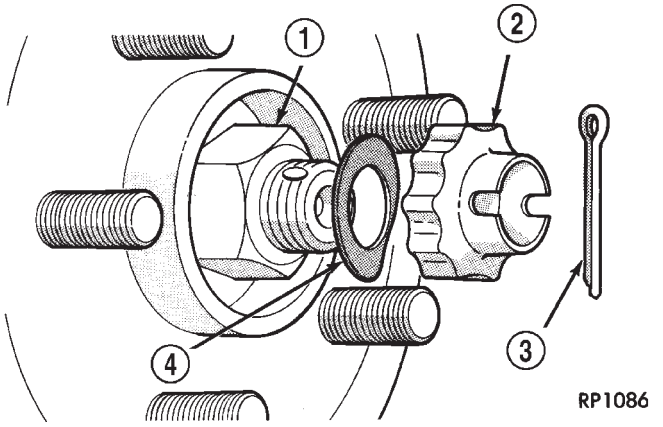

Fig. 8 Hub Nut

1 - HUB NUT
2 - NUT LOCK
3 - COTTER PIN
4 - SPRING WASHER

(4) Have a helper apply the vehicle's brakes to keep hub from turning, **loosen and remove** the hub nut (Fig. 8).

(5) Remove disc brake caliper and adapter as an assembly from knuckle as shown (Fig. 9). Hang assembly out of the way using a bungee cord or wire (Fig. 10). **Do not allow caliper to hang by brake hose.**

(6) Remove nut attaching outer tie rod end to steering knuckle by holding the tie rod end stud while loosening and removing nut with a wrench (Fig. 11).

(7) Remove tie rod end from steering knuckle using Remover, Special Tool C-3894–A (Fig. 12).

(8) If equipped with antilock brakes, remove the front wheel speed sensor from the steering knuckle (Fig. 13).

(9) Remove the two steering knuckle-to-strut clevis bracket attaching bolts.

(10) Tip the knuckle outward and remove the driveshaft stub axle from the hub and bearing. Suspend driveshaft straight outward using a bungee cord or wire (Fig. 10). **Do not allow driveshaft to hang by inner joint.**

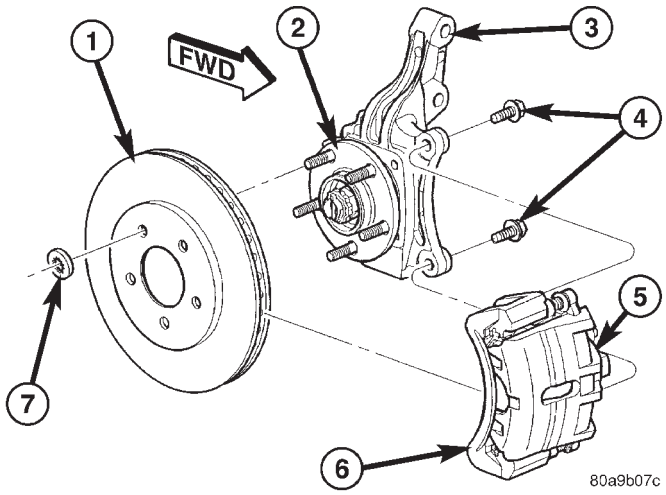

Fig. 9 Front Brake Mounting

1 - BRAKE ROTOR
2 - HUB AND BEARING
3 - STEERING KNUCKLE
4 - ADAPTER MOUNTING BOLTS
5 - BRAKE CALIPER
6 - ADAPTER
7 - CLIP

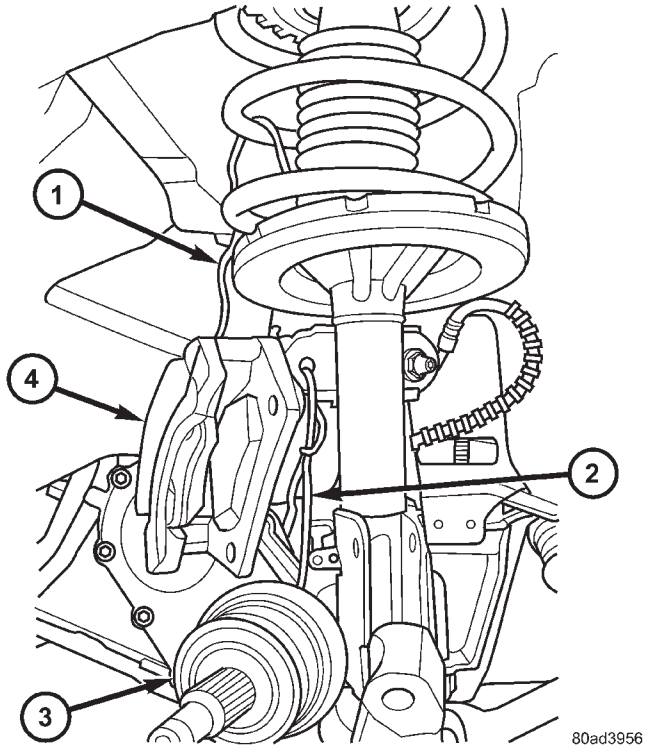

Fig. 10 Caliper And Driveshaft Suspended

1 - HANGER SUSPENDING CALIPER
2 - HANGER SUSPENDING DRIVESHAFT
3 - DRIVESHAFT
4 - BRAKE CALIPER

KNUCKLE (Continued)

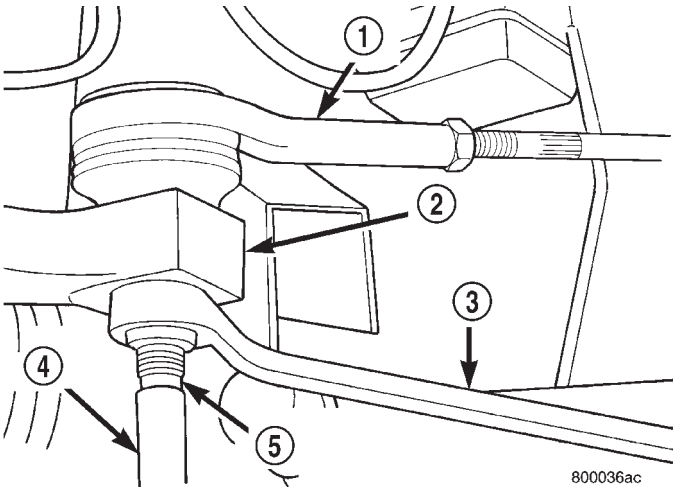

Fig. 11 Removing Tie Rod End Attaching Nut

1 - TIE ROD END
2 - STEERING KNUCKLE
3 - WRENCH
4 - SOCKET
5 - TIE ROD END STUD

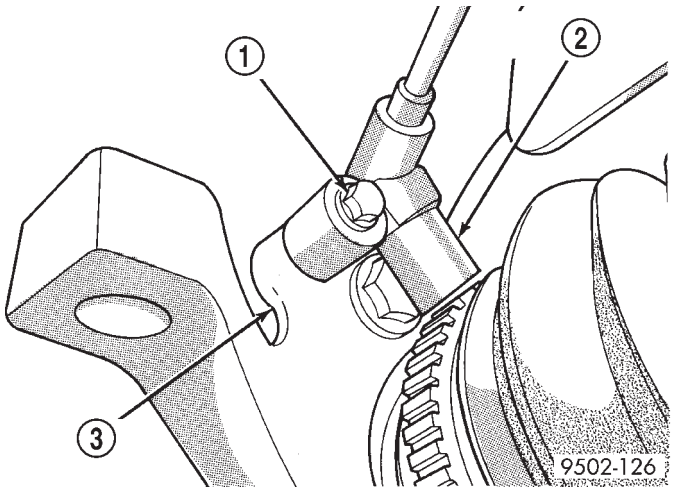

Fig. 13 Front Wheel Speed Sensor

1 - MOUNTING BOLT
2 - WHEEL SPEED SENSOR
3 - STEERING KNUCKLE

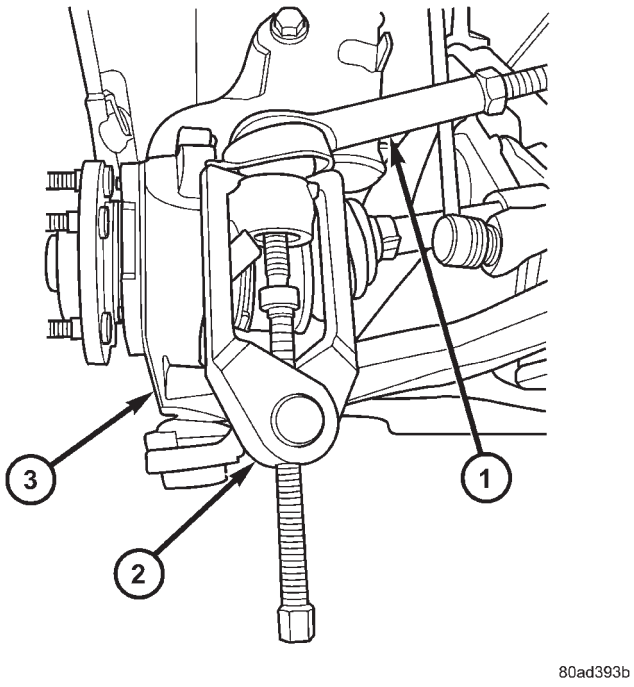

Fig. 12 Tie Rod Removal With Tool C-3894-A

1 - OUTER TIE ROD
2 - SPECIAL TOOL C-3894-A
3 - STEERING KNUCKLE

(11) Remove ball joint nut using a power impact wrench. Because the tapered stud is held sufficiently in the knuckle at this time, it is not necessary to hold the stud stationary to remove the nut.

(12) Reinstall the ball joint nut until the top of the nut is even with the top of the ball joint stud. This will keep the stud from distorting while the stud is released from the knuckle in the following step.

CAUTION: Do not remove ball joint stud from steering knuckle using a hammer. Damage to the Aluminum knuckle, ball joint or control arm will result.

(13) Release ball joint stud from steering knuckle using Remover, Special Tool C-4150A, as shown (Fig. 14). To ease Remover installation and use, it may help to rotate the knuckle around so the inside of the knuckle faces outward.

(14) Remove the nut from the top of the ball joint stud.

(15) Remove the steering knuckle from the vehicle.

(16) If the hub and bearing needs to be transferred, remove the four bolts attaching the hub and bearing to the knuckle, then remove the hub and bearing.

INSPECTION - STEERING KNUCKLE

Inspect the knuckle for the following:

- Cracks or breaks
- Dents or damage
- Stress marks indicating a bend

The front suspension knuckle is not a repairable component of the vehicles front suspension. If bent, broken or damaged in any way, do not attempt to straighten or repair the steering knuckle. It must be replaced.

KNUCKLE (Continued)

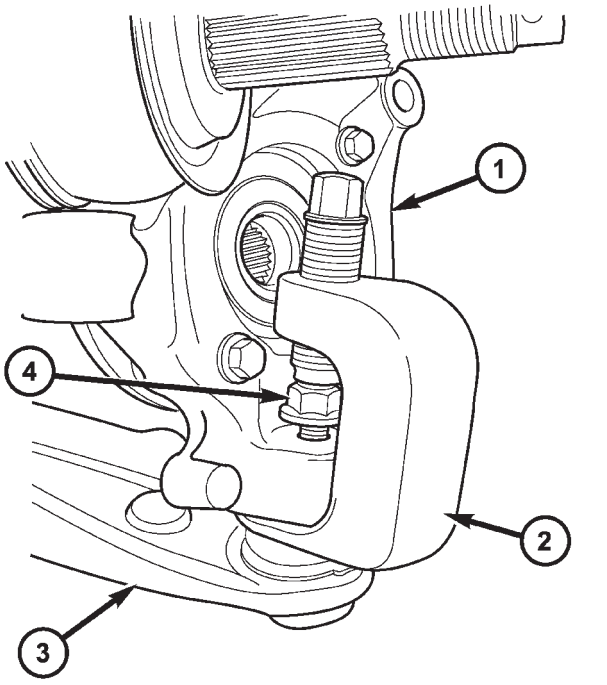

Fig. 14 Using C-4150A To Release Ball Joint

1 - ALUMINUM KNUCKLE
2 - SPECIAL TOOL C-4150A
3 - LOWER CONTROL ARM
4 - NUT INSTALLED ON BALL JOINT STEM

If inspection leads to the hub and bearing, (Refer to 2 - SUSPENSION/FRONT/HUB / BEARING - DIAGNOSIS AND TESTING)

INSTALLATION - STEERING KNUCKLE

(1) If the hub and bearing needs to be installed in the knuckle, place the hub and bearing squarely into the center hole of the steering knuckle aligning the threaded mounting holes of the hub and bearing with the mounting holes in the steering knuckle. Install the four mounting bolts and tighten them to a torque of 65 N·m (45 ft. lbs.).

CAUTION: Before installing the knuckle on the ball joint stud, wipe the ball joint stud and knuckle contact area free of any grease or debris, otherwise damage to the knuckle can occur. Use a clean shop cloth with Mopar® Brake Parts Cleaner applied to it for proper cleaning. Do not spray the stud directly.

(2) Place the knuckle on the ball joint stud.

(3) Install a NEW steering knuckle to ball joint stud nut. Tighten the nut by holding ball joint stud with hex wrench while turning nut with a wrench (Fig. 15). Using a crowsfoot wrench on a torque wrench, tighten the nut to a torque of 108 N·m (80 ft. lbs.).

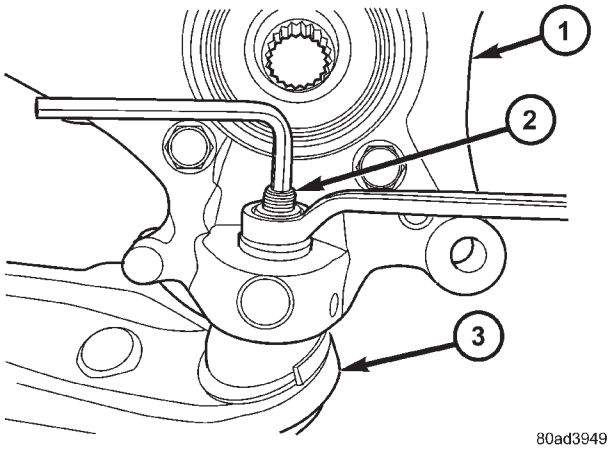

Fig. 15 Ball Joint Nut Installation

1 - KNUCKLE
2 - BALL JOINT STUD
3 - LOWER CONTROL ARM

(4) Slide driveshaft stub axle into hub and bearing assembly.

CAUTION: The steering knuckle to strut assembly attaching bolts are serrated and must not be turned during installation. Install nuts while holding bolts stationary in the steering knuckle.

CAUTION: If the vehicle being serviced is equipped with eccentric strut assembly attaching bolts, the eccentric bolt must be installed in the bottom (slotted) hole on the strut clevis bracket (Fig. 16).

NOTE: The strut clevis-to-steering knuckle bolts are installed differently on each side. Left hand side bolts are to be installed from vehicle rear to front. Right side bolts are to be installed from vehicle front to rear.

(5) Install steering knuckle in clevis bracket of strut damper assembly. Install the strut clevis-to-steering knuckle attaching bolts. Tighten both bolts to a torque of 81 N·m (60 ft. lbs.) plus an additional 1/4 (90°) turn.

(6) Install tie rod end into knuckle steering arm. Start nut onto stud of tie rod end. While holding stud of tie rod end stationary using a socket (Fig. 11), tighten tie rod end to steering knuckle attaching nut. Tighten the tie rod end nut to a torque of 75 N·m (55 ft. lbs.).

KNUCKLE (Continued)

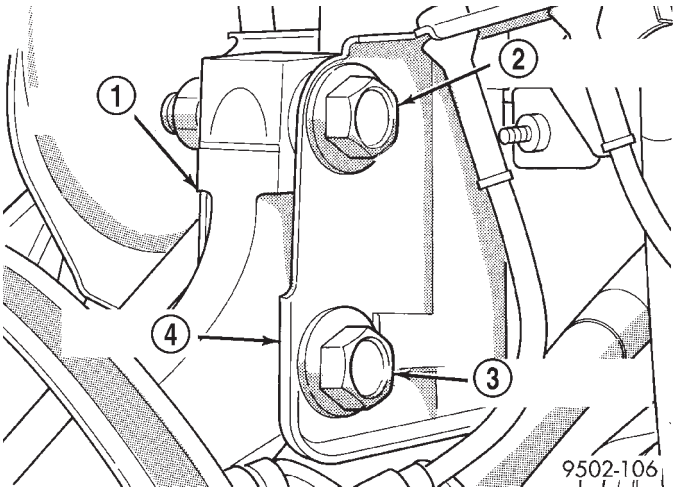

Fig. 16 Correctly Installed Eccentric Attaching Bolt

1 - STEERING KNUCKLE
2 - FLANGED BOLT IN TOP HOLE
3 - CAM BOLT IN BOTTOM HOLE
4 - STRUT CLEVIS BRACKET

(7) If equipped with antilock brakes, install wheel speed sensor and mounting bolt on steering knuckle (Fig. 13). Tighten the speed sensor bolt to a torque of 7 N·m (60 in. lbs.).

(8) Install brake rotor on hub and bearing (Fig. 9).

(9) Install disc brake caliper and adapter assembly on steering knuckle. Install adapter amounting bolts and tighten to 169 N·m (125 ft. lbs.).

(10) Clean any debris from the threads of the outer C/V joint stub axle.

(11) Install the washer and hub nut on stub axle.

(12) Have a helper apply the vehicle's brakes to keep hub from turning, then tighten hub nut to a torque of 244 N·m (180 ft. lbs.).

(13) Install the spring wave washer on the end of the stub axle.

(14) Install the hub nut lock, and a **new** cotter pin (Fig. 8). Wrap cotter pin prongs tightly around the hub nut lock.

(15) Install wheel and tire assembly. Install and tighten the wheel mounting nuts in proper sequence until all nuts are torqued to half the required specification. Then repeat the tightening sequence to the full specified torque of 135 N·m (100 ft. lbs.).

(16) Lower vehicle.

(17) Set front wheel alignment camber and toe as necessary. (Refer to 2 - SUSPENSION/WHEEL ALIGNMENT - STANDARD PROCEDURE)

LOWER BALL JOINT

DESCRIPTION

The ball joint is an integral part of the lower control arm (Fig. 1). The ball joint has a tapered stud that is pressed into the aluminum knuckle. The ball joint stud is threaded on the end for a retainer nut.

The ball joint has a non-vented seal boot. The seal boot has an integrated heat shield.

The ball joint used in the lower control arm of this vehicle is a sealed-for-life ball joint and requires no maintenance lubrication. The ball joint has been lubricated-for-life during the manufacturing process. A special fitting cap is installed on the fill port. This cap must not be removed and replaced with a common zirc fitting. The special cap is there to eliminate the possibility of lubrication latter during the ball joints life, thus damaging the non-vented seal boot.

NOTE: The ball joint does not require any type of additional lubrication for the life of the vehicle. No attempt should be made to ever add any lubrication to the lower ball joint.

OPERATION

The ball joint is a pivotal joint on the lower control arm that allows the knuckle to move up and down, and turn with ease.

DIAGNOSIS AND TESTING - LOWER BALL JOINT

With the weight of the vehicle resting on the road wheels, grasp the special fitting cap on the bottom of the ball joint and with no mechanical assistance or added force, attempt to rotate the grease fitting.

If the ball joint is worn, the grease fitting will rotate easily. If movement is noted, replacement of the control arm is recommended.

LOWER BALL JOINT SEAL BOOT

DESCRIPTION - EXPORT

The lower ball joint seal boot is a two piece unit. It consists of the seal boot, plus a separate shield that is located in a groove at the top of the seal boot.

NOTE: The seal boot should only be replaced if damaged during vehicle service. The entire lower control arm should be replaced if the joint has been contaminated.

LOWER BALL JOINT SEAL BOOT (Continued)

REMOVAL

REMOVAL - BALL JOINT SEAL BOOT

(1) Remove steering knuckle from vehicle. (Refer to 2 - SUSPENSION/FRONT/KNUCKLE - REMOVAL)

(2) Using a screw driver or other suitable tool, pry the seal boot off of the ball joint (Fig. 17)

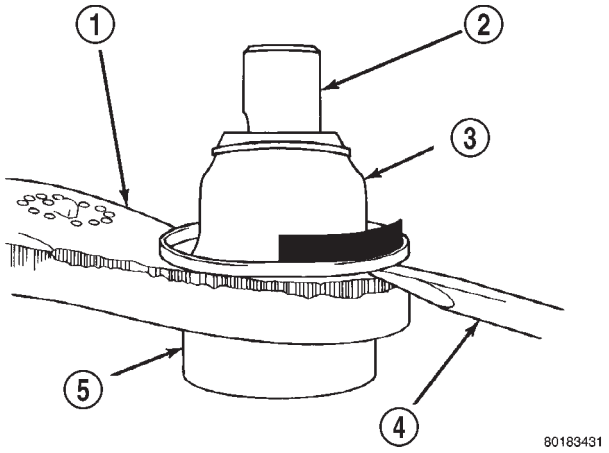

Fig. 17 Ball Joint Seal Boot Removal (Typical)

1 - LOWER CONTROL ARM
2 - BALL JOINT STUD
3 - SEAL BOOT
4 - SCREW DRIVER
5 - BALL JOINT ASSEMBLY

(3) Inspect the ball joint for evidence of dirt or water intrusion and wipe clean as necessary. If dirt or water intrusion is extreme and joint cannot be properly cleaned, the lower control arm will need to be replaced. (Refer to 2 - SUSPENSION/FRONT/LOWER CONTROL ARM - REMOVAL)

REMOVAL - EXPORT

(1) Remove steering knuckle from vehicle. (Refer to 2 - SUSPENSION/FRONT/KNUCKLE - REMOVAL)

(2) Remove shield from seal boot by gently pulling on it.

(3) Using a screw driver or other suitable tool, pry seal boot off lower ball joint.

INSTALLATION

INSTALLATION - BALL JOINT SEAL BOOT

(1) Place a liberal dab of Mopar® Wheel Bearing Grease around the base of the ball joint stem at the socket.

(2) Install a **NEW** seal boot by hand as far as possible on the ball joint. Installation of the seal boot is to be with the shield positioned as shown (Fig. 18).

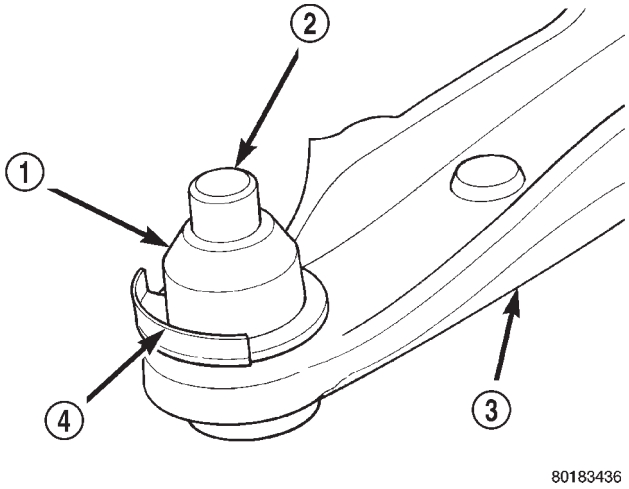

Fig. 18 Ball Joint Seal Boot Installed Position (Typical)

1 - BALL JOINT SEAL BOOT
2 - BALL JOINT STUD
3 - LOWER CONTROL ARM
4 - SHIELD

CAUTION: Do not use an arbor press to install the sealing boot on the ball joint. Damage to the sealing boot will occur if excessive pressure is applied to the sealing boot when it is being installed.

(3) Place Installer, Special Tool 6758, over seal boot and squarely align it with bottom edge of seal boot (Fig. 19). Apply hand pressure (or gently tap with a hammer) to Special Tool 6758 until seal boot is pressed squarely against top surface of lower control arm.

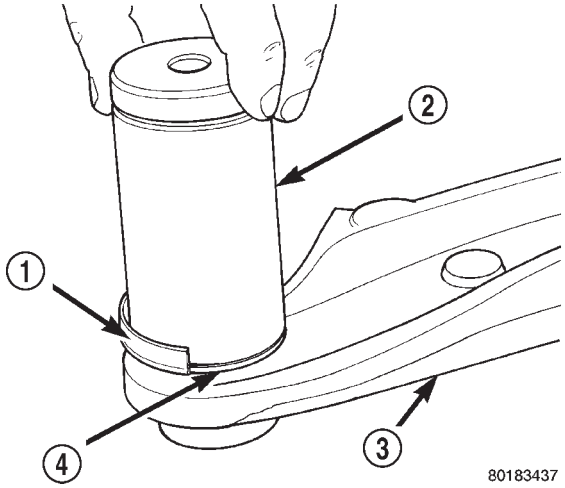

Fig. 19 Installing Ball Joint Seal Boot

1 - SHIELD
2 - SPECIAL TOOL 6758
3 - LOWER CONTROL ARM
4 - BALL JOINT SEAL BOOT

LOWER BALL JOINT SEAL BOOT (Continued)

(4) Wipe any grease off the ball joint stem using a clean shop towel with Mopar® Brake Parts Cleaner applied to it.

CAUTION: Do not attempt to install a normal grease zirc in the ball joint an lubricate the joint through the zirc fitting.

(5) Reinstall steering knuckle on vehicle. (Refer to 2 - SUSPENSION/FRONT/KNUCKLE - INSTALLATION)

INSTALLATION - EXPORT

(1) Place a liberal dab of Mopar® Wheel Bearing Grease around the base of the ball joint stem at the socket.

(2) Install a **NEW** seal boot by hand as far as possible on the ball joint.

CAUTION: Do not use an arbor press to install the sealing boot on the ball joint. Damage to the sealing boot will occur if excessive pressure is applied to the sealing boot when it is being installed.

(3) Place Installer, Special Tool 6758, over seal boot and squarely align it with bottom edge of seal boot (Fig. 20). Apply hand pressure to Special Tool 6758 until seal boot is pressed squarely against top surface of lower control arm.

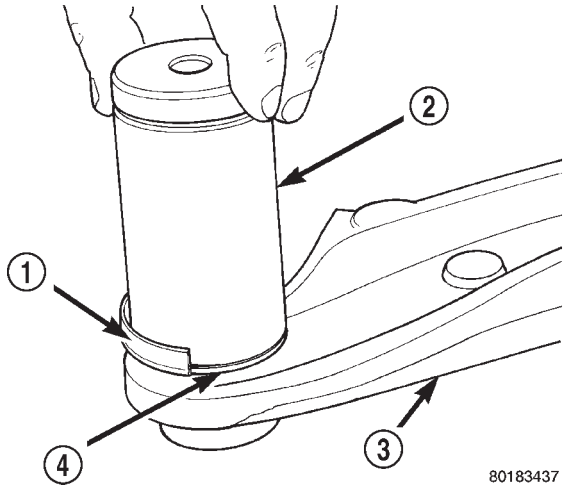

Fig. 20 Installing Ball Joint Seal Boot (Typical)

1 - SHIELD (NOT ON RG VEHICLE)
2 - SPECIAL TOOL 6758
3 - LOWER CONTROL ARM
4 - BALL JOINT SEAL BOOT

(4) Wipe any grease off the ball joint stem.

(5) Place the shield over the top of the seal boot and stretch it into the groove at the top of the seal boot.

CAUTION: Do not attempt to install a normal grease zirc in the ball joint and lubricate the joint through the zirc fitting.

(6) Reinstall steering knuckle on vehicle. (Refer to 2 - SUSPENSION/FRONT/KNUCKLE - INSTALLATION)

LOWER CONTROL ARM

DESCRIPTION

The lower control arm is mounted to the front suspension crossmember using a pivot bolt through the center of the front pivot bushing, and the front suspension cradle crossmember reinforcement traps the rear bushing in the crossmember (Fig. 1).

The lower control arm is an iron casting with two rubber bushings and a ball joint. The lower control arm front bushing is the spool type and is pressed into the lower control arm. The standard (Low-line) lower control arm rear bushing is a push-on bushing that is pushed over a stem on the rear of the lower control arm. The optional (High-line, Premium, Sport) lower control arm rear bushing is a hydro-bushing that is pressed on. It has liquid filled voids that provide more effective dampening than the standard bushing. Vehicles with rear hydro-bushings utilize a different lower control arm than vehicles with standard bushings. They have a straight slightly tapered round stem where the hydro-bushing is mounted whereas the standard arm has a straight stem with a squared knob on the end to retain the bushing.

The lower control arm ball joint is pressed into the outer end of the arm. The ball joint has a tapered stud and retainer nut for fastening it to the steering knuckle.

OPERATION

The lower control arm supports the lower end of the steering knuckle and allows for the up and down movement of the suspension during the jounce and rebound travel. The lower control arm ball joint connects the arm to the steering knuckle.

REMOVAL - LOWER CONTROL ARM

(1) Raise vehicle. (Refer to LUBRICATION & MAINTENANCE/HOISTING - STANDARD PROCEDURE)

(2) Remove wheel and tire assembly.

(3) Remove the steering knuckle. (Refer to 2 - SUSPENSION/FRONT/KNUCKLE - REMOVAL)

(4) Remove the bolts fastening the power steering cooler to the front suspension cradle crossmember reinforcement (Fig. 21).

LOWER CONTROL ARM (Continued)

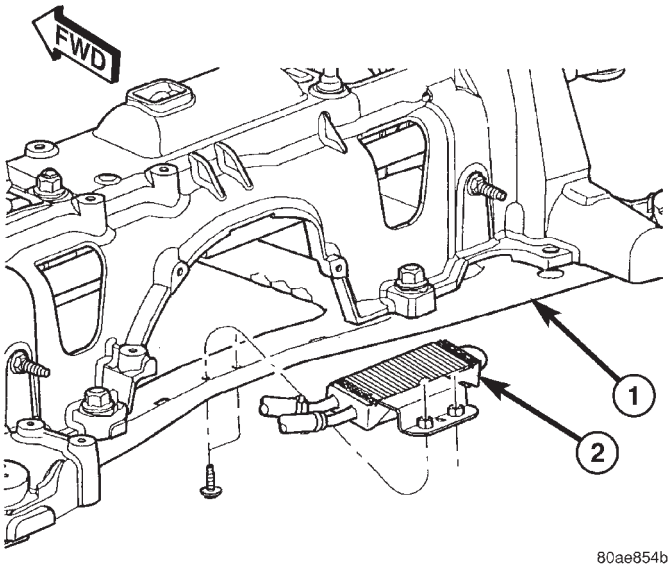

Fig. 21 Power Steering Cooler

1 - CRADLE CROSSMEMBER REINFORCEMENT
2 - POWER STEERING COOLER

(5) Remove the lower control arm rear bushing retainer bolts located on each side of each lower control arm rear bushing.

NOTE: The bolts fastening the cradle crossmember reinforcement are of three different thread sizes. Note the location of the various sizes.

(6) Remove the bolts attaching the cradle crossmember reinforcement to the front suspension cradle crossmember (Fig. 22). Remove the 2 bolts fastening the reinforcement and rear of cradle crossmember to the body of the vehicle. Remove the reinforcement.

(7) Remove the pivot bolt attaching the front bushing of the lower control arm to the front suspension cradle crossmember.

(8) Remove the lower control arm.

DISASSEMBLY

DISASSEMBLY - LOWER CONTROL ARM (REAR BUSHING - STANDARD)

(1) Remove the lower control arm from the front suspension cradle. (Refer to 2 - SUSPENSION/ FRONT/LOWER CONTROL ARM - REMOVAL)

(2) Mount the lower control arm in a vise **without** using excessive clamping force.

(3) Using a sharp knife (such as a razor), slit the bushing lengthwise (Fig. 23) to allow its removal from the lower control arm (Fig. 23).

(4) Remove the bushing from the lower control arm.

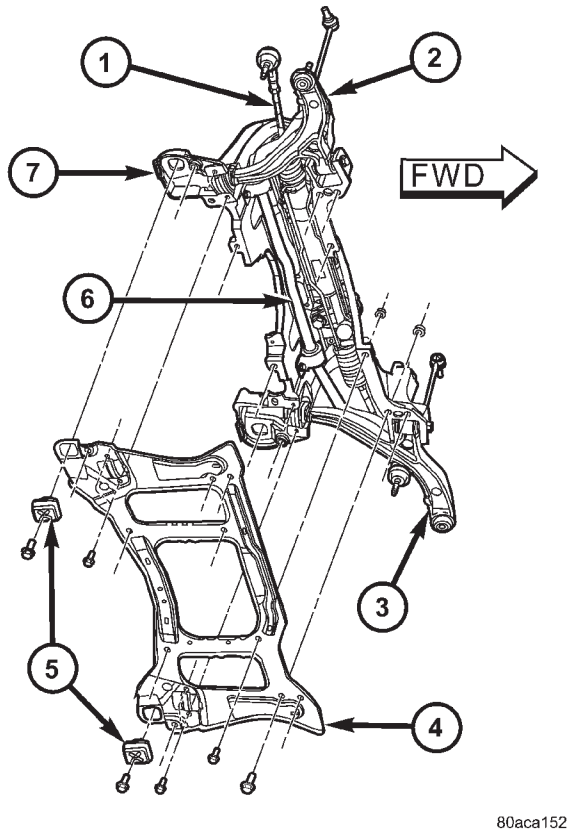

Fig. 22 Cradle Crossmember Reinforcement Attachment

1 - STEERING GEAR
2 - RIGHT LOWER CONTROL ARM
3 - LEFT LOWER CONTROL ARM
4 - CRADLE CROSSMEMBER REINFORCEMENT
5 - REAR CRADLE CROSSMEMBER ISOLATOR BUSHING
6 - STABILIZER BAR
7 - CRADLE CROSSMEMBER

DISASSEMBLY - LOWER CONTROL ARM (REAR BUSHING - HYDRO)

(1) Remove the lower control arm from the front suspension cradle. (Refer to 2 - SUSPENSION/ FRONT/LOWER CONTROL ARM - REMOVAL)

(2) Mount the lower control arm in a vise **without** using excessive clamping force.

(3) Install Remover, Special Tool 8460, on hydro-bushing as shown (Fig. 24). Removal Pin, Special Tool 8460–3, must extend though hole in center of bushing rear.

(4) Tighten forcing screw of Bridge (Special Tool 8460–1), removing bushing from lower control arm.

LOWER CONTROL ARM (Continued)

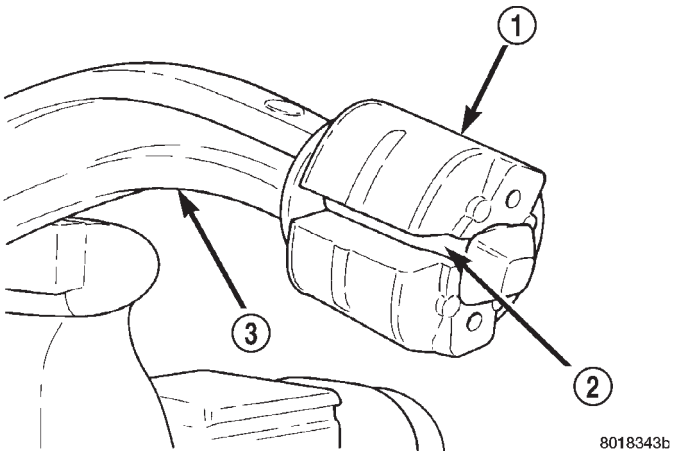

Fig. 23 Slit Lower Control Arm Rear Bushing

1 - REAR BUSHING
2 - SLIT CUT IN BUSHING
3 - LOWER CONTROL ARM

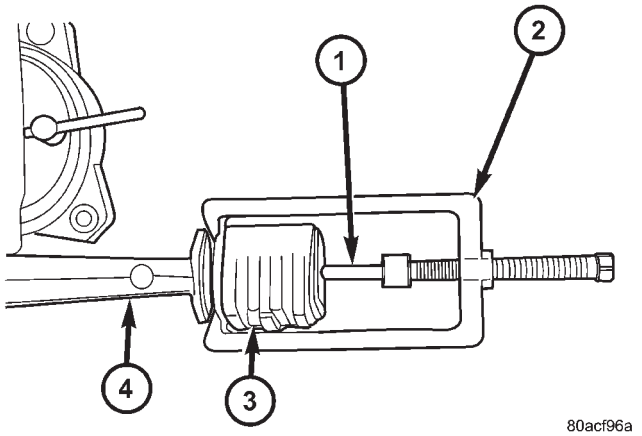

Fig. 24 HYDRO-BUSHING REMOVAL

1 - REMOVAL PIN (8460-3)
2 - BRIDGE (8460-1)
3 - HYDRO-BUSHING
4 - LOWER CONTROL ARM

INSPECTION - LOWER CONTROL ARM

Inspect lower control arm for signs of damage from contact with the ground or road debris. If lower control arm shows any sign of damage, inspect lower control arm for distortion. Do not attempt to repair or straighten a broken or bent lower control arm. If damaged, the lower control arm casting is serviced only as a complete component.

Inspect both lower control arm isolator bushings for severe deterioration, and replace as required. Inspect the rear hydro-bushing for seepage. Both type rear bushings are serviceable. If the front bushing fails, the lower control arm must be replaced.

Inspect and test the ball joint per the procedure listed in Lower Ball Joint. (Refer to 2 - SUSPENSION/FRONT/LOWER BALL JOINT - DIAGNOSIS AND TESTING)

ASSEMBLY

ASSEMBLY - LOWER CONTROL ARM (REAR BUSHING - STANDARD)

CAUTION: Do not apply grease or any other type of lubricant other than the silicone lubricant specified below to the control arm bushing.

(1) Apply Mopar Silicone Spray Lube or an equivalent, to the hole in lower control arm rear bushing. This will aid in the installation of the bushing on the lower control arm.

(2) With the lower control arm held securely in a vise, install bushing on lower control arm. Install bushing by pushing and rocking the bushing until it is fully installed on lower control arm. Be sure that when bushing is installed it is past the upset on the end of the lower control arm (Fig. 25).

(3) The rear bushing of the lower control arm, when correctly installed, is to be positioned on the lower control arm as shown (Fig. 25).

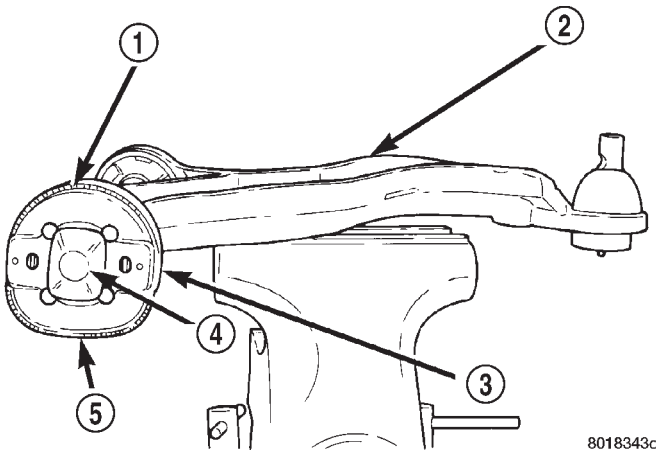

Fig. 25 Correctly Installed Lower Control Arm Bushing

1 - ROUND SURFACE OF BUSHING
2 - LOWER CONTROL ARM
3 - LOWER CONTROL ARM REAR BUSHING
4 - UPSET
5 - FLAT SURFACE OF BUSHING

(4) Install lower control arm on vehicle. (Refer to 2 - SUSPENSION/FRONT/LOWER CONTROL ARM - INSTALLATION)

LOWER CONTROL ARM (Continued)

ASSEMBLY - LOWER CONTROL ARM (REAR BUSHING - HYDRO)

CAUTION: Do not apply grease or any other type of lubricant to the arm stem where the bushing is to be mounted. Such action will reduce proper bushing adhesion to arm.

(1) Secure lower control arm in a vise.

NOTE: Hydro bushings and grooves on control arm stems are unique for right and left sides. Left side bushing master spline and control arm groove are on the top (when mounted on vehicle). Right side bushing master spline and control arm groove are on the bottom (when mounted on vehicle).

(2) Align master spline on bushing inner sleeve with groove on lower control arm rear bushing stem (Fig. 26). Start bushing on stem by hand.

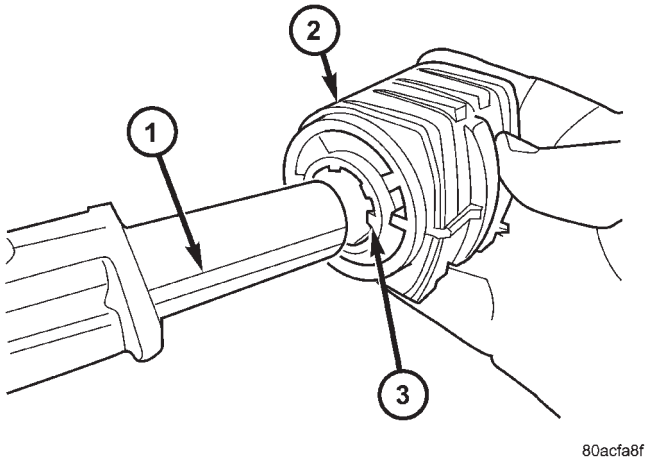

Fig. 26 BUSHING MASTER SPLINE LINED UP WITH GROOVE (RIGHT SIDE SHOWN)

1 - GROOVE
2 - HYDRO-BUSHING
3 - MASTER SPLINE

(3) Install Remover/Installer, Special Tool 8460, over bushing and lower control arm as shown (Fig. 27). Engage flange on lower control arm with tips of Bridge, Special Tool 8460–1 as shown (Fig. 27). The contoured side of Installer Cup, Special Tool 8460–2, should be fitted up against rear of the bushing.

(4) Begin to tighten forcing screw. As bushing nears lower control arm flange, place Spacer Plate, Special Tool 8460–4 between flange and bushing inner sleeve, straddling the stem as shown (Fig. 28).

(5) Install bushing up against Spacer Plate, tightening the bridge forcing screw with a torque wrench until approximately 50 N·m (37 ft. lbs.) torque is reached. This will properly space bushing on the stem in relation to the flange.

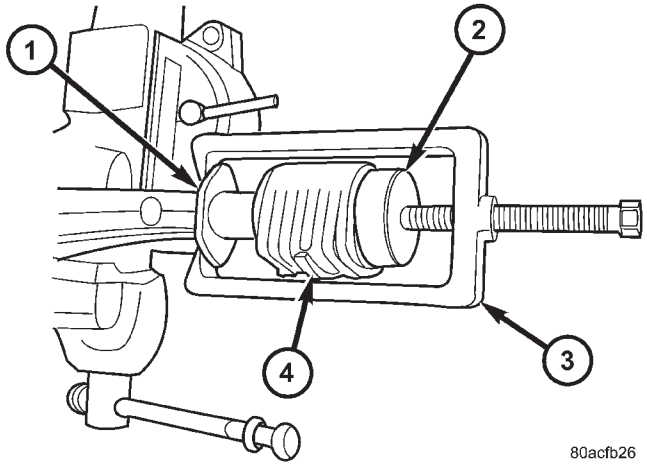

Fig. 27 HYDRO-BUSHING INSTALLATION

1 - LOWER CONTROL ARM FLANGE
2 - INSTALLER CUP (8460-2)
3 - BRIDGE (8460-1)
4 - HYDRO-BUSHING

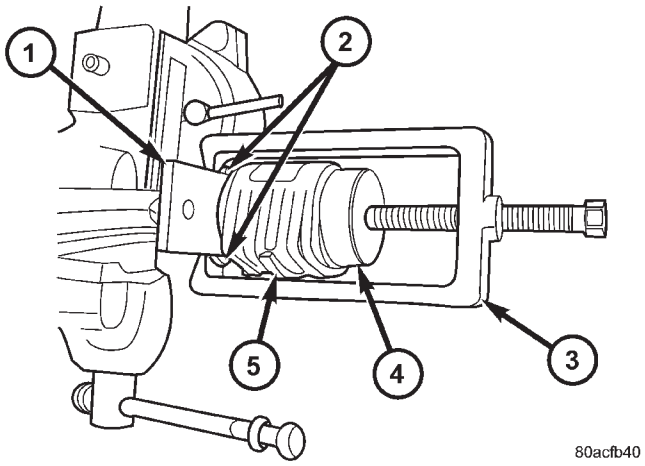

Fig. 28 SPACER PLATE POSITIONED

1 - SPACER PLATE (8460-4)
2 - LOWER CONTROL ARM FLANGE
3 - BRIDGE (8460-1)
4 - INSTALLER CUP (8460-2)
5 - HYDRO-BUSHING

(6) Back off the forcing screw and remove tool.

(7) Install lower control arm on vehicle. (Refer to 2 - SUSPENSION/FRONT/LOWER CONTROL ARM - INSTALLATION)

INSTALLATION - LOWER CONTROL ARM

(1) Position lower control arm assembly into front suspension cradle crossmember guiding bushings into mounting position (Fig. 22).

LOWER CONTROL ARM (Continued)

(2) Install NEW pivot bolt attaching front bushing of lower control arm to front suspension cradle crossmember (Fig. 29). **Do not tighten or torque pivot bolt at this time.**

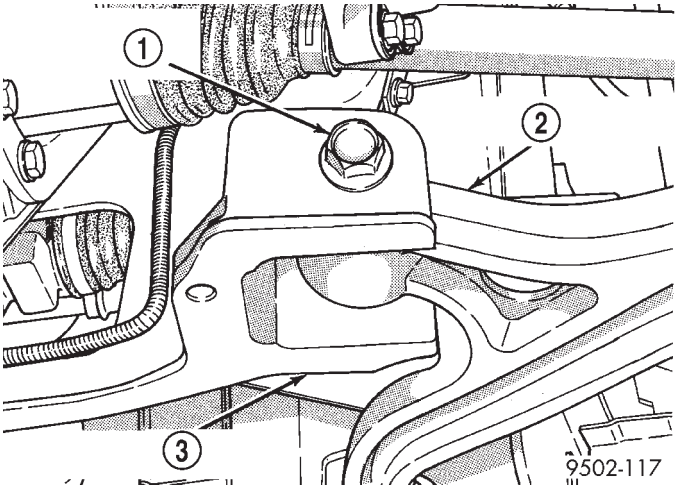

Fig. 29 Lower Control Arm Bushing Pivot Bolt Correctly Installed

1 - PIVOT BOLT
2 - LOWER CONTROL ARM
3 - FRONT SUSPENSION CRADLE CROSSMEMBER

(3) Install the reinforcement on the front suspension cradle crossmember and install the bolts attaching the reinforcement to the cradle crossmember (Fig. 22). Tighten the M-14 size bolts to a torque of 153 N·m (113 ft. lbs.). Tighten the M-12 size bolts to a torque of 106 N·m (78 ft. lbs.).

(4) Install the lower control arm rear bushing retainer bolts through reinforcement on each side of each lower control arm rear bushing. Tighten these M-10 size bolts to a torque of 61 N·m (45 ft. lbs.).

(5) Install the two bolts and bushings attaching the reinforcement and rear of cradle crossmember to body of vehicle (Fig. 22). Tighten bolts to a torque of 163 N·m (120 ft. lbs.).

(6) Install the power steering cooler (Fig. 21). Tighten bolts to a torque of 11 N·m (100 in. lbs.).

(7) Reinstall steering knuckle, brake rotor and caliper. (Refer to 2 - SUSPENSION/FRONT/KNUCKLE - INSTALLATION)

CAUTION: When locating jack stands under lower control arms, do not place the jack stands under the ball joints (Fig. 30).

(8) Position jack stands under the lower control arms as close to the ball joints as possible (Fig. 30). Lower the vehicle onto the jack stands until the jack stands are supporting the total weight of the vehicle.

(9) Tighten front lower control arm pivot bolt to a torque of 183 N·m (135 ft. lbs.).

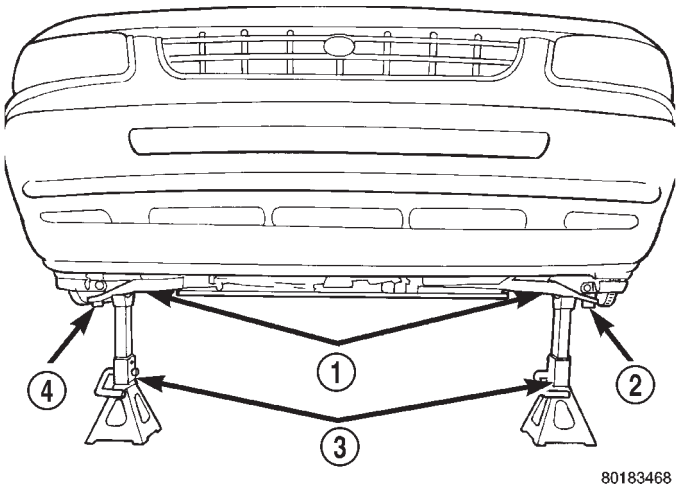

Fig. 30 Jack Stands Supporting Vehicle Weight

1 - LOWER CONTROL ARMS
2 - BALL JOINT
3 - JACK STANDS
4 - BALL JOINT

(10) Install the wheel and tire assembly. Install and tighten the wheel mounting stud nuts in proper sequence until all nuts are torqued to half specification. Then repeat the tightening sequence to the full specified torque of 135 N·m (100 ft. lbs.).

(11) Raise vehicle, remove jack stands and lower vehicle to the ground.

(12) Perform front wheel alignment as necessary. (Refer to 2 - SUSPENSION/WHEEL ALIGNMENT - STANDARD PROCEDURE)

STABILIZER BAR

DESCRIPTION

The stabilizer bar interconnects both front struts of the vehicle and is attached to the front crossmember (Fig. 1) .

Attachment of the stabilizer bar to the front crossmember is through 2 rubber-isolator cushion bushings and retainers. A double ball jointed stabilizer bar link is used to attach each end of the stabilizer bar to the front strut assemblies. All parts of the stabilizer bar are replaceable as individual components.

The stabilizer bar to front crossmember cushion bushings are split for easy removal and installation. The split in the bushings should be positioned toward the rear of the vehicle, with the square corner facing down, when the stabilizer bar is installed.

OPERATION

Jounce and rebound movements affecting one wheel are partially transmitted to the opposite wheel of the vehicle through the stabilizer bar. This helps

STABILIZER BAR (Continued)

to minimize the body roll of the vehicle during suspension movement.

Connecting the stabilizer bar links to the strut assemblies helps reduce the fore-and-aft rate of the stabilizer bar from the rest of the front suspension.

REMOVAL

(1) Raise vehicle. (Refer to LUBRICATION & MAINTENANCE/HOISTING - STANDARD PROCEDURE)

(2) Remove the bolts fastening the power steering cooler to the front suspension cradle crossmember reinforcement (Fig. 31).

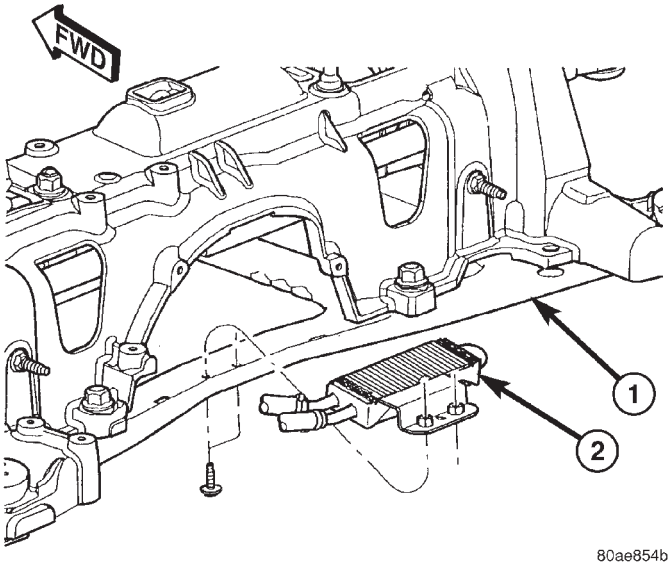

Fig. 31 Power Steering Cooler

1 - CRADLE CROSSMEMBER REINFORCEMENT
2 - POWER STEERING COOLER

(3) Remove the lower control arm rear bushing retainer bolts located on each side of each lower control arm rear bushing.

NOTE: The bolts fastening the cradle crossmember reinforcement are of two different thread sizes. Note the location of the various sizes.

(4) Remove the bolts attaching the cradle crossmember reinforcement to the front suspension cradle crossmember (Fig. 32). Remove the 2 bolts fastening the reinforcement and rear of cradle crossmember to the body of the vehicle. Remove the reinforcement.

CAUTION: When removing the nut from the stud of the stabilizer bar link, do not allow the stud to rotate in it's socket. Hold the stud from rotating by placing an open-end wrench on the flat machined into the stud (Fig. 33).

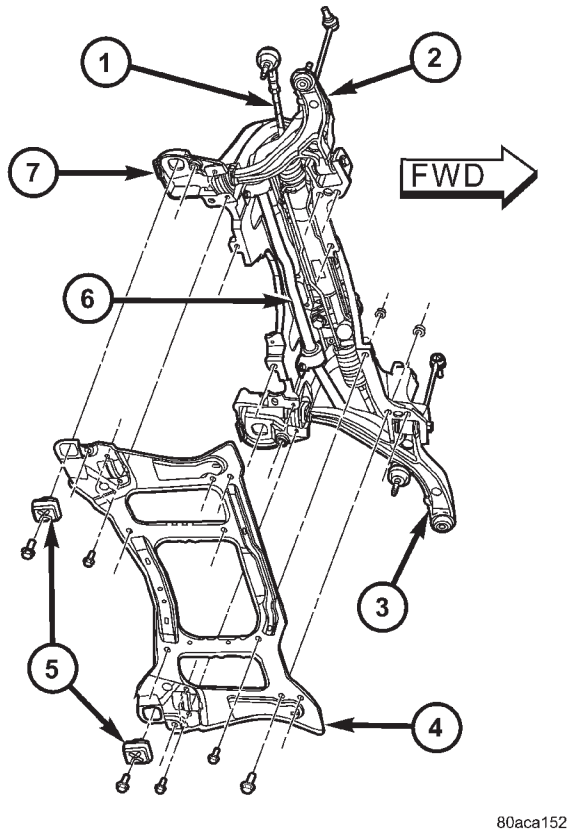

Fig. 32 Cradle Crossmember Reinforcement Attachment

1 - STEERING GEAR
2 - RIGHT LOWER CONTROL ARM
3 - LEFT LOWER CONTROL ARM
4 - CRADLE CROSSMEMBER REINFORCEMENT
5 - REAR CRADLE CROSSMEMBER ISOLATOR BUSHING
6 - STABILIZER BAR
7 - CRADLE CROSSMEMBER

(5) Remove the stabilizer bar links from each end of the stabilizer bar (Fig. 33). To do so, place an open-end wrench on the flat machined into the link's mounting stud, then remove the nut while holding the wrench in place. Push each stud out of the hole in the stabilizer bar.

(6) Remove the stabilizer bar bushing (cushion) retainers from the front suspension cradle crossmember (Fig. 34).

(7) Remove the stabilizer bar and bushings (cushions) as an assembly from the front suspension cradle crossmember.

INSPECTION

Inspect for broken or distorted stabilizer bar bushings (cushions), bushing retainers, and worn or damaged stabilizer bar links.

STABILIZER BAR (Continued)

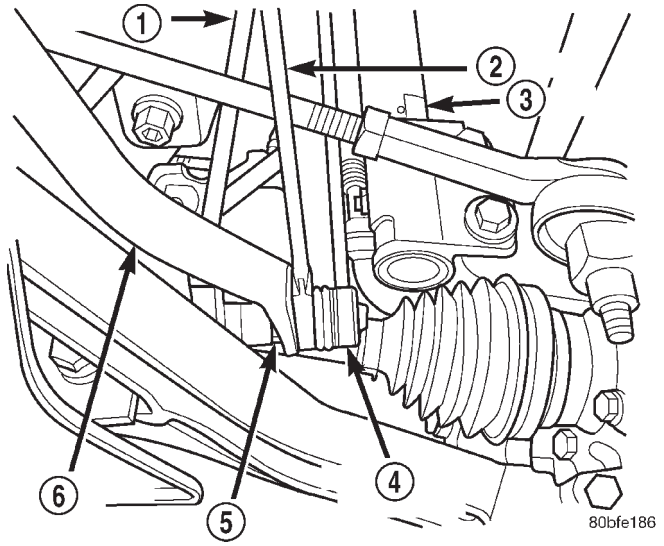

Fig. 33 Stabilizer Bar Link To Stabilizer Bar Attachment

1 - RATCHET
2 - WRENCH
3 - STRUT
4 - STABILIZER BAR LINK
5 - NUT
6 - STABILIZER BAR

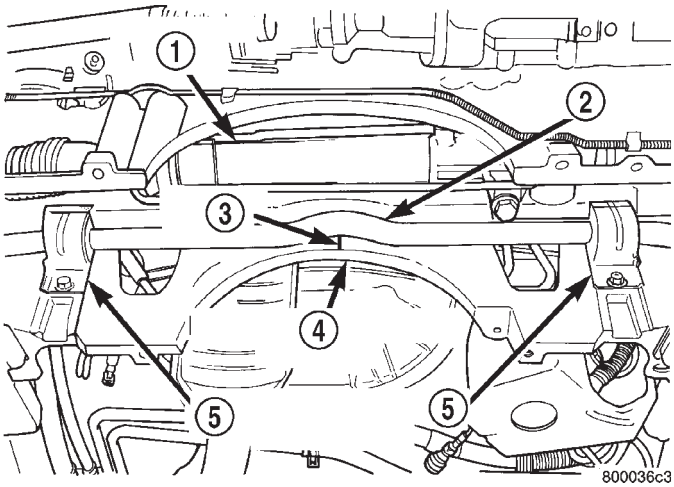

Fig. 34 Front Stabilizer Bar Retainers

1 - STEERING GEAR
2 - STABILIZER BAR
3 - RAISED BEAD
4 - FRONT CRADLE CROSSMEMBER
5 - RETAINERS

INSTALLATION

NOTE: Two different diameter stabilizer bars are available for this vehicle. Therefore, two different size bushings/cushions are also used. Use the correct bushing/cushion on the correct stabilizer bar.

(1) If the stabilizer bar to front suspension cradle bushings require replacement at time of inspection, install new bushings before installing stabilizer bar. Bushings are replaced by opening slit on bushings and peeling them off stabilizer bar. Install new bushings on stabilizer bar by spreading bushing at slit and forcing them on the stabilizer bar. **Bushings must be installed on stabilizer bar so slit in bushing will be facing toward the rear of vehicle with the square corner toward the ground, when the stabilizer bar is installed on the vehicle (Fig. 35).**

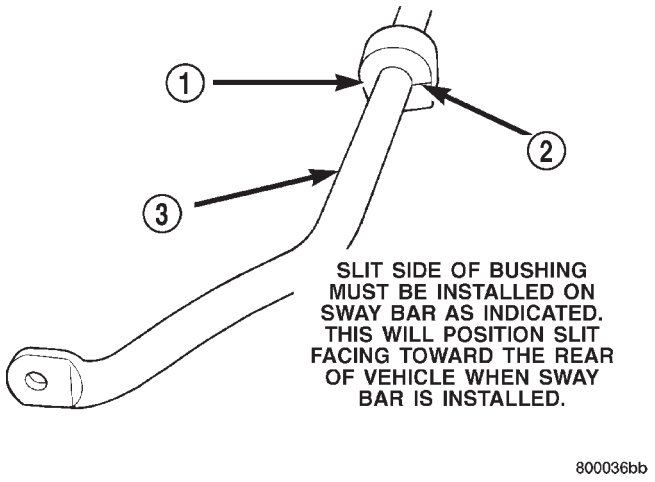

Fig. 35 Correctly Installed Stabilizer Bar To Cradle Bushing

1 - SWAY BAR ISOLATOR BUSHING
2 - SLIT IN SWAY BAR BUSHING
3 - SWAY BAR

(2) Position stabilizer bar into front suspension cradle so stabilizer bar bushings are aligned with depressions in cradle. Install stabilizer bar bushing retainers onto crossmember aligning raised bead on retainer with cutouts in bushings (Fig. 36). **Do not tighten Stabilizer bar bushing retainers bolts at this time.**

(3) Check position of the stabilizer bar in the front suspension cradle. The center of the curved section of the stabilizer bar must be aligned with the raised line in the center of the front suspension cradle (Fig. 37).

(4) Install the stabilizer bar link mounting stud through the hole in each end of the stabilizer bar (Fig. 33).

CAUTION: When installing the nut on the mounting stud of the stabilizer bar link, do not allow the stud to rotate in it's socket. Hold the stud from rotating by placing an open-end wrench on the flat machined into the stud (Fig. 33).

STABILIZER BAR (Continued)

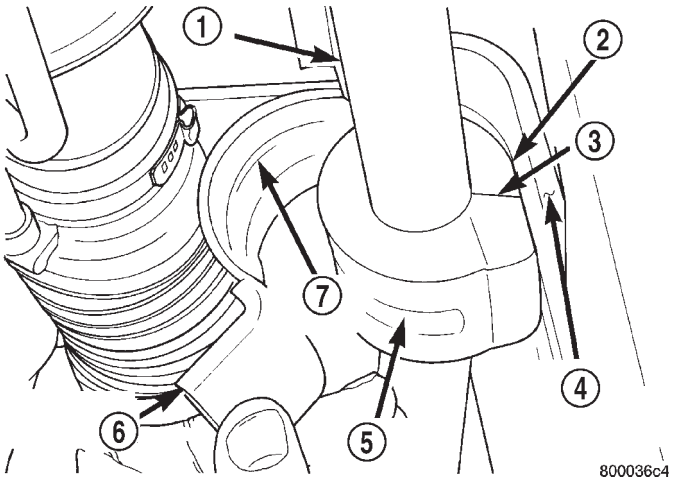

Fig. 36 Stabilizer Bar Bushing Retainer Installation

1 - SWAY BAR
2 - SWAY BAR BUSHING
3 - BUSHING SPLIT
4 - FRONT SUSPENSION CRADLE
5 - BUSHING CUT-OUT
6 - BUSHING RETAINER
7 - RAISED BEAD

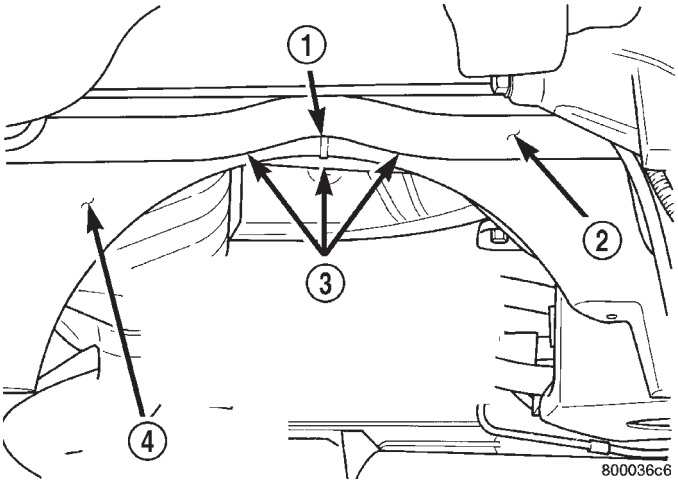

Fig. 37 Stabilizer Bar Correctly Positioned In Cradle

1 - RAISED BEAD
2 - SWAY BAR
3 - WHEN INSTALLING SWAY BAR THE RAISED BEAD ON THE SUSPENSION CRADLE MUST BE IN THE CENTER OF RADIUS IN SWAY BAR
4 - FRONT SUSPENSION CRADLE

(5) Hand-thread the nut on the end of each stabilizer bar link stud. Hold the studs from turning by placing an open-end wrench on the flat machined into the link's mounting stud, then tighten each nut while holding the wrench in place (Fig. 33). Tighten each nut to a torque of 88 N·m (65 ft. lbs.).

(6) Tighten the stabilizer bar bushing retainer to cradle attaching bolts (Fig. 34) to 68 N·m (50 ft. lbs.) torque.

(7) Install the reinforcement on the front suspension cradle crossmember and install the bolts attaching the reinforcement to the cradle crossmember (Fig. 32). Tighten the M-14 size bolts to a torque of 153 N·m (113 ft. lbs.). Tighten the M-12 size bolts to a torque of 106 N·m (78 ft. lbs.).

(8) Install the lower control arm rear bushing retainer bolts through reinforcement on each side of each lower control arm rear bushing. Tighten these M-10 size bolts to a torque of 61 N·m (45 ft. lbs.).

(9) Install the two bolts and bushings attaching the reinforcement and rear of cradle crossmember to body of vehicle (Fig. 32). Tighten bolts to a torque of 163 N·m (120 ft. lbs.).

(10) Install the power steering cooler (Fig. 31). Tighten bolts to a torque of 11 N·m (100 in. lbs.).

(11) Lower the vehicle.

STRUT

DESCRIPTION - STRUT ASSEMBLY

A Macpherson type strut assembly is used in place of a conventional front suspension's upper control arm and upper ball joint. The bottom of the strut mounts directly to the steering knuckle using two bolts and nuts going through the strut clevis bracket and steering knuckle. The top of the strut mounts directly to the strut tower of the vehicle using the threaded studs on the strut assemblies upper mount.

The strut assembly includes the components listed in the figure (Fig. 38).

Each component is serviced by removing the strut assembly from the vehicle and disassembling it.

The coil springs are side-oriented. Springs on the left side of the vehicle have a left-hand wind top-to-bottom while springs on the right side have a right-hand wind top-to-bottom. This helps provide better vehicle stability during jounce and rebound maneuvers of the front suspension. Left and right springs must not be interchanged. Coil springs are rated separately for each corner or side of the vehicle depending on optional equipment and type of vehicle service. If the coil springs require replacement, be sure that the springs are replaced with springs meeting the correct load rating and spring rate for the vehicle and its specific options.

OPERATION - STRUT ASSEMBLY

The strut assembly cushions the ride of the vehicle, controlling vibration, along with jounce and rebound of the suspension.

STRUT (Continued)

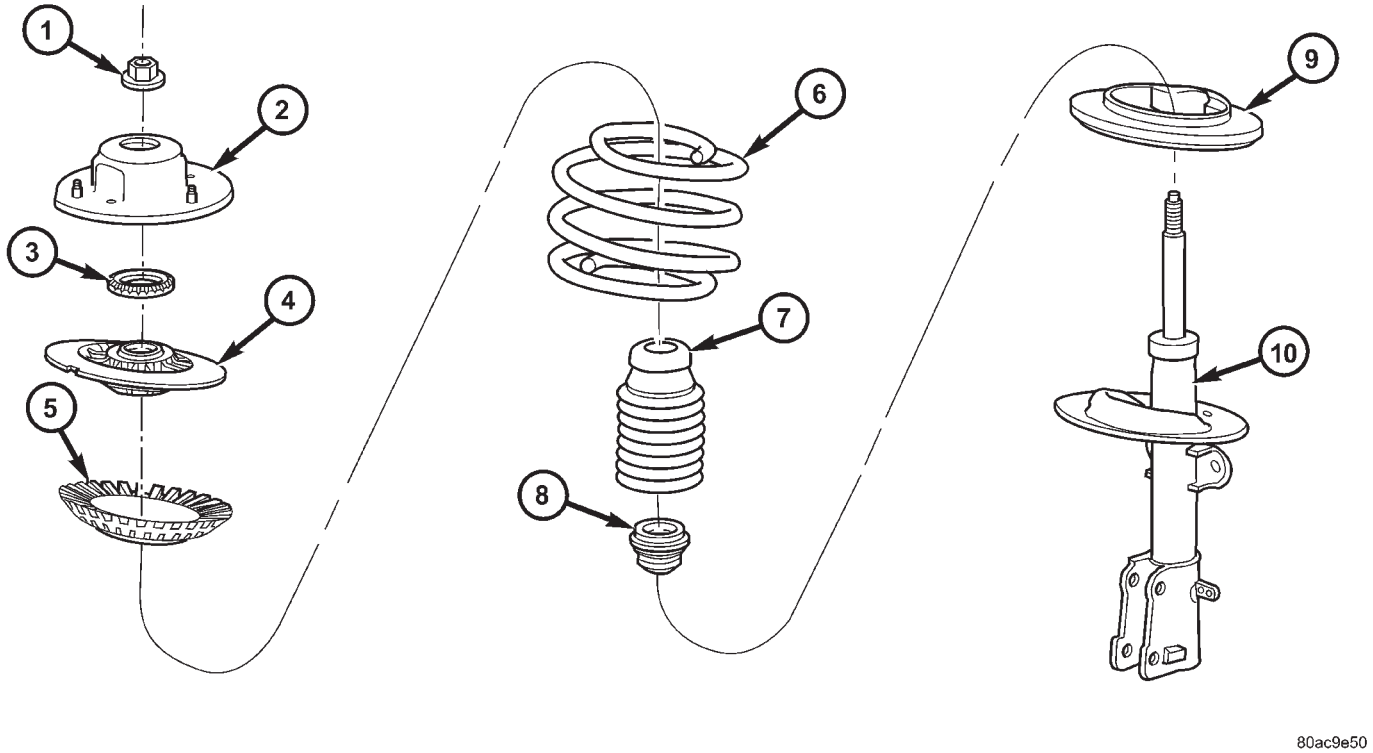

Fig. 38 STRUT ASSEMBLY

1 - NUT	6 - COIL SPRING
2 - UPPER MOUNT	7 - DUST SHIELD
3 - PIVOT BEARING	8 - JOUNCE BUMPER
4 - UPPER SPRING SEAT	9 - LOWER SPRING ISOLATOR
5 - UPPER SPRING ISOLATOR	10 - STRUT (DAMPER)

The coil spring controls ride quality and maintains proper ride height.

The spring isolators isolate the coil spring at the top and bottom from coming into metal-to-metal contact with the upper seat and strut.

The jounce bumper limits suspension travel and metal-to-metal contact under full jounce condition.

The strut dampens jounce and rebound motions of the coil spring and suspension.

During steering maneuvers, the strut assembly (through a pivot bearing in the upper strut mount) and steering knuckle (through the lower ball joint) turn as an assembly.

DIAGNOSIS AND TESTING - STRUT ASSEMBLY

(1) Inspect for damaged or broken coil springs (Fig. 38).

(2) Inspect for torn or damaged strut assembly dust boots (Fig. 38).

(3) Inspect the coil spring isolator on the lower spring seat for any signs of damage or deterioration.

(4) Lift dust boot (Fig. 39) and inspect strut assembly for evidence of fluid running from the upper end of fluid reservoir. (Actual leakage will be a stream of fluid running down the side and dripping off lower end of unit). A slight amount of seepage between the strut rod and strut shaft seal is not unusual and does not affect performance of the strut assembly (Fig. 39). Also inspect jounce bumpers for signs of damage or deterioration.

REMOVAL - STRUT ASSEMBLY

WARNING: DO NOT REMOVE THE NUT FROM THE STRUT ROD WHILE STRUT ASSEMBLY IS INSTALLED IN VEHICLE, OR BEFORE STRUT ASSEMBLY SPRING IS COMPRESSED.

(1) Raise the vehicle. See Hoisting in Lubrication and Maintenance.

(2) Remove the wheel and tire assembly from location on front of vehicle requiring strut removal.

(3) If both strut assemblies are to be removed, mark the strut assemblies right or left according to which side of the vehicle they were removed from.

(4) Remove the hydraulic brake hose routing bracket and the speed sensor cable routing bracket from the strut damper brackets (Fig. 40).

STRUT (Continued)

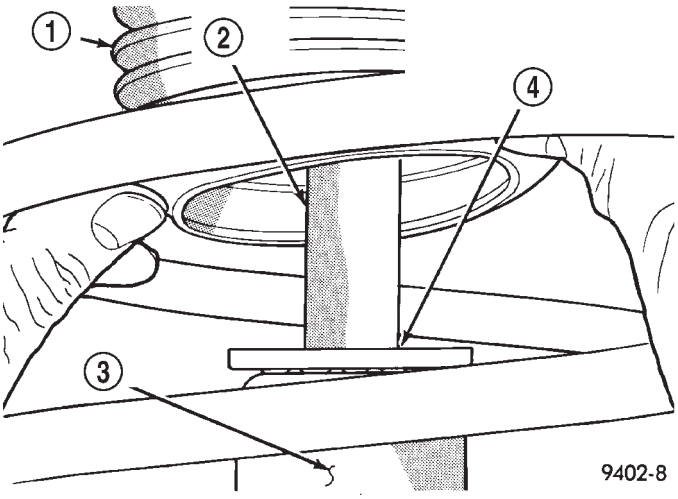

Fig. 39 Strut Assembly Leakage Inspection (Typical)

1 - DUST BOOT
2 - STRUT SHAFT
3 - STRUT FLUID RESERVOIR
4 - INSPECT THIS AREA FOR EVIDENCE OF EXCESSIVE FLUID LEAKAGE

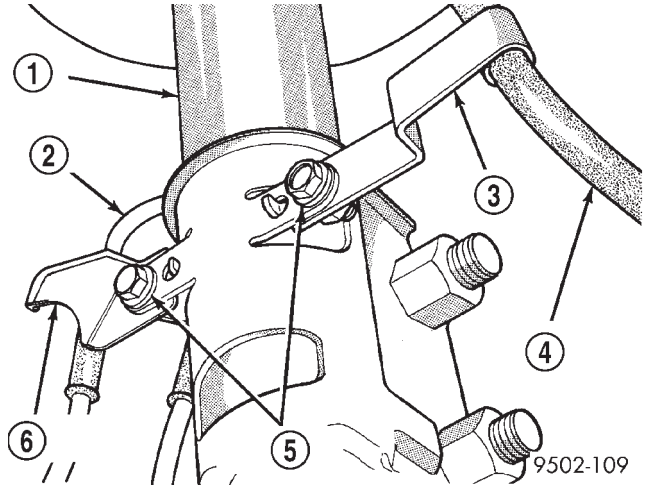

Fig. 40 Brake Hose And Speed Sensor Cable Routing

1 - STRUT DAMPER
2 - WHEEL SPEED SENSOR CABLE
3 - ROUTING BRACKET
4 - HYDRAULIC BRAKE HOSE
5 - ATTACHING BOLT
6 - ROUTING BRACKET

CAUTION: When removing the nut from the stud of the stabilizer bar link, do not allow the stud to rotate in it's socket. Hold the stud from rotating by placing an open-end wrench on the flat machined into the stud (Fig. 41).

(5) Remove the stabilizer bar link from the bracket on the strut assembly (Fig. 41). To do so, place an open-end wrench on the flat machined into the link's mounting stud, then remove the nut while holding the wrench in place. Push the stud out of the bracket.

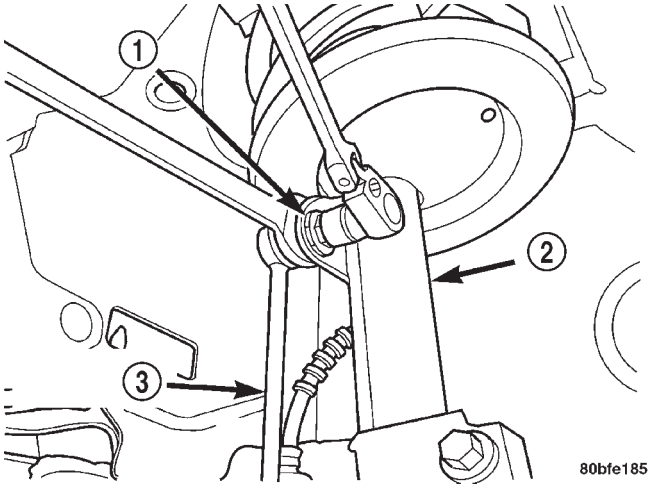

Fig. 41 Stabilizer Bar Link To Strut Attachment

1 - NUT
2 - STRUT
3 - STABILIZER BAR LINK

CAUTION: The steering knuckle to strut assembly attaching bolts are serrated and must not be turned during removal. Remove nuts while holding bolts stationary in the steering knuckles.

(6) Remove the 2 strut assembly clevis bracket to steering knuckle attaching bolts (Fig. 42).

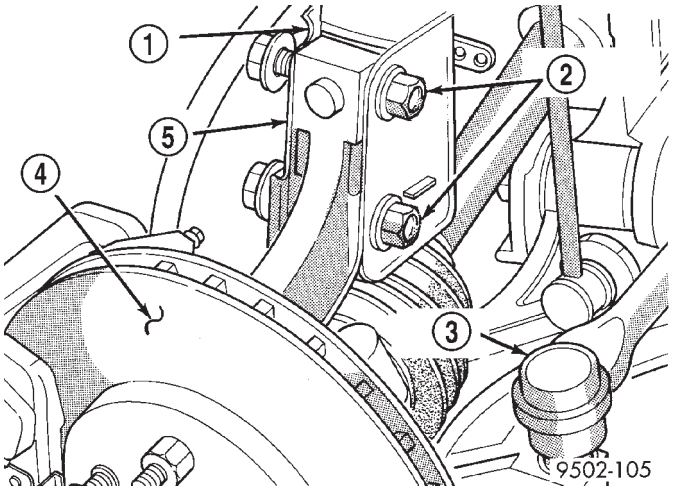

Fig. 42 Strut Damper Attachment To Steering Knuckle

1 - STRUT CLEVIS BRACKET
2 - ATTACHING BOLTS
3 - TIE ROD END
4 - ROTOR
5 - STEERING KNUCKLE

STRUT (Continued)

(7) Remove the 3 nuts attaching the strut assembly upper mount to the strut tower (Fig. 43) and remove the strut assembly from the vehicle.

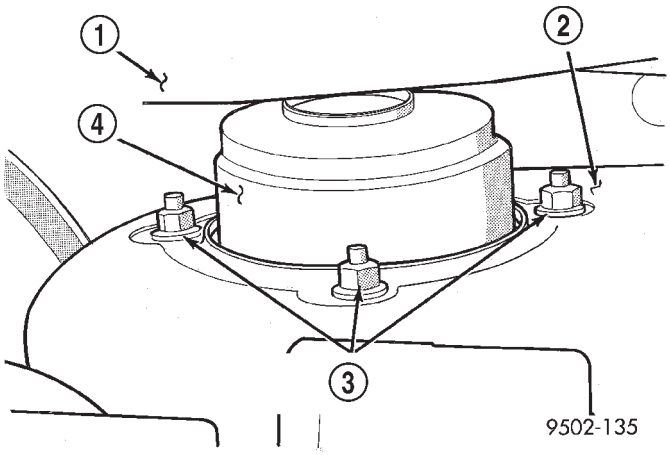

Fig. 43 Strut Assembly To Strut Tower Attaching Nuts (Typical)

1 - WINDSHIELD WIPER MODULE
2 - STRUT TOWER
3 - STRUT MOUNT ATTACHING BOLTS
4 - UPPER STRUT MOUNT

(8) To disassemble the strut assembly, (Refer to 2 - SUSPENSION/FRONT/STRUT - DISASSEMBLY).

DISASSEMBLY - STRUT ASSEMBLY

The strut assembly must be removed from the vehicle for it to be disassembled and assembled.

For the disassembly and assembly of the strut assembly, use of Strut Spring Compressor, Pentastar Service Equipment (PSE) tool W-7200, or the equivalent, is recommended to compress the coil spring. Follow the manufacturer's instructions closely.

WARNING: DO NOT REMOVE THE STRUT SHAFT NUT BEFORE THE COIL SPRING IS COMPRESSED. THE COIL SPRING IS HELD UNDER PRESSURE AND MUST BE COMPRESSED, REMOVING SPRING TENSION FROM THE UPPER MOUNT AND PIVOT BEARING, BEFORE THE SHAFT NUT IS REMOVED.

(1) Position the strut assembly in the strut coil spring compressor following the manufacturers instructions. Position the lower hooks on the coil spring first. The strut clevis bracket should be positioned straight outward from the compressor.

(2) Turn the upper mount of the strut assembly toward the inside of the compressor as shown to allow positioning of the compressor upper hooks (Fig. 44). Position the upper hooks on top of the coil spring upper seat approximately 1 inch from outside diameter of seat (Fig. 47). **Do not allow hooks to be placed closer to edge.** Place a clamp on the lower end of the coil spring, so the strut is held in place once the strut shaft nut is removed.

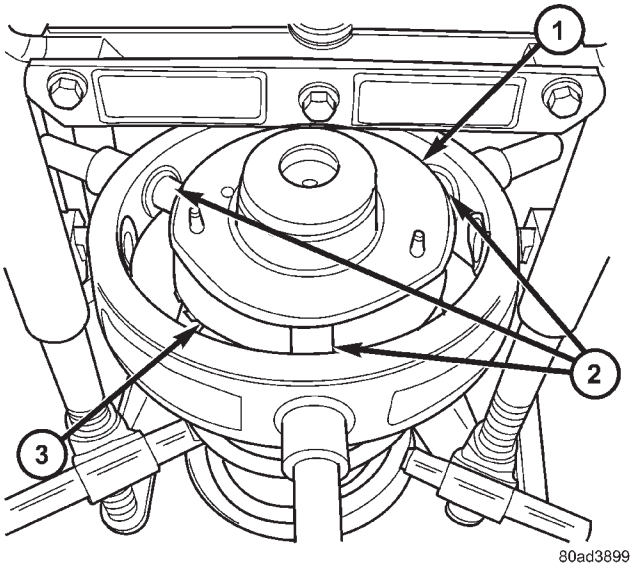

Fig. 44 Mount Rotated And Hooks Positioned

1 - UPPER MOUNT TURNED TOWARD COMPRESSOR
2 - COMPRESSOR UPPER HOOKS
3 - UPPER SPRING SEAT

(3) Compress the coil spring until all coil spring tension is removed from the upper mount.

(4) Install Strut Nut Socket, Special Tool 6864, on the strut shaft retaining nut (Fig. 45). Next, install a 10 mm socket on the hex on the end of the strut shaft. While holding the strut shaft from turning, remove the nut from the strut shaft.

(5) Remove the upper mount from the strut shaft.

(6) If the pivot bearing needs to be serviced, remove it from the top of the coil spring upper seat by pulling it straight up.

(7) Remove the clamp from the bottom of the coil spring and remove the strut out through the bottom of the coil spring.

NOTE: If the coil spring or upper spring seat needs to be serviced, proceed with the next step, otherwise, proceed with step 10.

(8) Release the tension from the coil spring by backing off the compressor drive fully. Push back the compressor upper hooks and remove the upper spring seat with upper spring isolator.

(9) Remove the coil spring from the spring compressor.

(10) Remove the dust shield and jounce bumper as an assembly from the strut shaft by pulling both straight up and off the strut shaft. The dust shield cannot be separated from the jounce bumper until after it is removed from strut shaft.

STRUT (Continued)

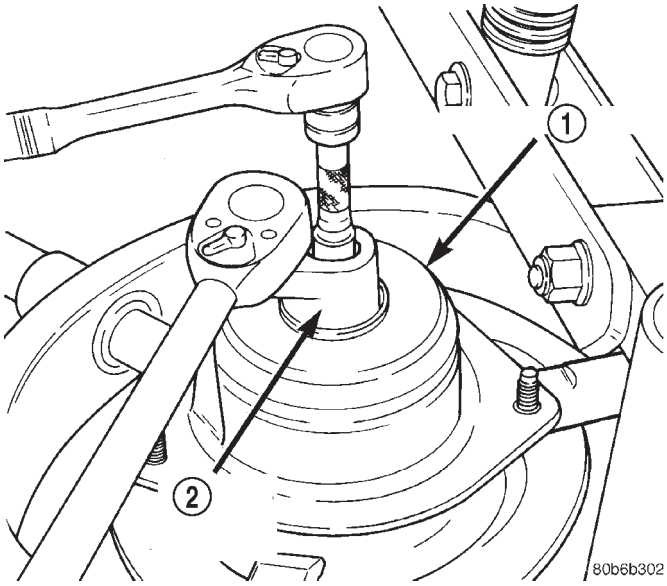

Fig. 45 Retaining Nut Removal/Installation (Typical)

1 - UPPER MOUNT
2 - SPECIAL TOOL 6864

(11) Remove the jounce bumper from the dust shield. The jounce bumper is removed from the dust shield by collapsing the dust shield until the jounce bumper can be pulled free from the dust boot.

(12) Remove the spring isolator from the lower spring seat on the strut (Fig. 38).

(13) Inspect the strut assembly components (Fig. 38) for the following and replace as necessary:

- Inspect the strut for any condition of shaft binding over the full stroke of the shaft.
- Check the upper mount for cracks and distortion and its retaining studs for any sign of damage.
- Check the upper seat for stress cracks and wear.
- Check the upper spring isolator for severe deterioration.
- Check for binding of the strut assembly pivot bearing.
- Inspect the dust shield for rips and deterioration.
- Inspect the jounce bumper for cracks and signs of deterioration.

ASSEMBLY - STRUT ASSEMBLY

For the disassembly and assembly of the strut assembly, use of Strut Spring Compressor, Pentastar Service Equipment (PSE) tool W-7200, or the equivalent, is recommended to compress the coil spring. Follow the manufacturer's instructions closely.

NOTE: Coil Springs on this vehicle are side-oriented. Springs on the left side of the vehicle have a left-hand wind top-to-bottom while springs on the right side have a right-hand wind top-to-bottom. Left and right springs must not be interchanged.

NOTE: If the coil spring has been removed from the spring compressor, proceed with the next step, otherwise, proceed with step 5.

(1) Place the coil spring in the compressor lower hooks following the manufacturers instructions. Proper orientation of the spring to the strut (once installed) is necessary. Consider the following when placing the coil spring in the compressor: From above, the compressor back is at the 12 o'clock position, and you, standing in the front of the machine, are at the 6 o'clock position. Place the lower coil spring end at the 6 o'clock position for both left and right springs. (Fig. 46).

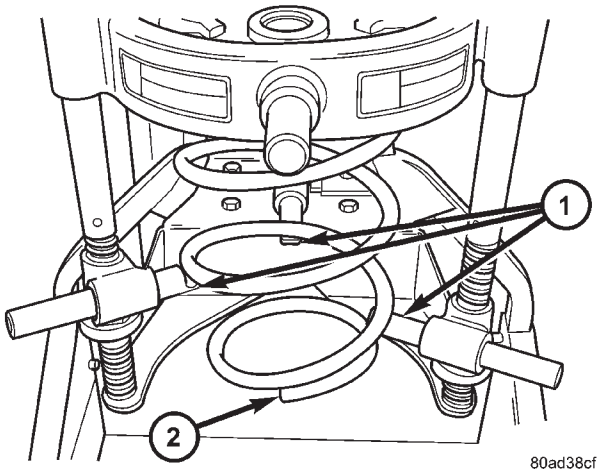

Fig. 46 Spring Positioned In Compressor (Right Spring Shown)

1 - COMPRESSOR LOWER HOOKS
2 - COIL SPRING END

(2) Install the upper seat and upper isolator on top of the coil spring. Position the notch in the perimeter of the upper seat toward the front of the compressor (same 6 o'clock position as in step 1).

(3) Position the upper hooks on top of the coil spring upper seat so the upper hooks span approximately 1 inch past outside diameter of upper seat (Fig. 47). This will allow proper clearance for upper mount installation without pinching the hooks in-between the two pieces. **Do not allow hooks to be placed closer to edge.**

(4) Compress the coil spring far enough to allow strut installation.

STRUT (Continued)

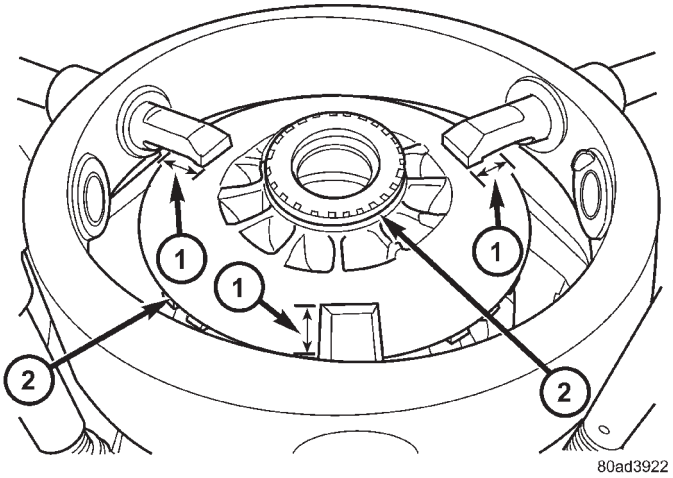

Fig. 47 Hook Placement On Upper Seat

1 - HOOKS POSITIONED 1 INCH FROM EDGE
2 - PIVOT BEARING AND UPPER SEAT

(5) If the pivot bearing has been removed from the upper seat, install the pivot bearing on the top of the upper spring seat (Fig. 48). The bearing must be installed on upper seat with the smaller diameter side of the pivot bearing toward the spring seat. Be sure the pivot bearing is sitting flat on the spring seat once mounted.

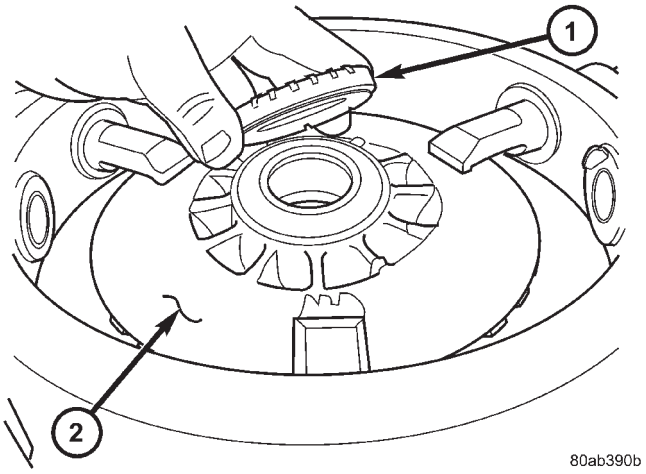

Fig. 48 Pivot Bearing Installation

1 - PIVOT BEARING
2 - UPPER SEAT

(6) Install the spring isolator on the lower spring seat of the strut (Fig. 38).

(7) Install the jounce bumper on the strut shaft (Fig. 38). The jounce bumper is to be installed with the small end pointing downward.

(8) Install the dust shield on the strut. Collapse and stretch the dust shield down over the top of the jounce bumper until the dust shield snaps into the slot on the jounce bumper. The jounce bumper will be at the top of the inner dust boot. Return the dust shield to its fully extended length.

(9) Install the strut through the bottom of the coil spring until the lower spring seat contacts the lower end of the coil spring. The clevis bracket on the strut should point straight outward away from the compressor (to the 6 o'clock position). This position should be within 5° of the lower end tip of the coil spring (Fig. 49). If necessary, reposition the strut or coil spring in the compressor so both of these line up straight outward away from the compressor (to the 6 o'clock position). Install the clamp to hold the strut and coil together.

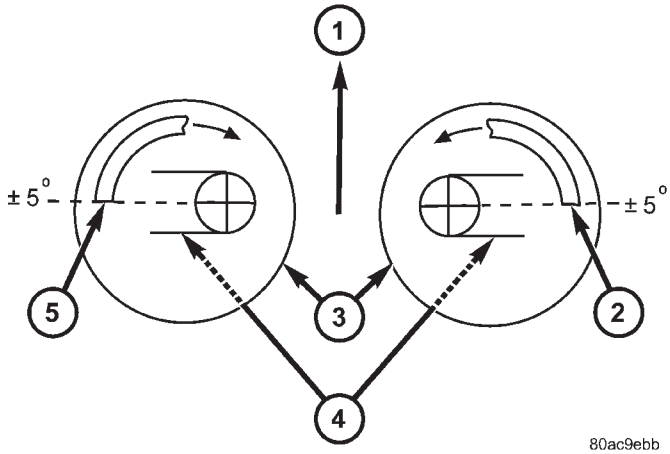

Fig. 49 Coil Spring Positioning

1 - FRONT OF VEHICLE
2 - END OF RIGHT COIL SPRING AT STRUT LOWER SEAT
3 - LOWER SEATS OF STRUTS
4 - STRUT CLEVIS BRACKETS
5 - END OF LEFT COIL SPRING AT STRUT LOWER SEAT

(10) Install the strut mount over the strut shaft and onto the top of the pivot bearing and upper seat as shown (Fig. 44). Loosely install the retaining nut on the strut shaft.

(11) Install Strut Nut Socket (on the end of a torque wrench), Special Tool 6864, on the strut shaft retaining nut (Fig. 45). Next, install a 10 mm socket on the hex on the end of the strut shaft. While holding the strut shaft from turning, tighten the strut shaft retaining nut to a torque of 100 N·m (75 ft. lbs.).

NOTE: Before releasing the tension the compressor has on the spring, using the following figure as reference (Fig. 50), make sure the upper spring seat, coil spring and strut clevis bracket are all lined up properly (within 5° of one another).

STRUT (Continued)

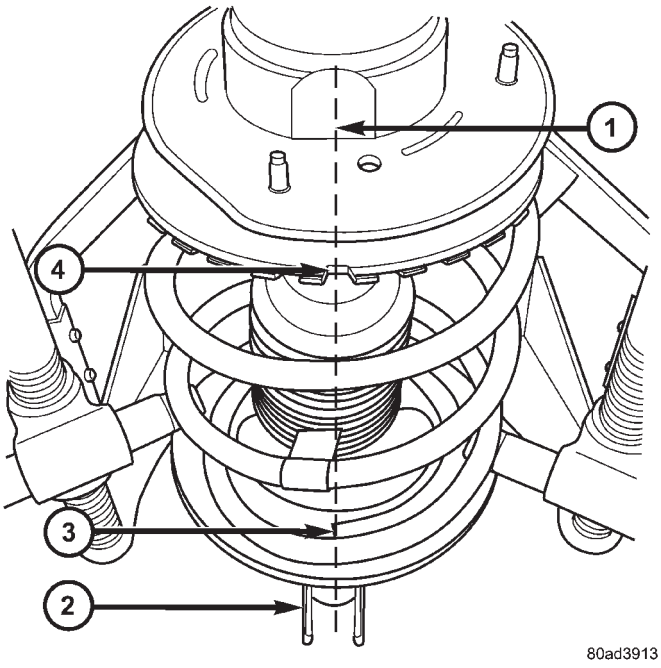

Fig. 50 Components Lined Up

1 - IMAGINARY VERTICAL LINE
2 - CLEVIS BRACKET
3 - END OF COIL SPRING
4 - NOTCH IN UPPER SPRING SEAT

(12) Slowly release the tension from the coil spring by backing off the compressor drive fully. As the tension is relieved, make sure the upper mount, pivot bearing and upper seat are align properly. Remove the clamp from the lower end of the coil spring and strut. Push back the spring compressor upper and lower hooks, then remove the strut assembly from the spring compressor.

(13) Install strut assembly on the vehicle. (Refer to 2 - SUSPENSION/FRONT/STRUT - INSTALLATION)

INSTALLATION - STRUT ASSEMBLY

CAUTION: Front strut coil springs are side-oriented. When installing a strut assembly, make sure the strut being installed has the correct coil spring for that side of the vehicle. Springs on the left side of the vehicle have a left-hand wind top-to-bottom while springs on the right side have a right-hand wind top-to-bottom (Fig. 49). Do not interchange the two sides.

(1) Install strut assembly into strut tower, aligning and installing the 3 studs on the upper strut mount into the holes in shock tower. Install the 3 upper strut mount attaching nut/washer assemblies (Fig. 43). Then using a crow foot. tighten the 3 attaching nuts to a torque of 28 N·m (250 in. lbs.).

CAUTION: The steering knuckle to strut assembly attaching bolts are serrated and must not be turned during installation. Install nuts while holding bolts stationary in the steering knuckles.

NOTE: The strut clevis-to-steering knuckle bolts are installed differently on each side of the vehicle. Left hand side bolts are to be installed from vehicle rear to front. Right side bolts are to be installed from vehicle front to rear.

(2) Align strut assembly with steering knuckle. Position arm of steering knuckle into strut assembly clevis bracket. Align the strut assembly clevis bracket mounting holes with the steering knuckle mounting holes. Install the 2 strut assembly to steering knuckle attaching bolts (Fig. 42). **If strut assembly is attached to steering knuckle using a cam bolt, the cam bolt must be installed in the lower slotted hole on strut clevis bracket.** Tighten the strut clevis-to-steering knuckle attaching bolts to a torque of 81 N·m (60 ft. lbs.) plus an additional 1/4 (90°) turn after specified torque is met.

(3) Install the stabilizer bar link mounting stud through the bracket on the strut assembly (Fig. 41).

CAUTION: When installing the nut on the mounting stud of the stabilizer bar link, do not allow the stud to rotate in it's socket. Hold the stud from rotating by placing an open-end wrench on the flat machined into the stud (Fig. 41).

(4) Hand thread the nut on the end of the stabilizer bar link stud. Hold the stud from turning by placing an open-end wrench on the flat machined into the link's mounting stud, then tighten the nut while holding the wrench in place (Fig. 41). Tighten the nut to a torque of 88 N·m (65 ft. lbs.).

(5) Install the hydraulic brake hose and speed sensor cable routing brackets on the strut assembly brackets (Fig. 40). Tighten the routing bracket attaching bolts to a torque of 13 N·m (10 ft. lbs.).

(6) Install the wheel/tire assembly on the vehicle.

(7) Install and tighten the wheel mounting stud nuts in proper sequence until all nuts are torqued to half specification. Then repeat the tightening sequence to the full specified torque of 135 N·m (100 ft. lbs.).

REAR SUSPENSION

TABLE OF CONTENTS

page

REAR SUSPENSION
DESCRIPTION - REAR SUSPENSION 26
OPERATION - REAR SUSPENSION 27
SPECIFICATIONS
REAR SUSPENSION FASTENER TORQUE . . 28
SPECIAL TOOLS
REAR SUSPENSION 28
BUSHINGS
REMOVAL - LEAF SPRING FRONT BUSHING . 29
INSTALLATION - LEAF SPRING FRONT BUSHING 29
HUB / BEARING
DESCRIPTION 30
OPERATION 31
DIAGNOSIS AND TESTING - HUB AND BEARING 31
REMOVAL 31
INSTALLATION 33
JOUNCE BUMPER
DESCRIPTION 36
OPERATION 36
REMOVAL
REMOVAL - AWD AND HEAVY DUTY 36
REMOVAL - FRONT-WHEEL-DRIVE 36
INSTALLATION
INSTALLATION - AWD AND HEAVY DUTY . . . 36
INSTALLATION - FRONT-WHEEL-DRIVE 36
SHOCK ABSORBER
DESCRIPTION 37
OPERATION 37
REMOVAL - SHOCK ABSORBER 37
DISASSEMBLY - SHOCK ABSORBER (UPPER BUSHING) 37

page

ASSEMBLY - SHOCK ABSORBER (UPPER BUSHING) 38
INSTALLATION - SHOCK ABSORBER 38
SPRING - AWD
DESCRIPTION 38
OPERATION 38
REMOVAL - AWD 38
INSTALLATION - AWD 39
SPRING - FWD
DESCRIPTION 40
OPERATION 40
REMOVAL - FWD 40
INSTALLATION - FWD 41
SPRING MOUNTS - FRONT
REMOVAL 42
INSTALLATION 43
SPRING MOUNTS - REAR
REMOVAL 43
INSTALLATION 44
STABILIZER BAR
DESCRIPTION 44
OPERATION 44
REMOVAL
REMOVAL - AWD 44
REMOVAL - FWD 44
INSTALLATION
INSTALLATION - AWD 44
INSTALLATION - FWD 45
TRACK BAR
DESCRIPTION 45
OPERATION 45
REMOVAL 45
INSTALLATION 45

REAR SUSPENSION

DESCRIPTION - REAR SUSPENSION

The rear suspension design on this vehicle uses leaf springs, and a tube and casting axle (Fig. 1) (Fig. 2). The leaf springs used on the rear suspension of this vehicle are of either a mono-leaf or multi-leaf design.

There are 2 different rear suspension designs available:

- Front-Wheel-Drive
- All-Wheel-Drive

The rear axle used on Front-Wheel-Drive applications of this vehicle is mounted to the rear leaf springs using isolator bushings at the axle mounting brackets.

The rear axle used on All-Wheel-Drive applications of this vehicle is also mounted to the rear leaf springs, but does not use isolator bushings between the rear axle and the leaf springs.

Each side of the rear suspension consists of these major components:

- Leaf spring
- Jounce bumper
- Shock absorber
- Hub and bearing
- Track bar (one per suspension)
- Stabilizer bar (one per suspension)

REAR SUSPENSION (Continued)

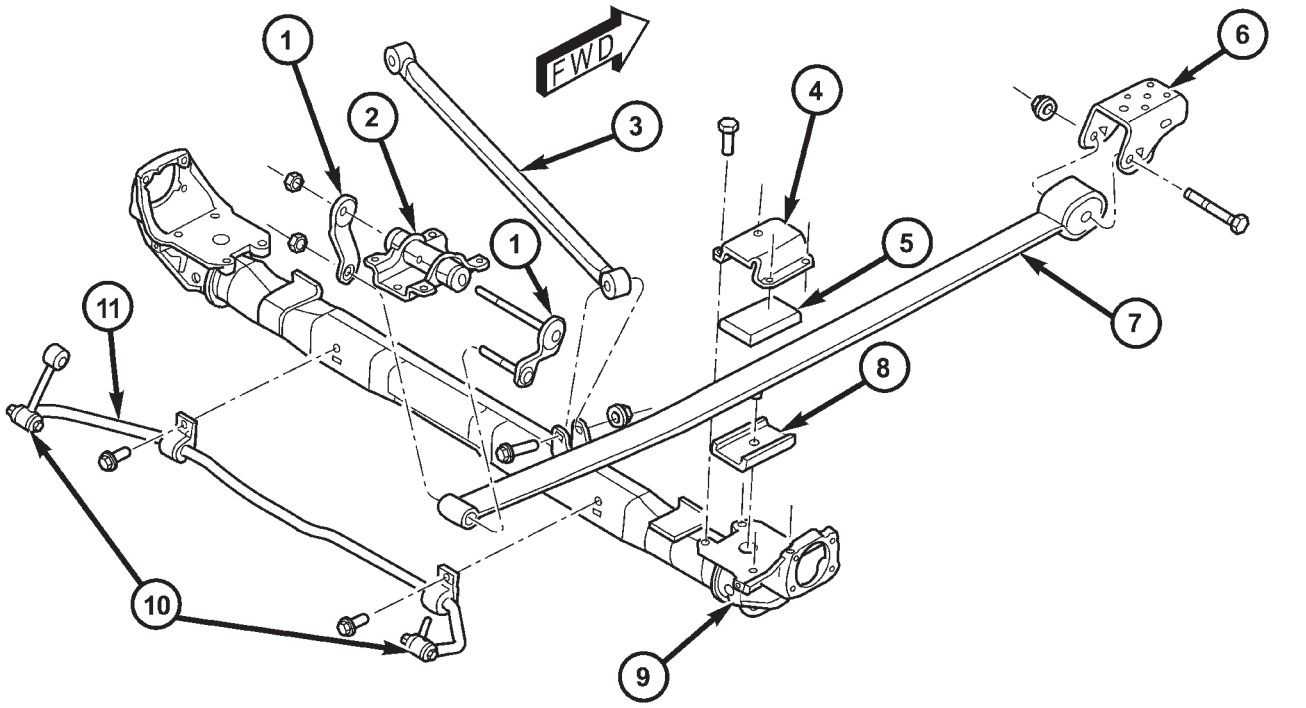

Fig. 1 Front-Wheel-Drive Rear Suspension

1 - SHACKLE
2 - REAR MOUNT (HANGER)
3 - TRACK BAR
4 - SPRING PLATE
5 - ISOLATOR
6 - FRONT MOUNT (HANGER)
7 - LEAF SPRING (MONO-LEAF)
8 - ISOLATOR
9 - FWD REAR AXLE
10 - STABILIZER BAR LINKS
11 - STABILIZER BAR

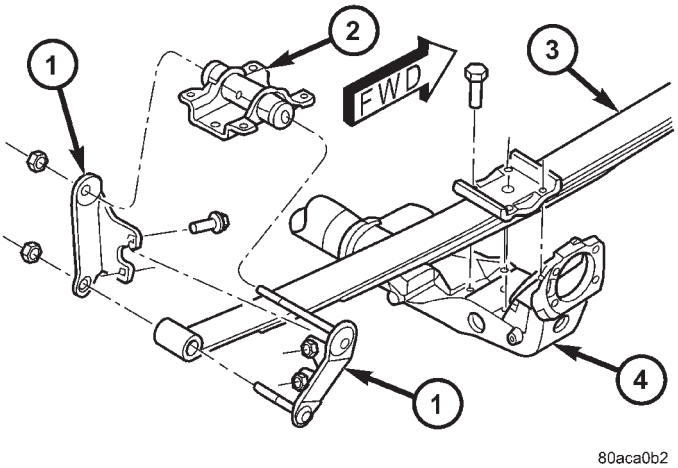

Fig. 2 All-Wheel-Drive Rear Suspension

1 - SHACKLE
2 - REAR MOUNT (HANGER)
3 - LEAF SPRING (MULTI-LEAF)
4 - AWD REAR AXLE

OPERATION - REAR SUSPENSION

This rear suspension is designed to handle the various load requirements of the vehicle yet allow for a comfortable ride.

The rear wheel bearings used are similar to the bearings used in the front suspension. A hub and bearing assembly is used.

REAR SUSPENSION (Continued)

SPECIFICATIONS

REAR SUSPENSION FASTENER TORQUE

DESCRIPTION	N·m	Ft. Lbs.	In. Lbs.
Hub And Bearing Mounting Bolts	129	95	—
Hub And Bearing Axle Hub Nut	244	180	—
Jounce Bumper Mounting Bolt	33	24	290
Leaf Spring Front Mount-To-Body Bolts	61	45	—
Leaf Spring Front Pivot Bolt	156	115	—
Leaf Spring Plate-To-Axle Bolts	95	70	—
Leaf Spring Rear Mount-To-Body Bolts	61	45	—
Leaf Spring Shackle Plate Nuts	61	45	—
Shock Absorber Mounting Bolts	88	65	—
Stabilizer Bar Bushing Retainer Bolts	61	45	—
Stabilizer Bar Link Nuts	61	45	—
Stabilizer Bar Link Frame Bracket Mounting Bolts	61	45	—
Track Bar Bracket-To-Body Mount Bolts	61	45	—
Track Bar Pivot Bolts	95	70	—
Wheel Mounting (Lug) Nut	135	100	—

SPECIAL TOOLS

REAR SUSPENSION

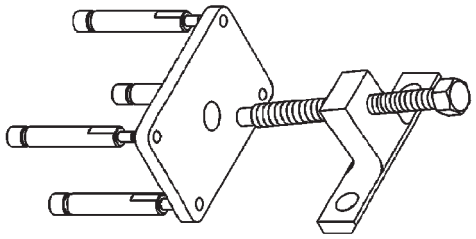

Remover, Hub/Bearing 8458

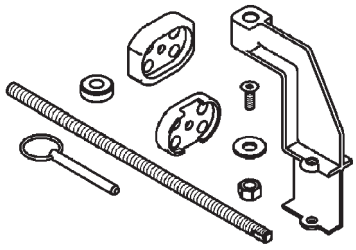

Remover/Installer, Bushing 8459

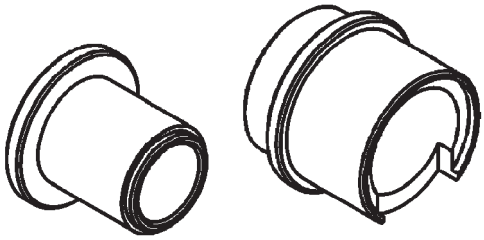

Remover/Installer, Bushing 8526

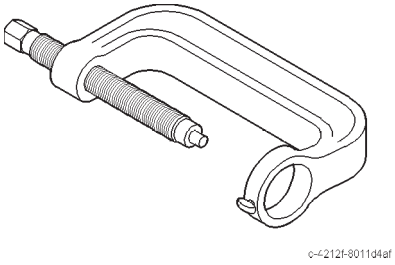

Press, Ball Joint C-4212F

BUSHINGS

REMOVAL - LEAF SPRING FRONT BUSHING

(1) Raise vehicle on frame-contact hoist as follows:
(a) Position the hoist arm supporting the corner of the vehicle to be serviced against a block of wood placed on the body sill as shown (Fig. 3).
(b) Position the remaining hoist arms at each corner of the vehicle in the normal fashion. (Refer to LUBRICATION & MAINTENANCE/HOISTING - STANDARD PROCEDURE)
(c) Raise the vehicle to a comfortable working level.

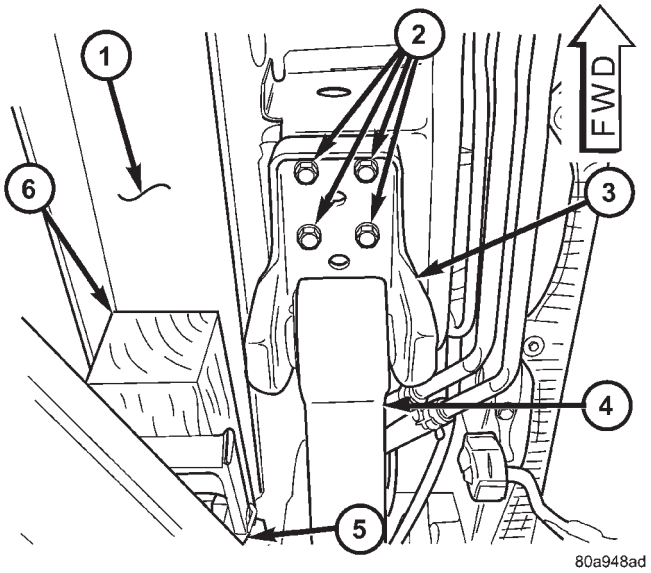

Fig. 3 LIFTING POINT AND SPRING MOUNT

1 - BODY SILL AREA
2 - MOUNTING BOLTS
3 - SPRING MOUNTING BRACKET
4 - LEAF SPRING
5 - HOIST LIFT ARM
6 - WOODEN BLOCK

(2) Position an under-hoist utility jack or transmission jack under rear axle toward the side needing bushing replacement. Jack pad should just contact axle.
(3) Remove shock absorber lower mounting bolt.

NOTE: If shock absorber bolt deflects upward during removal, raise axle by adjusting support jack. If shock absorber bolt deflects downward during removal, lower axle by adjusting support jack (or by pulling on axle).

(4) Remove four bolts securing leaf spring front mounting bracket to the body (Fig. 3).
(5) Using jack, **slowly** lower rear axle, permitting the forward end of rear spring to hang down. Lower it enough to allow access to spring pivot bolt. It may be necessary to place a wooden block between the spring and vehicle to hold forward end of the spring in place.
(6) Remove leaf spring forward pivot bolt, then remove mounting bracket.
(7) Straighten the retainer tabs on the bushing (Fig. 4).

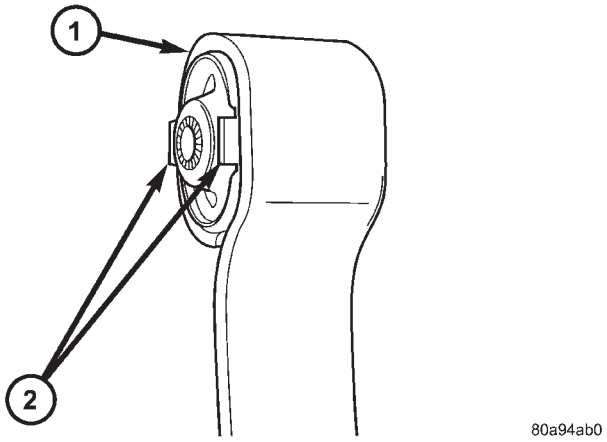

Fig. 4 STRAIGHTENED RETAINING TABS

1 - SPRING EYE
2 - RETAINING TABS

(8) Place Remover/Installer, Special Tool 8459 on leaf spring and bushing as shown (Fig. 5) and tighten Set Screw securing Remover Plate to tool threaded shaft.
(9) Tighten nut (Fig. 5), removing bushing from spring eye.
(10) Remove the tool from spring, then remove bushing from tool.

INSTALLATION - LEAF SPRING FRONT BUSHING

(1) Install by hand NEW bushing in left side of leaf spring eye.
(2) Place Remover/Installer, Special Tool 8459 on leaf spring and bushing as shown (Fig. 6) and tighten Set Screw securing Installer Plate (8459–3) to tool threaded shaft.
(3) Tighten nut (Fig. 6), installing bushing in spring eye. Tighten nut until there is approximately a 1 mm gap between the bushing flange and the spring eye. **Do not bottom the flange against the spring eye.**
(4) Remove Remover/Installer from the bushing and leaf spring.
(5) Bend the retainer tabs on bushing outward against spring eye.

BUSHINGS (Continued)

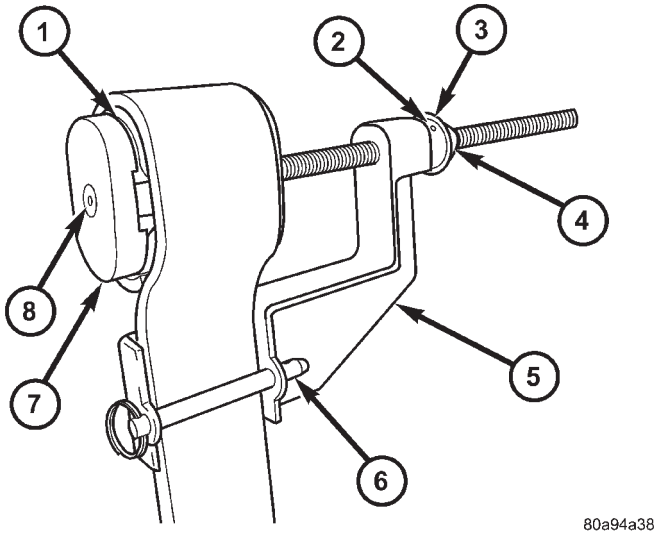

Fig. 5 TOOL 8459 MOUNTED FOR BUSHING REMOVAL

1 - BUSHING
2 - BEARING
3 - WASHER
4 - NUT
5 - BODY (8459-1)
6 - PIN
7 - REMOVER PLATE (8459-2)
8 - SET SCREW

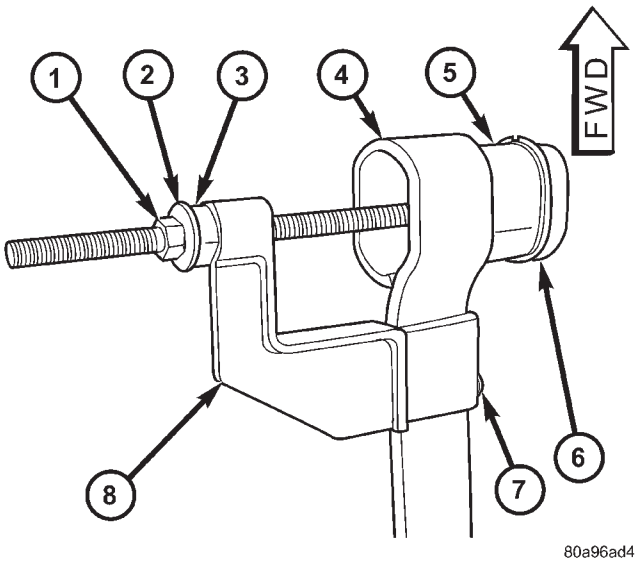

Fig. 6 TOOL 8459 MOUNTED FOR BUSHING INSTALLATION

1 - NUT
2 - WASHER
3 - BEARING
4 - LEAF SPRING EYE
5 - BUSHING
6 - INSTALLER PLATE (8459-3)
7 - PIN
8 - BODY (8459-1)

(6) Position spring mounting bracket over spring eye and install pivot bolt through center of bushing from the **outboard** side.

NOTE: The pivot bolt must be installed from the outboard side to allow proper bracket to body mounting.

(7) Install the nut on the pivot bolt and lightly tighten. Do not fully tighten bolt at this time.

(8) Raise the under-hoist utility jack or transmission jack, guiding the forward mounting bracket into place against the body. It may help to use a drift punch placed through the hole centered between the mounting bolt holes in the bracket and the pilot hole in the body of the vehicle as a guide. When the four mounting bolt holes line up with their threads in the body, Install the mounting bolts (Fig. 3). Tighten the four mounting bolts to 61 N·m (45 ft. lbs.) torque.

(9) Raise or lower the jack until shock absorber lower eye aligns with threads in axle housing. Install shock absorber lower mounting bolt. Do not fully tighten bolt at this time.

(10) Lower the vehicle and remove hoist arms and block of wood from under vehicle.

(11) Tighten the spring front pivot bolt to 156 N·m (115 ft. lbs.) torque.

(12) Tighten the lower shock absorber mounting bolt to 88 N·m (65 ft. lbs.) torque.

HUB / BEARING

DESCRIPTION

The rear wheel bearing and rear wheel hub of this vehicle are a one-piece sealed unit, or hub and bearing unit type assembly (Unit III). The hub and bearing is mounted to the center of the rear axle using 4 mounting bolts. It has five wheel mounting studs on the hub flange.

All-Wheel-Drive vehicles have a hub and bearing unit with a splined hole in the center of the hub for rear driveshaft stub axle acceptance.

Front-Wheel-Drive vehicles with antilock brakes have an internally mounted wheel speed sensor and tone wheel. This hub and bearing can be identified by the rounded cap and molded in connector on the rear of the assembly (Fig. 7). The sensor and tone wheel cannot be serviced separately from the hub and bearing.

HUB / BEARING (Continued)

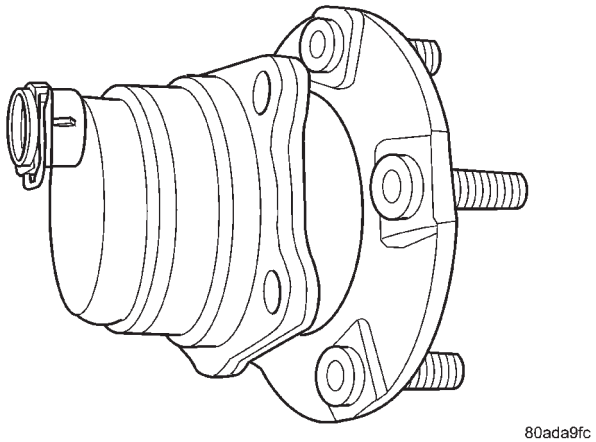

Fig. 7 Hub And Bearing - FWD With ABS

OPERATION

The hub and bearing has internal bearings that allow the hub to rotate with the tire and wheel assembly (and driveshaft on All-Wheel-Drive vehicles). The five wheel mounting studs mount the tire and wheel assembly, and disc brake rotor or brake drum to the vehicle.

On All-Wheel-Drive vehicles, the splined mating of the driveshaft stub axle and hub allows the driveshaft to rotate with the hub and wheel.

Front-Wheel-Drive vehicles equipped with antilock brakes have a wheel speed sensor and tone wheel mounted to the rear of the hub and bearing. The tone wheel rotates with the hub which is sensed by the wheel speed sensor.

DIAGNOSIS AND TESTING - HUB AND BEARING

The bearing contained in the hub and bearing assembly will produce noise and vibration when worn or damaged. The noise will generally change when the bearings are loaded. A road test of the vehicle is normally required to determine the location of a worn or damaged bearing.

Find a smooth level road surface and bring the vehicle up to a constant speed. When vehicle is at a constant speed, swerve the vehicle back and forth from the left and to the right. This will load and unload the bearings and change the noise level. When bearing damage is slight, the noise is sometimes noticeable at lower speeds and at other times is more noticeable at speeds above 105 km/h (65 mph).

REMOVAL

FRONT-WHEEL-DRIVE VEHICLES

(1) Raise vehicle. (Refer to LUBRICATION & MAINTENANCE/HOISTING - STANDARD PROCEDURE)

(2) Remove wheel and tire. (Refer to 22 - TIRES/WHEELS - REMOVAL)

(3) Remove brake drum or disc brake caliper and rotor from hub and bearing. (Refer to 5 - BRAKES/HYDRAULIC/MECHANICAL/DRUM - REMOVAL-)(Refer to 5 - BRAKES/HYDRAULIC/MECHANICAL/ROTOR - REMOVAL)

(4) If equipped with antilock brakes, perform the following:

(a) Remove secondary (yellow) retaining clip at rear of wheel speed sensor head (Fig. 8).

(b) Push up on metal retaining clip (Fig. 8) until it bottoms. This will release wheel speed sensor head from hub and bearing.

(c) While holding metal clip up, pull back on wheel speed sensor head removing it from hub and bearing.

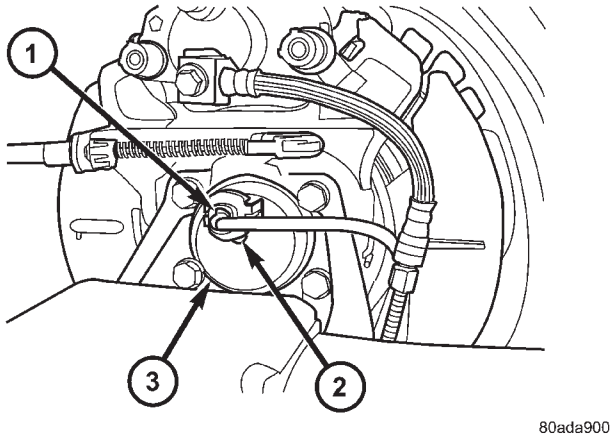

Fig. 8 Sensor Connector At Hub And Bearing

1 - SECONDARY SENSOR RETAINING CLIP
2 - METAL SENSOR RETAINING CLIP
3 - HUB AND BEARING

(5) Remove the 4 bolts attaching the hub and bearing to the rear axle.

CAUTION: Corrosion may occur between the hub and bearing, and the axle. If this occurs the hub and bearing will be difficult to remove from the axle. If the hub and bearing will not come out of the axle by pulling on it by hand, do not pound on the hub and bearing to remove it from the axle. Damage will occur. Use the following procedure.

HUB / BEARING (Continued)

(6) If hub and bearing cannot be removed from the axle by hand, use Remover, Special Tool 8458 (Fig. 9) and following procedure to press the hub and bearing out of the axle.

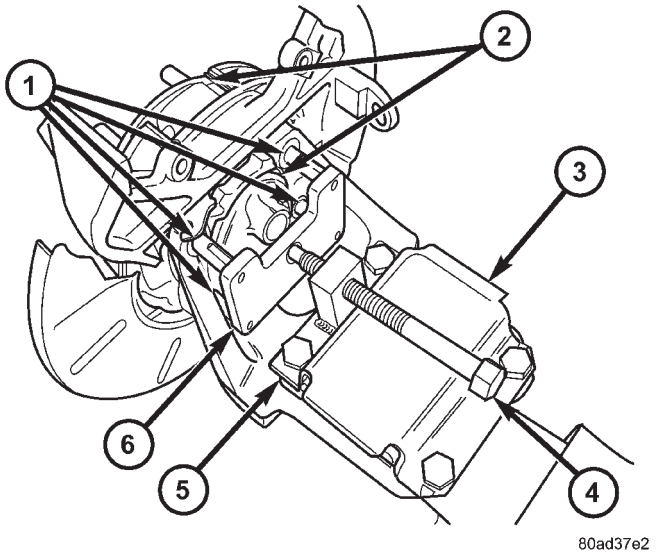

Fig. 9 Removal Using Special Tool 8458

1 - THREADED GUIDE PINS 8458-4
2 - HUB AND BEARING
3 - LEAF SPRING PLATE
4 - FORCING SCREW 8458-3
5 - SCREW MOUNT 8458-2
6 - PUSH PLATE 8458-1

(a) Thread Threaded Guide Pins into hub and bearing mounting bolt holes.

(b) Remove the two outboard spring plate bolts.

(c) Using the spring plate bolts, install the Screw Mount, Special Tool 8458–2, as shown (Fig. 9).

(d) Place Push Plate, Special Tool 8458–1, on ends of Threaded Guide Pins

(e) Place a dab of grease in dimple of Push Plate.

(f) Tighten the Forcing Screw, Special Tool 8458–3, up against dimple in Push Plate and press hub and bearing out of axle by continuing to tighten screw.

(g) Remove the tool.

(h) Reinstall the two outboard spring plate bolts. Tighten the bolts to 102 N·m (75 ft. lbs.) torque.

(7) Remove the hub/bearing from the rear axle and brake support plate.

ALL-WHEEL-DRIVE VEHICLES

(1) Set the parking brake. **The parking brake is set to keep the hub and bearing, and axle shaft from rotating when loosening the hub nut.**

(2) Raise vehicle. (Refer to LUBRICATION & MAINTENANCE/HOISTING - STANDARD PROCEDURE)

(3) Remove the wheel/tire assembly. (Refer to 22 - TIRES/WHEELS - REMOVAL)

(4) Remove the cotter pin and nut retainer (Fig. 18) from the stub shaft of the outer C/V joint.

(5) Remove the spring washer (Fig. 17) from the stub shaft of the outer C/V joint.

(6) Remove the hub nut and washer (Fig. 16) from the stub shaft of the outer C/V joint.

(7) Remove the 6 bolts mounting the driveshaft inner joint to the output shaft of the rear drive line module.

(8) Remove the rear wheel speed sensor (Fig. 19) from the rear hub/bearing.

(9) Release the parking brake.

(10) Remove the disc brake caliper to adapter guide pin bolts (Fig. 15).

(11) Remove rear caliper from adapter using the following procedure. First rotate front of caliper up from the adapter. Then pull the rear of the caliper and the outboard brake shoe anti-rattle clip out from under the rear abutment on the adapter (Fig. 14).

(12) Support caliper to prevent the weight of the caliper from damaging the flexible brake hose (Fig. 10).

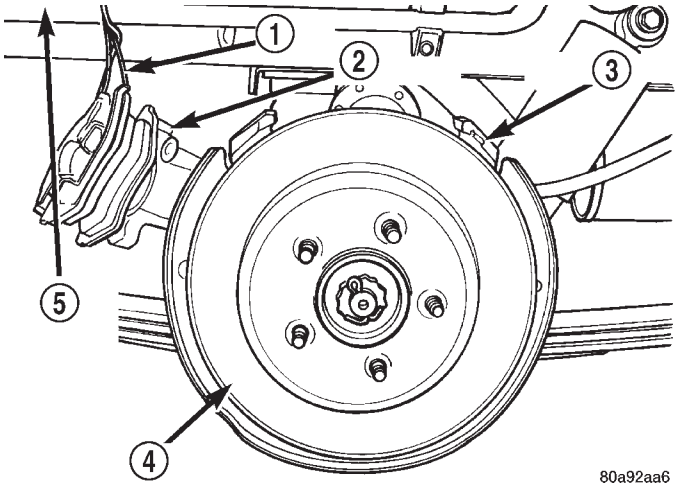

Fig. 10 Correctly Supported Caliper

1 - WIRE
2 - CALIPER
3 - ADAPTER
4 - ROTOR
5 - INNER FENDER

(13) Remove the rotor from the hub/bearing.

(14) Remove driveshaft from rear drive line module and hub/bearing. Driveshaft is removed by first compressing the inner joint on the driveshaft and removing it from the drive line module. Then, slide

HUB / BEARING (Continued)

the outer joint of the driveshaft out of the hub/bearing.

(15) Remove the hub/bearing to axle mounting bolts (Fig. 13).

CAUTION: Corrosion may occur between the hub/bearing and the axle. If this occurs the hub/bearing will be difficult to remove from the axle. If the hub/bearing will not come out of the axle by pulling on it by hand, do not pound on the hub/bearing to remove it from the axle. Pounding on the hub/bearing to remove it from the axle will damage the hub/bearing. This damage will result in noise or failure of the hub/bearing. To remove a hub/bearing which is corroded to the axle, lightly tap the disc brake caliper adapter using a soft faced hammer. This will remove both the disc brake caliper adapter and hub/bearing from the axle. The hub/bearing will then need to be removed from the caliper adapter.

(16) Remove the hub/bearing from the axle. (Fig. 12).

(17) If the disc brake caliper adapter and hub/bearing were removed as an assembly from the axle and the hub/bearing cannot be removed from the adapter by hand, use the following procedure to remove it from the adapter. With a helper supporting the caliper adapter in his hands, position Remover, Special Tool 8214-1 on the cast housing of hub/bearing (Fig. 11). **Do not position special tool on inner race of hub/bearing.** Lightly strike Remover, Special Tool 8214-1 with a hammer to remove the hub/bearing from the caliper adapter.

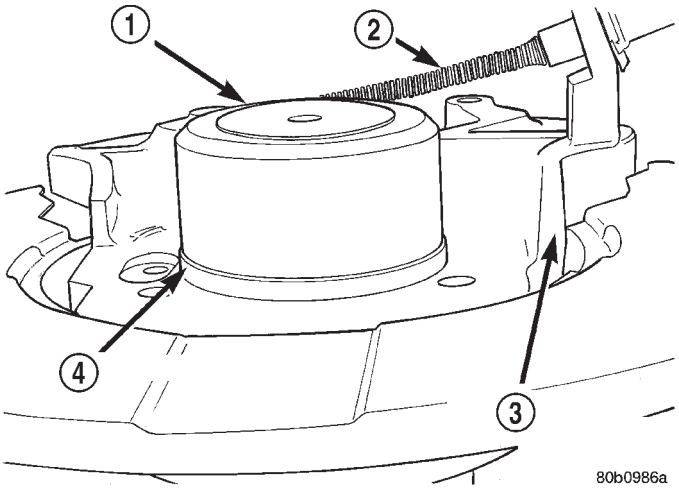

Fig. 11 Hub/Bearing Removal From Caliper Adapter

1 - SPECIAL TOOL 8214-1
2 - PARK BRAKE CABLE
3 - DISC BRAKE CALIPER ADAPTER
4 - HUB/BEARING

INSTALLATION

FRONT-WHEEL-DRIVE VEHICLES

(1) Install the 4 hub and bearing to axle mounting bolts into the holes in the flange of the rear axle.

(2) Install the rear brake support plate on the 4 mounting bolts installed in the flange of the rear axle.

(3) Align the rear hub and bearing with the 4 mounting bolts and start mounting bolts into hub and bearing. Tighten the 4 bolts in a crisscross pattern until the hub and bearing and brake support plate is fully and squarely seated onto flange of rear axle. Tighten the 4 mounting bolts to a torque of 129 N·m (95 ft. lbs.)

NOTE: If equipped with antilock brakes, make sure wheel speed sensor stays clean and dry as it is installed into the hub and bearing cap.

(4) If the vehicle is equipped with antilock brakes, perform the following:

(a) If metal sensor retaining clip is not in the neutral installed position on hub and bearing cap, install from the bottom, if necessary, and push clip upward until it snaps into position.

(b) Install wheel speed sensor head into rear of hub and bearing aligning index tab with the notch in the top of the mounting hole. Push the sensor in until it snaps into place on the metal retaining clip.

(c) Install secondary (yellow) retaining clip over wheel speed sensor head and engage the tabs on each side (Fig. 8).

(5) Install brake drum or disc brake rotor and brake caliper. (Refer to 5 - BRAKES/HYDRAULIC/MECHANICAL/DRUM - INSTALLATION)(Refer to 5 - BRAKES/HYDRAULIC/MECHANICAL/ROTOR - INSTALLATION)

(6) Install wheel and tire (Refer to 22 - TIRES/WHEELS - INSTALLATION). Tighten the wheel nuts in the proper sequence to a torque of 135 N·m (100 ft. lbs.).

(7) Adjust the rear brakes as necessary. (Refer to 5 - BRAKES/HYDRAULIC/MECHANICAL/BRAKE PADS/SHOES - ADJUSTMENTS)

(8) Lower vehicle.

(9) Road test vehicle to ensure proper operation of brakes.

ALL-WHEEL-DRIVE VEHICLES

(1) Install hub/bearing on end of axle. (Fig. 12).

(2) Install the hub/bearing mounting bolts. In a progressive crisscross pattern, tighten the 4 hub/bearing mounting bolts (Fig. 13) until the disc brake caliper adapter and hub/bearing are squarely seated against the axle. Then tighten the hub/bearing mounting bolts to a torque of 129 N·m (95 ft. lbs.).

HUB / BEARING (Continued)

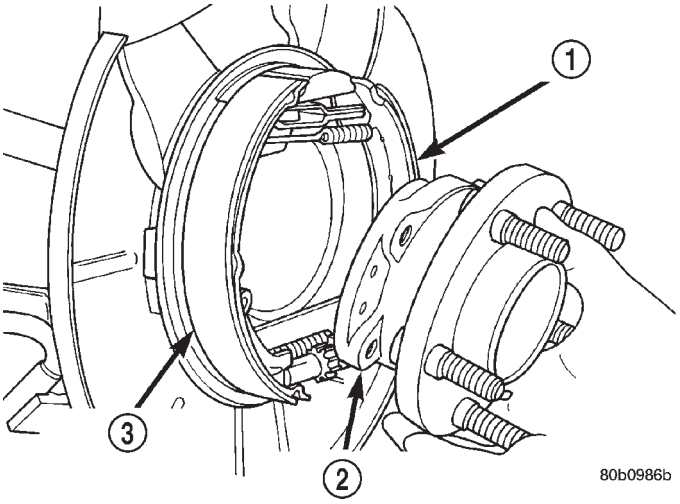

Fig. 12 Hub/Bearing Removal And Installation

1 - PARK BRAKE BRAKE SHOE
2 - HUB/BEARING
3 - PARK BRAKE BRAKE SHOE

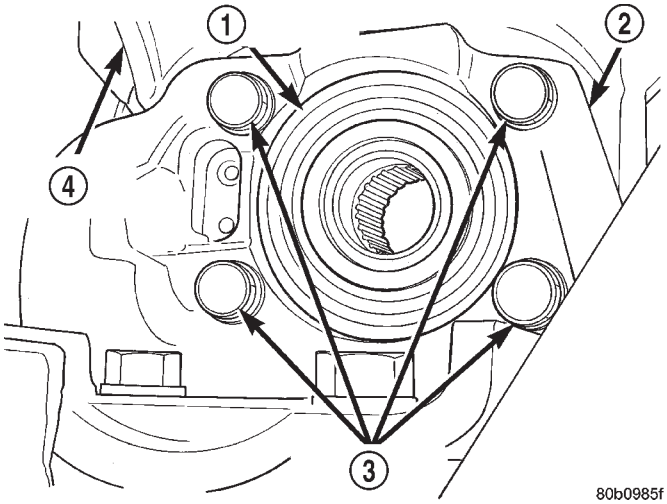

Fig. 13 Hub/Bearing Mounting Bolts

1 - HUB/BEARING
2 - AXLE
3 - MOUNTING BOLTS
4 - CALIPER ADAPTER

(3) Install driveshaft in hub/bearing and on output shaft of rear drive line module. Driveshaft is installed by first sliding the outer joint of the driveshaft into the hub/bearing and then compressing the inner joint on the driveshaft and installing it on the output shaft the drive line module.

(4) Install rotor on hub/bearing.

(5) Carefully lower disc brake caliper and brake shoes over rotor and onto caliper adapter by reversing the removal procedure (Fig. 14).

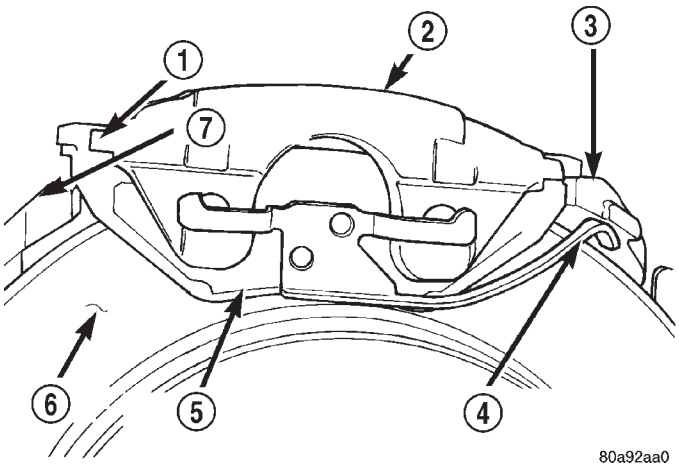

Fig. 14 Removing/Installing Caliper (Left Side Shown)

1 - LIFT THIS END OF CALIPER AWAY FROM ADAPTER FIRST
2 - DISC BRAKE CALIPER
3 - ADAPTER ABUTMENT
4 - OUTBOARD BRAKE SHOE HOLD DOWN CLIP
5 - OUTBOARD BRAKE SHOE
6 - ROTOR
7 - ADAPTER

CAUTION: When installing guide pin bolts extreme caution should be taken not to cross-thread the caliper guide pin bolts.

(6) Install the disc brake caliper guide pin bolts (Fig. 15). Tighten the guide pin bolts to a torque of 35 N·m (26 ft. lbs.).

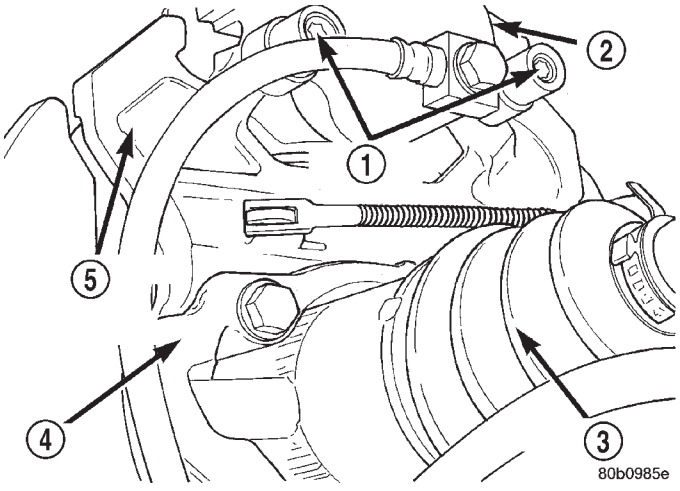

Fig. 15 Caliper Guide Pin Bolts

1 - STUD PIN BOLTS
2 - DISC BRAKE CALIPER
3 - DRIVESHAFT
4 - AXLE
5 - DISC BRAKE CALIPER ADAPTER

HUB / BEARING (Continued)

(7) Clean all foreign material off the threads of the outer C/V joint stub shaft. Install the washer and hub nut (Fig. 16) on the stub shaft of the outer C/V joint.

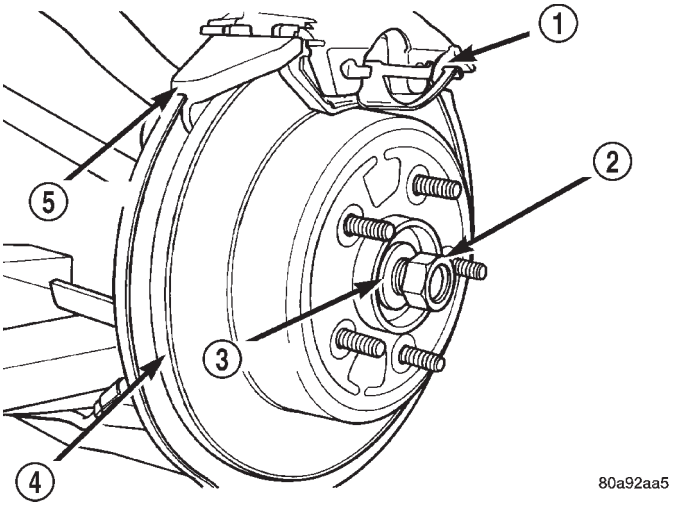

Fig. 16 Hub Nut And Washer

1 - CALIPER
2 - HUB NUT
3 - WASHER
4 - ROTOR
5 - ADAPTER

(8) Lower vehicle.

(9) Set the park brake. **This is required to keep the driveshaft from rotating when tightening and torquing the hub nut and driveshaft inner joint to driveline module mounting nuts.**

(10) Raise vehicle.

(11) Tighten the driveshaft inner joint to drive line module output shaft mounting bolts to a torque of 61 N·m (45 ft. lbs.).

(12) Tighten the outer C/V joint hub nut (Fig. 16) to a torque of 244 N·m (180 ft. lbs.).

(13) Install the spring washer (Fig. 17) on the stub shaft of the outer C/V joint.

(14) Install the nut retainer and cotter pin (Fig. 18) on the stub shaft of the outer C/V joint.

(15) Install the wheel speed sensor on the hub/bearing and adapter. Install the wheel speed sensor attaching bolt (Fig. 19). Tighten the wheel speed sensor attaching bolt to a torque of 12 N·m (105 in. lbs).

(16) Install wheel and tire. (Refer to 22 - TIRES/WHEELS - INSTALLATION)

(17) Tighten the wheel mounting stud nuts in proper sequence until all nuts are torqued to half specification. Then repeat the tightening sequence to the full specified torque of 135 N·m (100 ft. lbs.).

(18) Lower vehicle.

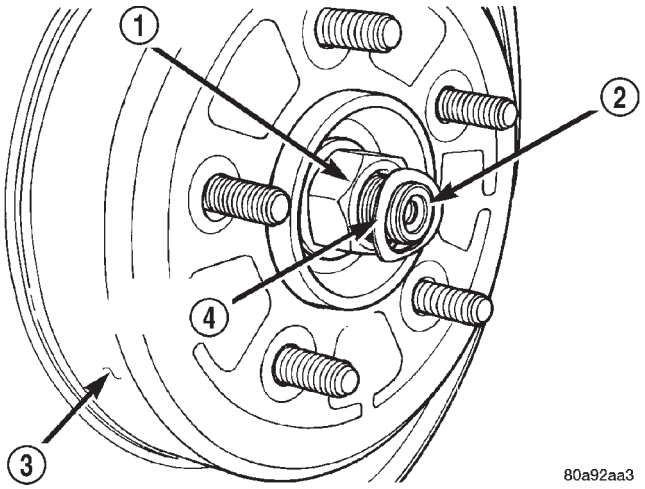

Fig. 17 Spring Washer

1 - HUB NUT
2 - STUB SHAFT
3 - ROTOR
4 - SPRING WASHER

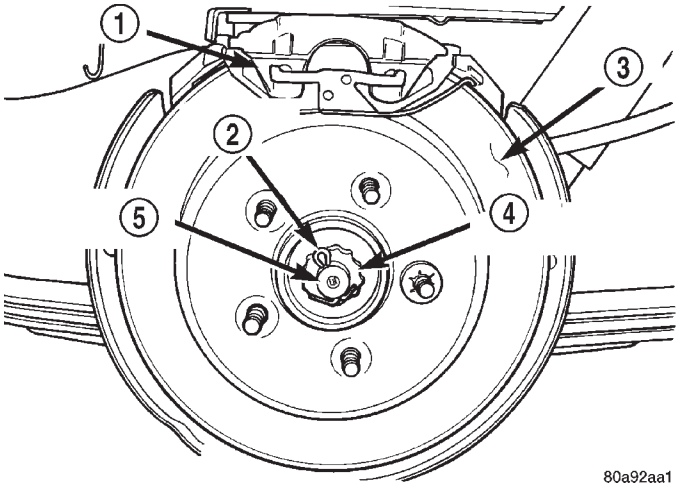

Fig. 18 Cotter Pin And Nut Retainer

1 - CALIPER
2 - COTTER PIN
3 - ROTOR
4 - NUT RETAINER
5 - OUTER C/V JOINT

CAUTION: Before moving vehicle, pump the brake pedal several times to insure the vehicle has a firm brake pedal to adequately stop vehicle.

HUB / BEARING (Continued)

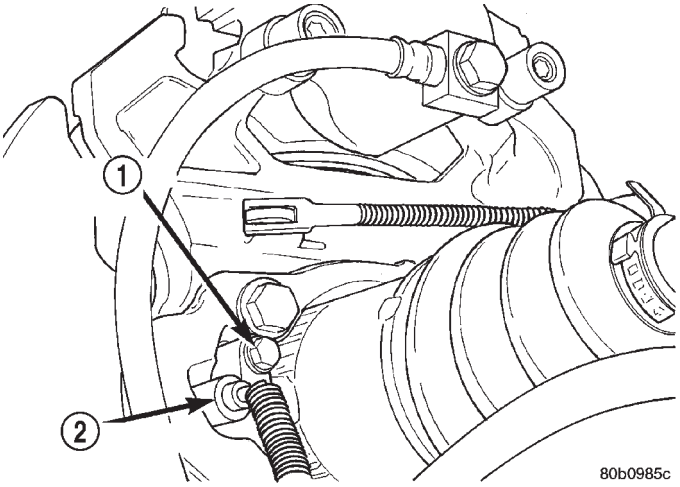

Fig. 19 Wheel Speed Sensor

1 - MOUNTING BOLT
2 - WHEEL SPEED SENSOR

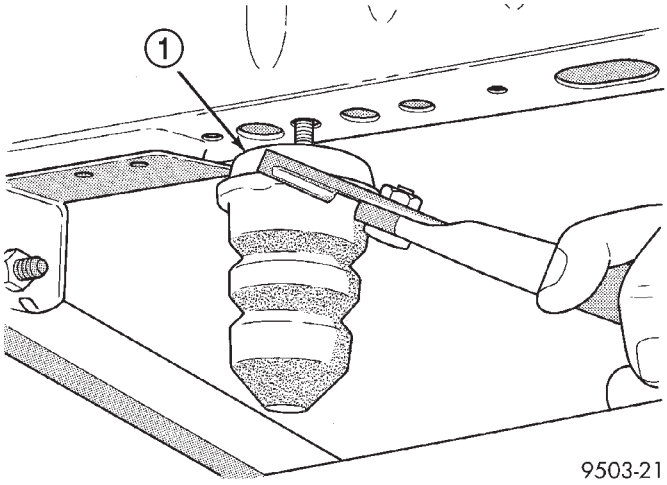

Fig. 20 Jounce Bumper

1 - JOUNCE BUMPER

(19) Road test vehicle to ensure proper operation of the brake system.

JOUNCE BUMPER

DESCRIPTION

There are two jounce bumpers used in the rear suspension. One mounts to each frame rail above the rear axle.

OPERATION

The jounce bumper limits suspension travel and metal-to-metal contact of the rear axle with the frame under full jounce conditions.

REMOVAL

REMOVAL - AWD AND HEAVY DUTY

(1) Using slip-joint pliers grasp the base of the jounce bumper. Turn the base counterclockwise (Fig. 20).

(2) Remove the jounce bumper from the frame rail.

REMOVAL - FRONT-WHEEL-DRIVE

(1) Remove the bolt attaching the jounce bumper to frame rail (Fig. 21).

(2) Remove the jounce bumper from the frame rail.

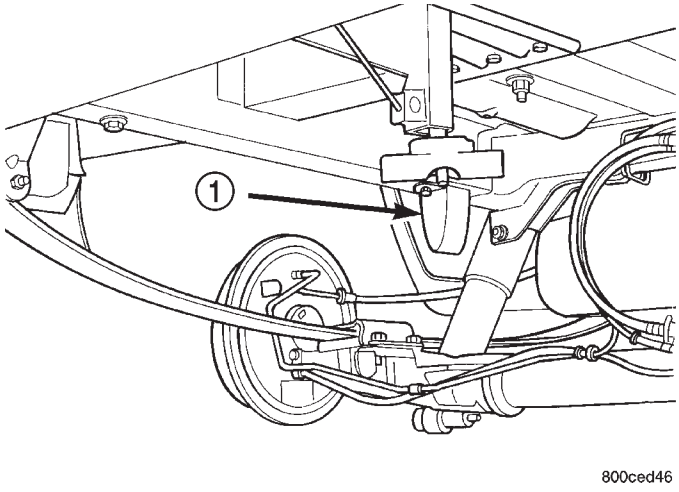

Fig. 21 Jounce Bumper - FWD

1 - **JOUNCE BUMPER**

INSTALLATION

INSTALLATION - AWD AND HEAVY DUTY

(1) Install jounce bumper through bumper support plate and thread into welded nut in frame rail.

(2) Tighten the jounce bumper to 33 N·m (290 in. lbs.) torque.

INSTALLATION - FRONT-WHEEL-DRIVE

(1) Hook the forward end of the jounce bumper bracket in the mounting hole of the frame rail, then install the mounting bolt in the opposite end, securing the bumper to the frame rail. Tighten the jounce bumper mounting bolt to 33 N·m (290 in. lbs.) torque.

SHOCK ABSORBER

DESCRIPTION

There is one shock absorber on each side of the rear suspension. The top of each shock absorber is bolted to the frame rail. The bottom of each shock absorber is bolted to the rear axle.

This vehicle is available with either standard type or load-leveling shock absorbers. On the exterior, load-leveling shock absorbers are larger in diameter than standard shock absorbers. The load-leveling shock absorbers mount the same as the standard shock absorbers.

OPERATION

The shock absorber dampens jounce and rebound motions of the spring and suspension.

Each load-leveling shock absorber is a self-leveling, self-contained vehicle leveling system and shock absorber combined. It does not require an external compressor, hoses, or height leveling sensors. All the height leveling sensors, hydraulic pump, etc., are contained inside the shock absorber. It uses road inputs (bumps, stops, starts, turns, acceleration, deceleration, etc.) to activate pumping, which results in the extension and compression of the shock absorber.

REMOVAL - SHOCK ABSORBER

(1) Raise vehicle. (Refer to LUBRICATION & MAINTENANCE/HOISTING - STANDARD PROCEDURE)

(2) Support the rear axle of the vehicle using 2 jackstands positioned at the outer ends of the axle.

NOTE: If the shock absorber lower mounting bolt deflects upward during removal, raise axle by adjusting the support jack. If the lower shock absorber bolt deflects downward during removal, lower the axle by adjusting the support jack.

(3) Remove the shock absorber lower mounting bolt.

(4) While holding shock absorber, remove the shock absorber upper mounting bolt and shock absorber.

DISASSEMBLY - SHOCK ABSORBER (UPPER BUSHING)

NOTE: This procedure applies to load-leveling shock absorbers only.

(1) Remove the shock absorber from the vehicle.

(2) Install the Receiver, Special Tool 8526-1, into the cup of the Ball Joint Press, Special Tool C-4212F, and tighten the set screw. Install the Driver, Special Tool 8526-2, on the tip of the Ball Joint Press screw drive as shown (Fig. 22).

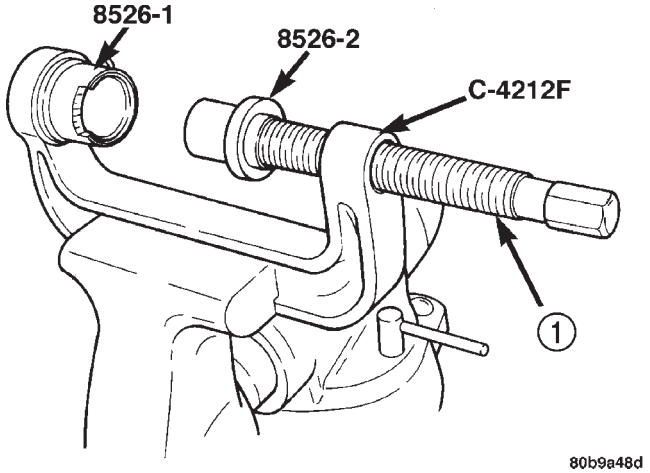

Fig. 22 Special Tools Positioned For Removal

1 - SCREW DRIVE

NOTE: It works well to place the Ball Joint Press, Special Tool C-4212F, in a bench vise as shown (Fig. 22) to perform this procedure.

(3) Place the shock absorber upper mounting eye in the Receiver so the notch in the Receiver clears the shock absorber body (Fig. 23).

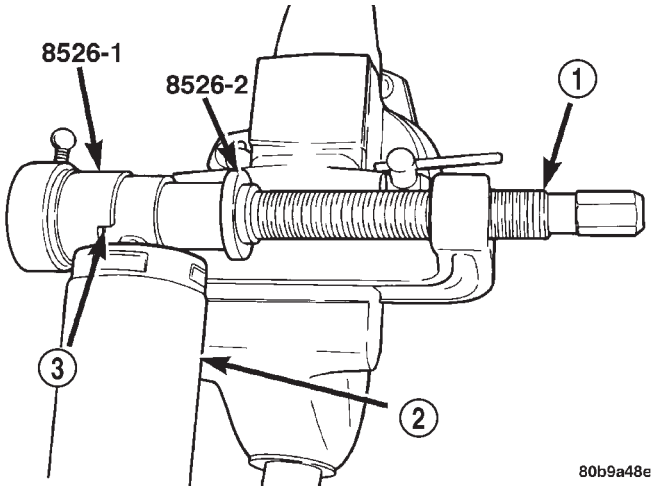

Fig. 23 Removing Bushing From Shock Absorber

1 - SCREW DRIVE
2 - SHOCK ABSORBER
3 - NOTCH

(4) Tighten the screw drive until the Driver contacts the outer circumference of the bushing evenly (Fig. 23). Continue to tighten the screw drive until the bushing is pressed completely out of the shock absorber eye and into the Receiver.

(5) Back off the screw drive and remove the bushing from the Receiver.

SHOCK ABSORBER (Continued)

ASSEMBLY - SHOCK ABSORBER (UPPER BUSHING)

NOTE: This procedure applies to load-leveling shock absorbers only.

(1) Install the Receiver, Special Tool 8526-1, into the cup of the Ball Joint Press, Special Tool C-4212F, and tighten the set screw. Install the Driver, Special Tool 8526-2, on the tip of the Ball Joint Press screw drive as shown (Fig. 24). Position the Driver this way to seat the bushing to its correct depth.

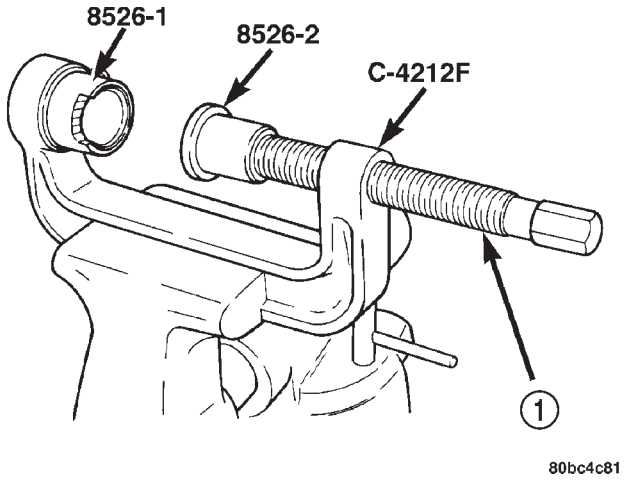

Fig. 24 Special Tools Positioned For Installation

1 - SCREW DRIVE

(2) Place the shock absorber upper mounting eye in the Receiver so the notch in the Receiver clears the shock absorber body (Fig. 25).

(3) Position the bushing between the shock absorber eye and the Driver (Fig. 25). Tighten the screw drive until the Driver, bushing, and shock absorber eye are touching and squarely aligned.

(4) Press the bushing into the shock absorber eye until the Driver bottoms against the face of the eye.

(5) Back off the Ball Joint Press screw drive and remove the shock absorber from the press.

(6) Install the shock absorber on the vehicle. Refer to REMOVAL AND INSTALLATION in this section for the procedure.

INSTALLATION - SHOCK ABSORBER

(1) While holding shock absorber in position against the frame rail, install the shock absorber upper mounting bolt.

(2) Install the shock absorber lower mounting bolt securing the lower end of the shock absorber to the axle.

(3) Remove the support jack.

(4) Lower the vehicle to the ground so the full curb weight of the vehicle is supported by the suspension.

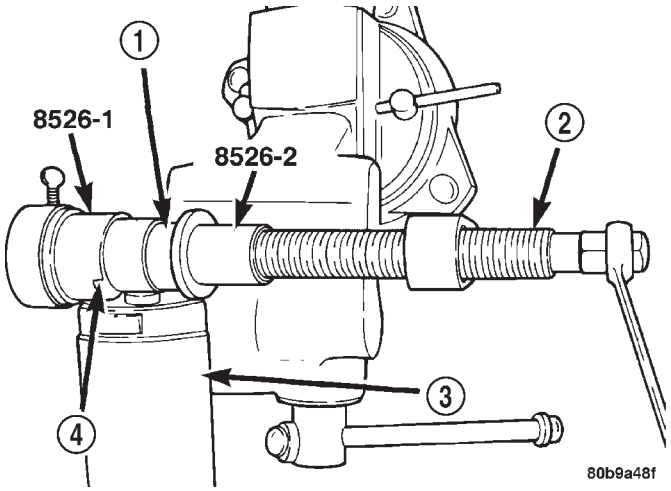

Fig. 25 Installing Bushing In Shock Absorber

1 - BUSHING
2 - SCREW DRIVE
3 - SHOCK ABSORBER
4 - NOTCH

(5) Tighten the upper and lower shock absorber mounting bolt to a torque of 88 N·m (65 ft. lbs.).

SPRING - AWD

DESCRIPTION

The leaf springs used on the rear suspension of this vehicle are of either a mono-leaf or multi-leaf design depending on model and options.

Since the rear springs come in various designs and rates, be sure the correct spring is in use.

OPERATION

The leaf spring controls ride quality and maintains ride height.

REMOVAL - AWD

(1) Raise vehicle on frame-contact hoist as follows:

(a) Position the hoist arm supporting the corner of the vehicle to be serviced against a block of wood placed on the body sill as shown (Fig. 26).

(b) Position the remaining hoist arms at each corner of the vehicle in the normal fashion. (Refer to LUBRICATION & MAINTENANCE/HOISTING - STANDARD PROCEDURE)

(c) Raise the vehicle to a comfortable working level.

(2) Position an under-hoist utility jack or transmission jack under rear axle toward the side needing spring replacement. Jack pad should just contact axle.

SPRING - AWD (Continued)

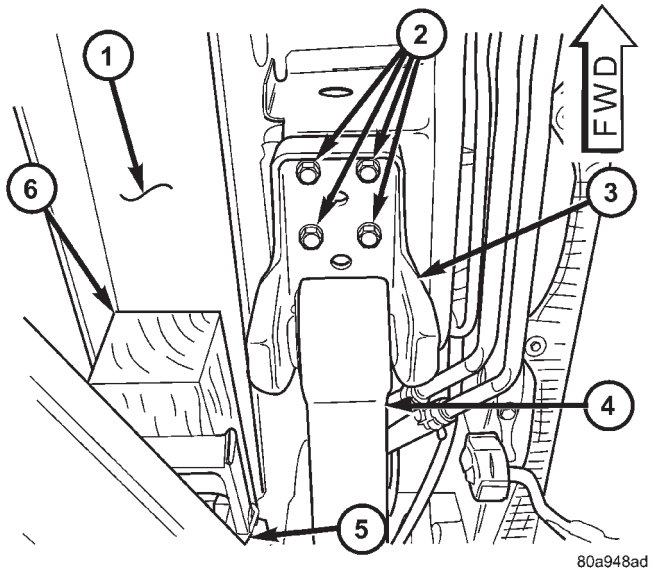

Fig. 26 LIFTING POINT AND SPRING MOUNT

1 - BODY SILL AREA
2 - MOUNTING BOLTS
3 - SPRING MOUNTING BRACKET
4 - LEAF SPRING
5 - HOIST LIFT ARM
6 - WOODEN BLOCK

NOTE: If shock absorber bolt deflects upward during removal, raise axle by adjusting support jack. If shock absorber bolt deflects downward during removal, lower axle by adjusting support jack (or by pulling on axle).

(3) Begin removal of the shock absorber lower mounting bolt (Fig. 27).

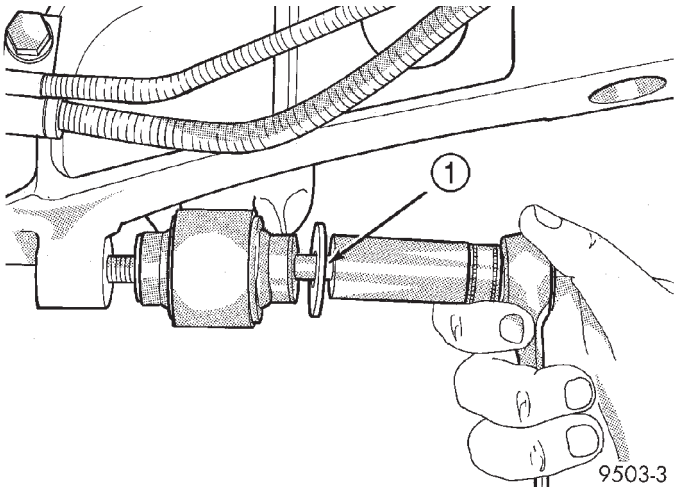

Fig. 27 Rear Shock Absorber Mounting Bolt

1 - SHOCK BOLT

(4) Using 2 jack stands positioned under the outer ends of the axle, raise the axle enough to remove the weight of the axle from the rear springs.

(5) Loosen and remove the axle plate bolts from the rear axle (Fig. 28).

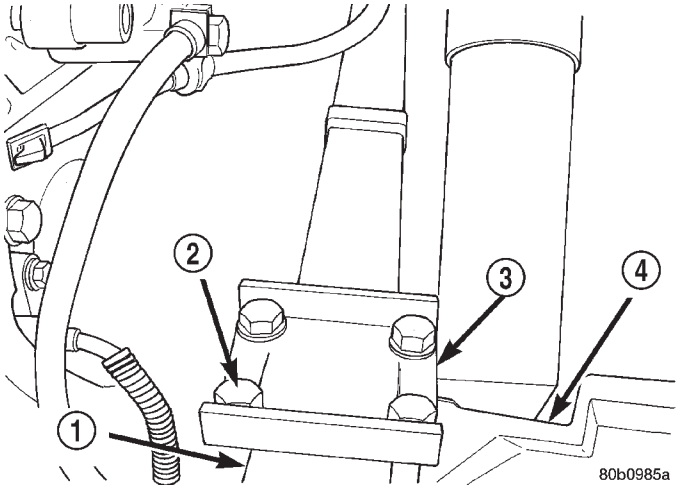

Fig. 28 Axle Plate Bolts

1 - LEAF SPRING
2 - AXLE PLATE BOLTS (4)
3 - AXLE PLATE
4 - AXLE

(6) Using the jack stands **slowly** lower the rear axle, permitting the rear springs to hang free.

(7) Loosen and remove the 4 bolts at the front mount of the rear leaf spring (Fig. 26).

(8) Loosen and remove the 2 bolts and the 2 pin nuts from the spring shackle for the rear leaf spring (Fig. 29). Then remove the inner half of the spring shackle from the outer half hanger of the spring hanger and the spring.

(9) Remove the rear leaf spring from the outer half of the spring shackle.

(10) Remove the leaf spring from the vehicle.

(11) Loosen and remove the pivot bolt from the front mount of the rear leaf spring. (Fig. 30).

INSTALLATION - AWD

CAUTION: Pivot bolt must face inboard to prevent structural damage during installation of spring.

(1) Install the front eyelet of the rear leaf spring into the spring mount. Install the pivot bolt and nut. **Do not tighten the pivot bolt at this time.**

(2) Position the front spring mount for the rear leaf spring against the floor pan of the vehicle. Install the 4 mounting bolts for the front spring mount (Fig. 26). Tighten the 4 mounting bolts to a torque of 61 N·m (45 ft. lbs.).

SPRING - AWD (Continued)

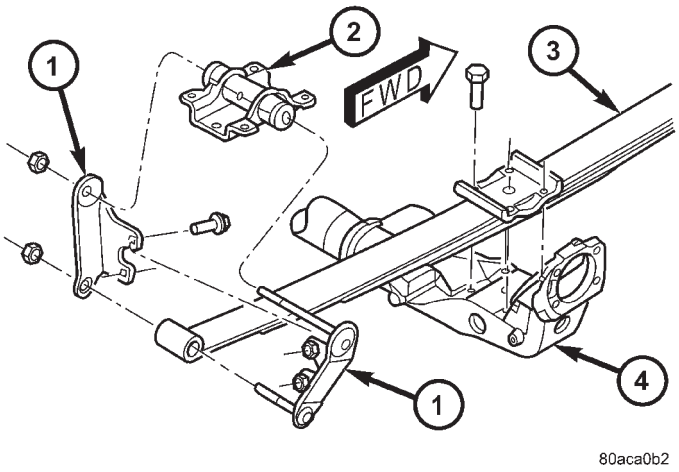

Fig. 29 All-Wheel-Drive Rear Suspension

1 - SHACKLE
2 - REAR MOUNT (HANGER)
3 - LEAF SPRING (MULTI-LEAF)
4 - AWD REAR AXLE

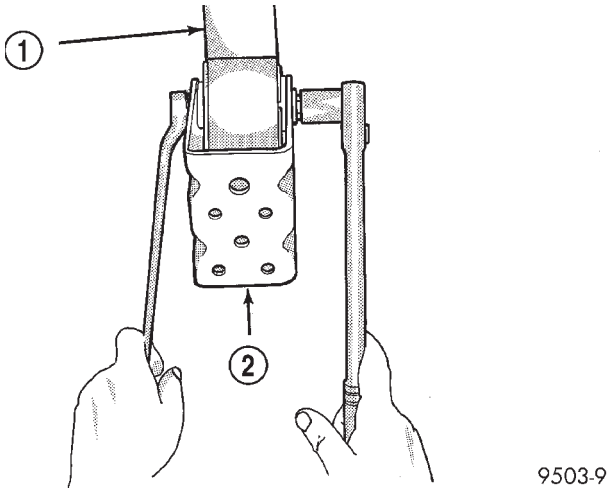

Fig. 30 Leaf Spring Front Mount (Typical)

1 - LEAF SPRING
2 - SPRING MOUNT

(3) Install the rear of the leaf spring onto the outer half of the rear shackle. Install the inner half of the rear hanger. Install the pin nuts and bolts on the rear shackle, **but do not tighten at this time.**

(4) Raise axle assembly into correct position with axle centered under spring locator post.

(5) Install axle plate bolts (Fig. 28). Tighten bolts to 95 N·m (70 ft. lbs.) torque.

(6) Install shock absorber bolts. **Do not tighten at this time.**

(7) Lower the vehicle and remove hoist arms and block of wood from under vehicle.

CAUTION: The following sequence must be followed when tightening the pin nuts on the rear hanger for the rear leaf spring. First the hanger pin nuts must be tightened to the specified torque shown below. Then tighten the retaining bolts for the inner to outer half of the spring hanger to the torque specification listed below. This sequence must be followed to properly seat the bushings into the springs and to avoid bending the spring hanger.

(8) Tighten the spring front pivot bolt to 156 N·m (115 ft. lbs.) torque.

(9) Tighten rear spring shackle pin nuts to 61 N·m (45 ft. lbs.) torque.

(10) Tighten rear spring shackle inner to outer half retaining bolts to 61 N·m (45 ft. lbs.) torque.

(11) Tighten the lower shock absorber mounting bolt to 102 N·m (75 ft. lbs.) torque.

SPRING - FWD

DESCRIPTION

The leaf springs used on the rear suspension of this vehicle are of either a mono-leaf or multi-leaf design depending on model and options.

Since the rear springs come in various designs and rates, be sure the correct spring is in use.

OPERATION

The leaf spring controls ride quality and maintains ride height.

REMOVAL - FWD

(1) Raise vehicle on frame-contact hoist as follows:

(a) Position the hoist arm supporting the corner of the vehicle to be serviced against a block of wood placed on the body sill as shown (Fig. 31).

(b) Position the remaining hoist arms at each corner of the vehicle in the normal fashion. (Refer to LUBRICATION & MAINTENANCE/HOISTING - STANDARD PROCEDURE)

(c) Raise the vehicle to a comfortable working level.

(2) Position an under-hoist utility jack or transmission jack under rear axle toward the side needing spring replacement. Jack pad should just contact axle.

(3) Remove the shock absorber lower mounting bolt (Fig. 32).

NOTE: If shock absorber bolt deflects upward during removal, raise axle by adjusting support jack. If shock absorber bolt deflects downward during removal, lower axle by adjusting support jack (or by pulling on axle).

SPRING - FWD (Continued)

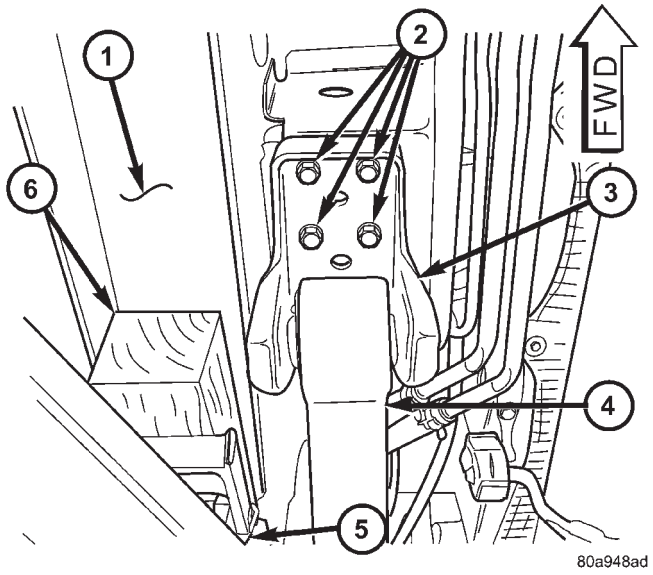

Fig. 31 LIFTING POINT AND SPRING MOUNT

1 - BODY SILL AREA
2 - MOUNTING BOLTS
3 - SPRING MOUNTING BRACKET
4 - LEAF SPRING
5 - HOIST LIFT ARM
6 - WOODEN BLOCK

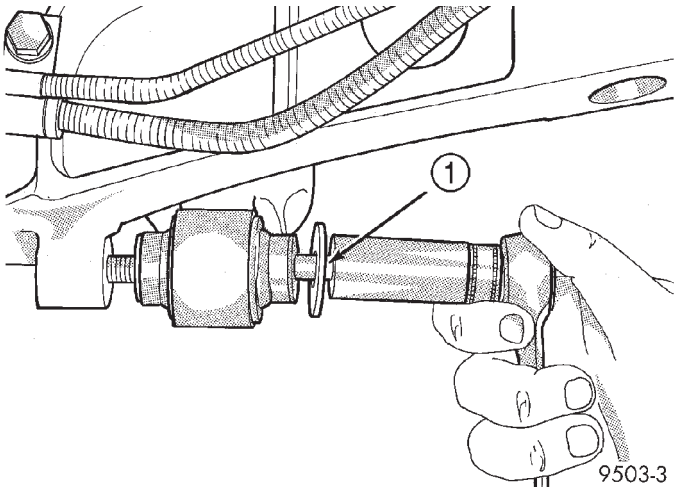

Fig. 32 Rear Shock Mounting Bolt

1 - SHOCK BOLT

(4) Using 2 jack stands positioned under the outer ends of the axle, raise the axle enough to remove the weight of the axle from the rear springs.

(5) Loosen and remove the spring plate bolts from the rear axle (Fig. 33).

(6) Remove the spring plate from the rear axle and the leaf spring (Fig. 34).

(7) Using the jack stands **slowly** lower the rear axle, permitting the rear springs to hang free.

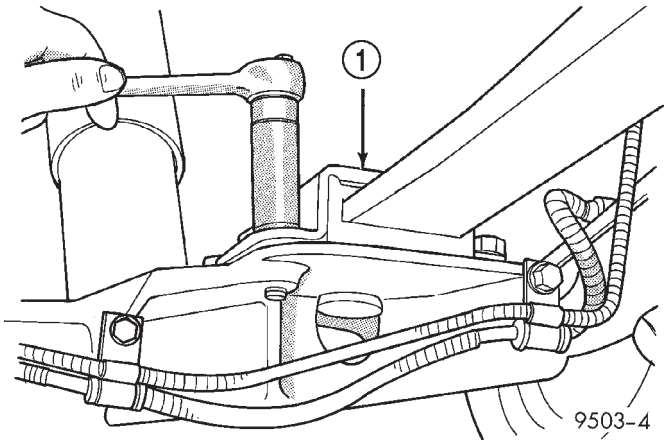

Fig. 33 Spring Plate Bolts

1 - SPRING PLATE

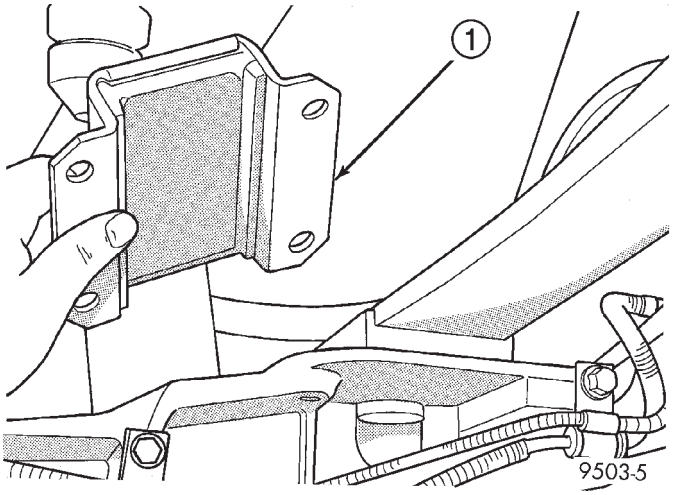

Fig. 34 Spring Plate

1 - SPRING PLATE

(8) Loosen and remove the 4 bolts securing the front mount of the leaf spring to the vehicle (Fig. 31).

(9) Loosen and remove the nuts from the spring hanger (Fig. 35) for the rear leaf spring. Then remove the hanger plate from the hanger and remove the spring from the spring hanger (Fig. 35).

(10) Remove the leaf spring from the vehicle.

(11) Loosen and remove the pivot bolt from the front mount of the rear leaf spring. Remove mount.

INSTALLATION - FWD

(1) Assemble front spring mount to front of spring eye and install pivot bolt and nut. **Do not tighten at this time.**

CAUTION: Pivot bolt must face inboard to prevent structural damage during installation of spring.

SPRING - FWD (Continued)

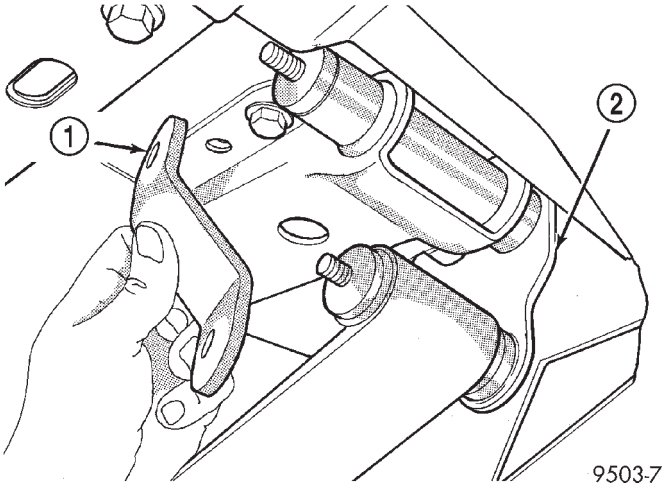

Fig. 35 Rear Spring Hanger

1 - SHACKLE PLATE
2 - SPRING HANGER

(2) Raise front of spring and install four mounting bolts (Fig. 31). Tighten bolts to 61 N·m (45 ft. lbs.) torque.

(3) Install rear of spring onto rear spring shackle. Install shackle plate. Do not tighten.

(4) Verify lower leaf spring isolator is in position.

(5) Raise axle into correct position on leaf spring with axle centered under spring locator post (Fig. 36).

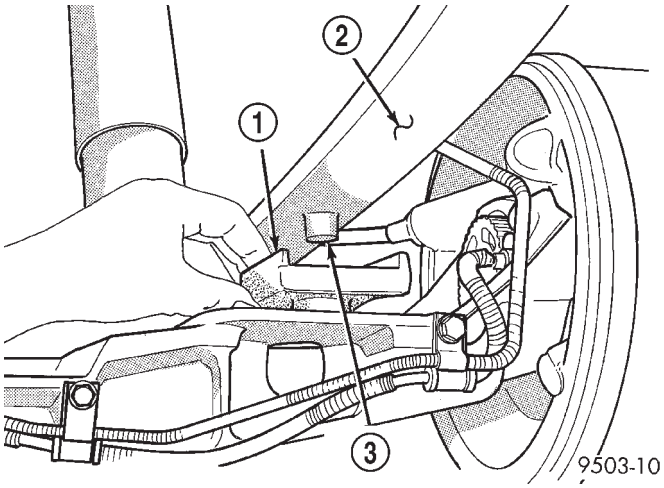

Fig. 36 Leaf Spring Locator Post

1 - LEAF SPRING ISOLATOR
2 - LEAF SPRING
3 - LOCATOR POST

(6) Verify that the leaf spring isolator is correctly positioned in the spring plate.

(7) Install spring plate in position on the spring (Fig. 33).

(8) Install spring plate bolts (Fig. 33). Tighten bolts to 95 N·m (70 ft. lbs.) torque.

(9) Install lower shock absorber bolt. **Do not tighten at this time**.

(10) Remove jack under axle.

(11) Lower the vehicle and remove hoist arms and block of wood from under vehicle.

CAUTION: The following sequence must be followed when tightening the pin nuts on the rear hanger for the rear leaf spring. First the hanger pin nuts must be tightened to the specified torque shown below. Then tighten the retaining bolts for the inner to outer half of the spring hanger to the torque specification listed below. This sequence must be followed to properly seat the bushings into the springs and to avoid bending the spring hanger.

(12) Tighten the spring front pivot bolt to 156 N·m (115 ft. lbs.) torque.

(13) Tighten rear spring shackle pin nuts to 61 N·m (45 ft. lbs.) torque.

(14) Tighten rear spring shackle inner to outer half retaining bolts to 61 N·m (45 ft. lbs.) torque.

(15) Tighten the lower shock absorber mounting bolt to 102 N·m (75 ft. lbs.) torque.

SPRING MOUNTS - FRONT

REMOVAL

(1) Raise vehicle on frame-contact hoist as follows:

(a) Position the hoist arm supporting the corner of the vehicle to be serviced against a block of wood placed on the body sill as shown (Fig. 37).

(b) Position the remaining hoist arms at each corner of the vehicle in the normal fashion. (Refer to LUBRICATION & MAINTENANCE/HOISTING - STANDARD PROCEDURE)

(c) Raise the vehicle to a comfortable working level.

(2) Position an under-hoist utility jack or transmission jack under rear axle toward the side needing bushing replacement. Jack pad should just contact axle.

(3) Remove shock absorber lower mounting bolt.

NOTE: If shock absorber bolt deflects upward during removal, raise axle by adjusting support jack. If shock absorber bolt deflects downward during removal, lower axle by adjusting support jack (or by pulling on axle).

(4) Remove four bolts securing leaf spring front mounting bracket to the body (Fig. 37).

(5) Using jack, **slowly** lower rear axle, permitting the forward end of rear spring to hang down. Lower

SPRING MOUNTS - FRONT (Continued)

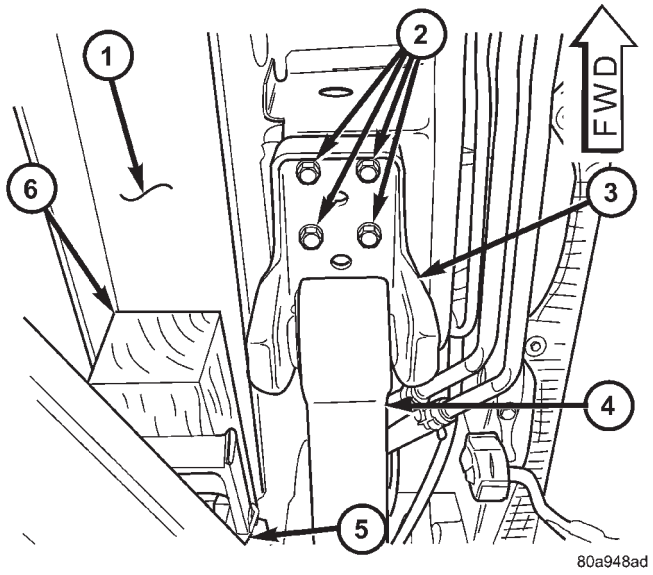

Fig. 37 LIFTING POINT AND SPRING MOUNT

1 - BODY SILL AREA
2 - MOUNTING BOLTS
3 - SPRING MOUNTING BRACKET
4 - LEAF SPRING
5 - HOIST LIFT ARM
6 - WOODEN BLOCK

it enough to allow access to spring pivot bolt. It may be necessary to place a wooden block between the spring and vehicle to hold forward end of the spring in place.

(6) Remove leaf spring forward pivot bolt, then remove mounting bracket.

INSTALLATION

(1) Position spring mounting bracket over spring eye and install pivot bolt through center of bushing from the **outboard** side.

NOTE: The pivot bolt must be installed from the outboard side to allow proper bracket to body mounting.

(2) Install the nut on the pivot bolt and lightly tighten. Do not fully tighten bolt at this time.

(3) Raise the under-hoist utility jack or transmission jack, guiding the forward mounting bracket into place against the body. It may help to use a drift punch placed through the hole centered between the mounting bolt holes in the bracket and the pilot hole in the body of the vehicle as a guide. When the four mounting bolt holes line up with their threads in the body, Install the mounting bolts (Fig. 37). Tighten the four mounting bolts to 61 N·m (45 ft. lbs.) torque.

(4) Raise or lower the jack until shock absorber lower eye aligns with threads in axle housing. Install shock absorber lower mounting bolt. Do not fully tighten bolt at this time.

(5) Lower the vehicle and remove hoist arms and block of wood from under vehicle.

(6) Tighten the spring front pivot bolt to 156 N·m (115 ft. lbs.) torque.

(7) Tighten the lower shock absorber mounting bolt to 88 N·m (65 ft. lbs.) torque.

SPRING MOUNTS - REAR

REMOVAL

(1) Remove the attaching nuts and bolts from the leaf spring rear shackle (Fig. 38) and (Fig. 39).

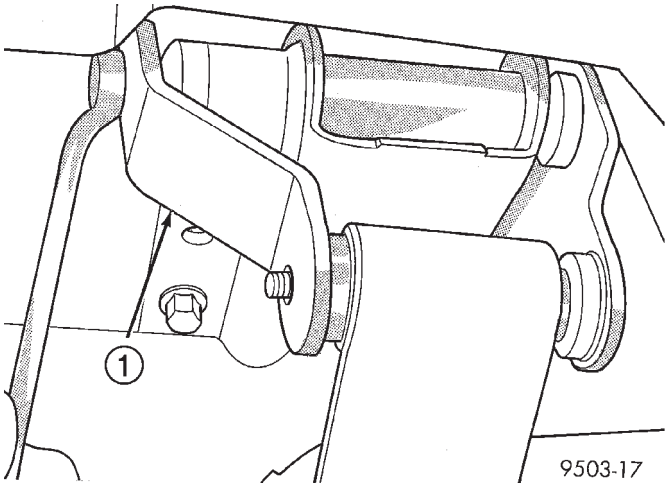

Fig. 38 Leaf Spring Shackle Nuts (FWD)

1 - SHACKLE PLATE

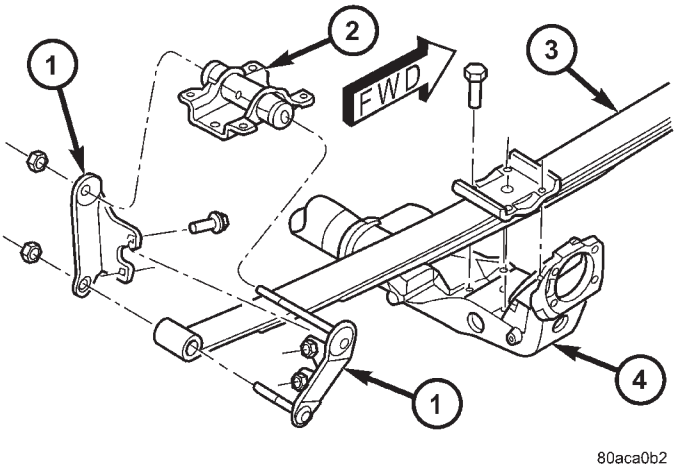

Fig. 39 All-Wheel-Drive Rear Suspension

1 - SHACKLE
2 - REAR MOUNT (HANGER)
3 - LEAF SPRING (MULTI-LEAF)
4 - AWD REAR AXLE

SPRING MOUNTS - REAR (Continued)

(2) Install a jackstand under the side of the axle having the leaf spring mount removed. Using the jackstand, support the weight of the axle and leaf spring.

(3) Remove the lower mounting bolt from the shock absorber.

(4) Remove the bolts attaching the leaf spring rear mount to the body of the vehicle (Fig. 40).

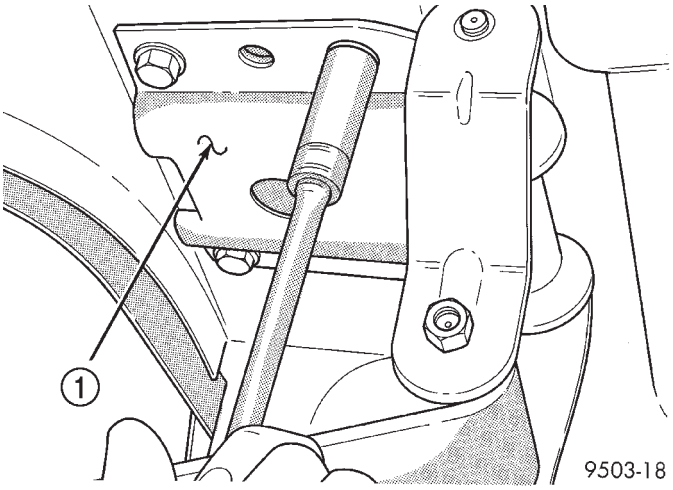

Fig. 40 Rear Spring Mount

1 - LEAF SPRING MOUNT

(5) Lower the jackstand and the rear of the leaf spring. Remove the shackle from the leaf spring bushing.

INSTALLATION

CAUTION: The following sequence must be followed when tightening the pin nuts on the rear hanger for the rear leaf spring. First the hanger pin nuts must be tightened to the specified torque. Then tighten the retaining bolts for the inner to outer half of the spring hanger to the specified torque. This sequence must be followed to avoid bending the spring hanger.

(1) For installation, reverse removal procedure. Do not tighten rear spring shackle nuts fully until vehicle is lowered and the full vehicle weight is applied to the rear wheels. Tighten rear spring mount bolts to 61 N·m (45 ft. lbs.). Tighten shackle nuts to 61 N·m (45 ft. lbs.).

STABILIZER BAR

DESCRIPTION

Front-wheel-drive models use a stabilizer bar that is mounted behind the rear axle. All-wheel-drive models use a stabilizer bar that is mounted in front of the rear axle.

The stabilizer bar interconnects both sides of the rear axle and attaches to the rear frame rails using 2 rubber isolated link arms.

Both type stabilizer bars have the same basic components. Attachment to the rear axle tube, and rear frame rails is through rubber-isolated bushings.

The 2 rubber isolated links are connected to the rear frame rails by brackets. These brackets are bolted to the bottom of the frame rails.

OPERATION

Jounce and rebound movements affecting one wheel are partially transmitted to the opposite wheel to reduce body roll.

REMOVAL

REMOVAL - AWD

(1) Raise vehicle. (Refer to LUBRICATION & MAINTENANCE/HOISTING - STANDARD PROCEDURE)

(2) Remove the bolts securing the stabilizer bar to links on each end of the bar.

(3) While holding the stabilizer bar in place, remove the bolts that attach the stabilizer bar bushing retainers to the rear axle.

(4) Remove the stabilizer bar from the vehicle.

(5) If the links need to be serviced, remove the upper link arm to bracket bolt. Then remove link arm from frame rail attaching bracket.

REMOVAL - FWD

(1) Raise vehicle. See Hoisting in Lubrication and Maintenance.

(2) Remove the bolts securing the stabilizer bar to links on each side of bar.

(3) While holding the stabilizer bar in place, remove the bolts that attach the stabilizer bar bushing retainers to the rear axle.

(4) Remove the stabilizer bar from the vehicle.

INSTALLATION

INSTALLATION - AWD

(1) Install the stabilizer bar on the rear axle.

(2) Install bushing retainer bolts. Do not tighten at this time.

(3) Install bolts connecting links to stabilizer bar. Do not tighten at this time.

(4) Lower the vehicle so that the full weight of the vehicle is on all four tires. With the vehicle at its curb height, tighten the following bolts to the torques listed:

- Stabilizer bar bushing retainer-to-axle bracket bolts — 61 N·m (45 ft. lbs.)

STABILIZER BAR (Continued)

- Stabilizer bar-to-link bolts — 61 N·m (45 ft. lbs.)

INSTALLATION - FWD

(1) Lift the stabilizer bar onto the rear axle and install the two retainer mounting bolts. DO NOT TIGHTEN.

(2) Install the bolts attaching the stabilizer bar links to the stabilizer bar. DO NOT TIGHTEN.

(3) Lower the vehicle so that the full weight of the vehicle is on all four tires. With the vehicle at its curb height, tighten the following bolts to the torques listed:

- Stabilizer bar bushing retainer-to-axle bracket bolts — 61 N·m (45 ft. lbs.)
- Stabilizer bar-to-link — 61 N·m (45 ft. lbs.)

TRACK BAR

DESCRIPTION

On front-wheel-drive applications of this vehicle that are equipped with single leaf rear springs, a track bar is used on the rear axle (Fig. 1).

The track bar connects the rear axle to the frame/body of the vehicle. The track bar is isolated from the body of the vehicle by an isolator bushing located in each end of the track bar.

OPERATION

The track bar prevents excessive side-to-side movement of the rear axle. The track bar is used to keep the location of the axle in the correct position for optimum handling and control of the vehicle.

REMOVAL

(1) Remove the nut and bolt mounting the track bar to the rear axle (Fig. 41).

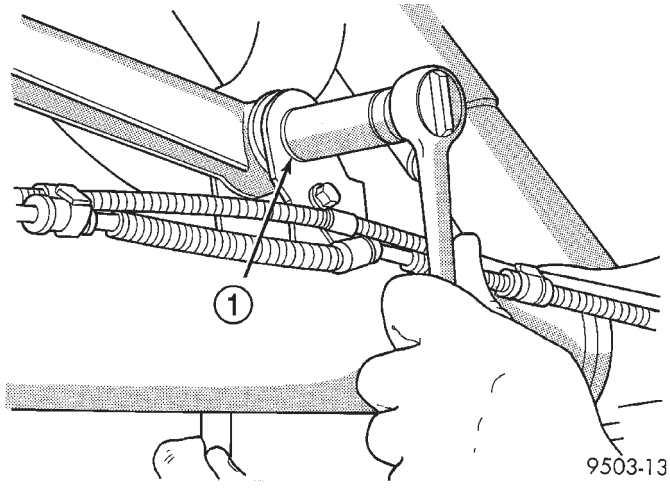

Fig. 41 Track Bar Mounting To Axle (Typical)

1 - LOWER TRACK BAR BOLT INSTALLATION

(2) Remove the nut and bolt attaching the track bar to the track bar mount on the body of the vehicle. Remove the track bar from the track bar mount.

INSTALLATION

(1) Install the track bar first into the body mount for the track bar (Fig. 42). Install the track bar bolt with the head of the bolt facing toward the rear of the vehicle (Fig. 43). Do not tighten.

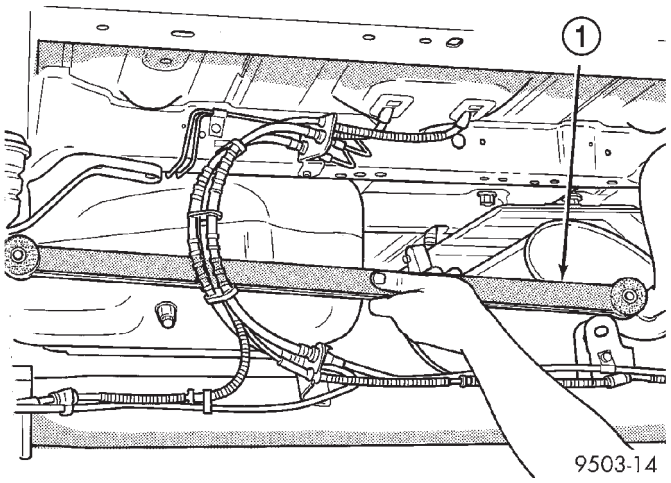

Fig. 42 Track Bar Installation (Typical)

1 - TRACK BAR REPLACEMENT

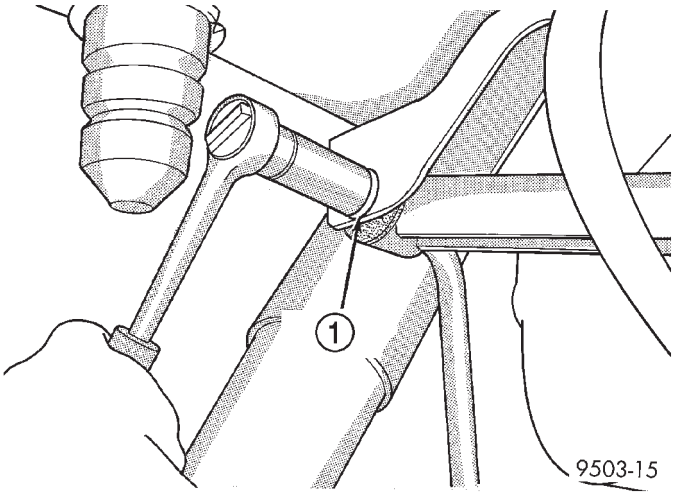

Fig. 43 Track Bar Bolt Installation

1 - TRACK BAR BOLT

(2) Install the track bar into its mounting bracket on the rear axle (Fig. 41). Install the track bar bolt with the head of the bolt facing toward the rear of the vehicle. Do not tighten.

(3) Lower the vehicle to the ground until the full weight of the vehicle is supported by the wheels. Tighten both track bar attaching bolts to a torque of 95 N·m (70 ft. lbs.).

WHEEL ALIGNMENT

TABLE OF CONTENTS

page

WHEEL ALIGNMENT
DESCRIPTION - WHEEL ALIGNMENT 46
DIAGNOSIS AND TESTING - SUSPENSION AND STEERING 49
STANDARD PROCEDURE
STANDARD PROCEDURE - WHEEL ALIGNMENT 51
STANDARD PROCEDURE - CURB HEIGHT MEASUREMENT 54
STANDARD PROCEDURE - CURB HEIGHT MEASUREMENT (EXPORT) 55
SPECIFICATIONS
WHEEL ALIGNMENT 56

WHEEL ALIGNMENT

DESCRIPTION - WHEEL ALIGNMENT

Vehicle wheel alignment is the positioning of all interrelated front and rear suspension angles. These angles affect the handling and steering of the vehicle when it is in motion. Proper wheel alignment is essential for efficient steering, good directional stability, and proper tire wear.

The method of checking a vehicle's front and rear wheel alignment varies depending on the manufacturer and type of equipment used. The manufacturer's instructions should always be followed to ensure accuracy of the alignment, except when DaimlerChrysler Corporation's wheel alignment specifications differ.

On this vehicle, the suspension angles that can be adjusted are as follows:

- Front Camber (with camber bolt package and standard procedure)
- Front Toe

Check the wheel alignment and make all wheel alignment adjustments with the vehicle standing at its proper curb height specification. Curb height is the normal riding height of the vehicle. It is measured from a certain point on the vehicle to the ground or a designated area while the vehicle is sitting on a flat, level surface. Refer to Curb Height Measurement in this section for additional information.

Typical wheel alignment angles and measurements are described in the following paragraphs.

CAMBER

Camber is the inward or outward tilt of the top of the tire and wheel assembly (Fig. 1). Camber is measured in degrees of angle relative to a true vertical line. Camber is a tire wearing angle.

- Excessive negative camber will cause tread wear at the inside of the tire.
- Excessive positive camber will cause tread wear on the outside of the tire.

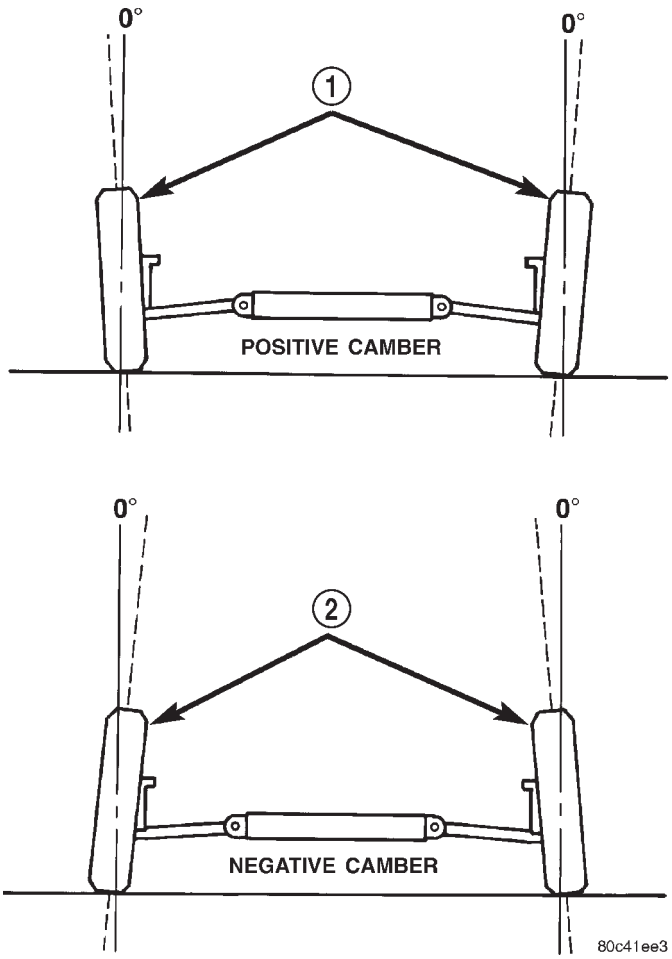

Fig. 1 Camber

1 - WHEELS TILTED OUT AT TOP
2 - WHEELS TILTED IN AT TOP

WHEEL ALIGNMENT (Continued)

CROSS CAMBER

Cross camber is the difference between left and right camber. To achieve the cross camber reading, subtract the right side camber reading from the left. For example, if the left camber is +0.3° and the right camber is 0.0°, the cross camber would be +0.3°.

CASTER

Caster is the forward or rearward tilt of the steering knuckle in reference to the position of the upper and lower ball joints. Caster is measured in degrees of angle relative to a true vertical center line. This line is viewed from the side of the tire and wheel assembly (Fig. 2).

- Forward tilt (upper ball joint ahead of lower) results in a negative caster angle.
- Rearward tilt (upper ball joint trailing lower) results in a positive caster angle.

Although caster does not affect tire wear, a caster imbalance between the two front wheels may cause the vehicle to lead to the side with the least positive caster.

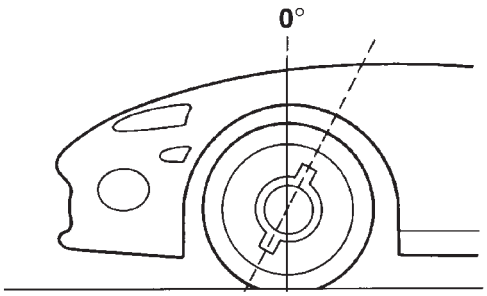

POSITIVE CASTER

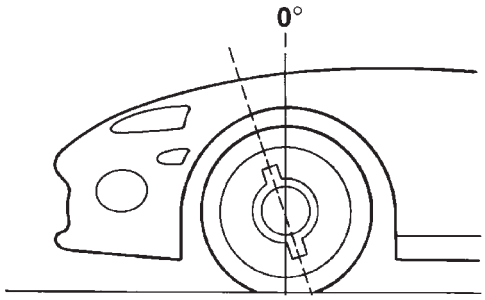

NEGATIVE CASTER

80c41ee4

Fig. 2 Caster

CROSS CASTER

Cross caster is the difference between left and right caster.

TOE

Toe is the inward or outward angle of the wheels as viewed from above the vehicle (Fig. 3).

- Toe-in is produced when the front edges of the wheels on the same axle are closer together than the rear edges.
- Toe-out is produced when the front edges of the wheels on the same axle are farther apart than the rear edges.

Toe-in and toe-out can occur at the front wheels and the rear wheels.

Toe is measured in degrees or inches. The measurement identifies the amount that the front of the wheels point inward (toe-in) or outward (toe-out). Toe is measured at the spindle height. Zero toe means the front and rear edges of the wheels on the same axle are equally distant.

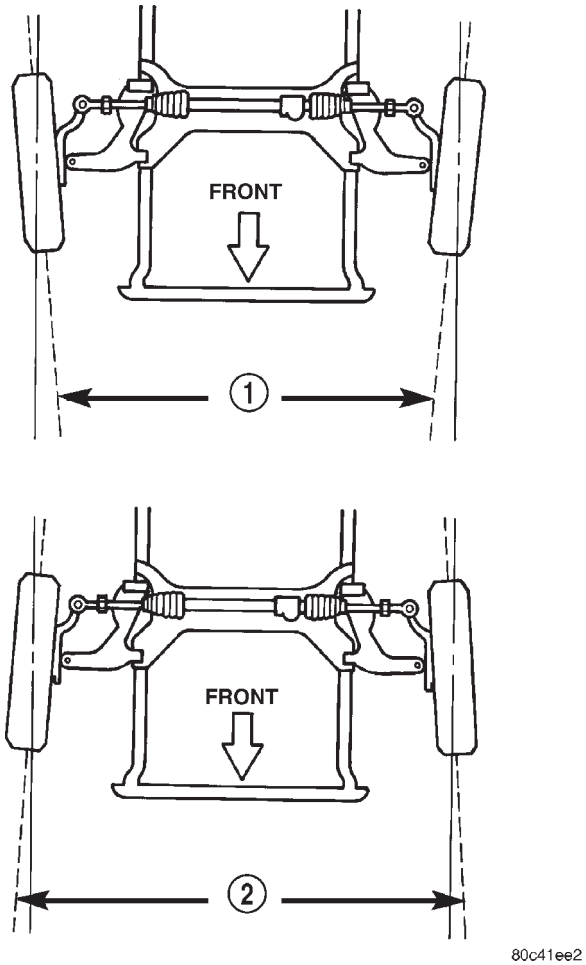

80c41ee2

Fig. 3 Toe

1 - TOE-IN
2 - TOE-OUT

WHEEL ALIGNMENT (Continued)

TOE-OUT ON TURNS

Toe-out on turns is the relative positioning of the front wheels while steering through a turn (Fig. 4). This compensates for each front wheel's turning radius. As the vehicle encounters a turn, the outboard wheel must travel in a larger radius circle than the inboard wheel. The steering system is designed to make each wheel follow its particular radius circle. To accomplish this, the front wheels must progressively toe outward as the steering is turned from center. This eliminates tire scrubbing and undue tire wear when steering a vehicle through a turn.

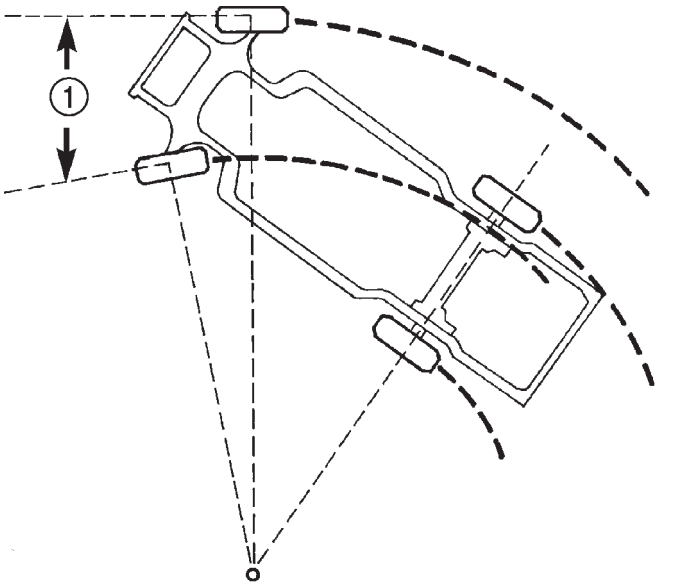

Fig. 4 Toe-Out On Turns

1 - TOE-OUT ON TURNS

DYNAMIC TOE PATTERN

Dynamic toe pattern is the inward and outward toe movement of the front and rear tires through the suspension's jounce and rebound travel. As the vehicle's suspension moves up and down, the toe pattern varies. Toe pattern is critical in controlling the directional stability of the vehicle while in motion. Front and rear dynamic toe pattern is preset by the factory at the time the vehicle is assembled.

It is not necessary to check or adjust front or rear dynamic toe pattern when doing a normal wheel alignment. The only time dynamic toe pattern needs to be checked or adjusted is if the frame of the vehicle has been damaged.

STEERING AXIS INCLINATION (S. A. I.)

Steering axis inclination is the angle between a true vertical line starting at the center of the tire at the road contact point and a line drawn through the center of the upper ball joint (or strut) and the lower ball joint (Fig. 5). S.A.I. is built into the vehicle and is not an adjustable angle. If S.A.I. is not within specifications, a bent or damaged suspension component may be the cause.

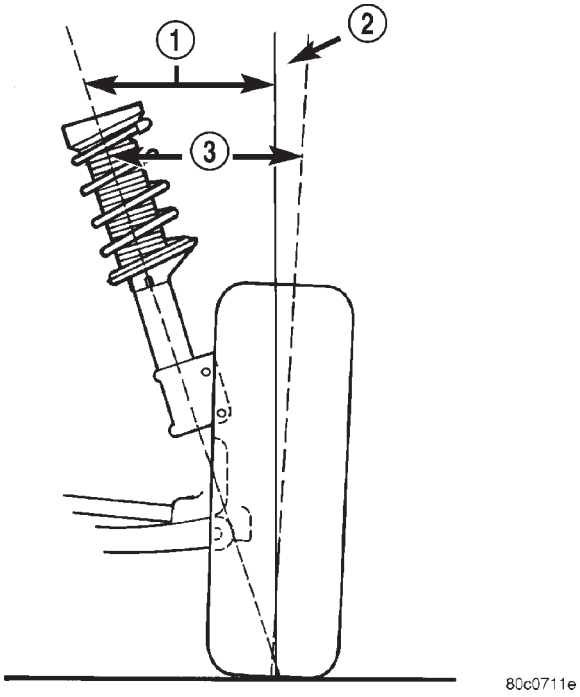

Fig. 5 S.A.I. and I.A.

1 - S.A.I.
2 - CAMBER
3 - I.A.

INCLUDED ANGLE (I. A.)

Included angle is the sum of the S.A.I. angle plus or minus the camber angle, depending on whether or not the wheel has positive or negative camber (Fig. 5). If camber is positive, add the camber angle to the S.A.I. angle. If camber is negative, subtract the camber angle from the S.A.I. angle. Included angle is not adjustable, but can be used to diagnose a frame misalignment or bent suspension component (spindle, strut).

WHEEL ALIGNMENT (Continued)

THRUST ANGLE

Thrust angle is the averaged direction the rear wheels are pointing in relation to the vehicle's center line (Fig. 6). The presence of negative or positive thrust angle causes the rear tires to track improperly to the left or right of the front tires (dog tracking).

- Negative thrust angle means the rear tires are tracking to the left of the front tires.
- Positive thrust angle means the rear tires are tracking to the right of the front tires.

Improper tracking can cause undue tire wear, a lead or pull and a crooked steering wheel. Excessive thrust angle can usually be corrected by adjusting the rear wheel toe so that each wheel has one-half of the total toe measurement.

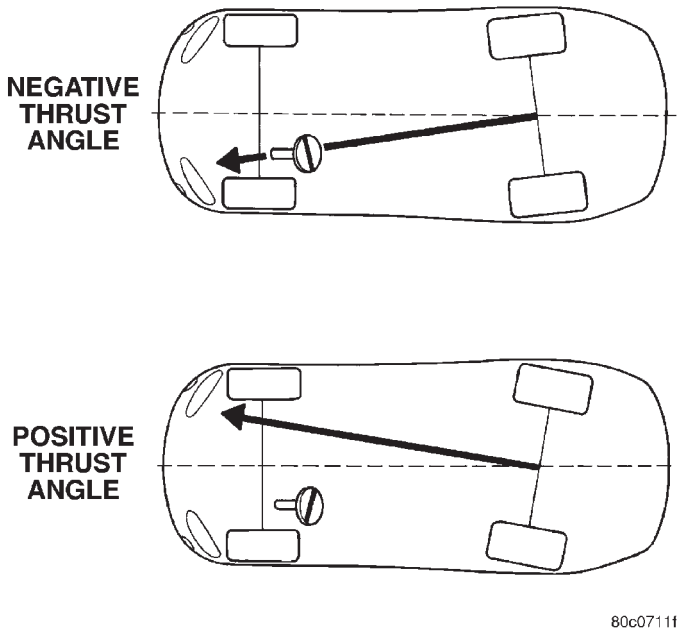

Fig. 6 Thrust Angle

DIAGNOSIS AND TESTING - SUSPENSION AND STEERING

CONDITION	POSSIBLE CAUSES	CORRECTION
Front End Whine On Turns	1. Defective wheel bearing	1. Replace wheel bearing
	2. Incorrect wheel alignment	2. Check and reset wheel alignment
	3. Worn tires	3. Replace tires
Front End Growl Or Grinding On Turns	1. Defective wheel bearing	1. Replace wheel bearing
	2. Engine mount grounding	2. Check for motor mount hitting frame rail and reposition engine as required
	3. Worn or broken C/V joint	3. Replace C/V joint
	4. Loose wheel lug nuts	4. Verify wheel lug nut torque
	5. Incorrect wheel alignment	5. Check and reset wheel alignment
	6. Worn tires	6. Replace tires
	7. Front strut pin in upper strut mount	7. Replace the front strut upper mount and bearing
Front End Clunk Or Snap On Turns	1. Loose lug nuts	1. Verify wheel lug nut torque
	2. Worn or broken C/V joint	2. Replace C/V joint
	3. Worn or loose tie rod	3. Tighten or replace tie rod end
	4. Worn or loose ball joint	4. Tighten or replace ball joint
	5. Worn/loose control arm bushing	5. Replace control arm bushing
	6. Loose stabilizer bar.	6. Tighten stabilizer bar to specified torque

WHEEL ALIGNMENT (Continued)

CONDITION	POSSIBLE CAUSES	CORRECTION
	7. Loose strut mount to body attachment	7. Tighten strut attachment to specified torque
	8. Loose crossmember bolts	8. Tighten crossmember bolts to specified torque
Front End Whine With Vehicle Going Straight At A Constant Speed	1. Defective wheel bearing	1. Replace wheel bearing
	2. Incorrect wheel alignment	2. Check and reset wheel alignment
	3. Worn tires	3. Replace tires
	4. Worn or defective transaxle gears or bearings	4. Replace transaxle gears or bearings
Front End Growl Or Grinding With Vehicle Going Straight At A Constant Speed	1. Engine mount grounding	1. Reposition engine as required
	2. Worn or broken C/V joint	2. Replace C/V joint
Front End Whine When Accelerating Or Decelerating	1. Worn or defective transaxle gears or bearings	1. Replace transaxle gears or bearings
Front End Clunk When Accelerating Or Decelerating	1. Worn or broken engine mount	1. Replace engine mount
	2. Worn or defective transaxle gears or bearings	2. Replace transaxle gears or bearings
	3. Loose lug nuts	3. Verify wheel lug nut torque
	4. Worn or broken C/V joint	4. Replace C/V joint
	5. Worn or loose ball joint	5. Tighten or replace ball joint
	6. Worn or loose control arm bushing	6. Replace control arm bushing
	7. Loose crossmember bolts	7. Tighten crossmember bolts to specified torque
	8. Worn tie rod end	8. Replace tie rod end
Road Wander	1. Incorrect tire pressure	1. Inflate tires to recommended pressure
	2. Incorrect front or rear wheel toe	2. Check and reset wheel toe
	3. Worn wheel bearings	3. Replace wheel bearing
	4. Worn control arm bushings	4. Replace control arm bushing
	5. Excessive friction in steering gear	5. Replace steering gear
	6. Excessive friction in steering shaft coupling	6. Replace steering coupler
	7. Excessive friction in strut upper bearing	7. Replace strut bearing
Lateral Pull	1. Unequal tire pressure	1. Inflate all tires to recommended pressure
	2. Radial tire lead	2. Perform lead correction procedure

WHEEL ALIGNMENT (Continued)

CONDITION	POSSIBLE CAUSES	CORRECTION
	3. Incorrect front wheel camber	3. Check and reset front wheel camber
	4. Power steering gear imbalance	4. Replace power steering gear
	5. Wheel braking	5. Correct braking condition causing lateral pull
Excessive Steering Free Play	1. Incorrect Steering Gear Adjustment	1. Adjust Or Replace Steering Gear
	2. Worn or loose tie rod ends	2. Replace or tighten tie rod ends
	3. Loose steering gear mounting bolts	3. Tighten steering gear bolts to specified torque
	4. Loose or worn steering shaft coupler	4. Replace steering shaft coupler
Excessive Steering Effort	1. Low tire pressure	1. Inflate all tires to recommended pressure
	2. Lack of lubricant in steering gear	2. Replace steering gear
	3. Low power steering fluid level	3. Fill power steering fluid reservoir to correct level
	4. Loose power steering pump drive belt	4. Correctly adjust power steering pump drive belt
	5. Lack of lubricant in ball joints	5. Lubricate or replace ball joints
	6. Steering gear malfunction	6. Replace steering gear
	7. Lack of lubricant in steering coupler	7. Replace steering coupler

STANDARD PROCEDURE

STANDARD PROCEDURE - WHEEL ALIGNMENT

PRE-WHEEL ALIGNMENT INSPECTION

Before any attempt is made to change or correct the wheel alignment, the following inspection and necessary corrections must be made to ensure proper alignment.

(1) Verify that the fuel tank is full of fuel. If the tank is not full, the reduction in weight will affect the curb height of the vehicle and the alignment angles.

(2) The passenger and luggage compartments of the vehicle should be free of any load that is not factory equipment.

(3) Check the tires on the vehicle. All tires must be the same size and in good condition with approximately the same amount of tread wear. Inflate all the tires to the recommended air pressure.

(4) Check the front wheel and tire assemblies for excessive radial runout.

(5) Inspect lower ball joints and all steering linkage for looseness, binding, wear or damage. Repair as necessary.

(6) Check suspension fasteners for proper torque and retighten as necessary.

(7) Inspect all suspension component rubber bushings for signs of wear or deterioration. Replace any faulty bushings or components before aligning the vehicle.

(8) Check the vehicle's curb height to verify it is within specifications. Refer to Curb Height Measurement.

WHEEL ALIGNMENT SETUP

(1) Position the vehicle on an alignment rack.

(2) Install all required alignment equipment on the vehicle per the alignment equipment manufacturer's instructions. On this vehicle, a four-wheel alignment is recommended.

NOTE: Prior to reading the vehicle's alignment readouts, the front and rear of vehicle should be jounced. Induce jounce (rear first, then front) by grasping the center of the bumper and jouncing each end of vehicle an equal number of times. The bumper should always be released when vehicle is at the bottom of the jounce cycle.

(3) Read the vehicle's current front and rear alignment settings. Compare the vehicle's current align-

ment settings to the vehicle specifications for camber, caster and toe-in. (Refer to 2 - SUSPENSION/ WHEEL ALIGNMENT - SPECIFICATIONS)

(4) If front camber and caster are not within specifications, proceed to CAMBER AND CASTER below. If caster and camber are within specifications, proceed to TOE which can be found following CAMBER AND CASTER. Rear camber, caster and toe are not adjustable. If found not to be within specifications, reinspect for damaged suspension or body components and replace as necessary.

CAMBER AND CASTER

Camber and caster settings on this vehicle are determined at the time the vehicle is designed, by the location of the vehicle's suspension components. This is referred to as NET BUILD. The result is no required adjustment of camber and caster after the vehicle is built or when servicing the suspension components. Thus, when performing a wheel alignment, caster and camber are not normally considered adjustable angles. Camber and caster should be checked to ensure they meet vehicle specifications.

If front camber is found not to meet alignment specifications, it can be adjusted using an available camber adjustment bolt package. Before installing a camber adjustment bolt package on a vehicle found to be outside the specifications, inspect the suspension components for any signs of damage or bending.

CAUTION: Do not attempt to adjust the vehicles wheel alignment by heating, bending or by performing any other modification to the vehicle's front suspension components or body.

If camber readings are not within specifications, use the following procedure to install the front camber adjustment bolt package and then adjust front camber.

CAMBER ADJUSTMENT BOLT PACKAGE INSTALLATION

The camber adjustment bolt package contains 2 flange bolts, 2 cam bolts, 2 dog bone washers, and 4 nuts. This package services both sides of the vehicle. Use the package to attach the strut clevis bracket to the steering knuckle after the strut clevis bracket has been modified. To install and adjust the camber adjustment bolt package, follow the procedure below.

(1) Raise the vehicle until its tires are not supporting the weight of the vehicle.

(2) Remove the front tire and wheel assemblies.

CAUTION: When removing the steering knuckle from the strut clevis bracket, do not put a strain on the brake flex hose. Also, do not let the weight of the steering knuckle assembly be supported by the brake flex hose when removed from the strut assembly. If necessary use a wire hanger to support the steering knuckle assembly or if required remove the brake flex hose from the caliper assembly.

CAUTION: The knuckle to strut assembly attaching bolt shanks are serrated and must not be turned during removal. Remove the nuts while holding the bolts stationary.

(3) Remove the top and bottom, strut clevis bracket to steering knuckle attaching bolts (Fig. 7)and discard. Separate the steering knuckle from the strut clevis bracket and position steering knuckle so it is out of the way of the strut.

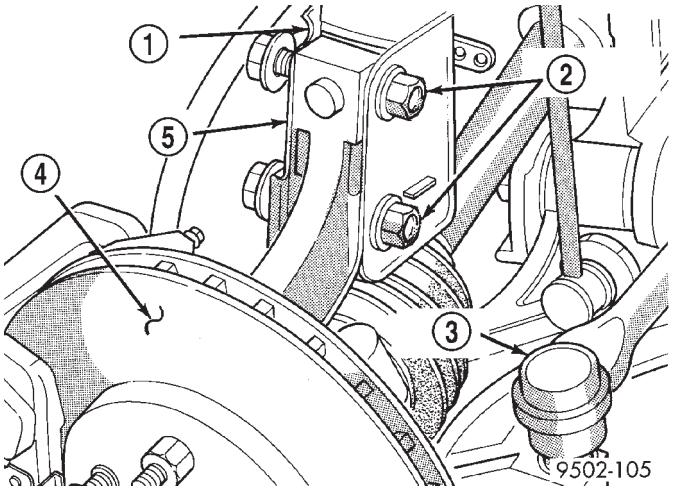

Fig. 7 Clevis Bracket To Steering Knuckle Attaching Bolts

1 - STRUT CLEVIS BRACKET
2 - ATTACHING BOLTS
3 - TIE ROD END
4 - ROTOR
5 - STEERING KNUCKLE

CAUTION: When slotting the bottom mounting hole on the strut clevis bracket, do not enlarge the hole beyond the indentations on the sides of the strut clevis bracket (Fig. 8).

(4) Using an appropriate grinder and grinding wheel, slot the bottom hole in both sides of the strut clevis bracket (Fig. 8).

CAUTION: After slotting the strut clevis bracket hole, do not install the original attaching bolts when assembling the steering knuckle to the strut assembly. Only the flange bolts, cam bolts, and dog bone washers from the service package must be used to attach the steering knuckle to the strut after the mounting hole is slotted.

WHEEL ALIGNMENT (Continued)

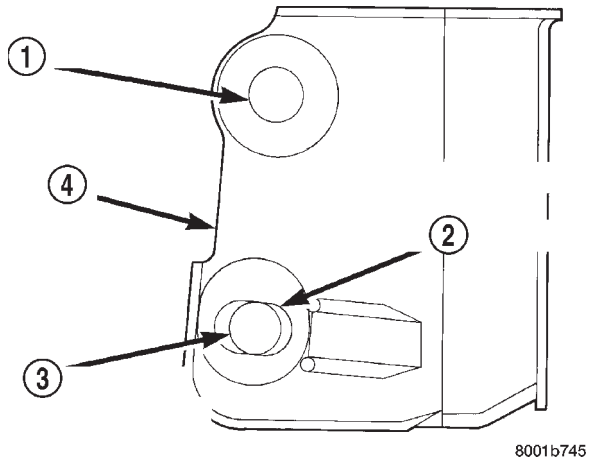

Fig. 8 Strut Clevis Bracket Bolt Hole Grinding Area

1 - UPPER STRUT TO STEERING KNUCKLE ATTACHING HOLE
2 - CAMBER ADJUSTMENT SLOT INDENTATION AREA ON CLEVIS BRACKET
3 - LOWER STRUT TO STEERING KNUCKLE ATTACHING HOLE
4 - STRUT CLEVIS BRACKET

NOTE: The strut clevis-to-knuckle bolts are installed differently on each side of the vehicle. Left-hand-side bolts are installed from vehicle rear to front (Fig. 9). Right-hand-side bolts are installed from vehicle front to rear.

(5) Position the knuckle back into the strut clevis bracket. Using the direction indicated in the above note, install a flanged bolt from the service package into the upper mounting hole. Using the direction indicated in the above note, install a cam bolt into the bottom mounting hole (Fig. 9).

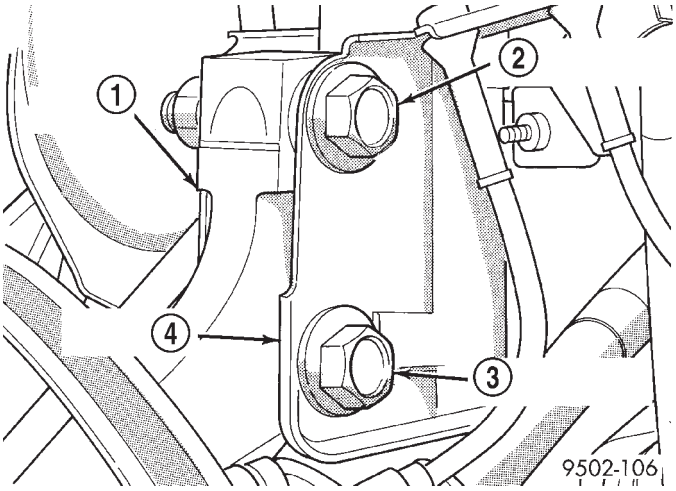

Fig. 9 Package Bolts Correctly Installed

1 - STEERING KNUCKLE
2 - FLANGED BOLT IN TOP HOLE
3 - CAM BOLT IN BOTTOM HOLE
4 - STRUT CLEVIS BRACKET

(6) Install a dog bone washer on the steering knuckle to strut clevis bracket attaching bolts, then install the nuts onto the bolts from the service package (Fig. 10). Tighten the bolts just enough to hold the steering knuckle in position when adjusting camber, while still allowing the steering knuckle to move in clevis bracket.

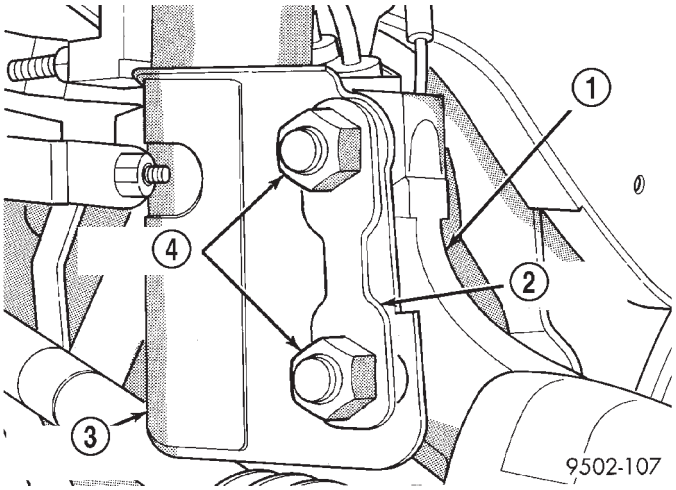

Fig. 10 Dog Bone Washer And Nuts Installed

1 - STEERING KNUCKLE
2 - DOG BONE WASHER
3 - STRUT CLEVIS BRACKET
4 - ATTACHING NUTS

(7) Repeat the procedure to the other side strut clevis bracket.

(8) Reinstall both front tire and wheel assemblies and tighten to specifications.

(9) Lower the vehicle. Jounce the front and rear of vehicle an equal amount of times.

(10) Adjust the front camber to the preferred setting by rotating the lower eccentric cam bolt against the cam stop areas on the strut clevis bracket (Fig. 11). When camber is set, tighten the upper strut clevis bracket bolt and lower cam bolt. Again jounce front and rear of vehicle an equal amount of times and verify front camber setting. Torque both front strut to steering knuckle attaching bolts to 81 N·m (60 ft. lbs.) plus an additional 1/4 (90°) turn after the required torque is met.

(11) If toe readings obtained are not within the required specification range, adjust toe to meet the preferred specification setting. Toe is adjustable using the following procedure.

TOE

(1) Center the steering wheel and lock in place using a steering wheel clamp.

WHEEL ALIGNMENT (Continued)

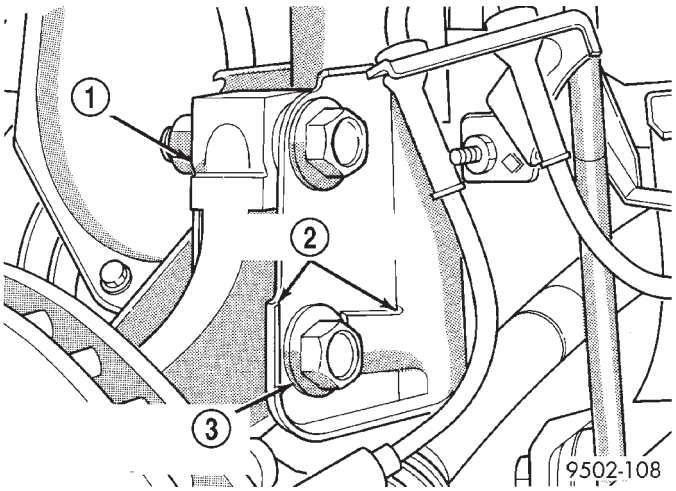

Fig. 11 Camber Adjustment Cam Bolt

1 - STEERING KNUCKLE
2 - CLEVIS BRACKET CAM STOP AREAS
3 - LOWER ECCENTRIC CAMBER ADJUSTMENT BOLT

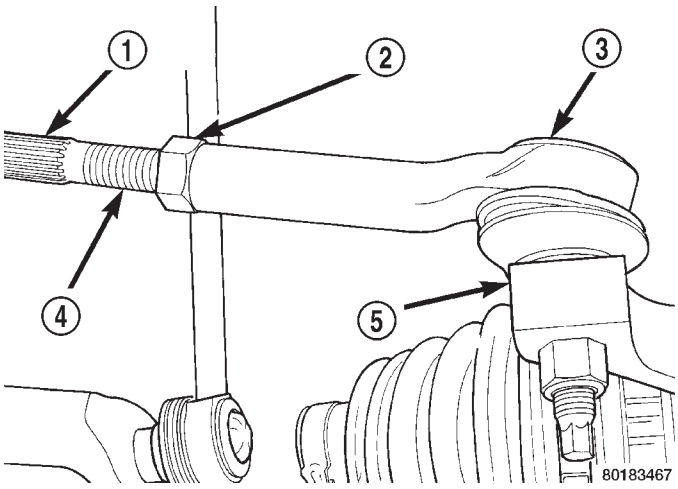

Fig. 12 Front Wheel Toe Adjustment

1 - INNER TIE ROD SERRATION
2 - OUTER TIE ROD JAM NUT
3 - OUTER TIE ROD END
4 - INNER TIE ROD
5 - STEERING KNUCKLE

CAUTION: Do not twist front inner tie rod to steering gear rubber boots during front wheel Toe adjustment.

(2) Loosen front inner to outer tie rod end jam nuts (Fig. 12). Grasp inner tie rods at serrations and rotate inner tie rods of steering gear (Fig. 12) to set front toe to the preferred toe specification. (Refer to 2 - SUSPENSION/WHEEL ALIGNMENT - SPECIFICATIONS)

(3) Tighten tie rod jam nuts (Fig. 12) to 75 N·m (55 ft. lbs.) torque.

(4) Adjust steering gear to tie rod boots at the inner tie rod.

(5) Remove steering wheel clamp.

(6) Remove the alignment equipment.

(7) Road test the vehicle to verify the steering wheel is straight and the vehicle does not wander or pull.

STANDARD PROCEDURE - CURB HEIGHT MEASUREMENT

The wheel alignment is to be checked and all alignment adjustments made with the vehicle at its required curb height specification.

Vehicle height is to be checked with the vehicle on a flat, level surface, preferably a vehicle alignment rack. The tires are to be inflated to the recommended pressure. All tires are to be the same size as standard equipment. Vehicle height is checked with the fuel tank full of fuel, and no passenger or luggage compartment load.

Vehicle height is not adjustable. If the measurement is not within specifications, inspect the vehicle for bent or weak suspension components. Compare the parts tag on the suspect coil spring(s) to the parts book and the vehicle sales code, checking for a match. Once removed from the vehicle, compare the coil spring height to a correct new or known good coil spring. The heights should vary if the suspect spring is weak.

(1) Measure from the inboard edge of the wheel opening fender lip directly above the wheel center (spindle), to the floor or alignment rack surface.

(2) When measuring, the maximum left-to-right differential is not to exceed 12.5 mm (0.5 in.).

(3) Compare the measurements to the specifications listed in the following Curb Height Specifications charts.

WHEEL ALIGNMENT (Continued)

CURB HEIGHT SPECIFICATIONS - LONG WHEEL BASE VEHICLES

TIRE SALES CODE/TIRE SIZE	FRONT	REAR
TM4 / 215/70 R 15	754 mm ± 10 mm 29.68 in. ± 0.39 in.	770 mm ± 10 mm 30.31 in. ± 0.39 in.
TM5 / 215/65 R 16	755 mm ± 10 mm 29.72 in. ± 0.39 in.	771 mm ± 10 mm 30.35 in. ± 0.39 in.
TTU / 215/60 R 17	758 mm ± 10 mm 29.84 in. ± 0.39 in.	774 mm ± 10 mm 30.47 in. ± 0.39 in.

CURB HEIGHT SPECIFICATIONS - SHORT WHEEL BASE VEHICLES

TIRE SALES CODE/TIRE SIZE	FRONT	REAR
TM4 / 215/70 R 15	755 mm ± 10 mm 29.72 in. ± 0.39 in.	770 mm ± 10 mm 30.31 in. ± 0.39 in.
TM5 / 215/65 R 16	756 mm ± 10 mm 29.76 in. ± 0.39 in.	771 mm ± 10 mm 30.35 in. ± 0.39 in.

STANDARD PROCEDURE - CURB HEIGHT MEASUREMENT (EXPORT)

The wheel alignment is to be checked and all alignment adjustments made with the vehicle at its required curb height specification.

Vehicle height is to be checked with the vehicle on a flat, level surface, preferably a vehicle alignment rack. The tires are to be inflated to the recommended pressure. All tires are to be the same size as standard equipment. Vehicle height is checked with the fuel tank full of fuel, and no passenger or luggage compartment load.

Vehicle height is not adjustable. If the measurement is not within specifications, inspect the vehicle for bent or weak suspension components. Compare the parts tag on the suspect coil spring(s) to the parts book and the vehicle sales code, checking for a match. Once removed from the vehicle, compare the coil spring height to a correct new or known good coil spring. The heights should vary if the suspect spring is weak.

(1) Measure from the inboard edge of the wheel opening fender lip directly above the wheel center (spindle), to the floor or alignment rack surface.

(2) When measuring, the maximum left-to-right differential is not to exceed 12.5 mm (0.5 in.).

(3) Compare the measurements to the specifications listed in the following Curb Height Specifications charts.

CURB HEIGHT SPECIFICATIONS - LONG WHEEL BASE VEHICLES WITH SDF SUSPENSION

TIRE SALES CODE/TIRE SIZE	FRONT	REAR
TMM / 215/65 R 16	756 mm ± 10 mm 29.76 in. ± 0.39 in.	772 mm ± 10 mm 30.39 in. ± 0.39 in.

CURB HEIGHT SPECIFICATIONS - LONG WHEEL BASE VEHICLES WITH SDF + SER SUSPENSION

TIRE SALES CODE/TIRE SIZE	FRONT	REAR
TMM / 215/65 R 16	756 mm ± 10 mm 29.76 in. ± 0.39 in.	771 mm ± 10 mm 30.35 in. ± 0.39 in.

CURB HEIGHT SPECIFICATIONS - SHORT WHEEL BASE VEHICLES

TIRE SALES CODE/TIRE SIZE	FRONT	REAR
TMM / 215/65 R 16	755 mm ± 10 mm 29.72 in. ± 0.39 in.	770 mm ± 10 mm 30.31 in. ± 0.39 in.

WHEEL ALIGNMENT (Continued)

SPECIFICATIONS

WHEEL ALIGNMENT

NOTE: All specifications are given in degrees.

NOTE: All wheel alignments are to be set at curb height. (Refer to 2 - SUSPENSION/WHEEL ALIGNMENT - STANDARD PROCEDURE)

FRONT WHEEL ALIGNMENT	PREFERRED SETTING	ACCEPTABLE RANGE
CAMBER	+0.10°	-0.30° to +0.50°
Cross-Camber (Maximum side-to-side difference)	0.0°	0.50°
CASTER*	+2.31°	+1.31° to +3.31°
Cross-Caster (Maximum side-to-side difference)	0.0°	1.00°
TOTAL TOE**	+0.10°	−0.10° to +0.30°
Maximum side-to-side difference	0.0°	0.06°
REAR WHEEL ALIGNMENT	**PREFERRED SETTING**	**ACCEPTABLE RANGE**
CAMBER*	0.0°	-0.25° to +0.25°
TOTAL TOE* **	0.0°	−0.20° to +0.20°
THRUST ANGLE*	0.0°	-0.30° to +0.30°

Notes:

* For reference only. These are non-adjustable angles.

** TOTAL TOE is the sum of both left and right wheel toe settings. TOTAL TOE must be equally split between each front wheel to ensure the steering wheel is centered after setting toe. Positive toe is toe-in and negative toe is toe-out

DIFFERENTIAL & DRIVELINE

TABLE OF CONTENTS

	page		page
HALF SHAFT - FRONT	1	**PROPELLER SHAFT**	22
HALF SHAFT - REAR	14	**REAR DRIVELINE MODULE**	24

HALF SHAFT - FRONT

TABLE OF CONTENTS

	page		page
HALF SHAFT - FRONT		INSTALLATION	6
DESCRIPTION	1	**CV BOOT - OUTER**	
DIAGNOSIS AND TESTING - HALF SHAFT	1	REMOVAL	10
REMOVAL	2	INSTALLATION	10
INSTALLATION	4	**OUTER CV JOINT BEARING SHIELD**	
SPECIFICATIONS - HALF SHAFT - FRONT	6	REMOVAL	13
CV BOOT - INNER		INSTALLATION	13
REMOVAL	6		

HALF SHAFT - FRONT

DESCRIPTION

All vehicles use an unequal length half shaft system (Fig. 1).

The left half shaft uses a tuned rubber damper weight. When replacing the left half shaft, be sure the replacement half shaft has the same damper weight as the original.

All half shaft assemblies use the same type of inner and outer joints. The inner joint of both half shaft assemblies is a tripod joint, and the outer joint of both half shaft assemblies is a Rzeppa joint. Both tripod joints and Rzeppa joints are true constant velocity (CV) joint assemblies. The inner tripod joint allows for the changes in half shaft length through the jounce and rebound travel of the front suspension.

On vehicles equipped with ABS brakes, the outer CV joint is equipped with a tone wheel used to determine vehicle speed for ABS brake operation.

The inner tripod joint of both half shafts is splined into the transaxle side gears. The inner tripod joints are retained in the side gears of the transaxle using a snap ring located in the stub shaft of the tripod joint. The outer CV joint has a stub shaft that is splined into the wheel hub and retained by a steel hub nut.

DIAGNOSIS AND TESTING - HALF SHAFT

VEHICLE INSPECTION

(1) Check for grease in the vicinity of the inboard tripod joint and outboard CV joint; this is a sign of inner or outer joint seal boot or seal boot clamp damage.

NOISE AND/OR VIBRATION IN TURNS

A clicking noise and/or a vibration in turns could be caused by one of the following conditions:

- Damaged outer CV or inner tripod joint seal boot or seal boot clamps. This will result in the loss and/or contamination of the joint grease, resulting in inadequate lubrication of the joint.
- Noise may also be caused by another component of the vehicle coming in contact with the half shafts.

CLUNKING NOISE DURING ACCELERATION

This noise may be a result of one of the following conditions:

- A torn seal boot on the inner or outer joint of the half shaft assembly.

HALF SHAFT - FRONT (Continued)

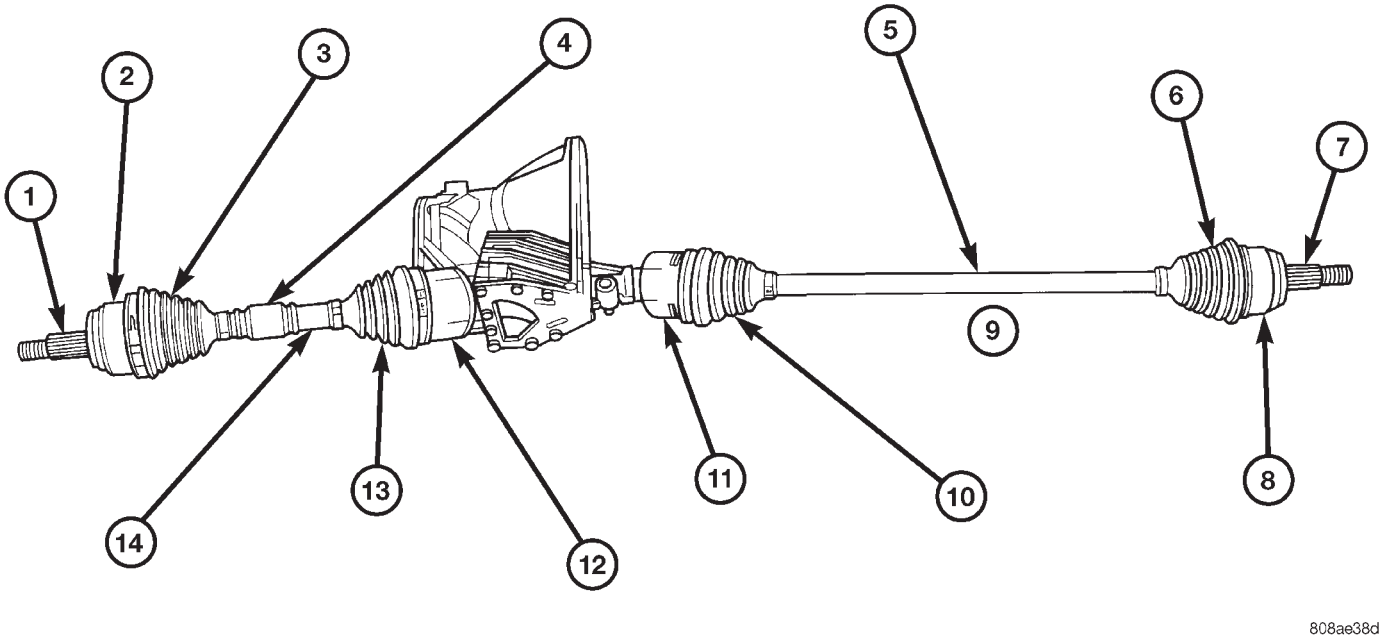

Fig. 1 Unequal Length Half Shaft System

1 - STUB AXLE
2 - OUTER C/V JOINT
3 - OUTER C/V JOINT BOOT
4 - TUNED RUBBER DAMPER WEIGHT
5 - INTERCONNECTING SHAFT
6 - OUTER C/V JOINT BOOT
7 - STUB AXLE
8 - OUTER C/V JOINT
9 - RIGHT HALFSHAFT
10 - INNER TRIPOD JOINT BOOT
11 - INNER TRIPOD JOINT
12 - INNER TRIPOD JOINT
13 - INNER TRIPOD JOINT BOOT
14 - INTERCONNECTING SHAFT LEFT HALFSHAFT

- A loose or missing clamp on the inner or outer joint of the half shaft assembly.
- A damaged or worn half shaft CV joint.

SHUDDER OR VIBRATION DURING ACCELERATION

This problem could be a result of:

- A worn or damaged half shaft inner tripod joint.
- A sticking tripod joint spider assembly (inner tripod joint only).
- Improper wheel alignment. (Refer to 2 - SUSPENSION/WHEEL ALIGNMENT - STANDARD PROCEDURE)

VIBRATION AT HIGHWAY SPEEDS

This problem could be a result of:

- Foreign material (mud, etc.) packed on the backside of the wheel(s).
- Out of balance tires or wheels. (Refer to 22 - TIRES/WHEELS - STANDARD PROCEDURE)
- Improper tire and/or wheel runout. (Refer to 22 - TIRES/WHEELS - DIAGNOSIS AND TESTING)

REMOVAL

(1) Raise vehicle.

(2) Remove the cotter pin and nut lock (Fig. 2) from the end of the half shaft.

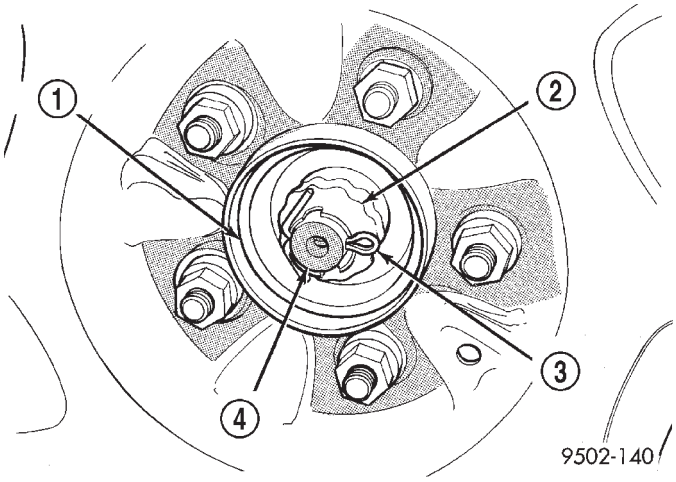

Fig. 2 Half Shaft Retaining Nut

1 - HUB/BEARING
2 - NUT LOCK
3 - COTTER PIN
4 - STUB AXLE

HALF SHAFT - FRONT (Continued)

(3) Remove the wheel and tire assembly from the vehicle. (Refer to 22 - TIRES/WHEELS - REMOVAL)

(4) Remove the wave washer (Fig. 3) from the end of the half shaft.

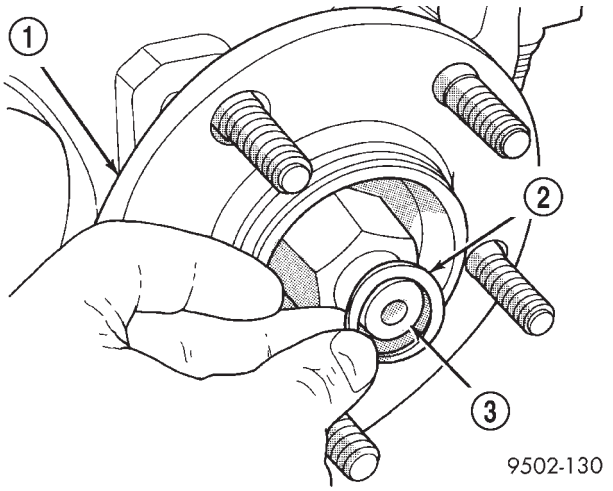

Fig. 3 Wave Washer

1 - HUB/BEARING ASSEMBLY
2 - WAVE WASHER
3 - STUB AXLE

(5) With the vehicle's brakes applied to keep hub from turning, **loosen and remove** the half shaft nut.

(6) Remove the two front disc brake caliper adapter to steering knuckle attaching bolts (Fig. 4).

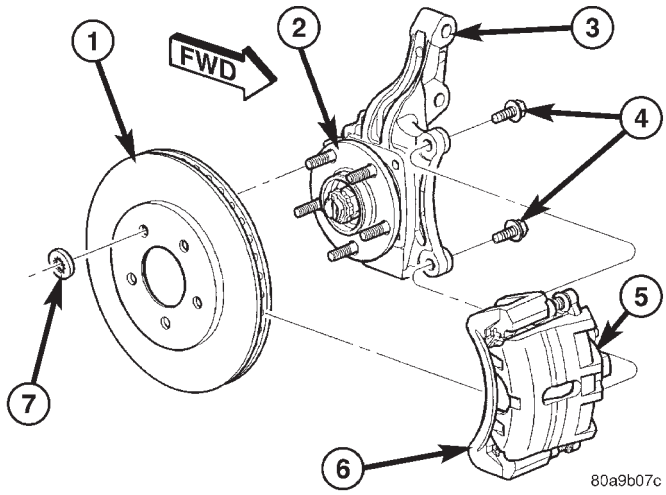

Fig. 4 Front Brake Mounting

1 - BRAKE ROTOR
2 - HUB AND BEARING
3 - STEERING KNUCKLE
4 - ADAPTER MOUNTING BOLTS
5 - BRAKE CALIPER
6 - ADAPTER
7 - CLIP

(7) Remove the disc brake caliper assembly from the steering knuckle. Caliper assembly is removed by first rotating top of caliper assembly away from steering knuckle and then removing bottom of assembly out from under machined abutment on steering knuckle.

(8) Support disc brake caliper assembly by using a wire hook and suspending it from the strut assembly (Fig. 5). **Do not allow the brake caliper assembly to hang by the brake flex hose.**

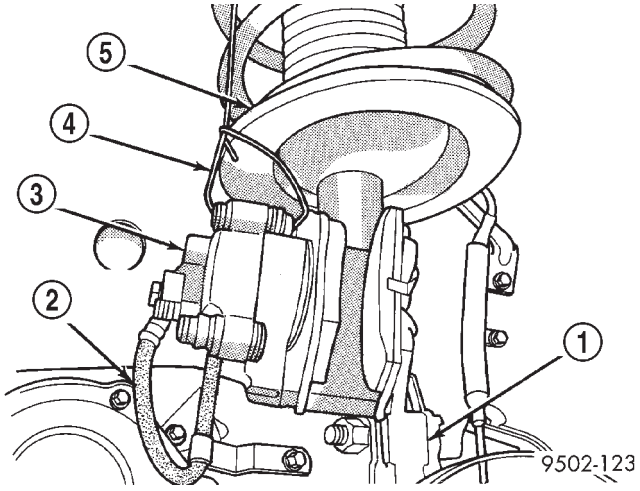

Fig. 5 Properly Supported Disc Brake Caliper - Typical

1 - STEERING KNUCKLE
2 - BRAKE FLEX HOSE
3 - CALIPER ASSEMBLY
4 - WIRE HANGER
5 - STRUT ASSEMBLY

(9) Remove the brake rotor from the hub and bearing assembly.

(10) Remove the steering knuckle-to-strut attachment bolts (Fig. 6) from the steering knuckle.

(11) Pull the steering knuckle from the strut clevis bracket.

NOTE: Care must be taken not to separate the inner C/V joint during this operation. Do not allow half shaft to hang by inner C/V joint after removing outer C/V Joint from the hub/bearing assembly in steering knuckle, end of half shaft must be supported.

(12) Pull steering knuckle assembly down and away from the outer C/V joint of the half shaft assembly while pulling the joint out of the hub bearing.

HALF SHAFT - FRONT (Continued)

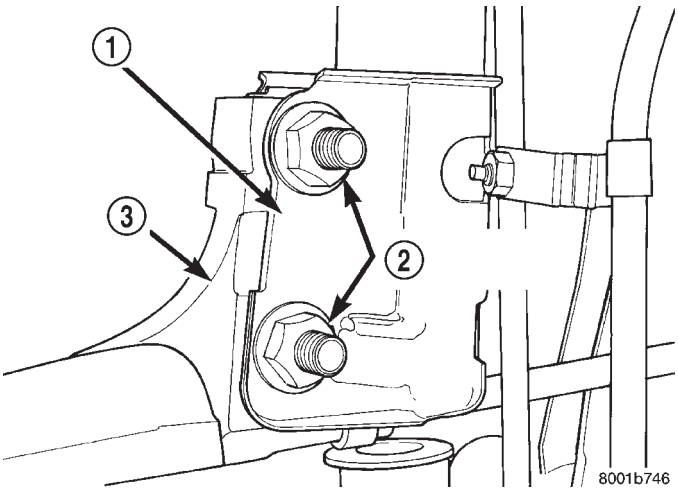

Fig. 6 Strut To Steering Knuckle Attaching Bolts

1 - STRUT CLEVIS BRACKET
2 - NUTS AND BOLTS
3 - STEERING KNUCKLE

(13) Support the outer end of the half shaft assembly. Insert a pry bar between inner tripod joint and transaxle case (Fig. 7). Pry against inner tripod joint, until tripod joint retaining snap-ring is disengaged from transaxle side gear.

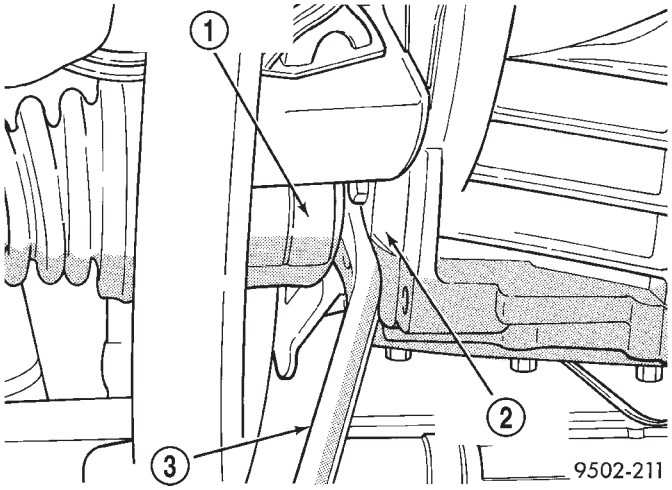

Fig. 7 Disengaging Inner Tripod Joint From Transaxle

1 - INNER TRIPOD JOINT
2 - TRANSAXLE CASE
3 - PRY BAR

(14) Hold inner tripod joint and interconnecting shaft of half shaft assembly. Remove inner tripod joint from transaxle, by pulling it straight out of transaxle side gear and transaxle oil seal (Fig. 8). **When removing tripod joint, do not let spline or snap-ring drag across sealing lip of the transaxle to tripod joint oil seal.**

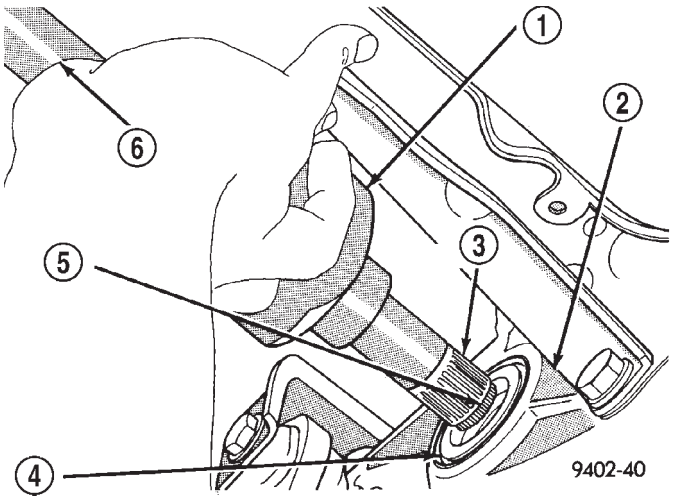

Fig. 8 Tripod Joint Removal from Transaxle

1 - INNER TRIPOD JOINT
2 - TRANSAXLE
3 - SPLINE
4 - OIL SEAL
5 - SNAP-RING
6 - INTERCONNECTING SHAFT

INSTALLATION

(1) Thoroughly clean spline and oil seal sealing surface, on tripod joint. Lightly lubricate oil seal sealing surface on tripod joint with fresh clean transmission lubricant.

(2) Holding half shaft assembly by tripod joint and interconnecting shaft, install tripod joint into transaxle side gear as far as possible by hand (Fig. 8).

(3) Grasp inner tripod joint an interconnecting shaft. Forcefully push the tripod joint into side gear of transaxle, until snap-ring is engaged with transaxle side gear. **Test that snap-ring is fully engaged with side gear by attempting to remove tripod joint from transaxle by hand. If snap-ring is fully engaged with side gear, tripod joint will not be removable by hand.**

(4) Clean all debris and moisture out of steering knuckle, in the area were outer CV joint will be installed into steering knuckle.

(5) Ensure that front of outer CV joint which fits against the face of the hub and bearing is free of debris and moisture before installing outer CV joint into hub and bearing assembly (Fig. 9).

(6) Slide half shaft back into front hub and bearing assembly.

CAUTION: The steering knuckle to strut assembly attaching bolts are serrated and must not be turned during installation. Install nuts while holding bolts stationary in the steering knuckle.

HALF SHAFT - FRONT (Continued)

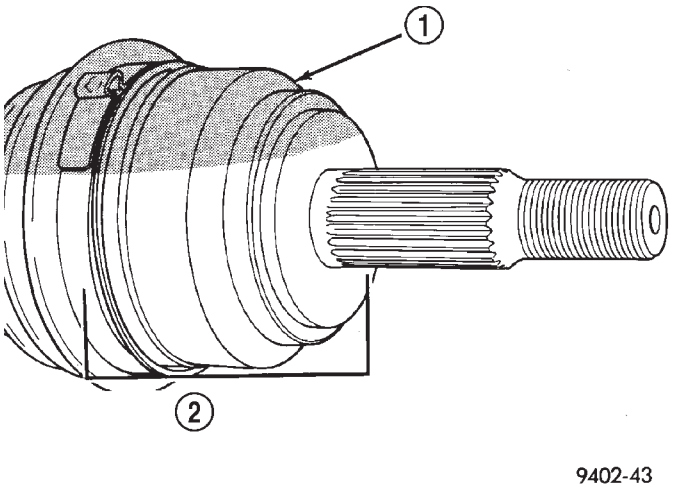

Fig. 9 Outer CV Joint Inspection

1 - OUTER C/V JOINT
2 - THIS AREA OF OUTER C/V JOINT MUST BE FREE OF ALL DEBRIS AND MOISTURE, BEFORE INSTALLATION INTO STEERING KNUCKLE.

CAUTION: If the vehicle being serviced is equipped with eccentric strut assembly attaching bolts, the eccentric bolt must be installed in the bottom (slotted) hole on the strut clevis bracket (Fig. 10).

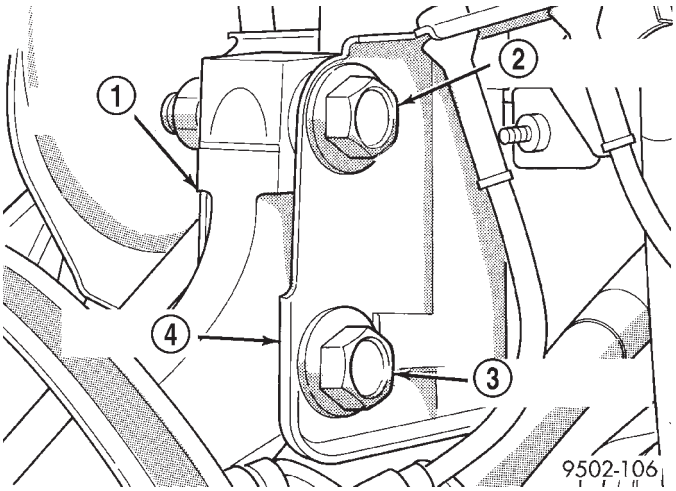

Fig. 10 Correctly Installed Eccentric Attaching Bolt

1 - STEERING KNUCKLE
2 - FLANGED BOLT IN TOP HOLE
3 - CAM BOLT IN BOTTOM HOLE
4 - STRUT CLEVIS BRACKET

(7) Install steering knuckle in clevis bracket of strut damper assembly. Install the strut damper to steering knuckle attaching bolts. Tighten both bolts to a torque of 81 N·m (60 ft. lbs.) plus an additional 1/4 turn.

(8) Install braking disc on hub and bearing assembly.

(9) Install disc brake caliper assembly on steering knuckle. Caliper is installed by first sliding bottom of caliper assembly under abutment on steering knuckle, and then rotating top of caliper against top abutment.

(10) Install disc brake caliper adapter to steering knuckle attaching bolts (Fig. 4). Tighten the disc brake caliper adapter attaching bolts to a torque of 169 N·m (125 ft. lbs.).

(11) Clean all foreign matter from the threads of the outer CV joint. Install the washer and half shaft to hub/bearing assembly nut on half shaft and securely tighten nut.

(12) Install front wheel and tire assembly. Install and tighten the wheel mounting stud nuts in proper sequence until all nuts are torqued to half the required specification. Then repeat the tightening sequence to the full specified torque of 135 N·m (100 ft. lbs.).

(13) Lower vehicle.

(14) With the vehicle's brakes applied to keep hub from turning, tighten the hub nut to a torque of 244 N·m (180 ft. lbs.) (Fig. 11).

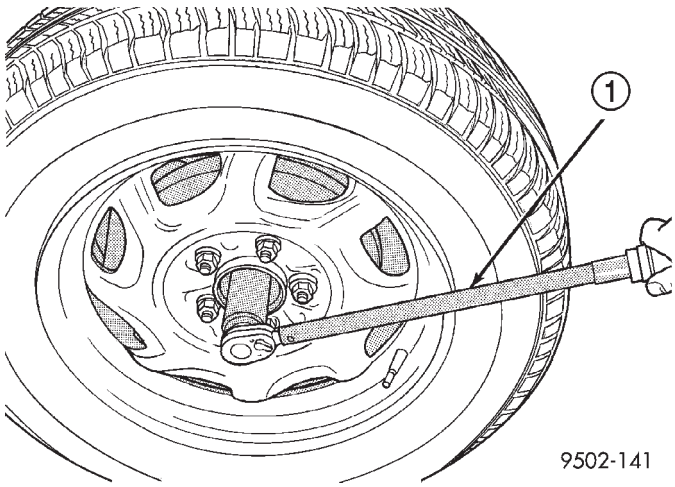

Fig. 11 Torquing Front Half Shaft To Hub Nut

1 - TORQUE WRENCH

(15) Install the spring wave washer on the end of the half shaft.

(16) Install the hub nut lock, and a **new** cotter pin (Fig. 2). Wrap cotter pin prongs tightly around the hub nut lock as shown in (Fig. 2).

(17) Check for correct fluid level in transaxle assembly. (Refer to 21 - TRANSMISSION/TRANSAXLE/AUTOMATIC - 41TE/FLUID - STANDARD PROCEDURE)

HALF SHAFT - FRONT (Continued)

SPECIFICATIONS - HALF SHAFT - FRONT

TORQUE SPECIFICATIONS

DESCRIPTION	N·m	Ft. Lbs.	In. Lbs.
Bolts, Caliper Adapter to Knuckle	169	125	-
Nut, Hub	244	180	-
Nuts, Front Wheel Lug	135	100	-
Nut, Tie Rod End to Knuckle	75	55	-
Nut, Strut Clevis to Knuckle	81 +90°	60 +90°	-

CV BOOT - INNER

REMOVAL

(1) Remove the half shaft requiring boot replacement from the vehicle. (Refer to 3 - DIFFERENTIAL & DRIVELINE/HALF SHAFT - REMOVAL)

(2) Remove large boot clamp which retains inner tripod joint sealing boot to tripod joint housing and discard.

(3) Remove small clamp which retains inner tripod joint sealing boot to interconnecting shaft and discard.

(4) Remove the sealing boot from the tripod housing and slide it down the interconnecting shaft.

CAUTION: When removing the tripod joint housing from the spider assembly, hold the bearings in place on the spider trunions to prevent the bearings from falling away.

(5) Slide the tripod joint housing off the spider assembly and the interconnecting shaft (Fig. 12).

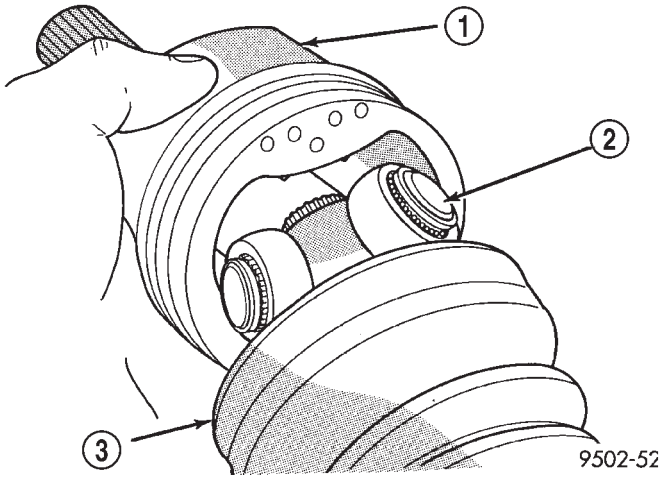

Fig. 12 Spider Assembly Removal from Tripod Joint Housing

1 - TRIPOD JOINT HOUSING
2 - SPIDER ASSEMBLY
3 - SEALING BOOT

(6) Remove snap-ring which retains spider assembly to interconnecting shaft (Fig. 13). **Do not hit the outer tripod bearings in an attempt to remove spider assembly from interconnecting shaft.**

(7) Remove the spider assembly from interconnecting shaft. If spider assembly will not come off interconnecting shaft by hand, it can be removed by tapping spider assembly with a brass drift (Fig. 14).

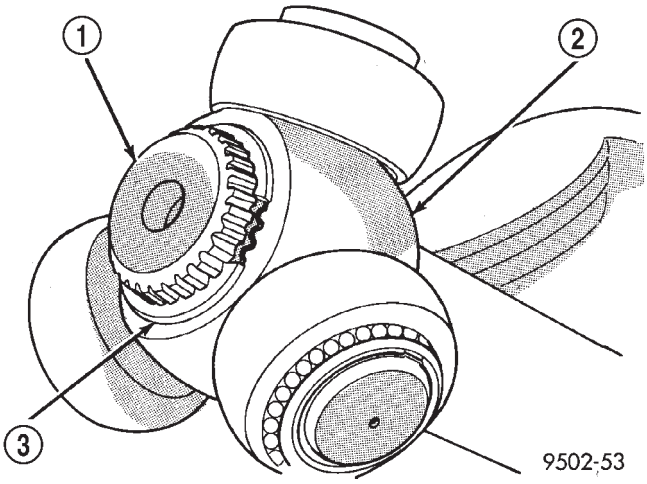

Fig. 13 Spider Assembly Retaining Snap-Ring

1 - INTERCONNECTING SHAFT
2 - SPIDER ASSEMBLY
3 - RETAINING SNAP-RING

(8) Slide sealing boot off interconnecting shaft.

(9) Thoroughly clean and inspect spider assembly, tripod joint housing, and interconnecting shaft for any signs of excessive wear. **If any parts show signs of excessive wear, the half shaft assembly will require replacement. Component parts of these half shaft assemblies are not serviceable.**

INSTALLATION

(1) Slide inner CV joint seal boot retaining clamp, onto the interconnecting shaft. Then, slide the replacement inner CV joint sealing boot onto the interconnecting shaft. **Inner CV joint seal boot**

CV BOOT - INNER (Continued)

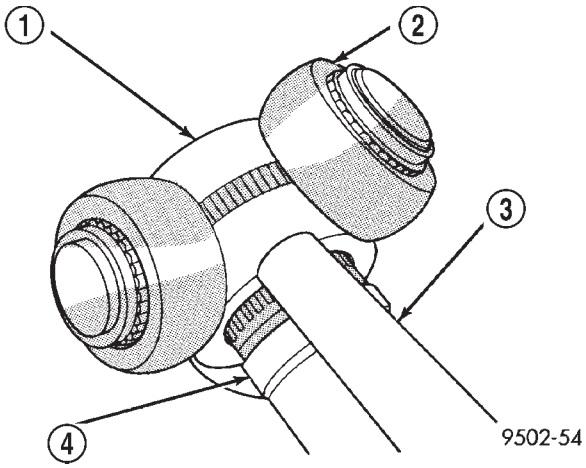

Fig. 14 Spider Assembly Removal from Interconnecting Shaft

1 - SPIDER ASSEMBLY
2 - DO NOT HIT SPIDER ASSEMBLY BEARINGS WHEN REMOVING SPIDER ASSEMBLY
3 - BRASS DRIFT
4 - INTERCONNECTING SHAFT

MUST be positioned on interconnecting shaft so the raised bead on the inside of the small diameter end of the seal boot is in mating groove on interconnecting shaft (Fig. 15).

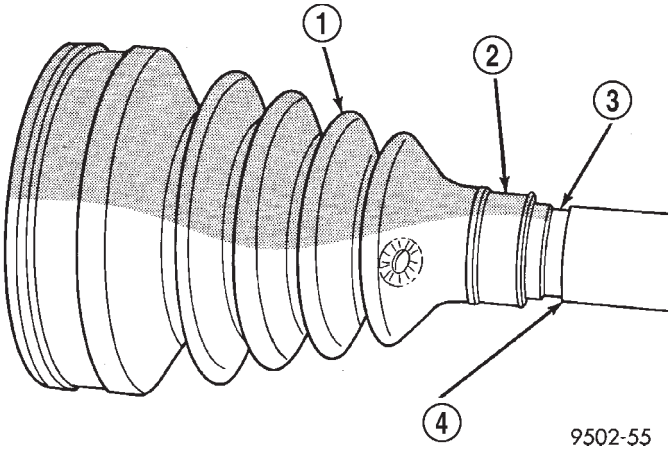

Fig. 15 Sealing Boot Installation on Interconnecting Shaft

1 - SEALING BOOT
2 - RAISED BEAD IN THIS AREA OF SEALING BOOT
3 - GROOVE
4 - INTERCONNECTING SHAFT

(2) Install spider assembly onto interconnecting shaft (Fig. 16). Spider assembly must be installed on interconnecting shaft far enough to fully install spider retaining snap-ring. If the spider assembly will not fully install on interconnecting shaft by hand, it can be installed by tapping the spider body with a brass drift (Fig. 17). **Do not hit the outer tripod bearings in an attempt to install spider assembly on interconnecting shaft.**

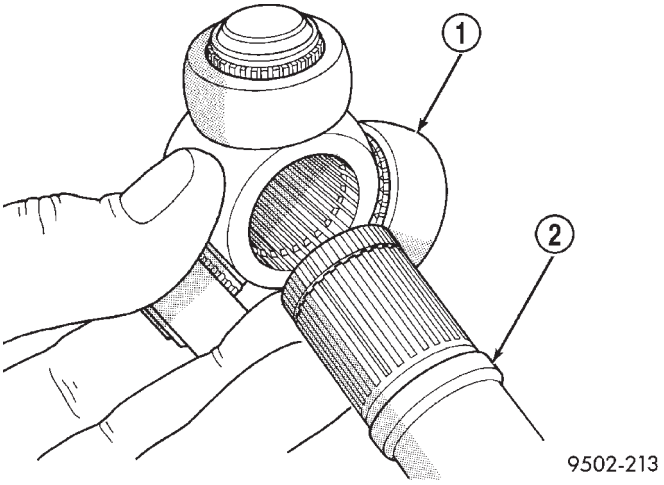

Fig. 16 Spider Assembly Installation on Interconnecting Shaft

1 - SPIDER ASSEMBLY
2 - INTERCONNECTING SHAFT

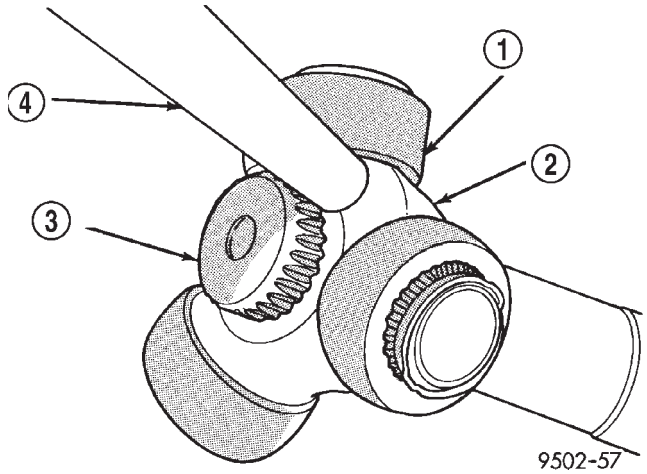

Fig. 17 Installing Spider Assembly on Interconnecting Shaft

1 - DO NOT HIT BEARINGS WHEN INSTALLING THE SPIDER ASSEMBLY
2 - SPIDER ASSEMBLY
3 - INTERCONNECTING SHAFT
4 - BRASS DRIFT

CV BOOT - INNER (Continued)

(3) Install the spider assembly to interconnecting shaft retaining snap-ring into groove on end of interconnecting shaft (Fig. 18). Be sure the snap-ring is fully seated into groove on interconnecting shaft.

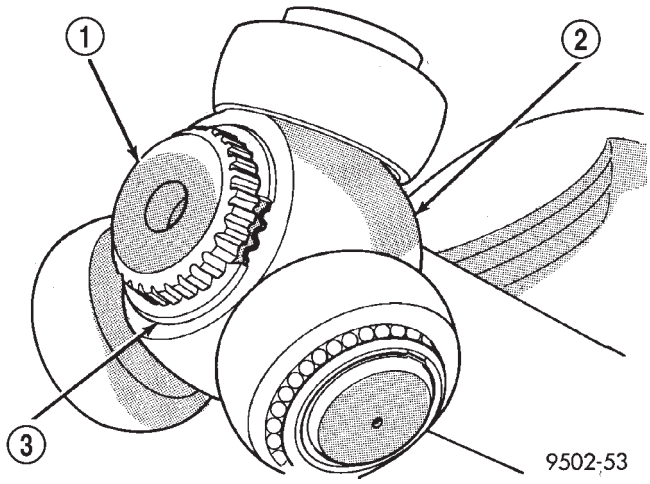

Fig. 18 Spider Assembly Retaining Snap-Ring Installed

1 - INTERCONNECTING SHAFT
2 - SPIDER ASSEMBLY
3 - RETAINING SNAP-RING

(4) Distribute 1/2 the amount of grease provided in the seal boot service package (DO NOT USE ANY OTHER TYPE OF GREASE) into tripod housing. Put the remaining amount into the sealing boot.

(5) Align tripod housing with spider assembly and then slide tripod housing over spider assembly and interconnecting shaft (Fig. 19).

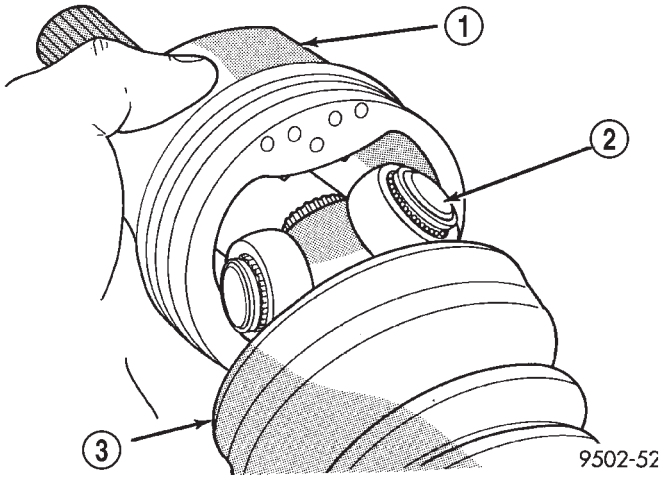

Fig. 19 Installing Tripod Housing on Spider Assembly

1 - TRIPOD JOINT HOUSING
2 - SPIDER ASSEMBLY
3 - SEALING BOOT

(6) Install inner CV joint seal boot to interconnecting shaft clamp evenly on sealing boot.

(7) Place crimping tool C-4975-A over bridge of clamp (Fig. 20).

(8) Tighten nut on crimping tool C-4975-A until jaws on tool are closed completely together, face to face (Fig. 21).

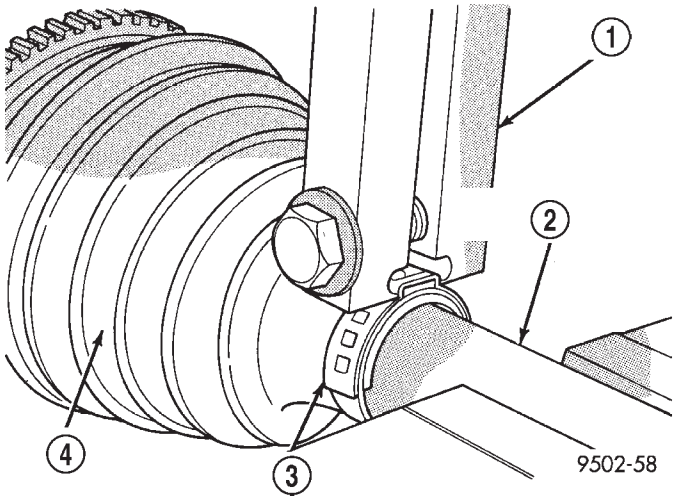

Fig. 20 Crimping Tool Installed on Sealing Boot Clamp - Typical

1 - SPECIAL TOOL C-4975-A
2 - INTERCONNECTING SHAFT
3 - CLAMP
4 - SEALING BOOT

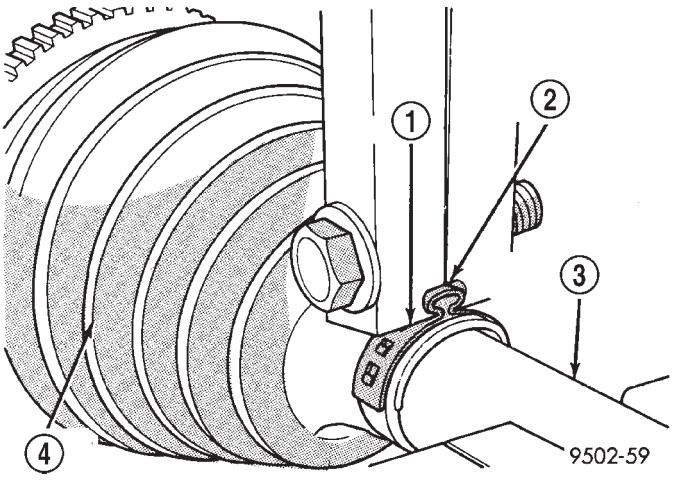

Fig. 21 Sealing Boot Retaining Clamp Installed - Typical

1 - CLAMP
2 - JAWS OF SPECIAL TOOL C-4975-A MUST BE CLOSED COMPLETELY TOGETHER HERE
3 - INTERCONNECTING SHAFT
4 - SEALING BOOT

CV BOOT - INNER (Continued)

CAUTION: Seal boot must not be dimpled, stretched or out of shape in any way. If seal boot is NOT shaped correctly, equalize pressure in seal and shape it by hand.

(9) Position sealing boot into the tripod housing retaining groove. Install seal boot retaining clamp evenly on sealing boot.

(10) Position trilobal boot to interface with the tripod housing. The lobes of the boot must be properly aligned with the recess's of the tripod housing.

CAUTION: The following positioning procedure determines the correct air pressure inside the inner CV joint assembly prior to clamping the sealing boot to inner CV joint housing. If this procedure is not done prior to clamping sealing boot to CV joint housing sealing boot durability can be adversely affected.

CAUTION: When venting the inner CV joint assembly, use care so that the inner CV sealing boot does not get punctured, or in any other way damaged. If sealing boot is punctured, or damaged in any way while being vented, the sealing boot can not be used.

(11) Insert a trim stick between the CV joint housing and the sealing boot insert to vent inner CV joint assembly (Fig. 22). **When inserting trim stick between tripod housing and sealing boot ensure trim stick is held flat and firmly against the tripod housing. If this is not done damage to the sealing boot can occur.**

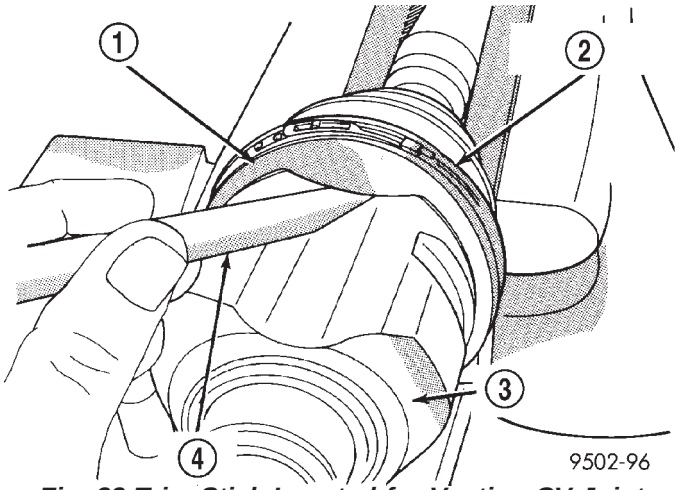

Fig. 22 Trim Stick Inserted for Venting CV Joint

1 - INNER CV JOINT SEALING BOOT
2 - SEALING BOOT CLAMP
3 - INNER CV JOINT HOUSING
4 - TRIM STICK

(12) With trim stick inserted between sealing boot insert and the CV joint housing, position the interconnecting shaft so it is at the center of its travel in the tripod joint housing. Remove the trim stick from between the sealing boot insert and the CV joint housing. **This procedure will equalize the air pressure in the CV joint, preventing premature sealing boot failure.**

(13) Clamp CV joint sealing boot to CV joint, using required procedure for type of boot clamp application.

CRIMP TYPE BOOT CLAMP

If seal boot uses crimp type boot clamp, use the following procedure to install the retaining clamp.

(1) Place crimping tool C-4975-A over bridge of clamp (Fig. 23).

(2) Tighten nut on crimping tool C-4975-A until jaws on tool are closed completely together, face to face (Fig. 24).

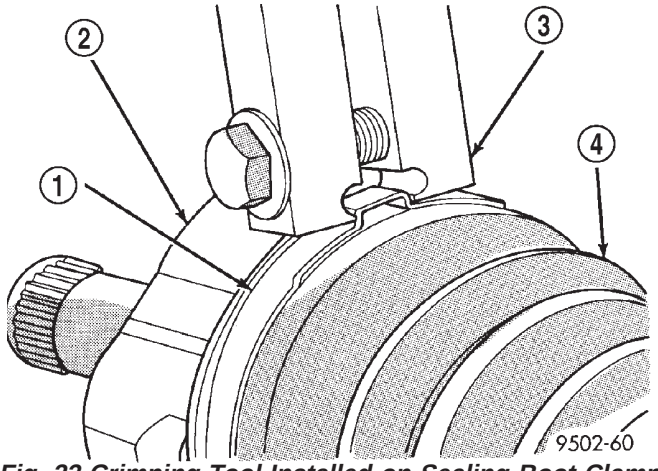

Fig. 23 Crimping Tool Installed on Sealing Boot Clamp

1 - CLAMP
2 - TRIPOD JOINT HOUSING
3 - SPECIAL TOOL C-4975-A
4 - SEALING BOOT

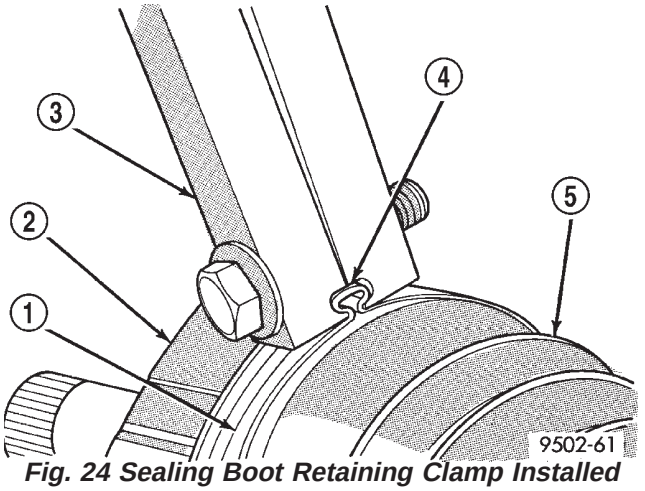

Fig. 24 Sealing Boot Retaining Clamp Installed

1 - CLAMP
2 - TRIPOD HOUSING
3 - SPECIAL TOOL C-4975-A
4 - JAWS OF SPECIAL TOOL C-4975-A MUST BE CLOSED COMPLETELY TOGETHER HERE
5 - SEALING BOOT

CV BOOT - INNER (Continued)

LATCHING TYPE BOOT CLAMP

If seal boot uses low profile latching type boot clamp, use the following procedure to install the retaining clamp.

(1) Place prongs of clamp locking tool in the holes of the clamp (Fig. 25).

(2) Squeeze tool together until top band of clamp is latched behind the two tabs on lower band of clamp (Fig. 26).

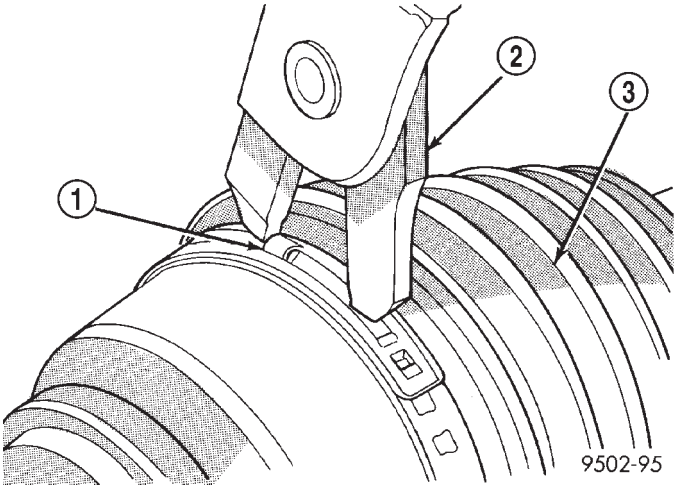

Fig. 25 Clamping Tool Installed on Sealing Boot Clamp

1 - CLAMP
2 - TOOL YA3050, OR EQUIVALENT
3 - SEALING BOOT

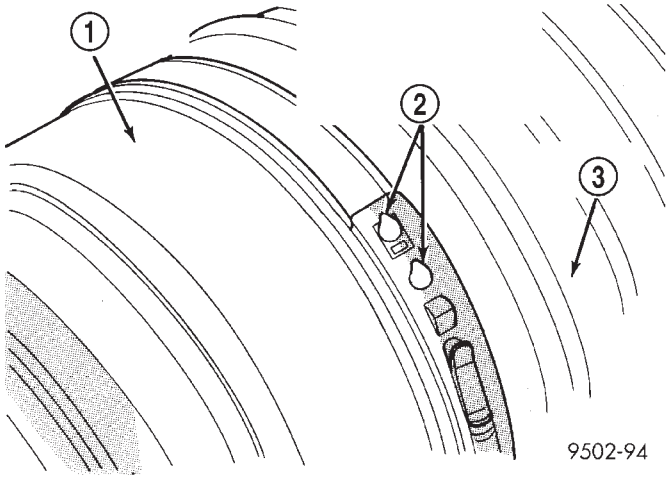

Fig. 26 Sealing Boot Clamp Correctly Installed

1 - INNER TRIPOD JOINT HOUSING
2 - TOP BAND OF CLAMP MUST BE RETAINED BY TABS AS SHOWN HERE TO CORRECTLY LATCH BOOT CLAMP
3 - SEALING BOOT

(14) Install the half shaft back into the vehicle. (Refer to 3 - DIFFERENTIAL & DRIVELINE/HALF SHAFT - INSTALLATION)

CV BOOT - OUTER

REMOVAL

(1) Remove half shaft assembly requiring boot replacement from vehicle. (Refer to 3 - DIFFERENTIAL & DRIVELINE/HALF SHAFT - REMOVAL)

(2) Remove large boot clamp retaining CV joint sealing boot to CV joint housing (Fig. 27) and discard.

(3) Remove small clamp that retains outer CV joint sealing boot to interconnecting shaft and discard.

(4) Remove sealing boot from outer CV joint housing and slide it down interconnecting shaft.

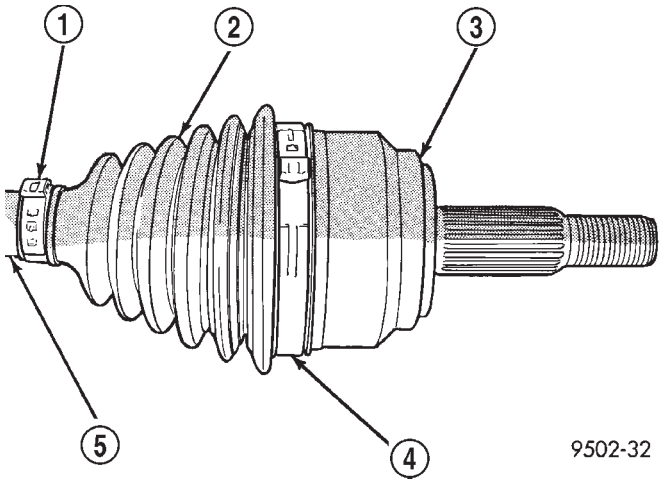

Fig. 27 Outer CV Joint Seal Boot Clamps

1 - SMALL CLAMP
2 - SEALING BOOT
3 - OUTER C/V JOINT HOUSING
4 - LARGE CLAMP
5 - INTERCONNECTING SHAFT

(5) Wipe away grease to expose outer CV joint to interconnecting shaft retaining ring.

(6) Spread ears apart on CV joint assembly to interconnecting shaft retaining ring (Fig. 28).

(7) Slide outer CV joint assembly off end of interconnecting shaft.

(8) Slide sealing boot off interconnecting shaft.

(9) Thoroughly clean and inspect outer CV joint assembly and interconnecting joint for any signs of excessive wear. **If any parts show signs of excessive wear, the half shaft assembly will require replacement. Component parts of these half shaft assemblies are not serviceable.**

INSTALLATION

(1) Slide the new small diameter seal boot retaining clamp onto the interconnecting shaft. Then slide

CV BOOT - OUTER (Continued)

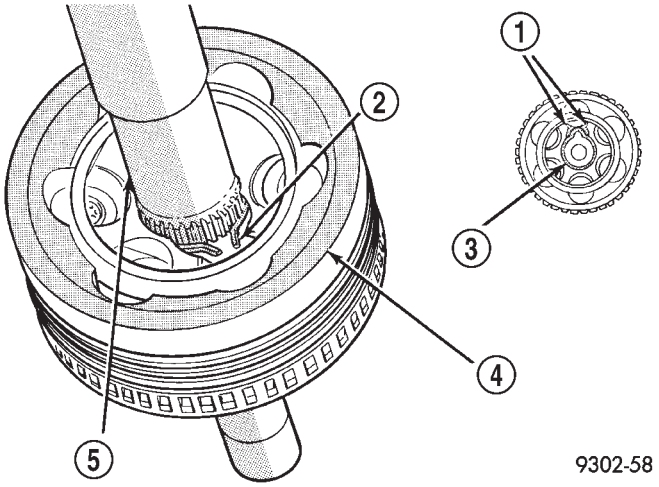

Fig. 28 Outer CV Joint Removal From Interconnecting Shaft

1 - SPREAD RETAINING RING EARS AND PULL JOINT OFF SHAFT
2 - RETAINING SNAP RING
3 - RETAINING RING
4 - OUTER C/V JOINT ASSEMBLY
5 - INTERCONNECTING SHAFT

the replacement outer CV joint assembly sealing boot onto the interconnecting shaft.

(2) Install the outer CV joint assembly onto the interconnecting shaft. Joint is installed on interconnecting shaft, by pushing interconnecting shaft into outer CV joint, until retaining ring is seated in groove on interconnecting shaft (Fig. 29). Verify that the retaining ring is fully seated into groove on interconnecting shaft.

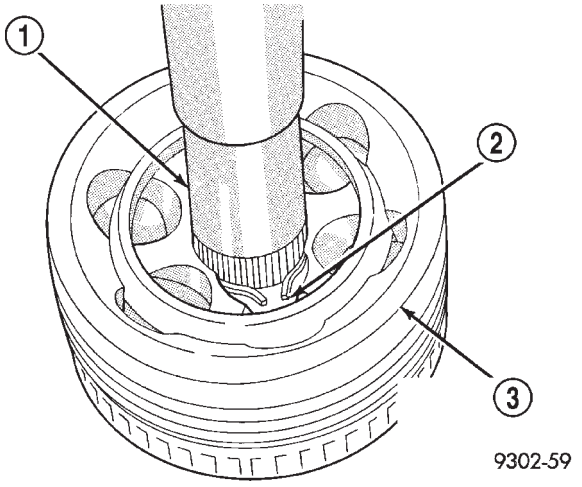

Fig. 29 Outer CV Joint Installed On Interconnecting Shaft

1 - INTERCONNECTING SHAFT
2 - RETAINING SNAP RING
3 - OUTER C/V JOINT ASSEMBLY

(3) Distribute 1/2 the amount of grease provided in seal boot service package (DO NOT USE ANY OTHER TYPE OF GREASE) into outer CV joint assembly housing. Put the remaining amount into the sealing boot.

(4) Install outer CV joint seal boot retaining clamp, onto interconnecting shaft. Install replacement outer CV joint sealing boot onto interconnecting shaft. **Outer CV joint seal boot MUST be positioned on interconnecting shaft, so that only the thinnest (sight) groove on interconnecting shaft is visible (Fig. 30).**

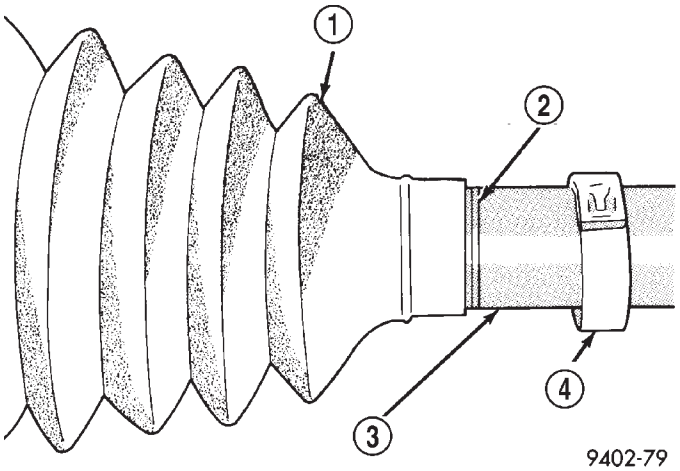

Fig. 30 Seal Boot Correctly Positioned On Interconnecting Shaft

1 - SEALING BOOT
2 - INTERCONNECTING SHAFT THINNEST GROOVE
3 - INTERCONNECTING SHAFT
4 - BOOT CLAMP

(5) Place crimping tool C- 4975-A over bridge of clamp (Fig. 31).

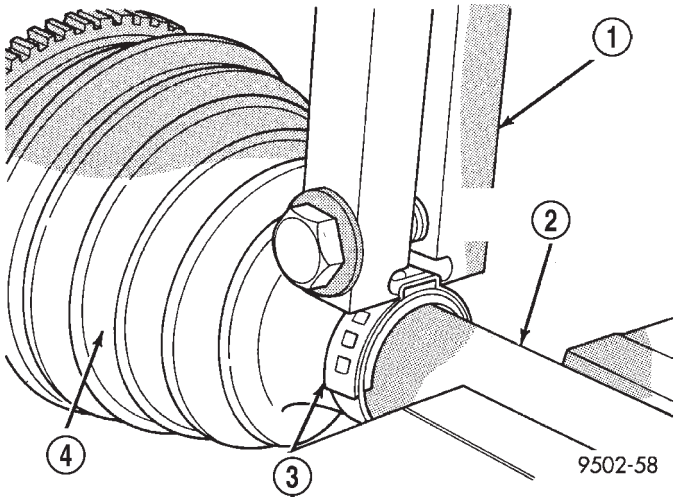

Fig. 31 Crimping Tool Installed on Sealing Boot Clamp

1 - SPECIAL TOOL C-4975-A
2 - INTERCONNECTING SHAFT
3 - CLAMP
4 - SEALING BOOT

CV BOOT - OUTER (Continued)

(6) Tighten nut on crimping tool C- 4975-A until jaws on tool are closed completely together, face to face (Fig. 32).

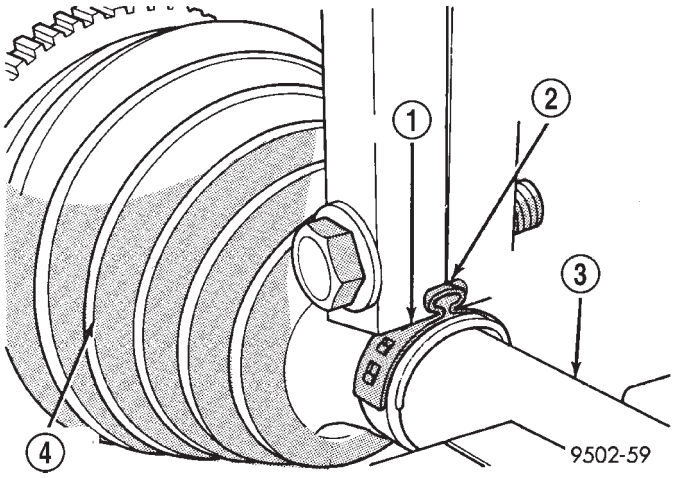

Fig. 32 Sealing Boot Retaining Clamp Installed

1 - CLAMP
2 - JAWS OF SPECIAL TOOL C-4975-A MUST BE CLOSED COMPLETELY TOGETHER HERE
3 - INTERCONNECTING SHAFT
4 - SEALING BOOT

CAUTION: Seal boot must not be dimpled, stretched, or out-of-shape in any way. If seal boot is NOT shaped correctly, equalize pressure in seal and shape it by hand.

(7) Position outer CV joint sealing boot into its retaining groove on outer CV joint housing.

(8) Install sealing boot to outer CV joint retaining clamp evenly on sealing boot.

(9) Place crimping tool C- 4975-A over bridge of clamp (Fig. 33).

(10) Tighten nut on crimping tool C- 4975-A until jaws on tool are closed completely together, face to face (Fig. 34).

(11) Install the half shaft requiring boot replacement back on the vehicle. (Refer to 3 - DIFFERENTIAL & DRIVELINE/HALF SHAFT - INSTALLATION)

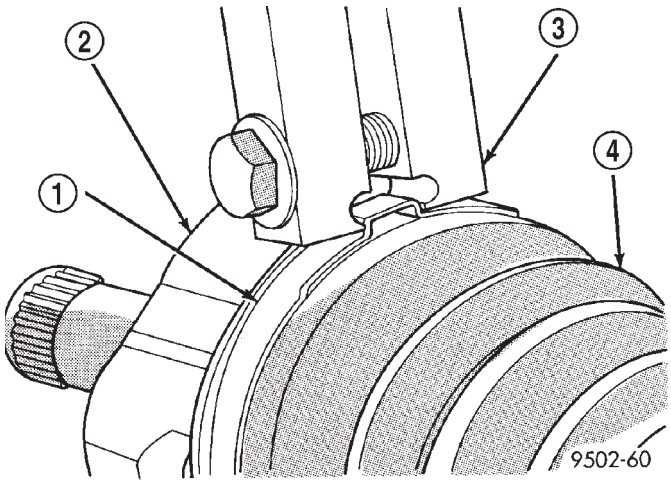

Fig. 33 Crimping Tool Installed on Sealing Boot Clamp - Typical

1 - CLAMP
2 - TRIPOD JOINT HOUSING
3 - SPECIAL TOOL C-4975-A
4 - SEALING BOOT

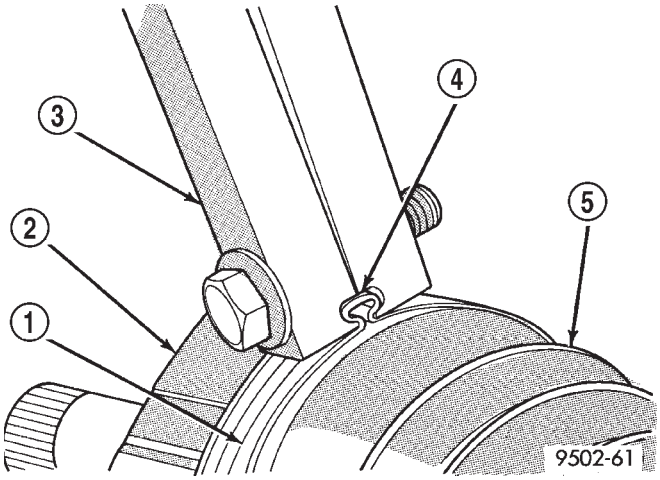

Fig. 34 Sealing Boot Retaining Clamp Installed - Typical

1 - CLAMP
2 - TRIPOD HOUSING
3 - SPECIAL TOOL C-4975-A
4 - JAWS OF SPECIAL TOOL C-4975-A MUST BE CLOSED COMPLETELY TOGETHER HERE
5 - SEALING BOOT

OUTER CV JOINT BEARING SHIELD

REMOVAL

(1) Clamp half shaft in a vise by the interconnecting shaft.

(2) Using a drift (Fig. 35) tap around the entire edge of the bearing shield until it is removed from the outer CV joint.

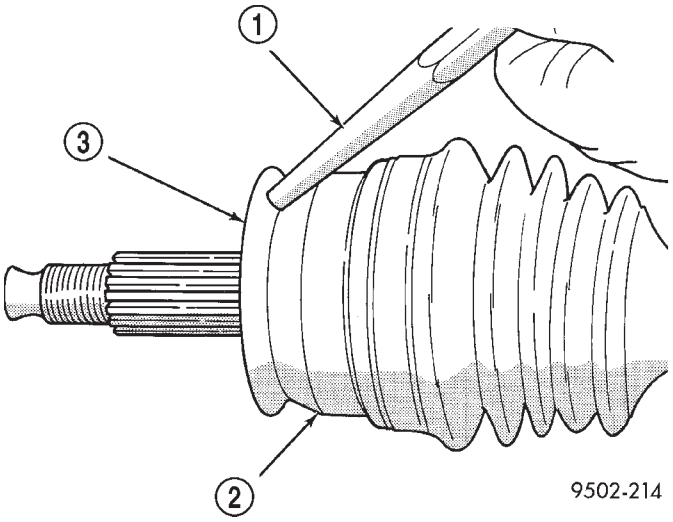

Fig. 35 Removing Bearing Shield from Outer CV Joint

1 - DRIFT
2 - OUTER C/V JOINT
3 - BEARING SHIELD

INSTALLATION

(1) Install bearing shield by hand on outer CV Joint so that it is installed squarely on the CV joint.

(2) Position installer, Special Tool C-4698-2, and handle, Special Tool C-4698-1, on face of bearing shield (Fig. 36).

CAUTION: If bearing shield is not installed flush against the face of the outer CV joint, interference with steering knuckle will occur when driveshaft is installed.

(3) Using a hammer, drive the bearing shield on the outer CV joint until it is flush against the front of the outer CV joint (Fig. 37).

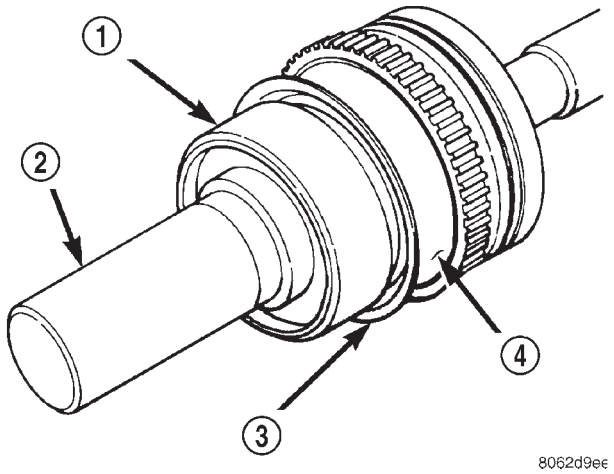

Fig. 36 Special Tools for Installing Bearing Shield

1 - SPECIAL TOOL C-4698–2
2 - SPECIAL TOOL C-4698–1
3 - BEARING SHIELD
4 - OUTER C/V JOINT

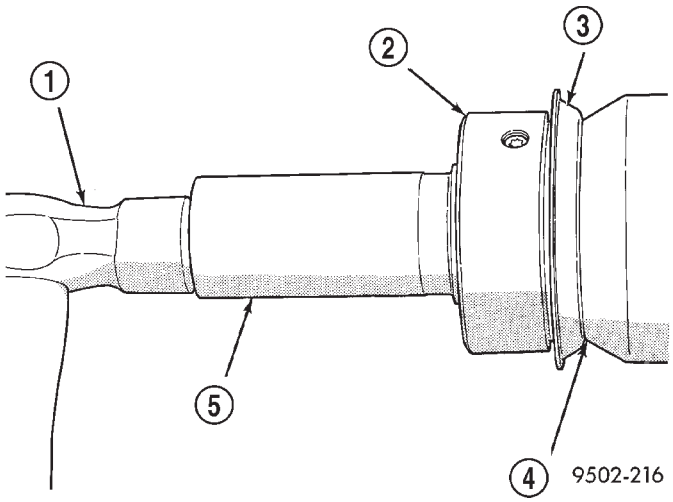

Fig. 37 Correctly Installed Bearing Shield

1 - HAMMER
2 - SPECIAL TOOL C-4698–2
3 - BEARING SHIELD
4 - BEARING SEAL MUST BE FLUSH WITH FRONT OF OUTER C/V JOINT
5 - SPECIAL TOOL C-4698–1

HALF SHAFT - REAR

TABLE OF CONTENTS

page

HALF SHAFT - REAR
DESCRIPTION 14
DIAGNOSIS AND TESTING - HALF SHAFT 14
REMOVAL 15
INSTALLATION 15
SPECIFICATIONS - HALF SHAFT - FRONT . . . 16
CV BOOT - INNER/OUTER
REMOVAL 17
INSTALLATION 18

HALF SHAFT - REAR

DESCRIPTION

The inner and outer joints of both half shaft assemblies are tripod joints. The tripod joints are true constant velocity (CV) joint assemblies, which allow for the changes in half shaft length through the jounce and rebound travel of the rear suspension.

On vehicles equipped with ABS brakes, the outer CV joint is equipped with a tone wheel used to determine vehicle speed for ABS brake operation.

The inner tripod joint of both half shafts is bolted rear differential assembly's output flanges. The outer CV joint has a stub shaft that is splined into the wheel hub and retained by a steel hub nut.

DIAGNOSIS AND TESTING - HALF SHAFT

VEHICLE INSPECTION

(1) Check for grease in the vicinity of the inboard tripod joint and outboard CV joint; this is a sign of inner or outer joint seal boot or seal boot clamp damage.

NOISE AND/OR VIBRATION IN TURNS

A clicking noise and/or a vibration in turns could be caused by one of the following conditions:

- Damaged outer CV or inner tripod joint seal boot or seal boot clamps. This will result in the loss and/or contamination of the joint grease, resulting in inadequate lubrication of the joint.
- Noise may also be caused by another component of the vehicle coming in contact with the half shafts.

CLUNKING NOISE DURING ACCELERATION

This noise may be a result of one of the following conditions:

- A torn seal boot on the inner or outer joint of the half shaft assembly.
- A loose or missing clamp on the inner or outer joint of the half shaft assembly.
- A damaged or worn half shaft CV joint.

SHUDDER OR VIBRATION DURING ACCELERATION

This problem could be a result of:

- A worn or damaged half shaft inner tripod joint.
- A sticking tripod joint spider assembly (inner tripod joint only).
- Improper wheel alignment. (Refer to 2 - SUSPENSION/WHEEL ALIGNMENT - STANDARD PROCEDURE)

VIBRATION AT HIGHWAY SPEEDS

This problem could be a result of:

- Foreign material (mud, etc.) packed on the backside of the wheel(s).
- Out of balance tires or wheels. (Refer to 22 - TIRES/WHEELS - STANDARD PROCEDURE)
- Improper tire and/or wheel runout. (Refer to 22 - TIRES/WHEELS - DIAGNOSIS AND TESTING)

HALF SHAFT - REAR (Continued)

REMOVAL

(1) Lift vehicle on hoist so that the wheels hang freely.
(2) Remove rear wheel.
(3) Remove cotter pin, nut lock, and wave washer (Fig. 1).

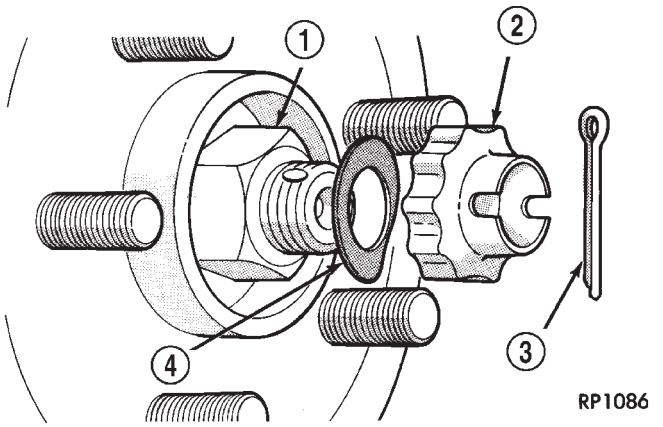

Fig. 1 Cotter Pin, Nut Lock, And Wave Washer

1 - HUB NUT
2 - NUT LOCK
3 - COTTER PIN
4 - SPRING WASHER

(4) Remove hub nut and washer.

CAUTION: The half shaft outer CV joint, when installed, acts as a bolt and secures the hub/bearing assembly. If the vehicle is to be supported or moved on its wheels, install and torque a bolt through the hub. This will ensure that the hub/bearing assembly cannot loosen.

(5) Remove inner half shaft retaining bolts (Fig. 2).

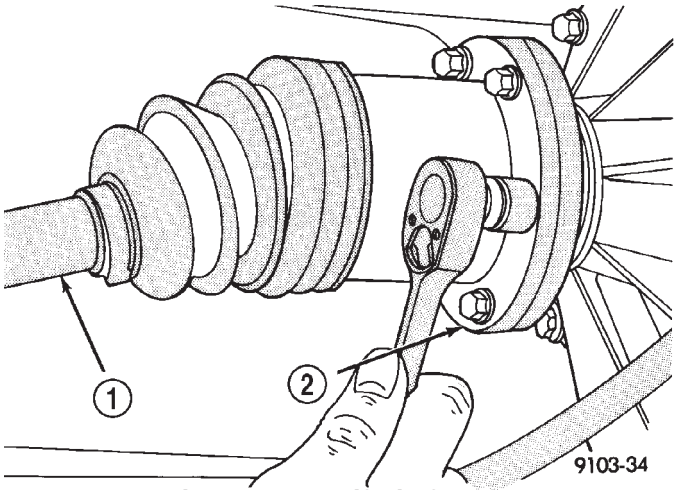

Fig. 2 Inner Half Shaft Bolts

1 - SHAFT
2 - FLANGE

(6) The half shaft is spring loaded. Compress inner half shaft joint slightly and pull downward to clear rear differential output flange. Then pull half shaft assembly outward to remove (Fig. 3).

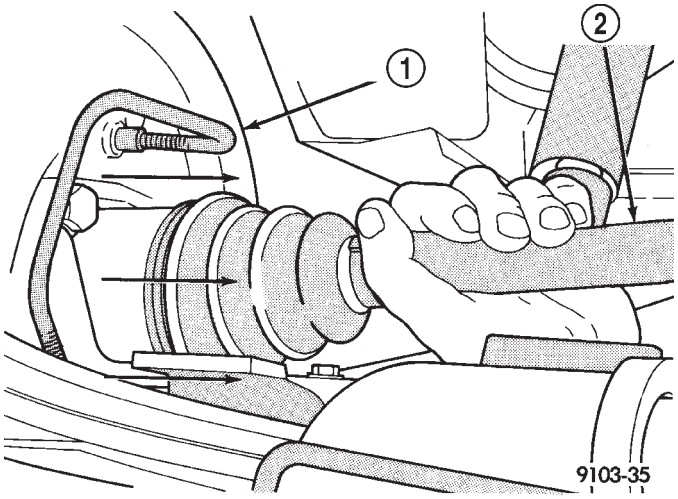

Fig. 3 Half Shaft Removal

1 - BRAKE BACKING PLATE
2 - HALF SHAFT

INSTALLATION

(1) Install the outer CV joint stub shaft through the hub bearing (Fig. 4).
(2) The half shaft is spring loaded. Compress inner half shaft joint slightly and push upward until the inner CV joint flange engages the rear differential output flange.

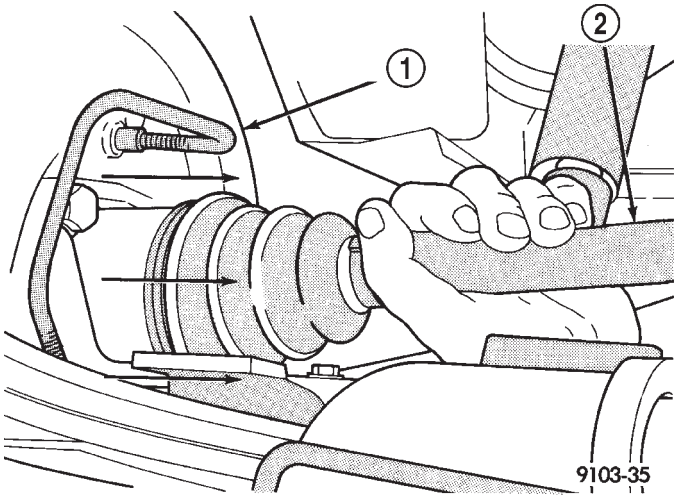

Fig. 4 Half Shaft Installation

1 - BRAKE BACKING PLATE
2 - HALF SHAFT

(3) Install the inner half shaft retaining bolts (Fig. 5). Torque the bolts to 61 N·m (45 ft.lbs.).

HALF SHAFT - REAR (Continued)

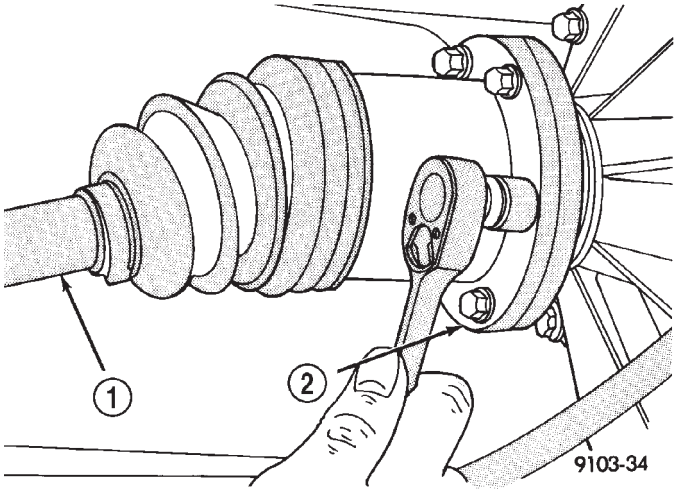

Fig. 5 Inner Half Shaft Bolts

1 - SHAFT
2 - FLANGE

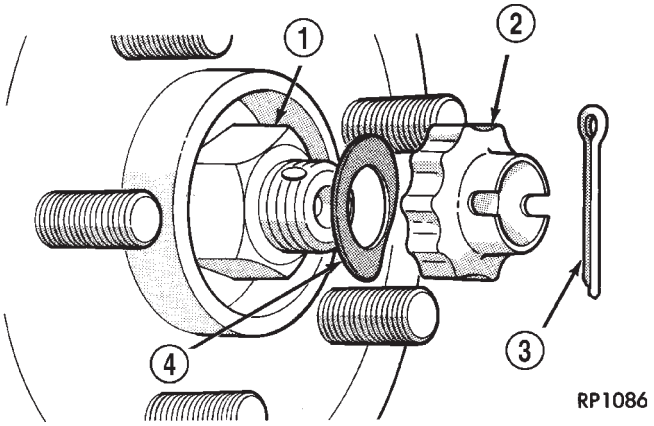

Fig. 6 Cotter Pin, Nut Lock, And Wave Washer

1 - HUB NUT
2 - NUT LOCK
3 - COTTER PIN
4 - SPRING WASHER

(4) Install the half shaft washer and hub nut. Torque the hub nut to 244 N·m (180 ft.lbs.).

(5) Install the wave washer, nut lock, and a new cotter pin (Fig. 6). Be sure to wrap the cotter pin prongs tightly around the hub nut lock.

(6) Install rear wheel. Torque the lug nuts to 135 N·m (100 ft.lbs.).

SPECIFICATIONS - HALF SHAFT - FRONT

TORQUE SPECIFICATIONS

DESCRIPTION	N·m	Ft. Lbs.	In. Lbs.
Nut, Hub	244	180	-
Nuts, Rear Wheel Lug	135	100	-
Bolt, Half Shaft to Output Flange	61	45	-

CV BOOT - INNER/OUTER

REMOVAL

(1) Remove half shaft from vehicle. (Refer to 3 - DIFFERENTIAL & DRIVELINE/HALF SHAFT - REMOVAL)

(2) Clamp the half shaft into a suitable vise with protective jaws clamped onto the interconnecting shaft (Fig. 7).

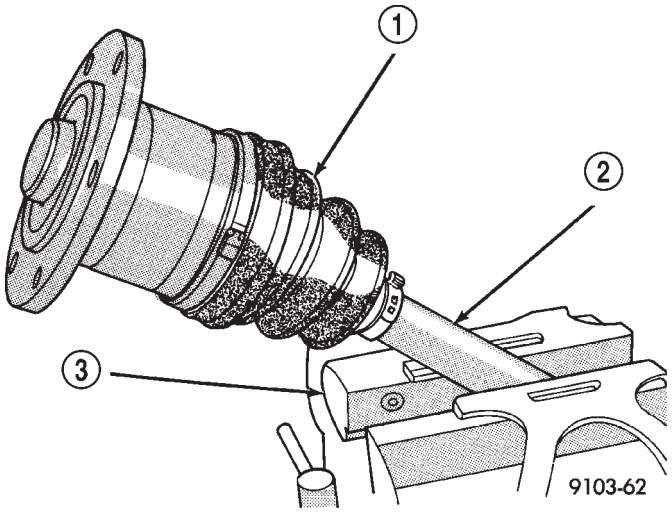

Fig. 7 Clamp Shaft In Soft Jawed Vice

1 - HALF SHAFT BOOT
2 - HALF SHAFT
3 - VISE

(3) Remove the large and small diameter retaining clamps holding the CV boot to the CV joint and the interconnecting shaft (Fig. 8).

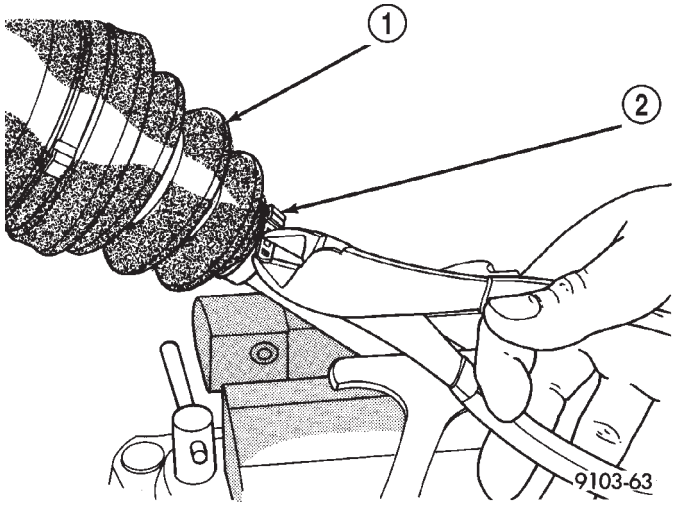

Fig. 8 Remove Boot Clamps

1 - HALF SHAFT BOOT
2 - CLAMP

(4) Pull the boot back from the CV joint (Fig. 9).

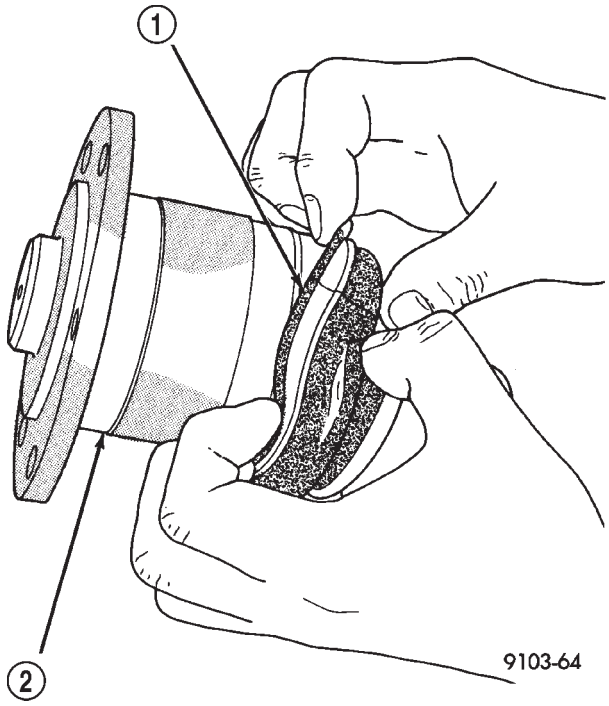

Fig. 9 Pull Back Boot

1 - HALF SHAFT BOOT
2 - HALF SHAFT JOINT

(5) Remove the CV housing from the interconnecting shaft and tripod assembly (Fig. 10).

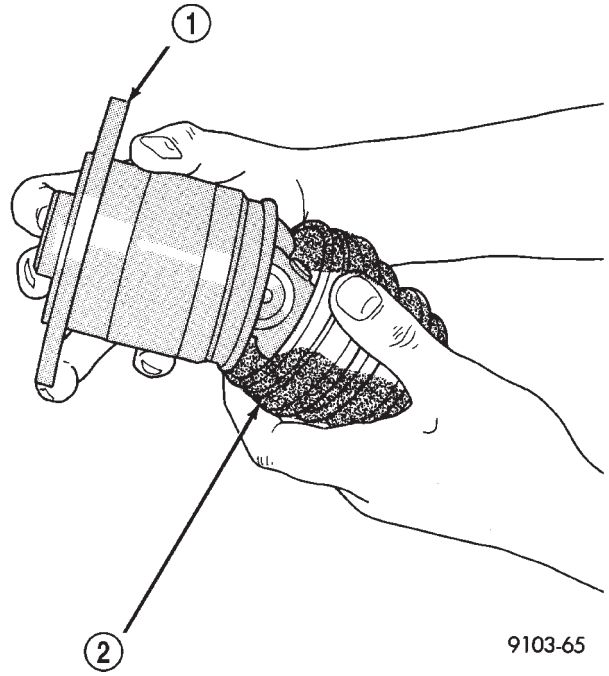

Fig. 10 Remove CV Housing

1 - HALF SHAFT JOINT HOUSING
2 - BOOT

CV BOOT - INNER/OUTER (Continued)

(6) Remove the snap-ring holding the tripod assembly onto the interconnecting shaft (Fig. 11).

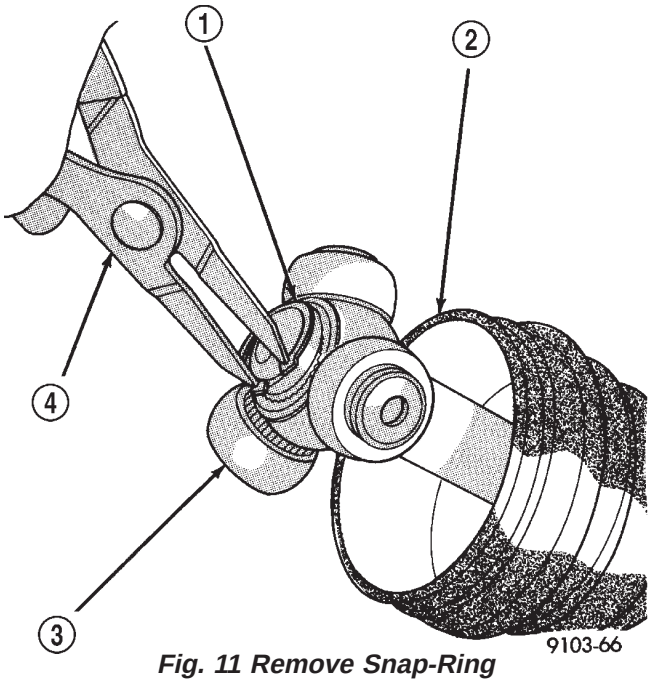

Fig. 11 Remove Snap-Ring

1 - SNAP RING
2 - HALF SHAFT BOOT
3 - TRIPOD ASSEMBLY
4 - SNAP RING PLIERS

(7) Remove the tripod assembly from the interconnecting shaft (Fig. 12).

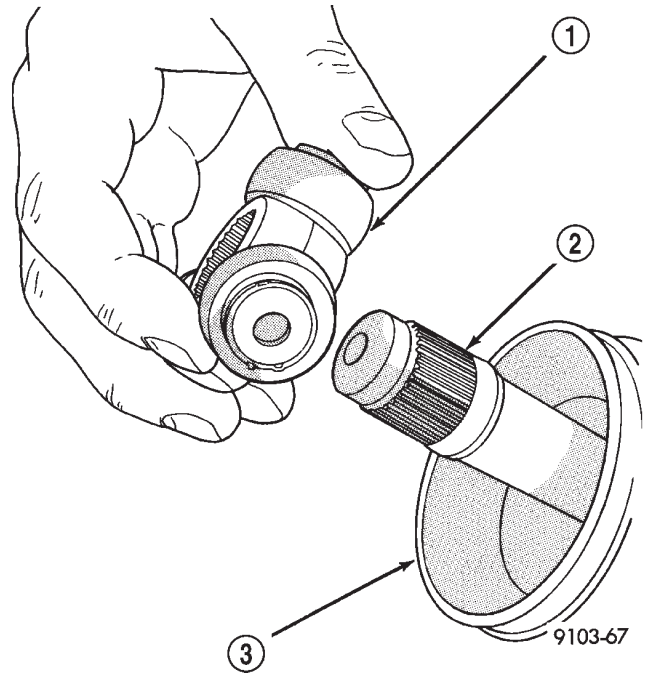

Fig. 12 Slide Tripod Off The Shaft

1 - TRIPOD ASSEMBLY
2 - AXLE SHAFT
3 - HALF SHAFT BOOT

(8) Remove the CV boot from the interconnecting shaft (Fig. 13).

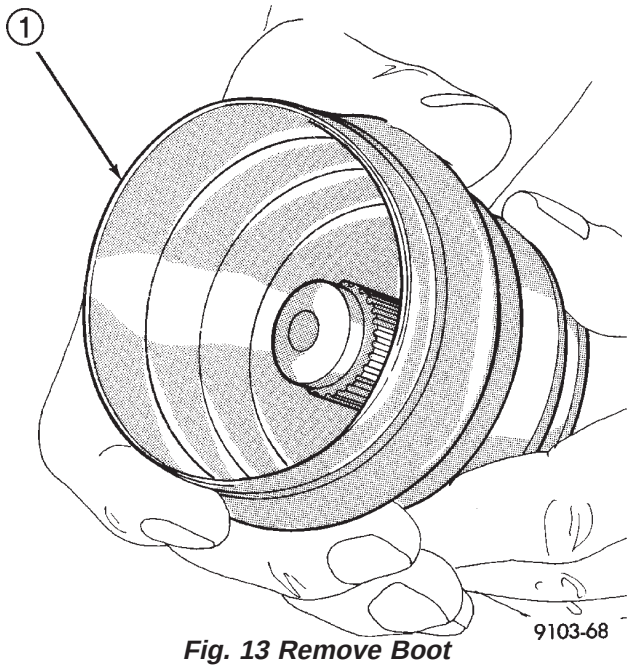

Fig. 13 Remove Boot

1 - HALF SHAFT BOOT

INSTALLATION

(1) Clean the interconnecting shaft and inner CV joint of any residual grease and dirt.

(2) Slide the new small diameter retaining clamp onto the interconnecting shaft.

(3) Install the CV boot onto the interconnecting shaft (Fig. 14).

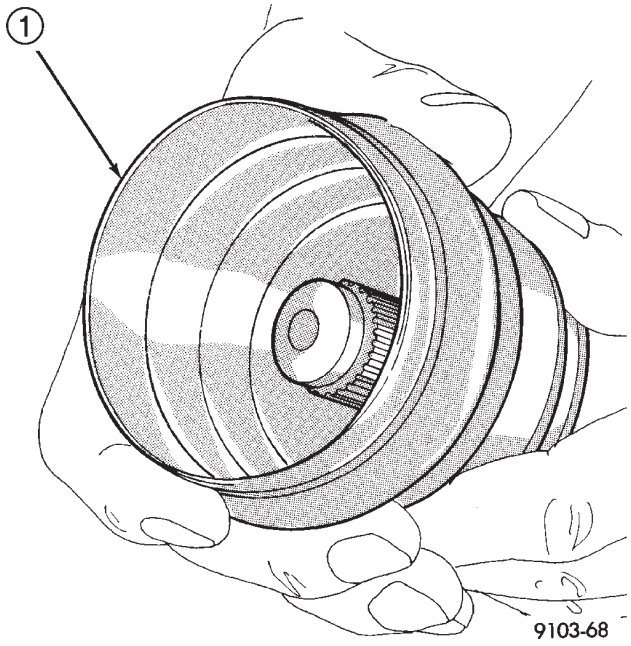

Fig. 14 Install CV Boot Onto Interconnecting Shaft

1 - HALF SHAFT BOOT

CV BOOT - INNER/OUTER (Continued)

(4) Install the tripod assembly onto the interconnecting shaft (Fig. 15).

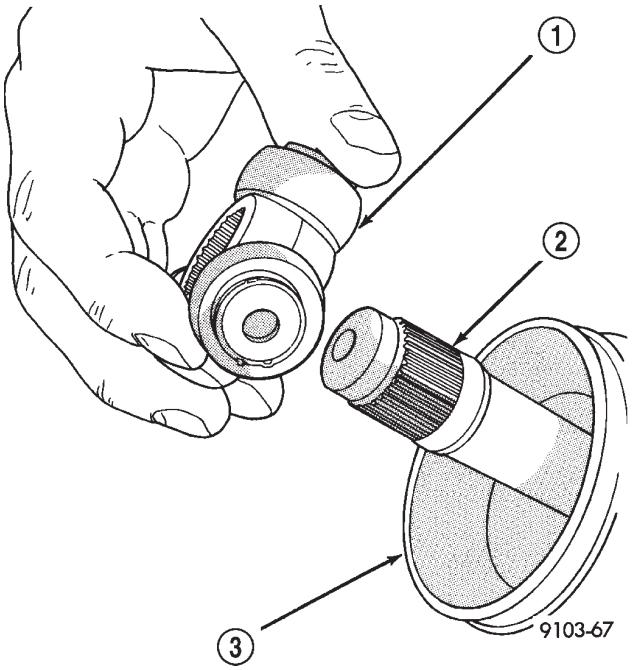

Fig. 15 Slide Tripod Onto The Interconnecting Shaft

1 - TRIPOD ASSEMBLY
2 - AXLE SHAFT
3 - HALF SHAFT BOOT

(5) Install the snap-ring to hold the tripod assembly onto the interconnecting shaft (Fig. 16).

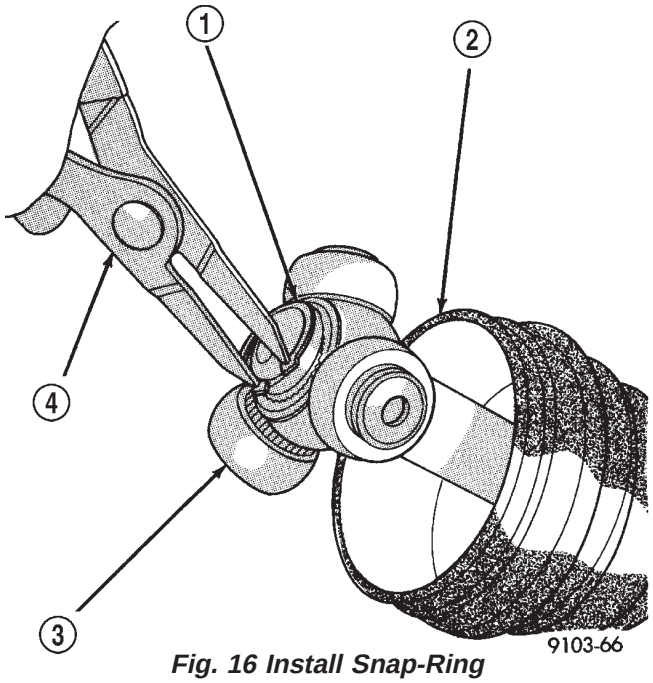

Fig. 16 Install Snap-Ring

1 - SNAP RING
2 - HALF SHAFT BOOT
3 - TRIPOD ASSEMBLY
4 - SNAP RING PLIERS

(6) Install the new large diameter retaining clamp onto the CV joint housing.

(7) Distribute 1/2 the amount of grease provided in the seal boot service package (DO NOT USE ANY OTHER TYPE OF GREASE) into tripod housing. Put the remaining amount into the sealing boot.

(8) Install the CV housing onto the interconnecting shaft and tripod assembly (Fig. 17).

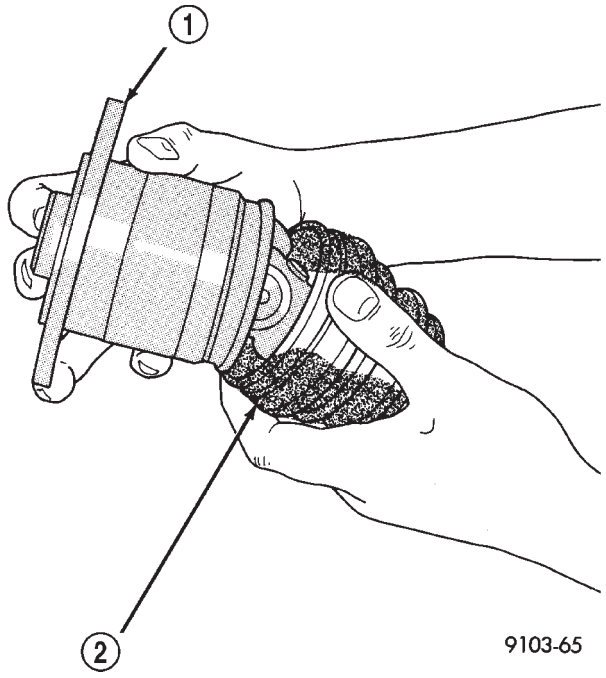

Fig. 17 Install CV Housing

1 - HALF SHAFT JOINT HOUSING
2 - BOOT

(9) Clamp the half shaft into a suitable vise with protective jaws clamped onto the interconnecting shaft.

CV BOOT - INNER/OUTER (Continued)

(10) Position the inner CV joint boot on interconnecting shaft so the raised bead on the inside of the small diameter end of the seal boot is in mating groove on interconnecting shaft (Fig. 18).

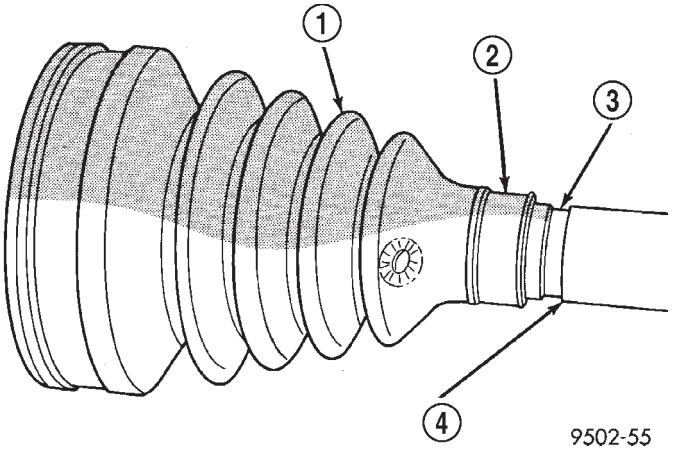

Fig. 18 Sealing Boot Installation on Interconnecting Shaft

1 - SEALING BOOT
2 - RAISED BEAD IN THIS AREA OF SEALING BOOT
3 - GROOVE
4 - INTERCONNECTING SHAFT

(11) Install inner CV joint seal boot to interconnecting shaft clamp evenly on sealing boot.

(12) Place crimping tool C-4975-A over bridge of clamp (Fig. 19).

(13) Tighten nut on crimping tool C-4975-A until jaws on tool are closed completely together, face to face (Fig. 20).

CAUTION: The boot must not be dimpled, stretched or out of shape in any way. If boot is NOT shaped correctly, equalize pressure in boot and shape it by hand.

(14) Position CV boot into the CV housing retaining groove. Install the boot large diameter retaining clamp evenly onto the boot.

(15) Clamp the CV joint boot to the CV joint, using required procedure for type of boot clamp application.

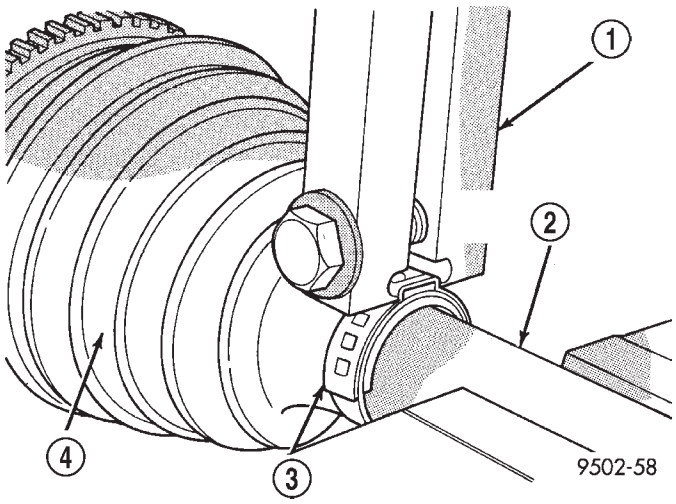

Fig. 19 Crimping Tool Installed on Sealing Boot Clamp - Typical

1 - SPECIAL TOOL C-4975-A
2 - INTERCONNECTING SHAFT
3 - CLAMP
4 - SEALING BOOT

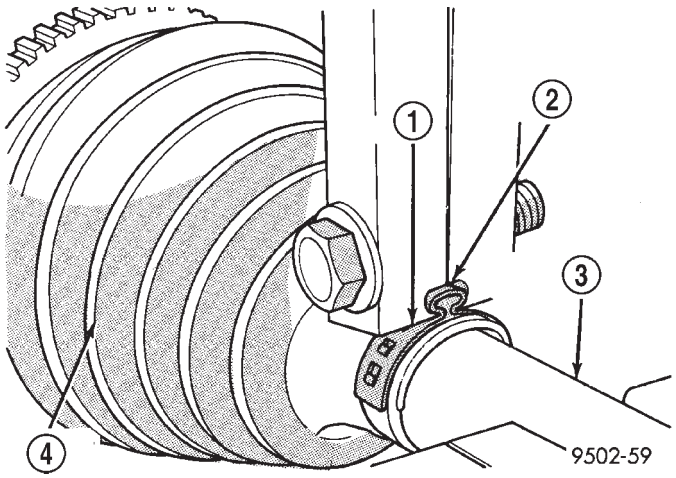

Fig. 20 Sealing Boot Retaining Clamp Installed - Typical

1 - CLAMP
2 - JAWS OF SPECIAL TOOL C-4975-A MUST BE CLOSED COMPLETELY TOGETHER HERE
3 - INTERCONNECTING SHAFT
4 - SEALING BOOT

CV BOOT - INNER/OUTER (Continued)

CRIMP TYPE BOOT CLAMP

If seal boot uses crimp type boot clamp, use the following procedure to install the retaining clamp.

(1) Place crimping tool C-4975-A over bridge of clamp (Fig. 21).

(2) Tighten nut on crimping tool C-4975-A until jaws on tool are closed completely together, face to face (Fig. 22).

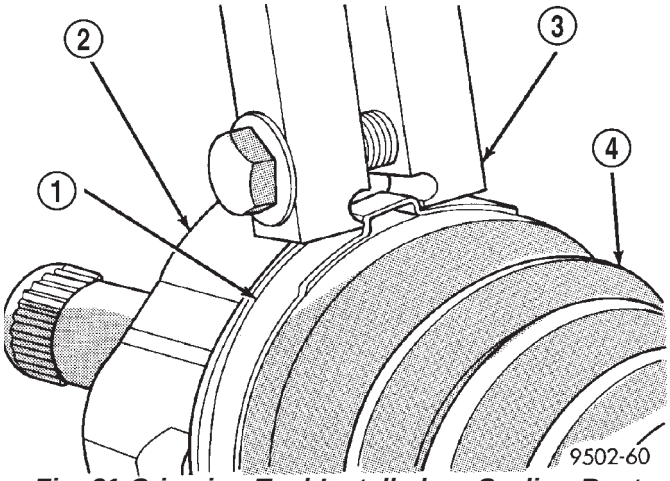

Fig. 21 Crimping Tool Installed on Sealing Boot Clamp - Typical

1 - CLAMP
2 - TRIPOD JOINT HOUSING
3 - SPECIAL TOOL C-4975-A
4 - SEALING BOOT

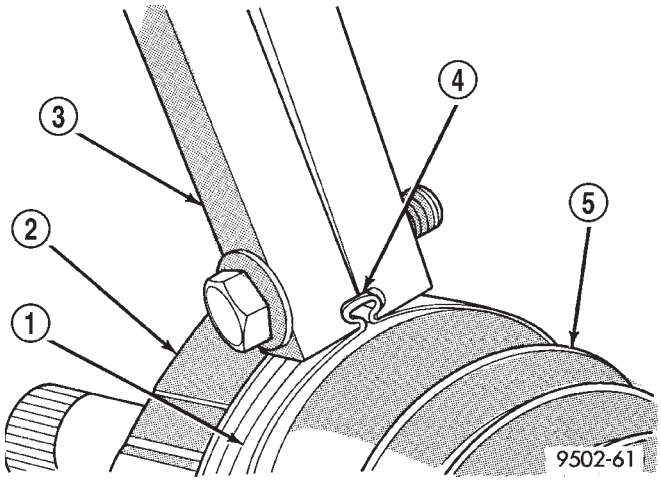

Fig. 22 Sealing Boot Retaining Clamp Installed - Typical

1 - CLAMP
2 - TRIPOD HOUSING
3 - SPECIAL TOOL C-4975-A
4 - JAWS OF SPECIAL TOOL C-4975-A MUST BE CLOSED COMPLETELY TOGETHER HERE
5 - SEALING BOOT

LATCHING TYPE BOOT CLAMP

If seal boot uses low profile latching type boot clamp, use the following procedure to install the retaining clamp.

(1) Place prongs of clamp locking tool in the holes of the clamp (Fig. 23).

(2) Squeeze tool together until top band of clamp is latched behind the two tabs on lower band of clamp (Fig. 24).

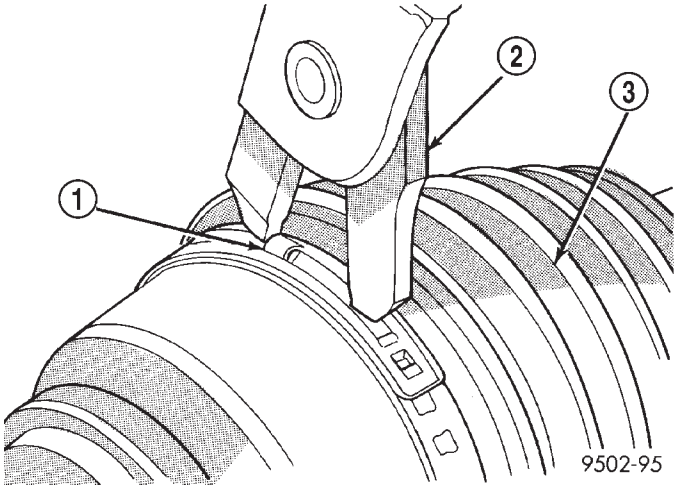

Fig. 23 Clamping Tool Installed on Sealing Boot Clamp

1 - CLAMP
2 - TOOL YA3050, OR EQUIVALENT
3 - SEALING BOOT

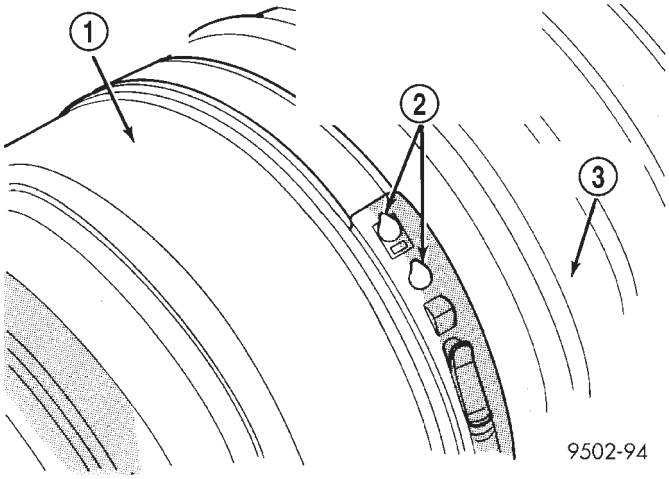

Fig. 24 Sealing Boot Clamp Correctly Installed

1 - INNER TRIPOD JOINT HOUSING
2 - TOP BAND OF CLAMP MUST BE RETAINED BY TABS AS SHOWN HERE TO CORRECTLY LATCH BOOT CLAMP
3 - SEALING BOOT

(16) Install the half shaft into the vehicle. (Refer to 3 - DIFFERENTIAL & DRIVELINE/HALF SHAFT - INSTALLATION)

PROPELLER SHAFT

TABLE OF CONTENTS

	page
PROPELLER SHAFT	
DESCRIPTION	22
OPERATION	22
REMOVAL	23
INSTALLATION	23
SPECIFICATIONS - PROPELLER SHAFT	23

PROPELLER SHAFT

DESCRIPTION

WARNING: Due to propeller shaft imbalance concerns, the propeller shaft can only be serviced as an assembly.

AWD models utilize a “two-piece” propeller shaft (Fig. 1) to transmit power to the rear driveline module assembly. This two-piece design consists of:

- Front and rear shaft segments.
- Plunging center CV joint
- Center support bearing
- Rubber coupler at driveline module flange

The front shaft segment utilizes a CV joint at the power transfer unit connection, and a plunging CV joint at the center bearing location.

The rear shaft segment utilizes a center support bearing at the forward position, and a rubber coupler at the driveline module flange.

OPERATION

The propeller shaft (Fig. 1) is used to transmit torque from the transaxle power transfer unit (PTU)

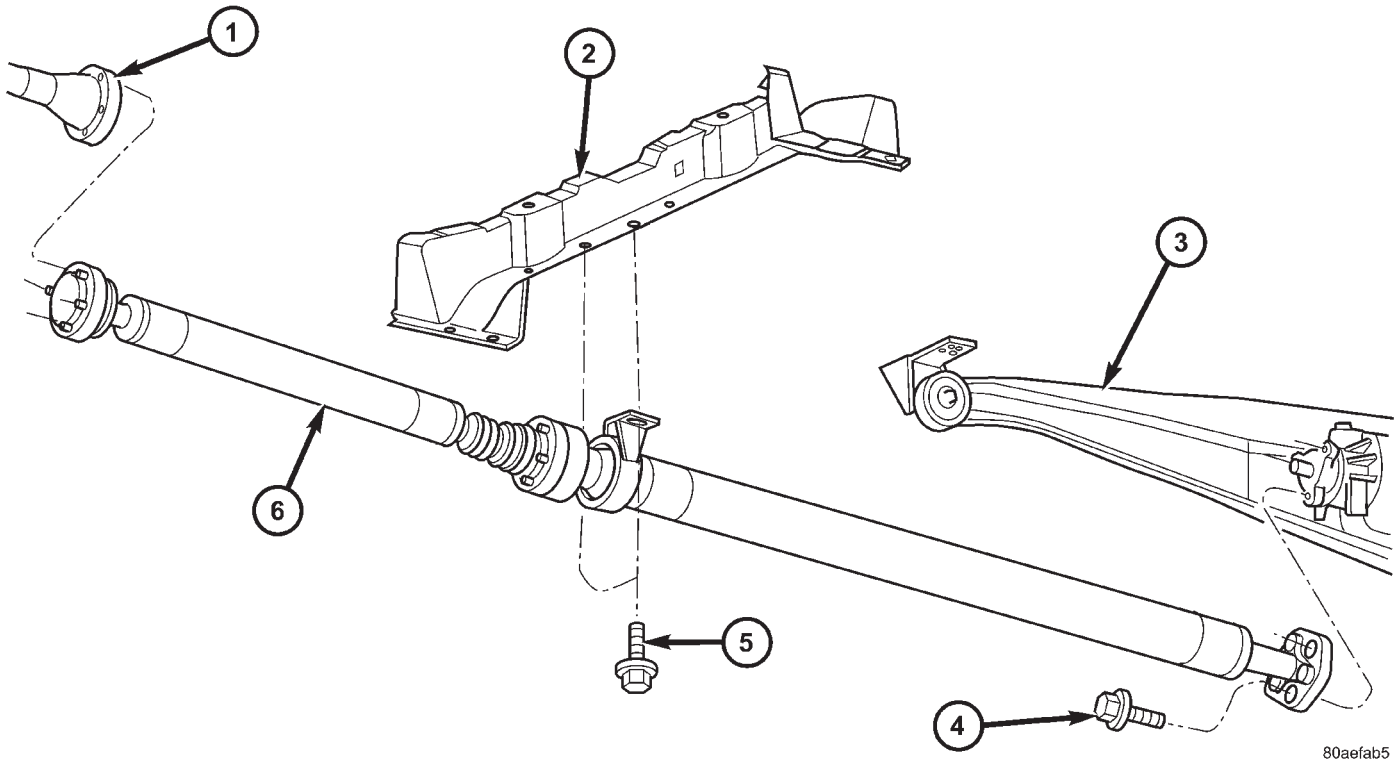

Fig. 1 Propeller Shaft Removal/Installation

1 - PTU FLANGE	3 - REAR DRIVELINE MODULE	5 - BOLT-CENTER SUPPORT BEARING-TO-CROSSMEMBER
2 - CROSSMEMBER	4 - BOLT-PROPELLER SHAFT COUPLER-T0-DRIVELINE MODULE	6 - PROPELLER SHAFT ASSEMBLY

PROPELLER SHAFT (Continued)

to the rear driveline module of AWD equipped models.

The propeller shaft front half utilizes a CV joint at the PTU flange, and a plunging CV joint at the center bearing location. These joints are flexible, allowing for torsional movement of the powertrain.

The propeller shaft rear half utilizes a center support bearing, which supports this two-piece assembly. The bearing also stabilizes the rear shaft segment to minimize axle wind-up. The rubber coupler at the driveline module flange dampens out propeller shaft torsional vibrations, as the driveline module it connects to is fastened to the vehicle body.

REMOVAL

CAUTION: Propeller shaft removal is a two-man operation. Never allow propeller shaft to hang while connected to power transfer unit (PTU) or rear driveline module flanges. A helper is required.

(1) Make sure transaxle is in neutral (N). Using chalk, mark propeller shaft flanges at PTU and rear driveline module for installation reference.

(2) Remove six propeller shaft-to-power transfer unit bolts.

(3) Have helper remove three propeller shaft rubber coupler-to-driveline module bolts while he/she supports rear shaft by hand.

(4) Remove center bearing support-to-crossmember bolts, while supporting front shaft with two hands.

(5) Lower propeller shaft assembly to ground, using care not to damage fore and aft flanges (Fig. 1).

INSTALLATION

CAUTION: Propeller shaft installation is a two-man operation. Never allow propeller shaft to hang while connected to power transfer unit (PTU) or rear driveline module flanges. A helper is required.

(1) Make sure transaxle is in Neutral (N) position.

(2) Obtain a helper and lift propeller shaft assembly into position (Fig. 1).

(3) While helper supports front half of shaft level to underbody, align paint marks at driveline module flange and install three propeller shaft rubber coupler-to-rear driveline module bolts by hand. Do not torque at this time.

(4) While helper supports front half of shaft level to underbody, align chalk marks at PTU flange. Install six propeller shaft-to-PTU flange bolts and torque to 30 N·m (22 ft. lbs.). Torque bolts alternately to ensure proper flange mating.

(5) Place center bearing into position. Install and torque center bearing-to-crossmember bolts to 54 N·m (40 ft. lbs.).

(6) Torque propeller shaft rubber coupler-to-rear driveline module assembly to 54 N·m (40 ft. lbs.).

SPECIFICATIONS - PROPELLER SHAFT

TORQUE SPECIFICATIONS

DESCRIPTION	N·m	Ft. Lbs.	In. Lbs.
Bolt, Propeller Shaft Front Flange-to-PTU Flange	30	22	—
Bolt, Propeller Shaft Rear Flange-to-Driveline Module Flange	54	40	—
Bolt, Center Support Bearing-to-Body	54	40	—

REAR DRIVELINE MODULE

TABLE OF CONTENTS

page

REAR DRIVELINE MODULE
DESCRIPTION 24
OPERATION 24
DIAGNOSIS AND TESTING
DIAGNOSIS AND TESTING - REAR DRIVELINE MODULE NOISE 25
DIAGNOSIS AND TESTING - REAR DRIVELINE MODULE OPERATION 27
REMOVAL 27
DISASSEMBLY 28
ASSEMBLY 30
INSTALLATION 34
SPECIFICATIONS - REAR DRIVELINE MODULE 35
SPECIAL TOOLS 35
BI-DIRECTIONAL OVERRUNNING CLUTCH
DESCRIPTION 36
OPERATION 38
DIFFERENTIAL ASSEMBLY
DESCRIPTION 41

page

OPERATION 41
FLUID - DIFFERENTIAL ASSEMBLY
STANDARD PROCEDURE - DIFFERENTIAL ASSEMBLY FLUID DRAIN AND FILL 42
FLUID
STANDARD PROCEDURE - OVERRUNNING CLUTCH HOUSING FLUID CHANGE 43
VISCOUS COUPLER
DESCRIPTION 44
OPERATION 44
TORQUE ARM
REMOVAL 46
INSTALLATION 46
INPUT FLANGE SEAL
REMOVAL 46
INSTALLATION 47
OUTPUT FLANGE SEAL
REMOVAL 48
INSTALLATION 49

REAR DRIVELINE MODULE

DESCRIPTION

The rear driveline module assembly (Fig. 1) consists of four main components:

- Bi-Directional Overrunning Clutch (BOC)
- Viscous Coupling
- Differential Assembly
- Torque Arm

The viscous coupling and bi-directional overrunning clutch are contained within an overrunning clutch housing, which fastens to the differential assembly. The overrunning clutch housing and differential assembly have unique fluid sumps, each requiring their own type and capacity of fluid. The overrunning clutch housing requires Mopar® ATF+4 (Automatic Transmission Fluid—Type 9602) or equivalent. The differential assembly requires

Driveline module service is limited to the following components:

- Differential Assembly (serviced only as assembly)
- Viscous Coupling
- Bi-Directional Overrunning Clutch (BOC)
- Overrunning Clutch Housing
- Seals (Input Flange, Output Flange, Overrunning Clutch Housing O-rings)
- Input Flange/Shield
- Torque Arm
- Vents
- Fasteners

OPERATION

The primary benefits of All Wheel Drive are:

- Superior straight line acceleration, and cornering on all surfaces
- Better traction and handling under adverse conditions, resulting in improved hill climbing ability and safer driving.

The heart of the system is an inter-axle viscous coupling. The vehicle retains predominantly front-wheel drive characteristics, but the All Wheel Drive capability takes effect when the front wheels start to slip. Under normal level road, straight line driving, 100% of the torque is allocated to the front wheels. The viscous coupling controls and distributes torque/power to the rear wheels. The viscous coupling transmits torque to the rear wheels in proportion of the amount of the slippage at the front wheels. Thais variable torque distribution is automatic with no driver inputs required. The coupling is similar to a multi-plate clutch. It consists of a series of closely spaced discs, which are alternately connected to the front and rear drive units. The unit is totally sealed and partially filled with silicone fluid. There is no

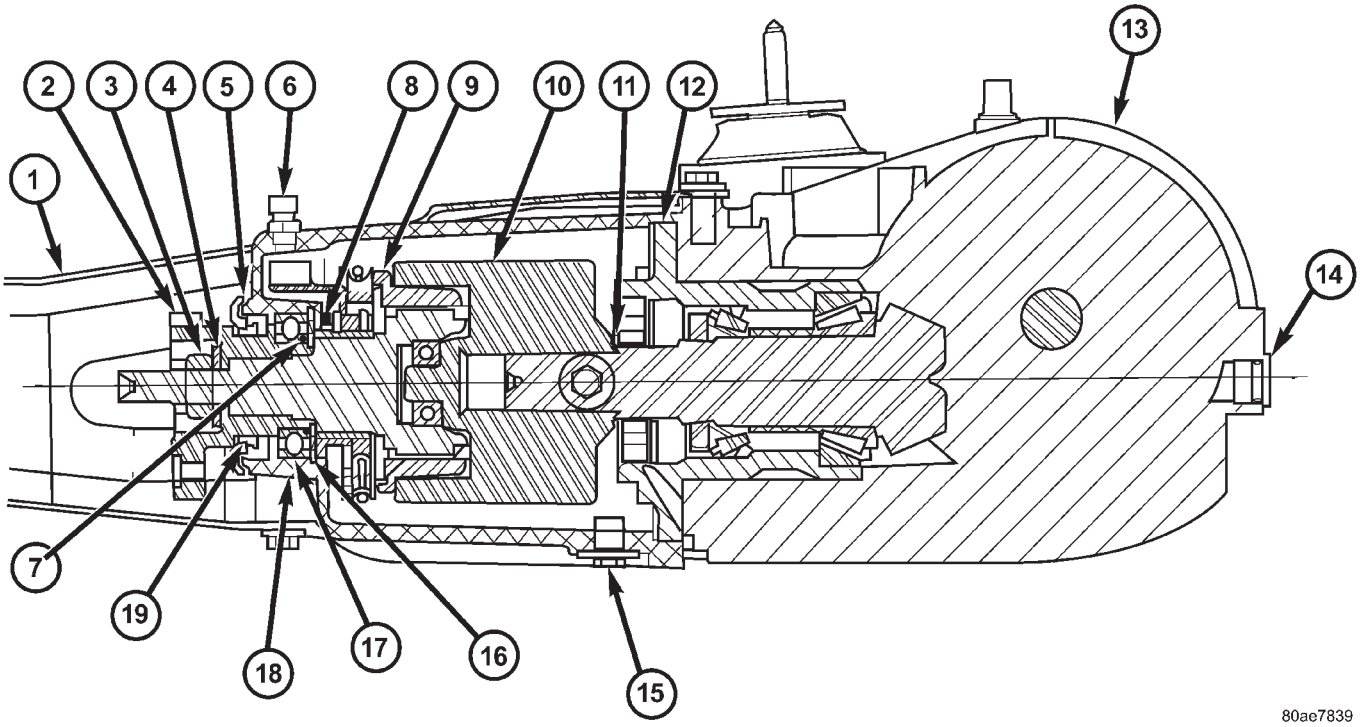

Fig. 1 AWD Driveline Module Assembly

1 - TORQUE ARM	8 - WASHER	15 - PLUG-OVERRUNNING CLUTCH HOUSING DRAIN
2 - INPUT FLANGE	9 - BI-DIRECTIONAL OVERRUNNING CLUTCH (BOC)	16 - SNAP RING
3 - FLANGE NUT	10 - VISCOUS COUPLER	17 - BEARING
4 - WASHER	11 - SHIM (SELECT)	18 - OVERRUNING CLUTCH HOUSING
5 - SHIELD	12 - O-RING	19 - SEAL-INPUT FLANGE
6 - VENT	13 - DIFFERENTIAL ASSEMBLY	
7 - O-RING	14 - PLUG-DIFFERENTIAL FILL	

adjustment, maintenance or fluid checks required during the life of the unit.

The overrunning clutch allows the rear wheels to overrun the front wheels during a rapid front wheel lock braking maneuver. The overrunning action prevents any feed-back of front wheel braking torque to the rear wheels. It also allows the braking system to control the braking behavior as a two wheel drive (2WD) vehicle.

The overrunning clutch housing has a separate oil sump and is filled independently from the differential. The fill plug is located on the side of the overrunning clutch case. When filling the overrunning clutch with lubricant use Mopar® ATF+4 (Automatic Transmission Fluid—Type 9602) or equivalent.

The differential assembly contains a conventional open differential with hypoid ring gear and pinion gear set. The hypoid gears are lubricated by SAE 80W-90 gear lubricant.

DIAGNOSIS AND TESTING

DIAGNOSIS AND TESTING - REAR DRIVELINE MODULE NOISE

Different sources can be the cause of noise that the rear driveline module assembly is suspected of making. Refer to the following causes for noise diagnosis.

DRIVELINE MODULE ASSEMBLY NOISE

The most important part of driveline module service is properly identifying the cause of failures and noise complaints. The cause of most driveline module failures is relatively easy to identify. The cause of driveline module noise is more difficult to identify.

If vehicle noise becomes intolerable, an effort should be made to isolate the noise. Many noises that are reported as coming from the driveline module may actually originate at other sources. For example:

- Tires
- Road surfaces

REAR DRIVELINE MODULE (Continued)

- Wheel bearings
- Engine
- Transmission
- Exhaust
- Propeller shaft (vibration)
- Vehicle body (drumming)

Driveline module noises are normally divided into two categories: gear noise or bearing noise. A thorough and careful inspection should be completed to determine the actual source of the noise before replacing the driveline module.

The rubber mounting bushings help to dampen-out driveline module noise when properly installed. Inspect to confirm that no metal contact exists between the driveline module case and the body. The complete isolation of noise to one area requires expertise and experience. Identifying certain types of vehicle noise baffles even the most capable technicians. Often such practices as:

- Increase tire inflation pressure to eliminate tire noise.
- Listen for noise at varying speeds with different driveline load conditions
- Swerving the vehicle from left to right to detect wheel bearing noise.

All driveline module assemblies produce noise to a certain extent. Slight carrier noise that is noticeable only at certain speeds or isolated situations should be considered normal. Carrier noise tends to peak at a variety of vehicle speeds. Noise is **NOT ALWAYS** an indication of a problem within the carrier.

TIRE NOISE

Tire noise is often mistaken for driveline module noise. Tires that are unbalanced, worn unevenly or are worn in a saw-tooth manner are usually noisy. They often produce a noise that appears to originate in the driveline module.

Tire noise changes with different road surfaces, but driveline module noise does not. Inflate all four tires with approximately 20 psi (138 kPa) more than the recommended inflation pressure (for test purposes only). This will alter noise caused by tires, but will not affect noise caused by the differential. Rear axle noise usually ceases when coasting at speeds less than 30 mph (48 km/h); however, tire noise continues, but at a lower frequency, as the speed is reduced.

After test has been completed lower tire pressure back to recommended pressure.

GEAR NOISE (DRIVE PINION AND RING GEAR)

Abnormal gear noise is rare and is usually caused by scoring on the ring gear and drive pinion. Scoring is the result of insufficient or incorrect lubricant in the carrier housing.

Abnormal gear noise can be easily recognized. It produces a cycling tone that will be very pronounced within a given speed range. The noise can occur during one or more of the following drive conditions:

- Drive
- Road load
- Float
- Coast

Abnormal gear noise usually tends to peak within a narrow vehicle speed range or ranges. It is usually more pronounced between 30 to 40 mph (48 to 64 km/h) and 50 to 60 mph (80 to 96 km/h). When objectionable gear noise occurs, note the driving conditions and the speed range.

BEARING NOISE (DRIVE PINION AND DIFFERENTIAL)

Defective bearings produce a rough growl that is constant in pitch and varies with the speed of vehicle. Being aware of this will enable a technician to separate bearing noise from gear noise.

Drive pinion bearing noise that results from defective or damaged bearings can usually be identified by its constant, rough sound. Drive pinion front bearing is usually more pronounced during a coast condition. Drive pinion rear bearing noise is more pronounced during a drive condition. The drive pinion bearings are rotating at a higher rate of speed than either the differential side bearings or the axle shaft bearing.

Differential side bearing noise will usually produce a constant, rough sound. The sound is much lower in frequency than the noise caused by drive pinion bearings.

Bearing noise can best be detected by road testing the vehicle on a smooth road (black top). However, it is easy to mistake tire noise for bearing noise. If a doubt exists, the tire treads should be examined for irregularities that often causes a noise that resembles bearing noise.

ENGINE AND TRANSMISSION NOISE

Sometimes noise that appears to be in the driveline module assembly is actually caused by the engine or the transmission. To identify the true source of the noise, note the approximate vehicle speed and/or RPM when the noise is most noticeable. Stop the vehicle next to a flat brick or cement wall (this will help reflect the sound). Place the transaxle in **NEUTRAL**. Accelerate the engine slowly up through the engine speed that matches the vehicle speed noted when the noise occurred. If the same noise is produced, it usually indicates that the noise is being caused by the engine or transaxle.

REAR DRIVELINE MODULE (Continued)

DIAGNOSIS AND TESTING - REAR DRIVELINE MODULE OPERATION

Driveline module operation requires relatively straight-forward diagnosis. Refer to the following chart:

DRIVELINE MODULE DIAGNOSIS CHART

CONDITION	POSSIBLE CAUSES	CORRECTION
Rear wheels not overrunning	1) Bi-directional overrunning clutch failure	1) Replace overrunning clutch components as required
No AWD in forward or reverse directions, propeller shaft turning	1) Bi-directional overrunning clutch failure	1) Replace overrunning clutch components as required
	2) Viscous coupling failure	2) Replace viscous coupling
	3) Rear differential failure	3) Replace the rear differential assembly
No AWD in forward or reverse directions, propeller shaft not turning	1) Power transfer unit failure.	1) Replace power transfer unit components as necessary
Vibration at all speeds, continuous torque transfer	1) Mis-matched tires, worn tires on front axle.	1) Replace worn or incorrect (mis-matched) tires with same make and size

REMOVAL

(1) Raise vehicle on hoist.

(2) Drain fluid from overrunning clutch housing and/or differential assembly if necessary.

(3) Remove propeller shaft. (Refer to 3 - DIFFERENTIAL & DRIVELINE/PROPELLER SHAFT - REMOVAL)

(4) Disconnect left and right rear halfshafts from output flanges (Fig. 2).

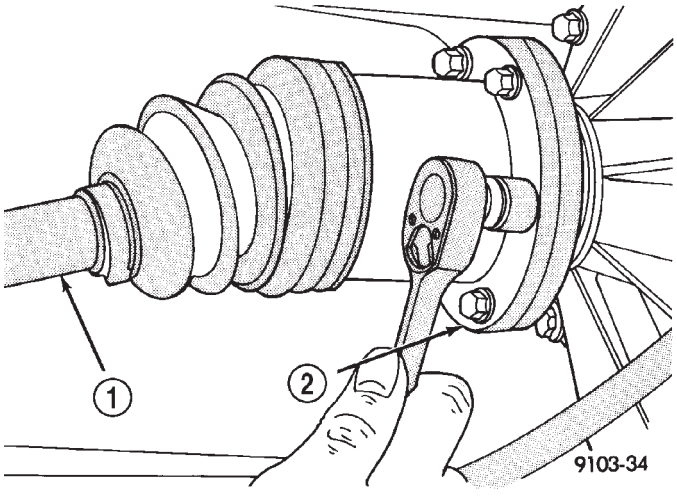

Fig. 2 Half Shaft Mounting Bolts

1 - SHAFT
2 - FLANGE

(5) Remove torque arm mount to body bolts.

(6) Position transmission jack to driveline module assembly and secure assembly to jack.

(7) Remove two driveline module-to-body bolts (Fig. 3).

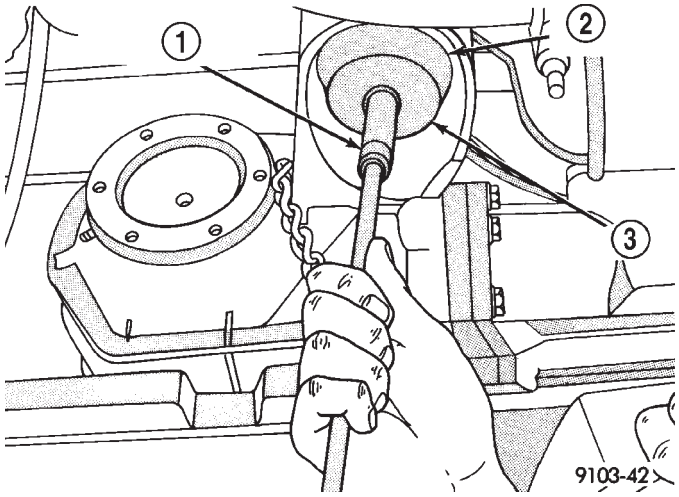

Fig. 3 Rear Drive Line Module Assembly Mounting Bolts

1 - DRIVELINE MODULE RETAINING BOLT (2)
2 - RUBBER ISOLATOR
3 - WASHER

(8) Lower driveline module from vehicle and remove from jack.

REAR DRIVELINE MODULE (Continued)

DISASSEMBLY

WARNING: Differential is only to be serviced as an assembly, and no disassembly is required.

(1) Remove six torque arm-to-differential case bolts and remove torque arm assembly (Fig. 4).

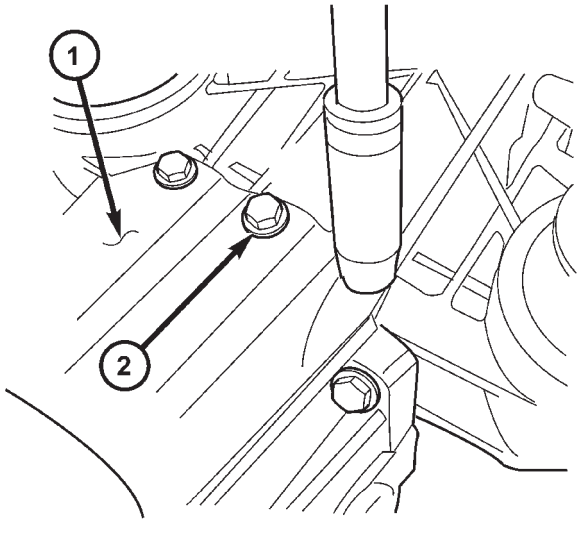

Fig. 4 Torque Arm Fasteners

1 - TORQUE ARM ASSEMBLY
2 - BOLT (SIX)

(2) Remove input flange nut and washer using Tool 6958 and a breaker bar (Fig. 5).

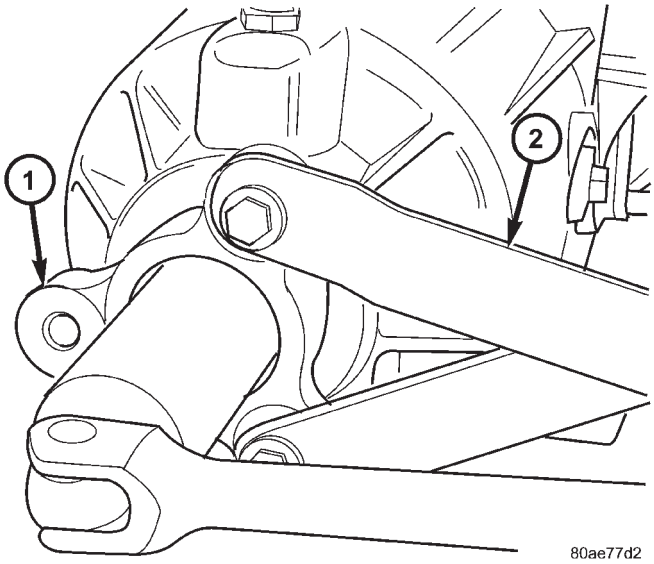

Fig. 5 Input Flange Nut

1 - INPUT FLANGE
2 - TOOL 6958

(3) Remove input flange (Fig. 6).

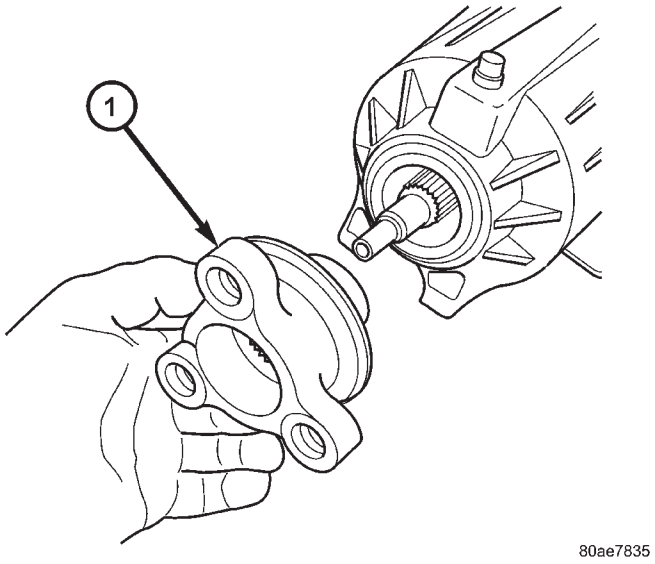

Fig. 6 Input Flange

1 - INPUT FLANGE/SHIELD

(4) Remove input flange seal from overrunning clutch housing using suitable screwdriver (Fig. 7).

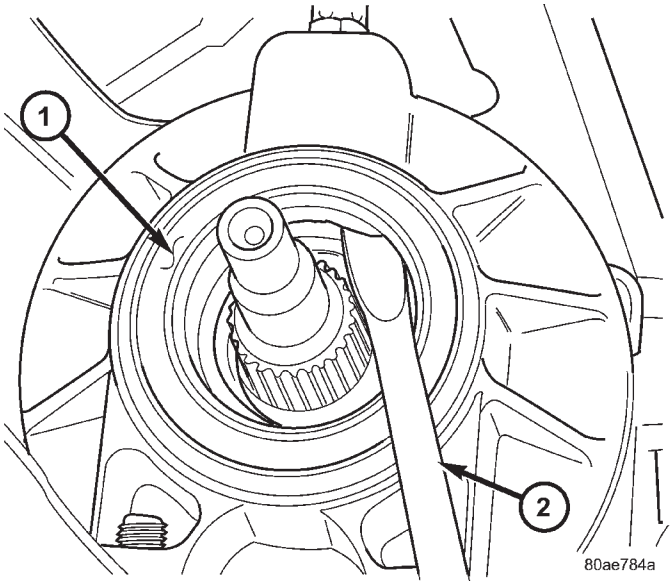

Fig. 7 Input Flange Seal Removal

1 - INPUT FLANGE SEAL
2 - SCREWDRIVER

REAR DRIVELINE MODULE (Continued)

(5) Remove four overrunning clutch housing-to-differential assembly bolts (Fig. 8) and remove housing.

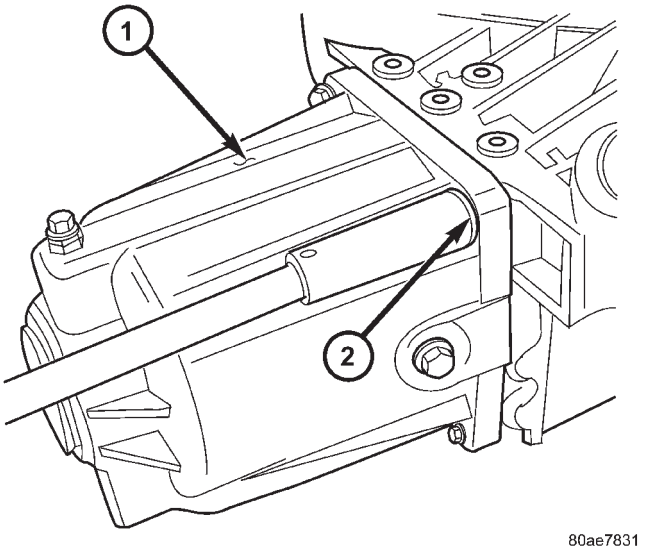

Fig. 8 Overrunning Clutch Housing Bolts

1 - OVERRUNNING CLUTCH HOUSING
2 - BOLT (FOUR)

(6) Remove front bearing snap ring (Fig. 14).
(7) Remove front bearing (Fig. 14).
(8) Remove o-ring and washer from overrunning clutch assembly (Fig. 14).
(9) Remove overrunning clutch assembly from viscous coupler (Fig. 9).

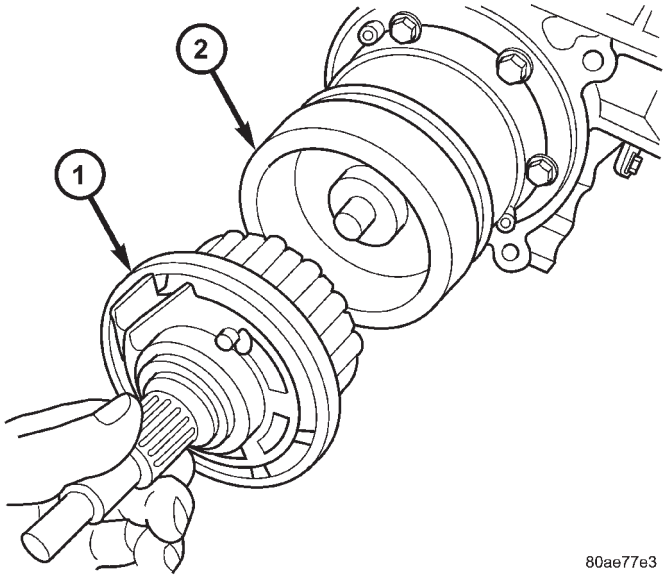

Fig. 9 Overrunning Clutch

1 - OVERRUNNING CLUTCH
2 - VISCOUS COUPLER

(10) Remove viscous coupler from differential pinion shaft (Fig. 10).

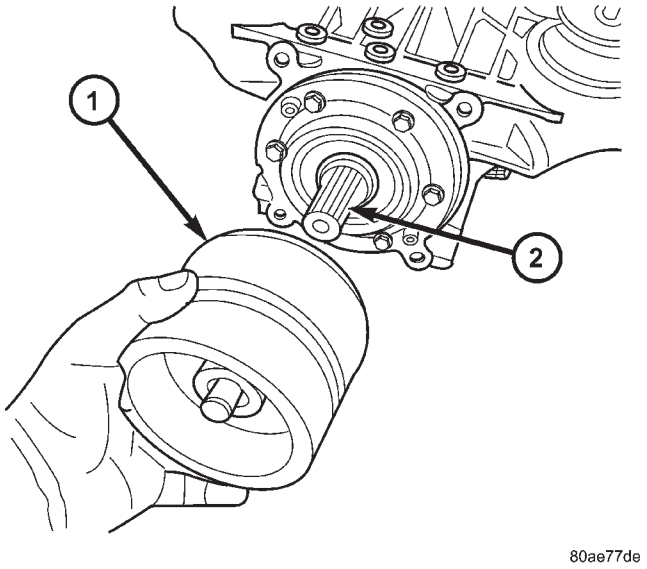

Fig. 10 Viscous Coupler

1 - VISCOUS COUPLER
2 - DIFFERENTIAL PINION

(11) Remove shim (select) from differential pinion gear (Fig. 11).

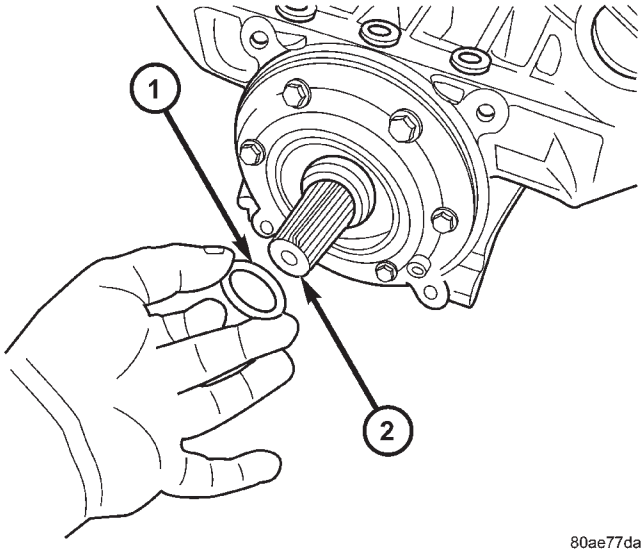

Fig. 11 Shim (Select)

1 - SHIM (SELECT)
2 - DIFFERENTIAL PINION

REAR DRIVELINE MODULE (Continued)

(12) Remove overrunning clutch housing large o-ring from differential assembly (Fig. 14).

(13) Remove output flanges using suitable screwdrivers and wood blocks to protect casting (Fig. 12).

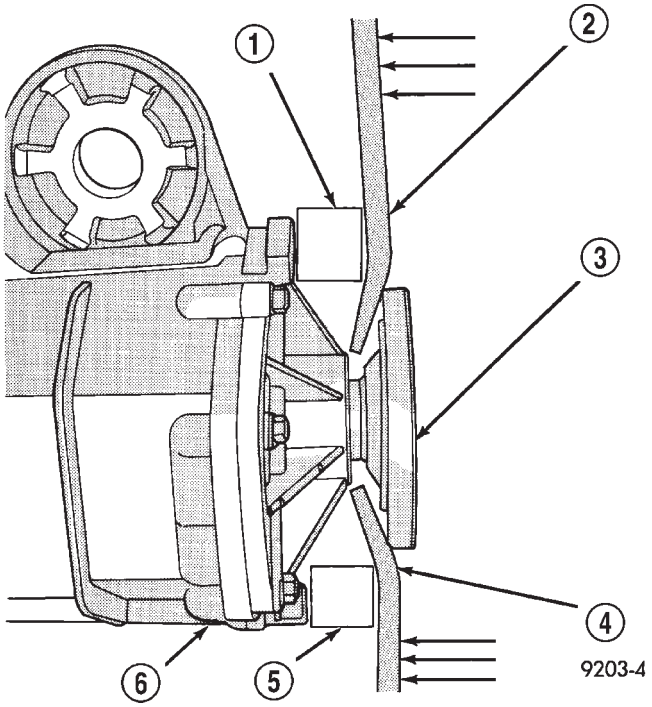

Fig. 12 Output Flange Removal

1 - WOOD BLOCK
2 - PRYBAR
3 - OUTPUT SHAFT
4 - PRYBAR
5 - WOOD BLOCK
6 - DIFFERENTIAL CASE

(14) Remove output flange seals (Fig. 13).

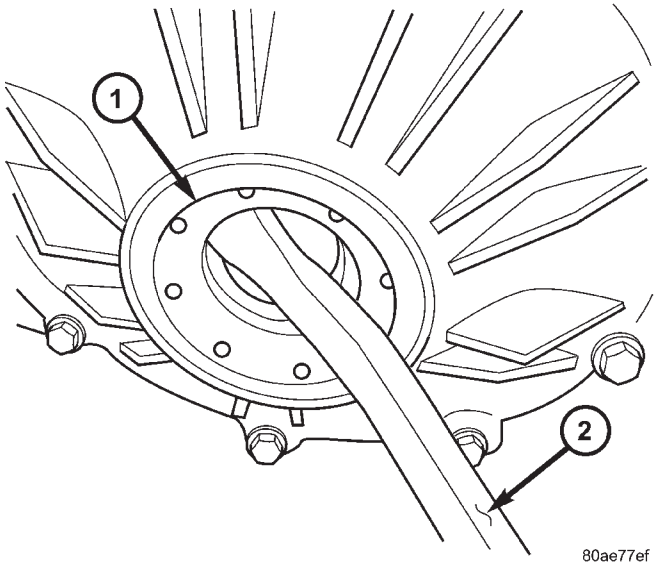

Fig. 13 Output Flange Seal Removal

1 - OUTPUT FLANGE SEAL
2 - SCREWDRIVER

ASSEMBLY

(1) Install output flange seals using tools C4171 and 8493 (Fig. 15).

(2) Install large overrunning clutch housing o-ring to differential assembly (Fig. 14).

(3) Install shim to differential pinion shaft (Fig. 16).

REAR DRIVELINE MODULE (Continued)

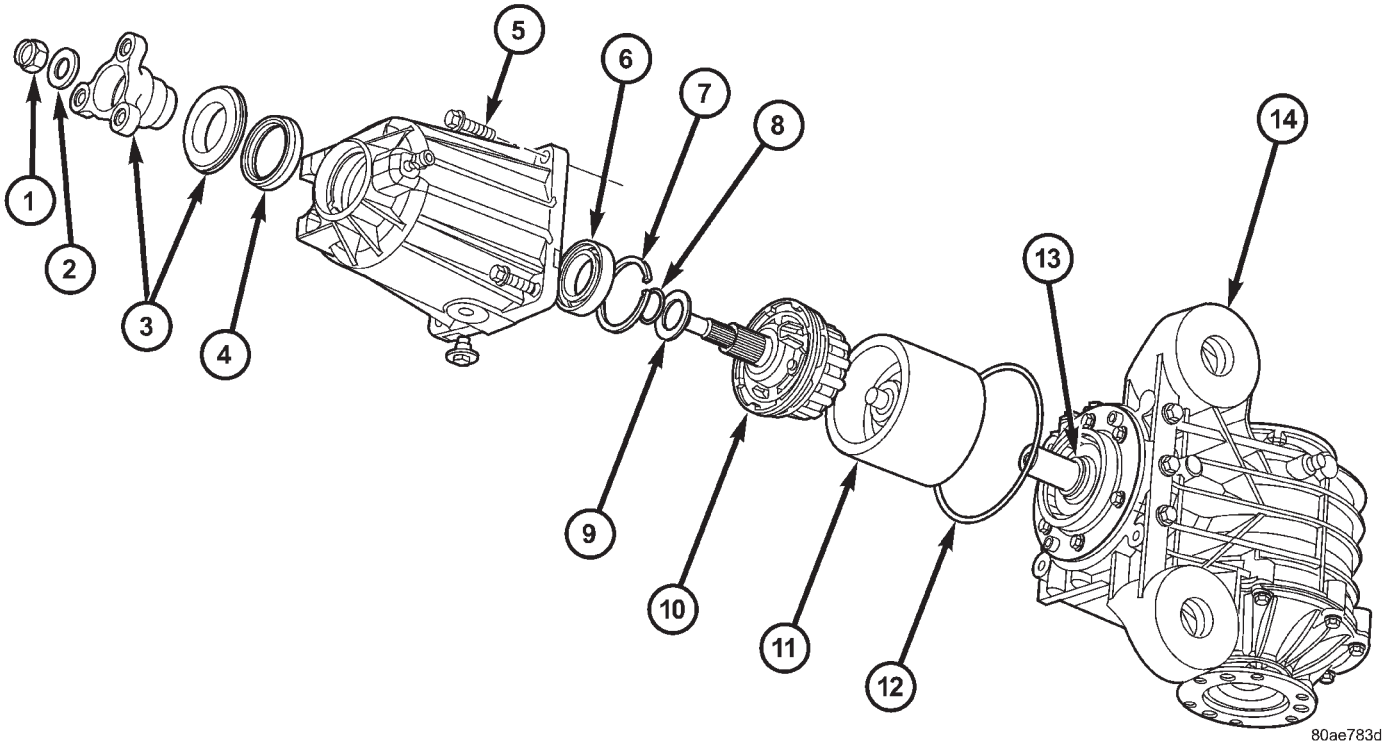

Fig. 14 Drive Line Module

1 - NUT, INPUT FLANGE
2 - WASHER, INPUT FLANGE NUT
3 - INPUT FLANGE/SHIELD
4 - SEAL, INPUT FLANGE
5 - OVERRUNNING CLUTCH HOUSING BOLT
6 - BEARING, FRONT
7 - SNAP RING, BEARING RETAINER
8 - O-RING
9 - WASHER
10 - BI-DIRECTIONAL OVERRUNNING CLUTCH
11 - VISCOUS COUPLER
12 - O-RING, OVERRUNNING CLUTCH HOUSING
13 - SHIM (SELECT)
14 - DIFFERENTIAL ASSEMBLY

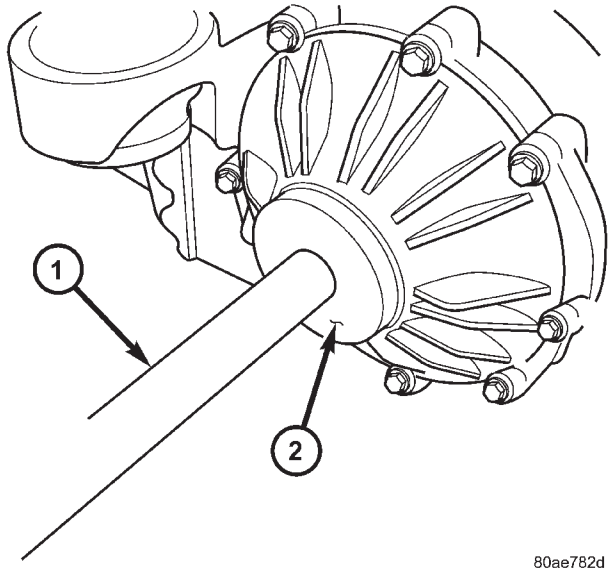

Fig. 15 Output Flange Seal Installation

1 - DRIVER HANDLE C4171
2 - INSTALLER 8493

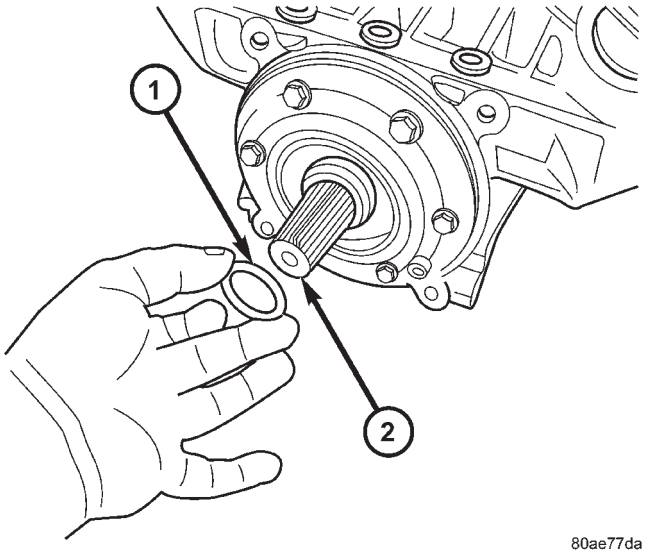

Fig. 16 Shim (Select)

1 - SHIM (SELECT)
2 - DIFFERENTIAL PINION

REAR DRIVELINE MODULE (Continued)

(4) Install viscous coupler to differential pinion shaft (Fig. 17).

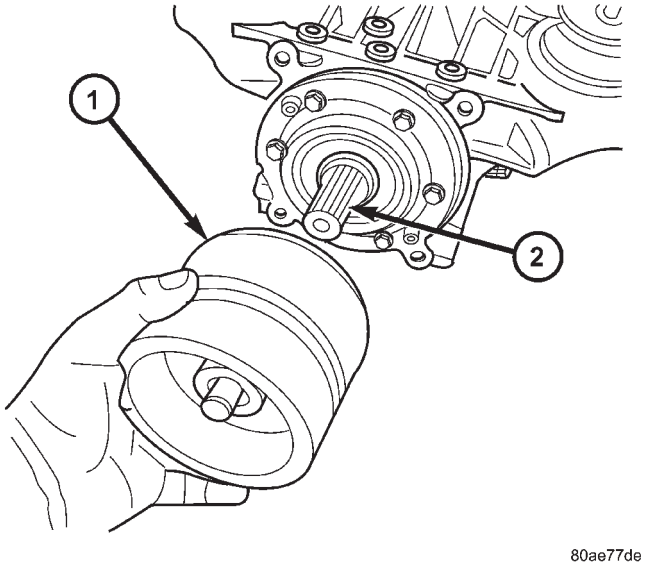

Fig. 17 Viscous Coupler

1 - VISCOUS COUPLER
2 - DIFFERENTIAL PINION

(5) Install overrunning clutch assembly to viscous coupler (Fig. 18).

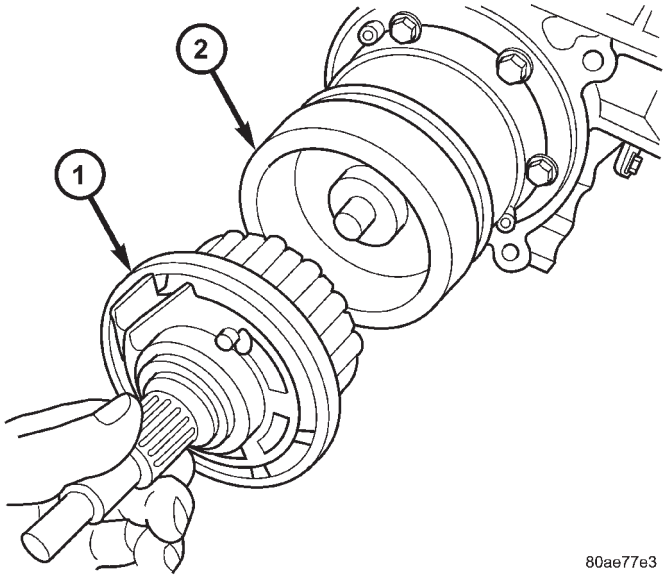

Fig. 18 Overrunning Clutch

1 - OVERRUNNING CLUTCH
2 - VISCOUS COUPLER

(6) Install washer to overrunning clutch (Fig. 14).
(7) Install o-ring to overrunning clutch (Fig. 14).
(8) Align overrunning clutch ground tab to 12 o'clock position (Fig. 19).

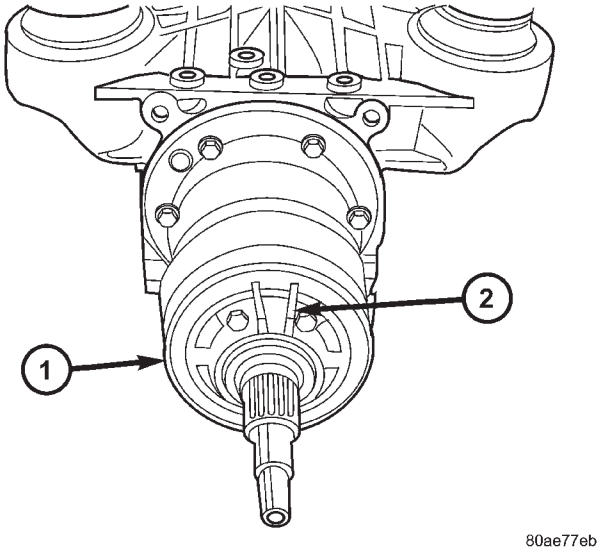

Fig. 19 Grounding Tab at 12 O'clock

1 - OVERRUNNING CLUTCH
2 - GROUND TAB

(9) Install overrunning clutch housing into position, making sure ground tab engages with notch in housing (Fig. 20).

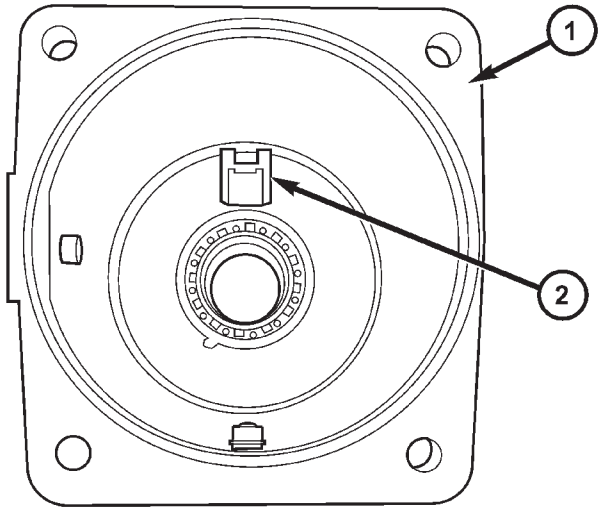

Fig. 20 Overrunning Clutch Housing

1 - OVERRUNNING CLUTCH HOUSING
2 - NOTCH

REAR DRIVELINE MODULE (Continued)

(10) Install and torque overrunning clutch housing-to-differential assembly bolts (Fig. 21) to 60 N·m (44 ft. lbs.).

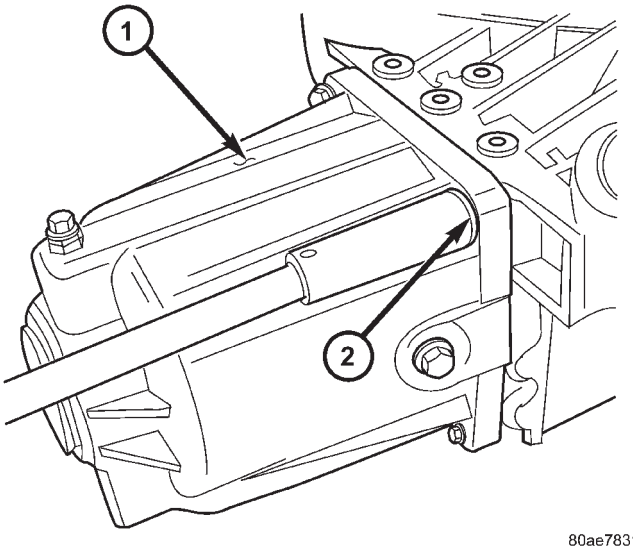

Fig. 21 Overrunning Clutch Housing Bolts

1 - OVERRUNNING CLUTCH HOUSING
2 - BOLT (FOUR)

(11) Install input flange seal using tool 8802 (Fig. 22).

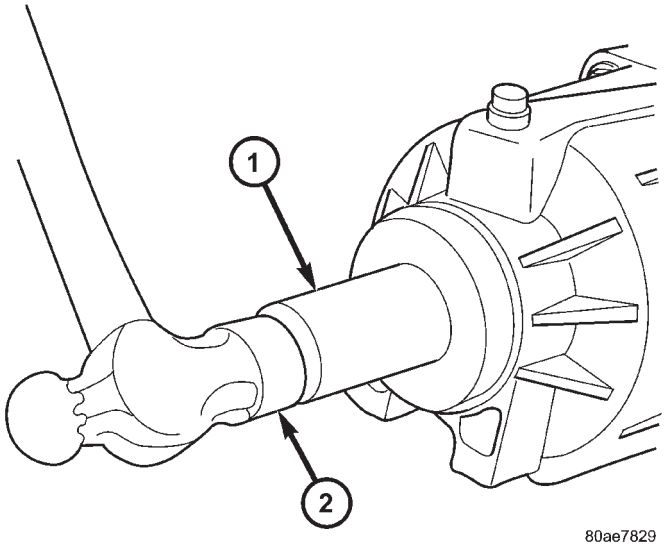

Fig. 22 Input Flange Seal Installation

1 - TOOL 8802
2 - HAMMER

(12) Install flange/shield assembly (Fig. 23).

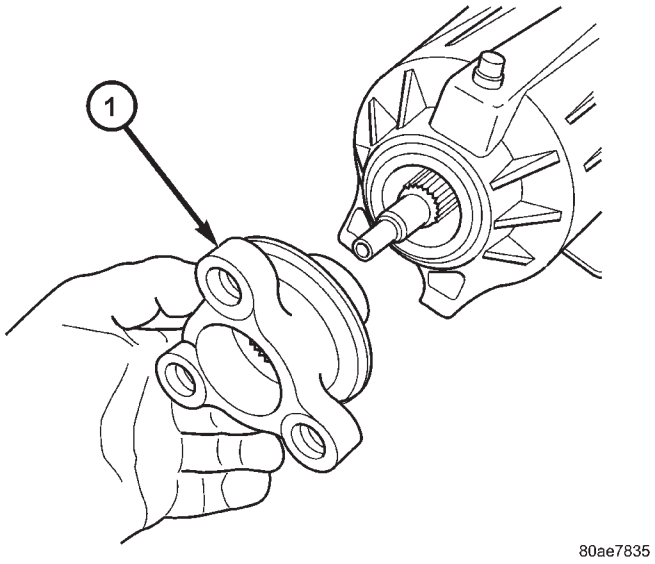

Fig. 23 Input Flange/Shield

1 - INPUT FLANGE/SHIELD

(13) Install input flange washer and nut. Using tool 6958 (Fig. 24), torque nut to 135 N·m (100 ft. lbs.).

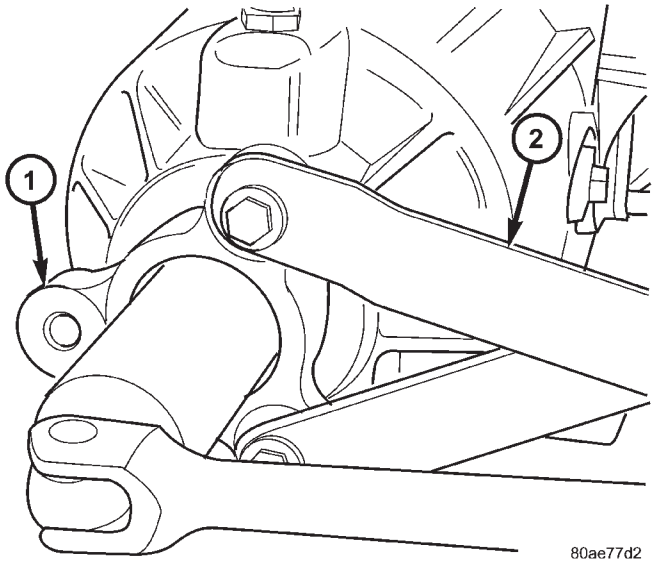

Fig. 24 Input Flange Nut

1 - INPUT FLANGE
2 - TOOL 6958

REAR DRIVELINE MODULE (Continued)

(14) Install torque arm assembly into position. Install and torque torque arm-to-differential assembly bolts (Fig. 25) to 60 N·m (44 ft. lbs.).

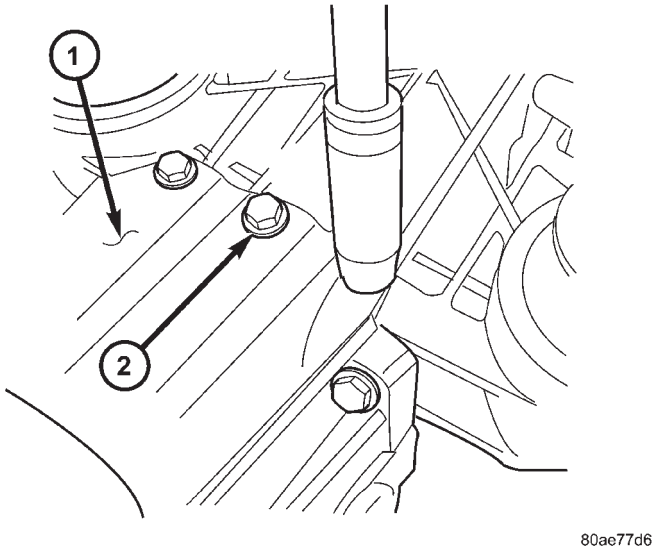

Fig. 25 Torque Arm Fasteners

1 - TORQUE ARM ASSEMBLY
2 - BOLT (SIX)

INSTALLATION

(1) Install rear driveline module assembly to transmission jack and secure.

(2) Raise rear driveline module into position and install and torque mounting bolts (Fig. 26) to 54 N·m (40 ft. lbs.).

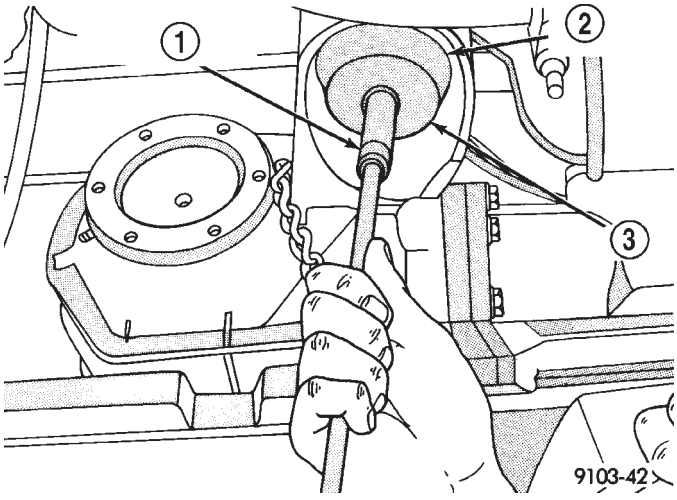

Fig. 26 Rear Drive Line Module Assembly Rear Mounting Bolts

1 - DRIVELINE MODULE RETAINING BOLT (2)
2 - RUBBER ISOLATOR
3 - WASHER

(3) Remove transmission jack.

(4) Install and torque torque arm mount-to-body bolts to 54 N·m (40 ft. lbs.).

(5) Install halfshafts to differential output flanges and torque bolts (Fig. 27) to 61 N·m (45 ft. lbs.).

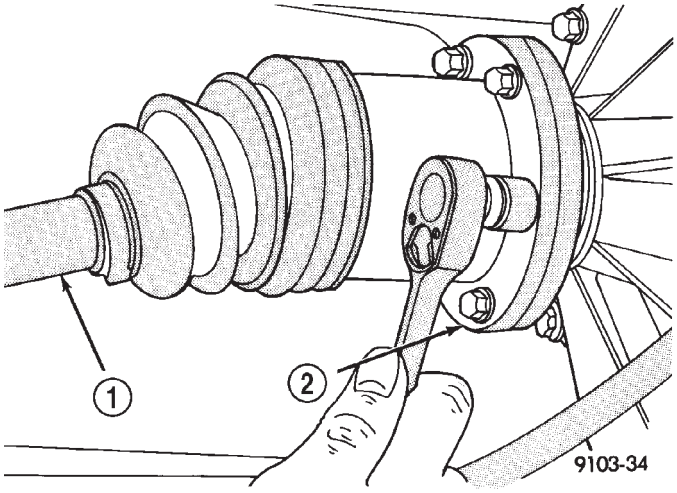

Fig. 27 Half Shaft Mounting Bolts

1 - SHAFT
2 - FLANGE

(6) Install propeller shaft. (Refer to 3 - DIFFERENTIAL & DRIVELINE/PROPELLER SHAFT - INSTALLATION)

(7) Lower vehicle.

REAR DRIVELINE MODULE (Continued)

SPECIFICATIONS - REAR DRIVELINE MODULE

TORQUE SPECIFICATIONS

DESCRIPTION	N·m	Ft. Lbs.	In. Lbs.
Bolt, Driveline Module-to-Body	54	40	—
Bolt, Halfshaft-to-Ouput Flange	61	45	—
Bolt, Overrunning Clutch Housing-to-Differential	60	44	—
Bolt, Torque Arm-to-Differential Assembly	60	44	—
Bolt, Torque Arm Mount-to-Body	54	40	—
Nut, Input Flange	135	100	—
Plug, Differential Drain/Fill	35	26	—
Plug, Overrunning Clutch Housing Drain/Fill	30	22	—
Vent, Differential/Overrunning Clutch Housing	12	—	110

SPECIAL TOOLS

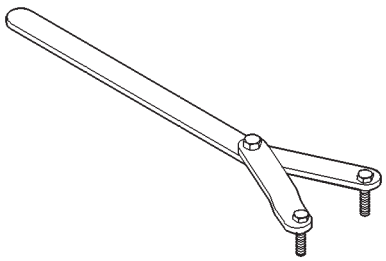

Tool 6958

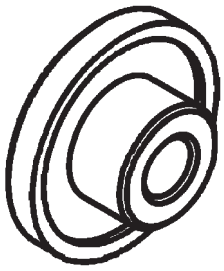

Tool 8493

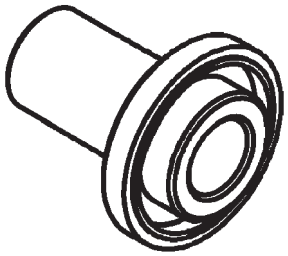

Tool 8802

BI-DIRECTIONAL OVERRUNNING CLUTCH

DESCRIPTION

The bi-directional overrunning clutch (BOC) (Fig. 28) works as a mechanical disconnect between the front and rear axles, preventing torque from being transferred from the rear axle to the front. The BOC is a simply an overrunning clutch which works in both clockwise and counter-clockwise rotations. This means that when the output (the rear axle) is rotating faster in one direction than the input (front axle), there is no torque transmission. But when the input speed is equal to the output speed, the unit becomes locked. The BOC provides significant benefits regarding braking stability, handling, and driveline durability. Disconnecting the front and the rear driveline during braking helps to maintain the braking stability of an AWD vehicle. In an ABS/braking event, the locking of the rear wheels must be avoided for stability reasons. Therefore brake systems are designed to lock the front wheels first. Any torque transfer from the rear axle to the front axle disturbs the ABS/braking system and causes potential instabilities on a slippery surface. The BOC de-couples the rear driveline as soon the rear wheels begin to spin faster than the front wheels (front wheels locked) in order to provide increased braking stability. Furthermore the BOC also reduces the likelihood of throttle off over-steer during cornering. In a throttle off maneuver, the BOC once again de-couples the rear driveline forcing all the engine brake torque to the front wheels. This eliminates the chance of lateral slip on the rear axle and increases it on the front. The vehicle will therefore tend to understeer, a situation which is considered easier to manage in most circumstances. During this maneuver, and during the ABS braking event, the BOC does not transmit torque through to the rear wheels. The rear driveline module, with the BOC, will perform the same as a front wheel drive vehicle during these events. The gear ratio offset between the front and rear differentials force the BOC into the overrunning mode most of the time. This allows BOC to significantly reduce the rolling resistance of the vehicle, which improves fuel consumption, allows the downsizing of the driveline components, and prevents the PTU and propshaft joints from overheating.

BI-DIRECTIONAL OVERRUNNING CLUTCH (Continued)

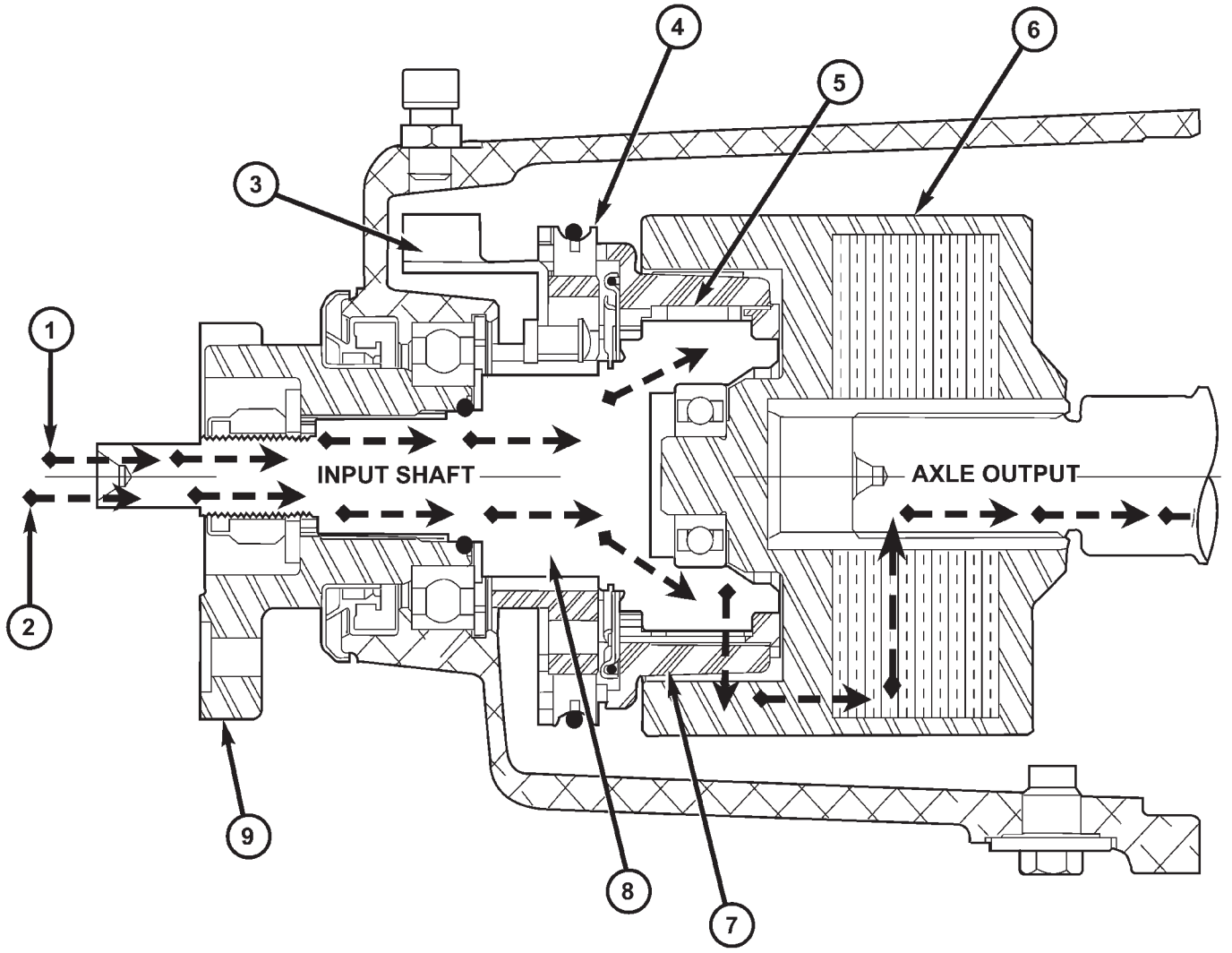

Fig. 28 Bi-directional Overrunning Clutch and Viscous Coupler

1 - POWERFLOW - BOC OVERUNNING
2 - POWERFLOW - BOC LOCKED
3 - BOC GROUND TAB
4 - FRICTION BRAKE SHOES
5 - BOC ROLLERS
6 - VISCOUS COUPLER
7 - BOC ROLLER CAGE
8 - BOC INPUT SHAFT
9 - INPUT FLANGE

BI-DIRECTIONAL OVERRUNNING CLUTCH (Continued)

OPERATION

In order to achieve all-wheel drive operation in reverse, the overrunning clutch locking functional direction must be reversible. The bi-directional overrunning clutch (BOC) changes the operational mode direction depending on the propeller shaft direction. The propeller shaft rotates in the clockwise (when viewed from the front) direction when the vehicle is moving forward, which indexes the BOC to the forward overrunning position. When the vehicle is in reverse, the propeller shaft will rotate counter-clockwise and index the BOC to the reverse overrunning position.

The BOC acts as a mechanical stator. It is active (transmitting torque), or it is not active and in overrunning mode (not transmitting torque). This “all or nothing” approach to torque transfer would cause a sudden application of all available power to the rear wheels, which is not desirable. Therefore it is run in series with a viscous coupler to smooth, dampen, and limit the transmission of torque to the rear axle and to prevent a step style torque input to the rear axle.

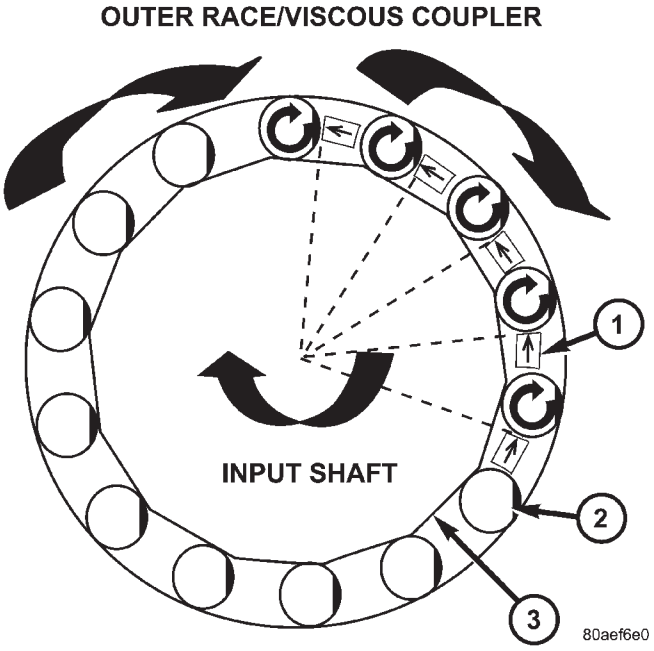

Fig. 29 BOC Operation at Low Speeds With No Front Wheel Slip

1 - CAGE
2 - ROLLER
3 - INPUT SHAFT

STEADY STATE, LOW TO MODERATE SPEED, NO FRONT WHEEL SLIP, FORWARD DIRECTION

During normal driving conditions, (no wheel slip), the inner shaft (front axle) and outer race (viscous coupler) are running at different speeds due to the different gear ratios between the front and rear differentials. In this condition, the outer race is always spinning faster (overdriving between 5-32 rpm) than the inner shaft. When the BOC (Fig. 29) is running under these conditions, at low vehicle speeds the drag shoes and the cage keep the rollers up on the left side (forward side) of the inner shaft flats. This is what is known as “overrunning mode.” Notice that when the clutch is in overrunning mode, the rollers are spinning clockwise and with the outer race, thus no torque is being transferred.

NOTE: Low speed, forward and reverse operation is identical, just in opposite directions. (Fig. 29) shows forward direction in reverse the rollers are on the other side of the flats due to a reversal of the cage force.

TRANSIENT CONDITION (BOC LOCKED), FRONT WHEEL SLIP, FORWARD DIRECTION

When the front wheels lose traction and begin to slip, the propeller shaft and rear axle pinion speed difference decreases to zero. At this point the input shaft (cam) becomes the driving member of the BOC (Fig. 30), compressing the rollers against the outer race. This locks the input shaft with the outer race and transmits torque to the housing of the viscous coupler, that in turn transmits torque to the rear axle pinion. It should also be noted that when the device is locked, the inner shaft and the outer race are rotating at the same speed. The rollers are pinched at this point and will stay locked until a torque reversal (no front wheel slip) occurs. When locked, the viscous coupler slips during the torque transfer and the amount of torque transferred is dependent on the coupling characteristic and the amount of front wheel slip.

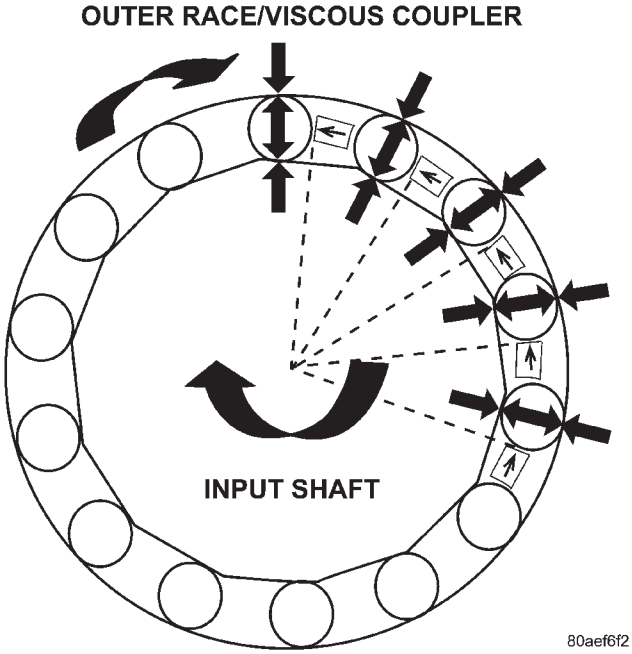

Fig. 30 BOC Operation with Front Wheel Slip

BI-DIRECTIONAL OVERRUNNING CLUTCH (Continued)

STEADY STATE, HIGH SPEED, NO WHEEL SLIP

The roller cage positions the rollers on the input shaft flats during low and high speed overrunning and during initial BOC lockup. The roller cage is rotating at input shaft (propeller shaft) speed at all times. At low speeds, the friction shoes (Fig. 31) are pressed against the friction ground via the garter spring (Fig. 32), creating a drag force on the roller cage. The drag force positions the cage, which in turn positions the rollers to one side of the flat. The direction of this drag force (position of the roller) is dependent on the input (propeller shaft) rotational direction. Since the rollers are always in contact with the outer race, due to centrifugal forces, the rollers want to follow the outer race due to drag. During overrunning operation, the outer race is rotating faster than the input; causing the rollers to want to traverse the flat from one side to the other. During low speeds, the brake shoes counteract this effect. To avoid excessive wear, the ground shoes are designed to lift off from the friction ground due to centrifugal forces at higher rotational speeds.

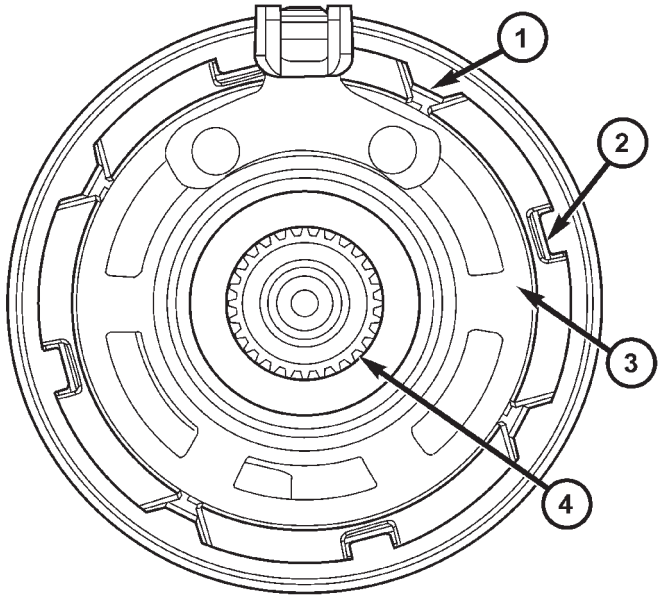

80aef6f6

Fig. 31 Front View of BOC

1 - GARTER SPRING
2 - FRICTION BRAKE SHOES
3 - FRICTION GROUND CONNECTED TO GROUND TAB
4 - INPUT SHAFT

To keep the rollers in the overrunning position and avoid undesired ″high speed lockup″, a high speed latch (Fig. 33) positions the cage before the ground shoes lift off. A further explanation of the high speed effects follows as well. Utilizing only the friction shoes approach means that at high speed the required ground shoe drag torque would cause excessive brake shoe wear or the roller will begin to migrate to the opposite side of the flat due to the drag force of the outer race. This would result in system lock-up. (Fig. 34) shows the BOC as it crosses the speed where the brake shoe force is overcome by the roller drag on the outer race. Notice that the roller is locking up on the opposite side of the flat and the cage supplies no force on the rollers.

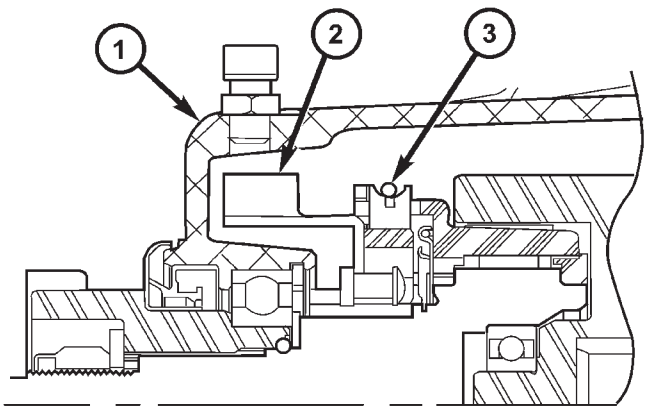

80aef704

Fig. 32 Location of the Grounding Element

1 - DIFFERENTIAL HOUSING
2 - GROUND TAB
3 - GARTER SPRING

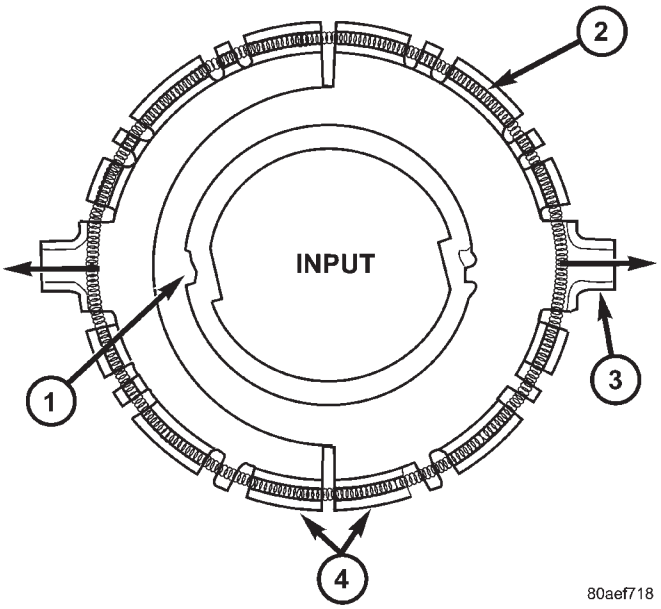

80aef718

Fig. 33 BOC High Speed Latch (Not Engaged)

1 - TOOTH (TWO PLACES)
2 - GARTER SPRING
3 - TABS AT BOTH ENDS FIT INTO SLOTS IN CAGE
4 - TWO PART DESIGN

BI-DIRECTIONAL OVERRUNNING CLUTCH (Continued)

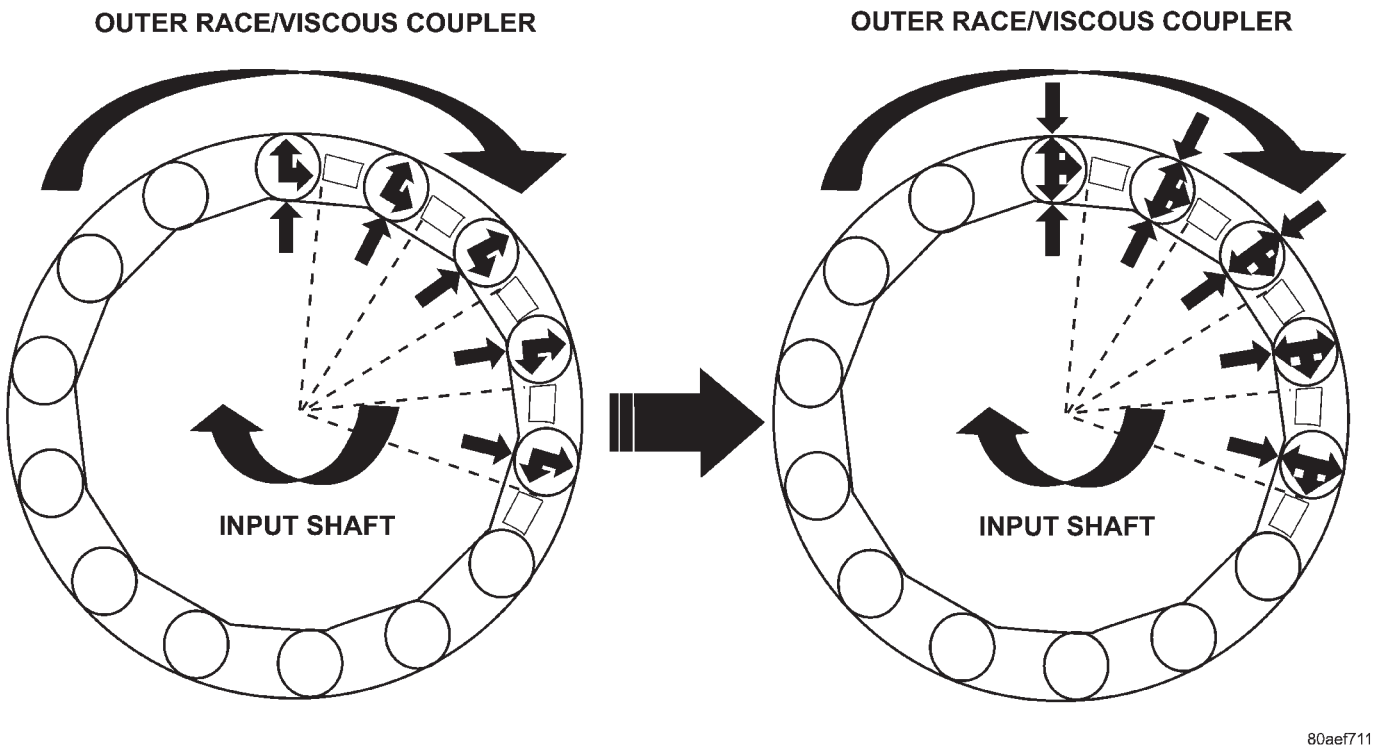

Fig. 34 BOC Operation During High Speed Lock-up Without High Speed Latch

This lock-up is not desired, and requires the use of another mechanism to prevent the lock-up. The device that prevents undesired high-speed lock-up is called a ″high speed latch″.

Similar to the friction shoes, the two-piece high-speed latch will separate from each other at high rotational speeds due to centrifugal effects. (Fig. 35) shows the high speed latch engaged. The gap ″x″ increases with speed, eventually locking into one of the slots in the BOC shaft. When the high-speed latch is activated (propeller shaft speed reaches X amount), the cage is partially fixed, and cannot lock on the wrong side of the flat as shown (Fig. 34). The high speed latch is a one way device and does not prevent high-speed lockup in the reverse direction. At high speeds, the BOC provides the same function as low speeds, transferring torque to the viscous coupler only when front wheel slip overcomes the axle ratio offset.

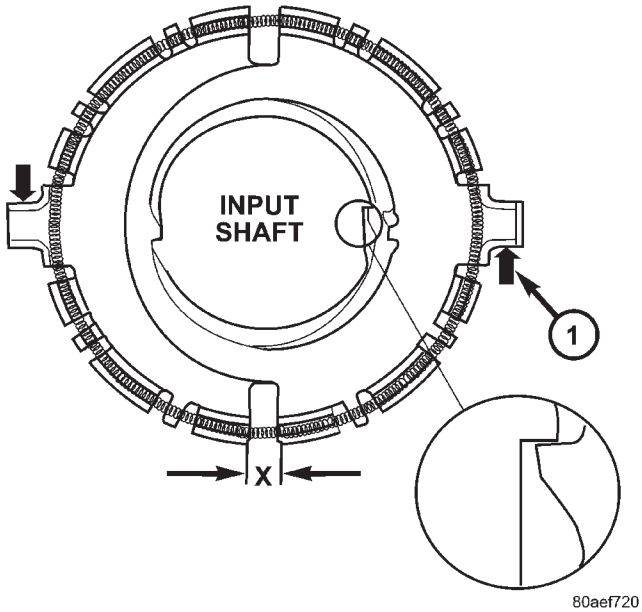

Fig. 35 High Speed Latch Engaged

1 - CAGE FORCE EXERTED BY ROLLERS AT HIGH SPEED

BI-DIRECTIONAL OVERRUNNING CLUTCH (Continued)

At high speed, the rollers are forced outward to the outer race because of centrifugal force. At high speeds, the friction shoes can no longer prevent lock-up. When the teeth on the high-speed latch engage into the input shaft, it keeps the rollers centered above the flats because the tabs on the latch are locked into the cage. (Fig. 36) shows the roller configuration with the High-Speed Latch engaged.

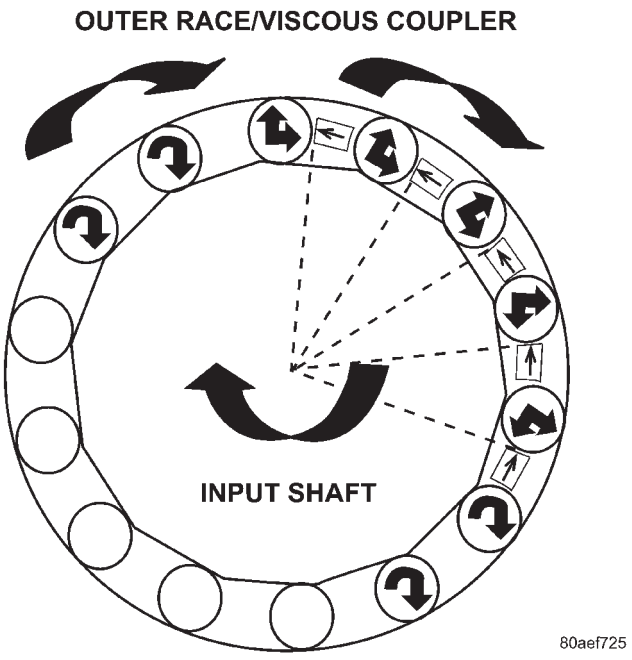

Fig. 36 BOC Operation at High Speed with High Speed Latch

On the BOC shaft, the high speed latch teeth lock up in the grooved areas, shown in (Fig. 37), when the turning speed reaches the critical value. (Fig. 37) also shows the outer race/viscous coupler. Notice the surface (outer race) the rollers mate against when transferring torque.

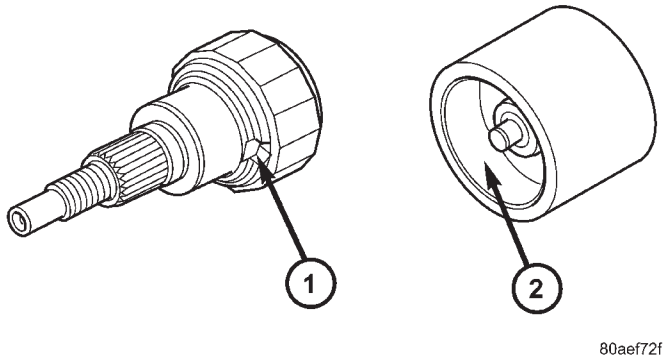

Fig. 37 BOC Input Shaft

1 - GROOVED AREA (2 LOCATIONS)
2 - ROLLER MATING SURFACE

DIFFERENTIAL ASSEMBLY

DESCRIPTION

The differential gear system divides the torque between the axle shafts. It allows the axle shafts to rotate at different speeds when turning corners.

Each differential side gear is splined to an axle shaft. The pinion gears are mounted on a pinion mate shaft and are free to rotate on the shaft. The pinion gear is fitted in a bore in the differential case and is positioned at a right angle to the axle shafts.

OPERATION

In operation, power flow occurs as follows:

- The pinion gear rotates the ring gear
- The ring gear (bolted to the differential case) rotates the case
- The differential pinion gears (mounted on the pinion mate shaft in the case) rotate the side gears
- The side gears (splined to the axle shafts) rotate the shafts

During straight-ahead driving, the differential pinion gears do not rotate on the pinion mate shaft. This occurs because input torque applied to the gears is divided and distributed equally between the two side gears. As a result, the pinion gears revolve with the pinion mate shaft but do not rotate around it (Fig. 38).

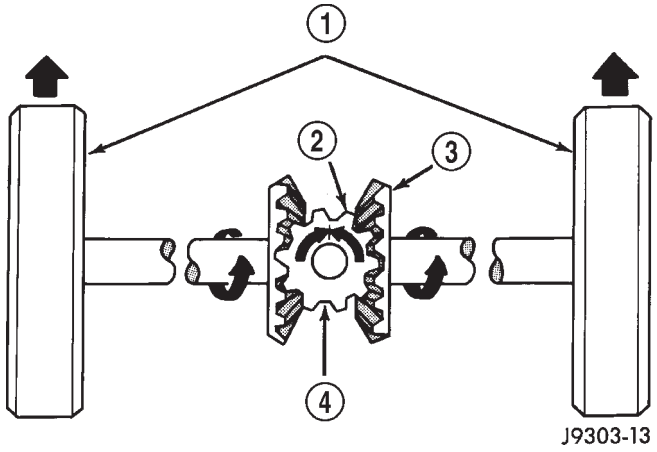

Fig. 38 Differential Operation—Straight Ahead Driving

1 - IN STRAIGHT AHEAD DRIVING EACH WHEEL ROTATES AT 100% OF CASE SPEED
2 - PINION GEAR
3 - SIDE GEAR
4 - PINION GEARS ROTATE WITH CASE

DIFFERENTIAL ASSEMBLY (Continued)

When turning corners, the outside wheel must travel a greater distance than the inside wheel to complete a turn. The difference must be compensated for to prevent the tires from scuffing and skidding through turns. To accomplish this, the differential allows the axle shafts to turn at unequal speeds (Fig. 39). In this instance, the input torque applied to the pinion gears is not divided equally. The pinion gears now rotate around the pinion mate shaft in opposite directions. This allows the side gear and axle shaft attached to the outside wheel to rotate at a faster speed.

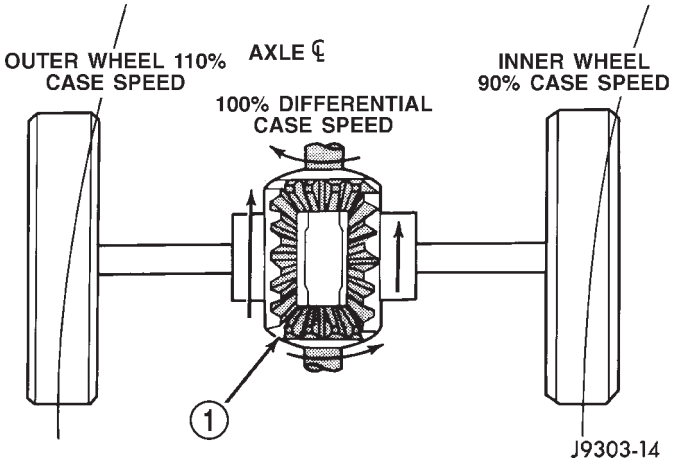

Fig. 39 Differential Operation—On Turns

1 - PINION GEARS ROTATE ON PINION SHAFT

FLUID - DIFFERENTIAL ASSEMBLY

STANDARD PROCEDURE - DIFFERENTIAL ASSEMBLY FLUID DRAIN AND FILL

The drain plug (Fig. 40) for the differential assembly is located in the bottom of the differential assembly case, toward the rear of the unit.

The fill plug (Fig. 41) for the differential assembly is located on the rear of the assembly case.

The correct fill level is to the bottom of the fill plug hole. Be sure the vehicle is on a level surface, or is hoisted in a level manner, in order to obtain the correct fill level.

(1) Raise the vehicle on a hoist.

(2) Position a drain pan under the differential drain plug (Fig. 40).

(3) Remove the drain plug and allow the fluid to drain into the pan.

(4) Install the drain plug and torque to 35 N·m (26 ft. lbs.).

(5) Re-position the drain pan under the differential fill plug.

(6) Remove the differential fill plug (Fig. 41).

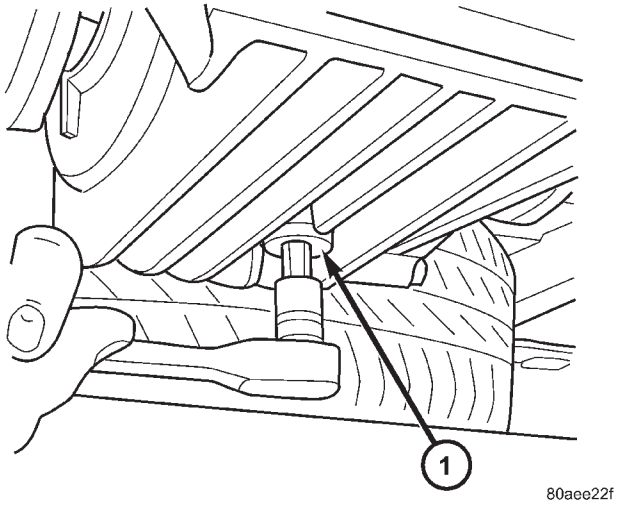

Fig. 40 Differential Drain Plug

1 - DIFFERENTIAL DRAIN PLUG

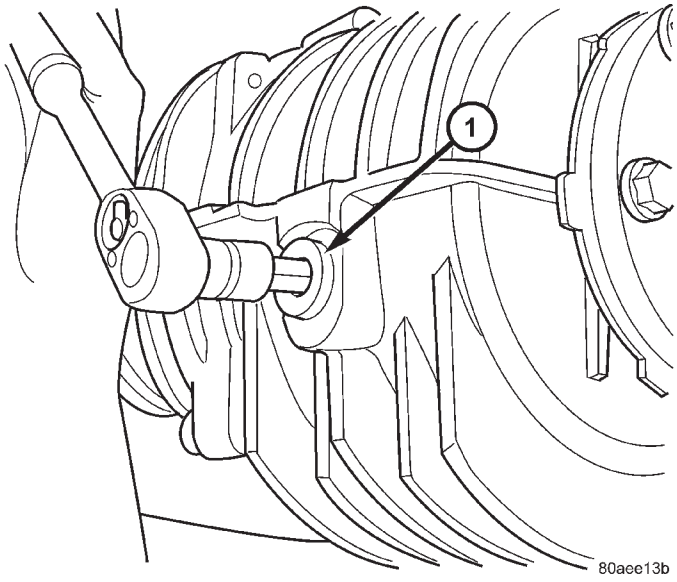

Fig. 41 Differential Fill Plug

1 - DIFFERENTIAL FILL PLUG

FLUID - DIFFERENTIAL ASSEMBLY (Continued)

(7) Using a suction gun (Fig. 42) or equivalent, fill the differential assembly with 0.7 L (1.48 pts.) of Mopar® Gear and Axle Lubricant (80W-90).

(8) Install the fill plug and torque to 35 N·m (26 ft. lbs.).

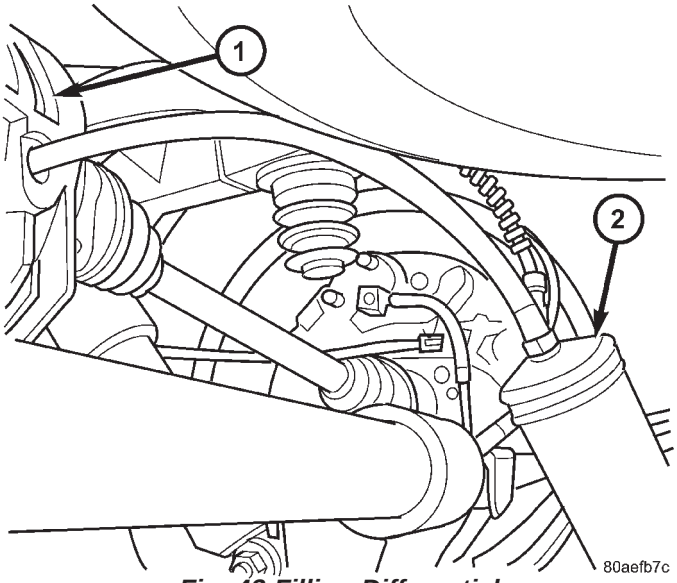

Fig. 42 Filling Differential

1 - DIFFERENTIAL ASSEMBLY
2 - SUCTION GUN

FLUID

STANDARD PROCEDURE - OVERRUNNING CLUTCH HOUSING FLUID CHANGE

(1) Raise vehicle on hoist.

(2) Position a drain pan under overrunning clutch housing drain plug.

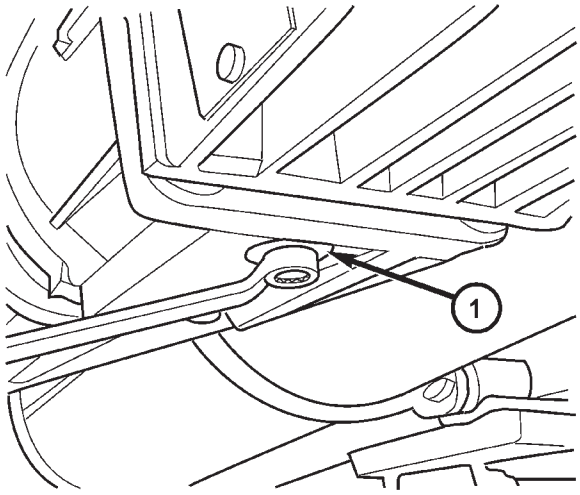

Fig. 43 Overrunning Clutch Case Drain Plug

1 - OVERRUNNING CLUTCH HOUSING DRAIN PLUG

(3) Remove overrunning clutch housing drain plug and drain fluid (Fig. 43).

(4) Install the drain plug and torque to 30 N·m (22 ft. lbs.).

(5) Re-position the drain pan under the overrunning clutch housing fill plug.

(6) Remove fill plug (Fig. 44).

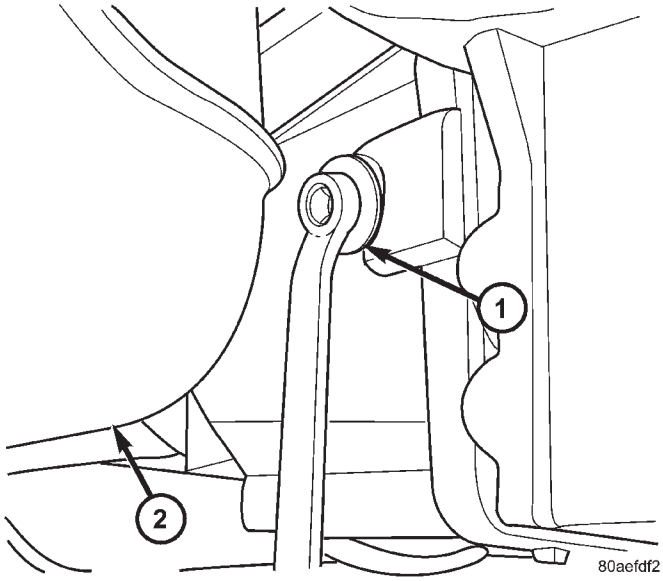

Fig. 44 Overrunning Clutch Housing Fill Plug

1 - OVERRUNNING CLUTCH HOUSING FILL PLUG
2 - FUEL TANK

(7) Using a suction gun (Fig. 45), add 0.58 L (1.22 pts.) of Mopar® ATF+4 (Automatic Transmission Fluid—Type 9602).

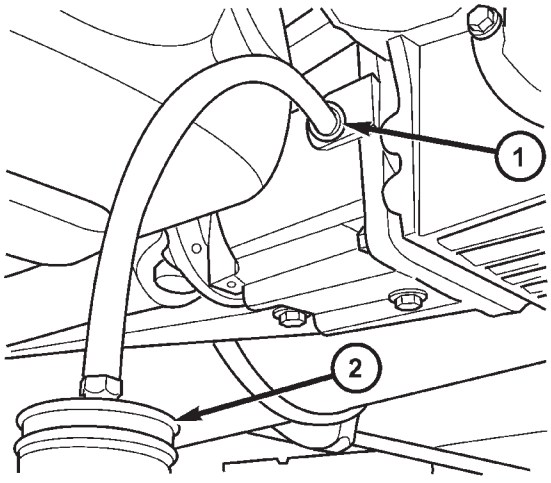

Fig. 45 Filling Overrunning Clutch Case

1 - OVERRUNNING CLUTCH HOUSING FILL HOLE
2 - SUCTION GUN

(8) Install fill plug and torque to 30 N·m (22 ft. lbs.).

VISCOUS COUPLER

DESCRIPTION

The heart of the all-wheel drive system is the inter-axle viscous coupling and bi-directional overrunning clutch. Under normal driving the vehicle retains predominantly front wheel drive characteristics. The all-wheel drive takes effect when the front wheels start to slip. Under normal level road, straight line driving, 100% of the torque is allocated to the front wheels. The viscous coupler allows more torque to the rear wheels in accordance with the amount of slippage at the front wheels. The variable torque distribution is automatic with no driver inputs required.

OPERATION

The viscous coupler (Fig. 46) is a housing nearly filled with a high viscosity silicone liquid and thin metal plates alternately splined to an inner and outer drum. The viscous coupler provides torque in the following modes:

- Shear mode (normal operation)
- Hump mode (locked mode)

The inner plates are slotted around the radius and the outer plates have holes in them. In the shear mode (normal operation), the plates are evenly spaced and the torque is created by the shearing of the plates through the fluid and 90-100% of the torque is applied to the rear axle. During the shear mode, a fluid flow pattern is created from this design (holes and slots). This fluid flow causes high pressure on each side of each pair of plates and low pressure between each pair of plates.

When a high speed difference (shear) occurs because of loss of traction (one axle spinning faster than the other), the silicone fluid expands as it heats from this shearing. When the silicone expands to fill the viscous coupler completely, this pressure difference is high enough to squeeze each pair of plates together. The resulting hump torque is up to 8 times higher than the shear torque. When the viscous coupler is in the hump mode, it does not lock the axles (undifferentiated 4-Wheel Drive). It controls the amount of slippage while delivering maximum power to the axle having greatest traction. Once the speed difference equalizes the fluid and plates cool down and the viscous coupler goes back to the shear mode.

VISCOUS COUPLER (Continued)

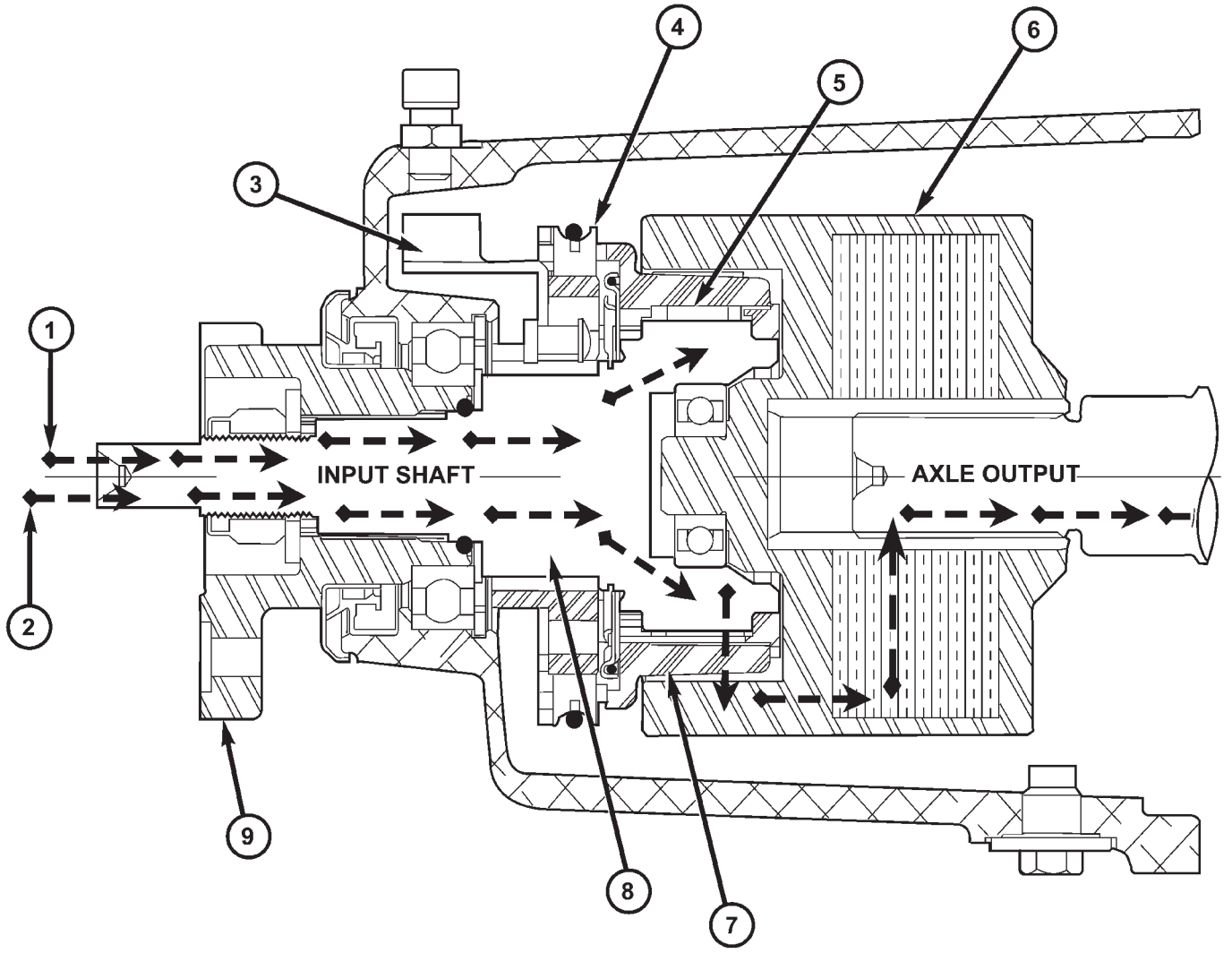

Fig. 46 Bi-directional Overrunning Clutch (BOC) and Viscous Coupler Powerflow

1 - POWERFLOW - BOC OVERUNNING
2 - POWERFLOW - BOC LOCKED
3 - BOC GROUND TAB
4 - FRICTION BRAKE SHOES
5 - BOC ROLLERS
6 - VISCOUS COUPLER
7 - BOC ROLLER CAGE
8 - BOC INPUT SHAFT
9 - INPUT FLANGE

TORQUE ARM

REMOVAL

(1) Raise vehicle on hoist.
(2) Remove rear driveline module assembly. (Refer to 3 - DIFFERENTIAL & DRIVELINE/REAR DRIVELINE MODULE - REMOVAL)
(3) Remove six torque arm-to-differential assembly bolts (Fig. 47). Remove torque arm.

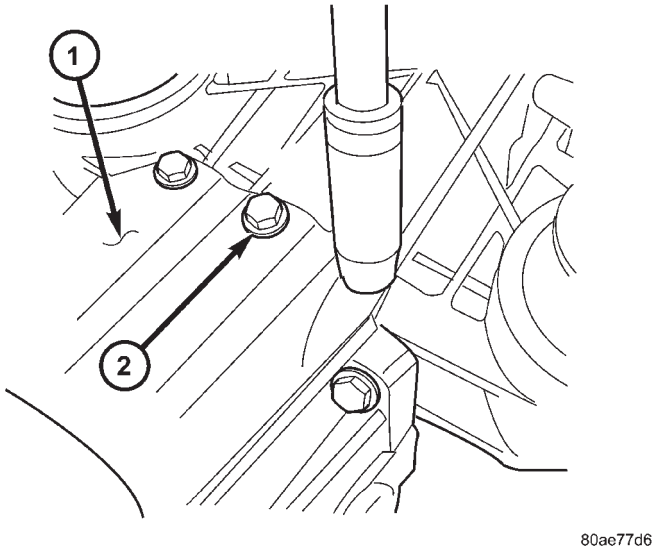

Fig. 47 Torque Arm Fasteners

1 - TORQUE ARM ASSEMBLY
2 - BOLT (SIX)

INSTALLATION

(1) Install six torque arm-to-differential assembly bolts (Fig. 47) and torque to 60 N·m (44 ft. lbs.).
(2) Install rear driveline module assembly. (Refer to 3 - DIFFERENTIAL & DRIVELINE/REAR DRIVELINE MODULE - INSTALLATION)
(3) Lower vehicle.

INPUT FLANGE SEAL

REMOVAL

(1) Raise vehicle on hoist.
(2) Remove propeller shaft. (Refer to 3 - DIFFERENTIAL & DRIVELINE/PROPELLER SHAFT - REMOVAL)
(3) Using tool 6958, remove input flange nut and washer (Fig. 48).
(4) Remove input flange (Fig. 49).

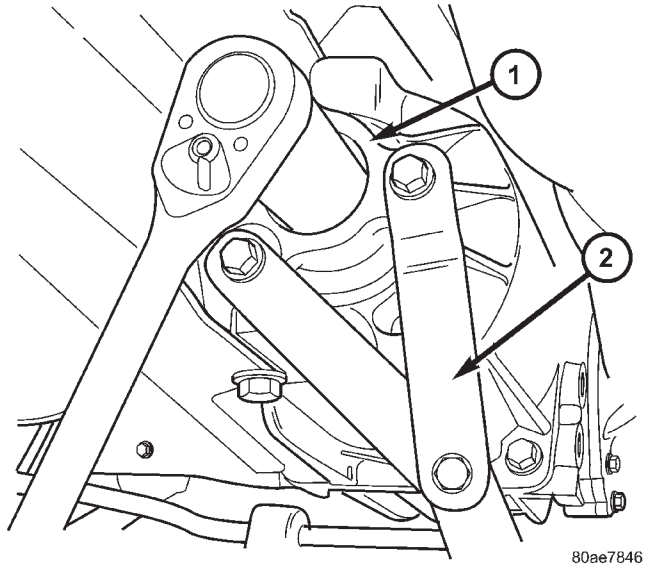

Fig. 48 Input Flange Nut

1 - INPUT FLANGE
2 - TOOL 6958

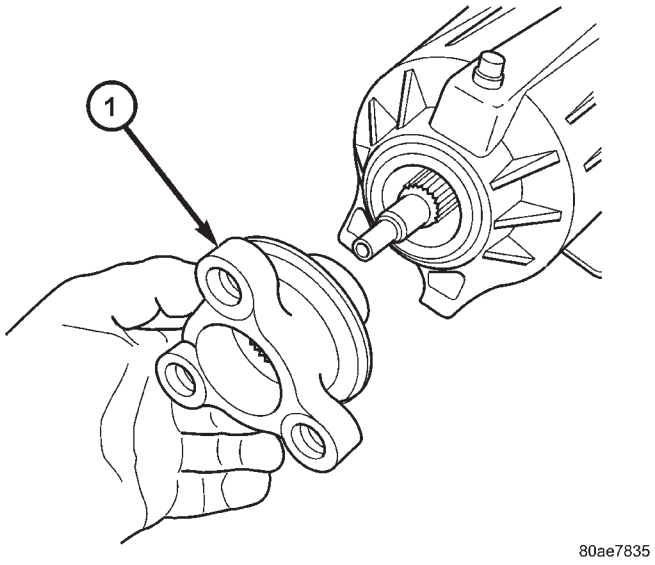

Fig. 49 Input Flange

1 - INPUT FLANGE/SHIELD

INPUT FLANGE SEAL (Continued)

(5) Using suitable screwdriver, remove input flange seal from overrunning clutch housing (Fig. 50).

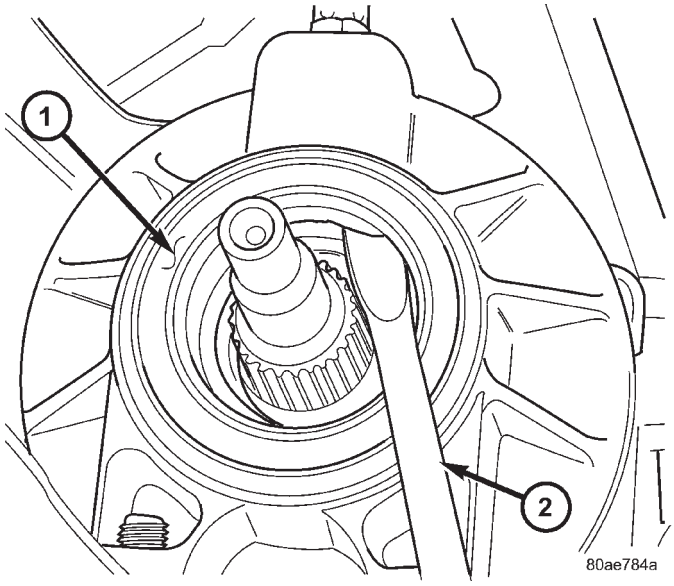

Fig. 50 Input Flange Seal Removal

1 - INPUT FLANGE SEAL
2 - SCREWDRIVER

INSTALLATION

(1) Using tool 8802, install input flange seal to overrunning clutch case (Fig. 51).

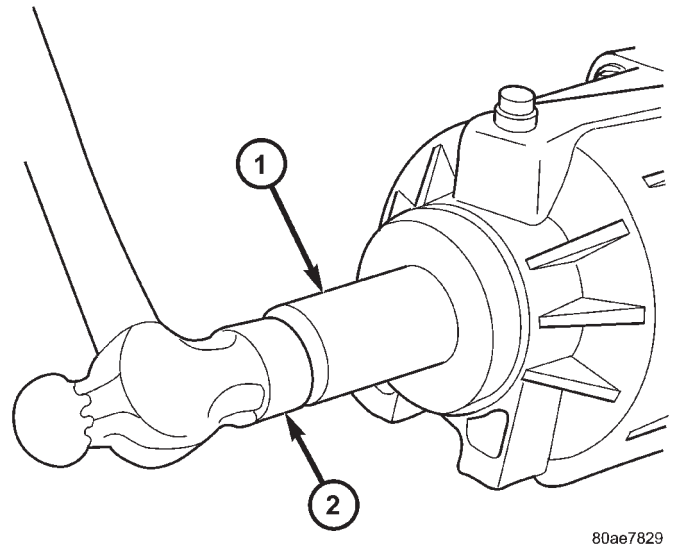

Fig. 51 Input Flange Seal Installation

1 - TOOL 8802
2 - HAMMER

(2) Install input flange (Fig. 52).

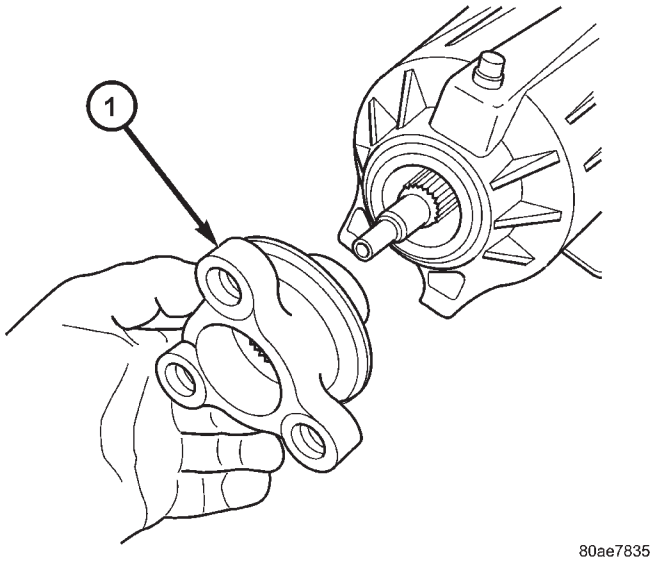

Fig. 52 Input Flange

1 - INPUT FLANGE/SHIELD

(3) Install flange nut and washer. Using tool 6958, torque flange nut to 135 N·m (100 ft. lbs.) (Fig. 53).

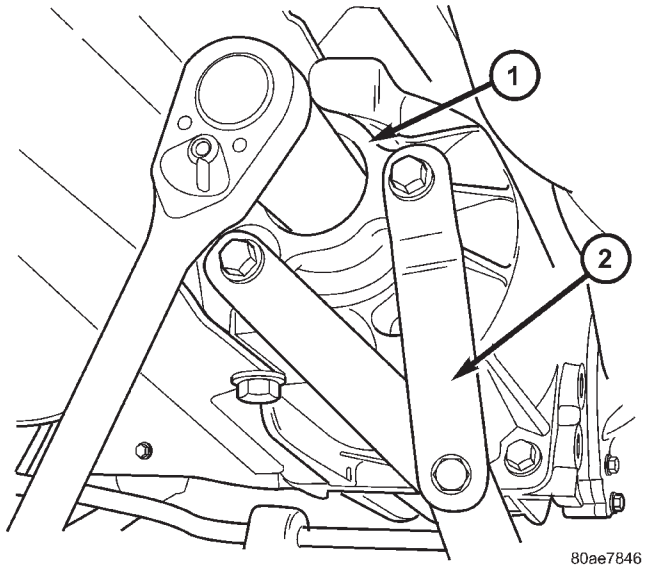

Fig. 53 Input Flange Nut

1 - INPUT FLANGE
2 - TOOL 6958

(4) Install propeller shaft. (Refer to 3 - DIFFERENTIAL & DRIVELINE/PROPELLER SHAFT - INSTALLATION)

(5) Lower vehicle.

OUTPUT FLANGE SEAL

REMOVAL

(1) Raise vehicle on hoist.

(2) Remove rear halfshaft inner joint at differential output flange (Fig. 54).

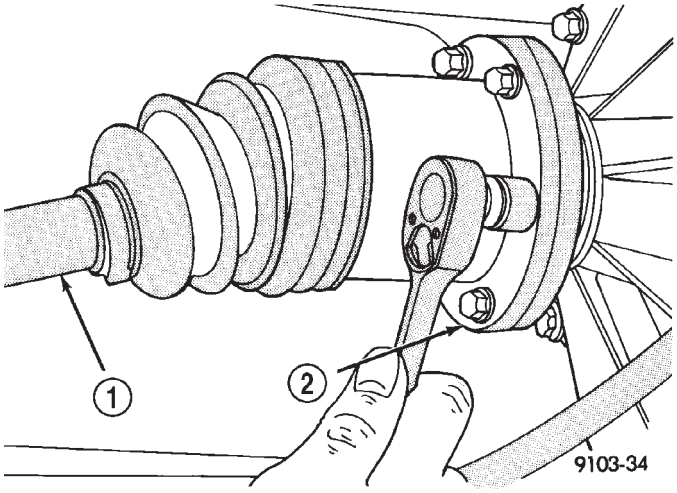

Fig. 54 Inner Half Shaft Bolts

1 - SHAFT
2 - FLANGE

(3) Using two screwdrivers and wood blocks to protect differential housing casting, pry output flange out of differential (Fig. 55).

(4) Use suitable screwdriver to remove output flange seal (Fig. 56).

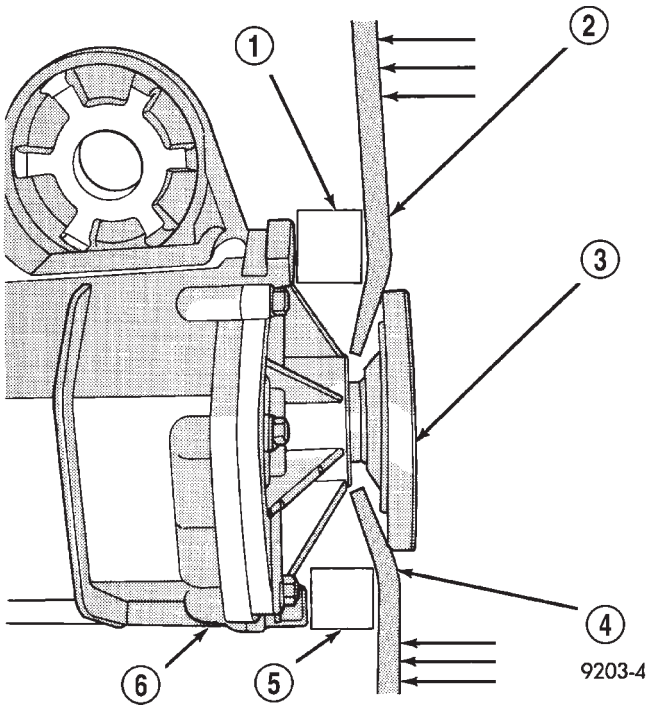

Fig. 55 Output Flange Removal

1 - WOOD BLOCK
2 - PRYBAR
3 - OUTPUT SHAFT
4 - PRYBAR
5 - WOOD BLOCK
6 - DIFFERENTIAL CASE

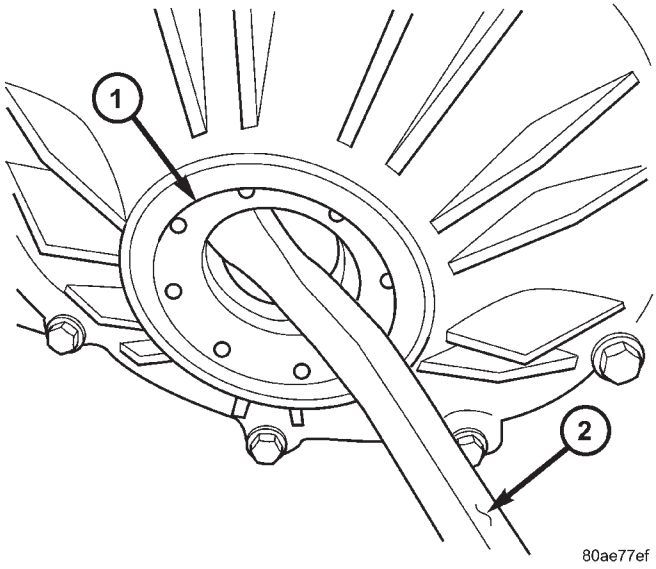

Fig. 56 Output Flange Seal Removal

1 - OUTPUT FLANGE SEAL
2 - SCREWDRIVER

OUTPUT FLANGE SEAL (Continued)

INSTALLATION

(1) Install output flange seal to differential housing using tool C4171A and 8493 (Fig. 57).

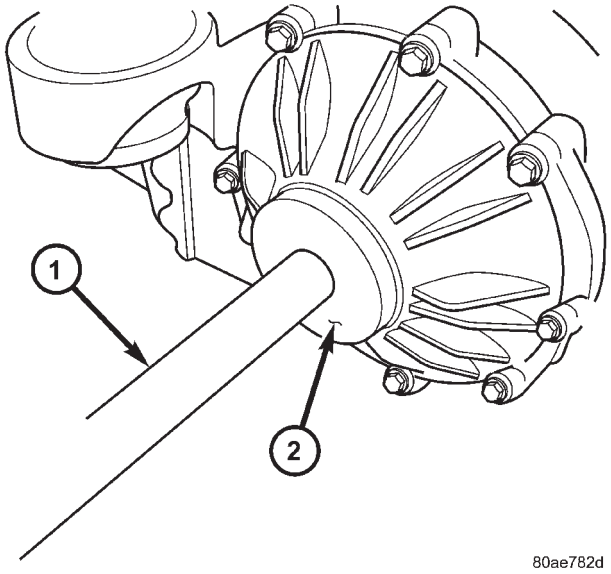

Fig. 57 Output Flange Seal Installation

1 - DRIVER HANDLE C4171
2 - INSTALLER 8493

(2) Install ouput flange to differential assembly. Verify that it is seated all the way into position by attempting to pull out by hand.

(3) Install rear halfshaft inner joint to output flange.

(4) Install and torque bolts to 61 N·m (45 ft. lbs.) (Fig. 58).

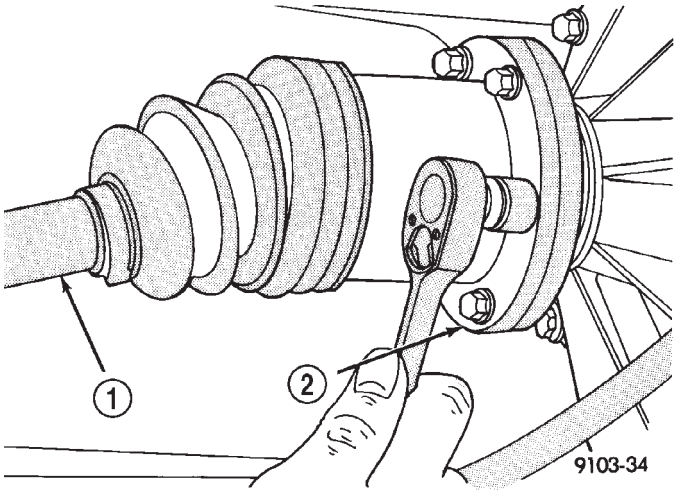

Fig. 58 Inner Half Shaft Bolts

1 - SHAFT
2 - FLANGE

(5) Check differential assembly fluid level and adjust as required. (Refer to 3 - DIFFERENTIAL & DRIVELINE/REAR DRIVELINE MODULE/FLUID - STANDARD PROCEDURE)

BRAKES

TABLE OF CONTENTS

page

BRAKES - BASE 1

BRAKES - ABS 85

BRAKES - BASE

TABLE OF CONTENTS

page

BRAKES - BASE
- DESCRIPTION
  - DESCRIPTION - BASE BRAKES 3
  - DESCRIPTION - BASE BRAKES (EXPORT) . . . 3
- OPERATION - BASE BRAKES 3
- WARNING 4
- CAUTION 4
- DIAGNOSIS AND TESTING - BASE BRAKE SYSTEM 4
- STANDARD PROCEDURE - BASE BRAKE BLEEDING 7
- SPECIFICATIONS
  - BRAKE FASTENER TORQUE 9
- SPECIAL TOOLS
  - BASE BRAKE SYSTEM 9

BRAKE FLUID LEVEL SWITCH
- DESCRIPTION 10
- OPERATION 10
- REMOVAL 10
- INSTALLATION 10

ADJUSTABLE PEDAL SWITCH
- DESCRIPTION 11
- DIAGNOSIS AND TESTING - ADJUSTABLE PEDAL SWITCH 11
- REMOVAL 11
- INSTALLATION 12

PEDAL POSITION SENSOR
- DESCRIPTION 12
- DIAGNOSIS AND TESTING - PEDAL POSITION SENSOR 13
- REMOVAL 13
- INSTALLATION 13

HYDRAULIC/MECHANICAL
- DESCRIPTION
  - DESCRIPTION - DISC BRAKES (FRONT) . . . 14
  - DESCRIPTION - DISC BRAKES (REAR) 15
  - DESCRIPTION - DISC BRAKES (EXPORT) . . 15
  - DESCRIPTION - DRUM BRAKES (REAR) . . . 16
- OPERATION
  - OPERATION - DISC BRAKES (FRONT) 16
  - OPERATION - DISC BRAKES (REAR) 16
- DIAGNOSIS AND TESTING - DRUM BRAKE AUTOMATIC ADJUSTER 16

BRAKE LINES
- DESCRIPTION - BRAKE TUBES AND HOSES . 17
- OPERATION - BRAKE TUBES AND HOSES . . . 17
- INSPECTION - BRAKE TUBES AND HOSES . . . 17

BRAKE PADS/SHOES - FRONT
- REMOVAL
  - REMOVAL - FRONT DISC BRAKE SHOES (DISC/DISC BRAKES) 17
  - REMOVAL - FRONT DISC BRAKE SHOES (DISC/DRUM BRAKES) 18
- CLEANING - DISC BRAKE SHOES 18
- INSPECTION - DISC BRAKE SHOES 18
- INSTALLATION
  - INSTALLATION - FRONT DISC BRAKE SHOES 19
  - INSTALLATION - FRONT DISC BRAKE SHOES (DISC/DRUM BRAKES) 19

BRAKE PADS/SHOES - REAR DISC
- REMOVAL - REAR DISC BRAKE SHOES 19
- CLEANING - DISC BRAKE SHOES 21
- INSPECTION - DISC BRAKE SHOES 21
- INSTALLATION - REAR DISC BRAKE SHOES . . 21

BRAKE PADS/SHOES - REAR DRUM
- REMOVAL - REAR DRUM BRAKE SHOES 22
- INSPECTION - REAR DRUM BRAKE SHOE LINING 25
- INSTALLATION - REAR DRUM BRAKE SHOES . 25
- ADJUSTMENTS
  - ADJUSTMENT - REAR DRUM BRAKE SHOES 26

DISC BRAKE CALIPER - FRONT
REMOVAL
REMOVAL - FRONT DISC BRAKE CALIPER (DISC/DISC BRAKES) . . . 26
REMOVAL - FRONT DISC BRAKE CALIPER (DISC/DRUM BRAKES) . . . 26
DISASSEMBLY
DISASSEMBLY - CALIPER GUIDE PIN BUSHINGS (DISC/DISC BRAKES) . . . 27
DISASSEMBLY - CALIPER PISTON AND SEAL . . . 27
CLEANING - CALIPER . . . 28
INSPECTION - CALIPER . . . 28
ASSEMBLY
ASSEMBLY - CALIPER GUIDE PIN BUSHINGS (DISC/DISC BRAKES) . . . 28
ASSEMBLY - CALIPER PISTON AND SEAL . . 28
INSTALLATION
INSTALLATION - FRONT DISC BRAKE CALIPER (DISC/DISC BRAKES) . . . 29
INSTALLATION - FRONT DISC BRAKE CALIPER (DISC/DRUM BRAKES) . . . 30
DISC BRAKE CALIPER - REAR
REMOVAL - REAR DISC BRAKE CALIPER . . . 30
DISASSEMBLY - CALIPER PISTON AND SEAL . 31
CLEANING - CALIPER . . . 32
INSPECTION - CALIPER . . . 32
ASSEMBLY - CALIPER PISTON AND SEAL . . . 32
INSTALLATION - REAR DISC BRAKE CALIPER . 33
DISC BRAKE CALIPER ADAPTER
REMOVAL - FRONT DISC BRAKE CALIPER ADAPTER . . . 34
INSTALLATION - FRONT DISC BRAKE CALIPER ADAPTER . . . 34
DISC BRAKE CALIPER GUIDE PINS
REMOVAL - DISC BRAKE CALIPER GUIDE PINS (DISC/DRUM BRAKES) . . . 34
INSTALLATION - DISC BRAKE CALIPER GUIDE PINS (DISC/DRUM BRAKES) . . . 34
DRUM
REMOVAL . . . 35
INSTALLATION . . . 35
FLUID
DIAGNOSIS AND TESTING - BRAKE FLUID CONTAMINATION . . . 35
STANDARD PROCEDURE - BRAKE FLUID LEVEL CHECKING . . . 35
SPECIFICATIONS
BRAKE FLUID . . . 35
JUNCTION BLOCK
DESCRIPTION - NON-ABS JUNCTION BLOCK . 36
OPERATION - NON-ABS JUNCTION BLOCK . . 36
REMOVAL - NON-ABS JUNCTION BLOCK . . . 36
INSTALLATION - NON-ABS JUNCTION BLOCK . 36
MASTER CYLINDER
DESCRIPTION
DESCRIPTION . . . 37
DESCRIPTION - RHD . . . 38
OPERATION . . . 38
STANDARD PROCEDURE - MASTER CYLINDER BLEEDING . . . 38
REMOVAL
REMOVAL - LHD . . . 39
REMOVAL - RHD . . . 40
DISASSEMBLY - MASTER CYLINDER (FLUID RESERVOIR) . . . 40
ASSEMBLY - MASTER CYLINDER (FLUID RESERVOIR) . . . 41
INSTALLATION
INSTALLATION - LHD . . . 41
INSTALLATION - RHD . . . 42
PEDAL - ADJUSTABLE
DESCRIPTION . . . 42
OPERATION . . . 42
DIAGNOSIS AND TESTING - ADJUSTABLE PEDAL SYSTEM . . . 43
REMOVAL . . . 43
INSTALLATION . . . 45
PEDAL TORQUE SHAFT - RHD
REMOVAL . . . 47
INSTALLATION . . . 47
POWER BRAKE BOOSTER
DESCRIPTION . . . 48
OPERATION . . . 49
DIAGNOSIS AND TESTING - POWER BRAKE BOOSTER . . . 49
REMOVAL
REMOVAL - LHD . . . 50
REMOVAL - RHD . . . 52
INSTALLATION
INSTALLATION - LHD . . . 53
INSTALLATION - RHD . . . 55
PROPORTIONING VALVE
DESCRIPTION - PROPORTIONING VALVE (HEIGHT SENSING) . . . 56
OPERATION - PROPORTIONING VALVE (HEIGHT SENSING) . . . 57
DIAGNOSIS AND TESTING - PROPORTIONING VALVE (HEIGHT SENSING) . . . 57
REMOVAL - PROPORTIONING VALVE (HEIGHT SENSING) . . . 58
INSTALLATION - PROPORTIONING VALVE (HEIGHT SENSING) . . . 59
ROTOR
DIAGNOSIS AND TESTING - BRAKE ROTOR . . 59
STANDARD PROCEDURE - BRAKE ROTOR MACHINING . . . 61
REMOVAL - FRONT BRAKE ROTOR . . . 62
INSTALLATION - FRONT BRAKE ROTOR . . . 62
SPECIFICATIONS
BRAKE ROTOR . . . 63
BRAKE ROTOR - EXPORT . . . 63

SUPPORT PLATE - DRUM BRAKE
REMOVAL 64
INSTALLATION 64
WHEEL CYLINDERS
REMOVAL 65
INSPECTION 65
INSTALLATION 65
PARKING BRAKE
DESCRIPTION
DESCRIPTION 65
DESCRIPTION - EXPORT 66
OPERATION 66
STANDARD PROCEDURE
STANDARD PROCEDURE - PARKING BRAKE AUTOMATIC ADJUSTER TENSION RELEASE 66
STANDARD PROCEDURE - PARKING BRAKE AUTOMATIC ADJUSTER TENSION RESET 67
CABLES - PARKING BRAKE
REMOVAL
REMOVAL - PARKING BRAKE CABLE (FRONT) 67
REMOVAL - PARKING BRAKE CABLE (INTERMEDIATE) 68
REMOVAL - PARKING BRAKE CABLE (RIGHT REAR) 69
REMOVAL - PARKING BRAKE CABLE (LEFT REAR) 70
INSTALLATION
INSTALLATION - PARKING BRAKE CABLE (FRONT) 71
INSTALLATION - PARKING BRAKE CABLE (INTERMEDIATE) 71
INSTALLATION - PARKING BRAKE CABLE (RIGHT REAR) 72
INSTALLATION - PARKING BRAKE CABLE (LEFT REAR) 72
ADJUSTMENTS
ADJUSTMENT - PARKING BRAKE CABLES . 72
CABLES - PARKING BRAKE (EXPORT)
REMOVAL - FRONT CABLE 72
INSTALLATION - FRONT CABLE 72
LEVER - PARKING BRAKE
REMOVAL 72
INSTALLATION 73
LEVER - PARKING BRAKE (EXPORT)
REMOVAL - PARKING BRAKE LEVER AND FRONT CABLE 74
INSTALLATION - PARKING BRAKE LEVER AND FRONT CABLE 75
SHOES - PARKING BRAKE
REMOVAL 75
INSTALLATION 81
ADJUSTMENTS
ADJUSTMENT - PARKING BRAKE SHOES . . 83

BRAKES - BASE

DESCRIPTION

DESCRIPTION - BASE BRAKES

The base brake system consists of the following components:

- Brake pedal
- Power brake booster
- Master cylinder
- Brake tubes and hoses
- Proportioning valve (non-ABS vehicles only)
- Disc brakes
- Drum brakes
- Brake lamp switch
- Brake fluid level switch
- Parking brakes

Front disc brakes control the braking of the front wheels; rear braking is controlled by rear drum brakes or rear disc brakes depending on options.

The hydraulic brake system is diagonally split on both the non-antilock braking systems and antilock braking systems. That means the left front and right rear brakes are on one hydraulic circuit and the right front and left rear are on the other.

For information on the brake lamp switch, (Refer to 8 - ELECTRICAL/LAMPS/LIGHTING - EXTERIOR/BRAKE LAMP SWITCH - DESCRIPTION)

Vehicles equipped with the optional antilock brake system (ABS) use a system designated Mark 20e. It is available with or without traction control. This system shares most base brake hardware used on vehicles without ABS. ABS components are described in detail in ANTILOCK BRAKE SYSTEM.

DESCRIPTION - BASE BRAKES (EXPORT)

Four-Wheel Disc Antilock Brakes are standard on all models.

OPERATION - BASE BRAKES

When a vehicle needs to be stopped, the driver applies the brake pedal. The brake pedal pushes the input rod of the power brake booster into the booster. The booster uses vacuum to ease pedal effort as force is transferred through the booster to the master cylinder. The booster's output rod pushes in the master cylinder's primary and secondary pistons applying hydraulic pressure through the chassis brake tubes to the brakes at each tire and wheel assembly.

The parking brakes are foot-operated. When applied, the parking brake lever pulls on cables that actuate brake shoes at each rear wheel. These shoes

come in contact with a hub mounted drum (drum for disc/drum brakes or drum-in-hat for disc/disc brakes) and hold it in place.

WARNING

WARNING: DUST AND DIRT ACCUMULATING ON BRAKE PARTS DURING NORMAL USE MAY CONTAIN ASBESTOS FIBERS FROM PRODUCTION OR AFTERMARKET BRAKE LININGS. BREATHING EXCESSIVE CONCENTRATIONS OF ASBESTOS FIBERS CAN CAUSE SERIOUS BODILY HARM. EXERCISE CARE WHEN SERVICING BRAKE PARTS. DO NOT SAND OR GRIND BRAKE LINING UNLESS EQUIPMENT USED IS DESIGNED TO CONTAIN THE DUST RESIDUE. DO NOT CLEAN BRAKE PARTS WITH COMPRESSED AIR OR BY DRY BRUSHING. CLEANING SHOULD BE DONE BY DAMPENING THE BRAKE COMPONENTS WITH A FINE MIST OF WATER, THEN WIPING THE BRAKE COMPONENTS CLEAN WITH A DAMPENED CLOTH. DISPOSE OF CLOTH AND ALL RESIDUE CONTAINING ASBESTOS FIBERS IN AN IMPERMEABLE CONTAINER WITH THE APPROPRIATE LABEL. FOLLOW PRACTICES PRESCRIBED BY THE OCCUPATIONAL SAFETY AND HEALTH ADMINISTRATION (OSHA) AND THE ENVIRONMENTAL PROTECTION AGENCY (EPA) FOR THE HANDLING, PROCESSING, AND DISPOSING OF DUST OR DEBRIS THAT MAY CONTAIN ASBESTOS FIBERS.

CAUTION

CAUTION: During service procedures, grease or any other foreign material must be kept off brake shoe assemblies, and braking surfaces of brake rotor or drum, and external surfaces of hub and bearing assembly.

CAUTION: Handling of brake rotors and calipers must be done in such a way as to avoid damage to the rotor and scratching or nicking of brake lining on the brake shoes.

CAUTION: At no time when servicing a vehicle, can a sheet metal screw, bolt or other metal fastener be installed in the shock tower to take the place of an original plastic clip. Also, NO holes can be drilled into the front shock tower in the area shown in (Fig. 1), for the installation of any metal fasteners into the shock tower. Because of the minimum clearance in this area (Fig. 1), installation of metal fasteners could damage the coil spring coating and lead to a corrosion failure of the spring. If a plastic clip is missing, or is lost or broken during servicing a vehicle, replace only with the equivalent part listed in the Mopar parts catalog.

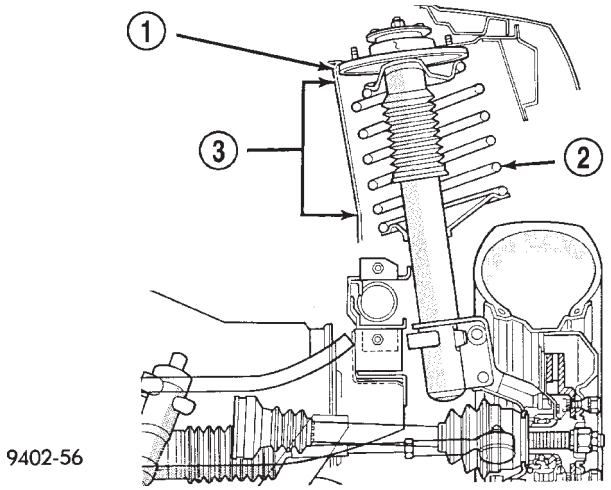

Fig. 1 Shock Tower To Spring Minimum Clearance Area

1 - SHOCK TOWER
2 - COIL SPRING
3 - NO SHEET METAL SCREWS, BOLTS, OR ANY OTHER METAL FASTENERS ARE TO BE INSTALLED INTO SHOCK TOWER IN THIS AREA. ALSO, NO HOLES ARE TO BE DRILLED INTO SHOCK TOWER IN THIS SAME AREA.

CAUTION: Only the recommended jacking or hoisting positions for this vehicle are to be used whenever it is necessary to lift a vehicle. Failure to raise a vehicle from the recommended locations could result in lifting a vehicle by the hydraulic control unit mounting bracket. Lifting a vehicle by the hydraulic control unit mounting bracket will result in damage to the mounting bracket and the hydraulic control unit.

DIAGNOSIS AND TESTING - BASE BRAKE SYSTEM

NOTE: There are three diagnosis charts following that cover the RED BRAKE WARNING INDICATOR LAMP, BRAKE NOISE and OTHER BRAKE CONDITIONS.

BRAKES - BASE (Continued)

RED BRAKE WARNING INDICATOR LAMP

CONDITION	POSSIBLE CAUSES	CORRECTION
RED BRAKE WARNING LAMP ON	1. Parking brake lever not fully released.	1. Release parking brake lever.
	2. Parking brake warning lamp switch on parking brake lever.	2. Inspect and replace switch as necessary.
	3. Brake fluid level low in reservoir.	3. Fill reservoir. Check entire system for leaks. Repair or replace as required.
	4. Brake fluid level switch.	4. Disconnect switch wiring connector. If lamp goes out, replace switch.
	5. Mechanical instrument cluster (MIC) problem.	5. Refer to appropriate Diagnostic information.
	6. Amber ABS Warning Indicator Lamp also illuminated.	6. Refer to appropriate Diagnostic information.

BRAKE NOISE

CONDITION	POSSIBLE CAUSES	CORRECTION
CLICK OR SQUAWK ON PEDAL APPLICATION	1. Brake lamp switch.	1. Replace switch.
	2. Brake Transmission Shift Interlock Linkage.	2. Lubricate BTSI linkage.
	3. Pedal pivot bushings	3. Lubricate pivot bushings. Replace if necessary.
DISC BRAKE CHIRP	1. Excessive brake rotor runout.	1. Follow brake rotor diagnosis and testing. Correct as necessary.
	2. Lack of lubricant on brake caliper slides.	2. Lubricate brake caliper slides.
	3. Caliper/shoes not fully seated.	3. Reseat caliper/shoes.
DISC BRAKE RATTLE OR CLUNK	1. Broken or missing anti-rattle spring clips on shoes.	1. Replace brake shoes.
	2. Caliper guide pins/bolts loose.	2. Tighten guide pins/bolts.
DISC BRAKE SQUEAK AT LOW SPEED (WHILE APPLYING LIGHT BRAKE PEDAL EFFORT)	1. Brake shoe linings.	1. Replace brake shoes.
DRUM BRAKE CHIRP	1. Lack of lubricant on brake shoe support plate where shoes ride.	1. Lubricate shoe contact areas on brake shoe support plates.
DRUM BRAKE CLUNK	1. Drum(s) have threaded machined braking surface.	1. Replace brake drums as necessary.
DRUM BRAKE HOWL OR MOAN	1. Lack of lubricant on brake shoe support plate where shoes ride and at the anchor.	1. Lubricate shoe contact areas on brake shoe support plates and at the anchor.
	2. Rear brake shoes.	2. Replace rear brake shoes.
DRUM BRAKE SCRAPING OR WHIRRING	1. ABS wheel speed sensor or tone wheel.	1. Inspect, correct or replace faulty component(s).

BRAKES - BASE (Continued)

CONDITION	POSSIBLE CAUSES	CORRECTION
SCRAPING (METAL-TO-METAL).	1. Foreign object interference with brakes.	1. Inspect brakes and remove foreign object.
	2. Brake shoes worn out.	2. Replace brake shoes. Inspect rotors and drums. Reface or replace as necessary.

OTHER BRAKE CONDITIONS

CONDITION	POSSIBLE CAUSES	CORRECTION
BRAKES CHATTER	1. Rear brake drum out of round or disc brake rotor has excessive thickness variation.	1. Isolate condition as rear or front. Reface or replace brake drums or rotors as necessary.
BRAKES DRAG (FRONT OR ALL)	1. Contaminated brake fluid.	1. Check for swollen seals. Replace all system components containing rubber.
	2. Binding caliper pins or bushings.	2. Replace pins and bushings.
	3. Binding master cylinder.	3. Replace master cylinder.
	4. Binding brake pedal.	4. Replace brake pedal.
	5. Brake lamp switch not adjusted properly and mounting bracket is bent.	5. Straighten mounting bracket and replace brake lamp switch.
BRAKES DRAG (REAR ONLY)	1. Parking brake cables binding or froze up.	1. Check cable routing. Replace cables as necessary.
	2. Parking brake cable return spring not returning shoes.	2. Replace cables as necessary.
	3. Service brakes not adjusted properly (rear drum brakes only).	3. Follow the procedure listed in the adjustment section.
	4. Rear disc brake parking brake not properly adjusted.	Adjust parking brake shoes.
BRAKES GRAB	1. Contaminated brake shoe linings.	1. Inspect and clean, or replace shoes. Repair source of contamination.
	2. Improper power brake booster assist.	2. Refer to power brake booster diagnosis and testing.
EXCESSIVE PEDAL EFFORT	1. Obstruction of brake pedal.	1. Inspect, remove or move obstruction.
	2. Low power brake booster assist (vacuum leak).	2. Refer to power brake booster diagnosis and testing.
	3. Glazed brake linings.	3. Reface or replace brake rotors as necessary. Replace brake shoes.
	4. Brake shoe lining transfer to brake rotor.	4. Reface or replace brake rotors as necessary. Replace brake shoes.
EXCESSIVE PEDAL TRAVEL (VEHICLE STOPS OK)	1. Air in brake lines.	1. Bleed brakes.
	2. Rear drum brake auto-adjuster malfunctioning.	2. Inspect and replace drum brake components as necessary. Adjust rear brakes.

BRAKES - BASE (Continued)

CONDITION	POSSIBLE CAUSES	CORRECTION
EXCESSIVE PEDAL TRAVEL (ONE FRONT WHEEL LOCKS UP DURING HARD BRAKING)	1. One of the two hydraulic circuits to the front brakes is malfunctioning.	1. Inspect system for leaks. Check master cylinder for internal malfunction.
PEDAL PULSATES/ SURGES DURING BRAKING	1. Rear brake drum out of round or disc brake rotor has excessive thickness variation.	1. Isolate condition as rear or front. Reface or replace brake drums or rotors as necessary.
PEDAL IS SPONGY	1. Air in brake lines. 2. Power brake booster runout (vacuum assist).	1. Bleed brakes. 2. Check booster vacuum hose and engine tune for adequate vacuum supply. Refer to power brake booster diagnosis and testing.
PREMATURE REAR WHEEL LOCKUP	1. Contaminated brake shoe linings. 2. Inoperative proportioning valve (non-ABS vehicles). 3. Improper power brake booster assist.	1. Inspect and clean, or replace shoes. Repair source of contamination. 2. Refer to proportioning valve diagnosis and testing. Replace valve as necessary. 3. Refer to power brake booster in the diagnosis and testing section.
STOP/BRAKE LAMPS STAY ON	1. Brake lamp switch out of adjustment. 2. Brake pedal binding. 3. Obstruction in pedal linkage. 4. Power Brake Booster not allowing pedal to return completely.	1. Replace brake lamp switch. 2. Inspect and replace as necessary. 3. Remove obstruction. 4. Replace power brake booster.
VEHICLE PULLS TO RIGHT OR LEFT ON BRAKING	1. Frozen brake caliper piston. 2. Contaminated brake shoe lining. 3. Pinched brake lines. 4. Leaking piston seal. 5. Suspension problem.	1. Replace frozen piston or caliper. Bleed brakes. 2. Inspect and clean, or replace shoes. Repair source of contamination. 3. Replace pinched line. 4. Replace piston seal or brake caliper. 5. Refer to the Suspension group.
PARKING BRAKE - EXCESSIVE HANDLE TRAVEL	1. Rear drum brakes or rear disc brake parking brake shoes out of adjustment.	1. Adjust rear drum brake shoes, or rear parking brake shoes on vehicles with rear disc brakes.

STANDARD PROCEDURE - BASE BRAKE BLEEDING

NOTE: This bleeding procedure is only for the vehicle's base brakes hydraulic system. For bleeding the antilock brakes hydraulic system, (Refer to 5 - BRAKES - ABS - STANDARD PROCEDURE)

CAUTION: Before removing the master cylinder cover, thoroughly clean the cover and master cylinder fluid reservoir to prevent dirt and other foreign matter from dropping into the master cylinder fluid reservoir.

BRAKES - BASE (Continued)

NOTE: The following wheel sequence should be used when bleeding the brake hydraulic system. The use of this wheel sequence will ensure adequate removal of all trapped air from the brake hydraulic system.

- Left Rear Wheel
- Right Front Wheel
- Right Rear Wheel
- Left Front Wheel

NOTE: When bleeding the brake system, some air may be trapped in the brake lines or valves far upstream, as much as ten feet from the bleeder screw (Fig. 2). Therefore, it is essential to have a fast flow of a large volume of brake fluid when bleeding the brakes to ensure all the air gets out.

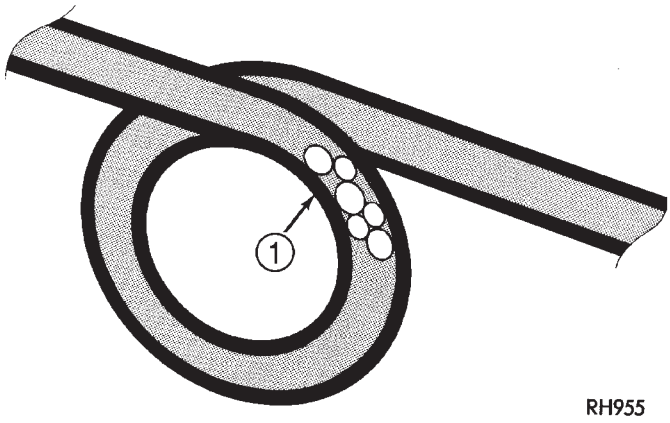

Fig. 2 Trapped Air In Brake Fluid Line

1 - TRAPPED AIR

The brakes may be manually bled or pressure bled. Refer to the appropriate following procedure.

MANUAL BLEEDING PROCEDURE

NOTE: Correct manual bleeding of the brakes hydraulic system will require the aid of a helper.

NOTE: To adequately bleed the brakes using the manual bleeding procedure the rear brakes must be correctly adjusted. Prior to the manual bleeding of the brake hydraulic system, correctly adjust the rear brakes.

(1) Pump the brake pedal three or four times and hold it down before the bleeder screw is opened.

(2) Push the brake pedal toward the floor and hold it down. Then open the left rear bleeder screw at least 1 full turn. When the bleeder screw opens the brake pedal will drop all the way to the floor.

CAUTION: "Just cracking" the bleeder screw often restricts fluid flow, allowing only a slow, weak fluid discharge of fluid. This practice will NOT get all the air out. Make sure the bleeder is opened at least 1 full turn when bleeding.

(3) Release the brake pedal only **after** the bleeder screw is closed.

(4) Repeat steps 1 through 3, four or five times, at each bleeder screw in the proper sequence. This should pass a sufficient amount of fluid to expel all the trapped air from the brake system. Be sure to monitor the fluid level in the master cylinder, so it stays at a proper level so air will not enter the brake system through the master cylinder.

(5) Check pedal travel. If pedal travel is excessive or has not been improved, enough fluid has not passed through the system to expel all the trapped air. Continue to bleed system as necessary.

(6) Perform a final adjustment of the rear brake shoes (when applicable), then test drive vehicle to be sure brakes are operating correctly and that pedal is solid.

PRESSURE BLEEDING PROCEDURE

CAUTION: Use bleeder tank Special Tool C-3496-B or equivalent with Adapter, Special Tool 6921, to pressurize the hydraulic system for bleeding.

Follow pressure bleeder manufacturer's instructions for use of pressure bleeding equipment.

(1) Install the Adapter Master Cylinder Pressure Bleed Cap, Special Tool 6921 on the fluid reservoir of the master cylinder (Fig. 3). Attach the fluid hose from the pressure bleeder to the fitting on Special Tool 6921.

(2) Attach a clear plastic hose to the bleeder screw at one wheel and feed the hose into a clear jar containing fresh brake fluid.

(3) Open the left rear wheel bleeder screw at least **one full turn** or more to obtain an adequate flow of brake fluid.

CAUTION: "Just cracking" the bleeder screw often restricts fluid flow, allowing only a slow, weak fluid discharge of fluid. This practice will NOT get all the air out. Make sure the bleeder is opened at least 1 full turn when bleeding.

(4) After 4 to 8 ounces of brake fluid has been bled through the hydraulic system, and an air-free flow is maintained in the hose and jar, this will indicate a good bleed of the hydraulic system has been obtained.

(5) Repeat the procedure at all the other remaining bleeder screws.

BRAKES - BASE (Continued)

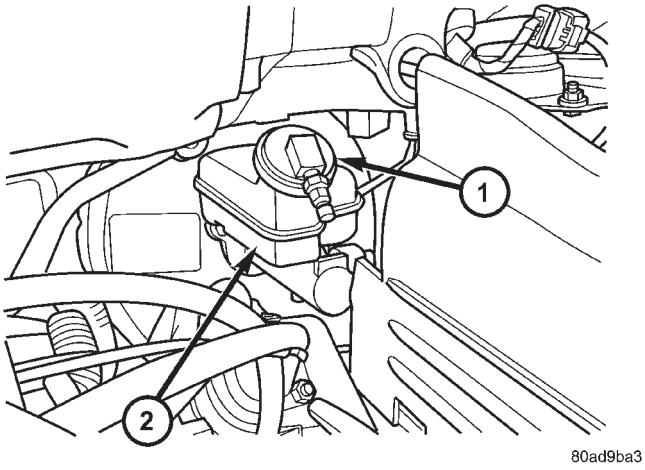

Fig. 3 TOOL 6921 INSTALLED ON MASTER CYLINDER

1 - SPECIAL TOOL 6921
2 - FLUID RESERVOIR

(6) Check pedal travel. If pedal travel is excessive or has not been improved, enough fluid has not passed through the system to expel all the trapped air. Be sure to monitor the fluid level in the pressure bleeder, so it stays at a proper level so air will not enter the brake system through the master cylinder.

(7) Perform a final adjustment of the rear brake shoes (when applicable), then test drive vehicle to be sure brakes are operating correctly and that pedal is solid.

SPECIFICATIONS

BRAKE FASTENER TORQUE

DESCRIPTION	N·m	Ft. Lbs.	In. Lbs.
ABS ICU Mounting Bolts To Bracket	11	—	97
ABS ICU Mounting Bracket-To-Cradle Bolts	28	21	250
ABS CAB-To-HCU Mounting Screws	2	—	17
ABS Wheel Speed Sensor Head Mounting Bolt - Front	13	—	115
ABS Wheel Speed Sensor Head Mounting Bolt - Rear	10	—	90
Adjustable Pedal Position Sensor Mounting Screws	7.5	66	—
Adjustable Pedal Module Mounting Screws	2.0	15	—
Brake Tube Nuts	17	—	145
Brake Hose Intermediate Bracket Bolt	12	—	105
Brake Hose-To-Caliper Mounting Bolt	47	35	—
Disc Brake Caliper Guide Pin Bolts	35	26	—
Disc Brake Caliper Bleeder Screw	15	—	125
Drum Brake Wheel Cylinder Mounting Bolts	8	—	75
Drum Brake Wheel Cylinder Mounting Bleeder screw	10	—	80
Drum Brake Support Plate Mounting Bolts	130	95	—
Junction Block (Non-ABS Brakes) Mounting Bolts	28	21	250
Master Cylinder Mounting Nuts	25	19	225
Power Brake Booster Mounting Nuts	28	21	250
Proportioning Valve Mounting Bolts	54	40	—
Proportioning Valve Axle Bracket Mounting Bolt	20	—	175
Parking Brake Lever (Pedal) Mounting Bolts And Nut	28	21	250
Wheel Mounting (Lug) Nuts	135	100	—

SPECIAL TOOLS

BASE BRAKE SYSTEM

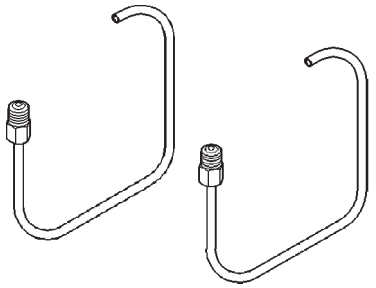

Tubes, Master Cylinder Bleeding 6920

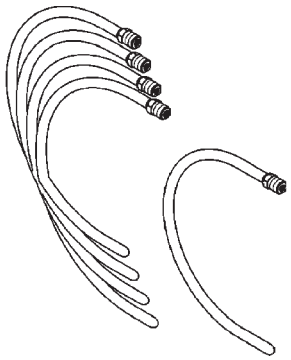

Tubes, Master Cylinder Bleed 8358

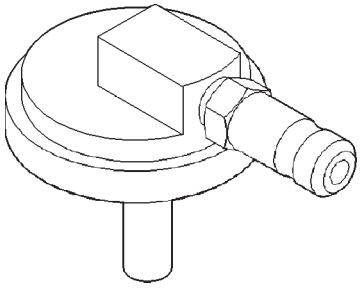

Adapter, Master Cylinder Pressure Bleed Cap 6921

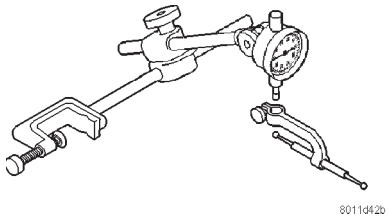

Dial Indicator, C-3339

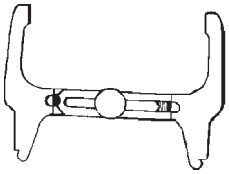

Gauge, Brake Safe-Set

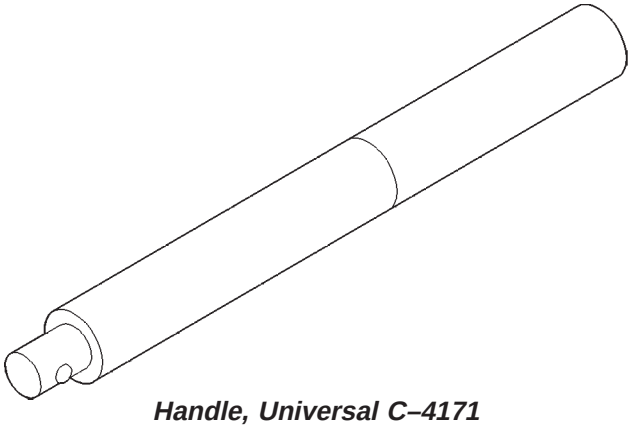

Handle, Universal C–4171

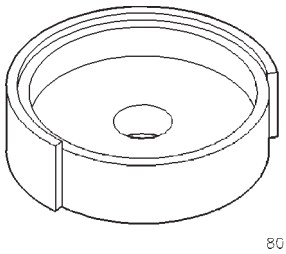

Installer, Dust Boot C-4689 or C-4842

BRAKE FLUID LEVEL SWITCH

DESCRIPTION

The brake fluid level switch is located in the brake fluid reservoir of the master cylinder (Fig. 4).

OPERATION

The purpose of the brake fluid level switch is to provide the driver with an early warning that the brake fluid level in the master cylinder fluid reservoir has dropped below a normal level. This may indicate:

- Abnormal loss of brake fluid in the master cylinder fluid reservoir resulting from a leak in the hydraulic system.
- Brake shoe linings which have worn to a point requiring replacement.

As the brake fluid drops below the minimum level, the brake fluid level switch closes to complete the red BRAKE warning indicator (lamp) circuit. This will turn on the red BRAKE warning indicator. The master cylinder fluid reservoir should be checked and refilled to the Full mark with DOT 3 brake fluid. **If the brake fluid level has dropped below the add line in the master cylinder fluid reservoir, the entire brake hydraulic system should be checked for evidence of a leak.**

REMOVAL

(1) Remove wiring harness connector from brake fluid reservoir level switch (Fig. 4).

(2) Using fingers, compress the retaining tabs on the opposite end of brake fluid level switch.

(3) With retaining tabs compressed, grasp the connector end of brake fluid level switch and pull it out of master cylinder brake fluid reservoir.

INSTALLATION

(1) Insert brake fluid level switch into left side of brake fluid reservoir. Be sure switch is pushed in until retaining tabs lock it to brake fluid reservoir.

(2) Connect vehicle wiring harness connector to brake fluid level switch (Fig. 4).

BRAKE FLUID LEVEL SWITCH (Continued)

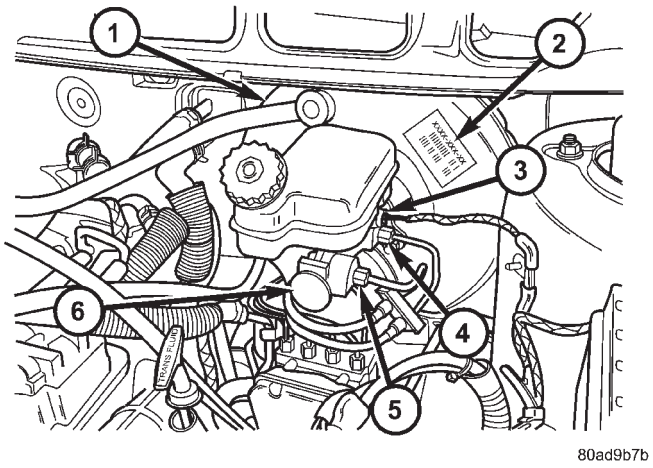

Fig. 4 MASTER CYLINDER AND BOOSTER

1 - POWER BRAKE BOOSTER
2 - BOOSTER IDENTIFICATION LABEL
3 - FLUID LEVEL SWITCH CONNECTOR
4 - PRIMARY BRAKE TUBE NUT
5 - SECONDARY BRAKE TUBE NUT
6 - MASTER CYLINDER

ADJUSTABLE PEDAL SWITCH

DESCRIPTION

The adjustable pedal switch is mounted on the left side of the lower steering column shroud (Fig. 5). The adjustable pedal switch adjusts the adjustable pedal assembly fore-and-aft. The pedal assembly moves in the direction the switch is actuated.

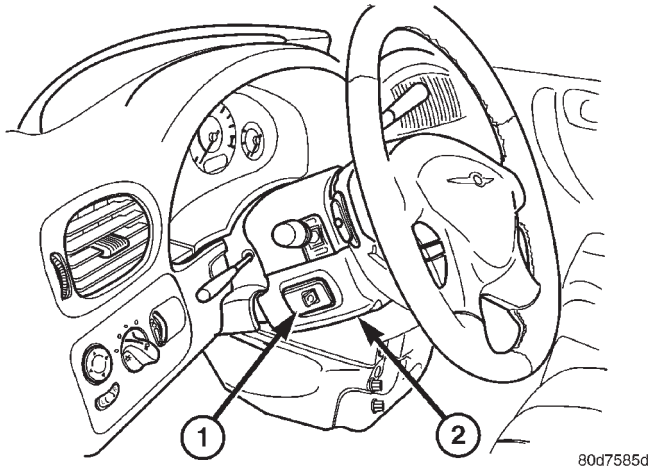

Fig. 5 Adjustable Pedal Switch Location

1 - ADJUSTABLE PEDAL SWITCH
2 - LOWER STEERING COLUMN SHROUD

DIAGNOSIS AND TESTING - ADJUSTABLE PEDAL SWITCH

Refer to Appropriate Diagnostic Information.

REMOVAL

NOTE: Before proceeding, review all Steering Column and Airbag Warnings and Cautions. (Refer to 19 - STEERING/COLUMN - WARNING)(Refer to 8 - ELECTRICAL/RESTRAINTS - WARNING)

(1) Remove battery ground cable terminal from battery negative post and isolate.

(2) Under instrument panel, remove silencer panel below lower steering column cover.

(3) Remove screws securing lower steering column cover/knee blocker, then remove it (Fig. 6).

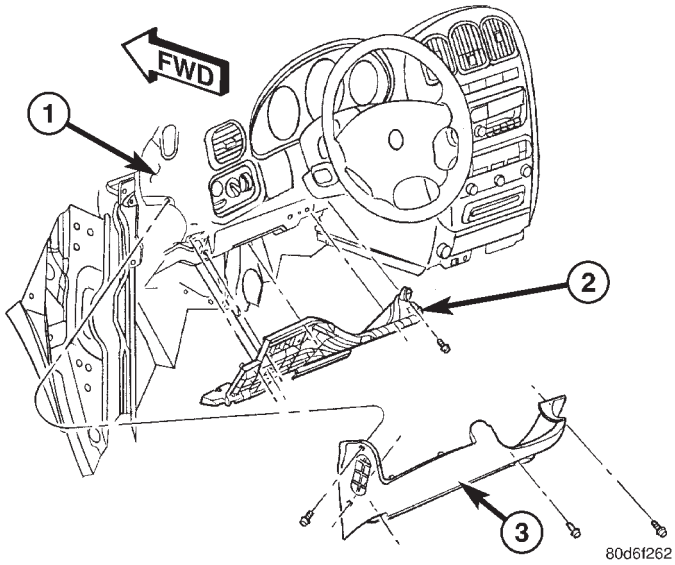

Fig. 6 Lower Steering Column Cover And Reinforcement

1 - INSTRUMENT PANEL
2 - REINFORCEMENT PLATE
3 - LOWER STEERING COLUMN COVER/KNEE BLOCKER

(4) Disconnect parking brake release link at release handle.

(5) Compress tabs on sides of data link diagnostic connector and remove it from knee blocker reinforcement plate.

(6) Remove screws securing knee blocker reinforcement plate in place, then remove reinforcement plate (Fig. 6).

(7) Remove screws fastening upper and lower steering column shrouds to steering column (Fig. 7).

(8) Remove the lower shroud with adjustable pedal switch; disconnect switch wiring connector along left side of column as shroud is removed (Fig. 8).

ADJUSTABLE PEDAL SWITCH (Continued)

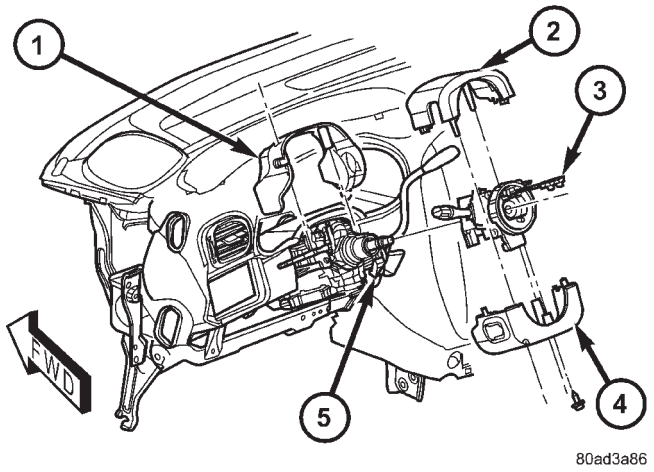

Fig. 7 Steering Column Shrouds

1 - FIXED SHROUD
2 - UPPER SHROUD
3 - CLOCKSPRING
4 - LOWER SHROUD
5 - STEERING COLUMN

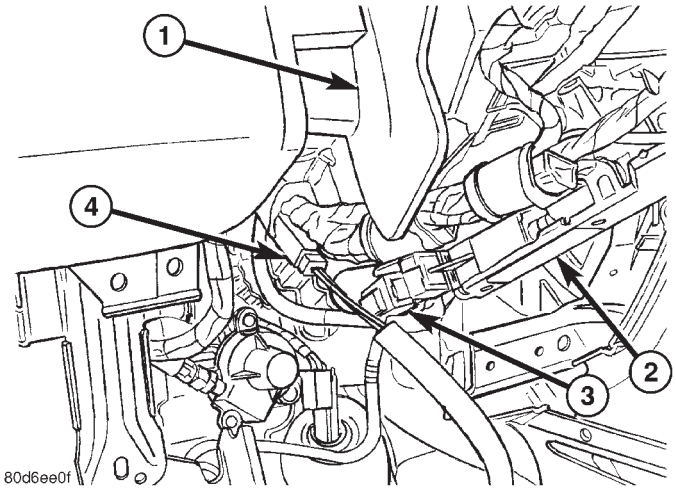

Fig. 8 Pedal Switch Wiring Connector

1 - STEERING COLUMN FIXED SHROUD
2 - BRAKE TRANSMISSION SHIFT INTERLOCK
3 - B.T.S.I. WIRING CONNECTOR
4 - PEDAL SWITCH WIRING CONNECTOR

(9) Depress retainers on rear of adjustable pedal switch, then remove switch from lower shroud (Fig. 9).

INSTALLATION

(1) Guide adjustable pedal switch wiring through mounting hole in lower shroud.

(2) Align switch retainers with notches in mounting hole and snap the switch into place (Fig. 9).

(3) Connect adjustable pedal switch wiring connector along left side of column (Fig. 8).

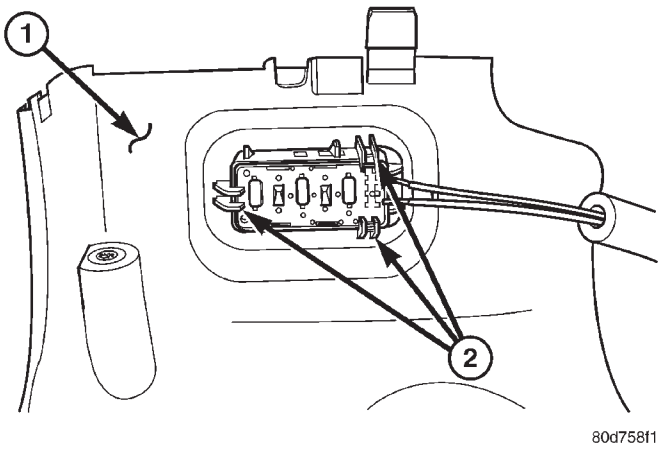

Fig. 9 Pedal Switch Retainers

1 - LOWER SHROUD INTERIOR
2 - RETAINERS

(4) Install the lower shroud with adjustable pedal switch. Install screws fastening steering column shrouds to steering column (Fig. 7).

(5) Install knee blocker reinforcement plate (Fig. 6).

(6) Connect parking brake release link to release handle.

(7) Install data link diagnostic connector to mounting hole in reinforcement plate.

(8) Install lower steering column cover/knee blocker (Fig. 6).

(9) Install silencer panel below lower steering column cover/knee blocker.

(10) Connect ground cable to negative post of battery.

(11) Connect scan tool (DRBIII®) to data link diagnostic connector located below steering column.

(12) Turn ignition key to ON position.

(13) Using scan tool, check for and clear any existing adjustable pedal fault codes.

(14) Test operation of adjustable pedals, memory sets and RKE (if equipped). If applicable, reset radio and clock.

(15) Recheck for any fault codes.

(16) Turn key to OFF and remove scan tool from vehicle.

PEDAL POSITION SENSOR

DESCRIPTION

The pedal position sensor is part of the adjustable pedal assembly. It is mounted to the left of the brake pedal (Fig. 10). It senses the fore and aft position of the brake pedal.

PEDAL POSITION SENSOR (Continued)

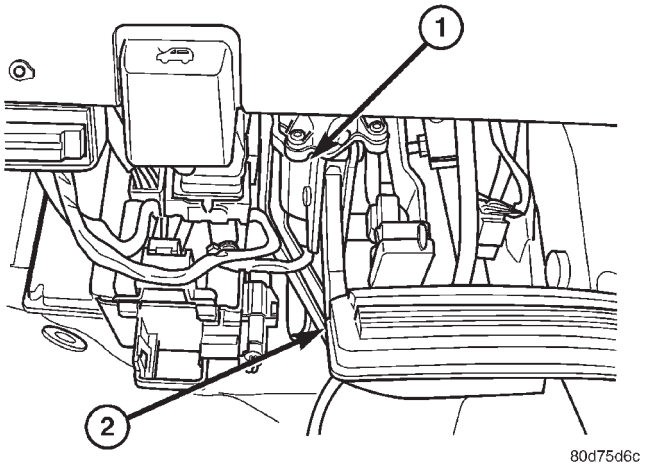

Fig. 10 Pedal Position Sensor Location

1 - PEDAL POSITION SENSOR
2 - BRAKE PEDAL

DIAGNOSIS AND TESTING - PEDAL POSITION SENSOR

Refer to Appropriate Diagnostic Information.

REMOVAL

(1) Remove battery ground cable terminal from battery negative post and isolate.

(2) Under instrument panel, remove silencer panel below lower steering column cover.

(3) Press release tab to the left (Fig. 11), then remove bulkhead connector from bracket by pulling it toward lower steering column cover.

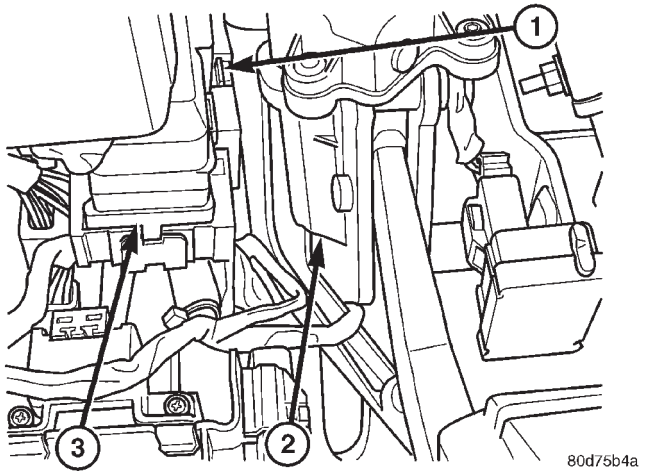

Fig. 11 Bulkhead Connector Release Tab

1 - RELEASE TAB
2 - PEDAL POSITION SENSOR
3 - BULKHEAD CONNECTOR

(4) Move bulkhead connector toward left side of vehicle as far as its wires will allow. Do not overstress wiring.

(5) Remove two mounting screws securing pedal position sensor in place (Fig. 12).

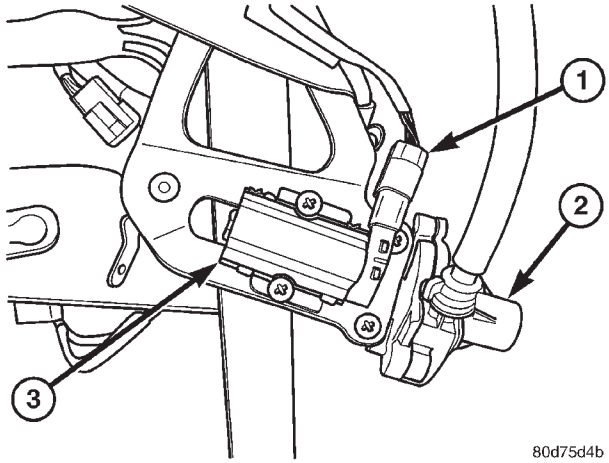

Fig. 12 Pedal Position Sensor

1 - WIRING CONNECTOR
2 - GEAR BOX
3 - PEDAL POSITION SENSOR

(6) Remove pedal position sensor from bracket.

(7) Disconnect wiring connector and remove pedal position sensor.

INSTALLATION

(1) Connect wiring connector to pedal position sensor.

NOTE: Make sure pin in pedal assembly fits into slot in sensor carriage when installing sensor.

(2) Place sensor against mounting bracket and into brake pedal (Fig. 12). Move carriage as necessary to align slot with pin. Install two mounting screws. Tighten screws to 7.5 N·m (66 in. lbs.) torque.

(3) Align the bulkhead connector mounting slot with its bracket and install it, locking it in place.

(4) Install silencer panel below lower steering column cover.

(5) Connect ground cable to negative post of battery.

(6) Connect scan tool (DRBIII®) to data link diagnostic connector located below steering column.

(7) Turn ignition key to ON position.

(8) Using scan tool, check for and clear any existing adjustable pedal fault codes.

(9) Test operation of adjustable pedals, memory sets (if equipped), and RKE (if equipped). If applicable, reset radio and clock.

(10) Recheck for any fault codes.

PEDAL POSITION SENSOR (Continued)

(11) Turn key to OFF and remove scan tool from vehicle.

(12) Road test the vehicle to ensure proper operation of the adjustable brake system.

HYDRAULIC/MECHANICAL

DESCRIPTION

DESCRIPTION - DISC BRAKES (FRONT)

Each front disc brake consists of the following components:

- Brake Rotor
- Brake Caliper
- Brake Caliper Adapter
- Shoes (Pads)

There are two non-interchangeable front disc brake systems depending on whether the vehicle is equipped with rear drum or rear disc brakes. Vehicles with the front disc/rear drum brake combination utilize a system manufactured by TRW. Vehicles with front disc/rear disc brakes utilize a system manufactured by Continental Teves.

CAUTION: Components used on the disc/drum combination brakes are not interchangeable with the disc/disc combination brakes. The two different systems must not be mixed. Improper performance, noise and increased stopping distance can occur.

The TRW front brake caliper is a one piece casting containing a single 64 mm diameter piston bore (Fig. 13) with a phenolic piston. The caliper mounts to a caliper adapter using two guide pin bolts that thread into guide pins slid into the caliper adapter (Fig. 14). The pins are lubricated and have boots that seal them in place in the adapter.

The Continental Teves front brake caliper is a one piece casting containing a single piston 66 mm diameter bore (Fig. 13) with a phenolic piston. The caliper mounts to a caliper adapter using two guide pin bolts that thread into the caliper adapter and slide on bushings mounted in the caliper.

CAUTION: TRW and Continental Teves calipers are not interchangeable. Each caliper is specifically designed for the unique brake system. If calipers are interchanged, improper performance, noise and increased stopping distance can occur.

The two different brake calipers use different devices to control rattling. While the TRW brakes use spring clips that mount at the ends of the shoes in the adapters, Continental Teves brakes use a clip on the rear of the inboard pad to hold it to the piston and a larger clip on the outside of the caliper, holding it to the adapter (Fig. 15).

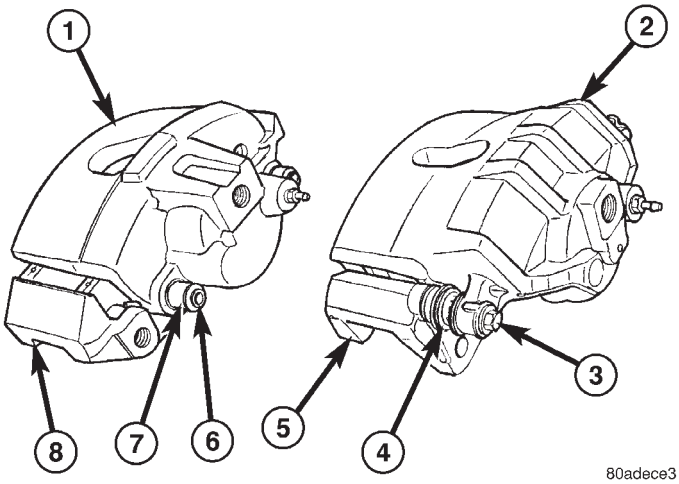

Fig. 13 FRONT DISC BRAKE CALIPERS

1 - CONTINENTAL TEVES CALIPER (66 mm bore)
2 - TRW CALIPER (64 mm bore)
3 - GUIDE PIN BOLT
4 - GUIDE PIN AND BOOT
5 - CALIPER ADAPTER
6 - GUIDE PIN BOLT
7 - GUIDE PIN BUSHING
8 - CALIPER ADAPTER

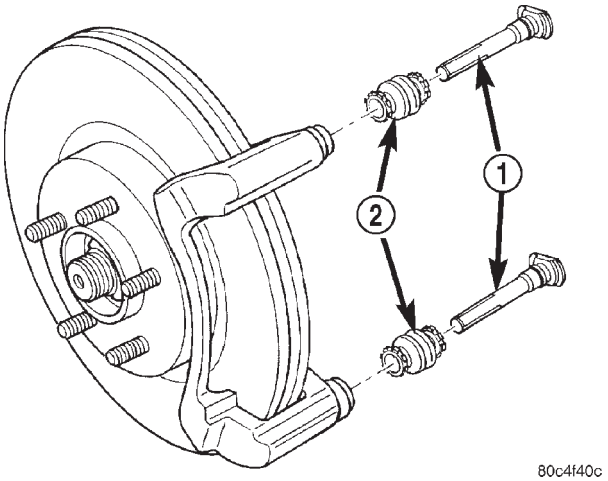

Fig. 14 Guide Pins And Boots

1 - PINS
2 - BOOTS

All brake caliper adapters mount to the steering knuckle in the same way using two mounting bolts.

The brake rotors are also different depending on brake system. The TRW (disc/drum) front brakes utilize an inverted-hat style rotor. This rotor is externally vented meaning the inner most diameter of the braking disc vents to the outboard side (or face) of the rotor (Fig. 16). The Continental Teves (disc/disc)

HYDRAULIC/MECHANICAL (Continued)

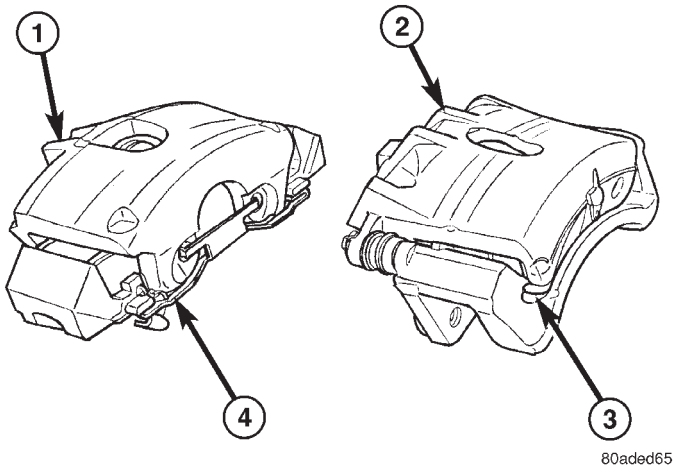

Fig. 15 ANTI-RATTLE DEVICES ON CALIPERS

1 - CONTINENTAL TEVES CALIPER
2 - TRW CALIPER
3 - ANTI-RATTLE CLIP
4 - ANTI-RATTLE CLIP

front brakes utilize the familiar internally-vented hat style rotor. Internally-vented refers to the fact that the inner most diameter of the braking disc vents to the inboard side of the rotor (Fig. 16).

CAUTION: TRW and Continental Teves brake rotors are not interchangeable. If brake rotors are interchanged, noise and wear problems can result.

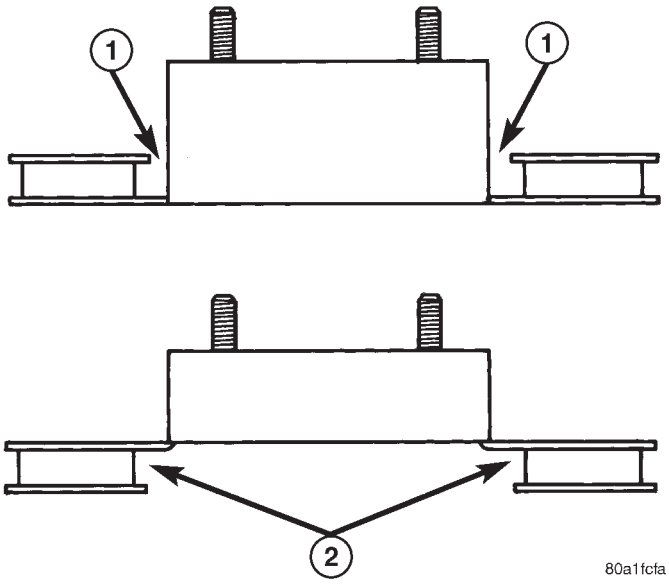

Fig. 16 Externally and Internally Vented Rotors (Cross-Sectional View)

1 - EXTERNAL VENTS (TRW)
2 - INTERNAL VENTS (Continetal Teves)

DESCRIPTION - DISC BRAKES (REAR)

There are several distinctive features to the rear disc brakes on this vehicle (Fig. 17). The single piston, floating caliper rear disc brake system includes a hub and bearing assembly, adapter, rotor, caliper, and brake shoes.

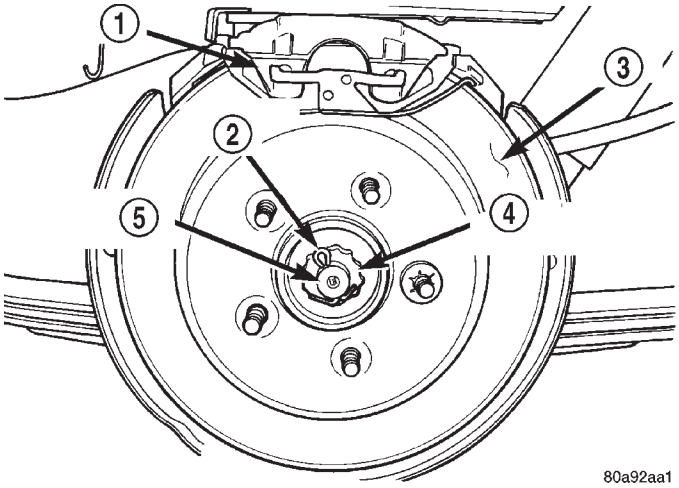

Fig. 17 Rear Disc Brakes

1 - CALIPER
2 - COTTER PIN
3 - ROTOR
4 - NUT RETAINER
5 - OUTER C/V JOINT

This vehicle is equipped with a caliper having a 42 mm (1.65 in.) piston and uses a 15 inch solid non-vented brake rotor. The brake rotor is described as a drum-in-hat style because of its dual role as a braking disc and parking brake drum.

The parking brake system on vehicles equipped with rear disc brakes consists of a small duo-servo drum brake mounted to the caliper adapter and uses the interior of the rear disc brake rotor as a drum (hat section of drum-in-hat style brake rotor).

The outboard rear disc brake shoes (pads) are side-oriented. The shoes are marked indicating which side they belong on.

DESCRIPTION - DISC BRAKES (EXPORT)

All vehicles are equipped with Four-Wheel-Disc brakes. Both 15” (BRE) and 16” (BR3) disc/disc brake systems are available. The disc brakes are manufactured by Continental Teves. The BR3 system is standard equipment on all-wheel drive and all right-hand drive models. It is optional on other models.

The BR3 system features larger, externally vented front brake rotors.

Although there are different disc/disc systems, they are serviced using the same service procedures. Some specifications differ.

HYDRAULIC/MECHANICAL (Continued)

DESCRIPTION - DRUM BRAKES (REAR)

This vehicle's rear wheel drum brakes are a two-shoe, internal-expanding type with an automatic adjuster screw. The automatic adjuster screw is located directly below the wheel cylinder that is mounted near the top of the brake assembly (Fig. 18). These and two brake shoes (and attaching parts) are mounted to a support plate at each rear wheel. A brake drum covers each brake assembly.

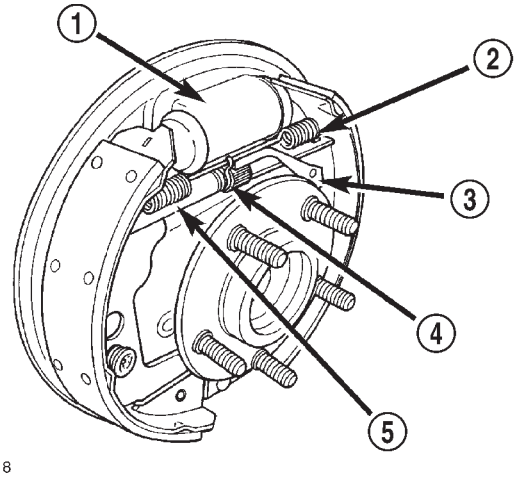

Fig. 18 Drum Brake Assembly (Right Shown)

1 - WHEEL CYLINDER
2 - BRAKE SHOE UPPER RETURN SPRING
3 - AUTOMATIC ADJUSTER LEVER
4 - TENSION CLIP
5 - AUTOMATIC ADJUSTER ASSEMBLY

OPERATION

OPERATION - DISC BRAKES (FRONT)

When the brakes are applied, fluid pressure is sent to each brake caliper. The pressure at the caliper is exerted equally against the caliper piston. The pressure applied to the piston is transmitted directly to the inboard brake shoe. This forces the shoe lining against the inner surface of the brake rotor. At the same time, fluid pressure within the caliper piston bore forces the caliper to slide inward on its guide pins. This action brings the outboard shoe lining into contact with the outer surface of the brake rotor. This pressure on both sides of the brake rotor causes friction, bringing the vehicle to a stop.

When the brake pedal is released, so is the fluid pressure. The piston seal inside the caliper is designed to pull the piston back into the bore of the caliper when the brake pedal is released (Fig. 19). This action helps maintain the proper brake shoe-to-rotor clearance.

As disc brake shoe linings wear, master cylinder reservoir brake fluid level will drop. Adjust as necessary. Fluid level should always be checked after replacing shoes.

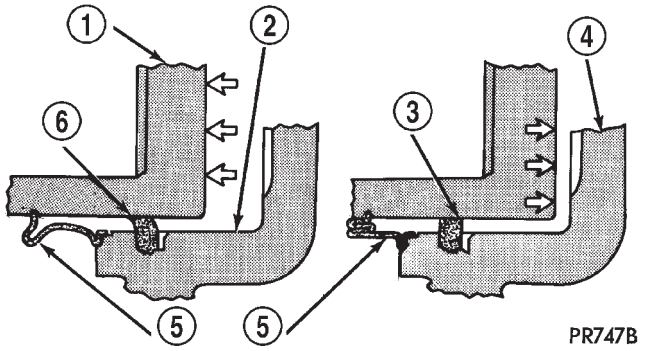

Fig. 19 Caliper Piston Seal Function For Automatic Adjustment

1 - PISTON
2 - CYLINDER BORE
3 - PISTON SEAL BRAKE PRESSURE OFF
4 - CALIPER HOUSING
5 - DUST BOOT
6 - PISTON SEAL BRAKE PRESSURE ON

OPERATION - DISC BRAKES (REAR)

The rear disc brakes operate similarly to front disc brakes, however, there are some features that require different service procedures.

DIAGNOSIS AND TESTING - DRUM BRAKE AUTOMATIC ADJUSTER

The rear drum brakes on this vehicle automatically adjust when required during the normal operation of the vehicle every time the brakes are applied. Use the following procedure to test the operation of the automatic adjuster.

Place the vehicle on a hoist with a helper in the driver's seat to apply the brakes. Remove the access plug from the adjustment hole in each brake support plate to provide visual access of the brake adjuster star wheel.

To eliminate the condition where maximum adjustment of the rear brake shoes does not allow the automatic adjuster to operate when tested, back the star wheel off approximately 30 notches. It will be necessary to hold the adjuster lever away from the star wheel to permit this adjustment.

Have the helper apply the brakes. Upon application of the brake pedal, the adjuster lever should move down, turning the adjuster star wheel. Thus, a definite rotation of the adjuster star wheel can be observed if the automatic adjuster is working properly. If one or more adjusters do not function properly, the respective drum must be removed for adjuster servicing.

BRAKE LINES

DESCRIPTION - BRAKE TUBES AND HOSES

The brake tubes are steel with a corrosion-resistant nylon coating applied to the external surfaces. The flex hoses are made of reinforced rubber with fittings at each end.

The primary and secondary brake tubes leading from the master cylinder to the ABS ICU Hydraulic Control Unit (HCU) or the non-ABS junction block have a special flexible section. This flexible section is required due to cradle movement while the vehicle is in motion (The ICU and non-ABS junction block are mounted to the cradle). **If replacement of these lines is necessary, only the original factory brake line containing the flexible section must be used**.

OPERATION - BRAKE TUBES AND HOSES

The purpose of the chassis brake tubes and flex hoses is to transfer the pressurized brake fluid developed by the master cylinder to the wheel brakes of the vehicle. The flex hoses are made of rubber to allow for the movement of the vehicle's suspension.

INSPECTION - BRAKE TUBES AND HOSES

Flexible rubber hose is used at both front brakes and at the rear axle. Inspection of brake hoses should be performed whenever the brake system is serviced and every 7,500 miles or 12 months, whichever comes first (every engine oil change). Inspect hydraulic brake hoses for surface cracking, scuffing, or worn spots. If the fabric casing of the rubber hose becomes exposed due to cracks or abrasions in the rubber hose cover, the hose should be replaced immediately. Eventual deterioration of the hose can take place with possible burst failure. Faulty installation can cause twisting, resulting in wheel, tire, or chassis interference.

The brake tubing should be inspected periodically for evidence of physical damage or contact with moving or hot components.

The flexible brake tube sections used on this vehicle in the primary and secondary tubes from the master cylinder to the ABS hydraulic control unit connections must also be inspected. This flexible tubing must be inspected for kinks, fraying and contact with other components or with the body of the vehicle.

BRAKE PADS/SHOES - FRONT

REMOVAL

REMOVAL - FRONT DISC BRAKE SHOES (DISC/DISC BRAKES)

(1) Raise the vehicle. (Refer to LUBRICATION & MAINTENANCE/HOISTING - STANDARD PROCEDURE).

(2) Remove both front wheel and tire assemblies.

(3) Begin on one side of the vehicle.

(4) Remove the anti-rattle clip from the outboard side of the caliper and adapter.

(5) Remove the two caliper guide pin bolts.

(6) Remove caliper from caliper adapter and brake rotor.

CAUTION: Supporting weight of caliper by the flexible brake fluid hose can damage the hose.

(7) Using wire or cord, hang the caliper from the front strut assembly (Fig. 20). Support the caliper firmly to prevent weight of caliper from being supported by the brake fluid hose.

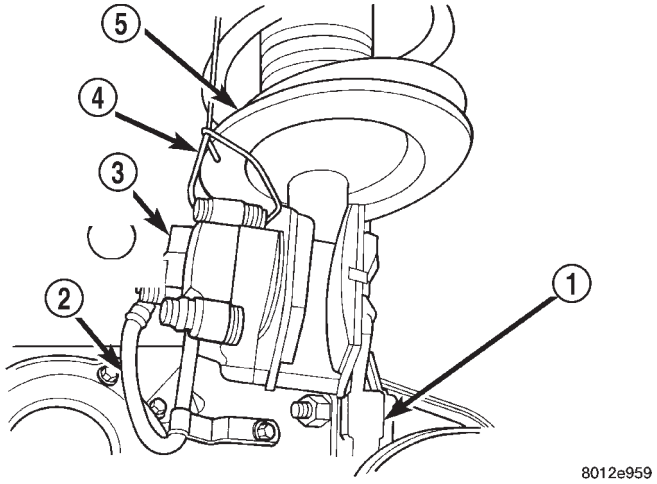

Fig. 20 Stored Front Disc Brake Caliper

1 - STEERING KNUCKLE
2 - BRAKE FLEX HOSE
3 - CALIPER ASSEMBLY
4 - WIRE HANGER
5 - STRUT ASSEMBLY

(8) Remove the outboard brake shoe from the caliper adapter.

(9) Pull the inboard brake shoe away from the caliper piston until the retaining clip on shoe is free from the cavity in the caliper piston (Fig. 21).

(10) Repeat the above procedure on other side of the vehicle.

BRAKE PADS/SHOES - FRONT (Continued)

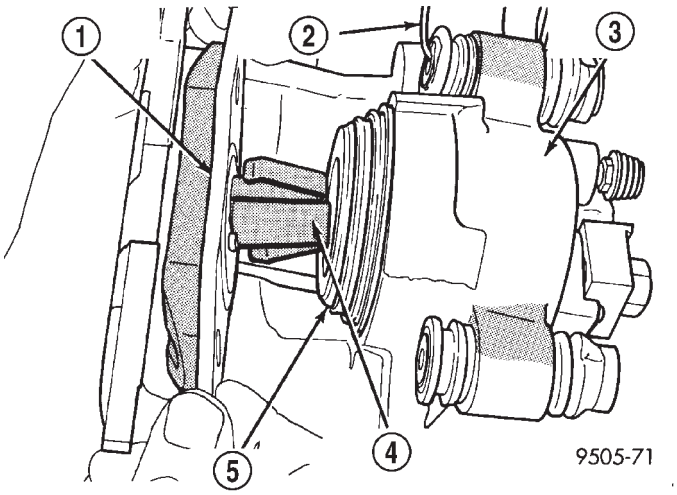

Fig. 21 Removing Inboard Shoe

1 - INBOARD BRAKE SHOE
2 - HANGER WIRE
3 - CALIPER ASSEMBLY
4 - RETAINING CLIP
5 - PISTON

REMOVAL - FRONT DISC BRAKE SHOES (DISC/DRUM BRAKES)

(1) Raise the vehicle. Refer to HOISTING in LUBRICATION AND MAINTENANCE.

NOTE: Perform Step 2 through Step 5 on each side of the vehicle.

(2) Remove the front tire and wheel assembly.
(3) Remove the two brake caliper guide pin bolts (Fig. 22).

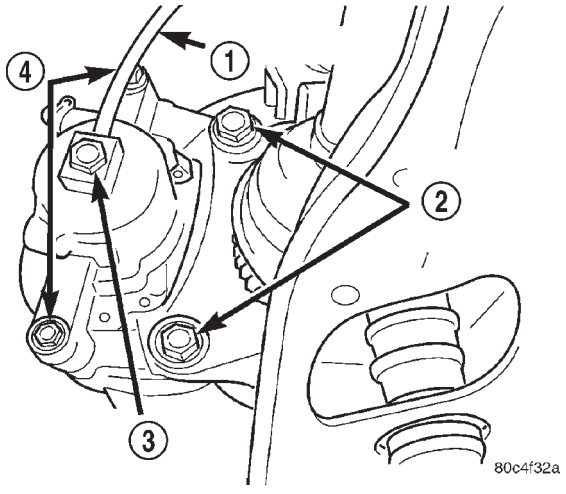

Fig. 22 Brake Caliper Mounting (Typical)

1 - BRAKE HOSE
2 - ADAPTER MOUNTING BOLTS
3 - BANJO BOLT
4 - CALIPER GUIDE PIN BOLTS

(4) Remove the disc brake caliper from the disc brake adapter and hang out of the way using wire or a bungee cord. Use care not to overextend the brake hose when doing this.
(5) Remove the brake shoes from the disc brake caliper adapter.

CLEANING - DISC BRAKE SHOES

WARNING: DUST AND DIRT ACCUMULATING ON BRAKE PARTS DURING NORMAL USE MAY CONTAIN ASBESTOS FIBERS FROM PRODUCTION OR AFTERMARKET BRAKE LININGS. BREATHING EXCESSIVE CONCENTRATIONS OF ASBESTOS FIBERS CAN CAUSE SERIOUS BODILY HARM. EXERCISE CARE WHEN SERVICING BRAKE PARTS. DO NOT SAND OR GRIND BRAKE LINING UNLESS EQUIPMENT USED IS DESIGNED TO CONTAIN THE DUST RESIDUE. DO NOT CLEAN BRAKE PARTS WITH COMPRESSED AIR OR BY DRY BRUSHING. CLEANING SHOULD BE DONE BY DAMPENING THE BRAKE COMPONENTS WITH A FINE MIST OF WATER, THEN WIPING THE BRAKE COMPONENTS CLEAN WITH A DAMPENED CLOTH. DISPOSE OF CLOTH AND ALL RESIDUE CONTAINING ASBESTOS FIBERS IN AN IMPERMEABLE CONTAINER WITH THE APPROPRIATE LABEL. FOLLOW PRACTICES PRESCRIBED BY THE OCCUPATIONAL SAFETY AND HEALTH ADMINISTRATION (OSHA) AND THE ENVIRONMENTAL PROTECTION AGENCY (EPA) FOR THE HANDLING, PROCESSING, AND DISPOSING OF DUST OR DEBRIS THAT MAY CONTAIN ASBESTOS FIBERS.

INSPECTION - DISC BRAKE SHOES

Visually inspect brake shoes (pads) for uneven lining wear. Also inspect for excessive lining deterioration. Check the clearance between the tips of the wear indicators on the shoes (if equipped) and the brake rotors.

If a visual inspection does not adequately determine the condition of the lining, a physical check will be necessary. To check the amount of lining wear, remove the disc brake shoes from the calipers.

Measure each brake shoe. The combined brake shoe and its lining material thickness should be measured at its thinnest point.

- For front disc brake shoes, when a set of brake shoes are worn to a thickness of approximately 7.95 mm (5/16 inch), they should be replaced.
- For rear disc brake shoes, when a set of brake shoes are worn to a thickness of approximately 7.0 mm (9/32 inch), they should be replaced.
- Typically, if front shoes are worn out, both fronts and rears need to be replaced. Make sure to check rears.

BRAKE PADS/SHOES - FRONT (Continued)

Replace **both** disc brake shoes (inboard and outboard) on each caliper. It is necessary to replace the shoes on the opposite side of the vehicle as well as the shoes failing inspection.

If the brake shoe assemblies do not require replacement, be sure to reinstall the brake shoes in the original position they were removed from.

INSTALLATION

INSTALLATION - FRONT DISC BRAKE SHOES

NOTE: There may be more than 1 lining material released. Make sure proper linings are being installed.

(1) Begin on one side of the vehicle or the other.

(2) Completely retract the caliper piston back into its bore in the brake caliper (This is required for caliper installation on the brake rotor with new brake shoes installed).

(3) If applied, remove the protective paper from the noise suppression gasket on the rear of both the inner and outer brake shoe assemblies.

(4) Install the new inboard brake shoe into the caliper piston by firmly pressing its retaining clip into the piston bore. Be sure the inboard brake shoe is positioned squarely against the face of the caliper piston.

(5) Lubricate both adapter abutments where the shoes slide with a small amount of Mopar® Dielectric grease, or equivalent.

(6) Slide the new outboard brake shoe into the caliper adapter with the lining up against the outside of the brake rotor.

CAUTION: Use care when installing the caliper assembly onto the caliper adapter, so the caliper guide pin bushings do not get damaged by the adapter bosses.

(7) Carefully position the brake caliper over the brake rotor and adapter.

(8) Install the caliper guide pin bolts and tighten to a torque of 35 N·m (26 ft. lbs.). **Extreme caution should be taken not to cross thread the caliper guide pin bolts.**

(9) Install the caps over the caliper guide pin bolts.

(10) Install the new caliper hold down spring (anti-rattle clip) on the outboard side of the caliper. Start the spring into the holes on the caliper, then stretch the clip legs past the abutments on the caliper adapter.

(11) Repeat the above procedure on other side of the vehicle.

(12) Install the wheel and tire assemblies. Tighten the wheel mounting nuts in proper sequence until all nuts are torqued to half specification, then repeat the tightening sequence to the full specified torque of 135 N·m (100 ft. lbs.).

(13) Lower vehicle.

(14) Pump the brake pedal several times. This will set the shoes to the brake rotor.

(15) Check and adjust brake fluid level as necessary.

(16) Road test the vehicle and make several stops to wear off any foreign material on the brakes and to seat the brake shoes.

INSTALLATION - FRONT DISC BRAKE SHOES (DISC/DRUM BRAKES)

NOTE: Perform steps Step 1 through Step 5on each side of the vehicle.

(1) Place the brake shoes in the adapter anti-rattle clips.

(2) Completely retract the caliper piston back into the bore of the caliper.

CAUTION: Use care when installing the caliper onto the disc brake adapter to avoid damaging the boots on the caliper guide pins.

(3) Install the disc brake caliper over the brake shoes on the brake caliper adapter.

(4) Align the caliper guide pin bolt holes with the guide pins. Install the caliper guide pin bolts and tighten them to a torque of 35 N·m (26 ft. lbs.) (Fig. 22).

(5) Install the tire and wheel assembly. Tighten the wheel mounting nuts to a torque of 135 N·m (100 ft. lbs.).

(6) Lower the vehicle.

(7) Pump the brake pedal several times. This will set the shoes to the brake rotor.

(8) Check and adjust the brake fluid level as necessary.

(9) Road test the vehicle and make several stops to wear off any foreign material on the brakes and to seat the brake shoes.

BRAKE PADS/SHOES - REAR DISC

REMOVAL - REAR DISC BRAKE SHOES

(1) Raise vehicle. (Refer to LUBRICATION & MAINTENANCE/HOISTING - STANDARD PROCEDURE).

BRAKE PADS/SHOES - REAR DISC (Continued)

(2) Remove rear wheel and tire assemblies from vehicle.

(3) Remove the caliper to adapter guide pin bolts (Fig. 23).

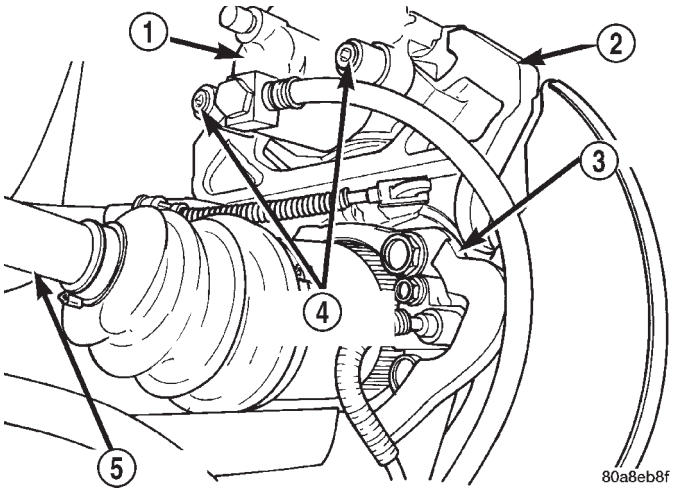

Fig. 23 Caliper Guide Pin Bolts

1 - DISC BRAKE CALIPER
2 - ADAPTER
3 - AXLE
4 - GUIDE PIN BOLTS
5 - DRIVESHAFT (AWD MODELS ONLY)

(4) Remove rear caliper from adapter using the following procedure. First rotate front of caliper up from the adapter. Then pull the rear of the caliper and the outboard brake shoe anti-rattle clip out from under the rear abutment on the adapter (Fig. 24).

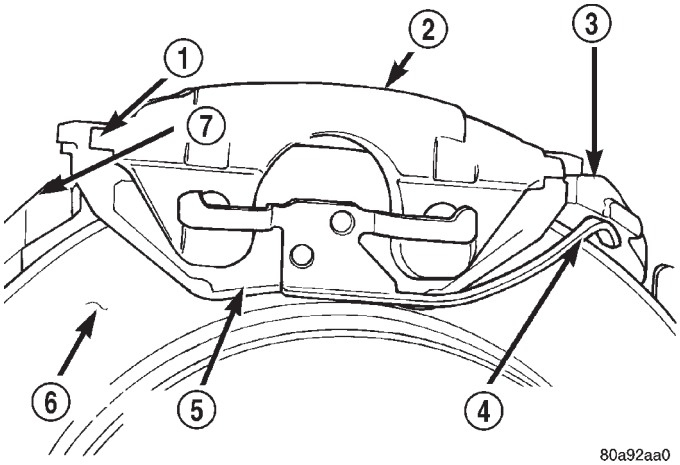

Fig. 24 Removing/Installing Caliper

1 - LIFT THIS END OF CALIPER AWAY FROM ADAPTER FIRST
2 - DISC BRAKE CALIPER
3 - ADAPTER ABUTMENT
4 - OUTBOARD BRAKE SHOE HOLD DOWN CLIP
5 - OUTBOARD BRAKE SHOE
6 - ROTOR
7 - ADAPTER

(5) Support caliper to prevent the weight of the caliper from damaging the flexible brake hose (Fig. 25).

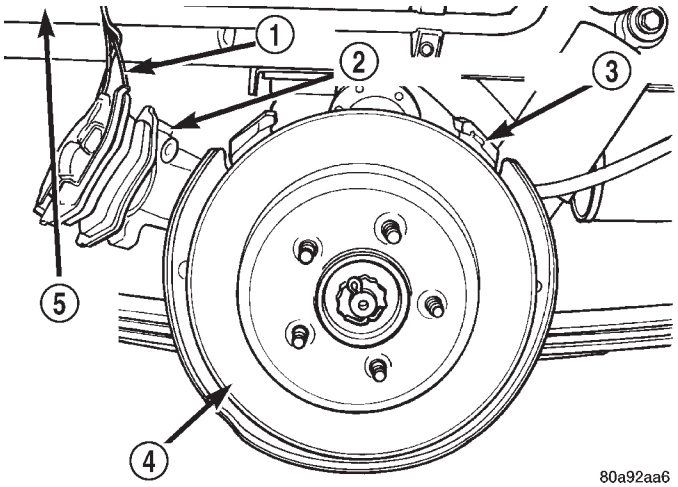

Fig. 25 Correctly Supported Caliper

1 - WIRE
2 - CALIPER
3 - ADAPTER
4 - ROTOR
5 - INNER FENDER

(6) If the brake rotor needs to be removed it can be removed by removing the retainer clips and then pulling the rotor straight off the wheel mounting studs.

(7) Remove the outboard brake shoe from the caliper. Brake shoe is removed by pushing the shoe toward the piston, disengaging the two metal protrusions on the shoe back, then sliding the brake shoe off the caliper.

(8) Remove inboard brake shoe from caliper. Inboard brake shoe is removed by pulling it out of the caliper piston, until the retaining clip is free of the piston (Fig. 26).

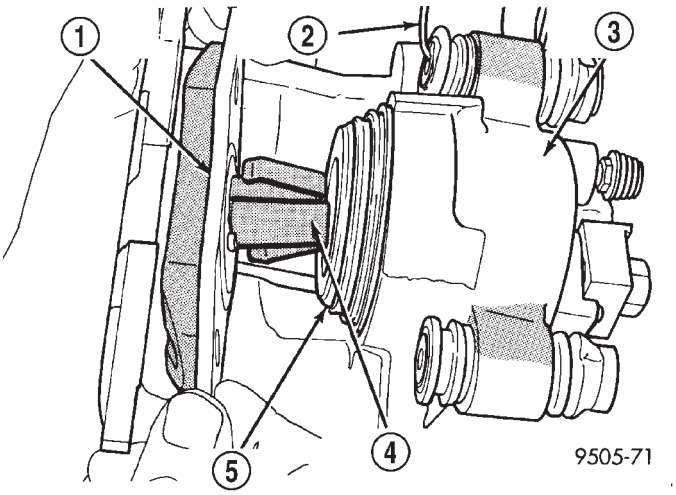

Fig. 26 Removing Inboard Brake Shoe

1 - INBOARD BRAKE SHOE
2 - HANGER WIRE
3 - CALIPER ASSEMBLY
4 - RETAINING CLIP
5 - PISTON

CLEANING - DISC BRAKE SHOES

WARNING: DUST AND DIRT ACCUMULATING ON BRAKE PARTS DURING NORMAL USE MAY CONTAIN ASBESTOS FIBERS FROM PRODUCTION OR AFTERMARKET BRAKE LININGS. BREATHING EXCESSIVE CONCENTRATIONS OF ASBESTOS FIBERS CAN CAUSE SERIOUS BODILY HARM. EXERCISE CARE WHEN SERVICING BRAKE PARTS. DO NOT SAND OR GRIND BRAKE LINING UNLESS EQUIPMENT USED IS DESIGNED TO CONTAIN THE DUST RESIDUE. DO NOT CLEAN BRAKE PARTS WITH COMPRESSED AIR OR BY DRY BRUSHING. CLEANING SHOULD BE DONE BY DAMPENING THE BRAKE COMPONENTS WITH A FINE MIST OF WATER, THEN WIPING THE BRAKE COMPONENTS CLEAN WITH A DAMPENED CLOTH. DISPOSE OF CLOTH AND ALL RESIDUE CONTAINING ASBESTOS FIBERS IN AN IMPERMEABLE CONTAINER WITH THE APPROPRIATE LABEL. FOLLOW PRACTICES PRESCRIBED BY THE OCCUPATIONAL SAFETY AND HEALTH ADMINISTRATION (OSHA) AND THE ENVIRONMENTAL PROTECTION AGENCY (EPA) FOR THE HANDLING, PROCESSING, AND DISPOSING OF DUST OR DEBRIS THAT MAY CONTAIN ASBESTOS FIBERS.

INSPECTION - DISC BRAKE SHOES

Visually inspect brake shoes (pads) for uneven lining wear. Also inspect for excessive lining deterioration. Check the clearance between the tips of the wear indicators on the shoes (if equipped) and the brake rotors.

If a visual inspection does not adequately determine the condition of the lining, a physical check will be necessary. To check the amount of lining wear, remove the disc brake shoes from the calipers.

Measure each brake shoe. The combined brake shoe and its lining material thickness should be measured at its thinnest point.

- For front disc brake shoes, when a set of brake shoes are worn to a thickness of approximately 7.95 mm (5/16 inch), they should be replaced.
- For rear disc brake shoes, when a set of brake shoes are worn to a thickness of approximately 7.0 mm (9/32 inch), they should be replaced.
- Typically, if front shoes are worn out, both fronts and rears need to be replaced. Make sure to check rears.

Replace **both** disc brake shoes (inboard and outboard) on each caliper. It is necessary to replace the shoes on the opposite side of the vehicle as well as the shoes failing inspection.

If the brake shoe assemblies do not require replacement, be sure to reinstall the brake shoes in the original position they were removed from.

INSTALLATION - REAR DISC BRAKE SHOES

(1) Completely retract caliper piston back into piston bore of caliper assembly.

(2) Lubricate both adapter abutments where the shoes contact with a liberal amount of Mopar® Multipurpose Lubricant, or equivalent.

(3) If removed, install the brake rotor on the hub, making sure it is squarely seated on the face of the hub.

(4) Install the inboard brake shoe into the caliper piston by firmly pressing it into the piston bore using your thumbs. Be sure inboard brake shoe is positioned squarely against the face of the caliper piston.

NOTE: The outboard shoes are different left to right. They can be identified by a L or R stamped on the clip.

(5) Install the outboard brake shoe on the disc brake caliper. Be sure the outboard shoe is positioned squarely against the outboard fingers of the caliper.

CAUTION: Use care when installing the caliper assembly onto the adapter, so the caliper guide pin bushings do not get damaged by the mounting bosses.

(6) Carefully lower caliper and brake shoes over rotor and onto adapter, reversing the removal procedure (Fig. 24).

BRAKE PADS/SHOES - REAR DISC (Continued)

CAUTION: When installing the caliper guide pin bolts extreme caution should be taken not to crossthread the guide pin bolts.

(7) Install the caliper guide pin bolts. Tighten the guide pin bolts to a torque of 35 N·m (26 ft. lbs.).

(8) Install the wheel and tire assembly. Tighten the wheel mounting nuts in proper sequence until all nuts are torqued to half specification. Then repeat the tightening sequence to the full specified torque of 135 N·m (100 ft. lbs.).

(9) Lower vehicle.

CAUTION: Before moving vehicle, pump the brake pedal several times to insure the vehicle has a firm brake pedal to adequately stop the vehicle.

(10) Pump brake pedal several times to set brake shoes to rotors.

(11) Check fluid level in reservoir.

(12) Road test the vehicle and make several stops to wear off any foreign material on the brakes and to seat the brake shoe linings.

BRAKE PADS/SHOES - REAR DRUM

REMOVAL - REAR DRUM BRAKE SHOES

(1) Raise vehicle. (Refer to LUBRICATION & MAINTENANCE/HOISTING - STANDARD PROCEDURE).

(2) Remove the rear wheel and tire assemblies from the vehicle.

(3) Remove rear brake drum to hub retaining clips (if equipped), then remove rear brake drums. (Refer to 5 - BRAKES/HYDRAULIC/MECHANICAL/DRUM - REMOVAL)

NOTE: When creating slack in the park brake cables by locking out the automatic adjuster, (Fig. 27) be sure that the park brake pedal is in the released (most upward) position.

(4) Create slack in the rear park brake cables. Slack is created by grabbing exposed section of front park brake cable and pulling it down and rearward. Slack is maintained in the park brake cable by installing a pair of locking pliers on the park brake cable just rearward of **only the rear** body outrigger bracket. (Fig. 27)

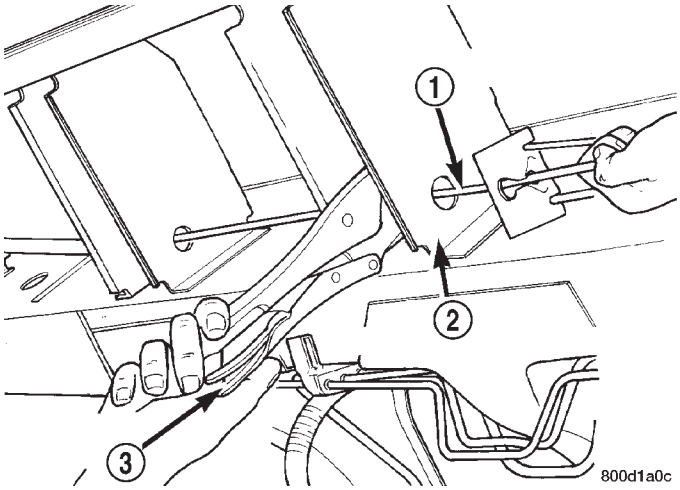

Fig. 27 Locked Out Park Brake Automatic Adjuster

1 - PARK BRAKE CABLE
2 - REAR BODY OUTRIGGER BRACKET
3 - LOCKING PLIERS

(5) Remove adjustment lever spring (Fig. 28) from adjustment lever and front brake shoe.

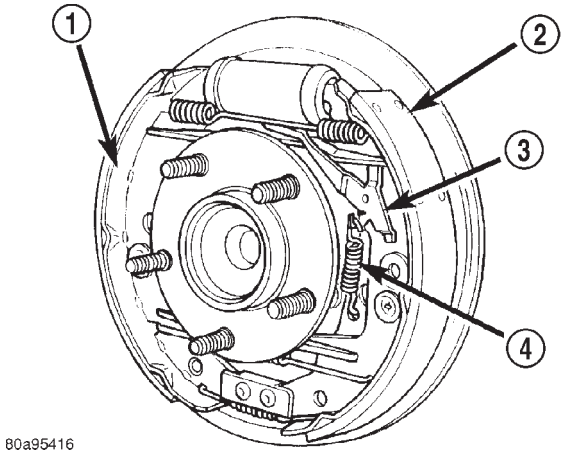

Fig. 28 Adjustment Lever Actuating Spring

1 - TRAILING BRAKE SHOE
2 - LEADING BRAKE SHOE
3 - AUTOMATIC ADJUSTER LEVER
4 - ADJUSTER LEVER ACTUATING SPRING

BRAKE PADS/SHOES - REAR DRUM (Continued)

(6) Remove adjustment lever (Fig. 29) from leading brake shoe.

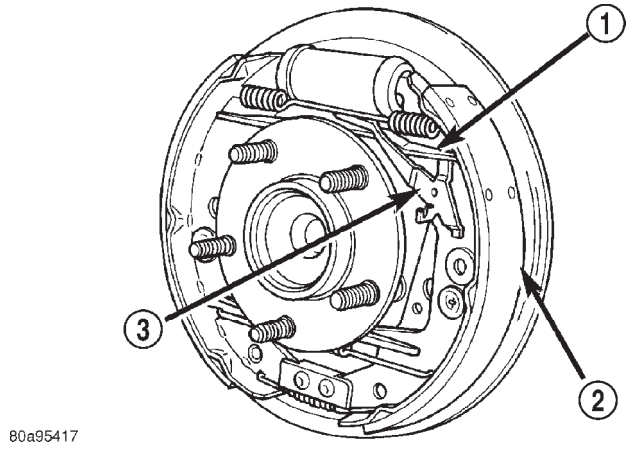

Fig. 29 Adjustment Lever

1 - AUTOMATIC ADJUSTER
2 - LEADING BRAKE SHOE
3 - AUTOMATIC ADJUSTER LEVER

(7) Remove the brake shoe to brake shoe lower return springs (Fig. 30) and (Fig. 31).

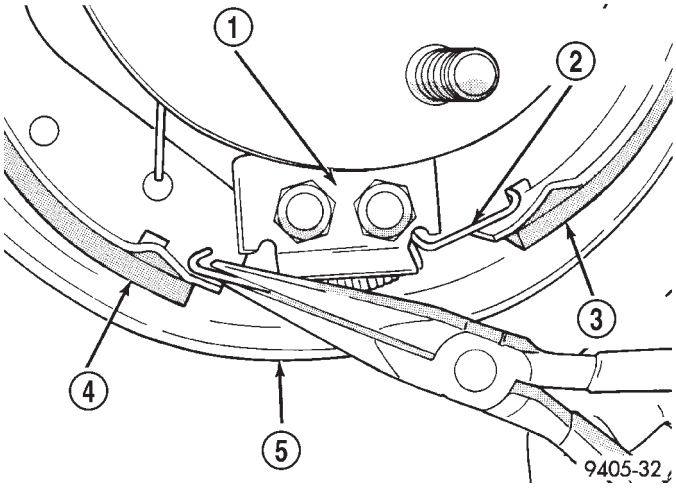

Fig. 30 Remove/Install Brake Shoe Lower Return Spring

1 - ANCHOR PLATE
2 - LOWER BRAKE SHOE RETURN SPRING
3 - REAR BRAKE SHOE
4 - FRONT BRAKE SHOE
5 - BRAKE SUPPORT PLATE

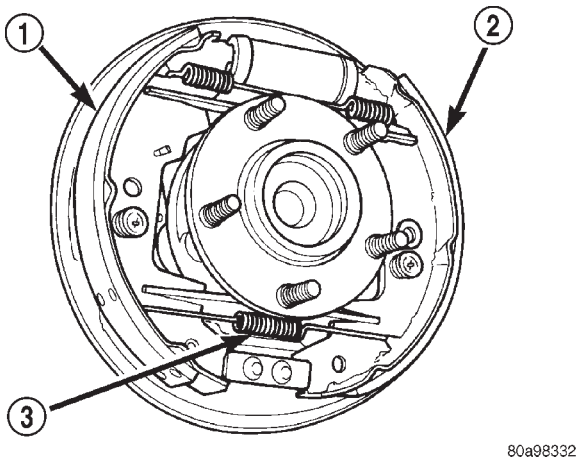

Fig. 31 Brake Shoe Lower Return Spring

1 - TRAILING BRAKE SHOE
2 - LEADING BRAKE SHOE
3 - RETURN SPRING

(8) Remove the tension clip (Fig. 32) attaching the upper return spring to the automatic adjuster assembly.

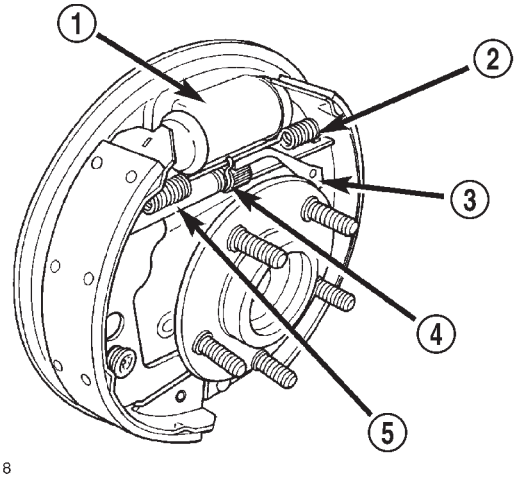

Fig. 32 Tension Clip Attachment To Adjuster

1 - WHEEL CYLINDER
2 - BRAKE SHOE UPPER RETURN SPRING
3 - AUTOMATIC ADJUSTER LEVER
4 - TENSION CLIP
5 - AUTOMATIC ADJUSTER ASSEMBLY

BRAKE PADS/SHOES - REAR DRUM (Continued)

(9) Remove the brake shoe to brake shoe upper return spring (Fig. 33).

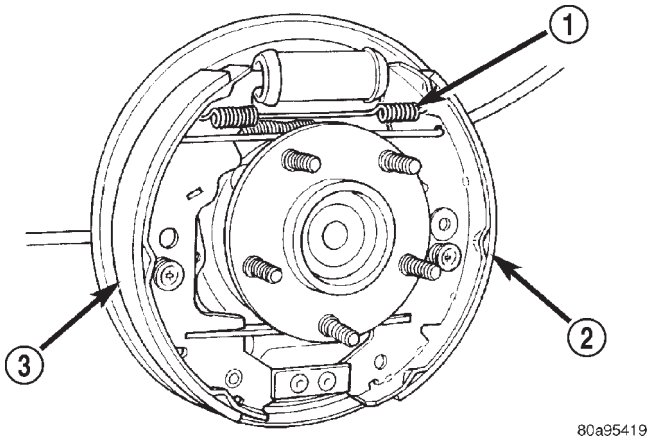

Fig. 33 Brake Shoe Upper Return Spring

1 - BRAKE SHOE RETURN SPRING
2 - LEADING BRAKE SHOE
3 - TRAILING BRAKE SHOE

(10) Remove the trailing brake shoe assembly to brake support plate hold down spring and pin (Fig. 34) from the brake shoe assembly.

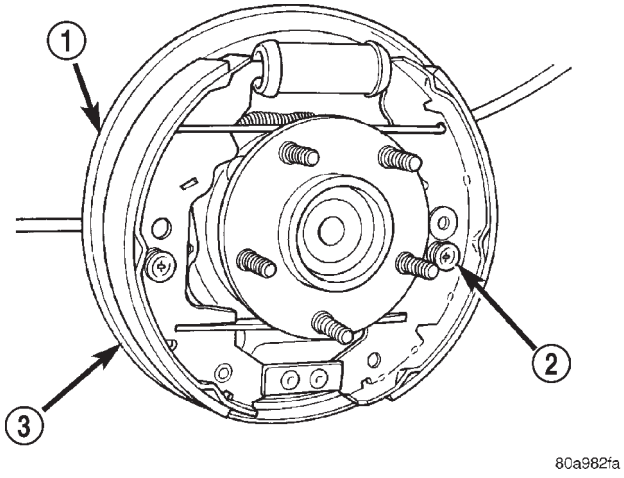

Fig. 34 Trailing Brake Shoe Hold Down Spring And Pin

1 - BRAKE SUPPORT PLATE
2 - HOLD DOWN SPRING AND PIN
3 - TRAILING BRAKE SHOE

(11) Remove the trailing brake shoe assembly from the brake support plate, park brake actuating lever and park brake actuating strut (Fig. 35). Remove the automatic adjuster assembly from the leading brake shoe.

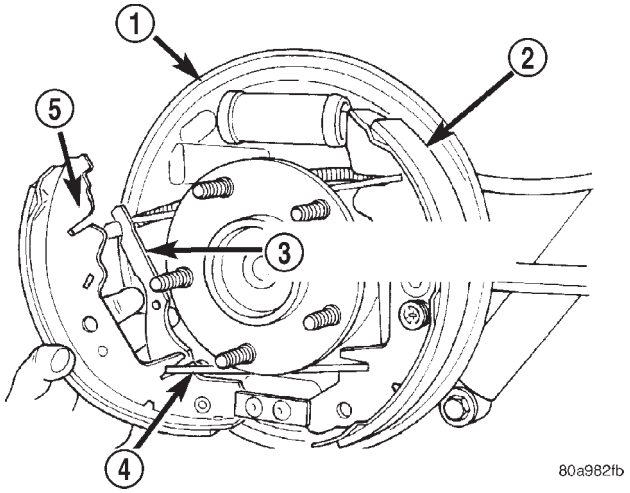

Fig. 35 Trailing Brake Shoe Removal/Installation

1 - BRAKE SUPPORT PLATE
2 - LEADING BRAKE SHOE
3 - PARK BRAKE ACTUATING LEVER
4 - PARK BRAKE ACTUATING STRUT
5 - TRAILING BRAKE SHOE

(12) Remove the leading brake shoe assembly to brake support plate hold down spring and pin (Fig. 36) from the brake shoe. Remove the leading brake shoe from the brake support plate.

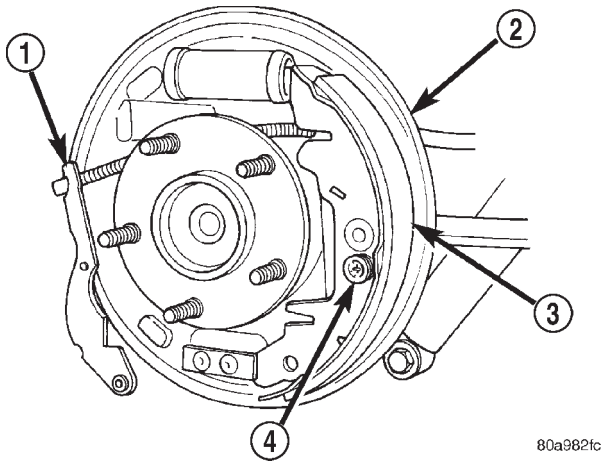

Fig. 36 Leading Brake Shoe Hold Down Spring And Pin

1 - PARK BRAKE ACTUATING LEVER
2 - BRAKE SUPPORT PLATE
3 - LEADING BRAKE SHOE
4 - HOLD DOWN SPRING AND PIN

BRAKE PADS/SHOES - REAR DRUM (Continued)

(13) Remove the park brake actuator (Fig. 37) from the leading brake shoe and transfer to the replacement brake shoe.

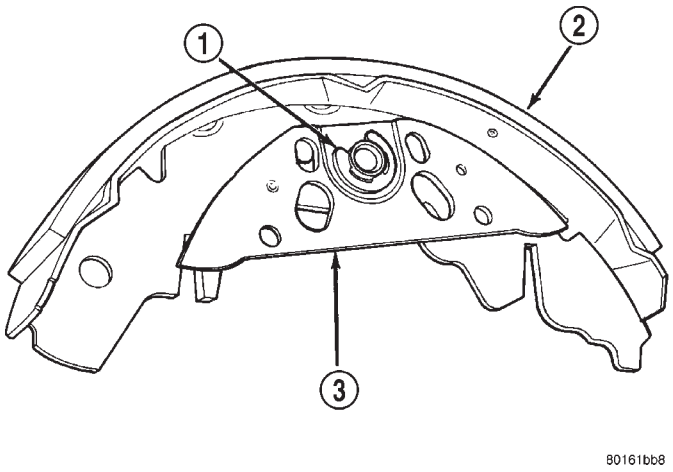

Fig. 37 Park Brake Actuator Plate

1 - RETAINING CLIP
2 - BRAKE SHOE ASSEMBLY
3 - ACTUATOR PLATE

INSPECTION - REAR DRUM BRAKE SHOE LINING

(1) Remove the tire and wheel assembly from the vehicle

(2) Remove the rear brake adjusting hole plug found in the brake support.

(3) Insert a thin screwdriver into brake adjusting hole to hold the adjusting lever away from the notches on the adjusting screw star wheel.

(4) Insert Tool C-3784 into brake adjusting hole and engage notches of brake adjusting screw star wheel. Release brake by prying down with adjusting tool.

(5) Remove the rear brake drum from the rear hub and bearing assembly. (Refer to 5 - BRAKES/HYDRAULIC/MECHANICAL/DRUM - REMOVAL)

(6) Inspect brake lining for wear, shoe alignment, and or contamination from grease or brake fluid.

INSTALLATION - REAR DRUM BRAKE SHOES

(1) Lubricate the eight shoe contact areas on the support plate and anchor, (Fig. 38) using the required special Mopar® Brake Lubricant or equivalent.

(2) Install leading brake shoe on brake support plate. Install the leading brake shoe hold down spring and pin (Fig. 36) on the brake shoe.

(3) Install the park brake actuator strut (Fig. 39) on the leading brake shoe. Then install the park brake actuator lever on the strut (Fig. 39).

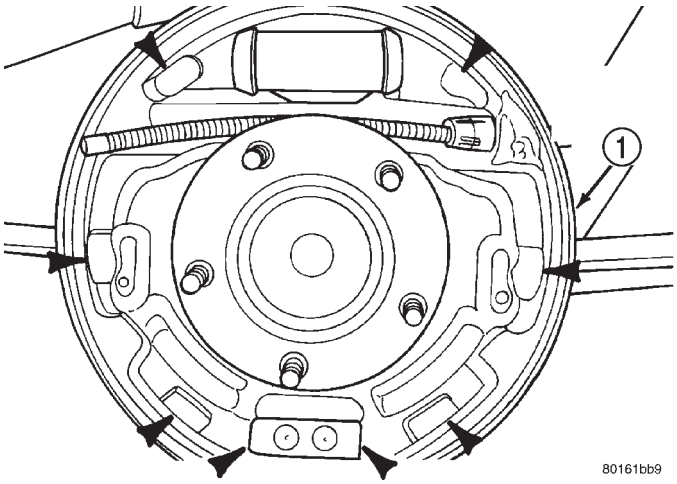

Fig. 38 Brake Support Plate Contact Areas

1 - REAR BRAKE SUPPORT PLATE

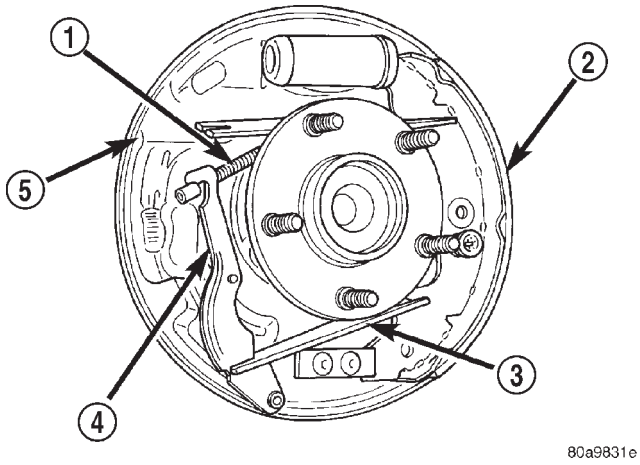

Fig. 39 Park Brake Components Assembled On Leading Brake Shoe

1 - PARK BRAKE CABLE
2 - LEADING BRAKE SHOE
3 - PARK BRAKE ACTUATING STRUT
4 - PARK BRAKE ACTUATING LEVER
5 - BRAKE SUPPORT PLATE

(4) Install the automatic adjuster screw on the leading brake shoe. Then install the trailing brake shoe on the park brake actuating lever and park brake actuating strut (Fig. 35). Position trailing brake shoe on brake support plate.

(5) Install the brake shoe hold down pin and spring on the trailing brake shoe (Fig. 34).

(6) Install the brake shoe to brake shoe upper return spring (Fig. 33).

CAUTION: When installing the tension clip on the automatic adjuster, it must be located on only the threaded area of the adjuster assembly (Fig. 32). If it is located on a non-threaded area of the adjuster, the function of the automatic adjuster will be affected.

(7) Install the tension clip (Fig. 32) attaching the upper return spring to the automatic adjuster assembly.

(8) Install the brake shoe to brake shoe lower return springs on the brake shoes (Fig. 30) and (Fig. 31).

(9) Install automatic adjustment lever on the leading brake shoe of the rear brake assembly (Fig. 29).

(10) Install the actuating spring on the automatic adjustment lever and leading brake shoe assembly (Fig. 28).

(11) Verify that the automatic adjuster lever has positive contact with the star wheel on the automatic adjuster assembly.

(12) When all components of both rear brake assemblies are correctly and fully installed, remove the locking pliers from the front park brake cable.

(13) Adjust brake shoes assemblies so as not to interfere with brake drum installation.

(14) Install the rear brake drums on the hubs.

(15) Adjust rear brake shoes.

(16) Install the wheel and tire assembly.

(17) Tighten the wheel mounting stud nuts in proper sequence until all nuts are torqued to half specification. Then repeat the tightening sequence to the full specified torque of 135 N·m (100 ft. lbs.).

(18) Lower the vehicle.

(19) Push the parking brake lever (pedal) to the floor once and release pedal. This will automatically remove the slack from and correctly adjust the parking brake cables.

(20) Road test vehicle. The automatic adjuster will continue the brake adjustment during the road test of the vehicle.

ADJUSTMENTS

ADJUSTMENT - REAR DRUM BRAKE SHOES

NOTE: Normally, self-adjusting drum brakes do not require manual brake shoe adjustment. Although, in the event of a brake shoe replacement, it is advisable to make the initial adjustment manually to speed up the adjusting time.

NOTE: Before raising the vehicle, verify the parking brake lever is fully released.

(1) Raise the vehicle. (Refer to LUBRICATION & MAINTENANCE/HOISTING - STANDARD PROCEDURE).

(2) Remove rubber plug from rear brake adjusting hole in the rear brake support plate.

(3) Insert a thin screwdriver through the adjusting hole in the support plate and against the star wheel of the adjusting screw. Move handle of the tool upward rotating the star wheel until a slight drag is felt when tire and wheel assembly is rotated.

(4) Insert a second thin screwdriver or piece of welding rod into brake adjusting hole and push the adjusting lever out of engagement with the star wheel. **Care should be taken so as not to bend adjusting lever or distort lever spring.**

(5) While holding the adjusting lever out of engagement, back off the star wheel just enough to ensure a free wheel with no brake shoe drag.

(6) Repeat the above adjustment at the other rear wheel.

(7) Install the adjusting hole rubber plugs back in the rear brake support plates.

(8) Lower the vehicle.

DISC BRAKE CALIPER - FRONT

REMOVAL

REMOVAL - FRONT DISC BRAKE CALIPER (DISC/DISC BRAKES)

(1) Depress the brake pedal past its first inch of travel and hold it in this position using a brake pedal depressor (holding) tool. This is done to isolate the master cylinder from the brake hydraulic system disallowing the brake fluid to completely drain out of the brake fluid reservoir.

(2) Raise the vehicle. (Refer to LUBRICATION & MAINTENANCE/HOISTING - STANDARD PROCEDURE).

(3) Remove front wheel and tire assembly.

(4) Remove the banjo bolt connecting the brake hose to the brake caliper. There are two washers (one on each side of the brake hose fitting) that will come off with the banjo bolt. Discard these washers.

(5) Remove the 2 caliper guide pin bolts.

(6) Remove the brake caliper from the adapter.

REMOVAL - FRONT DISC BRAKE CALIPER (DISC/DRUM BRAKES)

(1) Using a brake pedal holding tool, depress the brake pedal past its first one inch of travel and hold it in this position. This will isolate the master cylinder from the brake hydraulic system and will not

DISC BRAKE CALIPER - FRONT (Continued)

allow the brake fluid to drain out of the master cylinder reservoir when the lines are opened.

(2) Raise the vehicle. Refer to HOISTING in LUBRICATION AND MAINTENANCE.

(3) Remove the front tire and wheel assembly.

(4) Remove the banjo bolt connecting the brake hose to the brake caliper (Fig. 40). There are two washers (one on each side of the flex hose fitting) that will come off with the banjo bolt. Discard the washers.

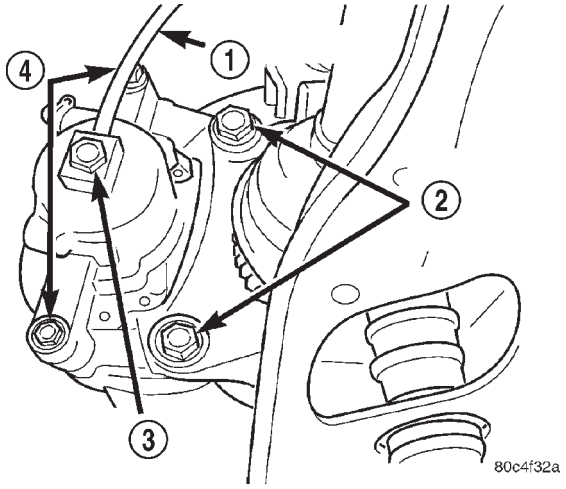

Fig. 40 Brake Caliper Mounting (Typical)

1 - BRAKE HOSE
2 - ADAPTER MOUNTING BOLTS
3 - BANJO BOLT
4 - CALIPER GUIDE PIN BOLTS

(5) Remove the two brake caliper guide pin bolts (Fig. 40).

(6) Remove the disc brake caliper from the disc brake adapter.

DISASSEMBLY

DISASSEMBLY - CALIPER GUIDE PIN BUSHINGS (DISC/DISC BRAKES)

Before disassembling the brake caliper, clean and inspect it. Refer to CLEANING or INSPECTION in this section.

(1) Using your fingers, collapse one side of the rubber guide pin bushing. Pull the guide pin bushing out the other side of the brake caliper mounting boss.

(2) Repeat this procedure on the remaining bushing.

DISASSEMBLY - CALIPER PISTON AND SEAL

WARNING: UNDER NO CONDITION SHOULD HIGH PRESSURE AIR EVER BE USED TO REMOVE A PISTON FROM A CALIPER BORE. PERSONAL INJURY COULD RESULT FROM SUCH A PRACTICE.

NOTE: Before disassembling the brake caliper, clean and inspect it. Refer to CLEANING AND INSPECTION in this section.

NOTE: The safest way to remove the piston from the caliper bore is to use the hydraulic pressure of the vehicle's brake system.

(1) Following the removal procedure in DISC BRAKE SHOES found in this section, remove the caliper from the brake rotor and hang the assembly on a wire hook away from rotor and body of the vehicle so brake fluid cannot get on these components. Remove the brake shoes, and place a small piece of wood between the piston and caliper fingers.

(2) Carefully depress the brake pedal to hydraulically push piston out of its bore. Once completed, apply and hold down the brake pedal to any position beyond the first inch of pedal travel using a brake pedal holding tool. This will prevent the fluid in the master cylinder reservoir from completely draining out.

(3) Disconnect the brake fluid flex hose from the caliper assembly and remove it from the vehicle.

CAUTION: Do not use excessive force when clamping caliper in vise. Excessive vise pressure will cause bore distortion.

(4) Mount the caliper in a vise equipped with protective jaws.

(5) Remove the piston dust boot from the caliper and discard.

NOTE: Do not use a screw driver or other metal tool for seal removal. Using such tools can scratch the bore or leave burrs on the seal groove edges.

(6) Using a soft tool such as a plastic trim stick, work the piston seal out of its groove in caliper piston bore (Fig. 41). Discard the old seal.

(7) Clean the piston bore and drilled passage ways using alcohol or a suitable solvent. Wipe it dry using only a lint-free cloth.

(8) Inspect the piston bore for scoring or pitting. Bores that show light scratches or corrosion can usually be cleared of the light scratches or corrosion using crocus cloth.

DISC BRAKE CALIPER - FRONT (Continued)

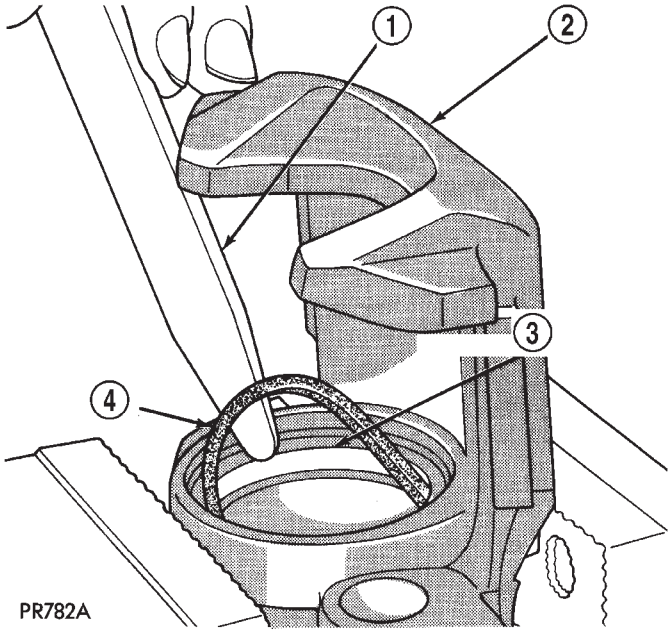

Fig. 41 Removing Piston Seal

1 - PLASTIC TRIM STICK
2 - CALIPER
3 - PISTON SEAL GROOVE
4 - PISTON SEAL

CLEANING - CALIPER

WARNING: DUST AND DIRT ACCUMULATING ON BRAKE PARTS DURING NORMAL USE MAY CONTAIN ASBESTOS FIBERS FROM PRODUCTION OR AFTERMARKET BRAKE LININGS. BREATHING EXCESSIVE CONCENTRATIONS OF ASBESTOS FIBERS CAN CAUSE SERIOUS BODILY HARM. EXERCISE CARE WHEN SERVICING BRAKE PARTS. DO NOT SAND OR GRIND BRAKE LINING UNLESS EQUIPMENT USED IS DESIGNED TO CONTAIN THE DUST RESIDUE. DO NOT CLEAN BRAKE PARTS WITH COMPRESSED AIR OR BY DRY BRUSHING. CLEANING SHOULD BE DONE BY DAMPENING THE BRAKE COMPONENTS WITH A FINE MIST OF WATER, THEN WIPING THE BRAKE COMPONENTS CLEAN WITH A DAMPENED CLOTH. DISPOSE OF CLOTH AND ALL RESIDUE CONTAINING ASBESTOS FIBERS IN AN IMPERMEABLE CONTAINER WITH THE APPROPRIATE LABEL. FOLLOW PRACTICES PRESCRIBED BY THE OCCUPATIONAL SAFETY AND HEALTH ADMINISTRATION (OSHA) AND THE ENVIRONMENTAL PROTECTION AGENCY (EPA) FOR THE HANDLING, PROCESSING, AND DISPOSING OF DUST OR DEBRIS THAT MAY CONTAIN ASBESTOS FIBERS.

To clean or flush the internal passages of the brake caliper, use fresh brake fluid or Mopar® Non-Chlorinated Brake Parts Cleaner. Never use gasoline, kerosene, alcohol, oil, transmission fluid or any fluid containing mineral oil to clean the caliper. These fluids will damage rubber cups and seals.

INSPECTION - CALIPER

Inspect the disc brake caliper for the following:

- Brake fluid leaks in and around boot area and inboard lining
- Ruptures, brittleness or damage to the piston dust boot
- Damaged, dry or brittle guide pin dust boots

If caliper fails inspection, disassemble and recondition caliper, replacing the seals and dust boots.

ASSEMBLY

ASSEMBLY - CALIPER GUIDE PIN BUSHINGS (DISC/DISC BRAKES)

(1) Fold the guide pin bushing in half lengthwise.

NOTE: To avoid damage to the bushing, do not use a sharp object to install the guide pin bushing.

(2) Insert the folded bushing into the caliper mounting boss using your fingers from the rear of the caliper.

(3) Unfold the bushing using your fingers or a wooden dowel until the bushing is fully seated into the caliper housing. The bushing flanges should be seated evenly on both sides of the bushing hole.

(4) Lubricate inside surfaces of bushing using Mopar® Dielectric Grease or equivalent.

(5) Repeat the procedure for remaining bushing.

ASSEMBLY - CALIPER PISTON AND SEAL

NOTE: Never use an old piston seal.

(1) Dip the new piston seal in clean brake fluid and install it in the groove of the caliper bore. The seal should be started at one area of the groove and gently worked around and into the groove (Fig. 42)using only your clean fingers to seat it.

(2) Coat the new piston boot with clean brake fluid.

(3) Position the dust boot over the piston after coating it with brake fluid.

CAUTION: Force applied to the piston to seat it in the bore must be applied uniformly to avoid cocking and binding of the piston.

(4) Install piston into caliper bore pushing it past the piston seal until it bottoms in the caliper bore (Fig. 43).

DISC BRAKE CALIPER - FRONT (Continued)

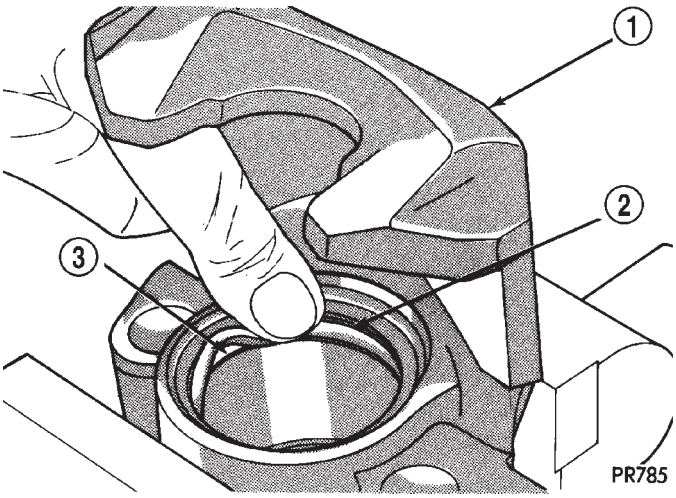

Fig. 42 Installing New Piston Seal

1 - CALIPER
2 - PISTON SEAL
3 - SEAL GROOVE

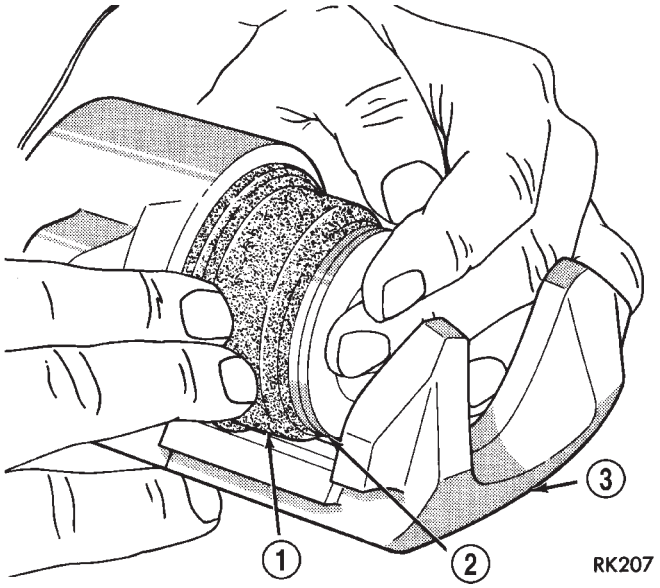

Fig. 43 Installing Piston Into Caliper Bore

1 - BOOT
2 - PISTON
3 - CALIPER

(5) Position the dust boot into the counterbore of the caliper assembly piston bore.

(6) Using a hammer and Installer, Special Tool C-4689 or C-4842 (depending on piston size), and Handle, Special Tool C-4171, drive the boot into the counterbore of the caliper as necessary (Fig. 44).

(7) Reinstall the caliper on the vehicle and bleed the brakes as necessary. Refer to Installation in this section.

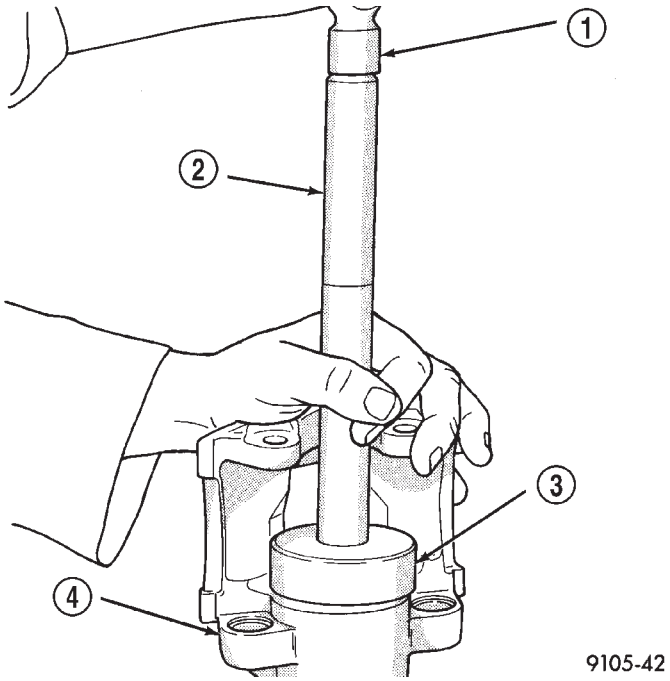

Fig. 44 Installing Dust Boot

1 - HAMMER
2 - SPECIAL TOOL C-4171
3 - SPECIAL TOOL C-4689 or C-4842
4 - CALIPER

INSTALLATION

INSTALLATION - FRONT DISC BRAKE CALIPER (DISC/DISC BRAKES)

CAUTION: TRW and Continental Teves brake calipers are not interchangeable. Each caliper is specifically designed for the unique brake system (TRW - disc/drum brake combination and Continental Teves - disc/disc brake combination). If calipers are interchanged, improper performance, noise and increased stopping distance can occur.

(1) Completely retract the caliper piston back into piston bore of the caliper. Use a C-clamp to retract the piston if necessary. Place a wood block over the piston before installing the C-clamp to avoid damaging the piston.

CAUTION: Use care when installing the brake caliper assembly onto the steering knuckle, so that the seals on the caliper guide pin bushings do not get damaged by the steering knuckle bosses.

(2) Carefully position the brake caliper and shoes over the brake rotor and adapter.

(3) Install the caliper guide pin bolts and tighten to a torque of 35 N·m (26 ft. lbs.). **Extreme caution**

DISC BRAKE CALIPER - FRONT (Continued)

should be taken not to cross thread the caliper guide pin bolts.

(4) Install the anti-rattle clip on the outboard side of the caliper. Start the clip into the holes on the caliper, then stretch the clip legs past the abutments on the caliper adapter.

CAUTION: When connecting the brake hose to the caliper, install new brake hose to caliper special copper washers.

(5) Install the brake hose on the caliper. To do this, first place one NEW special fitting washer on each side of the hose fitting, then slide the banjo bolt through the fitting. Next, thread the banjo bolt into the threaded port on the rear of the brake caliper. Tighten the banjo bolt to a torque of 47 N·m (35 ft. lbs.).

(6) Install the wheel and tire assembly. Tighten the wheel mounting stud nuts in proper sequence until all nuts are torqued to half specification, then repeat the tightening sequence to the full specified torque of 135 N·m (100 ft. lbs.).

(7) Lower the vehicle.

(8) Remove the brake pedal depressor (holding) tool.

(9) Bleed the hydraulic brake circuit to the brake caliper. (Refer to 5 - BRAKES - STANDARD PROCEDURE)

(10) Road test the vehicle and make several stops to wear off any foreign material on the brakes and to seat the brake shoe linings.

INSTALLATION - FRONT DISC BRAKE CALIPER (DISC/DRUM BRAKES)

CAUTION: TRW and Continental Teves brake calipers are not interchangeable. Each caliper is specifically designed for the unique brake system (TRW - disc/drum brake combination and Continental Teves - disc/disc brake combination). If calipers are interchanged, improper performance, noise and increased stopping distance can occur.

(1) Completely retract the caliper piston back into the bore of the caliper. Use a C-clamp to retract the piston if necessary. Place a wood block over the piston before installing the C-clamp to avoid damaging the piston.

CAUTION: Use care when installing the caliper onto the disc brake adapter to avoid damaging the boots on the caliper guide pins.

(2) Install the disc brake caliper over the brake shoes on the brake caliper adapter.

(3) Align the caliper guide pin bolt holes with the guide pins. Install the caliper guide pin bolts and tighten them to a torque of 35 N·m (26 ft. lbs.) (Fig. 40).

(4) Install the banjo bolt connecting the brake hose to the brake caliper (Fig. 40). Install NEW copper washers on each side of the hose fitting as the banjo bolt is guided through the fitting. Thread the banjo bolt into the caliper and tighten it to a torque of 47 N·m (35 ft. lbs.).

(5) Install the tire and wheel assembly. Tighten the wheel mounting nuts to a torque of 135 N·m (100 ft. lbs.).

(6) Lower the vehicle.

(7) Remove the brake pedal holding tool.

(8) Bleed the caliper as necessary. (Refer to 5 - BRAKES - BASE - STANDARD PROCEDURE).

(9) Road test the vehicle and make several stops to wear off any foreign material on the brakes and to seat the brake shoes.

DISC BRAKE CALIPER - REAR

REMOVAL - REAR DISC BRAKE CALIPER

NOTE: Handling of the rotor and caliper, must be done in such a way as to avoid damage to the rotor and scratching or nicking of lining on the brake shoes.

(1) Depress the brake pedal past its first inch of travel and hold it in this position using a brake pedal depressor (holding) tool. This is done to isolate the master cylinder from the brake hydraulic system disallowing the brake fluid to completely drain out of the brake fluid reservoir.

(2) Raise the vehicle. (Refer to LUBRICATION & MAINTENANCE/HOISTING - STANDARD PROCEDURE)

(3) Remove rear wheel and tire assembly from vehicle.

(4) Remove the banjo bolt connecting the brake hose to the brake caliper. There are two washers (one on each side of the brake hose fitting) that will come off with the banjo bolt. Discard these washers.

(5) Remove the disc brake caliper to adapter guide pin bolts (Fig. 45).

(6) Remove rear caliper from adapter using the following procedure. First rotate front of caliper up from the adapter. Then pull the rear of the caliper and the outboard brake shoe anti-rattle clip out from under the rear abutment on the adapter (Fig. 46).

(7) If the brake rotor requires removal, it can now be removed by first removing the retainer clips from the wheel mounting studs, then pulling the rotor straight off the studs.

DISC BRAKE CALIPER - REAR (Continued)

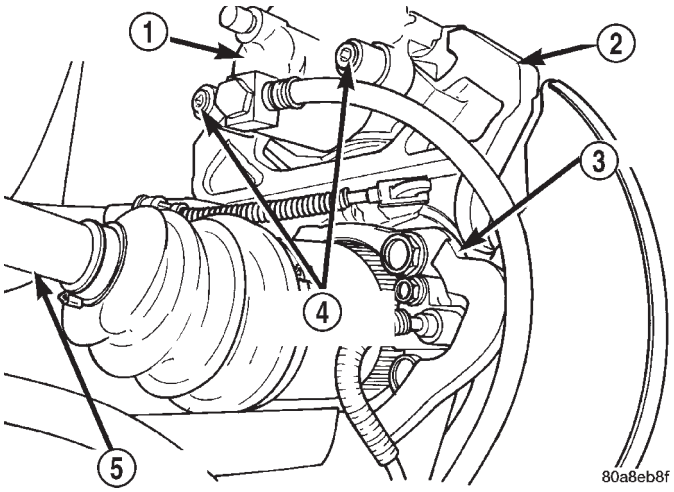

Fig. 45 Caliper Guide Pin Bolts

1 - DISC BRAKE CALIPER
2 - ADAPTER
3 - AXLE
4 - GUIDE PIN BOLTS
5 - DRIVESHAFT (AWD MODELS ONLY)

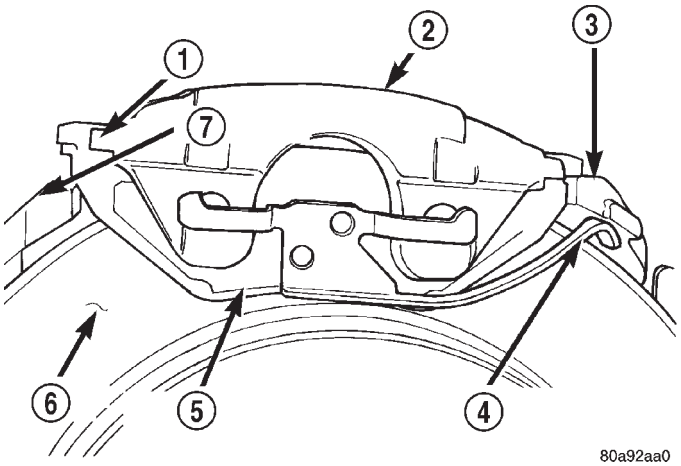

Fig. 46 Removing/Installing Caliper

1 - LIFT THIS END OF CALIPER AWAY FROM ADAPTER FIRST
2 - DISC BRAKE CALIPER
3 - ADAPTER ABUTMENT
4 - OUTBOARD BRAKE SHOE HOLD DOWN CLIP
5 - OUTBOARD BRAKE SHOE
6 - ROTOR
7 - ADAPTER

DISASSEMBLY - CALIPER PISTON AND SEAL

WARNING: UNDER NO CONDITION SHOULD HIGH PRESSURE AIR EVER BE USED TO REMOVE A PISTON FROM A CALIPER BORE. PERSONAL INJURY COULD RESULT FROM SUCH A PRACTICE.

NOTE: Before disassembling the brake caliper, clean and inspect it. Refer to CLEANING AND INSPECTION in this section.

NOTE: The safest way to remove the piston from the caliper bore is to use the hydraulic pressure of the vehicle's brake system.

(1) Following the removal procedure in DISC BRAKE SHOES found in this section, remove the caliper from the brake rotor and hang the assembly on a wire hook away from rotor and body of the vehicle so brake fluid cannot get on these components. Remove the brake shoes, and place a small piece of wood between the piston and caliper fingers.

(2) Carefully depress the brake pedal to hydraulically push piston out of its bore. Once completed, apply and hold down the brake pedal to any position beyond the first inch of pedal travel using a brake pedal holding tool. This will prevent the fluid in the master cylinder reservoir from completely draining out.

(3) Disconnect the brake fluid flex hose from the caliper assembly and remove it from the vehicle.

CAUTION: Do not use excessive force when clamping caliper in vise. Excessive vise pressure will cause bore distortion.

(4) Mount the caliper in a vise equipped with protective jaws.

(5) Remove the piston dust boot from the caliper and discard.

NOTE: Do not use a screw driver or other metal tool for seal removal. Using such tools can scratch the bore or leave burrs on the seal groove edges.

(6) Using a soft tool such as a plastic trim stick, work the piston seal out of its groove in caliper piston bore (Fig. 47). Discard the old seal.

(7) Clean the piston bore and drilled passage ways using alcohol or a suitable solvent. Wipe it dry using only a lint-free cloth.

(8) Inspect the piston bore for scoring or pitting. Bores that show light scratches or corrosion can usually be cleared of the light scratches or corrosion using crocus cloth.

DISC BRAKE CALIPER - REAR (Continued)

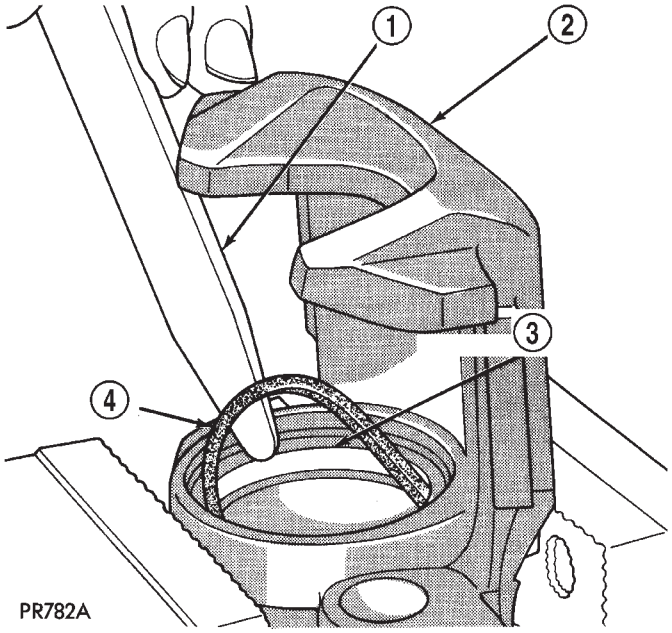

Fig. 47 Removing Piston Seal

1 - PLASTIC TRIM STICK
2 - CALIPER
3 - PISTON SEAL GROOVE
4 - PISTON SEAL

CLEANING - CALIPER

WARNING: DUST AND DIRT ACCUMULATING ON BRAKE PARTS DURING NORMAL USE MAY CONTAIN ASBESTOS FIBERS FROM PRODUCTION OR AFTERMARKET BRAKE LININGS. BREATHING EXCESSIVE CONCENTRATIONS OF ASBESTOS FIBERS CAN CAUSE SERIOUS BODILY HARM. EXERCISE CARE WHEN SERVICING BRAKE PARTS. DO NOT SAND OR GRIND BRAKE LINING UNLESS EQUIPMENT USED IS DESIGNED TO CONTAIN THE DUST RESIDUE. DO NOT CLEAN BRAKE PARTS WITH COMPRESSED AIR OR BY DRY BRUSHING. CLEANING SHOULD BE DONE BY DAMPENING THE BRAKE COMPONENTS WITH A FINE MIST OF WATER, THEN WIPING THE BRAKE COMPONENTS CLEAN WITH A DAMPENED CLOTH. DISPOSE OF CLOTH AND ALL RESIDUE CONTAINING ASBESTOS FIBERS IN AN IMPERMEABLE CONTAINER WITH THE APPROPRIATE LABEL. FOLLOW PRACTICES PRESCRIBED BY THE OCCUPATIONAL SAFETY AND HEALTH ADMINISTRATION (OSHA) AND THE ENVIRONMENTAL PROTECTION AGENCY (EPA) FOR THE HANDLING, PROCESSING, AND DISPOSING OF DUST OR DEBRIS THAT MAY CONTAIN ASBESTOS FIBERS.

To clean or flush the internal passages of the brake caliper, use fresh brake fluid or Mopar® Non-Chlorinated Brake Parts Cleaner. Never use gasoline, kerosene, alcohol, oil, transmission fluid or any fluid containing mineral oil to clean the caliper. These fluids will damage rubber cups and seals.

INSPECTION - CALIPER

Inspect the disc brake caliper for the following:

- Brake fluid leaks in and around boot area and inboard lining
- Ruptures, brittleness or damage to the piston dust boot
- Damaged, dry or brittle guide pin dust boots

If caliper fails inspection, disassemble and recondition caliper, replacing the seals and dust boots.

ASSEMBLY - CALIPER PISTON AND SEAL

NOTE: Never use an old piston seal.

(1) Dip the new piston seal in clean brake fluid and install it in the groove of the caliper bore. The seal should be started at one area of the groove and gently worked around and into the groove (Fig. 48)using only your clean fingers to seat it.

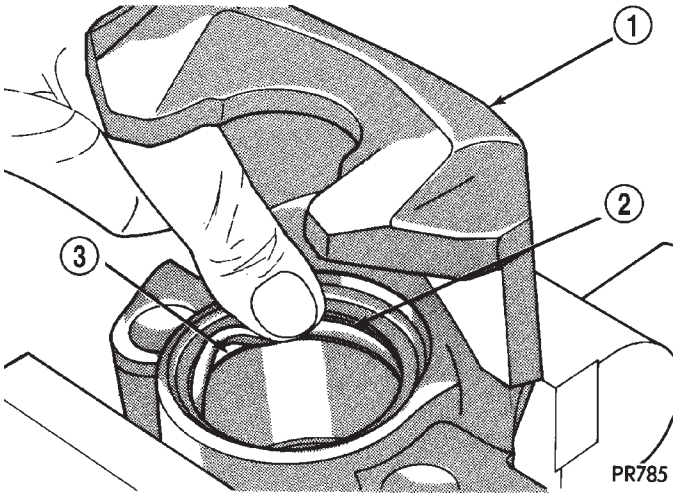

Fig. 48 Installing New Piston Seal

1 - CALIPER
2 - PISTON SEAL
3 - SEAL GROOVE

(2) Coat the new piston boot with clean brake fluid.

(3) Position the dust boot over the piston after coating it with brake fluid.

CAUTION: Force applied to the piston to seat it in the bore must be applied uniformly to avoid cocking and binding of the piston.

(4) Install piston into caliper bore pushing it past the piston seal until it bottoms in the caliper bore (Fig. 49).

DISC BRAKE CALIPER - REAR (Continued)

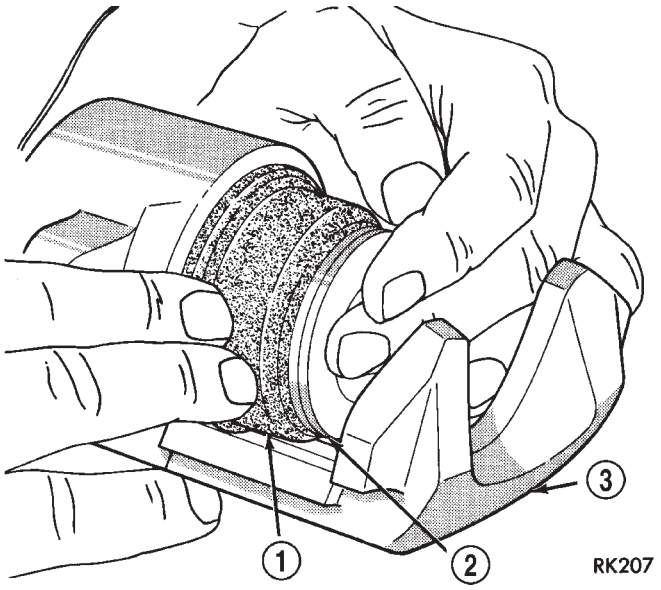

Fig. 49 Installing Piston Into Caliper Bore

1 - BOOT
2 - PISTON
3 - CALIPER

(5) Position the dust boot into the counterbore of the caliper assembly piston bore.

(6) Using a hammer and Installer, Special Tool C-4689 or C-4842 (depending on piston size), and Handle, Special Tool C-4171, drive the boot into the counterbore of the caliper as necessary (Fig. 50).

(7) Reinstall the caliper on the vehicle and bleed the brakes as necessary. Refer to Installation in this section.

INSTALLATION - REAR DISC BRAKE CALIPER

(1) Completely retract caliper piston back into piston bore of the caliper.

(2) If removed, install the brake rotor on the hub, making sure it is squarely seated on the face of the hub.

CAUTION: Use care when installing the caliper assembly onto the adapter, so the caliper guide pin bushings do not get damaged by the mounting bosses.

(3) Carefully lower caliper and brake shoes over rotor and onto the adapter using the reverse procedure for removal (Fig. 46).

CAUTION: When installing guide pin bolts extreme caution should be taken not to cross-thread the caliper guide pin bolts.

(4) Install the caliper guide pin bolts. Tighten the guide pin bolts to a torque of 35 N·m (26 ft. lbs.).

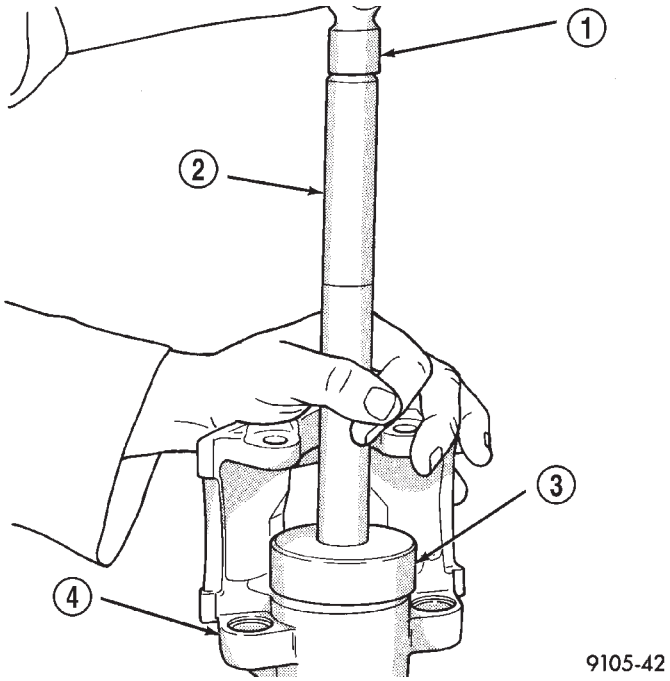

Fig. 50 Installing Dust Boot

1 - HAMMER
2 - SPECIAL TOOL C-4171
3 - SPECIAL TOOL C-4689 or C-4842
4 - CALIPER

CAUTION: When connecting the brake hose to the caliper, install new brake hose to caliper special washers.

(5) Install the brake hose on the caliper. To do this, first place one NEW special copper washer on each side of the hose fitting, then slide the banjo bolt through the fitting. Next, thread the banjo bolt into the threaded port on the rear of the brake caliper. Tighten the banjo bolt to a torque of 47 N·m (35 ft. lbs.).

(6) Install the wheel and tire assembly.

(7) Tighten the wheel mounting stud nuts in proper sequence until all nuts are torqued to half specification. Then repeat the tightening sequence to the full specified torque of 135 N·m (100 ft. lbs.).

(8) Lower the vehicle.

(9) Remove the brake pedal depressor (holding) tool.

(10) Bleed the hydraulic brake circuit to the brake caliper. (Refer to 5 - BRAKES - STANDARD PROCEDURE)

(11) Road test the vehicle and make several stops to wear off any foreign material on the brakes and to seat the brake shoe linings.

DISC BRAKE CALIPER ADAPTER

REMOVAL - FRONT DISC BRAKE CALIPER ADAPTER

(1) Raise vehicle. (Refer to LUBRICATION & MAINTENANCE/HOISTING - STANDARD PROCEDURE)

(2) Remove front wheel and tire assembly, disc brake caliper and brake shoes. (Refer to 5 - BRAKES/HYDRAULIC/MECHANICAL/BRAKE PADS/SHOES - REMOVAL)

(3) Remove two bolts fastening adapter to steering knuckle, then remove disc brake caliper adapter.

INSTALLATION - FRONT DISC BRAKE CALIPER ADAPTER

(1) Place adapter over brake rotor and align adapter mounting holes to knuckle.

CAUTION: Adapter mounting bolts have a special Dacromet® coating applied to resist corrosion. If mounting bolts need to be replaced, use only Mopar® replacement parts.

(2) Install adapter mounting bolts and tighten to 169 N·m (125 ft. lbs.) torque.

(3) Install brake shoes, disc brake caliper and wheel and tire assembly. (Refer to 5 - BRAKES/HYDRAULIC/MECHANICAL/BRAKE PADS/SHOES - INSTALLATION)

(4) Lower vehicle.

(5) Pump the brake pedal several times to set the pads to the brake rotor.

(6) Check and adjust brake fluid level as necessary.

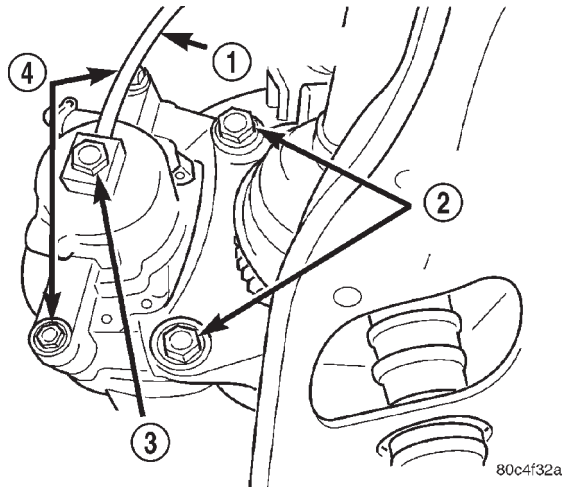

Fig. 51 Brake Caliper Mounting

1 - BRAKE HOSE
2 - ADAPTER MOUNTING BOLTS
3 - BANJO BOLT
4 - CALIPER GUIDE PIN BOLTS

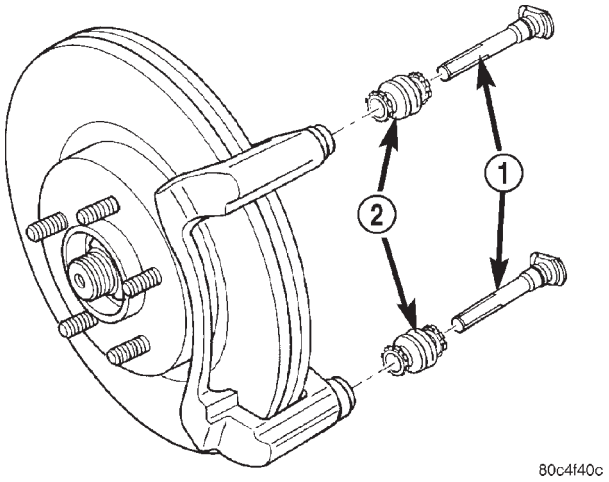

Fig. 52 Guide Pins And Boots

1 - PINS
2 - BOOTS

DISC BRAKE CALIPER GUIDE PINS

REMOVAL - DISC BRAKE CALIPER GUIDE PINS (DISC/DRUM BRAKES)

(1) Raise the vehicle. Refer to HOISTING in LUBRICATION AND MAINTENANCE.

(2) Remove the front tire and wheel assembly.

(3) Remove the two brake caliper guide pin bolts (Fig. 51).

(4) Remove the disc brake caliper from the disc brake caliper adapter and hang it out of the way using wire or a bungee cord. Use care not to overextend the brake hose when doing this.

(5) Remove the guide pins and boots from the adapter as shown (Fig. 52).

INSTALLATION - DISC BRAKE CALIPER GUIDE PINS (DISC/DRUM BRAKES)

(1) Lubricate the guide pins and inside the boots with the packet supplied with the service kit, Syntheso GLK-1 lubricant or equivalent.

(2) Install the guide pins and boots in the adapter as shown (Fig. 52). The boots have grooves built into their inner lips to fit onto the pins and adapter.

CAUTION: Use care when installing the caliper onto the disc brake adapter to avoid damaging the boots on the caliper guide pins.

DISC BRAKE CALIPER GUIDE PINS (Continued)

(3) Install the disc brake caliper over the brake shoes on the brake caliper adapter.

(4) Align the caliper guide pin bolt holes with the guide pins. Install the caliper guide pin bolts and tighten them to a torque of 35 N·m (26 ft. lbs.) (Fig. 51).

(5) Install the tire and wheel assembly. Tighten the wheel mounting nuts to a torque of 135 N·m (100 ft. lbs.).

(6) Lower the vehicle.

(7) Pump the brake pedal several times before moving the vehicle to set the shoes to the brake rotor.

DRUM

REMOVAL

(1) Raise the vehicle. (Refer to LUBRICATION & MAINTENANCE/HOISTING - STANDARD PROCEDURE).

(2) Remove the tire and wheel assembly from the vehicle

(3) Remove the rear brake shoe adjusting hole cover plug.

(4) Insert a thin screwdriver into brake adjusting hole and hold adjusting lever away from notches of adjusting screw star wheel.

(5) Insert another thin screwdriver into brake adjusting hole and engage notches of brake adjusting screw star wheel. Release brake adjustment by prying down with adjusting tool.

(6) Remove rear brake drum from rear hub/bearing assembly.

NOTE: It may be necessary to insert M8 X 1.25 MM bolts into the two removal holes on the drum to force the drum off the hub.

INSTALLATION

(1) Adjust brake shoe assemblies so as not to interfere with brake drum installation.

(2) Install the rear brake drums on the hubs.

(3) Adjust drum brake shoes as necessary per procedure found in the Adjustment section of this service manual group (Refer to 5 - BRAKES/ HYDRAULIC/MECHANICAL/DRUM - ADJUSTMENTS).

(4) Install wheel and tire assembly.

(5) Tighten the wheel mounting stud nuts in proper sequence until all nuts are torqued to half specification. Then repeat the tightening sequence to the full specified torque of 135 N·m (100 ft. lbs.).

(6) Lower the vehicle.

FLUID

DIAGNOSIS AND TESTING - BRAKE FLUID CONTAMINATION

Indications of fluid contamination are swollen or deteriorated rubber parts.

Swollen rubber parts indicate the presence of petroleum in the brake fluid.

To test for contamination, put a small amount of drained brake fluid in clear glass jar. If fluid separates into layers, there is mineral oil or other fluid contamination of the brake fluid.

If brake fluid is contaminated, drain and thoroughly flush system. Replace master cylinder, proportioning valve, caliper seals, wheel cylinder seals, Antilock Brake hydraulic unit and all hydraulic fluid hoses.

STANDARD PROCEDURE - BRAKE FLUID LEVEL CHECKING

Check master cylinder reservoir fluid level a minimum of twice annually.

Fluid reservoirs are marked with the words FULL and ADD to indicate proper brake fluid fill level of the master cylinder.

If necessary, add brake fluid to bring the level to the bottom of the FULL mark on the side of the master cylinder fluid reservoir.

Use only Mopar® brake fluid or equivalent from a sealed container. Brake fluid must conform to DOT 3 specifications (DOT 4 or DOT 4+ are acceptable).

DO NOT use brake fluid with a lower boiling point, as brake failure could result during prolonged hard braking.

Use only brake fluid that was stored in a tightly-sealed container.

DO NOT use petroleum-based fluid because seal damage will result. Petroleum based fluids would be items such as engine oil, transmission fluid, power steering fluid etc.

SPECIFICATIONS

BRAKE FLUID

The brake fluid used in this vehicle must conform to DOT 3 specifications (DOT 4 and DOT 4+ are acceptable) and SAE J1703 standards. No other type of brake fluid is recommended or approved for usage in the vehicle brake system. Use only Mopar® Brake Fluid or equivalent from a tightly sealed container.

CAUTION: Never use reclaimed brake fluid or fluid from an container which has been left open. An open container of brake fluid will absorb moisture from the air and contaminate the fluid.

FLUID (Continued)

CAUTION: Never use any type of a petroleum-based fluid in the brake hydraulic system. Use of such type fluids will result in seal damage of the vehicle brake hydraulic system causing a failure of the vehicle brake system. Petroleum based fluids would be items such as engine oil, transmission fluid, power steering fluid, etc.

JUNCTION BLOCK

DESCRIPTION - NON-ABS JUNCTION BLOCK

A junction block is used on vehicles that are not equipped with antilock brakes (ABS). The junction block mounts in the same location as the integrated control unit (ICU) does on vehicles equipped with ABS. This allows for use of the same brake tube configuration on all vehicles. The junction block is located on the driver's side of the front suspension cradle/crossmember below the master cylinder (Fig. 53).

It has six threaded ports to which the brake tubes connect. Two are for the primary and secondary brake tubes coming from the master cylinder. The remaining four are for the chassis brake tubes going to each brake assembly.

OPERATION - NON-ABS JUNCTION BLOCK

The junction block distributes the brake fluid coming from the master cylinder primary and secondary ports to the four chassis brake tubes leading to the brakes at each wheel. Since the junction block mounts in the same location as the ABS integrated control unit (ICU), it allows for the common use of brake tubes going to the brakes whether the vehicle is equipped with or without ABS.

NOTE: Although the brake tubes coming from the master cylinder to the junction block or ABS ICU may appear to be the same, they are not. They are unique to each brake system application.

REMOVAL - NON-ABS JUNCTION BLOCK

(1) Using a brake pedal depressor, move and lock the brake pedal to a position past its first 1 inch of travel. This will prevent brake fluid from draining out of the master cylinder when the brake tubes are removed from the junction block.

(2) Disconnect the battery negative cable.

(3) If the vehicle is equipped with speed control, perform the following:

(a) Disconnect the battery positive cable.

(b) Remove the battery (Refer to 8 - ELECTRICAL/BATTERY SYSTEM/BATTERY - REMOVAL).

(c) Disconnect the vacuum hose connector at the tank built into the battery tray.

(d) Remove the screw securing the coolant filler neck to the battery tray.

(e) Remove the battery tray (Refer to 8 - ELECTRICAL/BATTERY SYSTEM/TRAY - REMOVAL).

(f) Remove the fasteners and move the speed control servo off to the side, out of the way.

CAUTION: Before removing the brake tubes from the junction block, the junction block and the brake tubes must be thoroughly cleaned. This is required to prevent contamination from entering the brake hydraulic system.

(4) Remove the four chassis brake tubes from the top of the junction block (Fig. 53).

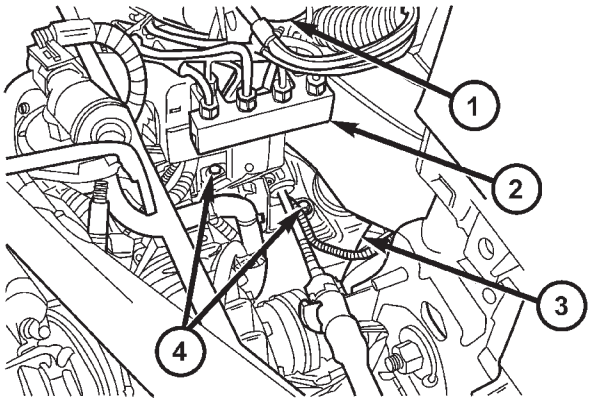

80ad9ddb

Fig. 53 NON-ABS JUNCTION BLOCK

1 - MASTER CYLINDER
2 - JUNCTION BLOCK
3 - SUSPENSION CROSSMEMBER
4 - MOUNTING BOLTS

(5) Remove the primary and secondary brake tubes from the top of the junction block.

(6) Remove the bolts attaching the junction block mounting bracket to the front suspension crossmember (Fig. 53), then remove the junction block.

INSTALLATION - NON-ABS JUNCTION BLOCK

(1) Install the junction block and mounting bracket on the front suspension crossmember (Fig. 53). Install the mounting bolts and tighten to a torque of 28 N·m (250 in. lbs.).

(2) Install the primary and secondary brake tubes from the master cylinder in their ports. Tighten tube nuts to a torque of 17 N·m (145 in. lbs.). **Take care not to twist tubes when tightening tube nuts. They must be properly positioned to allow free movement with rubber isolated suspension crossmember.**

JUNCTION BLOCK (Continued)

(3) Install the four chassis brake tubes into the outlet ports of the junction block. Tighten all 6 tube nuts to a torque of 17 N·m (145 in. lbs.).

(4) If the vehicle is equipped with speed control, perform the following:

(a) Install the speed control servo with its mounting nuts.

(b) Connect the wiring harness to the speed control servo.

(c) Install the battery tray (Refer to 8 - ELECTRICAL/BATTERY SYSTEM/TRAY - INSTALLATION).

(d) Install the screw securing the coolant filler neck to the battery tray.

(e) Reconnect the vacuum hose connector at the tank built into the battery tray.

(f) Install the battery (Refer to 8 - ELECTRICAL/BATTERY SYSTEM/BATTERY - INSTALLATION).

(g) Install the battery shield.

(5) Remove the brake pedal holder.

(6) Connect negative cable back on negative post of the battery.

(7) Bleed the brake system thoroughly to ensure that all air has been expelled from the hydraulic system. (Refer to 5 - BRAKES - STANDARD PROCEDURE).

(8) Road test the vehicle to verify proper operation of the brake system.

MASTER CYLINDER

DESCRIPTION

DESCRIPTION

The master cylinder is located on the power brake booster in the engine compartment on the driver's side (Fig. 54). This vehicle uses 3 different master cylinders. Master cylinder usage depends on what type of brake system the vehicle is equipped with.

CAUTION: Master cylinders are not interchangeable between systems. Performance and stopping distance issues will result if the incorrect master cylinder is installed on the vehicle.

For information on master cylinder application, bore and type, view the following table:

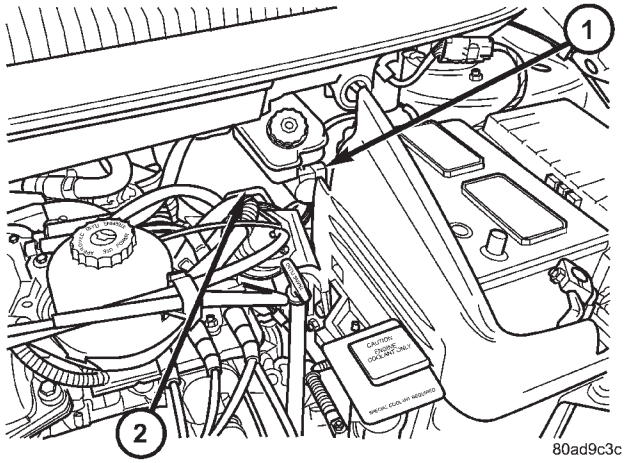

Fig. 54 Master Cylinder And Booster Location

1 - MASTER CYLINDER
2 - POWER BRAKE BOOSTER

BRAKE SYSTEM	MASTER CYLINDER BORE/TYPE
Disc/Drum - ABS	23.8 mm (15/16 in.) Conventional Compensating Port
Disc/Drum - Non-ABS	23.8 mm (15/16 in.) Conventional Compensating Port
Disc/Disc - ABS	27.0 mm (1-1/16 in.) Conventional Compensating Port
Disc/Disc ABS With Traction Control	27.0 mm (1-1/16 in.) Dual Center Port

CAUTION: When replacing a master cylinder, be sure to use the correct master cylinder for the type of brake system the vehicle is equipped with.

The body of the master cylinder is an anodized aluminum casting. It has a machined bore to accept the master cylinder pistons and threaded ports with seats for the hydraulic brake line connections.

The brake fluid reservoir is mounted on the top of the master cylinder. It is made of a see-through polypropylene type plastic for easy fluid level viewing. A brake fluid level switch is attached to the brake fluid reservoir.

The master cylinder is not a repairable component and must be replaced if diagnosed to be functioning improperly. The brake fluid reservoir and brake fluid level switch can be replaced separately.

MASTER CYLINDER (Continued)

CAUTION: Do not hone the bore of the cylinder as this will remove the anodized surface from the bore.

DESCRIPTION - RHD

The master cylinder used on right hand drive (RHD) vehicles functions similarly to that used on left hand drive (LHD) vehicles. The RHD master cylinder, as well as the RHD power brake booster, is located in the same area, but lower in the engine compartment than LHD models (Fig. 55). For that reason an extension manifold is placed between the fluid reservoir and master cylinder housing allowing the fluid reservoir to be positioned in the same location as on LHD models.

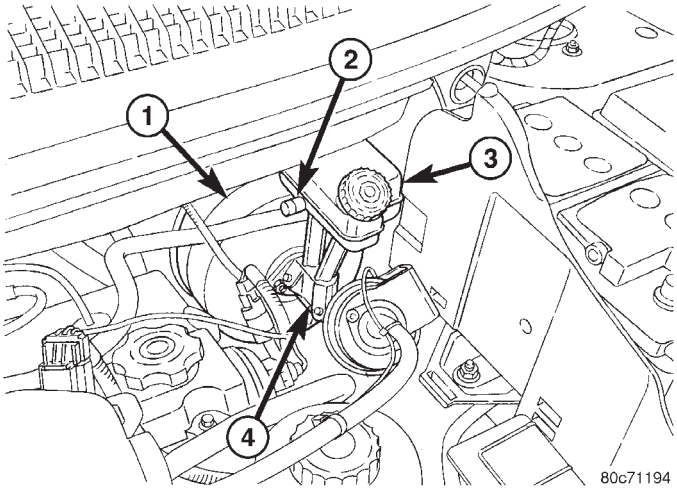

Fig. 55 RHD MASTER CYLINDER AND POWER BRAKE BOOSTER

1 - POWER BRAKE BOOSTER
2 - BRAKE FLUID LEVEL SWITCH
3 - FLUID RESERVOIR
4 - MASTER CYLINDER

OPERATION

When the brake pedal is depressed, the master cylinder primary and secondary pistons apply brake pressure through the chassis tubes to the brakes at each tire and wheel assembly.

The master cylinder primary outlet port supplies hydraulic pressure to the right front and left rear brakes. The secondary outlet port supplies hydraulic pressure to the left front and right rear brakes.

STANDARD PROCEDURE - MASTER CYLINDER BLEEDING

CAUTION: When clamping master cylinder in vise, only clamp master cylinder by its mounting flange. Do not clamp master cylinder piston rod, reservoir, seal or body.

(1) Clamp master cylinder in a vise.

NOTE: Use correct bleeder tubes when bleeding master cylinder. Master cylinder outlet ports vary in size and type depending on whether master cylinder is for a vehicle equipped with traction control or not. Traction control equipped master cylinders require the additional use of ISO style flare adapters supplied in Special Tool Package 8822 to be used in conjunction with Bleeder Tubes, Special Tool Package 8358.

(2) Attach special tools for bleeding master cylinder in the following fashion:

(a) **For non-traction control equipped master cylinders**, thread a Bleeder Tube, Special Tool 8358–1, into each outlet port. Tighten each tube to 17 N·m (145 in. lbs.) torque. Flex bleeder tubes and place open ends into mouth of fluid reservoir as far down as possible (Fig. 56).

(b) **For traction control equipped master cylinders**, thread one Adapter, Special Tool 8822–2, in each outlet port. Tighten Adapters to 17 N·m (145 in. lbs.) torque. Next, thread a Bleeder Tube, Special Tool 8358–1, into each Adapter. Tighten each tube to 17 N·m (145 in. lbs.) torque. Flex bleeder tubes and place open ends into mouth of fluid reservoir as far down as possible (Fig. 56).

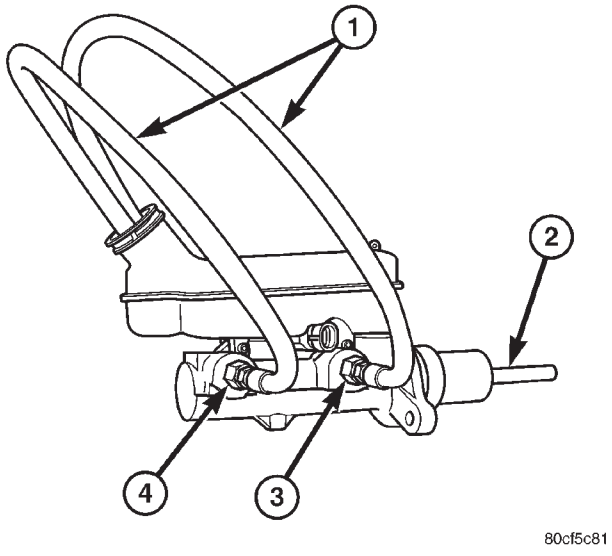

Fig. 56 Master Cylinder Set Up For Bleeding

1 - BLEEDER TUBES 8358
2 - WOODEN DOWEL
3 - ADAPTER 8822-2 (USE ONLY ON TRACTION CONTROL EQUIPPED MASTER CYLINDERS)
4 - ADAPTER 8822-2 (USE ONLY ON TRACTION CONTROL EQUIPPED MASTER CYLINDERS)

MASTER CYLINDER (Continued)

NOTE: Make sure open ends of bleeder tubes stay below surface of brake fluid once reservoir is filled to proper level.

(3) Fill brake fluid reservoir with Mopar® brake fluid or equivalent conforming to DOT 3 (DOT 4 and DOT 4+ are acceptable) specifications. Make sure fluid level is above tips of bleeder tubes in reservoir to ensure no air is ingested during bleeding.

(4) Using a wooden dowel as a pushrod (Fig. 56), slowly depress master cylinder pistons, then release pressure, allowing pistons to return to released position. Repeat several times until all air bubbles are expelled. Make sure fluid level stays above tips of bleeder tubes in reservoir while bleeding.

(5) Remove bleeder tubes from master cylinder outlet ports, then plug outlet ports and install fill cap on reservoir.

(6) Remove master cylinder from vise.

(7) Install master cylinder on vehicle. (Refer to 5 - BRAKES - BASE/HYDRAULIC/MECHANICAL/MASTER CYLINDER - INSTALLATION)

REMOVAL

REMOVAL - LHD

CAUTION: Vacuum in the power brake booster must be pumped down (removed) before removing master cylinder from power brake booster. This is necessary to prevent the power brake booster from sucking in any contamination as the master cylinder is removed. This can be done simply by pumping the brake pedal, with the vehicle's engine not running, until a firm feeling brake pedal is achieved.

(1) With engine not running, pump brake pedal until a firm pedal is achieved (4-5 strokes).

(2) Disconnect negative battery terminal.

(3) Disconnect positive battery terminal.

(4) Remove battery shield.

(5) Remove nut and clamp securing battery to tray, remove battery.

(6) Thoroughly clean all surfaces of the brake fluid reservoir and master cylinder. Use only solvent such as Mopar® Brake Parts Cleaner or equivalent.

(7) Remove wiring harness connector from brake fluid level switch in master cylinder brake fluid reservoir (Fig. 57).

(8) Disconnect primary and secondary brake tubes from master cylinder housing (Fig. 57). Install sealing plugs in the now open brake tube outlet ports.

CAUTION: Before removing the master cylinder from the power brake vacuum booster, the master cylinder and vacuum booster must be thoroughly cleaned. This must be done to prevent dirt particles from falling into the power brake vacuum booster.

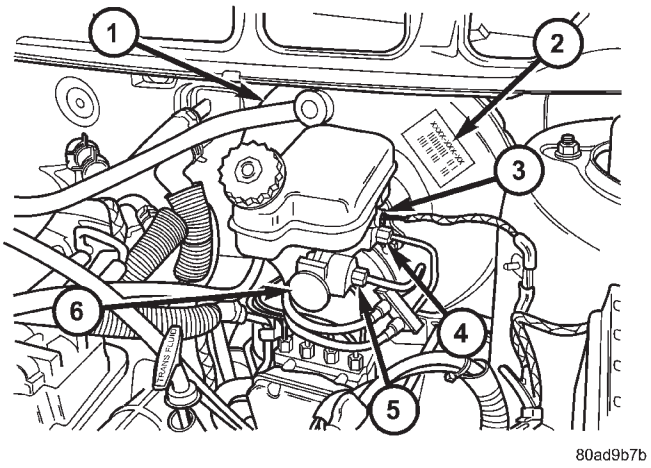

Fig. 57 MASTER CYLINDER AND BOOSTER

1 - POWER BRAKE BOOSTER
2 - BOOSTER IDENTIFICATION LABEL
3 - FLUID LEVEL SWITCH CONNECTOR
4 - PRIMARY BRAKE TUBE NUT
5 - SECONDARY BRAKE TUBE NUT
6 - MASTER CYLINDER

(9) Clean area where master cylinder assembly attaches to power brake booster. Use only a solvent such as Mopar® Brake Parts Cleaner or equivalent.

(10) Remove two nuts attaching master cylinder to power brake booster (Fig. 58).

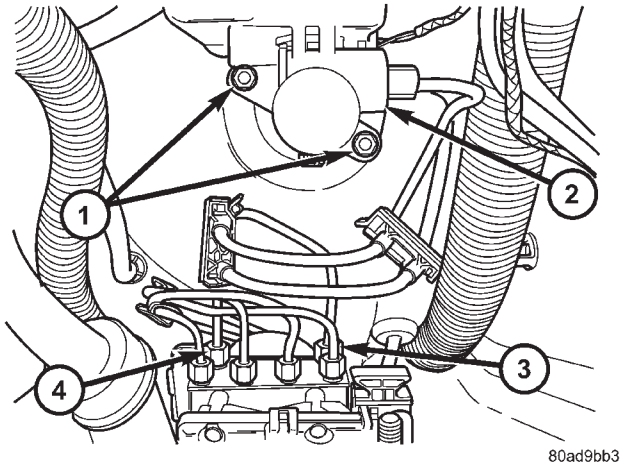

Fig. 58 MASTER CYLINDER MOUNTING

1 - MASTER CYLINDER MOUNTING NUTS
2 - MASTER CYLINDER
3 - SECONDARY TUBE NUT AT ICU
4 - PRIMARY TUBE NUT AT ICU

(11) Slide master cylinder straight out of power brake booster.

MASTER CYLINDER (Continued)

CAUTION: A seal on the rear of the master cylinder is used to create the seal for holding vacuum in the power brake vacuum booster. The vacuum seal on the master cylinder MUST be replaced whenever the master cylinder is removed from the power brake vacuum booster.

(12) Remove vacuum seal located on the mounting flange of the master cylinder. The vacuum seal is removed from master cylinder by **carefully** pulling it off the rear of master cylinder. **Do not attempt to pry the seal off the master cylinder by inserting a sharp tool between seal and master cylinder casting.**

REMOVAL - RHD

CAUTION: Vacuum in the power brake booster must be pumped down (removed) before removing master cylinder from power brake booster. This is necessary to prevent the power brake booster from sucking in any contamination as the master cylinder is removed. This can be done simply by pumping the brake pedal, with the vehicle's engine not running, until a firm feeling brake pedal is achieved.

(1) With engine not running, pump brake pedal until a firm pedal is achieved (4 or 5 strokes).
(2) Disconnect negative battery terminal.
(3) Disconnect positive battery terminal.
(4) Remove battery shield.
(5) Remove nut and clamp securing battery to tray, remove battery.
(6) Thoroughly clean all surfaces of the brake fluid reservoir and master cylinder. Use only solvent such as Mopar® Brake Parts Cleaner or equivalent.
(7) Remove wiring harness connector from brake fluid level switch in master cylinder brake fluid reservoir (Fig. 55).
(8) Disconnect primary and secondary brake tubes from master cylinder housing (Fig. 59). Install sealing plugs in the now open brake tube outlet ports.

CAUTION: Before removing the master cylinder from the power brake vacuum booster, the master cylinder and vacuum booster must be thoroughly cleaned. This must be done to prevent dirt particles from falling into the power brake vacuum booster.

(9) Clean area where master cylinder assembly attaches to power brake booster. Use only a solvent such as Mopar® Brake Parts Cleaner or equivalent.
(10) Remove two nuts attaching master cylinder to power brake booster (Fig. 59).
(11) Slide master cylinder straight out of power brake booster.

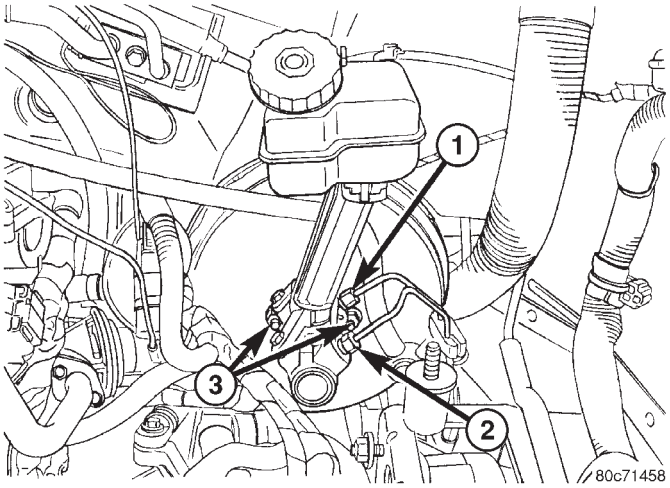

Fig. 59 RHD MASTER CYLINDER MOUNTING

1 - PRIMARY BRAKE TUBE NUT
2 - SECONDARY BRAKE TUBE NUT
3 - MASTER CYLINDER MOUNTING NUTS

CAUTION: A seal on the rear of the master cylinder is used to create the seal for holding vacuum in the power brake vacuum booster. The vacuum seal on the master cylinder MUST be replaced whenever the master cylinder is removed from the power brake vacuum booster.

(12) Remove vacuum seal located on the mounting flange of the master cylinder. The vacuum seal is removed from master cylinder by **carefully** pulling it off the rear of master cylinder. **Do not attempt to pry the seal off the master cylinder by inserting a sharp tool between seal and master cylinder casting.**

DISASSEMBLY - MASTER CYLINDER (FLUID RESERVOIR)

(1) Clean master cylinder housing and brake fluid reservoir. Use only a solvent such as Mopar Brake Parts Cleaner or an equivalent.
(2) Remove brake fluid reservoir cap. Using a syringe or equivalent type tool empty as much brake fluid as possible from the reservoir.

CAUTION: When removing fluid reservoir from the master cylinder, do not pry off using any type of tool. This can damage the fluid reservoir or master cylinder housing.

(3) Remove the master cylinder assembly from the power brake vacuum booster. (Refer to 5 - BRAKES - BASE/HYDRAULIC/MECHANICAL/MASTER CYLINDER - REMOVAL).
(4) Mount the master cylinder in a vise using the master cylinder mounting flange.

MASTER CYLINDER (Continued)

(5) Using correct size pin punch, remove the two retaining pins between the fluid reservoir and master cylinder housing (Fig. 60).

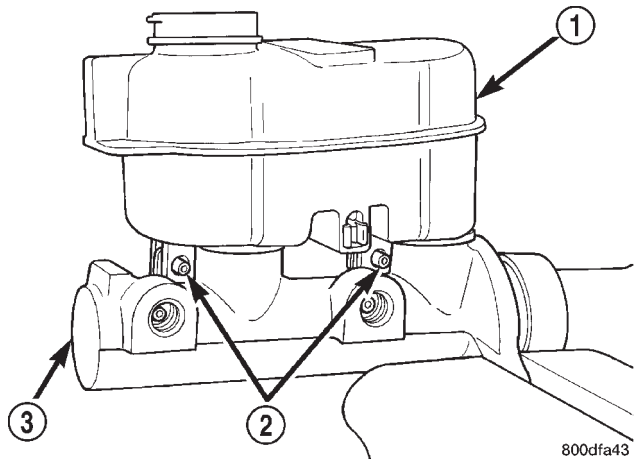

Fig. 60 Fluid Reservoir Retaining Pins (Typical)

1 - FLUID RESERVOIR
2 - RETAINING PINS
3 - MASTER CYLINDER

(6) Rock the brake fluid reservoir from side to side while pulling up to remove it from the seal grommets in master cylinder housing.

(7) Remove the two master cylinder housing to brake fluid reservoir seal grommets (Fig. 61).

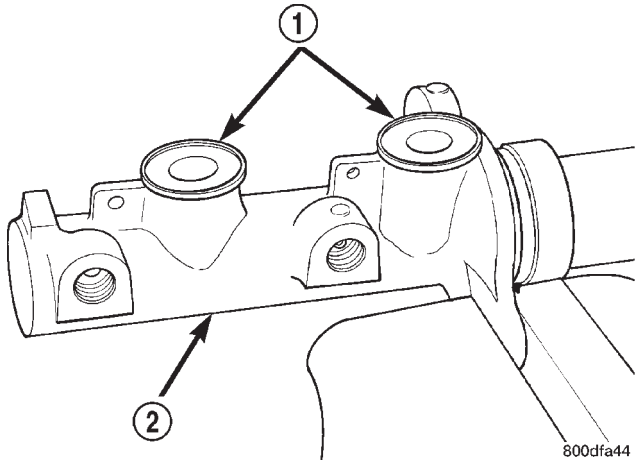

Fig. 61 Master Cylinder To Fluid Reservoir Seal Grommets

1 - SEAL GROMMETS
2 - MASTER CYLINDER

ASSEMBLY - MASTER CYLINDER (FLUID RESERVOIR)

(1) Install new master cylinder housing to brake fluid reservoir sealing grommets in master cylinder housing (Fig. 61).

(2) Lubricate reservoir mounting area with fresh clean brake fluid. Place reservoir in position over sealing grommets. Seat reservoir into sealing grommets using a rocking motion while firmly pressing down on fluid reservoir.

(3) Be sure fluid reservoir is positioned properly on master cylinder. **Bottom of fluid reservoir is to be touching the top of both sealing grommets when properly installed on master cylinder housing.**

(4) Install the two fluid reservoir to master cylinder retaining pins (Fig. 60).

(5) Install the master cylinder assembly on the power brake booster. (Refer to 5 - BRAKES/HYDRAULIC/MECHANICAL/MASTER CYLINDER - INSTALLATION)

(6) Fill fluid reservoir to its proper level as indicated on the side of the fluid reservoir.

INSTALLATION

INSTALLATION - LHD

CAUTION: Different types of master cylinders are used on this vehicle depending on brake options. If a new master cylinder is being installed, be sure it is the correct master cylinder for the type of brake system the vehicle is equipped with.

CAUTION: When replacing the master cylinder on a vehicle, a NEW vacuum seal MUST be installed on the master cylinder.

(1) Install a NEW vacuum seal on master cylinder making sure seal fits squarely in groove of master cylinder casting.

(2) Position master cylinder on studs of power brake booster, aligning booster push rod with master cylinder piston.

(3) Install the two master cylinder mounting nuts (Fig. 58). Tighten both mounting nuts to a torque of 25 N·m (225 in. lbs.).

CAUTION: When tightening the primary and secondary brake tube nuts at master cylinder, be sure brake tubes do not contact any other components within the vehicle and that there is slack in the flexible sections of the tubes. This is required due to the movement between the ABS ICU and the master cylinder while the vehicle is in motion.

(4) Connect primary and secondary brake tubes to master cylinder primary and secondary ports (Fig. 57). Brake tubes must be held securely when tightened to control orientation of flex section. Tighten tube nuts to a torque of 17 N·m (145 in. lbs.).

(5) Install wiring harness connector to brake fluid level switch mounted in brake fluid reservoir (Fig. 57).
(6) Install battery, clamp and nut.
(7) Install battery shield.
(8) Connect positive battery terminal.
(9) Connect negative battery terminal.
(10) Fill master cylinder with clean, fresh Mopar® Brake Fluid or equivalent.
(11) Road test vehicle to ensure proper operation of brakes.

INSTALLATION - RHD

CAUTION: Different types of master cylinders are used on this vehicle depending on brake options. If a new master cylinder is being installed, be sure it is the correct master cylinder for the type of brake system the vehicle is equipped with.

CAUTION: When replacing the master cylinder on a vehicle, a NEW vacuum seal MUST be installed on the master cylinder.

(1) Install a NEW vacuum seal on master cylinder making sure seal fits squarely in groove of master cylinder casting.
(2) Position master cylinder on studs of power brake booster, aligning booster push rod with master cylinder piston.
(3) Install the two master cylinder mounting nuts (Fig. 59). Tighten both mounting nuts to a torque of 25 N·m (225 in. lbs.).

CAUTION: When tightening the primary and secondary brake tube nuts at master cylinder, be sure brake tubes do not contact any other components within the vehicle and that there is slack in the flexible sections of the tubes. This is required due to the movement between the ABS ICU and the master cylinder while the vehicle is in motion.

(4) Connect primary and secondary brake tubes to master cylinder primary and secondary ports (Fig. 59). Brake tubes must be held securely when tightened to control orientation of flex section. Tighten tube nuts to a torque of 17 N·m (145 in. lbs.).
(5) Install wiring harness connector to brake fluid level switch mounted in brake fluid reservoir (Fig. 55).
(6) Install battery, clamp and nut.
(7) Install battery shield.
(8) Connect positive battery terminal.
(9) Connect negative battery terminal.
(10) Fill master cylinder with clean, fresh Mopar® Brake Fluid or equivalent.
(11) Road test vehicle to ensure proper operation of brakes.

PEDAL - ADJUSTABLE

DESCRIPTION

The Adjustable Pedals System (APS) is designed to enable the fore and aft repositioning of the brake and accelerator pedals. This results in improved ergonomics in relation to the steering wheel for taller and shorter drivers. Being able to adjust the pedal positions also allows the driver to set steering wheel tilt and seat position to the most comfortable position. The effort required for pedal application will not change regardless of pedal position.

The adjustable pedal system allows the pedals to adjust up to 3 inches (75 mm) at a rate of approximately 0.4 in./sec. (9 mm/sec.). An adjustment switch is located on the left side of the steering column lower shroud.

If the vehicle is equipped with Remote Keyless Entry (RKE), an optional memory feature is available.

The serviceable components of the APS are:

- Adjustable pedal assembly (includes motor, cables, pedals, gear box, sensor and module)
- Adjustable pedal module (Refer to 8 - ELECTRICAL/ELECTRONIC CONTROL MODULES/ ADJUSTABLE PEDAL MODULE)
- Adjustable pedal switch
- Pedal position sensor

OPERATION

Change of pedal position is accomplished by means of a motor driven screw. Operating the adjustable pedal switch activates the pedal drive motor. The pedal drive motor turns a screw that changes the position of the accelerator pedal. The motor also drives a cable connected to a gear box that changes the brake pedal position the same distance as the accelerator pedal. The pedals can be moved rearward (closer to the driver) or forward (away from driver). Each pedal is moved on its activating lever to a position where the driver feels most comfortable. The position and operation of the activating levers are not changed.

Pedal adjustment is inhibited when the vehicle is in reverse or when cruise control is engaged. The Electronic Vehicle Information Center (EVIC) will display a message when the Adjustable Pedal Module (APM) is disabled. i.e.: ″Adjustable Pedal Disabled - Cruise Control Engaged″ or ″Adjustable Pedal Disabled - Vehicle in Reverse″.

Foot pressure or debris can stall pedal adjustment. In order to avoid damage to system components dur-

PEDAL - ADJUSTABLE (Continued)

ing pedal adjustment, the APM will monitor pedal position sensor voltage. If the APM does not detect expected voltage change within 3 seconds, it will cut power to the adjustable pedal motor.

An optional memory feature is available. This allows storing of one or two preferred pedal positions in the APS. A preferred position can be stored and recalled using the door-mounted switches. A stored pedal position can be recalled (but not stored) using the Remote Keyless Entry (RKE) if equipped with the memory feature.

DIAGNOSIS AND TESTING - ADJUSTABLE PEDAL SYSTEM

Refer to Appropriate Diagnostic Information.

REMOVAL

NOTE: Before proceeding, review all Steering Column and Airbag Warnings and Cautions. (Refer to 19 - STEERING/COLUMN - WARNING)(Refer to 8 - ELECTRICAL/RESTRAINTS - WARNING)

(1) Remove battery ground cable terminal from battery negative post and isolate.

(2) Under instrument panel, remove silencer panel below lower steering column cover.

(3) Remove screws securing lower steering column cover/knee blocker, then remove it (Fig. 62).

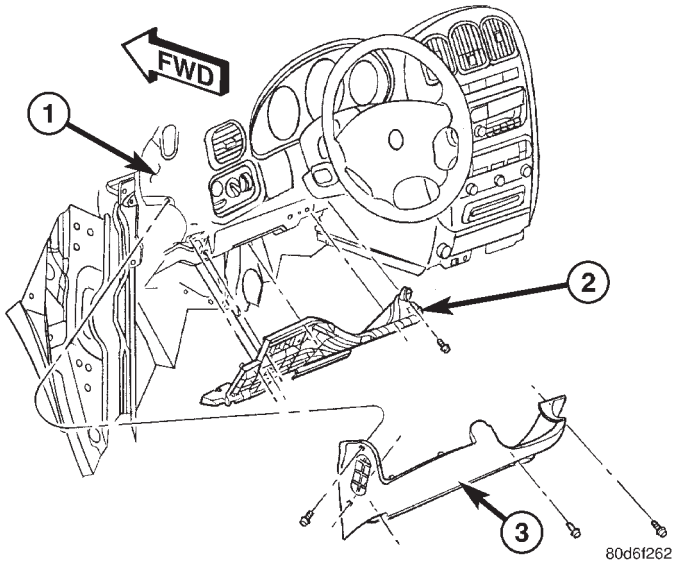

Fig. 62 Lower Steering Column Cover And Reinforcement

1 - INSTRUMENT PANEL
2 - REINFORCEMENT PLATE
3 - LOWER STEERING COLUMN COVER/KNEE BLOCKER

(4) Disconnect parking brake release link at release handle.

(5) Compress tabs on sides of data link diagnostic connector and remove it from knee blocker reinforcement plate.

(6) Remove screws securing knee blocker reinforcement plate in place, then remove reinforcement plate (Fig. 62).

(7) Remove screws securing instrument panel lower left reinforcement in place, then remove reinforcement (Fig. 63).

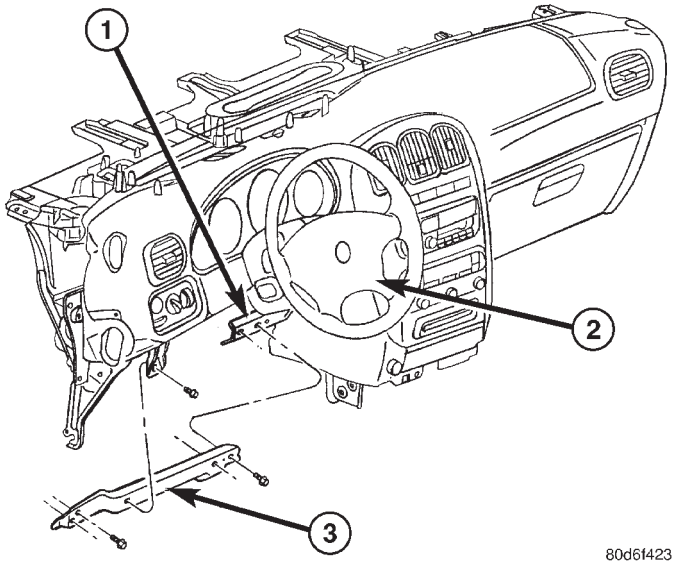

Fig. 63 Instrument Panel Lower Left Reinforcement

1 - INSTRUMENT PANEL LOWER REINFORCEMENT
2 - STEERING WHEEL
3 - LOWER LEFT REINFORCEMENT

(8) Remove brake lamp switch. Discard the original switch; it must not be reused (Refer to 8 - ELECTRICAL/LAMPS/LIGHTING - EXTERIOR/BRAKE LAMP SWITCH - REMOVAL)

(9) Remove screws fastening upper and lower steering column shrouds to steering column (Fig. 64).

(10) Remove the lower shroud with adjustable pedal switch; disconnect switch wiring connector along left side of column as shroud is removed (Fig. 65).

(11) Disconnect traction control off switch wiring connector; Remove upper shroud with traction control off switch.

(12) Disconnect wiring harness connectors (as equipped) from clockspring, multi-function switch, halo lamp, SKIM module, ignition switch and BTSI solenoid (Fig. 65).

(13) Disconnect column wiring harness routing clip from column.

PEDAL - ADJUSTABLE (Continued)

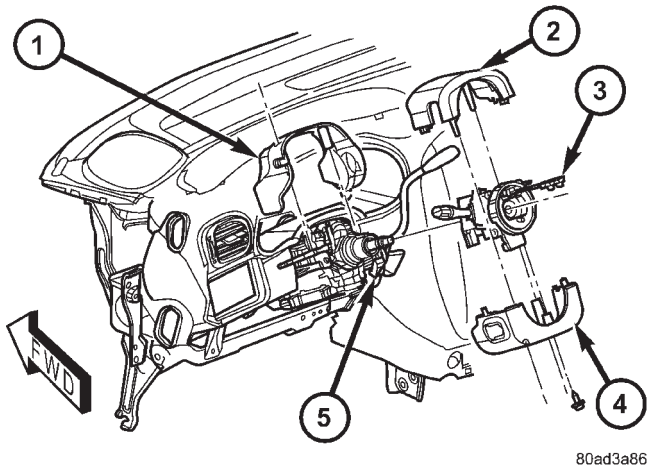

Fig. 64 Steering Column Shrouds

1 - FIXED SHROUD
2 - UPPER SHROUD
3 - CLOCKSPRING
4 - LOWER SHROUD
5 - STEERING COLUMN

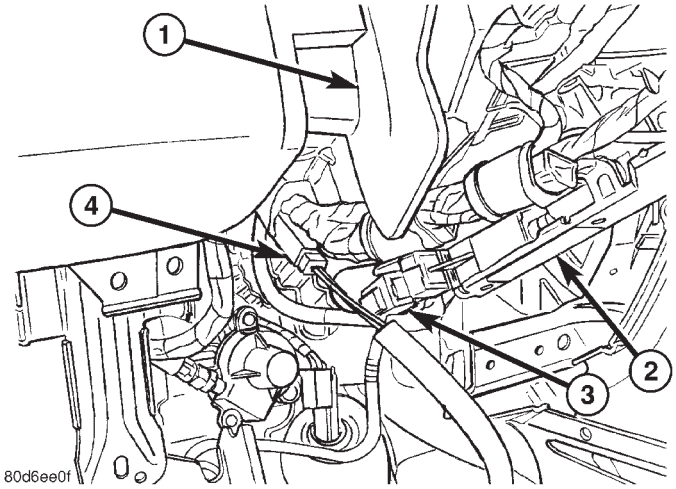

Fig. 65 Pedal Switch Wiring Connector

1 - STEERING COLUMN FIXED SHROUD
2 - BRAKE TRANSMISSION SHIFT INTERLOCK
3 - B.T.S.I. WIRING CONNECTOR
4 - PEDAL SWITCH WIRING CONNECTOR

(14) Disconnect PRNDL cable from shift lever and column bracket (Fig. 66).

(15) Disconnect shift cable at shift lever mechanism pin (Fig. 66).

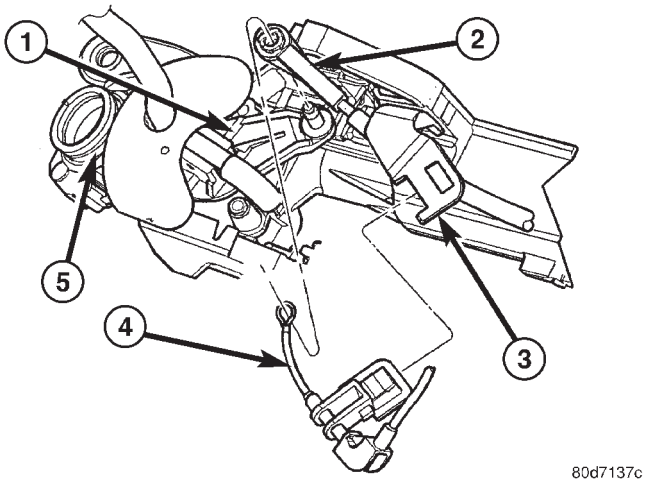

Fig. 66 Shift Cable At Steering Column

1 - SHIFT LEVER MECHANISM
2 - SHIFT CABLE
3 - BRACKET
4 - PRNDL CABLE
5 - STEERING COLUMN

(16) Remove pinch side clip, then remove shift cable from bracket on column.

(17) Turn the steering wheel from the STRAIGHT-AHEAD position 180° to the right (upside-down position), then remove the key and lock the column in place.

(18) Remove the pinch bolt securing column coupling to intermediate shaft (Fig. 67).

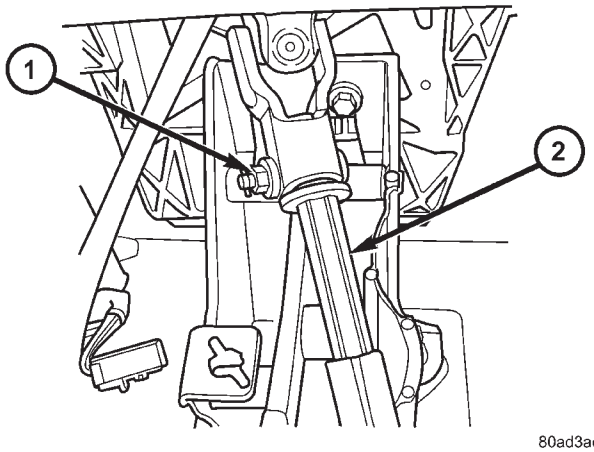

Fig. 67 Pinch Bolt

1 - PINCH BOLT
2 - STEERING COLUMN

PEDAL - ADJUSTABLE (Continued)

(19) Loosen two lower column mounting nuts.
(20) Remove two upper column mounting nuts.
(21) Remove the steering column.
(22) Remove dash seal silencer shell over steering column intermediate shaft (Fig. 68).

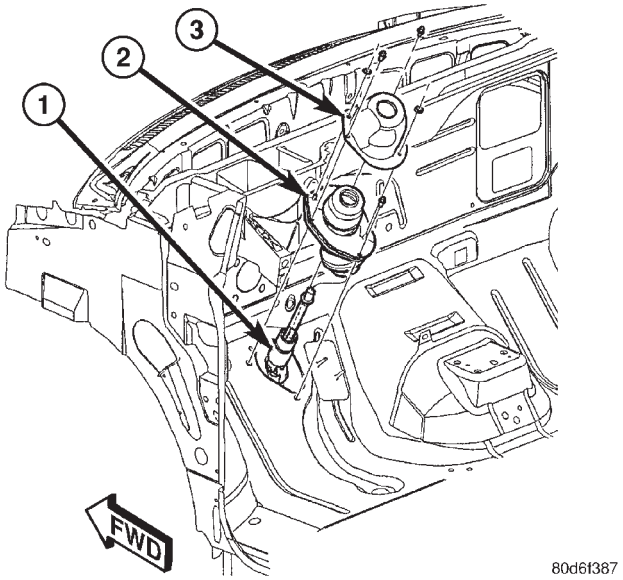

Fig. 68 Intermediate Shaft Dash Seal And Silencer Shell

1 - INTERMEDIATE SHAFT
2 - DASH SEAL
3 - SILENCER SHELL

(23) Remove two nuts securing brake lamp switch bracket to pedal assembly (Fig. 69). Remove bracket.

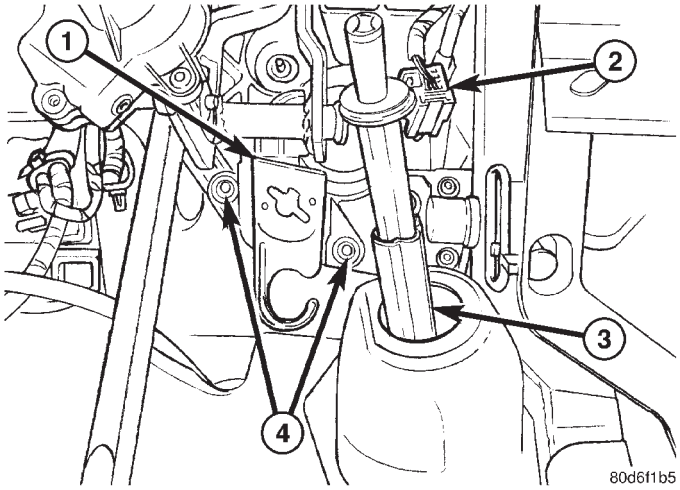

Fig. 69 Brake Lamp Switch Bracket

1 - BRAKE LAMP SWITCH BRACKET
2 - PEDAL WIRING HARNESS CONNECTOR
3 - STEERING COLUMN INTERMEDIATE SHAFT
4 - BRACKET MOUNTING NUTS

(24) Disconnect pedal wiring harness connector (Fig. 69).
(25) Remove pedal wiring harness from clips along pedal bracket.
(26) Position a small screwdriver between the center tang on the power brake booster input rod-to-brake pedal pin retaining clip (Fig. 70).

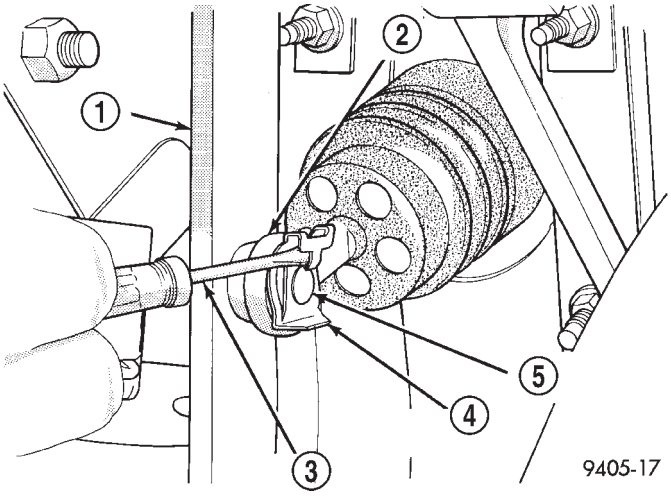

Fig. 70 Input Rod Brake Pedal Retaining Clip Removal

1 - BRAKE PEDAL
2 - INPUT ROD
3 - SCREWDRIVER
4 - RETAINING CLIP
5 - BRAKE PEDAL PIN

(27) Rotate screwdriver enough to allow retaining clip center tang to pass over end of brake pedal pin. Then pull retaining clip off brake pedal pin. **Discard retaining clip. It is not to be reused. Replace only with a new retaining clip when assembling.**
(28) Slide booster input rod off pedal pin.
(29) Remove the four nuts attaching power brake booster to dash panel (Fig. 71).
(30) Remove two brake pedal upper mounting bolts at instrument panel dash bracket (Fig. 71).
(31) Disconnect accelerator cable retainer at accelerator pedal; remove cable from pedal.
(32) Remove adjustable brake pedal assembly.

INSTALLATION

(1) Install adjustable brake pedal assembly under instrument panel.
(2) Install two brake pedal upper mounting bolts at instrument panel dash bracket (Fig. 71). Do not fully tighten at this time.
(3) Install four nuts attaching power brake booster to dash panel (Fig. 71).

PEDAL - ADJUSTABLE (Continued)

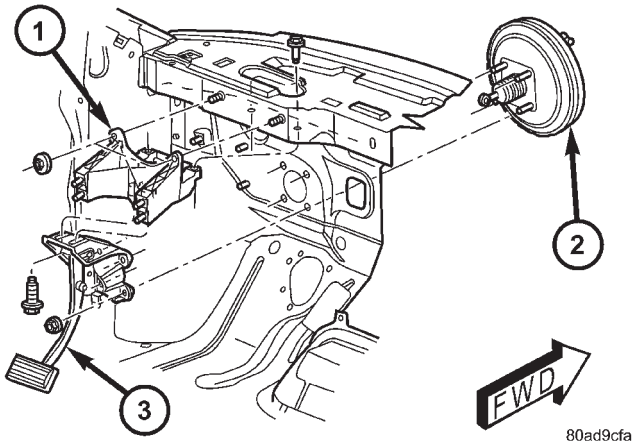

Fig. 71 Booster Mounting (Typical)

1 - DASH BRACKET
2 - POWER BRAKE BOOSTER
3 - BRAKE PEDAL ASSEMBLY

(4) Tighten four booster mounting nuts and two pedal bracket upper mounting bolts to 28 N·m (21 ft. lbs.) torque.

(5) Install accelerator cable to pedal; install cable retainer at accelerator pedal.

(6) Install booster input rod on brake pedal pin and install a NEW retaining clip (Fig. 72).

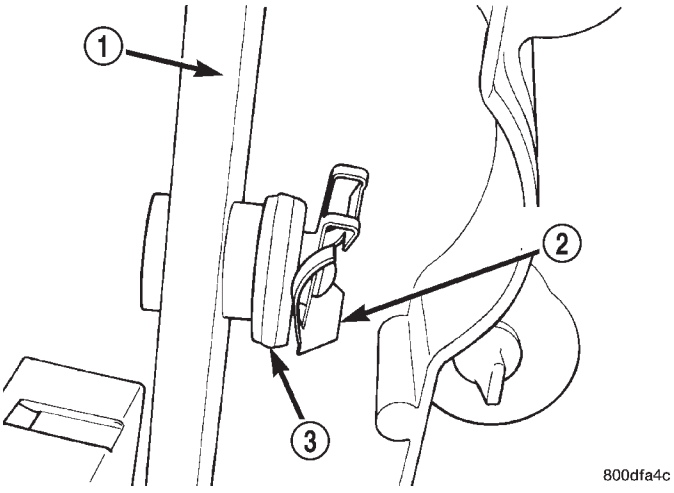

Fig. 72 Retaining Pin Installed On Brake Pedal Pin

1 - BRAKE PEDAL
2 - RETAINING CLIP
3 - BOOSTER INPUT ROD

(7) Install wiring harness in clips along pedal bracket, then connect harness to pedal wiring harness connector (Fig. 69).

(8) Install brake lamp switch bracket on pedal assembly (Fig. 69). Tighten mounting nuts to 6 N·m (50 in. lbs.) torque.

(9) Install dash seal silencer shell over steering column intermediate shaft and fasten in place (Fig. 68).

(10) Install the steering column on the mounting studs. Install the two upper and two lower mounting nuts. Tighten the upper, then lower mounting nuts to 12 N·m (105 in. lbs.) torque.

(11) Install the column shaft coupling onto the intermediate shaft and install the pinch bolt (steering column should still be locked position it was placed in during removal). Make sure the rounded side of the intermediate shaft is matched to the curvature of the coupling. Tighten the pinch bolt to 28 N·m (250 in. lbs.).

(12) Attach shift cable housing to bracket on column.

(13) Connect shift cable end to shift lever mechanism pin (Fig. 66).

(14) Connect PRNDL cable to end of shift lever mechanism pin and column bracket (Fig. 66).

(15) Connect column wiring harness connectors to SKIM (if equipped), BTSI solenoid, ignition switch, halo lamp, multi-function switch, and clockspring.

(16) Install the upper shroud (Refer to 19 - STEERING/COLUMN/LOWER SHROUD - INSTALLATION).

(17) If equipped, connect traction control off switch wiring connector.

(18) Install upper shroud (with traction control off switch if equipped) (Fig. 64).

(19) Connect adjustable pedal switch wiring connector along left side of column (Fig. 65).

(20) Install the lower shroud with adjustable pedal switch. Install screws fastening steering column shrouds to steering column (Fig. 64).

CAUTION: Do not reuse the original brake lamp switch. The switch can only be adjusted once. That is during initial installation of the switch. If the switch is not adjusted properly or has been removed for some service, a new switch must be installed and adjusted.

(21) Install and adjust NEW brake lamp switch. (Refer to 8 - ELECTRICAL/LAMPS/LIGHTING - EXTERIOR/BRAKE LAMP SWITCH - INSTALLATION)

(22) Install instrument panel lower left reinforcement (Fig. 63).

(23) Attach hood release to lower left reinforcement.

(24) Install knee blocker reinforcement plate (Fig. 62).

(25) Connect parking brake release link to release handle.

(26) Install data link diagnostic connector to mounting hole in reinforcement plate.

PEDAL - ADJUSTABLE (Continued)

(27) Install lower steering column cover/knee blocker (Fig. 62).

(28) Install silencer panel below lower steering column cover/knee blocker.

NOTE: When reconnecting the battery on a vehicle that has had the airbag module removed, the following procedure should be used.

(29) Reconnect ground cable to negative post of battery in following manor:

(a) Connect scan tool (DRBIII®) to data link diagnostic connector located below steering column.

(b) Turn ignition key to ON position. Exit vehicle with scan tool leaving scan tool harness plugged in.

(c) Ensuring that there are no occupants in vehicle, connect ground (-) cable to the negative post of the battery.

(d) Using scan tool, read and record any airbag fault codes. Refer to Appropriate Diagnostic Information if any faults are found.

(e) Through drivers open window, Reach around back of steering wheel (between steering wheel and instrument cluster) and turn ignition key to OFF, then back ON while observing instrument cluster airbag indicator lamp. It should go on for six to eight seconds, then go out. This action indicates that airbag system is functioning normally. If airbag indicator lamp fails to light, blinks on and off, or goes on and stays on, there is an airbag system malfunction. Refer to Appropriate Diagnostic Information to diagnose the system malfunction.

(30) Using scan tool (DRBIII®), check for and clear any existing adjustable pedal fault codes. The adjustable pedal system is now activated.

(31) Turn key to OFF and remove scan tool from vehicle.

(32) Test operation of adjustable pedals, memory seats (if equipped), RKE (if equipped), and all functions that are steering column operated. If applicable, reset the radio and the clock.

(33) Road test the vehicle to ensure proper operation of the steering and brake systems.

PEDAL TORQUE SHAFT - RHD

REMOVAL

(1) Remove the instrument panel. (Refer to 23 - BODY/INSTRUMENT PANEL/INSTRUMENT PANEL ASSEMBLY - REMOVAL)

(2) Remove the HVAC housing. (Refer to 24 - HEATING & AIR CONDITIONING/DISTRIBUTION/HVAC HOUSING - REMOVAL)

(3) Remove the retaining clip at the torque shaft end of the brake pedal-to-torque shaft link. Remove the link from the torque shaft. Discard the retaining clip. It is not to be reused. Replace with a new clip when reassembled.

(4) Locate the booster input rod-to-brake pedal torque shaft connection and remove the retaining clip (Fig. 73). Discard the retaining clip. It is not to be reused. Replace with a new clip when reassembled.

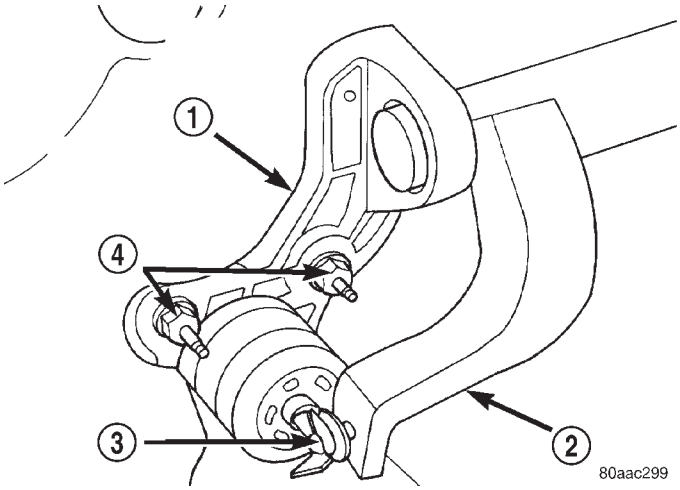

Fig. 73 POWER BRAKE BOOSTER BRACKET

1 - BOOSTER BRACKET
2 - PEDAL TORQUE SHAFT
3 - RETAINING CLIP
4 - BOOSTER MOUNTING NUTS

(5) Remove the four (4) brake booster retaining nuts from inside the passenger compartment (Fig. 74).

(6) Remove the retaining nut from the brake booster bracket located above the booster in the engine compartment (Fig. 74).

(7) Remove the power brake booster bracket.

(8) Rotate the pedal torque shaft and remove it out the left side of the vehicle.

INSTALLATION

(1) Lubricate both ends of the torque shaft with MS-4517 Lubricant or equivalent and install the torque shaft from the left side reversing the removal procedure.

(2) Install the brake booster bracket on the left end of the shaft.

(3) Install the four brake booster retaining nuts inside the passenger compartment. Tighten the mounting nuts to a torque of 29 N·m (250 in. lbs.).

(4) Install the retaining nut for the brake booster bracket in the engine compartment. Tighten the mounting nuts to a torque of 29 N·m (250 in. lbs.).

(5) Using lubriplate, or equivalent, coat the surface of the brake pedal torque shaft pin where it contacts the booster input rod. Also coat the surface of

PEDAL TORQUE SHAFT - RHD (Continued)

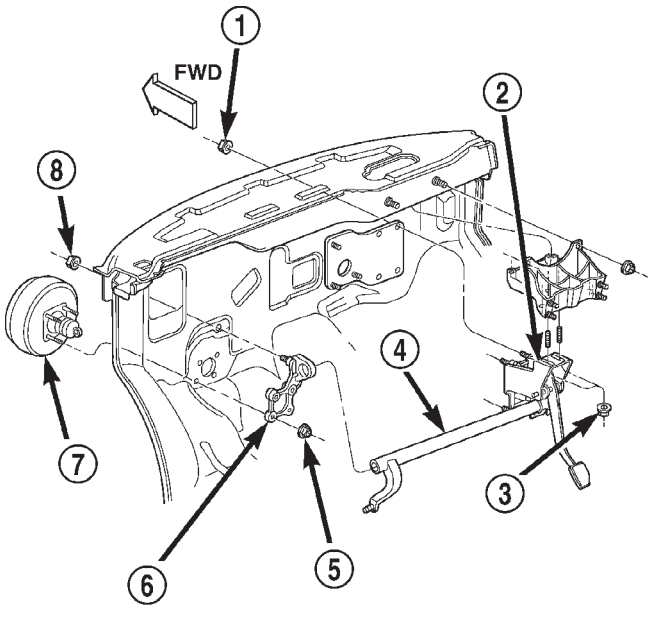

Fig. 74 BOOSTER, TORQUE SHAFT AND PEDAL MOUNTING

1 - PEDAL MOUNTING NUT
2 - BRAKE PEDAL ASSEMBLY
3 - PEDAL MOUNTING NUT
4 - PEDAL TORQUE SHAFT
5 - BOOSTER MOUNTING NUT
6 - BOOSTER BRACKET
7 - POWER BRAKE BOOSTER
8 - BOOSTER BRACKET MOUNTING NUT

the brake pedal torque shaft pin where it contacts the brake pedal link.

CAUTION: When installing the power brake booster input rod on the brake pedal torque shaft pin, do not reuse the old retaining clip.

(6) Install booster input rod on brake pedal torque shaft pin and install a NEW retaining clip (Fig. 73).

CAUTION: When installing the brake pedal link on the brake pedal torque shaft pin, do not reuse the old retaining clip.

(7) Connect the brake pedal link to the torque shaft. Install a NEW retaining clip at the torque shaft end of the brake pedal-to-torque shaft link.

(8) Install the HVAC housing. (Refer to 24 - HEATING & AIR CONDITIONING/DISTRIBUTION/HVAC HOUSING - INSTALLATION)

(9) Install the instrument panel. (Refer to 23 - BODY/INSTRUMENT PANEL/INSTRUMENT PANEL ASSEMBLY - INSTALLATION)

CAUTION: Do not reuse the original brake lamp switch. The switch can only be adjusted once. That is during initial installation of the switch. If the switch is not adjusted properly or has been removed for some service, a new switch must be installed and adjusted.

(10) Remove and replace the brake lamp switch with a NEW switch. (Refer to 8 - ELECTRICAL/LAMPS/LIGHTING - EXTERIOR/BRAKE LAMP SWITCH - REMOVAL), (Refer to 8 - ELECTRICAL/LAMPS/LIGHTING - EXTERIOR/BRAKE LAMP SWITCH - INSTALLATION)

(11) Road test vehicle to ensure proper operation of the brakes.

POWER BRAKE BOOSTER

DESCRIPTION

The power brake booster mounts on the engine compartment side of the dash panel. It is connected to the brake pedal by the input (push) rod (Fig. 75). The master cylinder is bolted to the front of the booster. A vacuum line connects the power brake booster to the intake manifold.

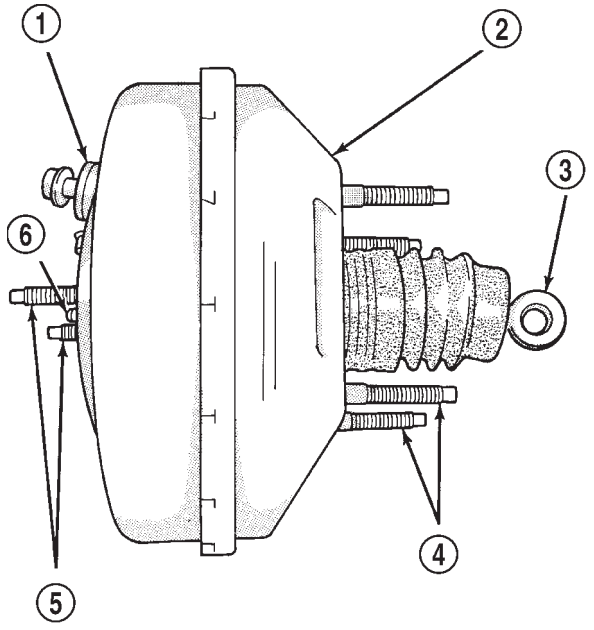

Fig. 75 Power Brake Booster (Typical)

1 - VACUUM CHECK VALVE
2 - POWER BRAKE BOOSTER ASSEMBLY
3 - INPUT ROD
4 - POWER BOOSTER ASSEMBLY TO DASH PANEL MOUNTING STUDS (4)
5 - MASTER CYLINDER MOUNTING STUDS (2)
6 - OUTPUT ROD

POWER BRAKE BOOSTER (Continued)

All vehicles use a 270 mm single diaphragm vacuum power brake booster.

Vehicles equipped with Disc/Disc brakes use a different power brake booster than vehicles equipped with Disc/Drum brakes. Differences between the two are internal. Service is the same for all boosters.

The power brake booster can be identified by the tag attached to the body of the booster (Fig. 76). This tag contains the production part number, the date it was built, and who the manufacturer of the power brake booster is.

NOTE: The power brake booster assembly is not a repairable component and must be replaced as a complete assembly if found to be faulty in any way. The check valve located on the power brake booster face is not repairable, but it can be replaced separately from the power brake booster.

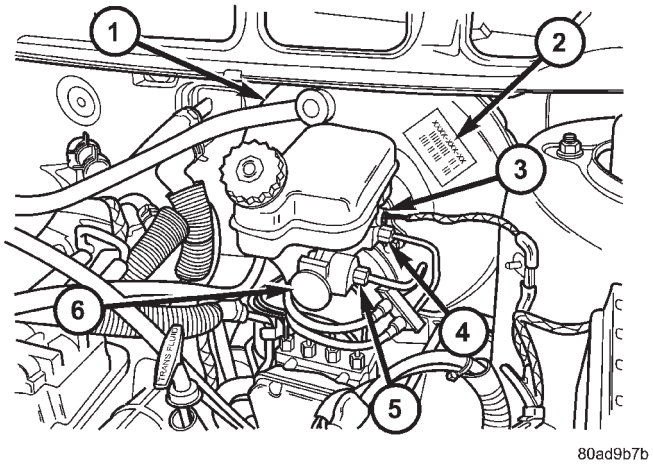

Fig. 76 MASTER CYLINDER AND BOOSTER

1 - POWER BRAKE BOOSTER
2 - BOOSTER IDENTIFICATION LABEL
3 - FLUID LEVEL SWITCH CONNECTOR
4 - PRIMARY BRAKE TUBE NUT
5 - SECONDARY BRAKE TUBE NUT
6 - MASTER CYLINDER

The different engine combinations used in this vehicle require different vacuum hose routings to the power brake booster. All vacuum hoses must be routed from the engine to the power brake booster without kinks or excessively tight bends.

OPERATION

The power brake booster reduces the amount of force required by the driver to obtain the necessary hydraulic pressure to stop a vehicle.

The power brake booster is vacuum operated. The vacuum is supplied from the intake manifold on the engine through a vacuum hose and the power brake booster check valve (Fig. 75).

As the brake pedal is depressed, the power brake booster's input rod moves forward (Fig. 75). This opens and closes valves in the power booster allowing atmospheric pressure to enter on one side of a diaphragm. Engine vacuum is always present on the other side. This difference in pressure forces the output rod of the power brake booster out against the primary piston of the master cylinder. As the pistons in the master cylinder move forward this creates the hydraulic pressure in the brake system.

DIAGNOSIS AND TESTING - POWER BRAKE BOOSTER

BASIC TEST

(1) With engine off, depress and release the brake pedal several times to purge all vacuum from the power brake booster.

(2) Depress and hold the pedal with light effort (15 to 25 lbs. pressure), then start the engine.

The pedal should fall slightly, then hold. Less effort should be needed to apply the pedal at this time. If the pedal fell as indicated, perform the VACUUM LEAK TEST listed after the BASIC TEST. If the pedal did not fall, continue on with this BASIC TEST.

(3) Disconnect the vacuum hose on the vacuum check valve, then place a vacuum gauge in line between the vacuum hose and the valve.

(4) Start the engine.

(5) When the engine is at warm operating temperature, allow it to idle and check the vacuum at the gauge.

If the vacuum supply is 12 inches Hg (40.5 kPa) or more, the power brake booster is defective and must be replaced. If the vacuum supply is below 12 inches Hg, continue on with this BASIC TEST.

(6) Shut off the engine.

(7) Connect the vacuum gauge to the vacuum reference port on the engine intake manifold.

(8) Start the engine and observe the vacuum gauge.

If the vacuum is still low, check the engine tune and repair as necessary. If the vacuum is above 12 inches Hg, the hose or check valve to the booster has a restriction or leak.

Once an adequate vacuum supply is obtained, repeat the BASIC TEST.

VACUUM LEAK TEST

(1) Disconnect the vacuum hose on the vacuum check valve, then place a vacuum gauge in line between the vacuum hose and the valve.

(2) Start the engine.

(3) Allow the engine to warm up to normal operating temperature and engine idle.

POWER BRAKE BOOSTER (Continued)

(4) Using vacuum line pliers, close off the vacuum supply hose near the booster, but before the vacuum gauge, then observe the vacuum gauge.

If the vacuum drop exceeds 1.0 inch Hg (3.3 kPa) in one minute, repeat the above steps to confirm the reading. The vacuum loss should be less than 1.0 inch Hg in one minute time span. If the loss is more than 1.0 inch Hg, replace the power brake booster. If it is not, continue on with this test.

(5) Remove the pliers from the hose temporarily.

(6) Apply light effort (approximately 15 lbs. of force) to the brake pedal and hold the pedal steady. Do not move the pedal once the pressure is applied or the test results may vary.

(7) Have an assistant reattach the vacuum line pliers to the vacuum supply hose.

(8) Allow 5 seconds for stabilization, then observe the vacuum gauge.

If the vacuum drop exceeds 3.0 inches Hg (10 kPa) in 15 seconds, repeat the above steps to confirm the reading. The vacuum loss should be less than 3.0 inches Hg in 15 seconds time span. If the loss is more than 3.0 inches Hg, replace the power brake booster. If it is not, the booster is not defective.

(9) Remove the pliers and vacuum gauge.

REMOVAL

REMOVAL - LHD

CAUTION: Reserve vacuum in power brake booster must be pumped down (removed) before removing master cylinder from booster. This is necessary to prevent booster from sucking in any contamination as master cylinder is removed. This can be done simply by pumping the brake pedal, with the vehicle's engine not running, until a firm feeling brake pedal is achieved.

(1) With engine not running, pump the brake pedal until a firm pedal is achieved (4-5 strokes).

(2) Remove negative battery cable terminal from battery.

(3) Remove positive battery cable terminal from battery.

(4) Remove battery thermal guard shield.

(5) Remove battery clamp, nut and battery from the battery tray.

(6) Remove screw securing engine coolant filler tube to battery tray.

(7) If the vehicle is equipped with speed control, disconnect the vacuum hose at the vacuum tank built into the battery tray.

(8) Remove the two nuts and one bolt securing battery tray in place. Remove battery tray.

(9) If vehicle is equipped with speed control:

(a) Disconnect wiring harness connector from the speed control servo.

(b) Remove the two servo mounting nuts.

(c) Lay speed control servo off to the side, out of the way.

(10) Remove the wiper module (unit). (Refer to 8 - ELECTRICAL/WIPERS/WASHERS/WIPER MODULE - REMOVAL)

(11) Disconnect wiring harness connector from brake fluid level switch in master cylinder fluid reservoir (Fig. 77).

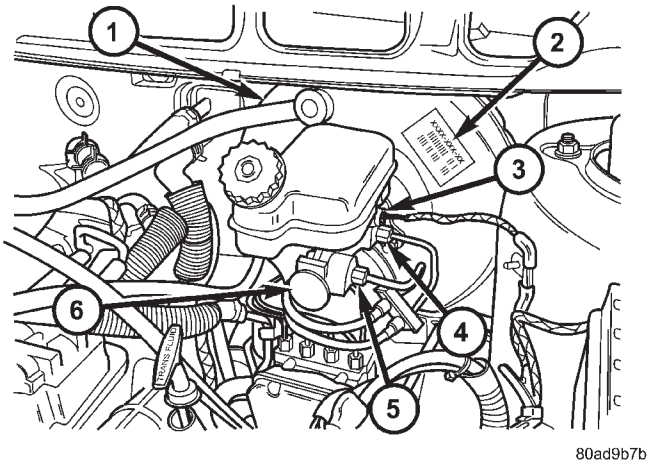

Fig. 77 Master Cylinder And Booster

1 - POWER BRAKE BOOSTER
2 - BOOSTER IDENTIFICATION LABEL
3 - FLUID LEVEL SWITCH CONNECTOR
4 - PRIMARY BRAKE TUBE NUT
5 - SECONDARY BRAKE TUBE NUT
6 - MASTER CYLINDER

CAUTION: Before removing the master cylinder from the power brake vacuum booster, the master cylinder and vacuum booster must be thoroughly cleaned. This must be done to prevent dirt particles from falling into the power brake vacuum booster.

(12) Clean area where master cylinder assembly attaches to power brake booster. Use only a solvent such as Mopar® Brake Parts Cleaner or equivalent.

(13) Disconnect primary and secondary brake tubes from ABS integrated control unit or non-ABS junction block (Fig. 78). Install sealing plugs in the now open brake tube ports and install caps on ends of tubes.

NOTE: It is not necessary to remove the brake tubes from the master cylinder when removing the master cylinder from the vacuum booster.

(14) Remove two nuts attaching master cylinder to power brake booster (Fig. 78).

POWER BRAKE BOOSTER (Continued)

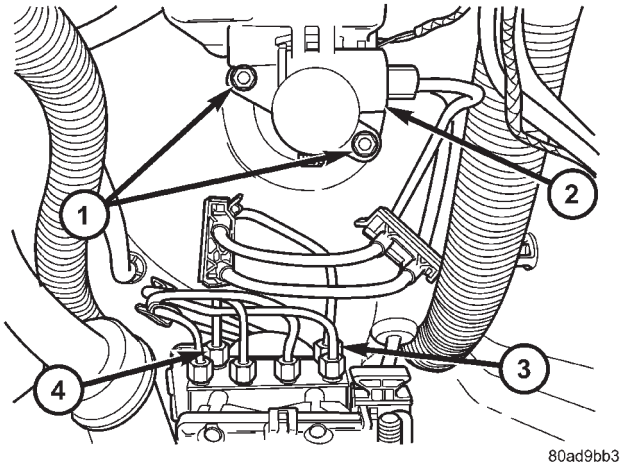

Fig. 78 Master Cylinder Mounting

1 - MASTER CYLINDER MOUNTING NUTS
2 - MASTER CYLINDER
3 - SECONDARY TUBE NUT AT ICU
4 - PRIMARY TUBE NUT AT ICU

(15) Slide master cylinder straight out of power brake booster. Remove master cylinder with primary and secondary tubes from vehicle.

CAUTION: A seal on the rear of the master cylinder is used to create the seal for holding vacuum in the power brake vacuum booster. The vacuum seal on the master cylinder MUST be replaced whenever the master cylinder is removed from the power brake vacuum booster.

(16) Disconnect vacuum hose from check valve located on vacuum booster. **DO NOT REMOVE CHECK VALVE FROM POWER BRAKE BOOSTER.**

(17) Inside vehicle, remove silencer panel under instrument panel below steering column.

(18) Locate the booster input rod to brake pedal connection under the instrument panel. Position a small screwdriver between the center tang on the power brake booster input rod to brake pedal pin retaining clip (Fig. 79).

(19) Rotate screwdriver enough to allow retaining clip center tang to pass over end of brake pedal pin. Then pull retaining clip off brake pedal pin. **Discard retaining clip. It is not to be reused. Replace only with a new retaining clip when assembling.**

(20) Slide booster input rod off pedal pin.

(21) Remove the four nuts attaching power brake booster to dash panel (Fig. 80).

(22) Slide power brake booster forward and remove through engine compartment (Fig. 81).

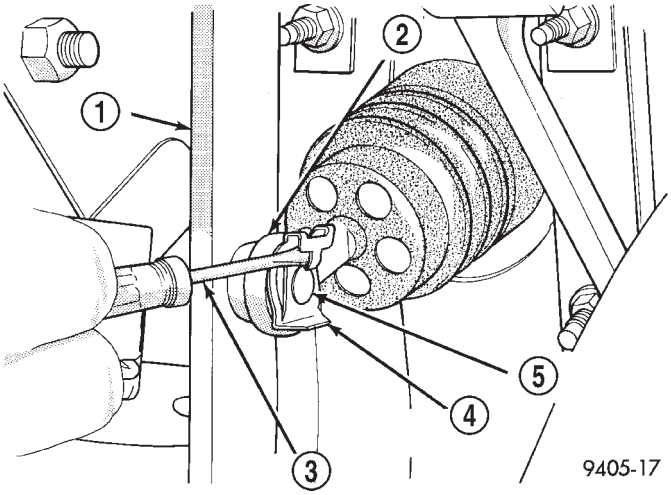

Fig. 79 Vacuum Booster Input Rod Retaining Pin

1 - BRAKE PEDAL
2 - INPUT ROD
3 - SCREWDRIVER
4 - RETAINING CLIP
5 - BRAKE PEDAL PIN

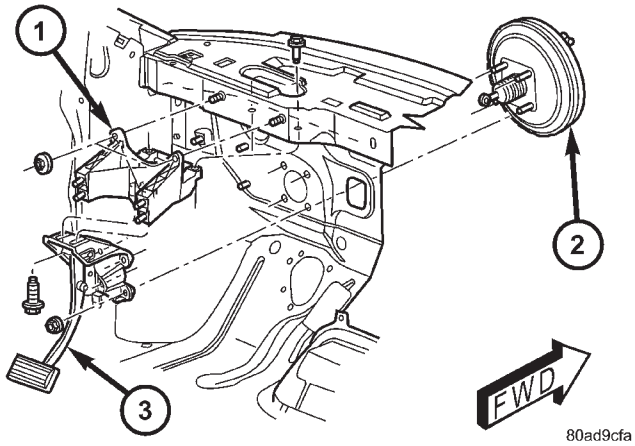

Fig. 80 Booster Mounting

1 - DASH BRACKET
2 - POWER BRAKE BOOSTER
3 - BRAKE PEDAL ASSEMBLY

CAUTION: Do not attempt to disassemble the power brake vacuum booster. It is serviced ONLY as a complete assembly.

POWER BRAKE BOOSTER (Continued)

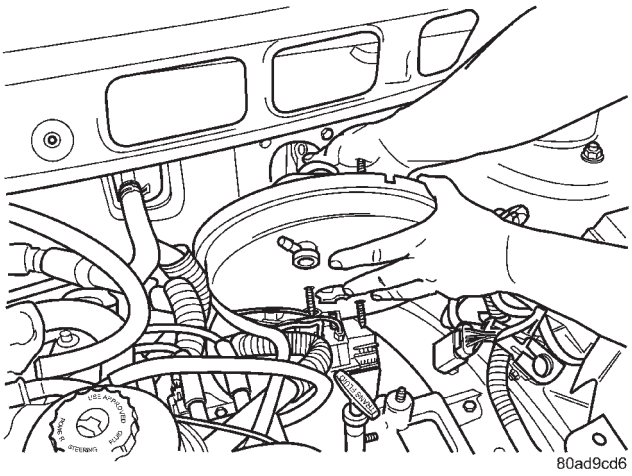

Fig. 81 Booster Removal/Installation

REMOVAL - RHD

CAUTION: Reserve vacuum in power brake booster must be pumped down (removed) before removing master cylinder from booster. This is necessary to prevent booster from sucking in any contamination as master cylinder is removed. This can be done simply by pumping the brake pedal, with the vehicle's engine not running, until a firm feeling brake pedal is achieved.

(1) With engine not running, pump the brake pedal until a firm pedal is achieved (4 or 5 strokes).
(2) Remove negative battery cable terminal from battery.
(3) Remove positive battery cable terminal from battery.
(4) Remove battery thermal guard shield.
(5) Remove battery clamp, nut and battery from the battery tray.
(6) If the vehicle is equipped with speed control, disconnect the vacuum hose at the vacuum tank built into the battery tray.
(7) Remove the two nuts and one bolt securing battery tray in place. Remove battery tray.
(8) If vehicle is equipped with speed control:
(a) Disconnect wiring harness connector from the speed control servo.
(b) Remove the two servo mounting nuts.
(c) Lay speed control servo off to the side, out of the way.
(9) If the vehicle is equipped with the 2.5L diesel engine, remove the coolant recovery pressure container and bracket. (Refer to 7 - COOLING/ENGINE/ COOLANT RECOVERY PRESS CONTAINER - REMOVAL)
(10) Disconnect wiring harness connector from brake fluid level switch in master cylinder fluid reservoir (Fig. 82).

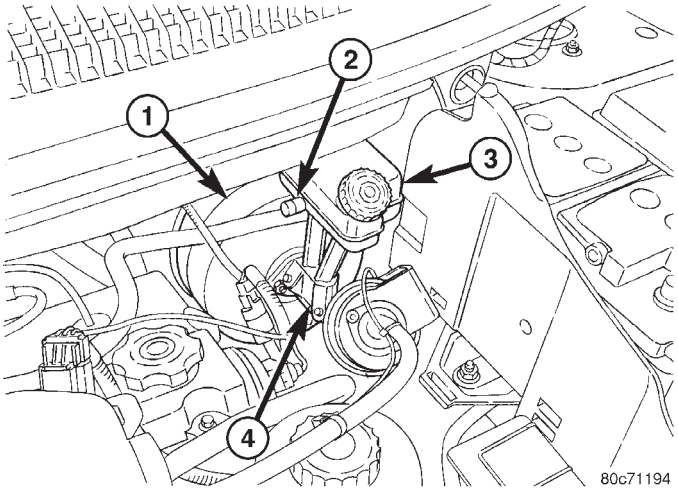

Fig. 82 RHD Master Cylinder And Power Brake Booster

1 - POWER BRAKE BOOSTER
2 - BRAKE FLUID LEVEL SWITCH
3 - FLUID RESERVOIR
4 - MASTER CYLINDER

CAUTION: Before removing the master cylinder from the power brake vacuum booster, the master cylinder and vacuum booster must be thoroughly cleaned. This must be done to prevent dirt particles from falling into the power brake vacuum booster.

(11) Clean area where master cylinder assembly attaches to power brake booster. Use only a solvent such as Mopar® Brake Parts Cleaner or equivalent.

NOTE: It is not necessary to remove the brake tubes from the master cylinder when removing the master cylinder from the booster.

(12) Remove two nuts attaching master cylinder to power brake booster (Fig. 83).
(13) Slide master cylinder straight out of power brake booster. Lay master cylinder with primary and secondary tubes to the side, out of the way.

CAUTION: A seal on the rear of the master cylinder is used to create the seal for holding vacuum in the power brake vacuum booster. The vacuum seal on the master cylinder MUST be replaced whenever the master cylinder is removed from the power brake vacuum booster.

(14) Disconnect vacuum hose from check valve located on booster. **DO NOT REMOVE CHECK VALVE FROM POWER BRAKE BOOSTER.**
(15) Under the instrument panel, remove booster input rod trim cover.
(16) Locate the booster input rod to brake pedal torque shaft connection under the instrument panel.

POWER BRAKE BOOSTER (Continued)

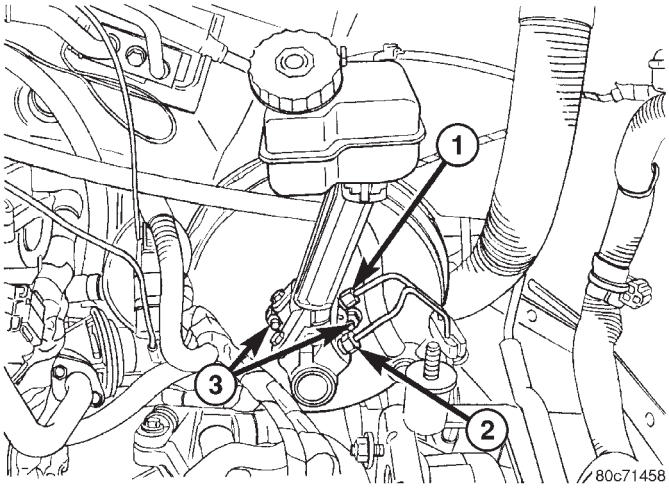

Fig. 83 RHD Master Cylinder Mounting

1 - PRIMARY BRAKE TUBE NUT
2 - SECONDARY BRAKE TUBE NUT
3 - MASTER CYLINDER MOUNTING NUTS

Position a small screwdriver between the center tang on the retaining clip (Fig. 84).

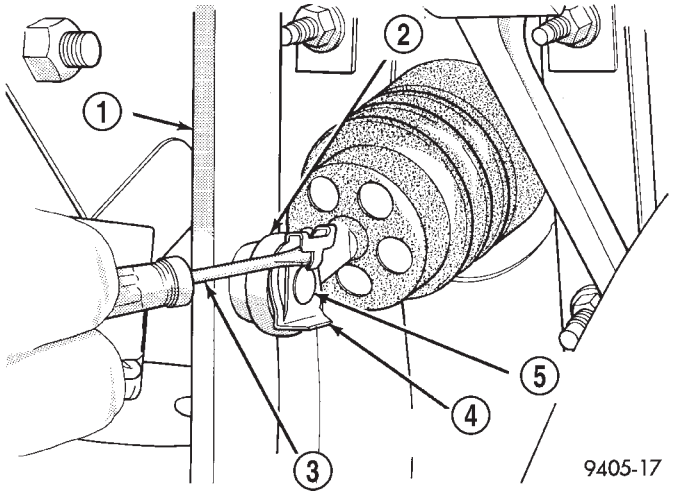

Fig. 84 Booster Input Rod Pin Retaining Clip (Typical)

1 - BRAKE PEDAL
2 - INPUT ROD
3 - SCREWDRIVER
4 - RETAINING CLIP
5 - BRAKE PEDAL PIN

(17) Rotate screwdriver enough to allow retaining clip center tang to pass over end of brake pedal pin. Then pull retaining clip off brake pedal torque shaft pin. **Discard retaining clip. It is not to be reused. Replace only with a new retaining clip when assembling.**

(18) Remove booster input rod from pedal torque shaft pin.

(19) Remove the three easily accessed mounting nuts attaching power brake booster to dash panel and loosen fourth (Fig. 85). As fourth nut is loosened, push the booster forward periodically until the nut can be completely removed.

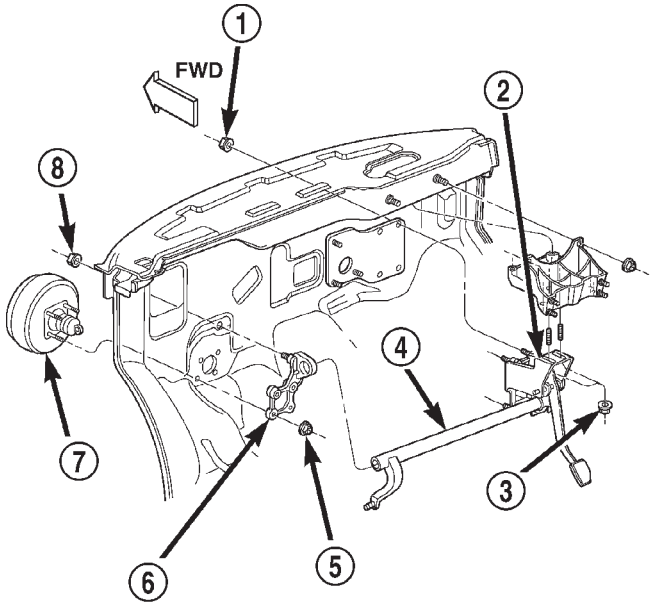

Fig. 85 Booster, Torque Shaft And Pedal Mounting

1 - PEDAL MOUNTING NUT
2 - BRAKE PEDAL ASSEMBLY
3 - PEDAL MOUNTING NUT
4 - PEDAL TORQUE SHAFT
5 - BOOSTER MOUNTING NUT
6 - BOOSTER BRACKET
7 - POWER BRAKE BOOSTER
8 - BOOSTER BRACKET MOUNTING NUT

(20) Slide power brake booster forward and remove through engine compartment (Fig. 86).

CAUTION: Do not attempt to disassemble the power brake vacuum booster. It is serviced ONLY as a complete assembly.

INSTALLATION

INSTALLATION - LHD

(1) Position power brake booster on dash panel using the reverse procedure of its removal (Fig. 81). It may be necessary to push in on booster input rod as it is guided through the dash panel.

(2) Install the four nuts mounting the booster to the dash panel (Fig. 80). Tighten the mounting nuts to a torque of 29 N·m (250 in. lbs.).

POWER BRAKE BOOSTER (Continued)

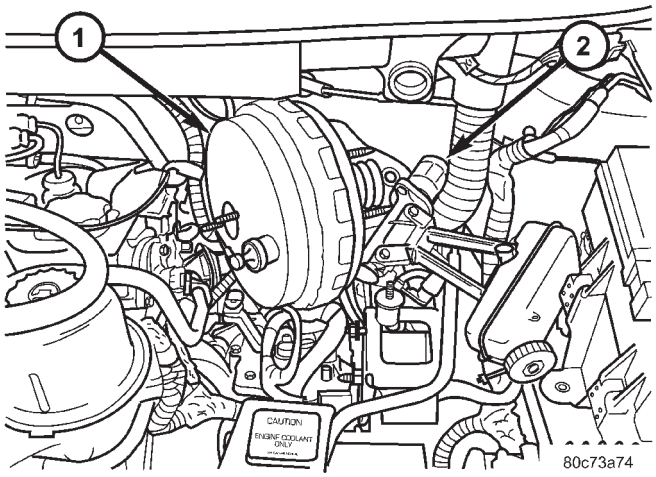

Fig. 86 RHD Booster Removal/Installation

1 - POWER BRAKE BOOSTER
2 - MASTER CYLINDER

(3) Using lubriplate, or equivalent, coat the surface of the brake pedal pin where it contacts the booster input rod.

CAUTION: When installing the brake pedal pin on the power brake booster input rod, do not re-use the old retaining clip.

(4) Install booster input rod on brake pedal pin and install a NEW retaining clip (Fig. 87).

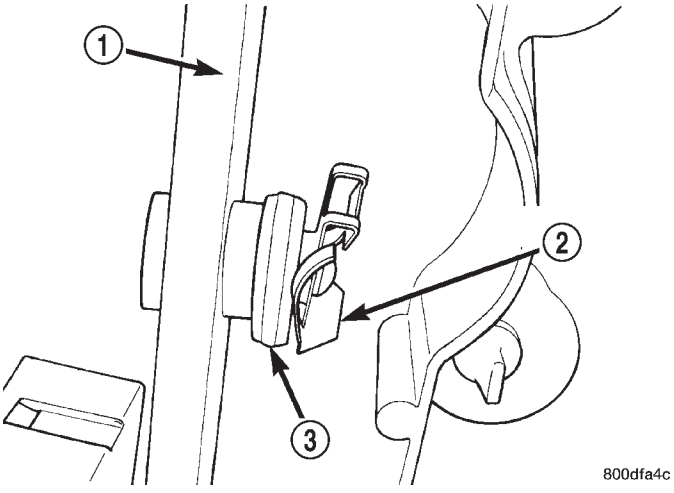

Fig. 87 Retaining Pin Installed On Brake Pedal Pin

1 - BRAKE PEDAL
2 - RETAINING CLIP
3 - BOOSTER INPUT ROD

CAUTION: Do not reuse the original brake lamp switch. The switch can only be adjusted once. That is during initial installation of the switch. If the switch is not adjusted properly or has been removed for some service, a new switch must be installed and adjusted.

(5) Remove and replace the brake lamp switch with a NEW switch. (Refer to 8 - ELECTRICAL/ LAMPS/LIGHTING - EXTERIOR/BRAKE LAMP SWITCH - REMOVAL), (Refer to 8 - ELECTRICAL/ LAMPS/LIGHTING - EXTERIOR/BRAKE LAMP SWITCH - INSTALLATION)

(6) Install the silencer panel below the steering column.

(7) Connect vacuum hose to check valve on power brake booster.

CAUTION: The master cylinder (and its rear seal) is used to create the seal for holding vacuum in the vacuum booster. The vacuum seal on the master cylinder MUST be replaced with a NEW seal whenever the master cylinder is removed from the vacuum booster.

CAUTION: When removing the vacuum seal from the master cylinder do not use a sharp tool.

(8) Using a soft tool such as a trim stick, remove the vacuum seal from the master cylinder mounting flange.

(9) Install a NEW vacuum seal on rear mounting flange of the master cylinder (Fig. 88).

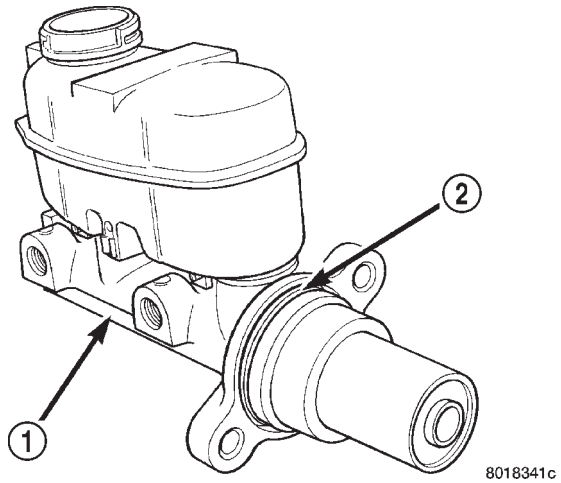

Fig. 88 Vacuum Seal (Typical)

1 - MASTER CYLINDER ASSEMBLY
2 - VACUUM SEAL

(10) Position master cylinder on studs of booster, aligning push rod on booster with master cylinder piston.

(11) Install the two nuts mounting the master cylinder to the booster (Fig. 78). Tighten both mounting nuts to a torque of 25 N·m (225 in. lbs.).

POWER BRAKE BOOSTER (Continued)

(12) Connect wiring harness connector to brake fluid level switch in the master cylinder fluid reservoir (Fig. 77).

(13) Connect primary and secondary brake tubes to ABS ICU or non-ABS junction block (Fig. 78). Tighten the tube nuts to 17 N·m (145 in lbs.).

(14) Install wiper module (unit). (Refer to 8 - ELECTRICAL/WIPERS/WASHERS/WIPER MODULE - INSTALLATION)

(15) If equipped with speed control, install speed control servo and connect wiring connector. Tighten the mounting nuts to a torque of 14 N·m (124 in. lbs.).

(16) Install the battery tray. Install the two nuts and one bolt attaching the battery tray to the vehicle. Tighten the bolt and nuts to a torque of 14 N·m (124 in. lbs.).

(17) If vehicle is equipped with speed control, connect the servo vacuum hose to the vacuum tank on the battery tray.

(18) Install the air inlet resonator and hoses as an assembly on the throttle body and air cleaner housing. Securely tighten hose clamp at air cleaner housing and throttle body.

(19) Secure the engine coolant filler neck to the battery tray with its mounting screw.

(20) Install the battery, clamp and mounting nut.

(21) Install the positive battery cable on the battery.

(22) Install the negative battery cable on the battery.

(23) Install the battery thermal guard shield.

(24) Bleed the base brakes as necessary. (Refer to 5 - BRAKES - STANDARD PROCEDURE)

(25) Road test vehicle to ensure operation of the brakes.

INSTALLATION - RHD

(1) Position power brake booster on dash panel using the reverse procedure of its removal (Fig. 86).

(2) Below instrument panel, first install the two upper nuts mounting the booster to the dash panel, drawing it into place, then install the two lower mounting nuts. Tighten the mounting nuts to a torque of 29 N·m (250 in. lbs.).

(3) Using lubriplate, or equivalent, coat the surface of the brake pedal torque shaft pin where it contacts the booster input rod.

CAUTION: When installing the brake pedal torque shaft pin on the power brake booster input rod, do not re-use the old retaining clip.

(4) Install booster input rod on brake pedal torque shaft pin and install a NEW retaining clip (Fig. 89).

(5) Install booster input rod trim cover.

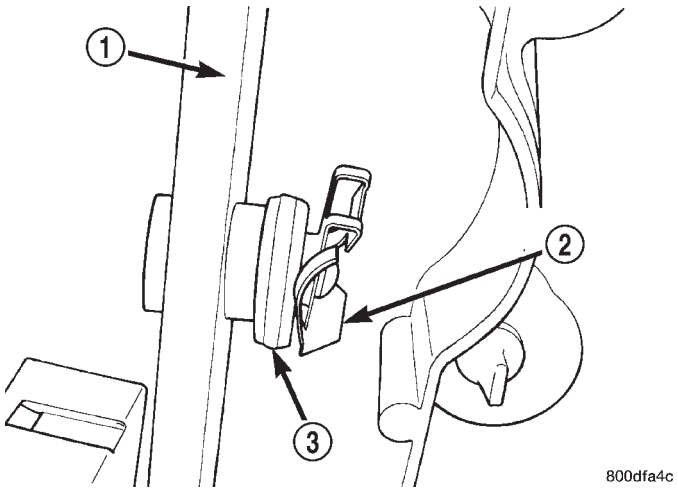

Fig. 89 Retaining Pin Installed On Brake Pedal Pin (Typical)

1 - BRAKE PEDAL
2 - RETAINING CLIP
3 - BOOSTER INPUT ROD

(6) Connect vacuum hose to check valve on power brake booster.

CAUTION: The master cylinder (and its rear seal) is used to create the seal for holding vacuum in the vacuum booster. The vacuum seal on the master cylinder MUST be replaced with a NEW seal whenever the master cylinder is removed from the vacuum booster.

CAUTION: When removing the vacuum seal from the master cylinder, do not use a sharp tool.

(7) Using a soft tool such as a trim stick, remove the vacuum seal from the master cylinder mounting flange.

(8) Install a NEW vacuum seal on rear mounting flange of the master cylinder (Fig. 90).

(9) Position master cylinder on studs of booster, aligning push rod on booster with master cylinder piston.

(10) Install the two nuts mounting the master cylinder to the booster (Fig. 83). Tighten both mounting nuts to a torque of 25 N·m (225 in. lbs.).

(11) Connect wiring harness connector to brake fluid level switch in the master cylinder fluid reservoir (Fig. 82).

(12) If the vehicle is equipped with the 2.5L diesel engine, install the coolant recovery pressure container and bracket. (Refer to 7 - COOLING/ENGINE/ COOLANT RECOVERY PRESS CONTAINER - INSTALLATION)

(13) If equipped with speed control, install speed control servo and connect wiring connector. Tighten

POWER BRAKE BOOSTER (Continued)

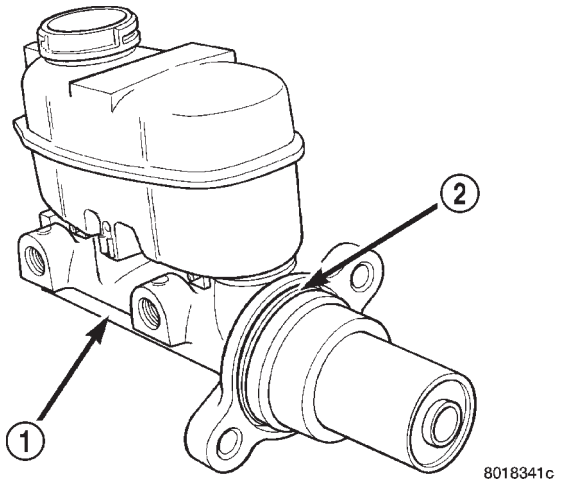

Fig. 90 Vacuum Seal (Typical)

1 - MASTER CYLINDER ASSEMBLY
2 - VACUUM SEAL

the mounting nuts to a torque of 14 N·m (124 in. lbs.).

(14) Install the battery tray. Install the two nuts and one bolt attaching the battery tray to the vehicle. Tighten the bolt and nuts to a torque of 14 N·m (124 in. lbs.).

(15) If vehicle is equipped with speed control, connect the servo vacuum hose to the vacuum tank on the battery tray.

(16) Install the battery, clamp and mounting nut.

(17) Install the positive battery cable on the battery.

(18) Install the negative battery cable on the battery.

(19) Install the battery thermal guard shield.

CAUTION: Do not reuse the original brake lamp switch. The switch can only be adjusted once. That is during initial installation of the switch. If the switch is not adjusted properly or has been removed for some service, a new switch must be installed and adjusted.

(20) Remove and replace the brake lamp switch with a NEW switch. (Refer to 8 - ELECTRICAL/ LAMPS/LIGHTING - EXTERIOR/BRAKE LAMP SWITCH - REMOVAL), (Refer to 8 - ELECTRICAL/ LAMPS/LIGHTING - EXTERIOR/BRAKE LAMP SWITCH - INSTALLATION)

(21) Bleed the base brakes as necessary. (Refer to 5 - BRAKES - STANDARD PROCEDURE)

(22) Road test vehicle to ensure proper operation of the brakes.

PROPORTIONING VALVE

DESCRIPTION - PROPORTIONING VALVE (HEIGHT SENSING)

NOTE: Only vehicles without antilock brakes (ABS) have a proportioning valve. Vehicles with ABS utilize electronic brake distribution which is controlled through the ABS integrated control unit.

Vehicles not equipped with ABS use a height sensing proportioning valve. It is mounted to the body of the vehicle above the rear axle (Fig. 91). It has an actuator lever that attaches to the rear axle and moves with the axle to help the valve sense the vehicle height.

CAUTION: The height sensing proportioning valve is not adjustable. No attempt should be made to adjust it. It is replaced as a complete assembly.

CAUTION: The use of after-market load leveling or load capacity increasing devices on this vehicle are prohibited. Using air shock absorbers or helper springs on this vehicle will cause the height sensing proportioning valve to inappropriately reduce the hydraulic pressure to the rear brakes. This inappropriate reduction in hydraulic pressure potentially could result in increased stopping distance of the vehicle.

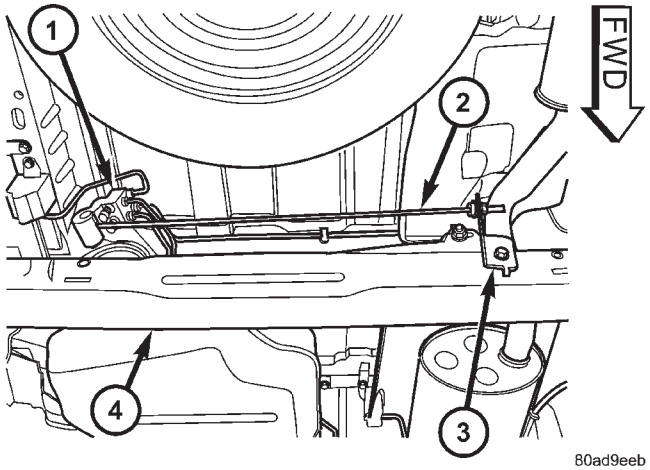

Fig. 91 HEIGHT SENSING PROPORTIONING VALVE

1 - PROPORTIONING VALVE
2 - ACTUATOR LEVER
3 - AXLE BRACKET
4 - REAR AXLE

PROPORTIONING VALVE (Continued)

OPERATION - PROPORTIONING VALVE (HEIGHT SENSING)

Vehicles not equipped with ABS use a height sensing proportioning valve.

The height sensing proportioning valve operates similarly to a standard proportioning valve in the following way. As hydraulic pressure is applied to the valve, full input hydraulic pressure is supplied to the rear brakes up to a certain pressure point, called the split point. Beyond the split point, the proportioning valve reduces the amount of hydraulic pressure to the rear brakes according to a given ratio. Thus, on light brake applications, approximately equal hydraulic pressure will be transmitted to both the front and rear brakes. Upon heavier brake applications, the hydraulic pressure transmitted to the rear brakes will be lower than the front brakes. This will prevent premature rear wheel lockup and skid.

Here is how the height sensing proportioning valve differs from a standard proportioning valve. As the height of the rear suspension changes, the height sensing portion of the proportioning valve changes the split point of the proportioning valve. When the height of the rear suspension is low, the proportioning valve interprets this as extra load and the split point of the proportioning valve is raised to a higher pressure to allow for more rear braking. When the height of the rear suspension is high, the proportioning valve interprets this as a light load and the split point of the proportioning valve is lowered to a lower pressure and rear braking is reduced.

The height sensing proportioning valve regulates the pressure by sensing the load condition of the vehicle through the movement of the proportioning valve actuator lever (Fig. 91). As the position of the rear axle changes, depending on the load the vehicle is carrying, the movement is transferred to the proportioning valve. The proportioning valve adjusts the hydraulic pressure accordingly.

The height sensing proportioning valve allows the brake system to maintain the optimal front to rear brake balance regardless of the vehicle load condition. Under a light load condition, hydraulic pressure to the rear brakes is minimized. As the rear load condition increases, so does the hydraulic pressure to the rear brakes.

DIAGNOSIS AND TESTING - PROPORTIONING VALVE (HEIGHT SENSING)

CAUTION: The use of aftermarket load leveling or load capacity increasing devices on this vehicle is prohibited. Using air shock absorbers or helper springs on this vehicle will cause the height sensing proportioning valve to inappropriately reduce the hydraulic pressure to the rear brakes. This inappropriate reduction in hydraulic pressure potentially could result in increased stopping distance of the vehicle.

When a premature rear wheel skid is obtained on a brake application, it may be an indication that the hydraulic pressure to the rear brakes is above the specified output from the proportioning valve. This condition indicates a possible malfunction of the height sensing proportioning valve, which will require testing to verify that it is properly controlling the hydraulic pressure allowed to the rear brakes. Premature rear wheel skid may also be caused by contaminated front or rear brake linings.

Prior to testing a proportioning valve for function, check that all tire pressures are correct. Also, ensure the front and rear brake linings are in satisfactory condition. **It is also necessary to verify that the brakes shoe assemblies on a vehicle being tested are either original equipment manufacturers (OEM) or original replacement brake shoe assemblies meeting the OEM lining material specification. This vehicles brake system is not balanced for aftermarket brake shoe assembly lining material.**

If both front and rear brakes check OK, proceed with the following test procedure for the height sensing proportioning valve.

(1) Road test the vehicle to determine which rear wheel brake is exhibiting premature wheel skid.

(2) Raise vehicle. (Refer to LUBRICATION & MAINTENANCE/HOISTING - STANDARD PROCEDURE)

(3) Remove the chassis brake tube going to the rear brake in question at the proportioning valve. Remove the chassis brake tube coming from the junction block at the proportioning valve (Fig. 92).

(4) Install the appropriate fittings from Pressure Test Fittings, Special Tool 6833, into the open ports of the proportioning valve.

(5) Install the previously removed brake lines into the Pressure Test Fittings. Tighten all tube nuts to 17 N·m (145 in. lbs.).

(6) Install a pressure gauge from Gauge Set, Special Tool C-4007-A into the open port on each pressure test fitting. Bleed air out of hose from pressure test fittings to pressure gauges at the pressure gauges. Then bleed air out of the brake line being tested at that rear wheel brake bleeder.

NOTE: Actuator rod is a linear spring and is meant to flex by design. When rod is raised, it will have some curvature to it.

(7) Remove the screw fastening the proportioning valve actuator rod bracket to the rear axle. Raise the actuator lever to the full-upward position and hold it there.

PROPORTIONING VALVE (Continued)

(8) With the aid of a helper, apply pressure to the brake pedal until a pressure of 6895 kPa (1000 psi) is obtained on the proportioning valve inlet gauge. Then, based on the type of brake system the vehicle is equipped with and the pressure specification shown on the following table, compare the pressure reading on the outlet gauge to the specification. If outlet pressure at the proportioning valve is not within specification when required inlet pressure is obtained, replace the proportioning valve. (Refer to 5 - BRAKES/HYDRAULIC/MECHANICAL/PROPORTIONING VALVE - REMOVAL)

CAUTION: Do not attempt to adjust the height sensing proportioning valve. If found to be defective, replace the valve.

(9) Remove the pressure test fittings and pressure gauges from the proportioning valve.

(10) Install the chassis brake lines in the correct ports of the proportioning valve. Tighten all tube nuts to 17 N·m (145 in. lbs.).

(11) If necessary, repeat the above steps on the remaining side of the proportioning valve which control the other rear wheel brake.

(12) Attach the actuator lever and bracket to the rear axle.

(13) Bleed rear brakes. (Refer to 5 - BRAKES - STANDARD PROCEDURE)

(14) Road test vehicle.

PROPORTIONING VALVE SPECIFICATIONS

WHEEL BASE	DRIVE TRAIN	SALES CODE	BRAKE SYSTEM	SPLIT POINT	SLOPE	INLET PRESSURE PSI	OUTLET PRESSURE PSI
SWB	FWD	BRB-BGF	15″ DISC/DRUM W/O ANTILOCK	VAR.	.59	1000 PSI	675-875 PSI

REMOVAL - PROPORTIONING VALVE (HEIGHT SENSING)

(1) Using a brake pedal depressor, move and lock the brake pedal to a position past its first 1 inch of travel. This will prevent brake fluid from draining out of the master cylinder when the brake tubes are removed from the proportioning valve.

(2) Raise vehicle. (Refer to LUBRICATION & MAINTENANCE/HOISTING - STANDARD PROCEDURE).

CAUTION: Before removing the brake tubes from the proportioning valve, the proportioning valve and the brake tubes must be thoroughly cleaned. This is required to prevent contamination from entering the proportioning valve or the brake tubes.

(3) Remove the four brake tubes from the inlet and outlet ports of the proportioning valve (Fig. 92).

(4) Remove the two bolts attaching the proportioning valve and bracket to the vehicle (Fig. 92).

(5) Slide the bracket out from under rear track bar bracket. Lower the valve down enough to pull its actuator rod out of the axle bracket and remove the proportioning valve from the vehicle.

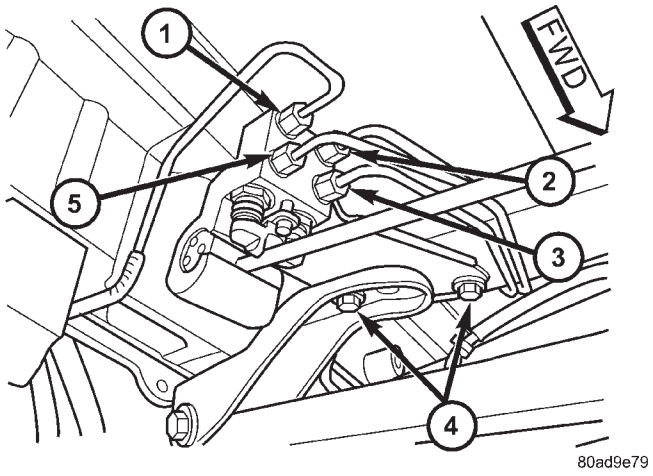

Fig. 92 PROPORTIONING VALVE MOUNTING

1 - LEFT REAR OUTLET TUBE
2 - RIGHT REAR OUTLET TUBE
3 - RIGHT REAR INLET TUBE
4 - MOUNTING BOLTS
5 - LEFT REAR INLET TUBE

PROPORTIONING VALVE (Continued)

INSTALLATION - PROPORTIONING VALVE (HEIGHT SENSING)

(1) Install the end of the actuator rod through the axle bracket grommet and slide the proportioning valve bracket under the rear track bar body bracket (Fig. 92).

(2) Install the proportioning valve attaching bolts (Fig. 92). Tighten the attaching bolts to a torque of 54 N·m (40 ft. lbs.).

(3) Install the four chassis brake lines into the inlet and outlet ports of the proportioning valve (Fig. 92). Tighten all tube nuts to a torque of 17 N·m (145 in. lbs.).

CAUTION: The height sensing proportioning valve is not adjustable. No attempt should be made to adjust it.

(4) Bleed the brake system thoroughly to ensure that all air has been expelled from the hydraulic system. (Refer to 5 - BRAKES - BASE - STANDARD PROCEDURE).

(5) Lower the vehicle to the ground.

(6) Road test the vehicle to verify proper operation of the brake system.

ROTOR

DIAGNOSIS AND TESTING - BRAKE ROTOR

Any servicing of the rotor requires extreme care to maintain the rotor within service tolerances to ensure proper brake action.

Excessive runout or wobble in a rotor can increase pedal travel due to piston knock-back. This increases guide pin sleeve wear due to the tendency of the caliper to follow the rotor wobble.

When diagnosing a brake noise or pulsation, the machined disc braking surface should be checked and inspected.

BRAKING SURFACE INSPECTION

Light braking surface scoring and wear is acceptable. If heavy scoring or warping is evident, the rotor must be refaced or replaced. (Refer to 5 - BRAKES/HYDRAULIC/MECHANICAL/ROTORS - STANDARD PROCEDURE).

Excessive wear and scoring of the rotor can cause improper lining contact on the rotor's braking surface. If the ridges on the rotor are not removed before new brake shoes are installed, improper wear of the shoes will result.

If a vehicle has not been driven for a period of time, the rotor's braking surface will rust in the areas not covered by the brake shoes at that time. Once the vehicle is driven, noise and chatter from the disc brakes can result when the brakes are applied.

Some discoloration or wear of the rotor surface is normal and does not require resurfacing when linings are replaced. If cracks or burned spots are evident, the rotor must be replaced.

ROTOR MINIMUM THICKNESS

Measure rotor thickness at the center of the brake shoe contact surface. Replace the rotor if it is worn below minimum thickness or if machining the rotor will cause its thickness to fall below specifications.

CAUTION: Do not machine the rotor if it will cause the rotor to fall below minimum thickness.

Minimum thickness specifications are cast on the rotor's unmachined surface (Fig. 93). Limits can also be found in this section's specification table. (Refer to 5 - BRAKES/HYDRAULIC/MECHANICAL/ROTOR - SPECIFICATIONS)

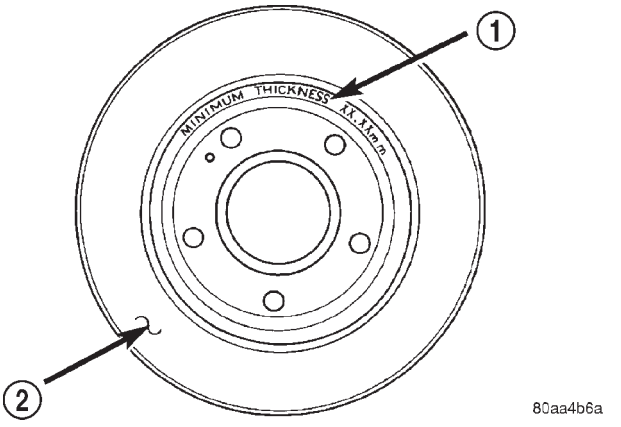

Fig. 93 Minimum Brake Rotor Thickness Markings (Typical)

1 - ROTOR MINIMUM THICKNESS MARKING
2 - ROTOR

ROTOR THICKNESS VARIATION

Thickness variation in a rotor's braking surface can result in pedal pulsation, chatter and surge. This can also be caused by excessive runout in the rotor or the hub.

Rotor thickness variation measurements should be made in conjunction with measuring runout. Measure thickness of the brake rotor at 12 equal points around the rotor braking surface with a micrometer at a radius approximately 25 mm (1 inch) from edge of rotor (Fig. 94). If thickness measurements vary beyond the specification listed in the specifaction table (Refer to 5 - BRAKES/HYDRAULIC/MECHANICAL/ROTOR - SPECIFICATIONS), the rotor should be refaced or replaced. (Refer to 5 - BRAKES/HYDRAULIC/MECHANICAL/ROTORS - STANDARD PROCEDURE).

ROTOR (Continued)

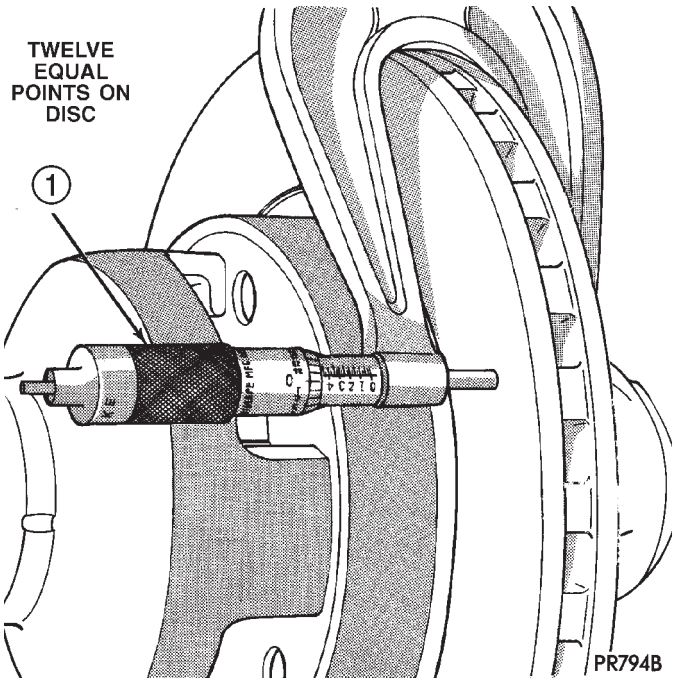

Fig. 94 Checking Rotor For Thickness

1 - CALIPER

ROTOR RUNOUT

On-vehicle rotor runout is the combination of the individual runout of the hub face and the runout of the rotor. (The hub and rotor runouts are separable). To measure rotor runout on the vehicle, first remove the tire and wheel assembly. Reinstall the wheel mounting nuts on the studs, tightening the rotor to the hub. Mount the Dial Indicator, Special Tool C-3339, with Mounting Adaptor, Special Tool SP-1910 on steering arm. The dial indicator plunger should contact braking surface of rotor approximately ten millimeters from edge of rotor (Fig. 95). Check lateral runout on both sides of the rotor, marking the low and high spots on both. Runout limits can be found in the specification table in this section. (Refer to 5 - BRAKES/HYDRAULIC/MECHANICAL/ROTOR - SPECIFICATIONS)

If runout is in excess of the specification, check the lateral runout of the hub face. Before removing the rotor from the hub, place a chalk mark across both the rotor and the one wheel stud closest to where the high runout measurement was taken. This way, the original mounting spot of the rotor on the hub is indexed (Fig. 96).

Remove the rotor from the hub.

NOTE: Clean the hub face surface before checking runout. This provides a clean surface to get an accurate indicator reading.

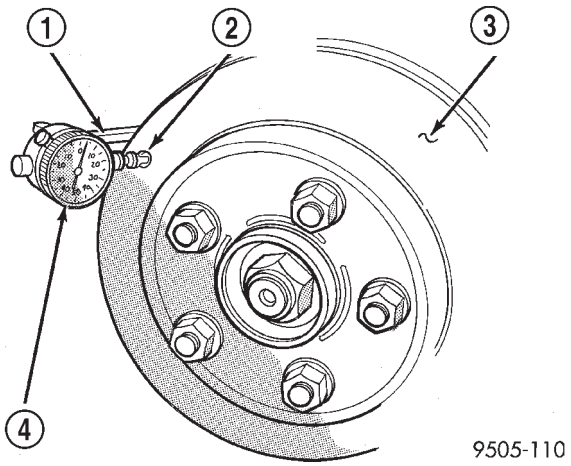

Fig. 95 Checking Rotor Runout

1 - SPECIAL TOOL SP-1910
2 - 10 MILLIMETERS FROM EDGE
3 - DISC SURFACE
4 - SPECIAL TOOL C-3339

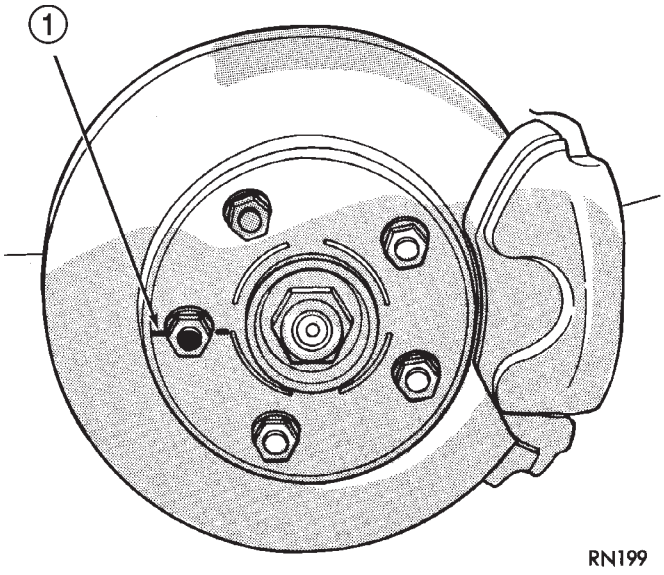

Fig. 96 Marking Rotor and Wheel Stud

1 - CHALK MARK

Mount Dial Indicator, Special Tool C-3339, and Mounting Adaptor, Special Tool SP-1910, to the steering knuckle. Position the indicator stem so it contacts the hub face near the outer diameter. Care must be taken to position stem outside of the stud circle, but inside of the chamfer on the hub rim (Fig. 97).

Hub runout should not exceed 0.03 mm (0.0012 inch). If runout exceeds this specification, the hub must be replaced. (Refer to 2 - SUSPENSION/FRONT/HUB / BEARING - REMOVAL)(Refer to 2 - SUSPENSION/REAR/HUB / BEARING - REMOVAL)

ROTOR (Continued)

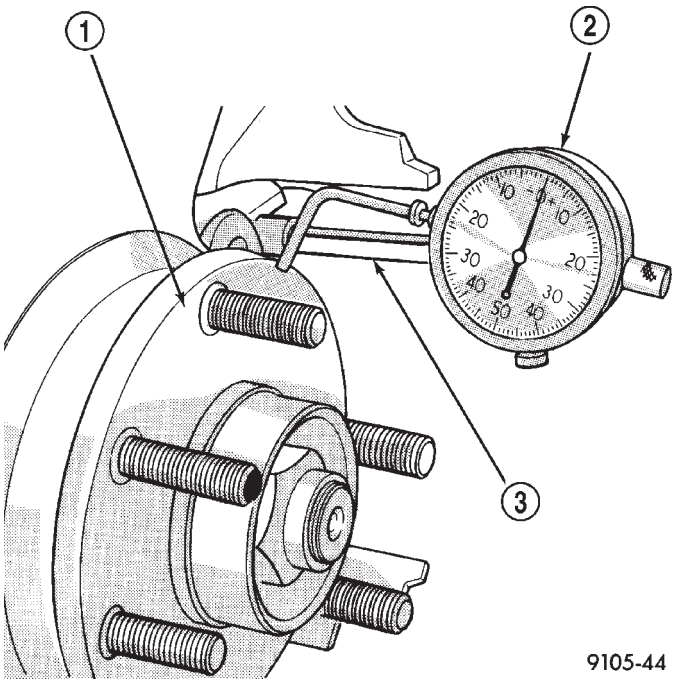

Fig. 97 Checking Hub Runout

1 - HUB SURFACE
2 - SPECIAL TOOL C-3339
3 - SPECIAL TOOL SP-1910

If the hub runout does not exceed this specification, install the rotor back on the hub, aligning the chalk marks on the rotor with a wheel mounting stud, two studs apart from the original stud (Fig. 98). Tighten nuts in the proper sequence and torque to specifications.

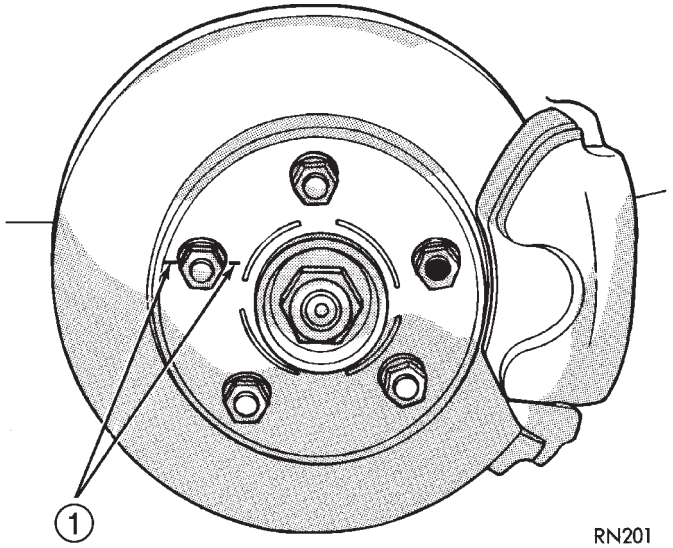

Fig. 98 Index Rotor And Wheel Stud

1 - CHALK MARK

Recheck brake rotor runout to see if the runout is now within specifications. (Refer to 5 - BRAKES/HYDRAULIC/MECHANICAL/ROTOR - SPECIFICATIONS)

If runout is not within specifications, reface or replace the brake rotor. (Refer to 5 - BRAKES/HYDRAULIC/MECHANICAL/ROTORS - STANDARD PROCEDURE)

STANDARD PROCEDURE - BRAKE ROTOR MACHINING

NOTE: Refacing the rotor is not required each time the brake pads are replaced, only when the need is foreseen.

Any servicing of the rotor requires extreme care to maintain the rotor within service tolerances to ensure proper brake action.

If the rotor surface is deeply scored or warped, or there is a complaint of brake roughness or brake pedal pulsation, the rotor should be refaced using a hub-mounted on-car brake lathe (Fig. 99), or replaced.

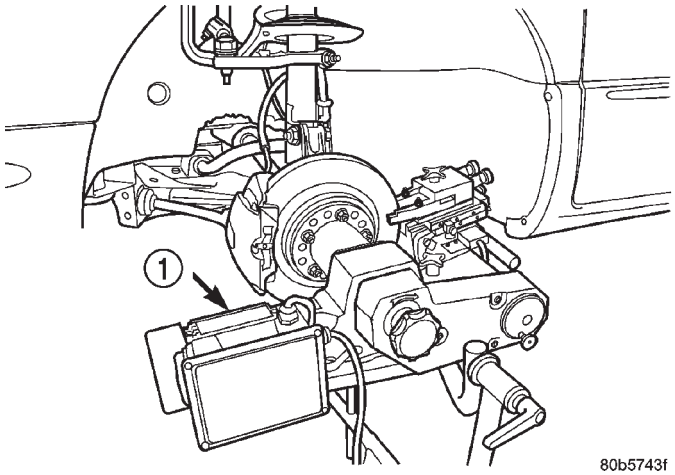

Fig. 99 On-Car Brake Lathe

1 - ON-CAR BRAKE LATHE

The use of a hub-mounted on-car brake lathe is highly recommended to eliminate the possibility of excessive runout. It trues the brake rotor to the vehicle's hub and bearing.

NOTE: All rotors have markings for minimum allowable thickness cast on an un-machined surface of the rotor (Fig. 100) (Fig. 101). Minimum thickness specifications can also be found in the specification table in this section. (Refer to 5 - BRAKES/HYDRAULIC/MECHANICAL/ROTOR - SPECIFICATIONS)

ROTOR (Continued)

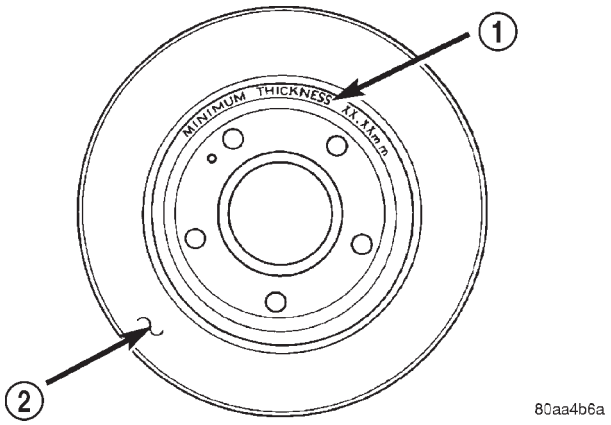

Fig. 100 Front Brake Rotor

1 - ROTOR MINIMUM THICKNESS MARKING
2 - ROTOR

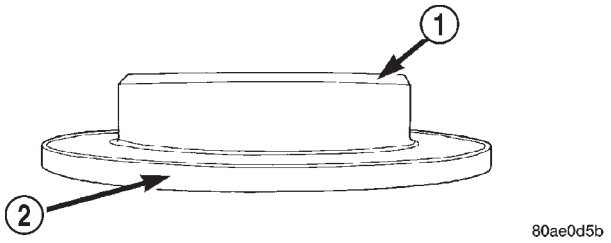

Fig. 101 Rear Brake Rotor Minimum Thickness Markings

1 - ROTOR MINIMUM THICKNESS AND DRUM MAXIMUM DIAMETER SPECIFICATIONS ARE SHOWN ON THIS SURFACE
2 - REAR ROTOR

Minimum allowable thickness is the minimum thickness which the brake rotor machined surface may be cut to.

CAUTION: Do not machine the rotor if it will cause the rotor to fall below minimum thickness.

Before installation, verify the brake rotor face and the hub adapters are free of any chips, rust, or contamination.

When mounting and using the brake lathe, strict attention to the brake lathe manufacturer's operating instructions is required.

Machine both sides of the brake rotor at the same time. Cutting both sides at the same time minimizes the possibility of a tapered or uneven cut.

When refacing a rotor, the required TIR (Total Indicator Reading) and thickness variation limits MUST BE MAINTAINED. Extreme care in the operation of rotor turning equipment is required. Specifications for brake rotor machining can be found in this section's specification table. (Refer to 5 - BRAKES/HYDRAULIC/MECHANICAL/ROTOR - SPECIFICATIONS)

REMOVAL - FRONT BRAKE ROTOR

(1) Raise vehicle on jackstands or centered on a frame contact type hoist. See Hoisting in Lubrication and Maintenance.

(2) Remove the front wheel and tire assembly.

(3) Remove the two mounting bolts securing the disc brake caliper adapter with brake caliper to the steering knuckle (Fig. 102).

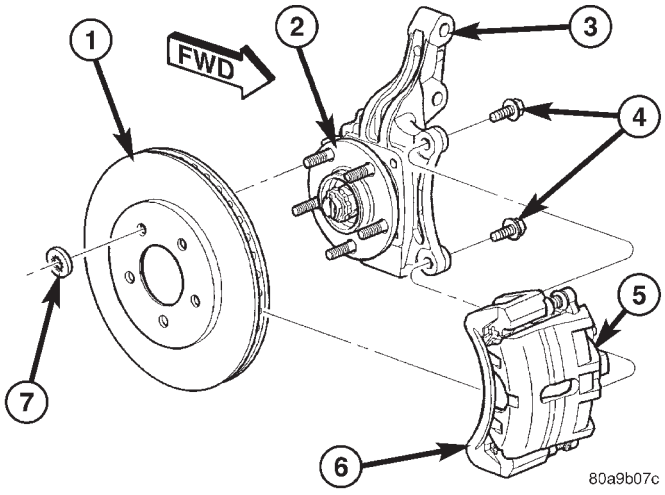

Fig. 102 Front Brake Mounting

1 - BRAKE ROTOR
2 - HUB AND BEARING
3 - STEERING KNUCKLE
4 - ADAPTER MOUNTING BOLTS
5 - BRAKE CALIPER
6 - ADAPTER
7 - CLIP

(4) Remove the disc brake caliper and adapter as an assembly from the steering knuckle (Fig. 102). Hang the assembly out of the way using wire or a bungee cord. Use care not to overextend the brake hose when doing this.

(5) Remove any retainer clips from the wheel mounting studs.

(6) Remove brake rotor from hub by pulling it straight off wheel mounting studs (Fig. 102).

INSTALLATION - FRONT BRAKE ROTOR

(1) Install the brake rotor back on the hub and bearing (Fig. 102).

(2) Install brake caliper and adapter back over brake rotor aligning adapter with mounting holes on steering knuckle (Fig. 102).

(3) Install the two adapter mounting bolts securing the adapter to the steering knuckle. Tighten the mounting bolts to 169 N·m (125 ft. lbs.) torque.

(4) Install wheel and tire assembly on vehicle. Tighten the wheel mounting lug nuts in proper sequence until all nuts are torqued to half specifica-

ROTOR (Continued)

tion, then repeat the tightening sequence to the full specified torque of 135 N·m (100 ft. lbs.).

(5) Lower vehicle to the ground.

SPECIFICATIONS

BRAKE ROTOR

When refacing a rotor, the required TIR (Total Indicator Reading) and thickness variation limits MUST BE MAINTAINED. Extreme care in the operation of rotor turning equipment is required.

LIMITS/SPECIFICATIONS

Braking Rotor	Rotor Thickness	Minimum Rotor Thickness	Rotor Thickness Variation	Rotor Runout*
Front Rotor - Disc/Drum Brakes (TRW)	27.87–28.13 mm 1.097-1.107 in.	25.3 mm 0.996 in.	0.009 mm 0.0004 in.	0.035 mm 0.0014 in.
Front Rotor - Disc/Disc Brakes (Teves)	27.90–28.10 mm 1.098-1.106 in.	25.3 mm 0.996 in.	0.008 mm 0.0003 in.	0.035 mm 0.0014 in.
Rear Rotor	12.4–12.6 mm 0.488 -0.496 in.	11.25 mm 0.443 in.	0.013 mm 0.0005 in.	0.14 mm 0.0055 in.
* TIR Total Indicator Reading (Measured On Vehicle)				

BRAKE ROTOR - EXPORT

NOTE: Use the following information on all 4 wheel disc brake vehicles that are equipped with BR3 sales code.

When refacing a rotor, the required TIR (Total Indicator Reading) and thickness variation limits MUST BE MAINTAINED. Extreme care in the operation of rotor turning equipment is required.

LIMITS/SPECIFICATIONS

Brake Rotor	Rotor Thickness	Minimum Rotor Thickness	Rotor Thickness Variation	Rotor Runout *
Front	27.9-28.1 mm 1.098 -1.106 in.	26.5 mm 1.043 in	0.010 mm 0.0004 in.	0.080 mm 0.0031 in.
Rear	12.4-12.6 mm 0.488-0.496 in.	11.25 mm 0.443 in.	0.013 mm 0.0005 in.	0.14 mm 0.0055 in.
* TIR Total Indicator Reading (Measured On Vehicle)				

SUPPORT PLATE - DRUM BRAKE

REMOVAL

(1) Using a brake pedal depressor, move and secure brake pedal to a position past its first 1 inch of travel. This will prevent brake fluid from draining out of master cylinder when brake tube is remove from wheel cylinder.

(2) Raise vehicle. (Refer to LUBRICATION & MAINTENANCE/HOISTING - STANDARD PROCEDURE).

(3) Remove wheel and tire assembly.

(4) Disconnect brake tube from rear of wheel cylinder. Cap open ends

(5) Remove brake drum.

(6) Remove brake shoes from brake support plate. (Refer to 5 - BRAKES/HYDRAULIC/MECHANICAL/BRAKE PADS/SHOES - REMOVAL).

(7) Remove the 2 bolts attaching the wheel cylinder to the brake support plate.

(8) Remove the wheel cylinder from the brake support plate.

(9) Disconnect the park brake cable from the park brake actuation lever.

(10) Using a suitable tool such as a 14 mm box wrench (Fig. 103) or an aircraft type hose clamp, compress the flared legs on park brake cable retainer. Then pull the park brake cable out of brake support plate.

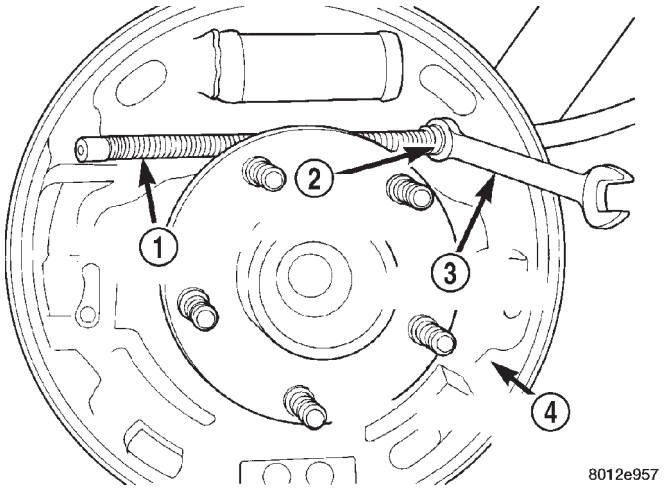

Fig. 103 Removing Park Brake Cable From Brake Support Plate

1 - PARK BRAKE CABLE
2 - CABLE RETAINER
3 - 14 mm BOX WRENCH
4 - BRAKE SUPPORT PLATE

(11) Remove the rear hub and bearing. (Refer to 2 - SUSPENSION/REAR/HUB / BEARING - REMOVAL)

(12) Remove the rear brake support plate from the rear axle.

INSTALLATION

(1) Install the 4 hub and bearing to axle mounting bolts into the mounting holes in the flange of the rear axle.

(2) Install the rear brake support plate on the 4 mounting bolts installed in the flange of the rear axle (Fig. 104).

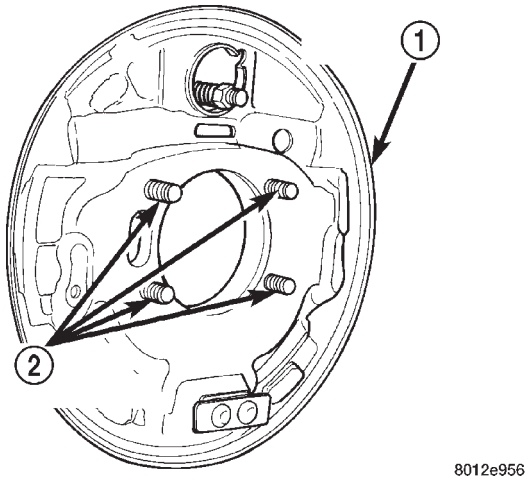

Fig. 104 Brake Support Plate Mounted On Bearing Attaching Bolts

1 - REAR BRAKE SUPPORT PLATE
2 - HUB/BEARING MOUNTING BOLTS

(3) Install the rear hub and bearing (and connect wheel speed sensor where applicable) stopping short of installing the brake drum. (Refer to 2 - SUSPENSION/REAR/HUB / BEARING - INSTALLATION)

(4) Install the rear park brake cable into its mounting hole in the rear brake support plate.

(5) Install the park brake cable on the park brake actuation lever.

(6) Apply sealant such as Mopar Gasket-In-A-Tube or equivalent around the wheel cylinder opening in the brake support plate.

(7) Install wheel cylinder onto brake support. Install and tighten the wheel cylinder to brake support plate attaching bolts to 8 N·m (75 in. lbs.) torque.

(8) Install brake tube into wheel cylinder. Tighten tube nut to a torque of 17 N·m (145 in. lbs.) torque.

(9) Install the rear brake shoes on the brake support plate. (Refer to 5 - BRAKES/HYDRAULIC/MECHANICAL/BRAKE PADS/SHOES - INSTALLATION).

(10) Install brake drum.

SUPPORT PLATE - DRUM BRAKE (Continued)

(11) Install wheel and tire.
(12) Tighten wheel stud nuts to 135 N·m (100 ft. lbs.).
(13) Adjust drum brake shoes. (Refer to 5 - BRAKES/HYDRAULIC/MECHANICAL/BRAKE PADS/SHOES - ADJUSTMENTS)
(14) Remove brake pedal depressor tool.
(15) Bleed the brake system as necessary. (Refer to 5 - BRAKES - BASE - STANDARD PROCEDURE).
(16) Lower the vehicle.

WHEEL CYLINDERS

REMOVAL

(1) Using a brake pedal depressor, move and secure brake pedal to a position past its first 1 inch of travel. This will prevent brake fluid from draining out of master cylinder when brake tube is remove from wheel cylinder.
(2) Raise vehicle. (Refer to LUBRICATION & MAINTENANCE/HOISTING - STANDARD PROCEDURE).
(3) Remove wheel and tire assembly.
(4) Disconnect brake tube from rear of wheel cylinder. Cap open ends
(5) Remove brake drum.
(6) Remove brake shoes from brake support plate (Discard if contaminated).(Refer to 5 - BRAKES/HYDRAULIC/MECHANICAL/BRAKE PADS/SHOES - REMOVAL)
(7) Remove the 2 bolts attaching the wheel cylinder to the brake support plate.
(8) Remove the wheel cylinder from the brake support plate.

INSPECTION

With brake drums removed, inspect the wheel cylinder boots for evidence of a brake fluid leak. Visually check the boots for cuts, tears, or heat cracks. If any of these conditions exist, the wheel cylinders should be completely cleaned, inspected and new parts installed.
If a wheel cylinder is leaking and the brake lining material is saturated with brake fluid, the brake shoes must be replaced.

INSTALLATION

(1) Apply sealant such as Mopar Gasket-In-A-Tube or equivalent around the wheel cylinder opening in the brake support plate.
(2) Install wheel cylinder onto brake support. Install and tighten the wheel cylinder to brake support plate attaching bolts to 8 N·m (75 in. lbs.) torque.
(3) Install brake tube into wheel cylinder. Tighten tube nut to a torque of 17 N·m (145 in. lbs.) torque.
(4) Install the rear brake shoes on the brake support plate. (Refer to 5 - BRAKES/HYDRAULIC/MECHANICAL/BRAKE PADS/SHOES - INSTALLATION).
(5) Install brake drum.
(6) Install wheel and tire. Install and tighten wheel lug nuts to 135 N·m (100 ft. lbs.).
(7) Adjust drum brake shoes. (Refer to 5 - BRAKES/HYDRAULIC/MECHANICAL/BRAKE PADS/SHOES - ADJUSTMENTS)
(8) Remove brake pedal depressor tool.
(9) Bleed the brake system as necessary. (Refer to 5 - BRAKES - BASE - STANDARD PROCEDURE).
(10) Lower vehicle.

PARKING BRAKE

DESCRIPTION

DESCRIPTION

The parking brake system is operated by a foot operated parking brake lever. The parking brake lever is mounted on the body of the vehicle to the left of the brake pedal (Fig. 105). It is a automatic-adjusting type lever.

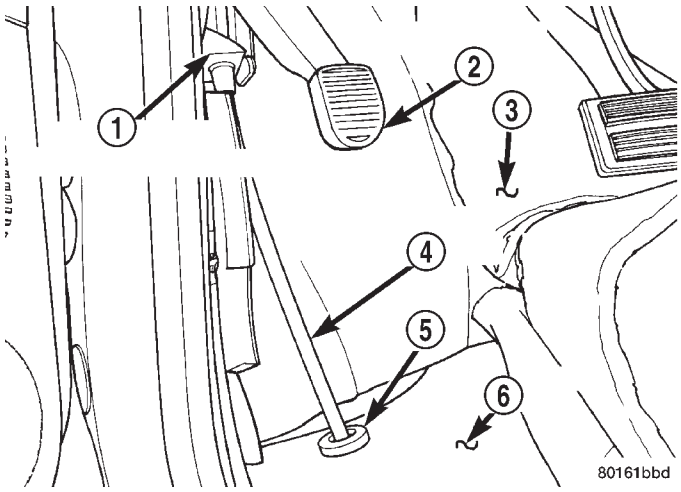

Fig. 105 Parking Brake Lever (Pedal)

1 - PARK BRAKE PEDAL ASSEMBLY
2 - PARK BRAKE PEDAL
3 - CARPET
4 - FRONT PARK BRAKE CABLE
5 - SEAL
6 - FLOOR PAN

PARKING BRAKE (Continued)

The vehicle has four flexible steel parking brake cables. They are:

- Front
- Intermediate
- Left rear
- Right rear

The front parking brake cable extends from the parking brake lever. A steel equalizer bracket connects the front parking brake cable to the left rear and intermediate cable. The intermediate cable is connected to the right rear cable using a parking brake cable connector.

On vehicles equipped with rear drum brakes, the rear service brakes also act as the vehicle's parking brakes.

Vehicles equipped with rear disc brakes use a small duo-servo brake assembly mounted to the each rear disc brake caliper adapter as the parking brake. The inside of the brake rotor (hat section of drum-in-hat style brake rotor) is used as the parking brake drum.

DESCRIPTION - EXPORT

The parking brake system on this vehicle features a hand-operated parking brake lever. The lever is located between the two front seats and requires a special front cable.

OPERATION

The automatic-adjusting feature in the foot operated parking brake lever continuously applies minimal tension to the parking brake cables when the parking brake lever is in the released position to keep them in adjustment at all times. Due to this feature, the parking brake cables require no periodic adjustment.

When the parking brake lever is applied, the cables are pulled, thus applying the brake shoes (rear drum brakes) or parking brake shoes (rear disc brakes) at each rear wheel.

The brake shoes are mechanically operated by an internal lever and strut connected to the rear parking brake cables.

An equalizer bracket is used at the rear end of the front parking brake cable to distribute tension equally to each parking brake cable.

STANDARD PROCEDURE

STANDARD PROCEDURE - PARKING BRAKE AUTOMATIC ADJUSTER TENSION RELEASE

The parking brake lever (pedal) mechanism used in this vehicle is designed so that the automatic adjuster is not required to be locked out when servicing the parking brake lever (pedal) or the parking brake cables.

This parking brake lever (pedal) mechanism is designed so that the adjuster mechanism will rotate only half a turn when the tension is released from the parking brake cable. This eliminates the requirement to lock out the automatic adjuster when servicing the parking brake lever (pedal) mechanism and cables.

Use the following procedure to release the tension from the parking brake cables and the automatic adjuster in the parking brake lever (pedal) mechanism.

(1) Grasp the exposed section of the front parking brake cable and pull rearward on it. While holding the park brake in this position, install a pair of locking pliers on the front parking brake cable just rearward of the second body outrigger bracket (Fig. 106).

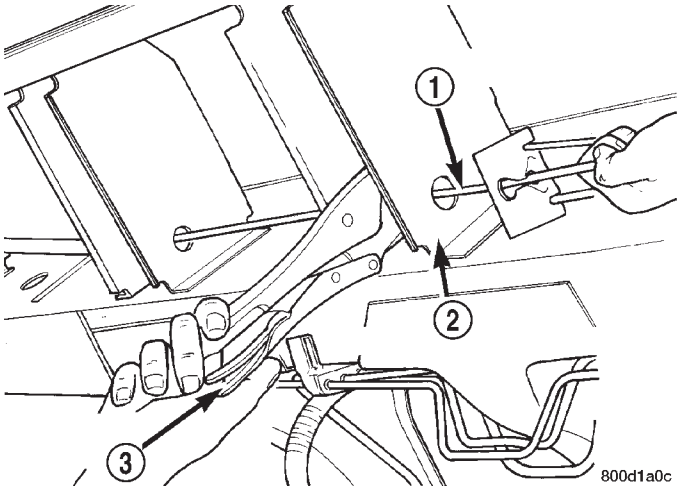

Fig. 106 Locking Out Automatic Adjuster

1 - PARK BRAKE CABLE
2 - REAR BODY OUTRIGGER BRACKET
3 - LOCKING PLIERS

(2) Remove the left rear and intermediate parking brake cables from the parking brake cable equalizer (Fig. 107).

(3) Remove the equalizer from the front parking brake cable.

(4) Remove the locking pliers from the front parking brake cable. This will allow the adjuster in the parking brake lever (pedal) mechanism to rotate around to its stop. This will remove the tension from the adjuster and front park brake cable (Refer to 5 - BRAKES/PARKING BRAKE - STANDARD PROCEDURE).

PARKING BRAKE (Continued)

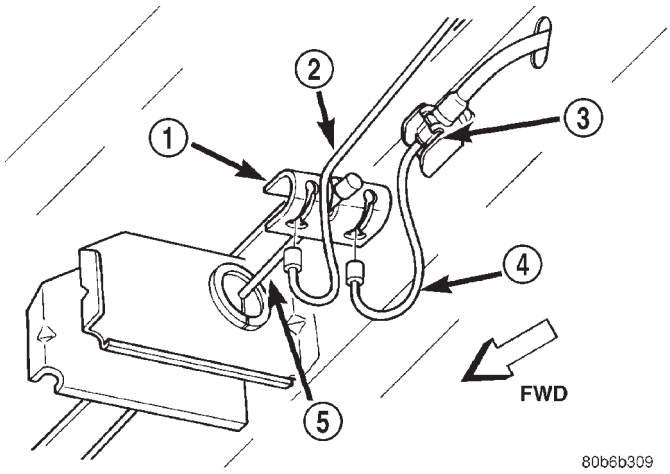

Fig. 107 Parking Brake Cable Attachment To Equalizer

1 - EQUALIZER
2 - LEFT REAR PARKING BRAKE CABLE
3 - LOCKING NUT
4 - INTERMEDIATE PARKING BRAKE CABLE
5 - FRONT PARKING BRAKE CABLE

STANDARD PROCEDURE - PARKING BRAKE AUTOMATIC ADJUSTER TENSION RESET

The parking brake lever (pedal) mechanism used in this vehicle is designed so that the automatic adjuster is not required to be locked out when servicing the parking brake lever (pedal) or the parking brake cables.

(1) Grasp the exposed section of the front parking brake cable and pull rearward on it. While holding the park brake in this position, install a pair of locking pliers on the front parking brake cable just rearward of the second body outrigger bracket (Fig. 106).

(2) Install the equalizer on the front parking brake cable.

(3) Install the left rear and intermediate park brake cable in the correct location on the parking brake cable equalizer (Fig. 107).

(4) Remove the locking pliers from the front parking brake cable. This will allow the adjuster in the park brake lever (pedal) mechanism to tension the park brake cables.

(5) Apply and release the parking brake lever (pedal) one time. This will seat the parking brake cables and allow the auto adjuster in the parking brake lever (pedal) mechanism to correctly tension the parking brake cables.

CABLES - PARKING BRAKE

REMOVAL

REMOVAL - PARKING BRAKE CABLE (FRONT)

(1) Raise vehicle on jackstands or centered on a hoist. (Refer to LUBRICATION & MAINTENANCE/ HOISTING - STANDARD PROCEDURE).

(2) Manually release the automatic self-adjusting mechanism tension of the parking brake lever (pedal) assembly. (Refer to 5 - BRAKES - STANDARD PROCEDURE).

(3) Remove the intermediate and left rear park brake cable from the park brake cable equalizer (Fig. 108).

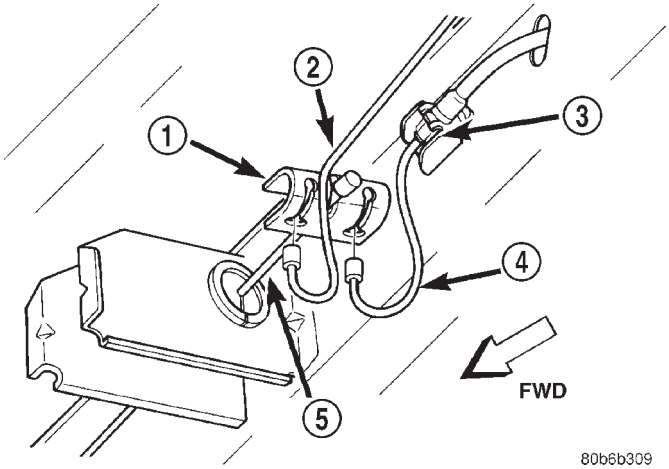

Fig. 108 Park Brake Cable Attachment To Equalizer

1 - EQUALIZER
2 - LEFT REAR PARKING BRAKE CABLE
3 - LOCKING NUT
4 - INTERMEDIATE PARKING BRAKE CABLE
5 - FRONT PARKING BRAKE CABLE

(4) Remove the front park cable housing retainer from body outrigger bracket (Fig. 109). Cable is removable by sliding a 14 mm box wrench over cable retainer and compressing the three retaining fingers. Alternate method is to use an aircraft type hose clamp and screwdriver.

(5) Lower vehicle.

(6) Remove the left front door sill molding.

(7) Remove the left front kick panel for access to the park brake cable and park brake pedal assembly.

(8) Lift floor mat for access to park brake cable and floor pan. Pull the seal and the park brake cable (Fig. 110) out of the floor pan of vehicle.

(9) Pull parking brake cable strand end forward and disconnect button from clevis. Tap cable housing end fitting out of pedal assembly bracket.

CABLES - PARKING BRAKE (Continued)

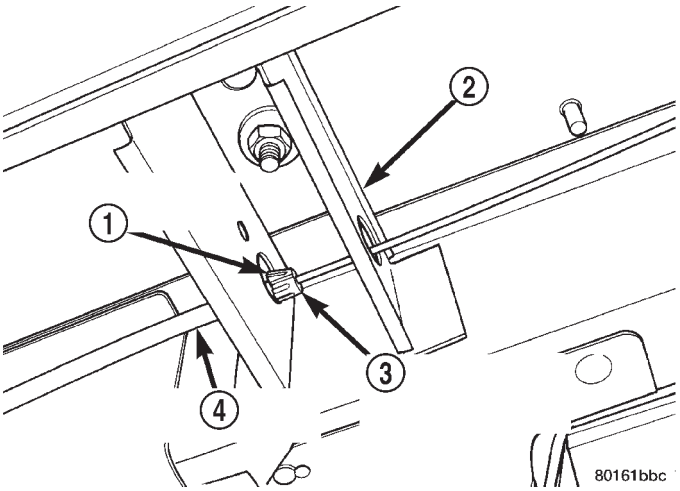

Fig. 109 Front Park Brake Cable Attachment To Body

1 - CABLE HOUSING RETAINER
2 - BODY OUTRIGGER BRACKET
3 - PUSH WRENCH OVER END OF RETAINER HERE
4 - FRONT PARK BRAKE CABLE

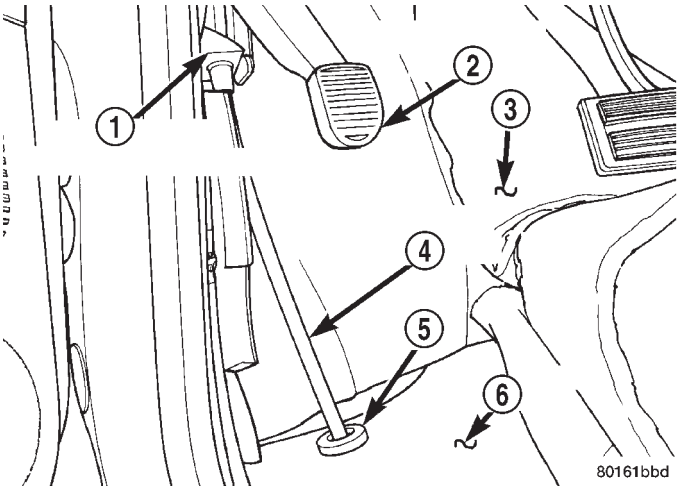

Fig. 110 Front Park Brake Cable At Floor Pan

1 - PARK BRAKE PEDAL ASSEMBLY
2 - PARK BRAKE PEDAL
3 - CARPET
4 - FRONT PARK BRAKE CABLE
5 - SEAL
6 - FLOOR PAN

(10) Remove cable retainer from the parking brake lever (pedal) assembly bracket.

(11) Pull front parking brake cable assembly out of vehicle through hole in floor pan.

REMOVAL - PARKING BRAKE CABLE (INTERMEDIATE)

(1) Raise the vehicle. (Refer to LUBRICATION & MAINTENANCE/HOISTING - STANDARD PROCEDURE).

(2) Manually lock out the automatic self-adjusting mechanism tension of the parking brake lever (pedal) assembly. (Refer to 5 - BRAKES - STANDARD PROCEDURE). Once the cable is released from the equalizer, do not remove the locking pliers until reinstallation of the cable is complete.

(3) Remove the intermediate parking brake cable from the parking brake cable equalizer (Fig. 111).

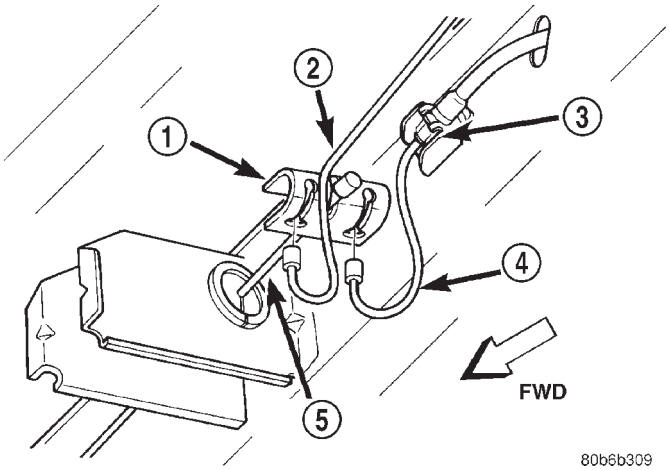

Fig. 111 Parking Brake Cable Attachment To Equalizer

1 - EQUALIZER
2 - LEFT REAR PARKING BRAKE CABLE
3 - LOCKING NUT
4 - INTERMEDIATE PARKING BRAKE CABLE
5 - FRONT PARKING BRAKE CABLE

(4) Remove the locking nut securing the intermediate cable housing to the side bracket on the frame rail (Fig. 111).

(5) Remove the intermediate parking brake cable from the cable connector attaching it to the right rear parking brake cable (Fig. 112). Remove the locking nut securing the intermediate cable housing to the side bracket on the frame rail (Fig. 112).

(6) If the vehicle is a short-wheel-base model, it will be necessary to loosen and lower the fuel tank far enough to remove the intermediate parking brake cable. (Refer to 14 - FUEL SYSTEM/FUEL DELIVERY/FUEL TANK - REMOVAL).

(7) Remove the intermediate parking brake cable from the side brackets and vehicle.

CABLES - PARKING BRAKE (Continued)

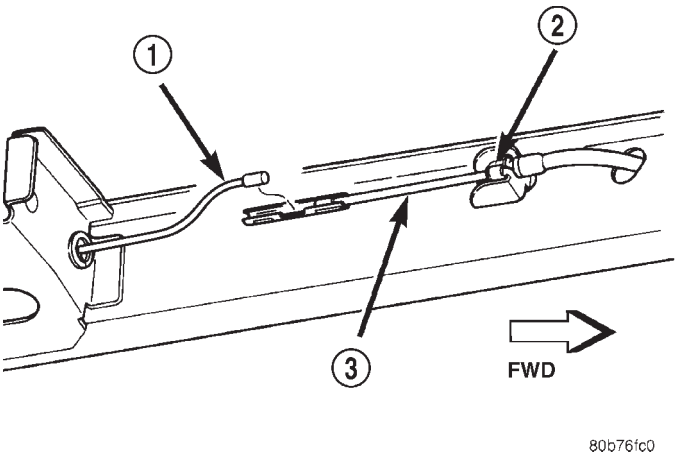

Fig. 112 Intermediate Cable Attachment To Right

1 - RIGHT REAR PARKING BRAKE CABLE
2 - LOCKING NUT
3 - INTERMEDIATE PARKING BRAKE CABLE

REMOVAL - PARKING BRAKE CABLE (RIGHT REAR)

(1) Raise vehicle on jackstands or centered on a hoist. (Refer to LUBRICATION & MAINTENANCE/ HOISTING - STANDARD PROCEDURE).

(2) Remove rear tire and wheel assembly.

(3) Remove rear brake drum from the rear wheel of the vehicle requiring service to the rear park brake cable.

(4) Create slack in the rear parking brake cables by locking out the automatic adjuster as described here. Grasp an exposed section of front parking brake cable near the equalizer and pull down on it. At this time install a pair of locking pliers on the cable just rearward of the second body outrigger bracket (Fig. 113).

(5) Disconnect the right rear parking brake cable from the connector on the intermediate cable (Fig. 114).

(6) To remove the right parking brake cable housing from the body bracket, slide a 14 mm box end wrench over the end of cable retainer to compress the retaining fingers (Fig. 115). The alternate method using an aircraft type hose clamp will not work on the right side of the vehicle.

(7) Remove the brake shoes from the brake support plate. (Refer to 5 - BRAKES/HYDRAULIC/MECHANICAL/BRAKE PADS/SHOES - REMOVAL).

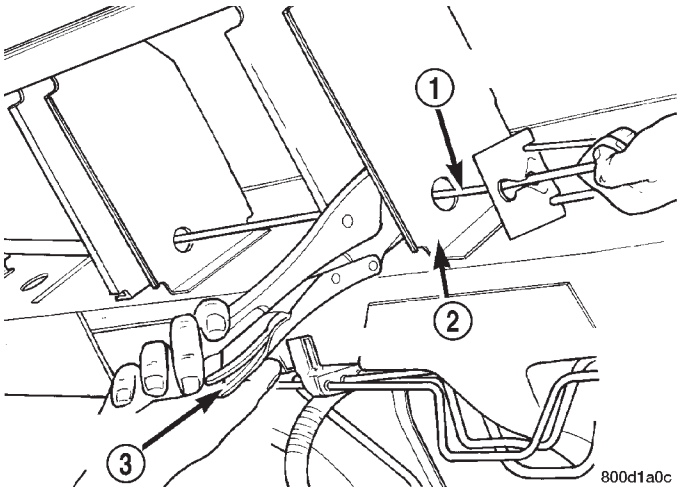

Fig. 113 Locking Out Automatic Adjuster

1 - PARK BRAKE CABLE
2 - REAR BODY OUTRIGGER BRACKET
3 - LOCKING PLIERS

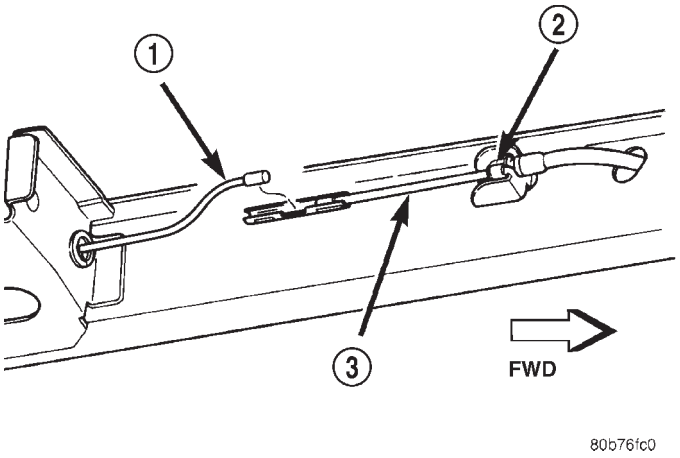

Fig. 114 Right Rear Cable Connection To Intermediate Cable

1 - RIGHT REAR PARKING BRAKE CABLE
2 - LOCKING NUT
3 - INTERMEDIATE PARKING BRAKE CABLE

(8) Disconnect parking brake cable from parking brake actuator lever.

(9) Remove the parking brake cable housing retainer from the brake support plate using a 14mm wrench to compress the retaining fingers (Fig. 116). Remove the cable.

CABLES - PARKING BRAKE (Continued)

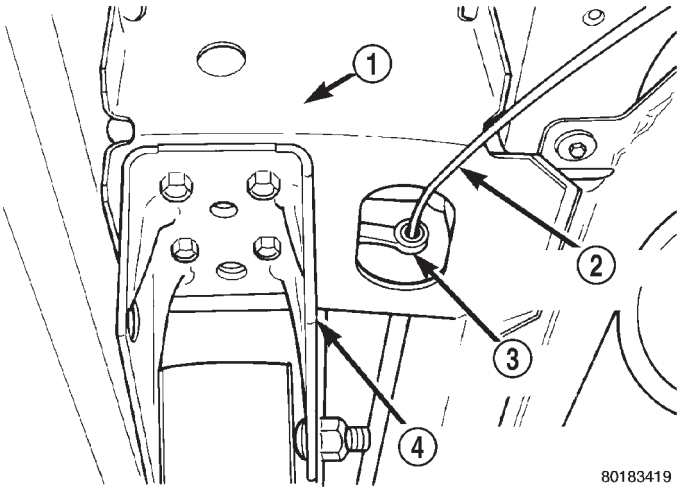

Fig. 115 Right Park Brake Cable Removal From Body Bracket

1 - RIGHT REAR BODY BRACKET
2 - PARK BRAKE CABLE
3 - 14MM WRENCH
4 - LEAF SPRING AND BRACKET

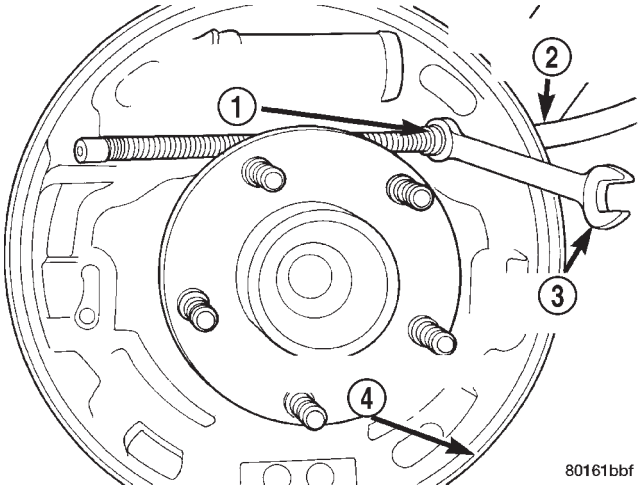

Fig. 116 Removing Park Brake Cable From Brake Support Plate

1 - PARK BRAKE CABLE RETAINER
2 - PARK BRAKE CABLE
3 - 14MM BOX WRENCH
4 - BRAKE SUPPORT PLATE

REMOVAL - PARKING BRAKE CABLE (LEFT REAR)

(1) Raise vehicle on jackstands or centered on a hoist. (Refer to LUBRICATION & MAINTENANCE/ HOISTING - STANDARD PROCEDURE).

(2) Remove rear tire and wheel assembly.

(3) Remove rear brake drum from the rear wheel of the vehicle requiring service to the rear park brake cable.

(4) Create slack in rear park brake cables by locking out the automatic adjuster as described here. Grasp an exposed section of front park brake cable near the equalizer and pull down on it. Then install a pair of locking pliers on the cable just rearward of the second body outrigger bracket (Fig. 117).

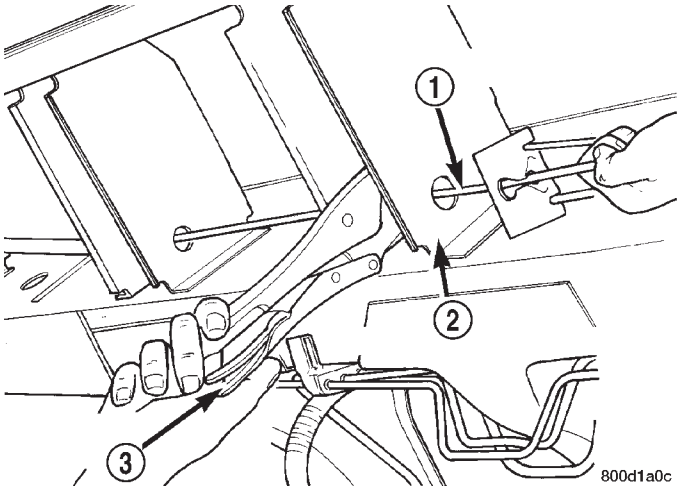

Fig. 117 Locked Out Park Brake Automatic Adjuster

1 - PARK BRAKE CABLE
2 - REAR BODY OUTRIGGER BRACKET
3 - LOCKING PLIERS

(5) Disconnect the left rear parking brake cable from the parking brake cable equalizer (Fig. 118).

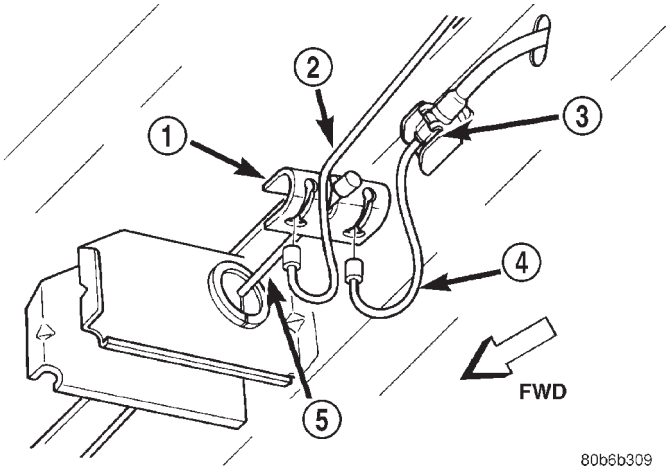

Fig. 118 Parking Brake Cables At Equalizer

1 - EQUALIZER
2 - LEFT REAR PARKING BRAKE CABLE
3 - LOCKING NUT
4 - INTERMEDIATE PARKING BRAKE CABLE
5 - FRONT PARKING BRAKE CABLE

(6) To remove parking brake cable housing from the body bracket, slide a 14 mm box end wrench over retainer end compressing the three fingers (Fig. 119). Alternate method is to use an aircraft type hose clamp.

CABLES - PARKING BRAKE (Continued)

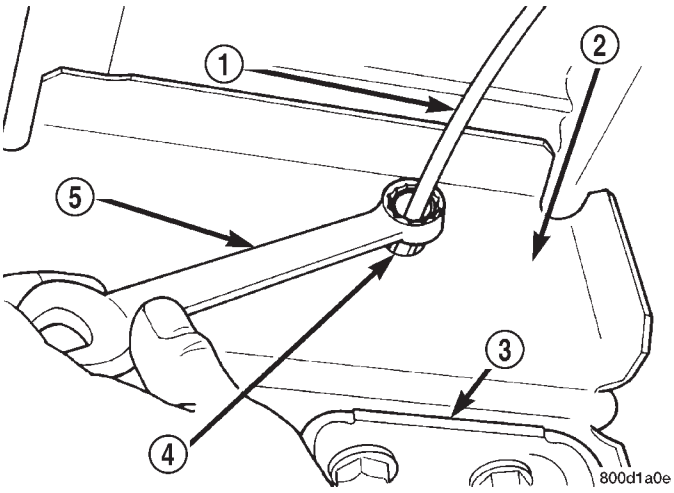

Fig. 119 Parking Brake Cable Removal From Body Bracket

1 - LEFT REAR PARK BRAKE CABLE
2 - BODY BRACKET
3 - LEAF SPRING MOUNTING BRACKET
4 - CABLE RETAINER
5 - 14MM BOX WRENCH

(7) Remove the brake shoes from the brake support plate. (Refer to 5 - BRAKES/HYDRAULIC/MECHANICAL/BRAKE PADS/SHOES - REMOVAL).

(8) Disconnect parking brake cable from parking brake actuator lever.

(9) Remove the parking brake cable housing retainer from the brake support plate using a 14mm wrench to compress the retaining fingers (Fig. 120).

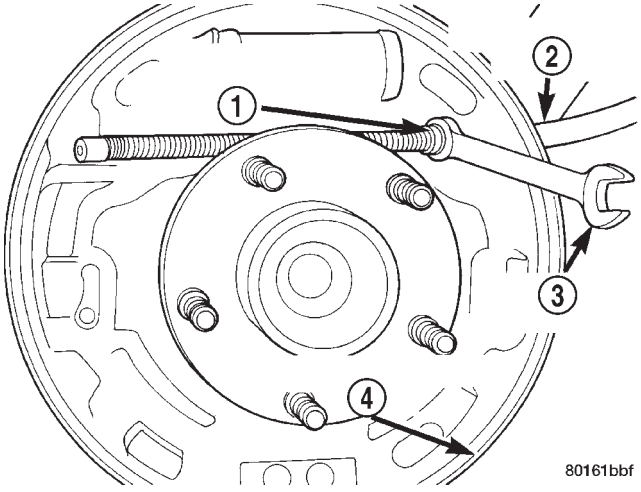

Fig. 120 Removing Parking Brake Cable From Brake Support Plate

1 - PARK BRAKE CABLE RETAINER
2 - PARK BRAKE CABLE
3 - 14MM BOX WRENCH
4 - BRAKE SUPPORT PLATE

INSTALLATION

INSTALLATION - PARKING BRAKE CABLE (FRONT)

(1) Pass front parking brake cable assembly through hole in floor pan from the inside of the vehicle.

(2) Pass cable strand button through the hole in the lever (pedal) assembly bracket.

(3) Install cable retainer onto the park brake cable and then install cable retainer into pedal assembly bracket.

(4) Install the end of the park brake cable into the retainer previously installed into the park brake pedal bracket.

(5) Install cable strand button into the clevis on the park brake pedal mechanism.

(6) Install the front park brake cable floor pan seal into hole in floor pan. Seal is to be installed so the flange on the seal is flush with the floor pan (Fig. 110). Fold carpeting back down on floor.

(7) Raise vehicle.

(8) Insert brake cable and housing into body outrigger bracket making certain that housing retainer fingers lock the housing firmly into place (Fig. 109).

(9) Manually reset the automatic self-adjusting mechanism tension of the parking brake lever (pedal) assembly. (Refer to 5 - BRAKES - STANDARD PROCEDURE).

(10) Assemble the park brake cables onto the park brake cable equalizer (Fig. 108).

(11) Lower vehicle and apply the park brake pedal 1 time. This will seat the parking brake cables.

INSTALLATION - PARKING BRAKE CABLE (INTERMEDIATE)

(1) Install the ends of the park brake cables through the frame rails and into the side brackets.

(2) Install the locking nuts at each end of the cable and securely tighten (Fig. 111) (Fig. 112).

(3) If the vehicle is a short-wheel-base model, it will be necessary to reinstall the fuel tank to its normal mounting position. (Refer to 14 - FUEL SYSTEM/FUEL DELIVERY/FUEL TANK - INSTALLATION).

(4) Install the intermediate parking brake cable on the cable connector at the right rear parking brake cable (Fig. 112).

(5) Install the intermediate park brake cable on the cable equalizer (Fig. 111).

(6) Remove the locking pliers from the front park brake cable. This will activate the automatic adjuster and correctly adjust the parking brake cables.

(7) Install and position the foam collar on the parking brake cable to prevent it from rattling against the vehicle's floor.

(8) Lower the vehicle and apply the park brake pedal 1 time, this will seat the park brake cables.

INSTALLATION - PARKING BRAKE CABLE (RIGHT REAR)

(1) Install the rear parking brake cable in the brake support plate. Insert cable housing retainer into brake support plate making certain that cable housing retainer fingers lock the housing and retainer firmly into place.

(2) Attach the parking brake cable onto the parking brake actuator lever.

(3) Install the brake shoes on the rear brake support plate. (Refer to 5 - BRAKES/HYDRAULIC/MECHANICAL/BRAKE PADS/SHOES - INSTALLATION).

(4) Insert cable housing retainer into body outrigger bracket making certain that cable housing retainer fingers lock the housing firmly into place.

(5) Connect the right rear parking brake cable to the connector on the intermediate parking brake cable (Fig. 114).

(6) Install the brake drum, then the wheel and tire assembly.

(7) Remove the locking pliers from the front park brake cable. This will automatically adjust the park brake cables.

(8) Lower the vehicle.

(9) Apply and release park brake pedal 1 time. This will seat the park brake cables.

INSTALLATION - PARKING BRAKE CABLE (LEFT REAR)

(1) Install the rear parking brake cable in the brake support plate. Insert cable housing retainer into brake support plate making certain that cable housing retainer fingers lock the housing and retainer firmly into place.

(2) Attach the parking brake cable onto the park brake actuator lever.

(3) Install the brake shoes on the rear brake support plate. (Refer to 5 - BRAKES/HYDRAULIC/MECHANICAL/BRAKE PADS/SHOES - INSTALLATION).

(4) Insert cable housing retainer into body outrigger bracket making certain that cable housing retainer fingers lock the housing firmly into place.

(5) Connect rear parking brake cable to the equalizer bracket (Fig. 118).

(6) Install brake drum, and wheel and tire assembly.

(7) Remove the locking pliers from the front park brake cable. This will automatically adjust the park brake cables.

(8) Apply and release park brake pedal 1 time. This will seat the park brake cables.

ADJUSTMENTS

ADJUSTMENT - PARKING BRAKE CABLES

The park brake cables on this vehicle have an automatic self adjuster built into the park brake pedal mechanism. When the foot operated park brake pedal is in its released (upward most) position, a clock spring automatically adjusts the park brake cables. The park brake cables are adjusted (tensioned) just enough to remove all the slack from the cables. The automatic adjuster system will not over adjust the cables causing rear brake drag.

Due to the automatic adjust feature of the park brake pedal, adjustment of the parking brake cables on these vehicles relies on proper drum brake and park brake shoe adjustment. (Refer to 5 - BRAKES/HYDRAULIC/MECHANICAL/DRUM - ADJUSTMENTS) and (Refer to 5 - BRAKES/PARKING BRAKE/SHOES - ADJUSTMENTS).

When the park brake pedal is applied the self adjuster is by-passed and the pedal operates normally to engage the park brakes.

When a service procedure needs to be performed on the park brake pedal or the park brake cables, the automatic self adjuster can be manually locked out by the service technician.

CABLES - PARKING BRAKE (EXPORT)

REMOVAL - FRONT CABLE

(Refer to 5 - BRAKES - BASE/PARKING BRAKE/LEVER - REMOVAL)

INSTALLATION - FRONT CABLE

(Refer to 5 - BRAKES - BASE/PARKING BRAKE/LEVER - INSTALLATION)

LEVER - PARKING BRAKE

REMOVAL

(1) Manually release the automatic self-adjusting mechanism tension of the parking brake lever (pedal) assembly. (Refer to 5 - BRAKES/PARKING BRAKE - STANDARD PROCEDURE).

(2) Disconnect negative (ground) cable from the battery and isolate cable from battery terminal.

LEVER - PARKING BRAKE (Continued)

(3) Remove sill scuff plate from left door sill.
(4) Remove the left side kick panel.
(5) Remove the silencer panel under the instrument panel.
(6) Remove the steering column cover from the lower instrument panel.
(7) Remove the reinforcement from the lower instrument panel.
(8) Remove the front parking brake cable from the parking brake cable equalizer (Fig. 121).

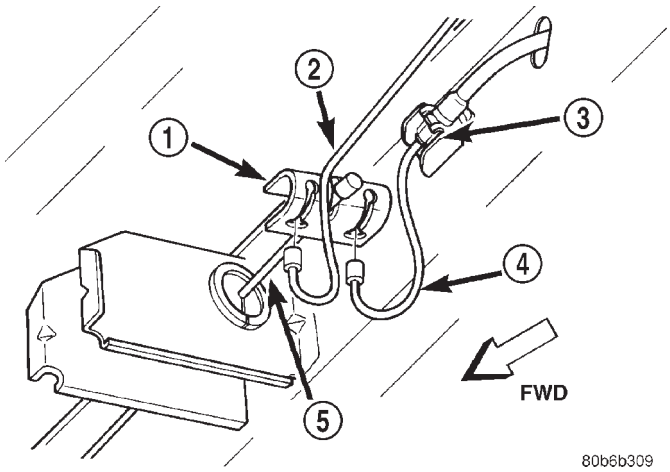

Fig. 121 Parking Brake Cable Equalizer

1 - EQUALIZER
2 - LEFT REAR PARKING BRAKE CABLE
3 - LOCKING NUT
4 - INTERMEDIATE PARKING BRAKE CABLE
5 - FRONT PARKING BRAKE CABLE

(9) Remove tension from front park brake cable. Tension is removed by releasing the locking pliers from the front park brake cable.
(10) Remove the 3 bolts mounting the wiring junction block to the instrument panel.

NOTE: When removing the lower mounting bolt, push the park brake pedal down 5 clicks to access the lower mounting bolt.

(11) Remove the lower bolt mounting the park brake pedal to the body (Fig. 122).
(12) Remove the forward nut mounting the park brake pedal to the body (Fig. 122).
(13) Remove the upper bolt mounting the park brake pedal to the body (Fig. 122).
(14) Pull downward on front park brake cable while rotating park brake pedal mechanism out from behind junction block.
(15) Remove park brake pedal release link from park brake mechanism.
(16) Remove the warning lamp ground switch connector from the park brake pedal mechanism (Fig. 122).

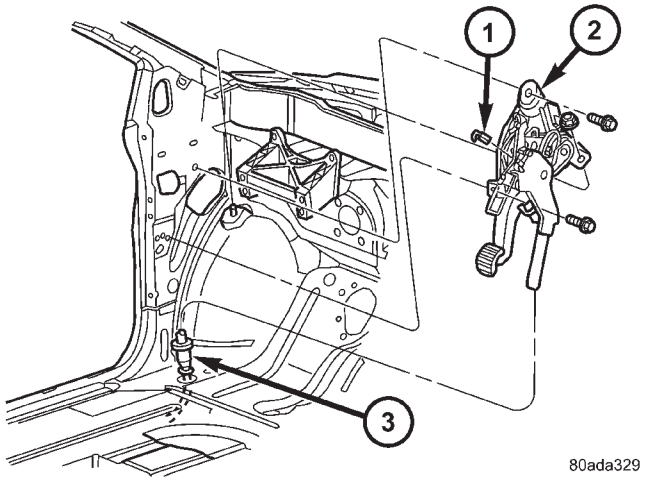

Fig. 122 PARKING BRAKE LEVER MOUNTING

1 - WIRE HARNESS CONNECTOR
2 - LEVER MECHANISM
3 - FRONT CABLE

(17) Remove front park brake cable button from park brake pedal mechanism. Tap end housing for front park brake cable out of park brake pedal mechanism.

INSTALLATION

(1) Install park brake cable end housing into park brake pedal mechanism.
(2) Install cable retainer onto the park brake cable strand and then install retainer into pedal bracket.
(3) Install cable strand button into the clevis on the park brake pedal mechanism.
(4) Install wiring harness connector on warning indicator lamp ground switch.
(5) Install the park brake release rod on the release mechanism of the park brake pedal.
(6) Position the park brake pedal mechanism into its installed position on the body of the vehicle.
(7) Loosely install the top bolt mounting the park brake pedal mechanism to the body (Fig. 122).
(8) Loosely install the forward nut mounting the park brake pedal mechanism to the body (Fig. 122).
(9) Loosely install the lower bolt mounting the park brake pedal mechanism to the body (Fig. 122).
(10) Tighten pedal mechanism attaching bolts and nut to 28 N·m (250 in. lbs.).
(11) Verify that the park brake pedal is in the fully released (full up) position.
(12) Raise vehicle.
(13) Install the front park brake cable on the park brake cable equalizer (Fig. 121).

LEVER - PARKING BRAKE (Continued)

NOTE: If the original lever assembly is being used, the lever mechanism auto adjuster spring tension will need to be reset. (Refer to 5 - BRAKES/PARKING BRAKE - STANDARD PROCEDURE)

(14) Lower vehicle.
(15) Remove the lock-out pin (if a new lever has been installed) from the automatic cable adjuster on the park brake pedal mechanism.
(16) Install the electrical junction block on the instrument panel.
(17) Install the reinforcement on the lower instrument panel.
(18) Install the steering column lower cover on the lower instrument panel.
(19) Install the silencer panel under the instrument panel.
(20) Install the left side kick panel.
(21) Install the sill scuff plate on the lower sill of the left door.
(22) Install the negative (ground) cable on the battery.
(23) Cycle the park brake pedal one time. This will seat the park brake cables and will allow the automatic self adjuster to properly tension the park brake cables.

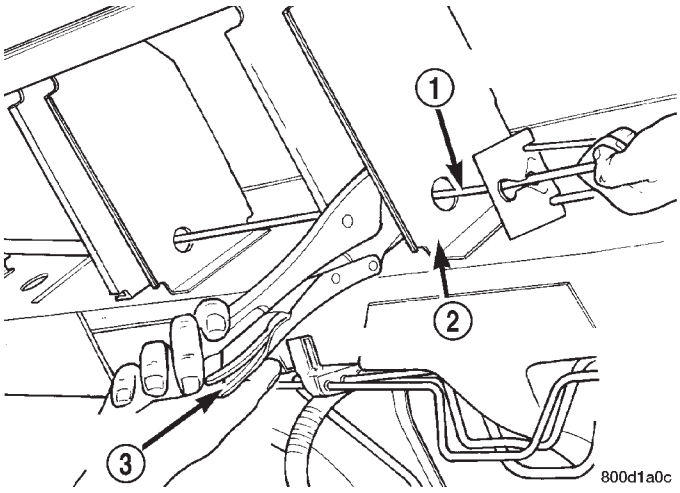

Fig. 123 Locking Out Automatic Adjuster

1 - PARK BRAKE CABLE
2 - REAR BODY OUTRIGGER BRACKET
3 - LOCKING PLIERS

LEVER - PARKING BRAKE (EXPORT)

REMOVAL - PARKING BRAKE LEVER AND FRONT CABLE

(1) Raise vehicle. (Refer to LUBRICATION & MAINTENANCE/HOISTING - STANDARD PROCEDURE)
(2) Grasp the exposed section of the front parking brake cable and pull rearward on it. While holding the park brake in this position, install a pair of locking pliers on the front parking brake cable just rearward of the second body outrigger bracket (Fig. 123).
(3) Remove the left rear and intermediate parking brake cables from the parking brake cable equalizer (Fig. 124).
(4) Remove the equalizer from the front parking brake cable.
(5) Remove the locking pliers from the front parking brake cable. This will allow the adjuster in the parking brake lever mechanism to rotate around to its stop and remove the tension from the adjuster and front park brake cable.
(6) Remove the front parking brake cable housing from body outrigger bracket. Cable is removable by sliding a 14 mm box wrench over the cable retainer and compressing the three retaining fingers. **Alternate method:** Use an aircraft type hose clamp and screwdriver.

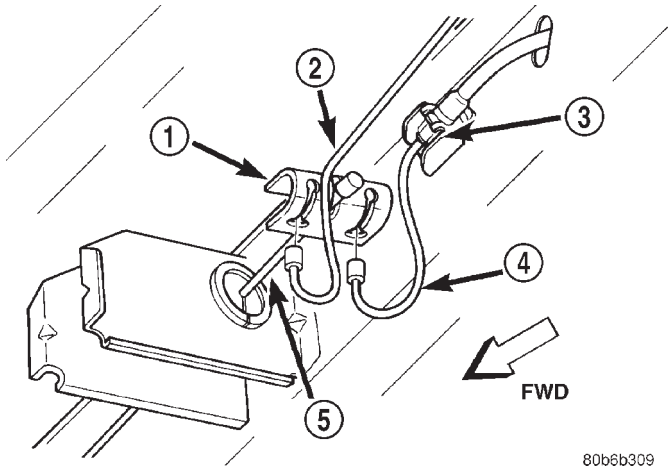

Fig. 124 Parking Brake Cable Equalizer

1 - EQUALIZER
2 - LEFT REAR PARKING BRAKE CABLE
3 - LOCKING NUT
4 - INTERMEDIATE PARKING BRAKE CABLE
5 - FRONT PARKING BRAKE CABLE

(7) Remove the four mounting nuts from the bottom of the parking brake lever bracket.
(8) Lower vehicle.
(9) Remove the floor console. (Refer to 23 - BODY/INTERIOR/FLOOR CONSOLE - REMOVAL)
(10) If equipped with a manual transaxle, remove the gearshift mechanism. (Refer to 21 - TRANSMISSION/TRANSAXLE/MANUAL/SHIFT MECHANISM - REMOVAL)
(11) Unhook the end of the parking brake cable from the lever mechanism.

LEVER - PARKING BRAKE (EXPORT) (Continued)

(12) Compress the parking brake cable retainer by sliding a 14 mm wrench over the cable retainer and compress the three (3) retaining fingers.

(13) Remove the three screws from the parking brake grommet on the floor pan of the passenger compartment.

(14) Lift the parking brake lever and slide the parking brake cable out.

(15) Pull the cable through the floor pan from inside the vehicle.

INSTALLATION - PARKING BRAKE LEVER AND FRONT CABLE

(1) Pass the parking brake cable down through the hole in the floor pan from inside of vehicle.

(2) Pass cable end button through the hole in the lever bracket and press the cable housing into the hole until all three retaining fingers lock the cable to the lever bracket.

(3) Hook the end of the parking brake cable on the parking brake lever mechanism.

(4) Press the cable grommet into the hole in the floor pan and install the three screws securing it to the floor pan.

(5) If equipped with a manual transaxle, install the gearshift mechanism. (Refer to 21 - TRANSMISSION/TRANSAXLE/MANUAL/SHIFT MECHANISM - INSTALLATION)

(6) Install the floor console. (Refer to 23 - BODY/INTERIOR/FLOOR CONSOLE - INSTALLATION)

(7) Raise the vehicle.

(8) Install the four mounting nuts securing the parking brake lever bracket in place.

(9) Install the front park cable housing retainer to the body outrigger bracket. Press the cable housing into the outrigger hole until all three retaining fingers lock the cable in place.

(10) Grasp the exposed section of the front parking brake cable and pull rearward on it. While holding the park brake in this position, install a pair of locking pliers on the front parking brake cable just rearward of the second body outrigger bracket.

(11) Install the equalizer on the front parking brake cable and install the left rear and intermediate park brake cable in the correct location on the parking brake cable equalizer (Fig. 124).

(12) Remove the locking pliers from the front parking brake cable. This will allow the adjuster in the park brake lever mechanism to tension the parking brake cables.

(13) Lower the vehicle.

(14) Apply and release the parking brake lever one time. This will seat the parking brake cables and allow the auto adjuster in the parking brake lever mechanism to correctly tension the parking brake cables.

SHOES - PARKING BRAKE

REMOVAL

(1) AWD only - Set the parking brake. **The parking brake is set to keep the hub/bearing and axle shaft from rotating when loosening the hub nut.**

(2) Raise vehicle. (Refer to LUBRICATION & MAINTENANCE/HOISTING - STANDARD PROCEDURE).

(3) Remove the wheel and tire assembly.

(4) AWD only - Remove the cotter pin and nut retainer (Fig. 125) from the stub shaft of the outer C/V joint.

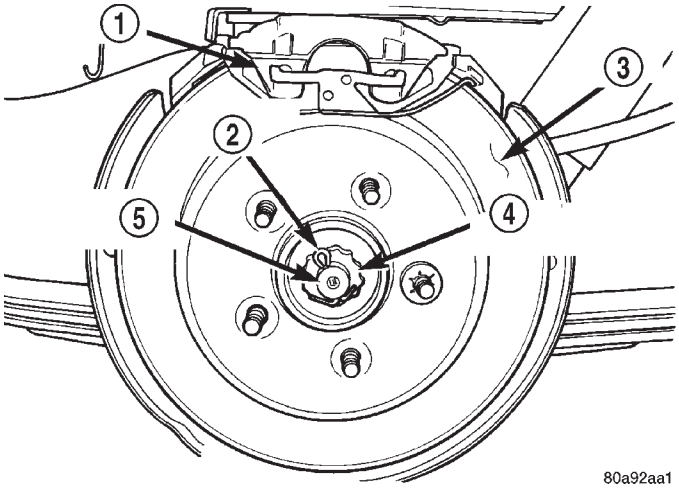

Fig. 125 Cotter Pin And Nut Retainer

1 - CALIPER
2 - COTTER PIN
3 - ROTOR
4 - NUT RETAINER
5 - OUTER C/V JOINT

SHOES - PARKING BRAKE (Continued)

(5) AWD only - Remove the spring washer (Fig. 126) from the stub shaft of the outer C/V joint.

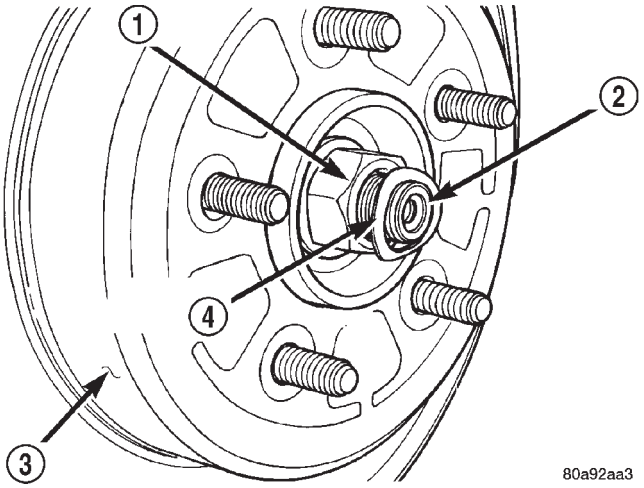

Fig. 126 Spring Washer

1 - HUB NUT
2 - STUB SHAFT
3 - ROTOR
4 - SPRING WASHER

(6) AWD only - Remove the hub nut and washer (Fig. 127) from the stub shaft of the outer C/V joint.

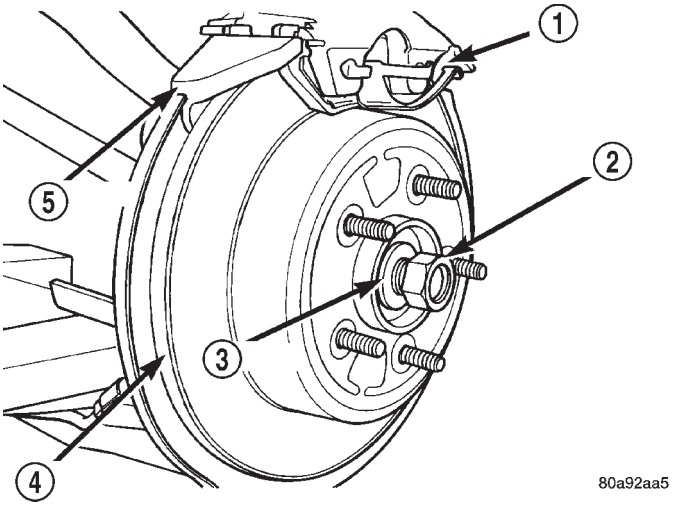

Fig. 127 Hub Nut And Washer

1 - CALIPER
2 - HUB NUT
3 - WASHER
4 - ROTOR
5 - ADAPTER

(7) Release the parking brake.

(8) Create slack in the rear park brake cables by locking the out the automatic adjuster as described. Grasp the exposed section of front park brake cable and pull downward on it. Then install a pair of locking pliers on the front park brake cable just rearward of the second body outrigger bracket (Fig. 128).

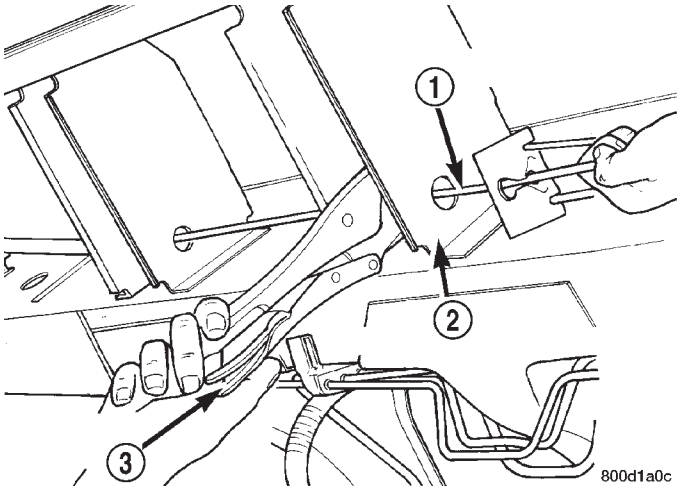

Fig. 128 Locking Out Automatic Adjuster

1 - PARK BRAKE CABLE
2 - REAR BODY OUTRIGGER BRACKET
3 - LOCKING PLIERS

(9) Remove the disc brake caliper to adapter guide pin bolts (Fig. 129).

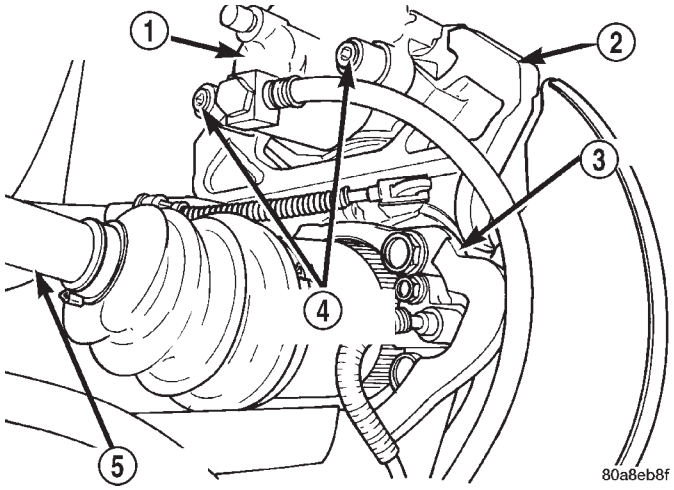

Fig. 129 Removing Caliper Guide Pin Bolts

1 - DISC BRAKE CALIPER
2 - ADAPTER
3 - AXLE
4 - GUIDE PIN BOLTS
5 - DRIVESHAFT (AWD MODELS ONLY)

(10) Remove rear caliper from adapter using the following procedure. First rotate front of caliper up from the adapter. Then pull the rear of the caliper and the outboard brake shoe anti-rattle clip out from under the rear abutment on the adapter (Fig. 130).

SHOES - PARKING BRAKE (Continued)

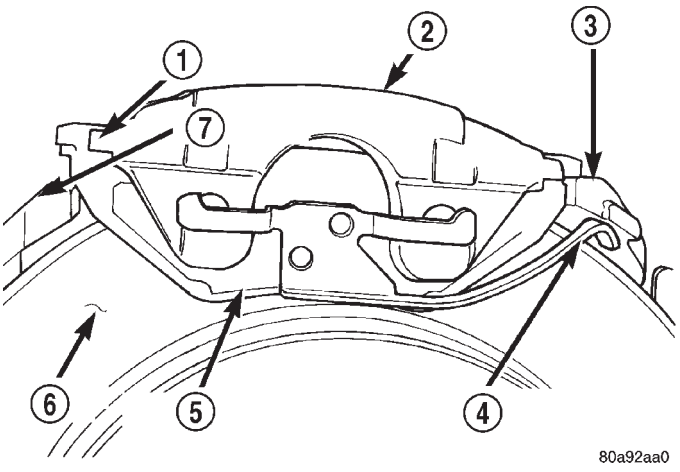

Fig. 130 Removing/Installing Caliper

1 - LIFT THIS END OF CALIPER AWAY FROM ADAPTER FIRST
2 - DISC BRAKE CALIPER
3 - ADAPTER ABUTMENT
4 - OUTBOARD BRAKE SHOE HOLD DOWN CLIP
5 - OUTBOARD BRAKE SHOE
6 - ROTOR
7 - ADAPTER

(11) Support caliper to prevent the weight of the caliper from damaging the flexible brake hose (Fig. 131).

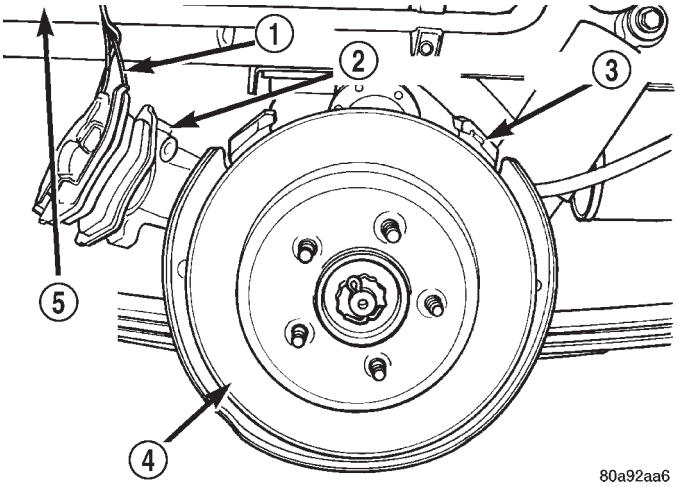

Fig. 131 Correctly Supported Caliper

1 - WIRE
2 - CALIPER
3 - ADAPTER
4 - ROTOR
5 - INNER FENDER

(12) Remove the rotor from the hub/bearing.
(13) Remove the park brake cable mounting bolt to adapter.
(14) Remove the end of the park brake cable from the actuator lever on the adapter (Fig. 132).

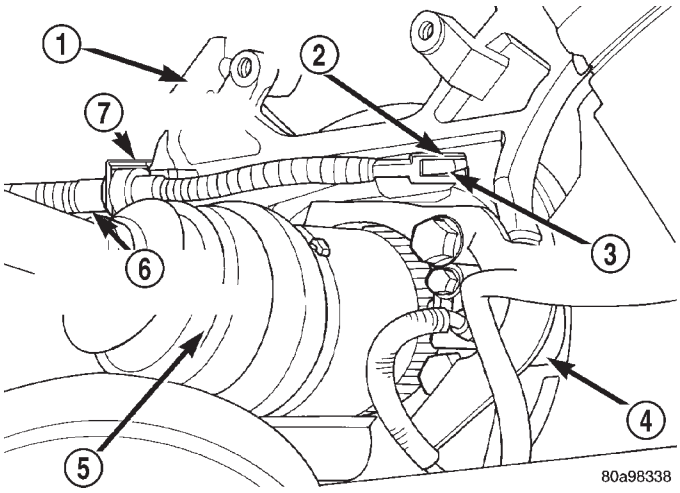

Fig. 132 Park Brake Cable Attachment To Actuator

1 - ADAPTER
2 - PARK BRAKE CABLE
3 - ACTUATOR
4 - AXLE
5 - DRIVESHAFT
6 - PARK BRAKE CABLE RETAINER
7 - HORSESHOE CLIP

(15) Remove the end of the park brake cable from the adapter. Park brake cable is removed from adapter using a 1/2 wrench slipped over the park brake cable retainer as show in (Fig. 133) to compress the locking tabs on the park brake cable retainer.

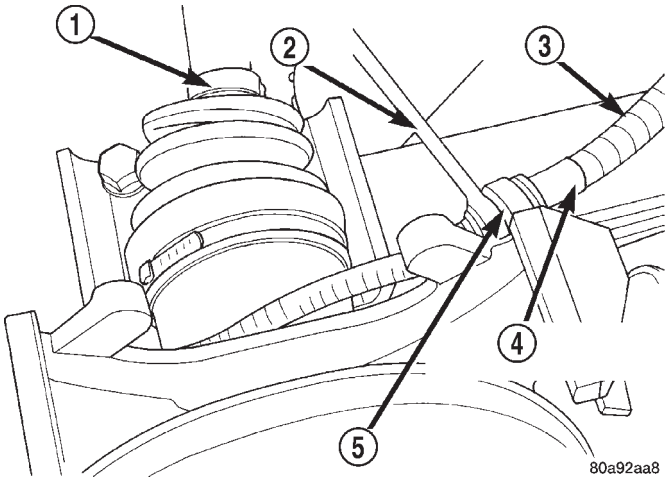

Fig. 133 Park Brake Cable Removal From Adapter

1 - DRIVESHAFT
2 - 1/2" WRENCH
3 - PARK BRAKE CABLE
4 - PARK BRAKE CABLE RETAINER
5 - ADAPTER

SHOES - PARKING BRAKE (Continued)

(16) AWD only - Remove ABS wheel speed sensor head from hub/bearing (Fig. 134).

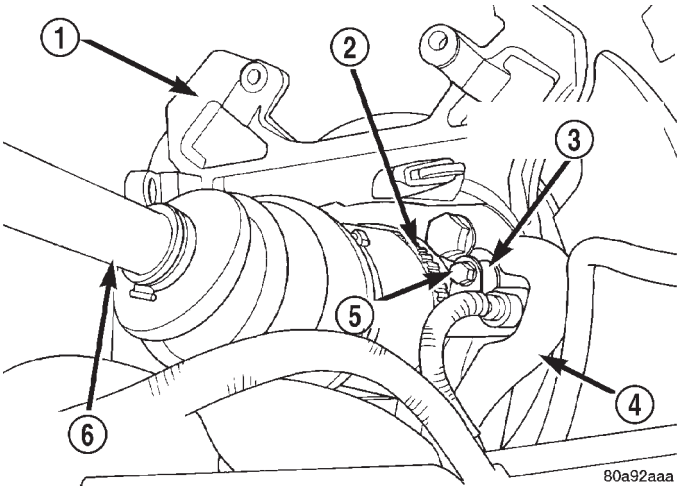

Fig. 134 Speed Sensor Attaching Bolt (AWD)

1 - ADAPTER
2 - TONE WHEEL
3 - WHEEL SPEED SENSOR
4 - AXLE
5 - BOLT
6 - DRIVESHAFT

(17) FWD only - Remove the ABS wheel speed sensor from the hub/bearing in the following fashion:

(a) Remove secondary (yellow) retaining clip at rear of wheel speed sensor head (Fig. 135).

(b) Push up on metal retaining clip (Fig. 135) until it bottoms. This will release wheel speed sensor head from hub and bearing. While holding metal clip up, pull back on wheel speed sensor head removing it from hub and bearing.

(c) Remove wheel speed sensor from hub/bearing.

(18) Remove the hub/bearing-to-axle mounting bolts (Fig. 136).

(19) Remove the hub/bearing (Fig. 137).

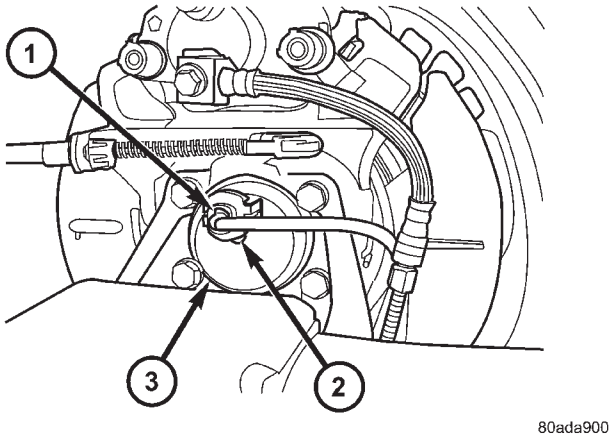

Fig. 135 Sensor Connection At Hub And Bearing

1 - SECONDARY SENSOR RETAINING CLIP
2 - METAL SENSOR RETAINING CLIP
3 - HUB AND BEARING

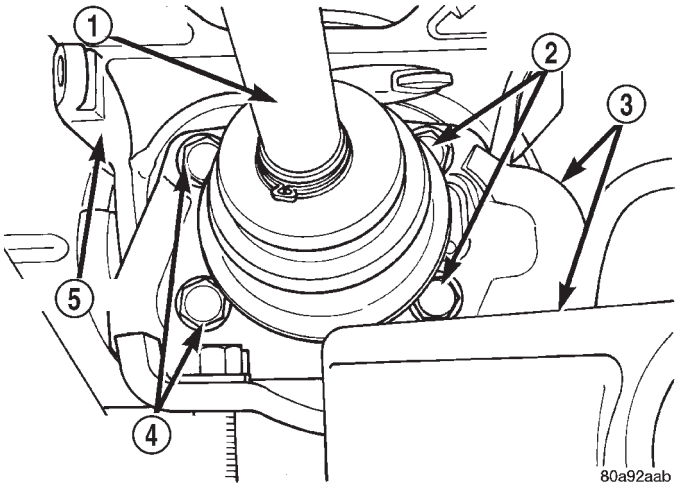

Fig. 136 Hub/Bearing Mounting Bolts (AWD Shown)

1 - DRIVESHAFT
2 - MOUNTING BOLTS
3 - AXLE
4 - MOUNTING BOLTS
5 - ADAPTER

SHOES - PARKING BRAKE (Continued)

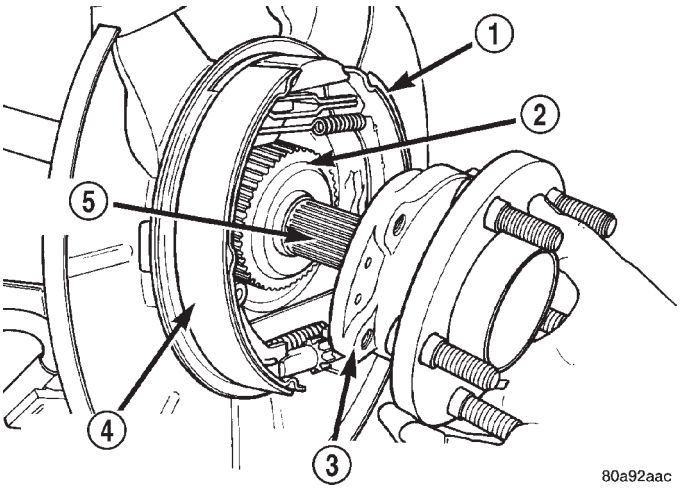

Fig. 137 Hub/Bearing Removal/Installation (AWD Shown)

1 - PARK BRAKE BRAKE SHOE
2 - OUTER C/V JOINT
3 - HUB/BEARING
4 - PARK BRAKE BRAKE SHOE
5 - STUB SHAFT

CAUTION: Corrosion may occur between the hub/bearing and the axle flange. If this occurs, the hub/bearing will be difficult to remove from the axle and disc brake caliper adapter. If the hub/bearing will not come out by pulling on it by hand, don't not pound on it with a hammer. Pounding on the hub/bearing will damage it. To remove a hub/bearing that is corroded in place, lightly tap the disc brake caliper adapter using a soft-face hammer. This will remove both the caliper adapter and hub/bearing together from the axle. With a helper supporting the caliper adapter in his hands, position Remover, Special Tool 8214-1, on the cast housing of hub/bearing (Fig. 138). Do not position the special tool on the inner race of hub/bearing. Lightly strike the Remover with a hammer to remove the hub/bearing from the caliper adapter.

(20) Remove the adapter from the rear axle.

(21) Mount the adapter in a vise using the anchor boss for the park brake cable (Fig. 139).

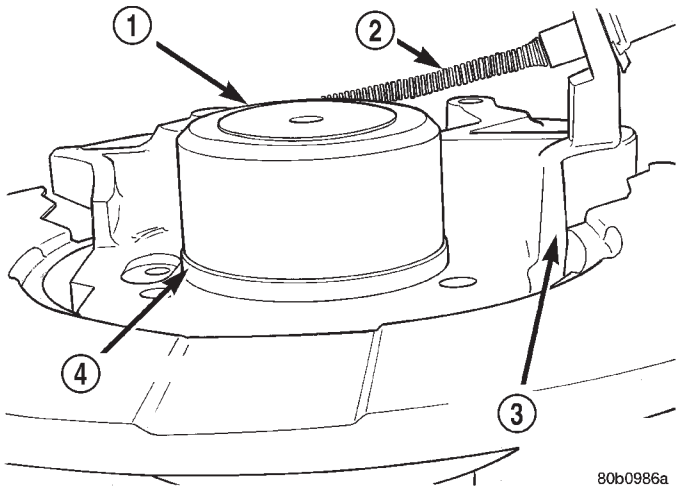

Fig. 138 Hub/Bearing Removal From Caliper Adapter

1 - SPECIAL TOOL 8214-1
2 - PARK BRAKE CABLE
3 - DISC BRAKE CALIPER ADAPTER
4 - HUB/BEARING

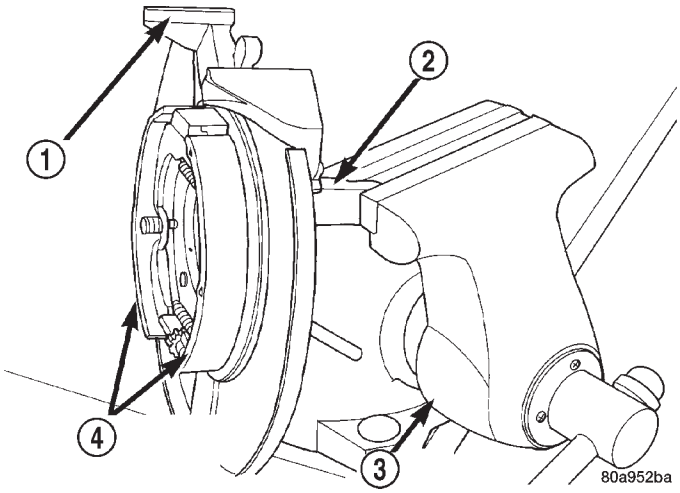

Fig. 139 Adapter Mounted In Vise

1 - ADAPTER
2 - PARK BRAKE CABLE BOSS
3 - VISE
4 - PARK BRAKE BRAKE SHOES

SHOES - PARKING BRAKE (Continued)

(22) Remove the lower return spring (Fig. 140) from the leading and trailing park brake shoes.

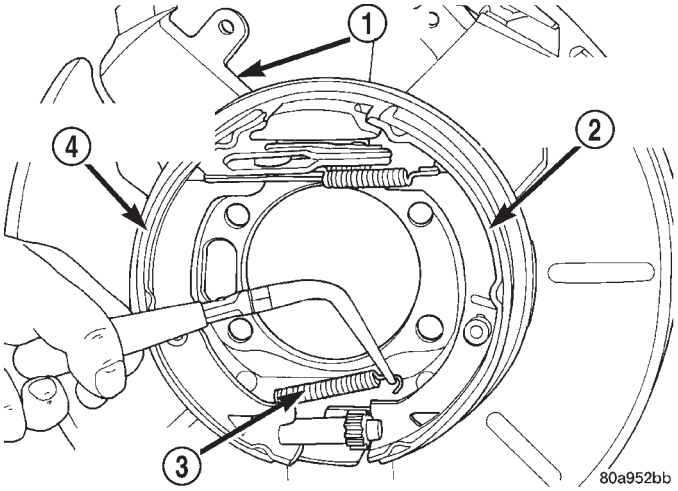

Fig. 140 Lower Return Spring

1 - ADAPTER
2 - LEADING PARK BRAKE SHOE
3 - RETURN SPRING
4 - TRAILING PARK BRAKE SHOE

(23) Remove the hold down spring and pin (Fig. 141) from the leading park brake shoe.

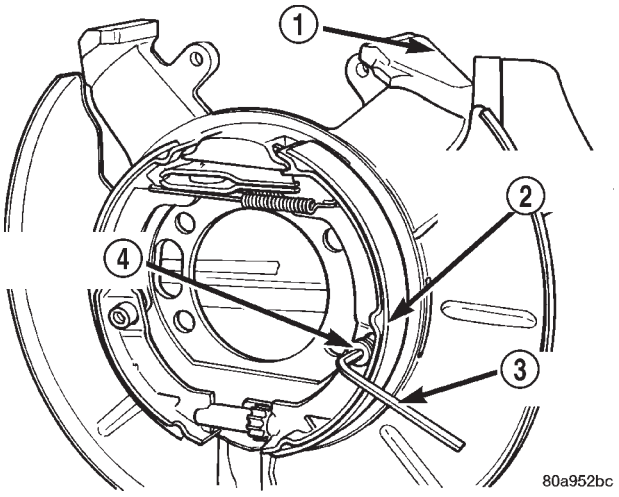

Fig. 141 Leading Brake Shoe Hold Down Pin And Spring

1 - ADAPTER
2 - LEADING PARK BRAKE SHOE
3 - ALLEN WRENCH
4 - HOLD DOWN SPRING/PIN

(24) Remove the adjuster (Fig. 142) from the leading and trailing park brake shoe.

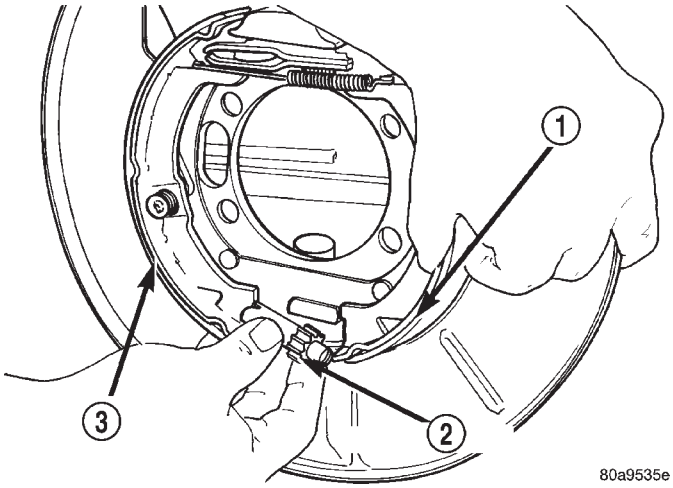

Fig. 142 Brake Shoe Adjuster

1 - LEADING PARK BRAKE SHOE
2 - ADJUSTER
3 - TRAILING PARK BRAKE SHOE

(25) Remove the leading park brake shoe (Fig. 143) from the adapter. Leading brake shoe is removed by rotating the bottom of the brake shoe inward (Fig. 143) until the top of the brake shoe can be removed from the brake shoe anchor. Then remove the upper return springs (Fig. 143) from the leading brake shoe.

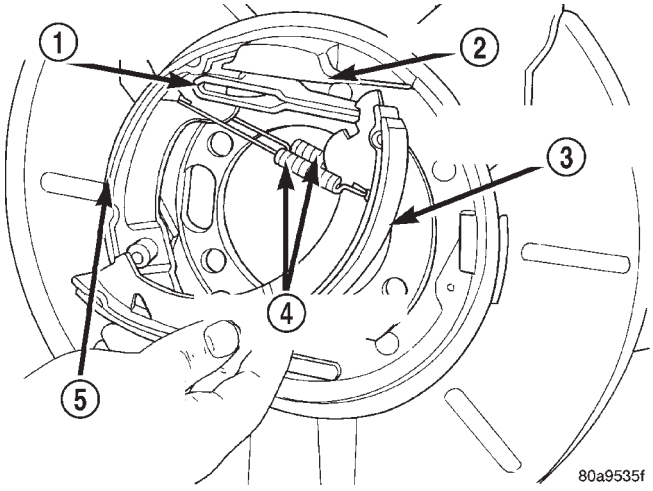

Fig. 143 Primary Brake Shoe Remove/Install

1 - PARK BRAKE ACTUATOR
2 - ANCHOR
3 - LEADING PARK BRAKE SHOE
4 - UPPER RETURN SPRINGS
5 - TRAILING PARK BRAKE SHOE

SHOES - PARKING BRAKE (Continued)

(26) Remove the upper return springs (Fig. 144) from the trailing park brake shoe.

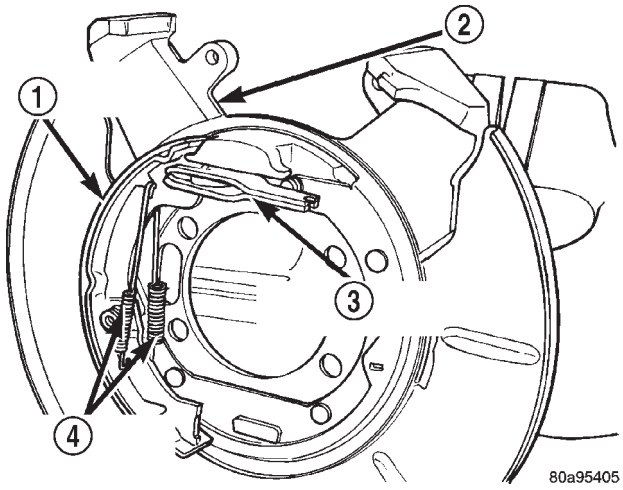

Fig. 144 Upper Return Springs

1 - TRAILING PARK BRAKE SHOE
2 - ADAPTER
3 - PARK BRAKE ACTUATOR
4 - UPPER RETURN SPRINGS

(27) Remove the hold down spring and pin (Fig. 145) from the trailing park brake shoe.

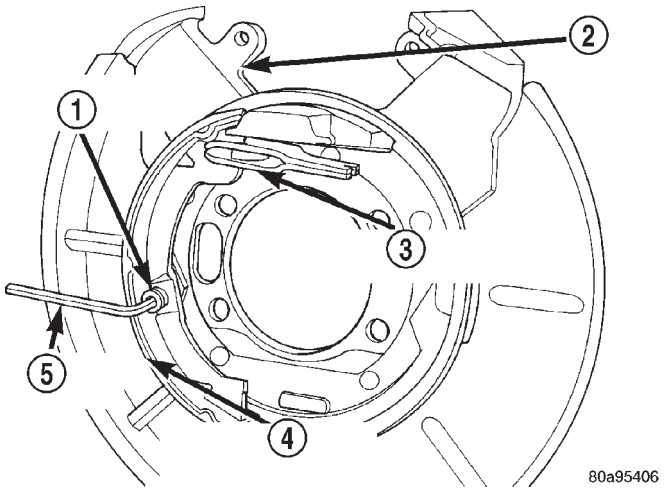

Fig. 145 Trailing Brake Shoe Hold Down Pin And Spring

1 - HOLD DOWN SPRING PIN
2 - ADAPTER
3 - PARK BRAKE ACTUATOR
4 - TRAILING PARK BRAKE SHOE
5 - ALLEN WRENCH

(28) Remove the trailing park brake shoe from the adapter.

(29) Remove the park brake shoe actuator from the adapter and inspect for signs of abnormal wear and binding at the pivot point.

INSTALLATION

(1) Install park brake shoe actuator into adapter.

(2) Install the trailing brake shoe on the adapter.

NOTE: When the hold down pin is installed, the long part of the hold down pin is to be positioned strait up and down. This will ensure that the hold down pin is correctly engaged with the adapter.

(3) Install the hold down spring and pin (Fig. 145) on the trailing park brake shoe.

(4) Install the upper return springs (Fig. 144) on the trailing park brake shoe.

(5) Install the upper return springs on the leading park brake shoe (Fig. 143). Then position the top of the leading park brake shoe at the upper anchor and rotate the bottom of the shoe outward until correctly installed on the adapter.

(6) Install the adjuster (Fig. 142) between the leading and trailing park brake shoe.

NOTE: When the hold down pin is installed, the long part of the hold down pin is to be positioned strait up and down. This will ensure that the hold down pin is correctly engaged with the adapter.

(7) Install the hold down spring and pin (Fig. 141) on the leading park brake shoe.

(8) Install the lower return spring (Fig. 140) on the leading and trailing park brake shoes.**When installing the return spring, it is to be installed behind the park brake shoes (Fig. 140).**

(9) Install the 4 mounting bolts for the adapter and hub/bearing into the bolt holes in the axle.

(10) Position the adapter on the 4 mounting bolts installed in the rear axle (Fig. 146).

SHOES - PARKING BRAKE (Continued)

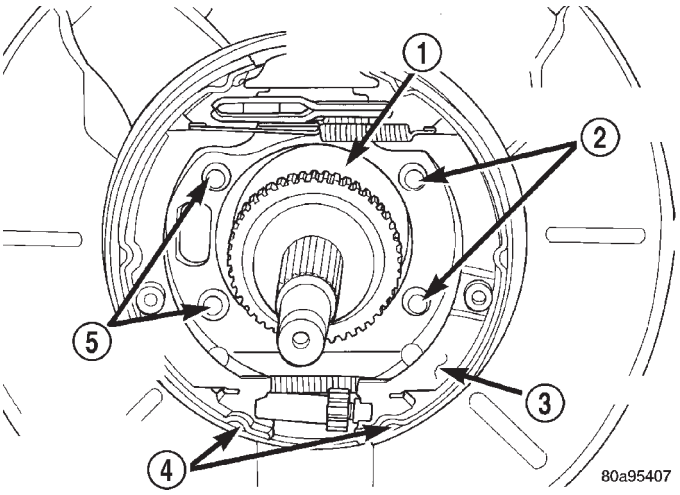

Fig. 146 Adapter Installed On Mounting Bolts (AWD Shown)

1 - DRIVESHAFT OUTER C/V JOINT
2 - MOUNTING BOLTS
3 - ADAPTER
4 - PARK BRAKE SHOES
5 - MOUNTING BOLTS

(11) Install the hub/bearing on the stub shaft of outer C/V joint (AWD only) and into the end of the axle. (Fig. 137).

(12) In a progressive crisscross pattern, tighten the 4 hub/bearing mounting bolts until the hub/bearing is squarely seated against the axle. Then tighten the hub/bearing mounting bolts to a torque of 129 N·m (95 ft. lbs.).

(13) AWD only - Install the wheel speed sensor on the hub/bearing and adapter. Install the wheel speed sensor attaching bolt (Fig. 134). Tighten the wheel speed sensor attaching bolt to a torque of 12 N·m (105 in. lbs).

(14) FWD only - Install the wheel speed sensor in the following fashion:

(a) If metal wheel speed sensor retaining clip is not in the neutral installed position on hub and bearing cap, install from the bottom, if necessary, and push clip upward until it snaps into position.

(b) Install wheel speed sensor head into rear of hub and bearing aligning index tab with the notch in the top of the mounting hole. Push the sensor in until it snaps into place on the metal retaining clip.

(c) Install secondary (yellow) retaining clip over wheel speed sensor head and engage the tabs on each side.

(15) Install the park brake cable into its mounting hole in the adapter. **Be sure all the locking tabs on the park brake cable retainer are expanded out to ensure the cable will not pull out of the adapter.**

(16) Install the end of the park brake cable on the park brake actuator lever (Fig. 132).

(17) Attach park brake cable to adapter using mounting bolt.

(18) Remove the locking pliers (Fig. 128) from the front park brake cable.

(19) Adjust the park brake drum-in-hat brake shoes. (Refer to 5 - BRAKES/PARKING BRAKE/ SHOES - ADJUSTMENTS).

(20) Install the rotor on the hub/bearing.

(21) Carefully lower caliper and brake shoes over rotor and onto the adapter using the reverse procedure for removal (Fig. 130).

CAUTION: When installing guide pin bolts extreme caution should be taken not to crossthread the caliper guide pin bolts.

(22) Install the caliper guide pin bolts (Fig. 129). Tighten the guide pin bolts to a torque of 35 N·m (26 ft. lbs.).

(23) AWD only - Clean all foreign material off the threads of the outer C/V joint stub shaft. Install the washer and hub nut (Fig. 127) on the stub shaft of the outer C/V joint.

(24) AWD only - Set the parking brake.

(25) AWD only - Tighten the hub nut to a torque of 244 N·m (180 ft. lbs.).

(26) AWD only - Install the spring washer (Fig. 126) on the stub shaft of the outer C/V joint.

(27) AWD only - Install the nut retainer and cotter pin (Fig. 125) on the stub shaft of the outer C/V joint.

(28) Install the wheel and tire assembly. Tighten the wheel mounting stud nuts in proper sequence until all nuts are torqued to half specification. Then repeat the tightening sequence to the full specified torque of 135 N·m (100 ft. lbs.).

(29) Lower vehicle.

(30) Fully apply and release the park brake pedal one time. This will seat and correctly adjust the park brake cables.

CAUTION: Before moving vehicle, pump the brake pedal several times to insure the vehicle has a firm brake pedal to adequately stop vehicle.

(31) Road test the vehicle and make several stops to wear off any foreign material on the brakes and to seat the brake shoe linings.

SHOES - PARKING BRAKE (Continued)

ADJUSTMENTS

ADJUSTMENT - PARKING BRAKE SHOES

CAUTION: Before adjusting the park brake shoes be sure that the park brake pedal is in the fully released position. If park brake pedal is not in the fully released position, the park brake shoes can not be accurately adjusted.

(1) Raise vehicle.
(2) Remove tire and wheel.
(3) Remove disc brake caliper from caliper adapter (Fig. 147). (Refer to 5 - BRAKES/HYDRAULIC/MECHANICAL/DISC BRAKE CALIPERS - REMOVAL).

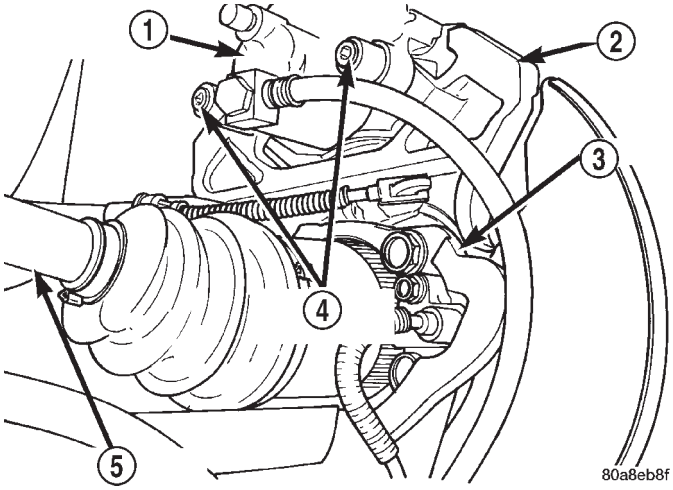

Fig. 147 Disc Brake Caliper

1 - DISC BRAKE CALIPER
2 - ADAPTER
3 - AXLE
4 - GUIDE PIN BOLTS
5 - DRIVESHAFT (AWD MODELS ONLY)

(4) Remove rotor from hub/bearing.

NOTE: When measuring the brake drum diameter, the diameter should be measured in the center of the area in which the park brake shoes contact the surface of the brake drum.

(5) Using Brake Shoe Gauge, Special Tool C-3919, or equivalent, **accurately** measure the inside diameter of the park brake drum portion of the rotor (Fig. 148).

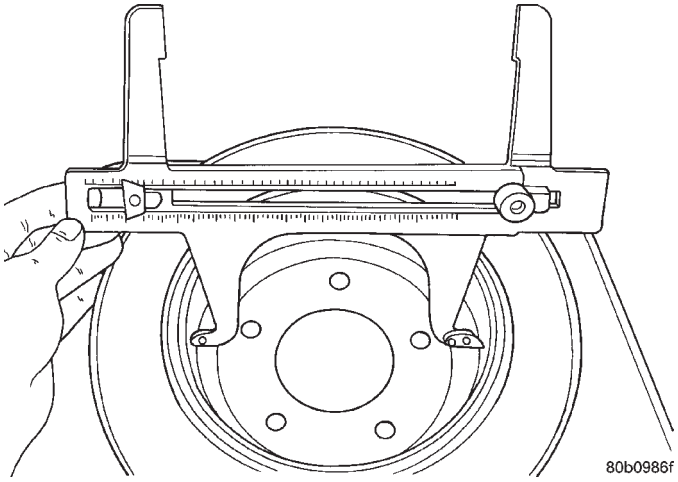

Fig. 148 Measuring Park Brake Drum Diameter

(6) Using a ruler that reads in 64th of an inch, accurately read the measurement of the inside diameter of the park brake drum from the special tool (Fig. 149).

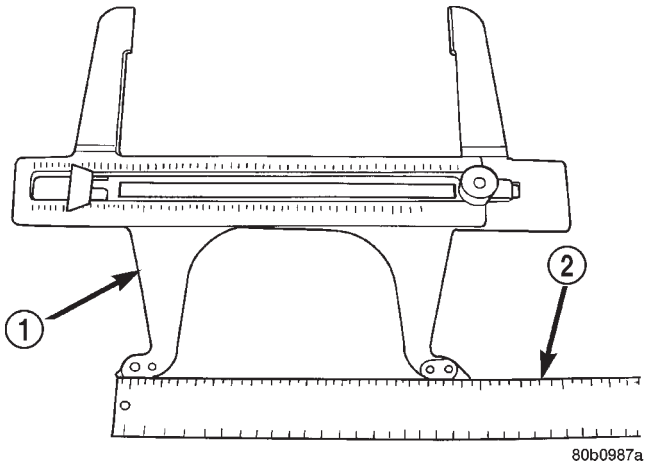

Fig. 149 Reading Park Brake Drum Diameter

1 - SPECIAL TOOL C-3919
2 - RULER

SHOES - PARKING BRAKE (Continued)

(7) Reduce the inside diameter measurement of the brake drum that was taken using Special Tool C-3919 by 1/64 of an inch. Reset Gauge, Brake Shoe, Special Tool C-3919 or the equivalent used, so that the outside measurement jaws are set to the reduced measurement (Fig. 150).

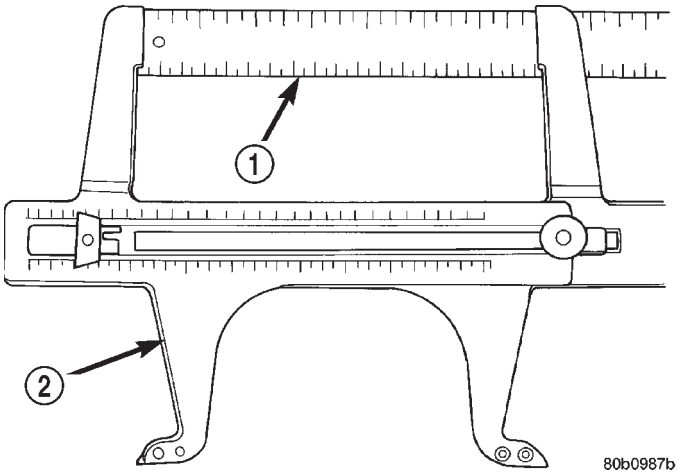

Fig. 150 Setting Gauge To Park Brake Shoe Measurement

1 - RULER
2 - SPECIAL TOOL C-3919

(8) Place Gauge, Brake Shoe, Special Tool C-3919, or equivalent over the park brake shoes. The special tool must be located diagonally across at the top of one shoe and bottom of opposite shoe (widest point) of the park brake shoes.

(9) Using the star wheel adjuster, adjust the park brake shoes until the lining on the park brake shoes just touches the jaws on the special tool.

(10) Repeat step 8 above and measure shoes in both directions.

(11) Install brake rotor on hub and bearing.

(12) Rotate rotor to verify that the park brake shoes are not dragging on the brake drum. If park brake shoes are dragging, remove rotor and back off star wheel adjuster one notch and recheck for brake shoe drag against drum. Continue with the previous step until brake shoes are not dragging on brake drum.

(13) Install disc brake caliper on caliper adapter (Fig. 147). (Refer to 5 - BRAKES/HYDRAULIC/MECHANICAL/DISC BRAKE CALIPERS - INSTALLATION).

(14) Install wheel and tire.

(15) Tighten the wheel mounting nuts in the proper sequence until all nuts are torqued to half the specified torque. Then repeat the tightening sequence to the full specified torque of 129 N·m (95 ft. lbs.).

(16) Lower vehicle.

(17) Apply and release the park brake pedal one time. This will seat and correctly adjust the park brake cables.

CAUTION: Before moving vehicle, pump brake pedal several times to ensure the vehicle has a firm enough pedal to stop the vehicle.

(18) Road test the vehicle to ensure proper function of the vehicle's brake system.

BRAKES - ABS

TABLE OF CONTENTS

page

BRAKES - ABS
DESCRIPTION
DESCRIPTION - ANTILOCK BRAKE SYSTEM . . . 85
DESCRIPTION - ANTILOCK BRAKE SYSTEM (EXPORT) . . . 85
DESCRIPTION - ELECTRONIC VARIABLE BRAKE PROPORTIONING . . . 86
DESCRIPTION - TRACTION CONTROL SYSTEM . . . 86
OPERATION
OPERATION - ANTILOCK BRAKE SYSTEM . . 86
OPERATION - ELECTRONIC VARIABLE BRAKE PROPORTIONING . . . 87
OPERATION - TRACTION CONTROL SYSTEM . . . 87
CAUTION
CAUTIONS . . . 88
STANDARD PROCEDURE - ANTILOCK BRAKE SYSTEM BLEEDING . . . 88
SPECIFICATIONS
ABS FASTENER TORQUE . . . 89
TONE WHEEL RUNOUT . . . 89
WHEEL SPEED SENSOR AIR GAP . . . 89
FRONT WHEEL SPEED SENSOR
REMOVAL . . . 89
INSTALLATION . . . 89
REAR WHEEL SPEED SENSOR - AWD
REMOVAL . . . 90

page

INSTALLATION . . . 90
REAR WHEEL SPEED SENSOR - FWD
REMOVAL . . . 91
INSTALLATION . . . 91
TONE WHEEL
INSPECTION - TONE WHEEL . . . 92
TRACTION CONTROL SWITCH
DIAGNOSIS AND TESTING - TRACTION CONTROL SWITCH . . . 92
HYDRAULIC/MECHANICAL
OPERATION - HYDRAULIC CIRCUITS AND VALVES . . . 93
HCU (HYDRAULIC CONTROL UNIT)
DESCRIPTION . . . 99
OPERATION . . . 99
ICU (INTEGRATED CONTROL UNIT)
DESCRIPTION . . . 100
OPERATION . . . 100
REMOVAL
REMOVAL - LHD . . . 100
REMOVAL - RHD . . . 101
DISASSEMBLY - ICU . . . 103
ASSEMBLY - ICU . . . 103
INSTALLATION
INSTALLATION - LHD . . . 104
INSTALLATION - RHD . . . 105

BRAKES - ABS

DESCRIPTION

DESCRIPTION - ANTILOCK BRAKE SYSTEM

This section covers the physical and operational descriptions and the on-car service procedures for the Mark 20e Antilock Brake System and the Mark 20e Antilock Brake System with traction control.

The purpose of the antilock brake system (ABS) is to prevent wheel lockup under braking conditions on virtually any type of road surface. Antilock braking is desirable because a vehicle that is stopped without locking the wheels retains directional stability and some steering capability. This allows the driver to retain greater control of the vehicle during braking.

DESCRIPTION - ANTILOCK BRAKE SYSTEM (EXPORT)

Four-wheel disc antilock brakes are standard on all models. The Mark 20e antilock brake system is used on all models. Depending on whether the vehicle is a left-hand drive (LHD) or right-hand drive (RHD) model, the integrated control unit (ICU) is located in one of two locations. On LHD models, the ICU is mounted above the front suspension cradle/crossmember below the master cylinder. On RHD models, the ICU is located behind the front suspension cradle/crossmember on the left side of the vehicle.

DESCRIPTION - ELECTRONIC VARIABLE BRAKE PROPORTIONING

Vehicles equipped with ABS use electronic variable brake proportioning (EVBP) to balance front-to-rear braking. The EVBP is used in place of a rear proportioning valve. The EVBP system uses the ABS system to control the slip of the rear wheels in partial braking range. The braking force of the rear wheels is controlled electronically by using the inlet and outlet valves located in the integrated control unit (ICU).

DESCRIPTION - TRACTION CONTROL SYSTEM

Traction control reduces wheel slip and maintains traction at the driving wheels at speeds below 56 km/h (35 mph) when road surfaces are slippery. The traction control system reduces wheel slip by braking the wheel that is losing traction.

HYDRAULIC SHUTTLE VALVES

Two pressure relief hydraulic shuttle valves are included on vehicles with traction control. These valves are located inside the HCU and cannot be serviced separately from the HCU.

TRACTION CONTROL LAMP

The traction control function lamp is located in the transmission range indicator display of the instrument cluster, displaying TRAC, TRAC OFF or neither depending on system mode.

The TRAC OFF lamp is controlled by a Traction Control Off switch that is a momentary contact type switch. The Traction Control Off switch is located on the steering column upper shroud.

OPERATION

OPERATION - ANTILOCK BRAKE SYSTEM

There are a few performance characteristics of the Mark 20e Antilock Brake System that may at first seem abnormal, but in fact are normal. These characteristics are described below.

NORMAL BRAKING

Under normal braking conditions, the ABS functions the same as a standard base brake system with a diagonally split master cylinder and conventional vacuum assist.

ABS BRAKING

ABS operation is available at all vehicle speeds above 3–5 mph. If a wheel locking tendency is detected during a brake application, the brake system enters the ABS mode. During ABS braking, hydraulic pressure in the four wheel circuits is modulated to prevent any wheel from locking. Each wheel circuit is designed with a set of electric solenoids to allow modulation, although for vehicle stability, both rear wheel solenoids receive the same electrical signal. Wheel lockup may be perceived at the very end of an ABS stop and is considered normal.

During an ABS stop, the brakes hydraulic system is still diagonally split. However, the brake system pressure is further split into three control channels. During antilock operation of the vehicle's brake system, the front wheels are controlled independently and are on two separate control channels, and the rear wheels of the vehicle are controlled together.

The system can build and release pressure at each wheel, depending on signals generated by the wheel speed sensors (WSS) at each wheel and received at the controller antilock brake (CAB).

NOISE AND BRAKE PEDAL FEEL

During ABS braking, some brake pedal movement may be felt. In addition, ABS braking will create ticking, popping, or groaning noises heard by the driver. This is normal and is due to pressurized fluid being transferred between the master cylinder and the brakes. If ABS operation occurs during hard braking, some pulsation may be felt in the vehicle body due to fore and aft movement of the suspension as brake pressures are modulated.

At the end of an ABS stop, ABS is turned off when the vehicle is slowed to a speed of 3–4 mph. There may be a slight brake pedal drop anytime that the ABS is deactivated, such as at the end of the stop when the vehicle speed is less than 3 mph or during an ABS stop where ABS is no longer required. These conditions exist when a vehicle is being stopped on a road surface with patches of ice, loose gravel, or sand on it. Also, stopping a vehicle on a bumpy road surface activates ABS because of the wheel hop caused by the bumps.

TIRE NOISE AND MARKS

Although the ABS system prevents complete wheel lockup, some wheel slip is desired in order to achieve optimum braking performance. Wheel slip is defined as follows: 0 percent slip means the wheel is rolling freely and 100 percent slip means the wheel is fully locked. During brake pressure modulation, wheel slip is allowed to reach up to 25–30 percent. This means that the wheel rolling velocity is 25–30 percent less than that of a free rolling wheel at a given vehicle speed. This slip may result in some tire chirping, depending on the road surface. This sound should not be interpreted as total wheel lockup.

Complete wheel lockup normally leaves black tire marks on dry pavement. The ABS will not leave dark

black tire marks since the wheel never reaches a fully locked condition. However, tire marks may be noticeable as light patched marks.

START-UP CYCLE

When the ignition is turned on, a popping sound and a slight brake pedal movement may be noticed. The ABS warning lamp will also be on for up to 5 seconds after the ignition is turned on. When the vehicle is first driven off, a humming may be heard or felt by the driver at approximately 20–40 kph (12–25 mph). All of these conditions are a normal function of ABS as the system is performing a diagnosis check.

PREMATURE ABS CYCLING

Symptoms of premature ABS cycling include: clicking sounds from the solenoid valves; pump/motor running; and pulsations in the brake pedal. Premature ABS cycling can occur at any braking rate of the vehicle and on any type of road surface. Neither the red BRAKE warning lamp, nor the amber ABS warning lamp, illuminate and no fault codes are stored in the CAB.

Premature ABS cycling is a condition that needs to be correctly assessed when diagnosing problems with the antilock brake system. It may be necessary to use a DRB scan tool to detect and verify premature ABS cycling.

Check the following common causes when diagnosing premature ABS cycling: damaged tone wheels; incorrect tone wheels; damaged steering knuckle wheel speed sensor mounting bosses; loose wheel speed sensor mounting bolts; excessive tone wheel runout; or an excessively large tone wheel-to-wheel speed sensor air gap. Give special attention to these components when diagnosing a vehicle exhibiting premature ABS cycling.

After diagnosing the defective component, repair or replace it as required. When the component repair or replacement is completed, test drive the vehicle to verify that premature ABS cycling has been corrected.

OPERATION - ELECTRONIC VARIABLE BRAKE PROPORTIONING

Upon entry into EVBP the inlet valve for the rear brake circuit is switched on so that the fluid supply from the master cylinder is shut off. In order to decrease the rear brake pressure, the outlet valve for the rear brake circuit is pulsed. This allows fluid to enter the low pressure accumulator (LPA) in the hydraulic control unit (HCU) resulting in a drop in fluid pressure to the rear brakes. In order to increase the rear brake pressure, the outlet valve is switched off and the inlet valve is pulsed. This increases the pressure to the rear brakes. This back-and-forth process will continue until the required slip difference is obtained. At the end of EVBP braking (brakes released) the fluid in the LPA drains back to the master cylinder by switching on the outlet valve and draining through the inlet valve check valve. At the same time the inlet valve is switched on in case of another brake application.

The EVBP will remain functional during many ABS fault modes. If both the red BRAKE and amber ABS warning indicators are illuminated, the EVBP may not be functioning.

OPERATION - TRACTION CONTROL SYSTEM

The traction control module monitors wheel speed. During acceleration, if the module detects front (drive) wheel slip and the brakes are not applied, the module enters traction control mode. Traction control operation proceeds in the following order:

(1) Close the normally open isolation valves.

(2) Start the pump/motor and supply volume and pressure to the front (drive) hydraulic circuit. (The pump/motor runs continuously during traction control operation.)

(3) Open and close the build and decay valves to maintain minimum wheel slip and maximum traction.

The cycling of the build and decay valves during traction control is similar to that during antilock braking, except the valves work to control wheel spin by applying the brakes, whereas the ABS function is to control wheel skid by releasing the brakes.

If the brakes are applied at anytime during a traction control cycle, the brake lamp switch triggers the controller to switch off traction control.

HYDRAULIC SHUTTLE VALVES

Two pressure relief hydraulic shuttle valves allow pressure and volume to return to the master cylinder reservoir when not consumed by the build and decay valves. These valves are necessary because the pump/motor supplies more volume than the system requires.

TRACTION CONTROL LAMP

The traction control system is enabled at each ignition cycle. It may be turned off by depressing the Traction Control Off switch button when the ignition is in the ON position. The traction control function lamp (TRAC OFF) illuminates immediately upon depressing the button.

The traction control function lamp illuminates during a traction control cycle, displaying TRAC.

If the CAB calculates that the brake temperatures are high, the traction control system becomes inoperative until a time-out period has elapsed. During this

"thermo-protection mode," the traction control function lamp illuminates TRAC OFF; note that no trouble code is registered.

CAUTION

CAUTIONS

The ABS uses an electronic control module, the CAB. This module is designed to withstand normal current draws associated with vehicle operation. Care must be taken to avoid overloading the CAB circuits.

CAUTION: In testing for open or short circuits, do not ground or apply voltage to any of the circuits unless instructed to do so for a diagnostic procedure.

CAUTION: These circuits should only be tested using a high impedance multi-meter or the DRBIII® scan tool as described in this section. Power should never be removed or applied to any control module with the ignition in the ON position. Before removing or connecting battery cables, fuses, or connectors, always turn the ignition to the OFF position.

CAUTION: The CAB 24-way connector should never be connected or disconnected with the ignition switch in the ON position.

CAUTION: This vehicle utilizes active wheel speed sensors. Do not apply voltage to wheel speed sensors at any time.

CAUTION: Use only factory wiring harnesses. Do not cut or splice wiring to the brake circuits. The addition of aftermarket electrical equipment (car phone, radar detector, citizen band radio, trailer lighting, trailer brakes, etc.) on a vehicle equipped with antilock brakes may affect the function of the antilock brake system.

CAUTION: When performing any service procedure on a vehicle equipped with ABS, do not apply a 12-volt power source to the ground circuit of the pump motor in the HCU. Doing this will damage the pump motor and will require replacement of the entire HCU.

CAUTION: An attempt to remove or disconnect certain system components may result in improper system operation. Only those components with approved removal and installation procedures in this manual should be serviced.

CAUTION: If welding work is to be performed on the vehicle, using an electric arc welder, the CAB connector should be disconnected during the welding operation.

CAUTION: Many components of the ABS System are not serviceable and must be replaced as an assembly. Do not disassemble any component which is not designed to be serviced.

CAUTION: Only the recommended jacking or hoisting positions for this vehicle are to be used whenever it is necessary to lift a vehicle. Failure to raise a vehicle from the recommended locations could result in lifting a vehicle by the hydraulic control unit mounting bracket. Lifting a vehicle by the hydraulic control unit mounting bracket will result in damage to the mounting bracket and the hydraulic control unit.

CAUTION: Brake fluid will damage painted surfaces. If brake fluid is spilled on any painted surface, wash off with water immediately.

STANDARD PROCEDURE - ANTILOCK BRAKE SYSTEM BLEEDING

The base brake's hydraulic system must be bled anytime air enters the hydraulic system. The ABS though, particularly the ICU (HCU), should only be bled when the HCU is replaced or removed from the vehicle. The ABS must always be bled anytime it is suspected that the HCU has ingested air. Under most circumstances that require the bleeding of the brakes hydraulic system, only the base brake hydraulic system needs to be bled.

It is important to note that excessive air in the brake system will cause a soft or spongy feeling brake pedal.

During the brake bleeding procedure, be sure the brake fluid level remains close to the FULL level in the master cylinder fluid reservoir. Check the fluid level periodically during the bleeding procedure and add DOT 3 brake fluid as required.

The ABS must be bled as two independent braking systems. The non-ABS portion of the brake system with ABS is to be bled the same as any non-ABS system.

BRAKES - ABS (Continued)

The ABS portion of the brake system must be bled separately. Use the following procedure to properly bleed the brake hydraulic system including the ABS.

BLEEDING

When bleeding the ABS system, the following bleeding sequence must be followed to insure complete and adequate bleeding.

(1) Make sure all hydraulic fluid lines are installed and properly torqued.

(2) Connect the DRBIII® scan tool to the diagnostics connector. The diagnostic connector is located under the lower steering column cover to the left of the steering column.

(3) Using the DRB, check to make sure the CAB does not have any fault codes stored. If it does, clear them using the DRB.

WARNING: WHEN BLEEDING THE BRAKE SYSTEM WEAR SAFETY GLASSES. A CLEAR BLEED TUBE MUST BE ATTACHED TO THE BLEEDER SCREWS AND SUBMERGED IN A CLEAR CONTAINER FILLED PART WAY WITH CLEAN BRAKE FLUID. DIRECT THE FLOW OF BRAKE FLUID AWAY FROM YOURSELF AND THE PAINTED SURFACES OF THE VEHICLE. BRAKE FLUID AT HIGH PRESSURE MAY COME OUT OF THE BLEEDER SCREWS WHEN OPENED.

(4) Bleed the base brake system using the standard pressure or manual bleeding procedure. (Refer to 5 - BRAKES - BASE - STANDARD PROCEDURE)

(5) Using the DRB, select ANTILOCK BRAKES, followed by MISCELLANEOUS, then BLEED BRAKES. Follow the instructions displayed. When the scan tool displays TEST COMPLETED, disconnect the scan tool and proceed.

(6) Bleed the base brake system a second time. Check brake fluid level in the reservoir periodically to prevent emptying, causing air to enter the hydraulic system.

(7) Fill the master cylinder reservoir to the full level.

(8) Test drive the vehicle to be sure the brakes are operating correctly and that the brake pedal does not feel spongy.

SPECIFICATIONS

ABS FASTENER TORQUE

(Refer to 5 - BRAKES - BASE - SPECIFICATIONS)

TONE WHEEL RUNOUT

DESCRIPTION	SPECIFICATION
Front Tone Wheel Maximum Runout	0.15 mm (0.006 in.)
Rear Tone Wheel Maximum Runout	0.15 mm (0.006 in.)

WHEEL SPEED SENSOR AIR GAP

DESCRIPTION	SPECIFICATION
Front Sensor	0.35 – 1.20 mm 0.014 – 0.047 in.
Rear Sensor	0.40 – 1.20 mm 0.016 – 0.047 in.

FRONT WHEEL SPEED SENSOR

REMOVAL

(1) Raise vehicle. (Refer to LUBRICATION & MAINTENANCE/HOISTING - STANDARD PROCEDURE)

(2) Remove the tire and wheel assembly.

(3) Remove the sensor cable routing clamp screws.

CAUTION: When disconnecting the wheel speed sensor from vehicle wiring harness, be careful not to damage pins on connector

(4) Remove speed sensor cable grommets from intermediate bracket on strut.

(5) Disconnect speed sensor cable from vehicle wiring harness behind fender well shield.

(6) Remove the wheel speed sensor head mounting bolt (Fig. 1).

(7) Remove sensor head from steering knuckle. If sensor has seized due to corrosion, **DO NOT USE PLIERS ON SENSOR HEAD.** Use a hammer and a punch and tap edge of sensor ear, rocking the sensor side-to-side until free.

(8) Remove front wheel speed sensor from vehicle.

INSTALLATION

CAUTION: Proper installation of wheel speed sensor cables is critical to continued system operation. Be sure that cables are installed in retainers. Failure to install cables in retainers as shown in this section may result in contact with moving parts and over extension of cables, resulting in an open circuit.

FRONT WHEEL SPEED SENSOR (Continued)

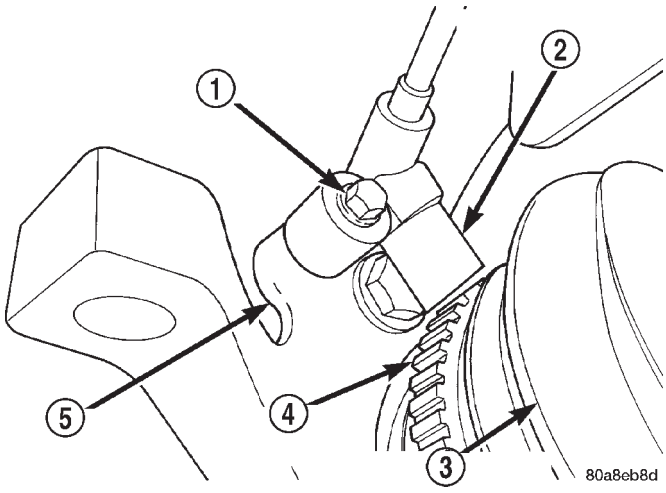

Fig. 1 Front Wheel Speed Sensor Attaching Bolt

1 - MOUNTING BOLT
2 - WHEEL SPEED SENSOR
3 - DRIVESHAFT
4 - TONE WHEEL
5 - STEERING KNUCKLE

(1) Connect the front wheel speed sensor cable to the vehicle wiring harness connector. Be sure speed sensor cable connector is fully seated and locked into vehicle wiring harness connector.

(2) Install the bolts attaching the routing clamps to the body of the vehicle. Tighten the bolts to a torque of 14 N·m (125 in. lbs.).

(3) Insert speed sensor cable grommets into intermediate bracket on strut.

(4) Install the wheel speed sensor head mounting bolt (Fig. 1). Tighten the bolt to a torque of 13 N·m (115 in. lbs.)

(5) Install the wheel and tire assembly on vehicle.

(6) Lower vehicle.

(7) Road test vehicle to ensure proper operation of the base and ABS brake systems.

REAR WHEEL SPEED SENSOR - AWD

REMOVAL

(1) Raise vehicle. (Refer to LUBRICATION & MAINTENANCE/HOISTING - STANDARD PROCEDURE)

CAUTION: When disconnecting speed sensor cable from vehicle wiring harness be careful not to damage pins on the electrical connectors. Also, inspect connectors for any signs of previous damage.

(2) Remove grommet from floor pan of vehicle and disconnect speed sensor cable connector from vehicle wiring harness.

CAUTION: When removing rear wheel speed sensor cable from routing clips, be sure not to damage the routing clips. Routing clips that are molded onto the brake hose will require replacement of the brake hose if damaged during removal or installation of the speed sensor cable.

(3) Carefully remove speed sensor cable from press-in routing clips along brake hose and tubing.

(4) Remove bolt securing wheel speed sensor cable metal clip to rear of axle. Remove metal clip from cable if necessary.

CAUTION: If speed sensor head has seized due to corrosion, do not use pliers on speed sensor head in an attempt to remove it. Use a hammer and a punch and tap mounting flange edge side-to-side, rocking the sensor until free.

(5) Remove wheel speed sensor head attaching bolt.

(6) Remove wheel speed sensor head from the axle, and remove sensor from vehicle.

INSTALLATION

CAUTION: Proper installation of wheel speed sensor cables is critical to continued system operation. Be sure that cables are installed in retainers. Failure to install cables in retainers as indicated may result in contact with moving parts or over-extension of cables, resulting in an open circuit.

(1) Install wheel speed sensor head in axle flange.

CAUTION: Prior to installing the speed sensor head attaching bolt, the plastic anti-rotation pin must be fully seated into the bearing flange.

(2) Install wheel speed sensor head attaching bolt. Tighten bolt to a torque 10 N·m (90 in. lbs.).

(3) Check the air gap between the face of the wheel speed sensor and the top surface of the tone wheel. (Refer to 5 - BRAKES - SPECIFICATIONS)

CAUTION: When installing wheel speed sensor cable in the routing clips on rear brake flex hose, be sure not to damage the routing clips. Routing clips are molded onto the hose and will require replacement of the brake hose if damaged.

(4) Install speed sensor cable under leaf spring onto brake hose and tubing utilizing routing clips to secure it in place.

REAR WHEEL SPEED SENSOR - AWD (Continued)

(5) Install metal routing clip on speed sensor cable and mount it to rear of axle with mounting bolt. Tighten mounting bolt to 16 N·m (140 in. lbs.).

(6) Connect wheel speed sensor cable to vehicle wiring harness.**Be sure speed sensor cable connector is fully seated and locked into vehicle wiring harness connector.**

(7) Install speed sensor cable grommet into the floor pan, being sure the grommet is fully seated into the access hole.

(8) Lower vehicle.

(9) Road test vehicle to ensure proper operation of the base and ABS braking systems.

REAR WHEEL SPEED SENSOR - FWD

REMOVAL

(1) Raise vehicle. (Refer to LUBRICATION & MAINTENANCE/HOISTING - STANDARD PROCEDURE)

CAUTION: When disconnecting speed sensor cable from vehicle wiring harness be careful not to damage pins on the electrical connectors. Also, inspect connectors for any signs of previous damage.

(2) Remove grommet from floor pan of vehicle and disconnect speed sensor cable connector from vehicle wiring harness (Fig. 2).

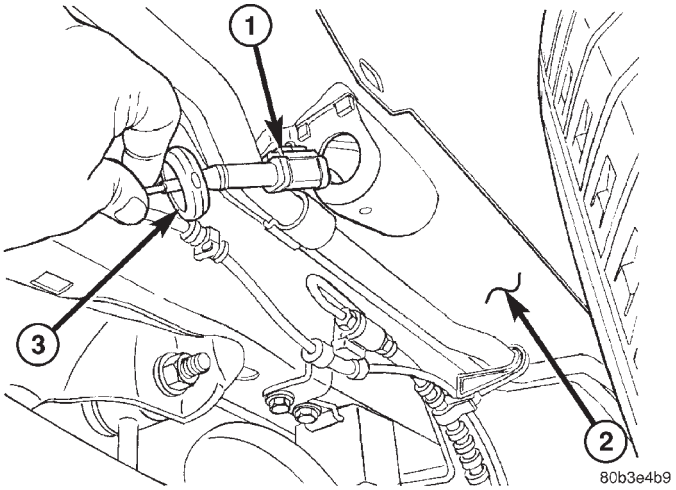

Fig. 2 Wheel Speed Sensor Connector

1 - CONNECTOR
2 - FLOOR PAN
3 - GROMMET

CAUTION: When removing rear wheel speed sensor cable from routing clips, be sure not to damage the routing clips. Routing clips that are molded onto the brake hose will require replacement of the brake hose if damaged during removal or installation of the speed sensor cable.

(3) Carefully remove speed sensor cable from press-in routing clips (Fig. 3).

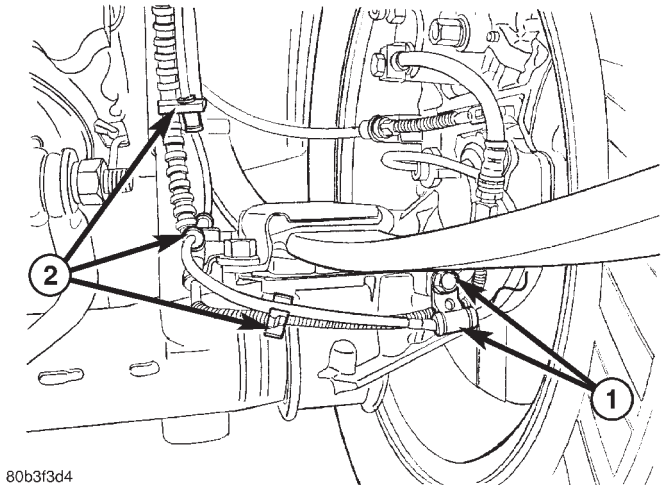

Fig. 3 SPEED SENSOR CABLE ROUTING

1 - METAL CLIP AND MOUNTING BOLT
2 - ROUTING CLIPS

(4) Remove bolt securing metal routing clip to rear of axle and remove sensor cable from metal clip (Fig. 3).

(5) Remove secondary (yellow) retaining clip at rear of wheel speed sensor head (Fig. 4).

(6) Push up on metal retaining clip (Fig. 4) until it bottoms. This will release wheel speed sensor head from hub and bearing. While holding metal clip up, pull back on wheel speed sensor head removing it from hub and bearing.

(7) Remove wheel speed sensor assembly from vehicle.

INSTALLATION

CAUTION: Proper installation of wheel speed sensor cable is critical to continued system operation. Be sure that cable is installed in routing retainers/ clips. Failure to install cable in retainers may result in contact with moving parts or over extension of cable, resulting in an open circuit.

NOTE: Make sure wheel speed sensor stays clean and dry as it is installed into the hub and bearing cap.

(1) If metal sensor retaining clip is not in the neutral installed position on hub and bearing cap, install from the bottom, if necessary, and push clip upward until it snaps into position.

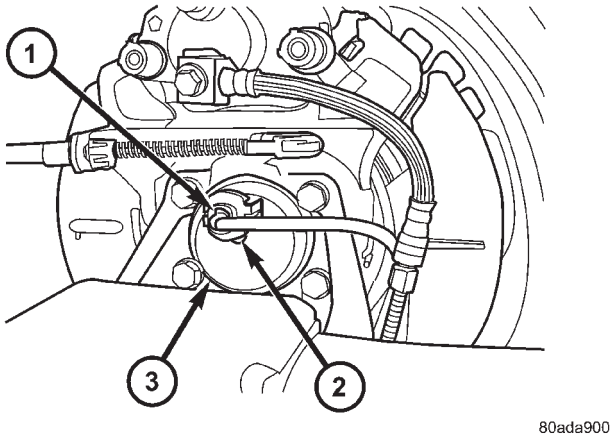

Fig. 4 SENSOR CONNECTION AT HUB AND BEARING

1 - SECONDARY SENSOR RETAINING CLIP
2 - METAL SENSOR RETAINING CLIP
3 - HUB AND BEARING

(2) Install wheel speed sensor head into rear of hub and bearing aligning index tab with the notch in the top of the mounting hole. Push the sensor in until it snaps into place on the metal retaining clip.

(3) Install secondary (yellow) retaining clip over wheel speed sensor head and engage the tabs on each side.

(4) Route sensor cable under leaf spring along rear of axle. Install speed sensor cable into routing clips on rear brake flex hose (Fig. 3).

(5) Install cable into metal routing clip and attach it to the rear axle with mounting bolt (Fig. 3). Tighten mounting bolt to 16 N·m (140 in. lbs.).

(6) Connect wheel speed sensor cable to vehicle wiring harness (Fig. 2). **Be sure speed sensor cable connector is fully seated and locked into vehicle wiring harness connector.**

(7) Install speed sensor cable grommet into hole in floor pan making sure grommet is fully seated into hole.

(8) Lower vehicle.

(9) Road test vehicle to ensure proper operation of the base and ABS braking systems.

TONE WHEEL

INSPECTION - TONE WHEEL

NOTE: Rear tone wheels for front-wheel-drive vehicles are sealed within the hub and bearing assembly and cannot be inspected or replaced. Replacement of the hub and bearing is necessary.

Tone wheels can cause erratic wheel speed sensor signals. Inspect tone wheels for the following possible causes.

- missing, chipped, or broken teeth
- contact with the wheel speed sensor
- wheel speed sensor to tone wheel alignment
- wheel speed sensor to tone wheel clearance
- excessive tone wheel runout
- tone wheel loose on its mounting surface

If a front tone wheel is found to need replacement, the drive shaft must be replaced. No attempt should be made to replace just the tone wheel. (Refer to 3 - DIFFERENTIAL & DRIVELINE/HALF SHAFT - REMOVAL)

If a rear tone wheel is found to need replacement on an all-wheel-drive model, the drive shaft must be replaced. No attempt should be made to replace just the tone wheel. (Refer to 3 - DIFFERENTIAL & DRIVELINE/HALF SHAFT - REMOVAL)

If wheel speed sensor to tone wheel contact is evident, determine the cause and correct it before replacing the wheel speed sensor or tone wheel.

Check the gap between the speed sensor head and the tone wheel to ensure it is within specifications. (Refer to 5 - BRAKES - ABS/ELECTRICAL - SPECIFICATIONS)

Excessive wheel speed sensor runout can cause erratic wheel speed sensor signals. Refer to SPECIFICATIONS in this section of the service manual for the maximum allowed tone wheel runout (Refer to 5 - BRAKES - ABS/ELECTRICAL - SPECIFICATIONS). If tone wheel runout is excessive, determine if it is caused by a defect in the driveshaft assembly or hub and bearing. Replace as necessary.

Tone wheels are pressed onto their mounting surfaces and should not rotate independently from the mounting surface. Replacement of the front driveshaft, rear driveshaft (AWD only) or rear hub and bearing is necessary.

TRACTION CONTROL SWITCH

DIAGNOSIS AND TESTING - TRACTION CONTROL SWITCH

(1) Remove lower column shroud.

(2) Disconnect traction control switch harness from column harness below column.

(3) Using an ohmmeter, check for continuity reading between pins. Refer to TRACTION CONTROL SWITCH CONTINUITY test table and (Fig. 5).

TRACTION CONTROL SWITCH (Continued)

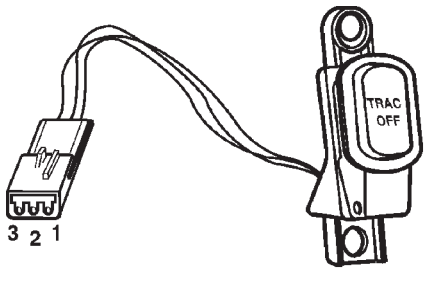

Fig. 5 TRACTION CONTROL SWITCH CONNECTOR

TRACTION CONTROL SWITCH CONTINUITY

SWITCH POSITION	CONTINUITY BETWEEN
ACTUATED	PINS 1 AND 2
ILLUMINATION	PINS 1 AND 3

HYDRAULIC/MECHANICAL

OPERATION - HYDRAULIC CIRCUITS AND VALVES

The hydraulic fluid control valves control the flow of pressurized brake fluid to the wheel brakes during the different modes of ABS braking. The following paragraphs explain how this works. For purposes of explanation only, it is assumed that only the right front wheel is experiencing antilock braking; the following diagrams show only the right front wheel in an antilock braking operation.

NORMAL BRAKING HYDRAULIC CIRCUIT AND SOLENOID VALVE FUNCTION

The hydraulic diagram (Fig. 6) shows the vehicle in the normal braking mode of the base brake hydraulic system. The diagram shows no wheel spin or slip occurring relative to the speed of the vehicle. The driver is applying the brake pedal which builds pressure in the brake hydraulic system to engage the brakes and stop the vehicle.

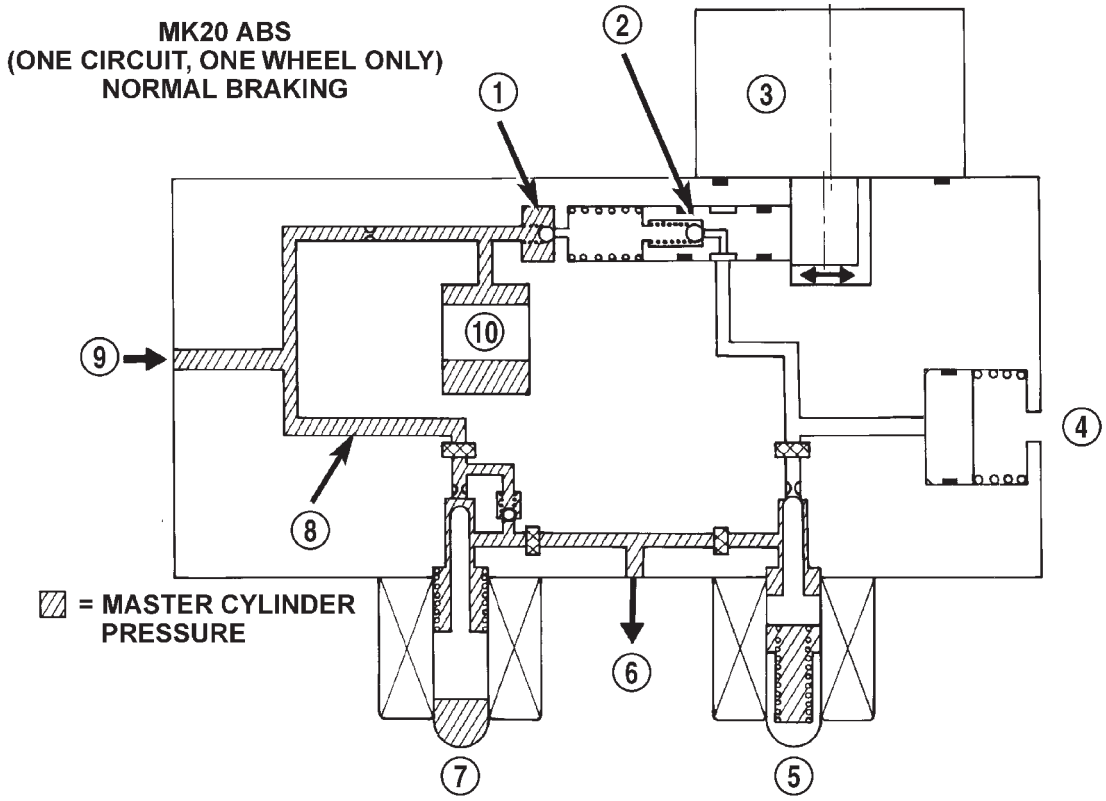

Fig. 6 Normal Braking Hydraulic Circuit

1 - OUTLET VALVE
2 - PUMP PISTON
3 - PUMP MOTOR (OFF)
4 - LOW PRESSURE ACCUMULATOR
5 - NORMALLY CLOSED VALVE (OFF)
6 - TO RIGHT FRONT WHEEL
7 - NORMALLY OPEN VALVE (OFF)
8 - MASTER CYLINDER PRESSURE
9 - FROM MASTER CYLINDER
10 - NOISE DAMPER CHAMBER

HYDRAULIC/MECHANICAL (Continued)

ABS PRIMARY HYDRAULIC CIRCUIT AND SOLENOID VALVE FUNCTION (ABS WITHOUT TRACTION CONTROL)

The hydraulic diagram (Fig. 7) shows the vehicle in the ABS braking mode. The diagram shows one wheel is slipping because the driver is attempting to stop the vehicle at a faster rate than is allowed by the surface on which the tires are riding.

- The normally open and normally closed valves modulate (build/decay) the brake hydraulic pressure as required.
- The pump/motor is switched on so that the brake fluid from the low pressure accumulators is returned to the master cylinder circuits.
- The brake fluid is routed to either the master cylinder or the wheel brake depending on the position of the normally open valve.

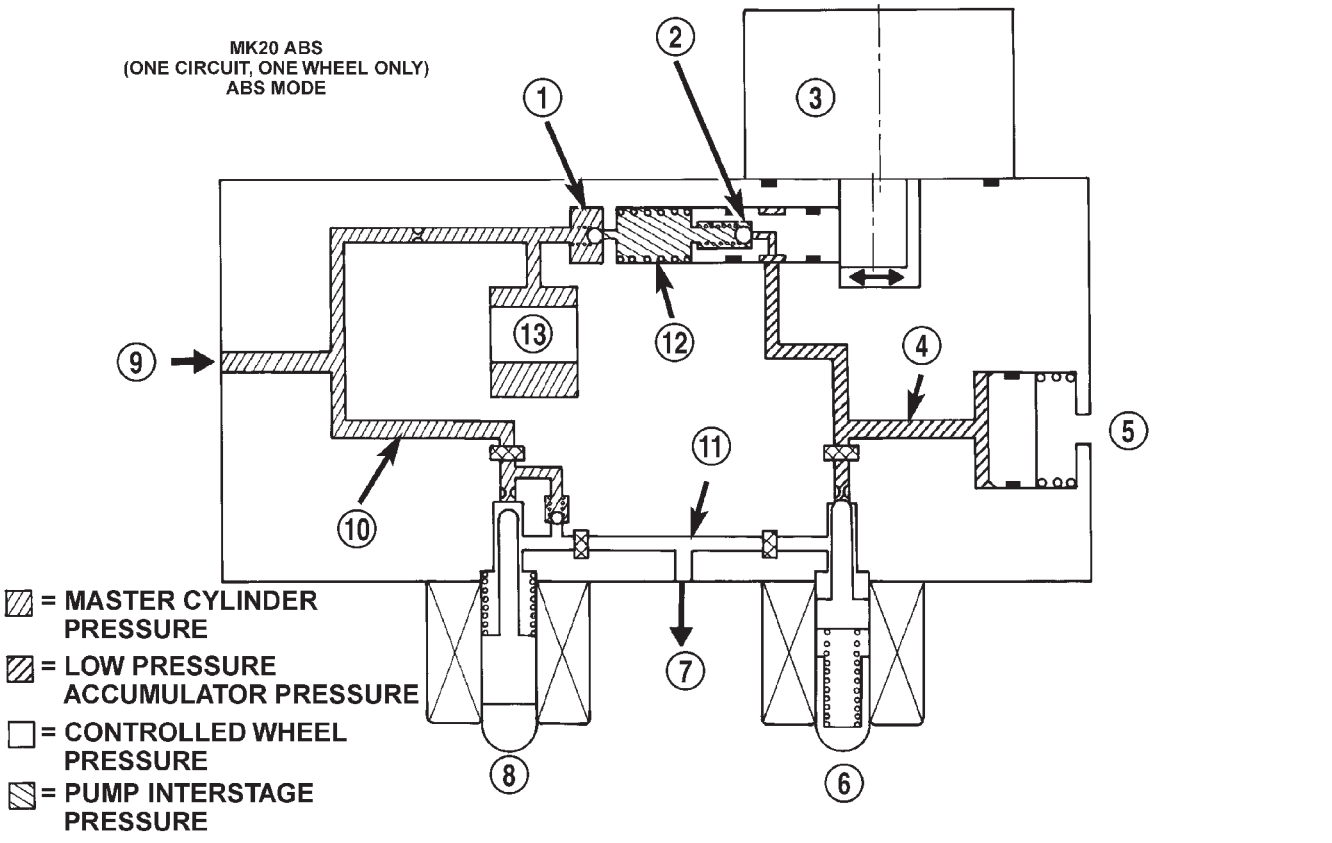

Fig. 7 ABS Without Traction Control - Primary Hydraulic Circuit

1 - OUTLET VALVE
2 - PUMP PISTON
3 - PUMP MOTOR (ON)
4 - LOW PRESSURE ACCUMULATOR PRESSURE
5 - LOW PRESSURE ACCUMULATOR
6 - NORMALLY CLOSED VALVE (MODULATING)
7 - TO RIGHT FRONT WHEEL
8 - NORMALLY OPEN VALVE (MODULATING)
9 - FROM MASTER CYLINDER
10 - MASTER CYLINDER PRESSURE
11 - CONTROLLED WHEEL PRESSURE
12 - PUMP INTERSTAGE PRESSURE
13 - NOISE DAMPER CHAMBER

HYDRAULIC/MECHANICAL (Continued)

ABS SECONDARY HYDRAULIC CIRCUIT AND SOLENOID VALVE FUNCTION (ABS WITHOUT TRACTION CONTROL)

The hydraulic diagram (Fig. 8) shows the vehicle in the ABS braking mode. The diagram shows one wheel is slipping because the driver is attempting to stop the vehicle at a faster rate than is allowed by the surface on which the tires are riding.

- The normally open and normally closed valves modulate (build/decay) the brake hydraulic pressure as required.
- The pump/motor is switched on so that the brake fluid from the low pressure accumulators is returned to the master cylinder circuits.
- The brake fluid will then be routed to either the master cylinder or the wheel brake depending on the position of the normally open valve.
- In the secondary circuit, 1.2 cc brake fluid is taken in by the lip seal saver to protect the lip seals on the master cylinder piston.

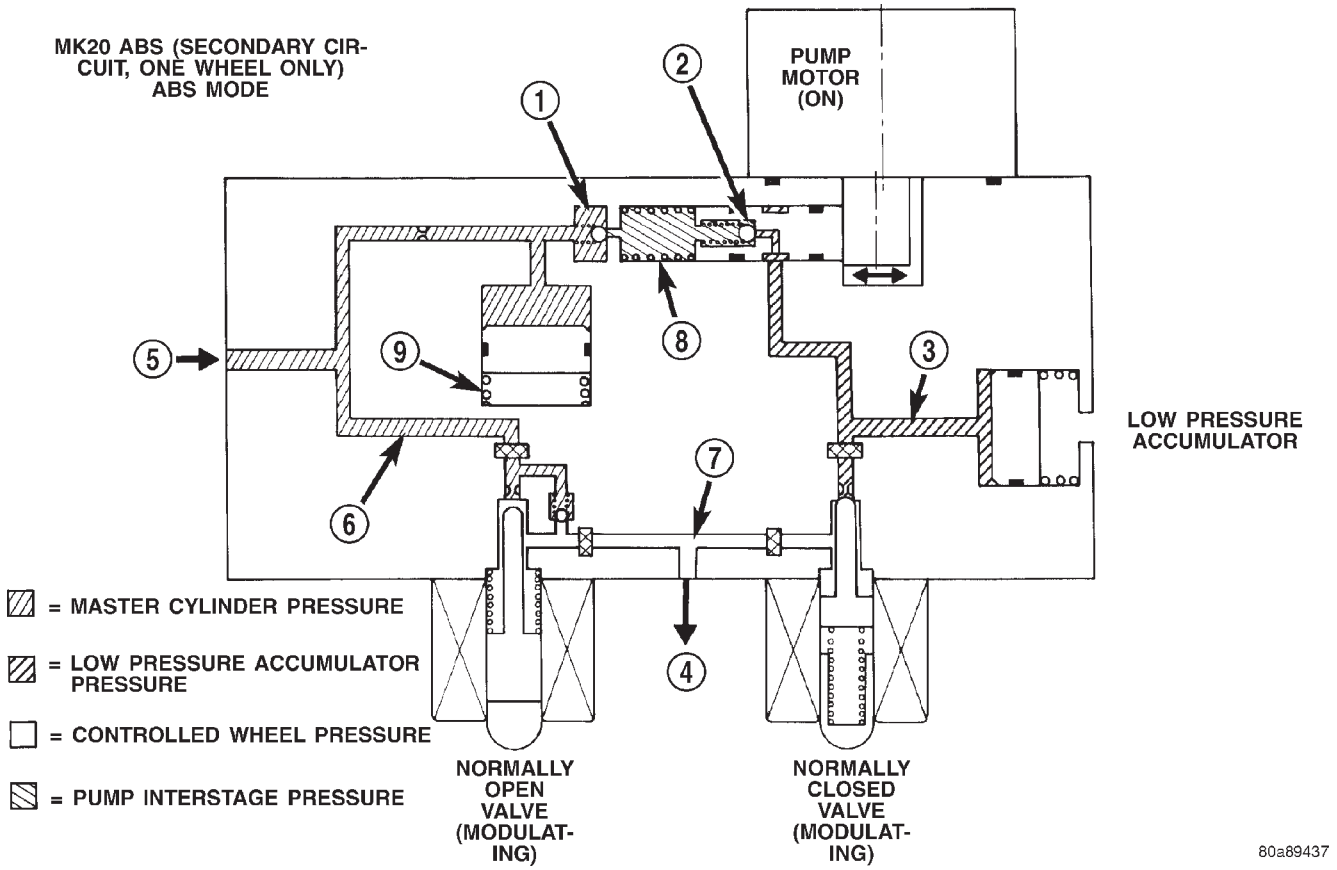

Fig. 8 ABS Without Traction Control - Secondary Hydraulic Circuit

1 - OUTLET VALVE
2 - PUMP PISTON
3 - LOW PRESSURE ACCUMULATOR PRESSURE
4 - TO RIGHT FRONT WHEEL
5 - FROM MASTER CYLINDER
6 - MASTER CYLINDER PRESSURE
7 - CONTROLLED WHEEL PRESSURE
8 - PUMP INTERSTAGE PRESSURE
9 - LIP SEAL SAVER (SECONDARY CIRCUIT ONLY)

HYDRAULIC/MECHANICAL (Continued)

NORMAL BRAKING HYDRAULIC CIRCUIT, SOLENOID VALVE, AND SHUTTLE VALVE FUNCTION (ABS WITH TRACTION CONTROL)

The hydraulic diagram (Fig. 9) shows a vehicle with traction control in the normal braking mode. The diagram shows no wheel spin or slip occurring relative to the speed of the vehicle. The driver is applying the brake pedal which builds pressure in the brake hydraulic system to engage the brakes and stop the vehicle. the hydraulic shuttle valve closes with every brake pedal application so pressure is not created at the inlet to the pump/motor.

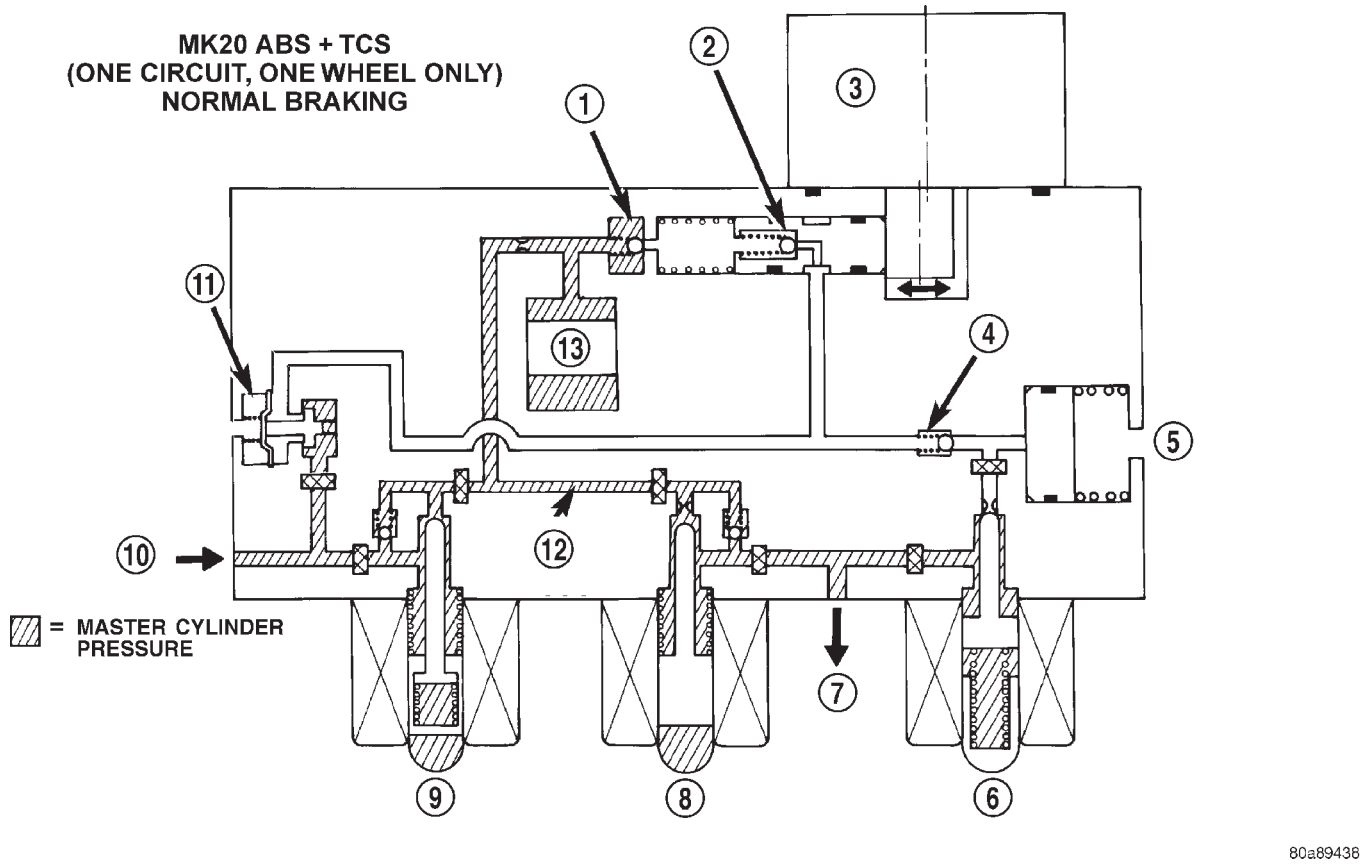

Fig. 9 ABS With Traction Control - Normal Braking Hydraulic Circuit

1 - OUTLET VALVE
2 - PUMP PISTON
3 - PUMP MOTOR (OFF)
4 - SUCTION VALVE
5 - LOW PRESSURE ACCUMULATOR
6 - NORMALLY CLOSED VALVE (OFF)
7 - TO RIGHT FRONT WHEEL
8 - NORMALLY OPEN VALVE (OFF)
9 - NORMALLY OPEN ASR VALVE (OFF)
10 - FROM MASTER CYLINDER
11 - HYDRAULIC SHUTTLE VALVE
12 - MASTER CYLINDER PRESSURE
13 - NOISE DAMPER CHAMBER

HYDRAULIC/MECHANICAL (Continued)

ABS BRAKING HYDRAULIC CIRCUIT, SOLENOID VALVE, AND SHUTTLE VALVE FUNCTION (ABS WITH TRACTION CONTROL)

The hydraulic diagram (Fig. 10) shows the vehicle in the ABS braking mode. The diagram shows one wheel is slipping because the driver is attempting to stop the vehicle at a faster rate than is allowed by the surface on which the tires are riding.

- The hydraulic shuttle valve closes upon brake application so that the pump/motor cannot siphon brake fluid from the master cylinder.
- The normally open and normally closed valves modulate (build/decay) the brake hydraulic pressure as required.
- The pump/motor is switched on so that the brake fluid from the low pressure accumulators is returned to the master cylinder circuits.
- The brake fluid is routed to either the master cylinder or the wheel brake depending on the position of the normally open valve.

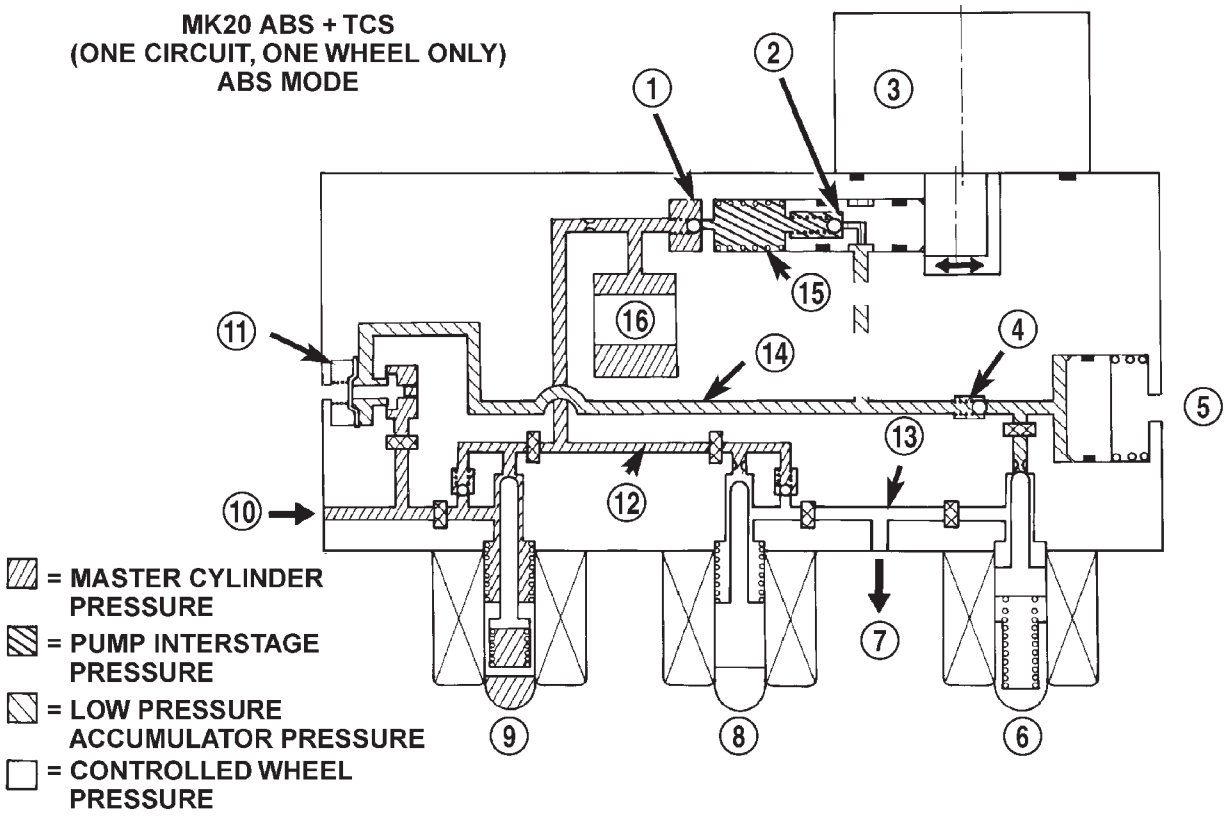

80a89439

Fig. 10 ABS With Traction Control - ABS Braking Hydraulic Circuit

1 - OUTLET VALVE
2 - PUMP PISTON
3 - PUMP MOTOR (ON)
4 - SUCTION VALVE
5 - LOW PRESSURE ACCUMULATOR
6 - NORMALLY CLOSED VALVE (MODULATING)
7 - TO RIGHT FRONT WHEEL
8 - NORMALLY OPEN VALVE (MODULATING)
9 - NORMALLY OPEN ASR VALVE (OFF)
10 - FROM MASTER CYLINDER
11 - HYDRAULIC SHUTTLE VALVE
12 - MASTER CYLINDER PRESSURE
13 - CONTROLLED WHEEL PRESSURE
14 - LOW PRESSURE ACCUMULATOR PRESSURE
15 - PUMP INTERSTAGE PRESSURE
16 - NOISE DAMPER CHAMBER

HYDRAULIC/MECHANICAL (Continued)

ABS TRACTION CONTROL HYDRAULIC CIRCUIT, SOLENOID VALVE, AND SHUTTLE VALVE FUNCTION (ABS WITH TRACTION CONTROL)

The hydraulic diagram (Fig. 11) shows the vehicle in the ABS braking mode. The diagram shows a drive wheel is spinning and brake pressure is required to reduce its speed.

- The normally open ASR valve is energized to isolate the brake fluid being pumped from the master cylinder and to isolate the driven wheel.
- The normally open ASR valve bypasses the pump output back to the master cylinder at a fixed pressure setting.
- The normally open and normally closed valves modulate (build/decay) the brake pressure as required to the spinning wheel.

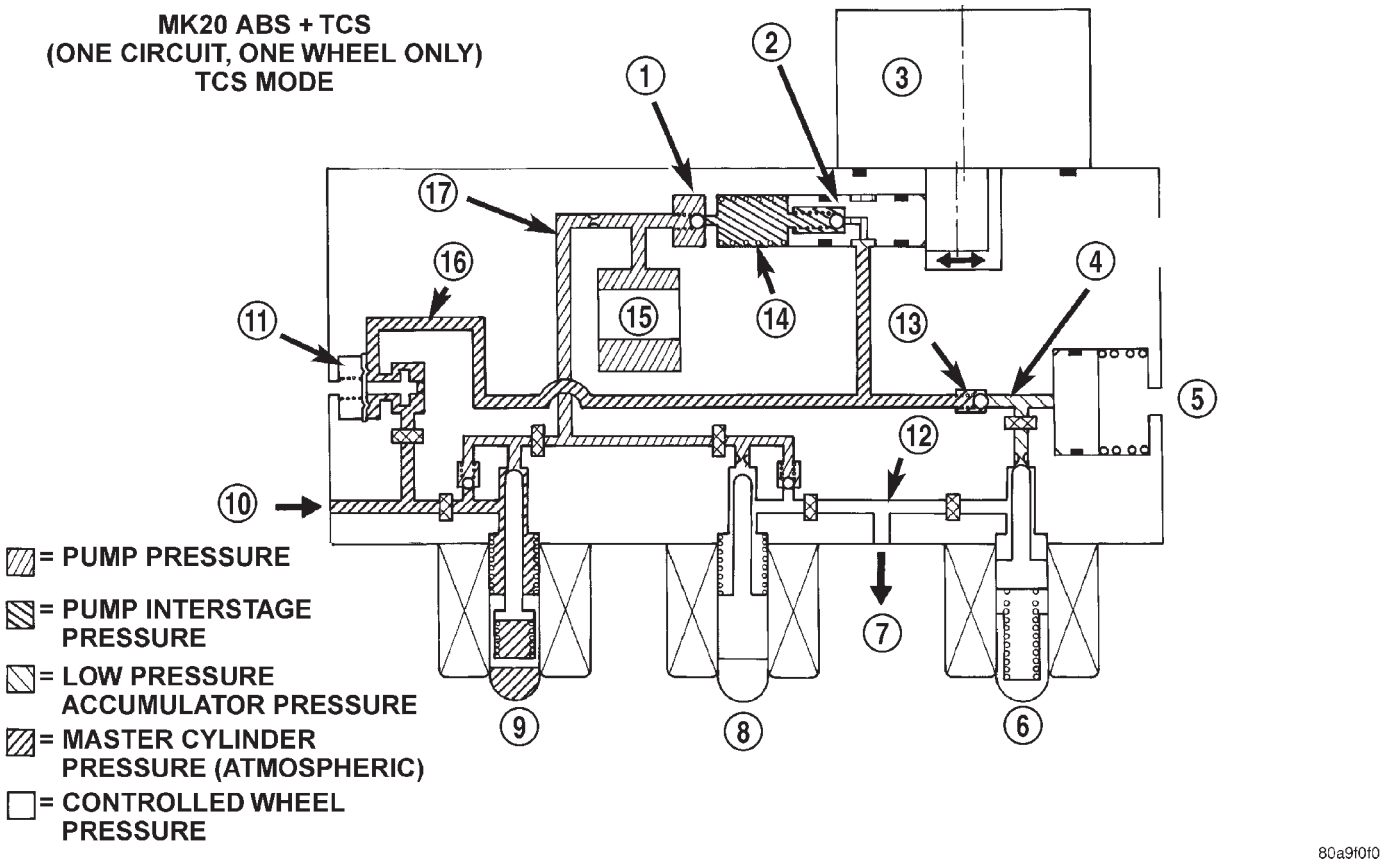

Fig. 11 Traction Control Hydraulic Circuit

1 - OUTLET VALVE
2 - PUMP PISTON
3 - PUMP MOTOR (ON)
4 - LOW PRESSURE ACCUMULATOR PRESSURE
5 - LOW PRESSURE ACCUMULATOR
6 - NORMALLY CLOSED VALVE (MODULATING)
7 - TO RIGHT FRONT WHEEL (SPINNING)
8 - NORMALLY OPEN VALVE (MODULATING)
9 - NORMALLY OPEN ASR VALVE ON (REGULATING)
10 - FROM MASTER CYLINDER
11 - HYDRAULIC SHUTTLE VALVE
12 - CONTROLLED WHEEL PRESSURE
13 - SUCTION VALVE
14 - PUMP INTERSTAGE PRESSURE
15 - NOISE DAMPER CHAMBER
16 - MASTER CYLINDER PRESSURE
17 - PUMP PRESSURE

HCU (HYDRAULIC CONTROL UNIT)

DESCRIPTION

The hydraulic control unit (HCU) is mounted to the CAB as part of the ICU (Fig. 22). The HCU controls the flow of brake fluid to the brakes using a series of valves and accumulators. A pump/motor is mounted on the HCU to supply build pressure to the brakes during an ABS stop.

The HCU on a vehicle equipped with ABS and traction control has a valve block housing that is approximately 1 inch longer on the low pressure fluid accumulators side than a HCU on a vehicle that is equipped with only ABS.

For more information, (Refer to 5 - BRAKES/HYDRAULIC/MECHANICAL/ICU (INTEGRATED CONTROL UNIT) - DESCRIPTION)

OPERATION

For information on the operation of the HCU as a whole, refer to Hydraulic Circuits And Valve Operation which can be found elsewhere in this section. For information on the operation of the components within the HCU, refer to the following three topics.

VALVES AND SOLENOIDS

The valve block contains four inlet valves and four outlet valves. The inlet valves are spring-loaded in the open position and the outlet valves are spring-loaded in the closed position during normal braking. The fluid is allowed to flow from the master cylinder to the wheel brakes.

During an ABS stop, these valves cycle to maintain the proper slip ratio for each wheel. The inlet valve closes preventing further pressure increase and the outlet valve opens to provide a path from the wheel brake to the HCU accumulators and pump/motor. This releases (decays) pressure from the wheel brake, thus releasing the wheel from excessive slippage. Once the wheel is no longer slipping, the outlet valve is closed and the inlet valve is opened to reapply (build) pressure.

On vehicles with traction control, there is an extra set of valves and solenoids. The ASR valves, mounted in the HCU valve block, are normally in the open position and close only when the traction control is applied.

These isolator valves are used to isolate the rear (non-driving) wheels of the vehicle from the hydraulic pressure that the HCU pump/motor is sending to the front (driving) wheels when traction control is being applied. The rear brakes need to be isolated from the master cylinder when traction control is being applied so the rear wheels do not drag. For more information, refer to Traction Control System in this section.

BRAKE FLUID ACCUMULATORS

There are two fluid accumulators in the HCU–one for the primary hydraulic circuit and one for the secondary hydraulic circuit. Each hydraulic circuit uses a 5 cc accumulator.

The fluid accumulators temporarily store brake fluid that is removed from the wheel brakes during an ABS cycle. This stored fluid is used by the pump/motor to provide build pressure for the brake hydraulic system. When the antilock stop is complete, the accumulators are drained by the pump/motor.

On ABS-only vehicles, there is a mini-accumulator on the secondary hydraulic circuit that protects the master cylinder seals during an ABS stop, and there is a noise dampening chamber on the primary circuit.

On ABS with traction control vehicles, there are two noise dampening chambers in the HCU.

PUMP/MOTOR

There are two pump assemblies in the HCU—one for the primary hydraulic circuit and one for the secondary hydraulic circuit. Both pumps are driven by a common electric motor. This DC-type motor is integral to the HCU and is controlled by the CAB.

The pump/motor provides the extra amount of brake fluid needed during antilock braking. Brake fluid is released to the accumulators when the outlet valve is opened during an antilock stop. The pump mechanism consists of two opposing pistons operated by an eccentric camshaft. In operation, one piston draws fluid from the accumulators, and the opposing piston pumps fluid to the master cylinder circuits. When the antilock stop is complete, the pump/motor drains the accumulators.

The CAB may turn on the pump/motor when an antilock stop is detected. The pump/motor continues to run during the antilock stop and is turned off after the stop is complete. Under some conditions, the pump/motor runs to drain the accumulators during the next drive-off.

The pump/motor is not a serviceable item; if it requires replacement, the HCU must be replaced.

ICU (INTEGRATED CONTROL UNIT)

DESCRIPTION

The hydraulic control unit (HCU) and the controller antilock brake (CAB) used with this antilock brake system are combined (integrated) into one unit, which is called the integrated control unit (ICU) (Fig. 12). The ICU is located below the master cylinder in the engine compartment (Fig. 13).

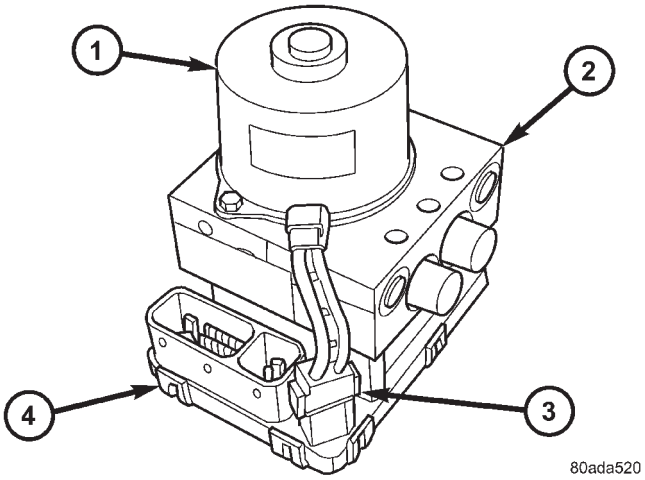

Fig. 12 INTEGRATED CONTROL UNIT (ICU)

1 - PUMP/MOTOR
2 - HCU
3 - PUMP/MOTOR CONNECTOR
4 - CAB

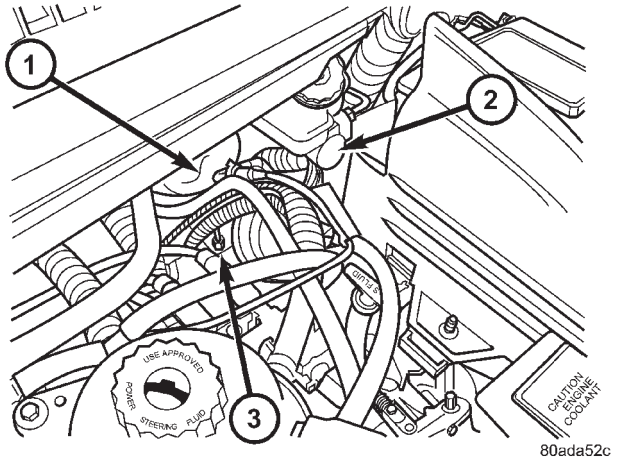

Fig. 13 ICU LOCATION IN VEHICLE

1 - POWER BRAKE BOOSTER
2 - MASTER CYLINDER
3 - ICU

Two different ICU's (HCU and CAB) are used on this vehicle depending on whether or not the vehicle is equipped with traction control. The HCU on a vehicle equipped with traction control has a valve block that is approximately one inch longer than a HCU on a vehicle that is equipped with ABS only.

The ABS-only ICU consists of the following components: the CAB, eight (build/decay) solenoid valves (four inlet valves and four outlet valves), valve block, fluid accumulators, a pump, and an electric motor.

The ABS-with traction control ICU consists of the following components: the CAB, eight (build/decay) solenoid valves (four inlet valves and four outlet valves), two traction control (ASR) valves, two hydraulic shuttle valves, valve block, fluid accumulators, a pump, and an electric motor.

The replaceable components of the ICU are the HCU and the CAB. No attempt should be made to service any individual components of the HCU or CAB. For information on the CAB, (Refer to 8 - ELECTRICAL/ELECTRONIC CONTROL MODULES/CONTROLLER ANTILOCK BRAKE - DESCRIPTION).

OPERATION

For information of the ICU, refer to these individual components of the ICU:

- CONTROLLER ANTILOCK BRAKE (CAB) (Refer to 8 - ELECTRICAL/ELECTRONIC CONTROL MODULES/CONTROLLER ANTILOCK BRAKE - OPERATION)
- HYDRAULIC CONTROL UNIT (HCU) (Refer to 5 - BRAKES - ABS/HYDRAULIC/MECHANICAL/HCU (HYDRAULIC CONTROL UNIT) - OPERATION)

For information on the ICU's hydraulic circuits, refer to HYDRAULIC CIRCUITS AND VALVE OPERATION. (Refer to 5 - BRAKES - ABS/HYDRAULIC/MECHANICAL - OPERATION)

REMOVAL

REMOVAL - LHD

(1) Disconnect the negative (ground) cable from the battery and isolate cable.

(2) Remove the battery shield.

(3) Remove the battery (Refer to 8 - ELECTRICAL/BATTERY SYSTEM/BATTERY - REMOVAL).

(4) Disconnect the vacuum hose connector at the tank built into the battery tray.

(5) Remove the screw securing the engine coolant filler neck to the battery tray.

(6) Remove the battery tray (Refer to 8 - ELECTRICAL/BATTERY SYSTEM/TRAY - REMOVAL).

ICU (INTEGRATED CONTROL UNIT) (Continued)

(7) Using a brake pedal depressor, move and lock the brake pedal to a position past the first inch of pedal travel. **This will prevent brake fluid from draining out of the master cylinder once the brake tubes are removed from the HCU.**

CAUTION: Do not apply a 12–volt power source to any terminals of the 24-way CAB connector when disconnected.

(8) Disconnect the wiring harness connector from the speed control servo.

(9) Remove the speed control servo mounting nuts and move the servo out of the way.

(10) Disconnect the 24–way connector from the CAB. To disconnect the 24–way connector, grasp the lock on the 24–way connector and pull it as far up as possible. This will unlock the 24–way connector from the socket on the CAB.

CAUTION: Before removing the brake tubes from the HCU, the HCU must be thoroughly cleaned. This must be done to prevent dirt particles from falling into the ports of HCU or entering the brake tubes.

(11) Thoroughly clean all surfaces of the ICU and brake tube nuts. Use only a solvent such as Mopar® Brake Parts Cleaner or equivalent to clean the ICU.

(12) Remove the brake tubes (4) from the outlet ports on the HCU (Fig. 14).

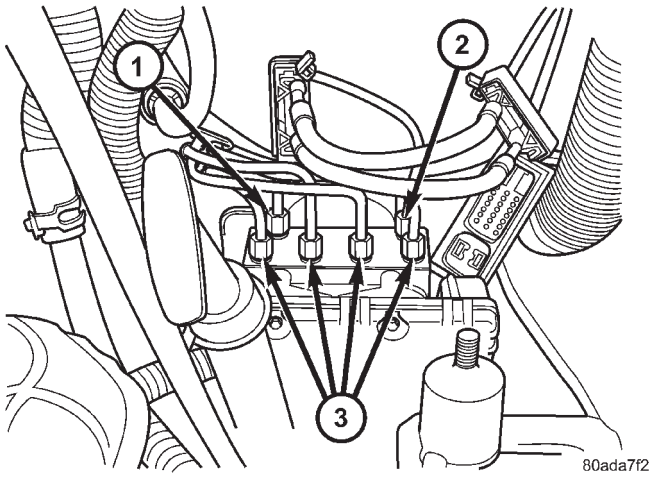

Fig. 14 BRAKE TUBE NUTS AT ICU

1 - PRIMARY BRAKE TUBE
2 - SECONDARY BRAKE TUBE
3 - CHASSIS BRAKE TUBES

(13) Remove the primary and secondary brake tubes from the inlet ports on the HCU (Fig. 14).

(14) Center and prop the steering wheel.

(15) Remove the silencer panel under the instrument panel, below the steering column.

(16) Remove the pinch bolt and disconnect the steering shaft coupling.

(17) Remove the two clips securing silencer to dash seal (Fig. 15).

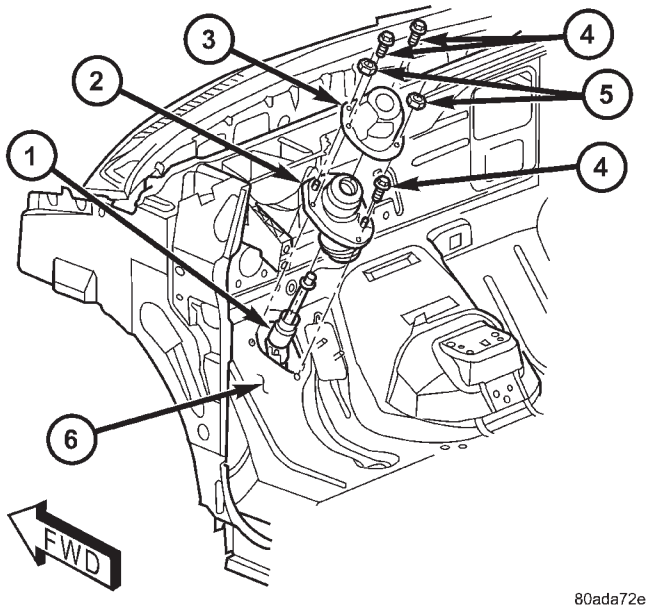

Fig. 15 LOWER COUPLING AND DASH SEAL

1 - COUPLING
2 - DASH SEAL
3 - SILENCER
4 - MOUNTING SCREWS
5 - RETAINING CLIPS
6 - DASH

(18) Remove the three screws securing the dash seal (Fig. 15).

(19) Remove the 3 bolts attaching the ICU to its mounting bracket (Fig. 16).

(20) Remove ICU from the vehicle through engine compartment.

(21) If required, to separating the CAB from the HCU, (Refer to 5 - BRAKES - ABS/HYDRAULIC/MECHANICAL/ICU (INTEGRATED CONTROL UNIT) - DISASSEMBLY).

REMOVAL - RHD

NOTE: Before proceeding, (Refer to 5 - BRAKES - WARNING)(Refer to 5 - BRAKES - CAUTION)

(1) Disconnect the negative (ground) cable from the battery and isolate cable.

(2) Using a brake pedal depressor, move and lock the brake pedal to a position past the first inch of pedal travel. **This will prevent brake fluid from**

ICU (INTEGRATED CONTROL UNIT) (Continued)

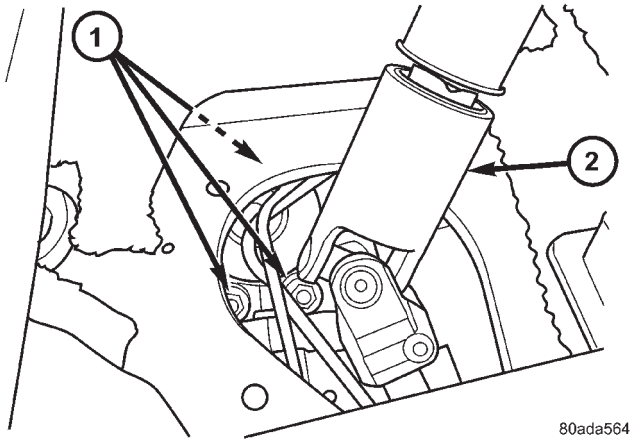

Fig. 16 ICU MOUNTING BOLTS

1 - ICU MOUNTING BOLTS
2 - COUPLER

draining out of the master cylinder when the brake tubes are removed from the HCU.

(3) Raise vehicle. (Refer to LUBRICATION & MAINTENANCE/HOISTING - STANDARD PROCEDURE)

(4) Remove the routing clip attaching the ICU wiring harness to the ICU mounting bracket (Fig. 17).

CAUTION: Do not apply a 12 volt power source to any terminals of the HCU connector when disconnected.

(5) Remove the 24-way connector (Fig. 17) from the CAB. The 24-way connector is removed from the CAB using the following procedure. Grasp the lock on the 24-way connector (Fig. 17) and pull it as far out as possible (Fig. 18). This will raise and unlock the 24-way connector from the socket on the CAB.

CAUTION: Before removing the brake tubes from the HCU, the HCU must be thoroughly cleaned. This must be done to prevent dirt particles from falling into the ports of HCU or entering the brake tubes.

(6) Thoroughly clean all surfaces of the HCU, and all brake tube nuts located on the HCU. Use only a solvent such as Mopar Brake Parts Cleaner or an equivalent to clean the HCU.

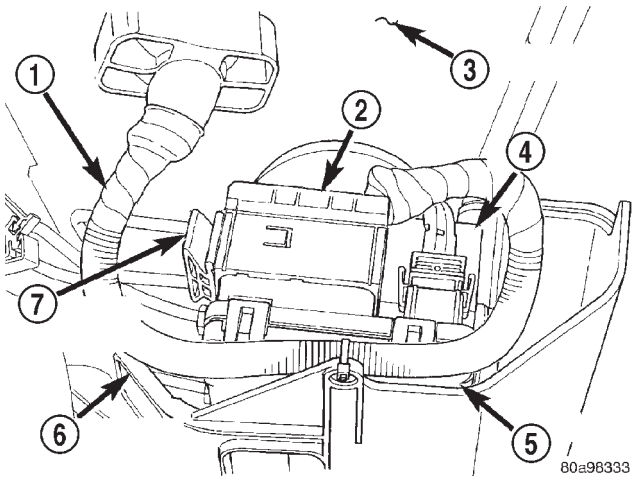

Fig. 17 CAB 24-Way Connector

1 - CAB WIRING HARNESS
2 - 24–WAY CONNECTOR
3 - FLOOR PAN
4 - HCU
5 - CAB
6 - HCU MOUNTING BRACKET
7 - CONNECTOR LOCK

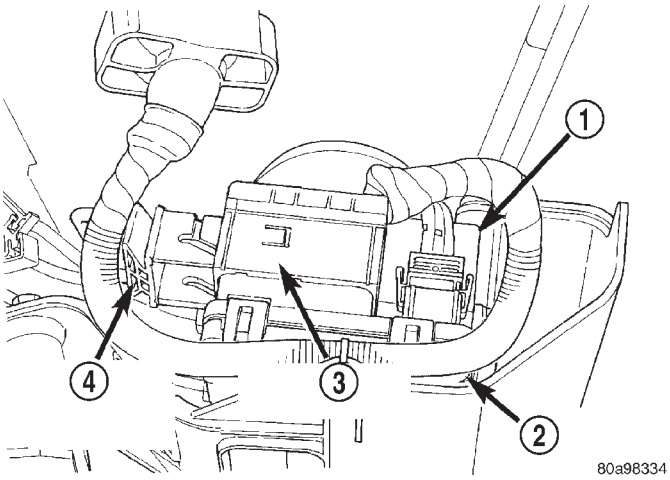

Fig. 18 Unlocked 24-Way CAB Connector

1 - HCU
2 - CAB
3 - 24–WAY CONNECTOR
4 - CONNECTOR LOCK (UNLOCKED)

ICU (INTEGRATED CONTROL UNIT) (Continued)

(7) Remove the brake tubes (6) from the inlet and outlet ports on the HCU. (Fig. 19).

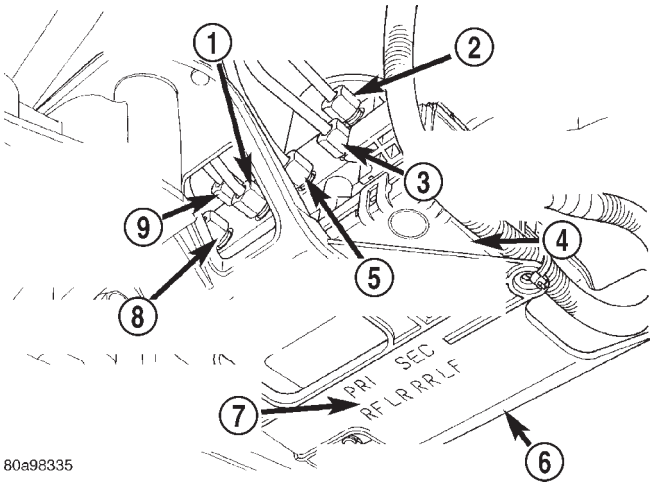

Fig. 19 Brake Tube Connections To HCU

1 - LEFT REAR WHEEL BRAKE TUBE
2 - SECONDARY BRAKE TUBE FROM MASTER CYLINDER
3 - LEFT FRONT WHEEL BRAKE TUBE
4 - CAB
5 - RIGHT REAR WHEEL BRAKE TUBE
6 - HCU MOUNTING BRACKET
7 - BRAKE TUBE TO HCU CONNECTION LOCATION LEGEND
8 - RIGHT FRONT WHEEL BRAKE TUBE
9 - PRIMARY BRAKE TUBE FROM MASTER CYLINDER

(8) Remove the 3 bolts (Fig. 20) attaching the ICU mounting bracket to the front suspension crossmember.

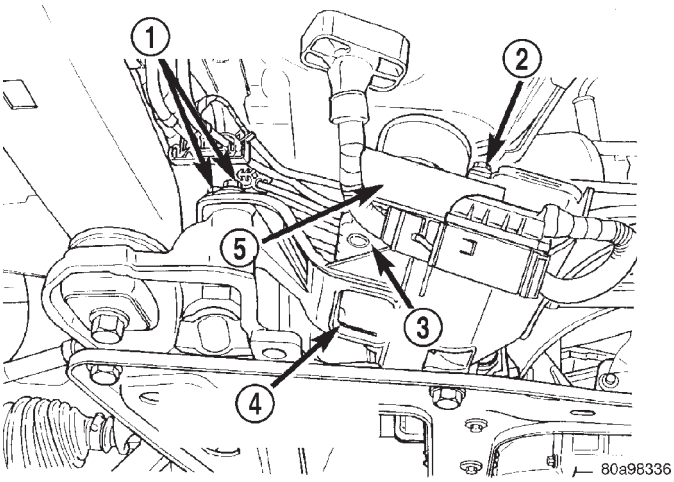

Fig. 20 ICU To Suspension Cradle Mounting Bolts

1 - HCU MOUNTING BRACKET BOLTS
2 - HCU MOUNTING BRACKET BOLT
3 - CAB
4 - HCU MOUNTING BRACKET
5 - HCU

(9) Remove ICU and the mounting bracket as a unit from the vehicle.

(10) Remove the 3 bolts (Fig. 21) mounting the ICU to the mounting bracket. Separate the ICU from the mounting bracket.

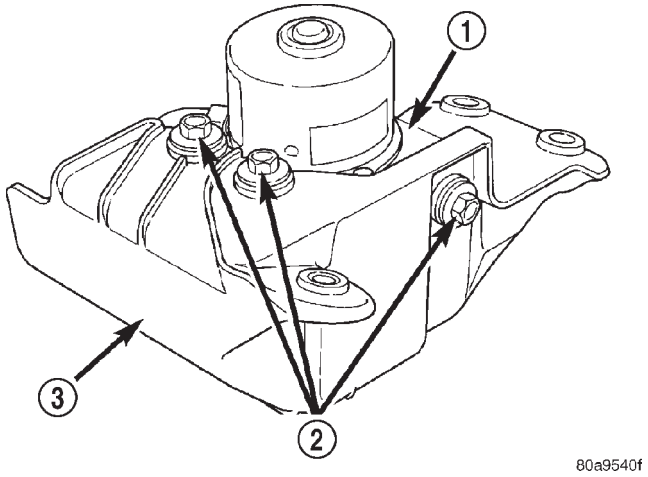

Fig. 21 ICU Mounting Bolts

1 - HCU
2 - HCU MOUNTING BOLTS
3 - HCU MOUNTING BRACKET

(11) For the procedure on separating and attaching the CAB to the HCU, refer to DISASSEMBLY.

DISASSEMBLY - ICU

(1) Remove the ICU from the vehicle. (Refer to 5 - BRAKES/HYDRAULIC/MECHANICAL/ICU (INTEGRATED CONTROL UNIT) - REMOVAL)

(2) Disconnect the pump/motor wiring harness from the CAB (Fig. 22).

(3) Remove the 4 bolts (Fig. 23) attaching the CAB to the HCU.

(4) Remove the CAB from the HCU (Fig. 24).

ASSEMBLY - ICU

(1) Install the CAB (Fig. 24) on the HCU.

(2) Install the 4 bolts mounting the CAB (Fig. 23) to the HCU. Tighten the CAB mounting bolts to a torque of 2 N·m (17 in. lbs.).

(3) Plug the pump/motor wiring harness into the CAB.

(4) Install the ICU in the vehicle and bleed the base and ABS hydraulic systems. (Refer to 5 - BRAKES/HYDRAULIC/MECHANICAL/ICU (INTEGRATED CONTROL UNIT) - INSTALLATION)

ICU (INTEGRATED CONTROL UNIT) (Continued)

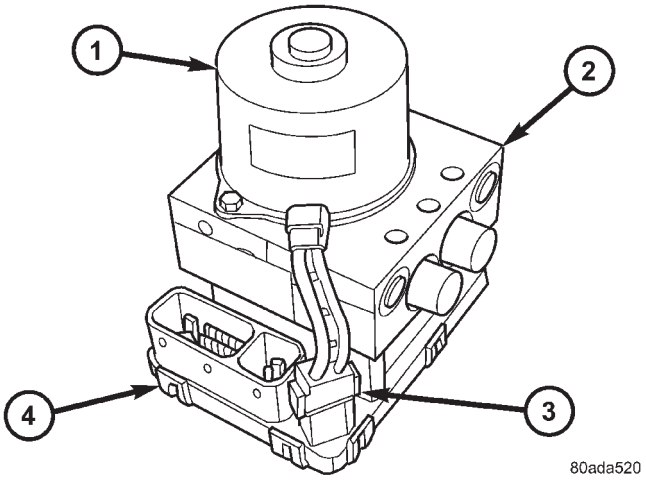

Fig. 22 INTEGRATED CONTROL UNIT (ICU)

1 - PUMP/MOTOR
2 - HCU
3 - PUMP/MOTOR CONNECTOR
4 - CAB

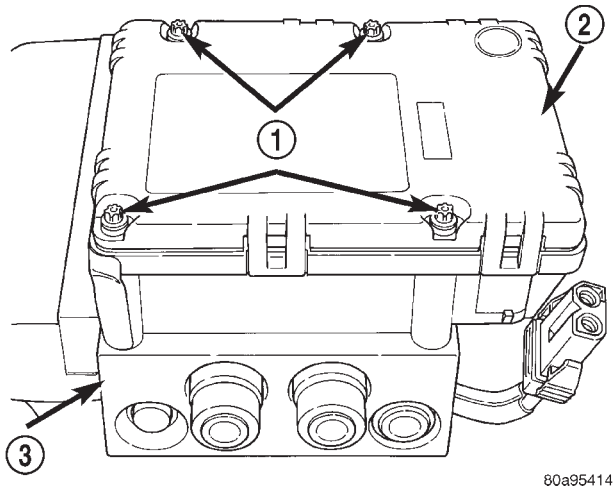

Fig. 23 (TYPICAL) CAB Attaching Bolts

1 - MOUNTING BOLTS
2 - CAB
3 - HCU VALVE BLOCK

INSTALLATION

INSTALLATION - LHD

(1) Place the ICU in its bracket below the master cylinder. Start the upper mounting bolt to hold it in place.

(2) Inside the vehicle, install the remaining 2 mounting bolts attaching the ICU to the mounting bracket (Fig. 16). Tighten all 3 mounting bolts to a torque of 11 N·m (97 in. lbs.).

(3) Install the dash seal and three mounting screws (Fig. 15).

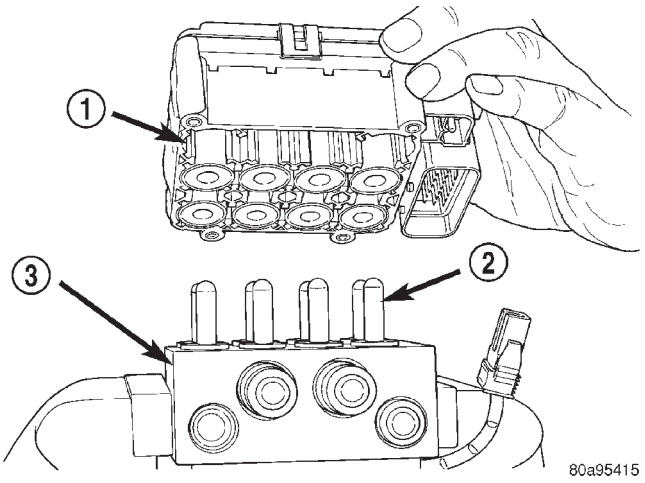

Fig. 24 (TYPICAL) Remove/Install CAB

1 - CAB
2 - HCU VALVES
3 - HCU VALVE BLOCK

(4) Install the silencer on top of the dash seal (Fig. 15).

(5) Connect the steering shaft coupling and install the pinch bolt (Fig. 15). Tighten the pinch bolt to 28 N·m (250 in. lbs.).

(6) Install the silencer panel below the steering column under the instrument panel.

(7) Remove the steering wheel holder.

CAUTION: Because of the flexible section in the primary and secondary brake tubes, the brake tubes must be held in proper orientation when tightened and torqued. These tubes must not contact each other or other vehicle components when installed. Also, after the brake tubes are installed on the HCU, ensure all spacer clips are reinstalled on the brake tubes.

(8) Install the primary and secondary brake tubes into their correct port locations on the HCU valve block (Fig. 14). Tighten the tube nuts to a torque of 17 N·m (145 in. lbs.).

CAUTION: When installing the chassis brake tubes on the HCU valve block, they must be located correctly in the valve block to ensure proper ABS operation.

NOTE: The chassis brake tube attachment locations to the HCU, are marked on the bottom of the CAB.

(9) Install the (4) chassis brake tubes into their correct port locations on the HCU valve block as shown (Fig. 14). Tighten the tube nuts to a torque of 17 N·m (145 in. lbs.).

ICU (INTEGRATED CONTROL UNIT) (Continued)

NOTE: Before installing the 24–way connector in the CAB be sure the seal is properly installed in the connector.

(10) Install the 24–way connector on the CAB by, first, positioning the 24–way connector in the socket of the CAB and carefully pushing it down as far as possible. Once connector is fully seated by hand into the CAB socket, push down on connector lock. This will pull the connector into the socket of the CAB and lock it in the installed position.

(11) Install any routing clips on the brake tubes.

(12) Remove the brake pedal holder.

(13) Install the speed control servo with its mounting nuts.

(14) Connect the wiring harness to the speed control servo.

(15) Install the battery tray (Refer to 8 - ELECTRICAL/BATTERY SYSTEM/TRAY - INSTALLATION).

(16) Install the screw securing the coolant filler neck to the battery tray.

(17) Reconnect the vacuum hose connector at the tank built into the battery tray.

(18) Install the battery (Refer to 8 - ELECTRICAL/BATTERY SYSTEM/BATTERY - INSTALLATION).

(19) Install the battery shield.

(20) Remove the brake pedal holder.

(21) Connect negative cable back on negative post of the battery.

(22) Bleed the Base and ABS brake hydraulic systems (Refer to 5 - BRAKES - STANDARD PROCEDURE).

(23) Road test vehicle to ensure proper operation of the base and antilock brake systems.

INSTALLATION - RHD

(1) Install the ICU on the mounting bracket (Fig. 21). Install the 3 bolts (Fig. 21) attaching the ICU to the mounting bracket. Tighten the 3 mounting bolts to a torque of 11 N·m (97 in. lbs.).

CAUTION: The ICU mounting bracket to front suspension cradle mounting bolts have a unique corrosion protection coating and a special aluminum washer. For this reason, only the original, or original equipment Mopar replacement bolts can be used to mount the ICU bracket to the front suspension crossmember.

(2) Install the ICU and its mounting bracket as an assembly on the front suspension crossmember. Install the 3 bolts attaching the ICU bracket to the crossmember (Fig. 20). Tighten the 3 mounting bolts to a torque of 28 N·m (250 in. lbs.).

CAUTION: Because of the flexible section in the primary and secondary brake tubes, and the brake tubes between the HCU and the proportioning valve, the brake tubes must be held in proper orientation when tightened and torqued. These tubes must not contact each other or other vehicle components when installed. Also, after the brake tubes are installed on the HCU, ensure all spacer clips are reinstalled on the brake tubes.

CAUTION: When installing the chassis brake tubes on the HCU valve block, they must be located correctly in the valve block to ensure proper ABS operation. Refer to (Fig. 19) for the correct chassis brake tube locations.

NOTE: The chassis brake tube attachment locations to the HCU, are marked on the bottom of the ICU mounting bracket.

(3) Install the 6 chassis brake tubes into their correct port locations on the HCU valve block as shown in (Fig. 19). Tighten the tube nuts to a torque of 17 N·m (145 in. lbs.).

NOTE: Before installing the 24-way connector in the CAB be sure the seal is properly installed in the connector.

(4) Install the 24-way connector (Fig. 17) on the CAB using the following procedure. Position the 24-way connector in the socket of the CAB and carefully push it down as far as possible. When connector is fully seated by hand into the CAB socket, push in the connector lock (Fig. 18). This will pull the connector into the socket of the CAB and lock it in the installed position.

NOTE: The CAB wiring harness must be clipped to the ICU mounting bracket. This will ensure the wiring harness is properly routed and does not contact the brake tubes or the body of the vehicle.

ICU (INTEGRATED CONTROL UNIT) (Continued)

(5) Clip the cab wiring harness (Fig. 17) to the ICU mounting bracket.

(6) Install the routing clips (Fig. 25) on the brake tubes.

(7) Lower the vehicle.

(8) Connect negative cable back on negative post of the battery.

(9) Bleed the base and ABS hydraulic systems. (Refer to 5 - BRAKES - STANDARD PROCEDURE)

(10) Road test vehicle to ensure proper operation of the base and antilock brake systems.

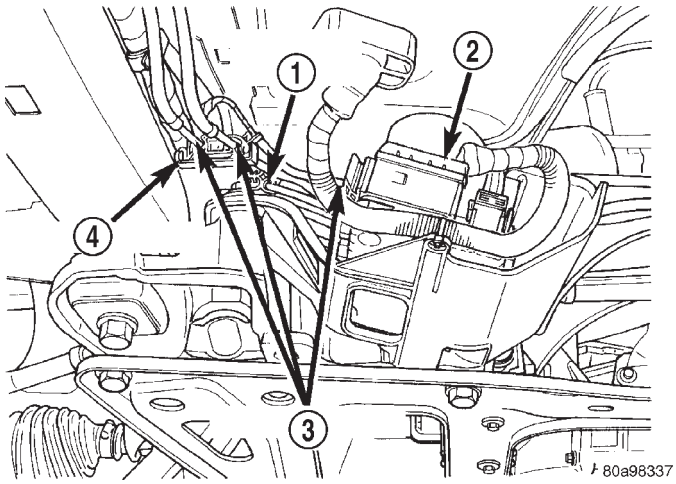

Fig. 25 Brake Tube Routing Clips

1 - ROUTING CLIP
2 - HCU
3 - BRAKE TUBES
4 - ROUTING CLIP

CLUTCH

TABLE OF CONTENTS

page

CLUTCH
DESCRIPTION 1
DIAGNOSIS AND TESTING
DIAGNOSIS AND TESTING - CLUTCH SYSTEM 3
DIAGNOSIS AND TESTING - DRIVE PLATE MISALIGNMENT 5
DIAGNOSIS AND TESTING - CLUTCH COVER AND DISC RUNOUT 6
DIAGNOSIS AND TESTING - CLUTCH CHATTER COMPLAINTS 6
SPECIAL TOOLS - T850 TRANSAXLE 6
CLUTCH RELEASE LEVER AND BEARING
REMOVAL 6
INSTALLATION 7
MASTER CYLINDER - RHD
REMOVAL 8
INSTALLATION 8
MASTER CYLINDER - LHD
REMOVAL 9
INSTALLATION 10
MODULAR CLUTCH ASSY - 2.4L GAS
REMOVAL 11
INSTALLATION 11
SLAVE CYLINDER
REMOVAL 11
INSTALLATION 11
CLUTCH DISC AND PRESSURE PLATE - 2.5L TD
REMOVAL 12
INSTALLATION 12
FLYWHEEL
REMOVAL 13
INSTALLATION 13

CLUTCH

DESCRIPTION

CLUTCH COMPONENTS

Models equipped with a 2.4L Gas engine utilize a modular clutch assembly (Fig. 1). The modular clutch consists of a single, dry-type clutch disc, a diaphragm style clutch cover, and an integrated flywheel. The clutch cover (pressure plate) is riveted to the flywheel, and therefore can only be serviced as an assembly.

Models equipped with the 2.5L Turbo Diesel engine utilize a conventional clutch system (Fig. 2). This system consists of a flywheel, clutch disc, and clutch cover (pressure plate), which is fastened to the flywheel, capturing the clutch disc within. Each component is individually serviceable, however it is **highly recommended that the clutch cover and disc be replaced as a set**.

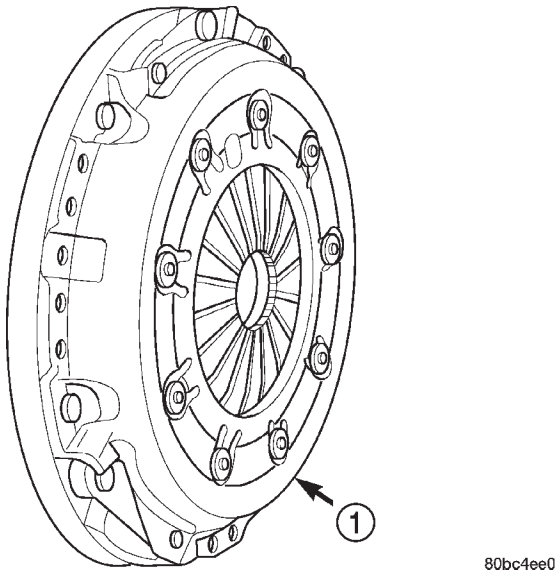

Fig. 1 Modular Clutch Assembly—2.4L Gas Engines

1 - MODULAR CLUTCH ASSEMBLY

CLUTCH (Continued)

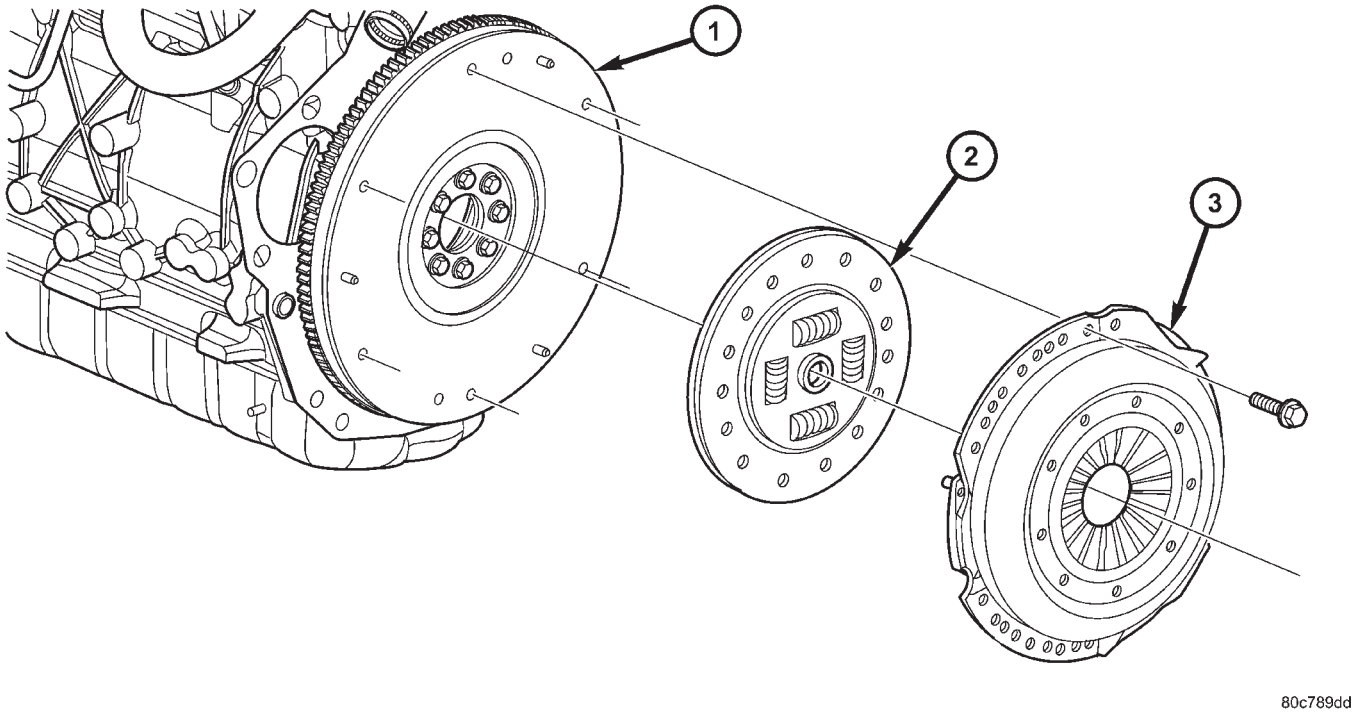

Fig. 2 Clutch Disc and Pressure Plate—2.5L TD Engines

1 - FLYWHEEL
2 - DISC
3 - PRESSURE PLATE

RELEASE SYSTEM

All models utilize a hydraulic clutch release system, conisting of a clutch master cylinder attached to the clutch pedal (Fig. 3), and a slave cylinder fastened to the transaxle which operates the clutch release lever (Fig. 4). When the driver depresses the clutch pedal, the master cylinder pushrod travels through the cylinder bore, displacing fluid through the master cylinder plumbing. This fluid displacement forces the slave cylinder piston to travel, forcing the clutch release bearing into the clutch diaphragm spring via the release lever and leverage (Fig. 5). This releases the clamping force on the clutch disc, allowing the engine crankshaft to rotate independently from the transaxle input shaft.

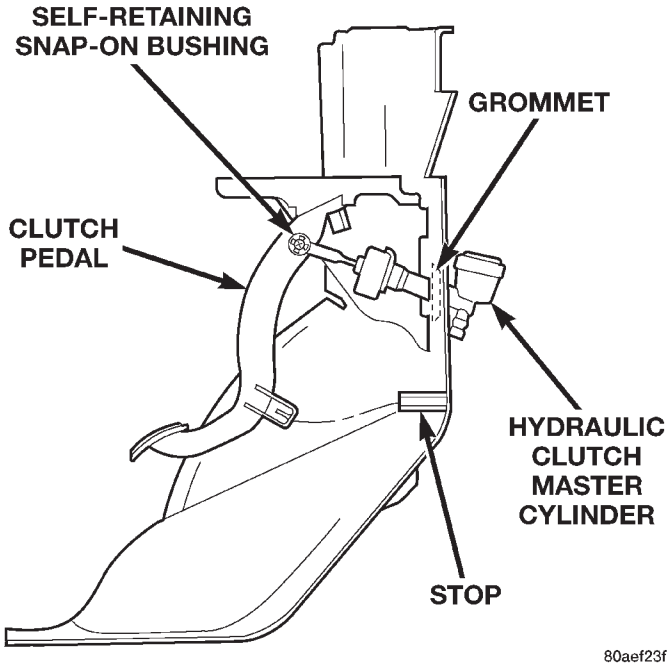

Fig. 3 Clutch Master Cylinder—Typical

CLUTCH (Continued)

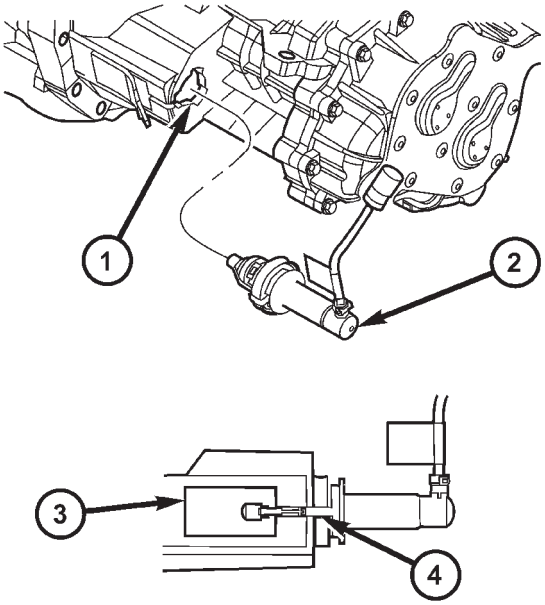

Fig. 4 Slave Cylinder Removal/Installation

1 - MOUNTING HOLE
2 - SLAVE CYLINDER
3 - ACCESS HOLE
4 - NYLON ANTI-ROTATION TAB

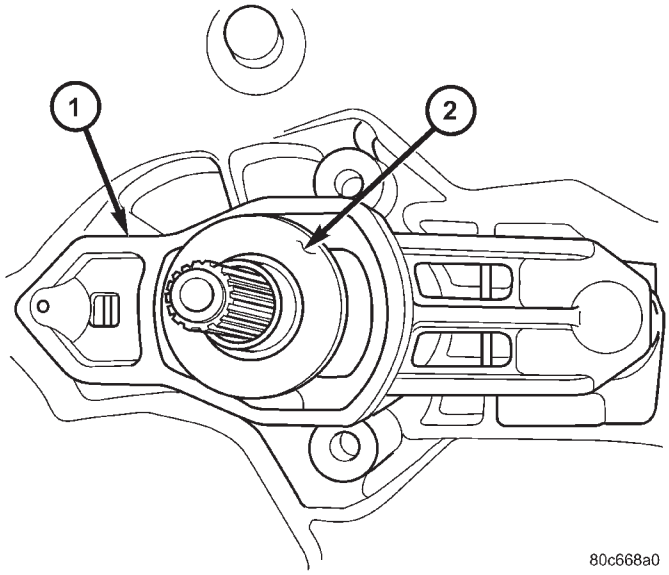

Fig. 5 Release Bearing and Lever

1 - RELEASE LEVER
2 - RELEASE BEARING

DIAGNOSIS AND TESTING

DIAGNOSIS AND TESTING - CLUTCH SYSTEM

Clutch problem diagnosis will generally require a road test to determine the type of fault. Component inspection will then determine the problem after road testing.

Drive the vehicle at normal speeds during road test. Shift the transaxle through all gear ranges and observe clutch action. If chatter, grab, slip, or improper release is experienced, remove and inspect the clutch components. If the problem is noise or hard shifting, further diagnosis may be needed. The transaxle or other driveline components may actually be at fault.

SERVICE DIAGNOSIS - CLUTCH GRAB/CHATTER

CONDITION	POSSIBLE CAUSES	CORRECTION
CLUTCH DISC FACING COVERED WITH OIL OR GREASE	Oil leak at engine rear main or transaxle input shaft seal.	Correct leak and replace modular clutch assembly (2.4L Gas) or clutch cover and disc (2.5L TD).
	Too much grease applied to splines of disc and input shaft.	Apply lighter coating of grease to splines.
NO FAULT FOUND WITH CLUTCH COMPONENTS	Problem actually related to suspension or driveline component.	Further diagnosis required. Check engine/transmission mounts, suspension attaching parts and other driveline components as needed.
	Engine related problems.	Check EFI and ignition systems.
PARTIAL ENGAGEMENT OF CLUTCH DISC	Clutch cover, spring, or release fingers bent, distorted (rough handling, improper assembly).	Replace modular clutch assembly (2.4L Gas) or clutch cover and disc (2.5L TD).

CLUTCH (Continued)

CONDITION	POSSIBLE CAUSES	CORRECTION
	Clutch disc damaged or distorted.	Replace modular clutch assembly (2.4L Gas) or clutch cover and disc (2.5L TD).
	Clutch misalignment.	Verify modular clutch pilot plate alignment to crankshaft. Replace the modular clutch assembly (2.4L Gas) or clutch cover and disc (2.5L TD) if the pilot plate is loose or bent.
	Improper transaxle-to-engine installation.	Verify transaxle is properly installed to engine.

SERVICE DIAGNOSIS - CLUTCH SLIPS

CONDITION	POSSIBLE CAUSES	CORRECTION
DISC FACING WORN OUT	Normal wear.	Replace modular clutch assembly (2.4L Gas) or clutch cover and disc (2.5L TD).
	Driver frequently rides (slips) clutch, results in rapid wear, overheating.	Replace modular clutch assembly (2.4L Gas) or clutch cover and disc (2.5L TD).
	Insufficient clutch cover diaphragm spring tension	Replace modular clutch assembly (2.4L Gas) or clutch cover and disc (2.5L TD).
CLUTCH DISC FACING CONTAMINATED WITH OIL OR GREASE	Leak at rear main oil seal or transaxle input shaft seal	Replace leaking seals. Replace modular clutch assembly (2.4L Gas) or clutch cover and disc (2.5L TD).
	Excessive amount of grease applied to input shaft splines	Apply less grease to input shaft. Replace modular clutch assembly (2.4L Gas) or clutch cover and disc (2.5L TD).
	Road splash, water entering housing	Seal housing. Inspect clutch assembly.
CLUTCH IS RUNNING PARTIALLY DISENGAGED	Release bearing sticking or binding, does not return to normal running position.	Verify that bearing is actually binding. Then, replace bearing and transmission front bearing retainer if sleeve surface is damaged.
	Clutch pedal not returning to static position.	Inspect pedal assembly for damage and/or obstructions. Replace componnents as necessary.
	Clutch master cylinder or pushrod damaged causing high preload.	Replace clutch master cylinder assembly.
	Slave cylinder binding or stuck.	Replace slave cylinder.
CLUTCH DISC FACINGS HAVE FRACTURED INTO SMALL PIECES	Leak at rear main or transaxle input shaft seal	Replace seal. Replace modular clutch assembly (2.4L Gas) or clutch cover and disc (2.5L TD)..
	Excessive heat from slippage	Replace modular clutch assembly (2.4L Gas) or clutch cover and disc (2.5L TD).

CLUTCH (Continued)

SERVICE DIAGNOSIS - IMPROPER CLUTCH RELEASE

CONDITION	POSSIBLE CAUSES	CORRECTION
CLUTCH DISC BINDS ON INPUT SHAFT SPLINES	Clutch disc hub splines damaged during installation	Clean, smooth, and lubricate disc and shaft splines. Replace modular clutch assembly, or clutch disc, and/or input shaft if splines are severely damaged.
	Input shaft splines rough, damaged.	Clean input shaft splines. Then lube.
	Corrosion or rust formations on splines of input shaft and disc	Clean input shaft splines and disc splines, then lube
CLUTCH DISC RUSTED TO FLYWHEEL AND/OR PRESSURE PLATE	Occurs in vehicles stored or not driven for extended period of time. Also occurs after steam cleaning if vehicle is not used for extended period.	Replace modular clutch assembly (2.4L Gas) or clutch cover and disc (2.5L TD).
CLUTCH WILL NOT DISENGAGE PROPERLY	Disc bent, distorted during transaxle installation	Replace modular clutch assembly (2.4L Gas) or clutch cover and disc (2.5L TD).
	Clutch cover diaphragm spring damaged during transaxle installation	Replace modular clutch assembly (2.4L Gas) or clutch cover and disc (2.5L TD).
	Release fork bent, loose, or damaged	Replace fork if worn or damaged
	Air in clutch hydraulic circuit.	Allow system to self-bleed or replace hydraulic components.
	Leak in clutch hydraulic circuit.	Replace worn/damaged/leaking hydraulic components.
Clutch pedal requires excessive force (high release load).	Clutch disc is worn.	Replace modular clutch assembly (2.4L models) or clutch cover and disc (2.5L TD models).

SERVICE DIAGNOSIS - CLUTCH PEDAL NOISE

CONDITION	POSSIBLE CAUSES	CORRECTION
CLUTCH PEDAL SQUEAKS WHEN DEPRESSED TO FLOOR	Pedal bushings worn out or inadequate lubrication	Replace or lubricate bushings at clutch pedal pivot or master cylinder pushrod.
	Clutch pedal return spring worn out	Lubricate or replace return spring
CLUTCH PEDAL SQUEAKS DURING OPERATION	Clutch release lever pivot stud has inadequate lubrication	Lubricate or replace clutch release lever

DIAGNOSIS AND TESTING - DRIVE PLATE MISALIGNMENT

Common causes of misalignment are:

- Heat warping
- Mounting drive plate on a dirty crankshaft flange
- Incorrect bolt tightening
- Improper seating on the crankshaft shoulder
- Loose crankshaft bolts

Clean the crankshaft flange before mounting the drive plate. Dirt and grease on the flange surface may misalign the flywheel, causing excessive runout. Use new bolts when mounting drive plate to crankshaft. Tighten drive plate bolts to specified torque only. Over-tightening can distort the drive plate hub causing excessive runout.

CLUTCH (Continued)

DIAGNOSIS AND TESTING - CLUTCH COVER AND DISC RUNOUT

Check condition of the clutch cover before installation. A warped cover or diaphragm spring will cause grab and/or incomplete release or engagement. Use care when handling the clutch assembly. Impact can distort the cover, diaphragm spring, and release fingers.

DIAGNOSIS AND TESTING - CLUTCH CHATTER COMPLAINTS

For all clutch chatter complaints, perform the following:

(1) Check for loose, misaligned, or broken engine and transmission mounts. If present, they should be corrected at this time. Test vehicle for chatter. If chatter is gone, there is no need to go any further.

(2) If chatter persists, check hydraulic clutch release system is functioning properly.

(3) Check for loose connections in drivetrain. Correct any problems and determine if clutch chatter complaints have been satisfied. If not:

(a) Remove transaxle.

(b) Check to see if the release bearing is sticky or binding. Replace bearing, if needed.

(c) Check linkage for excessive wear on the pivot stud and fork fingers. Replace all worn parts.

(d) Check clutch assembly for contamination (dirt, oil). Replace clutch assembly, if required.

(e) Check to see if the clutch disc hub splines are damaged. Replace with new clutch assembly, if necessary.

(f) Check input shaft splines for damage. Replace, if necessary.

(g) Check for uneven wear on clutch fingers.

(h) Check for broken clutch cover diaphragm spring fingers. Replace with new clutch assembly, if necessary.

SPECIAL TOOLS - T850 TRANSAXLE

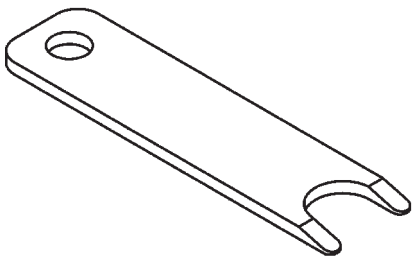

Disconnect Tool, 6638A

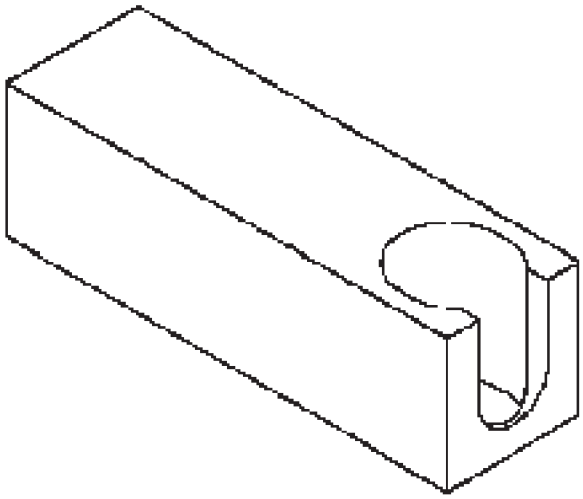

Remover/Installer, 6891

CLUTCH RELEASE LEVER AND BEARING

REMOVAL

(1) Remove transaxle assembly. (Refer to 21 - TRANSMISSION/TRANSAXLE/MANUAL - REMOVAL)

(2) Remove modular clutch assembly from input shaft (2.4L Gas models only).

(3) Grasp clutch release lever and bearing (Fig. 6) with both hands and pull outward using moderate pressure to release lever from pivot ball.

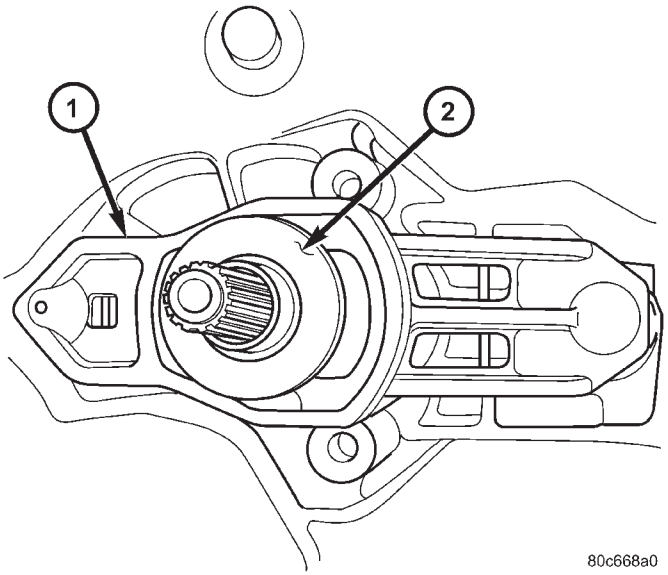

Fig. 6 Release Bearing and Lever

1 - RELEASE LEVER
2 - RELEASE BEARING

CLUTCH RELEASE LEVER AND BEARING (Continued)

(4) Separate release bearing from lever.

NOTE: Remove release lever pivot ball(s) ONLY if replacement is necessary.

(5) Remove pivot ball(s) using slide hammer C-3752 and remover/installer 6891 (Fig. 7).

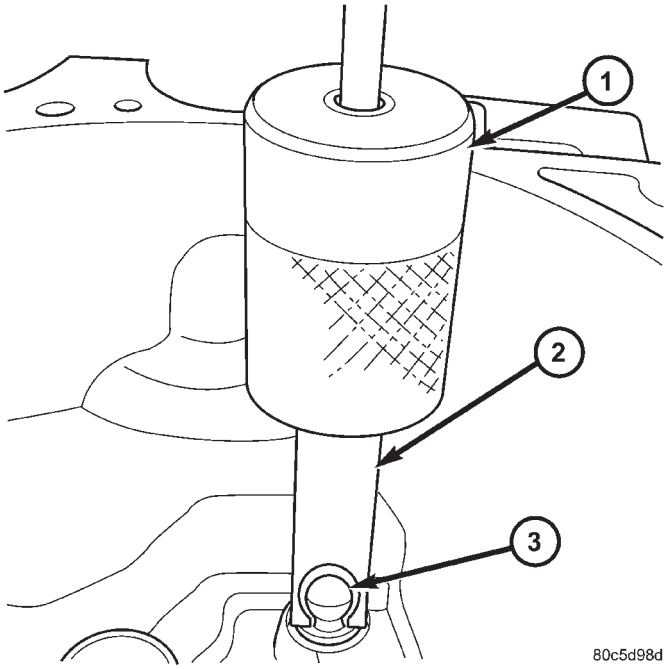

Fig. 7 Pivot Ball Removal/Installation

1 - C-3752 SLIDE HAMMER
2 - REMOVER/INSTALLER 6891
3 - PIVOT BALL

INSTALLATION

(1) If removed, install **new** release lever pivot ball(s) using slide hammer C-3752 and remover/installer 6891 (Fig. 8) (Fig. 9).

(2) Install clutch release bearing to lever. Apply grease to interface points. Make sure release bearing retainers engage lever pocket as shown in (Fig. 10).

(3) Apply grease to pivot ball, and on release lever at slave cylinder contact point.

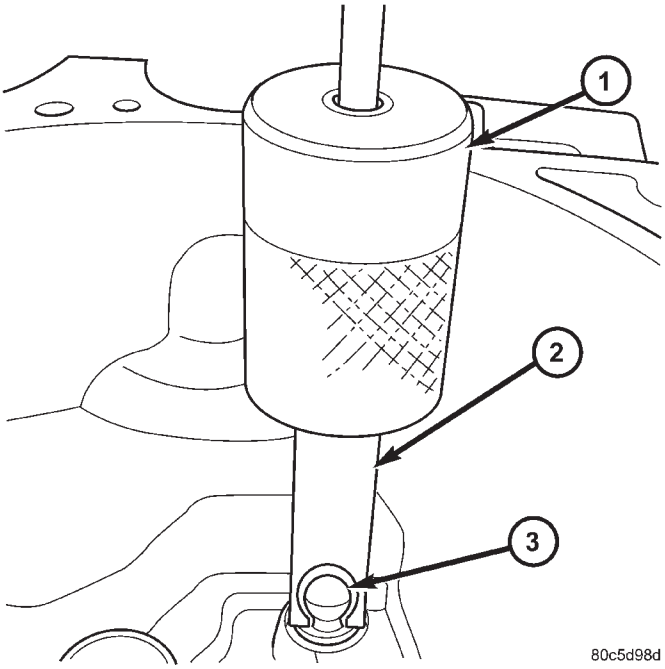

Fig. 8 Pivot Ball Removal/Installation

1 - C-3752 SLIDE HAMMER
2 - REMOVER/INSTALLER 6891
3 - PIVOT BALL

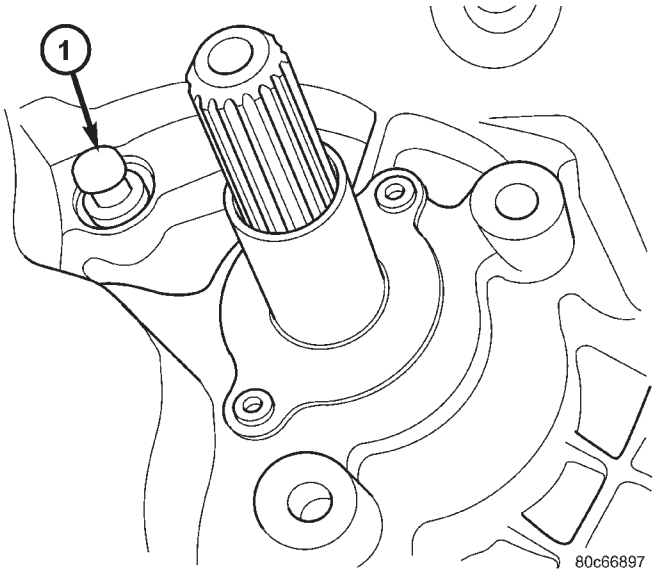

Fig. 9 Pivot Ball Position

1 - PIVOT BALL (1)

CLUTCH RELEASE LEVER AND BEARING (Continued)

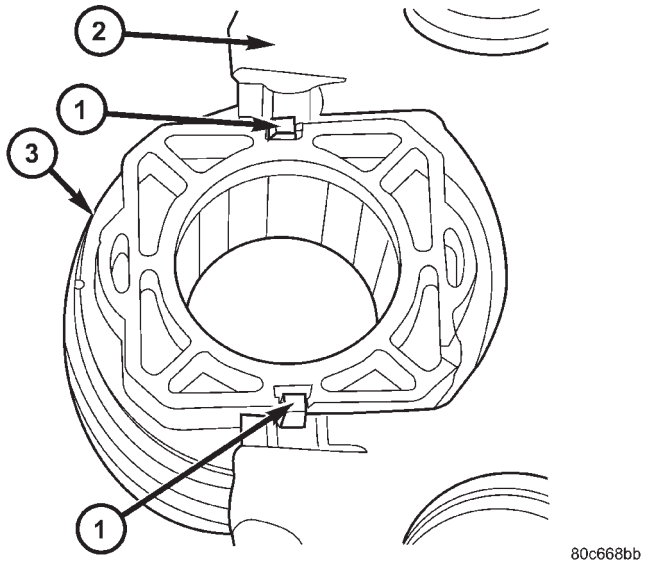

Fig. 10 Release Bearing-to-Lever

1 - RETAINER (2)
2 - RELEASE LEVER
3 - RELEASE BEARING

(4) Install clutch release bearing/lever assembly into position by sliding bearing onto input bearing retainer, and using moderate hand pressure to seat release lever to pivot ball(s) (Fig. 11). A “pop” sound should be heard. Verify proper engagement by lightly pulling outward on lever at pivot ball location, and then actuating lever and bearing to ensure proper operation.

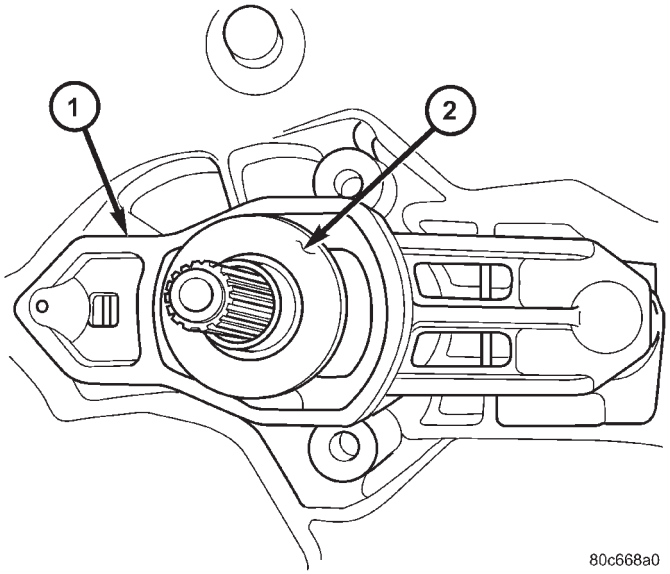

Fig. 11 Release Bearing and Lever

1 - RELEASE LEVER
2 - RELEASE BEARING

MASTER CYLINDER - RHD

REMOVAL

(1) Disconnect battery negative cable.
(2) Remove master cylinder to clutch pedal pin retainer clip. Disengage pushrod from clutch pedal pin (Fig. 13).
(3) Disengage master cylinder grommet from cowl panel.
(4) Remove battery and tray.
(5) **Diesel models:** Remove windshield wiper module assembly. (Refer to 8 - ELECTRICAL/WIPERS/WASHERS/WIPER MODULE - REMOVAL)
(6) Discharge Air Conditioning system. (Refer to 24 - HEATING & AIR CONDITIONING/PLUMBING/REFRIGERANT - STANDARD PROCEDURE)
(7) Remove suction/discharge line from evaporator junction block.
(8) Using tool 6638A, disconnect clutch hydraulic “quick-connect” fitting (Fig. 12).

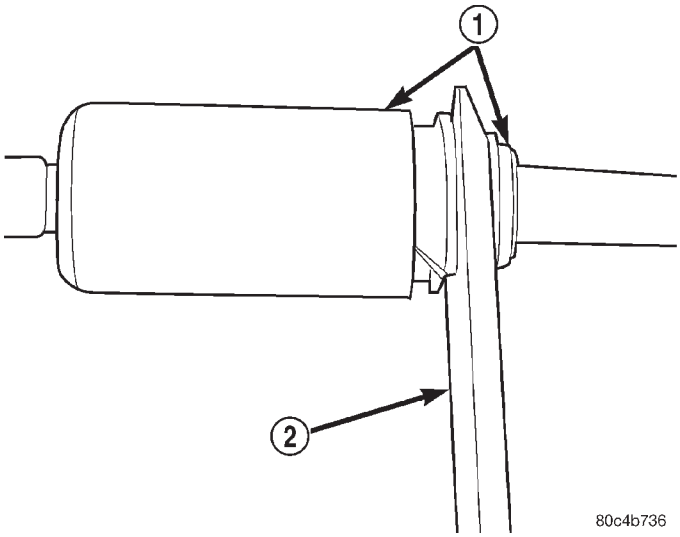

Fig. 12 Disconnect Quick-Connect Using Tool 6638A

1 - QUICK CONNECT FITTING
2 - TOOL 6638A

(9) Remove clutch master cylinder tubing from retainers in engine compartment.
(10) Remove clutch master cylinder from dash panel/clutch pedal bracket by rotating 45° clockwise and pulling outward towards engine (Fig. 13).
(11) Carefully guide clutch master cylinder and hydraulic plumbing from engine compartment.

INSTALLATION

(1) Carefully route master cylinder plumbing into engine compartment as removed and position master cylinder to dash panel hole.
(2) Rotate master cylinder 45° clockwise, insert into dash panel hole, engaging clutch pedal bracket.

MASTER CYLINDER - RHD (Continued)

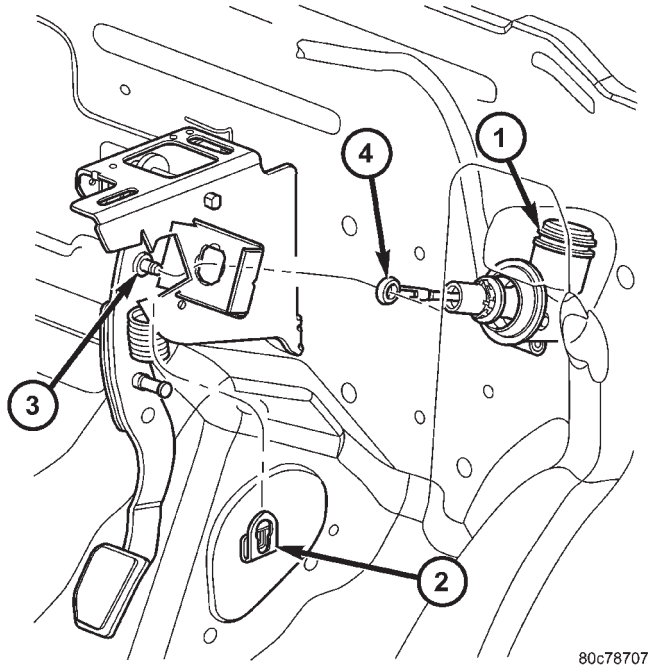

Fig. 13 Clutch Master Cylinder at Pedal Bracket

1 - CLUTCH MASTER CYLINDER
2 - RETAINER CLIP
3 - CLUTCH PEDAL PIN
4 - PUSH ROD

Rotate master cylinder 45° counter-clockwise, securing it to pedal bracket (Fig. 13).

(3) Install and secure grommet to dash panel.

(4) Connect pushrod to clutch pedal pin. Install retainer clip (Fig. 13).

(5) Secure master cylinder plumbing to retainers in engine compartment.

(6) Connect clutch master cylinder plumbing to slave cylinder “quick connect” fitting. An audible “click” should be heard. Verify connection by pulling outward.

(7) Connect A/C suction/discharge line to evaporator junction block.

(8) **Diesel models:** Install wiper module assembly. (Refer to 8 - ELECTRICAL/WIPERS/WASHERS/WIPER MODULE - INSTALLATION)

(9) Install battery and tray.

(10) Connect battery negative cable

(11) Charge Air Conditioning system. (Refer to 24 - HEATING & AIR CONDITIONING/PLUMBING/REFRIGERANT - STANDARD PROCEDURE)

MASTER CYLINDER - LHD

REMOVAL

(1) Disconnect battery cables.

(2) Remove instrument panel lower silencer (Fig. 14).

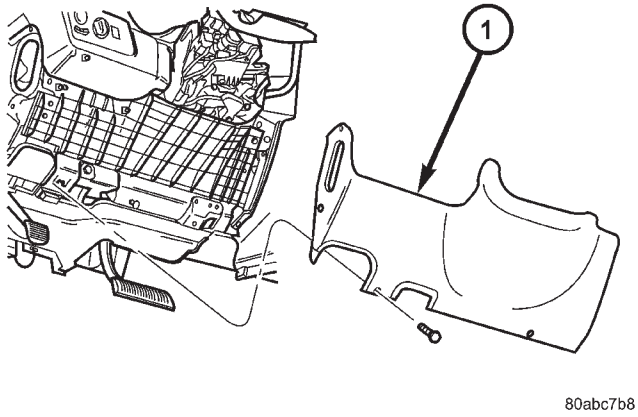

Fig. 14 Instrument Panel Lower Silencer

1 - INSTRUMENT PANEL LOWER SILENCER

(3) Remove knee bolster (Fig. 15).

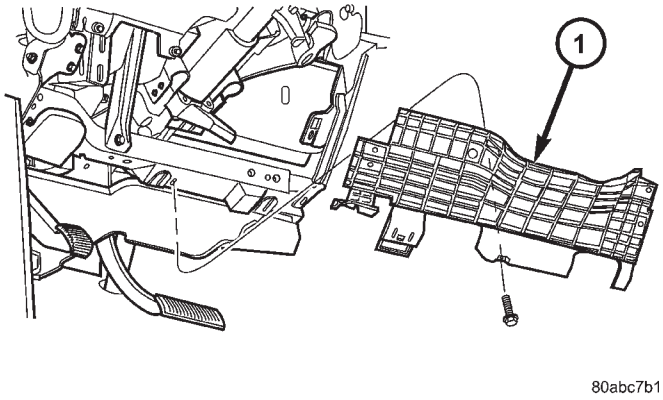

Fig. 15 Knee Bolster

1 - KNEE BOLSTER

MASTER CYLINDER - LHD (Continued)

(4) Remove clutch master cylinder pushrod retainer clip (Fig. 16).

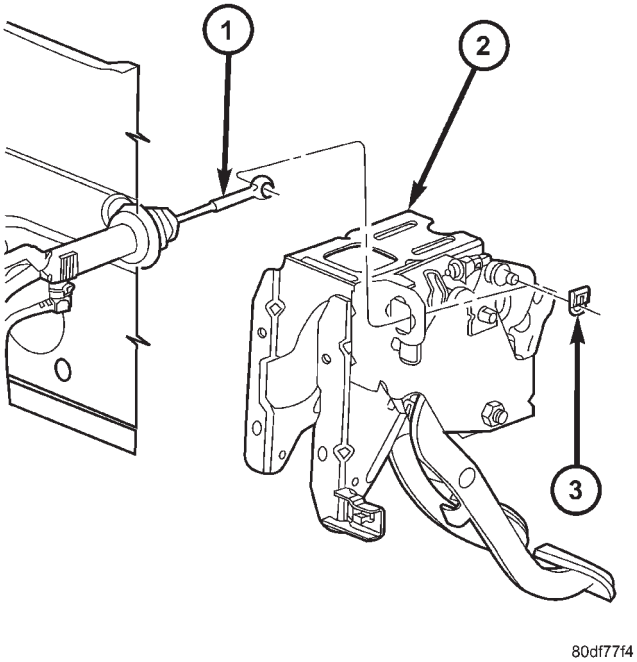

Fig. 16 Master Cylinder Pushrod at Pedal

1 - MASTER CYLINDER PUSHROD
2 - CLUTCH/BRAKE PEDAL ASSEMBLY
3 - PUSHROD RETAINER

(5) Disconnect pushrod from clutch pedal (Fig. 16).
(6) Remove battery shield.
(7) Remove battery.
(8) Remove battery tray.
(9) Remove windshield wiper module assembly (Refer to 8 - ELECTRICAL/WIPERS/WASHERS/ WIPER MODULE - REMOVAL).
(10) Using Tool 6638A, disconnect clutch master cylinder "quick connect" fitting (Fig. 17). Disengage plumbing retainer from body stud.
(11) Remove master cylinder reservoir-to-strut tower nuts (Fig. 18). Reposition reservoir off to side.
(12) Remove clutch master cylinder from dash panel by rotating clockwise 45° and removing from dash panel (Fig. 18).
(13) Remove master cylinder and plumbing from engine compartment. Use care not to bend or kink plumbing. Note plumbing routing to aid in installation.

INSTALLATION

(1) Install master cylinder into position, while routing plumbing as originally installed.
(2) Insert master cylinder pushrod through dash panel (Fig. 18) and rotate 45° counter-clockwise to secure.

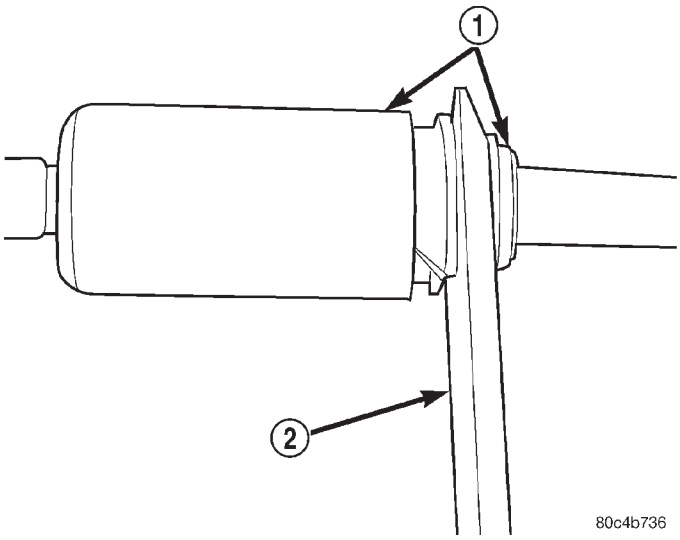

Fig. 17 Disconnect Quick-Connect Using Tool 6638A

1 - QUICK CONNECT FITTING
2 - TOOL 6638A

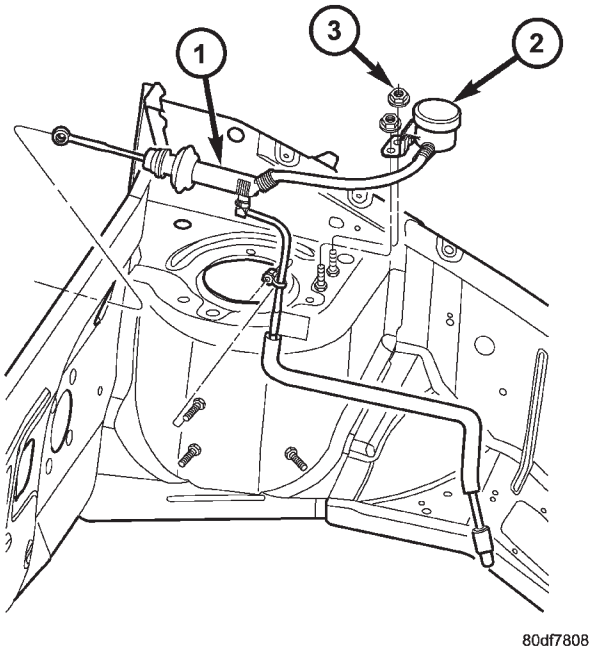

Fig. 18 Clutch Master Cylinder Removal/Installation

1 - CLUTCH MASTER CYLINDER
2 - RESERVOIR
3 - NUT (2)

(3) Connect master cylinder plumbing quick-connect fitting. An audible "click" should be heard. Verify connection by pulling outward.
(4) Install master cylinder reservoir onto strut tower. Install and tighten two (2) master cylinder reservoir-to-strut tower nuts (Fig. 18).

MASTER CYLINDER - LHD (Continued)

(5) Install windshield wiper module assembly (Refer to 8 - ELECTRICAL/WIPERS/WASHERS/ WIPER MODULE - INSTALLATION).
(6) Install battery tray.
(7) Install battery.
(8) Install battery shield.
(9) Connect master cylinder pushrod to clutch pedal lever (Fig. 16). Install retainer clip.
(10) Install knee bolster and instrument panel lower silencer (Fig. 15) (Fig. 14).
(11) Connect battery cables.

MODULAR CLUTCH ASSY - 2.4L GAS

REMOVAL

(1) Remove transaxle from vehicle. (Refer to 21 - TRANSMISSION/TRANSAXLE/MANUAL - REMOVAL)
(2) Remove modular clutch assembly from input shaft (Fig. 19).

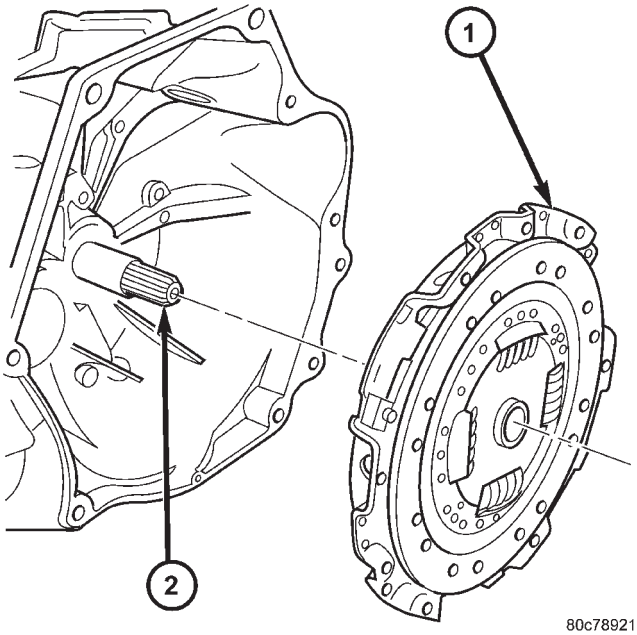

Fig. 19 Modular Clutch Assembly

1 - MODULAR CLUTCH ASSEMBLY
2 - INPUT SHAFT

INSTALLATION

(1) Install modular clutch assembly to transaxle input shaft (Fig. 19).
(2) Install transaxle to vehicle. (Refer to 21 - TRANSMISSION/TRANSAXLE/MANUAL - INSTALLATION)

SLAVE CYLINDER

REMOVAL

(1) Raise vehicle on hoist. **Diesel models:** Remove underbody splash shield.
(2) Using Tool 6638A, disconnect hydraulic clutch circuit quick connect fitting.
(3) Remove clutch slave cylinder (Fig. 20) by lifting nylon tab with a small screwdriver, and then depressing cylinder inward towards case and rotating cylinder 60° counter-clockwise.

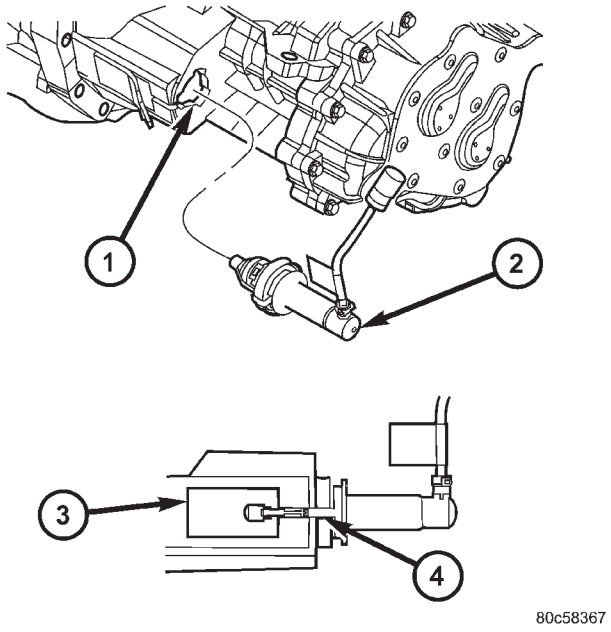

Fig. 20 Slave Cylinder Removal/Installation

1 - MOUNTING HOLE
2 - SLAVE CYLINDER
3 - ACCESS HOLE
4 - NYLON ANTI-ROTATION TAB

INSTALLATION

(1) Install clutch slave cylinder into position, noting orientation of different sized lugs. While depressing inward, rotate slave cylinder clockwise until nylon locating tab rests in transaxle case cutout, and the hydraulic tube is vertical (Fig. 20).
(2) Connect “quick-connect” connection until an audible “click” is heard. Verify connection by pulling outward on connection.
(3) **Diesel models:** Install underbody splash shield.
(4) Lower vehicle.

CLUTCH DISC AND PRESSURE PLATE - 2.5L TD

REMOVAL

(1) Remove transaxle assembly. (Refer to 21 - TRANSMISSION/TRANSAXLE/MANUAL - REMOVAL)

(2) Remove six (6) clutch pressure plate-to-flywheel bolts. Remove pressure plate and disc from flywheel (Fig. 21).

(3) Inspect flywheel. Resurface/replace as necessary.

(4) Inspect clutch release bearing and lever. Replace as necessary. (Refer to 6 - CLUTCH/CLUTCH RELEASE BEARING - REMOVAL)

INSTALLATION

(1) Install clutch release bearing and lever (if removed). (Refer to 6 - CLUTCH/CLUTCH RELEASE BEARING - INSTALLATION)

(2) Install clutch disc and pressure plate to flywheel (Fig. 21). Install clutch alignment tool, and install and torque pressure plate-to-flywheel bolts to 28 N·m (250 in. lbs.).

(3) Install transaxle assembly. (Refer to 21 - TRANSMISSION/TRANSAXLE/MANUAL - INSTALLATION)

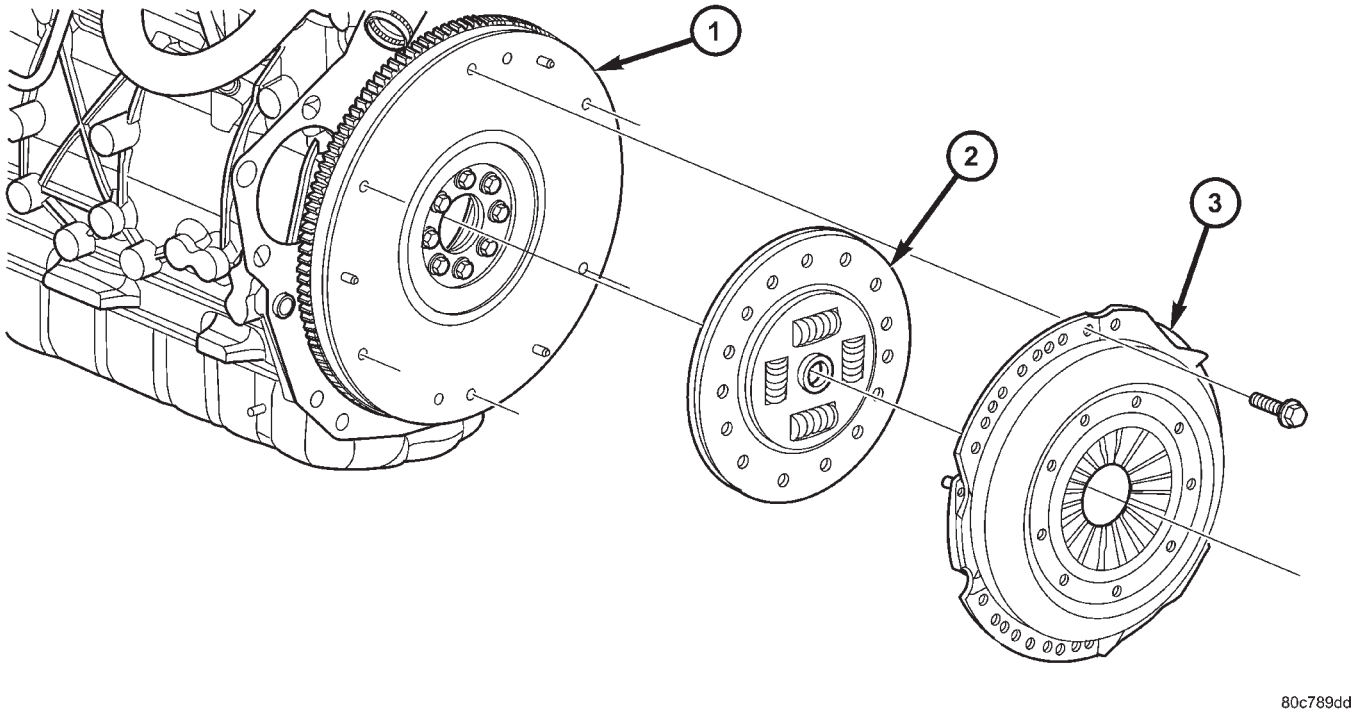

Fig. 21 Clutch Disc and Pressure Plate

1 - FLYWHEEL
2 - DISC
3 - PRESSURE PLATE

FLYWHEEL

REMOVAL

(1) Remove transaxle assembly. (Refer to 21 - TRANSMISSION/TRANSAXLE/MANUAL - REMOVAL)

(2) Remove clutch pressure plate and disc. (Refer to 6 - CLUTCH/CLUTCH DISC - REMOVAL)

(3) Remove flywheel assembly (Fig. 22).

INSTALLATION

(1) Install NEW flywheel-to-crankshaft bolts by hand.

(2) Torque bolts in a criss-cross sequence to 25 N·m (18 ft. lbs.) (Fig. 22).

(3) Torque bolts in a criss-cross sequence an additional 60°.

(4) Install clutch pressure plate and disc. (Refer to 6 - CLUTCH/CLUTCH DISC - INSTALLATION)

(5) Install transaxle assembly. (Refer to 21 - TRANSMISSION/TRANSAXLE/MANUAL - INSTALLATION)

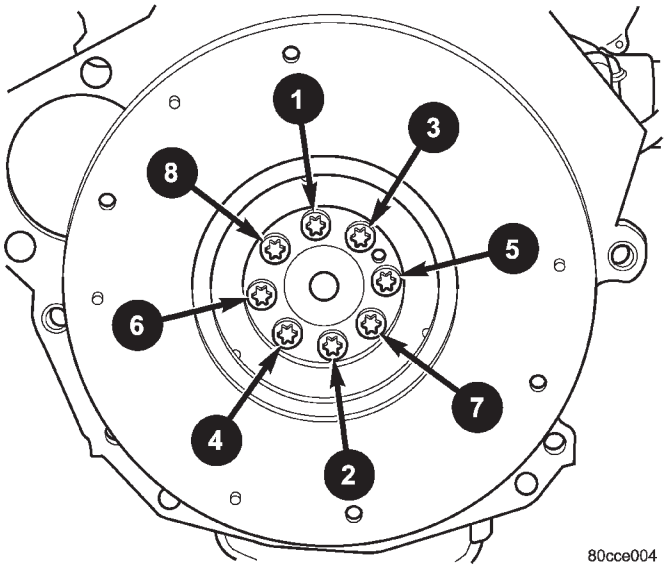

Fig. 22 Flywheel Bolt Torque Sequence

COOLING

TABLE OF CONTENTS

	page
COOLING	
DESCRIPTION	
DESCRIPTION - COOLING SYSTEM	1
DESCRIPTION - HOSE CLAMPS	1
OPERATION	
OPERATION - COOLING SYSTEM	2
OPERATION - HOSE CLAMPS	2
DIAGNOSIS AND TESTING	
DIAGNOSIS AND TESTING - COOLING SYSTEM LEAK TEST	2
DIAGNOSIS AND TESTING - COOLING SYSTEM FLOW CHECK	3
DIAGNOSIS AND TESTING - COOLING SYSTEM AERATION	4
DIAGNOSIS AND TESTING - COOLING SYSTEM DEAERATION	4
STANDARD PROCEDURE	
STANDARD PROCEDURE - COOLING SYSTEM DRAINING	4
STANDARD PROCEDURE - COOLING SYSTEM FILLING	4
STANDARD PROCEDURE - ADDING ADDITIONAL COOLANT	4
STANDARD PROCEDURE - COOLANT LEVEL CHECK	5
SPECIFICATIONS	
COOLING SYSTEM CAPACITY	6
ACCESSORY DRIVE BELT TENSION	6
TORQUE	6
SPECIAL TOOLS	
COOLING SYSTEM	7
ACCESSORY DRIVE	8
ENGINE	14
TRANSMISSION	38

COOLING

DESCRIPTION

DESCRIPTION - COOLING SYSTEM

The cooling system components consist of a radiator, electric fan motors, shroud, pressure cap, thermostat, transmission oil cooler, water pump, hoses, clamps, coolant, and a coolant reserve system to complete the circuit.

DESCRIPTION - HOSE CLAMPS

The cooling system uses spring type hose clamps. If a spring type clamp replacement is necessary, replace with the original Mopar® equipment spring type clamp.

CAUTION: A number or letter is stamped into the tongue of constant tension clamps. If replacement is necessary, use only a original equipment clamp with matching number or letter (Fig. 1).

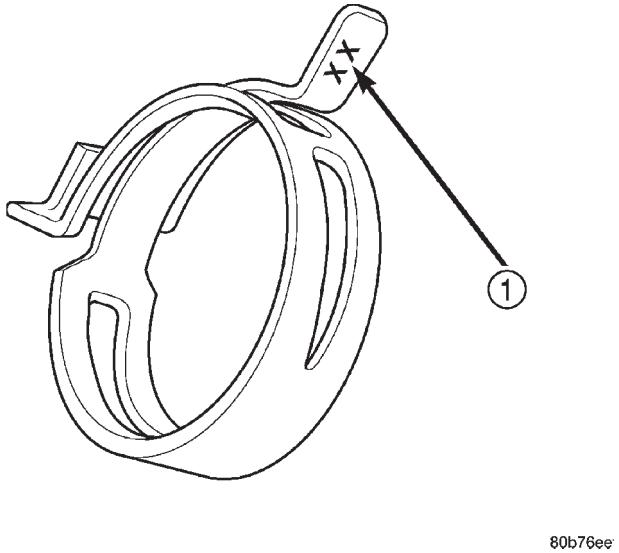

Fig. 1 Spring Clamp Size Location

1 - SPRING CLAMP SIZE LOCATION

COOLING (Continued)

OPERATION

OPERATION - COOLING SYSTEM

The engine cooling systems primary purpose is to maintain engine temperature in a range that will provide satisfactory engine performance and emission levels under all expected driving conditions. It also provides hot water (coolant) for heater performance and cooling for automatic transmission oil. It does this by transferring heat from engine metal to coolant, moving this heated coolant to the radiator, and then transferring this heat to the ambient air.

- When engine is cold: thermostat is closed, cooling system has no flow through the radiator. The coolant bypass flows through the engine only.
- When engine is warm: thermostat is open, cooling system has bypass flow and coolant flow through radiator.

Coolant flow circuits for the 2.4L and 3.3/3.8L engines are shown in (Fig. 2).

OPERATION - HOSE CLAMPS

The spring type hose clamp applies constant tension on a hose connection. To remove a spring type hose clamp, use Special Tool 6094 or equivalent, constant tension clamp pliers (Fig. 3) to compress the hose clamp.

DIAGNOSIS AND TESTING

DIAGNOSIS AND TESTING - COOLING SYSTEM LEAK TEST

WARNING: THE WARNING WORDS "DO NOT OPEN HOT" ON THE RADIATOR PRESSURE CAP IS A SAFETY PRECAUTION. WHEN HOT, PRESSURE BUILDS UP IN COOLING SYSTEM. TO PREVENT SCALDING OR INJURY, THE RADIATOR CAP SHOULD NOT BE REMOVED WHILE THE SYSTEM IS HOT OR UNDER PRESSURE.

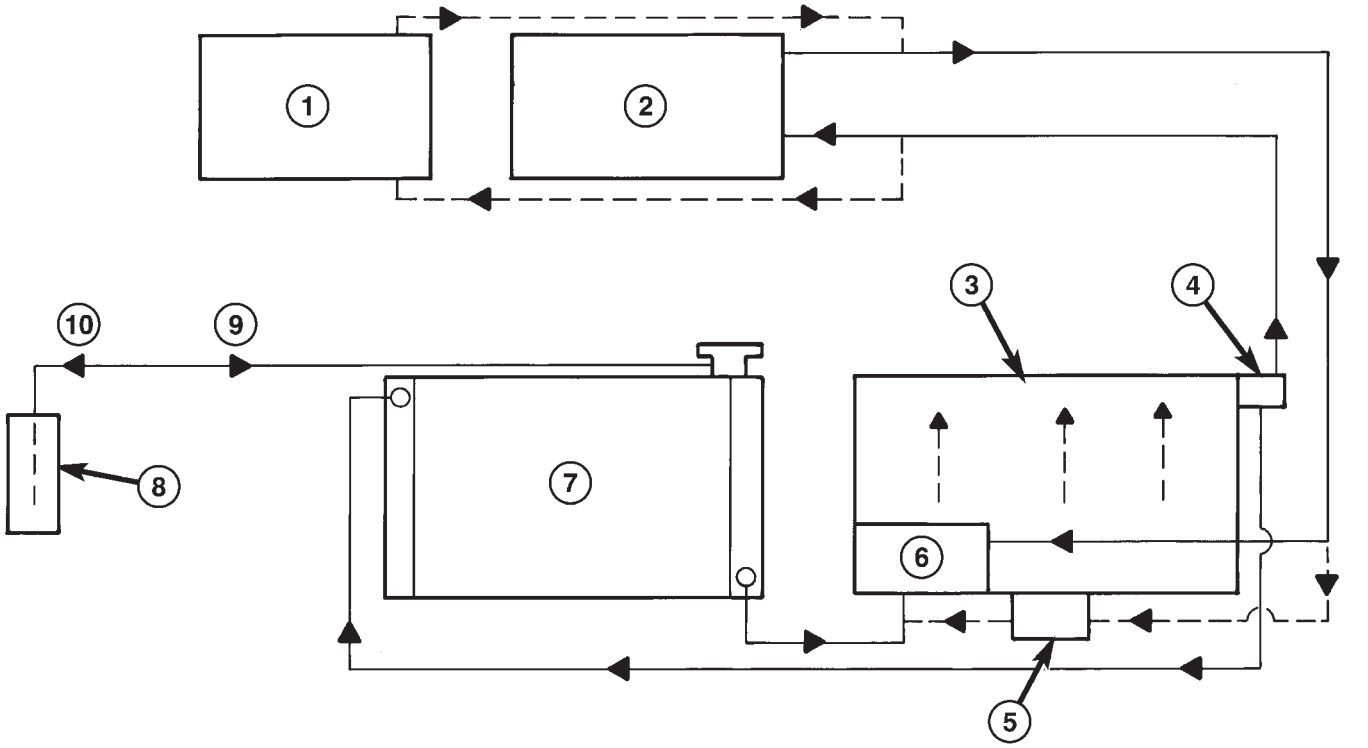

80a9089c

Fig. 2 Cooling System Flow

1 - HEATER - REAR (3.3/3.8L OPTIONAL EQUIPMENT)
2 - HEATER - FRONT
3 - ENGINE
4 - THERMOSTAT
5 - ENGINE OIL COOLER (3.3/3.8L OPTIONAL EQUIPMENT)
6 - WATER PUMP
7 - RADIATOR
8 - COOLANT RECOVERY/RESERVE CONTAINER
9 - COOLANT FLOW - PRESSURE CAP VACUUM
10 - COOLANT FLOW - PRESSURE CAP RELIEF

COOLING (Continued)

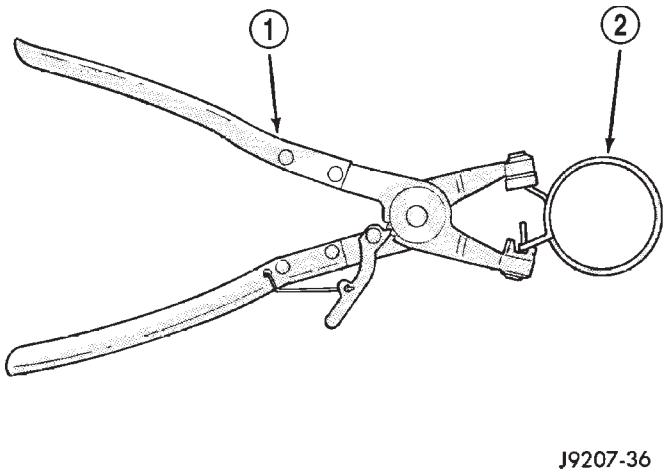

Fig. 3 Hose Clamp Tool

1 - HOSE CLAMP TOOL 6094
2 - HOSE CLAMP

With engine not running, remove radiator pressure cap and wipe the radiator filler neck sealing seat clean. The radiator should be full.

Attach the Cooling System Tester 7700 or equivalent to the radiator, as shown in (Fig. 4) and apply 104 kPa (15 psi) pressure. If the pressure drops more than 13.8 kPa (2 psi) in 2 minutes, inspect all points for external leaks.

All radiator and heater hoses should be shaken while at 104 kPa (15 psi), since some leaks occur only while driving due to engine movement.

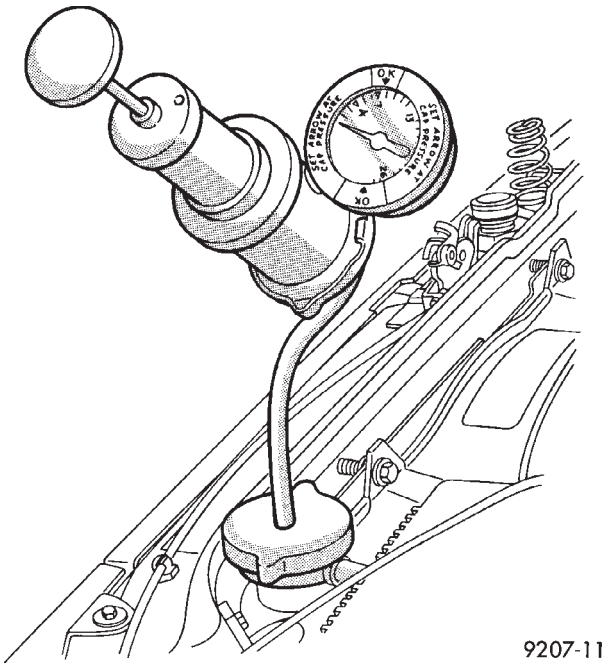

Fig. 4 Pressure Testing

If there are no external leaks, after the gauge dial shows a drop in pressure, detach the tester. Start engine and run until the thermostat opens, allowing the coolant to expand. Reattach the cooling system tester. If the needle on the dial fluctuates it indicates a combustion leak, usually a head gasket leak.

WARNING: WITH TOOL IN PLACE, PRESSURE WILL BUILD UP FAST. EXCESSIVE PRESSURE BUILT UP, BY CONTINUOUS ENGINE OPERATION, MUST BE RELEASED TO A SAFE PRESSURE POINT. NEVER PERMIT PRESSURE TO EXCEED 138 kPa (20 psi).

If the needle on the dial does not fluctuate, raise the engine rpm a few times. If an abnormal amount of coolant or steam emits from the tailpipe, it may indicate a coolant leak caused by a faulty head gasket, cracked engine block, or cracked cylinder head.

There may be internal leaks that can be determined by removing the oil dipstick. If water globules appear intermixed with the oil it will indicate an internal leak in the engine. If there is an internal leak, the engine must be disassembled for repair.

DIAGNOSIS AND TESTING - COOLING SYSTEM FLOW CHECK

To determine whether coolant is flowing through the cooling system, use one of the following procedures:

PREFERRED METHOD

WARNING: DO NOT REMOVE THE COOLING SYSTEM PRESSURE CAP OR ANY HOSE WITH THE SYSTEM HOT AND UNDER PRESSURE BECAUSE SERIOUS BURNS FROM COOLANT CAN OCCUR.

- Remove pressure cap when engine is cold. Remove small amount of coolant. Idle engine until thermostat opens. You should observe coolant flow while looking down the filler neck. Once flow is detected install the pressure cap. Replace removed coolant into coolant recovery container.

ALTERNATIVE METHOD

- If engine is cold, idle engine until normal operating temperature is reached. Feel the upper radiator hose. If it is hot, coolant is circulating.

COOLING (Continued)

DIAGNOSIS AND TESTING - COOLING SYSTEM AERATION

Low coolant level in a cross flow radiator will equalize in both tanks with engine off. With engine at running and at operating temperature, the high pressure inlet tank runs full and the low pressure outlet tank drops, resulting in cooling system aeration. Aeration will draw air into the water pump resulting in the following:

- High reading shown on the temperature gauge.
- Loss of coolant flow through the heater core.
- Corrosion in the cooling system.
- Water pump seal may run dry, increasing the risk of premature seal failure.
- Combustion gas leaks into the coolant can also cause the above problems.

DIAGNOSIS AND TESTING - COOLING SYSTEM DEAERATION

Air can only be removed from the system by gathering under the pressure cap. On the next heat up it will be pushed past the pressure cap into the coolant recovery bottle by thermal expansion of the coolant. It then escapes to the atmosphere in the coolant recovery bottle and is replaced with coolant on cool down.

To effectively deaerate the system, multiple thermal cycles of the system may be required.

NOTE: Deaeration does not occur at engine idle—higher engine speeds are required. Normal driving will deaerate cooling system.

STANDARD PROCEDURE

STANDARD PROCEDURE - COOLING SYSTEM DRAINING

WARNING: DO NOT REMOVE OR LOOSEN THE COOLANT PRESSURE CAP, CYLINDER BLOCK DRAIN PLUGS, OR THE DRAINCOCK WHEN THE SYSTEM IS HOT AND UNDER PRESSURE BECAUSE SERIOUS BURNS FROM THE COOLANT CAN OCCUR.

(1) **Without removing radiator pressure cap and with system not under pressure**, open the draincock. The draincock is located on the lower left side of radiator (Fig. 5).

(2) After the coolant recovery/reserve container is empty, then remove coolant pressure cap (Fig. 6).

(3) Remove the cylinder block drain plug(s).

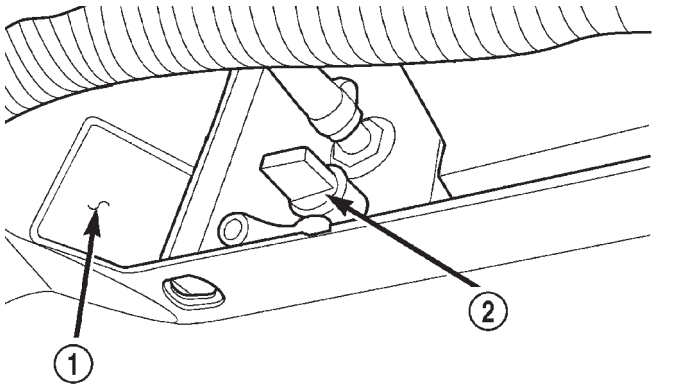

80c07121

Fig. 5 Draincock Location

1 - LEFT SIDE FRAME RAIL
2 - DRAINCOCK

STANDARD PROCEDURE - COOLING SYSTEM FILLING

Remove radiator pressure cap (Fig. 6) and fill system, using a 50/50 mix of Mopar® Antifreeze/Coolant, 5 Year/100,000 Mile Formula and distilled water.

Continue filling system until full. **Be careful not to spill coolant on drive belts or the generator.**

Fill coolant recovery/reserve container (Fig. 6) to at least the MAX mark with 50/50 solution. It may be necessary to add coolant to the recovery/reserve container after three or four warm up/cool down cycles to maintain coolant level between the MAX and MIN mark. This will allow trapped air to be removed from the system.

STANDARD PROCEDURE - ADDING ADDITIONAL COOLANT

The radiator cap should not be removed. When additional coolant is needed to maintain this level, it should be added to the coolant recovery/reserve container (Fig. 6). Use only 50/50 mix of ethylene glycol type antifreeze and distilled water. For the recommeded antifreeze/coolant type (Refer to LUBRICATION & MAINTENANCE/FLUID TYPES - DESCRIPTION).

CAUTION: Do not use well water, or suspect water supply in cooling system. A 50/50 ethylene glycol and distilled water mix is recommended. For the recommeded antifreeze/coolant type (Refer to LUBRICATION & MAINTENANCE/FLUID TYPES - DESCRIPTION).

COOLING (Continued)

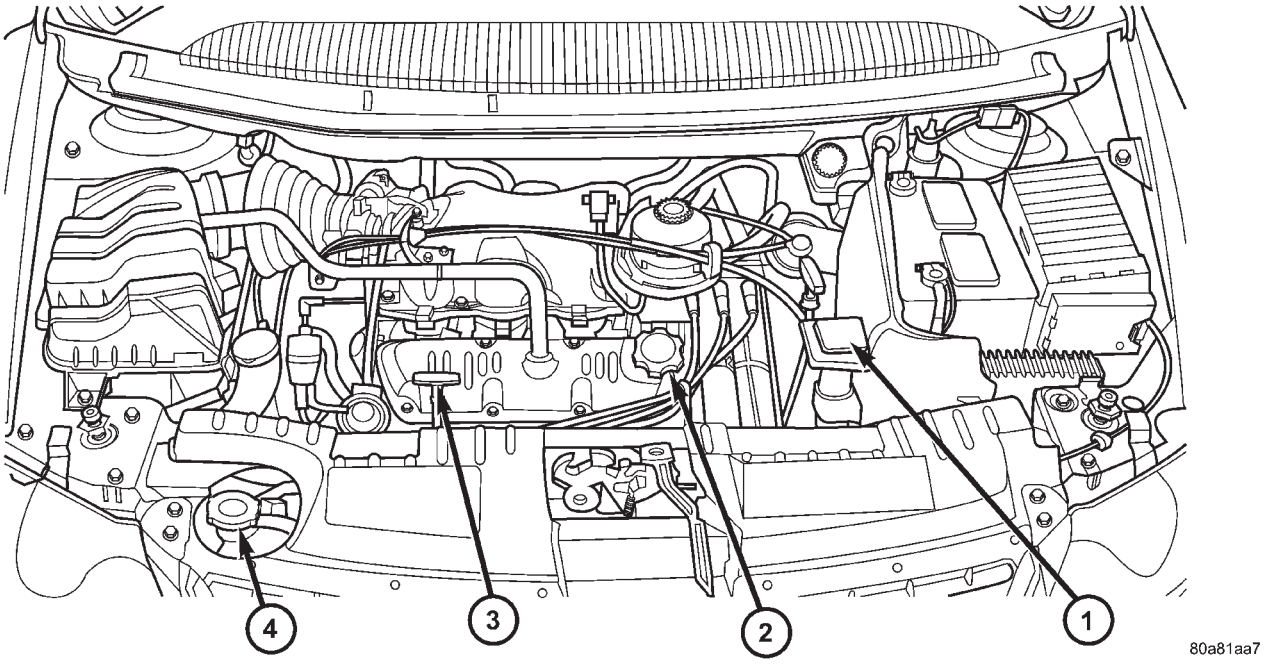

Fig. 6 Cooling System Service Locations

1 - COOLANT RECOVERY CONTAINER
2 - ENGINE OIL FILL CAP
3 - ENGINE OIL LEVEL DIPSTICK
4 - RADIATOR PRESSURE CAP

STANDARD PROCEDURE - COOLANT LEVEL CHECK

NOTE: Do not remove radiator cap for routine coolant level inspections.

The coolant reserve system provides a quick visual method for determining the coolant level without removing the radiator cap. **With the engine cold and not running,** simply observe the level of the coolant in the recovery/reserve container (Fig. 7). The coolant level should be between the MIN and MAX marks.

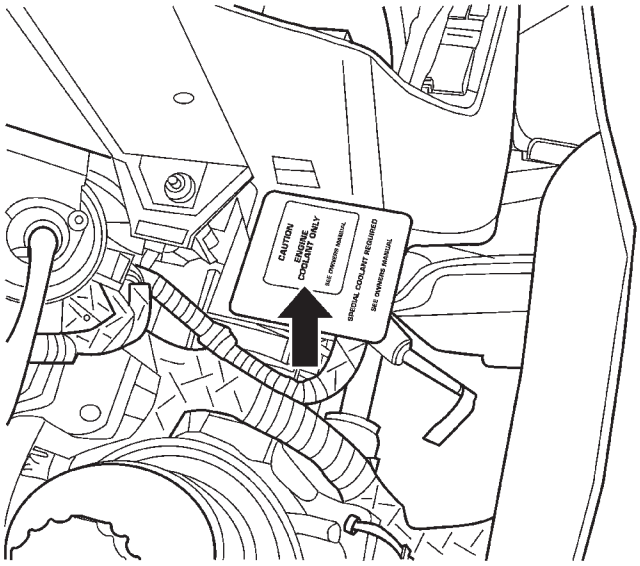

Fig. 7 Coolant Recovery Container

COOLING (Continued)

SPECIFICATIONS

COOLING SYSTEM CAPACITY

Engine	Coolant Capacity*	
2.4L	10.7 L	(11.4 qts.)
3.3/3.8L (without rear heater)	12.6 L	(13.4 qts.)
3.3/3.8L (with rear heater)	15.4 L	(16.3 qts.)
*Includes Heater and Coolant Recovery System		

ACCESSORY DRIVE BELT TENSION

ACCESSORY DRIVE BELT		TENSION	
2.4L ENGINE			
Air Conditioning Compressor/ Generator		Dynamic Tensioner	
Power Steering	New Belt	534 - 756 N (120 - 170 lbs.)	183 - 218 Hz
	Used Belt*	356 - 534 N (80 - 120 lbs)	150 - 183 Hz
*Belt is considered used after 15 minutes of run-in time			
3.3/3.8L ENGINES			
Air Conditioning Compressor		Dynamic Tensioner	
Generator/Water Pump/Power Steering			

TORQUE

DESCRIPTION	N·m	Ft. Lbs.	In. Lbs.
Accessory Drive Belt Tensioner Assembly (3.3/3.8L)—Bolt	28	—	250
Engine Coolant Temperature Sensor (2.4 & 3.3/3.8L)	7	—	60
Generator & A/C Compressor Drive Belt Tensioner Assembly (2.4L)—Bolt	54	40	—
Coolant Outlet Connector/ Thermostat Housing (2.4 & 3.3/3.8L)—Bolts	28	—	250
Water Pump (2.4 & 3.3/3.8L)—Bolts	12	—	105
Water Pump Inlet Tube (2.4L)—Bolts	12	—	105
Water Pump Inlet Tube (3.3/3.8L)—Bolts	28	—	250
Water Pump Pulley (3.3/3.8L)—Bolts	28	—	250
Radiator to A/C Condenser—Screws	5	—	45
Radiator Fan—Screws	5	—	45
Radiator Mounting (Upper Bracket)—Nuts	12	—	105

COOLING (Continued)

SPECIAL TOOLS

COOLING SYSTEM

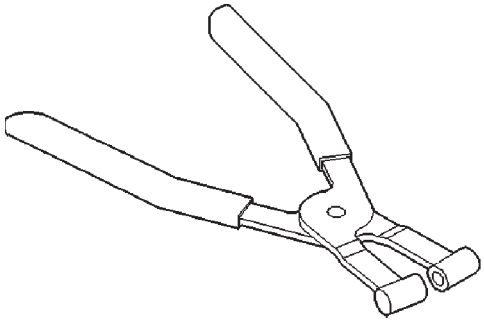

Hose Clamp Pliers 6094

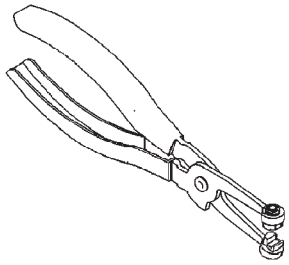

Hose Clamp Pliers 8495A

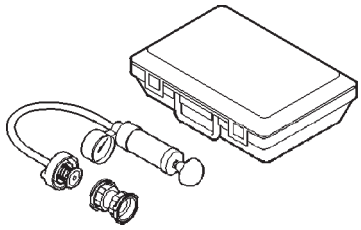

Cooling System Tester 7700

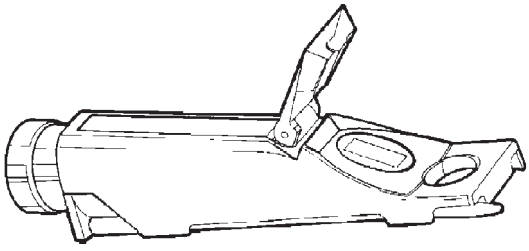

Coolant Refractometer 8286

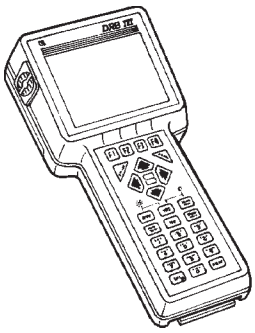

DRB III® with PEP Module – OT-CH6010A

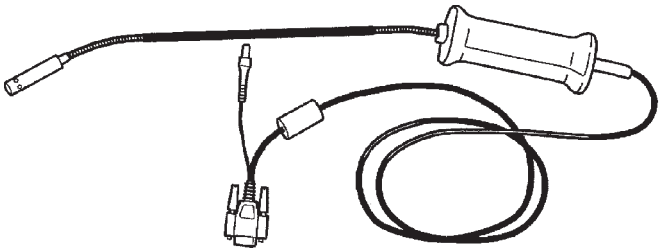

Belt Tension Gauge Adapter 8371

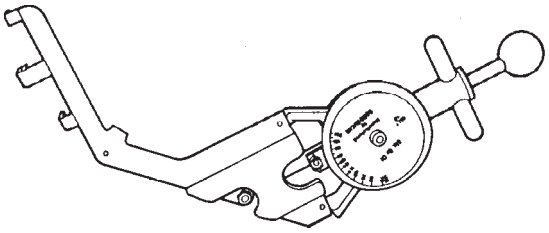

Belt Tension Gauge 7198A

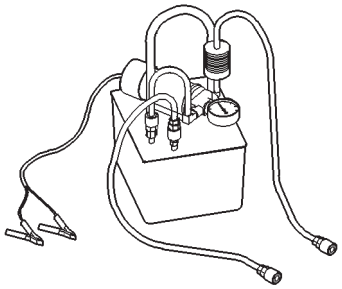

Cooler Flusher 6906-C

ACCESSORY DRIVE

TABLE OF CONTENTS

page

BELT TENSIONER - 2.4L
REMOVAL 8
INSTALLATION 8
BELT TENSIONER - 3.3/3.8L
REMOVAL 8
INSTALLATION 8
DRIVE BELTS
DESCRIPTION 9
OPERATION 9
DIAGNOSIS AND TESTING - ACCESSORY DRIVE BELT 9
DRIVE BELTS - 2.4L
STANDARD PROCEDURE - CHECKING POWER STEERING BELT TENSION 10

page

REMOVAL 10
CLEANING 11
INSPECTION 11
INSTALLATION 11
ADJUSTMENTS 12
DRIVE BELTS - 3.3/3.8L
REMOVAL 12
CLEANING 13
INSPECTION 13
INSTALLATION 13

BELT TENSIONER - 2.4L

REMOVAL

(1) Raise vehicle on hoist.
(2) Remove the drive belt shield.
(3) Remove the generator/A/C drive belt. (Refer to 7 - COOLING/ACCESSORY DRIVE/DRIVE BELTS - REMOVAL)
(4) Remove the belt tensioner (Fig. 1).

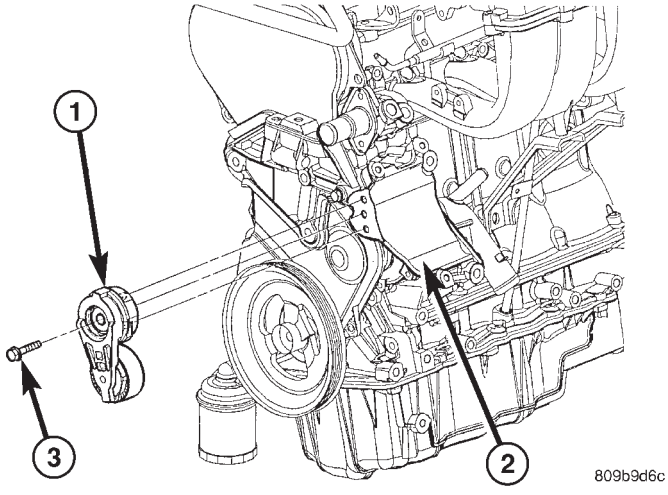

Fig. 1 Belt Tensioner - 2.4L

1 - BELT TENSIONER
2 - GENERATOR BRACKET
3 - BOLT

INSTALLATION

(1) Install belt tensioner and bolt (Fig. 1). Tighten bolt to 54 N·m (40 ft. lbs.).
(2) Install generator/A/C compressor drive belt. (Refer to 7 - COOLING/ACCESSORY DRIVE/DRIVE BELTS - INSTALLATION)
(3) Install splash shield.
(4) Lower the vehicle.

BELT TENSIONER - 3.3/3.8L

REMOVAL

(1) Raise vehicle on hoist.
(2) Remove the drive belt shield.
(3) Remove the drive belt. (Refer to 7 - COOLING/ACCESSORY DRIVE/DRIVE BELTS - REMOVAL)
(4) Remove the belt tensioner (Fig. 2).

INSTALLATION

(1) Install the belt tensioner and bolt (Fig. 2). Tighten bolt to 28 N·m (250 in. lbs.).
(2) Install the drive belt. (Refer to 7 - COOLING/ACCESSORY DRIVE/DRIVE BELTS - INSTALLATION)
(3) Install the drive belt shield.
(4) Lower the vehicle.

BELT TENSIONER - 3.3/3.8L (Continued)

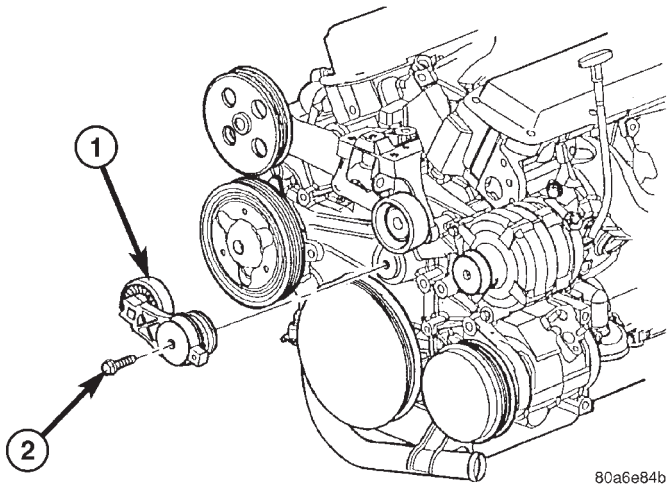

Fig. 2 BELT TENSIONER - 3.3/3.8L

1 - BELT TENSIONER
2 - BOLT

DRIVE BELTS

DESCRIPTION

The drive belts are a Poly-V type belt. Belt widths vary depending on the various engine and accessory packages. Satisfactory performance of these belts depends on belt condition and proper belt tension.

OPERATION

The accessory drive belts form the link between the engine crankshaft and the engine driven accessories.

DIAGNOSIS AND TESTING - ACCESSORY DRIVE BELT

CONDITION	POSSIBLE CAUSES	CORRECTIONS
INSUFFICIENT ACCESSORY OUTPUT DUE TO BELT SLIPPAGE	1. Belt too loose	1. (a) Replace belt (auto-tensioned belts) (b) Adjust power steering belt tension (4 cyl. engine)
	2. Belt excessively glazed or worn	2. Replace and tighten as specified
BELT SQUEAL WHEN ACCELERATING ENGINE	1. Belts too loose	1. (a) Replace belt (auto-tensioned belts) (b) Adjust power steering belt tension (4 cyl. engine)
	2. Belt glazed	2. Replace belts
BELT SQUEAK AT IDLE	1. Belts too loose	1. (a) Replace belt (auto-tensioned belts) (b) Adjust power steering belt tension (4 cyl. engine)
	2. Dirt or paint imbedded in belt	2. Replace belt
	3. Non-uniform belt	3. Replace belt
	4. Misaligned pulleys	4. Align accessories
	5. Non-uniform groove or eccentric pulley	5. Replace pulley

DRIVE BELTS (Continued)

CONDITION	POSSIBLE CAUSES	CORRECTIONS
BELT ROLLED OVER IN GROOVE OR BELT JUMPS OFF	1. Broken cord in belt	1. Replace belt
	2. Belt too loose, or too tight	2. (a) Replace belt (auto-tensioned belts.) (b) Adjust power steering belt tension (4 cyl. engine)
	3. Misaligned pulleys	3. Align accessories
	4. Non-uniform groove or eccentric pulley	4. Replace pulley

DRIVE BELTS - 2.4L

STANDARD PROCEDURE - CHECKING POWER STEERING BELT TENSION

WARNING: DO NOT CHECK BELT TENSION WITH ENGINE RUNNING.

Accessory drive belt tension can be measured with Special Tool 8371 – Belt Tension Gauge Adapter, and the DRBIII® using the following procedures:

(1) Connect 8371 to the DRBIII® following the instructions provided with tool.

(2) Place end of microphone probe approximately 2.54 cm (1 in.) from belt at belt center span location shown in (Fig. 3).

(3) Pluck the belt a minimum of 3 times. (Use your finger or other suitable tool) The frequency of the belt in hertz (Hz) will display on DRBIII® screen.

(4) Adjust belt to obtain proper frequency (tension). Refer to ACCESSORY DRIVE BELT TENSION CHART for belt tension specifications.

ACCESSORY DRIVE BELT TENSION CHART - 2.4L

Accessory Drive Belt	Belt Tension	
Air Conditioning Compressor/Generator	Dynamic Tensioner	
Power Steering Pump	New	183 - 218 Hz
	Used*	150 - 183 Hz
*A belt is considered used after 15 minutes of run-in time.		

REMOVAL

GENERATOR AND AIR CONDITIONING BELT

(1) Raise vehicle on hoist.

(2) Remove the drive belt shield (Fig. 8).

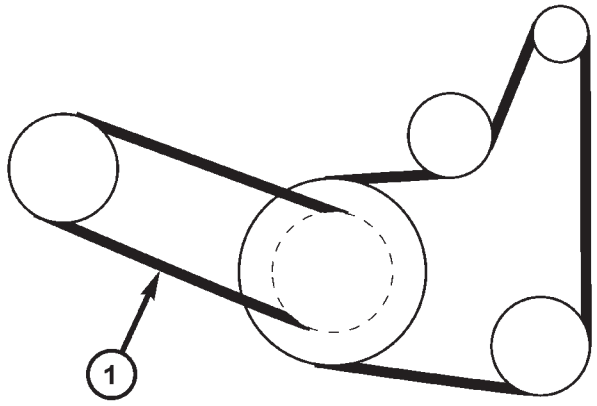

80cad8d9

Fig. 3 Power Steering Belt - Center Span Location

1 - POWER STEERING BELT CENTER SPAN LOCATION

WARNING: DO NOT ALLOW DRIVE BELT TENSIONER TO SNAP BACK, AS DAMAGE TO TENSIONER AND/OR PERSONAL INJURY COULD RESULT.

(3) Position a wrench on the belt tensioner lug (Fig. 4).

(4) Release belt tension by rotating the tensioner clockwise (Fig. 4).

(5) Remove belt.

(1) Carefully return tensioner to its relaxed position.

POWER STEERING PUMP

(1) From top of the vehicle, loosen locking nuts (D) and (F) (Fig. 5).

DRIVE BELTS - 2.4L (Continued)

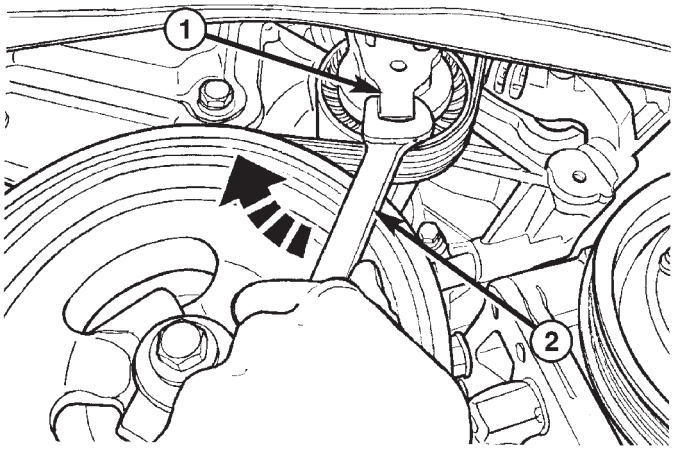

Fig. 4 A/C & GENERATOR BELT TENSION RELEASE

1 - BELT TENSIONER
2 - WRENCH

(2) From under the vehicle, loosen the pivot bolt (E). Loosen adjusting bolt (G) until belt can be removed.

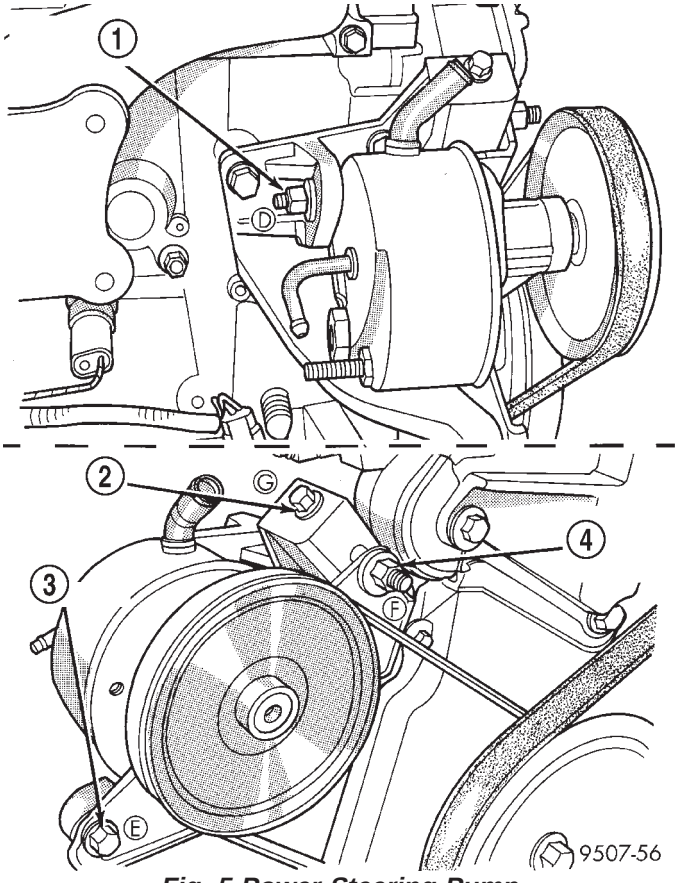

Fig. 5 Power Steering Pump

1 - REAR LOCKING NUT
2 - ADJUSTING BOLT
3 - PIVOT BOLT
4 - FRONT LOCKING NUT

CLEANING

Clean all foreign debris from belt pulley grooves. The belt pulleys must be free of oil, grease, and coolants before installing the drive belt.

INSPECTION

Belt replacement under any or all of the following conditions is required:

- Excessive wear
- Frayed cords
- Severe glazing

Poly-V Belt system may develop minor cracks across the ribbed side (due to reverse bending). These minor cracks are considered normal and acceptable. Parallel cracks are not (Fig. 6).

NOTE: Do not use any type of belt dressing or restorer on Poly-V Belts.

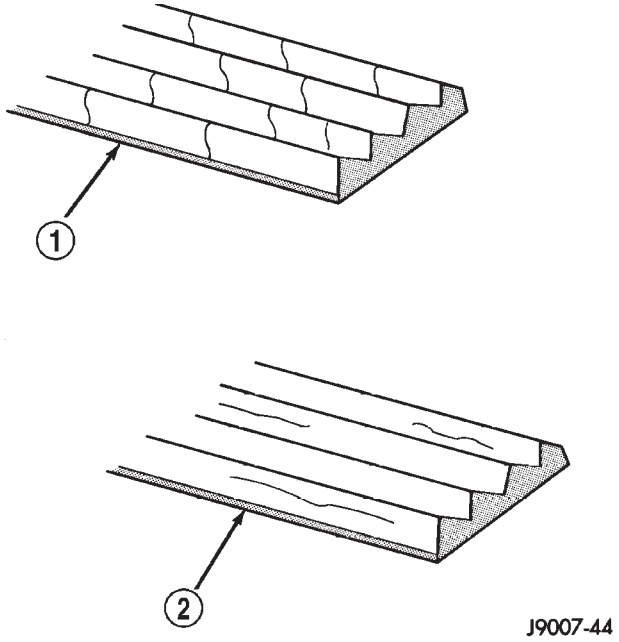

Fig. 6 Drive Belt Wear Pattern

1 - NORMAL CRACKS - BELT OK
2 - NOT NORMAL CRACKS - REPLACE BELT

INSTALLATION

GENERATOR AND AIR CONDITIONING BELT

(1) Install belt onto all pulleys except for the crankshaft (Fig. 7).

(2) Rotate belt tensioner clockwise until belt can be installed onto the crankshaft pulley (Fig. 4). Slowly release belt tensioner.

(3) Verify belt is properly routed and engaged on all pulleys (Fig. 7).

(4) Install drive belt shield (Fig. 8) and lower vehicle.

DRIVE BELTS - 2.4L (Continued)

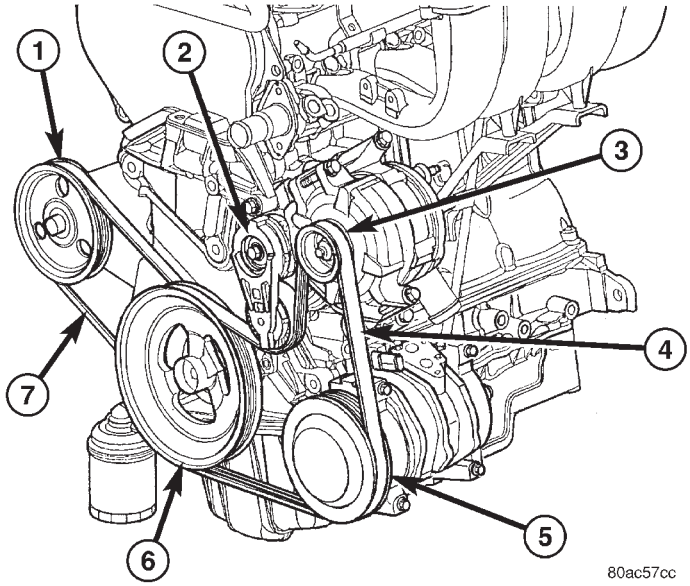

Fig. 7 Accessory Drive Belts - 2.4L

1 - POWER STEERING PUMP PULLEY
2 - BELT TENSIONER
3 - GENERATOR PULLEY
4 - BELT - A/C AND GENERATOR
5 - A/C COMPRESSOR PULLEY
6 - CRANKSHAFT PULLEY
7 - BELT - POWER STEERING

POWER STEERING PUMP

(1) Install belt over crankshaft and power steering pump pulleys (Fig. 7).

(2) Apply an initial snug torque to fasteners (E) and (F) (Fig. 5).

(3) Tighten adjusting bolt (G) until proper belt tension is obtained (Fig. 5). For belt tension check procedure, (Refer to 7 - COOLING/ACCESSORY DRIVE/ DRIVE BELTS - STANDARD PROCEDURE - CHECKING POWER STEERING BELT TENSION).

(4) Tighten locking nuts (D) and (F) to 54 N·m (40 ft. lbs.) (Fig. 5).

(5) Tighten pivot bolt (E) to 54 N·m (40 ft. lbs.) (Fig. 5).

ADJUSTMENTS

Satisfactory performance of the belt driven accessories depends on proper belt tension. Belt tensioning should be performed with the aid of Special Tool 7198. Because of space limitations in the engine compartment, the use of this gauge may be restricted. Raise the vehicle on a hoist and the remove the splash shield to gain access to the drive belts, if necessary. Adjust belt tension for either a **New** or **Used** belt. For specifications, (Refer to 7 - COOLING/ACCESSORY DRIVE - SPECIFICATIONS).

DRIVE BELTS - 3.3/3.8L

REMOVAL

(1) Raise vehicle on hoist.

(2) Remove the drive belt shield (Fig. 8).

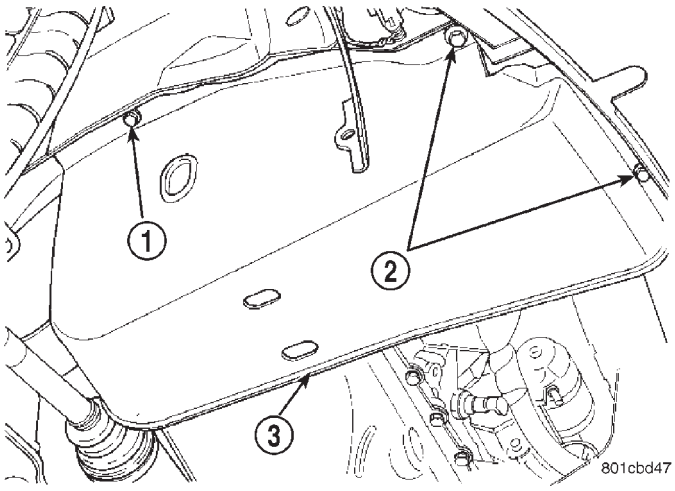

Fig. 8 Accessory Drive Belt Shield

1 - ATTACHING SCREW
2 - ATTACHING SCREWS
3 - SPLASH SHIELD

WARNING: DO NOT ALLOW DRIVE BELT TENSIONER TO SNAP BACK, AS DAMAGE TO TENSIONER AND/OR PERSONAL INJURY COULD RESULT.

(3) Position a wrench on the belt tensioner lug (Fig. 9).

(4) Release belt tension by rotating the tensioner counterclockwise (Fig. 9).

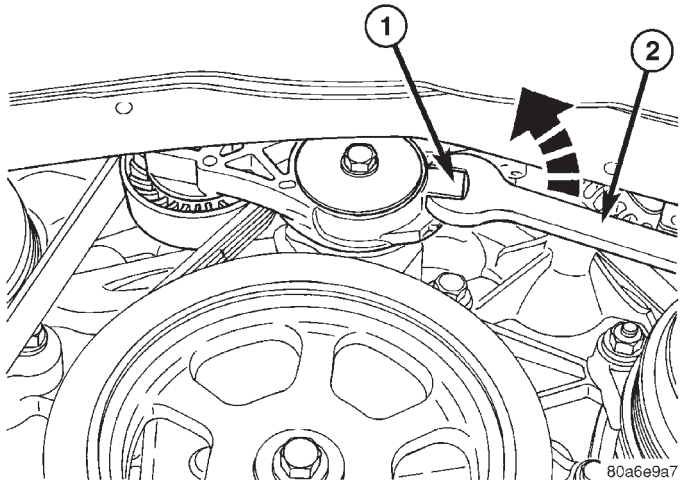

Fig. 9 DRIVE BELT TENSION RELEASE

1 - BLET TENSIONER LUG
2 - WRENCH

DRIVE BELTS - 3.3/3.8L (Continued)

(5) Remove the drive belt (Fig. 11).

(6) Carefully return tensioner to its relaxed position.

CLEANING

Clean all foreign debris from belt pulley grooves. The belt pulleys must be free of oil, grease, and coolants before installing the drive belt.

INSPECTION

Belt replacement under any or all of the following conditions is required:

- Excessive wear
- Frayed cords
- Severe glazing

Poly-V Belt system may develop minor cracks across the ribbed side (due to reverse bending). These minor cracks are considered normal and acceptable. Parallel cracks are not (Fig. 10).

NOTE: Do not use any type of belt dressing or restorer on Poly-V Belts.

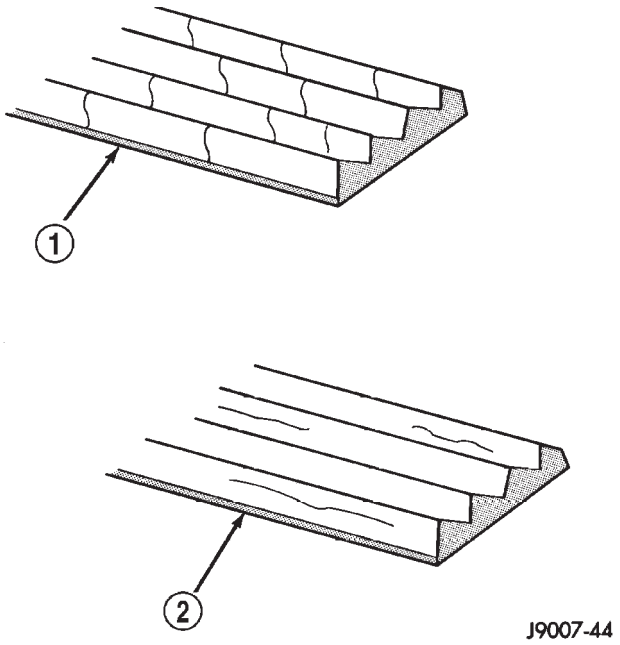

Fig. 10 Drive Belt Wear Pattern

1 - NORMAL CRACKS - BELT OK
2 - NOT NORMAL CRACKS - REPLACE BELT

INSTALLATION

(1) Route and position the drive belt onto all pulleys, except for the crankshaft (Fig. 11).

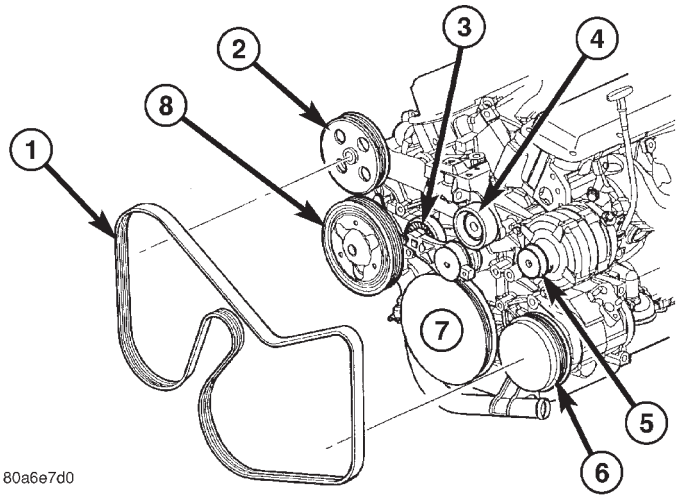

Fig. 11 ACCESSORY DRIVE BELT

1 - DRIVE BELT
2 - POWER STEERING PUMP PULLEY
3 - BELT TENIONER PULLEY
4 - IDLER PULLEY
5 - GENERATOR PULLEY
6 - AIR CONDITIONING COMPRESSOR PULLEY
7 - CRANKSHAFT PULLEY
8 - WATER PUMP PULLEY

(2) Rotate belt tensioner counterclockwise until belt can be installed onto the crankshaft pulley (Fig. 9). Slowly release belt tensioner.

(3) Verify belt is properly routed and engaged on all pulleys.

(4) Install drive belt shield (Fig. 8) and lower vehicle.

ENGINE

TABLE OF CONTENTS

page

ENGINE
DIAGNOSIS AND TESTING - ENGINE COOLING SYSTEM 15
CLEANING 19
INSPECTION 19
COOLANT
DIAGNOSIS AND TESTING - COOLANT CONCENTRATION TESTING 19
STANDARD PROCEDURE - COOLANT SERVICE 20
COOLANT RECOVERY CONTAINER
DESCRIPTION 20
OPERATION 20
DIAGNOSIS AND TESTING - COOLANT RECOVERY SYSTEM 20
REMOVAL 20
INSTALLATION 20
ENGINE BLOCK HEATER
DESCRIPTION 21
OPERATION 21
DIAGNOSIS AND TESTING - ENGINE BLOCK HEATER TESTING 21
REMOVAL 21
INSTALLATION 21
ENGINE COOLANT TEMPERATURE SENSOR - 2.4L
DESCRIPTION 21
REMOVAL 21
INSTALLATION 21
ENGINE COOLANT TEMPERATURE SENSOR - 3.3/3.8L
DESCRIPTION 22
REMOVAL 22
INSTALLATION 22
ENGINE COOLANT THERMOSTAT
DESCRIPTION 23
OPERATION 23
DIAGNOSIS AND TESTING - ENGINE COOLANT THERMOSTAT 23
ENGINE COOLANT THERMOSTAT - 2.4L
REMOVAL 23
INSTALLATION 23
ENGINE COOLANT THERMOSTAT - 3.3/3.8L
REMOVAL 24
INSTALLATION 24
RADIATOR
DESCRIPTION 25
OPERATION 25

page

REMOVAL 25
INSTALLATION 26
RADIATOR DRAINCOCK
REMOVAL 27
INSTALLATION 27
RADIATOR PRESSURE CAP
DESCRIPTION 27
OPERATION 27
DIAGNOSIS AND TESTING
DIAGNOSIS AND TESTING - COOLING SYSTEM PRESSURE CAP TESTING 28
DIAGNOSIS AND TESTING - RADIATOR CAP TO FILLER NECK SEAL 28
CLEANING 29
INSPECTION 29
RADIATOR FAN
DESCRIPTION 29
OPERATION 29
DIAGNOSIS AND TESTING - RADIATOR FAN MOTOR 30
REMOVAL 30
INSTALLATION 30
RADIATOR FAN RELAY
DESCRIPTION 31
OPERATION 31
REMOVAL 31
INSTALLATION 31
WATER PUMP - 2.4L
DESCRIPTION 32
OPERATION 32
REMOVAL 32
CLEANING 32
INSPECTION 32
INSTALLATION 32
WATER PUMP - 3.3/3.8L
DESCRIPTION 34
OPERATION 34
REMOVAL 34
CLEANING 35
INSPECTION 35
INSTALLATION 35
WATER PUMP INLET TUBE - 2.4L
DESCRIPTION 36
REMOVAL 36
INSTALLATION 36
WATER PUMP INLET TUBE - 3.3/3.8L
REMOVAL 36
INSTALLATION 36

ENGINE

DIAGNOSIS AND TESTING - ENGINE COOLING SYSTEM

Establish what driving condition caused the cooling system complaint. The problem may be caused by an abnormal load on the system such as the following: prolonged idle, very high ambient temperature, slight tail wind at idle, slow traffic speed, traffic jam, high speed, steep grade.

DRIVING TECHNIQUES

To avoid overheating the cooling system:

(1) Idle with A/C off when temperature gauge is at end of normal range.

(2) Do not increase engine speed for more air flow and coolant flow because the electric motor fan systems are not responsive to engine RPM. The added cooling from higher coolant flow rate is more than offset by increased heat rejection (engine heat added to coolant).

TRAILER TOWING

Consult the owner's manual under Trailer Towing and do not exceed specified limits.

VISUAL INSPECTION

If the cooling system problem is not caused by a driving condition, perform a visual inspection to determine if there was a recent service or accident repair, including the following:

- Loose/damaged water pump drive belt
- Incorrect cooling system refilling (trapped air or low level)
- Brakes possibly dragging
- Damaged hoses
- Loose/damaged hose clamps
- Damaged/incorrect engine thermostat
- Damaged cooling fan motor, fan blade and fan shroud
- Damaged head gasket
- Damaged water pump
- Damaged radiator
- Damaged coolant recovery system
- Damaged heater core
- Open/shorted electrical circuits

If the visual inspection reveals none of the above as cause for a cooling system complaint, refer to the following diagnostic charts.

COOLING SYSTEM DIAGNOSIS CHART

CONDITION	POSSIBLE CAUSES	CORRECTION
PRESSURE CAP IS BLOWING OFF STEAM AND/OR COOLANT. TEMPERATURE GAUGE READING MAY BE ABOVE NORMAL BUT NOT HIGH. COOLANT LEVEL MAY BE HIGH IN COOLANT RESERVE/ OVERFLOW TANK.	1. Pressure relief valve in radiator cap is defective, or was not properly seated.	1. Check condition of radiator cap and cap seal. (Refer to 7 - COOLING/ENGINE/RADIATOR PRESSURE CAP - DIAGNOSIS AND TESTING) Replace cap as necessary.
	2. Incorrect cap was installed.	2. Replace cap as necessary.
	3. Incorrect coolant mixture.	3. Check concentration level of the coolant. (Refer to 7 - COOLING/ ENGINE/COOLANT - DIAGNOSIS AND TESTING) Adjust the ethylene glycol-to-water ratio as required.
COOLANT LOSS TO THE GROUND WITHOUT PRESSURE CAP BLOWOFF. GAUGE IS READING HIGH OR HOT.	1. Coolant leaks in radiator, cooling system hoses, water pump or engine.	1. Pressure test and repair as necessary. (Refer to 7 - COOLING - DIAGNOSIS AND TESTING)

ENGINE (Continued)

CONDITION	POSSIBLE CAUSES	CORRECTION
DETONATION OR PRE-IGNITION (NOT CAUSED BY IGNITION SYSTEM). GAUGE MAY NOT BE READING HIGH.	1. Engine overheating.	1. Check reason for overheating and repair as necessary.
	2. Freeze point of coolant not correct. Mixture too concentrated or too diluted.	2. Check concentration level of the coolant. (Refer to 7 - COOLING/ ENGINE/COOLANT - DIAGNOSIS AND TESTING) Adjust the ethylene glycol-to-water ratio as required.
	3. Incorrect cooling system pressure cap.	3. Install correct pressure cap.
HOSE(S) COLLAPSE AS ENGINE COOLS DOWN.	1. Vacuum created in cooling system on engine cool-down is not being relieved through coolant recovery system.	1. (a) Pressure cap relief valve stuck. (Refer to 7 - COOLING/ ENGINE/RADIATOR PRESSURE CAP - DIAGNOSIS AND TESTING) Replace as necessary. (b) Hose between the radiator and overflow container is plugged or pinched. Clean and repair as necessary. (c) Vent at coolant reserve/overflow container is plugged. Clean vent and repair as necessary. (d) Reserve/overflow container is internally blocked. Clean and repair as necessary.
INADEQUATE AIR CONDITIONER PERFORMANCE (COOLING SYSTEM SUSPECTED).	1. Radiator and/or A/C condenser is restricted, obstructed, or dirty (insects, leaves, etc.).	1. Remove restriction and/or clean as necessary.
	2. Electrical radiator fan not operating when A/C is operated.	2. For test procedure (Refer to appropriate Diagnostic Information). Repair as necessary.
	3. Engine is overheating (heat may be transferred from radiator to A/C condenser). High underhood temperatures due to engine overheating may also transfer heat to A/C components.	3. Correct overheating condition.
	4. All models are equipped with air seals at the radiator and/or A/C condenser. If these seals are missing or damaged, not enough air flow will be pulled through the radiator and A/C condenser.	4. Check for missing or damaged air seals and repair as necessary.
INADEQUATE HEATER PERFORMANCE.	1. Check for a Diagnostic trouble code (DTC).	1. For procedures, (Refer to appropriate Diagnostic Information). Repair as necessary.
	2. Coolant level low.	2. (Refer to 7 - COOLING - STANDARD PROCEDURE) Repair as necessary.

ENGINE (Continued)

CONDITION	POSSIBLE CAUSES	CORRECTION
	3. Obstructions in heater hose fitting at engine or at heater core.	3. Remove heater hoses at both ends and check for obstructions. Repair as necessary.
	4. Heater hose kinked.	4. Locate kinked area and repair as necessary.
	5. Water pump is not pumping coolant to heater core.	5. When the engine is fully warmed up, both heater hoses should be hot to the touch. If only one of the hoses is hot, the water pump may not be operating correctly. Replace components as necessary.
	6. Air trapped in heater core.	6. (Refer to 7 - COOLING - DIAGNOSIS AND TESTING - COOLING SYSTEM DEAERATION)
HEAT ODOR	1. Various heat shields are used at certain driveline components. One or more of these shields may be missing.	1. Locate missing shields and replace or repair as necessary.
	2. Temperature gauge reading above the normal range.	2. Refer to Gauge Is Reading High in Temperature Gauge Indicatication Diagnosis Chart.
	3. Radiator fan operating incorrectly.	3. (Refer to 7 - COOLING/ENGINE/ RADIATOR FAN - OPERATION) Repair as necessary.
	4. Undercoating been applied to an unnecessary component.	4. Clean undercoating as necessary.
	5. Engine may be running rich, causing the catalytic converter to overheat	5. (Refer to Appropriate Diagnostic Information) Repair as necessary.
POOR DRIVEABILITY (THERMOSTAT POSSIBLY STUCK OPEN). GAUGE MAY BE READING LOW.	1. The engine thermostat must be operating correctly for proper driveability, clean vehicle emissions, and the prevention of sludge buildup in the engine oil. Check for a diagnostic trouble code.	1. (Refer to Appropriate Diagnostic Information) Replace thermostat, if necessary.
STEAM IS COMING FROM FRONT OF VEHICLE NEAR GRILL AREA WHEN WEATHER IS WET, ENGINE WARMED UP AND RUNNING WITH VEHICLE STATIONARY, OR JUST SHUT OFF. TEMPERATURE GAUGE IS NORMAL.	1. During wet weather, moisture (snow, ice, rain, or condensation) on the radiator will evaporate when the thermostat opens. The thermostat opening allows heated coolant into the radiator. When the moisture contacts the hot radiator, steam may be emitted. This usually occurs in cold weather with no fan or air flow to blow it away.	1. Occasional steam emitting from this area is normal. No repair is necessary.

ENGINE (Continued)

CONDITION	POSSIBLE CAUSES	CORRECTION
COOLANT COLOR	1. Coolant color is not necessarily an indication of adequate corrosion or temperature protection. Do not rely on coolant color for determining condition of coolant.	1. Check the freeze point of the coolant. (Refer to 7 - COOLING/ ENGINE/COOLANT - DIAGNOSIS AND TESTING) Adjust the ethylene glycol-to-water ratio as necessary.
COOLANT LEVEL CHANGES IN COOLANT BOTTLE. TEMPERATURE GAUGE IS IN NORMAL RANGE.	1. Level changes are to be expected as coolant volume fluctuates with engine temperature. The coolant level will also drop as the system removes air from a recent filling.	1. A normal condition. No repair is necessary.

Refer to (Fig. 1) when using the TEMPERATURE GAUGE INDICATION DIAGNOSIS CHART.

TEMPERATURE GAUGE INDICATION DIAGNOSIS CHART

CONDITION	POSSIBLE CAUSES	CORRECTION
TEMPERATURE GAUGE READING IS INCONSISTENT (FLUCTUATES, CYCLES OR IS ERRATIC).	1. Normal reaction to fan and/or thermostat cycle (Fig. 1), Examples B and C. During cold weather operation with the heater blower in the high position, the gauge reading may drop slightly (Fig. 1), Example D. Fluctuation is also influenced by outside temperature and heavy loads (Fig. 1), Example E.	1. A normal condition. No correction is necessary.
	2. Gauge reading rises when vehicle is brought to a stop after heavy use (engine still running) (Fig. 1), Example F.	2. A normal condition. No correction is necessary. Gauge reading should return to normal range (Fig. 1), Example A, after vehicle is driven.
	3. Gauge reading high after restarting a warmed-up (hot) engine.	3. A normal condition. No correction is necessary. The gauge should return to normal range (Fig. 1), Example A, after a few minutes of engine operation.
	4. Temperature gauge or engine coolant temperature sensor defective or shorted. Also, corroded or loose wiring in the electrical circuit.	4. Check operation of gauge or engine coolant temperature sensor and repair, if necessary.

ENGINE (Continued)

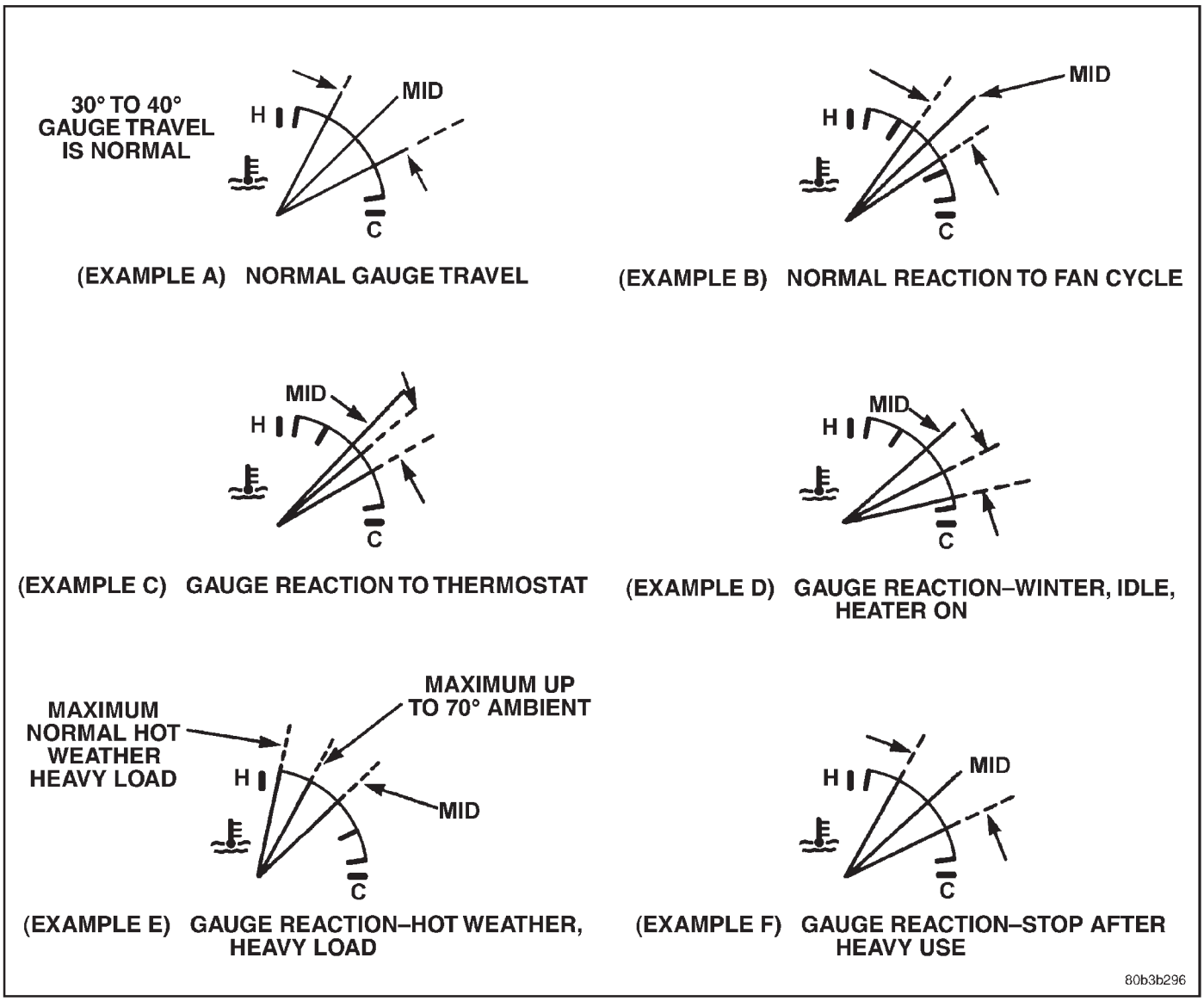

Fig. 1 Temperature Gauge Indications

CLEANING

Drain cooling system and refill with clean water. Refer to drain and fill procedures in this section. Run engine with radiator cap installed until upper radiator hose is hot. Stop engine and drain water from system. If water is dirty; fill, run, and drain system again, until water runs clear. Refill cooling system with a 50/50 mixture of the recommended ethylene glycol and distilled water (Refer to LUBRICATION & MAINTENANCE/FLUID TYPES - DESCRIPTION).

INSPECTION

After performing a cleaning/flush procedure, inspect all hoses, clamps and connections for deterioration and leaks. Inspect radiator and heater core for leaks.

COOLANT

DIAGNOSIS AND TESTING - COOLANT CONCENTRATION TESTING

Coolant concentration should be checked when any additional coolant was added to system or after a coolant drain, flush and refill. The coolant mixture offers optimum engine cooling and protection against corrosion when mixed to a freeze point of -37°C (-34°F) to -46°C (-50°F). The use of a hydrometer or a refractometer can be used to test coolant concentration.

A hydrometer will test the amount of glycol in a mixture by measuring the specific gravity of the mixture. The higher the concentration of ethylene glycol, the larger the number of balls that will float, and

COOLANT (Continued)

higher the freeze protection (up to a maximum of 60% by volume glycol).

A refractometer (Special Tool 8286)(Refer to 7 - COOLING - SPECIAL TOOLS) will test the amount of glycol in a coolant mixture by measuring the amount a beam of light bends as it passes through the fluid.

Some coolant manufactures use other types of glycols into their coolant formulations. Propylene glycol is the most common new coolant. However, propylene glycol based coolants do not provide the same freezing protection and corrosion protection and is not recommended.

CAUTION: Do not mix types of coolant—corrosion protection will be severely reduced.

STANDARD PROCEDURE - COOLANT SERVICE

For engine coolant recommended service schedule, (Refer to LUBRICATION & MAINTENANCE/MAINTENANCE SCHEDULES - DESCRIPTION).

COOLANT RECOVERY CONTAINER

DESCRIPTION

The coolant recovery/reserve system cotainer is mounted in the engine compartment (Fig. 2). The container is made of plastic.

OPERATION

The coolant recovery system works with the radiator pressure cap to use thermal expansion and contraction of the coolant to keep the coolant free of trapped air. Provides a convenient and safe method for checking coolant level and adjusting level at atmospheric pressure without removing the radiator pressure cap. It also provides some reserve coolant to cover deaeration, evaporation, or boiling losses.

DIAGNOSIS AND TESTING - COOLANT RECOVERY SYSTEM

The cooling system is closed and designed to maintain coolant level to the top of the radiator.

(1) With the engine **off** and cooling system **not** under pressure, drain several ounces of coolant from the radiator draincock while observing the coolant recovery container. Coolant level in the container should drop.

(2) Remove the radiator pressure cap. The coolant level should be full to the top radiator neck. If not, and the coolant level in the container is at or above the MIN mark, there is an air leak in the coolant recovery system.

(3) Check hose and hose connections to the container, radiator filler neck or the pressure cap seal to the radiator filler neck for leaks.

REMOVAL

(1) Raise the vehicle on hoist.

(2) Remove the lower attaching screws (Fig. 2).

(3) Lower the vehicle.

(4) Remove the upper attaching screw (Fig. 2).

(5) Disconnect recovery hose from container (Fig. 2).

(6) Remove the recovery container.

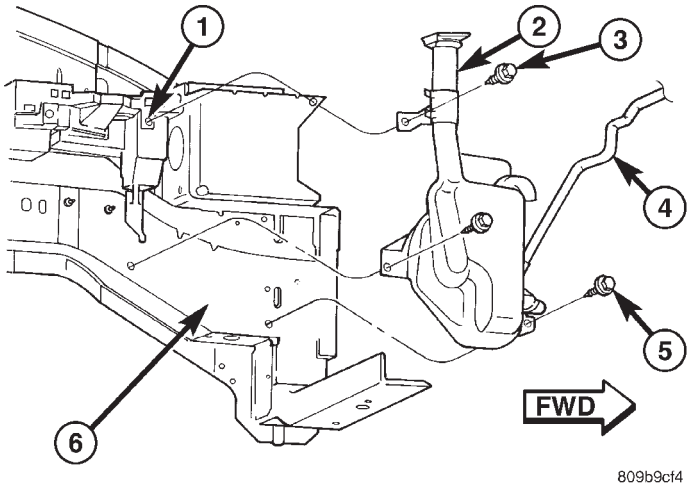

Fig. 2 Coolant Recovery Container

1 - UPPER BOLT ATTACHING TO BATTERY TRAY
2 - COOLANT RECOVERY CONTAINER
3 - UPPER BOLT
4 - HOSE
5 - LOWER BOLT (QTY. 2)
6 - LEFT SIDE FRAME RAIL

INSTALLATION

(1) Connect the recovery hose to container (Fig. 2).

(2) Position the recovery container on the frame rail (Fig. 2).

(3) Install the upper attaching screw and tighten to 7 N·m (60 in. lbs.) (Fig. 2).

(4) Raise the vehicle on hoist.

(5) Install the lower attaching screws and tighten to 8.5 N·m (75 in. lbs.) (Fig. 2).

(6) Lower the vehicle.

(7) Add coolant to container as necessary. (Refer to 7 - COOLING - STANDARD PROCEDURE)

ENGINE BLOCK HEATER

DESCRIPTION

The engine block heater is available as an optional accessory on all models. The heater is operated by ordinary house current (110 Volt A.C.) through a power cord located behind the radiator grille. This provides easier engine starting and faster warm-up when vehicle is operated in areas having extremely low temperatures. The heater is mounted in a core hole (in place of a core hole plug) in the engine block, with the heating element immersed in coolant.

OPERATION

The block heater element is submerged in the cooling system's coolant. When electrical power (110 volt A.C.) is applied to the element, it creates heat. This heat is transferred to the engine coolant. This provides easier engine starting and faster warm-up when vehicle is operated in areas having extremely low temperatures.

DIAGNOSIS AND TESTING - ENGINE BLOCK HEATER TESTING

If unit does not operate, trouble can be in either the power cord or the heater element. Test power cord for continuity with a 110-volt voltmeter or 110-volt test light; test heater element continuity with an ohmmeter or 12-volt test light.

REMOVAL

(1) Drain coolant from radiator and cylinder block. (Refer to 7 - COOLING - STANDARD PROCEDURE)

(2) Disconnect the power cord plug from heater.

(3) Loosen screw in center of heater. Remove the heater assembly.

INSTALLATION

(1) Clean block core hole and heater seat.

(2) Insert heater assembly with element loop positioned **upward.**

(3) With heater seated, tighten center screw securely to assure a positive seal.

(4) Install power cord plug to heater.

(5) Fill cooling system with coolant to the proper level. (Refer to 7 - COOLING - STANDARD PROCEDURE)

ENGINE COOLANT TEMPERATURE SENSOR - 2.4L

DESCRIPTION

The engine coolant temperature sensor threads into the top of the thermostat housing (Fig. 3). New sensors have sealant applied to the threads.

REMOVAL

WARNING: HOT, PRESSURIZED COOLANT CAN CAUSE INJURY BY SCALDING. COOLING SYSTEM MUST BE PARTIALLY DRAINED BEFORE REMOVING THE COOLANT TEMPERATURE SENSOR.

(1) Drain the cooling system below thermostat level. (Refer to 7 - COOLING - STANDARD PROCEDURE)

(2) Disconnect coolant temperature sensor electrical connector.

(3) Remove coolant temperature sensor (Fig. 3).

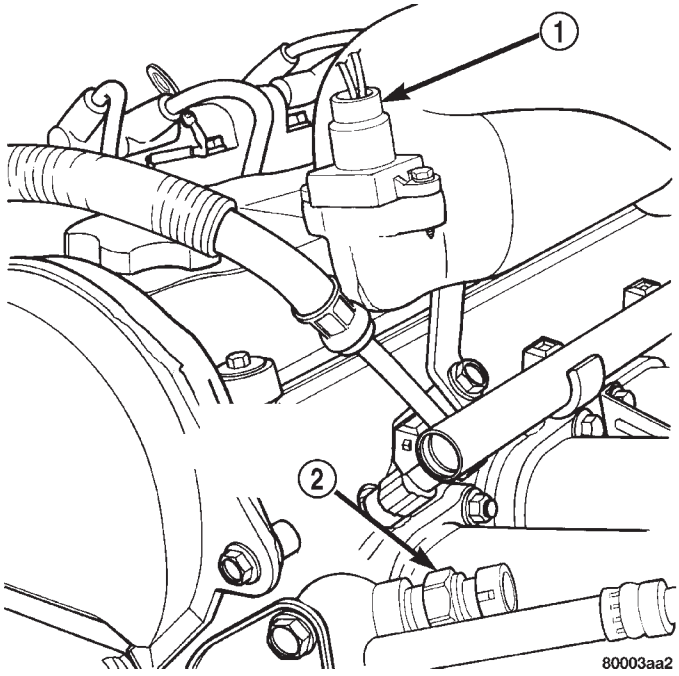

Fig. 3 Engine Coolant Temperature Sensor - 2.4L

1 - MAP SENSOR
2 - COOLANT TEMPERATURE SENSOR

INSTALLATION

(1) Install coolant temperature sensor (Fig. 3). Tighten sensor to 7 N·m (60 in. lbs.).

(2) Connect electrical connector to sensor.

(3) Fill cooling system. (Refer to 7 - COOLING - STANDARD PROCEDURE)

ENGINE COOLANT TEMPERATURE SENSOR - 3.3/3.8L

DESCRIPTION

The engine coolant temperature sensor threads into a coolant passage on lower intake manifold near the thermostat (Fig. 6). New sensors have sealant applied to the threads.

REMOVAL

WARNING: HOT, PRESSURIZED COOLANT CAN CAUSE INJURY BY SCALDING. COOLING SYSTEM MUST BE PARTIALLY DRAINED BEFORE REMOVING THE COOLANT TEMPERATURE SENSOR.

(1) Drain cooling system below engine coolant temperature sensor level. (Refer to 7 - COOLING - STANDARD PROCEDURE)

(2) Remove power steering reservoir and relocate (Fig. 4). Do not disconnect hoses.

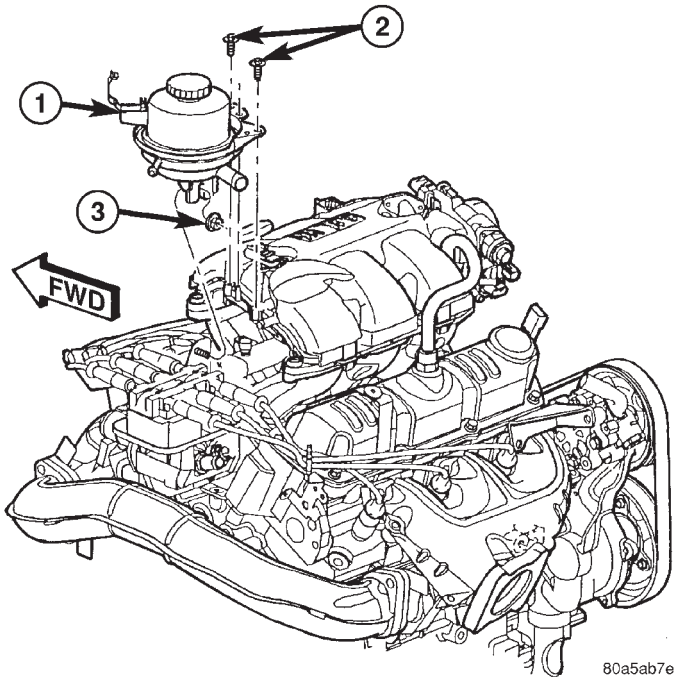

Fig. 4 Power Steering Fluid Reservoir

1 - POWER STEERING RESERVOIR
2 - BOLT - RESERVOIR TO MANIFOLD
3 - NUT - RESERVOIR TO COIL BRACKET

(3) Remove ignition coil and bracket (Fig. 5).

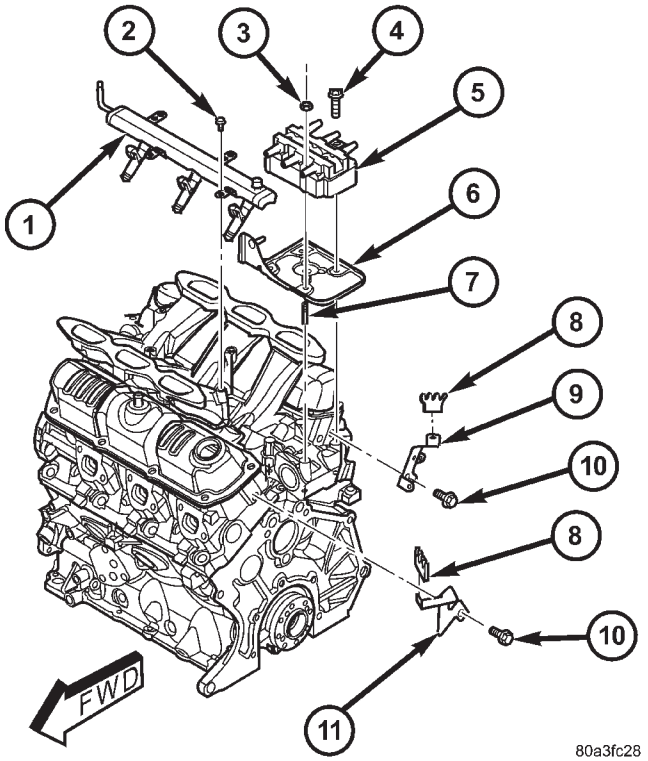

Fig. 5 Fuel Rail, Ignition Coil and Bracket

1 - FUEL RAIL
2 - BOLT - FUEL RAIL
3 - NUT - IGNITION COIL
4 - BOLT - IGNITION COIL
5 - IGNITION COIL
6 - BRACKET - IGNITION COIL
7 - STUD - IGNITION COIL
8 - SEPARATOR - SPARK PLUG CABLE
9 - BRACKET - SPARK PLUG CABLE SEPARATOR
10 - BOLT - SEPARATOR BRACKET
11 - BRACKET - SPARK PLUG CABLE SEPARATOR

(4) Disconnect coolant sensor electrical connector (Fig. 6).

(5) Remove coolant sensor (Fig. 6).

INSTALLATION

(1) Install engine coolant temperature sensor (Fig. 6). Tighten sensor to 7 N·m (60 in. lbs.).

(2) Connect electrical connector to sensor (Fig. 6).

(3) Install ignition coil bracket (Fig. 5).

(4) Install ignition coil (Fig. 5).

(5) Install power steering reservoir (Fig. 4).

ENGINE COOLANT TEMPERATURE SENSOR - 3.3/3.8L (Continued)

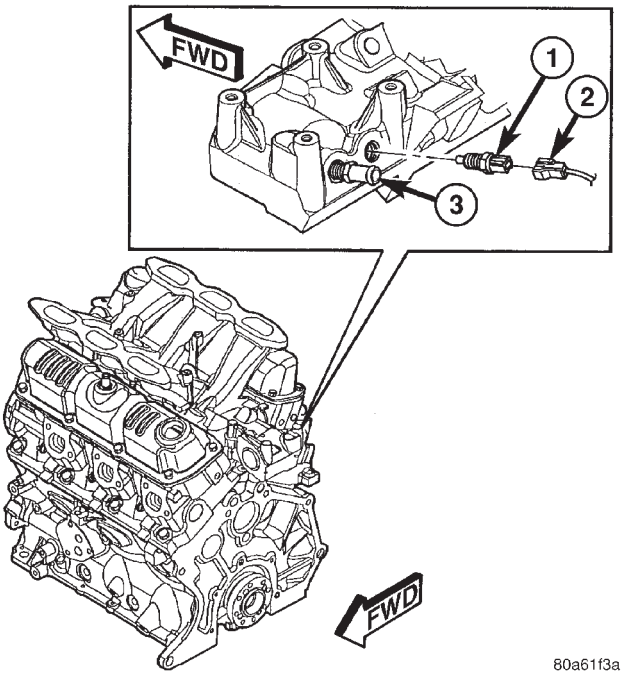

Fig. 6 Engine Coolant Temperature Sensor

1 - ENGINE COOLANT TEMPERATURE SENSOR
2 - CONNECTOR - ENGINE COOLANT SENSOR
3 - FITTING - HEATER SUPPLY

(6) Fill cooling system. (Refer to 7 - COOLING - STANDARD PROCEDURE)

ENGINE COOLANT THERMOSTAT

DESCRIPTION

The engine cooling thermostats are a wax pellet driven, reverse poppet choke type. The thermostat is mounted in a housing on the coolant outlet of the engine (Fig. 8) or (Fig. 10).

OPERATION

The engine cooling thermostat is a wax pellet driven, reverse poppet choke type. The thermostat is designed to provide the fastest warm up possible by preventing leakage through it and to guarantee a minimum engine operating temperature of 88 to 93°C (192 to 199°F). The thermostat also will automatically reach wide open so it will not restrict flow to the radiator as temperature of the coolant rises in hot weather to around 104°C (220°F). Above this temperature the coolant temperature is controlled by the radiator, fan, and ambient temperature, not the thermostat.

The thermostat is operated by a wax filled container (pellet) which is sealed. When heated coolant reaches a predetermined temperature, the wax expands enough to overcome the closing spring and water pump pressure, which forces the valve to open.

DIAGNOSIS AND TESTING - ENGINE COOLANT THERMOSTAT

The thermostat is operated by a wax filled chamber (pellet) which is sealed. When heated coolant reaches a predetermined temperature the wax pellet expands enough to overcome the closing spring and water pump pressure, which forces the valve to open. Coolant leakage into the pellet will cause a thermostat to fail open. Do not attempt to free up a thermostat with a screwdriver.

Thermostat diagnostics is included in powertrain control module's (PCM) programing for on-board diagnosis. The malfunction indicator light (MIL) will illuminate and a diagnostic trouble code (DTC) will be set when an "open too soon" condition occurs. Do not change a thermostat for lack of heater performance or temperature gauge position, unless a DTC is present. For other probable causes, (Refer to 7 - COOLING/ENGINE - DIAGNOSIS AND TESTING). Thermostat failing shut is the normal long term mode of failure, and normally, only on high mileage vehicles. The temperature gauge will indicate this (Refer to 7 - COOLING/ENGINE - DIAGNOSIS AND TESTING).

ENGINE COOLANT THERMOSTAT - 2.4L

REMOVAL

(1) Drain cooling system below the thermostat level. (Refer to 7 - COOLING - STANDARD PROCEDURE)

(2) Remove radiator upper hose from the coolant outlet housing (Fig. 7).

(3) Remove coolant outlet housing bolts and housing (Fig. 8).

(4) Remove thermostat. Discard gasket and clean both gasket sealing surfaces.

INSTALLATION

(1) Place a new gasket (dipped in clean water) on the coolant outlet connector surface. Position thermostat with air bleed at the 12 o'clock position in thermostat housing (Fig. 8).

(2) Position the coolant outlet connector and gasket over the thermostat, making sure thermostat is seated in the thermostat housing.

(3) Position outlet connector to thermostat housing and install bolts (Fig. 8). Tighten bolts to 28 N·m (250 in. lbs.).

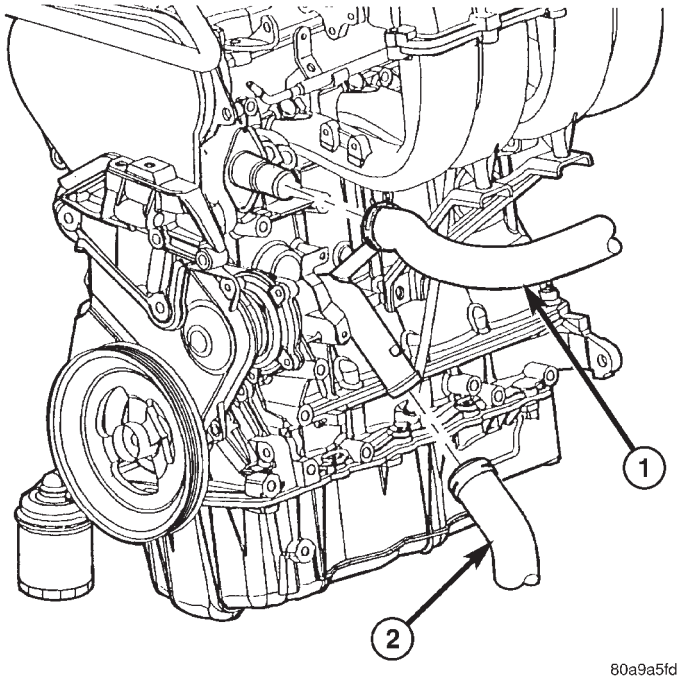

Fig. 7 RADIATOR HOSES TO ENGINE - 2.4L

1 - UPPER HOSE
2 - LOWER HOSE

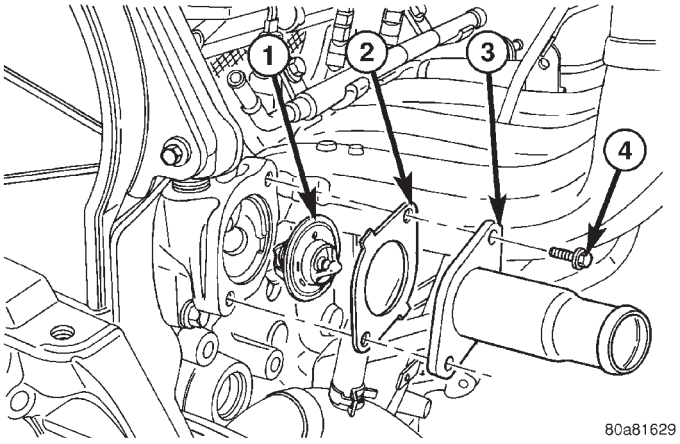

Fig. 8 Thermostat and Outlet Connector - 2.4L Engine

1 - THERMOSTAT
2 - GASKET
3 - COOLANT OUTLET CONNECTOR
4 - BOLT

(4) Install the radiator upper hose to coolant outlet housing (Fig. 7).

(5) Refill the cooling system. (Refer to 7 - COOLING - STANDARD PROCEDURE)

ENGINE COOLANT THERMOSTAT - 3.3/3.8L

REMOVAL

(1) Drain cooling system down below the thermostat level. (Refer to 7 - COOLING - STANDARD PROCEDURE)

(2) Remove radiator upper hose from coolant outlet connector (Fig. 9).

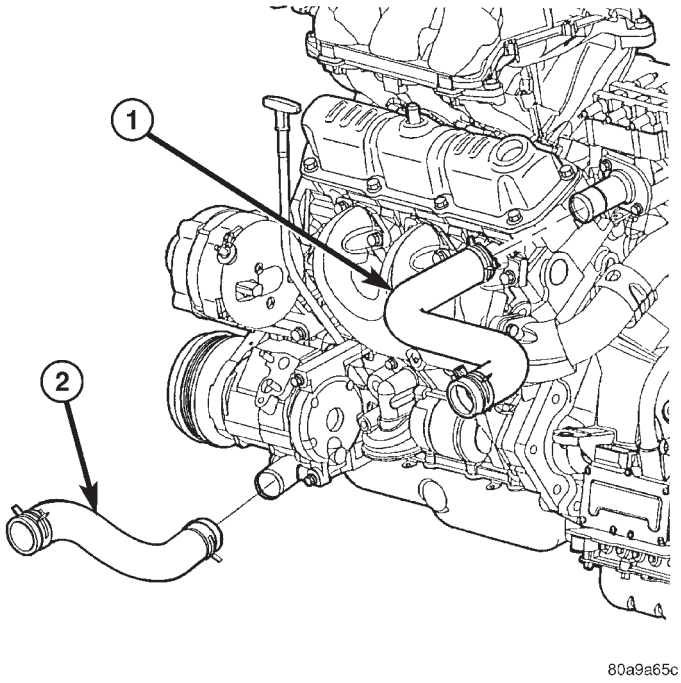

Fig. 9 RADIATOR HOSES TO ENGINE - 3.3/3.8L

1 - UPPER HOSE
2 - LOWER HOSE

(3) Remove coolant outlet connector bolts and connector (Fig. 10).

(4) Remove thermostat from outlet connector.

(5) Discard gasket and clean both gasket sealing surfaces.

INSTALLATION

(1) To ensure proper seating of replacement thermostat, carefully remove the bulged metal from the wall of the outlet connector recess that was created during the staking procedure that held the OEM thermostat in place (Fig. 11). It is not necessary to restake the replacement thermostat into the connector.

(2) Position thermostat to coolant outlet connector. Align the two locating notches on thermostat to the connector (Fig. 12). This position will ensure proper location of the thermostat air bleed.

ENGINE COOLANT THERMOSTAT - 3.3/3.8L (Continued)

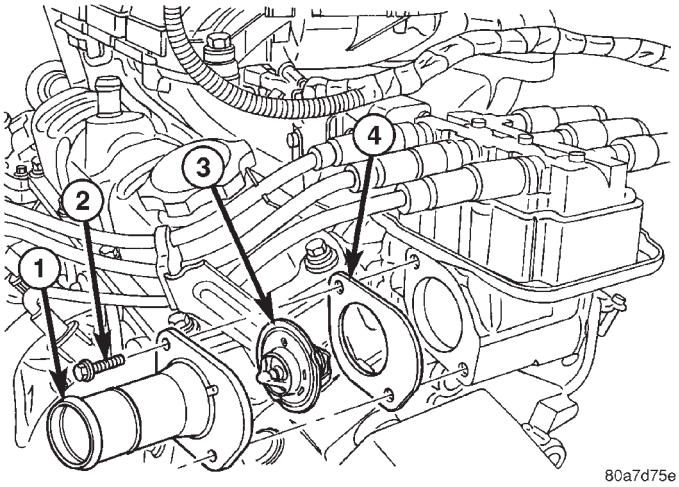

Fig. 10 THERMOSTAT - 3.3/3.8L ENGINE

1 - COOLANT OUTLET CONNECTOR
2 - BOLT
3 - THERMOSTAT
4 - GASKET

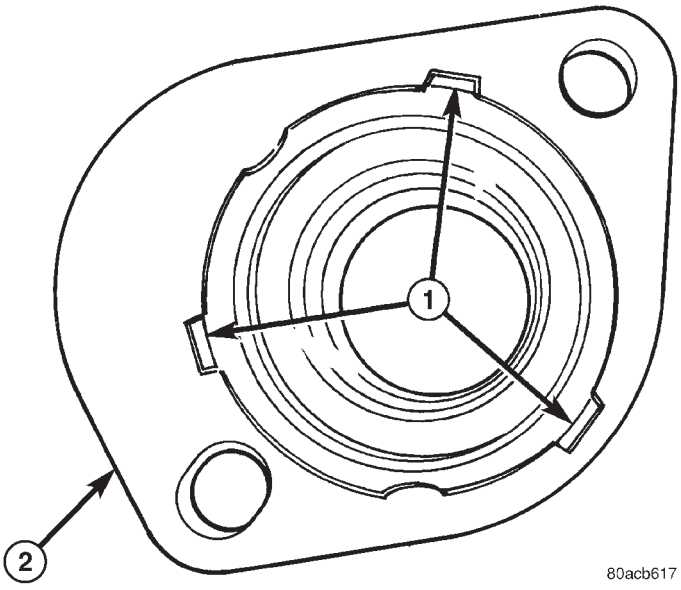

Fig. 11 Connector Staking Material Removal

1 - STAKE
2 - OUTLET CONNECTOR

(3) Position a new gasket over the thermostat and connector making sure thermostat is in proper position and in the recess provided.

(4) Install thermostat and connector assembly to the intake manifold (Fig. 10). Tighten bolts to 28 N·m (250 in. lbs.).

(5) Install the radiator upper hose to coolant outlet connector (Fig. 9).

(6) Refill the cooling system to the proper level. (Refer to 7 - COOLING - STANDARD PROCEDURE)

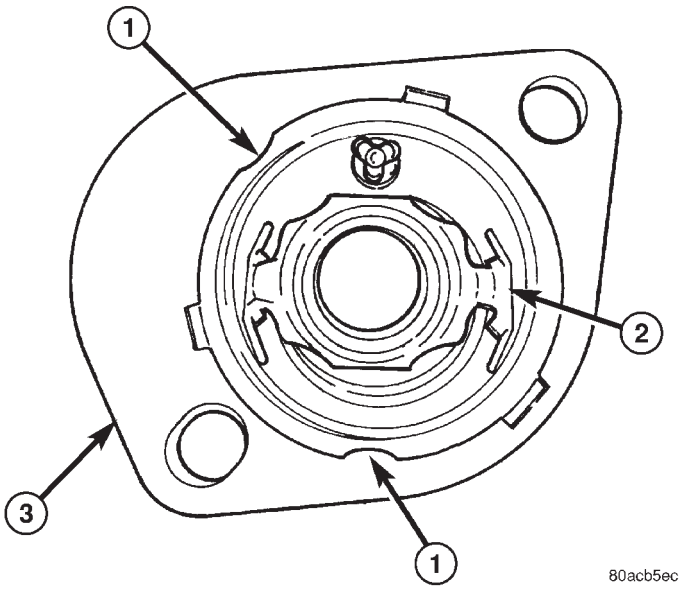

Fig. 12 Thermostat Position In Outlet Connector

1 - LOCATING NOTCH
2 - THERMOSTAT
3 - COOLANT OUTLET CONNECTOR

RADIATOR

DESCRIPTION

The radiator is a cross-flow type (horizontal tubes) with design features that provide greater strength along with sufficient heat transfer capabilities to keep the engine satisfactorily cooled. The radiator has plastic side tanks and aluminum cooling tubes.

OPERATION

The radiator functions as a heat exchanger, using air flow across the exterior of the radiator tubes. This heat is then transferred from the coolant and into the passing air.

REMOVAL

(1) Disconnect negative cable from battery.

(2) Remove radiator upper crossmember support. (Refer to 23 - BODY/EXTERIOR/GRILLE OPENING REINFORCEMENT - REMOVAL)

WARNING: DO NOT REMOVE THE CYLINDER BLOCK PLUG OR THE RADIATOR DRAINCOCK WITH THE SYSTEM HOT AND UNDER PRESSURE BECAUSE SERIOUS BURNS FROM COOLANT CAN OCCUR.

(3) Drain the cooling system. (Refer to 7 - COOLING - STANDARD PROCEDURE)

(4) Remove the radiator fans. (Refer to 7 - COOLING/ENGINE/RADIATOR FAN - REMOVAL)

(5) Disconnect coolant reserve/recovery hose.

RADIATOR (Continued)

(6) Remove vapor purge solenoid from mounting bracket.

(7) Disconnect upper and lower hoses from the radiator (Fig. 13) or (Fig. 14).

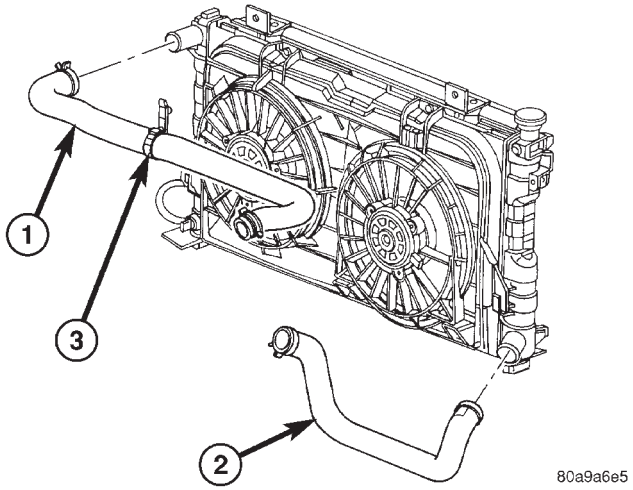

Fig. 13 Radiator Hoses to Radiator - 2.4L

1 - UPPER HOSE
2 - LOWER HOSE
3 - HOSE SUPPORT CLIP

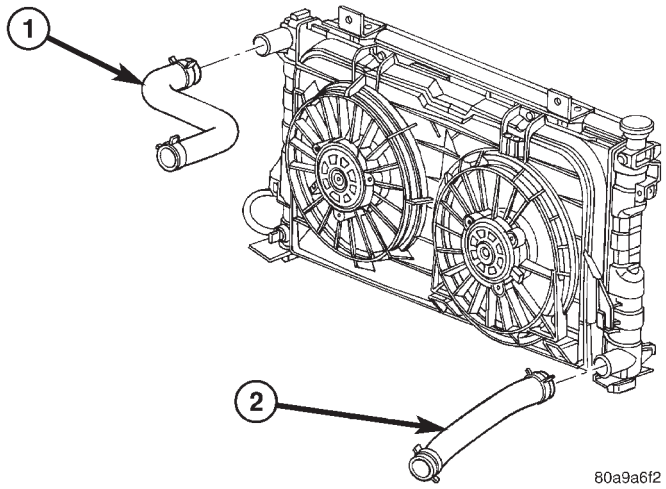

Fig. 14 Radiator Hoses to Radiator - 3.3/3.8L

1 - UPPER HOSE
2 - LOWER HOSE

(8) Remove the A/C condenser side brackets to radiator attaching screws (Fig. 15). Separate the condenser from the radiator by lifting upward to disengage from lower mounts (Fig. 15). Allow the condenser to rest in front of radiator.

(9) Radiator can now be lifted free from engine compartment. **Care should be taken not to damage radiator cooling fins or water tubes during removal.**

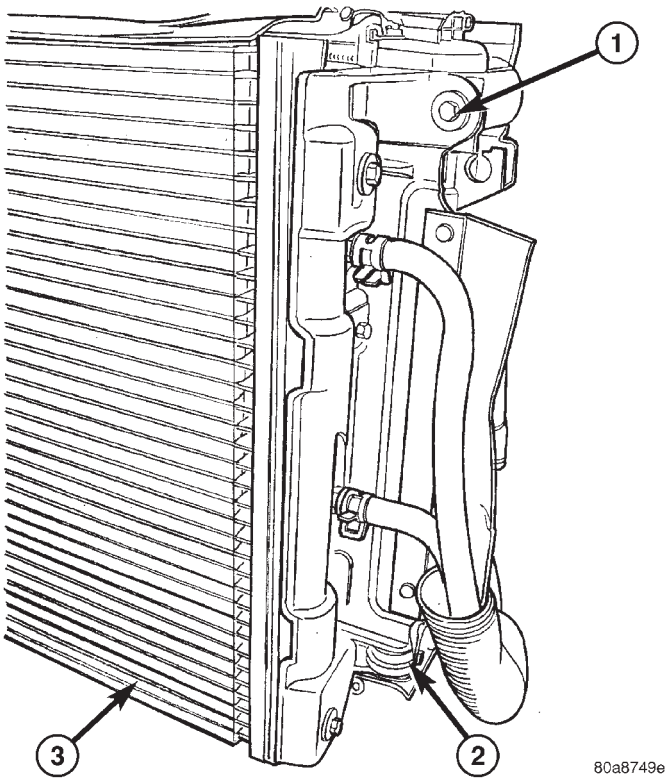

Fig. 15 Radiator to A/C Condenser Mounting (left mount shown, right similar)

1 - SCREW - A/C CONDENSER SIDE BRACKET TO RADIATOR
2 - LOWER MOUNT
3 - A/C CONDENSER

INSTALLATION

(1) **Be sure the air seal is in position before radiator is installed.** Slide radiator down into position. Seat the radiator with the rubber isolators into the mounting holes provided, with a 10 lbs. force.

(2) Position air conditioning condenser onto the radiator lower mounts and install upper screws (Fig. 15). Tighten fasteners to 5 N·m (45 in. lbs.).

(3) Install the radiator upper and lower hoses (Fig. 13) or (Fig. 14).

(4) Connect the coolant reserve/recovery hose.

(5) Connect the vapor purge solenoid to the mounting bracket.

(6) Install the radiator fans. (Refer to 7 - COOLING/ENGINE/RADIATOR FAN - INSTALLATION)

(7) Install the radiator upper crossmember support. (Refer to 23 - BODY/EXTERIOR/GRILLE OPENING REINFORCEMENT - INSTALLATION)

(8) Fill the cooling system. (Refer to 7 - COOLING - STANDARD PROCEDURE)

(9) Connect negative cable to battery.

RADIATOR DRAINCOCK

REMOVAL

CAUTION: Use of pliers on draincock is not recommended. Damage may occur to radiator or draincock.

NOTE: It is not necessary to remove draincock during a routine coolant drain.

(1) Drain the cooling system. (Refer to 7 - COOLING - STANDARD PROCEDURE)
(2) Open the draincock by turning it counterclockwise until it stops.
(3) Turn the draincock back (clockwise) 1/8 turn.
(4) Pull the draincock (Fig. 16) from the radiator tank.

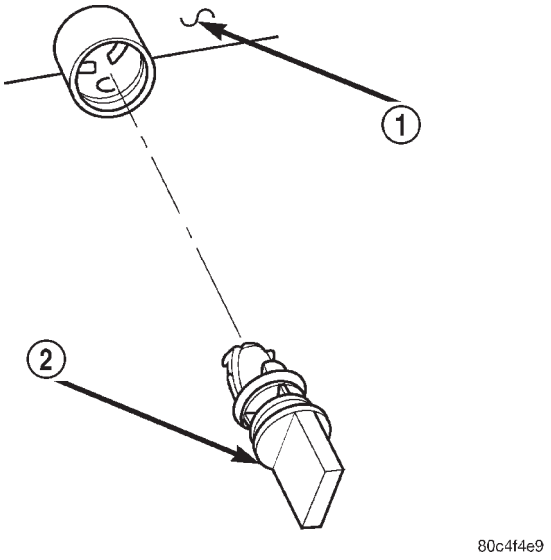

Fig. 16 Draincock

1 - RADIATOR TANK
2 - DRAINCOCK

INSTALLATION

(1) Align draincock stem to radiator tank opening.
(2) Push draincock into the radiator tank opening.
(3) Tighten the draincock by turning clockwise until it stops.
(4) Fill the cooling system. (Refer to 7 - COOLING - STANDARD PROCEDURE)

RADIATOR PRESSURE CAP

DESCRIPTION

The cooling system pressure cap is located on the radiator. The cap construction includes; stainless steel swivel top, rubber seals, and retainer, main spring, and a spring loaded valve (Fig. 17).

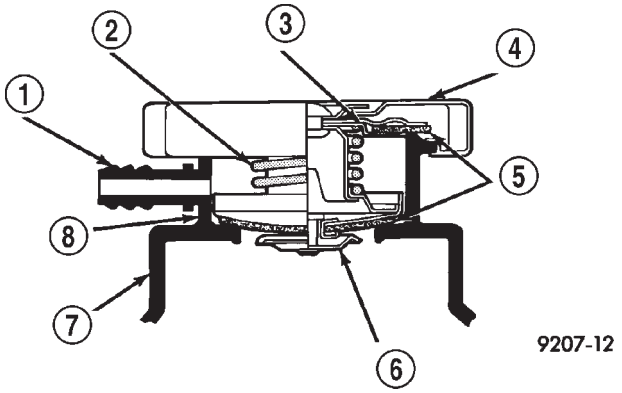

Fig. 17 Cooling System Pressure Cap Filler Neck

1 - OVERFLOW NIPPLE
2 - MAIN SPRING
3 - GASKET RETAINER
4 - STAINLESS-STEEL SWIVEL TOP
5 - RUBBER SEALS
6 - VENT VALVE
7 - RADIATOR
8 - FILLER NECK

OPERATION

The cooling system is equipped with a pressure cap that releases excessive pressure; maintaining a range of 97-124 kPa (14-18 psi).

The cooling system will operate at higher than atmospheric pressure. The higher pressure raises the coolant boiling point thus, allowing increased radiator cooling capacity.

There is also a vent valve in the center of the cap. This valve also opens when coolant is cooling and contracting, allowing the coolant to return to cooling system from coolant reserve system tank by vacuum through a connecting hose. **If valve is stuck shut, or the coolant recovery hose is pinched, the radiator hoses will be collapsed on cool down. Clean the vent valve (Fig. 17) and inspect coolant recovery hose routing, to ensure proper sealing when boiling point is reached.**

The gasket in the cap seals the filler neck, so that vacuum can be maintained, allowing coolant to be drawn back into the radiator from the reserve tank. **If the gasket is dirty or damaged, a vacuum may not be achieved, resulting is loss of coolant and eventual overheating due to low coolant level in radiator and engine.**

RADIATOR PRESSURE CAP (Continued)

DIAGNOSIS AND TESTING

DIAGNOSIS AND TESTING - COOLING SYSTEM PRESSURE CAP TESTING

Dip the pressure cap in water. Clean any deposits off the vent valve or its seat and apply cap to end of the Pressure Cap Test Adaptor that is included with the Cooling System Tester 7700 (Fig. 18). Working the plunger, bring the pressure to 104 kPa (15 psi) on the gauge. If the pressure cap fails to hold pressure of at least 97 kPa (14 psi), replace the pressure cap.

CAUTION: The Cooling System Tester Tool is very sensitive to small air leaks that will not cause cooling system problems. A pressure cap that does not have a history of coolant loss should not be replaced just because it leaks slowly when tested with this tool. Add water to the tool. Turn tool upside down and recheck pressure cap to confirm that cap is bad.

If the pressure cap tests properly while positioned on Cooling System Tester (Fig. 18), but will not hold pressure or vacuum when positioned on the filler neck. Inspect the filler neck and cap top gasket for irregularities that may prevent the cap from sealing properly.

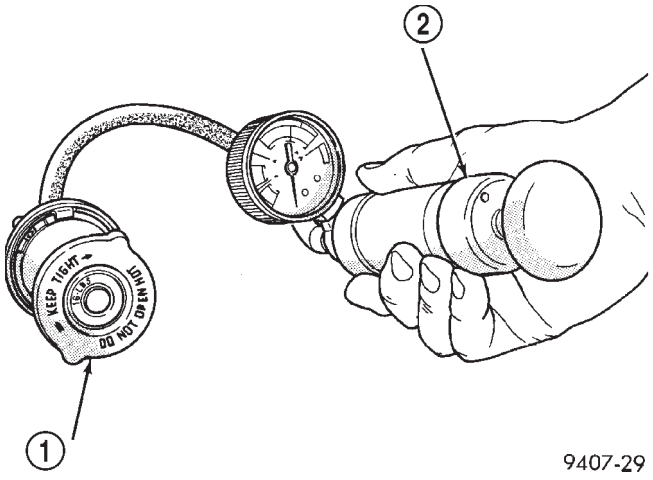

Fig. 18 Testing Cooling System Pressure Cap

1 - PRESSURE CAP
2 - PRESSURE TESTER

DIAGNOSIS AND TESTING - RADIATOR CAP TO FILLER NECK SEAL

The pressure cap upper gasket (seal) pressure relief can be checked by removing the overflow hose at the radiator filler neck nipple (Fig. 19). Attach the Radiator Pressure Tool to the filler neck nipple and pump air into the radiator. Pressure cap upper gasket should relieve at 69-124 kPa (10-18 psi) and hold pressure at 55 kPa (8 psi) minimum.

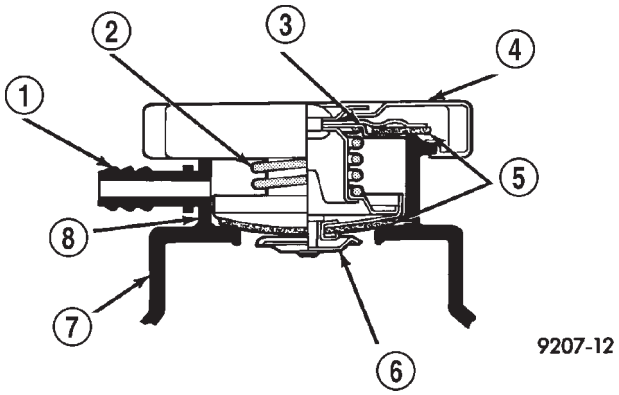

Fig. 19 Radiator Pressure Cap Filler Neck

1 - OVERFLOW NIPPLE
2 - MAIN SPRING
3 - GASKET RETAINER
4 - STAINLESS-STEEL SWIVEL TOP
5 - RUBBER SEALS
6 - VENT VALVE
7 - RADIATOR
8 - FILLER NECK

WARNING: THE WARNING WORDS "DO NOT OPEN HOT" ON THE RADIATOR PRESSURE CAP IS A SAFETY PRECAUTION. WHEN HOT, PRESSURE BUILDS UP IN COOLING SYSTEM. TO PREVENT SCALDING OR INJURY, THE RADIATOR CAP SHOULD NOT BE REMOVED WHILE THE SYSTEM IS HOT OR UNDER PRESSURE.

There is no need to remove the radiator cap at any time **except** for the following purposes:

(1) Check and adjust coolant freeze point.
(2) Refill system with new coolant.
(3) Conducting service procedures.
(4) Checking for vacuum leaks.

WARNING: IF VEHICLE HAS BEEN RUN RECENTLY, WAIT 15 MINUTES BEFORE REMOVING CAP. THEN PLACE A SHOP TOWEL OVER THE CAP AND WITHOUT PUSHING DOWN ROTATE COUNTERCLOCKWISE TO THE FIRST STOP. ALLOW FLUIDS TO ESCAPE THROUGH THE OVERFLOW TUBE AND WHEN THE SYSTEM STOPS PUSHING COOLANT AND STEAM INTO THE CRS TANK AND PRESSURE DROPS PUSH DOWN AND REMOVE THE CAP COMPLETELY. SQUEEZING THE RADIATOR INLET HOSE WITH A SHOP TOWEL (TO CHECK PRESSURE) BEFORE AND AFTER TURNING TO THE FIRST STOP IS RECOMMENDED.

RADIATOR PRESSURE CAP (Continued)

CLEANING

Use only a mild soap to clean the pressure cap.

INSPECTION

Hold the cap in your hand, **top side up** (Fig. 20). The vent valve at the bottom of the cap should open. If the rubber gasket has swollen, preventing the valve from opening, replace the cap.

Hold the cleaned cap in your hand, **upside down.** If any light can be seen between vent valve and the rubber gasket, replace the cap. **Do not use a replacement cap that has a spring to hold the vent shut.**

A replacement cap must be of the type designed for coolant reserve systems. This design ensures coolant return to the radiator.

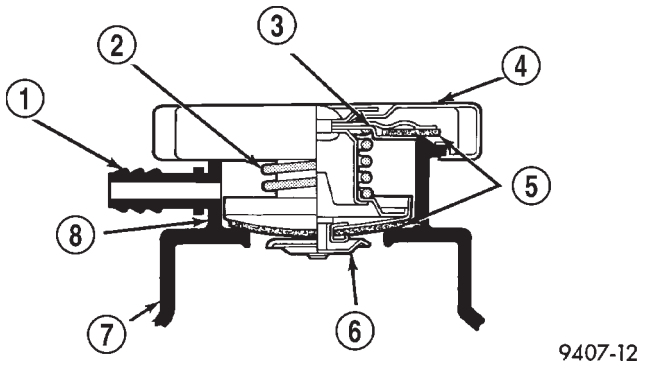

Fig. 20 Cooling System Pressure Cap

1 - OVERFLOW NIPPLE
2 - MAIN SPRING
3 - GASKET RETAINER
4 - STAINLESS-STEEL SWIVEL TOP
5 - RUBBER SEALS
6 - VENT VALVE
7 - RADIATOR
8 - FILLER NECK

RADIATOR FAN

DESCRIPTION

The dual radiator fans are mounted to the back side of the radiator (Fig. 21). The radiator fan consist of the fan blade, electric motor and a support shroud which are all serviced as an assembly.

OPERATION

RADIATOR FAN OPERATION CHART

COOLANT TEMPERATURE			A/C PRESSURE		TRANSAXLE OIL TEMPERATURE	
Fan Operation Speeds:	Initial	Max	Initial	Max	Initial	Max
Fan On:	104°C (220°F)	110°C (230°F) Fan Speed Duty-Cycles (Ramps-up) from 30% to 99%	1,724 Kpa (250 psi)	2,068 Kpa (300 psi) Fan Speed Duty-Cycles (Ramps-up) from 30% to 99%	96°C (204°F)	111°C (232°F) Fan Speed Duty Cycles (Ramps-up) from 30% to 99%
Fan Off:	101°C (214°F)	Fan Speed Duty-Cycles (Ramps-down) from 99% to 30%	1,710 Kpa (248 psi)	Fan Speed Duty-Cycles (Ramps-down) from 99% to 30%	89°C (192°F)	Fan Speed Duty Cycles (Ramps-down) from 99% to 30%

RADIATOR FAN (Continued)

DIAGNOSIS AND TESTING - RADIATOR FAN MOTOR

RADIATOR FAN DIAGNOSIS CHART

CONDITION	POSSIBLE CAUSES	CORRECTION
NOISY RADIATOR FAN	1. Fan blade loose.	1. Replace fan assembly. (Refer to 7 - COOLING/ENGINE/RADIATOR FAN - REMOVAL)
	2. Fan blade striking a surrounding object.	2. Locate point of fan blade contact and repair as necessary.
	3. Air obstructions at radiator or A/C condenser.	3. Remove obstructions and/or clean debris.
	4. Electric fan motor defective.	4. Replace fan assembly. (Refer to 7 - COOLING/ENGINE/RADIATOR FAN - REMOVAL)
ELECTRIC FAN MOTOR DOES NOT OPERATE	1. Fan relay, powertrain control module (PCM), coolant temperature sensor, or wiring defective.	1. (Refer to Appropriate Diagnostic Information) Repair as necessary.
	2. Defective A/C pressure transducer.	2. (Refer to Appropriate Diagnostic Information) Repair as necessary.
ELECTRIC RADIATOR FAN OPERATES ALL THE TIME	1. Fan relay, powertrain control module (PCM), coolant temperature sensor or wiring defective.	1. (Refer to Appropriate Diagnostic Information) Repair as necessary.
	2. Check for low coolant level.	2. Add coolant as necessary.
	3. Defective A/C pressure transducer.	3. (Refer to Appropriate Diagnostic Information) Repair as necessary.

REMOVAL

There are no repairs to be made to the fan or shroud assembly. If the fan is warped, cracked, or otherwise damaged, it must be replaced as an assembly (Fig. 21).

(1) Remove the radiator upper crossmember. (Refer to 23 - BODY/EXTERIOR/GRILLE OPENING REINFORCEMENT - REMOVAL)

(2) Disconnect the radiator fan electrical connectors.

(3) Remove radiator fan(s) retaining screw (Fig. 21).

(4) Remove the radiator fan(s) by lifting upward to release from mounts.

INSTALLATION

(1) Install the radiator fan(s) into mounts and attaching clips on the radiator.

(2) Install radiator fan(s) attaching screws (Fig. 21). Tighten to 5 N·m (45 in. lbs.).

(3) Connect the radiator fan(s) electrical connectors.

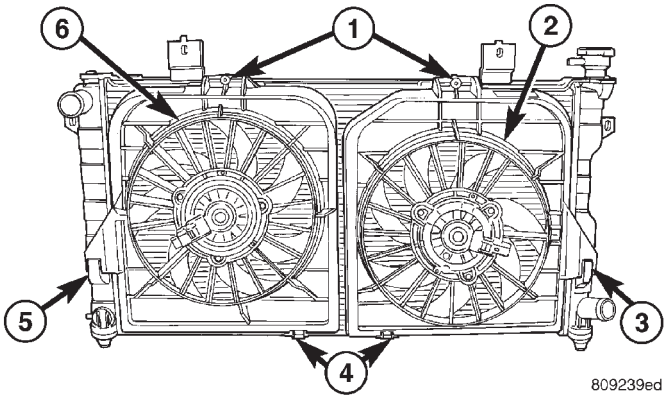

Fig. 21 Radiator Fans

1 - SCREWS - RADIATOR FAN ATTACHING
2 - RADIATOR FAN - RIGHT
3 - MOUNT - RIGHT RADIATOR FAN
4 - CLIPS - RADIATOR FAN LOWER
5 - MOUNT - LEFT RADIATOR FAN
6 - RADIATOR FAN - LEFT

(4) Install the radiator upper support crossmember. (Refer to 23 - BODY/EXTERIOR/GRILLE OPENING REINFORCEMENT - INSTALLATION)

(5) Install the upper radiator mounts to the crossmember bolts, if removed. Tighten to 8 N·m (70 in. lbs.).

(6) Install the radiator upper hose to the support clip (2.4L engine).

RADIATOR FAN RELAY

DESCRIPTION

The radiator fan relay is a solid state type and is located on the front bumper reinforcment (Fig. 22). Refer to WIRING DIAGRAMS for a circuit schematic.

OPERATION

The solid state radiator fan relay is controlled by the Powertrain Control Module (PCM) by way of a Pulse Width Modulated (PWM) signal. The relay control circuit supplies a 12 volt signal to the PCM. The PCM then pulses the ground circuit to achieve fan on time. The relay provides a voltage to the fan motors which is proportional to the pulse width it receives from the PCM. The duty cycle ranges from 30% for low speed operation, then ramps-up to 100% for high speed operation. This fan control system provides infinitely variable fan speeds, allowing for improved fan noise, A/C performance, better engine cooling, and additional vehicle power.

To control operation of the relay, the PCM looks at inputs from:

- Engine coolant temperature
- A/C pressure transducer
- Ambient temperature from the body controller
- Vehicle speed
- Transmission oil temperature

The PCM uses these inputs to determine when the fan should operate and at what speed. For further information on fan operation, (Refer to 7 - COOLING/ENGINE/RADIATOR FAN - OPERATION).

REMOVAL

(1) Open hood.

(2) Disconnect and isolate the battery negative cable.

(3) Remove the radiator crossmember to front fascia closure panel.

(4) Disconnect the relay electrical connector (Fig. 22).

(5) Remove the rivet attaching the relay to the front bumper beam (Fig. 22).

(6) Remove the relay.

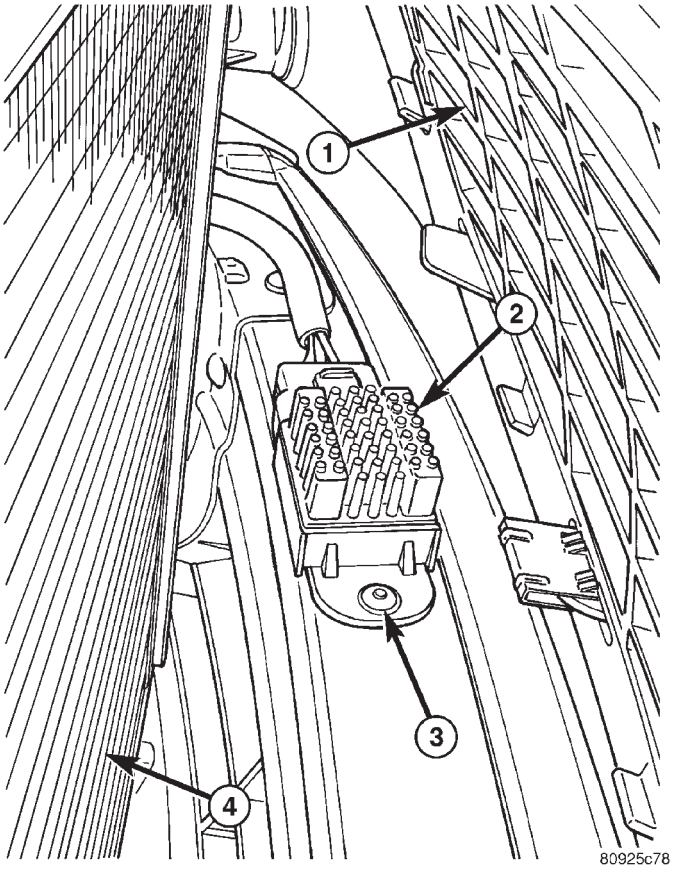

Fig. 22 Radiator Fan Relay

1 - FRONT FASCIA
2 - FAN RELAY
3 - RIVET
4 - A/C CONDENSER (FRONT SIDE)

INSTALLATION

CAUTION: The relay mounting location is designed to dissipate heat. Ensure the relay is securely attached to prevent relay “thermal” shutdown and relay damage, resulting in possible engine overheating.

(1) Position relay and install a new rivet (Fig. 22).

(2) Connect electrical connector to relay.

(3) Install closure panel and attaching screws.

(4) Connect negative cable to battery.

WATER PUMP - 2.4L

DESCRIPTION

The water pump has a cast aluminum body and housing with a stamped steel impeller. The water pump bolts directly to the block (Fig. 23). The cylinder block to water pump seal is provided by a rubber O-ring. The water pump is driven by the engine timing belt.

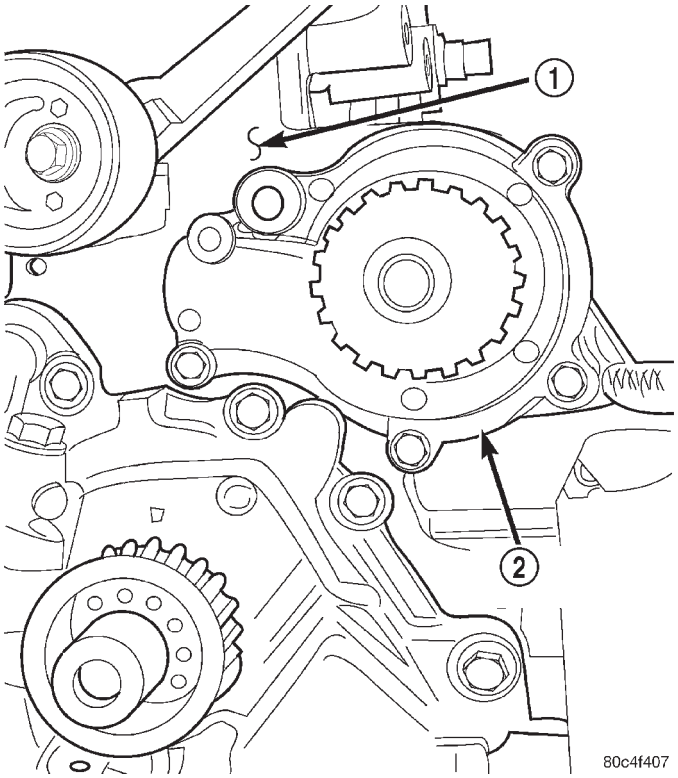

Fig. 23 Water Pump

1 - CYLINDER BLOCK
2 - WATER PUMP

OPERATION

The water pump is the heart of the cooling system. The coolant is pumped through the engine block, cylinder head, heater core, and radiator.

REMOVAL

(1) Disconnect negative cable from battery.
(2) Raise vehicle on a hoist.
(3) Remove the right inner splash shield.
(4) Remove the accessory drive belts (Refer to 7 - COOLING/ACCESSORY DRIVE/DRIVE BELTS - REMOVAL).
(5) Drain the cooling system (Refer to 7 - COOLING - STANDARD PROCEDURE).
(6) Support engine from the bottom and remove right engine mount. (Refer to 9 - ENGINE/ENGINE MOUNTING/RIGHT MOUNT - REMOVAL).
(7) Remove right engine mount bracket (Fig. 24).
(8) Remove the timing belt (Refer to 9 - ENGINE/VALVE TIMING/TIMING BELT AND SPROCKET(S) - REMOVAL).
(9) Remove timing belt idler pulley.
(10) Hold camshaft sprocket with Special tool C-4687 and adaptor C-4687-1 while removing bolt. Remove both cam sprockets.
(11) Remove the timing belt rear cover (Refer to 9 - ENGINE/VALVE TIMING/TIMING BELT COVER(S) - REMOVAL).
(12) Remove the generator and bracket (Fig. 24).
(13) Remove water pump to engine attaching screws (Fig. 25).

CLEANING

Clean gasket mating surfaces as necessary.

INSPECTION

Replace water pump body assembly if it has any of these defects:
(1) Cracks or damage on the body.
(2) Coolant leaks from the shaft seal, evident by wet coolant traces on the pump body.
(3) Loose or rough turning bearing.
(4) Impeller rubs either the pump body or the engine block.
(5) Impeller loose or damaged.
(6) Sprocket or sprocket flange loose or damaged.

INSTALLATION

(1) Install new O-ring gasket in water pump body O-ring locating groove (Fig. 26).

CAUTION: Make sure O-ring is properly seated in water pump groove before tightening screws. An improperly located O-ring may be damaged and cause a coolant leak.

(2) Assemble pump body to block and tighten screws to 12 N·m (105 in. lbs.) (Fig. 25). Pressurize cooling system to 103.4 Kpa (15 psi) with pressure tester and check water pump shaft seal and O-ring for leaks.
(3) Rotate pump by hand to check for freedom of movement.
(4) Install the timing belt rear cover (Refer to 9 - ENGINE/VALVE TIMING/TIMING BELT COVER(S) - INSTALLATION).
(5) Install camshaft sprockets and torque bolts to 101 N·m (75 ft. lbs.) while holding camshaft sprocket with Special tool C-4687 and adaptor C-4687-1.
(6) Install timing belt idler pulley and torque mounting bolt to 61 N·m (45 ft. lbs.).

WATER PUMP - 2.4L (Continued)

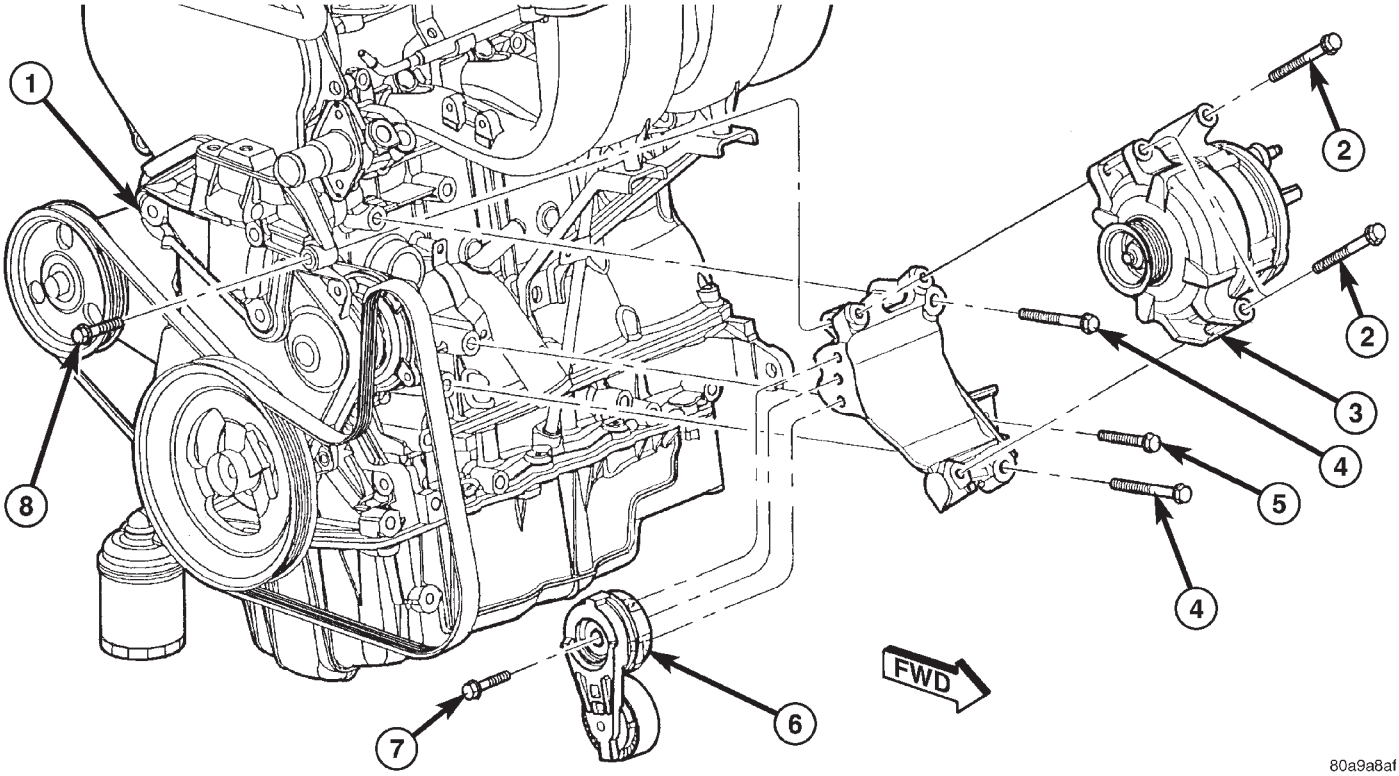

Fig. 24 Generator Bracket

1 - BRACKET - ENGINE MOUNT
2 - BOLT
3 - GENERATOR
4 - BOLT
5 - BOLT
6 - TENSIONER - DRIVE BELT
7 - BOLT
8 - BOLT

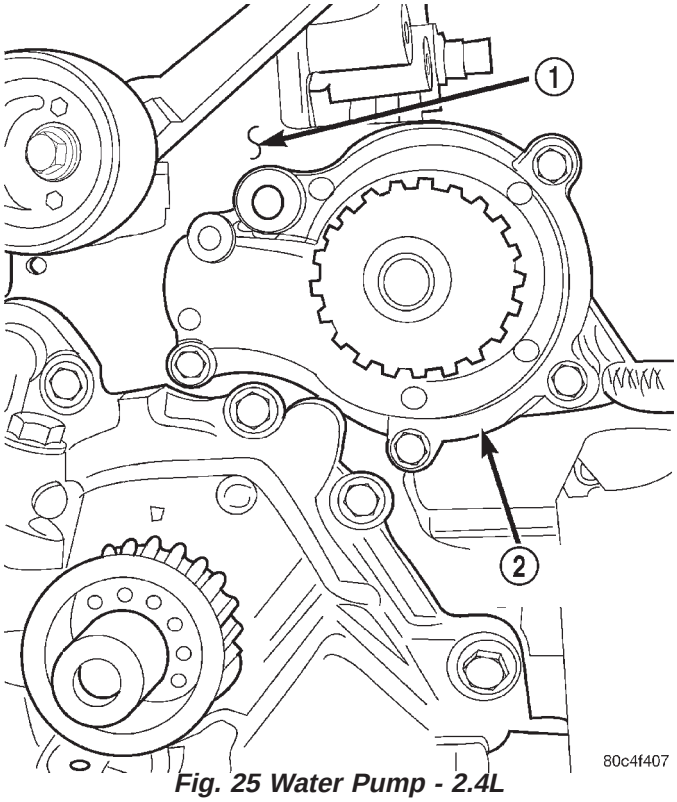

Fig. 25 Water Pump - 2.4L

1 - CYLINDER BLOCK
2 - WATER PUMP

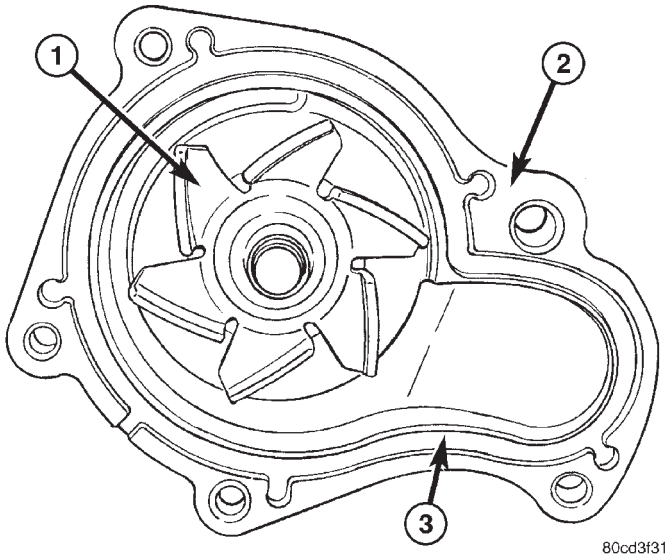

Fig. 26 Water Pump Body

1 - IMPELLER
2 - WATER PUMP BODY
3 - O-RING LOCATING GROOVE

WATER PUMP - 2.4L (Continued)

(7) Install the timing belt (Refer to 9 - ENGINE/VALVE TIMING/TIMING BELT AND SPROCKET(S) - INSTALLATION).

(8) Install the generator mount bracket. (Fig. 24)

(9) Install the generator.

(10) Install right engine mount bracket and engine mount (Refer to 9 - ENGINE/ENGINE MOUNTING/RIGHT MOUNT - INSTALLATION).

(11) Fill the cooling system (Refer to 7 - COOLING - STANDARD PROCEDURE).

(12) Install the accessory drive belts (Refer to 7 - COOLING/ACCESSORY DRIVE/DRIVE BELTS - INSTALLATION).

(13) Lower vehicle and connect battery cable.

WATER PUMP - 3.3/3.8L

DESCRIPTION

The water pump has a die-cast aluminum body and a plastic impeller. It bolts directly to the timing chain case cover, using a rubber seal for sealing (Fig. 27). It is driven by the accessory drive belt.

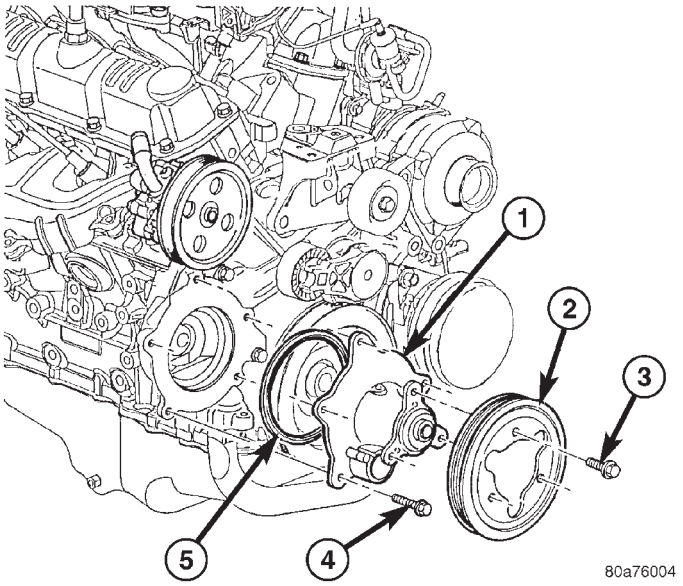

Fig. 27 Water Pump - 3.3/3.8L Engine

1 - WATER PUMP
2 - PULLEY - WATER PUMP
3 - BOLT - PULLEY
4 - BOLT - WATER PUMP
5 - SEAL - WATER PUMP

OPERATION

The water pump is the heart of the cooling system. The coolant is pumped through the engine block, cylinder head, heater core, and radiator.

REMOVAL

(1) Drain the cooling system. (Refer to 7 - COOLING - STANDARD PROCEDURE)

(2) Remove the accessory drive belt shield.

(3) Remove the accessory drive belt. (Refer to 7 - COOLING/ACCESSORY DRIVE/DRIVE BELTS - REMOVAL)

(4) Remove water pump pulley bolts (Fig. 27).

NOTE: To remove the water pump pulley, it MUST first be positioned between water pump housing and drive hub. The pulley can then be removed with the water pump assembly.

(5) Rotate pulley until openings in pulley align with water pump drive hub spokes (Fig. 28). Move pulley inward between pump housing and hub (Fig. 28).

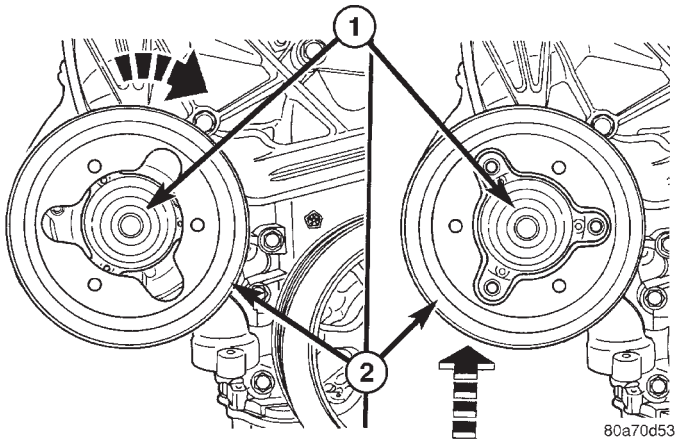

Fig. 28 Water Pump Pulley Positioning

1 - HUB - WATER PUMP
2 - PULLEY - WATER PUMP

(6) Position pulley to allow access to water pump mounting bolts. Remove water pump mounting bolts (Fig. 29).

(7) Remove water pump with the pulley loosely positioned between hub and the pump body.

(8) Remove and discard the seal.

WATER PUMP - 3.3/3.8L (Continued)

(9) Clean seal groove and sealing surfaces on pump and timing chain case cover. Take care not to scratch or gouge sealing surfaces.

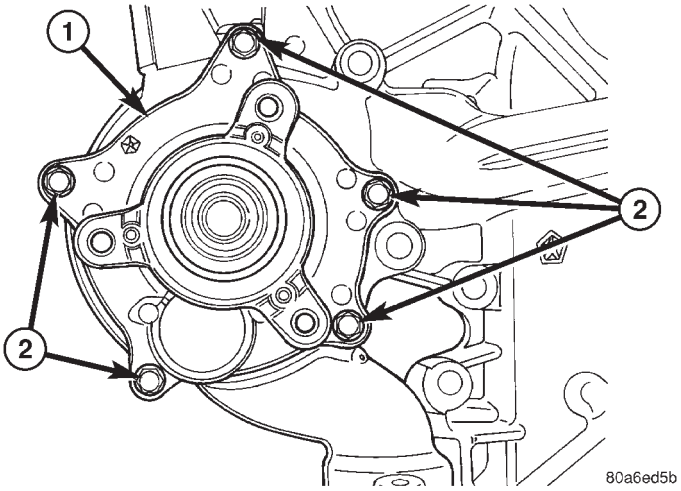

Fig. 29 Water Pump Bolts - 3.3/3.8L Engine (Shown Without Pulley)

1 - WATER PUMP
2 - BOLTS

CLEANING

Clean gasket mating surfaces as necessary.

INSPECTION

Replace the water pump if it has any of the following defects.

(1) Damage or cracks on the pump body.

(2) Coolant leaks; this will be evident by a wet stream of coolant running down the pump body and components below. A thin stain below the weep hole reservoir slot (Fig. 30) is considered normal operation.

(3) Impeller rubs inside of chain case cover.

(4) Excessively loose or rough turning bearing.

NOTE: A weepage stain that is black, brown, or grey is considered normal, if it is dry. If the weep appears wet; pressure test the cooling system at 15–18 psi and observe the weep area. If weep area remains unchanged, do not replace the water pump for this condition. Replace the water pump, if a steady flow of engine coolant is evident from the weep hole/reservoir slot (Fig. 30) (shaft seal failure). Be sure to perform a thorough analysis before replacing water pump.

INSTALLATION

(1) Install new seal into water pump housing groove (Fig. 31).

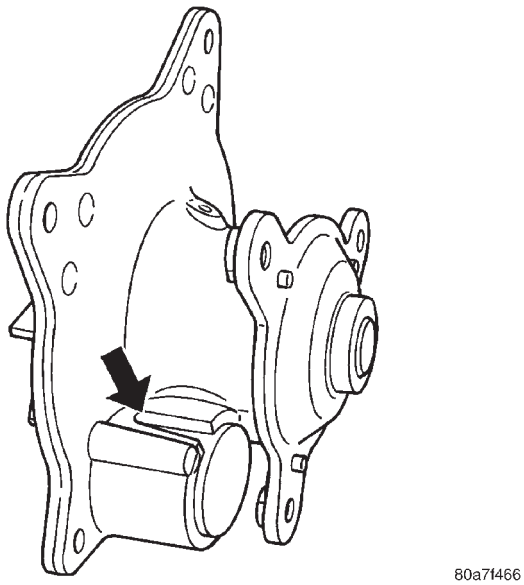

Fig. 30 Water Pump Inspection - 3.3/3.8L Engine

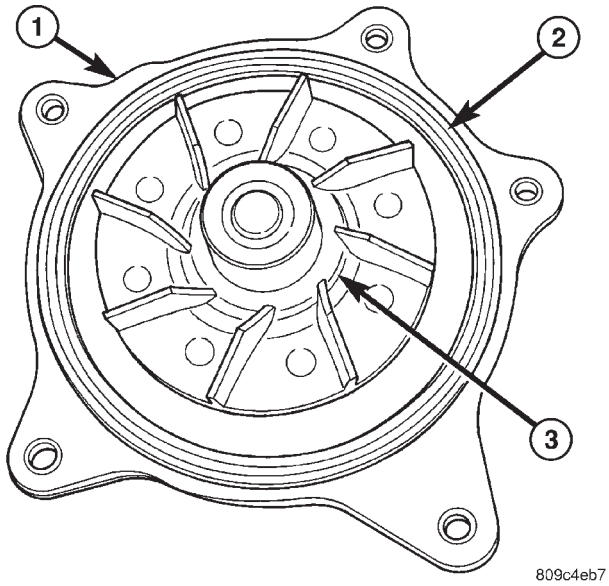

Fig. 31 Water Pump Seal

1 - WATER PUMP HOUSING
2 - SEAL
3 - IMPELLER

NOTE: The water pump pulley MUST be positioned loosely between the pump housing and drive hub BEFORE water pump installation.

(2) Position the water pump pulley loosely between pump housing and drive hub (Fig. 28).

(3) Install water pump and pulley to the timing chain case cover (Fig. 27). Tighten water pump bolts to 12 N·m (105 in. lbs.).

(4) Position pulley on water pump hub. Install bolts and tighten to 28 N·m (250 in. lbs.) (Fig. 27).

WATER PUMP - 3.3/3.8L (Continued)

(5) Rotate pump by hand to check for freedom of movement.

(6) Install the accessory drive belt. (Refer to 7 - COOLING/ACCESSORY DRIVE/DRIVE BELTS - INSTALLATION)

(7) Install drive belt shield.

(8) Fill the cooling system. (Refer to 7 - COOLING - STANDARD PROCEDURE)

WATER PUMP INLET TUBE - 2.4L

DESCRIPTION

The 2.4L engine uses a metal tube to connect the engine block to the lower radiator hose and heater return (Fig. 32). The tube has an O-ring for block to tube sealing and bolts attach the tube to the engine block.

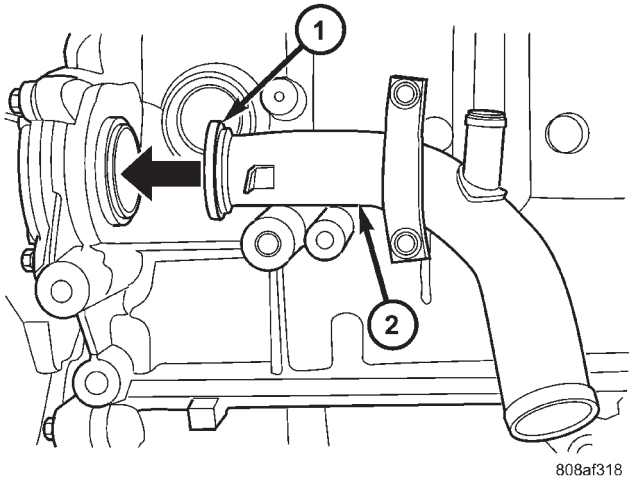

Fig. 32 Water Pump Inlet Tube—2.4L Engine

1 - O-RING
2 - WATER PUMP INLET TUBE

REMOVAL

(1) Drain the cooling system. (Refer to 7 - COOLING - STANDARD PROCEDURE)

(2) Remove radiator upper hose to access the hose connections at the inlet tube.

(3) Remove radiator lower (Fig. 7) and heater hoses from the inlet tube (Fig. 33).

(4) Remove the two fasteners that hold the inlet tube to the block.

(5) Rotate tube while removing the tube from the engine block.

INSTALLATION

(1) Inspect the O-ring for damage before installing the tube into the cylinder block (Fig. 32).

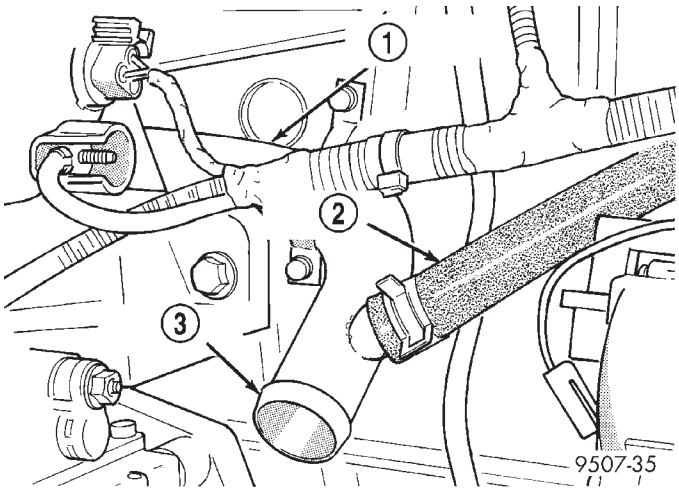

Fig. 33 Water Pump Inlet Tube Hose Connections

1 - WATER PUMP INLET TUBE
2 - HOSE - HEATER RETURN
3 - COOLANT INLET

(2) Lube O-ring with coolant and install inlet tube into the cylinder block opening (Fig. 32).

(3) Install the two inlet tube fasteners and tighten to 12 N·m (105 in. lbs.).

(4) Connect the radiator lower hose (Fig. 7) and heater hose to inlet tube (Fig. 33).

(5) Install the radiator upper hose.

(6) Fill the cooling system. (Refer to 7 - COOLING - STANDARD PROCEDURE)

WATER PUMP INLET TUBE - 3.3/3.8L

REMOVAL

(1) Drain the cooling system. (Refer to 7 - COOLING - STANDARD PROCEDURE)

(2) Raise vehicle on hoist and remove the belt splash shield.

(3) Remove the radiator lower hose from inlet tube (Fig. 34).

(4) Remove the oil cooler outlet/heater return hose from inlet tube (only if equipped with engine oil cooler) (Fig. 35).

(5) Remove the inlet tube bolts (Fig. 36).

(6) Remove the inlet tube (Fig. 36). Discard the O-ring seal.

INSTALLATION

(1) Clean the inlet tube O-ring sealing surfaces on the timing cover housing and tube.

(2) Apply Mopar® Dielectric Grease or equivalent to the O-ring before installation.

(3) Position new O-ring seal on inlet tube (Fig. 36).

WATER PUMP INLET TUBE - 3.3/3.8L (Continued)

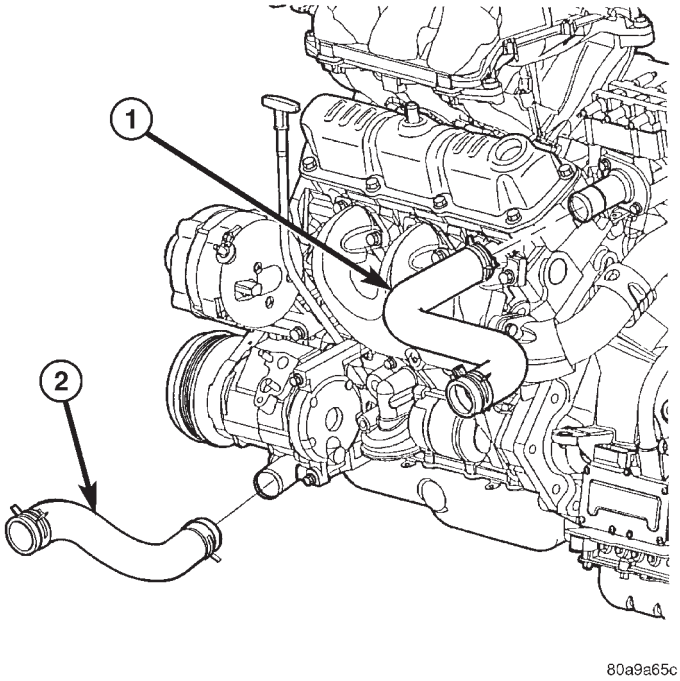

Fig. 34 RAD HOSES TO ENGINE - 3.3/3.8L

1 - UPPER HOSE
2 - LOWER HOSE

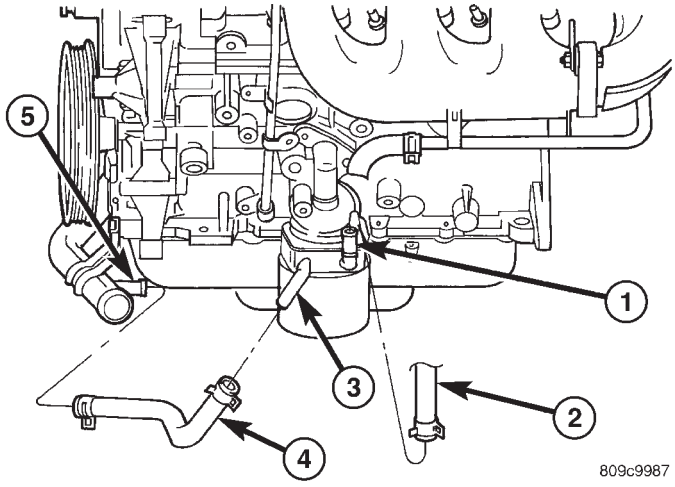

Fig. 35 Engine Oil Cooler Hoses (Engine Oil Cooler Equipped)

1 - OIL COOLER INLET TUBE
2 - INLET HOSE
3 - OIL COOLER OUTLET TUBE
4 - OUTLET HOSE
5 - WATER PUMP INLET TUBE

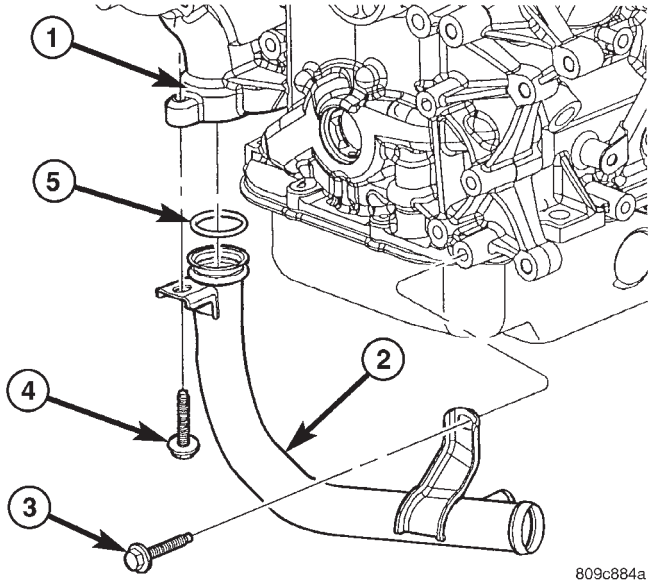

Fig. 36 WATER PUMP INLET TUBE

1 - TIMING CHAIN COVER
2 - INLET TUBE
3 - BOLT
4 - BOLT
5 - O-RING

(4) Install the inlet tube (Fig. 36). Tighten bolts to 28 N·m (250 in. lbs.).

(5) Connect radiator lower hose (Fig. 34) and heater return hose (if equipped with engine oil cooler) (Fig. 35) to the inlet tube.

(6) Install the drive belt splash shield and lower vehicle.

(7) Fill the cooling system. (Refer to 7 - COOLING - STANDARD PROCEDURE)

TRANSMISSION

TABLE OF CONTENTS

page

TRANSMISSION
STANDARD PROCEDURE - FLUSHING COOLERS AND TUBES 38
TRANSMISSION OIL COOLER
DESCRIPTION 38
REMOVAL 38
CLEANING 39
INSPECTION 39
INSTALLATION 39
TRANSMISSION OIL COOLER LINES
REMOVAL 39
INSTALLATION 40

TRANSMISSION

STANDARD PROCEDURE - FLUSHING COOLERS AND TUBES

The recommended procedure for cooler flushing is to use Tool 6906 Cooler Flusher.

WARNING: WEAR PROTECTIVE EYEWEAR THAT MEETS THE REQUIREMENTS OF OSHA AND ANSI Z87.1–1968. WEAR STANDARD INDUSTRIAL RUBBER GLOVES. KEEP LIT CIGARETTES, SPARKS, FLAMES, AND OTHER IGNITION SOURCES AWAY FROM THE AREA TO PREVENT THE IGNITION OF COMBUSTIBLE LIQUIDS AND GASES. KEEP A CLASS (B) FIRE EXTINGUISHER IN THE AREA WHERE THE FLUSHER WILL BE USED.

WARNING: KEEP THE AREA WELL VENTILATED. DO NOT LET FLUSHING SOLVENT COME IN CONTACT WITH YOUR EYES OR SKIN: IF EYE CONTAMINATION OCCURS, FLUSH EYES WITH WATER FOR 15 TO 20 SECONDS. REMOVE CONTAMINATED CLOTHING AND WASH AFFECTED SKIN WITH SOAP AND WATER. SEEK MEDICAL ATTENTION.

(1) Remove cover plate filler plug on Tool 6906. Fill reservoir 1/2 to 3/4 full of fresh flushing solution. Use Mopar® Transmission Cooler Flush (MS-552) or equivalent solution conforming to MS-552. Flushing solvents are petroleum based solutions generally used to clean automatic transmission components. **DO NOT** use solvents containing acids, water, gasoline, or any other corrosive liquids.

(2) Reinstall filler plug on Tool 6906.

(3) Verify pump power switch is turned OFF. Connect red alligator clip to positive (+) battery post. Connect black (-) alligator clip to a good ground.

NOTE: When flushing transmission cooler and lines, ALWAYS reverse flush.

(4) Connect the BLUE pressure line to the OUTLET (From) cooler line.

(5) Connect the CLEAR return line to the INLET (To) cooler line

(6) Turn pump ON for two to three minutes to flush cooler and lines.

(7) Turn pump OFF.

(8) Disconnect CLEAR suction line from reservoir at cover plate. Disconnect CLEAR return line at cover plate, and place it in a drain pan.

(9) Turn pump ON for 30 seconds to purge flushing solution from cooler and lines. Turn pump OFF.

(10) Place CLEAR suction line into a one quart container of Mopar® ATF+4 (Automatic Transmission Fluid—Type 9602).

(11) Turn pump ON until all transmission fluid is removed from the one quart container and lines. This purges any residual cleaning solvent from the transmission cooler and lines. Turn pump OFF.

(12) Disconnect alligator clips from battery. Reconnect flusher lines to cover plate, and remove flushing adapters from cooler lines.

TRANSMISSION OIL COOLER

DESCRIPTION

The transmission oil cooler is an oil-to-air type cooler that is mounted between the front of the radiator and back side of the A/C condenser (Fig. 2). Use only approved transmission oil cooler hoses that are molded to fit the space available.

REMOVAL

(1) Remove the radiator. (Refer to 7 - COOLING/ENGINE/RADIATOR - REMOVAL)

(2) Disconnect lines from oil cooler (Fig. 1).

(3) Remove oil cooler attaching screws (Fig. 2).

(4) Remove the oil cooler.

TRANSMISSION OIL COOLER (Continued)

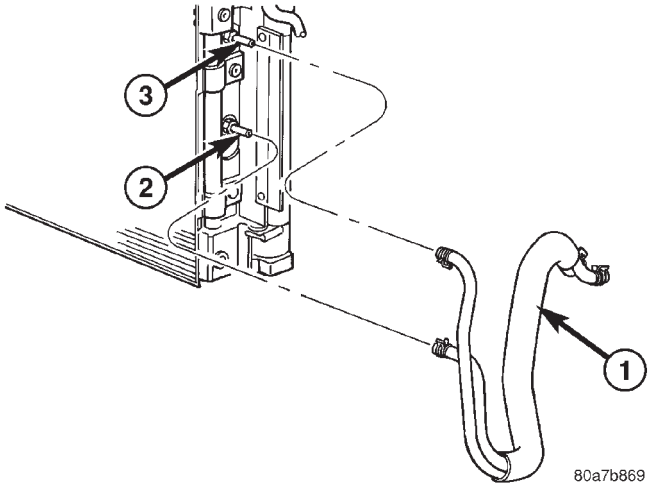

Fig. 1 TRANSMISSION COOLER HOSES

1 - TRANSAXLE COOLER HOSES
2 - FITTING - COOLER OUTLET
3 - FITTING - COOLER INLET

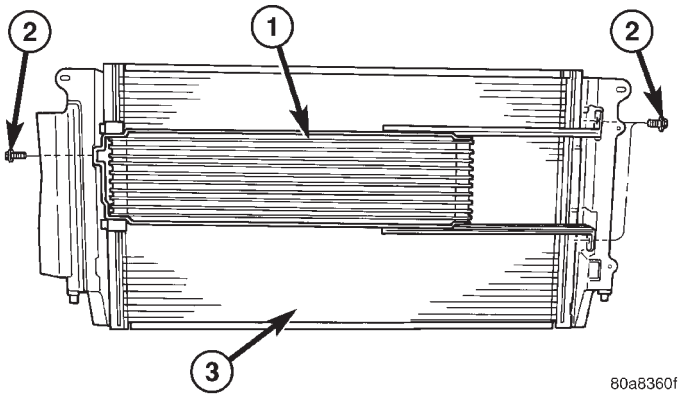

Fig. 2 Transmission Oil Cooler

1 - TRANSAXLE OIL COOLER
2 - SCREWS
3 - A/C CONDENSER (REAR SIDE)

CLEANING

Check the external cooler for debris on the cooling fin surfaces. Clean as necessary. For internal cleaning/flushing procedures, (Refer to 7 - COOLING/ TRANSMISSION - STANDARD PROCEDURE).

INSPECTION

Inspect all hoses, tubes, clamps and connections for leaks, cracks, or damage. Replace as necessary. Use only approved transmission oil cooler hoses that are molded to fit the space available.

Inspect external coolers for leaks, loose mounts, or damage. Replace as necessary.

INSTALLATION

(1) Install transaxle oil cooler and mounting screws (Fig. 2).

NOTE: When replacing the transmission oil cooler, the cooler hoses must be replaced.

(2) Connect the new cooler hoses and install clamps (Fig. 1).
(3) Install the radiator. (Refer to 7 - COOLING/ ENGINE/RADIATOR - INSTALLATION)
(4) Start engine. Check and adjust the fluid level as necessary.

TRANSMISSION OIL COOLER LINES

REMOVAL

(1) Using appropriate hose clamp pliers, release tension on clamps and move off fittings.

NOTE: When the transaxle cooler lines are removed from the rolled-groove type fittings at the cooler and transaxle, damage to the inner wall of hose will occur. To prevent potential leakage, the cooler hoses must be replaced.

(2) Remove the hoses (Fig. 3) or (Fig. 4).

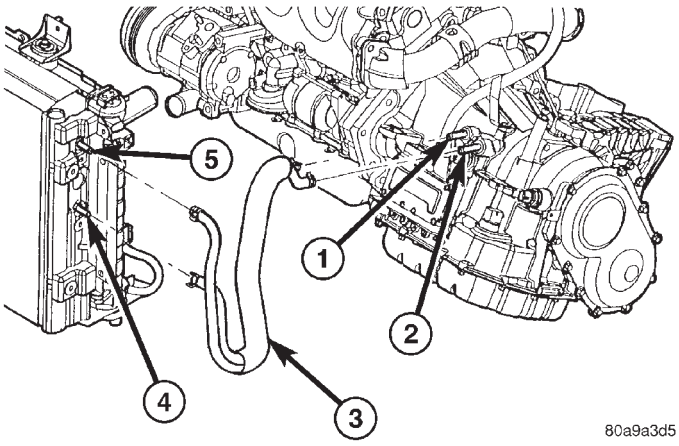

Fig. 3 TRANS OIL COOLER LINES - 41TE

1 - FITTING - COOLER RETURN
2 - FITTING - COOLER SUPPLY
3 - HOSES - TRANSAXLE COOLER
4 - FITTING - COOLER OUTLET
5 - FITTING - COOLER INLET

TRANSMISSION OIL COOLER LINES (Continued)

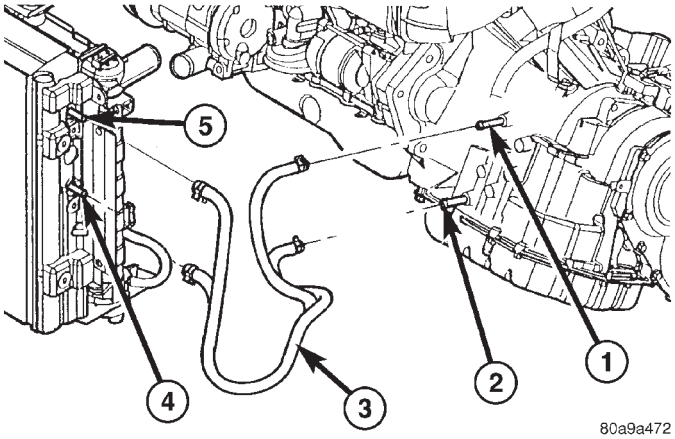

Fig. 4 TRANSAXLE OIL COOLER LINES - 31TH

1 - FITTING - COOLER RETURN
2 - FITTING - COOLER SUPPLY
3 - HOSES - TRANSAXLE COOLER
4 - FITTING - COOLER OUTLET
5 - FITTING - COOLER INLET

INSTALLATION

NOTE: When the transaxle cooler lines are removed from the rolled-groove type fittings at the cooler and transaxle, damage to the inner wall of hose will occur. To prevent potential leakage, the cooler hoses must be replaced.

(1) Connect hoses to cooler and transaxle fittings (Fig. 3) or (Fig. 4).

(2) Using appropriate pliers, position clamps over fittings and release tension.

(3) Start engine and check transaxle fluid level. Adjust fluid level as necessary.

COOLING 2.5L TURBO DIESEL

TABLE OF CONTENTS

page

COOLING 2.5L TURBO DIESEL
DESCRIPTION - COOLING SYSTEM 1
DIAGNOSIS AND TESTING
DIAGNOSIS AND TESTING - COOLING SYSTEM 1
DIAGNOSIS AND TESTING - COOLING SYSTEM LEAK TEST 6
DIAGNOSIS AND TESTING - COOLING SYSTEM FLOW CHECK 7
DIAGNOSIS AND TESTING - COOLING SYSTEM AERATION 7
CLEANING 7
INSPECTION 7
SPECIFICATIONS
SPECIFICATIONS - TORQUE 8
SPECIFICATIONS - COOLING SYSTEM CAPACITY 8
ACCESSORY DRIVE 9
ENGINE 14

COOLING 2.5L TURBO DIESEL

DESCRIPTION - COOLING SYSTEM

The cooling system regulates engine operating temperature. It allows the engine to reach normal operating temperature as quickly as possible, maintains normal operating temperature and prevents overheating.

The cooling system also provides a means of heating the passenger compartment. The cooling system is pressurized and uses a centrifugal water pump to circulate coolant throughout the system. A separate and remotely mounted, pressurized coolant tank using a pressure/vent cap is used.

COOLING SYSTEM COMPONENTS

The cooling system consists of:

- Charge Air Cooler
- Electric Cooling Fans
- A aluminum-core radiator with plastic side tanks
- A separate pressurized coolant tank
- A pressure/vent cap on the coolant tank
- Fan shroud
- Thermostat
- Coolant
- Low coolant warning lamp
- Coolant temperature gauge
- Water pump
- Hoses and hose clamps

DIAGNOSIS AND TESTING

DIAGNOSIS AND TESTING - COOLING SYSTEM

Establish what driving conditions caused the complaint. Abnormal loads on the cooling system such as the following may be the cause:

(1) PROLONGED IDLE, VERY HIGH AMBIENT TEMPERATURE, SLIGHT TAIL WIND AT IDLE, SLOW TRAFFIC, TRAFFIC JAMS, HIGH SPEED OR STEEP GRADES.

Driving techniques that avoid overheating are:

- Idle with A/C off when temperature gauge is at end of normal range.
- Increasing engine speed for more air flow is recommended.

(2) TRAILER TOWING:

Consult Trailer Towing section of owners manual. Do not exceed limits.

(3) RECENT SERVICE OR ACCIDENT REPAIR:

Determine if any recent service has been performed on vehicle that may effect cooling system. This may be:

- Engine adjustments (incorrect timing)
- Slipping engine accessory drive belt
- Brakes (possibly dragging)
- Changed parts (incorrect water pump)
- Reconditioned radiator or cooling system refilling (possibly under filled or air trapped in system).

NOTE: If investigation reveals none of the previous items as a cause for an engine overheating complaint, refer to following Cooling System Diagnosis charts.

These charts are to be used as a quick-reference only.

COOLING 2.5L TURBO DIESEL (Continued)

COOLING SYSTEM DIAGNOSIS-DIESEL ENGINE

CONDITION	POSSIBLE CAUSES	CORRECTION
TEMPERATURE GAUGE READS LOW	1. Diesel engines, due to their inherent effiency are slower to warm up than gasoline powered engines, and will operate at lower temperatures when the vehicle is unloaded.	1. The low gauge reading may be normal. Refer to thermostats in the manual text for information. See Thermostat Diagnosis-Diesel Engine.
	2. Is the temperature gauge connected to the temperature gauge coolant sensor on the engine?	2. Check, the engine temperature sensor connector in the engine compartment.
	3. Is the temperature gauge operating OK?	3. Check gauge operation. Repair as necessary.
	4. Coolant level low in cold ambient temperatures accompanied with poor heater performance.	4. Check coolant level in the coolant tank. Inspect system for leaks. Repair leaks as necessary. Refer to the Coolant section for WARNINGS and precautions before removing the pressure cap.
	5. Improper operation of internal heater doors or heater controls.	5. Inspect heater and repair as necessary. Refer to Heating and Air Conditioning for procedures.
TEMPERATURE GAUGE READS HIGH. COOLANT MAY OR MAY NOT BE LOST OR LEAKING FROM COOLING SYSTEM	1. Trailer is being towed, a steep hill is being climbed, vehicle is operated in slow moving traffic, or engine is being idled with very high ambient (outside) temperature and the air conditioning is on. Higher altitudes could aggravate these conditions.	1. This may be a temporary condition and repair is not necessary. Turn off the air conditioning and attempt to drive the vehicle without any of the previous conditions. Observe the temperature gauge. The gauge should return to the normal range. If the gauge does not return to normal range, determine the cause for the overheating and repair.
	2. Temperature gauge reading incorrectly.	2. Check gauge. Refer to I/P group.
	3. Coolant low in coolant tank and radiator.	3. Check for coolant leaks and repair as necessary.
	4. Pressure cap not installed tightly. If cap is loose, boiling point of coolant will be lowered.	4. Tighten cap.
	5. Poor seals at pressure/vent cap.	5. (a) Check condition of cap and cap seals. (b) Check condition of coolant tank filler neck. Make sure it does not leak pressure.

COOLING 2.5L TURBO DIESEL (Continued)

CONDITION	POSSIBLE CAUSES	CORRECTION
	6. Freeze point of antifreeze not correct. Mixture may be too rich.	6. Check antifreeze. Adjust antifreeze-to-water ratio as required.
	7. Coolant not flowing through system.	7. Check for coolant flow in coolant tank with engine warm and thermostat open. Coolant should be observed flowing through the tank. If flow is not observed, determine reason for lack of flow and repair as necessary.
	8. Radiator or A/C condensor fins are dirty or clogged.	8. Clean debris from radiator or A/C condensor
	9. Radiator core is corroded or plugged.	9. Have radiator re-cored or replaced.
	10. Aftermarket A/C installed without proper A/C condensor.	10. Install proper A/C condensor.
	11. Dragging Brakes.	11. Check and correct as necessary.
	12. Non-factory bug screen is being used reducing airflow.	12. Only a factory screen should be used.
	13. Thermostat partially or completely shut. This is more prevalent on high mileage vehicles.	13. Check thermostat and replace if necessary.
	14. Cylinder head gasket leaking.	14. Check cylinder head gasket for leaks.
	15. Heater core leaking.	15. Check heater cor for leaks. Repair as necessary.
TEMPERATURE GAUGE READING IS INCONSISTENT (FLUCTUATES, CYCLES OR IS ERRATIC)	1. During cold weather operation, with the heater blower in the high position, the gauge reading may drop slightly. Fluctuation is also influenced by loads, outside temperature and extended idle time with diesel engines.	1. A normal condition. No correction is necessary.
	2. Temperature gauge or engine mounted gauge sensor defective or shorted. Also, corroded or loose wiring in this circuit.	2. Check operation of gauge and repair as necessary.
	3. Gauge reading rises when vehicle is brought to a stop after heavy use (engine still running).	3. A normal condition. No correction needed. Gauge should return to normal range after vehicle is driven.
	4. Gauge reading high after starting a warm-iup (hot) engine.	4. A normal condition. No correction needed. Gauge should return to normal after a few minutes of engine operation.

COOLING 2.5L TURBO DIESEL (Continued)

CONDITION	POSSIBLE CAUSES	CORRECTION
	5. Coolant level low in the coolant tank (air will build up in the cooling system causing the thermostat to open late).	5. Check and correct coolant leaks.
	6. Cylinder head gasket leaking allowing exhaust gases to enter the cooling system causing the thermostat to open late.	6. (a) Check for cylinder head gasket leaks with a commercially available leak tester. (b) Check for coolant in engine oil. Inspect for white steam emitting from exhaust system. Repair as necessary.
	7. Water pump impeller loose on shaft.	7. Check water pump and replace as necessary.
	8. Loose accessory drive belt (water pump slipping).	8. Check and correct as necessary.
	9. Air leak on the suction side of the water pump allowing air to build up in the cooling system causing the thermostat to open late.	9. Locate leak and repair as necessary.
PRESSURE CAP IS BLOWING OFF STEAM AND/OR COOLANT. TEMPERATURE GAUGE READING MAY BE ABOVE NORMAL BUT NOT HIGH. COOLANT LEVEL MAY BE HIGH IN COOLANT TANK	1. Pressure relief valve in pressure/ vent cap is defective.	1. Check condition of pressure/vent cap and cap seals.
	2. Head gasket leak or cracked cylinder head.	2. Repair as necessary.
COOLANT LOSS TO THE GROUND WITHOUT PRESSURE CAP BLOWOFF. GAUGE IS READING HIGH OR HOT	1. Coolant leaks in radiator, cooling system hoses, water pump, or engine.	1. Pressure test cooling system and repair as necessary.
HOSE OR HOSES COLLAPSE WHEN ENGINE IS COOLING	1. Vacuum created in cooling system on engine cool-down is not being relieved through pressure/vent cap.	1. Cap relief valve stuck. Replace if necessary.
NOISY FAN	1. Cooling fan blades loose.	1. Replace cooling fan assembly.
	2. Cooling fan blades striking a surrounding object.	2. Locate point of fan blade contact and repair as necessary.
	3. Air obstructions at radiator or A/C condensor.	3. Remove obstructions or clean debris from radiator or A/C condensor.

COOLING 2.5L TURBO DIESEL (Continued)

CONDITION	POSSIBLE CAUSES	CORRECTION
INADEQUATE AIR CONDITIONER PERFORMANCE (COOLING SYSTEM SUSPECTED)	1. Radiator and/or A/C condensor is restricted, obstructed or dirty (insects, leaves, etc.)	1. Remove restriction or clean debris from radiator or A/C condensor.
	2. Engine is overheating (heat may be transferred from radiator to A/C condensor. High underhood temperatures due to engine overheating may also transfer heat to A/C condensor).	2. Correct overheating condition.
	3. The cooling system is equipped with air seals at the radiator and/or A/C condensor. If these seals are missing or damaged, not enough air flow will be pulled through the radiator and A/C condensor.	3. Check for missing or damaged air seals. Repair as necessary.
INADEQUATE HEATER PERFORMANCE. MAY BE ACCOMPANIED BY LOW GAUGE READING	1. Diesel engines, due to their inherent efficiency are slower to warm up than gasoline powered engines, and will operate at lower temperatures when the vehicle is unloaded.	1. The lower gauge reading may be normal.
	2. Coolant level low.	2. Pressure test cooling system. Repair leaks as necessary.
	3. Obstruction in heater hose fitting at engine.	3. Remove heater hoses and check for obstructions. Repair as necessary.
	4. Heater hose kinked.	4. Locate kinked area. Repair as necessary.
	5. Water pump is not pumping water to heater core. When the engine is fully warmed up, both heater hoses should be hot to the touch. If only one of the hoses is hot the water pump may not be operating correctly. The accessory drive belt may also be slipping causing poor water pump operation.	5. Refer to water pumps in this group. Repair as necessary. If a slipping belt is detected, refer to Engine Accessory Drive Belts in this group. Repair as necessary.
HEAT ODOR	1. Various heat shields are used at certain drive line components. One or more of these shields may be missing.	1. Locate missing shields. Repair or replace as necessary.
	2. Is temerature gauge reading above the normal range?	2. Refer to the previous Temperature Gauge Reads High in these Diagnostic Charts. Repair as necessary.
	3. Is the Cooling fan operating correctly?	3. Refer to Cooling System Fan in this group for diagnosis. Repair as necessary.

COOLING 2.5L TURBO DIESEL (Continued)

CONDITION	POSSIBLE CAUSES	CORRECTION
	4. Has undercoating been applied to any unnecessary components?	4. Clean undercoating as necessary.
STEAM IS COMING FROM FRONT OF VEHICLE NEAR GRILL AREA WHEN WEATHER IS WET, ENGINE IS WARMED UP AND RUNNING, AND VEHICLE IS STATIONARY. TEMPERATURE GAUGE IS IN NORMAL RANGE	1. During wet weather, moisture (snow, ice, or rain condensation) on the radiator will evaporate when the thermostat opens. This opening allows heated water into the radiator. When the moisture contacts the hot radiator, steam may be emitted. This usually occurs in cold weather with no fan or airflow to blow it away.	1. Occasional steam emitting from this area is normal. No repair is necessary.
COOLANT ODOR	1. Coolant color is not necessarily an indication of adequate corrosion or temperature protection. Do not rely on coolant color for determining condition of coolant.	1. Refer to Coolant in this group for antifreeze tests. Adjust antifreeze-to-water ratio as necessary.
COOLANT LEVEL CHANGES IN COOLANT TANK. TEMPERATURE GAUGE IS IN NORMAL RANGE	1. Level changes are to be expected as coolant volume fluctuates with engine temperature. If the level in the tank was between the HOT and COLD marks at normal engine operating temperature, the level should return to within that range after operation at elevated temperatures.	1. This a normal condition. No repair necessary.

DIAGNOSIS AND TESTING - COOLING SYSTEM LEAK TEST

WARNING: THE WARNING WORDS “DO NOT OPEN HOT” ON THE RADIATOR PRESSURE CAP IS A SAFETY PRECAUTION. WHEN HOT, PRESSURE BUILDS UP IN COOLING SYSTEM. TO PREVENT SCALDING OR INJURY, THE RADIATOR CAP SHOULD NOT BE REMOVED WHILE THE SYSTEM IS HOT OR UNDER PRESSURE.

With engine not running, remove pressure/vent cap from the coolant recovery pressure container and wipe the filler neck sealing seat clean. The coolant recovery pressure container should be full.

Attach the Cooling System Tester 7700 or equivalent to the radiator, as shown in (Fig. 1) and apply 104 kPa (15 psi) pressure. If the pressure drops more than 13.8 kPa (2 psi) in 2 minutes, inspect all points for external leaks.

All radiator and heater hoses should be shaken while at 104 kPa (15 psi), since some leaks occur only while driving due to engine movement.

If there are no external leaks, after the gauge dial shows a drop in pressure, detach the tester. Start engine and run until the thermostat opens, allowing the coolant to expand. Reattach the cooling system tester. If the needle on the dial fluctuates it indicates a combustion leak, usually a head gasket leak.

WARNING: WITH TOOL IN PLACE, PRESSURE WILL BUILD UP FAST. EXCESSIVE PRESSURE BUILT UP, BY CONTINUOUS ENGINE OPERATION, MUST BE RELEASED TO A SAFE PRESSURE POINT. NEVER PERMIT PRESSURE TO EXCEED 138 kPa (20 psi).

If the needle on the dial does not fluctuate, raise the engine rpm a few times. If an abnormal amount of coolant or steam emits from the tailpipe, it may indicate a coolant leak caused by a faulty head gasket, cracked engine block, or cracked cylinder head.

There may be internal leaks that can be determined by removing the oil dipstick. If water globules appear intermixed with the oil it will indicate an internal leak in the engine. If there is an internal leak, the engine must be disassembled for repair.

COOLING 2.5L TURBO DIESEL (Continued)

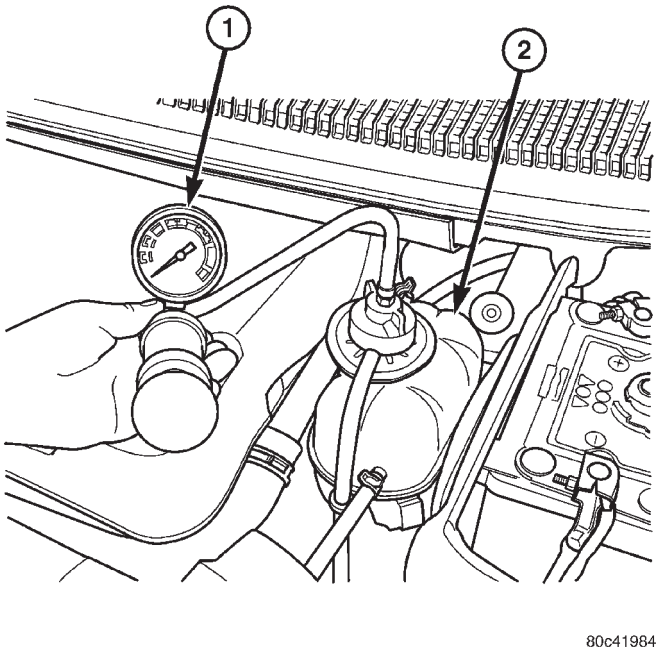

Fig. 1 PRESSURE TESTING COOLING SYSTEM

1 - COOLING SYSTEM PRESSURE TESTER
2 - COOLANT RECOVERY PRESSURE CONTAINER

DIAGNOSIS AND TESTING - COOLING SYSTEM FLOW CHECK

To determine whether coolant is flowing through the cooling system, use the following procedures:

(1) If engine is cold, idle engine until normal operating temperature is reached. Then feel the upper radiator hose. If it is hot, coolant is circulating.

WARNING: DO NOT REMOVE THE COOLING SYSTEM PRESSURE CAP WITH THE SYSTEM HOT AND UNDER PRESSURE BECAUSE SERIOUS BURNS FROM COOLANT CAN OCCUR.

(2) Remove pressure/vent cap when engine is cold, idle engine until thermostat opens, you should observe coolant flow while looking down in the coolant recovery pressure container. Once flow is detected install the pressure/vent cap.

DIAGNOSIS AND TESTING - COOLING SYSTEM AERATION

Low coolant level in a cross flow radiator will equalize in both tanks with engine off. With engine at running and at operating temperature, the high pressure inlet tank runs full and the low pressure outlet tank drops, resulting in cooling system aeration. Aeration will draw air into the water pump resulting in the following:

- High reading shown on the temperature gauge.
- Loss of coolant flow through the heater core.
- Corrosion in the cooling system.
- Water pump seal may run dry, increasing the risk of premature seal failure.
- Combustion gas leaks into the coolant can also cause the above problems.

CLEANING

Drain cooling system and refill with clean water. Refer to procedures in this section. Run engine with pressure/vent cap installed until upper radiator hose is hot. Stop engine and drain water from system. If water is dirty; fill, run, and drain system again, until water runs clear.

INSPECTION

After performing a cleaning/flush procedure, inspect all hoses, clamps and connections for deterioration and leaks. Inspect radiator and heater core for leaks.

SPECIFICATIONS

SPECIFICATIONS - TORQUE

2.5L DIESEL - TORQUE SPECIFICATIONS

DESCRIPTION	N·m	Ft. Lbs.	In. Lbs.
Water Pump Housing Nuts	24.4	18	215
Thermostat Housing Bolts	27.5	21	—
Accessory Drive Belt Tensioner Bolt	47.1	35	—
Accessory Drive Belt Idler Bolt	53	39	—

SPECIFICATIONS - COOLING SYSTEM CAPACITY

SPECIFICATIONS

DESCRIPTION	SPECIFICATION
Cooling System With Auxiliary Heater	16.6 Liters (17.5 qts.)
Cooling System With Out Auxiliary Heater	13.8 Liters (14.6 qts.)

ACCESSORY DRIVE

TABLE OF CONTENTS

page

ACCESSORY DRIVE
SPECIFICATIONS - ACCESSORY BELT TENSION 9
BELT TENSIONER
REMOVAL 9
INSTALLATION 9
IDLER PULLEY
REMOVAL 10
INSTALLATION 10
DRIVE BELTS
DESCRIPTION
DESCRIPTION - ACCESSORY DRIVE BELT . 10
DESCRIPTION - POWER STEERING BELT . . 10
OPERATION
OPERATION-ACCESSORY DRIVE BELT 10
OPERATION-POWER STEERING BELT 10
DIAGNOSIS AND TESTING - ACCESSORY DRIVE BELT 11
REMOVAL
REMOVAL-ACCESSORY DRIVE BELT 11
REMOVAL 11
INSTALLATION
INSTALLATION-ACCESSORY DRIVE BELT . . 13
INSTALLATION-POWER STEERING BELT . . . 13

ACCESSORY DRIVE

SPECIFICATIONS - ACCESSORY BELT TENSION

ACCESSORY DRIVE BELT	GAUGE
2.5L DIESEL ENGINE	
A/C Compressor/ Generator	Dynamic Tensioner
Power Steering Belt	300 N (67 lbs.)

BELT TENSIONER

REMOVAL

WARNING:: BECAUSE OF HIGH SPRING TENSION, DO NOT ATTEMPT TO DISASSEMBLE THE AUTOMATIC BELT TENSIONER. THE TENSIONER IS SERVICED AS AN ASSEMBLY.

(1) Remove the power steering belt (Refer to 7 - COOLING/ACCESSORY DRIVE/DRIVE BELTS - REMOVAL).
(2) Remove the accessory drive belt (Refer to 7 - COOLING/ACCESSORY DRIVE/DRIVE BELTS - INSTALLATION).
(3) Remove the belt tensioner retaining bolt and remove tensioner (Fig. 1).

INSTALLATION

(1) Install belt tensioner and retaining bolt (Fig. 1). Torque bolt to 47 N·m (35ft. lbs.).

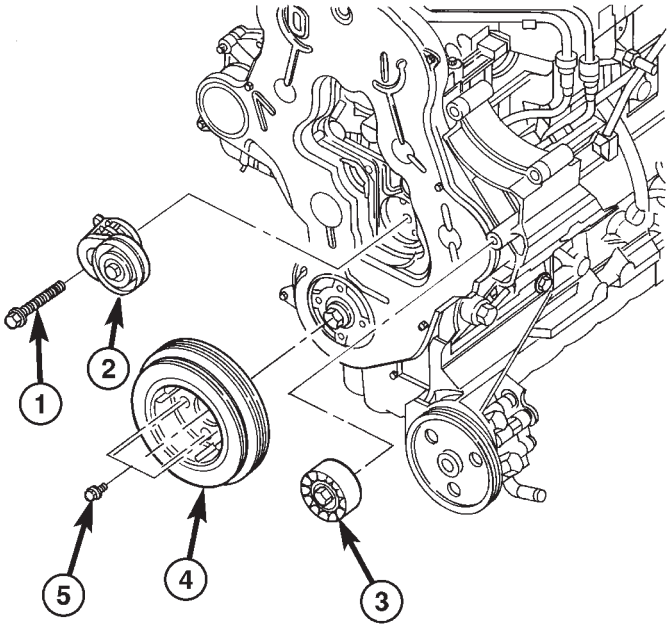

Fig. 1 BELT TENSIONER AND IDLER PULLEY

1 - BELT TENSIONER RETAINING BOLT
2 - BELT TENSIONER
3 - IDLER PULLEY
4 - VIBRATION DAMPER/CRANKSHAFT PULLEY
5 - VIBRATION DAMPER/CRANKSHAFT PULLEY RETAINING BOLTS

(2) Install the accessory drive belt (Refer to 7 - COOLING/ACCESSORY DRIVE/DRIVE BELTS - INSTALLATION).
(3) Install the power steering belt (Refer to 7 - COOLING/ACCESSORY DRIVE/DRIVE BELTS - INSTALLATION).

IDLER PULLEY

REMOVAL

(1) Remove the accessory drive belt (Refer to 7 - COOLING/ACCESSORY DRIVE/DRIVE BELTS - REMOVAL).

CAUTION: IDLER PULLEY RETAINING BOLT HAS LEFT HAND THREAD

(2) Remove the idler pulley (Fig. 2).

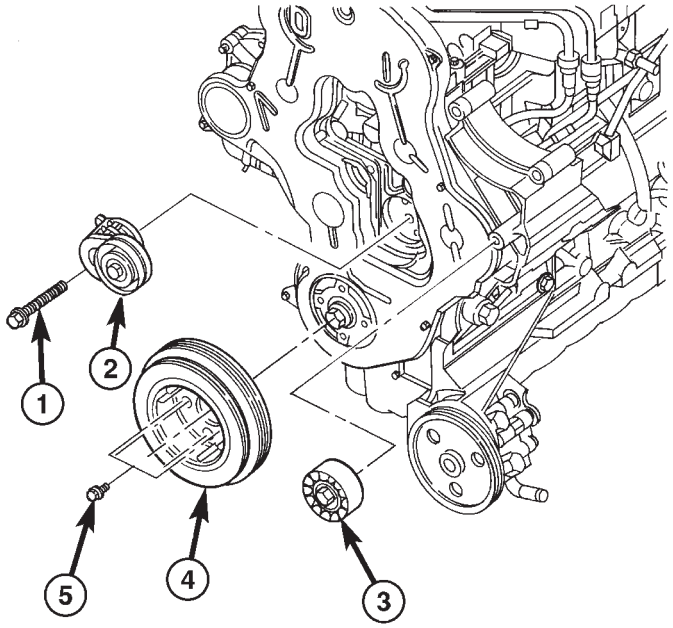

Fig. 2 BELT TENSIONER AND IDLER PULLEY

1 - BELT TENSIONER RETAINING BOLT
2 - BELT TENSIONER
3 - IDLER PULLEY
4 - VIBRATION DAMPER/CRANKSHAFT PULLEY
5 - VIBRATION DAMPER/CRANKSHAFT PULLEY RETAINING BOLTS

INSTALLATION

(1) Install the idler pulley (Fig. 2). Torque retaining bolt to 22 N·m (16 ft. lbs.).

(2) Install the accessory drive belt (Refer to 7 - COOLING/ACCESSORY DRIVE/DRIVE BELTS - INSTALLATION).

(3) Install the power steering belt (Refer to 7 - COOLING/ACCESSORY DRIVE/DRIVE BELTS - INSTALLATION).

DRIVE BELTS

DESCRIPTION

DESCRIPTION - ACCESSORY DRIVE BELT

The accessory drive belt is a serpentine type belt (Fig. 3). Satisfactory performance of these belts depends on belt condition and proper belt tension.

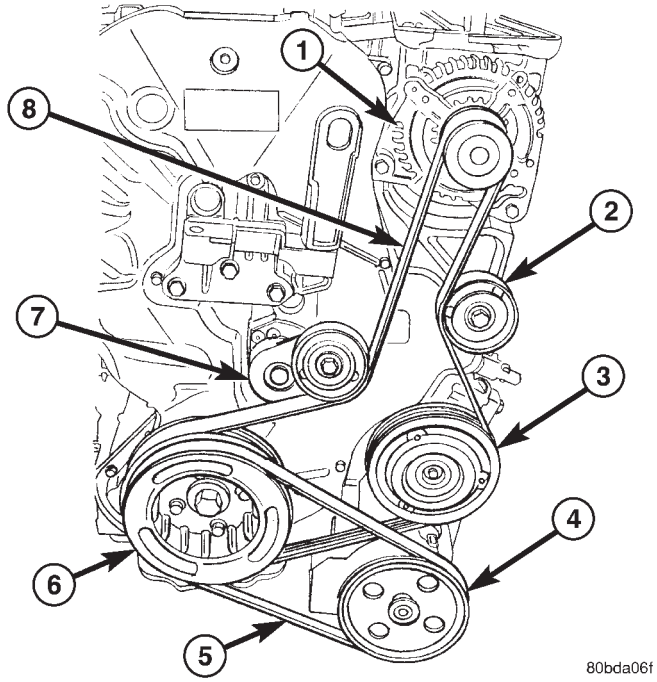

Fig. 3 ACCESSORY DRIVE BELT ROUTING

1 - GENERATOR
2 - IDLER PULLEY
3 - A/C COMPRESSOR CLUTCH
4 - POWER STEERING PUMP PULLEY
5 - POWER STEERING BELT
6 - CRANKSHAFT DAMPER/PULLEY
7 - BELT TENSIONER
8 - ACCESSORY DRIVE BELT

DESCRIPTION - POWER STEERING BELT

The power steering belt is a serpentine type belt (Fig. 3). Satisfactory performance of this belt depends on condition of the belt.

OPERATION

OPERATION-ACCESSORY DRIVE BELT

The accessory drive belts form the link between the engine crankshaft and the engine driven accessories.

OPERATION-POWER STEERING BELT

The power steering belt forms a link between the engine crankshaft and the power steering pump.

DRIVE BELTS (Continued)

DIAGNOSIS AND TESTING - ACCESSORY DRIVE BELT

CONDITION	POSSIBLE CAUSES	CORRECTIONS
INSUFFICIENT ACCESSORY OUTPUT DUE TO BELT SLIPPAGE	1. Belt too loose	1. (a) Replace belt (auto-tensioned belts)
	2. Faulty belt tensioner	2. Replace tensioner as necessary
	3. Belt excessively glazed or worn	3. Replace belt
BELT SQUEAL WHEN ACCELERATING ENGINE	1. Belts too loose	1. Check and replace belt tensioner if necessary
	2. Belt glazed	2. Replace belt
BELT SQUEAK AT IDLE	1. Belts too loose	1. (a) Replace belt
	2. Dirt or paint imbedded in belt	2. Replace belt
	3. Non-uniform belt	3. Replace belt
	4. Misaligned pulleys	4. Align accessories
	5. Non-uniform groove or eccentric pulley	5. Replace pulley
BELT ROLLED OVER IN GROOVE OR BELT JUMPS OFF	1. Broken cord in belt	1. Replace belt
	2. Belt too loose, or too tight	2. Replace belt
	3. Misaligned pulleys	3. Align accessories
	4. Non-uniform groove or eccentric pulley	4. Replace pulley

REMOVAL

REMOVAL-ACCESSORY DRIVE BELT

(1) Remove the power steering belt (Refer to 7 - COOLING/ACCESSORY DRIVE/DRIVE BELTS - REMOVAL).

(2) Relieve tension on belt tensioner using a suitable wrench (Fig. 4) and lock tensioner with a drift punch (Fig. 5).

(3) Remove the accessory drive belt.

REMOVAL

(1) Raise vehicle on hoist.

(2) Remove right front fender inner splash shield.

(3) Install power steering belt remover tool on crankshaft damper (Fig. 6).

(4) Rotate engine clockwise to remove belt (Fig. 7).

DRIVE BELTS (Continued)

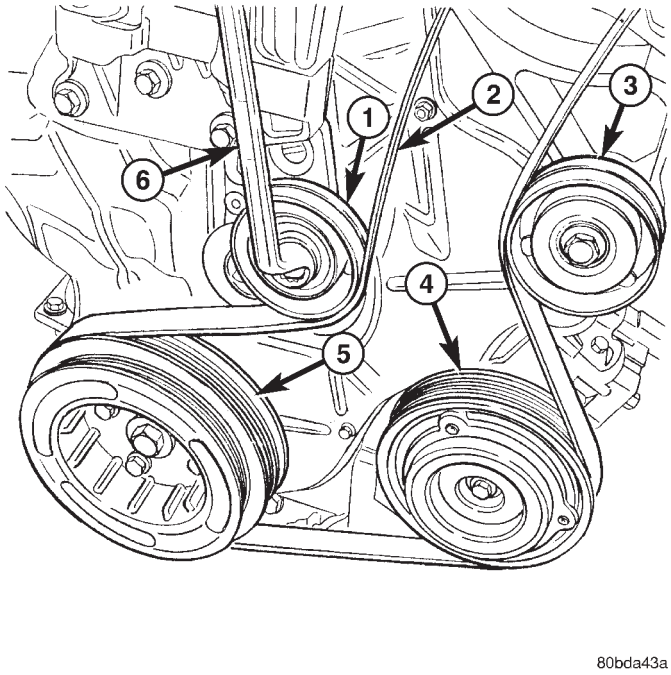

Fig. 4 ACCESSORY DRIVE BELT REMOVAL

1 - BELT TENSIONER
2 - ACCESSORY DRIVE BELT
3 - IDLER PULLEY
4 - A/C COMPRESSOR CLUTCH
5 - CRANKSHAFT DAMPER/PULLEY
6 - WRENCH

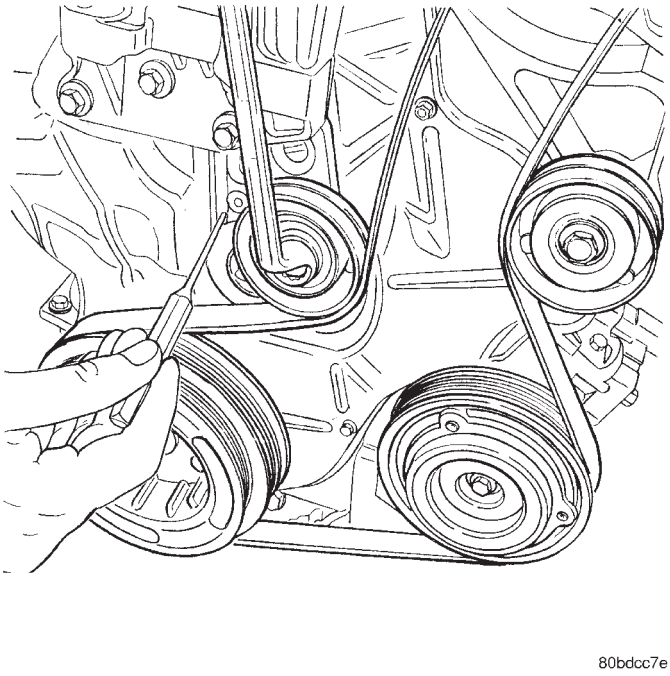

Fig. 5 LOCKING/LOCKING BELT TENSIONER

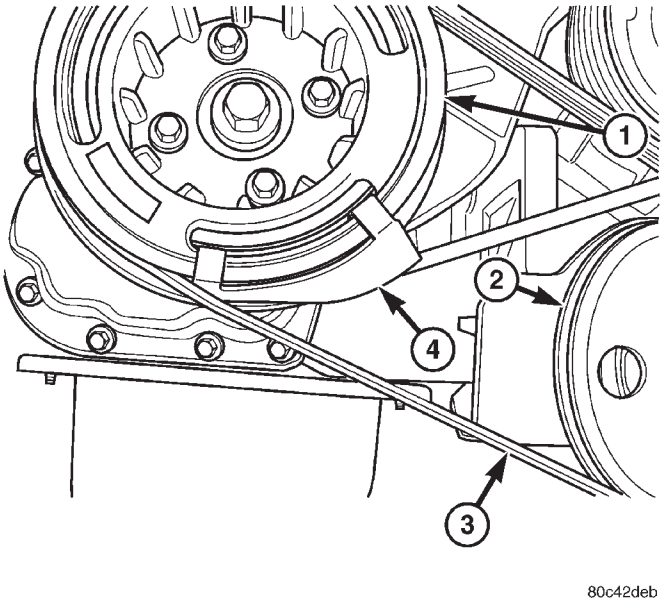

Fig. 6 POWER STEERING BELT REMOVAL TOOL

1 - VIBRATION DAMPER
2 - POWER STEERING PULLEY
3 - POWER STEERING BELT
4 - POWER STEERING BELT REMOVER

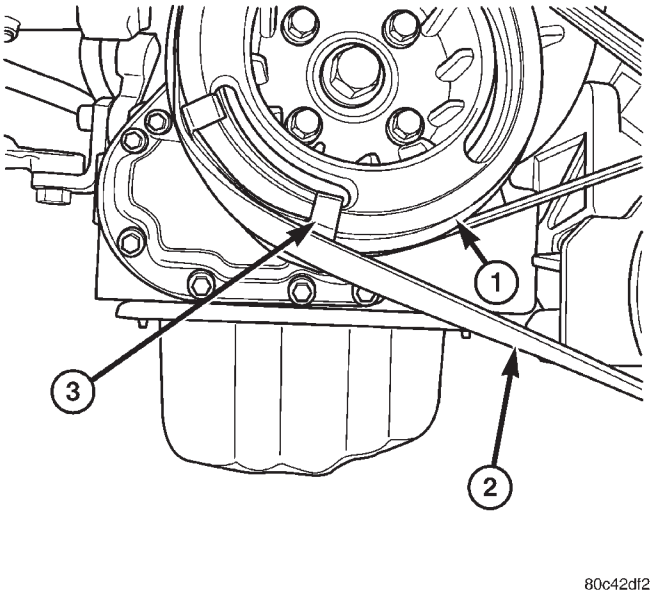

Fig. 7 POWER STEERING BELT REMOVAL

1 - VIBRATION DAMPER
2 - POWER STEERING BELT
3 - POPWER STEERING BELT REMOVER

DRIVE BELTS (Continued)

INSTALLATION

INSTALLATION-ACCESSORY DRIVE BELT

(1) Install the accessory drive belt in proper popsition (Fig. 8).

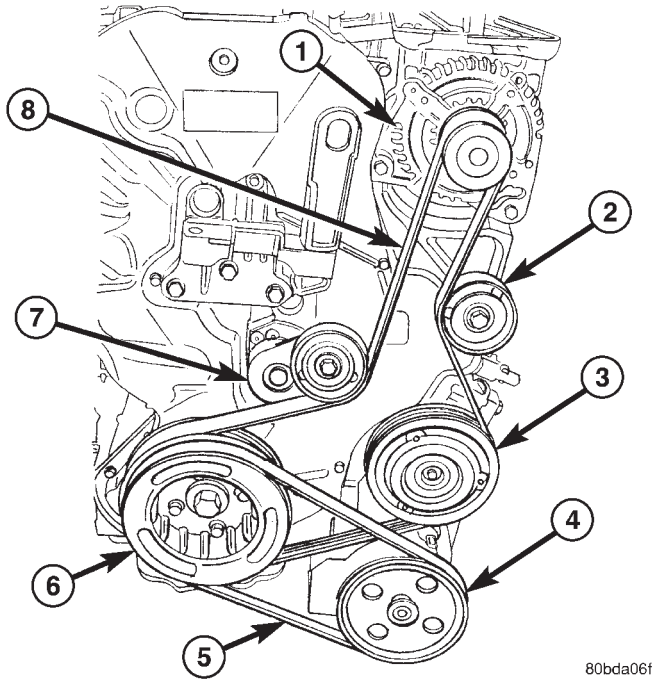

Fig. 8 ACCESSORY DRIVE BELT ROUTING

1 - GENERATOR
2 - IDLER PULLEY
3 - A/C COMPRESSOR CLUTCH
4 - POWER STEERING PUMP PULLEY
5 - POWER STEERING BELT
6 - CRANKSHAFT DAMPER/PULLEY
7 - BELT TENSIONER
8 - ACCESSORY DRIVE BELT

(2) Unlock belt tensioner by removing punch and apply tension to accessory drive belt (Fig. 9).

(3) Install the power steering belt (Refer to 7 - COOLING/ACCESSORY DRIVE/DRIVE BELTS - INSTALLATION).

INSTALLATION-POWER STEERING BELT

(1) Install power steering belt installation tool (Fig. 10).

(2) Install power steering belt on crankshaft and rotate crankshaft clockwise until belt is fully installed on crankshaft (Fig. 10).

(3) Remove installation tool from crankshaft.

(4) Install right front fender inner splash shield.

(5) Lower vehicle from hoist.

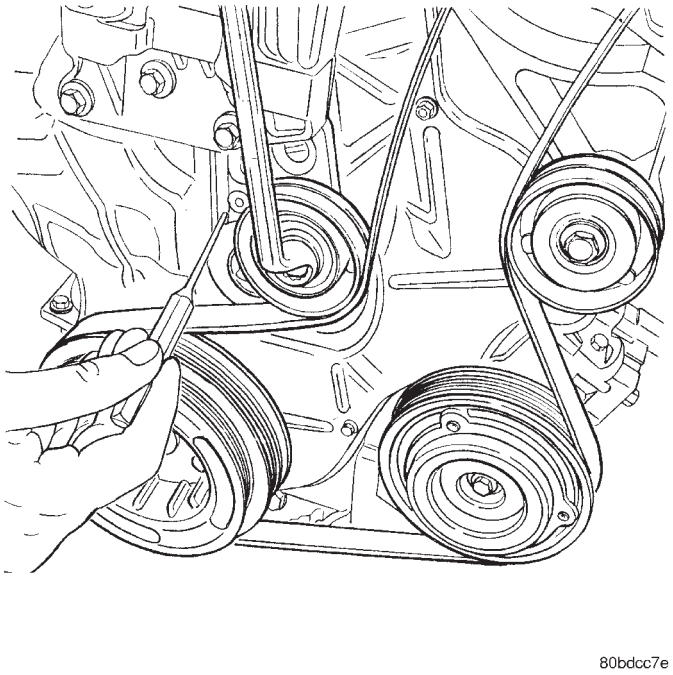

Fig. 9 LOCKING/UNLOCKING BELT TENSIONER

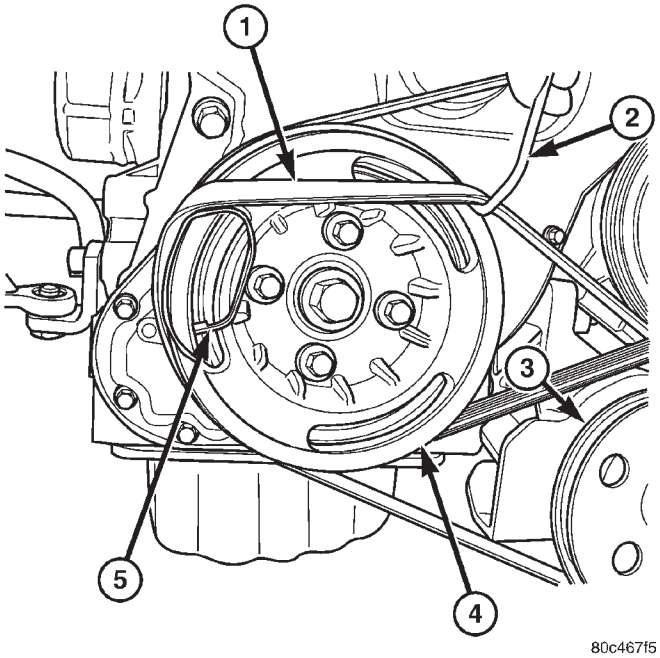

Fig. 10 POWER STEERING BELT INSTALLATION

1 - POWER STEERING BELT
2 - HOLDING HOOK
3 - POWER STEERING PUMP PULLEY
4 - VIBRATION DAMPER
5 - POWER STEERING BELT INSTALLATION TOOL

ENGINE

TABLE OF CONTENTS

page

COOLANT
DESCRIPTION 15
DIAGNOSIS AND TESTING - COOLANT
CONCENTRATION TESTING 15
STANDARD PROCEDURE
STANDARD PROCEDURE - COOLANT
SERVICE 16
STANDARD PROCEDURE - ADDING
ADDITIONAL COOLANT. 16
STANDARD PROCEDURE - COOLANT
LEVEL CHECK. 16
STANDARD PROCEDURE - COOLING
SYSTEM FILLING 16
STANDARD PROCEDURE - COOLING
SYSTEM DRAINING. 17
COOLANT RECOVERY PRESS CONTAINER
DESCRIPTION 17
OPERATION 17
REMOVAL 18
INSTALLATION 18
ENGINE COOLANT TEMP SENSOR
DESCRIPTION 19
OPERATION 19
REMOVAL 19
INSTALLATION 19
ENGINE COOLANT THERMOSTAT
DESCRIPTION 20
OPERATION 20
REMOVAL 20
INSTALLATION 20
RADIATOR
DESCRIPTION 21
OPERATION 21
REMOVAL 21
INSTALLATION 22
RADIATOR DRAINCOCK
REMOVAL 22
INSTALLATION 22
WATER PUMP
DESCRIPTION 23

page

OPERATION 23
REMOVAL
REMOVAL - WATER PUMP 23
REMOVAL - WATER PUMP HOUSING 23
CLEANING 23
INSTALLATION
INSTALLATION - WATER PUMP 23
INSTALLATION - WATER PUMP HOUSING . . 24
RADIATOR PRESSURE CAP
DESCRIPTION 25
OPERATION 25
DIAGNOSIS AND TESTING
DIAGNOSIS AND TESTING - COOLING
SYSTEM PRESSURE CAP. 25
DIAGNOSIS AND TESTING - PRESSURE
RELIEF TEST 26
CLEANING 26
INSPECTION 26
RADIATOR FAN
DESCRIPTION 26
OPERATION 27
DIAGNOSIS AND TESTING - RADIATOR FAN
MOTOR 27
REMOVAL 28
INSTALLATION 28
HOSE CLAMPS
DESCRIPTION - HOSE CLAMPS 28
OPERATION - HOSE CLAMPS 28
RADIATOR FAN RELAY
DESCRIPTION 29
OPERATION 29
COOLANT SYSTEM HOSES
REMOVAL
REMOVAL - UPPER RADIATOR HOSE 29
REMOVAL - LOWER RADIATOR HOSE 29
REMOVAL - COOLANT BYPASS HOSE 30
INSTALLATION
INSTALLATION - UPPER RADIATOR HOSE . . 30
INSTALLATION - LOWER RADIATOR HOSE . 30
INSTALLATION - COOLANT BYPASS HOSE . 30

COOLANT

DESCRIPTION

Coolant flows through the engine water jackets and cylinder heads absorbing heat produced by the engine during operation. The coolant carries heat to the radiator and heater core. Here it is transferred to ambient air passing through the radiator and heater core fins.

The required ethylene-glycol (antifreeze) and water mixture depends upon the climate and vehicle operating conditions. The recommended mixture of 50/50 ethylene-glycol and water will provide protection against freezing to -37 deg. C (-35 deg. F). The antifreeze concentration **must always** be a minimum of 44 percent, year-round in all climates. **If percentage is lower than 44 percent, engine parts may be eroded by cavitation, and cooling system components may be severely damaged by corrosion.** Maximum protection against freezing is provided with a 68 percent antifreeze concentration, which prevents freezing down to -67.7 deg. C (-90 deg. F). A higher percentage will freeze at a warmer temperature. Also, a higher percentage of antifreeze can cause the engine to overheat because the specific heat of antifreeze is lower than that of water.

100 Percent Ethylene-Glycol—Should Not Be Used in Chrysler Vehicles

Use of 100 percent ethylene-glycol will cause formation of additive deposits in the system, as the corrosion inhibitive additives in ethylene-glycol require the presence of water to dissolve. The deposits act as insulation, causing temperatures to rise to as high as 149 deg. C (300 deg. F). This temperature is hot enough to melt plastic and soften solder. The increased temperature can result in engine detonation. In addition, 100 percent ethylene-glycol freezes at -22 deg. C (-8 deg. F).

Propylene-glycol Formulations—Should Not Be Used in Chrysler Vehicles

Propylene-glycol formulations do not meet Chrysler coolant specifications. It's overall effective temperature range is smaller than that of ethylene-glycol. The freeze point of 50/50 propylene-glycol and water is -32 deg. C (-26 deg. F). 5 deg. C higher than ethylene-glycol's freeze point. The boiling point (protection against summer boil-over) of propylene-glycol is 125 deg. C (257 deg. F) at 96.5 kPa (14 psi), compared to 128 deg. C (263 deg. F) for ethylene-glycol. Use of propylene-glycol can result in boil-over or freeze-up in Chrysler vehicles, which are designed for ethylene-glycol. Propylene glycol also has poorer heat transfer characteristics than ethylene glycol. This can increase cylinder head temperatures under certain conditions.

Propylene-glycol/Ethylene-glycol Mixtures—Should Not Be Used in Chrysler Vehicles

Propylene-glycol/ethylene-glycol Mixtures can cause the destabilization of various corrosion inhibitors, causing damage to the various cooling system components. Also, once ethylene-glycol and propylene-glycol based coolants are mixed in the vehicle, conventional methods of determining freeze point will not be accurate. Both the refractive index and specific gravity differ between ethylene glycol and propylene glycol.

CAUTION: Richer antifreeze mixtures cannot be measured with normal field equipment and can cause problems associated with 100 percent ethylene-glycol.

DIAGNOSIS AND TESTING - COOLANT CONCENTRATION TESTING

Coolant concentration should be checked when any additional coolant was added to system or after a coolant drain, flush and refill. The coolant mixture offers optimum engine cooling and protection against corrosion when mixed to a freeze point of -37°C (-34°F) to -59°C (-50°F). The use of a hydrometer or a refractometer can be used to test coolant concentration.

A hydrometer will test the amount of glycol in a mixture by measuring the specific gravity of the mixture. The higher the concentration of ethylene glycol, the larger the number of balls that will float, and higher the freeze protection (up to a maximum of 60% by volume glycol).

A refractometer will test the amount of glycol in a coolant mixture by measuring the amount a beam of light bends as it passes through the fluid.

Some coolant manufactures use other types of glycols into their coolant formulations. Propylene glycol is the most common new coolant. However, propylene glycol based coolants do not provide the same freezing protection and corrosion protection and is not recommended.

CAUTION: Do not mix types of coolant—corrosion protection will be severely reduced.

STANDARD PROCEDURE

STANDARD PROCEDURE - COOLANT SERVICE

For engine coolant recommended service schedule, (Refer to LUBRICATION & MAINTENANCE/MAINTENANCE SCHEDULES - DESCRIPTION).

STANDARD PROCEDURE - ADDING ADDITIONAL COOLANT

The pressure/vent cap should not be removed from the coolant recovery pressure container when the engine is hot. When additional coolant is needed to maintain this level, it should be added to the coolant recovery pressure container (Fig. 1). Use only 50/50 mix of ethylene glycol type antifreeze and distilled water. For the recommeded antifreeze/coolant type (Refer to LUBRICATION & MAINTENANCE/FLUID TYPES - DESCRIPTION).

CAUTION: Do not use well water, or suspect water supply in cooling system. A 50/50 ethylene glycol and distilled water mix is recommended. For the recommeded antifreeze/coolant type (Refer to LUBRICATION & MAINTENANCE/FLUID TYPES - DESCRIPTION).

STANDARD PROCEDURE - COOLANT LEVEL CHECK

NOTE: Do not remove pressure/vent cap for routine coolant level inspections.

The coolant reserve system provides a quick visual method for determining the coolant level without removing the pressure/vent cap. **With the engine cold and not running,** simply observe the level of the coolant in the coolant recovery pressure container (Fig. 2). The coolant level should be between the MIN and MAX marks.

STANDARD PROCEDURE - COOLING SYSTEM FILLING

(1) Remove pressure vent cap from coolant recovery pressure container.

(2) Loosen air bleed screw on the thermostat housing (Fig. 9).

(3) Slowly fill the cooling through the coolant recovery pressure container until a steady stream of coolant comes out of the air bleed.

(4) Tighten the air bleed screw.

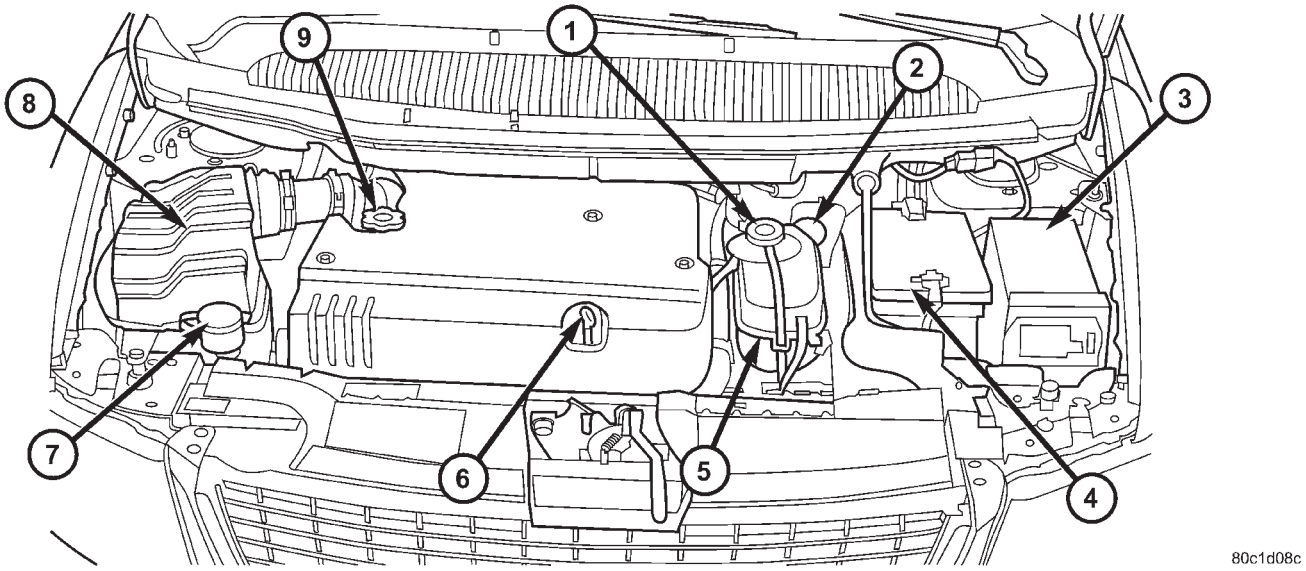

Fig. 1 UNDERHOOD FLUID FILL LOCATIONS

1 - COOLANT PRESSURE/VENT CAP
2 - BRAKE MASTER CYLINDER
3 - INTELLIGENT POWER MODULE
4 - BATTERY
5 - COOLANT RECOVERY PRESSURE CONTAINER
6 - OIL DIPSTICK
7 - WINDSHIELD SOLVENT RESEVOIR
8 - AIR FILTER HOUSING
9 - ENGINE OIL FILL CAP

COOLANT (Continued)

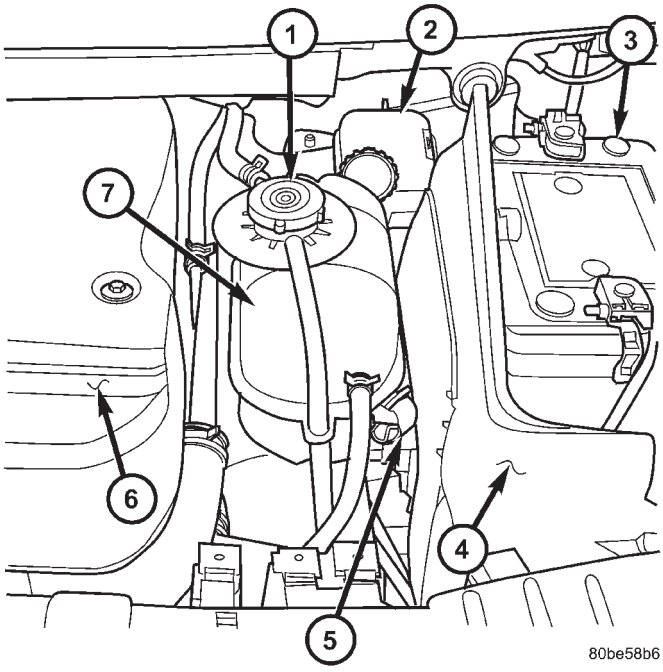

Fig. 2 COOLANT RECOVERY PRESSURE CONTAINER LOCATION

1 - PRESSURE/VENT CAP
2 - BRAKE MASTER CYLINDER
3 - BATTERY
4 - BATTERY SHIELD
5 - COOLANT RECOVERY PRESSURE CONTAINER RETAING CLIP
6 - ENGINE COVER
7 - COOLANT RECOVERY PRESSURE CONTAINER

(5) Continue filling coolant recovery pressure container until level reaches the full line.

(6) Without installing the pressure/vent cap, start and run engine at idle for a couple minutes.

(7) Recheck coolant level and fill as necessary.

(8) Install pressure/vent cap and drive vehicle for approx. 10 km to reach normal operating temperatures.

(9) Allow vehicle to cool. Check and fill coolant as needed.

STANDARD PROCEDURE - COOLING SYSTEM DRAINING

WARNING: DO NOT REMOVE OR LOOSEN THE COOLANT PRESSURE/VENT CAP, CYLINDER BLOCK DRAIN PLUGS, OR THE DRAINCOCK WHEN THE SYSTEM IS HOT AND UNDER PRESSURE BECAUSE SERIOUS BURNS FROM THE COOLANT CAN OCCUR.

(1) **Without removing pressure/vent cap and with system not under pressure**, open the draincock. The draincock is located on the lower right side of radiator (Fig. 3).

(2) After the coolant recovery pressure container is empty, then remove coolant pressure/vent cap.

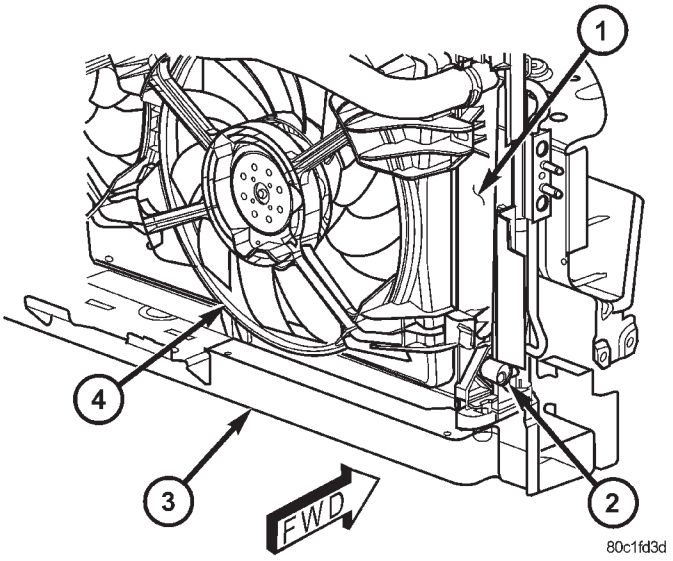

Fig. 3 DRAINCOCK LOCATION

1 - RADIATOR
2 - DRAINCOCK
3 - LOWER RADIATOR SUPPORT
4 - ELECTRIC COOLING FAN

COOLANT RECOVERY PRESS CONTAINER

DESCRIPTION

The coolant recovery pressure container is mounted in the engine compartment next to the battery. The coolant recovery pressure container is made of plastic (Fig. 4).

OPERATION

The coolant recovery pressure container works with the pressure/vent cap to use thermal expansion and contraction of the coolant to keep the coolant free of trapped air. Provides a convenient and safe method for checking coolant level and adjusting level at atmospheric pressure without removing the pressure/vent cap. It also provides some reserve coolant to cover deaeration, evaporation, or boiling losses.

COOLANT RECOVERY PRESS CONTAINER (Continued)

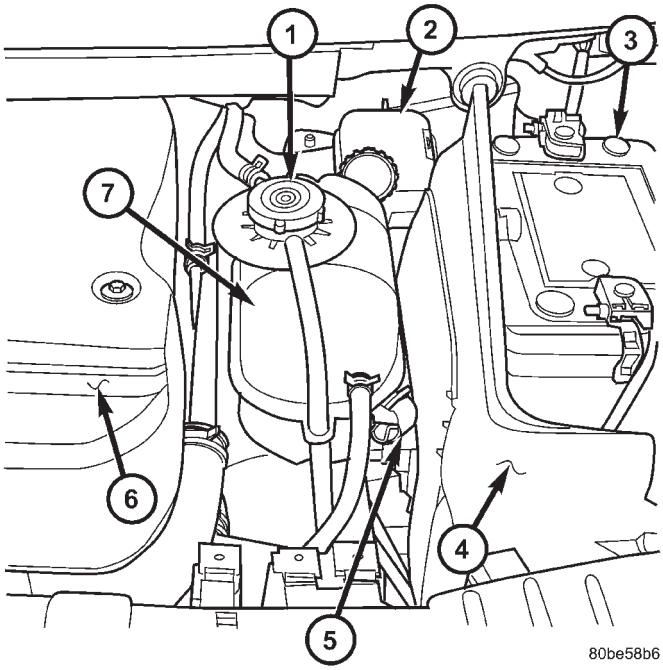

Fig. 4 COOLANT RECOVERY PRESSURE CONTAINER LOCATION

1 - PRESSURE/VENT CAP
2 - BRAKE MASTER CYLINDER
3 - BATTERY
4 - BATTERY SHIELD
5 - COOLANT RECOVERY PRESSURE CONTAINER RETAING CLIP
6 - ENGINE COVER
7 - COOLANT RECOVERY PRESSURE CONTAINER

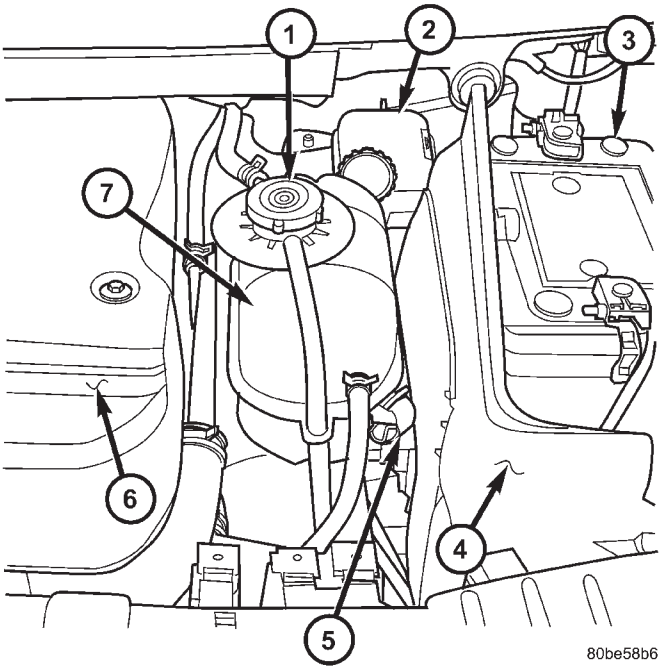

Fig. 5 COOLANT RECOVERY PRESSURE CONTAINER LOCATION

1 - PRESSURE/VENT CAP
2 - BRAKE MASTER CYLINDER
3 - BATTERY
4 - BATTERY SHIELD
5 - COOLANT RECOVERY PRESSURE CONTAINER RETAING CLIP
6 - ENGINE COVER
7 - COOLANT RECOVERY PRESSURE CONTAINER

REMOVAL

(1) Drain cooling system below level of coolant recovery pressure bottle. (Refer to 7 - COOLING/ENGINE/COOLANT - STANDARD PROCEDURE)

(2) Disconnect coolant bypass and overflow hoses from coolant recovery pressure container (Fig. 6).

(3) Unclip the coolant recovery pressure container retaining clip (Fig. 5).

(4) Raise coolant recovery pressure container from mounting bracket and disconnect coolant hose from bottom of container (Fig. 6).

(5) Remove coolant recovery pressure bottle.

INSTALLATION

(1) Connect coolant hose at bottom of coolant recovery pressure container (Fig. 6) and install in mounting bracket.

(2) Connect coolant recovery pressure container retaining clip (Fig. 5).

(3) Connect coolant bypass and overflow hoses to coolant recovery pressure container.

(4) Refill cooling system. (Refer to 7 - COOLING/ENGINE/COOLANT - STANDARD PROCEDURE)

COOLANT RECOVERY PRESS CONTAINER (Continued)

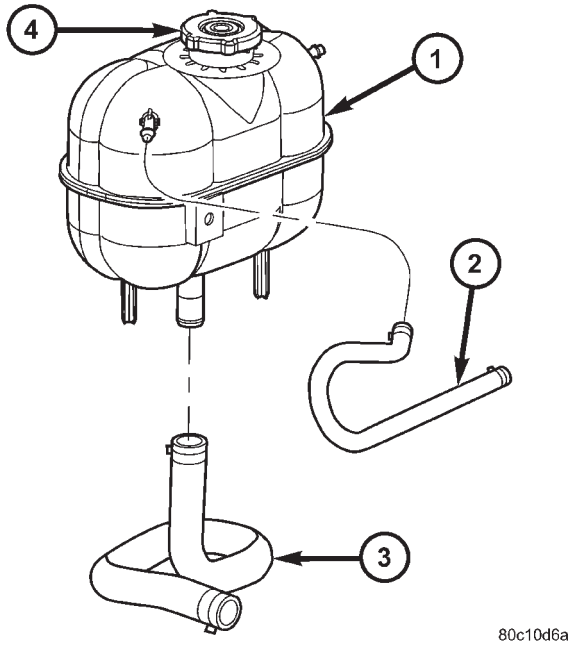

Fig. 6 COOLANT RECOVERY PRESSURE CONTAINER

1 - COOLANT RECOVERY PRESSURE CONTAINER
2 - COOLANT BYPASS HOSE
3 - OUTLET HOSE
4 - PRESSURE/VENT CAP

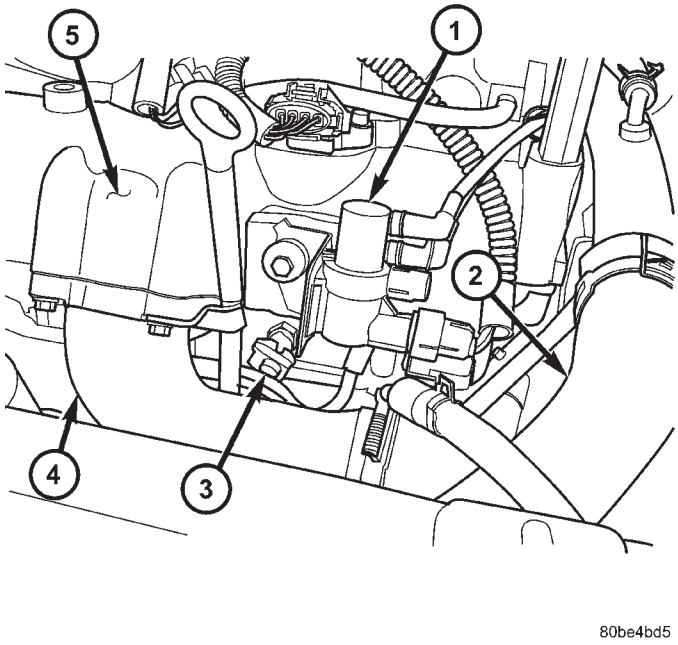

Fig. 7 COOLANT TEMPERATURE SENSOR LOCATION

1 - EGR SOLENOID
2 - UPPER RADIATOR HOSE
3 - COOLANT TEMPERATURE SENSOR
4 - INTAKE MANIFOLD INLET
5 - INTAKE MANIFOLD/CYLINDER HEAD COVER

ENGINE COOLANT TEMP SENSOR

DESCRIPTION

The engine coolant temperature sensor threads into a coolant passage in the cylinder head (Fig. 7). New sensors have sealant applied to the threads.

OPERATION

The coolant temperature (ECT) sensor is a negative temperature coefficient (NTC) thermistor (resistance varies inversley with temperature). This means at cold tempertures its resistance is high so the voltage signal will be high. As coolant temperture increases, resistance decreases and the signal voltage will be low. This allows the sensor to provide an analog voltage signal to the ECM.

REMOVAL

WARNING: DO NOT REMOVE OR LOOSEN THE COOLANT PRESSURE/VENT CAP, CYLINDER BLOCK DRAIN PLUGS, OR THE DRAINCOCK WHEN THE SYSTEM IS HOT AND UNDER PRESSURE BECAUSE SERIOUS BURNS FROM THE COOLANT CAN OCCUR.

(1) Drain the cooling system. (Refer to 7 - COOLING/ENGINE/COOLANT - STANDARD PROCEDURE)
(2) Disconnect coolant temperature sensor electrical connector (Fig. 8).
(3) Remove coolant temperature sensor from cylinder head (Fig. 8).

INSTALLATION

(1) Install coolant temperature sensor in cylinder head (Fig. 8).
(2) Connect coolant temperature sensor electrical connector (Fig. 8).
(3) Refill the cooling system. (Refer to 7 - COOLING/ENGINE/COOLANT - STANDARD PROCEDURE)
(4) Connect the negative battery cable.

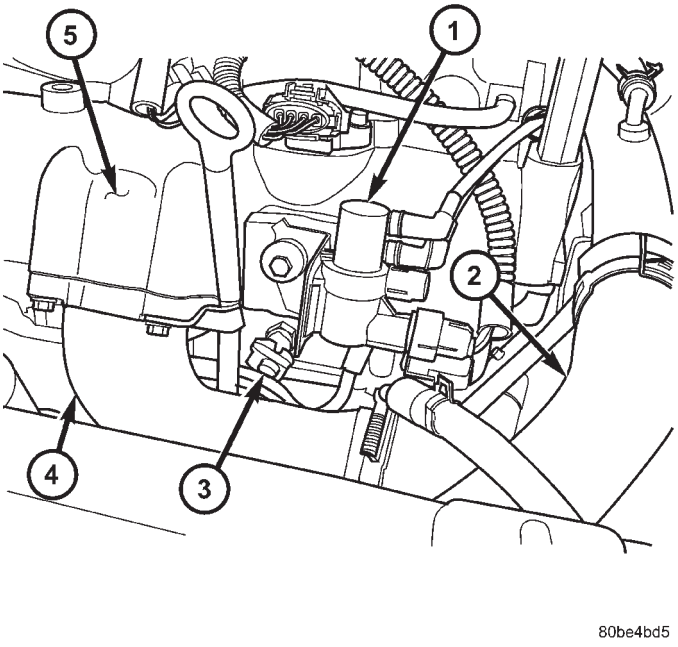

Fig. 8 COOLANT TEMPERATURE SENSOR LOCATION

1 - EGR SOLENOID
2 - UPPER RADIATOR HOSE
3 - COOLANT TEMPERATURE SENSOR
4 - INTAKE MANIFOLD INLET
5 - INTAKE MANIFOLD/CYLINDER HEAD COVER

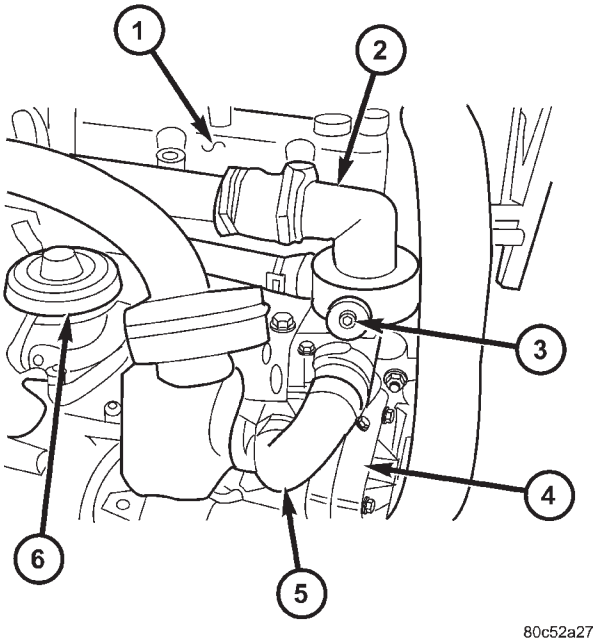

Fig. 9 THERMOSTAT HOUSING LOCATION

1 - CYLINDER HEAD COVER
2 - THERMOSTAT HOUSING
3 - AIR BLEED
4 - WATER PUMP
5 - WATER PUMP HOUSING TO THERMOSTAT HOUSING BYPASS HOSE
6 - EGR VALVE

ENGINE COOLANT THERMOSTAT

DESCRIPTION

A pellet-type thermostat controls the operating temperature of the engine by controlling the amount of coolant flow to the radiator (Fig. 9).

OPERATION

The thermostat starts to open at 80°C (176°F). Above this temperature, coolant is allowed to flow to the radiator. This provides quicker engine warmup and overall temperature control.

The same thermostat is used for winter and summer seasons. An engine should not be operated without a thermostat, except for servicing or testing. Operating without a thermostat causes other problems. These are: longer engine warmup time, unreliable warmup performance, increased exhaust emissions and crankcase condensation. This condensation can result in sludge formation.

REMOVAL

NOTE: The thermostat is not serviced separately. The thermostat and housing must be replaced as an assembly.

(1) Disconnect negative battery cable.
(2) Drain cooling system (Refer to 7 - COOLING/ENGINE/COOLANT - STANDARD PROCEDURE).
(3) Remove front wiper unit to gain access to thermostat housing(Refer to 8 - ELECTRICAL/WIPERS/WASHERS/WIPER MODULE - REMOVAL).
(4) Disconnect upper radiator hose adapter tube, water pump hose, and EGR hose at thermostat housing.
(5) Remove both thermostat housing attaching bolts and housing (Fig. 10).

INSTALLATION

(1) Install thermostat housing, gasket, and retaining bolts (Fig. 10). Torque bolts to 27.5N·m.
(2) Connect upper radiator hose adapter tube, water pump hose, and EGR cooler hose to thermostat housing.

ENGINE COOLANT THERMOSTAT (Continued)

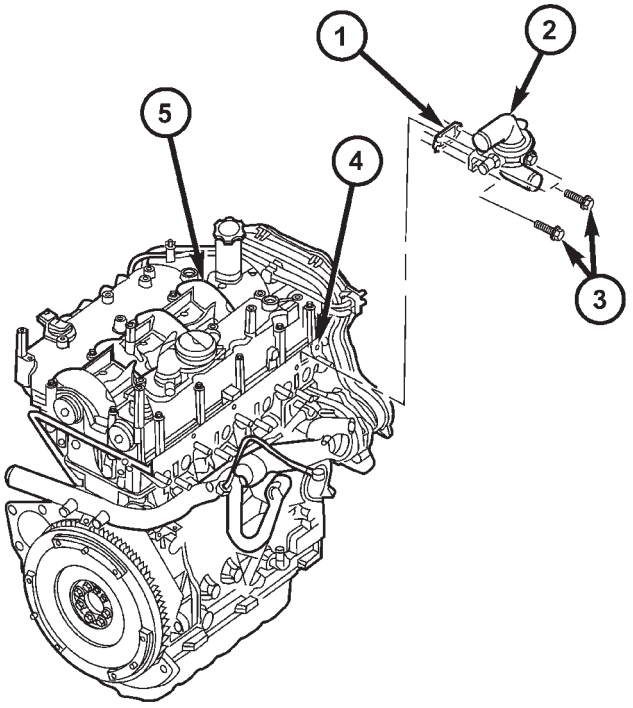

Fig. 10 THERMOSTAT HOUSING ASSEMBLY

1 - THERMOSTAT HOUSING GASKET
2 - THERMOSTAT HOUSING
3 - RETAINING BOLTS
4 - CYLINDER HEAD
5 - CYLINDER HEAD COVER/INTAKE MANIFOLD

(3) Install front wiper unit (Refer to 8 - ELECTRICAL/WIPERS/WASHERS/WIPER MODULE - INSTALLATION).

(4) Refill cooling system (Refer to 7 - COOLING/ENGINE/COOLANT - STANDARD PROCEDURE).

(5) Connect negative battery cable.

RADIATOR

DESCRIPTION

The radiator is a cross-flow type (horizontal tubes) with design features that provide greater strength along with sufficient heat transfer capabilities to keep the engine satisfactorily cooled. The radiator has plastic side tanks and aluminum cooling tubes.

OPERATION

The radiator functions as a heat exchanger, using air flow across the exterior of the radiator tubes. This heat is then transferred from the coolant and into the passing air.

REMOVAL

(1) Disconnect negative cable from battery.

(2) Remove radiator upper crossmember support. (Refer to 23 - BODY/EXTERIOR/GRILLE OPENING REINFORCEMENT - REMOVAL)

WARNING: DO NOT REMOVE THE CYLINDER BLOCK PLUG OR THE RADIATOR DRAINCOCK WITH THE SYSTEM HOT AND UNDER PRESSURE BECAUSE SERIOUS BURNS FROM COOLANT CAN OCCUR.

(3) Drain the cooling system (Refer to 7 - COOLING/ENGINE/COOLANT - STANDARD PROCEDURE).

(4) Remove the radiator fans. (Refer to 7 - COOLING/ENGINE/RADIATOR FAN - REMOVAL)

(5) Disconnect coolant bypass hose (Fig. 11).

(6) Disconnect upper and lower hoses from the radiator (Fig. 11).

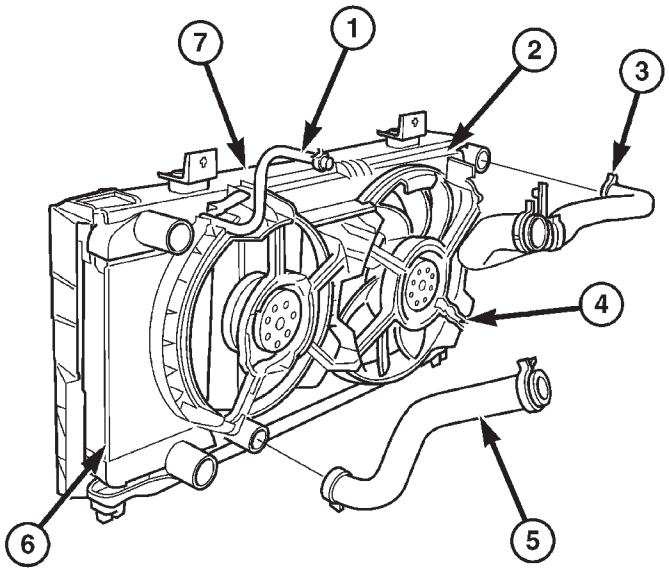

Fig. 11 UPPER AND LOWER RADIATOR HOSES

1 - COOLANT BYPASS HOSE
2 - RADIATOR ASSEMBLY
3 - UPPER RADIATOR HOSE
4 - COOLING FAN
5 - LOWER RADIATOR HOSE
6 - CHARGE AIR COOLER
7 - RADIATOR BRACKET

(7) Remove the A/C condenser side brackets to radiator attaching screws (Fig. 12). Separate the condenser from the radiator by lifting upward to disengage from lower mounts (Fig. 12). Allow the condenser to rest in front of radiator.

RADIATOR (Continued)

(8) Radiator can now be lifted free from engine compartment. **Care should be taken not to damage radiator cooling fins or water tubes during removal.**

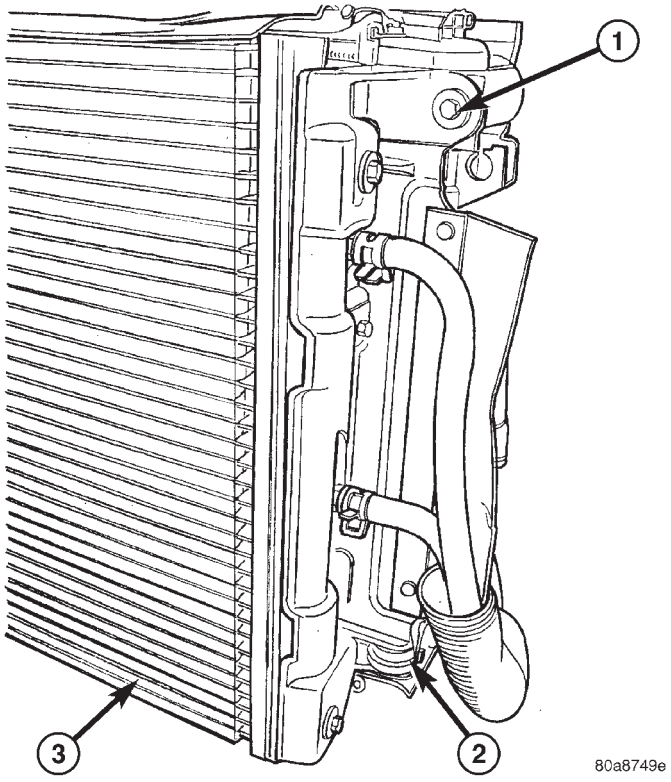

Fig. 12 Radiator to A/C Condenser Mounting (left mount shown, right similar)

1 - SCREW - A/C CONDENSER SIDE BRACKET TO RADIATOR
2 - LOWER MOUNT
3 - A/C CONDENSER

INSTALLATION

(1) **Be sure the air seal is in position before radiator is installed.** Slide radiator down into position. Seat the radiator with the rubber isolators into the mounting holes provided, with a 10 lbs. force.

(2) Position air conditioning condenser onto the radiator lower mounts and install upper screws (Fig. 12). Tighten fasteners to 5 N·m (45 in. lbs.).

(3) Install the radiator upper and lower hoses (Fig. 11).

(4) Connect the coolant bypass hose.

(5) Install the radiator fans. (Refer to 7 - COOLING/ENGINE/RADIATOR FAN - INSTALLATION)

(6) Install the radiator upper crossmember support. (Refer to 23 - BODY/EXTERIOR/GRILLE OPENING REINFORCEMENT - INSTALLATION)

(7) Fill the cooling system (Refer to 7 - COOLING/ENGINE/COOLANT - STANDARD PROCEDURE).

(8) Connect negative cable to battery.

RADIATOR DRAINCOCK

REMOVAL

CAUTION: Use of pliers on draincock is not recommended. Damage may occur to radiator or draincock.

NOTE: It is not necessary to remove draincock during a routine coolant drain.

(1) Drain the cooling system (Refer to 7 - COOLING/ENGINE/COOLANT - STANDARD PROCEDURE).

(2) Open the draincock by turning it counterclockwise until it stops.

(3) Turn the draincock back (clockwise) 1/8 turn.

(4) Pull the draincock (Fig. 13) from the radiator tank.

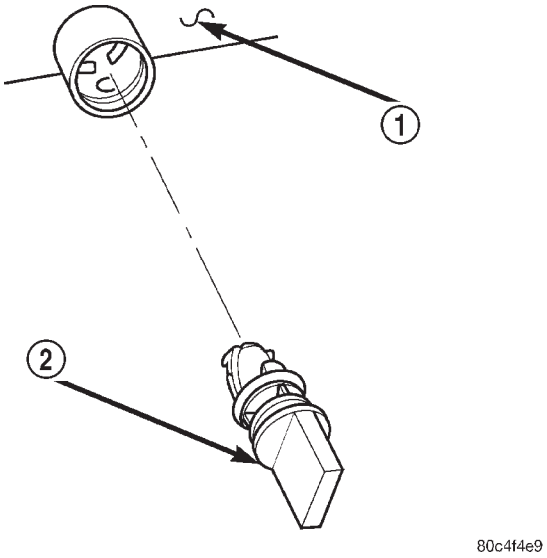

Fig. 13 Draincock

1 - RADIATOR TANK
2 - DRAINCOCK

INSTALLATION

(1) Align draincock stem to radiator tank opening.

(2) Push draincock into the radiator tank opening.

(3) Tighten the draincock by turning clockwise until it stops.

(4) Fill the cooling system (Refer to 7 - COOLING/ENGINE/COOLANT - STANDARD PROCEDURE).

WATER PUMP

DESCRIPTION

The water pump on the 2.5L CRD diesel has a die cast aluminum housing. It bolts to a aluminum housing which attaches to the engine block (Fig. 14).

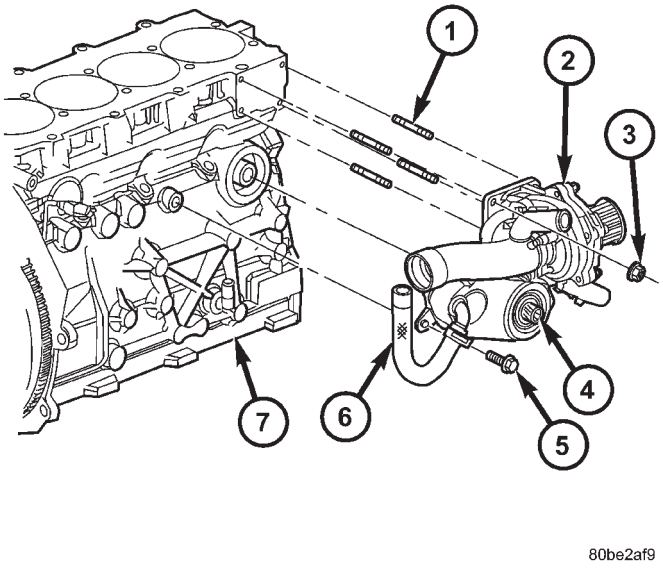

Fig. 14 WATER PUMP

1 - WATER PUMP HOUSING STUDS
2 - WATER PUMP
3 - RETAINING NUTS
4 - OIL COOLER RETAINING STUD
5 - OIL COOLER TO ENGINE BLOCK RETAINING BOLT
6 - OIL COOLER COOLANT HOSE
7 - ENGINE BLOCK

OPERATION

The water pump is used to circulate coolant through the cooling system. The coolant is pumped through the engine block, cylinder head, heater core, EGR cooler, cabin heater, and radiator.

REMOVAL

REMOVAL - WATER PUMP

(1) Disconnect negative battery cable.
(2) Drain cooling system (Refer to 7 - COOLING/ ENGINE/COOLANT - STANDARD PROCEDURE).
(3) Remove timing belt inner and outer covers (Refer to 9 - ENGINE/VALVE TIMING/TIMING BELT / CHAIN COVER(S) - REMOVAL).
(4) Remove water pump retaining bolts and pump (Fig. 15).

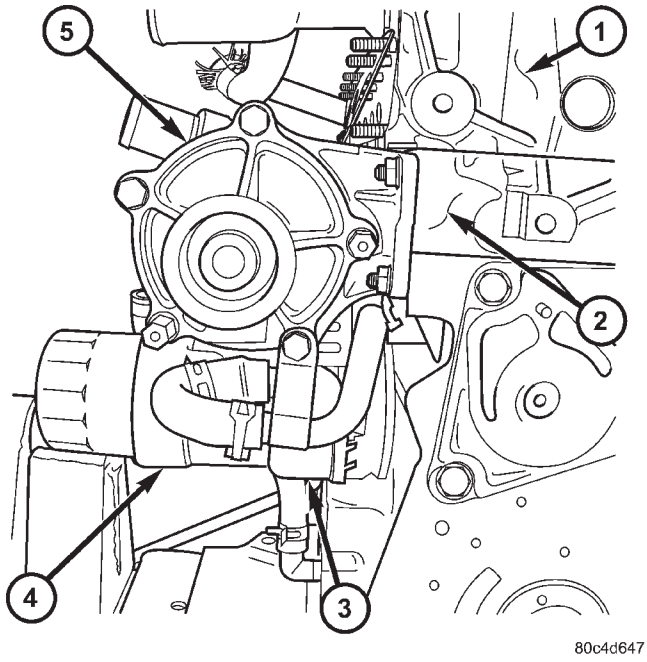

Fig. 15 WATER PUMP LOCATION

1 - CYLINDER HEAD
2 - ENGINE BLOCK
3 - OIL COOLER
4 - OIL FILTER HOUSING
5 - WATER PUMP

REMOVAL - WATER PUMP HOUSING

(1) Disconnect negative battery cable.
(2) Drain cooling system (Refer to 7 - COOLING/ ENGINE/COOLANT - STANDARD PROCEDURE).
(3) Remove both outer and inner timing belt covers (Refer to 9 - ENGINE/VALVE TIMING/TIMING BELT / CHAIN COVER(S) - REMOVAL).
(4) Disconnect water pump housing to thermostat housing bypass hose (Fig. 16).
(5) Remove the water pump housing retaining nuts (Fig. 17).
(6) Remove water pump housing from engine block (Fig. 17).

CLEANING

Clean gasket mating surfaces as necessary.

INSTALLATION

INSTALLATION - WATER PUMP

(1) Clean gasket mating surfaces as necessary.
(2) Place water pump and gasket in place. Install water pump retaining bolts (Fig. 15). Torque bolts to 24.4N·m.

WATER PUMP (Continued)

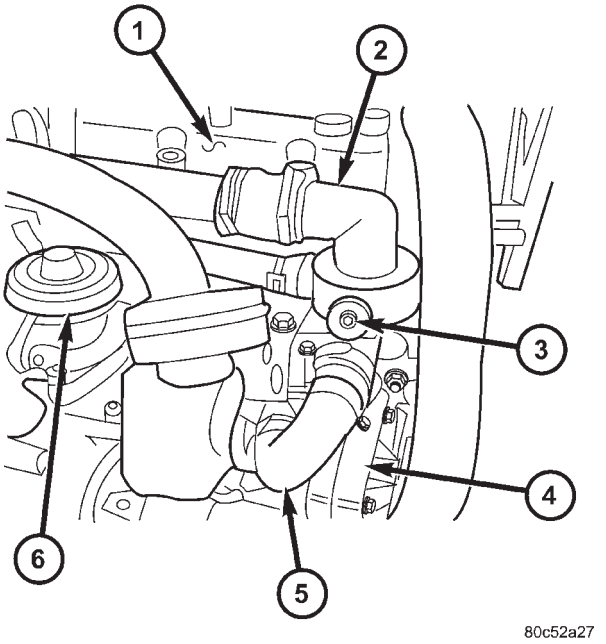

Fig. 16 THERMOSTAT HOUSING LOCATION

1 - CYLINDER HEAD COVER
2 - THERMOSTAT HOUSING
3 - AIR BLEED
4 - WATER PUMP
5 - WATER PUMP HOUSING TO THERMOSTAT HOUSING BYPASS HOSE
6 - EGR VALVE

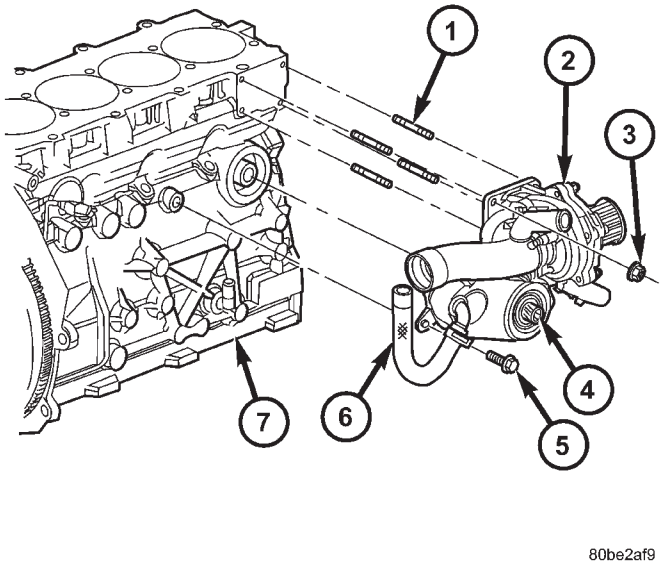

Fig. 17 WATER PUMP ASSEMBLY

1 - WATER PUMP HOUSING STUDS
2 - WATER PUMP
3 - RETAINING NUTS
4 - OIL COOLER RETAINING STUD
5 - OIL COOLER TO ENGINE BLOCK RETAINING BOLT
6 - OIL COOLER COOLANT HOSE
7 - ENGINE BLOCK

(3) Install both inner and outer timing belt covers (Refer to 9 - ENGINE/VALVE TIMING/TIMING BELT / CHAIN COVER(S) - INSTALLATION).

(4) Refill cooling system (Refer to 7 - COOLING/ ENGINE/COOLANT - STANDARD PROCEDURE).

(5) Connect negative battery cable.

INSTALLATION - WATER PUMP HOUSING

(1) Clean mating serfaces of water pump housing and engine block as necessary.

(2) Place new o-ring in groove in water pump housing (Fig. 18).

(3) Be sure lower radiator hose tube o-ring is in place.

(4) Install water pump housing on lower radiator hose tube and push on mounting studs (Fig. 17). Torque retaining nuts to 24.4N·m.

(5) Connect water pump housing to thermostat housing bypass hose (Fig. 16).

(6) Install both inner and outer timing belt covers (Refer to 9 - ENGINE/VALVE TIMING/TIMING BELT / CHAIN COVER(S) - INSTALLATION).

(7) Refill cooling system (Refer to 7 - COOLING/ ENGINE/COOLANT - STANDARD PROCEDURE).

(8) Connect negative battery cable.

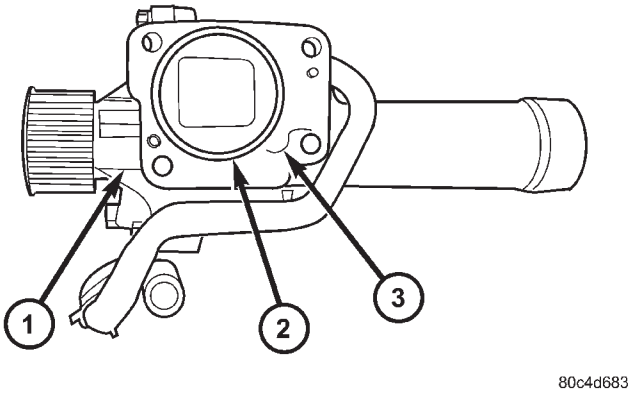

Fig. 18 WATER PUMP HOUSING O-RING

1 - WATER PUMP
2 - WATER PUMP HOUSING O-RING
3 - WATER PUMP HOUSING

RADIATOR PRESSURE CAP

DESCRIPTION

The cooling system pressure cap is located on the radiator. The cap construction includes; stainless steel swivel top, rubber seals, and retainer, main spring, and a spring loaded valve (Fig. 19).

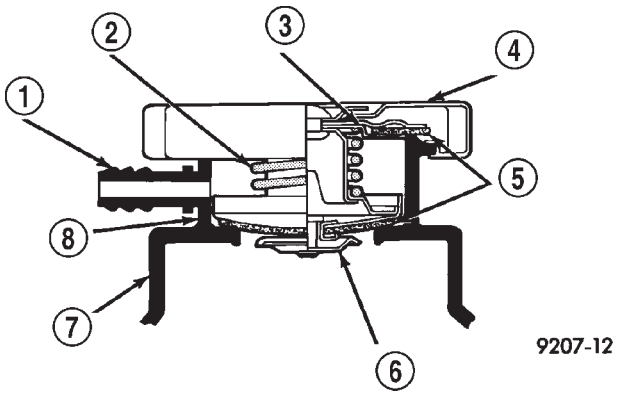

Fig. 19 Cooling System Pressure Cap Filler Neck

1 - OVERFLOW NIPPLE
2 - MAIN SPRING
3 - GASKET RETAINER
4 - STAINLESS-STEEL SWIVEL TOP
5 - RUBBER SEALS
6 - VENT VALVE
7 - PRESSURE BOTTLE
8 - FILLER NECK

OPERATION

The cooling system is equipped with a pressure cap that releases excessive pressure; maintaining a range of 97-124 kPa (14-18 psi).

The cooling system will operate at higher than atmospheric pressure. The higher pressure raises the coolant boiling point thus, allowing increased radiator cooling capacity.

There is also a vent valve in the center of the cap. This valve also opens when coolant is cooling and contracting, allowing the coolant to return to cooling system from coolant reserve system tank by vacuum through a connecting hose. **If valve is stuck shut, or the coolant recovery hose is pinched, the radiator hoses will be collapsed on cool down. Clean the vent valve (Fig. 19) and inspect coolant recovery hose routing, to ensure proper sealing when boiling point is reached.**

The gasket in the cap seals the filler neck, so that vacuum can be maintained, allowing coolant to be drawn back into the radiator from the reserve tank. **If the gasket is dirty or damaged, a vacuum may not be achieved, resulting is loss of coolant and eventual overheating due to low coolant level in radiator and engine.**

DIAGNOSIS AND TESTING

DIAGNOSIS AND TESTING - COOLING SYSTEM PRESSURE CAP

Dip the pressure cap in water. Clean any deposits off the vent valve or its seat and apply cap to end of the Pressure Cap Test Adaptor that is included with the Cooling System Tester 7700. Working the plunger, bring the pressure to 104 kPa (15 psi) on the gauge. If the pressure cap fails to hold pressure of at least 97 kPa (14 psi), replace the pressure cap.

CAUTION: The Cooling System Tester Tool is very sensitive to small air leaks that will not cause cooling system problems. A pressure cap that does not have a history of coolant loss should not be replaced just because it leaks slowly when tested with this tool. Add water to the tool. Turn tool upside down and recheck pressure cap to confirm that cap is bad.

If the pressure cap tests properly while positioned on Cooling System Tester (Fig. 20), but will not hold pressure or vacuum when positioned on the filler neck. Inspect the filler neck and cap top gasket for irregularities that may prevent the cap from sealing properly.

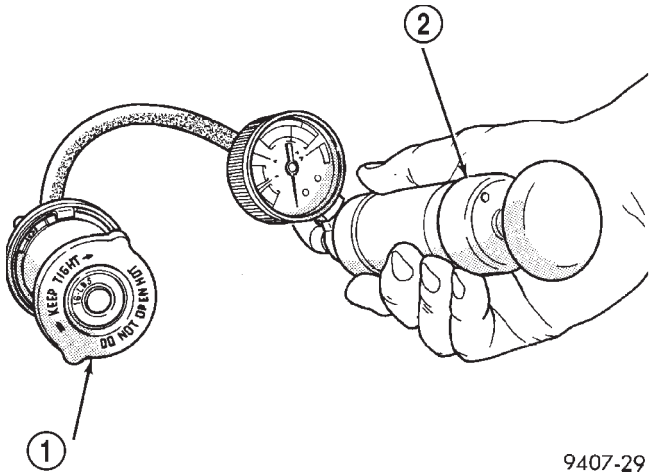

Fig. 20 Testing Cooling System Pressure Cap

1 - PRESSURE CAP
2 - PRESSURE TESTER

RADIATOR PRESSURE CAP (Continued)

DIAGNOSIS AND TESTING - PRESSURE RELIEF TEST

The pressure cap upper gasket (seal) pressure relief can be checked by removing the overflow hose at the radiator filler neck nipple (Fig. 21). Attach the Radiator Pressure Tool to the filler neck nipple and pump air into the radiator. Pressure cap upper gasket should relieve at 69-124 kPa (10-18 psi) and hold pressure at 55 kPa (8 psi) minimum.

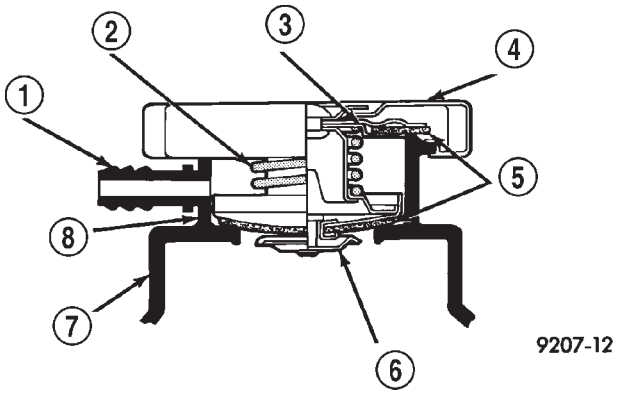

Fig. 21 Radiator Pressure Cap Filler Neck

1 - OVERFLOW NIPPLE
2 - MAIN SPRING
3 - GASKET RETAINER
4 - STAINLESS-STEEL SWIVEL TOP
5 - RUBBER SEALS
6 - VENT VALVE
7 - PRESSURE BOTTLE
8 - FILLER NECK

WARNING: THE WARNING WORDS "DO NOT OPEN HOT" ON THE RADIATOR PRESSURE CAP IS A SAFETY PRECAUTION. WHEN HOT, PRESSURE BUILDS UP IN COOLING SYSTEM. TO PREVENT SCALDING OR INJURY, THE RADIATOR CAP SHOULD NOT BE REMOVED WHILE THE SYSTEM IS HOT OR UNDER PRESSURE.

There is no need to remove the radiator cap at any time **except** for the following purposes:

(1) Check and adjust coolant freeze point.
(2) Refill system with new coolant.
(3) Conducting service procedures.
(4) Checking for vacuum leaks.

WARNING: IF VEHICLE HAS BEEN RUN RECENTLY, WAIT 15 MINUTES BEFORE REMOVING CAP. THEN PLACE A SHOP TOWEL OVER THE CAP AND WITHOUT PUSHING DOWN ROTATE COUNTERCLOCKWISE TO THE FIRST STOP. ALLOW FLUIDS TO ESCAPE THROUGH THE OVERFLOW TUBE AND WHEN THE SYSTEM STOPS PUSHING COOLANT AND STEAM INTO THE CRS TANK AND PRESSURE DROPS PUSH DOWN AND REMOVE THE CAP COMPLETELY. SQUEEZING THE RADIATOR INLET HOSE WITH A SHOP TOWEL (TO CHECK PRESSURE) BEFORE AND AFTER TURNING TO THE FIRST STOP IS RECOMMENDED.

CLEANING

Use only a mild soap to clean the pressure cap.

INSPECTION

Hold the cap in your hand, **top side up** (Fig. 21). The vent valve at the bottom of the cap should open. If the rubber gasket has swollen, preventing the valve from opening, replace the cap.

Hold the cleaned cap in your hand, **upside down.** If any light can be seen between vent valve and the rubber gasket, replace the cap. **Do not use a replacement cap that has a spring to hold the vent shut.**

A replacement cap must be of the type designed for coolant reserve systems. This design ensures coolant return to the radiator.

RADIATOR FAN

DESCRIPTION

The dual radiator fans are mounted to the back side of the radiator (Fig. 22). The radiator fan consist of the fan blade, electric motor and a support shroud which are all serviced as an assembly.

RADIATOR FAN (Continued)

OPERATION

RADIATOR FAN OPERATION CHART

COOLANT TEMPERATURE			A/C PRESSURE	
Fan Operation Speeds:	Initial	Max	Initial	Max
Fan On:	104°C (220°F)	110°C (230°F) Fan Speed Duty-Cycles (Ramps-up) from 30% to 99%	1,724 Kpa (250 psi)	2,068 Kpa (300 psi) Fan Speed Duty-Cycles (Ramps-up) from 30% to 99%
Fan Off:	101°C (214°F)	Fan Speed Duty-Cycles (Ramps-down) from 99% to 30%	1,710 Kpa (248 psi)	Fan Speed Duty-Cycles (Ramps-down) from 99% to 30%

DIAGNOSIS AND TESTING - RADIATOR FAN MOTOR

RADIATOR FAN DIAGNOSIS CHART

CONDITION	POSSIBLE CAUSES	CORRECTION
NOISY RADIATOR FAN	1. Fan blade loose.	1. Replace fan assembly. (Refer to 7 - COOLING/ENGINE/RADIATOR FAN - REMOVAL)
	2. Fan blade striking a surrounding object.	2. Locate point of fan blade contact and repair as necessary.
	3. Air obstructions at radiator or A/C condenser.	3. Remove obstructions and/or clean debris.
	4. Electric fan motor defective.	4. Replace fan assembly. (Refer to 7 - COOLING/ENGINE/RADIATOR FAN - REMOVAL)
ELECTRIC FAN MOTOR DOES NOT OPERATE	1. Fan relay, powertrain control module (PCM), coolant temperature sensor, or wiring defective.	1. (Refer to Appropriate Diagnostic Information) Repair as necessary.
	2. Defective A/C pressure transducer.	2. (Refer to Appropriate Diagnostic Information) Repair as necessary.
ELECTRIC RADIATOR FAN OPERATES ALL THE TIME	1. Fan relay, powertrain control module (PCM), coolant temperature sensor or wiring defective.	1. (Refer to Appropriate Diagnostic Information) Repair as necessary.
	2. Check for low coolant level.	2. Add coolant as necessary.
	3. Defective A/C pressure transducer.	3. (Refer to Appropriate Diagnostic Information) Repair as necessary.

RADIATOR FAN (Continued)

REMOVAL

There are no repairs to be made to the fan or shroud assembly. If the fan is warped, cracked, or otherwise damaged, it must be replaced as an assembly (Fig. 22).

(1) Remove the radiator upper crossmember. (Refer to 23 - BODY/EXTERIOR/GRILLE OPENING REINFORCEMENT - REMOVAL)

(2) Disconnect the radiator fan electrical connectors.

(3) Remove radiator fan(s) retaining screw (Fig. 22).

(4) Remove the radiator fan(s) by lifting upward to release from mounts.

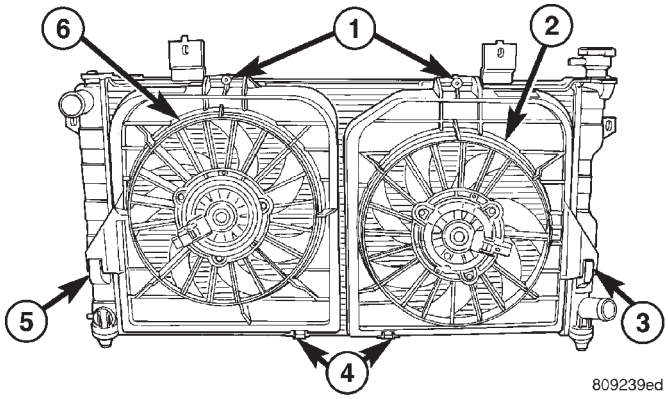

Fig. 22 Radiator Fans

1 - SCREWS - RADIATOR FAN ATTACHING
2 - RADIATOR FAN - RIGHT
3 - MOUNT - RIGHT RADIATOR FAN
4 - CLIPS - RADIATOR FAN LOWER
5 - MOUNT - LEFT RADIATOR FAN
6 - RADIATOR FAN - LEFT

INSTALLATION

(1) Install the radiator fan(s) into mounts and attaching clips on the radiator.

(2) Install radiator fan(s) attaching screws (Fig. 22). Tighten to 5 N·m (45 in. lbs.).

(3) Connect the radiator fan(s) electrical connectors.

(4) Install the radiator upper support crossmember. (Refer to 23 - BODY/EXTERIOR/GRILLE OPENING REINFORCEMENT - INSTALLATION)

(5) Install the upper radiator mounts to the crossmember bolts, if removed. Tighten to 8 N·m (70 in. lbs.).

(6) Install the radiator upper hose to the support clip (2.4L engine).

HOSE CLAMPS

DESCRIPTION - HOSE CLAMPS

The cooling system uses spring type hose clamps. If a spring type clamp replacement is necessary, replace with the original Mopar® equipment spring type clamp.

CAUTION: A number or letter is stamped into the tongue of constant tension clamps. If replacement is necessary, use only a original equipment clamp with matching number or letter (Fig. 23).

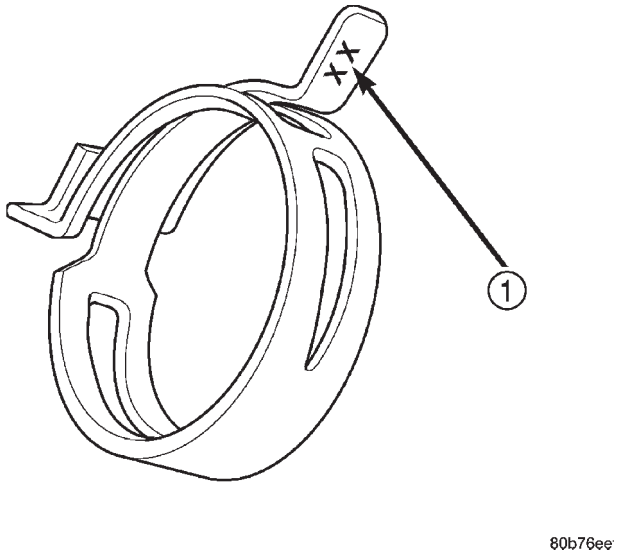

Fig. 23 Spring Clamp Size Location

1 - SPRING CLAMP SIZE LOCATION

OPERATION - HOSE CLAMPS

The spring type hose clamp applies constant tension on a hose connection. To remove a spring type hose clamp, use Special Tool 6094 or equivalent, constant tension clamp pliers (Fig. 24) to compress the hose clamp.

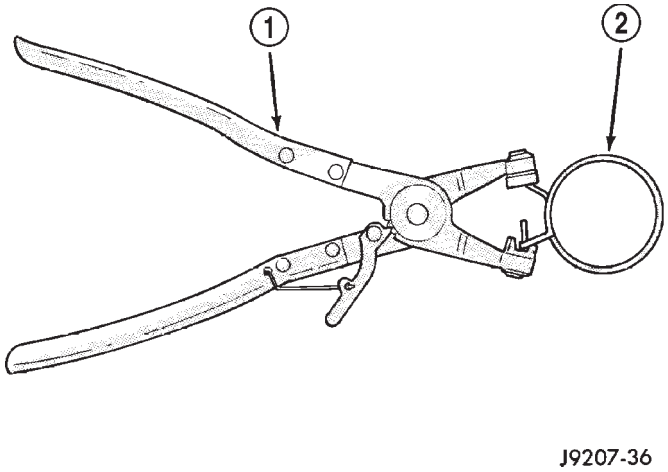

Fig. 24 Hose Clamp Tool

1 - HOSE CLAMP TOOL 6094
2 - HOSE CLAMP

RADIATOR FAN RELAY

DESCRIPTION

The low and high speed fan relays are mounted to the upper radiator support above the charge air cooler (Fig. 25).

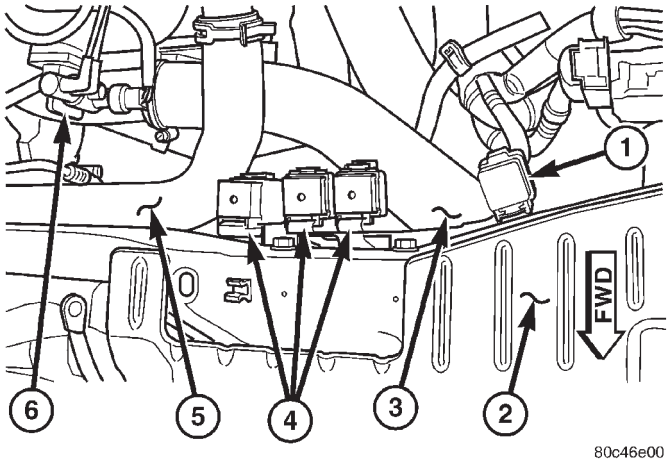

Fig. 25 RELAY LOCATIONS

1 - GLOW PLUG RELAY
2 - UPPER RADIATOR SUPPORT
3 - CHARGE AIR COOLER OUTLET HOSE
4 - RADIATOR FAN RELAYS
5 - UPPER RADIATOR HOSE
6 - EGR SOLENOID

OPERATION

The cooling system uses two fans. Both fans operate at two different speeds, low and high. Depending on engine coolant temperature and A/C system high side pressure, the fans operate at either low or high. The ignition switch supplies voltage to the coil side of the relay. When the ECM grounds the coil side of the relay, the contacts close and the battery supplies power to the fans.

COOLANT SYSTEM HOSES

REMOVAL

REMOVAL - UPPER RADIATOR HOSE

WARNING: THE WARNING WORDS "DO NOT OPEN HOT" ON THE RADIATOR PRESSURE CAP IS A SAFETY PRECAUTION. WHEN HOT, PRESSURE BUILDS UP IN COOLING SYSTEM. TO PREVENT SCALDING OR INJURY, THE RADIATOR CAP SHOULD NOT BE REMOVED WHILE THE SYSTEM IS HOT OR UNDER PRESSURE.

(1) Remove engine cover (Refer to 9 - ENGINE - REMOVAL).
(2) Drain cooling system (Refer to 7 - COOLING/ ENGINE/COOLANT - STANDARD PROCEDURE).
(3) Remove upper radiator hose (Fig. 26).

REMOVAL - LOWER RADIATOR HOSE

WARNING: THE WARNING WORDS "DO NOT OPEN HOT" ON THE RADIATOR PRESSURE CAP IS A SAFETY PRECAUTION. WHEN HOT, PRESSURE BUILDS UP IN COOLING SYSTEM. TO PREVENT SCALDING OR INJURY, THE RADIATOR CAP SHOULD NOT BE REMOVED WHILE THE SYSTEM IS HOT OR UNDER PRESSURE.

(1) Drain cooling system (Refer to 7 - COOLING/ ENGINE/COOLANT - STANDARD PROCEDURE).
(2) Remove lower radiator hose (Fig. 26).

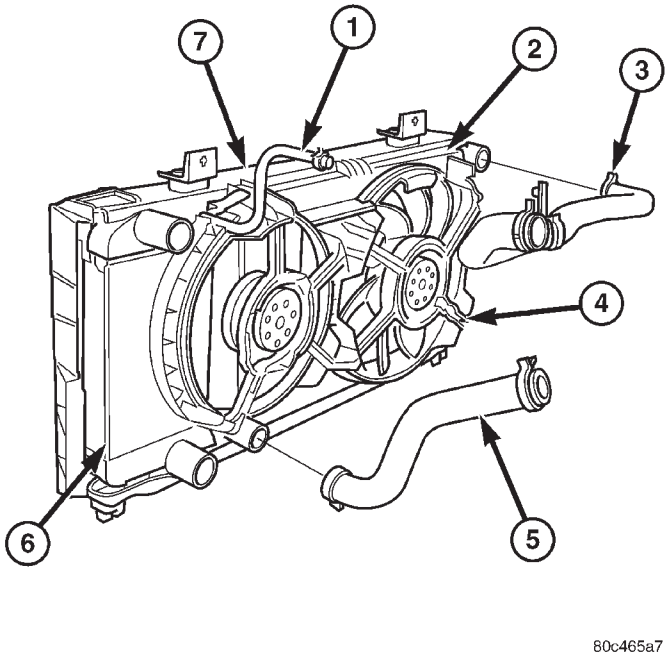

Fig. 26 UPPER AND LOWER RADIATOR HOSES

1 - COOLANT BYPASS HOSE
2 - RADIATOR ASSEMBLY
3 - UPPER RADIATOR HOSE
4 - COOLING FAN
5 - LOWER RADIATOR HOSE
6 - CHARGE AIR COOLER
7 - RADIATOR BRACKET

COOLANT SYSTEM HOSES (Continued)

REMOVAL - COOLANT BYPASS HOSE

WARNING: THE WARNING WORDS "DO NOT OPEN HOT" ON THE RADIATOR PRESSURE CAP IS A SAFETY PRECAUTION. WHEN HOT, PRESSURE BUILDS UP IN COOLING SYSTEM. TO PREVENT SCALDING OR INJURY, THE RADIATOR CAP SHOULD NOT BE REMOVED WHILE THE SYSTEM IS HOT OR UNDER PRESSURE.

(1) Drain cooling system (Refer to 7 - COOLING/ ENGINE/COOLANT - STANDARD PROCEDURE).
(2) Remove the coolant bypass hose (Fig. 26).

INSTALLATION

INSTALLATION - UPPER RADIATOR HOSE

(1) Install upper radiator hose (Fig. 26).
(2) Refill cooling system (Refer to 7 - COOLING/ ENGINE/COOLANT - STANDARD PROCEDURE).
(3) Install engine cover (Refer to 9 - ENGINE - INSTALLATION).

INSTALLATION - LOWER RADIATOR HOSE

(1) Install lower radiator hose (Fig. 26).
(2) Refill cooling system (Refer to 7 - COOLING/ ENGINE/COOLANT - STANDARD PROCEDURE).

INSTALLATION - COOLANT BYPASS HOSE

(1) Install cooling system bypass hose (Fig. 26).
(2) Refill cooling system (Refer to 7 - COOLING/ ENGINE/COOLANT - STANDARD PROCEDURE).

AUDIO

TABLE OF CONTENTS

page

AUDIO
DESCRIPTION 1
OPERATION 1
DIAGNOSIS AND TESTING - AUDIO 1
ANTENNA BODY AND CABLE
DESCRIPTION 4
OPERATION 4
DIAGNOSIS AND TESTING - ANTENNA BODY AND CABLE 4
REMOVAL 4
INSTALLATION 5
ANTENNA MODULE - EXPORT
DESCRIPTION 6
OPERATION 6
DIAGNOSIS AND TESTING - ANTENNA MODULE - EXPORT 6
REMOVAL 7
INSTALLATION 7
CD CHANGER
DESCRIPTION 7
OPERATION 7
REMOVAL 7
INSTALLATION 7
INSTRUMENT PANEL ANTENNA CABLE
REMOVAL 8
INSTALLATION 8
QUARTER GLASS INTEGRAL ANTENNA - EXPORT
DESCRIPTION 8
OPERATION 8
DIAGNOSIS AND TESTING - QUARTER GLASS INTEGRAL ANTENNA - EXPORT 8
RADIO
DIAGNOSIS AND TESTING - RADIO 9
REMOVAL 9
INSTALLATION 10
RADIO NOISE SUPPRESSION COMPONENTS
DESCRIPTION 10
OPERATION 10
REMOTE SWITCHES
DESCRIPTION 11
OPERATION 11
DIAGNOSIS AND TESTING - REMOTE SWITCHES 11
REMOVAL 12
INSTALLATION 12
SPEAKER
DIAGNOSIS AND TESTING - SPEAKER 12
REMOVAL 13
INSTALLATION 14

AUDIO

DESCRIPTION

There are four different system combinations available on this model. The available radio options are:

- AM/FM Cassette
- AM/FM Compact Disc with Compact Disc changer controls
- AM/FM Cassette with single Compact Disc Player and Compact Disc changer controls
- AM/FM Cassette with Compact Disc changer controls
- AM/FM Cassette with Compact Disc player, rear seat audio system and Compact Disc changer controls.

The rear seat audio system allows passengers to listen to a different music source, through headphones, other than what is playing through the vehicles speaker system. A remote control is provided for functions such as changing stations, tracks, disc and modes while listening to rear seat audio. The radio must be turned ON to use the rear seat audio system.

All factory installed radio receivers are stereo Electronically Tuned Radios (ETR) and include and electronic digital clock function.

OPERATION

Operating instructions for the factory installed audio systems can be found in the Owner's Manual provided with this vehicle.

DIAGNOSIS AND TESTING - AUDIO

Any diagnosis of the Audio system should begin with the use of the DRB III® diagnostic tool. For information on the use of the DRB III®, refer to the appropriate Diagnostic Service Manual.

Refer to the appropriate wiring information. The wiring information includes wiring diagrams, proper wire and connector repair procedures, details of wire harness routing and retention, connector pin-out

AUDIO (Continued)

information and location views for the various wire harness connectors, splices and grounds.

WARNING: ON VEHICLES EQUIPPED WITH AIRBAGS, REFER TO ELECTRICAL, RESTRAINTS BEFORE ATTEMPTING ANY STEERING WHEEL, STEERING COLUMN, OR INSTRUMENT PANEL COMPONENT DIAGNOSIS OR SERVICE. FAILURE TO TAKE THE PROPER PRECAUTIONS COULD RESULT IN ACCIDENTAL AIRBAG DEPLOYMENT AND POSSIBLE PERSONAL INJURY.

AUDIO SYSTEM DIAGNOSIS

CONDITION	POSSIBLE CAUSE	CORRECTION
NO AUDIO.	1. FUSE FAULTY.	1. CHECK RADIO FUSES IN FUSE BLOCK MODULE. REPLACE FUSES, IF REQUIRED.
	2. RADIO CONNECTOR FAULTY.	2. CHECK FOR LOOSE OR CORRODED RADIO CONNECTOR. REPAIR, IF REQUIRED.
	3. WIRING FAULTY.	3. CHECK FOR BATTERY VOLTAGE AT RADIO CONNECTOR. REPAIR WIRING, IF REQUIRED.
	4. GROUND FAULTY.	4. CHECK FOR CONTINUITY BETWEEN RADIO CHASSIS AND A KNOWN GOOD GROUND. THERE SHOULD BE CONTINUITY. REPAIR GROUND, IF REQUIRED.
	5. RADIO FAULTY.	5. EXCHANGE OR REPLACE RADIO, IF REQUIRED.
	6. SPEAKERS FAULTY.	6. SEE SPEAKER DIAGNOSIS, IN THIS GROUP.
NO DISPLAY.	1. FUSE FAULTY.	1. CHECK RADIO FUSES IN FUSE BLOCK MODULE. REPLACE FUSES, IF REQUIRED.
	2. RADIO CONNECTOR FAULTY.	2. CHECK FOR LOOSE OR CORRODED RADIO CONNECTOR. REPAIR, IF REQUIRED.
	3. WIRING FAULTY.	3. CHECK FOR BATTERY VOLTAGE AT RADIO CONNECTOR. REPAIR WIRING, IF REQUIRED.
	4. GROUND FAULTY.	4. CHECK FOR CONTINUITY BETWEEN RADIO CHASSIS AND A KNOWN GOOD GROUND. THERE SHOULD BE CONTINUITY. REPAIR GROUND, IF REQUIRED.
	5. RADIO FAULTY.	5. EXCHANGE OR REPLACE RADIO, IF REQUIRED.
NO MEMORY.	1. FUSE FAULTY.	1. CHECK IGNITION-OFF DRAW FUSE. REPLACE FUSE, IF REQUIRED.
	2. RADIO CONNECTOR FAULTY.	2. CHECK FOR LOOSE OR CORRODED RADIO CONNECTOR. REPAIR, IF REQUIRED.
	3. WIRING FAULTY.	3. CHECK FOR BATTERY VOLTAGE AT RADIO CONNECTOR. REPAIR WIRING, IF REQUIRED.
	4. GROUND FAULTY.	4. CHECK FOR CONTINUITY BETWEEN RADIO CHASSIS AND A KNOWN GOOD GROUND. THERE SHOULD BE CONTINUITY. REPAIR GROUND, IF REQUIRED.
	5. RADIO FAULTY.	5. EXCHANGE OR REPLACE RADIO, IF REQUIRED.
POOR RADIO RECEPTION.	1. ANTENNA FAULTY.	1. SEE ANTENNA DIAGNOSIS, IN THIS GROUP. REPAIR OR REPLACE ANTENNA, IF REQUIRED.

AUDIO (Continued)

CONDITION	POSSIBLE CAUSE	CORRECTION
	2. GROUND FAULTY.	2. CHECK FOR CONTINUITY BETWEEN RADIO CHASSIS AND A KNOWN GOOD GROUND. THERE SHOULD BE CONTINUITY. REPAIR GROUND, IF REQUIRED.
	3. RADIO FAULTY.	3. EXCHANGE OR REPLACE RADIO, IF REQUIRED.
	4. POOR ANTENNA CONNECTION AT RADIO OR IN LINE.	4. SEAT CONNECTOR.
NO/POOR TAPE OPERATION.	1. FAULTY TAPE.	1. INSERT KNOWN GOOD TAPE AND TEST OPERATION.
	2. FOREIGN OBJECTS BEHIND TAPE DOOR.	2. REMOVE FOREIGN OBJECTS AND TEST OPERATION.
	3. DIRTY CASSETTE TAPE HEAD.	3. CLEAN HEAD WITH MOPAR CASSETTE HEAD CLEANER.
	4. FAULTY TAPE DECK.	4. EXCHANGE OR REPLACE RADIO, IF REQUIRED.
NO COMPACT DISC OPERATION	1. FAULTY CD.	1. INSERT KNOWN GOOD CD AND TEST OPERATION.
	2. FOREIGN MATERIAL ON CD.	2. CLEAN CD AND TEST OPERATION.
	3. CONDENSATION ON CD OR OPTICS.	3. ALLOW TEMPERATURE OF VEHICLE INTERIOR TO STABILIZE AND TEST OPERATION.
	4. FAULTY CD PLAYER.	4. EXCHANGE OR REPLACE RADIO, IF REQUIRED.
HEADPHONES WILL NOT HOLD A CHANNEL OR HAVE STATIC	1. WEAK BATTERIES IN THE HEADPHONES.	1. REPLACE BATTERIES.
	2. CLOSENESS TO RADIO TRANSMITTER SUCH AS A RADIO TOWER, AIRPORT TRANSMITTER OR SOME MOBILE RADIOS.	2. MOVE TO AN AREA AWAY FREE FROM THESE CONDITIONS.
REMOTE CONTROL INOPERATIVE	1. WEAK BATTERIES IN THE REMOTE CONTROL.	1. REPLACE BATTERIES.
	2. OPERATION CONSTRAINT OF SYSTEM	2. MAKE SURE THAT REAR AUDIO IS IN A DIFFERENT MODE THAN FRONT SPEAKERS. REMOTE CONTROL WILL NOT WORK WHEN BOTH ARE IN THE SAME MODE.

ANTENNA BODY AND CABLE

DESCRIPTION

All models use a fixed-length stainless steel rod-type antenna mast, installed at the right front fender of the vehicle. The antenna mast is connected to the center wire of the coaxial antenna cable, and is not grounded to any part of the vehicle.

OPERATION

To minimize static, the antenna base must have a good ground. The coaxial antenna cable shield (the outer wire mesh of the cable) is grounded to the antenna base and the radio chassis.

The antenna coaxial cable has an additional disconnect, located near the right end of the instrument panel. This additional disconnect allows the instrument panel assembly to be removed and installed without removing the radio.

The factory-installed Electronically Tuned Radios (ETRs) automatically compensate for radio antenna trim. Therefore, no antenna trimmer adjustment is required or possible when replacing the receiver or the antenna.

DIAGNOSIS AND TESTING - ANTENNA BODY AND CABLE

WARNING: ON VEHICLES EQUIPPED WITH AIRBAGS, REFER TO ELECTRICAL, RESTRAINTS BEFORE ATTEMPTING ANY STEERING WHEEL, STEERING COLUMN, OR INSTRUMENT PANEL COMPONENT DIAGNOSIS OR SERVICE. FAILURE TO TAKE THE PROPER PRECAUTIONS COULD RESULT IN ACCIDENTAL AIRBAG DEPLOYMENT AND POSSIBLE PERSONAL INJURY.

The ohmmeter test lead connections for each test are shown in (Fig. 1).

TEST 1

Test 1 determines of the antenna mast is insulated from the base. Proceed as follows:

(1) Unplug the antenna coaxial cable from the radio chassis and isolate. Remove the antenna mast.

(2) Connect an ohmmeter test lead to the inside center of the antenna base. Connect the other test lead to a metallic portion on the outside of the antenna base. Check for continuity.

(3) There should be no continuity. If continuity is found, replace the faulty or damaged antenna base and cable assembly.

TEST 2

Test 2 checks the antenna for an open circuit as follows:

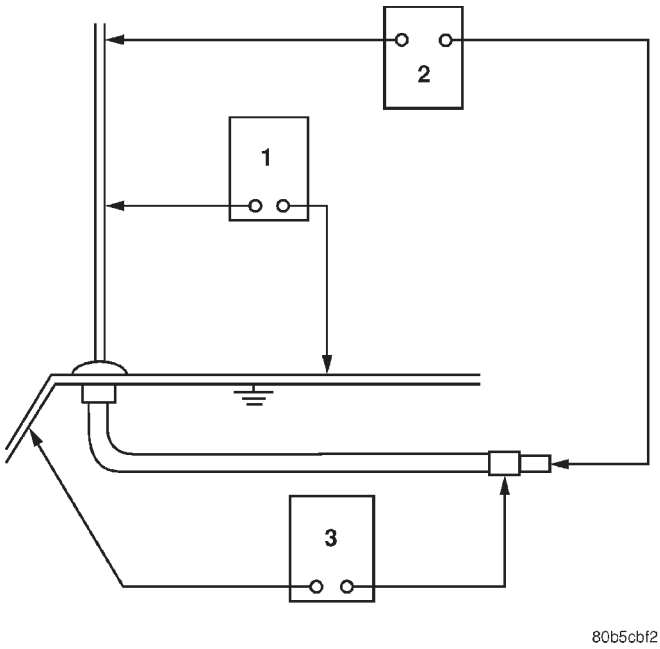

Fig. 1 Antenna Test Points

(1) Unplug the antenna coaxial cable connector from the radio chassis. Remove the antenna mast. The painted mast prevents measurement directly through the mast.

(2) Connect an ohmmeter test lead to the inside center of the antenna base. Connect the other test lead to the center pin of the antenna coaxial cable connector.

(3) Continuity should exist (the ohmmeter should only register a fraction of an ohm). High or infinite resistance indicates damage to the base and cable assembly. Replace the faulty base and cable if required.

TEST 3

Test 3 checks the condition of the ground between the antenna base and the vehicle body as follows:

(1) Connect one ohmmeter test lead to the fender on an exposed metal area (paint and e-coat must be penetrated to obtain continuity). Connect the other test lead to the outer crimp on the antenna coaxial cable connector.

(2) The resistance should be less than (1) ohm.

(3) If the resistance is more than (1) ohm, clean and/or tighten the antenna base to the fender mounting hardware.

REMOVAL

(1) Disconnect and isolate the battery negative cable.

(2) Remove glove box from instrument panel, (Refer to 23 - BODY/INSTRUMENT PANEL/GLOVE BOX - REMOVAL).

ANTENNA BODY AND CABLE (Continued)

(3) Disconnect antenna cable connector from extension cable (Fig. 2).
(4) Remove right kick trim panel.
(5) Disengage rubber grommet insulator from door hinge pillar.
(6) Pull antenna cable through hinge pillar into opening between door hinges.
(7) Hoist and support vehicle on safety stands.
(8) Remove front wheel.
(9) Remove front wheelhouse splash shield. (Refer to 23 - BODY/EXTERIOR/LF WHEELHOUSE SPLASH SHIELD - REMOVAL).
(10) Remove antenna mast from antenna base (Fig. 3).
(11) Remove plastic cap from the cap nut. Using cap nut tool, remove cap nut holding antenna base to front fender (Fig. 4).
(12) Remove antenna base from under front fender.

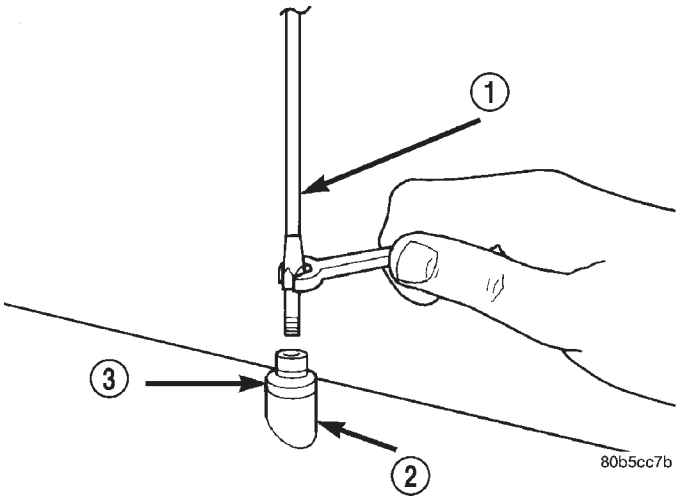

Fig. 3 Antenna Mast

1 - ANTENNA MAST
2 - ADAPTER
3 - CAP NUT

INSTALLATION

(1) Install antenna base to underside of front fender.
(2) Install cap nut holding antenna base to front fender.
(3) Install plastic cap to the cap nut.
(4) Install antenna mast to antenna base.
(5) Install front wheelhouse splash shield.
(6) Install front wheel.
(7) Lower vehicle.
(8) Push antenna cable through opening in hinge pillar.
(9) Insert rubber grommet into door hinge pillar.
(10) Install kick panel.

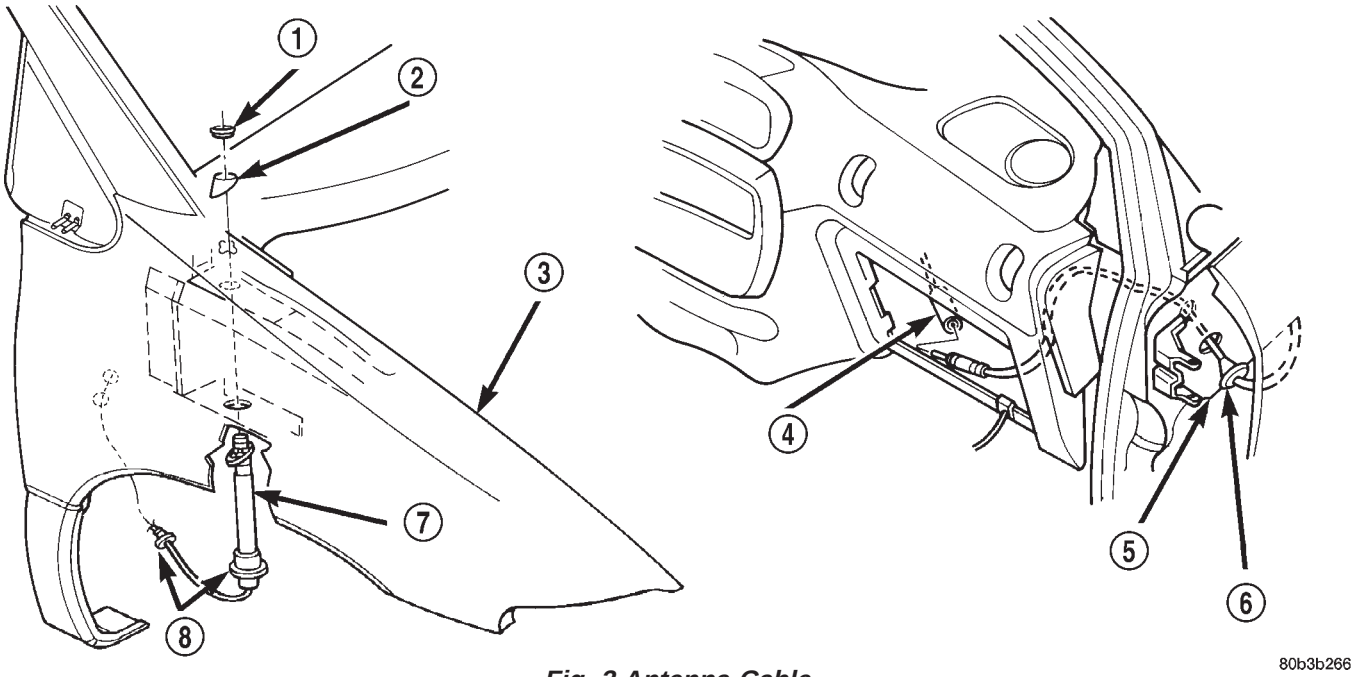

Fig. 2 Antenna Cable

1 - CAP NUT
2 - ADAPTER
3 - FENDER
4 - CABLE TO RADIO (EXTENSION CABLE)
5 - A-PILLAR
6 - RUBBER GROMMET
7 - ANTENNA CABLE AND BODY ASSEMBLY
8 - RUBBER GROMMET

ANTENNA BODY AND CABLE (Continued)

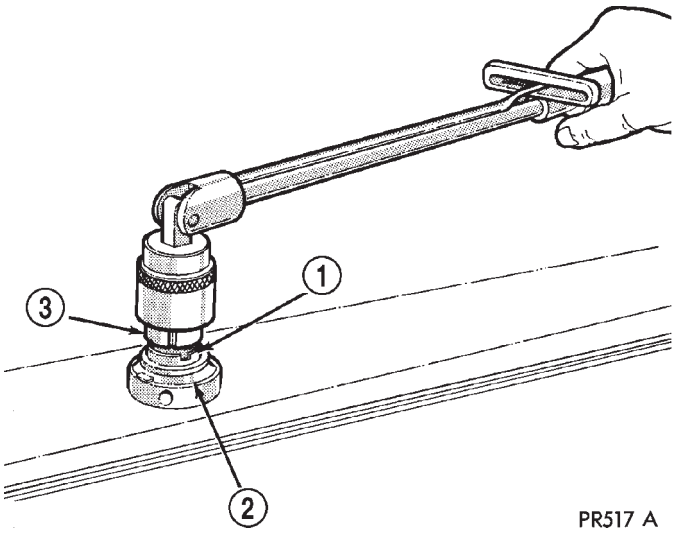

Fig. 4 Antenna Cap Nut

1 - CAP NUT
2 - ANTENNA ADAPTER
3 - TOOL

(11) Connect antenna cable connector to extension cable.

(12) Install glove box to instrument panel.
(13) Connect the battery negative cable.

ANTENNA MODULE - EXPORT

DESCRIPTION

The antenna module is an electromagnetic circuit component designed to capture and enhance RF (Radio Frequency) signals in both the AM and FM broadcast bands. The antenna module is mounted to the right rear roof rail under the headliner. The module is grounded through the mounting bracket and fastener. The module has a two wire electrical connector that connects to the integral radio antenna, located on the right rear quarter glass. There is also an electrical connector for battery voltage and a coax cable connector.

OPERATION

The antenna module receives both AM and FM radio signals supplied by the side window integral radio antenna system and selectively amplifies them. The amplified signal is then sent through the body length coax cable to the radio input.

DIAGNOSIS AND TESTING - ANTENNA MODULE - EXPORT

CONDITION	POSSIBLE CAUSES	CORRECTION
NO AM RECEPTION, WEAK FM RECEPTION	1. Antenna module to antenna connector open or disconnected.	1. Repair open, reconnect antenna module connector to glass mounted antenna.
	2. Coax open or disconnected.	2. Repair open, reconnect coax.
	3. No battery power at antenna module.	3. Check fuse. if okay, repair open in battery voltage circuit.
NO AM OR FM RECEPTION	1. Coax disconnected at radio.	1. Reconnect coax.
	2. Coax shorted to ground.	2. Repair or Replace coax
WEAK OR NO AM/FM RECEPTION	1. Antenna Module faulty.	1. Substitute known good module. If reception improves, Antenna Module was faulty.

ANTENNA MODULE - EXPORT (Continued)

REMOVAL

(1) Disconnect and isolate the battery negative cable.

(2) Lower headliner as necessary to access antenna module (Fig. 5).

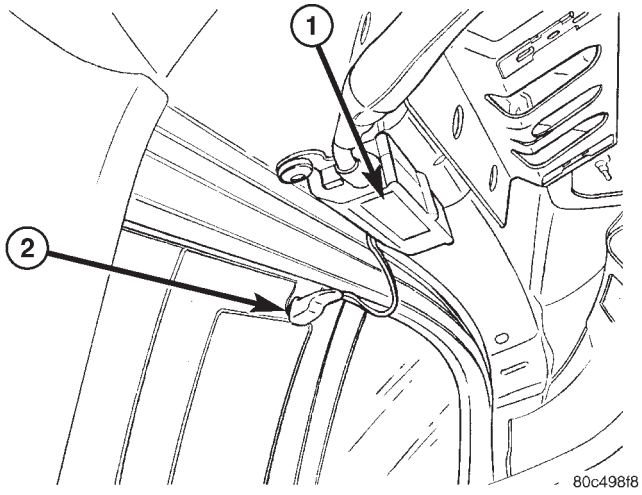

Fig. 5 ANTENNA MODULE

1 - ANTENNA MODULE
2 - ANTENNA MODULE CONNECTOR

(3) Disconnect antenna coax cable lead and electrical harness connector from antenna module.

(4) Disconnect the antenna module connector from the quarter glass.

(5) Remove the mounting screw and the antenna module.

INSTALLATION

(1) Install the antenna module and the mounting fastener.

(2) Connect the antenna connector to the quarter glass.

(3) Connect the antenna lead and electrical connector to the antenna module.

(4) Raise and install headliner.

(5) Connect the battery negative cable.

CD CHANGER

DESCRIPTION

The 4 Disc In-Dash CD Changer (if equipped) is located in the instrument panel below the radio. The remote changer does not use a cartridge or magazine for the CD's. Up to 4 CD's can be directly loaded into this unit.

OPERATION

Due to its compact design, the CD changer can carry out only one operation at a time. For example, you can not load a new disc while playing another at the same time. Each operation happens sequentially.

The radio unit provides control over all features of the CD changer with the exception of the CD load and eject functions, which are controlled by buttons located on the front of the CD changer. All features you would expect, such as Disc Up/Down, Track Up/Down, Random and Scan are controlled by the radio, which also displays all relevant CD changer information on the radio display.

The CD changer contains a Load/Eject button and an indicator LED for each of the four disc positions as well as an illuminated disc opening. The individual LED indicates whether a CD is currently loaded in that particular chamber of the CD changer. Pressing the individual Load/Eject button for a particular chamber will eject a disc currently present in that chamber. If the chamber is currently empty, actuating the Load/Eject button will position that chamber to receive and load a new disc in that chamber.

REMOVAL

(1) Disconnect and isolate the battery negative cable.

(2) Remove screws holding CD changer.

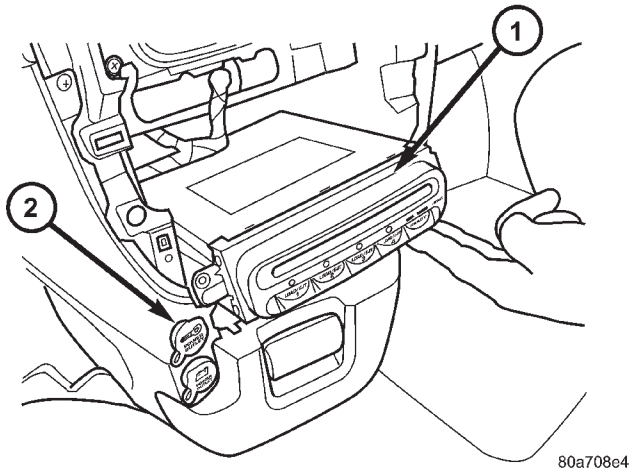

Fig. 6 CD - CHANGER

1 - CD-CHANGER
2 - POWER OUTLET

(3) Disconnect the wire connector from the back of the CD changer.

(4) Remove the CD changer from the vehicle (Fig. 6).

INSTALLATION

(1) Reconnect the wire connector to the CD changer.

(2) Insert the CD changer into the instrument panel.

CD CHANGER (Continued)

NOTE: Use care when inserting CD changer so that cable is not pinched or trapped against instrument panel.

(3) Install screws holding CD changer.
(4) Reconnect the battery negative cable.

INSTRUMENT PANEL ANTENNA CABLE

REMOVAL

WARNING: ON VEHICLES EQUIPPED WITH AIRBAGS, REFER TO ELECTRICAL, RESTRAINTS BEFORE ATTEMPTING ANY STEERING WHEEL, STEERING COLUMN, OR INSTRUMENT PANEL COMPONENT DIAGNOSIS OR SERVICE. FAILURE TO TAKE THE PROPER PRECAUTIONS COULD RESULT IN ACCIDENTAL AIRBAG DEPLOYMENT AND POSSIBLE PERSONAL INJURY.

(1) Disconnect and isolate the battery negative cable.
(2) Remove glove box (Refer to 23 - BODY/INSTRUMENT PANEL/GLOVE BOX - REMOVAL).
(3) Disconnect extension cable end from antenna cable end.
(4) Disconnect cable hanger clip from HVAC unit.
(5) Remove radio as necessary to gain access to extension cable (Refer to 8 - ELECTRICAL/AUDIO/RADIO - REMOVAL).
(6) Disconnect extension cable from back of radio.
(7) Remove extension cable from vehicle.

INSTALLATION

(1) Install extension cable to vehicle.
(2) Connect extension cable to back of radio.
(3) Install radio (Refer to 8 - ELECTRICAL/AUDIO/RADIO - INSTALLATION).
(4) Connect cable hanger clip to HVAC unit.
(5) Connect extension cable end to antenna cable end.
(6) Install glove box (Refer to 23 - BODY/INSTRUMENT PANEL/GLOVE BOX - INSTALLATION).
(7) Connect the battery negative cable.

QUARTER GLASS INTEGRAL ANTENNA - EXPORT

DESCRIPTION

The quarter glass integral antenna element is bonded to the right rear quarter glass and is replaced with the glass assembly only (Fig. 7).

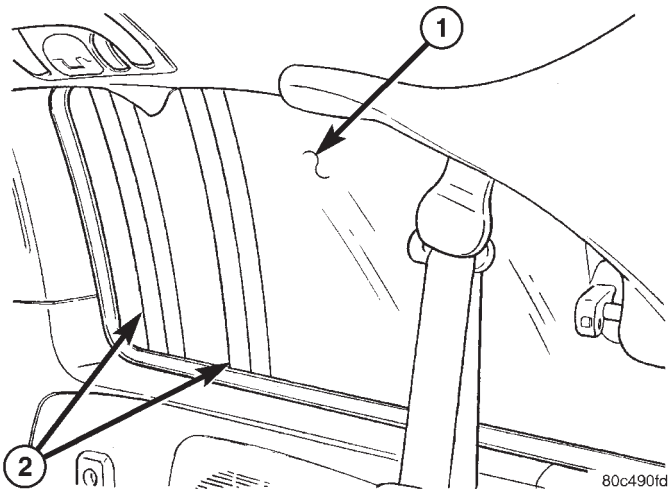

Fig. 7 QUARTER GLASS INTEGRAL ANTENNA

1 - REAR QUARTER GLASS
2 - ANTENNA

OPERATION

The integral antenna receives RF (Radio Frequencies) and sends them to the antenna module for amplification.

DIAGNOSIS AND TESTING - QUARTER GLASS INTEGRAL ANTENNA - EXPORT

The antenna grid pattern is divided into two separate patterns. Each terminal connects to a separate grid pattern, one for AM and the other for FM.

For circuit descriptions and diagrams, refer to the appropriate wiring information. The wiring information includes wiring diagrams, proper wire and connector repair procedures, details of wire harness routing and retention, connector pin-out information and location views for the various wire harness connectors, splices and grounds. To detect breaks in the integral antenna elements, the following procedure is required:

(1) Disconnect the antenna module connector from the antenna terminals on the glass.

(2) Using an ohmmeter, place a lead on one of the terminals and check each end of the grid pattern connected to this terminal for continuity. If continuity is not present, move one lead through the grid in progression starting at the terminal with the other lead on the terminal until continuity is lost. Repeat procedure for the other terminal. A break in the antenna grid can be repaired using a Mopar Rear Window Defogger Repair Kit (Part Number 4267922) or equivalent. (Refer to 8 - ELECTRICAL/HEATED GLASS/WINDSHIELD GRID - STANDARD PROCEDURE).

RADIO

DIAGNOSIS AND TESTING - RADIO

WARNING: ON VEHICLES EQUIPPED WITH AIRBAGS, REFER TO ELECTRICAL, RESTRAINTS BEFORE ATTEMPTING ANY STEERING WHEEL, STEERING COLUMN, OR INSTRUMENT PANEL COMPONENT DIAGNOSIS OR SERVICE. FAILURE TO TAKE THE PROPER PRECAUTIONS COULD RESULT IN ACCIDENTAL AIRBAG DEPLOYMENT AND POSSIBLE PERSONAL INJURY.

Any diagnosis of the Audio system should begin with the use of the DRB III® diagnostic tool. For information on the use of the DRB III®, refer to the appropriate Diagnostic Service Manual.

Refer to the appropriate wiring information. The wiring information includes wiring diagrams, proper wire and connector repair procedures, details of wire harness routing and retention, connector pin-out information and location views for the various wire harness connectors, splices and grounds.

If the vehicle is equipped with remote radio switches located on the back of the steering wheel spokes, and the problem being diagnosed is related to one of the symptoms listed below, be certain to check the remote radio switches and circuits as described in this group, prior to attempting radio diagnosis or repair.

- Stations changing with no remote radio switch input
- Radio memory presets not working properly
- Volume changes with no remote radio switch input
- Remote radio switch buttons taking on other functions
- CD player skipping tracks
- Remote radio switch inoperative.

CAUTION: The speaker output of the radio is a "floating ground" system. Do not allow any speaker lead to short to ground, as damage to the radio may result.

(1) Check the fuse(s) in the junction block and the Integrated Power Module (IPM). If OK, go to Step 2. If not OK, repair the shorted circuit or component as required and replace the faulty fuse(s).

(2) Check for battery voltage at the fuse in the (IPM). If OK, go to Step 3. If not OK, repair the open circuit to the battery as required.

(3) Turn the ignition switch to the ON position. Check for battery voltage at the fuse in the junction block. If OK, go to Step 4. If not OK, repair the open circuit to the ignition switch as required.

(4) Turn the ignition switch to the OFF position. Remove the radio, but do not unplug the wire harness connectors. Check for continuity between the radio chassis and a good ground. There should be continuity. If OK, go to Step 5. If not OK, repair the open radio chassis ground circuit as required.

(5) Connect the battery negative cable. Turn the ignition switch to the ON position. Check for battery voltage at the fused ignition switch output circuit cavity of the radio wire harness connector. If OK, go to Step 6. If not OK, repair the open circuit as required.

(6) Turn the ignition switch to the OFF position. Check for battery voltage at the fused B(+) circuit cavity of the radio wire harness connector. If OK, replace the faulty radio. If not OK, repair the open circuit to the Ignition-Off Draw (IOD) fuse as required.

REMOVAL

(1) Disconnect and isolate the battery negative cable.

(2) Remove cup holder.

(3) Remove trim panel above cupholder by pulling straight out.

(4) Remove center instrument panel trim panel.

(5) Remove screws holding radio to instrument panel.

(6) Pull radio rearward to gain access to the back of radio (Fig. 8).

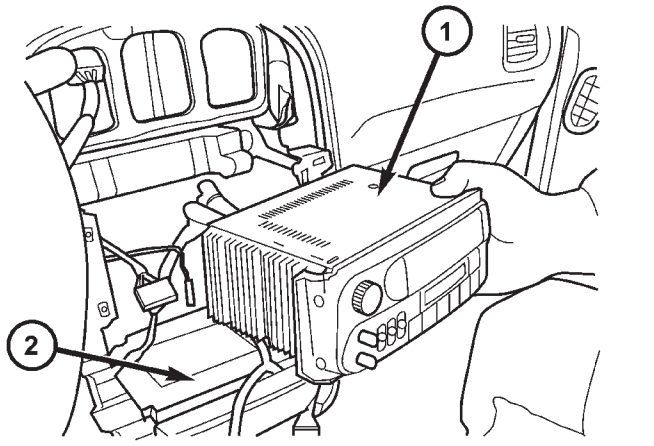

Fig. 8 RADIO

1 - RADIO
2 - CD-PLAYER

(7) Disconnect the antenna cable by pulling the locking antenna connector away from the radio (Fig. 9).

(8) Disconnect bolt holding ground strap to the radio (if equipped).

RADIO (Continued)

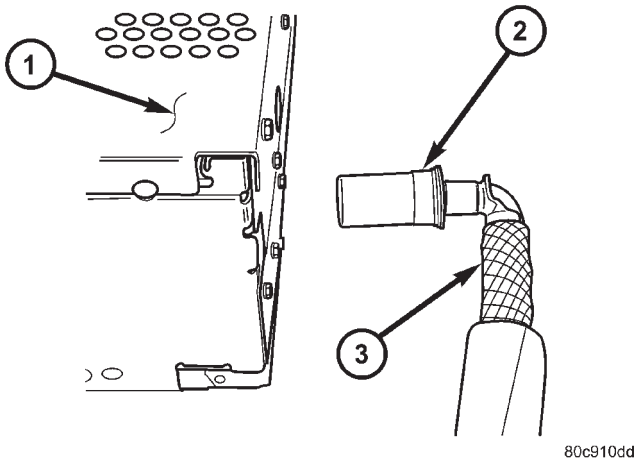

Fig. 9 ANTENNA TO RADIO

1 - RADIO
2 - LOCKING ANTENNA CONNECTOR
3 - INSTRUMENT PANEL ANTENNA CABLE

(9) Disconnect the wire connectors from the back of the radio.

INSTALLATION

(1) Connect wire harness to back of radio.
(2) Install bolt holding ground strap to the radio (if equipped).
(3) Connect antenna cable to back of radio.
(4) Position radio into instrument panel.
(5) Install screws holding radio to instrument panel.
(6) Install center instrument panel trim.
(7) Install trim panel above cupholder.
(8) Install cupholder.
(9) Connect battery negative cable.

RADIO NOISE SUPPRESSION COMPONENTS

DESCRIPTION

Radio noise suppression devices are factory-installed standard equipment on this vehicle. Radio Frequency Interference (RFI) and ElectroMagnetic Interference (EMI) can be produced by any on-board or external source of electromagnetic energy. These electromagnetic energy sources can radiate electromagnetic signals through the air, or conduct them through the vehicle electrical system.

When the audio system converts RFI or EMI to an audible acoustic wave form, it is referred to as radio noise. This undesirable radio noise is generally manifested in the form of “buzzing,” “hissing,” “popping,” “clicking,” “crackling,” and/or “whirring” sounds. In most cases, RFI and EMI radio noise can be suppressed using a combination of vehicle and component grounding, filtering and shielding techniques. This vehicle is equipped with factory-installed radio noise suppression devices that were designed to minimize exposure to typical sources of RFI and EMI; thereby, minimizing radio noise complaints.

Factory-installed radio noise suppression is accomplished primarily through circuitry or devices that are integral to the factory-installed radios, audio power amplifiers and other on-board electrical components such as generators, wiper motors, blower motors, and fuel pumps that have been found to be potential sources of RFI or EMI.

OPERATION

There are two common strategies that can be used to suppress Radio Frequency Interference (RFI) and ElectroMagnetic Interference (EMI) radio noise. The first suppression strategy involves preventing the production of RFI and EMI electromagnetic signals at their sources. The second suppression strategy involves preventing the reception of RFI and EMI electromagnetic signals by the audio system components.

The use of braided ground straps in key locations is part of the RFI and EMI prevention strategy. These ground straps ensure adequate ground paths, particularly for high current components such as many of those found in the starting, charging, ignition, engine control and transmission control systems. An insufficient ground path for any of these high current components may result in radio noise caused by induced voltages created as the high current seeks alternative ground paths through components or circuits intended for use by, or in close proximity to the audio system components or circuits.

Preventing the reception of RFI and EMI is accomplished by ensuring that the audio system components are correctly installed in the vehicle. Loose, corroded or improperly soldered wire harness connections, improperly routed wiring and inadequate audio system component grounding can all contribute to the reception of RFI and EMI. A properly grounded antenna body and radio chassis, as well as a shielded antenna coaxial cable with clean and tight connections will each help reduce the potential for reception of RFI and EMI.

REMOTE SWITCHES

DESCRIPTION

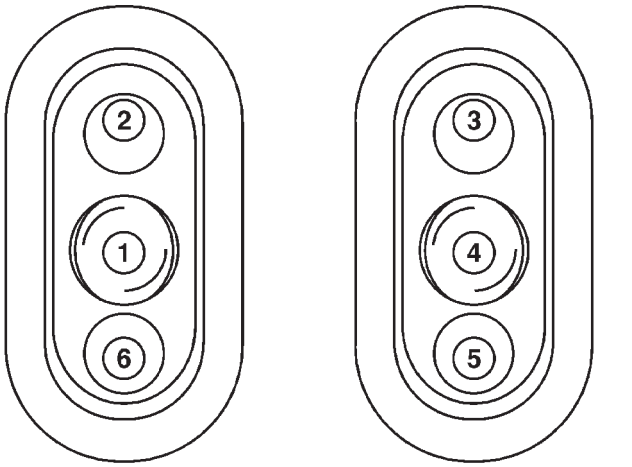

Fig. 10 Remote Radio Switch Operational View

1 - PRESET SEEK
2 - SEEK UP
3 - VOLUME UP
4 - MODE
5 - VOLUME DOWN
6 - SEEK DOWN

A remote radio control switch option is available on some models. Two rocker-type switches are mounted on the back (instrument panel side) of the steering wheel spokes (Fig. 10). The switch on the left spoke is the seek switch and has seek up, seek down, and preset station advance functions. The switch on the right spoke is the volume control switch and has volume up, and volume down functions. The switch on the right spoke also includes a “mode” control that allows the driver to sequentially select AM radio, FM radio, cassette player, CD player or CD changer (if equipped).

OPERATION

These switches are resistor multiplexed units that are hard-wired to the Body Control Module (BCM) through the clockspring. The BCM sends the proper messages on the Programmable Communications Interface (PCI) data bus network to the radio receiver. For diagnosis of the BCM or the PCI data bus, the use of a DRB III® scan tool and the proper Diagnostic Procedures manual are recommended. For more information on the operation of the remote radio switch controls, refer to the owner's manual in the vehicle glove box.

DIAGNOSIS AND TESTING - REMOTE SWITCHES

WARNING: ON VEHICLES EQUIPPED WITH AIRBAGS, REFER TO ELECTRICAL, RESTRAINTS BEFORE ATTEMPTING ANY STEERING WHEEL, STEERING COLUMN, OR INSTRUMENT PANEL COMPONENT DIAGNOSIS OR SERVICE. FAILURE TO TAKE THE PROPER PRECAUTIONS COULD RESULT IN ACCIDENTAL AIRBAG DEPLOYMENT AND POSSIBLE PERSONAL INJURY.

Any diagnosis of the Audio system should begin with the use of the DRB III® diagnostic tool. For information on the use of the DRB III®, refer to the appropriate Diagnostic Service Manual.

Refer to the appropriate wiring information. The wiring information includes wiring diagrams, proper wire and connector repair procedures, details of wire harness routing and retention, connector pin-out information and location views for the various wire harness connectors, splices and grounds.

(1) Disconnect and isolate the battery negative cable. Wait two minutes for the airbag system capacitor to discharge before further service.

(2) Remove the remote radio switch(es) from the steering wheel. (Refer to 8 - ELECTRICAL/AUDIO/ REMOTE SWITCHES - REMOVAL).

(3) Use an ohmmeter to check the switch resistance as shown in the Remote Radio Switch Test table (Fig. 11).

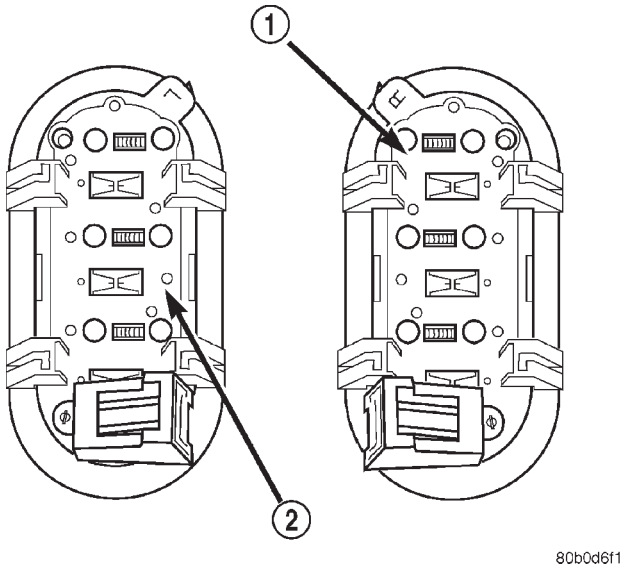

Fig. 11 Remote Radio Switches

1 - WHITE REAR SWITCH
2 - BLACK REAR SWITCH

REMOTE SWITCHES (Continued)

REMOTE RADIO SWITCH TEST

SWITCH POSITION	RESISTANCE
VOLUME UP	7320 OHMS
VOLUME DOWN	1210 OHMS
SEEK UP	4530 OHMS
SEEK DOWN	2050 OHMS
PRE-SET STATION ADVANCE	10 OHMS

NOTE: The right remote radio switch back is white in color. The left switch back is black in color. The right/left remote radio switch orientation is with the steering wheel installed, and driver in drivers seat.

(4) If the switch resistance checks OK, go to Step 5. If not OK, replace the faulty switch.

(5) Check for continuity between the ground circuit cavity of the switch wire harness connector and a good ground. There should be continuity. If OK, go to Step 6. If not OK, repair the open circuit as required.

(6) Unplug the 24-way white wire harness connector from the Body Control Module (BCM). Check for continuity between the radio control circuit cavity of the remote radio switch wire harness connector and a good ground. There should be no continuity. If OK, go to Step 7. If not OK, repair the short circuit as required.

(7) Check for continuity between the radio control circuit cavities of the remote radio switch wire harness connector and the BCM wire harness connector. There should be continuity. If OK, refer to the proper Diagnostic Procedures manual to test the BCM and the PCI data bus. If not OK, repair the open circuit as required.

REMOVAL

WARNING: ON VEHICLES EQUIPPED WITH AIRBAGS, REFER TO ELECTRICAL, RESTRAINTS BEFORE ATTEMPTING ANY STEERING WHEEL, STEERING COLUMN, OR INSTRUMENT PANEL COMPONENT DIAGNOSIS OR SERVICE. FAILURE TO TAKE THE PROPER PRECAUTIONS COULD RESULT IN ACCIDENTAL AIRBAG DEPLOYMENT AND POSSIBLE PERSONAL INJURY.

(1) Disconnect and isolate the battery negative cable. Wait two minutes for the airbag system capacitor to discharge before further service.

(2) Remove the driver side airbag module from the vehicle. Refer to ELECTRICAL/RESTRAINTS/DRIVER AIR BAG.

(3) Remove the steering wheel from the steering column. Refer to STEERING/COLUMN/STEERING WHEEL.

(4) Unplug the wire harness connector from the remote radio switch (s).

(5) Remove three screws securing steering wheel rear cover.

(6) Remove the remote radio switch from the steering wheel by depressing tabs on each side of each switch.

NOTE: The right remote radio switch back is white in color. The left switch back is black in color. The right/left remote radio switch orientation is with the steering wheel installed, and driver in drivers seat.

INSTALLATION

WARNING: ON VEHICLES EQUIPPED WITH AIRBAGS, REFER TO ELECTRICAL, RESTRAINTS BEFORE ATTEMPTING ANY STEERING WHEEL, STEERING COLUMN, OR INSTRUMENT PANEL COMPONENT DIAGNOSIS OR SERVICE. FAILURE TO TAKE THE PROPER PRECAUTIONS COULD RESULT IN ACCIDENTAL AIRBAG DEPLOYMENT AND POSSIBLE PERSONAL INJURY.

(1) Install remote radio switch to the steering wheel.

(2) Install three screws securing steering wheel rear cover.

(3) Connect the wire harness to the remote radio switch.

(4) Install the steering wheel. Refer to STEERING/COLUMN/STEERING WHEEL.

(5) Install the driver side airbag module. Refer to ELECTRICAL/RESTRAINTS/DRIVER AIRBAG.

(6) Connect the battery negative cable.

SPEAKER

DIAGNOSIS AND TESTING - SPEAKER

WARNING: DISABLE THE AIRBAG SYSTEM BEFORE ATTEMPTING ANY STEERING WHEEL, STEERING COLUMN, SEAT BELT TENSIONER, SIDE AIRBAG, OR INSTRUMENT PANEL COMPONENT DIAGNOSIS OR SERVICE. DISCONNECT AND ISOLATE THE BATTERY NEGATIVE (GROUND) CABLE, THEN WAIT TWO MINUTES FOR THE AIRBAG SYSTEM CAPACITOR TO DISCHARGE BEFORE PERFORMING FURTHER DIAGNOSIS OR SERVICE. THIS IS THE ONLY SURE WAY TO DISABLE THE AIRBAG SYSTEM. FAILURE TO TAKE THE PROPER PRECAUTIONS COULD RESULT IN ACCIDENTAL AIRBAG DEPLOYMENT AND POSSIBLE PERSONAL INJURY.

SPEAKER (Continued)

Any diagnosis of the Audio system should begin with the use of the DRB III® diagnostic tool. For information on the use of the DRB III®, refer to the appropriate Diagnostic Service Manual.

Refer to the appropriate wiring information. The wiring information includes wiring diagrams, proper wire and connector repair procedures, details of wire harness routing and retention, connector pin-out information and location views for the various wire harness connectors, splices and grounds.

CAUTION: The speaker output of the radio is a "floating ground" system. Do not allow any speaker lead to short to ground, as damage to the radio may result.

(1) If all speakers are inoperative, check the radio fuses in the junction block. If OK, go to Step 2. If not OK, repair the shorted circuit or component as required and replace the faulty fuse.

(2) Turn the ignition switch to the ON position. Turn the radio receiver ON. Adjust the balance and fader control controls to check the performance of each individual speaker. Note the speaker locations that are not performing correctly. Go to Step 3.

(3) Turn the radio receiver OFF. Turn the ignition OFF. Disconnect and isolate the battery negative cable. Remove the radio receiver.

(4) Check both the speaker feed (+) circuit and return (-) circuit cavities for the inoperative speaker at the radio receiver wire harness connector for continuity to ground. There should be no continuity. If OK, go to Step 5. If not OK, repair the shorted speaker feed (+) and/or return (-) circuits(s) to the speaker as required.

(5) Disconnect wire harness connector at the inoperative speaker. Check for continuity between the speaker feed (+) circuit cavities of the radio receiver wire harness connector. Repeat the check between the speaker return (-) circuit cavities of the radio receiver wire harness connector and the speaker wire harness connector. In each case, there should be continuity. If OK, replace the faulty speaker. If not OK, repair the open speaker feed (+) and/or return (-) circuits(s) as required.

REMOVAL

D-PILLAR SPEAKER

(1) Disconnect and isolate the battery negative cable.
(2) Remove rear header trim (right side speaker).
(3) Remove jack cover (left side speaker).
(4) Remove liftgate scuff plate.
(5) Remove upper seat belt bolt. (Refer to 8 - ELECTRICAL/RESTRAINTS/SEAT BELT OUTBOARD FRONT - REMOVAL).
(6) Partially remove quarter trim panel to access the D-pillar speaker.
(7) Slide the speaker from the retainer (Fig. 12).

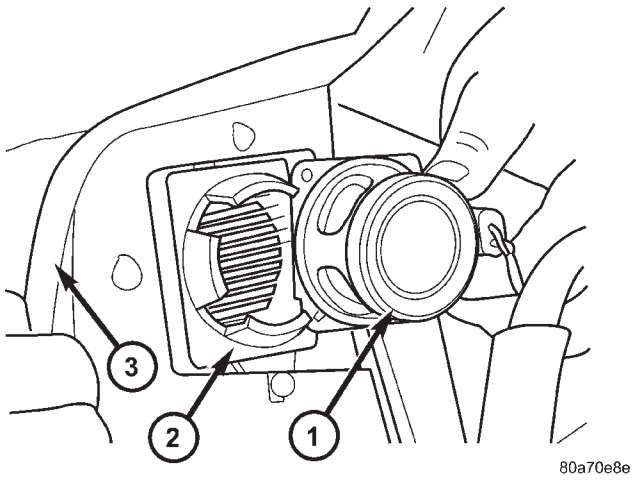

Fig. 12 D-PILLAR SPEAKER

1 - SPEAKER
2 - RETAINER
3 - TRIM PANEL

(8) Disconnect the wire harness connector from the speaker.

FRONT DOOR SPEAKER

(1) Disconnect and isolate the battery negative cable.
(2) Remove the front door trim panel. (Refer to 23 - BODY/DOOR - FRONT/TRIM PANEL - REMOVAL).
(3) Remove the speaker mounting screws (Fig. 13).

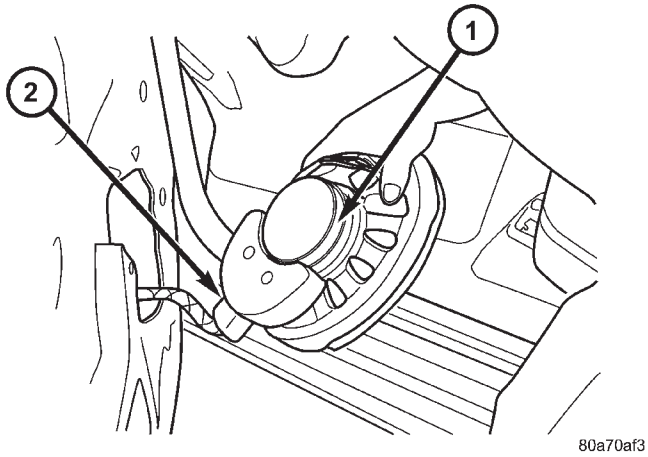

Fig. 13 DOOR SPEAKER

1 - SPEAKER
2 - WIRE HARNESS CONNECTOR

(4) Disconnect wire harness connector and remove speaker from door.

SPEAKER (Continued)

INSTRUMENT PANEL SPEAKER

(1) Disconnect and isolate the battery negative cable.
(2) Remove the A-pillar trim. (Refer to 23 - BODY/INTERIOR/A-PILLAR TRIM - REMOVAL).
(3) Remove instrument panel top pad (Refer to 23 - BODY/INSTRUMENT PANEL/INSTRUMENT PANEL TOP PAD - REMOVAL).
(4) Remove speaker screws (Fig. 14).

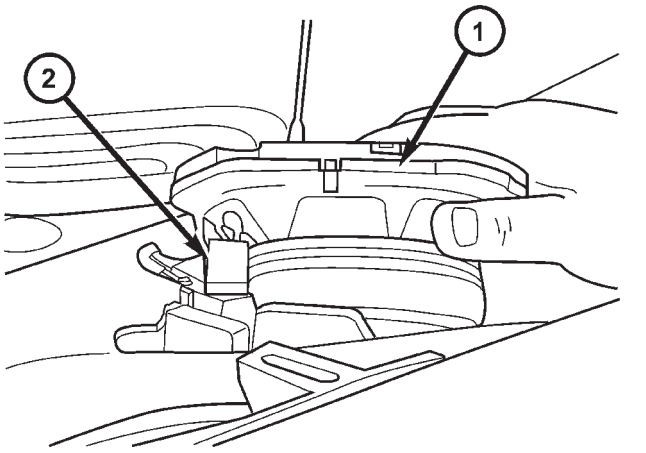

Fig. 14 INSTRUMENT PANEL SPEAKER

1 - SPEAKER
2 - WIRE HARNESS CONNECTOR

(5) Disconnect wire harness connector and remove speaker.

QUARTER PANEL SPEAKER

(1) Disconnect and isolate the battery negative cable.
(2) Using a trim stick, gently pry speaker grill from trim panel.
(3) Remove speaker retaining screws (Fig. 15).
(4) Disconnect wire harness connector and remove speaker.

INSTALLATION

D-PILLAR SPEAKER

(1) Connect the wire harness connector to the speaker.
(2) Slide the speaker into the retainer.
(3) Install quarter panel trim.
(4) Install upper seat belt bolt (right side).
(5) Install liftgate scuff plate.
(6) Install rear header trim (right side).

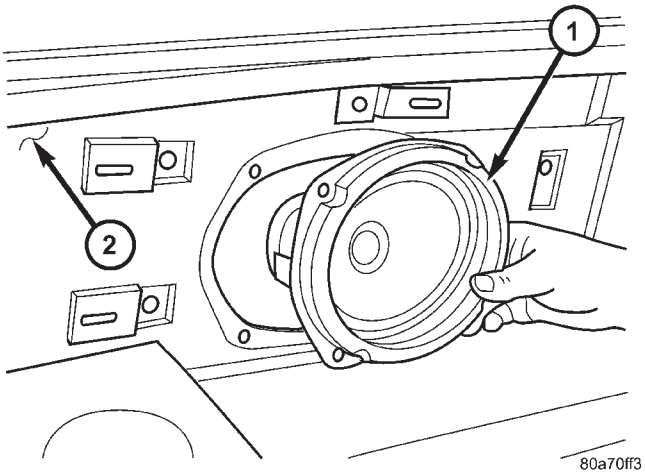

Fig. 15 QUARTER PANEL SPEAKER

1 - SPEAKER
2 - TRIM PANEL

(7) Install jack cover (left side).
(8) Connect battery negative cable.

FRONT DOOR SPEAKER

(1) Connect the wire harness connector and install speaker to door.
(2) Install the speaker mounting screws.
(3) Install the front door trim panel (Refer to 23 - BODY/DOOR - FRONT/TRIM PANEL - INSTALLATION).
(4) Connect battery negative cable.

INSTRUMENT PANEL SPEAKER

(1) Connect the wire harness connector and install speaker to instrument panel.
(2) Install the speaker mounting screws.
(3) Install instrument panel top pad (Refer to 23 - BODY/INSTRUMENT PANEL/INSTRUMENT PANEL TOP PAD - INSTALLATION).
(4) Install A-pillar trim (Refer to 23 - BODY/INTERIOR/A-PILLAR TRIM - INSTALLATION).
(5) Connect battery negative cable.

QUARTER PANEL SPEAKER

(1) Connect the wire harness connector and install speaker to trim panel.
(2) Install the speaker mounting screws.
(3) Install speaker grill by pressing into the trim panel.
(4) Connect battery negative cable.

CHIME/BUZZER

TABLE OF CONTENTS

page

CHIME/BUZZER
DESCRIPTION 1
OPERATION 1
WARNING 1
DIAGNOSIS AND TESTING
DIAGNOSIS AND TESTING - CHIME SYSTEM 1
DIAGNOSIS AND TESTING - DOME LAMP ON CHIME 2
DIAGNOSIS AND TESTING - ENGINE TEMPERATURE CRITICAL CHIME 2
DIAGNOSIS AND TESTING - EXTERIOR LAMPS ON CHIME 2
DIAGNOSIS AND TESTING - KEY-IN IGNITION CHIME 2
DIAGNOSIS AND TESTING - LOW OIL PRESSURE CHIME 3
DIAGNOSIS AND TESTING - SEAT BELT CHIME 3
DIAGNOSIS AND TESTING - SEAT BELT LAMP 3
DIAGNOSIS AND TESTING - TIRE PRESSURE MONITOR 3
DIAGNOSIS AND TESTING - TURN SIGNAL ON CHIME 3
DIAGNOSIS AND TESTING - WARNING LAMP ANNOUNCEMENT CHIME 4

CHIME/BUZZER

DESCRIPTION

The chime/buzzer system provides the driver with warning chimes for:

- Seat Belt
- Exterior Lamps ON
- Key-In Ignition
- Engine Temperature Critical
- Turn Signals ON
- Dome Lamp ON
- Low Oil Pressure
- High Speed Warning
- Warning Lamp Announcement
- Key-In Accessory
- Low/High Tire Pressure
- Service Tire Pressure Monitor (TPM)

HIGH SPEED WARNING - EXPORT

The chime will sound, acting as a warning to the driver that the vehicle speed has exceeded 120 ± 3 kph (75 ± 2 mph).

OPERATION

The Chime/Buzzer Warning System is diagnosed using a DRB lll® scan tool. Refer to the proper Body Diagnostic Procedures Manual.

HIGH SPEED WARNING - EXPORT

When the vehicle speed sensor sees 120 ± 3 kph (75 ± 2 mph), it sends a PCI data bus message to the Body Control Module (BCM). The BCM then turns on the chime to let the driver know that the vehicle has reached a speed greater than 120 ± 3 kph (75 ± 2 mph). This audible message will continue until the vehicle is slowed below the predetermined speed.

WARNING

WARNING: ON VEHICLES EQUIPPED WITH AIRBAGS, DISABLE THE AIRBAG SYSTEM BEFORE ATTEMPTING ANY STEERING WHEEL, STEERING COLUMN, OR INSTRUMENT PANEL COMPONENT DIAGNOSIS OR SERVICE. DISCONNECT AND ISOLATE THE BATTERY NEGATIVE (GROUND) CABLE, THEN WAIT TWO MINUTES FOR THE AIRBAG SYSTEM CAPACITOR TO DISCHARGE BEFORE PERFORMING FURTHER DIAGNOSIS OR SERVICE. THIS IS THE ONLY SURE WAY TO DISABLE THE AIRBAG SYSTEM. FAILURE TO TAKE THE PROPER PRECAUTIONS COULD RESULT IN ACCIDENTAL AIRBAG DEPLOYMENT AND POSSIBLE PERSONAL INJURY.

DIAGNOSIS AND TESTING

DIAGNOSIS AND TESTING - CHIME SYSTEM

NO TONE WHEN IGNITION SWITCH IS TURNED ON AND DRIVER'S SEAT BELT IS NOT BUCKLED.

(1) Using a DRB lll® scan tool, actuate chime (BCM actuates).

(2) Using a voltmeter, check for voltage:

(a) BCM has two battery feeds at pin 1 and pin 5 of the 6–way connector.

(b) Pin 5 of the (BX2) 32 way connector of the BCM for ignition feed.

(c) Check voltage (PX2) connector, pin 34 for 12v.

(d) If voltage OK, go to step Step 3

(e) If NO voltage repair as necessary. Refer to the appropriate wiring information. The wiring information includes wiring diagrams, proper wire and connector repair procedures, further details on wire harness routing and retention, as well as pin-out and location views for the various wire harness connectors, splices and grounds.

(3) Check driver's seat belt buckle switch input (form ORC) for a closed circuit when not buckled. If input not seen, look for open in wiring or switch. The switch is grounded when belt is not buckled.

(4) Verify PCI data bus communication between ORC and BCM.

NO FASTEN SEAT BELT LAMP WHEN IGNITION SWITCH IS TURNED ON.

(1) Check for burned out lamp.

(2) Using a voltmeter check for voltage at the cluster connccctor:

(a) Pin 2 of the mechanical instrument cluster for battery feed.

(b) Pin 11 of the mechanical instrument cluster for ignition voltage.

(3) Repair as necessary.

FASTEN SEAT BELT LAMP OR TONE CONTINUES FOR MORE THAN 10 SECONDS AFTER SEAT BELTS ARE FASTENED AND DRIVER'S DOOR IS CLOSED.

Refer to the proper Body Diagnostic Procedures manual.

NO TONE WHEN PARK OR HEADLAMPS ARE ON AND DRIVER'S DOOR IS OPEN.

Make sure ignition is in lock position with the key removed.

(1) Check the BCM DTC's and BCM sensors to verify the door is open. Repair as necessary.

(2) Actuate Chime (BCM actuates).

(3) Inspect BCM connectors and wires for proper connection.

(4) Measure with a voltmeter the voltage (12v) on BCM connector (PX2) pin 34 with harness connected.

DIAGNOSIS AND TESTING - DOME LAMP ON CHIME

The dome lamp on chime will warn the driver that the dome lamps have been left on.

When the ignition is OFF and the key is out of the ignition:

- Driver's door OPEN (door ajar switch is closed to ground) and
- Dome lamps are ON (dome lamp switch is closed to ground),

The chime will sound continuously until the drivers door is closed, dome lamps turned OFF or until the battery protection time out of 15 minutes has expired. Chime rate: 168 to 192 chimes per minute.

DIAGNOSIS AND TESTING - ENGINE TEMPERATURE CRITICAL CHIME

The engine temperature critical chime will warn the driver that the vehicle's engine is overheating. While monitoring the coolant temperature, the Powertrain Control Module (PCM) will send on the PCI data bus as engine temperature every 1.376 seconds to the cluster. The MIC calculates engine temperature and determines if a warning should occur. This feature is functional only with the Ignition Switch in the Run/Start position.

When the engine temperature reaches 122°C (252°F) the MIC requests a chime from the BCM and the engine temperature lamp comes ON. The MIC turns OFF the lamp when the engine temperature reaches 117°C (242°F). The MIC will chime continuously (request from the BCM). The chime will turn OFF after four minutes or when the temperature reaches 117°C (242°F), which ever occurs first.

DIAGNOSIS AND TESTING - EXTERIOR LAMPS ON CHIME

The exterior lamp on chime will warn the driver that the exterior lights have been left on.

With the ignition switch OFF/key out of ignition:

- Driver's door is open (door ajar switch is closed to ground)
- Parking lamps or headlamps ON (parking lamp switch is closed to ground)

The chime will sound until lights are turned OFF, driver's door closed or until the battery protection time out of 3 minutes has expired.

Chime rate: 168 to 192 chimes per minute.

To test the exterior lamps left on function:

- Turn ignition off
- Remove ignition key
- Turn exterior lamps on with driver's door open. Chime should sound until lamps are turned off or driver's door is closed.

DIAGNOSIS AND TESTING - KEY-IN IGNITION CHIME

The key-in ignition chime will act as a warning to the driver that the ignition key has been left in the

ignition switch. This chime will operate for all ignition positions except ON and START.

With the ignition switch in the OFF position ONLY:

- Driver's door is open/ajar (door ajar switch is closed to ground)
- Key is in the ignition switch (ignition is in the LOCK position)

The chime will sound until one of the above conditions is removed or until battery protection time out (15 min.) has expired. Chime rate: 168 to 192 chimes per minute.

To test the key-in ignition function, insert key into the ignition and open drivers door. Do not turn ignition ON. Chime should sound until key is removed from ignition or drivers door is closed.

For diagnosis and testing of the Key-In chime for other ignition positions, use the same testing procedure as above but with the key in the accessory or unlock position.

DIAGNOSIS AND TESTING - LOW OIL PRESSURE CHIME

The low oil pressure chime will warn the driver that the engine oil pressure is low. The oil pressure switch will close to ground during a low oil pressure condition. The oil pressure lamp will illuminate in the message center. The PCM will monitor the oil pressure switch and signal a low oil pressure condition. A continuous four minute warning chime will sound and the oil pressure lamp will come ON when the following conditions are met:

- Ignition on and engine not cranking
- Engine running at 420 to 480 rpm for 10 seconds
- Oil pressure switch closed to ground for (1 second minimum, 2 seconds maximum)

Chime rate: 168 to 192 chimes per minute.

DIAGNOSIS AND TESTING - SEAT BELT CHIME

The seat belt chime will sound for 4 to 8 seconds, when the ignition is turned on and the driver's seat belt is not buckled (seat belt switch is closed to ground). This is a reminder to the driver to buckle the seat belt. The seat belt lamp is controlled by the ORC. The cluster will also bulb check the seat belt warning lamp for 6 seconds. Buckling the driver's seat belt before the time out has expired will cause the chime to stop immediately. Chime rate: 38 to 62 chimes per minute but the lamp will remain on until 6 seconds have expired.

To test the seat belt warning system, the ignition switch must be in the OFF position for 1 minute before starting the test. Turn the ignition switch to the on position with the driver's seat belt not buckled. The seat belt warning lamp should light and the chime should sound 4 to 8 seconds.

DIAGNOSIS AND TESTING - SEAT BELT LAMP

The seat belt lamp in the instrument cluster signals the vehicle passengers to fasten their seat belts. The seat belt lamp is illuminated directly by the instrument cluster for 6 seconds after the instrument cluster receives the message from the ORC. The seat belt lamp is therefore illuminated for 6 seconds whenever the ignition switch is moved to run/start position.

(1) While ignition is off, the seat belt lamp will not be illuminated.

(2) The ignition power feed status will be updated every 250 milliseconds or on change.

(3) This lamp will be checked by the instrument cluster for 6 seconds with every run/start cycle of the ignition switch.

DIAGNOSIS AND TESTING - TIRE PRESSURE MONITOR

The Tire Pressure Warning chime, as well as the information being displayed in the EVIC, will act as a warning to the driver that a tire has either Low or High pressure, or if there is a need to service the Tire Pressure Monitor System. With the ignition switch in the ON position and the “Low Pressure/ High Pressure” or “Service the TPM System” displayed on the EVIC display, a single chime will sound.

DIAGNOSIS AND TESTING - TURN SIGNAL ON CHIME

The turn signal on chime will warn the driver that the turn signals have been left on. When the body control module receives a turn signal input for 1.0 mile, vehicle speed is greater than 24 km/h (15 mph), the chime will sound continuously until the turn signal is turned OFF. If vehicle speed drops below 24 km/h (15 mph) prior to the warning being activated, the accumulated distance traveled will be reset. The turn signal chime is not activated when the emergency flashers are turned on. Chime rate: 50 ± 12 chimes per minute.

For the turn signal warning system to operate:

- Must have input from either the right or left turn signal lamps. Creates a voltage change between 0 and battery voltage.
- The vehicle speed sensor sends a message to the Powertrain Control Module that vehicle has exceeded 24 km/h (15 mph) for 1.0 mile).
- When the above two conditions are met, the chime will sound. The chime will stop when no further voltage change is detected.

- If hazard warning signals are pulsing, no chime will sound.
- If speed drops below 24 km/h (15 mph) before the warning is issued, the warning will not be issued and the distance counter will be reset.
- If turn signal lamps are not working properly, the chime will not sound.
- When using the scan tool, refer to the proper Body Diagnostic Manual for the procedure.

DIAGNOSIS AND TESTING - WARNING LAMP ANNOUNCEMENT CHIME

The warning lamp announcement chime will warn the driver to scan the instrument cluster to observe which warning lamp is illuminated. Whenever the volts, low fuel, airbag, door ajar or gate ajar lamps are first illuminated, the chime will sound one tone. The door/liftgate ajar warning lamp announcement chime sounds only if the vehicle speed is above 4 m.p.h.

Two seconds after ignition switch is turned ON or until the seat belt warning chime ends, all warning announcement chimes will be consolidated into one warning announcement. This will occur 2 seconds after the seat belt warning chime ends. If a warning announcement should occur while another warning chime in progress (turn signal, low oil pressure or high speed warnings), no additional chimes will sound after the chime in progress ends. All associated lamps will be illuminated, and the active chime will be the warning announcement.

ELECTRONIC CONTROL MODULES

TABLE OF CONTENTS

page

ELECTRONIC CONTROL MODULES
STANDARD PROCEDURE - PCM/SKIM PROGRAMMING 2
ADJUSTABLE PEDAL MODULE
DIAGNOSIS AND TESTING - ADJUSTABLE PEDAL MODULE 3
REMOVAL 3
INSTALLATION 3
BODY CONTROL MODULE
DESCRIPTION 3
OPERATION 3
REMOVAL 5
INSTALLATION 5
CONTROLLER ANTILOCK BRAKE
DESCRIPTION 5
OPERATION 5
REMOVAL 6
INSTALLATION 6
DATA LINK CONNECTOR
DESCRIPTION 7
OPERATION 7
FRONT CONTROL MODULE
DESCRIPTION 7
OPERATION 7
DIAGNOSIS AND TESTING - FRONT CONTROL MODULE 8
REMOVAL 8
INSTALLATION 8
HEATED SEAT MODULE
DESCRIPTION 9
OPERATION 9
DIAGNOSIS AND TESTING - HEATED SEAT MODULE 9
REMOVAL 10
INSTALLATION 10
POWER LIFTGATE MODULE
DESCRIPTION 10
OPERATION 10
REMOVAL 10
INSTALLATION 11
POWERTRAIN CONTROL MODULE
DESCRIPTION
DESCRIPTION 11
DIAGNOSTIC TROUBLE CODE 13
OPERATION - SENSOR RETURN - PCM INPUT 25
OPERATION - SCI RECEIVE - PCM INPUT . . 25
OPERATION - IGNITION SENSE - PCM INPUT 25
OPERATION - PCM GROUND 25
OPERATION
OPERATION - 8-VOLT SUPPLY - PCM OUTPUT 25
OPERATION - 5 VOLT SUPPLY - PCM OUTPUT 25
STANDARD PROCEDURE - OBTAINING DIAGNOSTIC TROUBLE CODES 25
REMOVAL 26
INSTALLATION 26
SENTRY KEY IMMOBILIZER MODULE
DESCRIPTION 26
OPERATION 27
REMOVAL 27
INSTALLATION 27
TRANSMISSION CONTROL MODULE
DESCRIPTION 28
OPERATION 28
STANDARD PROCEDURE
STANDARD PROCEDURE - PINION FACTOR SETTING. 31
STANDARD PROCEDURE - QUICK LEARN PROCEDURE 31
REMOVAL 31
INSTALLATION 32
MEMORY SEAT/MIRROR MODULE
DESCRIPTION 33
OPERATION 33
DIAGNOSIS AND TESTING - MEMORY SEAT/MIRROR MODULE 33
REMOVAL 33
INSTALLATION 33
SLIDING DOOR CONTROL MODULE
DESCRIPTION 33
OPERATION 34
REMOVAL 34
INSTALLATION 34

ELECTRONIC CONTROL MODULES

STANDARD PROCEDURE - PCM/SKIM PROGRAMMING

NOTE: Before replacing the PCM for a failed driver, control circuit or ground circuit, be sure to check the related component/circuit integrity for failures not detected due to a double fault in the circuit. Most PCM driver/control circuit failures are caused by internal component failures (i.e. relay and solenoids) and shorted circuits (i.e. pull-ups, drivers and switched circuits). These failures are difficult to detect when a double fault has occurred and only one DTC has set.

When a PCM (SBEC) and the SKIM are replaced at the same time perform the following steps in order:

(1) Program the new PCM (SBEC)
(2) Program the new SKIM
(3) Replace all ignition keys and program them to the new SKIM.

PROGRAMMING THE PCM (SBEC)

The SKIS Secret Key is an ID code that is unique to each SKIM. This code is programmed and stored in the SKIM, PCM and transponder chip (ignition keys). When replacing the PCM it is necessary to program the secret key into the new PCM using the DRB III. Perform the following steps to program the secret key into the PCM.

(1) Turn the ignition switch on (transmission in park/neutral).
(2) Use the DRB III and select THEFT ALARM, SKIM then MISCELLANEOUS.
(3) Select PCM REPLACED (GAS ENGINE).
(4) Enter secured access mode by entering the vehicle four-digit PIN.
(5) Select ENTER to update PCM VIN.

NOTE: If three attempts are made to enter secure access mode using an incorrect PIN, secured access mode will be locked out for one hour. To exit this lockout mode, turn the ignition to the RUN position for one hour then enter the correct PIN. (Ensure all accessories are turned off. Also monitor the battery state and connect a battery charger if necessary).

(6) Press ENTER to transfer the secret key (the SKIM will send the secret key to the PCM).
(7) Press Page Back to get to the Select System menu and select ENGINE, MISCELLANEOUS, and SRI MEMORY CHECK.
(8) The DRB III will ask, Is odometer reading between XX and XX? Select the YES or NO button on the DRB III. If NO is selected, the DRB III will read, Enter odometer Reading<From I.P. odometer>. Enter the odometer reading from the Instrument Panel and press ENTER.

PROGRAMMING THE SKIM

(1) Turn the ignition switch on (transmission in park/neutral).
(2) Use the DRB III and select THEFT ALARM, SKIM then MISCELLANEOUS.
(3) Select PCM REPLACED (GAS ENGINE).
(4) Program the vehicle four-digit PIN into SKIM.
(5) Select COUNTRY CODE and enter the correct country.

NOTE: Be sure to enter the correct country code. If the incorrect country code is programmed into SKIM, the SKIM must be replaced.

(6) Select YES to update VIN (the SKIM will learn the VIN from the PCM).
(7) Press ENTER to transfer the secret key (the PCM will send the secret key to the SKIM).
(8) Program ignition keys to SKIM.

NOTE: If the PCM and the SKIM are replaced at the same time, all vehicle keys will need to be replaced and programmed to the new SKIM.

PROGRAMMING IGNITION KEYS TO THE SKIM

(1) Turn the ignition switch on (transmission in park/neutral).
(2) Use the DRB III and select THEFT ALARM, SKIM then MISCELLANEOUS.
(3) Select PROGRAM IGNITION KEY'S.
(4) Enter secured access mode by entering the vehicle four-digit PIN.

NOTE: A maximum of eight keys can be learned to each SKIM. Once a key is learned to a SKIM it (the key) cannot be transferred to another vehicle.

If ignition key programming is unsuccessful, the DRB III will display one of the following messages:

Programming Not Attempted - The DRB III attempts to read the programmed key status and there are no keys programmed into SKIM memory.

Programming Key Failed (Possible Used Key From Wrong Vehicle) - SKIM is unable to program key due to one of the following:

- faulty ignition key transponder
- ignition key is programmed to another vehicle.

8 Keys Already Learned, Programming Not Done - SKIM transponder ID memory is full.

ELECTRONIC CONTROL MODULES (Continued)

(5) Obtain ignition keys to be programmed from customer (8 keys maximum).

(6) Using the DRB III, erase all ignition keys by selecting MISCELLANEOUS and ERASE ALL CURRENT IGN. KEYS.

(7) Program all ignition keys.

Learned Key In Ignition - Ignition key transponder ID is currently programmed in SKIM memory.

ADJUSTABLE PEDAL MODULE

DIAGNOSIS AND TESTING - ADJUSTABLE PEDAL MODULE

Refer to Appropriate Diagnostic Information.

REMOVAL

(1) Remove adjustable pedal assembly from vehicle. (Refer to 5 - BRAKES/HYDRAULIC/MECHANICAL/PEDAL - REMOVAL)

(2) Disconnect 2 wiring connectors from module (Fig. 1).

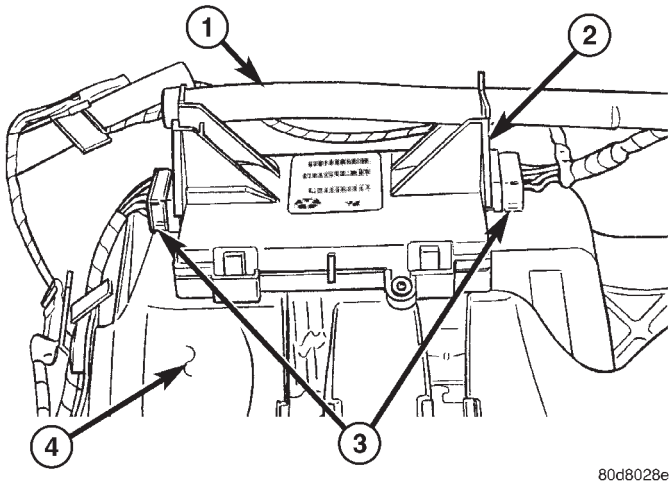

Fig. 1 Adjustable Pedal Module

1 - CABLE
2 - ADJUSTABLE PEDAL MODULE
3 - WIRING CONNECTORS
4 - ADJUSTABLE PEDAL ASSEMBLY

(3) Remove cable from routing clips on module (Fig. 1).

(4) Remove module mounting screws.

(5) Remove module.

INSTALLATION

(1) Install module on pedal assembly and install mounting screws.

(2) Place cable in routing clips on module (Fig. 1).

(3) Connect 2 wiring connectors to module (Fig. 1).

(4) Install adjustable pedal assembly. (Refer to 5 - BRAKES/HYDRAULIC/MECHANICAL/PEDAL - INSTALLATION)

BODY CONTROL MODULE

DESCRIPTION

The Body Control Module (BCM) is located in the passenger compartment, attached to the bulkhead underneath the left side of the instrument panel.

The BCM utilizes integrated circuitry and information carried on the Programmable Communications Interface (PCI) data bus network along with many hard wired inputs to monitor many sensor and switch inputs throughout the vehicle. In response to those inputs, the internal circuitry and programming of the BCM allow it to control and integrate many electronic functions and features of the vehicle through both hard wired outputs and the transmission of electronic message outputs to other electronic modules in the vehicle over the PCI data bus.

OPERATION

The Body Control Module (BCM) supplies vehicle occupants with visual and audible information and controls various vehicle functions. To provide and receive information, the BCM is interfaced to the vehicle's serial bus communications network, referred to as the Programmable Communications Interface (PCI) bus.

This network consists of the;

- Powertrain Control Module (PCM)
- Transmission Control Module (TCM)
- Mechanical Instrument Cluster (MIC)
- Occupant Restraint Controller (ORC)
- Compass/Mini-Trip Computer (CMTC)
- Electronic Vehicle Information Center (EVIC)
- Controller Antilock Brake (CAB)
- HVAC Control Module
- Sliding Door Control Modules (driver and passenger side doors)
- Power Liftgate Module (PLG)
- Audio system equipped with RAZ, RBU, RBK, and RBB radios.
- Side Impact Airbag Control Module (SIACM)
- Memory Seat Module (MSM)
- Sentry Key Immobilizer Module (SKIM)

The BCM is operational when battery power is supplied to the module.

The BCM provides the following features:

- Power Door Locks
- Automatic Door Locks
- Battery Protection - The BCM will automatically turn off all exterior lamps after 3 minutes, and all

BODY CONTROL MODULE (Continued)

interior lamps after 15 minutes after the ignition is turned off, if they are not turned off by the driver.

- Chime Driver
- Compass/Mini-Trip support.
- Interior Lighting (Courtesy/Reading Lamps)
- BCM Diagnostic Reporting
- Electronic Liftgate Release (with Power Door Locks)
- Exterior Lighting
- Headlamp Time Delay (with/without Automatic Headlamps)
- Illuminated Entry
- Fade to Off Interior Lamps - This feature dims the interior lighting (courtesy lamps) gradually if the BCM does not receive any new inputs that would cause the interior lamps to remain on.
- Pulse Width Modulated Instrument Panel Dimming
- Door Lock Inhibit - This feature disables the door lock functions if the key is in the ignition and either front door is ajar. Pressing the Remote Keyless Entry (RKE) lock/unlock button under these conditions result in normal lock/unlock activation.

The BCM has the ability to LEARN additional features in the vehicle, provided the appropriate switch input and PCI data bus messages are received. Refer to the LEARNED FEATURES table.

LEARNED FEATURES

FEATURE	LEARNING KEY
CENTRAL LOCKING (WITH VTSS ONLY)	DRIVER/PASSENGER KEY CYLINDER SWITCH PRESENT
AUTOMATIC HEADLAMPS	PCI MESSAGE FROM OVERHEAD OR HEADLAMP SWITCH POSITION (AUTO)
REMOTE KEYLESS ENTRY	RKE MESSAGE RECEIVED FROM MODULE
FRONT FOG LAMPS	HEADLAMP SWITCH POSITION (PARK W/FRONT FOG LAMPS)
POWER SLIDING DOOR	PCI IFR RECEIVED FROM MODULE
THE BCM HAS FOUR SWITCH INPUTS FOR THE POWER SLIDING DOOR FEATURE; LOCATED IN THE OVERHEAD CONSOLE ARE THE LEFT AND RIGHT SIDE SLIDING DOOR SWITCHES TO ACTIVATE EITHER OR BOTH SLIDING DOORS UNDER THE PROPER CONDITIONS. ALSO ARE B-PILLAR SWITCHES LOCATED ON THE LEFT AND RIGHT B-PILLAR POSTS.	
POWER LIFTGATE	PCI IFR RECEIVED FROM MODULE
THE BCM HAS ONE LIFTGATE INPUT LOCATED IN THE OVERHEAD CONSOLE.	
POWER LOCKOUT SWITCH INPUT	
THE BCM HAS ONE LOCKOUT SWITCH INPUT THAT WHEN ENABLED WILL DISABLE THE B-PILLAR SLIDING DOOR SWITCHES FROM ACTIVATING EITHER SLIDING DOOR WHEN DEPRESSED.	
PCI AUDIO SYSTEM	PCI MESSAGE RECEIVED FROM MODULE
NOTE: SWAPPING OUT A HIGHLINE RADIO FOR A NON-PCI BUS RADIO (RAS) WILL RESULT IN IMPROPER HARDWIRE COMMUNICATION BETWEEN THE BCM AND THE NEW RAS RADIO. THE LCD DISPLAY WILL NOT ILLUMINATE PROPERLY DUE TO THE BCM LEARNING THAT A PCI RADIO EXISTS. HOWEVER, THE BCM CAN RE-INITIALIZE LEARNED FEATURES VIA THE USE OF THE DRB III® SCAN TOOL.	
REMOTE RADIO CONTROLS	REMOTE RADIO SWITCHES PRESENT
VEHICLE THEFT SECURITY	DRIVER/PASSENGER DOOR CYLINDER LOCK SWITCH
MEMORY SEAT AND MIRRORS	MEMORY SEAT SWITCH PRESENT AND OR PCI MESSAGE RECEIVED FROM MEMORY MODULE
ABS W/TRACTION CONTROL	PCI MESSAGE RECEIVED FROM CAB
SENTRY KEY IMMOBILIZER SYSTEM	PCI MESSAGE RECEIVED FROM SKIM OR VTSS PRESENT
ADJUSTABLE PEDAL MODULE	PCI MESSAGE RECEIVED FROM ADJUSTABLE PEDAL MODULE (APM)

BODY CONTROL MODULE (Continued)

When replacing a BCM there are three modules available:

- Base
- Midline
- Highline

The Midline controller is used on vehicles that have Power Door Locks and the Highline controller is used for vehicles equipped with a Power Liftgate. If a vehicle is equipped with the Vehicle Theft Security System, the Midline/Highline controller becomes a Premium when the theft feature is enabled.

CAUTION: Do not swap Body Control Modules between vehicles or body controller's off the shelf.

The BCM has internal diagnostic capability that assists in diagnosing the system error. When an OPEN or a SHORT circuit exists, the diagnostic tool can be used to read the BCM faults. The faults are very descriptive in identifying the appropriate feature that has faulted.

The only two faults that the BCM logs that conclude the replacement of a BCM are faults;

- # 01 - Internal BCM failure (replace BCM)
- # 1F - J1850 Internal Hardware Failure (replace BCM)

Otherwise the appropriate diagnostic procedures for each of the features should be taken when the BCM logs a fault.

REMOVAL

(1) Disconnect and isolate the battery negative cable.

(2) Remove the lower instrument panel silencer.

(3) Remove the knee blocker and reinforcement (Refer to 23 - BODY/INSTRUMENT PANEL/KNEE BLOCKER REINFORCEMENT - REMOVAL).

(4) Disconnect the five wire connectors from the bottom of the Body Control Module (BCM).

(5) Move bulkhead wiring aside.

(6) Remove the screws holding the BCM to the bulkhead.

(7) Remove the BCM from the mounting bracket.

INSTALLATION

(1) Install the BCM to the mounting bracket.

(2) Install the screws holding the BCM to the bulkhead.

(3) Connect the five wire connectors to the bottom of the Body Control Module (BCM).

(4) Install the knee blocker and reinforcement (Refer to 23 - BODY/INSTRUMENT PANEL/KNEE BLOCKER REINFORCEMENT - INSTALLATION).

(5) Install the lower instrument panel silencer.

(6) Connect the battery negative cable.

(7) Verify proper operation of BCM and its functions.

CONTROLLER ANTILOCK BRAKE

DESCRIPTION

The controller antilock brake (CAB) is a microprocessor-based device which monitors the antilock brake system (ABS) during normal braking and controls it when the vehicle is in an ABS stop. The CAB is mounted to the HCU as part of the integrated control unit (ICU) (Fig. 2). The CAB uses a 24-way electrical connector on the vehicle wiring harness. The power source for the CAB is through the ignition switch in the RUN or ON position. The CAB is on the PCI bus.

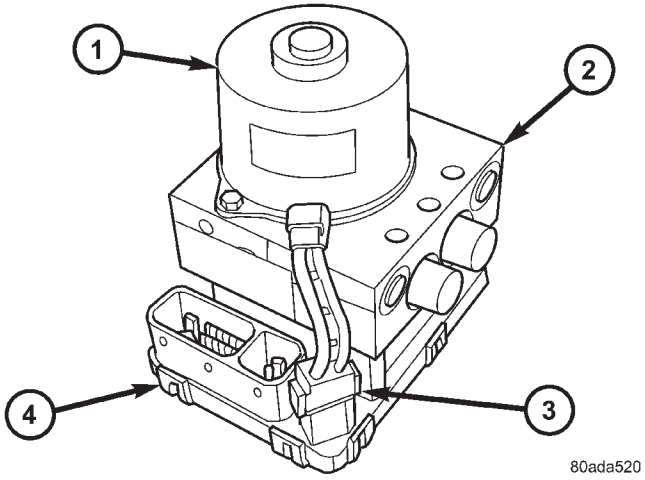

Fig. 2 Integrated Control Unit (ICU)

1 - PUMP/MOTOR
2 - HCU
3 - PUMP/MOTOR CONNECTOR
4 - CAB

OPERATION

The primary functions of the controller antilock brake (CAB) are to:

- Monitor the antilock brake system for proper operation.
- Detect wheel locking or wheel slipping tendencies by monitoring the speed of all four wheels of the vehicle.
- Control fluid modulation to the wheel brakes while the system is in an ABS mode.
- Store diagnostic information.
- Provide communication to the DRBIII® scan tool while in diagnostic mode.
- Illuminate the amber ABS warning indicator lamp.
- (With traction control only) Illuminate the TRAC ON lamp in the message center on the instrument panel when a traction control event occurs.

CONTROLLER ANTILOCK BRAKE (Continued)

- (with traction control only) Illuminate the TRAC OFF lamp when the amber ABS warning indicator lamp illuminates.

The CAB constantly monitors the antilock brake system for proper operation. If the CAB detects a fault, it will turn on the amber ABS warning indicator lamp and disable the antilock braking system. The normal base braking system will remain operational.

NOTE: If the vehicle is equipped with traction control, the TRAC OFF lamp will illuminate anytime the amber ABS warning indicator lamp illuminates.

The CAB continuously monitors the speed of each wheel through the signals generated by the wheel speed sensors to determine if any wheel is beginning to lock. When a wheel locking tendency is detected, the CAB commands the CAB command coils to actuate. The coils then open and close the valves in the HCU that modulate brake fluid pressure in some or all of the hydraulic circuits. The CAB continues to control pressure in individual hydraulic circuits until a locking tendency is no longer present.

The CAB contains a self-diagnostic program that monitors the antilock brake system for system faults. When a fault is detected, the amber ABS warning indicator lamp is turned on and the fault diagnostic trouble code (DTC) is then stored in a diagnostic program memory. These DTC's will remain in the CAB memory even after the ignition has been turned off. The DTC's can be read and cleared from the CAB memory by a technician using the DRBIII® scan tool. If not cleared with a DRBIII® scan tool, the fault occurrence and DTC will be automatically cleared from the CAB memory after the identical fault has not been seen during the next 3,500 miles.

CAB INPUTS

- Wheel speed sensors (four)
- Brake lamp switch
- Ignition switch
- System and pump voltage
- Ground
- Traction control switch (if equipped)
- Diagnostic communication (PCI)

CAB OUTPUTS

- Amber ABS warning indicator lamp actuation (via BUS)
- Instrument cluster (MIC) communication (PCI)
- Traction control lamps (if equipped)
- Diagnostic communication (PCI, via BUS)

REMOVAL

(1) Disconnect the battery cables.

(2) Remove the battery (Refer to 8 - ELECTRICAL/BATTERY SYSTEM/BATTERY - REMOVAL).

(3) Disconnect the vacuum hose connector at the tank built into the battery tray.

(4) Remove the screw securing the coolant filler neck to the battery tray.

(5) Remove the battery tray (Refer to 8 - ELECTRICAL/BATTERY SYSTEM/TRAY - REMOVAL).

(6) Pull up on the CAB connector lock and disconnect the 24–way electrical connector (Fig. 3).

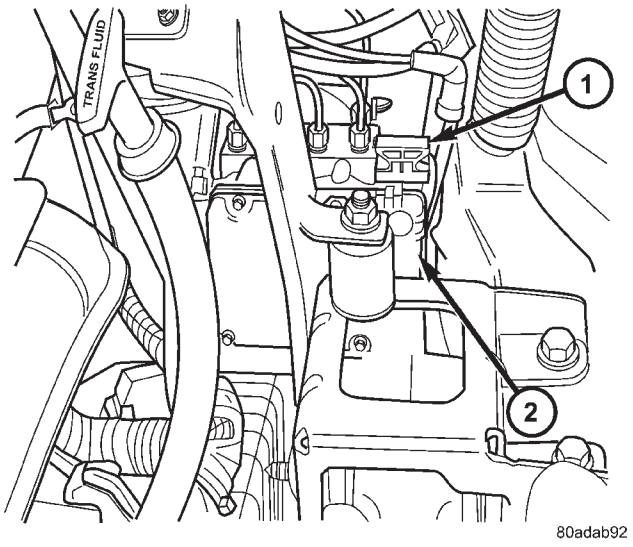

Fig. 3 CAB Connector Lock

1 - CONNECTOR LOCK
2 - CAB

(7) Disconnect the pump/motor connector from the CAB.

(8) Remove the screws securing the CAB to the HCU (Fig. 4)

(9) Pull CAB straight forward off HCU.

INSTALLATION

(1) Slide the CAB onto the HCU (Fig. 4).

(2) Install screws securing the CAB to the HCU (Fig. 4) Tighten the mounting screws to 2 N·m (17 in lbs).

(3) Reconnect the 24–way wiring connector and the pump/motor wiring connector. (Fig. 3)

(4) Install the battery tray (Refer to 8 - ELECTRICAL/BATTERY SYSTEM/TRAY - INSTALLATION).

(5) Install the screw securing the coolant filler neck to the battery tray.

(6) Reconnect the vacuum hose to the coolant tank built into the battery tray.

(7) Install the battery (Refer to 8 - ELECTRICAL/BATTERY SYSTEM/BATTERY - INSTALLATION).

(8) Reconnect the battery cables.

CONTROLLER ANTILOCK BRAKE (Continued)

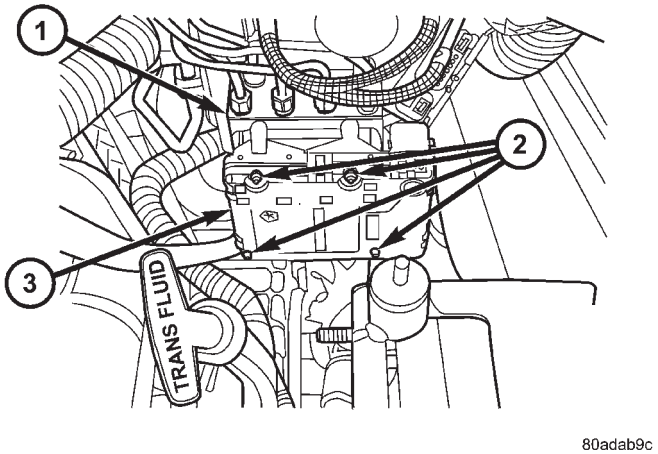

Fig. 4 CAB Mounting Screws

1 - HCU
2 - MOUNTING SCREWS
3 - CAB

(9) Connect a DRBIII® to the vehicle and initialize the system.

DATA LINK CONNECTOR

DESCRIPTION

The data link connector is located inside the vehicle, below instrument panel next to the center column (Fig. 5).

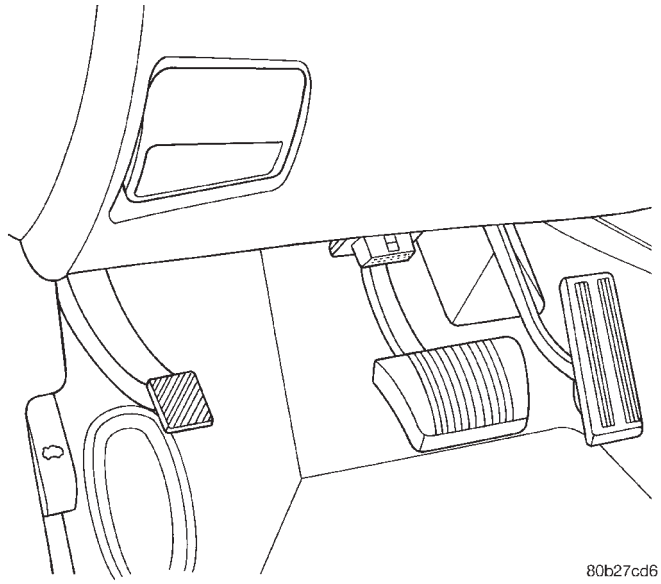

Fig. 5 DATA LINK CONNECTOR

OPERATION

The data link connector (diagnostic connector) links the DRB scan tool with the Powertrain Control Module (PCM). Refer to On-Board Diagnostics in the General Diagnosis section of this group.

FRONT CONTROL MODULE

DESCRIPTION

The Front Control Module (FCM) is a micro controller based module located in the engine compartment. This FCM mates to the power distribution center to form the Integrated Power Module (IPM). The IPM connects directly to the battery and provides the primary means of circuit protection and power distribution for all vehicle electrical systems. The FCM controls power to some of these vehicle systems electrical and electromechanical loads based on inputs received from hard wired switch inputs and data received on the Programmable Communications Interface (PCI) data bus.

For information on the IPM, (Refer to 8 - ELECTRICAL/POWER DISTRIBUTION/INTEGRATED POWER MODULE - DESCRIPTION)

OPERATION

As messages are sent over the Programmable Communications Interface (PCI) data bus, the Front Control Module (FCM) reads these messages and controls power to some of the vehicles electrical systems by completing the circuit to ground (low side driver) or completing the circuit to 12 volt power (high side driver).

The following functions are **controlled** by the Front Control Module:

- Accessory Relay Actuation
- Brake Transmission Shift Interlock Functions (BTSI)
- Diesel Cabin Heater (Diesel Engine Vehicles)
- Electronic Back Light (EBL) Rear Defogger
- Electronic Transaxle (Gasoline engine Vehicles)
- Front and Rear Blower Motor Relay Actuation
- Front Fog Lamp Relay Actuation
- Front Washer Motor
- Front Windshield Wiper “HI” & “LO” Relay Actuation
- Front Windshield Wiper “ON” Relay Actuation
- Headlamp Power with Voltage Regulation
- Horn Relay Actuation
- Headlamp Washer Relay Actuation
- Name Brand Speaker (NBS) Relay Actuation
- Occupant Restraint Controller Voltage
- Park Lamp Relay Actuation
- Rear Washer Motor
- Side Airbag Voltage

The following inputs are **Received/Monitored** by the Front Control Module:

- Ambient Temperature Sensing

FRONT CONTROL MODULE (Continued)

- Back-Up switch
- Brake Fluid Level
- B+ Connection Detection
- Engine Crank Signal (Diesel Engine Vehicles)
- Horn Input
- Ignition Switch Start Only
- Ignition Switch Run and Start Only
- Stop Lamp Sense
- Washer Fluid Level
- Windshield Wiper Park

DIAGNOSIS AND TESTING - FRONT CONTROL MODULE

The Front Control Module (FCM) is a printed circuit board based module with a on-board micro-processor. The FCM interfaces with other electronic modules in the vehicle via the Programmable Communications Interface (PCI) data bus. In order to obtain conclusive testing the PCI data bus and all of the electronic modules that provide inputs to, or receive outputs from the FCM must be checked. All PCI communication faults must be resolved prior to further diagnosing any front control module related issues.

The FCM was designed to be diagnosed with an appropriate diagnostic scan tool, such as the DRB III®. The most reliable, efficient, and accurate means to diagnose the front control module requires the use of a DRB III® scan tool and the proper Body Diagnostic Procedures manual.

Before any testing of the FCM is attempted, the battery should be fully charged and all wire harness and ground connections inspected around the affected areas on the vehicle.

REMOVAL

(1) Disconnect the positive and negative battery cables from the battery.

(2) Remove the battery from the vehicle. Refer to the procedure in Battery Systems.

(3) Using a long flat-bladed screwdriver, gently twist the Integrated Power Module (IPM) retaining clip outboard to free the IPM from its mounting bracket (Fig. 6). Rotate IPM upward to access the Front Control Module (FCM) retaining screws.

(4) Remove the front control module retaining screws.

(5) Using both hands, pull the FCM straight from the IPM assembly to disconnect the 49-way electrical connector (Fig. 7) and remove the front control module from the vehicle.

INSTALLATION

NOTE: Front Control Module must be programmed to the correct radio EQ curve using the DRB III®. This will ensure that the audio system is operating correctly.

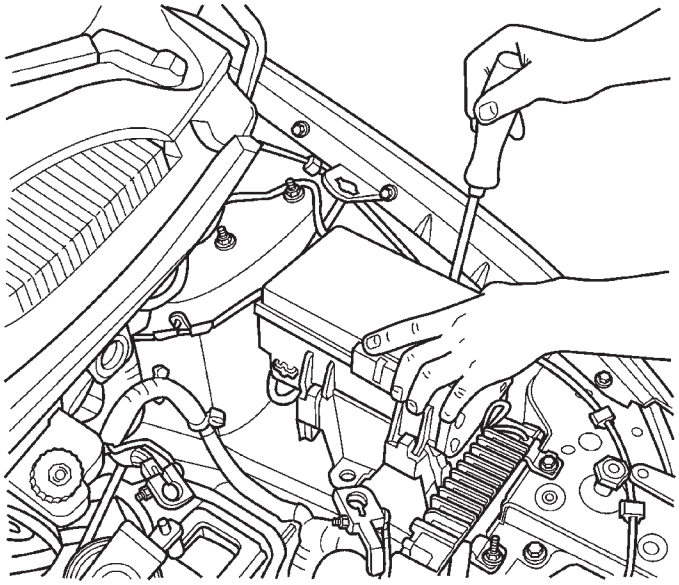

Fig. 6 REMOVING INTELLIGENT POWER MODULE

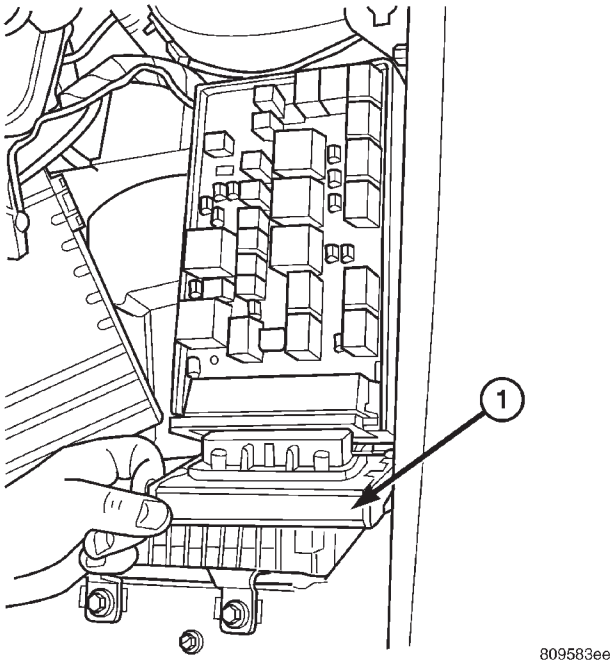

Fig. 7 FRONT CONTROL MODULE

1 - FRONT CONTROL MODULE

(1) Install the Front Control Module (FCM) in the Integrated Power Module (IPM) assembly by pushing the 49-way electrical connector straight in.

(2) Install the FCM retaining screws. Torque the screws to 1 N·m (7 in. lbs).

(3) Rotate the IPM assembly downward to secure in mounting bracket.

FRONT CONTROL MODULE (Continued)

(4) Install the battery in the vehicle. Refer to the procedure in Battery Systems.

(5) Connect the positive and negative battery cables.

(6) Using the DRB III ®, under “FRONT CONTROL MODULE” then “MISC” program the EQ curve of the radio into the Front Control Module. Refer to the appropriate diagnostic manual.

NOTE: If the vehicle is not equipped with Name Brand Speakers (Infinity, etc.) or Headlamp Washers the DRB III® must be used to Disable the appropriate relays in the Intelligent Power Module Assembly.

HEATED SEAT MODULE

DESCRIPTION

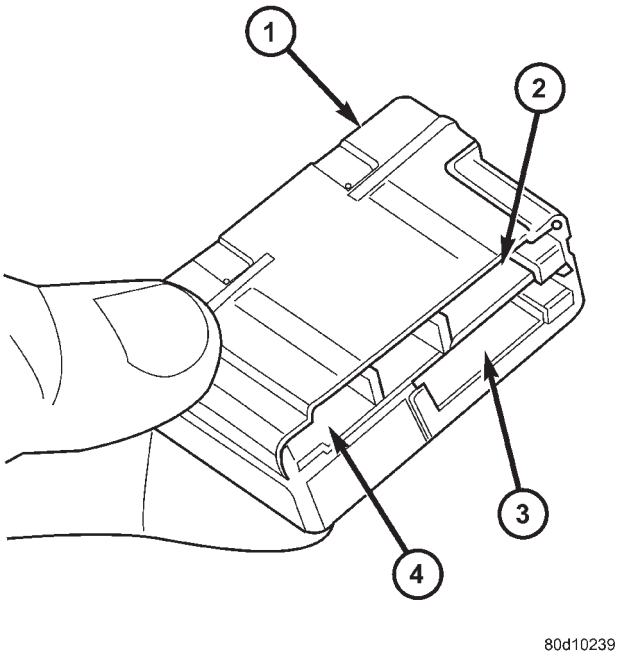

Fig. 8 RS/RG Heated Seat Modules

1 - HEATED SEAT MODULE
2 - C1 CONNECTOR
3 - C3 CONNECTOR
4 - C1 CONNECTOR

Vehicles equipped with heated seats utilize two heated seat modules. The heated seat modules (Fig. 8) are located under the front seats, where they are secured to the seat cushion pans. The left heated seat module controls the left heated seat, and the right controls the right. Each heated seat module has three connector receptacles that allows the module to be connected to all of the required inputs and outputs through the seat wire harness.

The heated seat module is an electronic microprocessor controlled device designed and programmed to use inputs from the ignition switch, heated seat switch and the heated seat sensor to operate and control the heated seat elements in the front seat and the two heated seat indicator lamp Light-Emitting Diodes (LEDs) in the heated seat switch.

The heated seat module cannot be repaired. If the heated seat module is damaged or faulty, the entire module must be replaced.

OPERATION

The heated seat module operates on fused battery current received from the ignition switch and integrated power module. The module is grounded at all times through the seat wire harness. Inputs to the module include a resistor multiplexed heated seat switch request circuit for the heated seat switch and the heated seat sensor inputs from the seat cushions of each front seat. In response to those inputs the heated seat module controls battery current feeds to the heated seat elements, and controls the ground for the heated seat switch indicator lamps.

When a heated seat switch request signal is received by the heated seat module, the module energizes the proper indicator lamp (Low or High) in the switch by grounding the indicator lamp circuit to indicate that the heated seat system is operating. At the same time, the heated seat module energizes the selected heated seat sensor circuit and the sensor provides the module with an input indicating the surface temperature of the selected seat cushion.

The Low heat set point is about 38° C (100.4° F), and the High heat set point is about 42° C (107.6° F). If the seat cushion surface temperature input is below the temperature set point for the selected temperature setting, the heated seat module energizes an N-channel Field Effect Transistor (N-FET) within the module which energizes the heated seat elements in the selected seat cushion and back. When the sensor input to the module indicates the correct temperature set point has been achieved, the module de-energizes the N-FET which de-energizes the heated seat elements. The heated seat module will continue to cycle the N-FET as needed to maintain the selected temperature set point.

DIAGNOSIS AND TESTING - HEATED SEAT MODULE

If a heated seat fails to heat and one or both of the indicator lamps on a heated seat switch flash, refer to **Diagnosis and Testing Heated Seat System** in Heated Seats for the location of flashing LED heated seat system diagnosis and testing procedures. If a heated seat heats but one or both indicator lamps on the heated seat switch fail to operate, test the heated

HEATED SEAT MODULE (Continued)

seat switch. Refer to **Diagnosis and Testing Heated Seat Switch** in Heated Seats for heated seat switch diagnosis and testing procedures. If the heated seat switch checks OK, proceed as follows.

(1) Check the heated seat element (Refer to 8 - ELECTRICAL/HEATED SEATS/HEATED SEAT ELEMENT - DIAGNOSIS AND TESTING).

(2) Check the heated seat sensor (Refer to 8 - ELECTRICAL/HEATED SEATS/HEATED SEAT SENSOR - DIAGNOSIS AND TESTING).

(3) Check the heated seat switch (Refer to 8 - ELECTRICAL/HEATED SEATS/DRIVER HEATED SEAT SWITCH - DIAGNOSIS AND TESTING).

NOTE: Refer to Wiring for the location of complete heated seat system wiring diagrams and connector pin-out information.

(4) Using a voltmeter, backprobe the appropriate heated seat module connector, do not disconnect. Check for voltage at the appropriate pin cavities. 12v should be present. If OK go to Step 5, if Not, Repair the open or shorted voltage supply circuit as required.

(5) Using a ohmmeter, backprobe the appropriate heated seat module connector, do not disconnect. Check for proper continuity to ground on the ground pin cavities. Continuity should be present. If OK replace the heated seat module with a known good unit and retest system, if Not OK, Repair the open or shorted ground circuit as required.

REMOVAL

(1) Disconnect and isolate the negative battery cable.

(2) Remove the appropriate front seat from the vehicle (Refer to 23 - BODY/SEATS/SEAT - REMOVAL).

(3) Unsnap the module from the seat cushion pan.

(4) Disconnect the module wire harness connectors.

INSTALLATION

(1) Connect the module wire harness connectors.

(2) Snap the module on the seat cushion pan.

(3) Install the appropriate front seat in the vehicle (Refer to 23 - BODY/SEATS/SEAT - INSTALLATION).

(4) Connect and isolate the negative battery cable.

POWER LIFTGATE MODULE

DESCRIPTION

Vehicles equipped with a power liftgate (PLG) utilize a PLG control module. This module is located on the vehicles left side D-pillar just below the motor

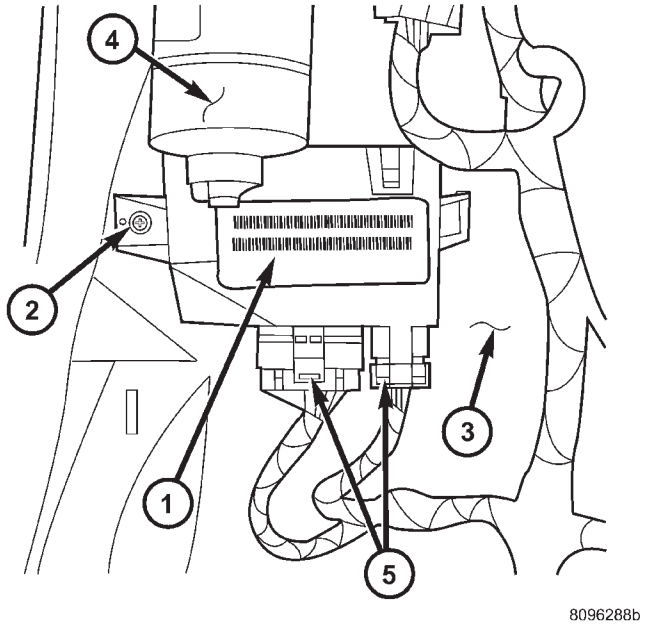

Fig. 9 LIFTGATE CONTROL MODULE

1 - POWER LIFTGATE CONTROL MODULE
2 - MODULE RETAINING SCREWS
3 - D-PILLAR
4 - POWER LIFTGATE MOTOR
5 - MODULE ELECTRICAL CONNECTORS

assembly (Fig. 9) and contains a microprocessor, which is used to communicate to the vehicles body control module. The PLG control module receives and monitors logic inputs from all the PLG system switches except for the outside handle switch. This module also contains the software technology to detect liftgate obstructions and stop and / or reverse the door accordingly.

OPERATION

The PLG control module contains the electronic circuitry and software used to control the sequence of events for the PLG system. This module comunicates on the PCI bus circuit with the vehicles body control module to monitor many different inputs and outputs such as door lock status, transmission gear selector position and vehicle speed. Refer to PLG system operation for more information.

REMOVAL

(1) Disconnect and isolate the negative battery cable.

(2) Remove left D-pillar trim panel from the vehicle. Refer to Body for the procedure.

(3) Disconnect the wire harness connections from the PLG motor assembly (Fig. 10).

POWER LIFTGATE MODULE (Continued)

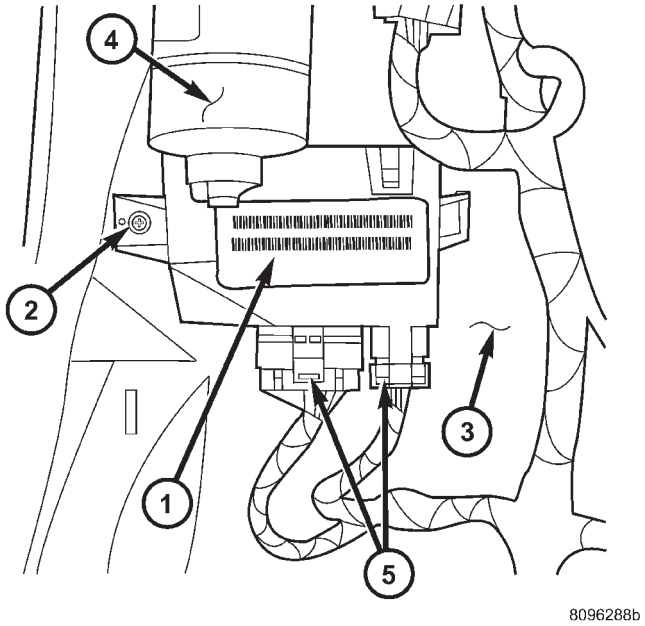

Fig. 10 LIFTGATE CONTROL MODULE

1 - POWER LIFTGATE CONTROL MODULE
2 - MODULE RETAINING SCREWS
3 - D-PILLAR
4 - POWER LIFTGATE MOTOR
5 - MODULE ELECTRICAL CONNECTORS

(4) Remove the screw holding the PLG control module to the D-pillar (Fig. 10).

(5) Remove the PLG control module from the vehicle.

INSTALLATION

(1) Install the PLG control module on the D-pillar and install retaining screw. Torque the screw to 14.5 in. lbs.

(2) Connect the wire harness connections on the PLG control module. Be certain to slide connector locks to the locked position.

(3) Install the D-pillar trim panel on the vehicle. Refer to the Body section for the procedure.

(4) Connect the negative battery cable.

(5) Using an appropriate scan tool, check any erase any PLG control module diagnostic trouble codes.

(6) Verify PLG system operation. Cycle the PLG through one complete open and close cycle, this will allow the PLG control module to relearn its cycle with the new components.

POWERTRAIN CONTROL MODULE

DESCRIPTION

DESCRIPTION

The Powertrain Control Module (PCM) is a digital computer containing a microprocessor (Fig. 11). The PCM receives input signals from various switches and sensors referred to as Powertrain Control Module Inputs. Based on these inputs, the PCM adjusts various engine and vehicle operations through devices referred to as Powertrain Control Module Outputs.

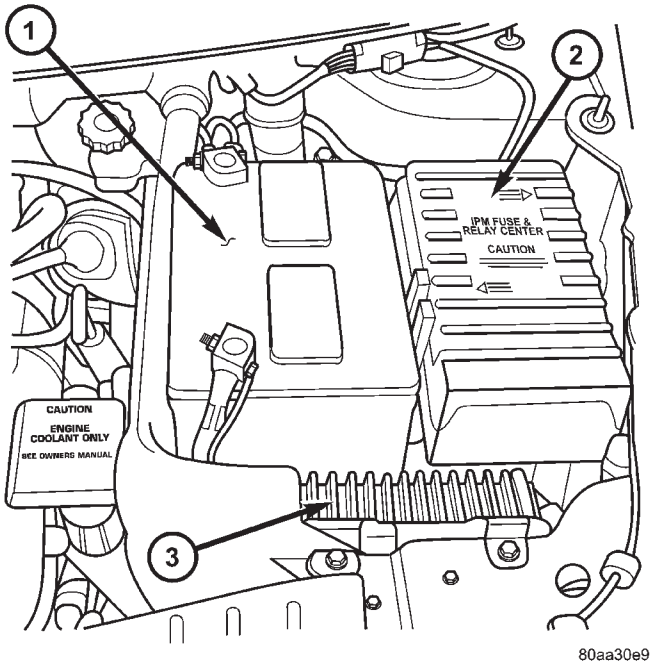

Fig. 11 Powertrain Control Module (PCM)

1 - Battery
2 - Power Distribution Center
3 - Powertrain Control Module

NOTE: PCM Inputs:

- Air Conditioning Pressure Transducer
- ASD Relay
- Battery Voltage
- Brake Switch
- Camshaft Position Sensor
- Crankshaft Position Sensor
- Distance Sensor (from transmission control module)
- EGR Position Feedback
- Engine Coolant Temperature Sensor
- Heated Oxygen Sensors

POWERTRAIN CONTROL MODULE (Continued)

- Ignition sense
- Intake Air Temperature Sensor
- Knock Sensor
- Leak Detection Pump Feedback
- Manifold Absolute Pressure (MAP) Sensor
- Park/Neutral (from transmission control module)
- PCI Bus
- Power Steering Pressure Switch
- Proportional Purge Sense
- SCI Receive
- Speed Control
- Throttle Position Sensor
- Torque Management Input (From TCM)
- Transaxle Control Module (TCM)
- Transaxle Gear Engagement (From TCM)
- Vehicle Speed (from transmission control module)

NOTE: PCM Outputs:

- Air Conditioning Clutch Relay
- Automatic Shut Down (ASD) and Fuel Pump Relays
- Data Link Connector (PCI and SCI Transmit)
- Double Start Override
- EGR Solenoid
- Fuel Injectors
- Generator Field
- High Speed Fan Relay
- Idle Air Control Motor
- Ignition Coils
- Leak Detection Pump
- Low Speed Fan Relay
- MTV Actuator
- Proportional Purge Solenoid
- SRV Valve
- Speed Control Relay
- Speed Control Vent Relay
- Speed Control Vacuum Relay
- 8 Volt Output
- 5 Volt Output

Based on inputs it receives, the powertrain control module (PCM) adjusts fuel injector pulse width, idle speed, ignition timing, and canister purge operation. The PCM regulates the cooling fans, air conditioning and speed control systems. The PCM changes generator charge rate by adjusting the generator field.

The PCM adjusts injector pulse width (air-fuel ratio) based on the following inputs.

- Battery Voltage
- Intake Air Temperature Sensor
- Engine Coolant Temperature
- Engine Speed (crankshaft position sensor)
- Exhaust Gas Oxygen Content (heated oxygen sensors)
- Manifold Absolute Pressure
- Throttle Position

The PCM adjusts engine idle speed through the idle air control motor based on the following inputs.

- Brake Switch
- Engine Coolant Temperature
- Engine Speed (crankshaft position sensor)
- Park/Neutral (transmission gear selection)
- Transaxle Gear Engagement
- Throttle Position
- Vehicle Speed (from Transmission Control Module)

The PCM adjusts ignition timing based on the following inputs.

- Intake Air Temperature
- Engine Coolant Temperature
- Engine Speed (crankshaft position sensor)
- Knock Sensor
- Manifold Absolute Pressure
- Park/Neutral (transmission gear selection)
- Transaxle Gear Engagement
- Throttle Position

The automatic shut down (ASD) and fuel pump relays are mounted externally, but turned on and off by the powertrain control module through the same circuit.

The camshaft and crankshaft signals are sent to the powertrain control module. If the PCM does not receive both signals within approximately one second of engine cranking, it deactivates the ASD and fuel pump relays. When these relays are deactivated, power is shut off to the fuel injectors, ignition coils, fuel pump and the heating element in each oxygen sensor.

The PCM contains a voltage converter that changes battery voltage to a regulated 8.0 volts. The 8.0 volts power the camshaft position sensor, crankshaft position sensor and vehicle speed sensor. The PCM also provides a 5.0 volts supply for the engine coolant temperature sensor, intake air temperature sensor, manifold absolute pressure sensor and throttle position sensor.

The PCM engine control strategy prevents reduced idle speeds until after the engine operates for 320 km (200 miles). If the PCM is replaced after 320 km (200 miles) of usage, update the mileage in new PCM. Use the DRB scan tool to change the mileage in the PCM. Refer to the appropriate Powertrain Diagnostic Manual and the DRB scan tool.

POWERTRAIN CONTROL MODULE (Continued)

DIAGNOSTIC TROUBLE CODE

DESCRIPTION

A Diagnostic Trouble Code (DTC) indicates the PCM has recognized an abnormal condition in the system.

Remember that DTC's are the results of a system or circuit failure, but do not directly identify the failed component or components.

NOTE: For a list of DTC's, refer to the charts in this section.

(M) Check Engine Lamp (MIL) will illuminate during engine operation if this Diagnostic Trouble Code was recorded.		
(G) Generator Lamp Illuminated		
GENERIC SCAN TOOL CODE	DRB SCAN TOOL DISPLAY	DESCRIPTION OF DIAGNOSTIC TROUBLE CODE
P0016	Crankshaft/Camshaft Timing Misalignment	A rationality error has been detected for camshaft position out of phase with crankshaft
P0030	O2 sensor 1/1 Heater Circuit	Shorted condition detected in the oxygen sensor heater element control feedback sense circuit.
P0031	O2 sensor 1/1 Heater Circuit	Shorted condition detected in the oxygen sensor heater element control feedback sense circuit.
P0036	O2 sensor 1/2 Heater Circuit	Shorted condition detected in the oxygen sensor heater element control feedback sense circuit.
P0037	O2 sensor 1/2 Heater Circuit	Shorted condition detected in the oxygen sensor heater element control feedback sense circuit.
P0038	O2 sensor 1/2 Heater Circuit	Shorted condition detected in the oxygen sensor heater element control feedback sense circuit.
P0043	O2 sensor 1/3 Heater Circuit	Shorted condition detected in the oxygen sensor heater element control feedback sense circuit.
P0044	O2 sensor 1/3 Heater Circuit	Shorted condition detected in the oxygen sensor heater element control feedback sense circuit.
P0050	O2 sensor 2/1 Heater Circuit	Shorted condition detected in the oxygen sensor heater element control feedback sense circuit.
P0051	O2 sensor 2/1 Heater Circuit	Shorted condition detected in the oxygen sensor heater element control feedback sense circuit.
P0052	O2 sensor 2/1 Heater Circuit	Shorted condition detected in the oxygen sensor heater element control feedback sense circuit.
P0056	O2 sensor 2/1 Heater Circuit	Shorted condition detected in the oxygen sensor heater element control feedback sense circuit.
P0057	O2 sensor 2/2 Heater Circuit	Shorted condition detected in the oxygen sensor heater element control feedback sense circuit.
P0058	O2 sensor 2/2 Heater Circuit	Shorted condition detected in the oxygen sensor heater element control feedback sense circuit.
P0068	Manifold Pressure/Throttle Position Correlation	MAP sensor signal does not correlate to throttle position sensor signal. Possible vacuum leak.
P0070	Ambient Temp Sensor Stuck	A rationality error has been detected in the ambient temp. sensor test.
P0071 (M)	Ambient Temp Sensor Performance	Ambient change less than 3° C in 200 Miles
P0072	Ambient Temp Sensor Low	Ambient temp. sensor input below the minimum acceptable voltage
P0073	Ambient Temp Sensor High	Ambient temp. sensor input above the maximum acceptable voltage

POWERTRAIN CONTROL MODULE (Continued)

(M) Check Engine Lamp (MIL) will illuminate during engine operation if this Diagnostic Trouble Code was recorded.		
(G) Generator Lamp Illuminated		
GENERIC SCAN TOOL CODE	DRB SCAN TOOL DISPLAY	DESCRIPTION OF DIAGNOSTIC TROUBLE CODE
P0106 (M)	Barometric Pressure Out of Range	MAP sensor input voltage out of an acceptable range detected during reading of barometric pressure at key-on.
P0107 (M)	Map Sensor Voltage Too Low	MAP sensor input below minimum acceptable voltage.
P0108 (M)	Map Sensor Voltage Too High	MAP sensor input above maximum acceptable voltage.
P0110	Intake Air Temp Sensor Stuck	A rationality error has been detected for the intake air temp. sensor.
P0111 (M)	Intake Air Temp Sensor Performance	Intake Air change less than 3° C in 200 Miles
P0112 (M)	Intake Air Temp Sensor Voltage Low	Intake air (charge) temperature sensor input below the minimum acceptable voltage.
P0113 (M)	Intake Air Temp Sensor Voltage High	Intake air (charge) temperature sensor input above the maximum acceptable voltage.
P0116	Engine Coolant Temp Performance	A rationality error has been detected in the coolant temp sensor.
P0117 (M)	ECT Sensor Voltage Too Low	Engine coolant temperature sensor input below the minimum acceptable voltage.
P0118 (M)	ECT Sensor Voltage Too High	Engine coolant temperature sensor input above the maximum acceptable voltage.
P0121 (M)	TPS Voltage Does Not Agree With MAP	TPS signal does not correlate to MAP sensor signal.
P0122 (M)	Throttle Position Sensor Voltage Low	Throttle position sensor input below the acceptable voltage range.
P0123 (M)	Throttle Position Sensor Voltage High	Throttle position sensor input above the maximum acceptable voltage.
P0125 (M)	Engine Coolant Temp Not Reached	Time to enter Closed Loop Operation (Fuel Control) is excessive.
P0128	Thermostat Rationality	A rationality error has been detected for the thermostat
P0129	Barometic Pressure Out-of-Range low	MAP sensor input voltage out of an acceptable range detected during reading of barometric pressure.
P0130	1/1 O2 Sensor Heater Relay Circuit	An open or shorted condition detected in the ASD or CNG shutoff relay control ckt.
P0131 (M)	1/1 O2 Sensor Shorted To Ground	Oxygen sensor input voltage maintained below normal operating range.
P0132 (M)	1/1 O2 Sensor Shorted To Voltage	Oxygen sensor input voltage maintained above normal operating range.
P0133 (M)	1/1 O2 Sensor Slow Response	Oxygen sensor response slower than minimum required switching frequency.
P0134 (M)	1/1 O2 Sensor Stays at Center	Neither rich or lean condition is detected from the oxygen sensor input.
P0135 (M)	1/1 O2 Sensor Heater Failure	Oxygen sensor heater element malfunction.
P0136	1/2 O2 Sensor Heater Relay Circuit	An open or shorted condition detected in the ASD or CNG shutoff relay control ckt.
P0137 (M)	1/2 O2 Sensor Shorted To Ground	Oxygen sensor input voltage maintained below normal operating range.

POWERTRAIN CONTROL MODULE (Continued)

(M) Check Engine Lamp (MIL) will illuminate during engine operation if this Diagnostic Trouble Code was recorded.		
(G) Generator Lamp Illuminated		
GENERIC SCAN TOOL CODE	DRB SCAN TOOL DISPLAY	DESCRIPTION OF DIAGNOSTIC TROUBLE CODE
P0138 (M)	1/2 O2 Sensor Shorted To Voltage	Oxygen sensor input voltage maintained above normal operating range.
P0139 (M)	1/2 O2 Sensor Slow Response	Oxygen sensor response not as expected.
P0140 (M)	1/2 O2 Sensor Stays at Center	Neither rich or lean condition is detected from the oxygen sensor.
P0141 (M)	1/2 O2 Sensor Heater Failure	Oxygen sensor heater element malfunction.
P0143	1/3 O2 Sensor Shorted To Ground	Oxygen sensor input voltage maintained below normal operating range.
P0144	1/3 O2 Sensor Shorted To Voltage	Oxygen sensor input voltage maintained above normal operating range.
P0145	1/3 O2 Sensor Slow Response	Oxygen sensor response slower than minimum required switching frequency.
P0146	1/3 O2 Sensor Stays at Center	Neither rich or lean condition is detected from the oxygen sensor.
P0147	1/3 O2 Sensor Heater Failure	Oxygen sensor heater element malfunction.
P0151 (M)	2/1 O2 Sensor Shorted To Ground	Oxygen sensor input voltage maintained below normal operating range.
P0152 (M)	2/1 O2 Sensor Shorted To Voltage	Oxygen sensor input voltage sustained above normal operating range.
P0153 (M)	2/1 O2 Sensor Slow Response	Oxygen sensor response slower than minimum required switching frequency.
P0154 (M)	2/1 O2 Sensor Stays at Center	Neither rich or lean condition is detected from the oxygen sensor.
P0155 (M)	2/1 O2 Sensor Heater Failure	Oxygen sensor heater element malfunction.
P0157 (M)	2/2 O2 Sensor Shorted To Ground	Oxygen sensor input voltage maintained below normal operating range.
P0158 (M)	2/2 O2 Sensor Shorted To Voltage	Oxygen sensor input voltage maintained above normal operating range.
P0159	2/2 O2 Sensor Slow Response	Oxygen sensor response slower than minimum required switching frequency.
P0160 (M)	2/2 O2 Sensor Stays at Center	Neither rich or lean condition is detected from the oxygen sensor.
P0161 (M)	2/2 O2 Sensor Heater Failure	Oxygen sensor heater element malfunction.
P0165	Starter Relay Circuit	
P0171 (M)	1/1 Fuel System Lean	A lean air/fuel mixture has been indicated by an abnormally rich correction factor.
P0172 (M)	1/1 Fuel System Rich	A rich air/fuel mixture has been indicated by an abnormally lean correction factor.
P0174 (M)	2/1 Fuel System Lean	A lean air/fuel mixture has been indicated by an abnormally rich correction factor.
P0175 (M)	2/1 Fuel System Rich	A rich air/fuel mixture has been indicated by an abnormally lean correction factor.
P0176	Flex Fuel Calibration Signal	No calibration voltage present from flex fuel sensor.

POWERTRAIN CONTROL MODULE (Continued)

(M) Check Engine Lamp (MIL) will illuminate during engine operation if this Diagnostic Trouble Code was recorded.		
(G) Generator Lamp Illuminated		
GENERIC SCAN TOOL CODE	DRB SCAN TOOL DISPLAY	DESCRIPTION OF DIAGNOSTIC TROUBLE CODE
P0178	Flex Fuel Sensor Volts Too Low	Flex fuel sensor input below minimum acceptable voltage.
P0179	Flex Fuel Sensor Volts Too High	Flex fuel sensor input above maximum acceptable voltage.
P0201 (M)	Injector #1 Control Circuit	An open or shorted condition detected in control circuit for injector #1 or the INJ 1 injector bank.
P0202 (M)	Injector #2 Control Circuit	An open or shorted condition detected in control circuit for injector #2 or the INJ 2 injector bank.
P0203 (M)	Injector #3 Control Circuit	An open or shorted condition detected in control circuit for injector #3 or the INJ 3 injector bank.
P0204 (M)	Injector #4 Control Circuit	Injector #4 or INJ 4 injector bank output driver stage does not respond properly to the control signal.
P0205 (M)	Injector #5 Control Circuit	Injector #5 output driver stage does not respond properly to the control signal.
P0206 (M)	Injector #6 Control Circuit	Injector #6 output driver stage does not respond properly to the control signal.
P0207	Injector #7 Control Circuit	Injector #7 output driver stage does not respond properly to the control signal.
P0208	Injector #8 Control Circuit	Injector #8 output driver stage does not respond properly to the control signal.
P0209	Injector #9 Control Circuit	Injector #9 output driver stage does not respond properly to the control signal.
P0210	Injector #10 Control Circuit	Injector #10 output driver stage does not respond properly to the control signal.
P0234	Boost Limit Exceeded	
P0243	Wastegate Solenoid Circuit	
P0300 (M)	Multiple Cylinder Mis-fire	Misfire detected in multiple cylinders.
P0301 (M)	CYLINDER #1 MISFIRE	Misfire detected in cylinder #1.
P0302 (M)	CYLINDER #2 MISFIRE	Misfire detected in cylinder #2.
P0303 (M)	CYLINDER #3 MISFIRE	Misfire detected in cylinder #3.
P0304 (M)	CYLINDER #4 MISFIRE	Misfire detected in cylinder #4.
P0305 (M)	CYLINDER #5 MISFIRE	Misfire detected in cylinder #5.
P0306 (M)	CYLINDER #6 MISFIRE	Misfire detected in cylinder #6.
P0307 (M)	CYLINDER #7 MISFIRE	Misfire detected in cylinder #7
P0308 (M)	CYLINDER #8 MISFIRE	Misfire detected in cylinder #8.
P0309 (M)	CYLINDER #9 MISFIRE	Misfire detected in cylinder #9.
P0310 (M)	CYLINDER #10 MISFIRE	Misfire detected in cylinder #10.
P0315	No Crank Sensor Learned	Unable to learn the crank senor's signal in preparation for misfire diagnostics.
P0320	No Crank Reference Signal at PCM	No reference signal (crankshaft position sensor) detected during engine cranking.
P0325	Knock Sensor #1 Circuit	Knock sensor (#1) signal above or below minimum acceptable threshold voltage at particular engine speeds.

POWERTRAIN CONTROL MODULE (Continued)

(M) Check Engine Lamp (MIL) will illuminate during engine operation if this Diagnostic Trouble Code was recorded.		
(G) Generator Lamp Illuminated		
GENERIC SCAN TOOL CODE	DRB SCAN TOOL DISPLAY	DESCRIPTION OF DIAGNOSTIC TROUBLE CODE
P0330	Knock Sensor #2 Circuit	Knock sensor (#2) signal above or below minimum acceptable threshold voltage at particular engine speeds.
P0335	Crankshaft Position Sensor Circuit	A rationality error has been detected for loss of crankshaft position sensor.
P0339	Crankshaft Position Sensor Circuit Intermittent	A rationality error has been detected for intermittent loss of crankshaft position sensor.
P0340 (M)	Camshaft Position Sensor Circuit	A rationality error has been detected for loss of camshaft position sensor.
P0344	Camshaft Position Sensor Circuit Intermittent	A rationality error has been detected for intermittent loss of camshaft position sensor.
P0350	Ignition Coil Draws Too Much Current	A coil (1-5) is drawing too much current.
P0351 (M)	Ignition Coil Primary # 1 Circuit	Peak primary circuit current not achieved with maximum dwell time.
P0352 (M)	Ignition Coil Primary # 2 Circuit	Peak primary circuit current not achieved with maximum dwell time.
P0353 (M)	Ignition Coil Primary # 3 Circuit	Peak primary circuit current not achieved with maximum dwell time.
P0354 (M)	Ignition Coil Primary# 4 Circuit	Peak primary circuit current not achieved with maximum dwell time (High Impedance).
P0355 (M)	Ignition Coil Primary # 5 Circuit	Peak primary circuit current not achieved with maximum dwell time (High Impedance).
P0356 (M)	Ignition Coil Primary # 6 Circuit	Peak primary circuit current not achieved with maximum dwell time (high impedance).
P0357	Ignition Coil Primary # 7 Circuit	Peak primary circuit current not achieved with maximum dwell time (high impedance).
P0358	Ignition Coil Primary # 8 Circuit	Peak primary circuit current not achieved with maximum dwell time (high impedance).
P0400	Diesel EGR System Failure	
P0401 (M)	EGR System Failure	Required change in air/fuel ration not detected during diagnostic test.
P0403 (M)	EGR Solenoid Circuit	An open or shorted condition detected in the EGR solenoid control circuit.
P0404 (M)	EGR Position Sensor Rationality	EGR position sensor signal does not correlate to EGR duty cycle.
P0405 (M)	EGR Position Sensor Volts Too Low	EGR position sensor input below the acceptable voltage range.
P0406 (M)	EGR Position Sensor Volts Too High	EGR position sensor input above the acceptable voltage range.
P0412	Secondary Air Solenoid Circuit	An open or shorted condition detected in the secondary air (air switching/aspirator) solenoid control circuit.
P0420 (M)	1/1 Catalytic Converter Efficiency	Catalyst 1/1 efficiency below required level.
P0432 (M)	1/2 Catalytic Converter Efficiency	Catalyst 2/1 efficiency below required level.
P0440	General EVAP System Failure	General system failure.

POWERTRAIN CONTROL MODULE (Continued)

(M) Check Engine Lamp (MIL) will illuminate during engine operation if this Diagnostic Trouble Code was recorded.		
(G) Generator Lamp Illuminated		
GENERIC SCAN TOOL CODE	DRB SCAN TOOL DISPLAY	DESCRIPTION OF DIAGNOSTIC TROUBLE CODE
P0441 (M)	Evap Purge Flow Monitor	Insufficient or excessive vapor flow detected during evaporative emission system operation.
P0442 (M)	Evap Leak Monitor 0.040 Leak Detected	A 0.040 leak has been detected in the evaporative system.
P0443 (M)	Evap Purge Solenoid Circuit	An open or shorted condition detected in the EVAP purge solenoid control circuit.
P0452	NVLD Pressure Switch Stuck Closed	NVLD pressure switch stuck closed.
P0453	NVLD Pressure Switch Stuck Open	NVLD pressure switch stuck open.
P0455 (M)	Evap Leak Monitor Large Leak Detected	A large leak has been detected in the evaporative system.
P0456 (M)	Evap Leak Monitor 0.020 Leak Detected	A 0.020 leak has been detected in the evaporative system.
P0460	Fuel Level Unit No Change Over Miles	No movement of fuel level sender detected.
P0461	Fuel Level Unit No Changeover Time	No level of fuel level sender detected.
P0462	Fuel Level Sending Unit Volts Too Low	Fuel level sensor input below acceptable voltage.
P0463	Fuel Level Sending Unit Volts Too High	Fuel level sensor input above acceptable voltage.
P0480	Low Speed Fan Relay Control Circuit	An open or shorted condition detected in the low speed rad. fan relay control circuit.
P0481	High Speed Fan Relay Control Circuit	An open or shorted condition detected in the high speed rad. fan relay control circuit.
P0498	NVLD Canister Vent Valve Solenoid Circuit Low	A shorted low condition detected in NVLD solenoid circuit.
P0499	NVLD Canister Vent Valve Solenoid Circuit High	A shorted high condition detected in NVLD solenoid circuit.
P0500 (M)	No Vehicle Speed Sensor Signal	No vehicle speed sensor signal detected during road load conditions.
P0501	Vehicle Speed Sensor #1 Performance	A rationality error has been detected for no vehicle speed sensor signal detected during road load conditions.
P0505 (M)	Idle Air Control Motor Circuits	Replace idle air control motor.
P0508 (M)	Idle Air Control Motor Circuit Low	Idle Air Control Motor Circuit input below acceptable current
P0509 (M)	Idle Air Control Motor Circuit High	Idle Air Control Motor Circuit input above acceptable current
P0511	Idle Air Control Valve Solenoid Circuit	An open or shorted condition detected in the IAC control circuit.
P0513	Invalid SKIM Key	The engine controller has received an invalid key from the Smart Key Immobilizer Module.
P0516	Battery Temperature Sensor Low	Battery Temp. sensor input below minimum acceptable voltage.
P0517	Battery Temperature Sensor High	Battery Temp. sensor input above maximum acceptable voltage.
P0519	Idle Speed Performance	A rationality error has been detected for target RPM not met during drive idle condition. Possible Vacuum leak or IAC lost steps.

POWERTRAIN CONTROL MODULE (Continued)

(M) Check Engine Lamp (MIL) will illuminate during engine operation if this Diagnostic Trouble Code was recorded.		
(G) Generator Lamp Illuminated		
GENERIC SCAN TOOL CODE	DRB SCAN TOOL DISPLAY	DESCRIPTION OF DIAGNOSTIC TROUBLE CODE
P0522	Oil Pressure Sens Low	Oil pressure sensor input below acceptable voltage.
P0523	Oil Pressure Sens High	Oil pressure sensor input above acceptable voltage.
P0532	A/C Pressure Sensor Low	A/C pressure sensor input below the minimum acceptable voltage.
P0533	A/C Pressure Sensor High	A/C pressure sensor input above the maximum acceptable voltage.
P0551 (M)	Power Steering Switch Failure	Incorrect input state detected for the power steering switch circuit. PL: High pressure seen at high speed.
P0562	Battery Voltage Low	Battery voltage sense input below the minimum acceptable voltage.
P0563	Battery Voltage High	Battery voltage sense input above the maximum acceptable voltage.
P0579	Speed Control Switch #1 Performance	Cruise switch stuck in a valid voltage range.
P0580	Speed Control Switch #1 Low	Speed control switch input below minimum acceptable voltage.
P0581	Speed Control Switch #1 High	Speed control switch input above maximum acceptable voltage.
P0582	Speed Control Vacuum Solenoid Circuit	An open or shorted condition detected in speed control Vacuum solenoid control circuit.
P0586	Speed Control Vent Solenoid Circuit	An open or shorted condition detected in speed control vent solenoid control circuit.
P0594	Speed Control Servo Power Circuit	An open or shorted condition open/short condition detected in the speed control servo power control circuit.
P0600 (M)	PCM Failure SPI Communications	No communication detected between co-processors in the control module.
P0601 (M)	Internal Controller Failure	Internal control module fault condition (check sum) detected.
P0604	Internal Trans Controller	Transmission control module RAM self test fault detected. -Aisin transmission.
P0605	Internal Trans Controller	Transmission control module ROM self test fault detected -Asian transmission.
P0615	Starter Relay Circuit	Open or shorted condition detected in the starter relay control circuit.
P0622 (G)	Generator Field Not Switching Properly	An open or shorted condition detected in the generator field control circuit.
P0627	Fuel Pump Relay Circuit	An open or shorted condition detected in the fuel pump relay control circuit.
P0630	VIN Not Programmed In PCM	VIN is not programmed in the control module EEPROM.
P0632	Odometer Not Programmed In PCM	Odometer is not programmed in the control module EEPROM.
P0633	SKIM Key Not Programmed In PCM	SKIM secert key is not programmed in the control module EEPROM.
P0645	A/C Clutch Relay Circuit	An open or shorted condition detected in the A/C clutch relay control circuit.

POWERTRAIN CONTROL MODULE (Continued)

(M) Check Engine Lamp (MIL) will illuminate during engine operation if this Diagnostic Trouble Code was recorded.		
(G) Generator Lamp Illuminated		
GENERIC SCAN TOOL CODE	DRB SCAN TOOL DISPLAY	DESCRIPTION OF DIAGNOSTIC TROUBLE CODE
P0660	Manifold Tune Valve Solenoid Circuit	An open or shorted condition detected in the manifold tuning valve solenoid control circuit.
P0685	ASD Relay Control Circuit	An open or shorted condition detected in the ASD relay control circuit.
P0688	ASD Relay Sense Circuit Low	ASD voltage sensed when ASD relay is energized or ASD voltage not sensed when ASD relay is not energized.
P0700 (M)	Check Transmission DTC's	This SBEC III or JTEC DTC indicates that the EATX has an active fault and has requested illuminated the MIL via a BUS message. The specific fault must be acquired from the EATX.
P0703 (M)	Brake Switch Stuck Pressed or Released	Incorrect input state detected in the brake switch circuit. (Changed from P1595).
P0711	Trans Temp Sensor, No Temp Rise After Start	Relationship between the transmission temperature and overdrive operation and/or TCC operation indicates a failure of the Transmission Temperature Sensor. OBD II Rationality.
P0712	Trans Temp Sensor Voltage Too Low	Transmission fluid temperature sensor input below acceptable voltage.
P0713	Trans Temp Sensor Voltage Too High	Transmission fluid temperature sensor input above acceptable voltage.
P0720	Low Output SPD Sensor RPM, Above 15 MPH	The relationship between the Output Shaft Speed Sensor and vehicle speed is not within acceptable limits.
P0740 (M)	Torque Con Clu, No RPM Drop at Lockup	Relationship between engine and vehicle speeds indicated failure of torque convertor clutch lock-up system (TCC/PTU sol).
P0743	Torque Converter Clutch Solenoid/ Trans Relay Circuits	An open or shorted condition detected in the torque converter clutch (part throttle unlock) solenoid control circuit. Shift solenoid C electrical fault - Asian transmission
P0748	Governor Pressure Sol Control/Trans Relay Circuits	An open or shorted condition detected in the Governor Pressure Solenoid circuit or Trans Relay Circuit in JTEC RE transmissions.
P0751	O/D Switch Pressed (Lo) More Than 5 Minutes	Overdrive override switch input is in a prolonged depressed state.
P0753	Trans 3-4 Shift Sol/Trans Relay Circuits	An open or shorted condition detected in the overdrive solenoid control circuit or Trans Relay Circuit in JTEC RE transmissions.
P0756	AW4 Shift Sol B (2-3) Functional Failure	Shift solenoid B (2-3) functional fault - Asian transmission
P0783	3-4 Shift Sol, No RPM Drop at Lockup	The overdrive solenoid is unable to engage the gear change from 3rd gear to the overdrive gear.
P0801	Reverse Gear Lockout Circuit Open or Short	An open or shorted condition detected in the transmission reverse gear lock-out solenoid control circuit.
P0833	Clutch Upstop Switch Performance	Rationality error detected for clutch upstop switch performance

POWERTRAIN CONTROL MODULE (Continued)

(M) Check Engine Lamp (MIL) will illuminate during engine operation if this Diagnostic Trouble Code was recorded.		
(G) Generator Lamp Illuminated		
GENERIC SCAN TOOL CODE	DRB SCAN TOOL DISPLAY	DESCRIPTION OF DIAGNOSTIC TROUBLE CODE
P0850	Park/Natural Switch Performance	A rationality error has been detected for park/neutral switch performance.
P1105	Baro Read Solenoid Circuit	Open or shorted condition detected in the baro read solenoid control circuit.
P1115	General Temperature Rationality	General temperature sensor rationality error.
P1192 (M)	Inlet Air Temp. Circuit Low	Inlet Air Temp. sensor input below acceptable voltage
P1193 (M)	Inlet Air Temp. Circuit High	Inlet Air Temp. sensor input above acceptable voltage.
P1194	PWM O2 Heater Performance	Incorrect or irrational performance has been detected for the PWM O2 heater circuit.
P1195 (M)	1/1 O2 Sensor Slow During Catalyst Monitor	A slow switching oxygen sensor has been detected in bank 1/1 during catalyst monitor test. (was P0133)
P1196 (M)	2/1 O2 Sensor Slow During Catalyst Monitor	A slow switching oxygen sensor has been detected in bank 2/1 during catalyst monitor test. (was P0153)
P1197	1/2 O2 Sensor Slow During Catalyst Monitor	A slow switching oxygen sensor has been detected in bank 1/2 during catalyst monitor test. (was P0139)
P1198	Radiator Temperature Sensor Volts Too High	Radiator coolant temperature sensor input above the maximum acceptable voltage.
P1199	Radiator Temperature Sensor Volts Too Low	Radiator coolant temperature sensor input below the minimum acceptable voltage.
P1281	Engine is Cold Too Long	Engine coolant temperature remains below normal operating temperatures during vehicle travel (Thermostat).
P1282	Fuel Pump Relay Control Circuit	An open or shorted condition detected in the fuel pump relay control circuit.
P1288	Intake Manifold Short Runner Solenoid Circuit	An open or shorted condition detected in the short runner tuning valve circuit.
P1289	Manifold Tune Valve Solenoid Circuit	An open or shorted condition detected in the manifold tuning valve solenoid control circuit.
P1290	CNG Fuel System Pressure Too High	Compressed natural gas system pressure above normal operating range.
P1291	No Temp Rise Seen From Intake Heaters	Energizing Heated Air Intake does not change intake air temperature sensor an acceptable amount.
P1292	CNG Pressure Sensor Voltage Too High	Compressed natural gas pressure sensor reading above acceptable voltage.
P1293	CNG Pressure Sensor Voltage Too Low	Compressed natural gas pressure sensor reading below acceptable voltage.
P1294 (M)	Target Idle Not Reached	Target RPM not achieved during drive idle condition. Possible vacuum leak or IAC (AIS) lost steps.
P1295	No 5 Volts to TP Sensor	Loss of a 5 volt feed to the Throttle Position Sensor has been detected.
P1296	No 5 Volts to MAP Sensor	Loss of a 5 volt feed to the MAP Sensor has been detected.
P1297 (M)	No Change in MAP From Start To Run	No difference is recognized between the MAP reading at engine idle and the stored barometric pressure reading.

POWERTRAIN CONTROL MODULE (Continued)

(M) Check Engine Lamp (MIL) will illuminate during engine operation if this Diagnostic Trouble Code was recorded.		
(G) Generator Lamp Illuminated		
GENERIC SCAN TOOL CODE	DRB SCAN TOOL DISPLAY	DESCRIPTION OF DIAGNOSTIC TROUBLE CODE
P1298	Lean Operation at Wide Open Throttle	A prolonged lean condition is detected during Wide Open Throttle.
P1299 (M)	Vacuum Leak Found (IAC Fully Seated)	MAP Sensor signal does not correlate to Throttle Position Sensor signal. Possible vacuum leak.
P1388	Auto Shutdown Relay Control Circuit	An open or shorted condition detected in the ASD or CNG shutoff relay control ckt.
P1389	No ASD Relay Output Voltage At PCM	No Z1 or Z2 voltage sensed when the auto shutdown relay is energized.
P1390 (M)	Timing Belt Skipped 1 Tooth or More	Relationship between Cam and Crank signals not correct.
P1391 (M)	Intermittent Loss of CMP or CKP	Loss of the Cam Position Sensor or Crank Position sensor has occurred. For PL 2.0L
P1398 (M)	Mis-Fire Adaptive Numerator at Limit	PCM is unable to learn the Crank Sensor's signal in preparation for Misfire Diagnostics. Probable defective Crank Sensor.
P1399	Wait To Start Lamp Circuit	An open or shorted condition detected in the Wait to Start Lamp circuit.
P1403	No 5 Volts to EGR Sensor	Loss of 5v feed to the EGR position sensor.
P1476	Too Little Secondary Air	Insufficient flow of secondary air injection detected during aspirator test.(was P0411)
P1477	Too Much Secondary Air	Excessive flow of secondary air injection detected during aspirator test (was P0411).
P1478 (M)	Battery Temp Sensor Volts Out of Limit	Internal temperature sensor input voltage out of an acceptable range.
P1479	Transmission Fan Relay Circuit	An open or shorted condition detected in the transmission fan relay circuit.
P1480	PCV Solenoid Circuit	An open or shorted condition detected in the PCV solenoid circuit.
P1481	EATX RPM Pulse Performance	ETAX RPM pulse generator signal for misfire detection does not correlate with expected value.
P1482	Catalyst Temperature Sensor Circuit Shorted Low	Catalyst temperature sensor circuit shorted low.
P1483	Catalyst Temperature Sensor Circuit Shorted High.	Catalyst temperature sensor circuit shorted high.
P1484	Catalytic Converter Overheat Detected	A catalyst overheat condition has been detected by the catalyst temperature sensor.
P1485	Air Injection Solenoid Circuit	An open or shorted condition detected in the air assist solenoid circuit.
P1486 (M)	Evap Leak Monitor Pinched Hose Found	LDP has detected a pinched hose in the evaporative hose system.
P1487	Hi Speed Rad Fan CTRL Relay Circuit	An open or shorted condition detected in the control circuit of the #2 high speed radiator fan control relay.
P1488	Auxiliary 5 Volt Supply Output Too Low	Auxiliary 5 volt sensor feed is sensed to be below an acceptable limit.

POWERTRAIN CONTROL MODULE (Continued)

(M) Check Engine Lamp (MIL) will illuminate during engine operation if this Diagnostic Trouble Code was recorded.		
(G) Generator Lamp Illuminated		
GENERIC SCAN TOOL CODE	DRB SCAN TOOL DISPLAY	DESCRIPTION OF DIAGNOSTIC TROUBLE CODE
P1489 (M)	High Speed Fan CTRL Relay Circuit	An open or shorted condition detected in the control circuit of the high speed radiator fan control relay.
P1490 (M)	Low Speed Fan CTRL Relay Circuit	An open or shorted condition detected in control circuit of the low speed radiator fan control relay.
P1491	Rad Fan Control Relay Circuit	An open or shorted condition detected in the radiator fan control relay control circuit. This includes PWM solid state relays.
P1492 (M,G)	Ambient/Batt Temp Sen Volts Too High	External temperature sensor input above acceptable voltage.
P1493 (M,G)	Ambient/Batt Temp Sen Volts Too Low	External temperature sensor input below acceptable voltage.
P1494 (M)	Leak Detection Pump Sw or Mechanical Fault	Incorrect input state detected for the Leak Detection Pump (LDP) pressure switch.
P1495 (M)	Leak Detection Pump Solenoid Circuit	An open or shorted condition detected in the Leak Detection Pump (LDP) solenoid circuit.
P1496 (M)	5 Volt Supply, Output Too Low	5 volt sensor feed is sensed to be below an acceptable limit. (< 4v for 4 sec).
P1498	High Speed Rad Fan Ground CTRL Rly Circuit	An open or shorted condition detected in the control circuit of the #3 high speed radiator fan control relay.
P1594 (G)	Charging System Voltage Too High	Battery voltage sense input above target charging voltage during engine operation.
P1595	Speed Control Solenoid Circuits	An open or shorted condition detected in either of the speed control vacuum or vent solenoid control circuits.
P1596	Speed Control Switch Always High	Speed control switch input above maximum acceptable voltage.
P1597	Speed Control Switch Always Low	Speed control switch input below minimum acceptable voltage.
P1598	A/C Pressure Sensor Volts Too High	A/C pressure sensor input above maximum acceptable voltage.
P1599	A/C Pressure Sensor Volts Too Low	A/C pressure sensor input below minimum acceptable voltage.
P1602 (M)	PCM not Programmed	PCM not programmed (generic controller fault).
P1603	PCM Internal Dual Port Ram Communication	Dual port RAM communication link error.
P1604	PCM Internal Dual Port Ram Read/Write Integrity Failure	Dual port RAM read/write error.
P1607	PCM internal Shutdown Timer Rationality	A rationality error has been detected for the shutdown timer.
P1680	Clutch Released Switch Circuit	
P1681	No I/P Cluster CCD/J1850 Messages Received	No CCD/J1850 messages received from the cluster control module.
P1682 (G)	Charging System Voltage Too Low	Battery voltage sense input below target charging voltage during engine operation and no significant change in voltage detected during active test of generator output circuit.

POWERTRAIN CONTROL MODULE (Continued)

(M) Check Engine Lamp (MIL) will illuminate during engine operation if this Diagnostic Trouble Code was recorded.		
(G) Generator Lamp Illuminated		
GENERIC SCAN TOOL CODE	DRB SCAN TOOL DISPLAY	DESCRIPTION OF DIAGNOSTIC TROUBLE CODE
P1683	SPD CTRL PWR Relay; or S/C 12v Driver CKT	An open or shorted condition detected in the speed control servo power control circuit. (SBECII: ext relay).
P1684	Battery Loss In The Last 50 Starts	The battery has been disconnected within the last 50 starts.
P1685	Skim Invalid Key	The engine controller has received an invalid key from the SKIM.
P1686	No SKIM BUS Messages Received	No CCD/J1850 messages received from the Smart Key Immobilizer Module (SKIM).
P1687	No MIC BUS Message	No CCD/J1850 messages received from the Mechanical Instrument Cluster (MIC) module.
P1693	DTC Detected in Companion Module	A fault has been generated in the companion engine control module.
P1694	Fault In Companion Module	No CCD/J1850 messages received from the powertrain control module-Aisin transmission.
P1695	No CCD/J1850 Message From Body Control Module	No CCD/J1850 messages received from the body control module.
P1696 (M)	PCM Failure EEPROM Write Denied	Unsuccessful attempt to write to an EEPROM location by the control module.
P1697 (M)	PCM Failure SRI Mile Not Stored	Unsuccessful attempt to update Service Reminder Indicator (SRI or EMR) mileage in the control module EEPROM.
P1698 (M)	No CCD/J1850 Message From TCM	No CCD/J1850 messages received from the electronic transmission control module (EATX) or the Aisin transmission controller.
P1719	Skip Shift Solenoid Circuit	An open or shorted condition detected in the transmission 2-3 gear lock-out solenoid control circuit.
P1740	TCC or O/D Solenoid Performance	Rationality error detected in either the torque convertor clutch or solenoid or overdrive solenoid system.
P1756	GOV Press Not Equal to Target @ 15-20 PSI	The requested pressure and the actual pressure are not within a tolerance band for the Governor Control System which is used to regulate governor pressure to control shifts for 1st, 2nd, and 3rd gear. (Mid Pressure Malfunction)
P1757	GOV Press Not Equal to Target @ 15-20 PSI	The requested pressure and the actual pressure are not within a tolerance band for the Governor Control System which is used to regulate governor pressure to control shifts for 1st, 2nd, and 3rd gear (Zero Pressure Malfunction)
P1762	Gov Press Sen Offset Volts Too Low or High	The Governor Pressure Sensor input is greater than a calibration limit or is less than a calibration limit for 3 consecutive park/neutral calibrations.
P1763	Governor Pressure Sensor Volts Too Hi	The Governor Pressure Sensor input is above an acceptable voltage level.
P1764	Governor Pressure Sensor Volts Too Low	The Governor Pressure Sensor input is below an acceptable voltage level.
P1765	Trans 12 Volt Supply Relay CTRL Circuit	An open or shorted condition is detected in the Transmission Relay control circuit. This relay supplies power to the TCC
P1899 (M)	P/N Switch Stuck in Park or in Gear	Incorrect input state detected for the Park/Neutral switch.

POWERTRAIN CONTROL MODULE (Continued)

(M) Check Engine Lamp (MIL) will illuminate during engine operation if this Diagnostic Trouble Code was recorded.		
(G) Generator Lamp Illuminated		
GENERIC SCAN TOOL CODE	DRB SCAN TOOL DISPLAY	DESCRIPTION OF DIAGNOSTIC TROUBLE CODE
P2008	Short Runner Valve Solenoid Circuit	An open or shorted condition detected in the short runner tuning valve control circuit.
P2302	Ignition Coil Secondary #1 Circuit	
P2305	Ignition Coil Secondary #2 Circuit	
P2308	Ignition Coil Secondary #3 Circuit	
P2311	Ignition Coil Secondary #4 Circuit	
P2314	Ignition Coil Secondary #5 Circuit	
P2317	Ignition Coil Secondary #6 Circuit	
P2320	Ignition Coil Secondary #7 Circuit	
P2323	Ignition Coil Secondary #8 Circuit	
P2503	Charging System Voltage Low	Charging system voltage below minimum acceptable voltage.

OPERATION - SENSOR RETURN - PCM INPUT

The sensor return circuit provides a low electrical noise ground reference for all of the systems sensors. The sensor return circuit connects to internal ground circuits within the Powertrain Control Module (PCM).

OPERATION - SCI RECEIVE - PCM INPUT

SCI Receive is the serial data communication receive circuit for the DRB scan tool. The Powertrain Control Module (PCM) receives data from the DRB through the SCI Receive circuit.

OPERATION - IGNITION SENSE - PCM INPUT

The ignition sense input informs the Powertrain Control Module (PCM) that the ignition switch is in the crank or run position.

OPERATION - PCM GROUND

Ground is provided through multiple pins of the PCM connector. Depending on the vehicle there may be as many as three different ground pins. There are power grounds and sensor grounds.

The power grounds are used to control the ground side of any relay, solenoid, ignition coil or injector. The signal ground is used for any input that uses sensor return for ground, and the ground side of any internal processing component.

The SBEC III case is shielded to prevent RFI and EMI. The PCM case is grounded and must be firmly attached to a good, clean body ground.

Internally all grounds are connected together, however there is noise suppression on the sensor ground. For EMI and RFI protection the case is also grounded separately from the ground pins.

OPERATION

OPERATION - 8-VOLT SUPPLY - PCM OUTPUT

The PCM supplies 8 volts to the crankshaft position sensor, camshaft position sensor.

OPERATION - 5 VOLT SUPPLY - PCM OUTPUT

The PCM supplies 5 volts to the following sensors:

- A/C pressure transducer
- Engine coolant temperature sensor
- Manifold absolute pressure sensor
- Throttle position sensor
- Linear EGR solenoid
- Battery temperature
- Knock sensor

STANDARD PROCEDURE - OBTAINING DIAGNOSTIC TROUBLE CODES

BULB CHECK

Key on: Bulb illuminated until vehicle starts, as long as all once per trip (readiness) monitors completed. If monitors have **not** been completed, then: Key on: bulb check for about 8 seconds, lamp then flashes if once per trip (readiness) monitors have **not** been completed until vehicle is started, then MIL is extinguished.

OBTAINING DTC'S USING DRB SCAN TOOL

(1) Connect the DRB scan tool to the data link (diagnostic) connector. This connector is located in the passenger compartment; at the lower edge of instrument panel; near the steering column.

POWERTRAIN CONTROL MODULE (Continued)

(2) Turn the ignition switch on and access the "Read Fault" screen.

(3) Record all the DTC's and "freeze frame" information shown on the DRB scan tool.

(4) To erase DTC's, use the "Erase Trouble Code" data screen on the DRB scan tool. **Do not erase any DTC's until problems have been investigated and repairs have been performed.**

OBTAINING DTC'S USING IGNITION KEY

(1) Cycle the ignition key On - Off - On - Off - On within 5 seconds.

(2) The Odometer will show the P-code for the DTC code number. Refer to the Emission section for the DTC chart for a detailed explanation of the DTC codes.

(3) If no DTC's are present, the cluster will display one of two texts: "P1684" and "done" or only "done".

- P1684 is only a status and indicates that the PCM memory has been cleared within the last 50 ignition cycles and does not indicate a problem.
- done indicates that NO DTCs are present and the procedure is complete.

REMOVAL

(1) Disconnect the negative battery cable.

(2) Remove the battery shield, refer to the Battery section for more information.

(3) Remove the 2 upper PCM bracket bolts (Fig. 12).

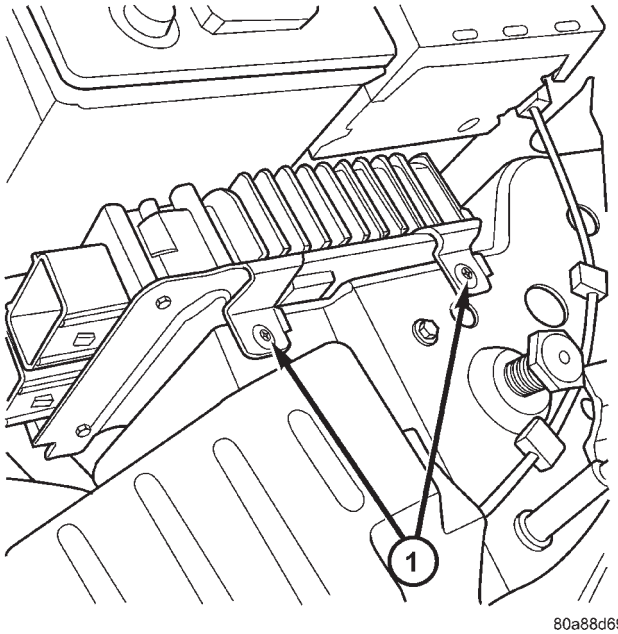

Fig. 12 PCM

1 - Attaching Bolts

(4) Remove the 2 PCM connectors.

(5) Remove the headlamp, refer to the Lamps section for more information.

(6) Remove the lower PCM mounting bolt (Fig. 13).

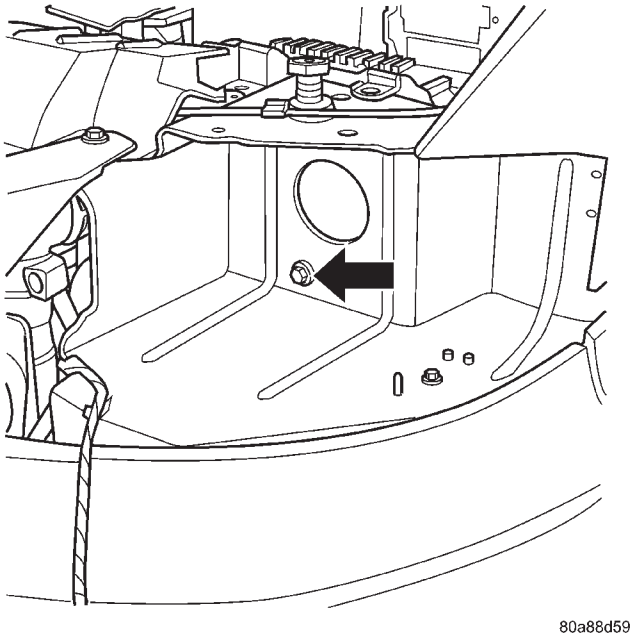

Fig. 13 PCM LOWER BOLT

(7) Remove PCM.

INSTALLATION

(1) Install the PCM.

(2) Install the lower PCM mounting bolt. Tighten bolt.

(3) Install the 2 upper PCM bracket bolts. Tighten bolt.

(4) Install the headlamp, refer to the Lamps section for more information.

(5) Install the 2 PCM connectors.

(6) Install the battery shield, refer to the Battery section for more information.

(7) Connect the negative battery cable.

SENTRY KEY IMMOBILIZER MODULE

DESCRIPTION

The Sentry Key Immobilizer Module (SKIM) contains a Radio Frequency (RF) transceiver and a microprocessor. The SKIM retains in memory the ID numbers of any Sentry Key that is programmed to it. The maximum number of keys that may be programmed to each module is eight (8). The SKIM also communicates over the PCI bus with the Powertrain Control Module (PCM), the Body Control Module

SENTRY KEY IMMOBILIZER MODULE (Continued)

(BCM), and the DRB III® scan tool. The SKIM transmits and receives RF signals through a tuned antenna enclosed within a molded plastic ring formation that is integral to the SKIM housing. When the SKIM is properly installed on the steering column, the antenna ring fits snugly around the circumference of the ignition lock cylinder housing. If this ring is not mounted properly, communication problems may arise in the form of transponder-related faults.

For added system security, each SKIM is programmed with a unique ″Secret Key″ code. This code is stored in memory and is sent over the PCI bus to the PCM and to each key that is programmed to work with the vehicle. The ″Secret Key″ code is therefore a common element found in all components of the Sentry Key Immobilizer System (SKIS). In the event that a SKIM replacement is required, the ″Secret Key″ code can be restored from the PCM by following the SKIM replacement procedure found in the DRB III® scan tool. Proper completion of this task will allow the existing ignition keys to be reprogrammed. Therefore, new keys will NOT be needed. In the event that the original ″Secret Key″ code can not be recovered, new ignition keys will be required. The DRB III® scan tool will alert the technician if key replacement is necessary. Another security code, called a PIN, is used to gain secured access to the SKIM for service. The SKIM also stores in its memory the Vehicle Identification Number (VIN), which it learns through a bus message from the assembly plant tester. The SKIS scrambles the information that is communicated between its components in order to reduce the possibility of unauthorized SKIM access and/or disabling.

OPERATION

When the ignition switch is moved to the RUN position, the SKIM transmits an RF signal to the transponder in the ignition key. The SKIM then waits for a response RF signal from the transponder in the key. If the response received identifies the key as valid, the SKIM sends a ″valid key″ message to the PCM over the PCI bus. If the response received identifies the key as invalid or no response is received from the transponder in the ignition key, the SKIM sends an ″invalid key″ message to the PCM. The PCM will enable or disable engine operation based upon the status of the SKIM messages. It is important to note that the default condition in the PCM is ″invalid key.″ Therefore, if no response is received by the PCM, the engine will be immobilized after two (2) seconds of running.

The SKIM also sends indicator light status messages to the BCM to operate the light. This is the method used to turn the light ON solid or to flash it after the indicator light test is complete to signify a fault in the SKIS. If the light comes ON and stays ON solid after the indicator light test, this signifies that the SKIM has detected a system malfunction and/or that the SKIS has become inoperative. If the SKIM detects an invalid key **OR** a key-related fault exists, the indicator light will flash following the indicator light test. The SKIM may also request an audible chime if the customer key programming feature is available and the procedure is being utilized (Refer to 8 - ELECTRICAL/VEHICLE THEFT SECURITY/TRANSPONDER KEY - STANDARD PROCEDURE).

REMOVAL

(1) Disconnect and isolate the battery negative cable.

(2) Remove Lower Instrument Panel Cover. Refer to Body, Instrument Panel, Lower Instrument Panel Cover, Removal.

(3) Remove the steering column upper and lower shrouds. Refer to Steering, Column, Column Shroud, Removal.

(4) Disengage the steering column wire harness from the Sentry Key Immobilizer Module (SKIM).

(5) Remove the one screws securing the SKIM to the steering column.

(6) Rotate the SKIM upwards and then to the side away from the steering column to slide the SKIM antenna ring from around the ignition switch lock cylinder housing.

(7) Remove the SKIM from the vehicle.

INSTALLATION

(1) Slip the SKIM antenna ring around the ignition switch lock cylinder housing. Rotate the SKIM downwards and then towards the steering column.

(2) Install the one screws securing the SKIM to the steering column.

(3) Engage the steering column wire harness from the Sentry Key Immobilizer Module (SKIM).

(4) Install the steering column upper and lower shrouds. Refer to Steering, Column, Column Shroud, Installation.

(5) Install the Lower Instrument Panel Cover. Refer to Body, Instrument Panel, Lower Instrument Panel Cover, Installation.

(6) Connect the battery negative cable.

TRANSMISSION CONTROL MODULE

DESCRIPTION

The Transmission Control Module (TCM) is located behind the left fender and is fastened with three screws to three clips in the left frame rail forward of the suspension (Fig. 14).

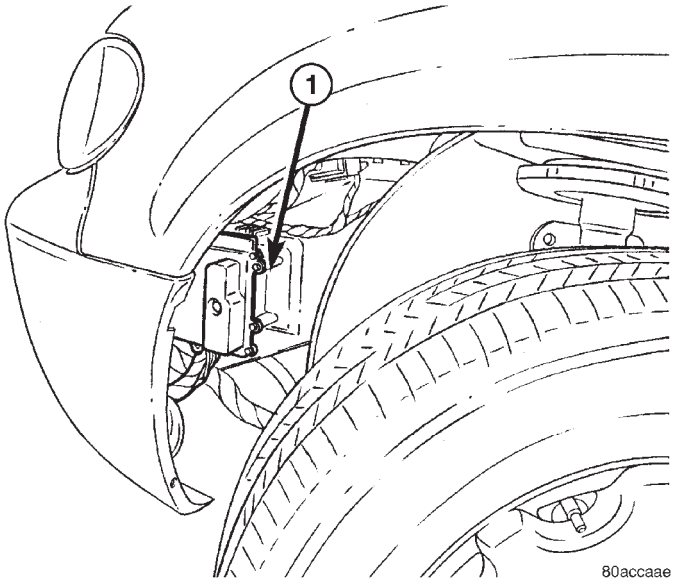

Fig. 14 Transmission Control Module (TCM) Location

1 - TRANSMISSION CONTROL MODULE (TCM)

OPERATION

The TCM is the controlling unit for all electronic operations of the transaxle. The TCM receives information regarding vehicle operation from both direct and indirect inputs, and selects the operational mode of the transaxle. Direct inputs are hardwired to, and used specifically by the TCM. Indirect inputs originate from other components/modules, and are shared with the TCM via the J1850 communication bus.

Some examples of **direct inputs** to the TCM are:

- Battery (B+) voltage
- Ignition "ON" voltage
- Transmission Control Relay (Switched B+)
- Throttle Position Sensor
- Crankshaft Position Sensor (CKP)
- Transmission Range Sensor (TRS)
- Pressure Switches (L/R, 2/4, OD)
- Transmission Temperature Sensor (Integral to TRS)
- Input Shaft Speed Sensor
- Output Shaft Speed Sensor

Some examples of **indirect inputs** to the TCM are:

- Engine/Body Identification
- Manifold Pressure
- Target Idle
- Torque Reduction Confirmation
- Speed Control ON/OFF Switch
- Engine Coolant Temperature
- Ambient/Battery Temperature
- Brake Switch Status
- DRB Communication

Based on the information received from these various inputs, the TCM determines the appropriate shift schedule and shift points, depending on the present operating conditions and driver demand. This is possible through the control of various direct and indirect outputs.

Some examples of TCM **direct outputs** are:

- Transmission Control Relay
- Solenoids (LR/CC, 2/4, OD and UD)
- Vehicle Speed (to PCM)
- Torque Reduction Request (to PCM)

An example of a TCM **indirect output** is:

- Transmission Temperature (to PCM)

In addition to monitoring inputs and controlling outputs, the TCM has other important responsibilities and functions:

- Storing and maintaining Clutch Volume Indices (CVI)
- Storing and selecting appropriate Shift Schedules
- System self-diagnostics
- Diagnostic capabilities (with DRB scan tool)

TRANSMISSION CONTROL MODULE (Continued)

CLUTCH VOLUME INDEX (CVI)

An important function of the TCM is to monitor Clutch Volume Index (CVI). CVIs represent the volume of fluid needed to compress a clutch pack.

The TCM monitors gear ratio changes by monitoring the Input and Output Speed Sensors. The Input, or Turbine Speed Sensor sends an electrical signal to the TCM that represents input shaft rpm. The Output Speed Sensor provides the TCM with output shaft speed information.

By comparing the two inputs, the TCM can determine transaxle gear ratio. This is important to the CVI calculation because the TCM determines CVIs by monitoring how long it takes for a gear change to occur (Fig. 15).

Gear ratios can be determined by using the DRB Scan Tool and reading the Input/Output Speed Sensor values in the “Monitors” display. Gear ratio can be obtained by dividing the Input Speed Sensor value by the Output Speed Sensor value.

For example, if the input shaft is rotating at 1000 rpm and the output shaft is rotating at 500 rpm, then the TCM can determine that the gear ratio is 2:1. In direct drive (3rd gear), the gear ratio changes to 1:1. The gear ratio changes as clutches are applied and released. By monitoring the length of time it takes for the gear ratio to change following a shift request, the TCM can determine the volume of fluid used to apply or release a friction element.

The volume of transmission fluid needed to apply the friction elements are continuously updated for adaptive controls. As friction material wears, the volume of fluid need to apply the element increases.

Certain mechanical problems within the clutch assemblies (broken return springs, out of position snap rings, excessive clutch pack clearance, improper assembly, etc.) can cause inadequate or out-of-range clutch volumes. Also, defective Input/Output Speed Sensors and wiring can cause these conditions. The following chart identifies the appropriate clutch volumes and when they are monitored/updated:

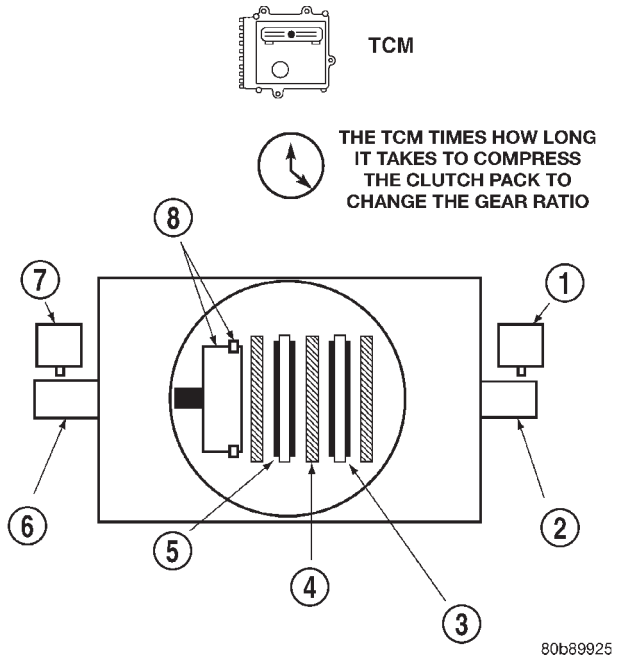

Fig. 15 Example of CVI Calculation

1 - OUTPUT SPEED SENSOR
2 - OUTPUT SHAFT
3 - CLUTCH PACK
4 - SEPARATOR PLATE
5 - FRICTION DISCS
6 - INPUT SHAFT
7 - INPUT SPEED SENSOR
8 - PISTON AND SEAL

CLUTCH VOLUMES				
Clutch	When Updated			Proper Clutch Volume
	Shift Sequence	Oil Temperature	Throttle Angle	
L/R	2-1 or 3-1 coast downshift	> 70°	< 5°	35 to 83
2/4	1-2 shift	> 110°	5 - 54°	20 to 77
OD	2-3 shift			48 to 150
UD	4-3 or 4-2 shift		> 5°	24 to 70

TRANSMISSION CONTROL MODULE (Continued)

SHIFT SCHEDULES

As mentioned earlier, the TCM has programming that allows it to select a variety of shift schedules. Shift schedule selection is dependent on the following:

- Shift lever position
- Throttle position
- Engine load
- Fluid temperature
- Software level

As driving conditions change, the TCM appropriately adjusts the shift schedule. Refer to the following chart to determine the appropriate operation expected, depending on driving conditions.

Schedule	Condition	Expected Operation
Extreme Cold	Oil temperature at start-up below -16° F	Park, Reverse, Neutral and 2nd gear only (prevents shifting which may fail a clutch with frequent shifts)
Cold	Oil temperature at start-up above -12° F and below 36° F	– Delayed 2-3 upshift (approximately 22-31 mph) – Delayed 3-4 upshift (45-53 mph) – Early 4-3 costdown shift (approximately 30 mph) – Early 3-2 coastdown shift (approximately 17 mph) – High speed 4-2, 3-2, 2-1 kickdown shifts are prevented – No EMCC
Warm	Oil temperature at start-up above 36° F and below 80 degree F	– Normal operation (upshift, kickdowns, and coastdowns) – No EMCC
Hot	Oil temperature at start-up above 80° F	– Normal operation (upshift, kickdowns, and coastdowns) – Full EMCC, no PEMCC except to engage FEMCC (except at closed throttle at speeds above 70-83 mph)
Overheat	Oil temperature above 240° F or engine coolant temperature above 244° F	– Delayed 2-3 upshift (25-32 mph) – Delayed 3-4 upshift (41-48 mph) – 3rd gear FEMCC from 30-48 mph – 3rd gear PEMCC from 27-31 mph
Super Overheat	Oil temperature above 260° F	– All ″Overheat″ shift schedule features apply – 2nd gear PEMCC above 22 mph – Above 22 mph the torque converter will not unlock unless the throttle is closed or if a wide open throttle 2nd PEMCC to 1 kickdown is made

STANDARD PROCEDURE

STANDARD PROCEDURE - PINION FACTOR SETTING

NOTE: This procedure must be performed if the Transmission Control Module (TCM) has been replaced with a NEW or replacement unit. Failure to perform this procedure will result in an inoperative or improperly calibrated speedometer.

The vehicle speed readings for the speedometer are taken from the output speed sensor. The TCM must be calibrated to the different combinations of equipment (final drive and tires) available. Pinion Factor allows the technician to set the Transmission Control Module initial setting so that the speedometer readings will be correct. To properly read and/or reset the Pinion Factor, it is necessary to use a DRBIII® scan tool.

(1) Plug the DRBIII® scan tool into the diagnostic connector located under the instrument panel.
(2) Select the Transmission menu.
(3) Select the Miscellaneous menu.
(4) Select Pinion Factor. Then follow the instructions on the DRBIII® scan tool screen.

STANDARD PROCEDURE - QUICK LEARN PROCEDURE

The quick learn procedure requires the use of the DRBIII® scan tool. This program allows the electronic transaxle system to recalibrate itself. This will provide the best possible transaxle operation.

NOTE: The quick learn procedure should be performed if any of the following procedures are performed:

- Transaxle Assembly Replacement
- Transmission Control Module Replacement
- Solenoid/Pressure Switch Assembly Replacement
- Clutch Plate and/or Seal Replacement
- Valve Body Replacement or Recondition

To perform the Quick Learn Procedure, the following conditions must be met:

- The brakes must be applied
- The engine speed must be above 500 rpm
- The throttle angle (TPS) must be less than 3 degrees
- The shift lever position must stay until prompted to shift to overdrive
- The shift lever position must stay in overdrive after the Shift to Overdrive prompt until the DRBIII® indicates the procedure is complete
- The calculated oil temperature must be above 60° and below 200°

(1) Plug the DRBIII® scan tool into the diagnostic connector. The connector is located under the instrument panel.
(2) Go to the Transmission screen.
(3) Go to the Miscellaneous screen.
(4) Select Quick Learn Procedure. Follow the instructions of the DRBIII® to perform the Quick Learn Procedure.

REMOVAL

NOTE: If transmission control module is being replaced with a new or replacement unit, the Pinion Factor and Quick Learn procedures must be performed. (Refer to 8 - ELECTRICAL/ELECTRONIC CONTROL MODULES/TRANSMISSION CONTROL MODULE - STANDARD PROCEDURE) (Refer to 8 - ELECTRICAL/ELECTRONIC CONTROL MODULES/ TRANSMISSION CONTROL MODULE - STANDARD PROCEDURE)

(1) Disconnect battery negative cable.
(2) Raise vehicle on hoist.
(3) Remove left front tire/wheel assembly.
(4) Pull back splash shield to gain access to TCM location.
(5) Disconnect TCM 60-way connector (Fig. 16).

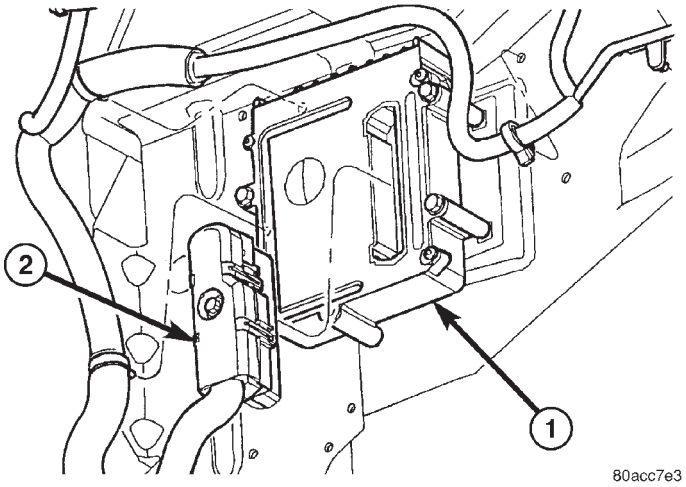

Fig. 16 Transmission Control Module 60-way Connector

1 - TRANSMISSION CONTROL MODULE (TCM)
2 - 60-WAY CONNECTOR

TRANSMISSION CONTROL MODULE (Continued)

(6) Remove three (3) TCM-to-rail screws and remove TCM from vehicle (Fig. 17).

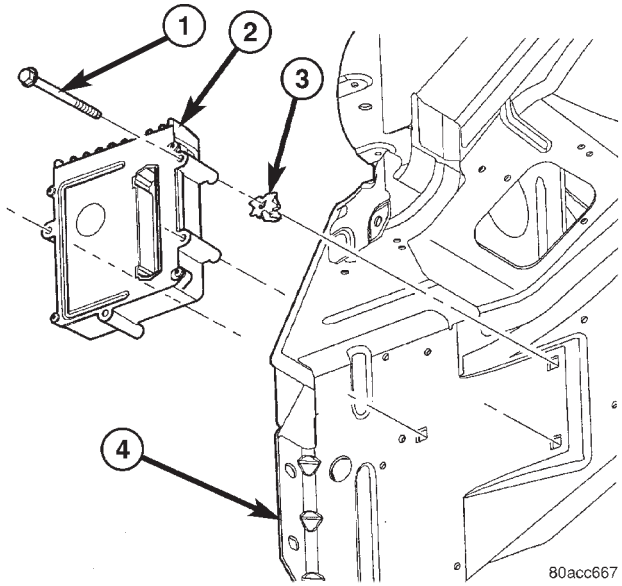

Fig. 17 Transmission Control Module Removal/ Installation

1 - SCREW
2 - TRANSMISSION CONTROL MODULE (TCM)
3 - CLIP
4 - LEFT RAIL

INSTALLATION

NOTE: If transmission control module is being replaced with a new or replacement unit, the Pinion Factor and Quick Learn procedures must be performed. (Refer to 8 - ELECTRICAL/ELECTRONIC CONTROL MODULES/TRANSMISSION CONTROL MODULE - STANDARD PROCEDURE) (Refer to 8 - ELECTRICAL/ELECTRONIC CONTROL MODULES/ TRANSMISSION CONTROL MODULE - STANDARD PROCEDURE)

(1) Install TCM into position (Fig. 18). Install three (3) screws and torque to 3 N·m (30 in. lbs.).

(2) Install TCM harness 60–way connector (Fig. 19) and torque to 4 N·m (35 in. lbs.).

(3) Install splash shield into position with fasteners.

(4) Install left front wheel/tire assembly.

(5) Lower vehicle.

(6) Connect battery negative cable.

(7) If TCM was replaced, reset Pinion Factor and Quick Learn. (Refer to 8 - ELECTRICAL/ELECTRONIC CONTROL MODULES/TRANSMISSION CONTROL MODULE - STANDARD PROCEDURE) (Refer to 8 - ELECTRICAL/ELECTRONIC CONTROL MODULES/TRANSMISSION CONTROL MODULE - STANDARD PROCEDURE).

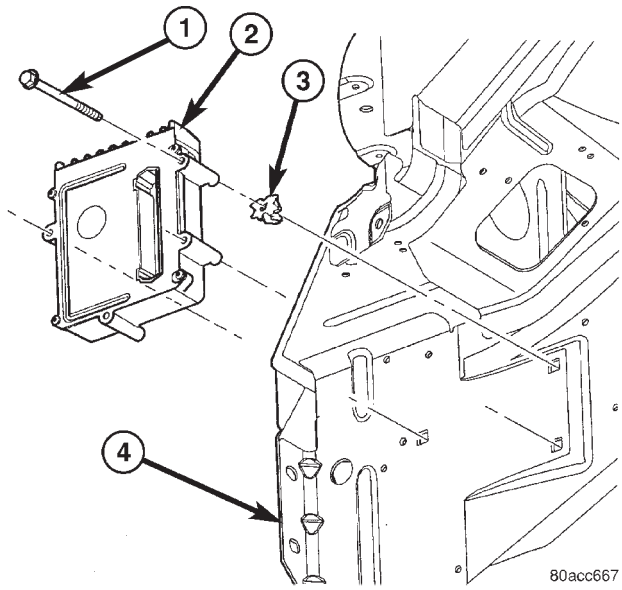

Fig. 18 Transmission Control Module Removal/ Installation

1 - SCREW
2 - TRANSMISSION CONTROL MODULE (TCM)
3 - CLIP
4 - LEFT RAIL

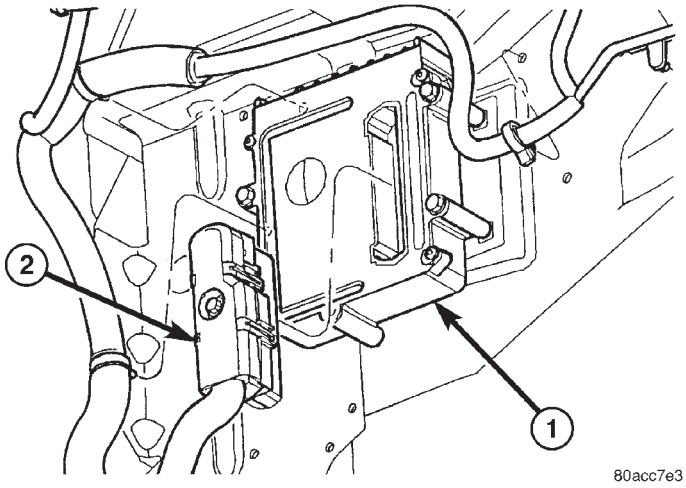

Fig. 19 Transmission Control Module 60-way Connector

1 - TRANSMISSION CONTROL MODULE (TCM)
2 - 60-WAY CONNECTOR

MEMORY SEAT/MIRROR MODULE

DESCRIPTION

Vehicles equipped with the memory seat/mirror option, utilize a memory module located under the drivers front seat. This module is basically wired in-line between the power seat switch and the power seat track/adjuster motors, or in-line between the power mirror switch and the power side view mirror(s) motor(s). The MSMM contains a central processing unit that communicates with other modules on the Programmable Communications Interface (PCI) data bus network.

The Memory Seat/Mirror Module (MSMM) receives hard wired inputs from the driver power seat switch and the potentiometers on each of the driver side power seat track motors, or from the power mirror switch and the potentiometers on the side view mirror. The MSMM receives messages over the PCI data bus from the Body Control Module (BCM) (memory switch status), the Powertrain Control Module (PCM) (vehicle speed status). The MSMM will prevent the seat memory recall function from being initiated if the driver side seat belt is buckled, if the transmission gear selector lever is not in the Park or Neutral positions, or if the vehicle is moving.

For diagnosis of the MSMM or the PCI data bus, a DRB III® scan tool and the proper Diagnostic Procedures manual are recommended. The MSMM cannot be repaired and, if faulty or damaged, it must be replaced. Refer to **Memory System** in the Power Seat or Power Mirror section of this manual for more information on the memory system option.

OPERATION

When memory system operation is requested (depressing of the memory switch), a resistor multiplexed signal is sent from the memory switch to the body control module (BCM). The body control module will then send the appropriate signals out to the memory/mirror seat module, the memory/mirror seat module then applies the voltage supply to the power seat track or side-view mirror if the proper requirements are met. The vehicle speed must equal zero and the transmission must be in park or neutral in order for the memory system to function.

DIAGNOSIS AND TESTING - MEMORY SEAT/MIRROR MODULE

Visually inspect the related wiring harness connectors. Look for broken, bent, pushed out, or corroded terminals. If any of the above conditions are present, repair as necessary. If not, use a DRB III® scan tool and the proper Diagnostic Procedures Manual to test the memory/mirror seat module. For complete circuit diagrams, refer to **Wiring Diagrams**.

REMOVAL

(1) Disconnect and isolate the battery negative cable.

(2) Remove the driver side front bucket seat retaining nuts from under the vehicle (Refer to 23 - BODY/SEATS/SEAT - REMOVAL).

(3) Lift the drivers seat up and out of the mounting holes in the floor pan and lay the seat rearward to access the module located under the seat. It is not necessary to disconnect the seat electrical, just use care not to damage the wiring by over-extending.

(4) Disconnect the memory/mirror seat module electrical connectors. Depress the retaining tab and pull straight apart.

(5) Remove the module retaining bolts and remove the module from the bracket.

INSTALLATION

(1) Position and install the module retaining bolts.

(2) Connect the memory/mirror seat module electrical connectors.

(3) Position the drivers seat in the mounting holes in the floor pan.

(4) Install the driver side front bucket seat retaining nuts from under the vehicle (Refer to 23 - BODY/SEATS/SEAT - INSTALLATION).

(5) Connect the battery negative cable.

SLIDING DOOR CONTROL MODULE

DESCRIPTION

Vehicles equipped with a power sliding door utilize a sliding door control module. The sliding door control module is located behind the sliding door trim panel in the center of the door, just above the sliding door motor (Fig. 20). This module controls the operation of the door through the Programmable Communication Interface (PCI) J1850 data bus circuit and the Body Control Module. The sliding door control module contains software technology which enables it to detect resistance to door travel and to reverse door travel in order to avoid damage to the door or to avoid possible personal injury if the obstruction is a person. This feature functions in both the opening and closing cycles. If the power sliding door system develops any problems the control module will store and recall Diagnostic Trouble Codes (DTC). The use of a diagnostic scan tool, such as the DRB III® is required to read and troubleshoot these trouble codes. The sliding door control module can be

SLIDING DOOR CONTROL MODULE (Continued)

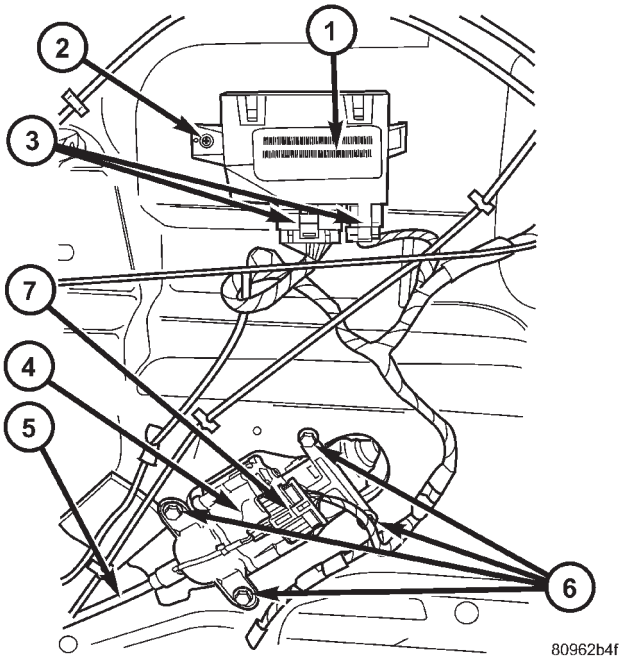

Fig. 20 Power Side Door Components

1 - SLIDING DOOR CONTROL MODULE
2 - MODULE RETAINING SCREW
3 - MODULE ELECTRICAL CONNECTORS
4 - DOOR MOTOR ASSEMBLY
5 - FLEX DRIVE ASSEMBLY
6 - DOOR MOTOR RETAINING FASTENERS
7 - DOOR MOTOR ELECTRICAL CONNECTOR

reflashed if necessary. Refer to the latest Technical Service Bulletin (TSB) Information for any updates.

The power door control module is a replaceable component and cannot be repaired, if found to be faulty it must be replaced. Consult your Mopar™ parts catalog for a specific part number.

OPERATION

The power sliding door control module serves as the main computer for the power sliding side door system. All power door functions are processed through the power door control module and/or the vehicles body control module (BCM). At the start of a power open command, a signal is sent to the BCM and then to the power door control module via the J1850 data bus circuit. This signal, generated by any of the power door command switches, tells the power door control module to activate a power latch release, engage the clutch assembly and drive the door into the full open position. If an obstacle is felt during this power open cycle, the module will reverse direction and close the door. This process is also enabled during a power close cycle. This process will repeat three times, and if a fourth obstacle is detected, the door will go into full manual mode. Once the full open position is obtained, a hold open latch assembly mounted full open switch tells the control module that the door has reached the full open position. If the power sliding door system develops any problems the control module will store and recall Diagnostic Trouble Codes (DTC). The use of a diagnostic scan tool, such as the DRB III® is required to read and troubleshoot these trouble codes.

REMOVAL

(1) Disconnect and isolate the negative battery cable.

(2) Remove the appropriate door trim panel from the vehicle. Refer to Body for the procedure.

(3) Remove the weather shield. Refer to Body for the procedure.

(4) Disconnect the power door control module electrical connectors. Slide the red locking tab out (away from module) and depress connector retaining tab, while pulling straight apart.

(5) Remove the control module retaining screw (Fig. 20).

(6) Remove the module from the vehicle.

INSTALLATION

(1) Position the control module and install the retaining screw.

(2) Connect the control module electrical connectors. Slide the locking tab into the locked position.

(3) Install the appropriate door trim panel on the vehicle. Refer to Body for the procedure.

(4) Install the weather shield. Refer to Body for the procedure.

(5) Connect the negative battery cable.

(6) Using an appropriate scan tool, check and erase any power door control module diagnostic trouble codes.

(7) Verify power door system operation. Cycle the power door through one complete open and close cycle.

ELECTRONIC CONTROL MODULES

TABLE OF CONTENTS

page

ENGINE CONTROL MODULE
DESCRIPTION 1
OPERATION 1
STANDARD PROCEDURE - PCM/ECM/SKIM PROGRAMMING - DIESEL 2

page

REMOVAL 4
INSTALLATION 4

ENGINE CONTROL MODULE

DESCRIPTION

The ECM is located in the left front corner of the engine compartment attached to the radiator support (Fig. 1).

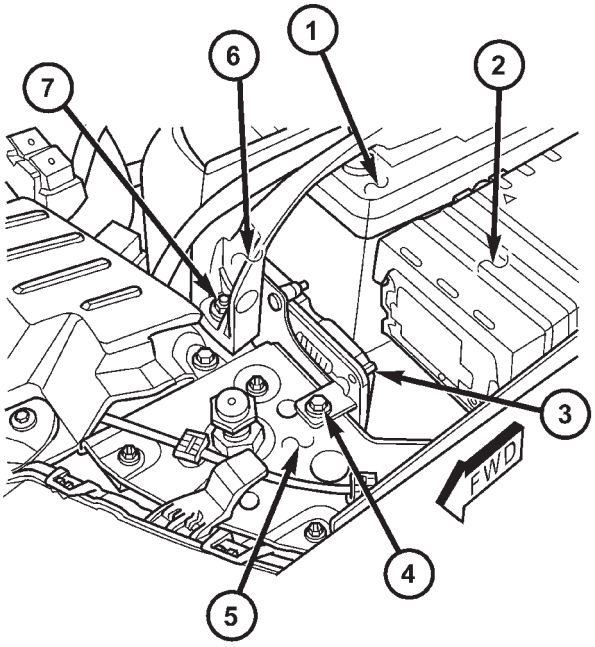

Fig. 1 ENGINE CONTROL MODULE LOCATION-TYPICAL

1 - BATTERY
2 - IPM (INTEGRATED POWER MODULE)
3 - ECM (ENGINE CONTROL MODULE)
4 - RETAINING BOLT
5 - RADIATOR SUPPORT
6 - CLUTCH CABLE BRACKET (LHD)
7 - CLUTCH CABLE BRACKET RETAINING BOLT (LHD)

OPERATION

The ECM has been programmed to monitor different circuits of the diesel fuel injection system. This monitoring is called on-board diagnostics. Certain criteria must be met for a diagnostic trouble code to be entered into the ECM memory. The criteria may be a range of: engine rpm, engine temperature, time or other input signals to the ECM. If all of the criteria for monitoring a system or circuit are met, and a problem is sensed, then a DTC will be stored in the ECM memory. It is possible that a DTC for a monitored circuit may not be entered into the ECM memory, even though a malfunction has occurred. This may happen when the monitoring criteria have not been met. The ECM compares input signal voltages from each input device with specifications (the established high and low limits of the input range) that are programmed into it for that device. If the input voltage is not within the specifications and other trouble code criteria are met, a DTC will be stored in the ECM memory.

ECM OPERATING MODES

As input signals to the ECM change, the ECM adjusts its response to the output devices. For example, the ECM must calculate a different fuel quantity and fuel timing for engine idle condition than it would for a wide open throttle condition. There are several different modes of operation that determine how the ECM responds to the various input signals.

Ignition Switch On (Engine Off)

When the ignition is turned on, the ECM activates the glow plug relay for a time period that is determined by engine coolant temperature, atmospheric temperature and battery voltage.

Engine Start-Up Mode

The ECM uses the engine temperature sensor and the crankshaft position sensor (engine speed) inputs to determine fuel injection quantity.

Normal Driving Modes

Engine idle, warm-up, acceleration, deceleration and wide open throttle modes are controlled based on all of the sensor inputs to the ECM. The ECM uses

these sensor inputs to adjust fuel quantity and fuel injector timing.

Limp-In Mode

If there is a fault detected with the accelerator pedal position sensor, the ECM will set the engine speed at 1100 RPM.

Overspeed Detection Mode

If the ECM detects engine RPM that exceeds 5200 RPM, the ECM will set a DTC in memory and illuminate the MIL until the DTC is cleared.

After-Run Mode

The ECM transfers RAM information to ROM and performs an Input/Output state check.

MONITORED CIRCUITS

The ECM is able to monitor and identify most driveability related trouble conditions. Some circuits are directly monitored through ECM feedback circuitry. In addition, the ECM monitors the voltage state of some circuits and compares those states with expected values. Other systems are monitored indirectly when the ECM conducts a rationality test to identify problems. Although most subsytems of the engine control module are either directly or indirectly monitored, there may be occasions when diagnostic trouble codes are not immediately identified. For a trouble code to set, a specific set of conditions must occur and unless these conditions occur, a DTC will not set.

DIAGNOSTIC TROUBLE CODES

Each diagnostic trouble code (DTC) is diagnosed by following a specific procedure. The diagnostic test procedure contains step-by-step instruction for determining the cause of the DTC as well as no trouble code problems. Refer to the appropriate Diesel Powertrain Diagnostic Manual for more information.

HARD CODE

A DTC that comes back within one cycle of the ignition key is a hard code. This means that the problem is current every time the ECM/SKIM checks that circuit or function. Procedures in this manual verify if the DTC is a hard code at the beginning of each test. When the fault is not a hard code, an intermittent test must be performed. NOTE: If the DRBIII® displays faults for multiple components (i.e. ECT, VSS, IAT sensors) identify and check the shared circuits for possible problems before continuing (i.e. sensor grounds or 5-volt supply circuits). Refer to the appropriate schematic to identify shared circuits. Refer to the appropriate Diesel Powertrain Diagnostic Manual for more information.

INTERMITTENT CODE

A DTC that is not current every time the ECM/SKIM checks the circuit or function is an intermittent code. Most intermittent DTCs are caused by wiring or connector problems. Problems that come and go like this are the most difficult to diagnose; they must be looked for under specific conditions that cause them. **NOTE: Electromagnetic (radio) interference can cause an intermittent system malfunction.** This interference can interrupt communication between the ignition key transponder and the SKIM. The following checks may assist you in identifying a possible intermittent problem:

- Visually inspect the related wire harness connectors. Look for broken, bent, pushed out or corroded terminals.
- Visually inspect the related wire harness. Look for chafed, pierced or partially broken wire.
- Refer to hotlines or technical service bulletins that may apply. Refer to the appropriate Diesel Powertrain Diagnostic Manual for more information.

ECM DIAGNOSTIC TROUBLE CODES

IMPORTANT NOTE: Before replacing the ECM for a failed driver, control circuit or ground circuit, be sure to check the related component/circuit integrity for failures not detected due to a double fault in the circuit. Most ECM driver/control circuit failures are caused by internal failures to components (i.e. relays and solenoids) and shorted circuits (i.e. sensor pull-ups, drivers and ground circuits). These faults are difficult to detect when a double fault has occurred and only one DTC has set. If the DRBIII® displays faults for multiple components (i.e.VSS, ECT, Batt Temp, etc.) identify and check the shared circuits for possible problems before continuing (i.e. sensor grounds or 5-volt supply circuits). Refer to the appropriate wiring diagrams to identify shared circuits. Refer to the appropriate Diesel Powertrain Diagnostic Manual for more information.

STANDARD PROCEDURE - PCM/ECM/SKIM PROGRAMMING - DIESEL

NOTE: Before replacing the PCM/ECM for a failed driver, control circuit or ground circuit, be sure to check the related component/circuit integrity for failures not detected due to a double fault in the circuit. Most PCM/ECM driver/control circuit failures are caused by internal component failures (i.e. relay and solenoids) and shorted circuits (i.e. pull-ups, drivers and switched circuits). These failures are difficult to detect when a double fault has occurred and only one DTC has set.

ENGINE CONTROL MODULE (Continued)

PCM/SKIM PROGRAMMING

When a PCM (JTEC) and the SKIM are replaced at the same time perform the following steps in order:

(1) Program the new PCM (JTEC)
(2) Program the new SKIM
(3) Replace all ignition keys and program them to the new SKIM.

ECM/SKIM PROGRAMMING

When an ECM (Bosch) and the SKIM are replaced at the same time perform the following steps in order:

(1) Program the new SKIM
(2) Program the new ECM (Bosch)

PROGRAMMING THE ECM (Bosch)

(1) To program the VIN, connect the DRB III and turn the ignition on.
(2) Select Engine from the main menu. The DRB III will require the VIN to be entered before continuing.
(3) Select ENTER to update the VIN. The DRB III will display the updated VIN.
(4) If the engine is equipped with air conditioning, the ECM A/C function must be enabled. Enable the ECM A/C function as follows:

- Using the DRB III select ENGINE, MISCELLANEOUS, then ENABLE/DISABLE A/C
- Push 1 to enable A/C. DRB III screen should display A/C Activated.

PROGRAMMING THE PCM (JTEC)

The SKIS Secret Key is an ID code that is unique to each SKIM. This code is programmed and stored in the SKIM, PCM and transponder chip (ignition keys). When replacing the PCM it is necessary to program the secret key into the new PCM using the DRB III. Perform the following steps to program the secret key into the PCM.

(1) Turn the ignition switch on (transmission in park/neutral).
(2) Use the DRB III and select THEFT ALARM, SKIM then MISCELLANEOUS.
(3) Select PCM REPLACED (GAS ENGINE).
(4) Enter secured access mode by entering the vehicle four-digit PIN.
(5) Select ENTER to update PCM VIN.

NOTE: If three attempts are made to enter secure access mode using an incorrect PIN, secured access mode will be locked out for one hour. To exit this lockout mode, turn the ignition to the RUN position for one hour then enter the correct PIN. (Ensure all accessories are turned off. Also monitor the battery state and connect a battery charger if necessary).

(6) Press ENTER to transfer the secret key (the SKIM will send the secret key to the PCM).
(7) Press Page Back to get to the Select System menu and select ENGINE, JTEC (diesel only), MISCELLANEOUS, and SRI MEMORY CHECK.
(8) The DRB III will ask, Is odometer reading between XX and XX? Select the YES or NO button on the DRB III. If NO is selected, the DRB III will read, Enter odometer Reading<From I.P. odometer>. Enter the odometer reading from the Instrument Panel and press ENTER.

PROGRAMMING THE SKIM

(1) Turn the ignition switch on (transmission in park/neutral).
(2) Use the DRB III and select THEFT ALARM, SKIM then MISCELLANEOUS.
(3) Select PCM REPLACED (GAS ENGINE).
(4) Program the vehicle four-digit PIN into SKIM.
(5) Select COUNTRY CODE and enter the correct country.

NOTE: Be sure to enter the correct country code. If the incorrect country code is programmed into SKIM, the SKIM must be replaced.

(6) Select YES to update VIN (the SKIM will learn the VIN from the PCM).
(7) Press ENTER to transfer the secret key (the PCM will send the secret key to the SKIM).
(8) Program ignition keys to SKIM.

NOTE: If the PCM and the SKIM are replaced at the same time, all vehicle keys will need to be replaced and programmed to the new SKIM.

PROGRAMMING IGNITION KEYS TO THE SKIM

(1) Turn the ignition switch on (transmission in park/neutral).
(2) Use the DRB III and select THEFT ALARM, SKIM then MISCELLANEOUS.
(3) Select PROGRAM IGNITION KEY'S.
(4) Enter secured access mode by entering the vehicle four-digit PIN.

NOTE: A maximum of eight keys can be learned to each SKIM. Once a key is learned to a SKIM it (the key) cannot be transferred to another vehicle.

If ignition key programming is unsuccessful, the DRB III will display one of the following messages:

Programming Not Attempted - The DRB III attempts to read the programmed key status and there are no keys programmed into SKIM memory.

ENGINE CONTROL MODULE (Continued)

Programming Key Failed (Possible Used Key From Wrong Vehicle) - SKIM is unable to program key due to one of the following:

- faulty ignition key transponder
- ignition key is programmed to another vehicle.

8 Keys Already Learned, Programming Not Done - SKIM transponder ID memory is full.

(5) Obtain ignition keys to be programmed from customer (8 keys maximum).

(6) Using the DRB III, erase all ignition keys by selecting MISCELLANEOUS and ERASE ALL CURRENT IGN. KEYS.

(7) Program all ignition keys.

Learned Key In Ignition - Ignition key transponder ID is currently programmed in SKIM memory.

REMOVAL

(1) Disconnect negative battery cable.

(2) Remove left front headlamp module (Refer to 8 - ELECTRICAL/LAMPS/LIGHTING - EXTERIOR/HEADLAMP UNIT - REMOVAL).

(3) Remove lower headlamp assembly mounting bolt (Fig. 2).

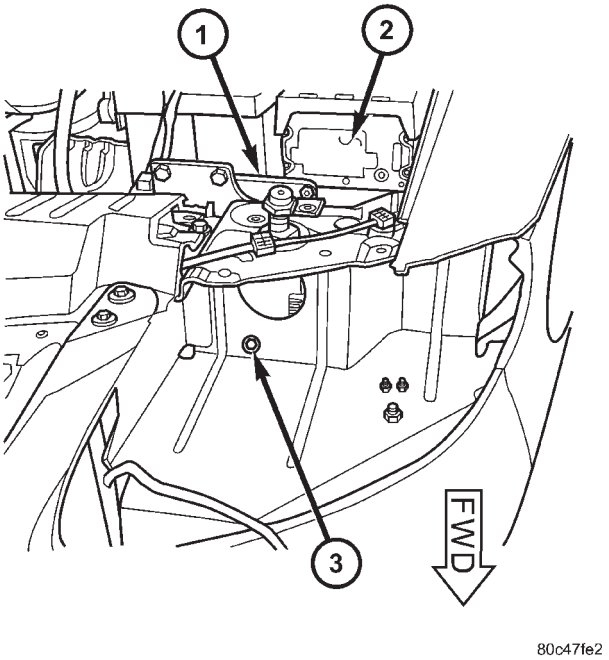

Fig. 2 ENGINE CONTROL MODULE-LOWER MOUNTING BOLT

1 - ENGINE CONTROL MODULE (ECM)
2 - INTEGRATED POWER MODULE
3 - ECM LOWER MOUNTING BOLT

(4) Remove ECM upper mounting bolts (Fig. 3).

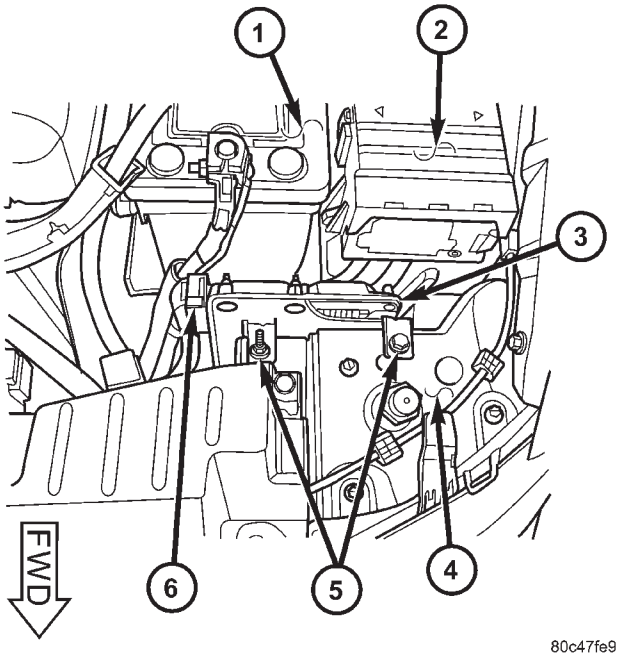

Fig. 3 ENGINE CONTROL MODULE-UPPER MOUNTING BOLTS

1 - BATTERY
2 - INTEGRATED POWER MODULE
3 - ENGINE CONTROL MODULE
4 - RADIATOR SUPPORT
5 - ECM UPPER MOUNTING BOLTS
6 - ECM ELECTRICAL CONNECTORS

(5) Lift ECM from radiator support.

(6) Disconnect ECM electrical connectors.

(7) Separate ECM from mounting bracket.

INSTALLATION

(1) Install ECM on mounting bracket.

(2) Connect ECM electrical connectors.

(3) Place ECM and bracket assembly in position on radiator support.

(4) Install upper and lower mounting bolts.

(5) Install left headlamp module (Refer to 8 - ELECTRICAL/LAMPS/LIGHTING - EXTERIOR/HEADLAMP UNIT - INSTALLATION).

(6) Connect negative battery cable.

(7) Program ECM as necessary (Refer to 8 - ELECTRICAL/ELECTRONIC CONTROL MODULES/ENGINE CONTROL MODULE - STANDARD PROCEDURE).

ENGINE SYSTEMS

TABLE OF CONTENTS

page

BATTERY SYSTEM 1
CHARGING 21
STARTING 28

BATTERY SYSTEM

TABLE OF CONTENTS

page

BATTERY SYSTEM
DESCRIPTION 1
OPERATION 2
DIAGNOSIS AND TESTING - BATTERY SYSTEM 2
CLEANING 5
INSPECTION 5
SPECIFICATIONS 6
SPECIAL TOOLS
BATTERY SYSTEM SPECIAL TOOLS 7
BATTERY
DESCRIPTION 7
OPERATION 9
DIAGNOSIS AND TESTING - BATTERY 9
STANDARD PROCEDURE
STANDARD PROCEDURE - SPIRAL PLATE BATTERY CHARGING 10
STANDARD PROCEDURE - CONVENTIONAL BATTERY CHARGING 11
STANDARD PROCEDURE - OPEN-CIRCUIT VOLTAGE TEST 13
STANDARD PROCEDURE - IGNITION-OFF DRAW TEST 13
STANDARD PROCEDURE - CHECKING BATTERY ELECTROLYTE LEVEL 14
REMOVAL - BATTERY 14
INSTALLATION 15
BATTERY HOLDDOWN
DESCRIPTION 15
OPERATION 15
REMOVAL 15
INSTALLATION 16
BATTERY CABLES
DESCRIPTION 16
OPERATION 16
DIAGNOSIS AND TESTING - BATTERY CABLE . 16
REMOVAL 18
INSTALLATION 18
BATTERY TRAY
DESCRIPTION 18
OPERATION 19
REMOVAL 19
INSTALLATION 19
THERMOWRAP
DESCRIPTION 19
OPERATION 20
REMOVAL 20
INSTALLATION 20

BATTERY SYSTEM

DESCRIPTION

A single 12-volt battery system is standard factory-installed equipment on this model. All of the components of the battery system are located within the engine compartment of the vehicle. The service information for the battery system in this vehicle covers the following related components, which are covered in further detail elsewhere in this service manual:

- **Battery** - The storage battery provides a reliable means of storing a renewable source of electrical energy within the vehicle.
- **Battery Cable** - The battery cables connect the battery terminal posts to the vehicle electrical system.

BATTERY SYSTEM (Continued)

- **Battery Holddown** - The battery holddown hardware secures the battery in the battery tray in the engine compartment.
- **Battery Thermowrap** - The battery thermowarp insulates the battery to protect it from engine compartment temperature extremes.
- **Battery Tray** - The battery tray provides a secure mounting location in the vehicle for the battery and an anchor point for the battery holddown hardware.

For battery system maintenance schedules and jump starting procedures, see the owner's manual in the vehicle glove box. Optionally, refer to Lubrication and Maintenance for the recommended battery maintenance schedules and for the proper battery jump starting procedures. While battery charging can be considered a maintenance procedure, the battery charging procedures and related information are located in the standard procedures section of this service manual. This was done because the battery must be fully-charged before any battery system diagnosis or testing procedures can be performed. Refer to Standard procedures for the proper battery charging procedures.

OPERATION

The battery system is designed to provide a safe, efficient, reliable and mobile means of delivering and storing electrical energy. This electrical energy is required to operate the engine starting system, as well as to operate many of the other vehicle accessory systems for limited durations while the engine and/or the charging system are not operating. The battery system is also designed to provide a reserve of electrical energy to supplement the charging system for short durations while the engine is running and the electrical current demands of the vehicle exceed the output of the charging system. In addition to delivering, and storing electrical energy for the vehicle, the battery system serves as a capacitor and voltage stabilizer for the vehicle electrical system. It absorbs most abnormal or transient voltages caused by the switching of any of the electrical components or circuits in the vehicle.

DIAGNOSIS AND TESTING - BATTERY SYSTEM

The battery, starting, and charging systems in the vehicle operate with one another and must be tested as a complete system. In order for the engine to start and the battery to maintain its charge properly, all of the components that are used in these systems must perform within specifications. It is important that the battery, starting, and charging systems be thoroughly tested and inspected any time a battery needs to be charged or replaced. The cause of abnormal battery discharge, overcharging or early battery failure must be diagnosed and corrected before a battery is replaced and before a vehicle is returned to service. The service information for these systems has been separated within this service manual to make it easier to locate the specific information you are seeking. However, when attempting to diagnose any of these systems, it is important that you keep their interdependency in mind.

The diagnostic procedures used for the battery, starting, and charging systems include the most basic conventional diagnostic methods, to the more sophisticated On-Board Diagnostics (OBD) built into the Powertrain Control Module (PCM). Use of an induction-type milliampere ammeter, a volt/ohmmeter, a battery charger, a carbon pile rheostat (load tester) and a 12-volt test lamp may be required. All OBD-sensed systems are monitored by the PCM. Each monitored circuit is assigned a Diagnostic Trouble Code (DTC). The PCM will store a DTC in electronic memory for any failure it detects. Refer to Charging System for the proper charging system onboard diagnostic test procedures.

MICRO 420 ELECTRICAL SYSTEM TESTER

The Micro 420 automotive battery system tester is designed to help the dealership technicians diagnose the cause of a defective battery. Follow the instruction manual supplied with the tester to properly diagnose a vehicle. If the instruction manual is not available refer to the standard procedure in this section, which includes the directions for using the Micro 420 electrical system tester.

BATTERY SYSTEM (Continued)

BATTERY SYSTEM DIAGNOSIS		
CONDITION	POSSIBLE CAUSES	CORRECTION
THE BATTERY SEEMS WEAK OR DEAD WHEN ATTEMPTING TO START THE ENGINE.	1. The electrical system ignition-off draw is excessive.	1. Refer to the IGNITION-OFF DRAW TEST Standard Procedure for the proper test procedures. Repair the excessive ignition-off draw, as required.
	2. The charging system is faulty.	2. Determine if the charging system is performing to specifications. Refer to Charging System for additional charging system diagnosis and testing procedures. Repair the faulty charging system, as required.
	3. The battery is discharged.	3. Determine the battery state-of-charge using the Micro 420 battery tester. Refer to the Standard Procedures in this section for additional test procedures. Charge the faulty battery, as required.
	4. The battery terminal connections are loose or corroded.	4. Refer to Battery Cables for the proper battery cable diagnosis and testing procedures. Clean and tighten the battery terminal connections, as required.
	5. The battery has an incorrect size or rating for this vehicle.	5. Refer to Battery System Specifications for the proper size and rating. Replace an incorrect battery, as required.
	6. The battery is faulty.	6. Test the battery using the Micro 420 battery tester. Refer to the Standard Procedures in this section for additional test procedures. Replace the faulty battery, as required.
	7. The starting system is faulty.	7. Determine if the starting system is performing to specifications. Refer to Starting System for the proper starting system diagnosis and testing procedures. Repair the faulty starting system, as required.
	8. The battery is physically damaged.	8. Inspect the battery for loose terminal posts or a cracked and leaking case. Replace the damaged battery, as required.

BATTERY SYSTEM (Continued)

BATTERY SYSTEM DIAGNOSIS		
CONDITION	POSSIBLE CAUSES	CORRECTION
THE BATTERY STATE OF CHARGE CANNOT BE MAINTAINED.	1. The battery has an incorrect size or rating for this vehicle.	1. Refer to Battery System Specifications for the proper specifications. Replace an incorrect battery, as required.
	2. The battery terminal connections are loose or corroded.	2. Refer to Battery Cable for the proper cable diagnosis and testing procedures. Clean and tighten the battery terminal connections, as required.
	3. The electrical system ignition-off draw is excessive.	3. Refer to the IGNITION-OFF DRAW TEST Standard Procedure for the proper test procedures. Repair the faulty electrical system, as required.
	4. The battery is faulty.	4. Test the battery using the Micro 420 battery tester. Refer to Standard Procedures for additional test procedures. Replace the faulty battery, as required.
	5. The starting system is faulty.	5. Determine if the starting system is performing to specifications. Refer to Starting System for the proper starting system diagnosis and testing procedures. Repair the faulty starting system, as required.
	6. The charging system is faulty.	6. Determine if the charging system is performing to specifications. Refer to Charging System for charging system diagnosis and testing procedures. Repair the faulty charging system, as required.
	7. Electrical loads exceed the output of the charging system.	7. Inspect the vehicle for aftermarket electrical equipment which might cause excessive electrical loads.
	8. Slow driving or prolonged idling with high-amperage draw loads in use.	8. Advise the vehicle operator, as required.
THE BATTERY WILL NOT ACCEPT A CHARGE.	1. The battery is faulty.	1. Test the battery using the Micro 420 battery tester.. Charge or replace the faulty battery, as required.

ABNORMAL BATTERY DISCHARGING

Any of the following conditions can result in abnormal battery discharging:

1. A faulty or incorrect charging system component. Refer to Charging System for additional charging system diagnosis and testing procedures.
2. A faulty or incorrect battery. Use Micro 420 tester and refer to Battery System for additional battery diagnosis and testing procedures.
3. A faulty circuit or component causing excessive ignition-off draw.
4. Electrical loads that exceed the output of the charging system. This can be due to equipment installed after manufacture, or repeated short trip use.
5. A faulty or incorrect starting system component. Refer to Starting System for the proper starting system diagnosis and testing procedures.
6. Corroded or loose battery posts and/or terminal clamps.
7. Slow driving speeds (heavy traffic conditions) or prolonged idling, with high-amperage draw loads in use.

BATTERY SYSTEM (Continued)

CLEANING

The following information details the recommended cleaning procedures for the battery and related components. In addition to the maintenance schedules found in this service manual and the owner's manual, it is recommended that these procedures be performed any time the battery or related components must be removed for vehicle service.

(1) Clean the battery cable terminal clamps of all corrosion. Remove any corrosion using a wire brush or a post and terminal cleaning tool, and a sodium bicarbonate (baking soda) and warm water cleaning solution (Fig. 1).

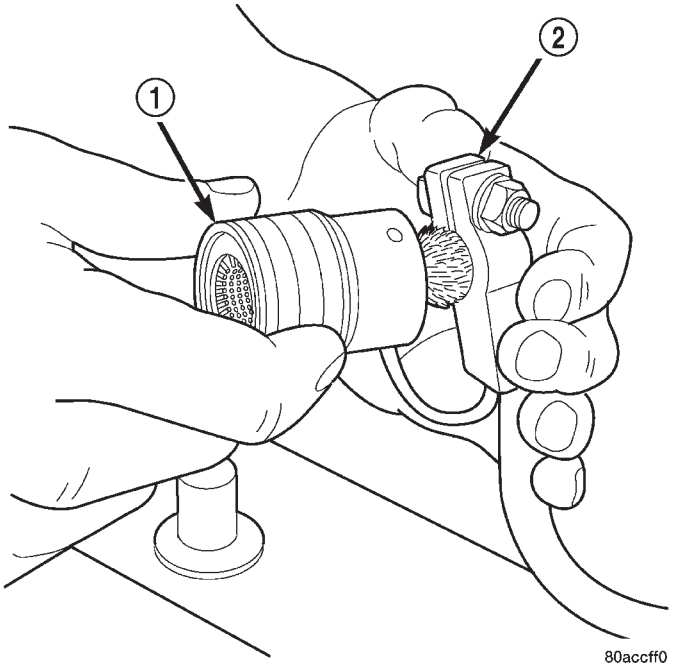

Fig. 1 Clean Battery Cable Terminal Clamp - Typical

1 - TERMINAL BRUSH
2 - BATTERY CABLE

(2) Clean the battery tray and battery holddown hardware of all corrosion. Remove any corrosion using a wire brush and a sodium bicarbonate (baking soda) and warm water cleaning solution. Paint any exposed bare metal.

(3) If the removed battery is to be reinstalled, clean the outside of the battery case and the top cover with a sodium bicarbonate (baking soda) and warm water cleaning solution using a stiff bristle parts cleaning brush to remove any acid film (Fig. 2). Rinse the battery with clean water. Ensure that the cleaning solution does not enter the battery cells through the vent holes. If the battery is being replaced, refer to Battery System Specifications for the factory-installed battery specifications. Confirm that the replacement battery is the correct size and has the correct ratings for the vehicle.

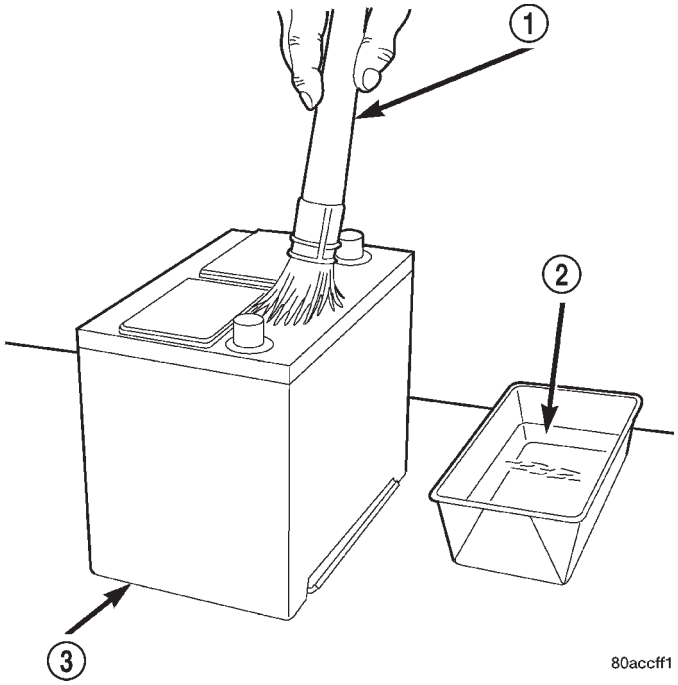

Fig. 2 Clean Battery - Typical

1 - CLEANING BRUSH
2 - WARM WATER AND BAKING SODA SOLUTION
3 - BATTERY

(4) Clean the battery thermowrap with a sodium bicarbonate (baking soda) and warm water cleaning solution using a soft bristle parts cleaning brush to remove any acid film.

(5) Clean any corrosion from the battery terminal posts with a wire brush or a post and terminal cleaner, and a sodium bicarbonate (baking soda) and warm water cleaning solution (Fig. 3).

INSPECTION

The following information details the recommended inspection procedures for the battery and related components. In addition to the maintenance schedules found in this service manual and the owner's manual, it is recommended that these procedures be performed any time the battery or related components must be removed for vehicle service.

(1) Inspect the battery cable terminal clamps for damage. Replace any battery cable that has a damaged or deformed terminal clamp.

(2) Inspect the battery tray and battery holddown hardware for damage. Replace any damaged parts.

(3) Slide the thermowrap off of the battery case. Inspect the battery case for cracks or other damage that could result in electrolyte leaks. Also, check the battery terminal posts for looseness. Batteries with damaged cases or loose terminal posts must be replaced.

BATTERY SYSTEM (Continued)

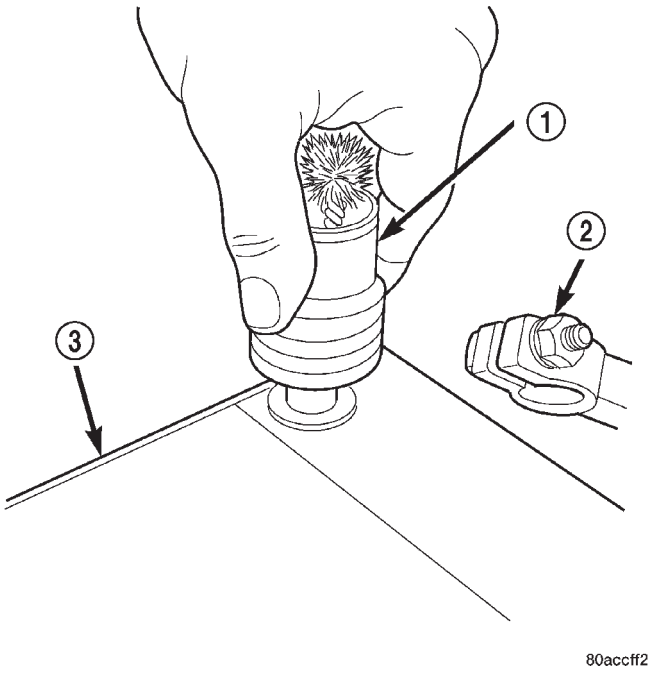

Fig. 3 Clean Battery Terminal Post - Typical

1 - TERMINAL BRUSH
2 - BATTERY CABLE
3 - BATTERY

(4) Inspect the battery thermowrap for tears, cracks, deformation or other damage. Replace any battery thermal guard that has been damaged.

(5) Inspect the battery built-in test indicator sight glass(if equipped) for an indication of the battery condition. If the battery is discharged, charge as required. Refer to Standard Procedures for the proper battery built-in indicator test procedures. Also refer to Standard Procedures for the proper battery charging procedures.

SPECIFICATIONS

The battery Group Size number, the Cold Cranking Amperage (CCA) rating, and the Reserve Capacity (RC) rating or Ampere-Hours (AH) rating can be found on the original equipment battery label. Be certain that a replacement battery has the correct Group Size number, as well as CCA, and RC or AH ratings that equal or exceed the original equipment specification for the vehicle being serviced. Battery sizes and ratings are discussed in more detail below.

- **Group Size** - The outside dimensions and terminal placement of the battery conform to standards established by the Battery Council International (BCI). Each battery is assigned a BCI Group Size number to help identify a correctly-sized replacement.
- **Cold Cranking Amperage** - The Cold Cranking Amperage (CCA) rating specifies how much current (in amperes) the battery can deliver for thirty seconds at -18° C (0° F). Terminal voltage must not fall below 7.2 volts during or after the thirty second discharge period. The CCA required is generally higher as engine displacement increases, depending also upon the starter current draw requirements.
- **Reserve Capacity** - The Reserve Capacity (RC) rating specifies the time (in minutes) it takes for battery terminal voltage to fall below 10.5 volts, at a discharge rate of 25 amperes. RC is determined with the battery fully-charged at 26.7° C (80° F). This rating estimates how long the battery might last after a charging system failure, under minimum electrical load.
- **Ampere-Hours** - The Ampere-Hours (AH) rating specifies the current (in amperes) that a battery can deliver steadily for twenty hours, with the voltage in the battery not falling below 10.5 volts. This rating is also sometimes identified as the twenty-hour discharge rating.

BATTERY CLASSIFICATIONS & RATINGS					
Part Number	BCI Group Size Classification	Cold Cranking Amperage	Reserve Capacity	Ampere - Hours	Load Test Amperage
4686158AB	34	500	110 Minutes	60	250
4727159AB	34	600	120 Minutes	66	300
4727242AB	DIN H6	600	120 Minutes	66	300
5033235AA	34	700	95 Minutes	48	350

BATTERY SYSTEM (Continued)

SPECIAL TOOLS

BATTERY SYSTEM SPECIAL TOOLS

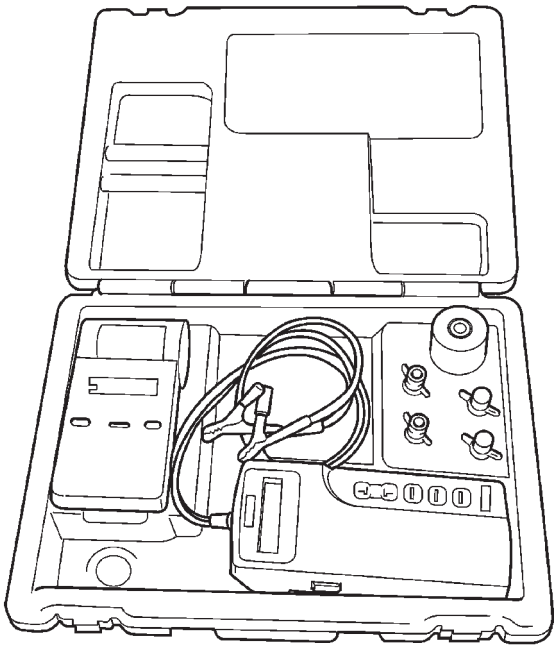

MICRO 420 BATTERY TESTER

BATTERY

DESCRIPTION

There are three different batteries available on this model. Vehicles equipped with a diesel engine utilize a spiral wound plate designed battery with recombination technology. This is a maintenance-free battery that is capable of delivering more power than a conventional battery. This additional power is required by a diesel engine during cold cranking. Vehicles equipped with a gasoline engine utilize a conventional battery. Refer to the following information for detailed differences and descriptions of these batteries.

SPIRAL PLATE BATTERY - DIESEL ENGINE

Spiral plate technology takes the elements of traditional batteries - lead and sulfuric acid - to the next level. By tightly winding layers of spiral grids and acid-permeated vitreous separators into cells, the manufacturer has developed a battery with more power and service life than conventional batteries the same size. The spiral plate battery is completely, permanently sealed. Through gas recombination, hydrogen and oxygen within the battery are captured during normal charging and reunited to form the water within the electrolyte, eliminating the need to add distilled water. Therefore, these batteries have non-removable battery vent caps (Fig. 4). Water **cannot** be added to this battery.

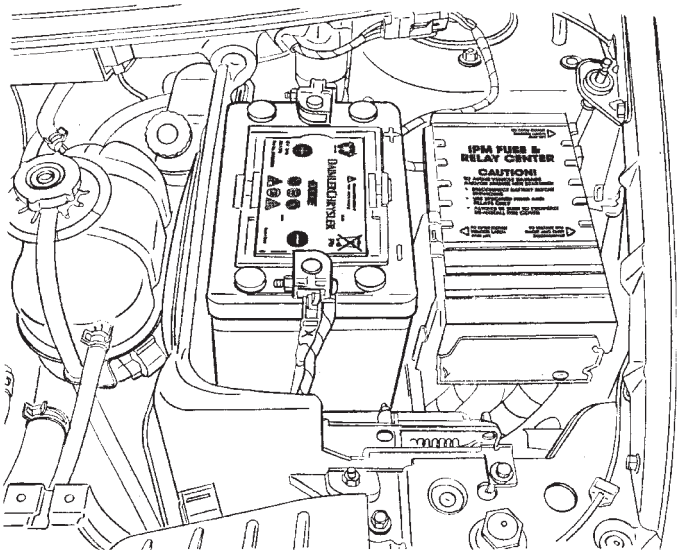

Fig. 4 MAINTENANCE-FREE DIESEL ENGINE BATTERY

The acid inside an spiral plate battery is bound within the vitreous separators, ending the threat of acid leaks. This feature allows the battery to be installed in any position anywhere in the vehicle.

Spiral plate technology is the process by which the plates holding the active material in the battery are wound tightly in coils instead of hanging flat, like conventional batteries. This design has a lower internal resistance and also increases the active material surface area.

WARNING: NEVER EXCEED 14.4 VOLTS WHEN CHARGING A SPIRAL PLATE BATTERY. PERSONAL INJURY AND/OR BATTERY DAMAGE MAY RESULT.

Due to the maintanance-free design, distilled water cannot be added to this battery. Therefore, if more than 14.4 volts are used during the spiral plate battery charging process, water vapor can be exhausted through the pressure-sensitive battery vents and lost for good. This can permanently damage the spiral plate battery. Never exceed 14.4 volts when charging a spiral plate battery. Personal injury and/or battery damage may result.

BATTERY (Continued)

CONVENTIONAL BATTERY - GASOLINE ENGINE

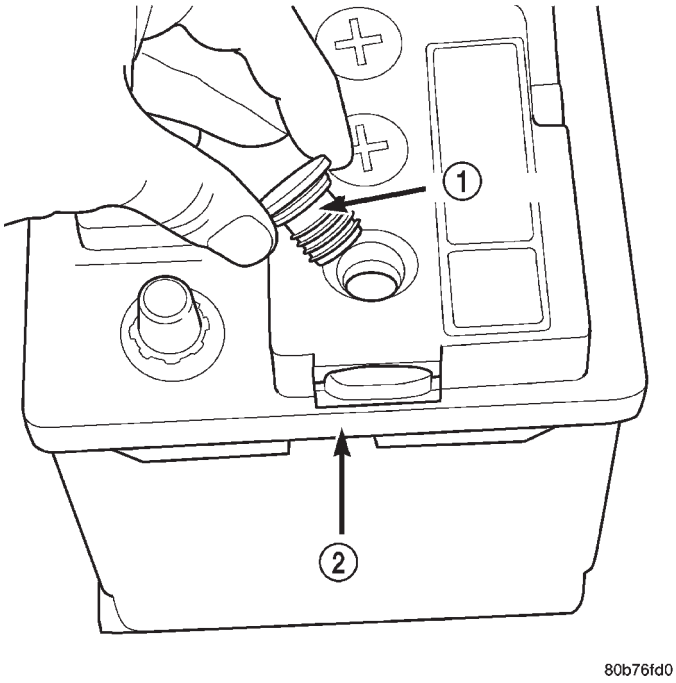

Fig. 5 BATTERY CELL CAP REMOVAL/ INSTALLATION - LOW-MAINTANANCE GASOLINE ENGINE BATTERY

1 - BATTERY CELL CAP
2 - BATTERY CASE

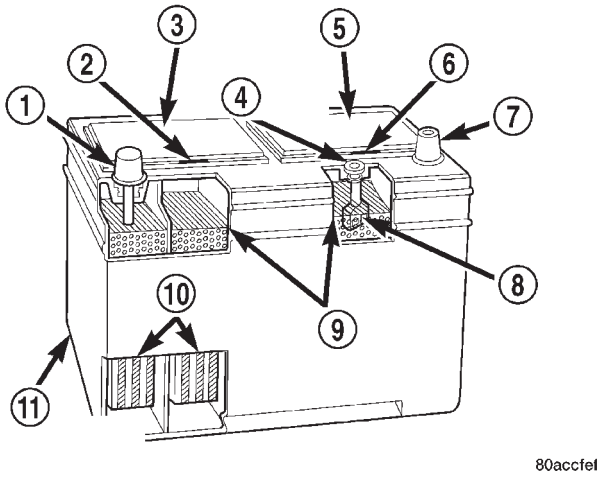

Fig. 6 Maintenance-Free Battery

1 - POSITIVE POST
2 - VENT
3 - CELL CAP
4 - VENT
5 - CELL CAP
6 - VENT
7 - NEGATIVE POST
8 - INDICATOR EYE (if equipped)
9 - ELECTROLYTE LEVEL
10 - PLATE GROUPS
11 - MAINTENANCE-FREE BATTERY

Low-maintenance batteries are used on vehicles equipped with a gasoline engine, these batteries have removable battery cell caps (Fig. 5). Water **can** be added to this battery. Under normal service, the composition of this battery reduces gassing and water loss at normal charge rates. However these batteries may require additional distilled water after years of service.

Maintenance-free batteries are standard factory-installed equipment on this model. Male post type terminals made of a soft lead material protrude from the top of the molded plastic battery case (Fig. 6)to provide the means for connecting the battery to the vehicle electrical system. The battery positive terminal post is visibly larger in diameter than the negative terminal post, for easy identification. The letters **POS** and **NEG** are also molded into the top of the battery case adjacent to their respective positive and negative terminal posts for additional identification confirmation.

This battery is designed to provide a safe, efficient and reliable means of storing electrical energy in a chemical form. This means of energy storage allows the battery to produce the electrical energy required to operate the engine starting system, as well as to operate many of the other vehicle accessory systems for limited durations while the engine and/or the charging system are not operating. The battery is made up of six individual cells that are connected in series. Each cell contains positively charged plate groups that are connected with lead straps to the positive terminal post, and negatively charged plate groups that are connected with lead straps to the negative terminal post. Each plate consists of a stiff mesh framework or grid coated with lead dioxide (positive plate) or sponge lead (negative plate). Insulators or plate separators made of a non-conductive material are inserted between the positive and negative plates to prevent them from contacting or shorting against one another. These dissimilar metal plates are submerged in a sulfuric acid and water solution called an electrolyte.

Some factory-installed batteries have a built-in test indicator (hydrometer). The color visible in the sight glass of the indicator will reveal the battery condition. For more information on the use of the built-in test indicator, refer to **Standard Procedures** The chemical composition of the metal coated plates within the low-maintenance battery reduces battery gassing and water loss, at normal charge and discharge rates. Therefore, the battery should not require additional water in normal service. If the electrolyte level in this battery does become low, distilled water must be added. However, rapid loss of

BATTERY (Continued)

electrolyte can be caused by an overcharging condition. Be certain to diagnose the charging system after replenishing the water in the battery for a low electrolyte condition and before returning the vehicle to service. Refer to **Charging System** for additional information.

The battery Group Size number, the Cold Cranking Amperage (CCA) rating, and the Reserve Capacity (RC) rating or Ampere-Hours (AH) rating can be found on the original equipment battery label. Be certain that a replacement battery has the correct Group Size number, as well as CCA, and RC or AH ratings that equal or exceed the original equipment specification for the vehicle being serviced. Refer to **Battery Specifications** in this group for the location of the proper factory-installed battery specifications.

OPERATION

The battery is designed to store electrical energy in a chemical form. When an electrical load is applied to the terminals of the battery, an electrochemical reaction occurs. This reaction causes the battery to discharge electrical current from its terminals. As the battery discharges, a gradual chemical change takes place within each cell. The sulfuric acid in the electrolyte combines with the plate materials, causing both plates to slowly change to lead sulfate. At the same time, oxygen from the positive plate material combines with hydrogen from the sulfuric acid, causing the electrolyte to become mainly water. The chemical changes within the battery are caused by the movement of excess or free electrons between the positive and negative plate groups. This movement of electrons produces a flow of electrical current through the load device attached to the battery terminals.

As the plate materials become more similar chemically, and the electrolyte becomes less acid, the voltage potential of each cell is reduced. However, by charging the battery with a voltage higher than that of the battery itself, the battery discharging process is reversed. Charging the battery gradually changes the sulfated lead plates back into sponge lead and lead dioxide, and the water back into sulfuric acid. This action restores the difference in the electron charges deposited on the plates, and the voltage potential of the battery cells. For a battery to remain useful, it must be able to produce high-amperage current over an extended period. A battery must also be able to accept a charge, so that its voltage potential may be restored.

The battery is vented to release excess hydrogen gas that is created when the battery is being charged or discharged. However, even with these vents, hydrogen gas can collect in or around the battery. If hydrogen gas is exposed to flame or sparks, it may ignite. If the electrolyte level is low, the battery may arc internally and explode. If the battery is equipped with removable cell caps, add distilled water whenever the electrolyte level is below the top of the plates. If the battery cell caps cannot be removed, the battery must be replaced if the electrolyte level becomes low.

DIAGNOSIS AND TESTING - BATTERY

The battery must be completely charged and the terminals should be properly cleaned and inspected before diagnostic procedures are performed. Refer to Battery System Cleaning for the proper cleaning procedures, and Battery System Inspection for the proper battery inspection procedures. Refer to Standard Procedures for the proper battery charging procedures.

MICRO 420 ELECTRICAL SYSTEM TESTER

The Micro420 automotive battery tester is designed to help the dealership technicians diagnose the cause of a defective battery. Follow the instruction manual supplied with the tester to properly diagnose a vehicle. If the instruction manual is not available refer to the standard procedure in this section, which includes the directions for using the Micro420 electrical system tester.

WARNING: IF THE BATTERY SHOWS SIGNS OF FREEZING, LEAKING OR LOOSE POSTS, DO NOT TEST, ASSIST-BOOST, OR CHARGE. THE BATTERY MAY ARC INTERNALLY AND EXPLODE. PERSONAL INJURY AND/OR VEHICLE DAMAGE MAY RESULT.

WARNING: EXPLOSIVE HYDROGEN GAS FORMS IN AND AROUND THE BATTERY. DO NOT SMOKE, USE FLAME, OR CREATE SPARKS NEAR THE BATTERY. PERSONAL INJURY AND/OR VEHICLE DAMAGE MAY RESULT.

WARNING: THE BATTERY CONTAINS SULFURIC ACID, WHICH IS POISONOUS AND CAUSTIC. AVOID CONTACT WITH THE SKIN, EYES, OR CLOTHING. IN THE EVENT OF CONTACT, FLUSH WITH WATER AND CALL A PHYSICIAN IMMEDIATELY. KEEP OUT OF THE REACH OF CHILDREN.

A battery that will not accept a charge is faulty, and must be replaced. Further testing is not required. A fully-charged battery must be load tested to determine its cranking capacity. A battery that is fully-charged, but does not pass the load test, is faulty and must be replaced.

BATTERY (Continued)

NOTE: Completely discharged batteries may take several hours to accept a charge. Refer to Standard Procedures for the proper battery charging procedures.

STANDARD PROCEDURE

STANDARD PROCEDURE - SPIRAL PLATE BATTERY CHARGING

Vehicles equipped with a diesel engine utilize a unique spiral plate battery. This battery has a maximum charging voltage that must be used in order to restore the battery to its full potential, failure to use the following spiral plate battery charging procedure could result in damage to the battery or personal injury.

Battery charging is the means by which the battery can be restored to its full voltage potential. A battery is fully-charged when:

- Micro 420 electrical system tester indicates battery is OK.
- Open-circuit voltage of the battery is 12.65 volts or above.
- Battery passes Load Test multiple times.

WARNING: IF THE BATTERY SHOWS SIGNS OF FREEZING, LEAKING, LOOSE POSTS OR LOW ELECTROLYTE LEVEL, DO NOT TEST, ASSIST-BOOST, OR CHARGE. THE BATTERY MAY ARC INTERNALLY AND EXPLODE. PERSONAL INJURY AND/OR VEHICLE DAMAGE MAY RESULT.

CAUTION: Always disconnect and isolate the battery negative cable before charging a battery. Do not exceed 14.4 volts while charging a battery.

CAUTION: The battery should not be hot to the touch. If the battery feels hot to the touch, turn off the charger and let the battery cool before continuing the charging operation. Damage to the battery may result.

After the battery has been charged to 12.6 volts or greater, perform a load test to determine the battery cranking capacity. Refer to Standard Procedures for the proper battery load test procedures. If the battery will endure a load test, return the battery to service. If the battery will not endure a load test, it is faulty and must be replaced.

Clean and inspect the battery hold downs, tray, terminals, posts, and top before completing battery service. Refer to Battery System Cleaning for the proper battery system cleaning procedures, and Battery System Inspection for the proper battery system inspection procedures.

CHARGING A COMPLETELY DISCHARGED BATTERY – SPIRAL PLATE BATTERY

The following procedure should be used to recharge a completely discharged battery. Unless this procedure is properly followed, a good battery may be needlessly replaced.

(1) Measure the voltage at the battery posts with a voltmeter, accurate to 1/10 (0.10) volt (Fig. 7). If the reading is below ten volts, the battery charging current will be low. It could take some time before the battery accepts a current greater than a few milliamperes. Such low current may not be detectable on the ammeters built into many battery chargers.

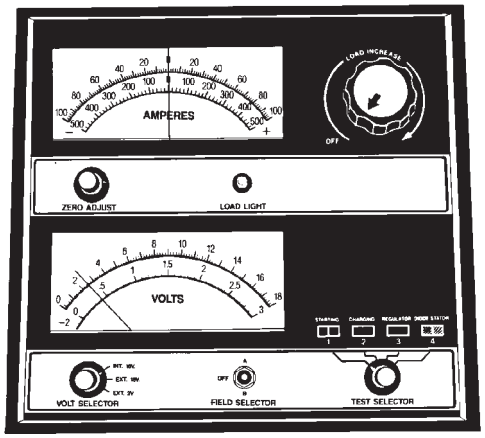

Fig. 7 Voltmeter - Typical

(2) Disconnect and isolate the battery negative cable. Connect the battery charger leads. Some battery chargers are equipped with polarity-sensing circuitry. This circuitry protects the battery charger and the battery from being damaged if they are improperly connected. If the battery state-of-charge is too low for the polarity-sensing circuitry to detect, the battery charger will not operate. This makes it appear that the battery will not accept charging current. See the instructions provided by the manufacturer of the battery charger for details on how to bypass the polarity-sensing circuitry.

(3) Battery chargers vary in the amount of voltage and current they provide. The amount of time required for a battery to accept measurable charging current at various voltages is shown in the Charge Rate Table. If the charging current is still not measurable at the end of the charging time, the battery is faulty and must be replaced. If the charging current is measurable during the charging time, the battery may be good and the charging should be completed in the normal manner.

BATTERY (Continued)

CHARGE RATE TABLE	
Voltage	Hours
14.4 volts maximum	up to 4 hours
13.0 to 14 volts	up to 8 hours
12.9 volts or less	up to 16 hours

CHARGING TIME REQUIRED

The time required to charge a battery will vary, depending upon the following factors:

- **Battery Capacity** - A completely discharged heavy-duty battery requires twice the charging time of a small capacity battery.
- **Temperature** - A longer time will be needed to charge a battery at -18° C (0° F) than at 27° C (80° F). When a fast battery charger is connected to a cold battery, the current accepted by the battery will be very low at first. As the battery warms, it will accept a higher charging current rate (amperage).
- **Charger Capacity** - A battery charger that supplies only five amperes will require a longer charging time. A battery charger that supplies eight amperes will require a shorter charging time.
- **State-Of-Charge** - A completely discharged battery requires more charging time than a partially discharged battery. Electrolyte is nearly pure water in a completely discharged battery. At first, the charging current (amperage) will be low. As the battery charges, the specific gravity of the electrolyte will gradually rise.

The Battery Charging Time Table gives an indication of the time required to charge a typical battery at room temperature based upon the battery state-of-charge and the charger capacity.

BATTERY CHARGING TIME TABLE		
Charging Amperage	5 Amps	8 Amps
Open Circuit Voltage	Hours Charging @ 21° C (70° F)	
12.25 to 12.49	6 hours	3 hours
12.00 to 12.24	10 hours	5 hours
10.00 to 11.99	14 hours	7 hours
Below 10.00	18 hours	9 hours

STANDARD PROCEDURE - CONVENTIONAL BATTERY CHARGING

Vehicles equipped with a diesel engine utilize a unique spiral plate battery. This battery has a maximum charging voltage that must be used in order to restore the battery to its full potential, failure to use the spiral plate battery charging procedure could result in damage to the battery or personal injury.

Battery charging is the means by which the battery can be restored to its full voltage potential. A battery is fully-charged when:

- Micro 420 electrical system tester indicates battery is OK.
- Three hydrometer tests, taken at one-hour intervals, indicate no increase in the temperature-corrected specific gravity of the battery electrolyte.
- Open-circuit voltage of the battery is 12.64 volts or above.

WARNING: IF THE BATTERY SHOWS SIGNS OF FREEZING, LEAKING, LOOSE POSTS, DO NOT TEST, ASSIST-BOOST, OR CHARGE. THE BATTERY MAY ARC INTERNALLY AND EXPLODE. PERSONAL INJURY AND/OR VEHICLE DAMAGE MAY RESULT.

WARNING: EXPLOSIVE HYDROGEN GAS FORMS IN AND AROUND THE BATTERY. DO NOT SMOKE, USE FLAME, OR CREATE SPARKS NEAR THE BATTERY. PERSONAL INJURY AND/OR VEHICLE DAMAGE MAY RESULT.

WARNING: THE BATTERY CONTAINS SULFURIC ACID, WHICH IS POISONOUS AND CAUSTIC. AVOID CONTACT WITH THE SKIN, EYES, OR CLOTHING. IN THE EVENT OF CONTACT, FLUSH WITH WATER AND CALL A PHYSICIAN IMMEDIATELY. KEEP OUT OF THE REACH OF CHILDREN.

WARNING: IF THE BATTERY IS EQUIPPED WITH REMOVABLE CELL CAPS, BE CERTAIN THAT EACH OF THE CELL CAPS IS IN PLACE AND TIGHT BEFORE THE BATTERY IS RETURNED TO SERVICE. PERSONAL INJURY AND/OR VEHICLE DAMAGE MAY RESULT FROM LOOSE OR MISSING CELL CAPS.

CAUTION: Always disconnect and isolate the battery negative cable before charging a battery. Do not exceed sixteen volts while charging a battery. Damage to the vehicle electrical system components may result.

CAUTION: Battery electrolyte will bubble inside the battery case during normal battery charging. Electrolyte boiling or being discharged from the battery vents indicates a battery overcharging condition. Immediately reduce the charging rate or turn off the charger to evaluate the battery condition. Damage to the battery may result from overcharging.

BATTERY (Continued)

CAUTION: The battery should not be hot to the touch. If the battery feels hot to the touch, turn off the charger and let the battery cool before continuing the charging operation. Damage to the battery may result.

After the battery has been charged to 12.4 volts or greater, retest the battery with the micro 420 tester or perform a load test to determine the battery cranking capacity. Refer to Standard Procedures for the proper battery load test procedures. If the battery will endure a load test, return the battery to service. If the battery will not endure a load test, it is faulty and must be replaced.

Clean and inspect the battery hold downs, tray, terminals, posts, and top before completing battery service. Refer to Battery System Cleaning for the proper battery system cleaning procedures, and Battery System Inspection for the proper battery system inspection procedures.

CHARGING A COMPLETELY DISCHARGED BATTERY

The following procedure should be used to recharge a completely discharged battery. Unless this procedure is properly followed, a good battery may be needlessly replaced.

(1) Measure the voltage at the battery posts with a voltmeter, accurate to 1/10 (0.10) volt (Fig. 8). If the reading is below ten volts, the battery charging current will be low. It could take some time before the battery accepts a current greater than a few milliamperes. Such low current may not be detectable on the ammeters built into many battery chargers.

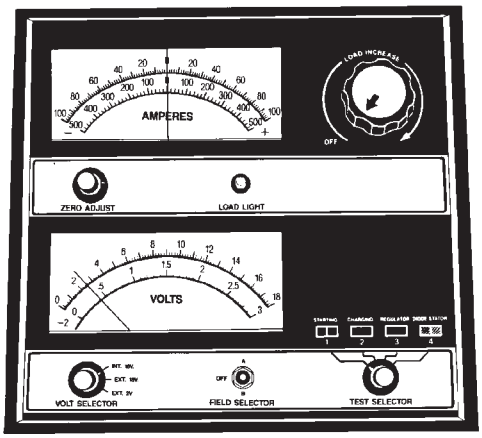

Fig. 8 Voltmeter - Typical

(2) Disconnect and isolate the battery negative cable. Connect the battery charger leads. Some battery chargers are equipped with polarity-sensing circuitry. This circuitry protects the battery charger and the battery from being damaged if they are improperly connected. If the battery state-of-charge is too low for the polarity-sensing circuitry to detect, the battery charger will not operate. This makes it appear that the battery will not accept charging current. See the instructions provided by the manufacturer of the battery charger for details on how to bypass the polarity-sensing circuitry.

(3) Battery chargers vary in the amount of voltage and current they provide. The amount of time required for a battery to accept measurable charging current at various voltages is shown in the Charge Rate Table. If the charging current is still not measurable at the end of the charging time, the battery is faulty and must be replaced. If the charging current is measurable during the charging time, the battery may be good and the charging should be completed in the normal manner.

CHARGE RATE TABLE	
Voltage	Hours
16.0 volts maximum	up to 10 min.
14.0 to 15.9 volts	up to 20 min.
13.9 volts or less	up to 30 min.

CHARGING TIME REQUIRED

The time required to charge a battery will vary, depending upon the following factors:

- **Battery Capacity** - A completely discharged heavy-duty battery requires twice the charging time of a small capacity battery.
- **Temperature** - A longer time will be needed to charge a battery at -18° C (0° F) than at 27° C (80° F). When a fast battery charger is connected to a cold battery, the current accepted by the battery will be very low at first. As the battery warms, it will accept a higher charging current rate (amperage).
- **Charger Capacity** - A battery charger that supplies only five amperes will require a longer charging time. A battery charger that supplies twenty amperes or more will require a shorter charging time.
- **State-Of-Charge** - A completely discharged battery requires more charging time than a partially discharged battery. Electrolyte is nearly pure water in a completely discharged battery. At first, the charging current (amperage) will be low. As the battery charges, the specific gravity of the electrolyte will gradually rise.

The Conventional Battery Charging Time Table gives an indication of the time required to charge a typical battery at room temperature based upon the battery state-of-charge and the charger capacity.

BATTERY (Continued)

CONVENTIONAL BATTERY CHARGING TIME TABLE			
Charging Amperage	5 Amps	10 Amps	20 Amps
Open Circuit Voltage	Hours Charging @ 21° C (70° F)		
12.25 to 12.49	6 hours	3 hours	1.5 hours
12.00 to 12.24	10 hours	5 hours	2.5 hours
10.00 to 11.99	14 hours	7 hours	3.5 hours
Below 10.00	18 hours	9 hours	4.5 hours

STANDARD PROCEDURE - OPEN-CIRCUIT VOLTAGE TEST

A battery open-circuit voltage (no load) test will show the approximate state-of-charge of a battery. This test can be used if no other battery tester is available.

Before proceeding with this test, completely charge the battery. Refer to Standard Procedures for the proper battery charging procedures.

(1) Before measuring the open-circuit voltage, the surface charge must be removed from the battery. Turn on the headlamps for fifteen seconds, then allow up to five minutes for the battery voltage to stabilize.

(2) Disconnect and isolate both battery cables, negative cable first.

(3) Using a voltmeter connected to the battery posts (see the instructions provided by the manufacturer of the voltmeter), measure the open-circuit voltage (Fig. 9).

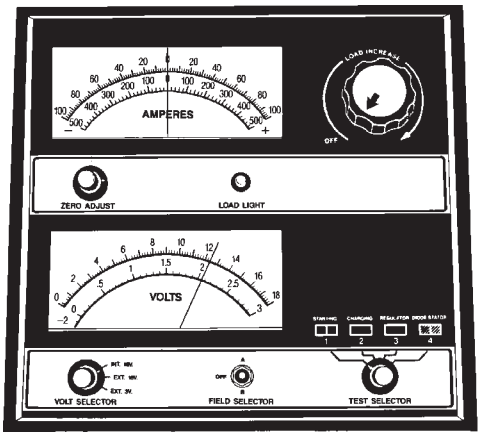

Fig. 9 Testing Open-Circuit Voltage - Typical

See the Open-Circuit Voltage Table. This voltage reading will indicate the battery state-of-charge, but will not reveal its cranking capacity. If a battery has an open-circuit voltage reading of 12.4 volts or greater, it may be load tested to reveal its cranking capacity. Refer to Standard Procedures for the proper battery load test procedures.

OPEN CIRCUIT VOLTAGE TABLE	
Open Circuit Voltage	Charge Percentage
11.7 volts or less	0%
12.0 volts	25%
12.2 volts	50%
12.45 volts	75%
12.65 volts or more	100%

STANDARD PROCEDURE - IGNITION-OFF DRAW TEST

The term Ignition-Off Draw (IOD) identifies a normal condition where power is being drained from the battery with the ignition switch in the Off position. A normal vehicle electrical system will draw from five to thirty-five milliamperes (0.015 to 0.025 ampere) with the ignition switch in the Off position, and all non-ignition controlled circuits in proper working order. Up to twenty-five milliamperes are needed to enable the memory functions for the Powertrain Control Module (PCM), digital clock, electronically tuned radio, and other modules which may vary with the vehicle equipment.

A vehicle that has not been operated for approximately twenty-one days, may discharge the battery to an inadequate level. When a vehicle will not be used for twenty-one days or more (stored), remove the IOD fuse from the Integrated Power Module (IPM). This will reduce battery discharging.

Excessive IOD can be caused by:

- Electrical items left on.
- Faulty or improperly adjusted switches.
- Faulty or shorted electronic modules and components.
- An internally shorted generator.
- Intermittent shorts in the wiring.

If the IOD is over twenty-five milliamperes, the problem must be found and corrected before replacing a battery. In most cases, the battery can be charged and returned to service after the excessive IOD condition has been corrected.

(1) Verify that all electrical accessories are off. Turn off all lamps, remove the ignition key, and close all doors. If the vehicle is equipped with an illuminated entry system or an electronically tuned radio, allow the electronic timer function of these systems to automatically shut off (time out). This may take up to three minutes.

(2) Disconnect the battery negative cable.

(3) Set an electronic digital multi-meter to its highest amperage scale. Connect the multi-meter

BATTERY (Continued)

between the disconnected battery negative cable terminal clamp and the battery negative terminal post. Make sure that the doors remain closed so that the illuminated entry system is not activated. The multi-meter amperage reading may remain high for up to three minutes, or may not give any reading at all while set in the highest amperage scale, depending upon the electrical equipment in the vehicle. The multi-meter leads must be securely clamped to the battery negative cable terminal clamp and the battery negative terminal post. If continuity between the battery negative terminal post and the negative cable terminal clamp is lost during any part of the IOD test, the electronic timer function will be activated and all of the tests will have to be repeated.

(4) After about three minutes, the high-amperage IOD reading on the multi-meter should become very low or nonexistent, depending upon the electrical equipment in the vehicle. If the amperage reading remains high, remove and replace each fuse or circuit breaker in the Integrated Power Module (IPM), one at a time until the amperage reading becomes very low, or nonexistent. Refer to the appropriate wiring information in this service manual for complete Integrated Power Module fuse, circuit breaker, and circuit identification. This will isolate each circuit and identify the circuit that is the source of the high-amperage IOD. If the amperage reading remains high after removing and replacing each fuse and circuit breaker, disconnect the wire harness from the generator. If the amperage reading now becomes very low or nonexistent, refer to Charging System for the proper charging system diagnosis and testing procedures. After the high-amperage IOD has been corrected, switch the multi-meter to progressively lower amperage scales and, if necessary, repeat the fuse and circuit breaker remove-and-replace process to identify and correct all sources of excessive IOD. It is now safe to select the lowest milliampere scale of the multi-meter to check the low-amperage IOD.

CAUTION: Do not open any doors, or turn on any electrical accessories with the lowest milliampere scale selected, or the multi-meter may be damaged.

(5) Allow twenty minutes for the IOD to stabilize and observe the multi-meter reading. The low-amperage IOD should not exceed twenty-five milliamperes (0.025 ampere). If the current draw exceeds twenty-five milliamperes, isolate each circuit using the fuse and circuit breaker remove-and-replace process in Step 4. The multi-meter reading will drop to within the acceptable limit when the source of the excessive current draw is disconnected. Repair this circuit as required; whether a wiring short, incorrect switch adjustment, or a component failure is at fault.

STANDARD PROCEDURE - CHECKING BATTERY ELECTROLYTE LEVEL

The following procedure can be used to check the electrolyte level in a low-maintenance lead-acid battery.

(1) Unscrew and remove the battery cell caps with a flat-bladed screw driver (Fig. 10).

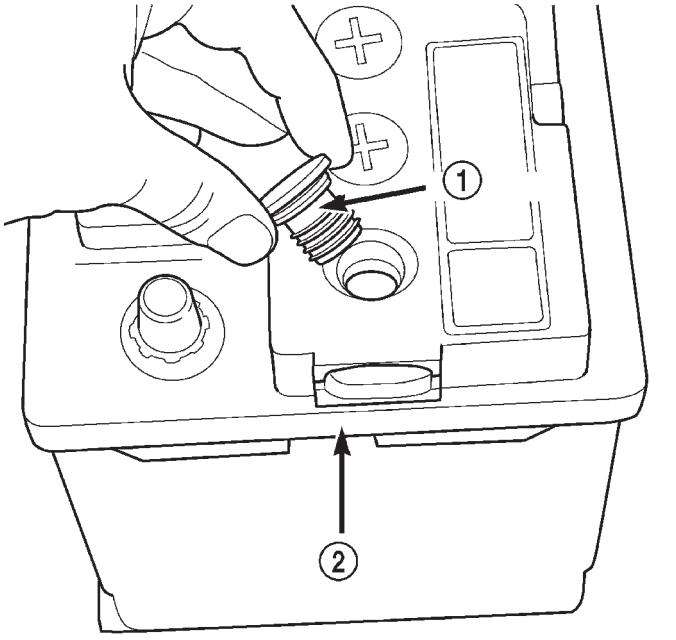

Fig. 10 BATTERY CELL CAP REMOVAL/ INSTALLATION - LOW-MAINTENANCE BATTERY ONLY

1 - BATTERY CELL CAP
2 - BATTERY CASE

WARNING: NEVER PUT YOUR FACE NEAR A GASSING, HOT OR SWELLED BATTERY. SERIOUS PERSONAL INJURY MAY RESULT.

(2) Wearing safety glasses, look through the battery cell cap holes to determine the level of the electrolyte in the battery. The electrolyte should be above the hooks inside the battery cells (Fig. 11).

(3) **Add only distilled water** until the electrolyte is above the hooks inside the battery cells (Fig. 11).

REMOVAL - BATTERY

WARNING: A SUITABLE PAIR OF HEAVY DUTY RUBBER GLOVES AND SAFETY GLASSES SHOULD BE WORN WHEN REMOVING OR SERVICING A BATTERY.

BATTERY (Continued)

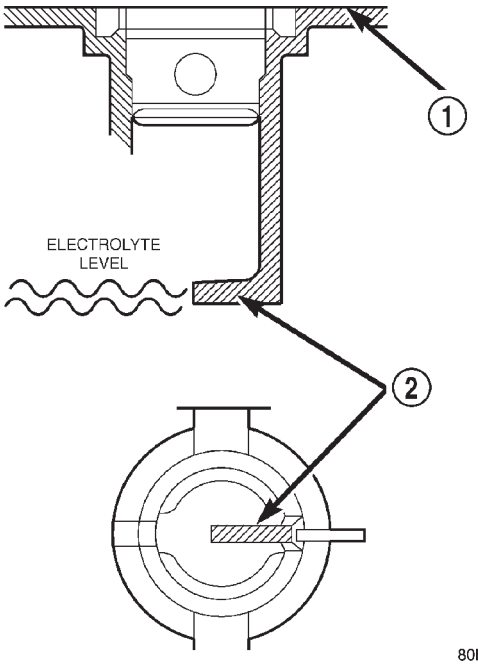

Fig. 11 HOOK INSIDE BATTERY CELLS - LOW-MAINTENANCE BATTERY ONLY

1 - TOP OF BATTERY
2 - HOOK INSIDE BATTERY CELLS

WARNING: REMOVE METALLIC JEWELRY TO AVOID INJURY BY ACCIDENTAL ARCING OF BATTERY CURRENT.

(1) Verify that the ignition switch and all accessories are OFF.
(2) Disconnect the battery cables from the battery posts, negative first (Fig. 12).
(3) Remove the battery hold down retaining nut.
(4) Remove the battery hold down bracket.
(5) Remove the battery from the vehicle.

INSTALLATION

(1) Position the battery in the battery tray.
(2) Install the battery hold down bracket and retaining nut. Torque the nut to 20 N·m (180 in. lbs.).
(3) Connect the battery cables to the battery posts, positive cable first. Torque terminal fasteners to 8.5 N·m (75 in. lbs.).

BATTERY HOLDDOWN

DESCRIPTION

The battery hold down hardware consists of a molded plastic lip that is integral to the outboard edge of the battery tray and support unit, a molded steel hold down bracket and a single hex nut with a coned washer.

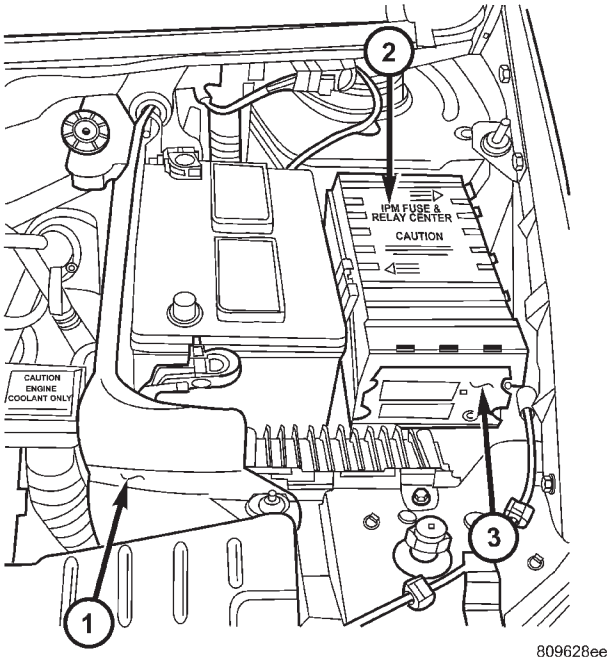

Fig. 12 BATTERY POSITION & ORIENTATION

1 - BATTERY THERMOWRAP (IF EQUIPPED)
2 - INTEGRATED POWER MODULE
3 - FRONT CONTROL MODULE

When installing a battery into the battery tray, be certain that the hold down hardware is properly installed and that the fasteners are tightened to the proper specifications. Improper hold down fastener tightness, whether too loose or too tight, can result in damage to the battery, the vehicle or both. Refer to **Battery Hold Downs** in this section of this service manual for the location of the proper battery hold down installation procedures, including the proper hold down fastener tightness specifications.

OPERATION

The battery holddown secures the battery in the battery tray. This holddown is designed to prevent battery movement during the most extreme vehicle operation conditions. Periodic removal and lubrication of the battery holddown hardware is recommended to prevent hardware seizure at a later date.

NOTE: Never operate a vehicle without a battery holddown device properly installed. Damage to the vehicle, components and battery could result.

REMOVAL

All of the battery hold down hardware can be serviced without removal of the battery or the battery tray and support unit.

BATTERY HOLDDOWN (Continued)

(1) Turn the ignition switch to the Off position. Be certain that all electrical accessories are turned off.

(2) Remove the nut with washer that secures the battery hold down bracket to the battery tray and support unit.

(3) Remove the battery hold down bracket from the battery tray and support unit.

INSTALLATION

(1) Install the battery hold down bracket in the battery tray and support unit.

(2) Install the nut with washer that secures the battery hold down bracket to the battery tray and support unit. Torque to 20 N·m (180 in. lbs.).

BATTERY CABLES

DESCRIPTION

The battery cables are large gauge, stranded copper wires sheathed within a heavy plastic or synthetic rubber insulating jacket. The wire used in the battery cables combines excellent flexibility and reliability with high electrical current carrying capacity. Refer to **Wiring Diagrams** in the index of this service manual for the location of the proper battery cable wire gauge information.

A clamping type female battery terminal made of stamped metal is attached to one end of the battery cable wire. A square headed pinch-bolt and hex nut are installed at the open end of the female battery terminal clamp. Large eyelet type terminals are crimped onto the opposite end of the battery cable wire and then solder-dipped. The battery positive cable wires have a red insulating jacket to provide visual identification and feature a larger female battery terminal clamp to allow connection to the larger battery positive terminal post. The battery negative cable wires have a black insulating jacket and a smaller female battery terminal clamp.

The battery cables cannot be repaired and, if damaged or faulty they must be replaced. Both the battery positive and negative cables are available for service replacement only as a unit with the battery wire harness, which may include portions of the wiring circuits for the generator and other components on some models. Refer to **Wiring Diagrams** in the index of this service manual for the location of more information on the various wiring circuits included in the battery wire harness for the vehicle being serviced.

OPERATION

The battery cables connect the battery terminal posts to the vehicle electrical system. These cables also provide a path back to the battery for electrical current generated by the charging system for restoring the voltage potential of the battery. The female battery terminal clamps on the ends of the battery cable wires provide a strong and reliable connection of the battery cable to the battery terminal posts. The terminal pinch bolts allow the female terminal clamps to be tightened around the male terminal posts on the top of the battery. The eyelet terminals secured to the opposite ends of the battery cable wires from the female battery terminal clamps provide secure and reliable connection of the battery cables to the vehicle electrical system.

The battery positive cable terminal clamp is attached to the ends of two wires. One wire has an eyelet terminal that connects the battery positive cable to the B(+) terminal stud of the Integrated Power Module (IPM), and the other wire has an eyelet terminal that connects the battery positive cable to the B(+) terminal stud of the engine starter motor solenoid. The battery negative cable terminal clamp is also attached to the ends of two wires. One wire has an eyelet terminal that connects the battery negative cable to the vehicle powertrain through a stud on the left side of the engine cylinder block. The other wire has an eyelet terminal that connects the battery negative cable to the vehicle body through a ground screw on the left front fender inner shield, near the battery.

DIAGNOSIS AND TESTING - BATTERY CABLE

A voltage drop test will determine if there is excessive resistance in the battery cable terminal connections or the battery cable. If excessive resistance is found in the battery cable connections, the connection point should be disassembled, cleaned of all corrosion or foreign material, then reassembled. Following reassembly, check the voltage drop for the battery cable connection and the battery cable again to confirm repair.

When performing the voltage drop test, it is important to remember that the voltage drop is giving an indication of the resistance between the two points at which the voltmeter probes are attached. **EXAMPLE:** When testing the resistance of the battery positive cable, touch the voltmeter leads to the battery positive cable terminal clamp and to the battery positive cable eyelet terminal at the starter solenoid B(+) terminal stud. If you probe the battery positive terminal post and the battery positive cable eyelet terminal at the starter solenoid B(+) terminal stud, you are reading the combined voltage drop in the battery positive cable terminal clamp-to-terminal post connection and the battery positive cable.

BATTERY CABLES (Continued)

VOLTAGE DROP TEST

The following operation will require a voltmeter accurate to 1/10 (0.10) volt. Before performing this test, be certain that the following procedures are accomplished:

- The battery is fully-charged and load tested. Refer to Standard Procedures for the proper battery charging and load test procedures.
- Fully engage the parking brake.
- If the vehicle is equipped with an automatic transmission, place the gearshift selector lever in the Park position. If the vehicle is equipped with a manual transmission, place the gearshift selector lever in the Neutral position and block the clutch pedal in the fully depressed position.
- Verify that all lamps and accessories are turned off.
- To prevent the engine from starting, remove the Automatic Shut Down (ASD) relay. The ASD relay is located in the Intelligent Power Module (IPM), in the engine compartment. See the fuse and relay layout label affixed to the underside of the IPM cover for ASD relay identification and location.

(1) Connect the positive lead of the voltmeter to the battery negative terminal post. Connect the negative lead of the voltmeter to the battery negative cable terminal clamp (Fig. 13). Rotate and hold the ignition switch in the Start position. Observe the voltmeter. If voltage is detected, correct the poor connection between the battery negative cable terminal clamp and the battery negative terminal post.

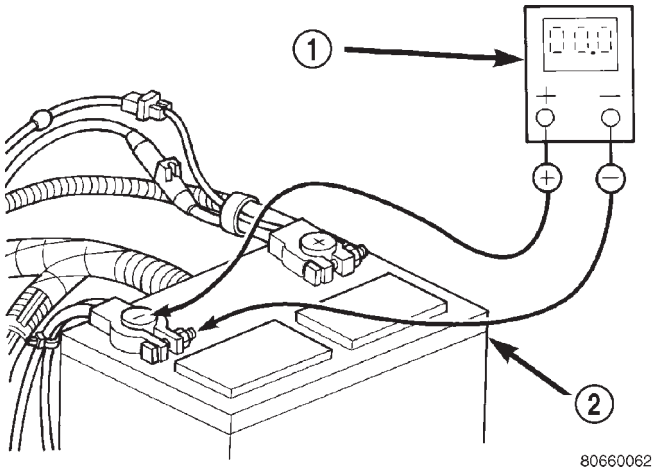

Fig. 13 TEST BATTERY NEGATIVE CONNECTION RESISTANCE - TYPICAL

1 - VOLTMETER
2 - BATTERY

(2) Connect the positive lead of the voltmeter to the battery positive terminal post. Connect the negative lead of the voltmeter to the battery positive cable terminal clamp (Fig. 14). Rotate and hold the ignition switch in the Start position. Observe the voltmeter. If voltage is detected, correct the poor connection between the battery positive cable terminal clamp and the battery positive terminal post.

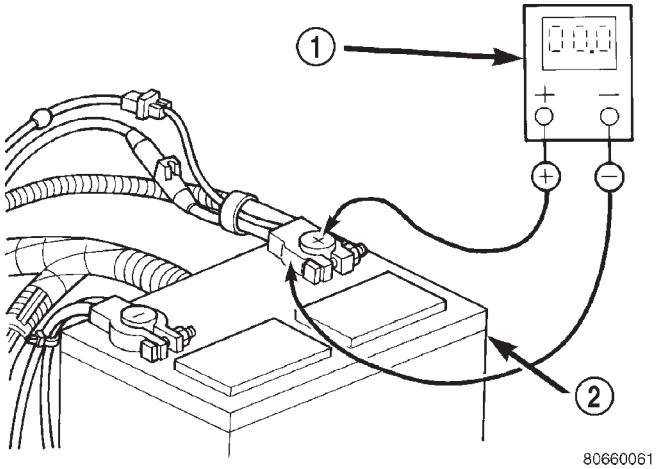

Fig. 14 TEST BATTERY POSITIVE CONNECTION RESISTANCE - TYPICAL

1 - VOLTMETER
2 - BATTERY

(3) Connect the voltmeter to measure between the battery positive cable terminal clamp and the starter solenoid B(+) terminal stud (Fig. 15). Rotate and hold the ignition switch in the Start position. Observe the voltmeter. If the reading is above 0.2 volt, clean and tighten the battery positive cable eyelet terminal connection at the starter solenoid B(+) terminal stud. Repeat the test. If the reading is still above 0.2 volt, replace the faulty battery positive cable.

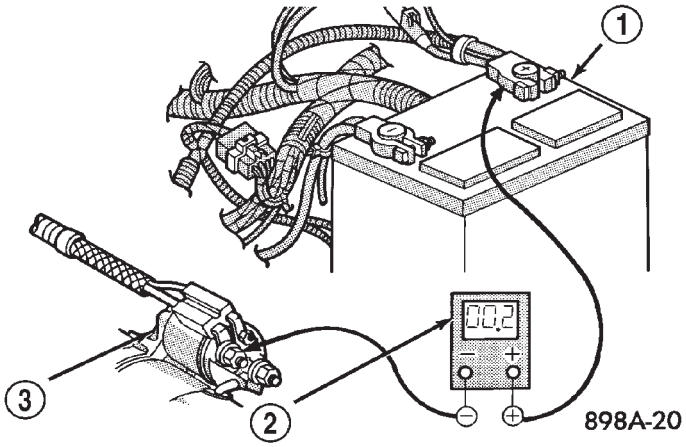

Fig. 15 TEST BATTERY POSITIVE CABLE RESISTANCE - TYPICAL

1 - BATTERY
2 - VOLTMETER
3 - STARTER MOTOR

BATTERY CABLES (Continued)

(4) Connect the voltmeter to measure between the battery negative cable terminal clamp and a good clean ground on the engine block (Fig. 16). Rotate and hold the ignition switch in the Start position. Observe the voltmeter. If the reading is above 0.2 volt, clean and tighten the battery negative cable eyelet terminal connection to the engine block. Repeat the test. If the reading is still above 0.2 volt, replace the faulty battery negative cable.

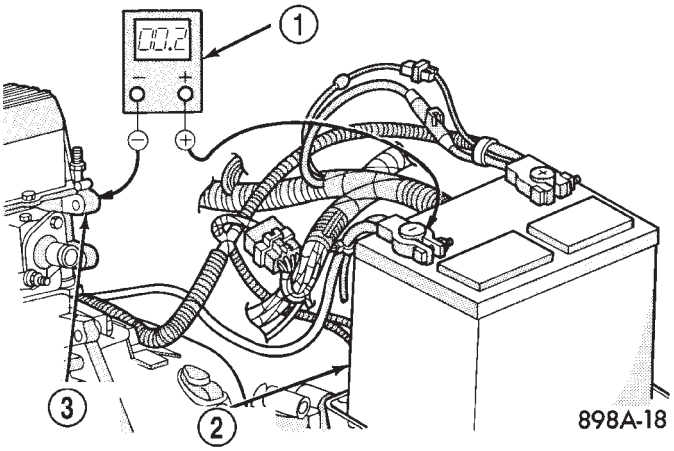

Fig. 16 TEST GROUND CIRCUIT RESISTANCE - TYPICAL

1 - VOLTMETER
2 - BATTERY
3 - ENGINE GROUND

REMOVAL

The battery cables on this model may include portions of wiring circuits for the generator and other components on the vehicle. If battery cable replacement is required, it will be necessary to extract the cables out of the engine wire harness assembly. Use care not to damage the other wires and circuits which are also packaged into the engine wire harness assembly.

(1) Turn the ignition switch to the Off position. Be certain that all electrical accessories are turned off.

(2) Disconnect and isolate the negative battery cable terminal.

(3) Remove the battery thermowrap (if equipped) from the battery tray.

(4) Remove the tape from the engine wire harness assembly, to access the desired battery cable.

(5) One at a time, trace and disconnect the battery cable retaining fasteners and routing clips until the desired cable is free from the vehicle.

(6) Feed the battery cable out of the vehicle.

INSTALLATION

(1) Position the battery cable in the vehicle.

(2) One at a time, trace and install the battery cable retaining fasteners and routing clips until the desired cable is properly installed in the engine wire harness assembly.

(3) Install the tape on the engine wire harness assembly.

(4) Install the battery thermowrap (if equipped) on the battery tray.

(5) Connect the negative battery cable terminal.

BATTERY TRAY

DESCRIPTION

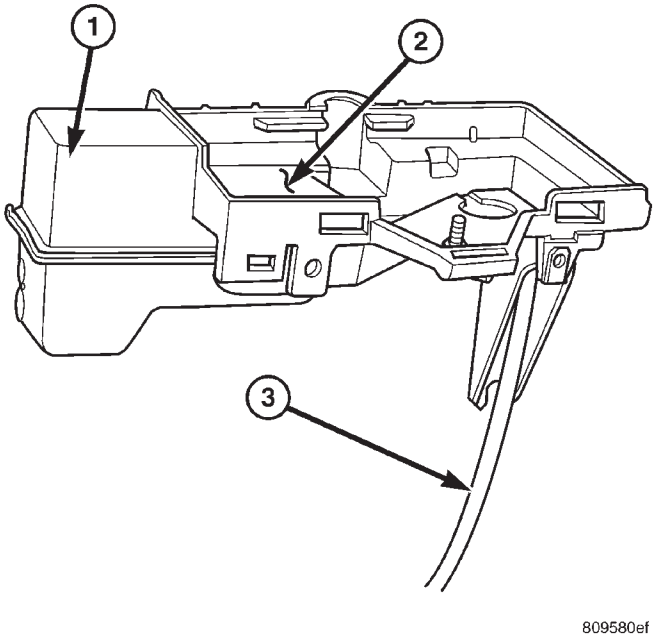

Fig. 17 RS BATTERY TRAY

1 - ENGINE VACUUM RESERVOIR
2 - BATTERY TRAY ASSEMBLY
3 - DRAINAGE HOSE

The battery is mounted in a molded plastic battery tray and support unit located in the left front corner of the engine compartment. The battery tray and support unit is secured with two nuts, one is located directly under the battery and the other is located on the right side of the tray which also serves as a coolant bottle neck retaining bolt. An additional bolt is located directly under the battery.

The battery tray and support unit also includes a engine vacuum reservoir, located in the rear of the unit (Fig. 17). And a drainage hose, located in the front of the unit (Fig. 17).

BATTERY TRAY (Continued)

OPERATION

The battery tray provides a secure mounting location and supports the battery. The battery tray also provides the anchor point for the battery holddown hardware. The battery tray and the battery holddown hardware combine to secure and stabilize the battery in the engine compartment, which prevents battery movement during vehicle operation. Unrestrained battery movement during vehicle operation could result in damage to the vehicle, the battery, or both.

The battery tray used on this model also includes a engine vacuum reservoir and drainage hose. The vacuum reservoir provides a storage container for engine vacuum. Refer to the engine section of the service manual for more engine vacuum information. The drainage hose provides means for any liquid that might collect in the bottom of the battery tray to drain under the vehicle.

REMOVAL

(1) Disconnect and isolate the negative battery cable.

(2) Remove the battery from the vehicle. Refer to the procedure in this section.

(3) Remove the battery tray retaining fasteners (Fig. 18).

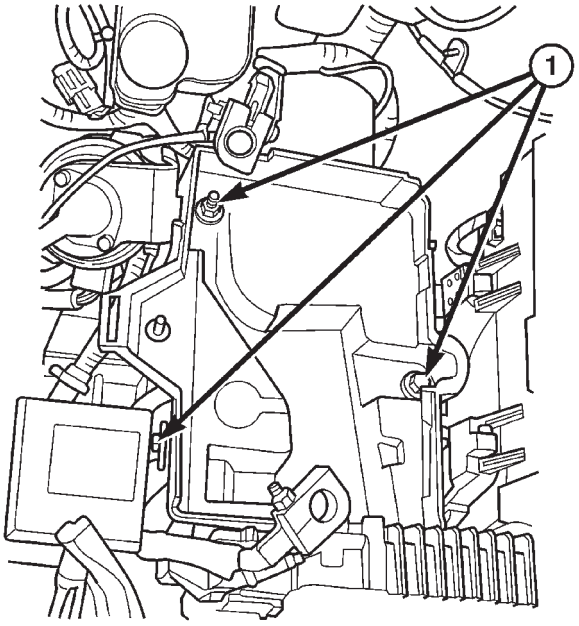

Fig. 18 BATTERY TRAY POSITION & ORIENTATION

1 - BATTERY TRAY RETAINING FASTENERS

(4) Pull battery tray up far enough to disconnect the engine vacuum harness hose from the battery tray mounted, vacuum reservoir.

(5) Remove the battery tray from the vehicle.

INSTALLATION

(1) Position the battery tray in the vehicle.

(2) Connect the engine vacuum harness hose on the battery tray mounted vacuum reservoir.

(3) Position drainage hose and install the battery tray retaining fasteners (Fig. 18).

(4) Install the battery in the vehicle. Refer to the procedure in this section.

(5) Connect the negative battery cable.

THERMOWRAP

DESCRIPTION

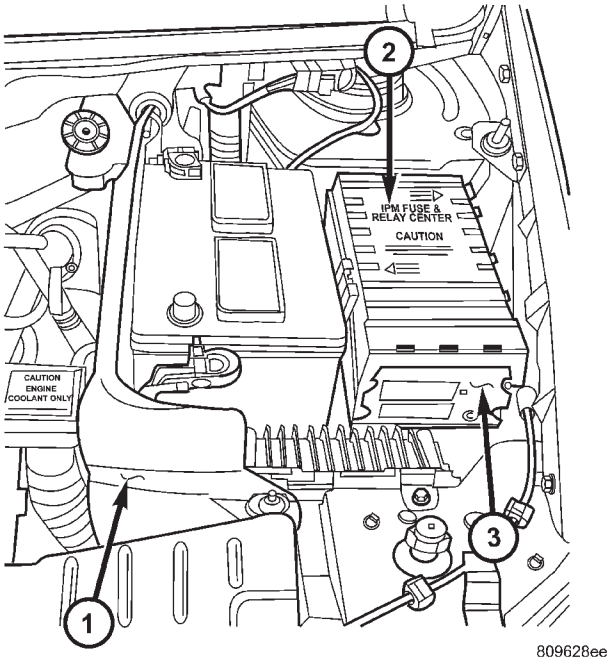

Fig. 19 BATTERY POSITION & ORIENTATION

1 - BATTERY THERMOWRAP (IF EQUIPPED)
2 - INTEGRATED POWER MODULE
3 - FRONT CONTROL MODULE

A one-piece slip-on thermowrap unit shields the battery case from engine compartment heat (Fig. 19).

THERMOWRAP (Continued)

OPERATION

The thermowrap protects the battery from engine compartment temperature extremes. The temperature of the battery can affect battery life. The air trapped in the padded material of the thermowrap creates a dead air space, which helps to insulate the sides of the battery case from the air temperature found in the surrounding engine compartment.

REMOVAL

(1) Disconnect and isolate the negative battery cable.
(2) Disconnect the positive battery cable.
(3) Lift the battery thermowrap straight up to remove from the battery.

INSTALLATION

(1) Position the thermowrap on the battery.
(2) Connect the negative and positive battery cables.

CHARGING

TABLE OF CONTENTS

page

CHARGING
- DESCRIPTION - CHARGING SYSTEM 21
- OPERATION - CHARGING SYSTEM 21
- DIAGNOSIS AND TESTING - ON-BOARD DIAGNOSTIC SYSTEM 22
- SPECIFICATIONS
  - GENERATOR 23
  - TORQUE 23
- SPECIAL TOOLS 23

BATTERY TEMPERATURE SENSOR
- DESCRIPTION 24
- OPERATION 24
- REMOVAL 24

GENERATOR
- DESCRIPTION 24
- OPERATION 24
- REMOVAL
  - REMOVAL - 2.4L 24
  - REMOVAL - 3.3/3.8L 24
- INSTALLATION
  - INSTALLATION - 2.4L 25
  - INSTALLATION - 3.3/3.8L 25

GENERATOR DECOUPLER PULLEY
- DESCRIPTION 25
- OPERATION 26
- DIAGNOSIS AND TESTING - GENERATOR DECOUPLER PULLEY 26
- REMOVAL 26
- INSTALLATION 26

VOLTAGE REGULATOR
- DESCRIPTION 27
- OPERATION 27

CHARGING

DESCRIPTION - CHARGING SYSTEM

The charging system consists of:

- Generator
- Decoupler Pulley (If equipped)
- Electronic Voltage Regulator (EVR) circuitry within the Powertrain Control Module (PCM)
- Ignition switch (refer to the Ignition System section for information)
- Battery (refer to the Battery section for information)
- Inlet Air Temperature (calculated battery temperature)
- Voltmeter (refer to the Instrument Cluster section for information if equipped)
- Wiring harness and connections (refer to the Wiring section for information)
- Accessory drive belt (refer to the Cooling section for more information)

OPERATION - CHARGING SYSTEM

The charging system is turned on and off with the ignition switch. The system is on when the engine is running and the ASD relay is energized. The ASD relay is energized when the PCM grounds the ASD control circuit. This voltage is connected through the PCM or IPM (intelligent power module) (if equipped) and supplied to one of the generator field terminals (Gen. Source +) at the back of the generator.

The generator is driven by the engine through a serpentine belt and pulley or decoupler pulley arrangement.

The amount of DC current produced by the generator is controlled by the EVR (field control) circuitry contained within the PCM. This circuitry is connected in series with the second rotor field terminal and ground.

An Inlet air temperature sensor is used to calculate the temperature near the battery. This temperature data, along with data from monitored line voltage (battery voltage sense circuit), is used by the PCM to vary the battery charging rate. This is done by cycling the ground path to control the strength of the rotor magnetic field. The PCM then compensates and regulates generator current output accordingly to maintain system voltage at the targeted system voltage based on battery temperature.

All vehicles are equipped with On-Board Diagnostics (OBD). All OBD-sensed systems, including EVR (field control) circuitry, are monitored by the PCM. Each monitored circuit is assigned a Diagnostic Trouble Code (DTC). The PCM will store a DTC in electronic memory for certain failures it detects and illuminate the (MIL) lamp. Refer to On-Board Diagnostics in the Electronic Control Modules(Refer to 8 - ELECTRICAL/ELECTRONIC CONTROL MODULES/POWERTRAIN CONTROL MODULE - DESCRIPTION) section for more DTC information.

CHARGING (Continued)

The Check Gauges Lamp (if equipped) or Battery Lamp monitors: **charging system voltage,** engine coolant temperature and engine oil pressure. If an extreme condition is indicated, the lamp will be illuminated. The signal to activate the lamp is sent via the PCI bus circuits. The lamp is located on the instrument panel. Refer to the Instrument Cluster section for additional information.

The PCM uses the inlet air temperature sensor to control the charge system voltage. This temperature, along with data from monitored line voltage, is used by the PCM to vary the battery charging rate. The system voltage is higher at cold temperatures and is gradually reduced as the calculated battery temperature increases.

The ambient temperature sensor is used to control the battery voltage based upon ambient temperature (approximation of battery temperature). The PCM maintains the optimal output of the generator by monitoring battery voltage and controlling it to a range of 13.5 - 14.7 volts based on battery temperature.

DIAGNOSIS AND TESTING - ON-BOARD DIAGNOSTIC SYSTEM

The Powertrain Control Module (PCM) monitors critical input and output circuits of the charging system, making sure they are operational. A Diagnostic Trouble Code (DTC) is assigned to each input and output circuit monitored by the OBD system. Some circuits are checked continuously and some are checked only under certain conditions.

If the OBD system senses that a monitored circuit is bad, it will put a DTC into electronic memory. The DTC will stay in electronic memory as long as the circuit continues to be bad. The PCM is programmed to clear the memory after 50 engine starts if the problem does not occur again.

DIAGNOSTIC TROUBLE CODES

A DTC description can be read using the DRBIII® scan tool. Refer to the appropriate Powertrain Diagnostic Procedures manual for information.

A DTC does not identify which component in a circuit is bad. Thus, a DTC should be treated as a symptom, not as the cause for the problem. In some cases, because of the design of the diagnostic test procedure, a DTC can be the reason for another DTC to be set. Therefore, it is important that the test procedures be followed in sequence, to understand what caused a DTC to be set.

ERASING DIAGNOSTIC TROUBLE CODES

The DRBIII® Scan Tool must be used to erase a DTC.

The following procedures may be used to diagnose the charging system if:

- the check gauges lamp or battery lamp is illuminated with the engine running
- the voltmeter (if equipped) does not register properly
- an undercharged or overcharged battery condition occurs.

Remember that an undercharged battery is often caused by:

- accessories being left on with the engine not running
- a faulty or improperly adjusted switch that allows a lamp to stay on. Refer to Ignition-Off Draw Test (Refer to 8 - ELECTRICAL/BATTERY SYSTEM/ BATTERY - STANDARD PROCEDURE)

INSPECTION

The Powertrain Control Module (PCM) monitors critical input and output circuits of the charging system, making sure they are operational. A Diagnostic Trouble Code (DTC) is assigned to each input and output circuit monitored by the On-Board Diagnostic (OBD) system. Some charging system circuits are checked continuously, and some are checked only under certain conditions.

Refer to Diagnostic Trouble Codes in; Powertrain Control Module; Electronic Control Modules for more DTC information. This will include a complete list of DTC's including DTC's for the charging system.

To perform a complete test of the charging system, refer to the appropriate Powertrain Diagnostic Procedures service manual and the DRBIII® scan tool. Perform the following inspections before attaching the scan tool.

(1) Inspect the battery condition. Refer to the Battery section (Refer to 8 - ELECTRICAL/BATTERY SYSTEM - DIAGNOSIS AND TESTING) for procedures.

(2) Inspect condition of battery cable terminals, battery posts, connections at engine block, starter solenoid and relay. They should be clean and tight. Repair as required.

(3) Inspect all fuses in both the fuseblock and Power Distribution Center (PDC) for tightness in receptacles. They should be properly installed and tight. Repair or replace as required.

(4) Inspect generator mounting bolts for tightness. Replace or tighten bolts if required. Refer to the Generator Removal/Installation section of this group for torque specifications (Refer to 8 - ELECTRICAL/ CHARGING - SPECIFICATIONS).

(5) Inspect generator drive belt condition and tension. Tighten or replace belt as required. Refer to Belt Tension Specifications(Refer to 7 - COOLING/ ACCESSORY DRIVE - SPECIFICATIONS).

CHARGING (Continued)

(6) Inspect decoupler pulley (if equipped). Ensure decoupler pulley is driving the alternator rotor.

(7) Inspect automatic belt tensioner (if equipped). Refer to the Cooling System for more information.

(8) Inspect generator electrical connections at generator field, battery output, and ground terminal (if equipped). Also check generator ground wire connection at engine (if equipped). They should all be clean and tight. Repair as required.

SPECIFICATIONS

GENERATOR

Type	Engine	Minimun Test Amperage
Denso	2.4 L	125 Amp
Denso	3.3/3.8L	135 Amp or 145 Amp
Test Specification: 1. Engine RPM : 2500 RPM ±20 RPM 2. Voltage Output : 14.0 V ± 0.5 V 3. Field Current : 5 amps ± 0.1 amps		

Part number is located on the side of the generator.

TORQUE

DESCRIPTION	N·m	Ft. Lbs.	In. Lbs.
Battery Hold Down Clamp Bolt	20	14.7	180
Generator B+ Nut	12.4	9.2	110
Battery Terminal Nut	4		35
Generator Mounting Bolt 2.4L	28.2	20.8	250
Generator Mounting Bolts 3.3/3.8L	54.2	40	
Starter Solenoid Battery Nut 3.3/3.8L	11.3	8.3	100
Generator Decoupler	109.8	81	

SPECIAL TOOLS

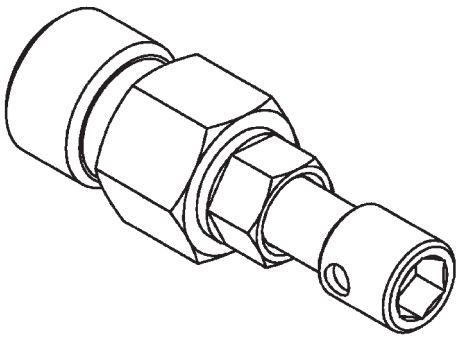

Fig. 1 GENERATOR DECOUPLER 8433

BATTERY TEMPERATURE SENSOR

DESCRIPTION

The PCM incorporates a Battery Temperature Sensor (BTS) on its circuit board.

OPERATION

The PCM uses the temperature of the battery area to control the charge system voltage. This temperature, along with data from monitored line voltage, is used by the PCM to vary the battery charging rate. The system voltage is higher at cold temperatures and is gradually reduced as temperature around the battery increases.

The ambient temperature sensor is used to control the battery voltage based upon ambient temperature (approximation of battery temperature). The PCM maintains the optimal output of the generator by monitoring battery voltage and controlling it to a range of 13.5 - 14.7 volts based on battery temperature.

The battery temperature sensor is also used for OBD II diagnostics. Certain faults and OBD II monitors are either enabled or disabled depending upon the battery temperature sensor input (example: disable purge and EGR, enable LDP). Most OBD II monitors are disabled below 20°F.

REMOVAL

The battery temperature sensor is not serviced separately. If replacement is necessary, the PCM must be replaced.

GENERATOR

DESCRIPTION

The generator is belt-driven by the engine. It is serviced only as a complete assembly. The generator produces DC voltage at the B+ terminal. If the generator is failed, the generator assembly subcomponents (generator and decoupler pulley) must be inspected for individual failure and replaced accordingly.

OPERATION

As the energized rotor begins to rotate within the generator, the spinning magnetic field induces a current into the windings of the stator coil. Once the generator begins producing sufficient current, it also provides the current needed to energize the rotor.

The Y type stator winding connections deliver the induced AC current to 3 positive and 3 negative diodes for rectification. From the diodes, rectified DC current is delivered to the vehicles electrical system through the generator, battery, and ground terminals.

Excessive or abnormal noise emitting from the generator may be caused by:

- Worn, loose or defective bearings
- Loose or defective drive pulley (2.4L) or decoupler (3.3/3.8L)
- Incorrect, worn, damaged or misadjusted drive belt
- Loose mounting bolts
- Misaligned drive pulley
- Defective stator or diode
- Damaged internal fins

REMOVAL

REMOVAL - 2.4L

(1) Release hood latch and open hood.
(2) Disconnect battery negative cable.
(3) Disconnect the Inlet Air Temperature sensor.
(4) Remove the Air Box, refer to the Engine/Air Cleaner for more information.
(5) Remove the EVAP Purge solenoid from its bracket and reposition.
(6) Disconnect the push-in field wire connector from back of generator.
(7) Remove nut holding B+ wire terminal to back of generator.
(8) Separate B+ terminal from generator.
(9) Remove accessory drive belt, refer to the Cooling System section for proper procedures.
(10) Remove the generator.

REMOVAL - 3.3/3.8L

(1) Release hood latch and open hood.
(2) Disconnect battery negative cable.
(3) Disconnect the push-in field wire connector from back of generator.
(4) Remove nut holding B+ wire terminal to back of generator.
(5) Separate B+ terminal from generator.
(6) Raise vehicle and support.
(7) Remove the right front lower splash shield.
(8) Remove accessory drive belt, refer to the Cooling System section for proper procedures.
(9) Remove the lower oil dip stick tube bolt (Fig. 2).
(10) Remove wiring harness from the oil dip stick tube
(11) Remove the 3 mounting bolts.
(12) Lower vehicle.
(13) Remove oil dip stick tube from vehicle.
(14) Roll and remove the generator from vehicle (Fig. 3).

GENERATOR (Continued)

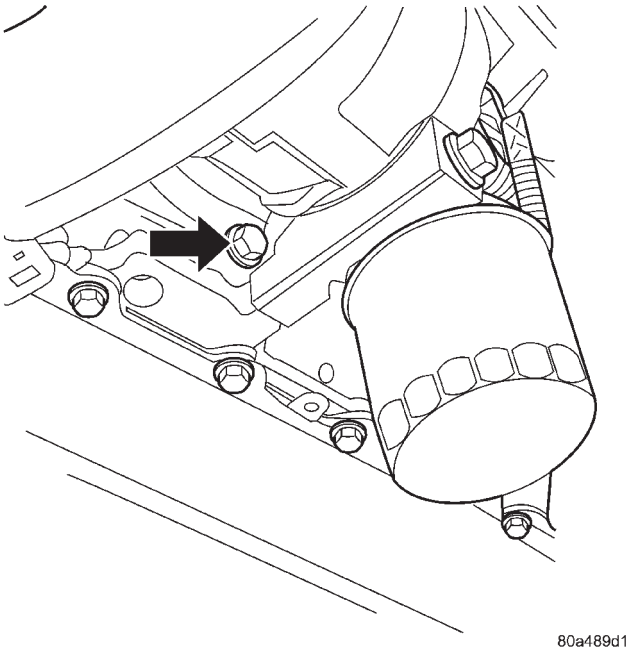

Fig. 2 DIP STICK LOWER BOLT

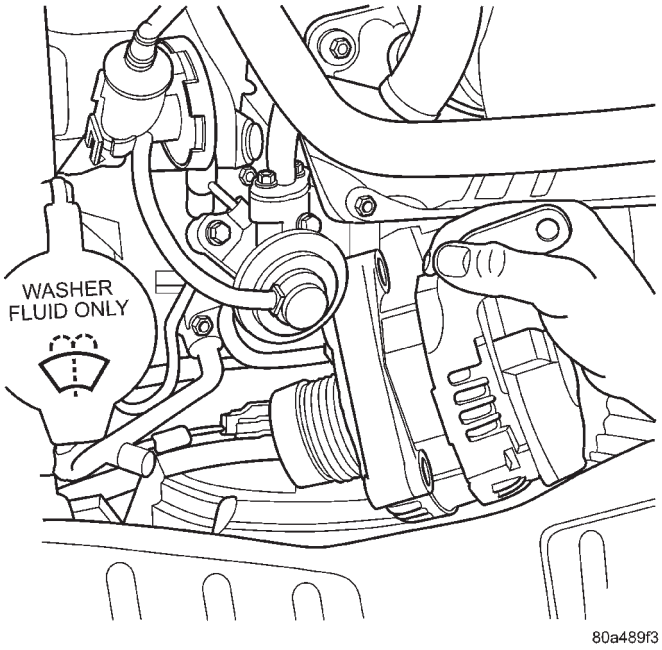

Fig. 3 GENERATOR 3.3/3.8L

INSTALLATION

INSTALLATION - 2.4L

(1) Install the generator.
(2) Install the accessory drive belt, refer to the Cooling System section for proper procedures.
(3) Connect B+ terminal to generator.
(4) Install nut holding B+ wire terminal to back of generator.
(5) Connect the push-in field wire connector to back of generator.
(6) Install the EVAP Purge solenoid to its bracket.
(7) Install the Air Box, refer to the Engine/Air Cleaner for more information.
(8) Connect the Inlet Air Temperature sensor.
(9) Connect battery negative cable.

INSTALLATION - 3.3/3.8L

(1) Roll and place generator in position on vehicle (Fig. 3).
(2) Install upper bolts to hold generator in place.
(3) Lubricate the o-ring. Install oil dip stick tube.
(4) Install the upper oil dip stick tube bolt.
(5) Place B+ terminal in position on generator.
(6) Install nut to hold B+ wire terminal to back of generator.
(7) Connect the push-in field wire connector into back of generator.
(8) Raise vehicle and support.
(9) Install the lower mounting bolt and tighten.
(10) Install the lower oil dip stick tube bolt and tighten (Fig. 2).
(11) Install accessory drive belt, refer to the Cooling System section for proper procedures.
(12) Install the right front lower splash shield.
(13) Lower vehicle.
(14) Install wiring harness to the oil dip stick tube
(15) Connect battery negative cable.
(16) Verify generator output rate.

GENERATOR DECOUPLER PULLEY

DESCRIPTION

The Generator Decoupler is a one way clutch (Fig. 4). It is attached to the generator and replaces the standard pulley. It is a non-serviceable item and is to be replaced as an assembly. It is a dry operation (no grease or lubricants). The operation of it is not temperature sensitive and has a low sensitivity to electrical load.

GENERATOR DECOUPLER PULLEY (Continued)

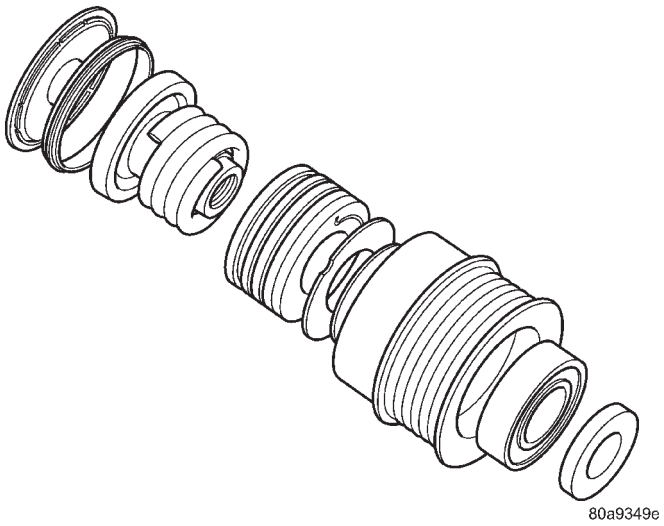

Fig. 4 GENERATOR DECOUPLER 3.3/3.8L

OPERATION

The generator decoupler is a one way clutch and should be replaced as an assembly. It is designed to help reduce belt tension fluctuation, reduce fatigue loads, improve belt life, reduce hubloads on components, and reduce noise.

DIAGNOSIS AND TESTING - GENERATOR DECOUPLER PULLEY

CONDITION	POSSIBLE CAUSES	CORRECTION
Does not drive generator (Generator not Charging)	Clutch failure	Replace Decoupler

REMOVAL

(1) Release hood latch and open hood.
(2) Disconnect battery negative cable.
(3) Raise vehicle and support.
(4) Remove the right front lower splash shield.
(5) Remove accessory drive belt, refer to the Cooling System section for proper procedures (Fig. 5).
(6) Lower vehicle.
(7) Remove the Air Box, refer to the Engine section for more information.
(8) Use Special Tool #8433 (Fig. 7) to loosen the Generator Decoupler (Fig. 6).
(9) Remove the tool.
(10) Remove the Generator Decoupler.

INSTALLATION

(1) Install the Generator Decoupler to the generator shaft.
(2) Use Special Tool #8433 (Fig. 7) to tighten the Generator Decoupler (Fig. 8). Refer to the torque chart for the proper torque.

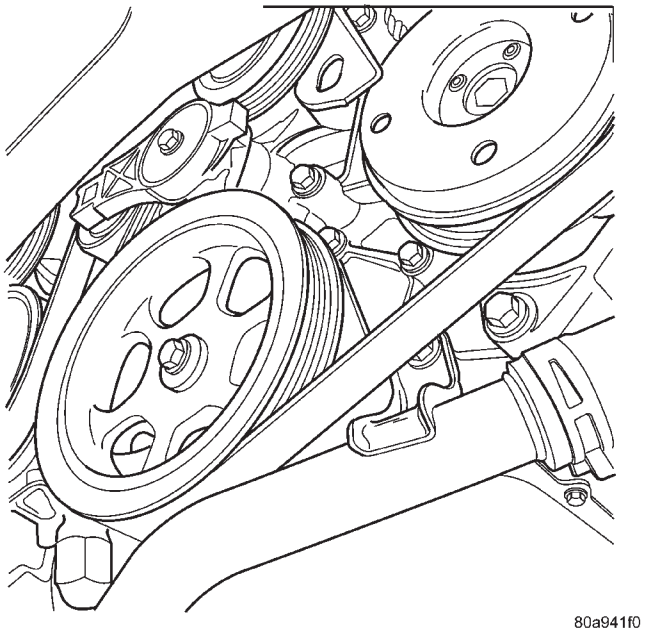

Fig. 5 DRIVE BELT 3.3/3.8L

GENERATOR DECOUPLER PULLEY (Continued)

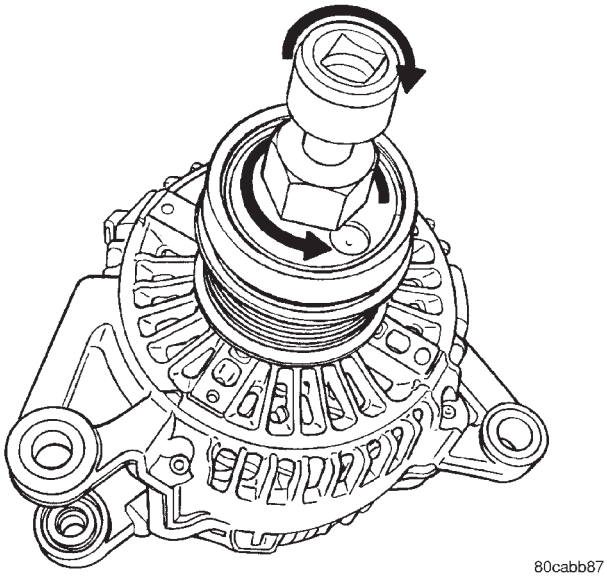

Fig. 6 DECOUPLER REMOVAL (LITENS)

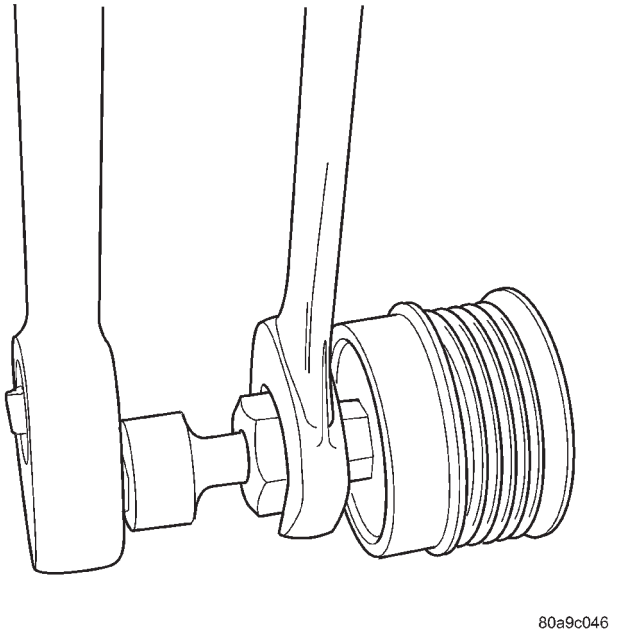

Fig. 7 SPECIAL TOOL 8433 AND DECOUPLER

(3) Install the Air Box, refer to the Engine section for more information.

(4) Raise vehicle and support.

(5) Install accessory drive belt, refer to the Cooling System section for proper procedures (Fig. 5).

(6) Install the right front lower splash shield.

(7) Lower vehicle.

(8) Connect battery negative cable.

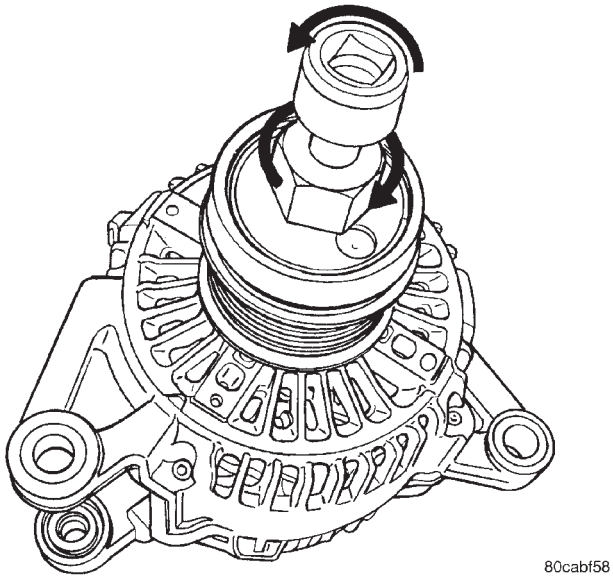

Fig. 8 DECOUPLER INSTALLATION (Litens)

VOLTAGE REGULATOR

DESCRIPTION

The Electronic Voltage Regulator (EVR) is not a separate component. It is actually a voltage regulating circuit located within the Powertrain Control Module (PCM). The EVR is not serviced separately. If replacement is necessary, the PCM must be replaced.

OPERATION

The amount of DC current produced by the generator is controlled by EVR circuitry contained within the PCM. This circuitry is connected in series with the generators second rotor field terminal and its ground.

Voltage is regulated by cycling the ground path to control the strength of the rotor magnetic field. The EVR circuitry monitors system line voltage (B+) and calculated battery temperature or inlet air temperature sensor (refer to Inlet Air Temperature Sensor, if equipped, for more information). It then determines a target charging voltage. If sensed battery voltage is lower than the target voltage, the PCM grounds the field winding until sensed battery voltage is at the target voltage. A circuit in the PCM cycles the ground side of the generator field at 250 times per second (250Hz), but has the capability to ground the field control wire 100% of the time (full field) to achieve the target voltage. If the charging rate cannot be monitored (limp-in), a duty cycle of 25% is used by the PCM in order to have some generator output. Also refer to Charging System Operation for additional information.

STARTING

TABLE OF CONTENTS

page

STARTING
DESCRIPTION 28
OPERATION 28
DIAGNOSIS AND TESTING
DIAGNOSIS AND TESTING - STARTING SYSTEM TEST 28
DIAGNOSIS AND TESTING - CONTROL CIRCUIT TEST 31
DIAGNOSIS AND TESTING - FEED CIRCUIT RESISTANCE TEST 33
DIAGNOSIS AND TESTING - FEED CIRCUIT TEST 33

page

SPECIFICATIONS
STARTER 34
Torques 34
STARTER MOTOR
REMOVAL
REMOVAL - 2.4L 35
REMOVAL - 3.3/3.8L 36
INSTALLATION
INSTALLATION - 2.4L 36
INSTALLATION - 3.3/3.8L 36

STARTING

DESCRIPTION

The starting system has (Fig. 1):

- Ignition switch
- Starter relay
- Transmission Range Sensor or Park/Neutral Switch
- Wiring harness
- Battery
- Starter motor with an integral solenoid
- Powertrain Control Module (PCM)

OPERATION

These components form two separate circuits. A high amperage circuit that feeds the starter motor up to 300+ amps, and a control circuit that operates on less than 20 amps.

The PCM controls a double start over-ride safety that does not allow the starter to be engaged if the engine is already running.

DIAGNOSIS AND TESTING

DIAGNOSIS AND TESTING - STARTING SYSTEM TEST

For circuit descriptions and diagrams, refer to the Wiring Diagrams.

WARNING: ON VEHICLES EQUIPPED WITH AIRBAGS, REFER TO THE PASSIVE RESTRAINT SYSTEMS BEFORE ATTEMPTING STEERING WHEEL, STEERING COLUMN, OR INSTRUMENT PANEL COMPONENT DIAGNOSIS OR SERVICE. FAILURE TO TAKE THE PROPER PRECAUTIONS COULD RESULT IN ACCIDENTAL AIRBAG DEPLOYMENT AND POSSIBLE PERSONAL INJURY.

INSPECTION

Before removing any unit from the starting system for repair or diagnosis, perform the following inspections:

- **Battery** - Visually inspect the battery for indications of physical damage and loose or corroded cable connections. Determine the state-of-charge and cranking capacity of the battery. Charge or replace the battery, if required. Refer to the Battery section for more information.
- **Ignition Switch** - Visually inspect the ignition switch for indications of physical damage and loose or corroded wire harness connections.
- **Transmission Range Sensor** - Visually inspect the transmission range sensor for indications of physical damage and loose or corroded wire harness connections.
- **Starter Relay** - Visually inspect the starter relay for indications of physical damage and loose or corroded wire harness connections.

STARTING (Continued)

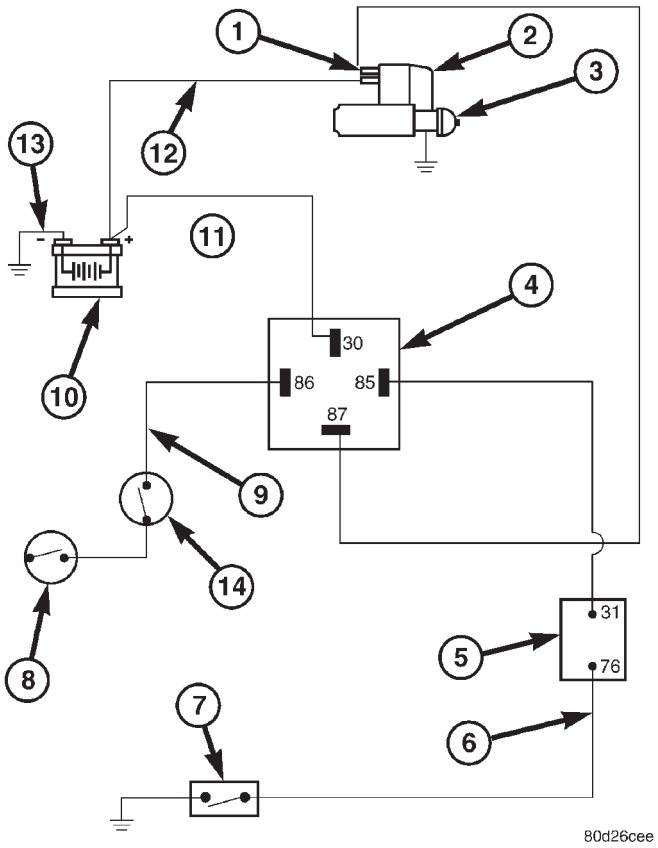

Fig. 1 STARTING SYSTEM SCHEMATIC

1 - SOLENOID TERMINAL
2 - STARTER SOLENOID
3 - STARTER MOTOR
4 - STARTER RELAY CONNECTOR
5 - PCM
6 - GROUND CIRCUIT
7 - TRANSMISSION RANGE SENSOR/PARK/NEUTRAL SENSE
8 - IGNITION SWITCH
9 - IGNITION FEED
10 - BATTERY
11 - BATTERY RELAY FEED
12 - POSITIVE CABLE
13 - NEGATIVE CABLE
14 - CLUTCH INTERLOCK SWITCH (MTX ONLY)

- **Starter** - Visually inspect the starter for indications of physical damage and loose or corroded wire harness connections.
- **Starter Solenoid** - Visually inspect the starter solenoid for indications of physical damage and loose or corroded wire harness connections.
- **Wiring** - Visually inspect the wire harness for damage. Repair or replace any faulty wiring, as required. Check for loose or corroded wire harness connections at main engine ground and remote jump post.
- **Power Distribution Center (PDC)** - Visually inspect the B+ connections at the PDC for physical damage and loose or corroded harness connections.

STARTING (Continued)

STARTING SYSTEM DIAGNOSIS

CONDITION	POSSIBLE CAUSE	CORRECTION
STARTER FAILS TO ENGAGE.	1. BATTERY DISCHARGED OR FAULTY.	1. REFER TO THE BATTERY SECTION FOR MORE INFORMATION. CHARGE OR REPLACE BATTERY, IF REQUIRED.
	2. STARTING CIRCUIT WIRING FAULTY.	2. REFER TO FEED CIRCUIT RESISTANCE TEST AND FEED CIRCUIT TEST IN THIS SECTION.
	3. STARTER RELAY FAULTY.	3. REFER TO RELAY TEST, IN THIS SECTION. REPLACE RELAY, IF NECESSARY.
	4. IGNITION SWITCH FAULTY.	4. REFER TO IGNITION SWITCH TEST, IN THE STEERING SECTION OR 8 WIRING DIAGRAMS. REPLACE SWITCH, IF NECESSARY.
	5. PARK/NEUTRAL POSITION SWITCH (AUTO TRANS) FAULTY OR MIS-ADJUSTED.	5. REFER PARK/NEUTRAL POSITION SWITCH TEST, IN THE TRANSAXLE. SECTION FOR MORE INFORMATION. REPLACE SWITCH, IF NECESSARY.
	6. CLUTCH PEDAL POSITION SWITCH (MAN TRANS) FAULTY.	6. REFER TO CLUTCH PEDAL POSITION SWITCH TEST, IN THE CLUTCH. SECTION. REPLACE SWITCH, IF NECESSARY.
	7. STARTER SOLENOID FAULTY.	7. REFER TO SOLENOID TEST, IN THIS SECTION. REPLACE STARTER ASSEMBLY, IF NECESSARY.
	8. STARTER ASSEMBLY FAULTY.	8. IF ALL OTHER STARTING SYSTEM COMPONENTS AND CIRCUITS CHECK OK, REPLACE STARTER ASSEMBLY.
	9. FAULTY TEETH ON RING GEAR.	9. ROTATE FLYWHEEL 360°, AND INSPECT TEETH AND RING GEAR REPLACED IF DAMAGED.
	10. PCM DOUBLE START OVERRIDE OUTPUT FAILURE.	10. REFER TO PCM DIAGNOSTIC. CHECK FOR CONTINUITY BETWEEN PCM AND TERMINAL 85. REPAIR OPEN CIRCUIT AS REQUIRED. IF OK, PCM MAY BE DEFECTIVE.
STARTER ENGAGES, FAILS TO TURN ENGINE.	1. BATTERY DISCHARGED OR FAULTY.	1. REFER TO THE BATTERY SECTION FOR MORE INFORMATION. CHARGE OR REPLACE BATTERY AS NECESSARY.
	2. STARTING CIRCUIT WIRING FAULTY.	2. REFER TO THE FEED CIRCUIT RESISTANCE TEST AND THE FEED CIRCUIT TEST IN THIS SECTION. REPAIR AS NECESSARY.
	3. STARTER ASSEMBLY FAULTY.	3. IF ALL OTHER STARTING SYSTEM COMPONENTS AND CIRCUITS CHECK OK, REPLACE STARTER ASSEMBLY.
	4. ENGINE SEIZED.	4. REFER TO THE ENGINE SECTION, FOR DIAGNOSTIC AND SERVICE PROCEDURES.
	5. LOOSE CONNECTION AT BATTERY, PDC, STARTER, OR ENGINE GROUND.	5. INSPECT FOR LOOSE CONNECTIONS.
	6. FAULTY TEETH ON RING GEAR.	6. ROTATE FLYWHEEL 360°, AND INSPECT TEETH AND RING GEAR REPLACED IF DAMAGED.

STARTING (Continued)

CONDITION	POSSIBLE CAUSE	CORRECTION
STARTER ENGAGES, SPINS OUT BEFORE ENGINE STARTS.	1. BROKEN TEETH ON STARTER RING GEAR.	1. REMOVE STARTER. INSPECT RING GEAR AND REPLACE IF NECESSARY.
	2. STARTER ASSEMBLY FAULTY.	2. IF ALL OTHER STARTING SYSTEM COMPONENTS AND CIRCUITS CHECK OK, REPLACE STARTER ASSEMBLY.
STARTER DOES NOT DISENGAGE.	1. STARTER IMPROPERLY INSTALLED.	1. INSTALL STARTER. TIGHTEN STARTER MOUNTING HARDWARE TO CORRECT TORQUE SPECIFICATIONS.
	2. STARTER RELAY FAULTY.	2. REFER TO RELAY TEST, IN THIS SECTION. REPLACE RELAY, IF NECESSARY.
	3. IGNITION SWITCH FAULTY.	3. REFER TO IGNITION SWITCH TEST, IN THE STEERING SECTION. REPLACE SWITCH, IF NECESSARY.
	4. STARTER ASSEMBLY FAULTY.	4. IF ALL OTHER STARTING SYSTEM COMPONENTS AND CIRCUITS CHECK OK, REPLACE STARTER ASSEMBLY.
	5. FAULTY TEETH ON RING GEAR.	5. ROTATE FLYWHEEL 360°, AND INSPECT TEETH AND RING GEAR REPLACED IF DAMAGED.

DIAGNOSIS AND TESTING - CONTROL CIRCUIT TEST

The starter control circuit has:

- Starter motor with integral solenoid
- Starter relay
- Transmission range sensor, or Park/Neutral Position switch with automatic transmissions
- Ignition switch
- Battery
- All related wiring and connections
- Powertrain Control Module (PCM)

CAUTION: Before performing any starter tests, the ignition and fuel systems must be disabled.

- To disable ignition and fuel systems, disconnect the Automatic Shutdown Relay (ASD). The ASD relay is located in the Power Distribution Center (PDC). Refer to the PDC cover for the proper relay location.

STARTER SOLENOID

WARNING: CHECK TO ENSURE THAT THE TRANSMISSION IS IN THE PARK POSITION WITH THE PARKING BRAKE APPLIED.

(1) Verify battery condition. Battery must be in good condition with a full charge before performing any starter tests. Refer to Battery Tests.

(2) Perform Starter Solenoid test BEFORE performing the starter relay test.

(3) Perform a visual inspection of the starter/starter solenoid for corrosion, loose connections or faulty wiring.

(4) Locate and remove the starter relay from the Power Distribution Center (PDC). Refer to the PDC label for relay identification and location.

(5) Connect a remote starter switch or a jumper wire between the remote battery positive post and terminal 87 of the starter relay connector.

(a) If engine cranks, starter/starter solenoid is good. Go to the Starter Relay Test.

(b) If engine does not crank or solenoid chatters, check wiring and connectors from starter relay to starter solenoid for loose or corroded connections. Particularly at starter terminals.

(c) Repeat test. If engine still fails to crank properly, trouble is within starter or starter mounted solenoid, and replace starter. Inspect the ring gear teeth.

STARTER RELAY

WARNING: CHECK TO ENSURE THAT THE TRANSMISSION IS IN THE PARK/NEUTRAL POSITION WITH THE PARKING BRAKE APPLIED.

RELAY TEST

The starter relay is located in the Power Distribution Center (PDC) in the engine compartment. Refer to the PDC label for relay identification and location.

STARTING (Continued)

Remove the starter relay from the PDC as described in this group to perform the following tests:

(1) A relay in the de-energized position should have continuity between terminals 87A and 30, and no continuity between terminals 87 and 30. If OK, go to Step 2. If not OK, replace the faulty relay.

(2) Resistance between terminals 85 and 86 (electromagnet) should be 75 ±5 ohms. If OK, go to Step 3. If not OK, replace the faulty relay.

(3) Connect a battery B+ lead to terminals 86 and a ground lead to terminal 85 to energize the relay. The relay should click. Also test for continuity between terminals 30 and 87, and no continuity between terminals 87A and 30. If OK, refer to Relay Circuit Test procedure. If not OK, replace the faulty relay.

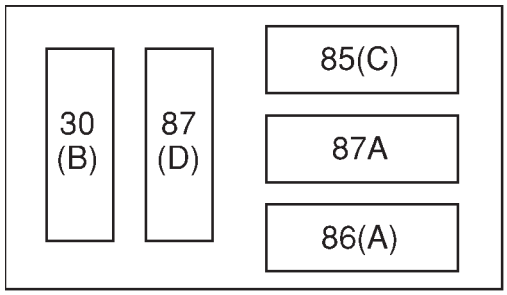

Starter Relay Pinout

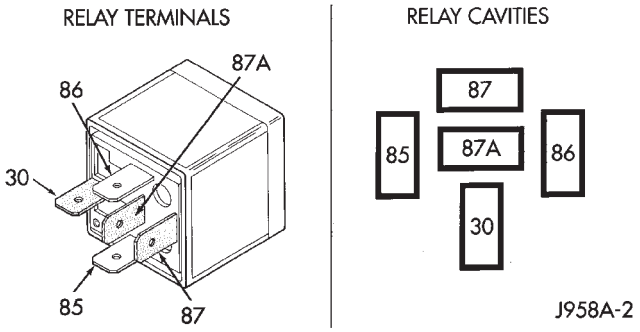

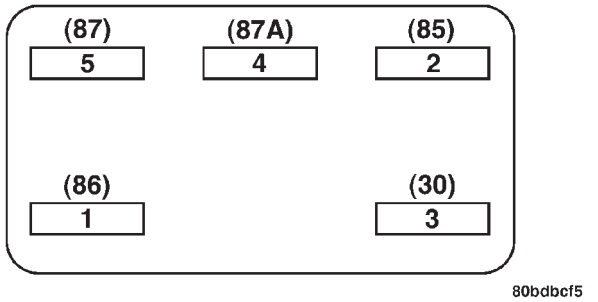

Starter Relay Pinout

CAV	FUNCTION
30	B (+)
85	P/N POSITION SW.SENSE
86	IGNITION SWITCH OUTPUT
87	STARTER RELAY OUTPUT
87A	NO CONNECT

RELAY CIRCUIT TEST

(1) The relay common feed terminal cavity (30) is connected to battery voltage and should be hot at all times. If OK, go to Step 2. If not OK, repair the open circuit to the PDC fuse as required.

(2) The relay normally closed terminal (87A) is connected to terminal 30 in the de-energized position, but is not used for this application. Go to Step 3.

(3) The relay normally open terminal (87) is connected to the common feed terminal (30) in the energized position. This terminal supplies battery voltage to the starter solenoid field coils. There should be continuity between the cavity for relay terminal 87 and the starter solenoid terminal at all times. If OK, go to Step 4. If not OK, repair the open circuit to the starter solenoid as required.

(4) The coil battery terminal (86) is connected to the electromagnet in the relay. It is energized when the ignition switch is held in the Start position and the clutch pedal is depressed (manual trans). Check for battery voltage at the cavity for relay terminal 86 with the ignition switch in the Start position and the clutch pedal is depressed (manual trans), and no voltage when the ignition switch is released to the On position. If OK, go to Step 5. If not OK, check for an open or short circuit to the ignition switch and repair, if required. If the circuit to the ignition switch is OK, see the Ignition Switch Test procedure in this group.

(5) The coil ground terminal (85) is connected to the electromagnet in the relay. It is grounded through the transmission range sensor only when the gearshift selector lever is in the Park or Neutral positions. Check for continuity to ground at the cavity for relay terminal 85. If not OK with an automatic transmission, check for an open or short circuit to the transmission range sensor and repair. It is grounded by the PCM if the conditions are right to start the car. For automatic trans. cars the PCM must see Park Neutral switch and near zero engine rpm. For manual trans. cars the PCM only needs to see near zero engine rpm. To diagnose the Park Neutral switch of the trans range sensor refer to the transaxle section for more information. Check for continuity to ground while the ignition switch is in the start position. If not OK and the vehicle has an automatic trans. verify Park Neutral switch opera-

STARTING (Continued)

tion. If that checks OK check for continuity between PCM and the terminal 85. Repair open circuit as required. If OK, the PCM may be defective.

SAFETY SWITCHES

For diagnostics of the Transmission Range Sensor, refer to the Transaxle section for more information.

If equipped with Clutch Interlock/Upstop Switch, refer to Diagnosis and Testing in the Clutch section.

IGNITION SWITCH

After testing starter solenoid and relay, test ignition switch and wiring. Refer to the Ignition Section or Wiring Diagrams for more information. Check all wiring for opens or shorts, and all connectors for being loose or corroded.

BATTERY

For battery diagnosis and testing, refer to the Battery section for procedures.

ALL RELATED WIRING AND CONNECTORS

Refer to Wiring Diagrams for more information.

DIAGNOSIS AND TESTING - FEED CIRCUIT RESISTANCE TEST

Before proceeding with this operation, review Diagnostic Preparation and Starter Feed Circuit Tests. The following operation will require a voltmeter, accurate to 1/10 of a volt.

CAUTION: Ignition and Fuel systems must be disabled to prevent engine start while performing the following tests.

(1) To disable the Ignition and Fuel systems, disconnect the Automatic Shutdown Relay (ASD). The ASD relay is located in the Power Distribution Center (PDC). Refer to the PDC cover for proper relay location.

(2) Gain access to battery terminals.

(3) With all wiring harnesses and components properly connected, perform the following:

(a) Connect the negative lead of the voltmeter to the battery negative post, and positive lead to the battery negative cable clamp. Rotate and hold the ignition switch in the START position. Observe the voltmeter. If voltage is detected, correct poor contact between cable clamp and post.

(b) Connect positive lead of the voltmeter to the battery positive post, and negative lead to the battery positive cable clamp. Rotate and hold the ignition switch key in the START position. Observe the voltmeter. If voltage is detected, correct poor contact between the cable clamp and post.

(c) Connect negative lead of voltmeter to battery negative terminal, and positive lead to engine block near the battery cable attaching point. Rotate and hold the ignition switch in the START position. If voltage reads above 0.2 volt, correct poor contact at ground cable attaching point. If voltage reading is still above 0.2 volt after correcting poor contacts, replace ground cable.

(4) Connect positive voltmeter lead to the starter motor housing and the negative lead to the battery negative terminal. Hold the ignition switch key in the START position. If voltage reads above 0.2 volt, correct poor starter to engine ground.

(a) Connect the positive voltmeter lead to the battery positive terminal, and negative lead to battery cable terminal on starter solenoid. Rotate and hold the ignition switch in the START position. If voltage reads above 0.2 volt, correct poor contact at battery cable to solenoid connection. If reading is still above 0.2 volt after correcting poor contacts, replace battery positive cable.

(b) If resistance tests do not detect feed circuit failures, replace the starter motor.

DIAGNOSIS AND TESTING - FEED CIRCUIT TEST

NOTE: The following results are based upon the vehicle being at room temperature.

The following procedure will require a suitable volt-ampere tester (Fig. 3).

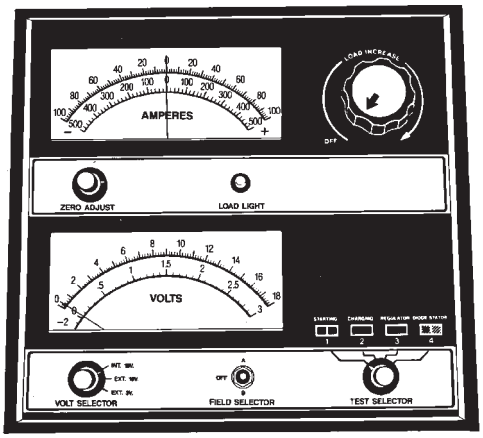

898A-8

Fig. 3 Volt Ampere Tester

CAUTION: Before performing any starter tests, the ignition and fuel systems must be disabled.

(1) Check battery before performing this test. Battery must be fully charged.

(2) Connect a volt-ampere tester to the battery terminals. Refer to the operating instructions provided with the tester being used.

STARTING (Continued)

(3) To disable the ignition and fuel systems, disconnect the Automatic Shutdown Relay (ASD). The ASD relay is located in the Power Distribution Center (PDC). Refer to the PDC cover for proper relay location.

(4) Verify that all lights and accessories are OFF, and the transmission shift selector is in the PARK and SET parking brake.

CAUTION: Do not overheat the starter motor or draw the battery voltage below 9.6 volts during cranking operations.

(5) Rotate and hold the ignition switch in the START position. Observe the volt-ampere tester (Fig. 3).

- If voltage reads above 9.6 volts, and amperage draw reads above 280 amps, check for engine seizing or faulty starter.
- If voltage reads 12.4 volts or greater and amperage reads 0 to 10 amps, check for corroded cables and/or bad connections.
- Voltage below 9.6 volts and amperage draw above 300 amps, the problem is the starter. Replace the starter refer to starter removal.

(6) After the starting system problems have been corrected, verify the battery state-of-charge and charge battery if necessary. Disconnect all testing equipment and connect ASD relay. Start the vehicle several times to assure the problem has been corrected.

SPECIFICATIONS

STARTER

MANUFACTURER	NIPPONDENSO
Engine Application	2.4L /3.3/3.8L
Power rating	1.2 Kw
Voltage	12 VOLTS
No. of Fields	4
No. of Poles	4
Brushes	4
Drive	Conventional Gear Train
Free running Test Voltage Amperage Draw Minimum Speed	 11 73 Amp 3401 RPM
SolenoidClosing Voltage	7.5 Volts
Cranking Amperage Draw test	150 - 200 Amps.

Engine should be up to operating temperature. Extremely heavy oil or tight engine will increase starter amperage draw.

Torques

DESCRIPTION	N·m	Ft. Lbs.	In. Lbs.
Starter Mounting Bolts	47.4	35	
Starter Solenoid Battery Nut	11.3	8.3	100

STARTER MOTOR

REMOVAL

REMOVAL - 2.4L

(1) Release hood latch and open hood (Fig. 4).

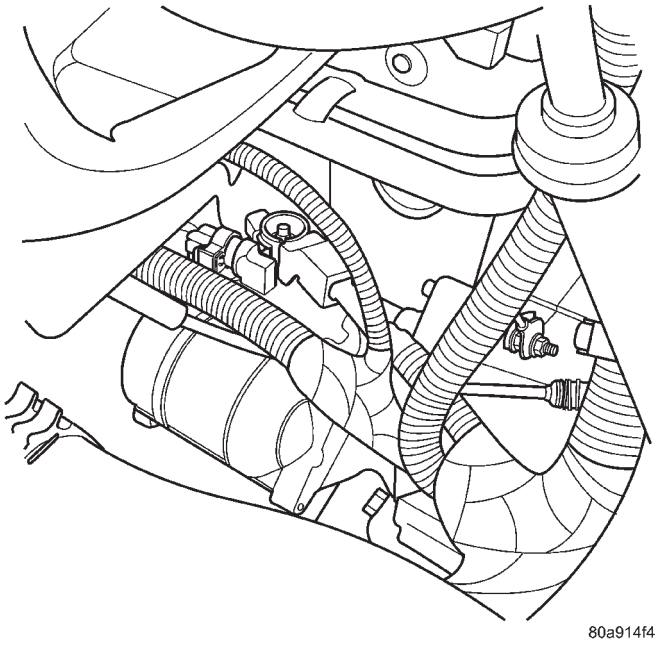

Fig. 4 STARTER 2.4L

(2) Disconnect and isolate the battery negative cable.

(3) Disconnect solenoid wire connector from terminal (Fig. 5).

(4) Remove nut holding B+ wire to terminal.

(5) Disconnect solenoid and B+ wires from starter terminals.

(6) Remove the lower bolt.

(7) Remove the upper bolt and ground wire (Fig. 6).

(8) Remove starter.

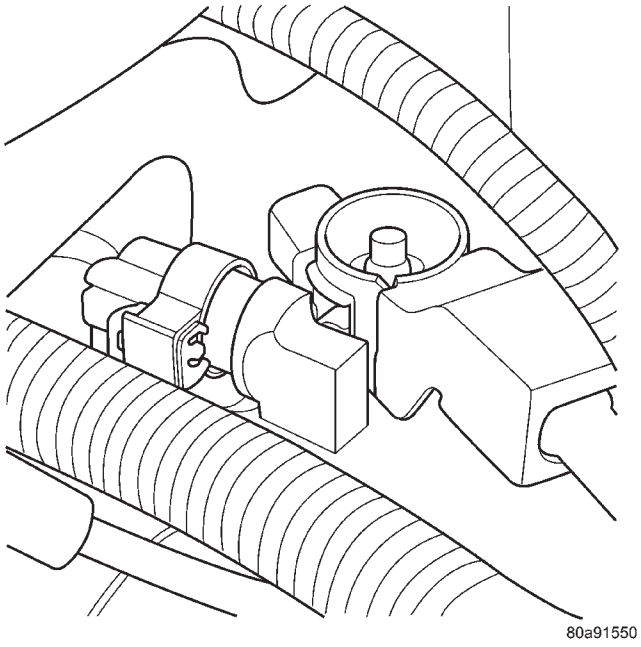

Fig. 5 BATTERY CABLE AND FIELD WIRE 2.4L

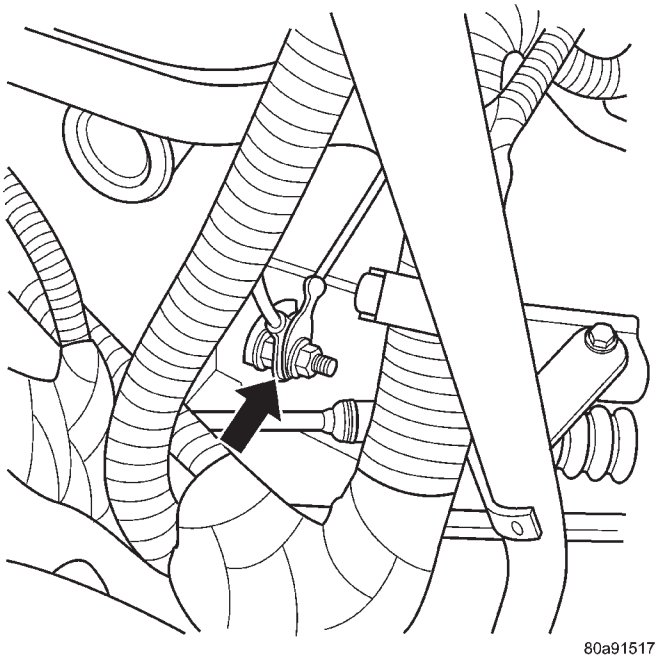

Fig. 6 Upper Bolt and Ground Wire

STARTER MOTOR (Continued)

REMOVAL - 3.3/3.8L

(1) Release hood latch and open hood.
(2) Disconnect and isolate the battery negative cable.
(3) Hoist and support vehicle on safety stands.
(4) Remove nut holding B+ terminal to starter solenoid (Fig. 7).

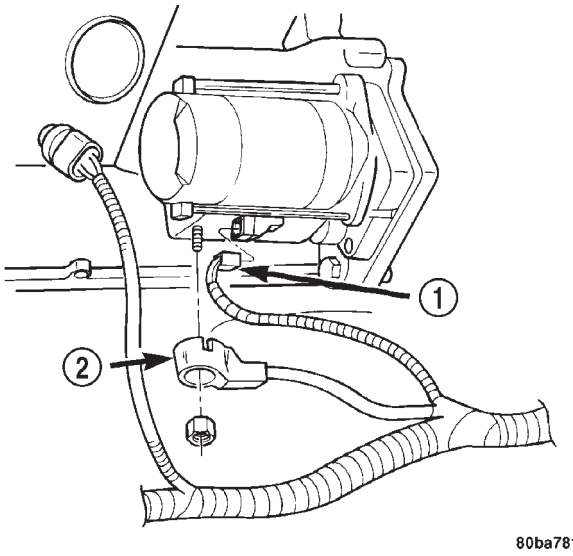

Fig. 7 Starter

1 - SOLENOID CONNECTOR
2 - B+ CONNECTOR

(5) Disconnect solenoid connector from starter.
(6) Remove bolts holding starter to transaxle bellhousing (Fig. 8).

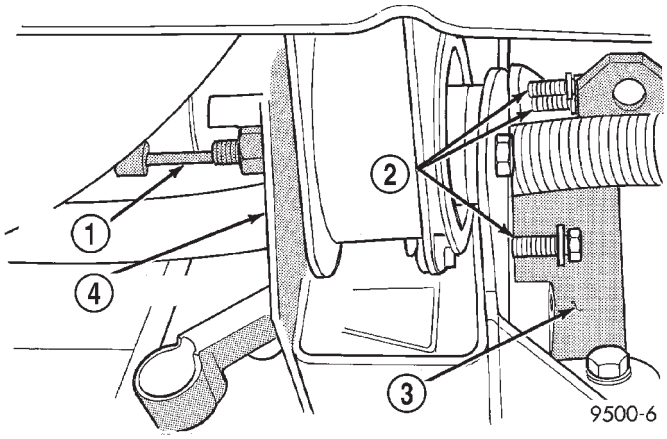

Fig. 8 Starter Bolts

1 - STARTER
2 - STARTER BOLTS
3 - TRANSAXLE
4 - ENGINE MOUNT

(7) Remove starter from bellhousing (Fig. 9).

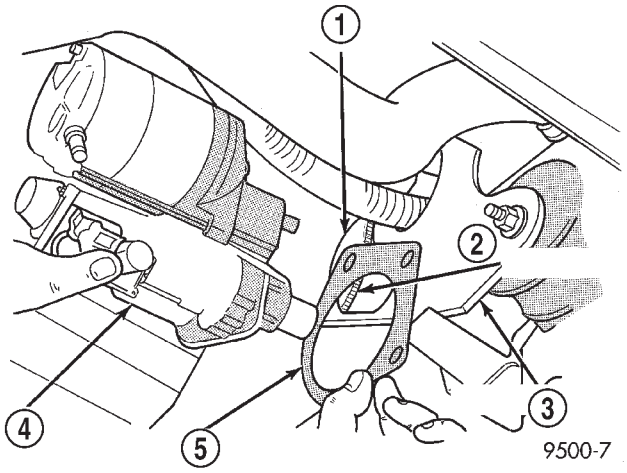

Fig. 9 STARTER 3.3/3.8L

1 - BELL HOUSING PLATE
2 - FLYWHEEL
3 - ENGINE MOUNT
4 - STARTER
5 - SPACER

(8) Separate starter spacer from transaxle bellhousing.

INSTALLATION

INSTALLATION - 2.4L

(1) Place starter in position on vehicle.
(2) Install the lower bolts to hold starter to transaxle bellhousing.
(3) Install the upper bolt and ground wire (Fig. 6).
(4) Place solenoid and B+ wires in position on starter terminals (Fig. 5).
(5) Install nut to hold B+ wire to terminal.
(6) Connect solenoid wire connector onto terminal.
(7) Connect battery negative cable.
(8) Verify starter operation.

INSTALLATION - 3.3/3.8L

(1) Place starter spacer in position on transaxle bellhousing, flange toward flywheel.
(2) Place starter in position on bellhousing.
(3) Install bolts and ground wire (Fig. 6) to hold starter to transaxle bellhousing.
(4) Connect solenoid connector into starter.
(5) Install nut to hold B+ terminal to starter solenoid.
(6) Lower vehicle.
(7) Connect battery negative cable.
(8) Verify starter operation.

ENGINE SYSTEMS

TABLE OF CONTENTS

page

BATTERY SYSTEM 1
CHARGING 20
STARTING 31

BATTERY SYSTEM

TABLE OF CONTENTS

page

BATTERY SYSTEM
DESCRIPTION 1
OPERATION 2
DIAGNOSIS AND TESTING - BATTERY SYSTEM 2
CLEANING 5
INSPECTION 6
SPECIFICATIONS 6
SPECIAL TOOLS
BATTERY SYSTEM SPECIAL TOOLS 7
BATTERY
DESCRIPTION 7
OPERATION 9
DIAGNOSIS AND TESTING - BATTERY 9
STANDARD PROCEDURE
STANDARD PROCEDURE - SPIRAL PLATE BATTERY CHARGING 10
STANDARD PROCEDURE - CONVENTIONAL BATTERY CHARGING 11
STANDARD PROCEDURE - OPEN-CIRCUIT VOLTAGE TEST 13
STANDARD PROCEDURE - IGNITION-OFF DRAW TEST 13
STANDARD PROCEDURE - CHECKING BATTERY ELECTROLYTE LEVEL 14
REMOVAL - BATTERY 15
INSTALLATION 15
BATTERY HOLDDOWN
DESCRIPTION 15
OPERATION 15
REMOVAL 16
INSTALLATION 16
BATTERY CABLES
DESCRIPTION 16
OPERATION 16
DIAGNOSIS AND TESTING - BATTERY CABLE . 16
REMOVAL 18
INSTALLATION 18
BATTERY TRAY
DESCRIPTION 18
OPERATION 19
REMOVAL 19
INSTALLATION 19
THERMOWRAP
DESCRIPTION 19
OPERATION 19
REMOVAL 19
INSTALLATION 19

BATTERY SYSTEM

DESCRIPTION

A single 12-volt battery system is standard factory-installed equipment on this model. All of the components of the battery system are located within the engine compartment of the vehicle. The service information for the battery system in this vehicle covers the following related components, which are covered in further detail elsewhere in this service manual:

- **Battery** - The storage battery provides a reliable means of storing a renewable source of electrical energy within the vehicle.
- **Battery Cable** - The battery cables connect the battery terminal posts to the vehicle electrical system.

- **Battery Holddown** - The battery holddown hardware secures the battery in the battery tray in the engine compartment.
- **Battery Thermowrap** - The battery thermowarp insulates the battery to protect it from engine compartment temperature extremes.
- **Battery Tray** - The battery tray provides a secure mounting location in the vehicle for the battery and an anchor point for the battery holddown hardware.

For battery system maintenance schedules and jump starting procedures, see the owner's manual in the vehicle glove box. Optionally, refer to Lubrication and Maintenance for the recommended battery maintenance schedules and for the proper battery jump starting procedures. While battery charging can be considered a maintenance procedure, the battery charging procedures and related information are located in the standard procedures section of this service manual. This was done because the battery must be fully-charged before any battery system diagnosis or testing procedures can be performed. Refer to Standard procedures for the proper battery charging procedures.

OPERATION

The battery system is designed to provide a safe, efficient, reliable and mobile means of delivering and storing electrical energy. This electrical energy is required to operate the engine starting system, as well as to operate many of the other vehicle accessory systems for limited durations while the engine and/or the charging system are not operating. The battery system is also designed to provide a reserve of electrical energy to supplement the charging system for short durations while the engine is running and the electrical current demands of the vehicle exceed the output of the charging system. In addition to delivering, and storing electrical energy for the vehicle, the battery system serves as a capacitor and voltage stabilizer for the vehicle electrical system. It absorbs most abnormal or transient voltages caused by the switching of any of the electrical components or circuits in the vehicle.

DIAGNOSIS AND TESTING - BATTERY SYSTEM

The battery, starting, and charging systems in the vehicle operate with one another and must be tested as a complete system. In order for the engine to start and the battery to maintain its charge properly, all of the components that are used in these systems must perform within specifications. It is important that the battery, starting, and charging systems be thoroughly tested and inspected any time a battery needs to be charged or replaced. The cause of abnormal battery discharge, overcharging or early battery failure must be diagnosed and corrected before a battery is replaced and before a vehicle is returned to service. The service information for these systems has been separated within this service manual to make it easier to locate the specific information you are seeking. However, when attempting to diagnose any of these systems, it is important that you keep their interdependency in mind.

The diagnostic procedures used for the battery, starting, and charging systems include the most basic conventional diagnostic methods, to the more sophisticated On-Board Diagnostics (OBD) built into the Powertrain Control Module (PCM). Use of an induction-type milliampere ammeter, a volt/ohmmeter, a battery charger, a carbon pile rheostat (load tester) and a 12-volt test lamp may be required. All OBD-sensed systems are monitored by the PCM. Each monitored circuit is assigned a Diagnostic Trouble Code (DTC). The PCM will store a DTC in electronic memory for any failure it detects. Refer to Charging System for the proper charging system onboard diagnostic test procedures.

MICRO 420 ELECTRICAL SYSTEM TESTER

The Micro 420 automotive battery system tester is designed to help the dealership technicians diagnose the cause of a defective battery. Follow the instruction manual supplied with the tester to properly diagnose a vehicle. If the instruction manual is not available refer to the standard procedure in this section, which includes the directions for using the Micro 420 electrical system tester.

BATTERY SYSTEM (Continued)

BATTERY SYSTEM DIAGNOSIS		
CONDITION	POSSIBLE CAUSES	CORRECTION
THE BATTERY SEEMS WEAK OR DEAD WHEN ATTEMPTING TO START THE ENGINE.	1. The electrical system ignition-off draw is excessive.	1. Refer to the IGNITION-OFF DRAW TEST Standard Procedure for the proper test procedures. Repair the excessive ignition-off draw, as required.
	2. The charging system is faulty.	2. Determine if the charging system is performing to specifications. Refer to Charging System for additional charging system diagnosis and testing procedures. Repair the faulty charging system, as required.
	3. The battery is discharged.	3. Determine the battery state-of-charge using the Micro 420 battery tester. Refer to the Standard Procedures in this section for additional test procedures. Charge the faulty battery, as required.
	4. The battery terminal connections are loose or corroded.	4. Refer to Battery Cables for the proper battery cable diagnosis and testing procedures. Clean and tighten the battery terminal connections, as required.
	5. The battery has an incorrect size or rating for this vehicle.	5. Refer to Battery System Specifications for the proper size and rating. Replace an incorrect battery, as required.
	6. The battery is faulty.	6. Test the battery using the Micro 420 battery tester. Refer to the Standard Procedures in this section for additional test procedures. Replace the faulty battery, as required.
	7. The starting system is faulty.	7. Determine if the starting system is performing to specifications. Refer to Starting System for the proper starting system diagnosis and testing procedures. Repair the faulty starting system, as required.
	8. The battery is physically damaged.	8. Inspect the battery for loose terminal posts or a cracked and leaking case. Replace the damaged battery, as required.

BATTERY SYSTEM (Continued)

BATTERY SYSTEM DIAGNOSIS		
CONDITION	POSSIBLE CAUSES	CORRECTION
THE BATTERY STATE OF CHARGE CANNOT BE MAINTAINED.	1. The battery has an incorrect size or rating for this vehicle.	1. Refer to Battery System Specifications for the proper specifications. Replace an incorrect battery, as required.
	2. The battery terminal connections are loose or corroded.	2. Refer to Battery Cable for the proper cable diagnosis and testing procedures. Clean and tighten the battery terminal connections, as required.
	3. The electrical system ignition-off draw is excessive.	3. Refer to the IGNITION-OFF DRAW TEST Standard Procedure for the proper test procedures. Repair the faulty electrical system, as required.
	4. The battery is faulty.	4. Test the battery using the Micro 420 battery tester. Refer to Standard Procedures for additional test procedures. Replace the faulty battery, as required.
	5. The starting system is faulty.	5. Determine if the starting system is performing to specifications. Refer to Starting System for the proper starting system diagnosis and testing procedures. Repair the faulty starting system, as required.
	6. The charging system is faulty.	6. Determine if the charging system is performing to specifications. Refer to Charging System for charging system diagnosis and testing procedures. Repair the faulty charging system, as required.
	7. Electrical loads exceed the output of the charging system.	7. Inspect the vehicle for aftermarket electrical equipment which might cause excessive electrical loads.
	8. Slow driving or prolonged idling with high-amperage draw loads in use.	8. Advise the vehicle operator, as required.
THE BATTERY WILL NOT ACCEPT A CHARGE.	1. The battery is faulty.	1. Test the battery using the Micro 420 battery tester.. Charge or replace the faulty battery, as required.

BATTERY SYSTEM (Continued)

ABNORMAL BATTERY DISCHARGING

Any of the following conditions can result in abnormal battery discharging:

1. A faulty or incorrect charging system component. Refer to Charging System for additional charging system diagnosis and testing procedures.
2. A faulty or incorrect battery. Use Micro 420 tester and refer to Battery System for additional battery diagnosis and testing procedures.
3. A faulty circuit or component causing excessive ignition-off draw.
4. Electrical loads that exceed the output of the charging system. This can be due to equipment installed after manufacture, or repeated short trip use.
5. A faulty or incorrect starting system component. Refer to Starting System for the proper starting system diagnosis and testing procedures.
6. Corroded or loose battery posts and/or terminal clamps.
7. Slow driving speeds (heavy traffic conditions) or prolonged idling, with high-amperage draw loads in use.

CLEANING

The following information details the recommended cleaning procedures for the battery and related components. In addition to the maintenance schedules found in this service manual and the owner's manual, it is recommended that these procedures be performed any time the battery or related components must be removed for vehicle service.

(1) Clean the battery cable terminal clamps of all corrosion. Remove any corrosion using a wire brush or a post and terminal cleaning tool, and a sodium bicarbonate (baking soda) and warm water cleaning solution (Fig. 1).

(2) Clean the battery tray and battery holddown hardware of all corrosion. Remove any corrosion using a wire brush and a sodium bicarbonate (baking soda) and warm water cleaning solution. Paint any exposed bare metal.

(3) If the removed battery is to be reinstalled, clean the outside of the battery case and the top cover with a sodium bicarbonate (baking soda) and warm water cleaning solution using a stiff bristle parts cleaning brush to remove any acid film (Fig. 2). Rinse the battery with clean water. Ensure that the cleaning solution does not enter the battery cells through the vent holes. If the battery is being replaced, refer to Battery System Specifications for the factory-installed battery specifications. Confirm that the replacement battery is the correct size and has the correct ratings for the vehicle.

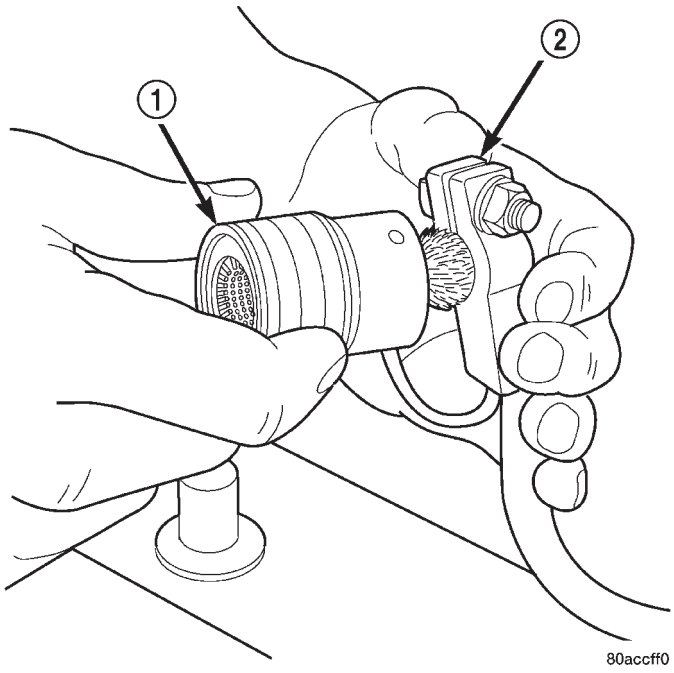

Fig. 1 Clean Battery Cable Terminal Clamp - Typical

1 - TERMINAL BRUSH
2 - BATTERY CABLE

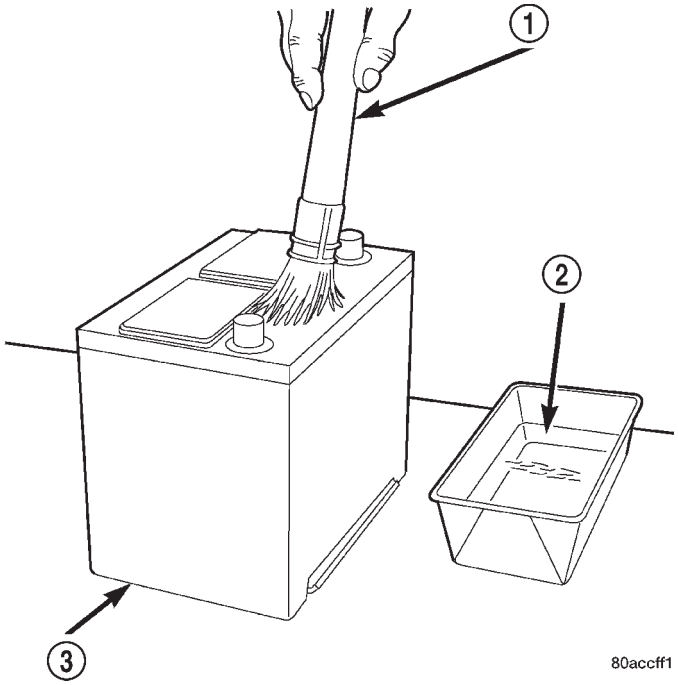

Fig. 2 BATTERY CLEANING- TYPICAL

1 - CLEANING BRUSH
2 - WARM WATER AND BAKING SODA SOLUTION
3 - BATTERY

(4) Clean the battery thermowrap with a sodium bicarbonate (baking soda) and warm water cleaning solution using a soft bristle parts cleaning brush to remove any acid film.

(5) Clean any corrosion from the battery terminal posts with a wire brush or a post and terminal cleaner, and a sodium bicarbonate (baking soda) and warm water cleaning solution (Fig. 3).

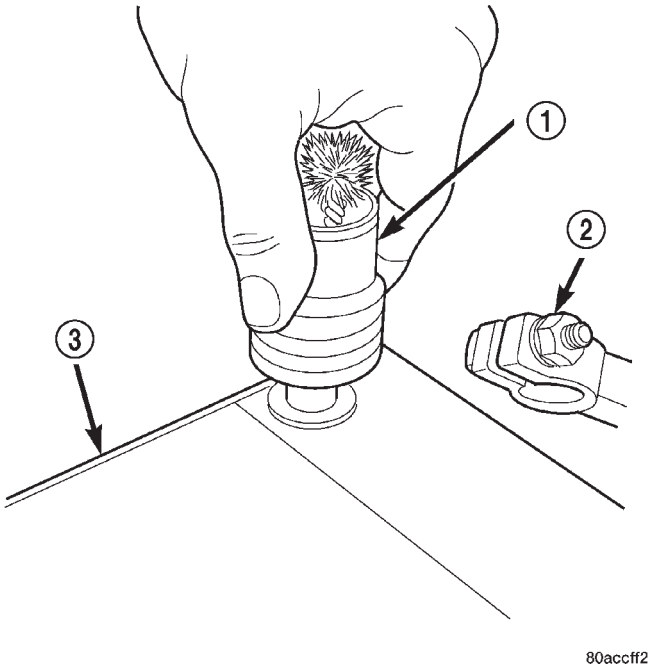

Fig. 3 Clean Battery Terminal Post - Typical

1 - TERMINAL BRUSH
2 - BATTERY CABLE
3 - BATTERY

INSPECTION

The following information details the recommended inspection procedures for the battery and related components. In addition to the maintenance schedules found in this service manual and the owner's manual, it is recommended that these procedures be performed any time the battery or related components must be removed for vehicle service.

(1) Inspect the battery cable terminal clamps for damage. Replace any battery cable that has a damaged or deformed terminal clamp.

(2) Inspect the battery tray and battery holddown hardware for damage. Replace any damaged parts.

(3) Slide the thermowrap off of the battery case. Inspect the battery case for cracks or other damage that could result in electrolyte leaks. Also, check the battery terminal posts for looseness. Batteries with damaged cases or loose terminal posts must be replaced.

(4) Inspect the battery thermowrap for tears, cracks, deformation or other damage. Replace any battery thermal guard that has been damaged.

(5) Inspect the battery built-in test indicator sight glass(if equipped) for an indication of the battery condition. If the battery is discharged, charge as required. Refer to Standard Procedures for the proper battery built-in indicator test procedures. Also refer to Standard Procedures for the proper battery charging procedures.

SPECIFICATIONS

The battery Group Size number, the Cold Cranking Amperage (CCA) rating, and the Reserve Capacity (RC) rating or Ampere-Hours (AH) rating can be found on the original equipment battery label. Be certain that a replacement battery has the correct Group Size number, as well as CCA, and RC or AH ratings that equal or exceed the original equipment specification for the vehicle being serviced. Battery sizes and ratings are discussed in more detail below.

- **Group Size** - The outside dimensions and terminal placement of the battery conform to standards established by the Battery Council International (BCI). Each battery is assigned a BCI Group Size number to help identify a correctly-sized replacement.
- **Cold Cranking Amperage** - The Cold Cranking Amperage (CCA) rating specifies how much current (in amperes) the battery can deliver for thirty seconds at -18° C (0° F). Terminal voltage must not fall below 7.2 volts during or after the thirty second discharge period. The CCA required is generally higher as engine displacement increases, depending also upon the starter current draw requirements.
- **Reserve Capacity** - The Reserve Capacity (RC) rating specifies the time (in minutes) it takes for battery terminal voltage to fall below 10.5 volts, at a discharge rate of 25 amperes. RC is determined with the battery fully-charged at 26.7° C (80° F). This rating estimates how long the battery might last after a charging system failure, under minimum electrical load.
- **Ampere-Hours** - The Ampere-Hours (AH) rating specifies the current (in amperes) that a battery can deliver steadily for twenty hours, with the voltage in the battery not falling below 10.5 volts. This rating is also sometimes identified as the twenty-hour discharge rating.

BATTERY SYSTEM (Continued)

BATTERY CLASSIFICATIONS & RATINGS					
Part Number	BCI Group Size Classification	Cold Cranking Amperage	Reserve Capacity	Ampere - Hours	Load Test Amperage
4686158AB	34	500	110 Minutes	60	250
4727159AB	34	600	120 Minutes	66	300
4727242AB	DIN H6	600	120 Minutes	66	300
5033235AA	34	700	95 Minutes	48	350

SPECIAL TOOLS

BATTERY SYSTEM SPECIAL TOOLS

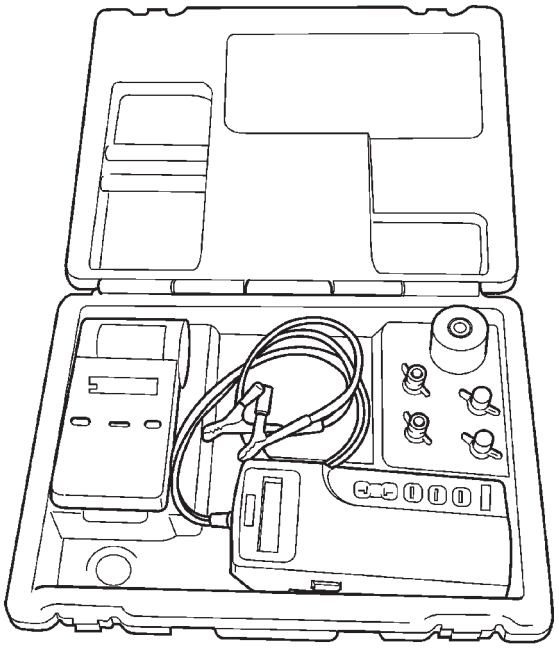

MICRO 420 BATTERY TESTER

BATTERY

DESCRIPTION

There are three different batteries available on this model. Vehicles equipped with a diesel engine utilize a spiral wound plate designed battery with recombination technology. This is a maintenance-free battery that is capable of delivering more power than a conventional battery. This additional power is required by a diesel engine during cold cranking. Vehicles equipped with a gasoline engine utilize a conventional battery. Refer to the following information for detailed differences and descriptions of these batteries.

SPIRAL PLATE BATTERY - DIESEL ENGINE

Spiral plate technology takes the elements of traditional batteries - lead and sulfuric acid - to the next level. By tightly winding layers of spiral grids and acid-permeated vitreous separators into cells, the manufacturer has developed a battery with more power and service life than conventional batteries the same size. The spiral plate battery is completely, permanently sealed. Through gas recombination, hydrogen and oxygen within the battery are captured during normal charging and reunited to form the water within the electrolyte, eliminating the need to add distilled water. Therefore, these batteries have non-removable battery vent caps (Fig. 4). Water **cannot** be added to this battery.

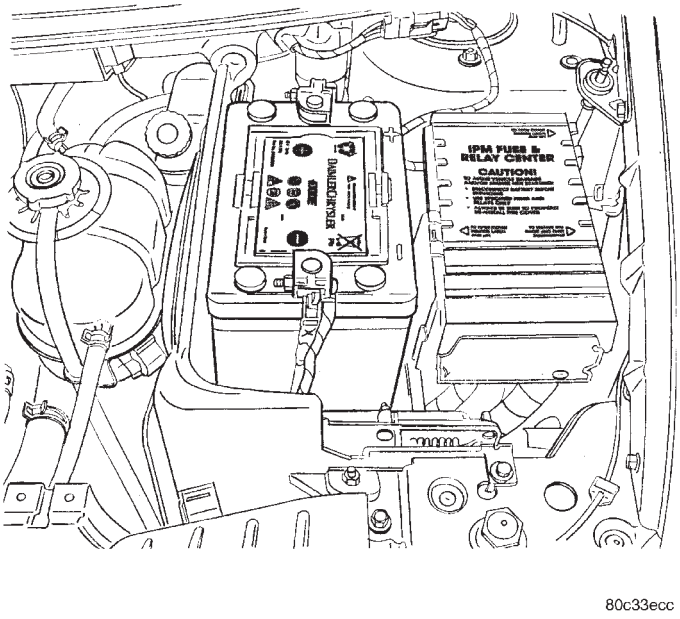

Fig. 4 MAINTENANCE-FREE DIESEL ENGINE BATTERY

The acid inside an spiral plate battery is bound within the vitreous separators, ending the threat of acid leaks. This feature allows the battery to be installed in any position anywhere in the vehicle.

Spiral plate technology is the process by which the plates holding the active material in the battery are wound tightly in coils instead of hanging flat, like conventional batteries. This design has a lower inter-

nal resistance and also increases the active material surface area.

WARNING: NEVER EXCEED 14.4 VOLTS WHEN CHARGING A SPIRAL PLATE BATTERY. PERSONAL INJURY AND/OR BATTERY DAMAGE MAY RESULT.

Due to the maintanance-free design, distilled water cannot be added to this battery. Therefore, if more than 14.4 volts are used during the spiral plate battery charging process, water vapor can be exhausted through the pressure-sensitive battery vents and lost for good. This can permanently damage the spiral plate battery. Never exceed 14.4 volts when charging a spiral plate battery. Personal injury and/or battery damage may result.

CONVENTIONAL BATTERY - GASOLINE ENGINE

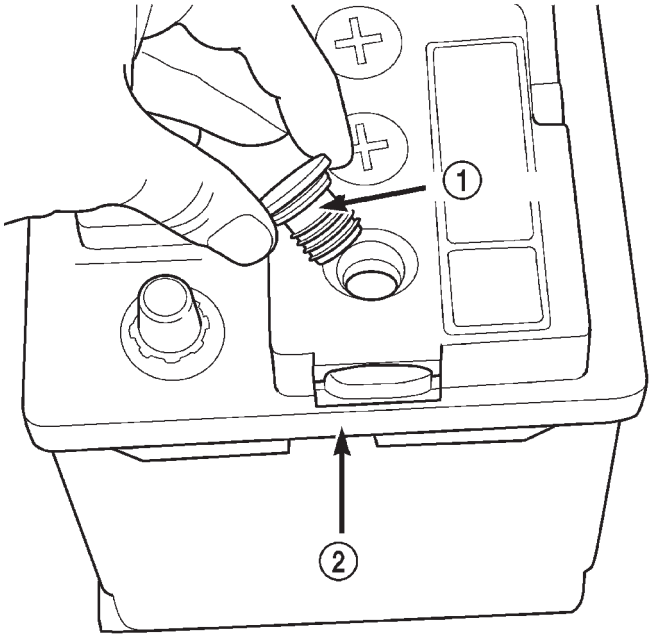

80b76fd0

Fig. 5 BATTERY CELL CAP REMOVAL/ INSTALLATION - LOW-MAINTANANCE GASOLINE ENGINE BATTERY

1 - BATTERY CELL CAP
2 - BATTERY CASE

Low-maintenance batteries are used on vehicles equipped with a gasoline engine, these batteries have removable battery cell caps (Fig. 5). Water **can** be added to this battery. Under normal service, the composition of this battery reduces gassing and water loss at normal charge rates. However these batteries may require additional distilled water after years of service.

Maintenance-free batteries are standard factory-installed equipment on this model. Male post type terminals made of a soft lead material protrude from the top of the molded plastic battery case (Fig. 6)to provide the means for connecting the battery to the vehicle electrical system. The battery positive terminal post is visibly larger in diameter than the negative terminal post, for easy identification. The letters **POS** and **NEG** are also molded into the top of the battery case adjacent to their respective positive and negative terminal posts for additional identification confirmation.

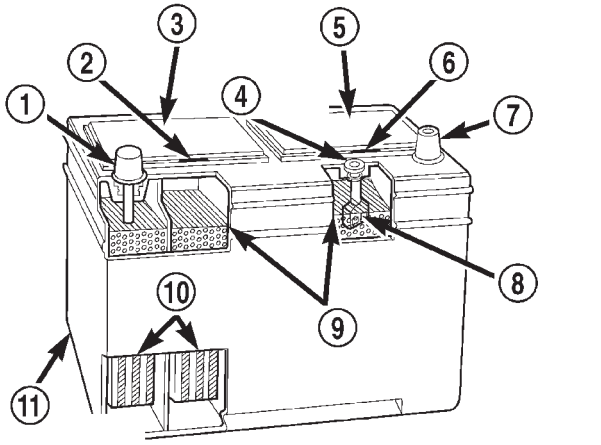

80accfel

Fig. 6 Maintenance-Free Battery

1 - POSITIVE POST
2 - VENT
3 - CELL CAP
4 - VENT
5 - CELL CAP
6 - VENT
7 - NEGATIVE POST
8 - INDICATOR EYE (if equipped)
9 - ELECTROLYTE LEVEL
10 - PLATE GROUPS
11 - MAINTENANCE-FREE BATTERY

This battery is designed to provide a safe, efficient and reliable means of storing electrical energy in a chemical form. This means of energy storage allows the battery to produce the electrical energy required to operate the engine starting system, as well as to operate many of the other vehicle accessory systems for limited durations while the engine and/or the charging system are not operating. The battery is made up of six individual cells that are connected in series. Each cell contains positively charged plate groups that are connected with lead straps to the positive terminal post, and negatively charged plate groups that are connected with lead straps to the negative terminal post. Each plate consists of a stiff mesh framework or grid coated with lead dioxide (positive plate) or sponge lead (negative plate). Insulators or plate separators made of a non-conductive material are inserted between the positive and nega-

BATTERY (Continued)

tive plates to prevent them from contacting or shorting against one another. These dissimilar metal plates are submerged in a sulfuric acid and water solution called an electrolyte.

Some factory-installed batteries have a built-in test indicator (hydrometer). The color visible in the sight glass of the indicator will reveal the battery condition. For more information on the use of the built-in test indicator, refer to **Standard Procedures** The chemical composition of the metal coated plates within the low-maintenance battery reduces battery gassing and water loss, at normal charge and discharge rates. Therefore, the battery should not require additional water in normal service. If the electrolyte level in this battery does become low, distilled water must be added. However, rapid loss of electrolyte can be caused by an overcharging condition. Be certain to diagnose the charging system after replenishing the water in the battery for a low electrolyte condition and before returning the vehicle to service. Refer to **Charging System** for additional information.

The battery Group Size number, the Cold Cranking Amperage (CCA) rating, and the Reserve Capacity (RC) rating or Ampere-Hours (AH) rating can be found on the original equipment battery label. Be certain that a replacement battery has the correct Group Size number, as well as CCA, and RC or AH ratings that equal or exceed the original equipment specification for the vehicle being serviced. Refer to **Battery Specifications** in this group for the location of the proper factory-installed battery specifications.

OPERATION

The battery is designed to store electrical energy in a chemical form. When an electrical load is applied to the terminals of the battery, an electrochemical reaction occurs. This reaction causes the battery to discharge electrical current from its terminals. As the battery discharges, a gradual chemical change takes place within each cell. The sulfuric acid in the electrolyte combines with the plate materials, causing both plates to slowly change to lead sulfate. At the same time, oxygen from the positive plate material combines with hydrogen from the sulfuric acid, causing the electrolyte to become mainly water. The chemical changes within the battery are caused by the movement of excess or free electrons between the positive and negative plate groups. This movement of electrons produces a flow of electrical current through the load device attached to the battery terminals.

As the plate materials become more similar chemically, and the electrolyte becomes less acid, the voltage potential of each cell is reduced. However, by charging the battery with a voltage higher than that of the battery itself, the battery discharging process is reversed. Charging the battery gradually changes the sulfated lead plates back into sponge lead and lead dioxide, and the water back into sulfuric acid. This action restores the difference in the electron charges deposited on the plates, and the voltage potential of the battery cells. For a battery to remain useful, it must be able to produce high-amperage current over an extended period. A battery must also be able to accept a charge, so that its voltage potential may be restored.

The battery is vented to release excess hydrogen gas that is created when the battery is being charged or discharged. However, even with these vents, hydrogen gas can collect in or around the battery. If hydrogen gas is exposed to flame or sparks, it may ignite. If the electrolyte level is low, the battery may arc internally and explode. If the battery is equipped with removable cell caps, add distilled water whenever the electrolyte level is below the top of the plates. If the battery cell caps cannot be removed, the battery must be replaced if the electrolyte level becomes low.

DIAGNOSIS AND TESTING - BATTERY

The battery must be completely charged and the terminals should be properly cleaned and inspected before diagnostic procedures are performed. Refer to Battery System Cleaning for the proper cleaning procedures, and Battery System Inspection for the proper battery inspection procedures. Refer to Standard Procedures for the proper battery charging procedures.

MICRO 420 ELECTRICAL SYSTEM TESTER

The Micro420 automotive battery tester is designed to help the dealership technicians diagnose the cause of a defective battery. Follow the instruction manual supplied with the tester to properly diagnose a vehicle. If the instruction manual is not available refer to the standard procedure in this section, which includes the directions for using the Micro420 electrical system tester.

WARNING: IF THE BATTERY SHOWS SIGNS OF FREEZING, LEAKING OR LOOSE POSTS, DO NOT TEST, ASSIST-BOOST, OR CHARGE. THE BATTERY MAY ARC INTERNALLY AND EXPLODE. PERSONAL INJURY AND/OR VEHICLE DAMAGE MAY RESULT.

WARNING: EXPLOSIVE HYDROGEN GAS FORMS IN AND AROUND THE BATTERY. DO NOT SMOKE, USE FLAME, OR CREATE SPARKS NEAR THE BATTERY. PERSONAL INJURY AND/OR VEHICLE DAMAGE MAY RESULT.

BATTERY (Continued)

WARNING: THE BATTERY CONTAINS SULFURIC ACID, WHICH IS POISONOUS AND CAUSTIC. AVOID CONTACT WITH THE SKIN, EYES, OR CLOTHING. IN THE EVENT OF CONTACT, FLUSH WITH WATER AND CALL A PHYSICIAN IMMEDIATELY. KEEP OUT OF THE REACH OF CHILDREN.

A battery that will not accept a charge is faulty, and must be replaced. Further testing is not required. A fully-charged battery must be load tested to determine its cranking capacity. A battery that is fully-charged, but does not pass the load test, is faulty and must be replaced.

NOTE: Completely discharged batteries may take several hours to accept a charge. Refer to Standard Procedures for the proper battery charging procedures.

STANDARD PROCEDURE

STANDARD PROCEDURE - SPIRAL PLATE BATTERY CHARGING

Vehicles equipped with a diesel engine utilize a unique spiral plate battery. This battery has a maximum charging voltage that must be used in order to restore the battery to its full potential, failure to use the following spiral plate battery charging procedure could result in damage to the battery or personal injury.

Battery charging is the means by which the battery can be restored to its full voltage potential. A battery is fully-charged when:

- Micro 420 electrical system tester indicates battery is OK.
- Open-circuit voltage of the battery is 12.65 volts or above.
- Battery passes Load Test multiple times.

WARNING: IF THE BATTERY SHOWS SIGNS OF FREEZING, LEAKING, LOOSE POSTS OR LOW ELECTROLYTE LEVEL, DO NOT TEST, ASSIST-BOOST, OR CHARGE. THE BATTERY MAY ARC INTERNALLY AND EXPLODE. PERSONAL INJURY AND/OR VEHICLE DAMAGE MAY RESULT.

CAUTION: Always disconnect and isolate the battery negative cable before charging a battery. Do not exceed 14.4 volts while charging a battery.

CAUTION: The battery should not be hot to the touch. If the battery feels hot to the touch, turn off the charger and let the battery cool before continuing the charging operation. Damage to the battery may result.

After the battery has been charged to 12.6 volts or greater, perform a load test to determine the battery cranking capacity. Refer to Standard Procedures for the proper battery load test procedures. If the battery will endure a load test, return the battery to service. If the battery will not endure a load test, it is faulty and must be replaced.

Clean and inspect the battery hold downs, tray, terminals, posts, and top before completing battery service. Refer to Battery System Cleaning for the proper battery system cleaning procedures, and Battery System Inspection for the proper battery system inspection procedures.

CHARGING A COMPLETELY DISCHARGED BATTERY – SPIRAL PLATE BATTERY

The following procedure should be used to recharge a completely discharged battery. Unless this procedure is properly followed, a good battery may be needlessly replaced.

(1) Measure the voltage at the battery posts with a voltmeter, accurate to 1/10 (0.10) volt (Fig. 7). If the reading is below ten volts, the battery charging current will be low. It could take some time before the battery accepts a current greater than a few milliamperes. Such low current may not be detectable on the ammeters built into many battery chargers.

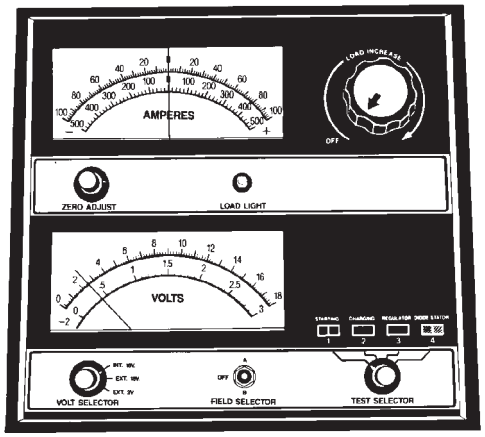

898A-12

Fig. 7 Voltmeter - Typical

(2) Disconnect and isolate the battery negative cable. Connect the battery charger leads. Some battery chargers are equipped with polarity-sensing circuitry. This circuitry protects the battery charger and the battery from being damaged if they are improperly connected. If the battery state-of-charge is too low for the polarity-sensing circuitry to detect, the battery charger will not operate. This makes it appear that the battery will not accept charging current. See the instructions provided by the manufac-

BATTERY (Continued)

turer of the battery charger for details on how to bypass the polarity-sensing circuitry.

(3) Battery chargers vary in the amount of voltage and current they provide. The amount of time required for a battery to accept measurable charging current at various voltages is shown in the Charge Rate Table. If the charging current is still not measurable at the end of the charging time, the battery is faulty and must be replaced. If the charging current is measurable during the charging time, the battery may be good and the charging should be completed in the normal manner.

CHARGE RATE TABLE	
Voltage	Hours
14.4 volts maximum	up to 4 hours
13.0 to 14 volts	up to 8 hours
12.9 volts or less	up to 16 hours

CHARGING TIME REQUIRED

The time required to charge a battery will vary, depending upon the following factors:

- **Battery Capacity** - A completely discharged heavy-duty battery requires twice the charging time of a small capacity battery.
- **Temperature** - A longer time will be needed to charge a battery at -18° C (0° F) than at 27° C (80° F). When a fast battery charger is connected to a cold battery, the current accepted by the battery will be very low at first. As the battery warms, it will accept a higher charging current rate (amperage).
- **Charger Capacity** - A battery charger that supplies only five amperes will require a longer charging time. A battery charger that supplies eight amperes will require a shorter charging time.
- **State-Of-Charge** - A completely discharged battery requires more charging time than a partially discharged battery. Electrolyte is nearly pure water in a completely discharged battery. At first, the charging current (amperage) will be low. As the battery charges, the specific gravity of the electrolyte will gradually rise.

The Battery Charging Time Table gives an indication of the time required to charge a typical battery at room temperature based upon the battery state-of-charge and the charger capacity.

BATTERY CHARGING TIME TABLE		
Charging Amperage	5 Amps	8 Amps
Open Circuit Voltage	Hours Charging @ 21° C (70° F)	
12.25 to 12.49	6 hours	3 hours
12.00 to 12.24	10 hours	5 hours
10.00 to 11.99	14 hours	7 hours
Below 10.00	18 hours	9 hours

STANDARD PROCEDURE - CONVENTIONAL BATTERY CHARGING

Vehicles equipped with a diesel engine utilize a unique spiral plate battery. This battery has a maximum charging voltage that must be used in order to restore the battery to its full potential, failure to use the spiral plate battery charging procedure could result in damage to the battery or personal injury.

Battery charging is the means by which the battery can be restored to its full voltage potential. A battery is fully-charged when:

- Micro 420 electrical system tester indicates battery is OK.
- Three hydrometer tests, taken at one-hour intervals, indicate no increase in the temperature-corrected specific gravity of the battery electrolyte.
- Open-circuit voltage of the battery is 12.64 volts or above.

WARNING: IF THE BATTERY SHOWS SIGNS OF FREEZING, LEAKING, LOOSE POSTS, DO NOT TEST, ASSIST-BOOST, OR CHARGE. THE BATTERY MAY ARC INTERNALLY AND EXPLODE. PERSONAL INJURY AND/OR VEHICLE DAMAGE MAY RESULT.

WARNING: EXPLOSIVE HYDROGEN GAS FORMS IN AND AROUND THE BATTERY. DO NOT SMOKE, USE FLAME, OR CREATE SPARKS NEAR THE BATTERY. PERSONAL INJURY AND/OR VEHICLE DAMAGE MAY RESULT.

WARNING: THE BATTERY CONTAINS SULFURIC ACID, WHICH IS POISONOUS AND CAUSTIC. AVOID CONTACT WITH THE SKIN, EYES, OR CLOTHING. IN THE EVENT OF CONTACT, FLUSH WITH WATER AND CALL A PHYSICIAN IMMEDIATELY. KEEP OUT OF THE REACH OF CHILDREN.

BATTERY (Continued)

WARNING: IF THE BATTERY IS EQUIPPED WITH REMOVABLE CELL CAPS, BE CERTAIN THAT EACH OF THE CELL CAPS IS IN PLACE AND TIGHT BEFORE THE BATTERY IS RETURNED TO SERVICE. PERSONAL INJURY AND/OR VEHICLE DAMAGE MAY RESULT FROM LOOSE OR MISSING CELL CAPS.

CAUTION: Always disconnect and isolate the battery negative cable before charging a battery. Do not exceed sixteen volts while charging a battery. Damage to the vehicle electrical system components may result.

CAUTION: Battery electrolyte will bubble inside the battery case during normal battery charging. Electrolyte boiling or being discharged from the battery vents indicates a battery overcharging condition. Immediately reduce the charging rate or turn off the charger to evaluate the battery condition. Damage to the battery may result from overcharging.

CAUTION: The battery should not be hot to the touch. If the battery feels hot to the touch, turn off the charger and let the battery cool before continuing the charging operation. Damage to the battery may result.

After the battery has been charged to 12.4 volts or greater, retest the battery with the micro 420 tester or perform a load test to determine the battery cranking capacity. Refer to Standard Procedures for the proper battery load test procedures. If the battery will endure a load test, return the battery to service. If the battery will not endure a load test, it is faulty and must be replaced.

Clean and inspect the battery hold downs, tray, terminals, posts, and top before completing battery service. Refer to Battery System Cleaning for the proper battery system cleaning procedures, and Battery System Inspection for the proper battery system inspection procedures.

CHARGING A COMPLETELY DISCHARGED BATTERY

The following procedure should be used to recharge a completely discharged battery. Unless this procedure is properly followed, a good battery may be needlessly replaced.

(1) Measure the voltage at the battery posts with a voltmeter, accurate to 1/10 (0.10) volt (Fig. 8). If the reading is below ten volts, the battery charging current will be low. It could take some time before the battery accepts a current greater than a few milliamperes. Such low current may not be detectable on the ammeters built into many battery chargers.

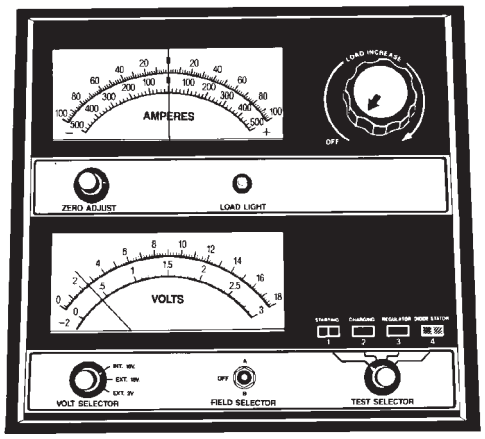

Fig. 8 Voltmeter - Typical

(2) Disconnect and isolate the battery negative cable. Connect the battery charger leads. Some battery chargers are equipped with polarity-sensing circuitry. This circuitry protects the battery charger and the battery from being damaged if they are improperly connected. If the battery state-of-charge is too low for the polarity-sensing circuitry to detect, the battery charger will not operate. This makes it appear that the battery will not accept charging current. See the instructions provided by the manufacturer of the battery charger for details on how to bypass the polarity-sensing circuitry.

(3) Battery chargers vary in the amount of voltage and current they provide. The amount of time required for a battery to accept measurable charging current at various voltages is shown in the Charge Rate Table. If the charging current is still not measurable at the end of the charging time, the battery is faulty and must be replaced. If the charging current is measurable during the charging time, the battery may be good and the charging should be completed in the normal manner.

CHARGE RATE TABLE	
Voltage	Hours
16.0 volts maximum	up to 10 min.
14.0 to 15.9 volts	up to 20 min.
13.9 volts or less	up to 30 min.

CHARGING TIME REQUIRED

The time required to charge a battery will vary, depending upon the following factors:

- **Battery Capacity** - A completely discharged heavy-duty battery requires twice the charging time of a small capacity battery.
- **Temperature** - A longer time will be needed to charge a battery at -18° C (0° F) than at 27° C (80°

BATTERY (Continued)

F). When a fast battery charger is connected to a cold battery, the current accepted by the battery will be very low at first. As the battery warms, it will accept a higher charging current rate (amperage).

- **Charger Capacity** - A battery charger that supplies only five amperes will require a longer charging time. A battery charger that supplies twenty amperes or more will require a shorter charging time.
- **State-Of-Charge** - A completely discharged battery requires more charging time than a partially discharged battery. Electrolyte is nearly pure water in a completely discharged battery. At first, the charging current (amperage) will be low. As the battery charges, the specific gravity of the electrolyte will gradually rise.

The Conventional Battery Charging Time Table gives an indication of the time required to charge a typical battery at room temperature based upon the battery state-of-charge and the charger capacity.

CONVENTIONAL BATTERY CHARGING TIME TABLE			
Charging Amperage	5 Amps	10 Amps	20 Amps
Open Circuit Voltage	Hours Charging @ 21° C (70° F)		
12.25 to 12.49	6 hours	3 hours	1.5 hours
12.00 to 12.24	10 hours	5 hours	2.5 hours
10.00 to 11.99	14 hours	7 hours	3.5 hours
Below 10.00	18 hours	9 hours	4.5 hours

STANDARD PROCEDURE - OPEN-CIRCUIT VOLTAGE TEST

A battery open-circuit voltage (no load) test will show the approximate state-of-charge of a battery. This test can be used if no other battery tester is available.

Before proceeding with this test, completely charge the battery. Refer to Standard Procedures for the proper battery charging procedures.

(1) Before measuring the open-circuit voltage, the surface charge must be removed from the battery. Turn on the headlamps for fifteen seconds, then allow up to five minutes for the battery voltage to stabilize.

(2) Disconnect and isolate both battery cables, negative cable first.

(3) Using a voltmeter connected to the battery posts (see the instructions provided by the manufacturer of the voltmeter), measure the open-circuit voltage (Fig. 9).

See the Open-Circuit Voltage Table. This voltage reading will indicate the battery state-of-charge, but will not reveal its cranking capacity. If a battery has an open-circuit voltage reading of 12.4 volts or greater, it may be load tested to reveal its cranking capacity. Refer to Standard Procedures for the proper battery load test procedures.

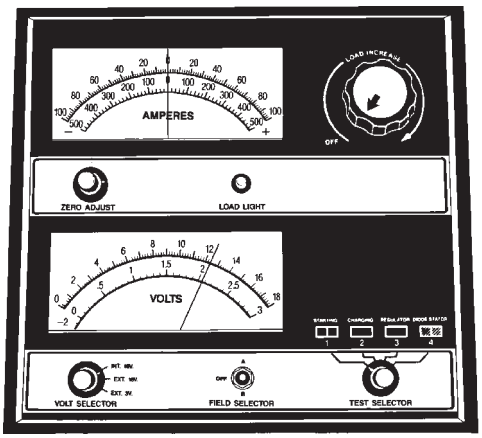

Fig. 9 Testing Open-Circuit Voltage - Typical

OPEN CIRCUIT VOLTAGE TABLE	
Open Circuit Voltage	Charge Percentage
11.7 volts or less	0%
12.0 volts	25%
12.2 volts	50%
12.45 volts	75%
12.65 volts or more	100%

STANDARD PROCEDURE - IGNITION-OFF DRAW TEST

The term Ignition-Off Draw (IOD) identifies a normal condition where power is being drained from the battery with the ignition switch in the Off position. A normal vehicle electrical system will draw from five to thirty-five milliamperes (0.015 to 0.025 ampere) with the ignition switch in the Off position, and all non-ignition controlled circuits in proper working order. Up to twenty-five milliamperes are needed to enable the memory functions for the Powertrain Control Module (PCM), digital clock, electronically tuned radio, and other modules which may vary with the vehicle equipment.

A vehicle that has not been operated for approximately twenty-one days, may discharge the battery to an inadequate level. When a vehicle will not be used for twenty-one days or more (stored), remove the IOD fuse from the Integrated Power Module (IPM). This will reduce battery discharging.

Excessive IOD can be caused by:

- Electrical items left on.
- Faulty or improperly adjusted switches.
- Faulty or shorted electronic modules and components.
- An internally shorted generator.

BATTERY (Continued)

- Intermittent shorts in the wiring.

If the IOD is over twenty-five milliamperes, the problem must be found and corrected before replacing a battery. In most cases, the battery can be charged and returned to service after the excessive IOD condition has been corrected.

(1) Verify that all electrical accessories are off. Turn off all lamps, remove the ignition key, and close all doors. If the vehicle is equipped with an illuminated entry system or an electronically tuned radio, allow the electronic timer function of these systems to automatically shut off (time out). This may take up to three minutes.

(2) Disconnect the battery negative cable.

(3) Set an electronic digital multi-meter to its highest amperage scale. Connect the multi-meter between the disconnected battery negative cable terminal clamp and the battery negative terminal post. Make sure that the doors remain closed so that the illuminated entry system is not activated. The multi-meter amperage reading may remain high for up to three minutes, or may not give any reading at all while set in the highest amperage scale, depending upon the electrical equipment in the vehicle. The multi-meter leads must be securely clamped to the battery negative cable terminal clamp and the battery negative terminal post. If continuity between the battery negative terminal post and the negative cable terminal clamp is lost during any part of the IOD test, the electronic timer function will be activated and all of the tests will have to be repeated.

(4) After about three minutes, the high-amperage IOD reading on the multi-meter should become very low or nonexistent, depending upon the electrical equipment in the vehicle. If the amperage reading remains high, remove and replace each fuse or circuit breaker in the Integrated Power Module (IPM), one at a time until the amperage reading becomes very low, or nonexistent. Refer to the appropriate wiring information in this service manual for complete Integrated Power Module fuse, circuit breaker, and circuit identification. This will isolate each circuit and identify the circuit that is the source of the high-amperage IOD. If the amperage reading remains high after removing and replacing each fuse and circuit breaker, disconnect the wire harness from the generator. If the amperage reading now becomes very low or nonexistent, refer to Charging System for the proper charging system diagnosis and testing procedures. After the high-amperage IOD has been corrected, switch the multi-meter to progressively lower amperage scales and, if necessary, repeat the fuse and circuit breaker remove-and-replace process to identify and correct all sources of excessive IOD. It is now safe to select the lowest milliampere scale of the multi-meter to check the low-amperage IOD.

CAUTION: Do not open any doors, or turn on any electrical accessories with the lowest milliampere scale selected, or the multi-meter may be damaged.

(5) Allow twenty minutes for the IOD to stabilize and observe the multi-meter reading. The low-amperage IOD should not exceed twenty-five milliamperes (0.025 ampere). If the current draw exceeds twenty-five milliamperes, isolate each circuit using the fuse and circuit breaker remove-and-replace process in Step 4. The multi-meter reading will drop to within the acceptable limit when the source of the excessive current draw is disconnected. Repair this circuit as required; whether a wiring short, incorrect switch adjustment, or a component failure is at fault.

STANDARD PROCEDURE - CHECKING BATTERY ELECTROLYTE LEVEL

The following procedure can be used to check the electrolyte level in a low-maintenance lead-acid battery.

(1) Unscrew and remove the battery cell caps with a flat-bladed screw driver (Fig. 10).

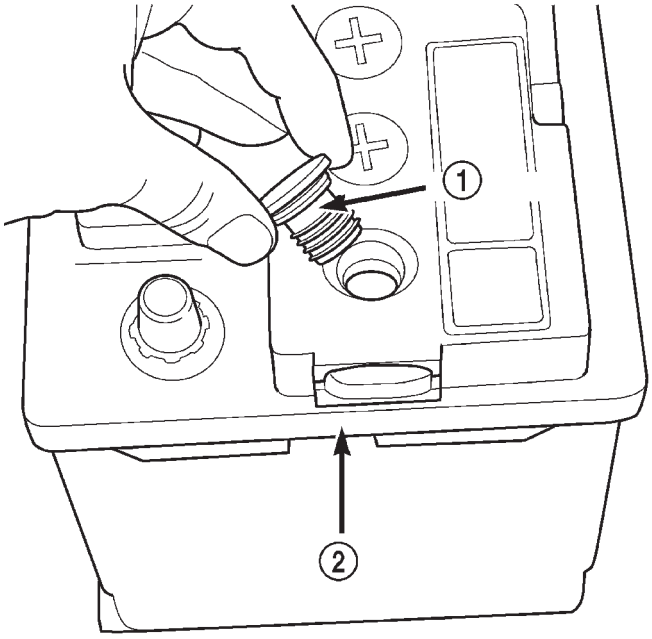

80b76fd0

Fig. 10 BATTERY CELL CAP REMOVAL/ INSTALLATION - LOW-MAINTENANCE BATTERY ONLY

1 - BATTERY CELL CAP
2 - BATTERY CASE

WARNING: NEVER PUT YOUR FACE NEAR A GASSING, HOT OR SWELLED BATTERY. SERIOUS PERSONAL INJURY MAY RESULT.

BATTERY (Continued)

(2) Wearing safety glasses, look through the battery cell cap holes to determine the level of the electrolyte in the battery. The electrolyte should be above the hooks inside the battery cells (Fig. 11).

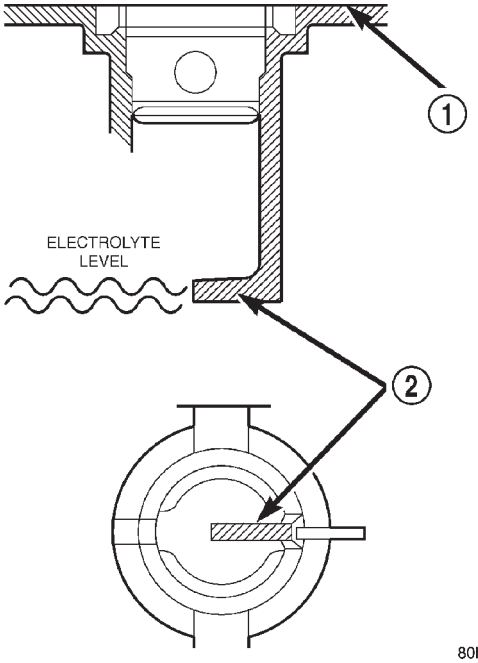

Fig. 11 HOOK INSIDE BATTERY CELLS - LOW-MAINTENANCE BATTERY ONLY

1 - TOP OF BATTERY
2 - HOOK INSIDE BATTERY CELLS

(3) **Add only distilled water** until the electrolyte is above the hooks inside the battery cells (Fig. 11).

REMOVAL - BATTERY

WARNING: A SUITABLE PAIR OF HEAVY DUTY RUBBER GLOVES AND SAFETY GLASSES SHOULD BE WORN WHEN REMOVING OR SERVICING A BATTERY.

WARNING: REMOVE METALLIC JEWELRY TO AVOID INJURY BY ACCIDENTAL ARCING OF BATTERY CURRENT.

(1) Verify that the ignition switch and all accessories are OFF.
(2) Disconnect the battery cables from the battery posts, negative first (Fig. 12).
(3) Remove the battery hold down retaining nut.
(4) Remove the battery hold down bracket.
(5) Remove the battery from the vehicle.

INSTALLATION

(1) Position the battery in the battery tray.

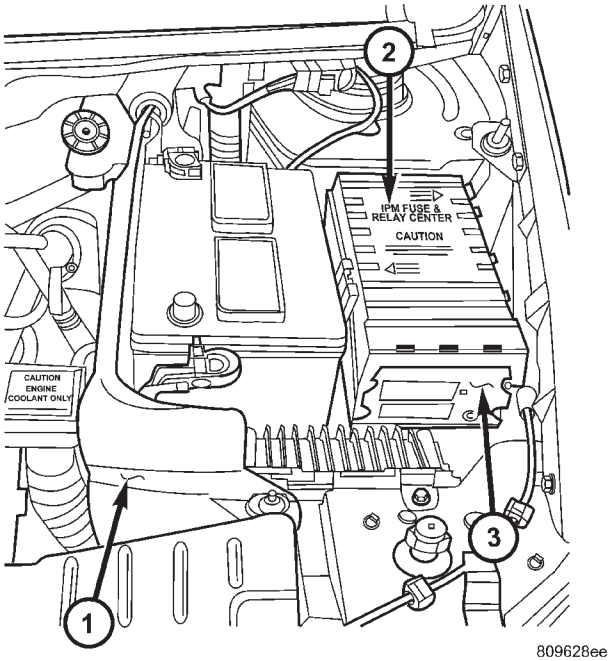

Fig. 12 BATTERY POSITION & ORIENTATION

1 - BATTERY THERMOWRAP (IF EQUIPPED)
2 - INTEGRATED POWER MODULE
3 - FRONT CONTROL MODULE

(2) Install the battery hold down bracket and retaining nut. Torque the nut to 20 N·m (180 in. lbs.).
(3) Connect the battery cables to the battery posts, positive cable first. Torque terminal fasteners to 8.5 N·m (75 in. lbs.).

BATTERY HOLDDOWN

DESCRIPTION

The battery hold down hardware consists of a molded plastic lip that is integral to the outboard edge of the battery tray and support unit, a molded steel hold down bracket and a single hex nut with a coned washer.

When installing a battery into the battery tray, be certain that the hold down hardware is properly installed and that the fasteners are tightened to the proper specifications. Improper hold down fastener tightness, whether too loose or too tight, can result in damage to the battery, the vehicle or both. Refer to **Battery Hold Downs** in this section of this service manual for the location of the proper battery hold down installation procedures, including the proper hold down fastener tightness specifications.

OPERATION

The battery holddown secures the battery in the battery tray. This holddown is designed to prevent

BATTERY HOLDDOWN (Continued)

battery movement during the most extreme vehicle operation conditions. Periodic removal and lubrication of the battery holddown hardware is recommended to prevent hardware seizure at a later date.

NOTE: Never operate a vehicle without a battery holddown device properly installed. Damage to the vehicle, components and battery could result.

REMOVAL

All of the battery hold down hardware can be serviced without removal of the battery or the battery tray and support unit.

(1) Turn the ignition switch to the Off position. Be certain that all electrical accessories are turned off.

(2) Remove the nut with washer that secures the battery hold down bracket to the battery tray and support unit.

(3) Remove the battery hold down bracket from the battery tray and support unit.

INSTALLATION

(1) Install the battery hold down bracket in the battery tray and support unit.

(2) Install the nut with washer that secures the battery hold down bracket to the battery tray and support unit. Torque to 20 N·m (180 in. lbs.).

BATTERY CABLES

DESCRIPTION

The battery cables are large gauge, stranded copper wires sheathed within a heavy plastic or synthetic rubber insulating jacket. The wire used in the battery cables combines excellent flexibility and reliability with high electrical current carrying capacity. Refer to **Wiring Diagrams** in the index of this service manual for the location of the proper battery cable wire gauge information.

A clamping type female battery terminal made of stamped metal is attached to one end of the battery cable wire. A square headed pinch-bolt and hex nut are installed at the open end of the female battery terminal clamp. Large eyelet type terminals are crimped onto the opposite end of the battery cable wire and then solder-dipped. The battery positive cable wires have a red insulating jacket to provide visual identification and feature a larger female battery terminal clamp to allow connection to the larger battery positive terminal post. The battery negative cable wires have a black insulating jacket and a smaller female battery terminal clamp.

The battery cables cannot be repaired and, if damaged or faulty they must be replaced. Both the battery positive and negative cables are available for service replacement only as a unit with the battery wire harness, which may include portions of the wiring circuits for the generator and other components on some models. Refer to **Wiring Diagrams** in the index of this service manual for the location of more information on the various wiring circuits included in the battery wire harness for the vehicle being serviced.

OPERATION

The battery cables connect the battery terminal posts to the vehicle electrical system. These cables also provide a path back to the battery for electrical current generated by the charging system for restoring the voltage potential of the battery. The female battery terminal clamps on the ends of the battery cable wires provide a strong and reliable connection of the battery cable to the battery terminal posts. The terminal pinch bolts allow the female terminal clamps to be tightened around the male terminal posts on the top of the battery. The eyelet terminals secured to the opposite ends of the battery cable wires from the female battery terminal clamps provide secure and reliable connection of the battery cables to the vehicle electrical system.

The battery positive cable terminal clamp is attached to the ends of two wires. One wire has an eyelet terminal that connects the battery positive cable to the B(+) terminal stud of the Integrated Power Module (IPM), and the other wire has an eyelet terminal that connects the battery positive cable to the B(+) terminal stud of the engine starter motor solenoid. The battery negative cable terminal clamp is also attached to the ends of two wires. One wire has an eyelet terminal that connects the battery negative cable to the vehicle powertrain through a stud on the left side of the engine cylinder block. The other wire has an eyelet terminal that connects the battery negative cable to the vehicle body through a ground screw on the left front fender inner shield, near the battery.

DIAGNOSIS AND TESTING - BATTERY CABLE

A voltage drop test will determine if there is excessive resistance in the battery cable terminal connections or the battery cable. If excessive resistance is found in the battery cable connections, the connection point should be disassembled, cleaned of all corrosion or foreign material, then reassembled. Following reassembly, check the voltage drop for the battery cable connection and the battery cable again to confirm repair.

When performing the voltage drop test, it is important to remember that the voltage drop is giving an indication of the resistance between the two points at which the voltmeter probes are attached. **EXAM-**

BATTERY CABLES (Continued)

PLE: When testing the resistance of the battery positive cable, touch the voltmeter leads to the battery positive cable terminal clamp and to the battery positive cable eyelet terminal at the starter solenoid B(+) terminal stud. If you probe the battery positive terminal post and the battery positive cable eyelet terminal at the starter solenoid B(+) terminal stud, you are reading the combined voltage drop in the battery positive cable terminal clamp-to-terminal post connection and the battery positive cable.

VOLTAGE DROP TEST

The following operation will require a voltmeter accurate to 1/10 (0.10) volt. Before performing this test, be certain that the following procedures are accomplished:

- The battery is fully-charged and load tested. Refer to Standard Procedures for the proper battery charging and load test procedures.
- Fully engage the parking brake.
- If the vehicle is equipped with an automatic transmission, place the gearshift selector lever in the Park position. If the vehicle is equipped with a manual transmission, place the gearshift selector lever in the Neutral position and block the clutch pedal in the fully depressed position.
- Verify that all lamps and accessories are turned off.
- To prevent the engine from starting, remove the Automatic Shut Down (ASD) relay. The ASD relay is located in the Intelligent Power Module (IPM), in the engine compartment. See the fuse and relay layout label affixed to the underside of the IPM cover for ASD relay identification and location.

(1) Connect the positive lead of the voltmeter to the battery negative terminal post. Connect the negative lead of the voltmeter to the battery negative cable terminal clamp (Fig. 13). Rotate and hold the ignition switch in the Start position. Observe the voltmeter. If voltage is detected, correct the poor connection between the battery negative cable terminal clamp and the battery negative terminal post.

(2) Connect the positive lead of the voltmeter to the battery positive terminal post. Connect the negative lead of the voltmeter to the battery positive cable terminal clamp (Fig. 14). Rotate and hold the ignition switch in the Start position. Observe the voltmeter. If voltage is detected, correct the poor connection between the battery positive cable terminal clamp and the battery positive terminal post.

(3) Connect the voltmeter to measure between the battery positive cable terminal clamp and the starter solenoid B(+) terminal stud (Fig. 15). Rotate and hold the ignition switch in the Start position. Observe the voltmeter. If the reading is above 0.2 volt, clean and tighten the battery positive cable eyelet terminal connection at the starter solenoid B(+) terminal stud. Repeat the test. If the reading is still above 0.2 volt, replace the faulty battery positive cable.

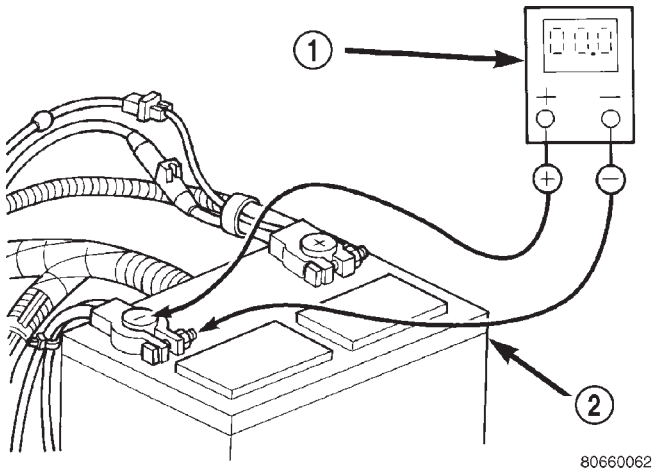

Fig. 13 TEST BATTERY NEGATIVE CONNECTION RESISTANCE - TYPICAL

1 - VOLTMETER
2 - BATTERY

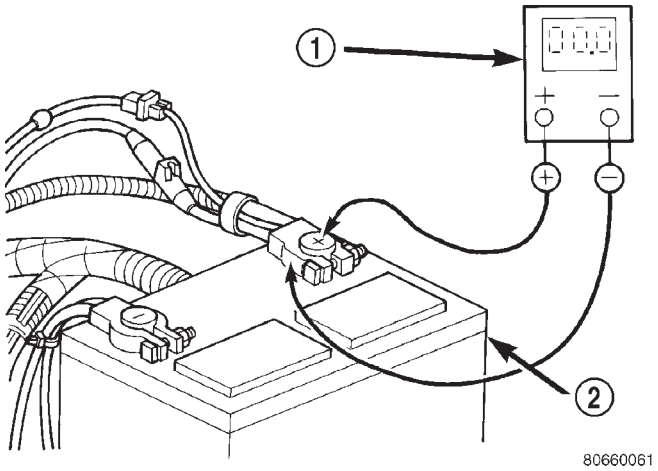

Fig. 14 TEST BATTERY POSITIVE CONNECTION RESISTANCE - TYPICAL

1 - VOLTMETER
2 - BATTERY

(4) Connect the voltmeter to measure between the battery negative cable terminal clamp and a good clean ground on the engine block (Fig. 16). Rotate and hold the ignition switch in the Start position. Observe the voltmeter. If the reading is above 0.2 volt, clean and tighten the battery negative cable eyelet terminal connection to the engine block. Repeat the test. If the reading is still above 0.2 volt, replace the faulty battery negative cable.

BATTERY CABLES (Continued)

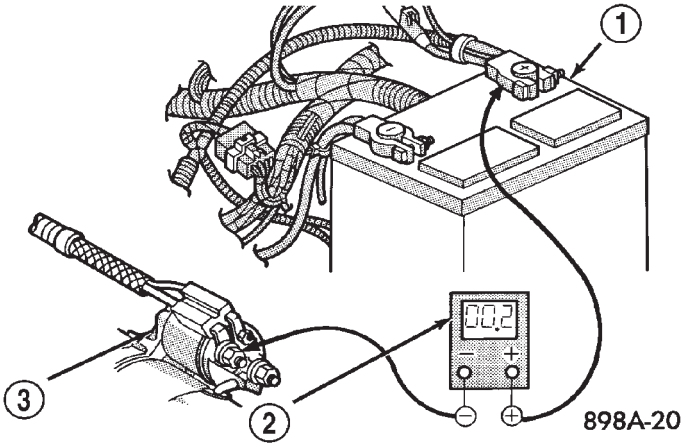

Fig. 15 TEST BATTERY POSITIVE CABLE RESISTANCE - TYPICAL

1 - BATTERY
2 - VOLTMETER
3 - STARTER MOTOR

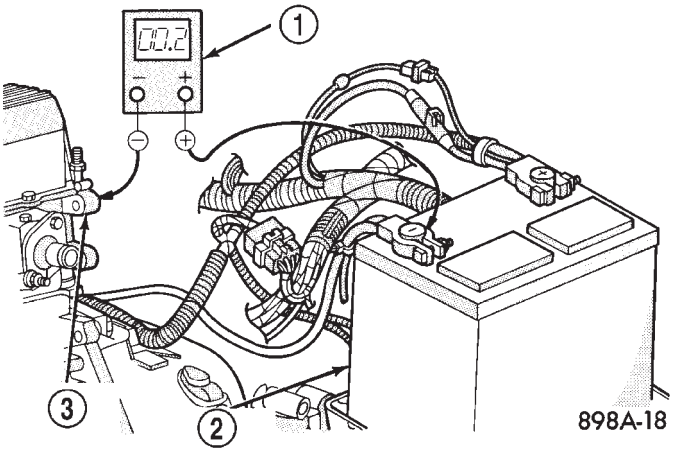

Fig. 16 TEST GROUND CIRCUIT RESISTANCE - TYPICAL

1 - VOLTMETER
2 - BATTERY
3 - ENGINE GROUND

REMOVAL

The battery cables on this model may include portions of wiring circuits for the generator and other components on the vehicle. If battery cable replacement is required, it will be necessary to extract the cables out of the engine wire harness assembly. Use care not to damage the other wires and circuits which are also packaged into the engine wire harness assembly.

(1) Turn the ignition switch to the Off position. Be certain that all electrical accessories are turned off.

(2) Disconnect and isolate the negative battery cable terminal.

(3) Remove the battery thermowrap (if equipped) from the battery tray.

(4) Remove the tape from the engine wire harness assembly, to access the desired battery cable.

(5) One at a time, trace and disconnect the battery cable retaining fasteners and routing clips until the desired cable is free from the vehicle.

(6) Feed the battery cable out of the vehicle.

INSTALLATION

(1) Position the battery cable in the vehicle.

(2) One at a time, trace and install the battery cable retaining fasteners and routing clips until the desired cable is properly installed in the engine wire harness assembly.

(3) Install the tape on the engine wire harness assembly.

(4) Install the battery thermowrap (if equipped) on the battery tray.

(5) Connect the negative battery cable terminal.

BATTERY TRAY

DESCRIPTION

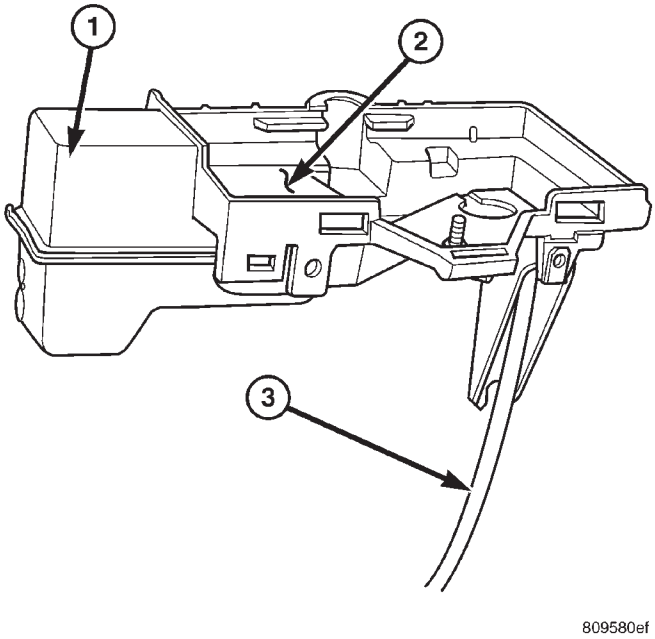

Fig. 17 RS BATTERY TRAY

1 - ENGINE VACUUM RESERVOIR
2 - BATTERY TRAY ASSEMBLY
3 - DRAINAGE HOSE

The battery is mounted in a molded plastic battery tray and support unit located in the left front corner of the engine compartment. The battery tray and support unit is secured with two nuts, one is located

BATTERY TRAY (Continued)

directly under the battery and the other is located on the right side of the tray which also serves as a coolant bottle neck retaining bolt. An additional bolt is located directly under the battery.

The battery tray and support unit also includes a engine vacuum reservoir, located in the rear of the unit (Fig. 17). And a drainage hose, located in the front of the unit (Fig. 17).

OPERATION

The battery tray provides a secure mounting location and supports the battery. The battery tray also provides the anchor point for the battery holddown hardware. The battery tray and the battery holddown hardware combine to secure and stabilize the battery in the engine compartment, which prevents battery movement during vehicle operation. Unrestrained battery movement during vehicle operation could result in damage to the vehicle, the battery, or both.

The battery tray used on this model also includes a engine vacuum reservoir and drainage hose. The vacuum reservoir provides a storage container for engine vacuum. Refer to the engine section of the service manual for more engine vacuum information. The drainage hose provides means for any liquid that might collect in the bottom of the battery tray to drain under the vehicle.

REMOVAL

(1) Disconnect and isolate the negative battery cable.

(2) Remove the battery from the vehicle. Refer to the procedure in this section.

(3) Remove the battery tray retaining fasteners (Fig. 18).

(4) Pull battery tray up far enough to disconnect the engine vacuum harness hose from the battery tray mounted, vacuum reservoir.

(5) Remove the battery tray from the vehicle.

INSTALLATION

(1) Position the battery tray in the vehicle.

(2) Connect the engine vacuum harness hose on the battery tray mounted vacuum reservoir.

(3) Position drainage hose and install the battery tray retaining fasteners (Fig. 18).

(4) Install the battery in the vehicle. Refer to the procedure in this section.

(5) Connect the negative battery cable.

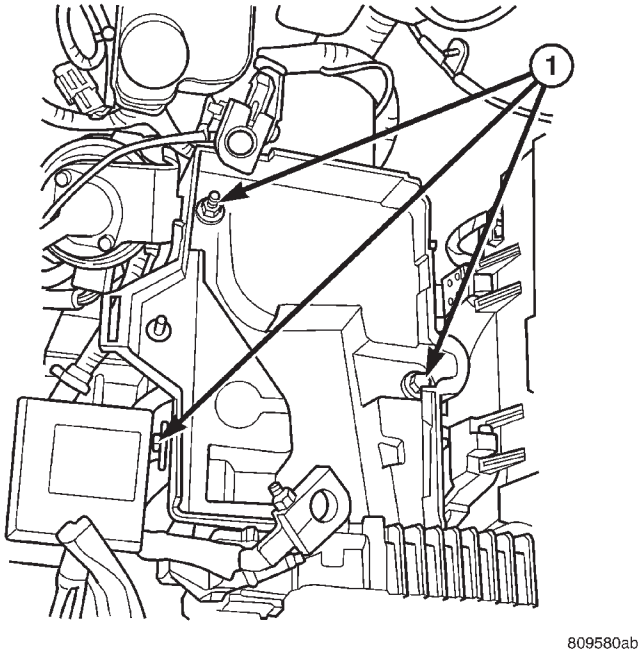

Fig. 18 BATTERY TRAY POSITION & ORIENTATION

1 - BATTERY TRAY RETAINING FASTENERS

THERMOWRAP

DESCRIPTION

A one-piece slip-on thermowrap unit shields the battery case from engine compartment heat. The thermowrap slips over the battery case and due to its one piece design, the battery cables must be removed in order to install or remove the thermowrap.

OPERATION

The thermowrap protects the battery from engine compartment temperature extremes. The temperature of the battery can affect battery life. The air trapped in the padded material of the thermowrap creates a dead air space, which helps to insulate the sides of the battery case from the air temperature found in the surrounding engine compartment.

REMOVAL

(1) Disconnect and isolate the negative battery cable.

(2) Disconnect the positive battery cable.

(3) Lift the battery thermowrap straight up to remove from the battery.

INSTALLATION

(1) Position the thermowrap on the battery.

(2) Connect the negative and positive battery cables.

CHARGING

TABLE OF CONTENTS

page

CHARGING
- DESCRIPTION - CHARGING SYSTEM 20
- OPERATION - CHARGING SYSTEM 20
- DIAGNOSIS AND TESTING - ON-BOARD DIAGNOSTIC SYSTEM 21
- SPECIFICATIONS
  - GENERATOR 22
  - TORQUE 22
- SPECIAL TOOLS 22

BATTERY TEMPERATURE SENSOR
- DESCRIPTION 23
- OPERATION 23
- REMOVAL 23

GENERATOR
- DESCRIPTION 23
- OPERATION 23
- REMOVAL
  - REMOVAL - 2.4L 23
  - REMOVAL - 2.5L 24
  - REMOVAL - 3.3/3.8L 25
  - REMOVAL - 3.5L 26
- INSTALLATION
  - INSTALLATION - 2.4L 27
  - INSTALLATION - 2.5L 28
  - INSTALLATION - 3.3/3.8L 28
  - INSTALLATION - 3.5L 28

GENERATOR DECOUPLER PULLEY
- DESCRIPTION 28
- OPERATION 28
- DIAGNOSIS AND TESTING - GENERATOR DECOUPLER PULLEY 29
- REMOVAL 29
- INSTALLATION 30

VOLTAGE REGULATOR
- DESCRIPTION 30
- OPERATION 30

CHARGING

DESCRIPTION - CHARGING SYSTEM

The charging system consists of:

- Generator
- Decoupler Pulley (If equipped)
- Electronic Voltage Regulator (EVR) circuitry within the Powertrain Control Module (PCM)
- Ignition switch (refer to the Ignition System section for information)
- Battery (refer to the Battery section for information)
- Inlet Air Temperature (calculated battery temperature)
- Voltmeter (refer to the Instrument Cluster section for information if equipped)
- Wiring harness and connections (refer to the Wiring section for information)
- Accessory drive belt (refer to the Cooling section for more information)

OPERATION - CHARGING SYSTEM

The charging system is turned on and off with the ignition switch. The system is on when the engine is running and the ASD relay is energized. The ASD relay is energized when the PCM grounds the ASD control circuit. This voltage is connected through the PCM or IPM (intelligent power module) (if equipped) and supplied to one of the generator field terminals (Gen. Source +) at the back of the generator.

The generator is driven by the engine through a serpentine belt and pulley or decoupler pulley arrangement.

The amount of DC current produced by the generator is controlled by the EVR (field control) circuitry contained within the PCM. This circuitry is connected in series with the second rotor field terminal and ground.

An Inlet air temperature sensor is used to calculate the temperature near the battery. This temperature data, along with data from monitored line voltage (battery voltage sense circuit), is used by the PCM to vary the battery charging rate. This is done by cycling the ground path to control the strength of the rotor magnetic field. The PCM then compensates and regulates generator current output accordingly to maintain system voltage at the targeted system voltage based on battery temperature.

All vehicles are equipped with On-Board Diagnostics (OBD). All OBD-sensed systems, including EVR (field control) circuitry, are monitored by the PCM. Each monitored circuit is assigned a Diagnostic Trouble Code (DTC). The PCM will store a DTC in electronic memory for certain failures it detects and illuminate the (MIL) lamp. Refer to On-Board Diagnostics in the Electronic Control Modules(Refer to 8 - ELECTRICAL/ELECTRONIC CONTROL MOD-

CHARGING (Continued)

ULES/POWERTRAIN CONTROL MODULE - DESCRIPTION) section for more DTC information.

The Check Gauges Lamp (if equipped) or Battery Lamp monitors: **charging system voltage,** engine coolant temperature and engine oil pressure. If an extreme condition is indicated, the lamp will be illuminated. The signal to activate the lamp is sent via the PCI bus circuits. The lamp is located on the instrument panel. Refer to the Instrument Cluster section for additional information.

The PCM uses the inlet air temperature sensor to control the charge system voltage. This temperature, along with data from monitored line voltage, is used by the PCM to vary the battery charging rate. The system voltage is higher at cold temperatures and is gradually reduced as the calculated battery temperature increases.

The ambient temperature sensor is used to control the battery voltage based upon ambient temperature (approximation of battery temperature). The PCM maintains the optimal output of the generator by monitoring battery voltage and controlling it to a range of 13.5 - 14.7 volts based on battery temperature.

DIAGNOSIS AND TESTING - ON-BOARD DIAGNOSTIC SYSTEM

The Powertrain Control Module (PCM) monitors critical input and output circuits of the charging system, making sure they are operational. A Diagnostic Trouble Code (DTC) is assigned to each input and output circuit monitored by the OBD system. Some circuits are checked continuously and some are checked only under certain conditions.

If the OBD system senses that a monitored circuit is bad, it will put a DTC into electronic memory. The DTC will stay in electronic memory as long as the circuit continues to be bad. The PCM is programmed to clear the memory after 50 engine starts if the problem does not occur again.

DIAGNOSTIC TROUBLE CODES

A DTC description can be read using the DRBIII® scan tool. Refer to the appropriate Powertrain Diagnostic Procedures manual for information.

A DTC does not identify which component in a circuit is bad. Thus, a DTC should be treated as a symptom, not as the cause for the problem. In some cases, because of the design of the diagnostic test procedure, a DTC can be the reason for another DTC to be set. Therefore, it is important that the test procedures be followed in sequence, to understand what caused a DTC to be set.

ERASING DIAGNOSTIC TROUBLE CODES

The DRBIII® Scan Tool must be used to erase a DTC.

The following procedures may be used to diagnose the charging system if:

- the check gauges lamp or battery lamp is illuminated with the engine running
- the voltmeter (if equipped) does not register properly
- an undercharged or overcharged battery condition occurs.

Remember that an undercharged battery is often caused by:

- accessories being left on with the engine not running
- a faulty or improperly adjusted switch that allows a lamp to stay on. Refer to Ignition-Off Draw Test (Refer to 8 - ELECTRICAL/BATTERY SYSTEM/ BATTERY - STANDARD PROCEDURE)

INSPECTION

The Powertrain Control Module (PCM) monitors critical input and output circuits of the charging system, making sure they are operational. A Diagnostic Trouble Code (DTC) is assigned to each input and output circuit monitored by the On-Board Diagnostic (OBD) system. Some charging system circuits are checked continuously, and some are checked only under certain conditions.

Refer to Diagnostic Trouble Codes in; Powertrain Control Module; Electronic Control Modules for more DTC information. This will include a complete list of DTC's including DTC's for the charging system.

To perform a complete test of the charging system, refer to the appropriate Powertrain Diagnostic Procedures service manual and the DRBIII® scan tool. Perform the following inspections before attaching the scan tool.

(1) Inspect the battery condition. Refer to the Battery section (Refer to 8 - ELECTRICAL/BATTERY SYSTEM - DIAGNOSIS AND TESTING) for procedures.

(2) Inspect condition of battery cable terminals, battery posts, connections at engine block, starter solenoid and relay. They should be clean and tight. Repair as required.

(3) Inspect all fuses in both the fuseblock and Power Distribution Center (PDC) for tightness in receptacles. They should be properly installed and tight. Repair or replace as required.

(4) Inspect generator mounting bolts for tightness. Replace or tighten bolts if required. Refer to the Generator Removal/Installation section of this group for torque specifications (Refer to 8 - ELECTRICAL/ CHARGING - SPECIFICATIONS).

CHARGING (Continued)

(5) Inspect generator drive belt condition and tension. Tighten or replace belt as required. Refer to Belt Tension Specifications(Refer to 7 - COOLING/ ACCESSORY DRIVE - SPECIFICATIONS).

(6) Inspect decoupler pulley (if equipped). Ensure decoupler pulley is driving the alternator rotor.

(7) Inspect automatic belt tensioner (if equipped). Refer to the Cooling System for more information.

(8) Inspect generator electrical connections at generator field, battery output, and ground terminal (if equipped). Also check generator ground wire connection at engine (if equipped). They should all be clean and tight. Repair as required.

SPECIFICATIONS

GENERATOR

Type	Engine	Minimun Test Amperage
Denso	2.4 L	125 Amp
Denso	3.3/3.8L	135 Amp or 145 Amp
Test Specification: 1. Engine RPM : 2500 RPM ±20 RPM 2. Voltage Output : 14.0 V ± 0.5 V 3. Field Current : 5 amps ± 0.1 amps		

Part number is located on the side of the generator.

TORQUE

DESCRIPTION	N·m	Ft. Lbs.	In. Lbs.
Battery Hold Down Clamp Bolt	20	14.7	180
Generator B+ Nut	12.4	9.2	110
Battery Terminal Nut	4		35
Generator Mounting Bolt 2.4L	28.2	20.8	250
Generator Mounting Bolts 3.3/3.8L	54.2	40	
Starter Solenoid Battery Nut 3.3/3.8L	11.3	8.3	100
Generator Decoupler	109.8	81	

SPECIAL TOOLS

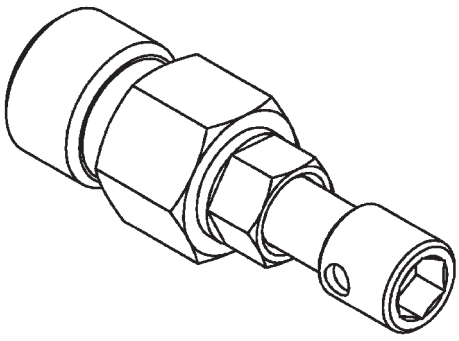

GENERATOR DECOUPLER 8433

BATTERY TEMPERATURE SENSOR

DESCRIPTION

The PCM incorporates a Battery Temperature Sensor (BTS) on its circuit board.

OPERATION

The PCM uses the temperature of the battery area to control the charge system voltage. This temperature, along with data from monitored line voltage, is used by the PCM to vary the battery charging rate. The system voltage is higher at cold temperatures and is gradually reduced as temperature around the battery increases.

The ambient temperature sensor is used to control the battery voltage based upon ambient temperature (approximation of battery temperature). The PCM maintains the optimal output of the generator by monitoring battery voltage and controlling it to a range of 13.5 - 14.7 volts based on battery temperature.

The battery temperature sensor is also used for OBD II diagnostics. Certain faults and OBD II monitors are either enabled or disabled depending upon the battery temperature sensor input (example: disable purge and EGR, enable LDP). Most OBD II monitors are disabled below 20°F.

REMOVAL

The battery temperature sensor is not serviced separately. If replacement is necessary, the PCM must be replaced.

GENERATOR

DESCRIPTION

The generator is belt-driven by the engine. It is serviced only as a complete assembly. The generator produces DC voltage at the B+ terminal. If the generator is failed, the generator assembly subcomponents (generator and decoupler pulley) must be inspected for individual failure and replaced accordingly.

OPERATION

As the energized rotor begins to rotate within the generator, the spinning magnetic field induces a current into the windings of the stator coil. Once the generator begins producing sufficient current, it also provides the current needed to energize the rotor.

The Y type stator winding connections deliver the induced AC current to 3 positive and 3 negative diodes for rectification. From the diodes, rectified DC current is delivered to the vehicles electrical system through the generator, battery, and ground terminals.

Excessive or abnormal noise emitting from the generator may be caused by:

- Worn, loose or defective bearings
- Loose or defective drive pulley (2.4L) or decoupler (3.3/3.8L)
- Incorrect, worn, damaged or misadjusted drive belt
- Loose mounting bolts
- Misaligned drive pulley
- Defective stator or diode
- Damaged internal fins

REMOVAL

REMOVAL - 2.4L

(1) Release hood latch and open hood.
(2) Disconnect battery negative cable.
(3) Disconnect the Inlet Air Temperature sensor.
(4) Remove the Air Box, refer to the Engine/Air Cleaner for more information.
(5) Remove the EVAP Purge solenoid from its bracket and reposition.
(6) Disconnect the push-in field wire connector from back of generator.
(7) Remove nut holding B+ wire terminal to back of generator.
(8) Separate B+ terminal from generator.
(9) Remove accessory drive belt, refer to the Cooling System section for proper procedures.
(10) Remove the generator.

GENERATOR (Continued)

REMOVAL - 2.5L

(1) Disconnect the negative battery cable (Fig. 1).

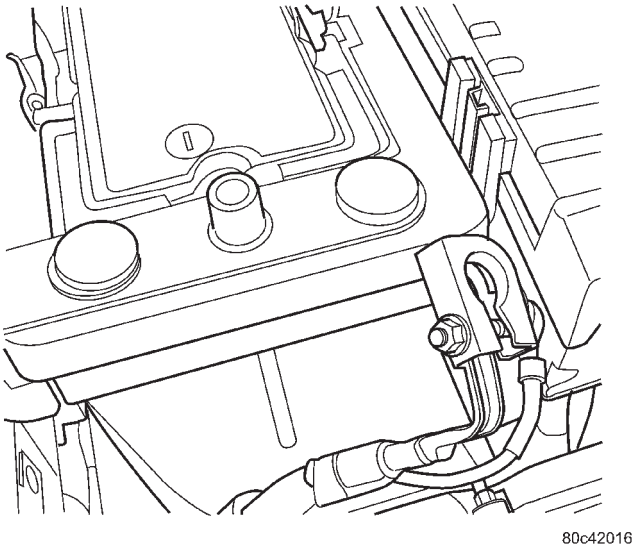

Fig. 1 BATTERY CONNECTION

(2) Remove the engine cover (Fig. 2).

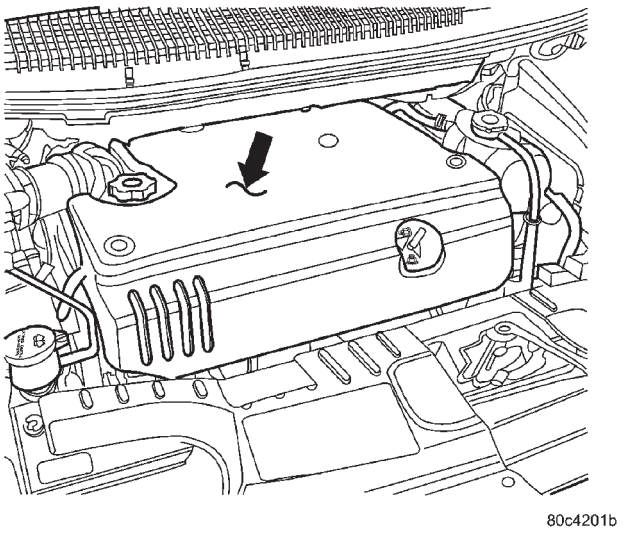

Fig. 2 ENGINE COVER

(3) Raise vehicle and support.

(4) Turn wheels to the right. Remove the right front splash shield (Fig. 3).

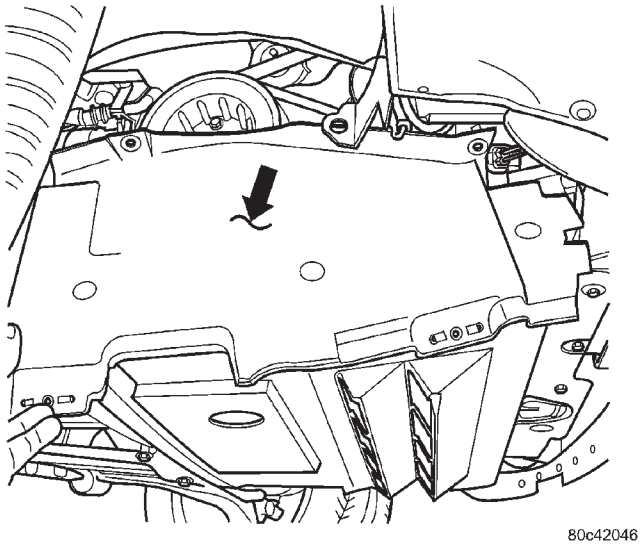

Fig. 3 SPLASH SHIELD

(5) Remove the generator drive belt (Fig. 4).

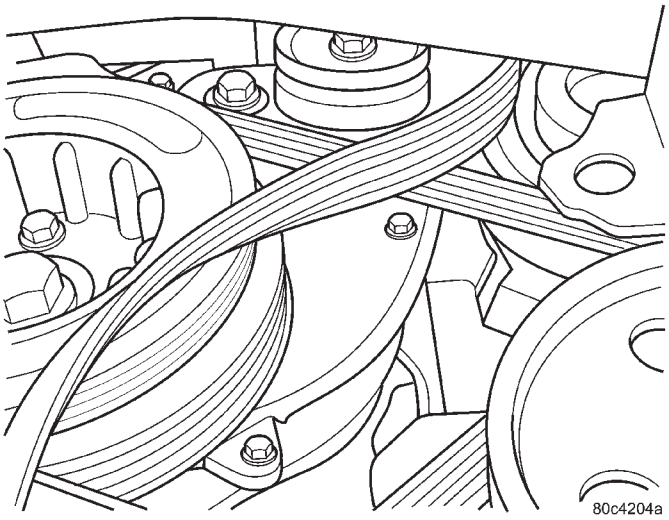

Fig. 4 GENERATOR BELT

GENERATOR (Continued)

(6) Lower vehicle.
(7) Disconnect the generator battery connection (Fig. 5).

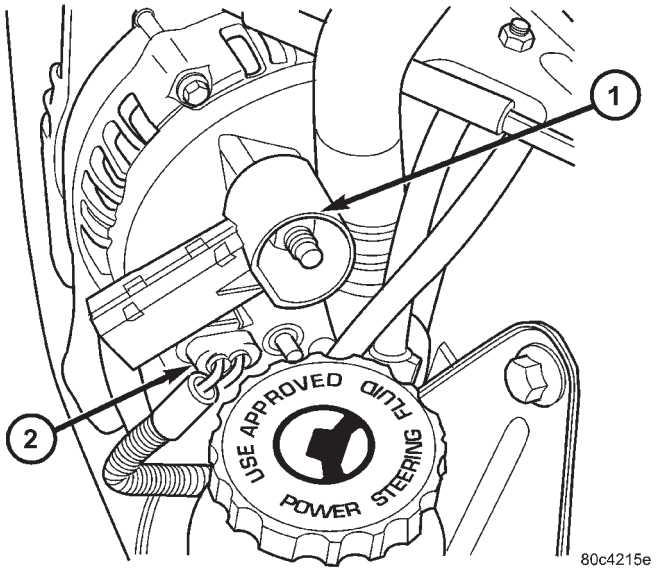

Fig. 5 GENERATOR CONNECTIONS

1 - Battery Connection
2 - Field Connection

(8) Disconnect the field connection (Fig. 5).
(9) Relocate the wiring harness on upper generator bracket (Fig. 6).

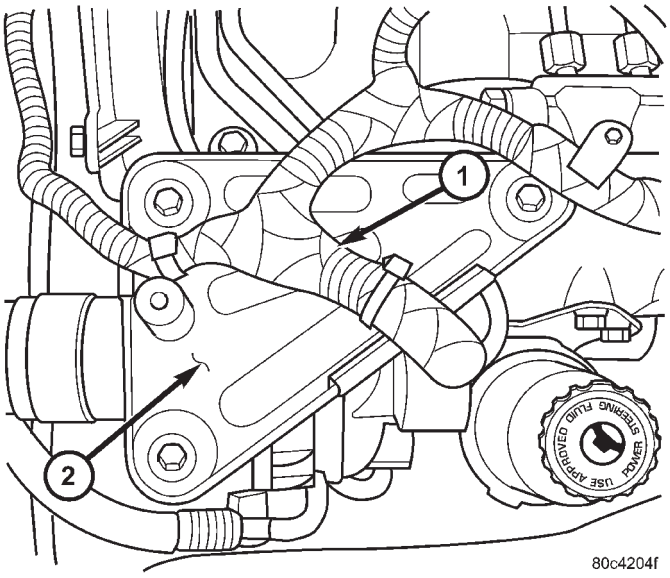

Fig. 6 UPPER SUPPORT BRACKET

1 - Wiring Harness
2 - Upper Bracket

(10) Remove the Air Cleaner Box (Fig. 7).
(11) Remove the 2 lower mounting Bolts (Fig. 8).
(12) Remove generator.

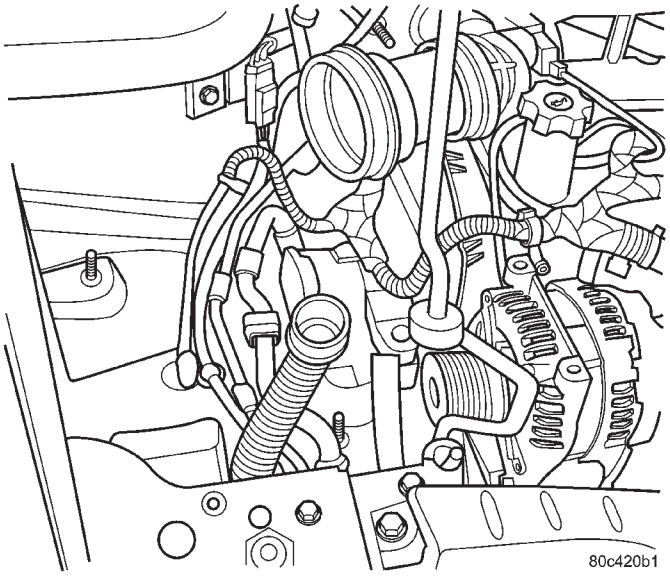

Fig. 7 AIR BOX REMOVED

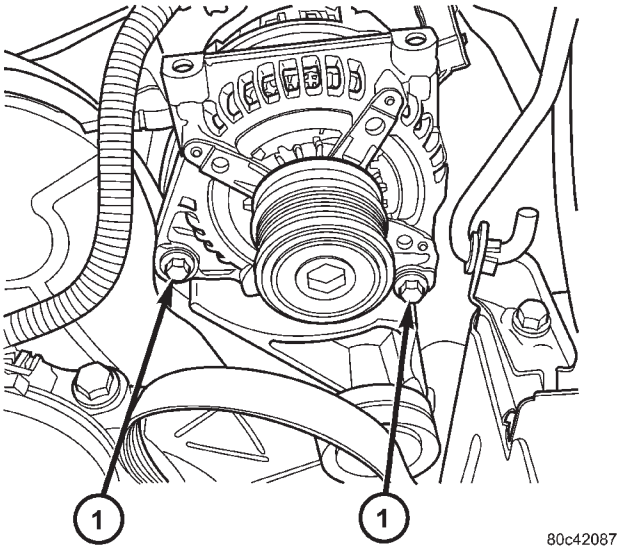

Fig. 8 GENERATOR LOWER BOLTS

1 - Lower Mounting Bolts

REMOVAL - 3.3/3.8L

(1) Release hood latch and open hood.
(2) Disconnect battery negative cable.
(3) Disconnect the push-in field wire connector from back of generator.
(4) Remove nut holding B+ wire terminal to back of generator.
(5) Separate B+ terminal from generator.
(6) Raise vehicle and support.
(7) Remove the right front lower splash shield.
(8) Remove accessory drive belt, refer to the Cooling System section for proper procedures.

GENERATOR (Continued)

(9) Remove the lower oil dip stick tube bolt (Fig. 9).

(10) Remove wiring harness from the oil dip stick tube

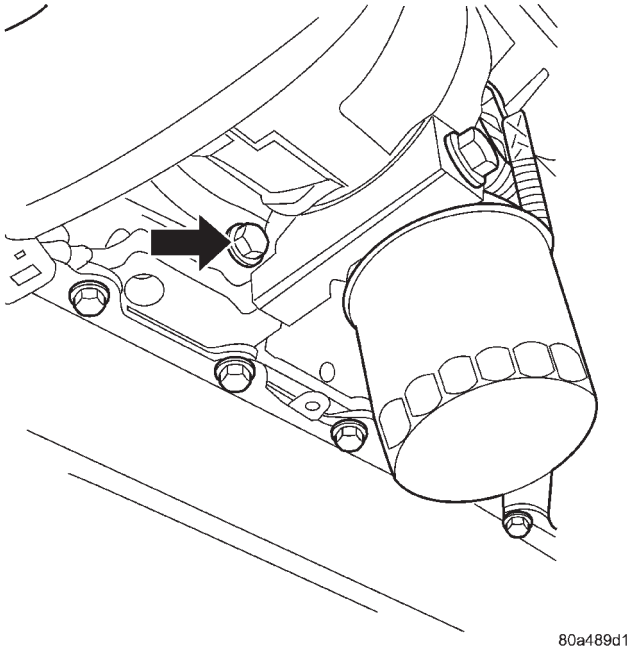

Fig. 9 DIP STICK LOWER BOLT

(11) Remove the 3 mounting bolts.

(12) Lower vehicle.

(13) Remove oil dip stick tube from vehicle.

(14) Roll and remove the generator from vehicle (Fig. 10).

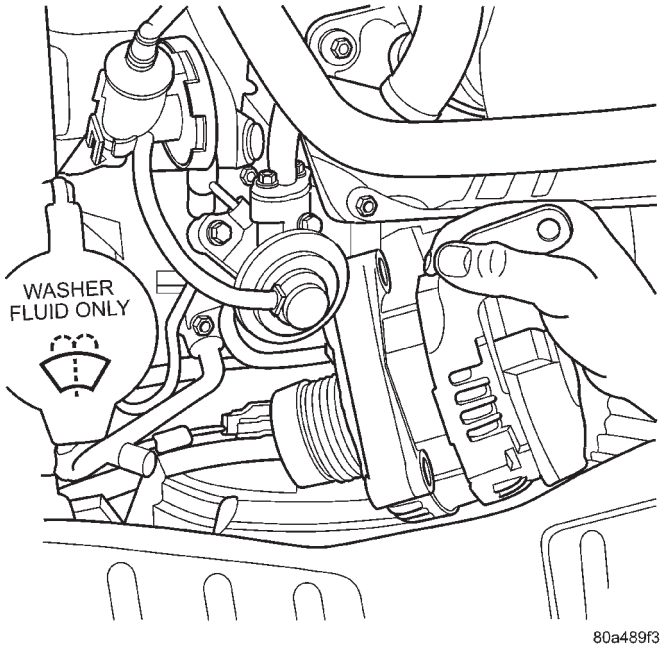

Fig. 10 GENERATOR 3.3/3.8L

REMOVAL - 3.5L

(1) Disconnect the negative battery cable.

(2) Turn wheels to the right.

(3) Raise and support the vehicle.

(4) Remove the right front tire.

(5) Remove the front axle nut.

(6) Relocate the ABS sensor (Fig. 11) wiring from bracket (Fig. 12).

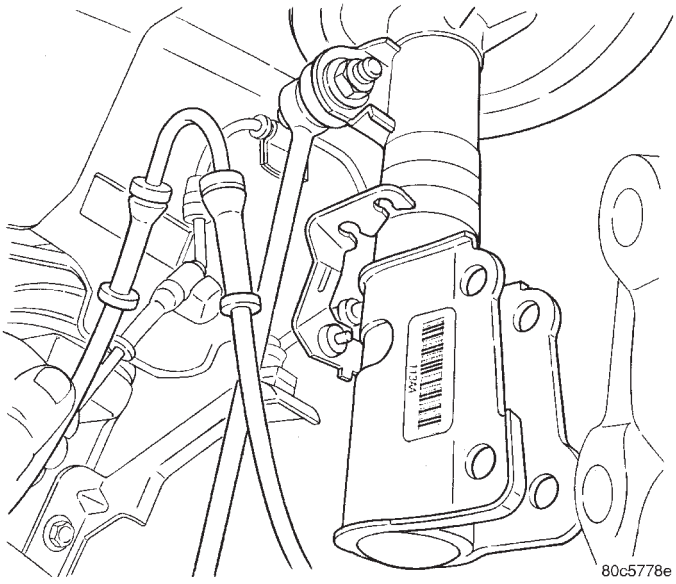

Fig. 11 ABS WIRING AND STRUT

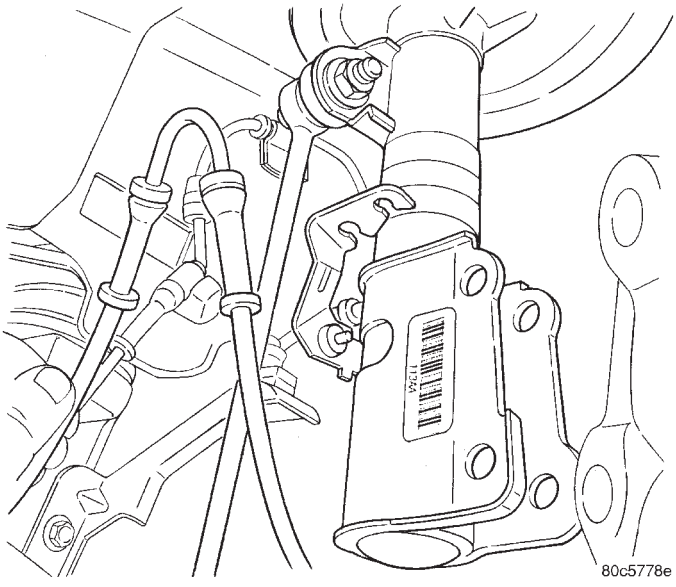

Fig. 12 ABS WIRING AND STRUT

GENERATOR (Continued)

(7) Remove the 2 upper clevies bolts.
(8) Remove axle from knuckle (Fig. 13).

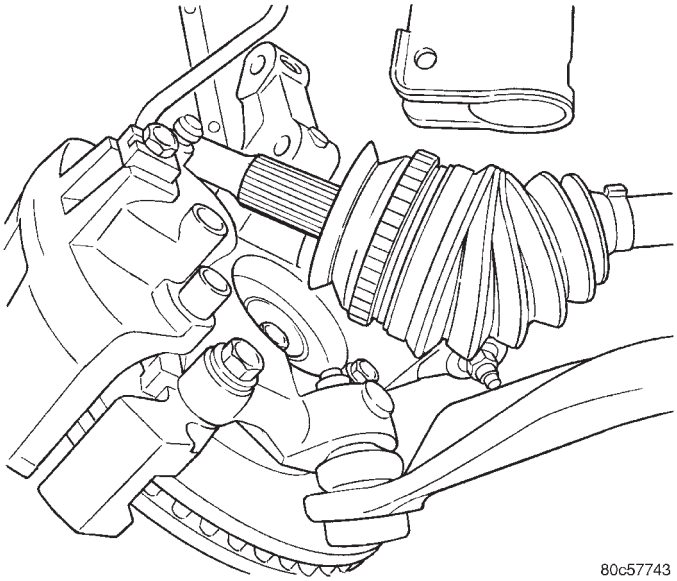

Fig. 13 AXLE AND KNUCKLE

(9) Remove the right front splash shield.
(10) Remove the accessory drive belt (Fig. 14), refer to the cooling section.

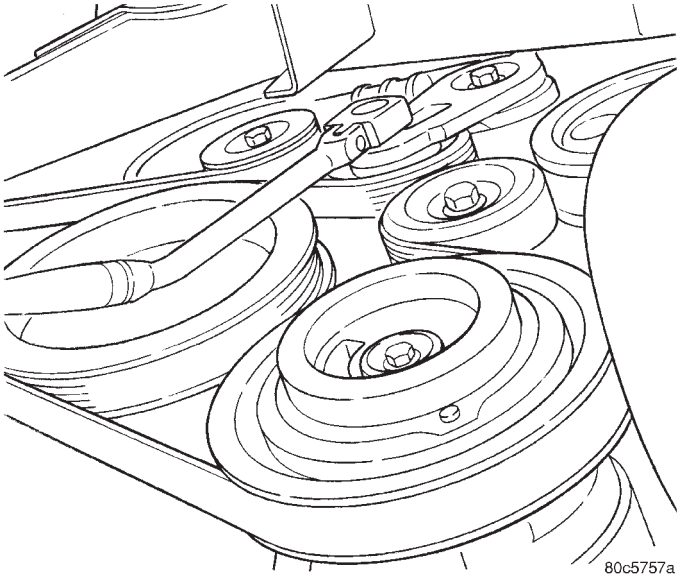

Fig. 14 ACCESSORY DRIVE BELT

(11) Disconnect the generator positive battery cable.
(12) Unlock the electrical connector for the field connector (Fig. 15).

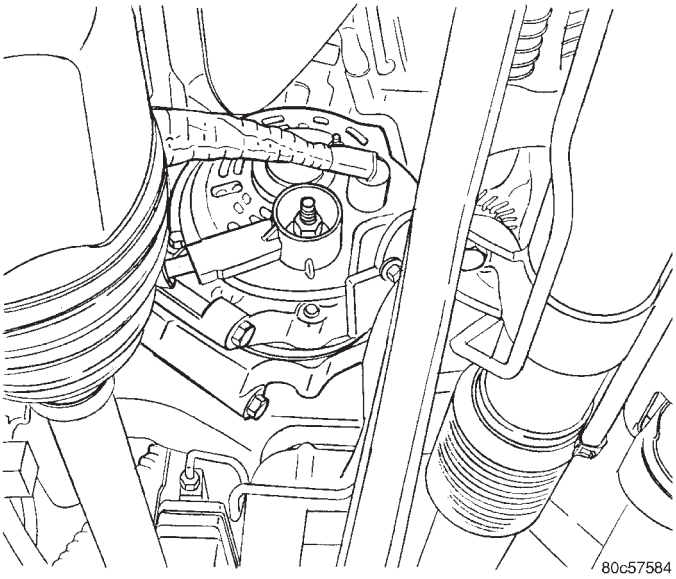

Fig. 15 GENERATOR CONNECTORS

(13) Disconnect the field connector.
(14) Remove the axle from vehicle, oil will leak from transmission.
(15) Remove the 3 mounting bolts for generator.
(16) Remove generator from vehicle (Fig. 16).

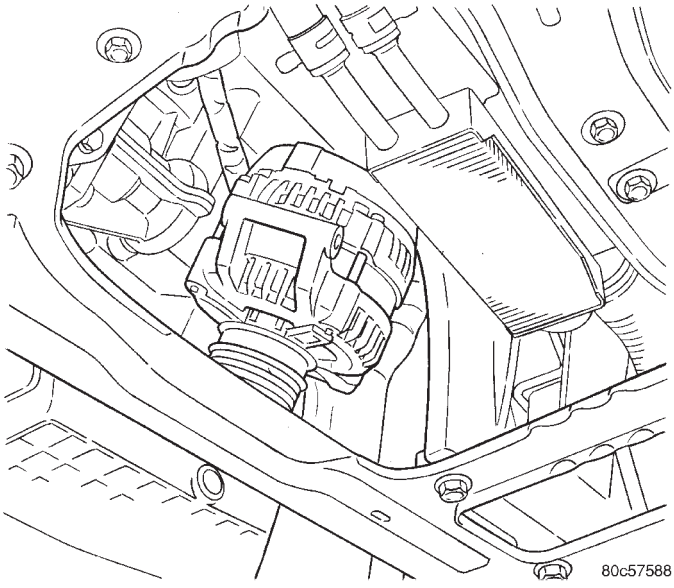

Fig. 16 GENERATOR REMOVEL/INSTALLATION

INSTALLATION

INSTALLATION - 2.4L

(1) Install the generator.
(2) Install the accessory drive belt, refer to the Cooling System section for proper procedures.
(3) Connect B+ terminal to generator.
(4) Install nut holding B+ wire terminal to back of generator.

GENERATOR (Continued)

(5) Connect the push-in field wire connector to back of generator.
(6) Install the EVAP Purge solenoid to its bracket.
(7) Install the Air Box, refer to the Engine/Air Cleaner for more information.
(8) Connect the Inlet Air Temperature sensor.
(9) Connect battery negative cable.

INSTALLATION - 2.5L

(1) Install generator.
(2) Install the 2 lower mounting Bolts (Fig. 8).
(3) Install the Air Cleaner Box (Fig. 7).
(4) Install the upper support bracket (Fig. 6).
(5) Install the wiring harness on upper generator bracket (Fig. 6).
(6) Connect the field connection (Fig. 5).
(7) Connect the generator battery connection (Fig. 5).
(8) Raise vehicle and support.
(9) Install the generator drive belt (Fig. 4).
(10) Install the right front splash shield (Fig. 3).
(11) Lower vehicle.
(12) Install the engine cover (Fig. 2).
(13) Connect the negative battery cable (Fig. 1).

INSTALLATION - 3.3/3.8L

(1) Roll and place generator in position on vehicle (Fig. 10).
(2) Install upper bolts to hold generator in place.
(3) Lubricate the o-ring. Install oil dip stick tube.
(4) Install the upper oil dip stick tube bolt.
(5) Place B+ terminal in position on generator.
(6) Install nut to hold B+ wire terminal to back of generator.
(7) Connect the push-in field wire connector into back of generator.
(8) Raise vehicle and support.
(9) Install the lower mounting bolt and tighten.
(10) Install the lower oil dip stick tube bolt and tighten (Fig. 9).
(11) Install accessory drive belt, refer to the Cooling System section for proper procedures.
(12) Install the right front lower splash shield.
(13) Lower vehicle.
(14) Install wiring harness to the oil dip stick tube
(15) Connect battery negative cable.
(16) Verify generator output rate.

INSTALLATION - 3.5L

(1) Install generator (Fig. 16) and the 3 mounting bolts and tighten.
(2) Connect the generator positive battery cable (Fig. 15).
(3) Connect the field connector and lock the connector (Fig. 15).
(4) Install the axle shaft to the transmission.
(5) Install axle to steering knuckle (Fig. 13).
(6) Install the 2 upper clevies bolts and tighten, refer to the Suspension section.
(7) Install axle nut and tighten, refer to the Differential and Driveline section.
(8) Relocate the ABS sensor wiring to bracket (Fig. 12).
(9) Install the accessory drive belt (Fig. 14), refer to the Cooling section.
(10) Install the right front splash shield.
(11) Install the right front tire, refer to the Wheels and Tires section.
(12) Lower vehicle.
(13) Connect the negative battery cable.

GENERATOR DECOUPLER PULLEY

DESCRIPTION

The Generator Decoupler is a one way clutch (Fig. 17). It is attached to the generator and replaces the standard pulley. It is a non-serviceable item and is to be replaced as an assembly. It is a dry operation (no grease or lubricants). The operation of it is not temperature sensitive and has a low sensitivity to electrical load.

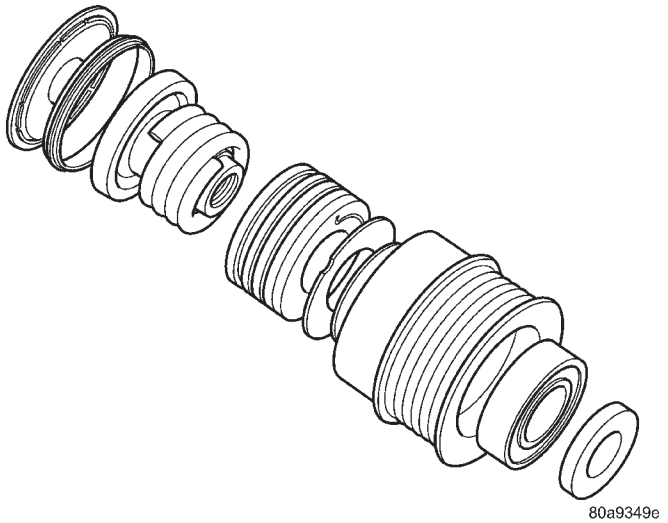

Fig. 17 GENERATOR DECOUPLER 3.3/3.8L

OPERATION

The generator decoupler is a one way clutch and should be replaced as an assembly. It is designed to help reduce belt tension fluctuation, reduce fatigue loads, improve belt life, reduce hubloads on components, and reduce noise.

GENERATOR DECOUPLER PULLEY (Continued)

DIAGNOSIS AND TESTING - GENERATOR DECOUPLER PULLEY

CONDITION	POSSIBLE CAUSES	CORRECTION
Does not drive generator (Generator not Charging)	Clutch failure	Replace Decoupler

REMOVAL

(1) Release hood latch and open hood.
(2) Disconnect battery negative cable.
(3) Raise vehicle and support.
(4) Remove the right front lower splash shield.
(5) Remove accessory drive belt, refer to the Cooling System section for proper procedures (Fig. 18).

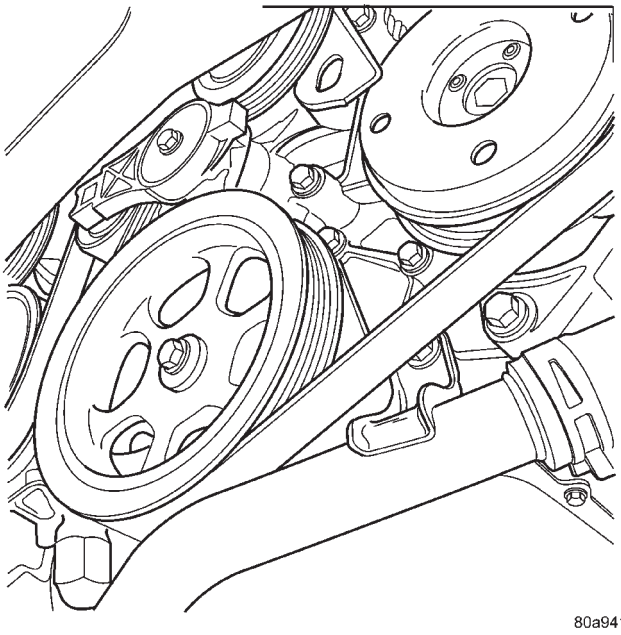

Fig. 18 DRIVE BELT 3.3/3.8L

(6) Lower vehicle.
(7) Remove the Air Box, refer to the Engine section for more information.
(8) Use Special Tool #8433 (Fig. 20) to loosen the Generator Decoupler (Fig. 19).
(9) Remove the tool.
(10) Remove the Generator Decoupler.

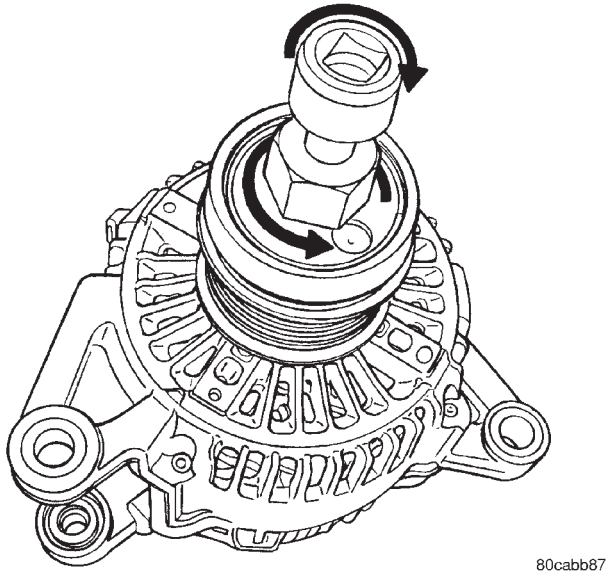

Fig. 19 DECOUPLER REMOVAL (LITENS)

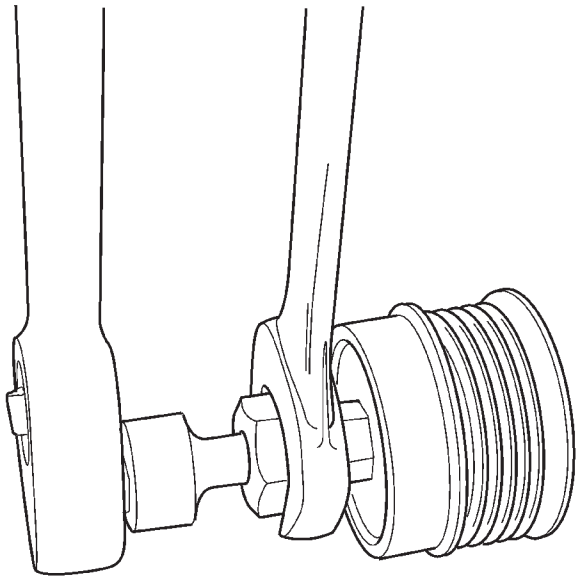

Fig. 20 SPECIAL TOOL 8433 AND DECOUPLER

GENERATOR DECOUPLER PULLEY (Continued)

INSTALLATION

(1) Install the Generator Decoupler to the generator shaft.

(2) Use Special Tool #8433 (Fig. 20) to tighten the Generator Decoupler (Fig. 21). Refer to the torque chart for the proper torque.

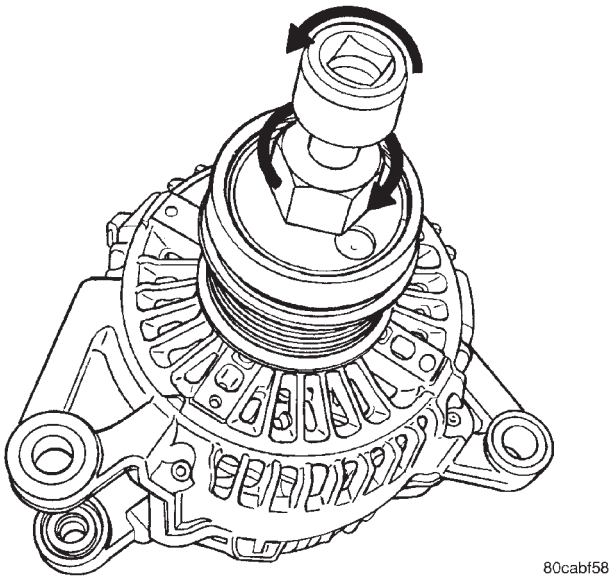

Fig. 21 DECOUPLER INSTALLATION (Litens)

(3) Install the Air Box, refer to the Engine section for more information.

(4) Raise vehicle and support.

(5) Install accessory drive belt, refer to the Cooling System section for proper procedures (Fig. 18).

(6) Install the right front lower splash shield.

(7) Lower vehicle.

(8) Connect battery negative cable.

VOLTAGE REGULATOR

DESCRIPTION

The Electronic Voltage Regulator (EVR) is not a separate component. It is actually a voltage regulating circuit located within the Powertrain Control Module (PCM). The EVR is not serviced separately. If replacement is necessary, the PCM must be replaced.

OPERATION

The amount of DC current produced by the generator is controlled by EVR circuitry contained within the PCM. This circuitry is connected in series with the generators second rotor field terminal and its ground.

Voltage is regulated by cycling the ground path to control the strength of the rotor magnetic field. The EVR circuitry monitors system line voltage (B+) and calculated battery temperature or inlet air temperature sensor (refer to Inlet Air Temperature Sensor, if equipped, for more information). It then determines a target charging voltage. If sensed battery voltage is lower than the target voltage, the PCM grounds the field winding until sensed battery voltage is at the target voltage. A circuit in the PCM cycles the ground side of the generator field at 250 times per second (250Hz), but has the capability to ground the field control wire 100% of the time (full field) to achieve the target voltage. If the charging rate cannot be monitored (limp-in), a duty cycle of 25% is used by the PCM in order to have some generator output. Also refer to Charging System Operation for additional information.

STARTING

TABLE OF CONTENTS

page

STARTING
DESCRIPTION 31
OPERATION 31
DIAGNOSIS AND TESTING
DIAGNOSIS AND TESTING - STARTING SYSTEM TEST 31
DIAGNOSIS AND TESTING - CONTROL CIRCUIT TEST 34
DIAGNOSIS AND TESTING - FEED CIRCUIT RESISTANCE TEST 36
DIAGNOSIS AND TESTING - FEED CIRCUIT TEST 36
SPECIFICATIONS
STARTER 37
Torques 37
STARTER MOTOR
REMOVAL
REMOVAL - 2.4L 38
REMOVAL - 3.3/3.8L 39
REMOVAL - 3.5L 39
REMOVAL - 2.5L 40
INSTALLATION
INSTALLATION - 2.4L 41
INSTALLATION - 3.3/3.8L 41
INSTALLATION - 3.5L 41
INSTALLATION - 2.5L 41

STARTING

DESCRIPTION

The starting system has (Fig. 1):

- Ignition switch
- Starter relay
- Transmission Range Sensor or Park/Neutral Switch
- Wiring harness
- Battery
- Starter motor with an integral solenoid
- Powertrain Control Module (PCM)

OPERATION

These components form two separate circuits. A high amperage circuit that feeds the starter motor up to 300+ amps, and a control circuit that operates on less than 20 amps.

The PCM controls a double start over-ride safety that does not allow the starter to be engaged if the engine is already running.

DIAGNOSIS AND TESTING

DIAGNOSIS AND TESTING - STARTING SYSTEM TEST

For circuit descriptions and diagrams, refer to the Wiring Diagrams.

WARNING: ON VEHICLES EQUIPPED WITH AIRBAGS, REFER TO THE PASSIVE RESTRAINT SYSTEMS BEFORE ATTEMPTING STEERING WHEEL, STEERING COLUMN, OR INSTRUMENT PANEL COMPONENT DIAGNOSIS OR SERVICE. FAILURE TO TAKE THE PROPER PRECAUTIONS COULD RESULT IN ACCIDENTAL AIRBAG DEPLOYMENT AND POSSIBLE PERSONAL INJURY.

STARTING (Continued)

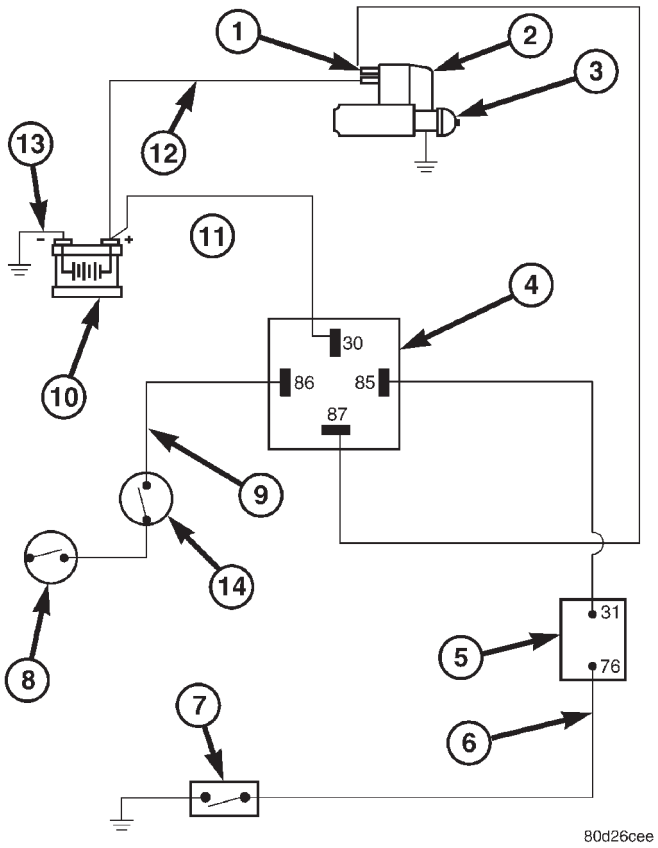

Fig. 1 STARTING SYSTEM SCHEMATIC

1 - SOLENOID TERMINAL
2 - STARTER SOLENOID
3 - STARTER MOTOR
4 - STARTER RELAY CONNECTOR
5 - PCM
6 - GROUND CIRCUIT
7 - TRANSMISSION RANGE SENSOR/PARK/NEUTRAL SENSE
8 - IGNITION SWITCH
9 - IGNITION FEED
10 - BATTERY
11 - BATTERY RELAY FEED
12 - POSITIVE CABLE
13 - NEGATIVE CABLE
14 - CLUTCH INTERLOCK SWITCH (MTX ONLY)

INSPECTION

Before removing any unit from the starting system for repair or diagnosis, perform the following inspections:

- **Battery** - Visually inspect the battery for indications of physical damage and loose or corroded cable connections. Determine the state-of-charge and cranking capacity of the battery. Charge or replace the battery, if required. Refer to the Battery section for more information.
- **Ignition Switch** - Visually inspect the ignition switch for indications of physical damage and loose or corroded wire harness connections.
- **Transmission Range Sensor** - Visually inspect the transmission range sensor for indications of physical damage and loose or corroded wire harness connections.
- **Starter Relay** - Visually inspect the starter relay for indications of physical damage and loose or corroded wire harness connections.
- **Starter** - Visually inspect the starter for indications of physical damage and loose or corroded wire harness connections.
- **Starter Solenoid** - Visually inspect the starter solenoid for indications of physical damage and loose or corroded wire harness connections.
- **Wiring** - Visually inspect the wire harness for damage. Repair or replace any faulty wiring, as required. Check for loose or corroded wire harness connections at main engine ground and remote jump post.
- **Power Distribution Center (PDC)** - Visually inspect the B+ connections at the PDC for physical damage and loose or corroded harness connections.

STARTING (Continued)

STARTING SYSTEM DIAGNOSIS

CONDITION	POSSIBLE CAUSE	CORRECTION
STARTER FAILS TO ENGAGE.	1. BATTERY DISCHARGED OR FAULTY.	1. REFER TO THE BATTERY SECTION FOR MORE INFORMATION. CHARGE OR REPLACE BATTERY, IF REQUIRED.
	2. STARTING CIRCUIT WIRING FAULTY.	2. REFER TO FEED CIRCUIT RESISTANCE TEST AND FEED CIRCUIT TEST IN THIS SECTION.
	3. STARTER RELAY FAULTY.	3. REFER TO RELAY TEST, IN THIS SECTION. REPLACE RELAY, IF NECESSARY.
	4. IGNITION SWITCH FAULTY.	4. REFER TO IGNITION SWITCH TEST, IN THE STEERING SECTION OR 8 WIRING DIAGRAMS. REPLACE SWITCH, IF NECESSARY.
	5. PARK/NEUTRAL POSITION SWITCH (AUTO TRANS) FAULTY OR MIS-ADJUSTED.	5. REFER PARK/NEUTRAL POSITION SWITCH TEST, IN THE TRANSAXLE. SECTION FOR MORE INFORMATION. REPLACE SWITCH, IF NECESSARY.
	6. CLUTCH PEDAL POSITION SWITCH (MAN TRANS) FAULTY.	6. REFER TO CLUTCH PEDAL POSITION SWITCH TEST, IN THE CLUTCH. SECTION. REPLACE SWITCH, IF NECESSARY.
	7. STARTER SOLENOID FAULTY.	7. REFER TO SOLENOID TEST, IN THIS SECTION. REPLACE STARTER ASSEMBLY, IF NECESSARY.
	8. STARTER ASSEMBLY FAULTY.	8. IF ALL OTHER STARTING SYSTEM COMPONENTS AND CIRCUITS CHECK OK, REPLACE STARTER ASSEMBLY.
	9. FAULTY TEETH ON RING GEAR.	9. ROTATE FLYWHEEL 360°, AND INSPECT TEETH AND RING GEAR REPLACED IF DAMAGED.
	10. PCM DOUBLE START OVERRIDE OUTPUT FAILURE.	10. REFER TO PCM DIAGNOSTIC. CHECK FOR CONTINUITY BETWEEN PCM AND TERMINAL 85. REPAIR OPEN CIRCUIT AS REQUIRED. IF OK, PCM MAY BE DEFECTIVE.
STARTER ENGAGES, FAILS TO TURN ENGINE.	1. BATTERY DISCHARGED OR FAULTY.	1. REFER TO THE BATTERY SECTION FOR MORE INFORMATION. CHARGE OR REPLACE BATTERY AS NECESSARY.
	2. STARTING CIRCUIT WIRING FAULTY.	2. REFER TO THE FEED CIRCUIT RESISTANCE TEST AND THE FEED CIRCUIT TEST IN THIS SECTION. REPAIR AS NECESSARY.
	3. STARTER ASSEMBLY FAULTY.	3. IF ALL OTHER STARTING SYSTEM COMPONENTS AND CIRCUITS CHECK OK, REPLACE STARTER ASSEMBLY.
	4. ENGINE SEIZED.	4. REFER TO THE ENGINE SECTION, FOR DIAGNOSTIC AND SERVICE PROCEDURES.
	5. LOOSE CONNECTION AT BATTERY, PDC, STARTER, OR ENGINE GROUND.	5. INSPECT FOR LOOSE CONNECTIONS.
	6. FAULTY TEETH ON RING GEAR.	6. ROTATE FLYWHEEL 360°, AND INSPECT TEETH AND RING GEAR REPLACED IF DAMAGED.

STARTING (Continued)

CONDITION	POSSIBLE CAUSE	CORRECTION
STARTER ENGAGES, SPINS OUT BEFORE ENGINE STARTS.	1. BROKEN TEETH ON STARTER RING GEAR.	1. REMOVE STARTER. INSPECT RING GEAR AND REPLACE IF NECESSARY.
	2. STARTER ASSEMBLY FAULTY.	2. IF ALL OTHER STARTING SYSTEM COMPONENTS AND CIRCUITS CHECK OK, REPLACE STARTER ASSEMBLY.
STARTER DOES NOT DISENGAGE.	1. STARTER IMPROPERLY INSTALLED.	1. INSTALL STARTER. TIGHTEN STARTER MOUNTING HARDWARE TO CORRECT TORQUE SPECIFICATIONS.
	2. STARTER RELAY FAULTY.	2. REFER TO RELAY TEST, IN THIS SECTION. REPLACE RELAY, IF NECESSARY.
	3. IGNITION SWITCH FAULTY.	3. REFER TO IGNITION SWITCH TEST, IN THE STEERING SECTION. REPLACE SWITCH, IF NECESSARY.
	4. STARTER ASSEMBLY FAULTY.	4. IF ALL OTHER STARTING SYSTEM COMPONENTS AND CIRCUITS CHECK OK, REPLACE STARTER ASSEMBLY.
	5. FAULTY TEETH ON RING GEAR.	5. ROTATE FLYWHEEL 360°, AND INSPECT TEETH AND RING GEAR REPLACED IF DAMAGED.

DIAGNOSIS AND TESTING - CONTROL CIRCUIT TEST

The starter control circuit has:

- Starter motor with integral solenoid
- Starter relay
- Transmission range sensor, or Park/Neutral Position switch with automatic transmissions
- Ignition switch
- Battery
- All related wiring and connections
- Powertrain Control Module (PCM)

CAUTION: Before performing any starter tests, the ignition and fuel systems must be disabled.

- To disable ignition and fuel systems, disconnect the Automatic Shutdown Relay (ASD). The ASD relay is located in the Power Distribution Center (PDC). Refer to the PDC cover for the proper relay location.

STARTER SOLENOID

WARNING: CHECK TO ENSURE THAT THE TRANSMISSION IS IN THE PARK POSITION WITH THE PARKING BRAKE APPLIED.

(1) Verify battery condition. Battery must be in good condition with a full charge before performing any starter tests. Refer to Battery Tests.

(2) Perform Starter Solenoid test BEFORE performing the starter relay test.

(3) Perform a visual inspection of the starter/starter solenoid for corrosion, loose connections or faulty wiring.

(4) Locate and remove the starter relay from the Power Distribution Center (PDC). Refer to the PDC label for relay identification and location.

(5) Connect a remote starter switch or a jumper wire between the remote battery positive post and terminal 87 of the starter relay connector.

(a) If engine cranks, starter/starter solenoid is good. Go to the Starter Relay Test.

(b) If engine does not crank or solenoid chatters, check wiring and connectors from starter relay to starter solenoid for loose or corroded connections. Particularly at starter terminals.

(c) Repeat test. If engine still fails to crank properly, trouble is within starter or starter mounted solenoid, and replace starter. Inspect the ring gear teeth.

STARTER RELAY

WARNING: CHECK TO ENSURE THAT THE TRANSMISSION IS IN THE PARK/NEUTRAL POSITION WITH THE PARKING BRAKE APPLIED.

RELAY TEST

The starter relay is located in the Power Distribution Center (PDC) in the engine compartment. Refer to the PDC label for relay identification and location.

STARTING (Continued)

Remove the starter relay from the PDC as described in this group to perform the following tests:

(1) A relay in the de-energized position should have continuity between terminals 87A and 30, and no continuity between terminals 87 and 30. If OK, go to Step 2. If not OK, replace the faulty relay.

(2) Resistance between terminals 85 and 86 (electromagnet) should be 75 ±5 ohms. If OK, go to Step 3. If not OK, replace the faulty relay.

(3) Connect a battery B+ lead to terminals 86 and a ground lead to terminal 85 to energize the relay. The relay should click. Also test for continuity between terminals 30 and 87, and no continuity between terminals 87A and 30. If OK, refer to Relay Circuit Test procedure. If not OK, replace the faulty relay.

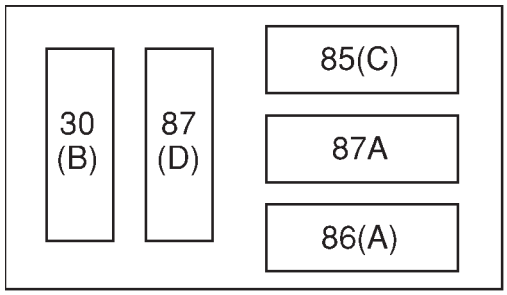

Starter Relay Pinout

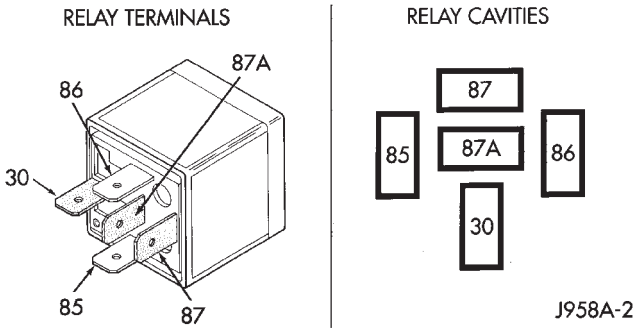

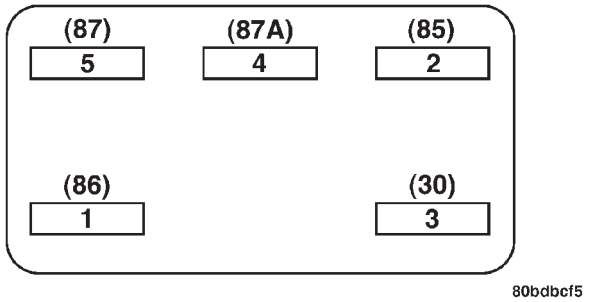

Starter Relay Pinout

CAV	FUNCTION
30	B (+)
85	P/N POSITION SW.SENSE
86	IGNITION SWITCH OUTPUT
87	STARTER RELAY OUTPUT
87A	NO CONNECT

RELAY CIRCUIT TEST

(1) The relay common feed terminal cavity (30) is connected to battery voltage and should be hot at all times. If OK, go to Step 2. If not OK, repair the open circuit to the PDC fuse as required.

(2) The relay normally closed terminal (87A) is connected to terminal 30 in the de-energized position, but is not used for this application. Go to Step 3.

(3) The relay normally open terminal (87) is connected to the common feed terminal (30) in the energized position. This terminal supplies battery voltage to the starter solenoid field coils. There should be continuity between the cavity for relay terminal 87 and the starter solenoid terminal at all times. If OK, go to Step 4. If not OK, repair the open circuit to the starter solenoid as required.

(4) The coil battery terminal (86) is connected to the electromagnet in the relay. It is energized when the ignition switch is held in the Start position and the clutch pedal is depressed (manual trans). Check for battery voltage at the cavity for relay terminal 86 with the ignition switch in the Start position and the clutch pedal is depressed (manual trans), and no voltage when the ignition switch is released to the On position. If OK, go to Step 5. If not OK, check for an open or short circuit to the ignition switch and repair, if required. If the circuit to the ignition switch is OK, see the Ignition Switch Test procedure in this group.

(5) The coil ground terminal (85) is connected to the electromagnet in the relay. It is grounded through the transmission range sensor only when the gearshift selector lever is in the Park or Neutral positions. Check for continuity to ground at the cavity for relay terminal 85. If not OK with an automatic transmission, check for an open or short circuit to the transmission range sensor and repair. It is grounded by the PCM if the conditions are right to start the car. For automatic trans. cars the PCM must see Park Neutral switch and near zero engine rpm. For manual trans. cars the PCM only needs to see near zero engine rpm. To diagnose the Park Neutral switch of the trans range sensor refer to the transaxle section for more information. Check for continuity to ground while the ignition switch is in the start position. If not OK and the vehicle has an automatic trans. verify Park Neutral switch opera-

STARTING (Continued)

tion. If that checks OK check for continuity between PCM and the terminal 85. Repair open circuit as required. If OK, the PCM may be defective.

SAFETY SWITCHES

For diagnostics of the Transmission Range Sensor, refer to the Transaxle section for more information.

If equipped with Clutch Interlock/Upstop Switch, refer to Diagnosis and Testing in the Clutch section.

IGNITION SWITCH

After testing starter solenoid and relay, test ignition switch and wiring. Refer to the Ignition Section or Wiring Diagrams for more information. Check all wiring for opens or shorts, and all connectors for being loose or corroded.

BATTERY

For battery diagnosis and testing, refer to the Battery section for procedures.

ALL RELATED WIRING AND CONNECTORS

Refer to Wiring Diagrams for more information.

DIAGNOSIS AND TESTING - FEED CIRCUIT RESISTANCE TEST

Before proceeding with this operation, review Diagnostic Preparation and Starter Feed Circuit Tests. The following operation will require a voltmeter, accurate to 1/10 of a volt.

CAUTION: Ignition and Fuel systems must be disabled to prevent engine start while performing the following tests.

(1) To disable the Ignition and Fuel systems, disconnect the Automatic Shutdown Relay (ASD). The ASD relay is located in the Power Distribution Center (PDC). Refer to the PDC cover for proper relay location.

(2) Gain access to battery terminals.

(3) With all wiring harnesses and components properly connected, perform the following:

(a) Connect the negative lead of the voltmeter to the battery negative post, and positive lead to the battery negative cable clamp. Rotate and hold the ignition switch in the START position. Observe the voltmeter. If voltage is detected, correct poor contact between cable clamp and post.

(b) Connect positive lead of the voltmeter to the battery positive post, and negative lead to the battery positive cable clamp. Rotate and hold the ignition switch key in the START position. Observe the voltmeter. If voltage is detected, correct poor contact between the cable clamp and post.

(c) Connect negative lead of voltmeter to battery negative terminal, and positive lead to engine block near the battery cable attaching point. Rotate and hold the ignition switch in the START position. If voltage reads above 0.2 volt, correct poor contact at ground cable attaching point. If voltage reading is still above 0.2 volt after correcting poor contacts, replace ground cable.

(4) Connect positive voltmeter lead to the starter motor housing and the negative lead to the battery negative terminal. Hold the ignition switch key in the START position. If voltage reads above 0.2 volt, correct poor starter to engine ground.

(a) Connect the positive voltmeter lead to the battery positive terminal, and negative lead to battery cable terminal on starter solenoid. Rotate and hold the ignition switch in the START position. If voltage reads above 0.2 volt, correct poor contact at battery cable to solenoid connection. If reading is still above 0.2 volt after correcting poor contacts, replace battery positive cable.

(b) If resistance tests do not detect feed circuit failures, replace the starter motor.

DIAGNOSIS AND TESTING - FEED CIRCUIT TEST

NOTE: The following results are based upon the vehicle being at room temperature.

The following procedure will require a suitable volt-ampere tester (Fig. 3).

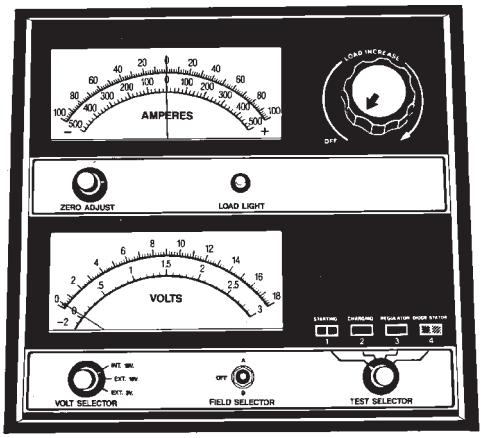

898A-8

Fig. 3 Volt Ampere Tester

CAUTION: Before performing any starter tests, the ignition and fuel systems must be disabled.

(1) Check battery before performing this test. Battery must be fully charged.

(2) Connect a volt-ampere tester to the battery terminals. Refer to the operating instructions provided with the tester being used.

STARTING (Continued)

(3) To disable the ignition and fuel systems, disconnect the Automatic Shutdown Relay (ASD). The ASD relay is located in the Power Distribution Center (PDC). Refer to the PDC cover for proper relay location.

(4) Verify that all lights and accessories are OFF, and the transmission shift selector is in the PARK and SET parking brake.

CAUTION: Do not overheat the starter motor or draw the battery voltage below 9.6 volts during cranking operations.

(5) Rotate and hold the ignition switch in the START position. Observe the volt-ampere tester (Fig. 3).

- If voltage reads above 9.6 volts, and amperage draw reads above 280 amps, check for engine seizing or faulty starter.
- If voltage reads 12.4 volts or greater and amperage reads 0 to 10 amps, check for corroded cables and/or bad connections.
- Voltage below 9.6 volts and amperage draw above 300 amps, the problem is the starter. Replace the starter refer to starter removal.

(6) After the starting system problems have been corrected, verify the battery state-of-charge and charge battery if necessary. Disconnect all testing equipment and connect ASD relay. Start the vehicle several times to assure the problem has been corrected.

SPECIFICATIONS

STARTER

MANUFACTURER	NIPPONDENSO
Engine Application	2.4L /3.3/3.8L
Power rating	1.2 Kw
Voltage	12 VOLTS
No. of Fields	4
No. of Poles	4
Brushes	4
Drive	Conventional Gear Train
Free running Test Voltage Amperage Draw Minimum Speed	 11 73 Amp 3401 RPM
SolenoidClosing Voltage	7.5 Volts
Cranking Amperage Draw test	150 - 200 Amps.

Engine should be up to operating temperature. Extremely heavy oil or tight engine will increase starter amperage draw.

Torques

DESCRIPTION	N·m	Ft. Lbs.	In. Lbs.
Starter Mounting Bolts	47.4	35	
Starter Solenoid Battery Nut	11.3	8.3	100

STARTER MOTOR

REMOVAL

REMOVAL - 2.4L

(1) Release hood latch and open hood (Fig. 4).

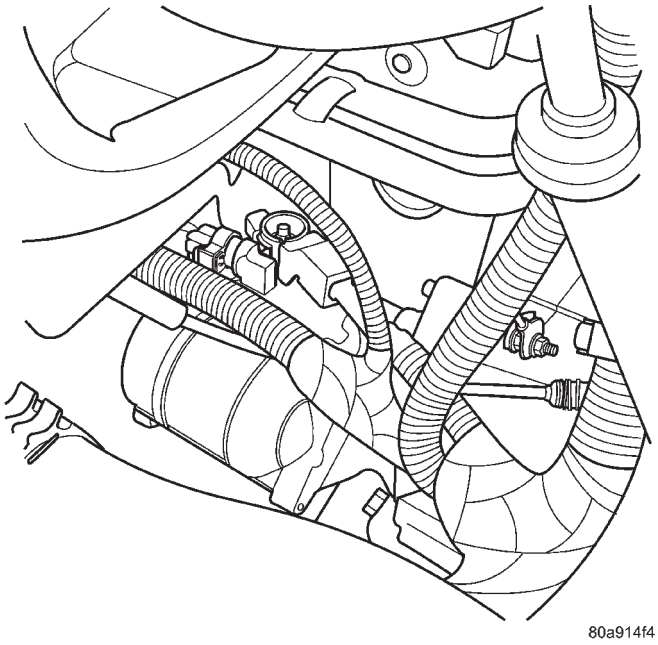

Fig. 4 STARTER 2.4L

(2) Disconnect and isolate the battery negative cable.

(3) Disconnect solenoid wire connector from terminal (Fig. 5).

(4) Remove nut holding B+ wire to terminal.

(5) Disconnect solenoid and B+ wires from starter terminals.

(6) Remove the lower bolt.

(7) Remove the upper bolt and ground wire (Fig. 6).

(8) Remove starter.

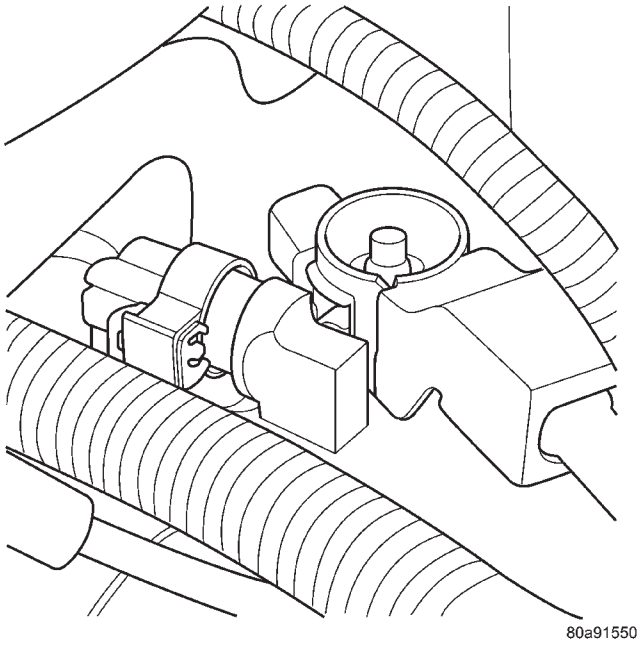

Fig. 5 BATTERY CABLE AND FIELD WIRE 2.4L

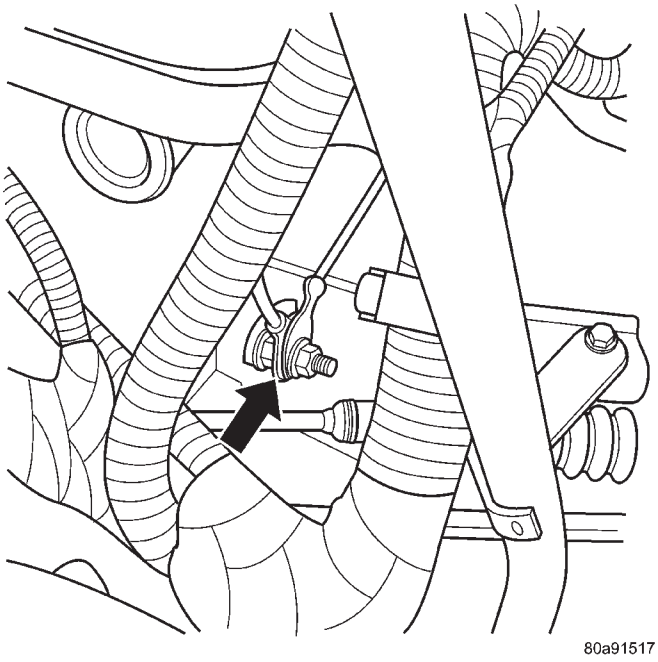

Fig. 6 Upper Bolt and Ground Wire

STARTER MOTOR (Continued)

REMOVAL - 3.3/3.8L

(1) Release hood latch and open hood.
(2) Disconnect and isolate the battery negative cable.
(3) Hoist and support vehicle on safety stands.
(4) Remove nut holding B+ terminal to starter solenoid (Fig. 7).

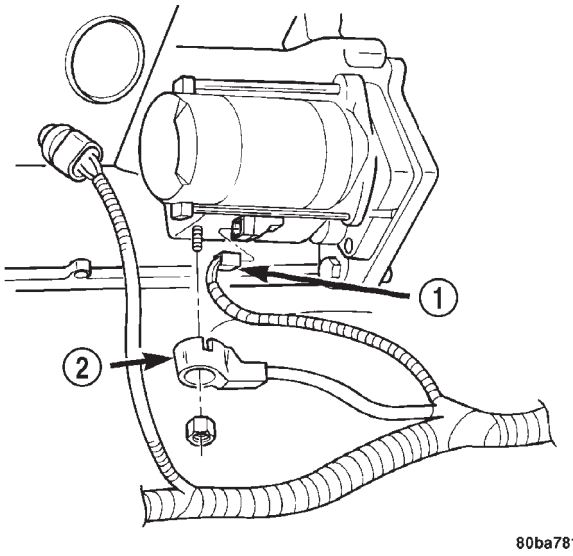

Fig. 7 Starter

1 - SOLENOID CONNECTOR
2 - B+ CONNECTOR

(5) Disconnect solenoid connector from starter.
(6) Remove bolts holding starter to transaxle bellhousing (Fig. 8).

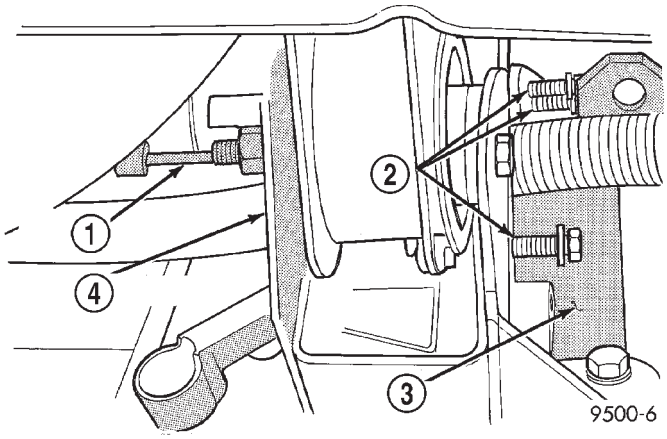

Fig. 8 Starter Bolts

1 - STARTER
2 - STARTER BOLTS
3 - TRANSAXLE
4 - ENGINE MOUNT

(7) Remove starter from bellhousing (Fig. 9).

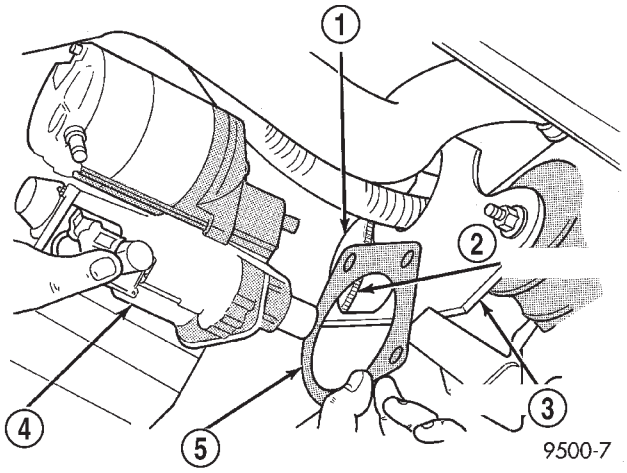

Fig. 9 STARTER 3.3/3.8L

1 - BELL HOUSING PLATE
2 - FLYWHEEL
3 - ENGINE MOUNT
4 - STARTER
5 - SPACER

(8) Separate starter spacer from transaxle bellhousing.

REMOVAL - 3.5L

(1) Disconnect the negative battery cable.
(2) Raise vehicle and support
(3) Disconnect the battery positive cable at starter (Fig. 10).

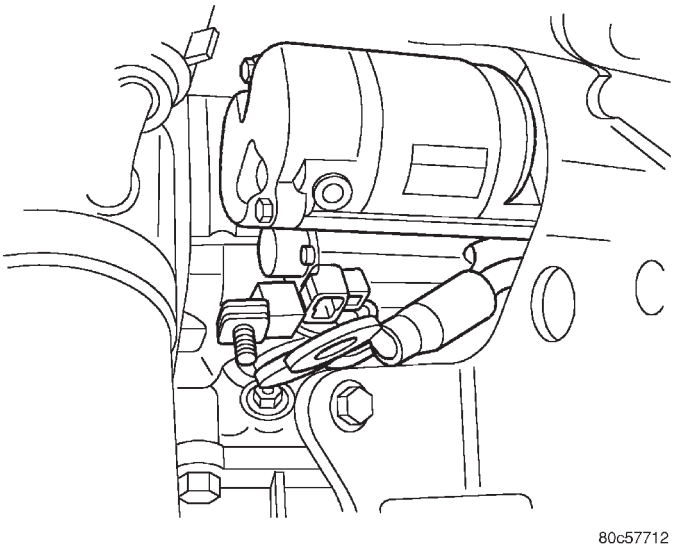

Fig. 10 ELECTRICAL CONNECTIONS

STARTER MOTOR (Continued)

(4) Disconnect the solenoid connector (Fig. 10).

(5) Turn front wheels to the left and use long extension to reach the upper mounting bolt (Fig. 11).

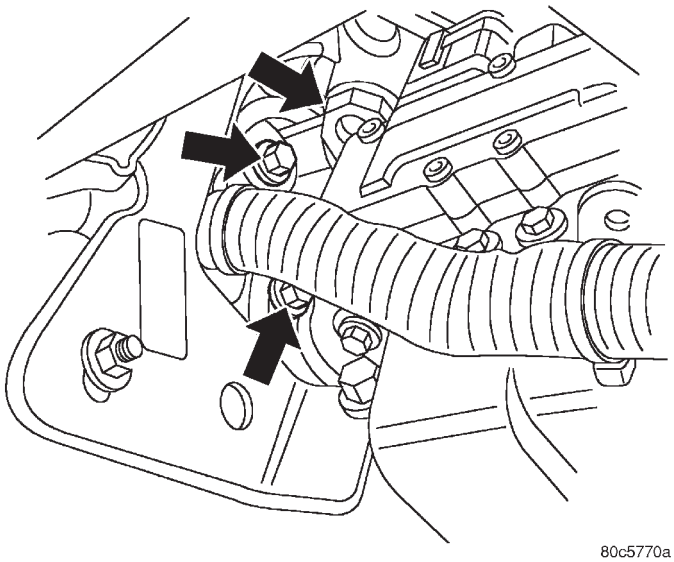

Fig. 11 STARTER BOLTS AND STUD

(6) Remove the ground wires from the upper mounting bolt.

(7) Remove the upper mounting bolt.

(8) Remove the middle mounting bolts (Fig. 12).

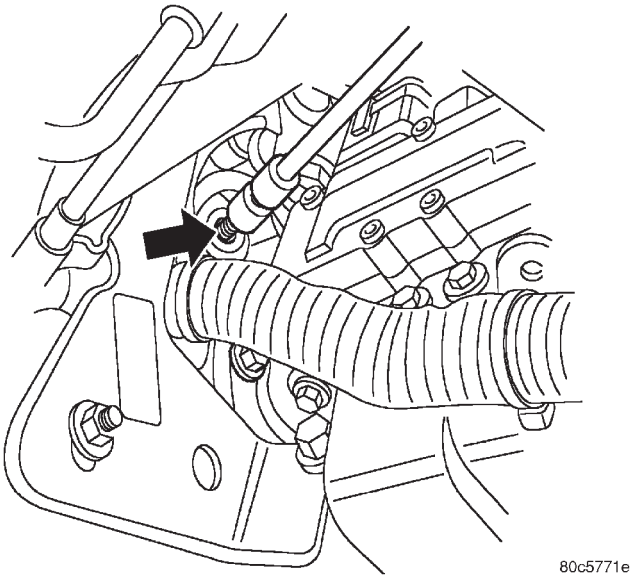

Fig. 12 MIDDLE BOLT

(9) Remove the lower mounting bolt (Fig. 13).

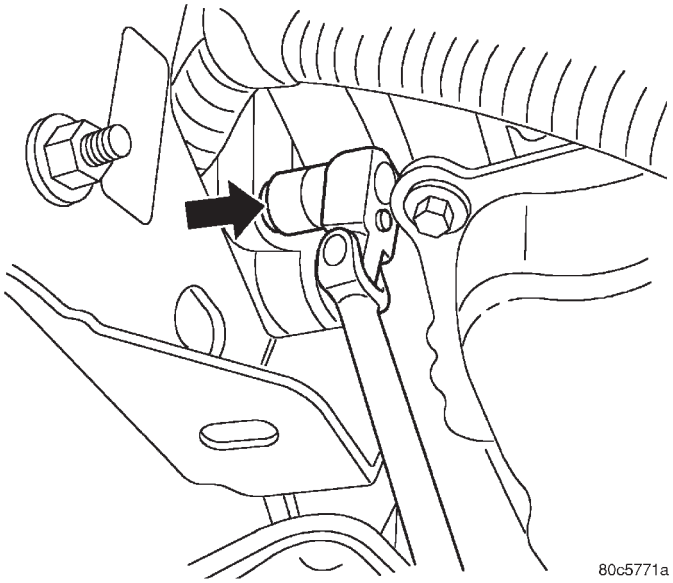

Fig. 13 LOWER BOLT

(10) Remove starter.

REMOVAL - 2.5L

(1) Disconnect the negative battery cable.

(2) Raise vehicle and support.

(3) Remove the lower engine splash shield.

(4) Remove the electrical connectors from the starter (Fig. 14).

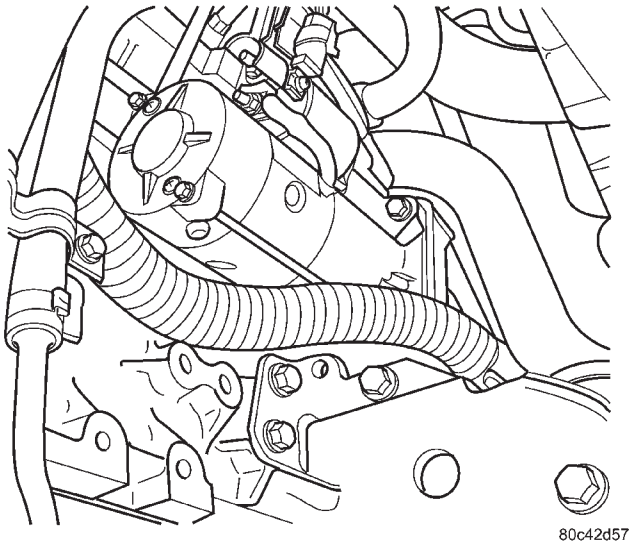

Fig. 14 STARTER LOCATION

STARTER MOTOR (Continued)

(5) Remove the starter mounting bolts (Fig. 15).

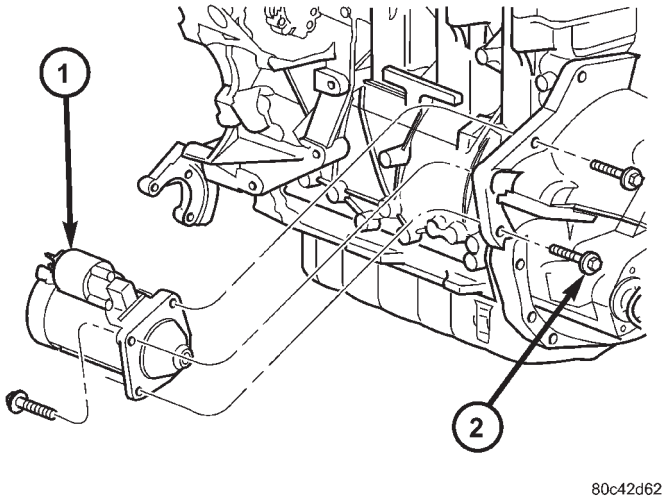

Fig. 15 STARTER MOUNTING BOLTS

1 - Starter
2 - Mounting Bolts

(6) Remove the starter.

INSTALLATION

INSTALLATION - 2.4L

(1) Place starter in position on vehicle.
(2) Install the lower bolts to hold starter to transaxle bellhousing.
(3) Install the upper bolt and ground wire (Fig. 6).
(4) Place solenoid and B+ wires in position on starter terminals (Fig. 5).
(5) Install nut to hold B+ wire to terminal.
(6) Connect solenoid wire connector onto terminal.
(7) Connect battery negative cable.
(8) Verify starter operation.

INSTALLATION - 3.3/3.8L

(1) Place starter spacer in position on transaxle bellhousing, flange toward flywheel.
(2) Place starter in position on bellhousing.
(3) Install bolts and ground wire (Fig. 6) to hold starter to transaxle bellhousing.
(4) Connect solenoid connector into starter.
(5) Install nut to hold B+ terminal to starter solenoid.
(6) Lower vehicle.
(7) Connect battery negative cable.
(8) Verify starter operation.

INSTALLATION - 3.5L

(1) Install starter.
(2) Install the middle (Fig. 12) and lower (Fig. 13) mounting bolts.

Turn front wheels to the left and use long extension to reach the upper mounting bolt (Fig. 11).

(3) Install the upper mounting bolt.
(4) Install the ground wires to the upper mounting bolt.
(5) Connect the solenoid connector (Fig. 10).
(6) Connect the battery positive cable at starter (Fig. 10).
(7) Lower vehicle.
(8) Connect the negative battery cable.

INSTALLATION - 2.5L

(1) Raise vehicle and support.
(2) Install the starter.
(3) Install the starter mounting bolts (Fig. 15).
(4) Install the electrical connectors to the starter (Fig. 14).
(5) Install the lower engine splash shield.
(6) Connect the negative battery cable.
(7) Lower vehicle.

HEATED SYSTEMS

TABLE OF CONTENTS

	page		page
HEATED GLASS	1	**HEATED SEAT SYSTEM**	7
HEATED MIRRORS	5		

HEATED GLASS

TABLE OF CONTENTS

	page		page
HEATED GLASS		**REAR WINDOW DEFOGGER SWITCH**	
DESCRIPTION	1	DESCRIPTION	2
OPERATION	2	OPERATION	2
DEFOGGER RELAY		**WINDSHIELD GRID**	
DESCRIPTION	2	DIAGNOSIS AND TESTING - SYSTEM TEST	3
REAR WINDOW DEFOGGER GRID		STANDARD PROCEDURE - GRID LINE AND TERMINAL REPAIR	3
STANDARD PROCEDURE - GRID LINE REPAIR REAR	2		

HEATED GLASS

DESCRIPTION

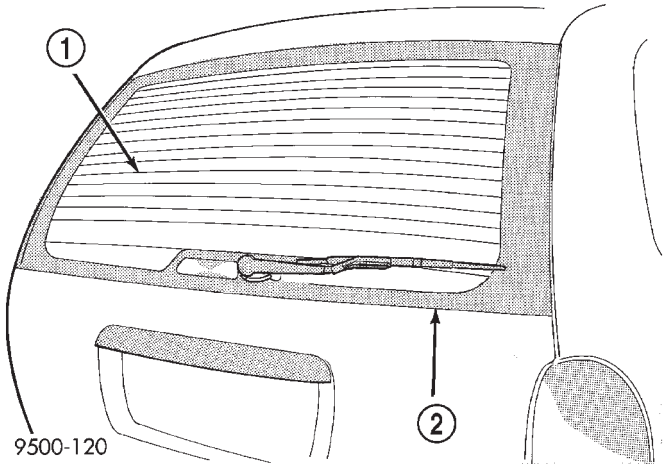

Fig. 1 REAR WINDOW DEFOGGER (TYPICAL)

1 - REAR DEFOGGER GRID
2 - REAR WINDOW

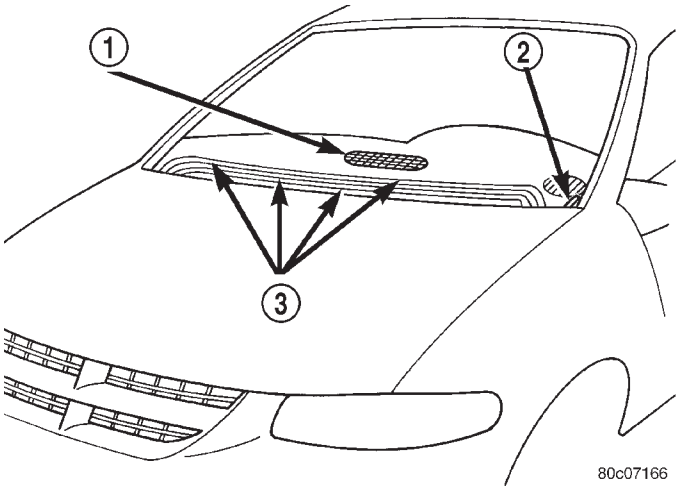

Fig. 2 (TYPICAL) Heated Windshield Wiper De-icer

1 - DEFROSTER OUTLET
2 - VIN #
3 - HEATED WINDSHIELD GRID

HEATED GLASS (Continued)

The electrically heated Rear Window Defogger (Fig. 1), Heated Power Side View Mirrors, and Heated Windshield Wiper De-icer (Fig. 2)is available on select models.

OPERATION

The Rear Window Defogger(Refer to 8 - ELECTRICAL/HEATED GLASS - DESCRIPTION) system consists of two vertical bus bars linked by a series of grid lines on the inside surface of the rear window. The electrical circuit consists of the rear defogger switch in the HVAC control assembly and a relay with timer switch to turn OFF the system after ten minutes. The main feed circuit is protected by fuse 13 (40 amp) in the Power Distribution Center (PDC) which is connected directly to the front control module (FCM) to form an integrated unit called an Integrated Power Module (IPM). The rear defogger switch and relay also activates the heated power side view mirrors. The rear defogger switch also activates the heated windshield wiper de-icer which is powered by the RUN/ACC relay in the IPM and feed thru fuse #11 (20 amp) in the PDC. The heated mirror circuit is protected by a non-servicable Positive Temperature Coefficient (PTC) located inside the PDC. The heated windshield wiper de-icer circuit is protected by fuse 11 (20 amp) in the PDC.

The Heated Windshield Wiper Deicer is also activated when the DEFROST mode is selected on the HVAC. In the DEFROST mode the rear defogger timout is bypassed, the heated windshield wiper de-icer will stay ON until the another mode is selected. For circuit information and component location refer to appropriate section for Wiring Diagrams.

CAUTION:
Since grid lines can be damaged or scraped off with sharp instruments, care should be taken in cleaning the glass or removing foreign materials, decals or stickers. Normal glass cleaning solvents or hot water used with rags or toweling is recommended.

DEFOGGER RELAY

DESCRIPTION

There is no heated windshield wiper de-icer relay. The grid is powered directly from fuse #11 in the PDC and is controlled directly from the HVAC control assembly.

REAR WINDOW DEFOGGER GRID

STANDARD PROCEDURE - GRID LINE REPAIR REAR

For Grid repair procedure for the rear window defogger (Refer to 8 - ELECTRICAL/HEATED GLASS/WINDSHIELD GRID - STANDARD PROCEDURE).

REAR WINDOW DEFOGGER SWITCH

DESCRIPTION

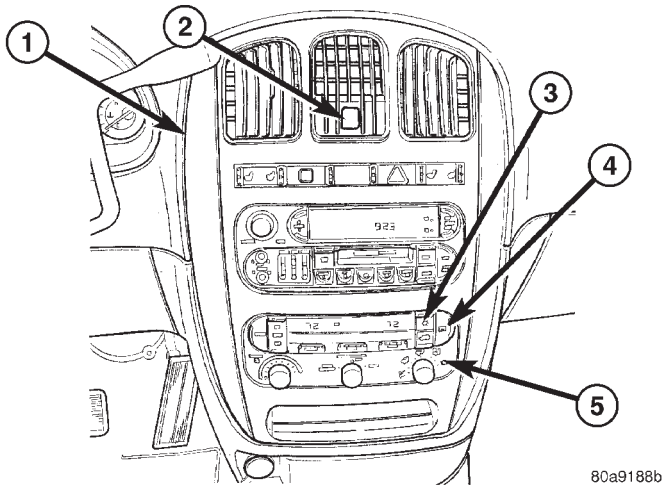

Fig. 3 HVAC CONTROL PANEL

1 - TRIM BEZEL
2 - ACT SENSOR
3 - A/C REQUEST SWITCH
4 - REAR WINDOW DEFOGGER/HEATED MIRRORS SWITCH COMBO
5 - FRONT WINDOW DEFROSTER MODE SELECTOR

The rear window defogger switch is integrated into the HVAC control panel assembly (Fig. 3)

OPERATION

A LED indicator will illuminate when the switch is activated. The switch energizes the HVAC control assembly when it requests the Front Control Module (FCM) to activate the rear window defogger relay. The relay controls the current to flow to the grids of the rear window defogger, heated power side view mirrors and the heated windshield wiper de-icer. The defogger relay will be on for approximately 10 minutes or until the control switch or ignition is turned off.

WINDSHIELD GRID

DIAGNOSIS AND TESTING - SYSTEM TEST

Electrically heated rear window defogger or the heated windshield wiper deicer operation can be checked on the vehicle in the following manner:

(1) Turn the ignition switch to the ON position.

(2) Using a ammeter on the battery, turn the rear defogger control switch to the ON position, a distinct increase in amperage draw should be noted.

(3) The rear window defogger or the heated windshield wiper deicer operation can be checked by feeling the glass. A distinct difference in temperature between the grid lines and adjacent clear glass can be detected in 3 to 4 minutes of operation.

(4) Using a DC voltmeter (Fig. 4) contact terminal B with the negative lead, and terminal A with the positive lead. The voltmeter should read 10-14 volts.

(5) Indicator light illumination means that there is power available at the switch only and does not necessarily verify system operation.

(6) If turning the defogger switch ON, no distinct current draw on the ammeter the problem should be isolated in the following manner:

- Confirm that ignition switch is ON.
- Ensure that the heated rear window or the heated windshield wiper deicer feed pigtail is connected to the wiring harness and that the ground pigtail is in fact grounded.
- Ensure that the proper fuse in the PDC is OK.

(7) When the above steps have been completed and the system is still inoperative it may be necessary to connect a DRBIII scan tool and refer to the Diagnostic Service Manual, you may also check for the following being defective:

- HVAC control assembly
- Rear window defogger relay in the PDC portion of the IPM.
- Rear window defogger relay control circuity in the FCM portion of the IPM.
- Check for loose connector or a wire pushed out of connector.
- Rear window or the windshield grid lines (all grid lines would have to be broken, or one of the feed pigtails not connected to the bus bar, for no ammeter deflection).

(8) If turning the switch ON produces severe voltmeter deflection, the circuit should be closely checked for a shorting condition.

(9) If the system operation has been verified but indicator LED does not light, replace the HVAC control assembly.

(10) For detailed wiring information, refer to the appropriate section for Wiring Diagrams.

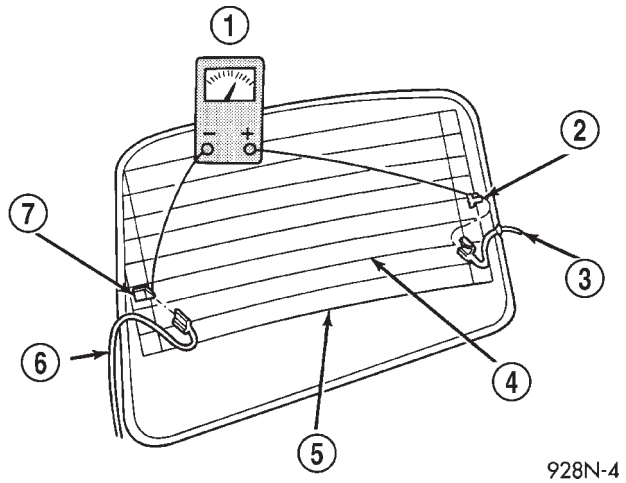

Fig. 4 Grid Line Test

1 - VOLTMETER
2 - TERMINAL B
3 - FEED WIRE
4 - MID-POINT C (TYPICAL)
5 - HEATED REAR WINDOW GRIDS
6 - GROUND WIRE
7 - TERMINAL A

STANDARD PROCEDURE - GRID LINE AND TERMINAL REPAIR

WARNING:
REPAIR KIT MAY CAUSE SKIN OR EYE IRRITATION. CONTAINS EPOXY RESIN AND AMINE TYPE HARDENER, HARMFUL IF SWALLOWED. AVOID CONTACT WITH SKIN AND EYES. FOR SKIN, WASH AFFECTED AREAS WITH SOAP AND WATER. DO NOT TAKE INTERNALLY. IF TAKEN INTERNALLY, INDUCE VOMITING; CALL A PHYSICIAN IMMEDIATELY. IF IN CONTACT WITH EYES, FLUSH WITH PLENTY OF WATER. USE WITH ADEQUATE VENTILATION. DO NOT USE NEAR FIRE OR FLAME. CONTENTS CONTAINS 3% FLAMMABLE SOLVENTS. KEEP OUT OF REACH OF CHILDREN.

The repair for the front windshield or the rear window grids are the same.

The repair of grid lines and replacement of the terminal is possible using the Mopar® Repair Package or equivalent.

(1) Clean area surrounding grid line or terminal by gently rubbing area with steel wool.

(2) Wipe area with clean cloth soaked in alcohol or similar solvent. It is necessary that all contaminants be removed from repair area.

(3) Remove package separator clamp and mix plastic conductive epoxy thoroughly.

WINDSHIELD GRID (Continued)

(4) For grid line, mark off area to be repaired with masking tape (Fig. 5).

(5) Apply conductive epoxy through slit in masking tape. Overlap both ends of the break.

(6) For a terminal replacement, apply a thin layer of epoxy to area where terminal was fastened.

(7) Apply a thin layer of epoxy on terminal and place terminal on desired location. To prevent terminal from falling off use a wooden wedge to secure it.

(8) Carefully remove masking tape from grid line.

CAUTION:
Do not allow the laminated windshield glass surface to exceed 82° C (180° F) or the glass may fracture. The rear window glass surface should not exceed 204° C (400° F).

(9) Allow epoxy to cure 24 hours at room temperature.

(10) After epoxy is properly cured remove wedge from terminal and check the operation of the rear window defogger.

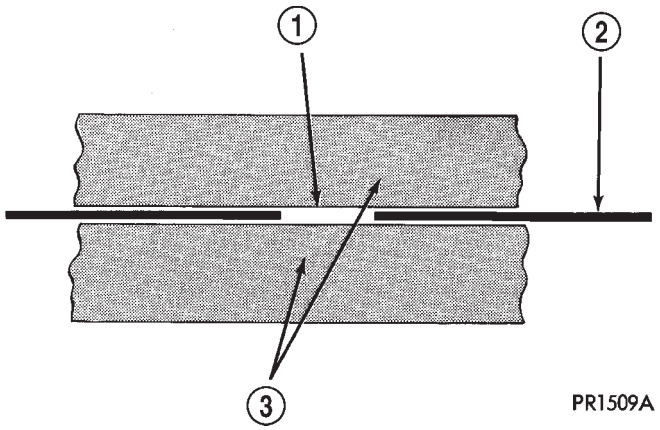

Fig. 5 Grid Line Repair

1 - BREAK
2 - GRID LINE
3 - MASKING TAPE

HEATED MIRRORS

TABLE OF CONTENTS

page

HEATED MIRRORS
DESCRIPTION 5
OPERATION 5
DIAGNOSIS AND TESTING - HEATED MIRROR TEST 5
MIRROR SWITCH
DESCRIPTION 5
OPERATION 6
HEATED MIRROR GRID
STANDARD PROCEDURE - HEATED MIRROR . . 6
RELAY
DESCRIPTION 6

HEATED MIRRORS

DESCRIPTION

Heated mirrors are available on models with Power Mirrors and Rear Window Defogger only.

OPERATION

The heated mirror is controlled by the rear window defogger switch. The heated mirror is ON when the rear window defogger is ON (Fig. 1).

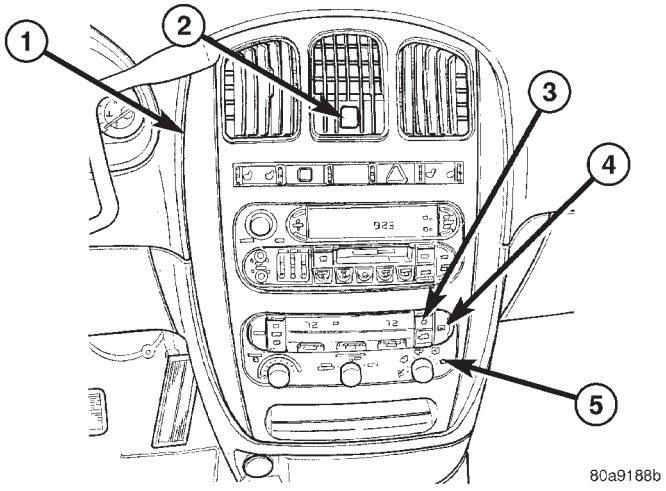

Fig. 1 HVAC CONTROL PANEL

1 - TRIM BEZEL
2 - ACT SENSOR
3 - A/C REQUEST SWITCH
4 - REAR WINDOW DEFOGGER/HEATED MIRRORS SWITCH COMBO
5 - FRONT WINDOW DEFROSTER MODE SELECTOR

DIAGNOSIS AND TESTING - HEATED MIRROR TEST

Heated mirrors are available on models with Power Mirrors and Rear Window Defogger only. The heated mirror is controlled by the rear window defogger switch. The heated mirror is ON when the rear window defogger is ON.

(1) The mirror glass should be warm to the touch.

(2) If not, check the 20 amp fuse (11) in the Power Distribution Center (PDC) part of the Integrated Power Module (IPM) in the engine compartment.

(3) Test voltage at rear window defogger switch.

- If no voltage repair wire.
- Remove mirror glass and test the wires for continuity. If no continuity repair wires.
- If wires are OK, replace mirror glass.
- To test defogger switch refer to the appropriate section in Electrical.

MIRROR SWITCH

DESCRIPTION

The heated mirror switch is integrated into the rear window defogger switch located in the HVAC control panel (Fig. 1).

MIRROR SWITCH (Continued)

OPERATION

A LED indicator will illuminate when the switch is activated. The switch energizes the HVAC control assembly when it requests the Front Control Module (FCM) to activate the rear window defogger relay. The relay controls the current to flow to the grids of the rear window defogger and the heated power side view mirrors. The defogger relay will be on for approximately 10 minutes or until the control switch or ignition is turned off.

HEATED MIRROR GRID

STANDARD PROCEDURE - HEATED MIRROR

Replacement of the mirror is necessary if the grid is damaged and diagnostics have been performed (Refer to 23 - BODY/EXTERIOR/SIDE VIEW MIRROR - REMOVAL).

RELAY

DESCRIPTION

There is no heated mirror relay it is integrated into the (E.B.L) relay that is located in the IPM in the engine compartment.

HEATED SEAT SYSTEM

TABLE OF CONTENTS

page

HEATED SEAT SYSTEM
DESCRIPTION 7
OPERATION 8
DIAGNOSIS AND TESTING - HEATED SEAT SYSTEM 8
DRIVER HEATED SEAT SWITCH
DESCRIPTION 9
OPERATION 9
DIAGNOSIS AND TESTING - DRIVER HEATED SEAT SWITCH 9
REMOVAL 10
INSTALLATION 10
HEATED SEAT ELEMENT
DESCRIPTION 11
OPERATION 11
DIAGNOSIS AND TESTING - HEATED SEAT ELEMENTS 11

page

REMOVAL 12
INSTALLATION 12
HEATED SEAT SENSOR
DESCRIPTION 12
OPERATION 12
DIAGNOSIS AND TESTING - HEATED SEAT SENSOR 12
PASSENGER HEATED SEAT SWITCH
DESCRIPTION 13
OPERATION 13
DIAGNOSIS AND TESTING - PASSENGER HEATED SEAT SWITCH 13
REMOVAL 14
INSTALLATION 15

HEATED SEAT SYSTEM

DESCRIPTION

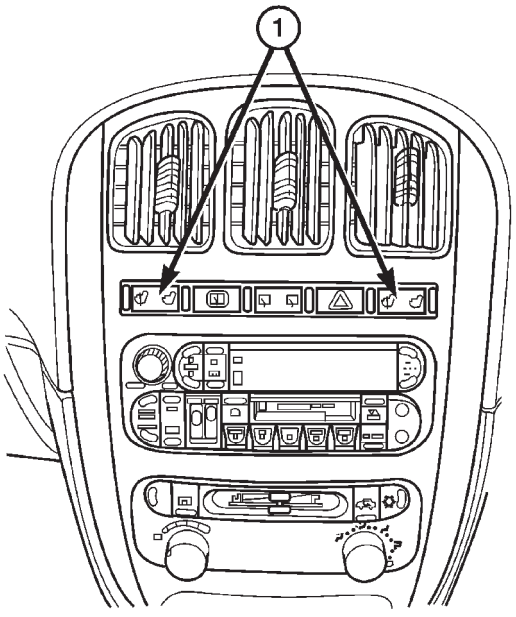

Fig. 1 HEATED SEAT SWITCH LOCATIONS

1 - HEATED SEAT SWITCHES

Vehicles with the heated seat option can be visually identified by the two separate heated seat switches located in the instrument panel center stack, just above the radio (Fig. 1). The heated seat system allows the front seat driver and passenger to select from two different levels of supplemental electrical seat heating (HI/LO), or no seat heating to suit their individual comfort requirements. The heated seat system for this vehicle includes the following major components, which are described in further detail later in this section:

- **Heated Seat Elements** - Four heated seat elements are used per vehicle, two for each front seat. One heated seat element is integral to each front seat trim cover, one in the seat back and one in the seat bottom (cushion). Service replacement heating elements are available, refer to heated seat elements later in this section for additional information.
- **Heated Seat Modules** - Two heated seat modules are used per vehicle. One module is mounted to each of the seat cushion pans, located under the forward edge of each front seat. Refer to heated seat module in the electronic control modules section of the service manual for additional information.
- **Heated Seat Sensors** - Two heated seat sensors are used per vehicle, one for each front seat. The heated seat sensors are integral to each of the heated seat bottoms (cushions).

HEATED SEAT SYSTEM (Continued)

• **Heated Seat Switch** - Two heated seat switches are used per vehicle, one for the driver and one for the passenger side front seats. The switches are mounted to in the instrument panel center stack. Refer to the description of the heated seat switch later in this section for additional information.

Hard wired circuitry connects the heated seat system components to each other through the electrical system of the vehicle. These hard wired circuits are integral to several wire harnesses, which are routed throughout the vehicle and retained by many different methods. These circuits may be connected to each other, to the vehicle electrical system and to the heated seat system components through the use of a combination of soldered splices and splice block connectors. Refer to Wiring for complete system wiring schematics. The wiring information also includes the proper wire and connector repair procedures, further details on wire harness routing and retention, as well as pin-out and location views for the various wire harness connectors, splices and grounds.

OPERATION

The heated seat system components operate on battery current received through a fuse in the Integrated Power Module (IPM) on a fused ignition switch output (run-acc) circuit so that the system will only operate when the ignition switch is in the On or Accessory positions. The heated seat system will be turned Off automatically whenever the ignition switch is turned to any position except On or Accessory. Also, the heated seat system will not operate when the surface temperature of the seat cushion cover at either heated seat sensor is above the designed temperature set points of the system. The heated seat system has a self-diagnostic capability. When certain failures are detected within the heated seat system, the system will provide a visual indication of the failure by flashing the Light Emitting Diode (LED) indicator lamps located in the heated seat switches. See the owner's manual in the vehicle glove box for more information on the features, use and operation of the heated seat system.

DIAGNOSIS AND TESTING - HEATED SEAT SYSTEM

Refer to**Wiring Diagrams** for complete wiring schematics. The wiring information also includes the proper wire and connector repair procedures, further details on wire harness routing and retention, as well as pin-out and location views for the various wire harness connectors, splices and grounds.

HEATED SEAT SYSTEM DIAGNOSIS		
CONDITION	POSSIBLE CAUSES	CORRECTION
NO HEATED SEAT SWITCH ILLUMINATION WITH IGNITION ON (SYSTEM ON)	1. Faulty fuse	1. Check heated seat fuse in Integrated Power Module. Replace fuse, repair short if required.
	2. Faulty components	2. Refer to individual Heated Seat System components for the proper diagnosis and testing procedures.
	3. Ground faulty	3. Check for ground at heated seat switch and module. Repair, if required.
	4. Wiring faulty	4. Check fused ignition switch output (run-acc) circuits at switch and module. Repair, if required.

DRIVER HEATED SEAT SWITCH

DESCRIPTION

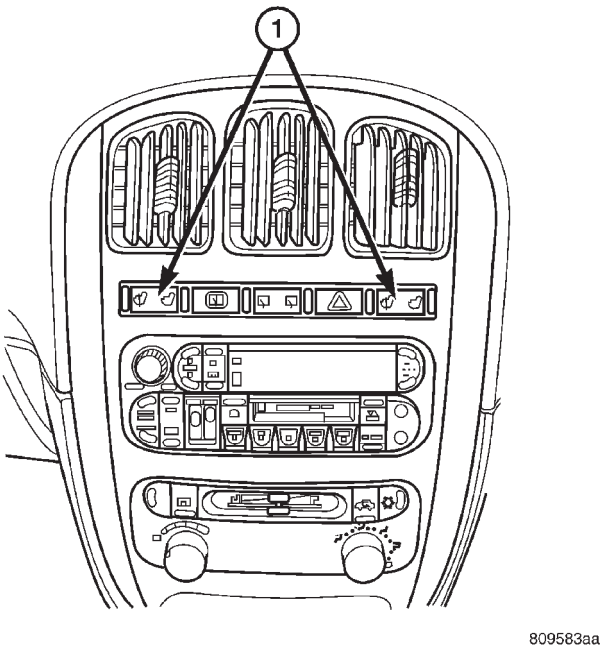

Fig. 2 HEATED SEAT SWITCH LOCATION

1 - HEATED SEAT SWITCHES

The heated seat switches are mounted in the instrument panel center bezel (Fig. 2). The two three-position rocker-type switches, one switch for each front seat, are incorporated into one large switch assembly that also includes the hazard, rear window wiper and washer switches. The heated seat switches provide a resistor multiplexed signal to the Heated Seat Module (HSM) through separate hard wired circuits. Each switch has an Off, Low, and High position so that both the driver and the front seat passenger can select a preferred seat heating mode. Each switch has two Light-Emitting Diodes (LED) which light to indicate that the heater for the seat is turned on.

The heated seat switches and their LEDs cannot be repaired. If either switch or LED is faulty or damaged, the entire switch assembly must be replaced.

OPERATION

There are three positions that can be selected with each of the heated seat switches: Off, Low, or High. When the left side of the switch rocker is fully depressed, the Low position is selected and the low position LED indicator illuminates. When the right side of the switch rocker is fully depressed, the High position is selected and the high position LED indicator illuminates. When the switch rocker is moved to its neutral position (middle), Off is selected and both LED indicators are extinguished.

Both switches provide separate resistor multiplexed hard wire inputs to the Heated Seat Module (HSM) to indicate the selected switch position. The heated seat module responds to the heated seat switch status messages by controlling the output to the seat heater elements of the selected seat. The Low heat position set point is about 36° C (97° F), and the High heat position set point is about 41° C (105° F).

DIAGNOSIS AND TESTING - DRIVER HEATED SEAT SWITCH

For complete circuit diagrams, refer to **Wiring Diagrams**.

WARNING: REFER TO THE RESTRAINTS SECTION OF THIS MANUAL BEFORE ATTEMPTING ANY STEERING WHEEL, STEERING COLUMN, SEAT OR INSTRUMENT PANEL COMPONENT DIAGNOSIS OR SERVICE. FAILURE TO TAKE THE PROPER PRECAUTIONS COULD RESULT IN ACCIDENTAL AIRBAG DEPLOYMENT AND POSSIBLE PERSONAL INJURY.

CHECKING SWITCH SIGNAL AND WIRING AT THE MODULE

(1) Disconnect and isolate the battery negative cable.

(2) Access and disconnect the gray 4-way connector from the heated seat module. Visually inspect wiring terminals for damage that would prevent positive connection. If not OK, repair or replace the necessary components.

(3) Reconnect the negative battery cable and Turn heated seat ON in the LO position. Using an Ohmmeter, check the resistance between cavities 2 and 3 of the gray connector noted above. Resistance should be about 3.5 kiloohms (3500 ohms). If not OK, check resistance directly at switch, as noted below. If OK, proceed. If NOT OK replace the switch or faulty wiring.

(4) Turn heated seat ON in the HI position. Using an Ohmmeter, check the resistance between cavities 2 and 3 of the gray connector noted above. Resistance should be about 1.4 kiloohms (1400 ohms). If not OK, check resistance directly at switch, as noted below. If OK, proceed. If NOT OK replace the switch or faulty wiring.

(5) With the system ON in the HI position, Check for battery voltage and ground at cavities 4 and 1. If OK, proceed with testing remaining components. If NOT OK, repair open or wiring short.

DRIVER HEATED SEAT SWITCH (Continued)

CHECKING SWITCH ONLY

(1) Disconnect and isolate the battery negative cable. Remove the center bezel from the instrument panel (Refer to 23 - BODY/INSTRUMENT PANEL/ INSTRUMENT PANEL CENTER BEZEL - REMOVAL). Check for continuity between the ground circuit cavity (#10) of the instrument panel switch bank electrical connector and a good ground. There should be continuity. If OK, go to Step 2. If not OK, repair the open ground circuit to ground as required.

(2) Reconnect the battery negative cable. Turn the ignition switch to the On position. Check for battery voltage at the fused ignition switch output (run) circuit cavity of the instrument panel switch bank connector (#4). If OK, turn the ignition switch to the Off position, and go to Step 3. If not OK, repair the open fused ignition switch output (run) circuit as required.

(3) Test the heated seat switch as shown in the Heated Seat Switch Test chart and the connector pinout below (Fig. 3). If OK, go to Step 4. If not OK, replace the faulty switch bank assembly.

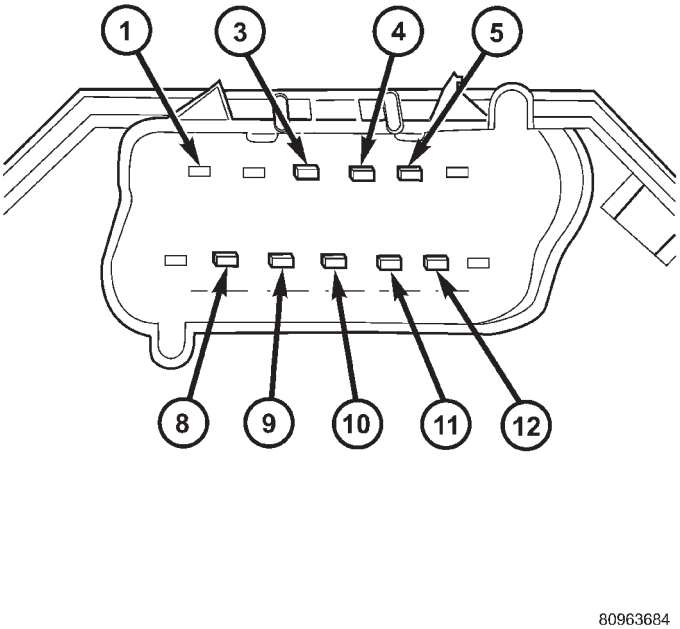

Fig. 3 Instrument Panel Switch Bank Connector

DRIVER HEATED SEAT SWITCH TEST		
SWITCH POSITION	RESISTANCE BETWEEN	RESISTANCE (OHMS)
Off	Pin 4 & 5	OPEN
Low	Pin 4 & 5	3570
High	Pin 4 & 5	1430
All resistance values are ±1%.		

(4) Reconnect the instrument panel switch bank and test the heated seat system for proper operation. If the system is still inoperative proceed with checking remaining components.

REMOVAL

WARNING: ON VEHICLES EQUIPPED WITH AIRBAGS, REFER TO THE RESTRAINTS SECTION OF THIS MANUAL BEFORE ATTEMPTING ANY STEERING WHEEL, STEERING COLUMN, SEAT OR INSTRUMENT PANEL COMPONENT DIAGNOSIS OR SERVICE. FAILURE TO TAKE THE PROPER PRECAUTIONS COULD RESULT IN ACCIDENTAL AIRBAG DEPLOYMENT AND POSSIBLE PERSONAL INJURY.

(1) Disconnect and isolate the battery negative cable.

(2) Remove the instrument panel center bezel. Refer to **Instrument Panel Center Bezel** in the Body section for the procedure.

(3) Remove the three screws (Fig. 4) that secure the heated seat switch to the back of the instrument panel center bezel.

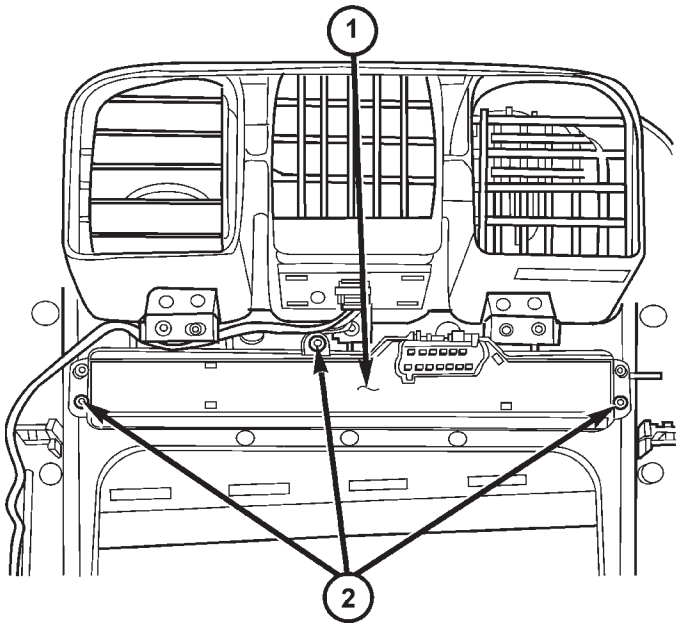

Fig. 4 SWITCH RETAINING SCREWS

1 - HEATED SEAT SWITCH ASSEMBLY
2 - RETAINING SCREWS

(4) Remove the heated seat switch from the back of the instrument panel center bezel.

INSTALLATION

(1) Position the heated seat switch onto the back of the instrument panel center bezel.

DRIVER HEATED SEAT SWITCH (Continued)

(2) Install and tighten the three screws that secure the heated seat switch to the back of the instrument panel center bezel. Tighten the screws to 1.5 N·m (13 in. lbs.) (Fig. 4).

(3) Install the center bezel onto the instrument panel. Refer to **Instrument Panel Center Bezel** in the Body section for the procedure.

(4) Reconnect the battery negative cable.

HEATED SEAT ELEMENT

DESCRIPTION

The heated seat system includes two seat heating elements in each front seat, one for the seat cushion and the other for the seat back. The two elements for each seat that are connected in series with the Heated Seat Module (HSM). The temperature sensor is a Negative Temperature Coefficient (NTC) thermistor. One temperature sensor is used for each seat, and it is located on the seat cushion heating element for all models.

The seat heating elements are sewn into the seat cushion cover trim and seat back cover trim units. The heated seat elements and the temperature sensor cannot be adjusted or repaired and, if faulty or damaged, the seat element assembly must be replaced. Refer to the procedure in this section.

OPERATION

The heated seat elements resist the flow of electrical current. When battery current is passed through the elements, the energy lost by the resistance of the elements to the current flow is released in the form of heat. The temperature sensor is a NTC thermistor. When the temperature of the seat cushion cover rises, the resistance of the sensor decreases. The heated seat module supplies a five-volt current to one side of each sensor, and monitors the voltage drop through the sensor on a return circuit. The heated seat module uses this temperature sensor input to monitor the temperature of the seat, and regulates the current flow to the seat heating elements accordingly.

DIAGNOSIS AND TESTING - HEATED SEAT ELEMENTS

The wire harness connectors for the seat cushion and seat back heating elements are located under the seat, at the heated seat module. For circuit descriptions and diagrams, refer to section 8W, Wiring Diagrams.

In order to access and test the heated seat elements it will be necessary to remove the appropriate front seat retaining bolts and lay the seat rearward, up against one of the rear seats. It is not necessary to disconnect the seat electrical connectors, just use care not to damage the attached wire harnesses while testing.

NOTE: WHEN CHECKING HEATED SEAT ELEMENTS FOR CONTINUITY, BE CERTAIN TO MOVE THE HEATING ELEMENT BEING CHECKED. MOVING THE ELEMENT, SUCH AS SITTING IN THE SEAT WILL ELIMINATE THE POSSIBILITY OF AN INTERMITTENT OPEN IN THE ELEMENT WHICH WOULD ONLY BE EVIDENT IF THE ELEMENT WAS MOVED IN A CERTAIN DIRECTION. FAILURE TO CHECK THE ELEMENT IN VARIOUS POSITIONS COULD RESULT IN AN INCOMPLETE TEST.

SEAT CUSHION ELEMENT

(1) From under the vehicle, remove the appropriate seats four retaining nuts.

(2) From inside the vehicle, pull the seat up, off the mounting studs and lay it back, up against one of the rear seats.

(3) Locate the heated seat module, attached to the bottom of the seat cushion pan. Remove the heated seat module from the seat cushion pan. Do not disconnect the electrical connectors at this time.

(4) Locate the green 4-way electrical connector, connected to the heated seat module. Disconnect the green 4-way connector from the heated seat module.

(5) Check for continuity between the two outboard circuit cavities of the wire harness connector (Pins 1&4). There should be continuity. If OK, refer to Heated Seat Module Diagnosis and Testing in the Electronic Control Modules section of the service manual for complete system testing procedures. If not OK, install a replacement heated seat cushion element. Refer to the procedure in this section.

SEAT BACK ELEMENT

(1) From under the vehicle, remove the appropriate seats four retaining nuts.

(2) From inside the vehicle, pull the seat up and off the mounting studs and lay it back, up against one of the rear seats.

(3) Locate the heated seat module, attached to the bottom of the seat cushion pan. Remove the heated seat module from the seat cushion pan. Do not disconnect the electrical connectors at this time.

(4) Locate the gray 2-way electrical connector, connected to the heated seat module. Disconnect the 2-way connector from the heated seat module.

(5) Check for continuity between the two circuit cavities of the 2-way wire harness connector. There should be continuity. If OK, refer to Heated Seat Module Diagnosis and Testing in the Electronic Control Modules section of the service manual for complete system testing procedures. If not OK, install a replacement heated seat back element. Refer to the procedure in this section.

HEATED SEAT ELEMENT (Continued)

REMOVAL

Do not remove the OEM heating element from the seat or seat back cushion/trim covers. The original element is permanently attached and cannot be removed without permanent damage. The service replacement heating element is designed to be applied directly on the seat cushion.

(1) Disconnect and isolate the negative battery cable.

(2) Remove the appropriate seat cushion or seat back trim cover. Refer to the Body section of the service manual for the procedures.

(3) Disconnect the inoperative heated seat cushion or seat back element electrical connectors.

(4) Locate the wires leading from the inoperative heating element and cut them off flush with the edge of the original heating element.

INSTALLATION

(1) Peel off the adhesive backing on the back of the replacement heating element and stick directly on the foam cushion.

CAUTION: During the installation of the replacement heating element, be careful not to fold or crease the element assembly. Folds or creases will cause premature failure.

(2) Connect the new heating element electrical connectors (Fig. 5).

(3) Connect the negative battery cable.

(4) Verify heated seat system operation.

(5) Install the appropriate seat cushion or seat back trim cover. Make certain the seat wire harness is correctly routed through the seat and seat back. The excess wire between the cushion and back elements should be securely tucked between the rear of the cushion foam and the rear carpet flap of the trim cover.

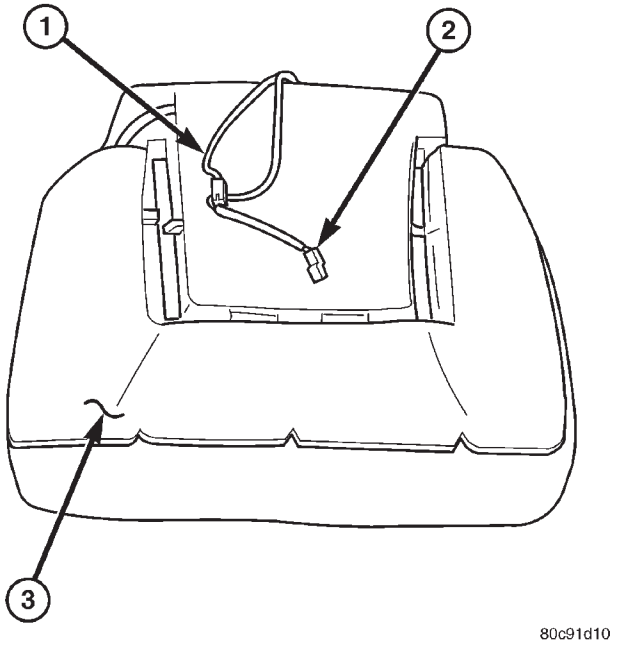

Fig. 5 HEATING ELEMENT INSTALLED - TYPICAL

1 - SEAT BACK WIRE HARNESS
2 - HEATED SEAT WIRE HARNESS CONNECTOR
3 - HEATED SEAT CUSHION ELEMENT

HEATED SEAT SENSOR

DESCRIPTION

Two heated seat sensors are used per vehicle, one in each front seat cushion heating element. The heated seat temperature sensor is a Negative Temperature Coefficient (NTC) thermistor.

The heated seat sensors cannot be repaired or adjusted and if found to be faulty, the complete heated seat cushion element must be replaced.

OPERATION

The temperature sensor is a NTC thermistor. When the temperature of the seat cushion cover rises, the resistance of the sensor decreases. The heated seat module supplies a five-volt current to one side of each sensor, and monitors the voltage drop through the sensor on a return circuit. The heated seat module uses this temperature sensor input to monitor the temperature of the seat, and regulates the current flow to the seat heating elements accordingly.

DIAGNOSIS AND TESTING - HEATED SEAT SENSOR

For complete circuit diagrams, refer to **Wiring Diagrams**.

(1) Disconnect and isolate the battery negative cable. Disconnect the green 4-way heated seat module wire harness connector.

(2) Using an ohmmeter, check the resistance between cavities 2 and 3. The sensor resistance should be between 2 kilohms at 15° C (60° F) and 50 kilohms at 30° C (85° F). If not OK, replace the faulty seat element and sensor assembly.

PASSENGER HEATED SEAT SWITCH

DESCRIPTION

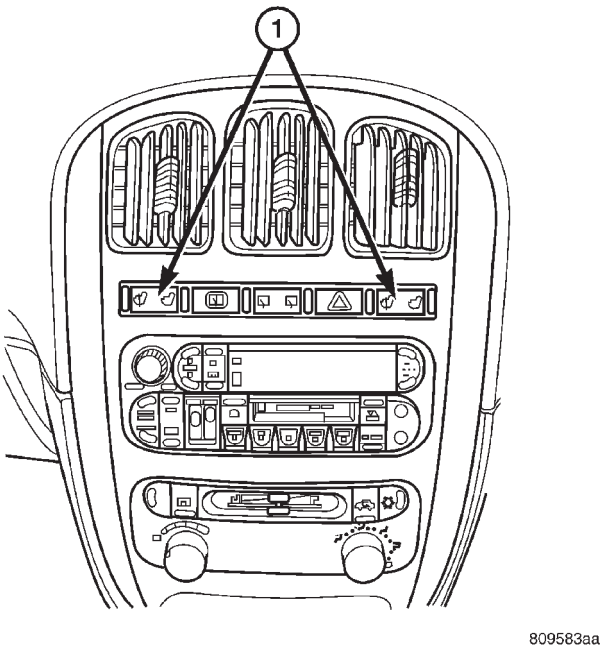

Fig. 6 HEATED SEAT SWITCH LOCATION

1 - HEATED SEAT SWITCHES

The heated seat switches are mounted in the instrument panel center bezel (Fig. 6). The two three-position rocker-type switches, one switch for each front seat, are incorporated into one large switch assembly that also includes the hazard, rear window wiper and washer switches. The heated seat switches provide a resistor multiplexed signal to the Heated Seat Module (HSM) through separate hard wired circuits. Each switch has an Off, Low, and High position so that both the driver and the front seat passenger can select a preferred seat heating mode. Each switch has two Light-Emitting Diodes (LED) which light to indicate that the heater for the seat is turned on.

The heated seat switches and their LEDs cannot be repaired. If either switch or LED is faulty or damaged, the entire switch assembly must be replaced.

OPERATION

There are three positions that can be selected with each of the heated seat switches: Off, Low, or High. When the left side of the switch rocker is fully depressed, the Low position is selected and the low position LED indicator illuminates. When the right side of the switch rocker is fully depressed, the High position is selected and the high position LED indicator illuminates. When the switch rocker is moved to its neutral position (middle), Off is selected and both LED indicators are extinguished.

Both switches provide separate resistor multiplexed hard wire inputs to the Heated Seat Module (HSM) to indicate the selected switch position. The heated seat module responds to the heated seat switch status messages by controlling the output to the seat heater elements of the selected seat. The Low heat position set point is about 36° C (97° F), and the High heat position set point is about 41° C (105° F).

DIAGNOSIS AND TESTING - PASSENGER HEATED SEAT SWITCH

For complete circuit diagrams, refer to **Wiring Diagrams**.

WARNING: REFER TO THE RESTRAINTS SECTION OF THIS MANUAL BEFORE ATTEMPTING ANY STEERING WHEEL, STEERING COLUMN, SEAT OR INSTRUMENT PANEL COMPONENT DIAGNOSIS OR SERVICE. FAILURE TO TAKE THE PROPER PRECAUTIONS COULD RESULT IN ACCIDENTAL AIRBAG DEPLOYMENT AND POSSIBLE PERSONAL INJURY.

CHECKING SWITCH SIGNAL AND WIRING AT THE MODULE

(1) Disconnect and isolate the battery negative cable.

(2) Access and disconnect the gray 4-way connector from the heated seat module. Visually inspect wiring terminals for damage that would prevent positive connection. If not OK, repair or replace the necessary components.

(3) Reconnect the negative battery cable and Turn heated seat ON in the LO position. Using an Ohmmeter, check the resistance between cavities 2 and 3 of the gray connector noted above. Resistance should be about 3.5 kiloohms (3500 ohms). If not OK, check resistance directly at switch, as noted below. If OK, proceed. If NOT OK replace the switch or faulty wiring.

(4) Turn heated seat ON in the HI position. Using an Ohmmeter, check the resistance between cavities 2 and 3 of the gray connector noted above. Resistance should be about 1.4 kiloohms (1400 ohms). If not OK, check resistance directly at switch, as noted below. If OK, proceed. If NOT OK replace the switch or faulty wiring.

(5) With the system ON in the HI position, Check for battery voltage and ground at cavities 4 and 1. If OK, proceed with testing remaining components. If NOT OK, repair open or wiring short.

PASSENGER HEATED SEAT SWITCH (Continued)

CHECKING SWITCH ONLY

(1) Disconnect and isolate the battery negative cable. Remove the center bezel from the instrument panel (Refer to 23 - BODY/INSTRUMENT PANEL/ INSTRUMENT PANEL CENTER BEZEL - REMOVAL). Check for continuity between the ground circuit cavity (#10) of the instrument panel switch bank electrical connector and a good ground. There should be continuity. If OK, go to Step 2. If not OK, repair the open ground circuit to ground as required.

(2) Reconnect the battery negative cable. Turn the ignition switch to the On position. Check for battery voltage at the fused ignition switch output (run) circuit cavity of the instrument panel switch bank connector (#4). If OK, turn the ignition switch to the Off position, and go to Step 3. If not OK, repair the open fused ignition switch output (run) circuit as required.

(3) Test the heated seat switch as shown in the Heated Seat Switch Test chart and the connector pinout below (Fig. 7). If OK, go to Step 4. If not OK, replace the faulty switch bank assembly.

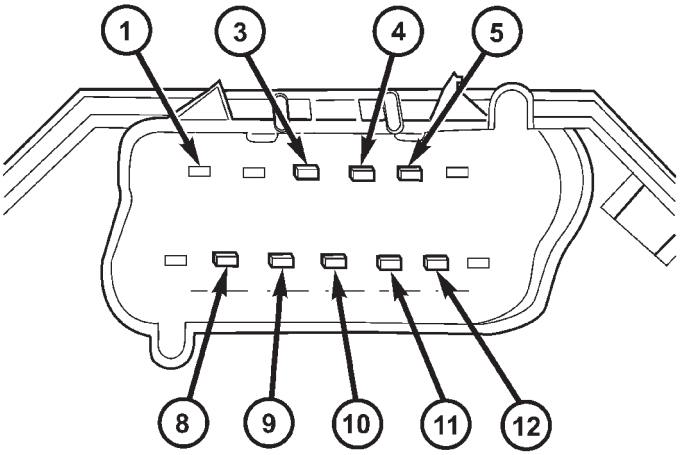

Fig. 7 Instrument Panel Switch Bank Connector

PASSENGER HEATED SEAT SWITCH TEST		
SWITCH POSITION	RESISTANCE BETWEEN	RESISTANCE (OHMS)
Off	Pin 3 & 4	OPEN
Low	Pin 3 & 4	3570
High	Pin 3 & 4	1430
All resistance values are ±1%.		

(4) Reconnect the instrument panel switch bank and test the heated seat system for proper operation. If the system is still inoperative proceed with checking remaining components.

REMOVAL

WARNING: ON VEHICLES EQUIPPED WITH AIRBAGS, REFER TO THE RESTRAINTS SECTION OF THIS MANUAL BEFORE ATTEMPTING ANY STEERING WHEEL, STEERING COLUMN, SEAT OR INSTRUMENT PANEL COMPONENT DIAGNOSIS OR SERVICE. FAILURE TO TAKE THE PROPER PRECAUTIONS COULD RESULT IN ACCIDENTAL AIRBAG DEPLOYMENT AND POSSIBLE PERSONAL INJURY.

(1) Disconnect and isolate the battery negative cable.

(2) Remove the instrument panel center bezel. Refer to **Instrument Panel Center Bezel** in the Body section for the procedure.

(3) Remove the three screws (Fig. 8) that secure the heated seat switch to the back of the instrument panel center bezel.

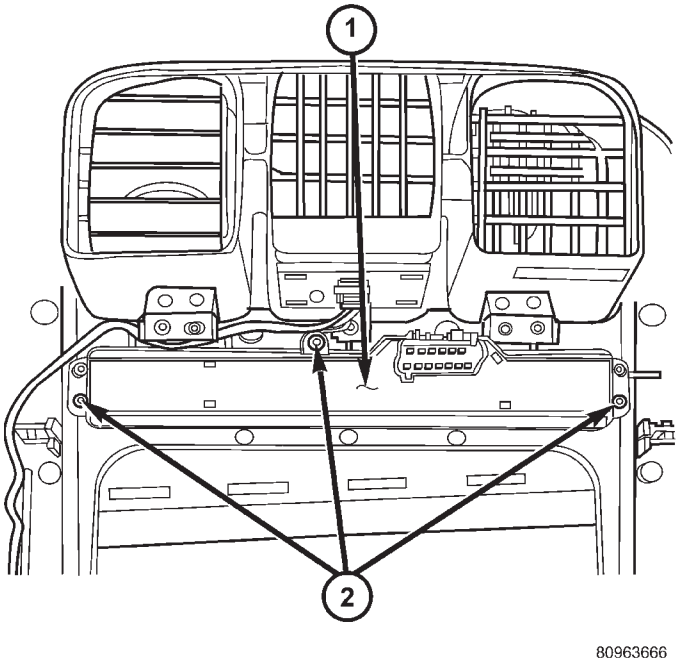

Fig. 8 SWITCH RETAINING SCREWS

1 - HEATED SEAT SWITCH ASSEMBLY
2 - RETAINING SCREWS

(4) Remove the heated seat switch from the back of the instrument panel center bezel.

PASSENGER HEATED SEAT SWITCH (Continued)

INSTALLATION

(1) Position the heated seat switch onto the back of the instrument panel center bezel.

(2) Install and tighten the three screws that secure the heated seat switch to the back of the instrument panel center bezel. Tighten the screws to 1.5 N·m (13 in. lbs.) (Fig. 8).

(3) Install the center bezel onto the instrument panel. Refer to **Instrument Panel Center Bezel** in the Body section for the procedure.

(4) Reconnect the battery negative cable.

HORN

TABLE OF CONTENTS

page

HORN SYSTEM
DESCRIPTION 1
OPERATION 1
DIAGNOSIS AND TESTING - HORN SYSTEM . . . 1
HORN
DIAGNOSIS AND TESTING - HORN 3
REMOVAL 4
INSTALLATION 4
HORN RELAY
DIAGNOSIS AND TESTING - HORN RELAY 5
REMOVAL 5
INSTALLATION 5
HORN SWITCH
DESCRIPTION 5

HORN SYSTEM

DESCRIPTION

WARNING: ON VEHICLES EQUIPPED WITH AIRBAG, REFER TO ELECTRICAL, RESTRAINTS FOR SAFETY PRECAUTIONS. DISCONNECT THE NEGATIVE CABLE FROM THE BATTERY BEFORE SERVICING COMPONENTS INVOLVING THE AIRBAG SYSTEM. ACCIDENTAL DEPLOYMENT OF AIRBAG AND PERSONAL INJURY CAN RESULT.

The horn circuit consists of a horn switch, clockspring, horn relay, horns and Integrated Power Module (IPM). The horn switch is a membrane switch located in the airbag trim cover. The horns are located forward of the left front wheel behind the bumper fascia.

OPERATION

The horn relay plugs into the Integrated Power Module (IPM) which is located in the engine compartment. For circuit information and component locations, refer to the appropriate wiring information. The wiring information includes wiring diagrams, proper wire and connector repair procedures, details of wire harness routing and retention, connector pin-out information and location views for the various wire harness connectors, splices and grounds.

The horns will not function if the switch is “CLOSED” for more than 30 seconds. Once the switch is “OPEN”, a 20–30 second delay will occur before the horns are functional again.

DIAGNOSIS AND TESTING - HORN SYSTEM

WARNING: ON VEHICLES EQUIPPED WITH AIRBAGS, REFER TO ELECTRICAL, RESTRAINTS BEFORE ATTEMPTING ANY STEERING WHEEL, STEERING COLUMN, OR INSTRUMENT PANEL COMPONENT DIAGNOSIS OR SERVICE. FAILURE TO TAKE THE PROPER PRECAUTIONS COULD RESULT IN ACCIDENTAL AIRBAG DEPLOYMENT AND POSSIBLE PERSONAL INJURY.

Refer to Horn System Test below. If the horn does not sound, check horn fuse located in the Integrated Power Module (IPM). If the fuse is blown, replace with the correct fuse. If the horns fail to sound and the new fuse blows when depressing the horn switch, a short circuit in the horn or the horn wiring between the fuse terminal and the horn is responsible, or a defective horn switch allowed the horn to burn out is responsible.

If the fuse is OK, test horn relay (Refer to 8 - ELECTRICAL/HORN/HORN RELAY - DIAGNOSIS AND TESTING).

If the relay is OK, test horn. Refer to Horn System Test.

CAUTION: Continuous sounding of horn may cause horn failure.

Should the horn sound continuously:

- Unplug the horn relay from IPM.
- Refer to (Refer to 8 - ELECTRICAL/HORN/HORN RELAY - DIAGNOSIS AND TESTING).

Refer to the appropriate wiring information. The wiring information includes wiring diagrams, proper wire and connector repair procedures, details of wire harness routing and retention, connector pin-out information and location views for the various wire harness connectors, splices and grounds.

HORN SYSTEM (Continued)

HORN SYSTEM TEST

CONDITION	POSSIBLE CAUSE	CORRECTION
HORN SOUNDS CONTINUOUSLY. NOTE: IMMEDIATELY UNPLUG HORN RELAY IN THE IPM.	(1) FAULTY HORN RELAY.	(1) REFER TO HORN RELAY TEST.
	(2) HORN CONTROL CIRCUIT TO RELAY SHORTED TO GROUND.	(2) CHECK TERMINAL 85 IN IPM FOR CONTINUITY TO GROUND. IF CONTINUITY TO GROUND INDICATES: (A) STEERING WHEEL HORN SWITCH/LEAD SHORTED TO GROUND. (B) WIRING HARNESS SHORTED TO GROUND. FIND THE SHORT AND REPAIR AS NECESSARY.
	(3) PINCHED HORN SWITCH WIRE UNDER DRIVER AIRBAG MODULE.	(3) REPLACE DRIVER AIRBAG MODULE TRIM COVER.
	(4) FAULTY HORN SWITCH.	(4) REPLACE DRIVER AIRBAG MODULE TRIM COVER.
	(5) FAULTY CLOCKSPRING.	(5) REPLACE CLOCKSPRING.
	(6) FAULTY FRONT CONTROL MODULE.	(6) REFER TO ELECTRONIC CONTROL MODULES/FRONT CONTROL MODULE.
HORN SOUND INTERMITTENTLY AS THE STEERING WHEEL IS TURNED.	(1) HORN RELAY CONTROL CIRCUIT X3 IS SHORTED TO GROUND INSIDE STEERING COLUMN OR WHEEL.	(1) REMOVE DRIVER AIRBAG MODULE AND/OR WHEEL. CHECK FOR RUBBING OR LOOSE WIRE/CONNECTOR, REPAIR AS NECESSARY.
	(2) PINCHED HORN SWITCH WIRE UNDER DRIVER AIRBAG MODULE.	(2) REPLACE DRIVER AIRBAG MODULE TRIM COVER.
	(3) FAULTY HORN SWITCH.	(3) REPLACE DRIVER AIRBAG MODULE TRIM COVER.
	(4) FAULTY CLOCKSPRING.	(4) REPLACE CLOCKSPRING.
HORN DOES NOT SOUND	(1) CHECK FUSE 8 IN INTELLIGENT POWER MODULE.	(1) REPLACE FUSE IF BLOWN REPAIR AS NECESSARY.
	(2) NO VOLTAGE AT HORN RELAY TERMINALS 30 & 86, AND FUSE IS OK.	(2) NO VOLTAGE, REPAIR THE CIRCUIT AS NECESSARY.
	(3) OPEN CIRCUIT FROM TERMINAL 85 OF THE HORN RELAY TO HORN SWITCH, X3 CIRCUIT.	(3) REPAIR CIRCUIT AS NECESSARY.
	(4) FAULTY OR DAMAGED HORN.	(4) VOLTAGE AT HORN WHEN HORN SWITCH IS PRESSED, REPLACE HORN.

HORN SYSTEM (Continued)

CONDITION	POSSIBLE CAUSE	CORRECTION
	(5) FAULTY HORN SWITCH.	(5) REPLACE DRIVER AIRBAG MODULE TRIM COVER.
	(6) FAULTY CLOCKSPRING.	(6) REPLACE CLOCKSPRING.
	(7) FAULTY FRONT CONTROL MODULE.	(7) REFER TO ELECTRONIC CONTROL MODULES/FRONT CONTROL MODULE.
FUSE BLOWS WHEN HORN SOUNDS	(1) SHORT CIRCUIT IN HORN OR HORN WIRING.	(1) REMOVE HORN RELAY, CHECK FOR SHORTED HORN OR HORN WIRING. DISCONNECT HORN WIRE HARNESS TO ISOLATE SHORT AND REPAIR AS NECESSARY.
	(2) FAULTY CLOCKSPRING.	(2) REPLACE CLOCKSPRING.
FUSE BLOWS WITHOUT BLOWING HORN	(1) SHORT CIRCUIT.	(1) REMOVE RELAY, INSTALL NEW FUSE, IF FUSE DOES NOT BLOW REPLACE HORN RELAY. IF FUSE BLOWS WITH RELAY REMOVED, CHECK FOR SHORT TO GROUND WITH OHMMETER ON CIRCUIT BETWEEN TERMINALS 30 & 86 AND THE FUSE TERMINAL. REPAIR AS NECESSARY.
	(2) FAULTY CLOCKSPRING.	(2) REPLACE CLOCKSPRING.

HORN

DIAGNOSIS AND TESTING - HORN

HORN

(1) Disconnect wire connector at horn.

(2) Using a voltmeter, connect one lead to ground terminal and the other lead to the positive wire terminal (Fig. 1).

(3) Depress the horn switch, battery voltage should be present.

(4) If no voltage, refer to **HORNS WILL NOT SOUND**. If voltage is OK, go to step Step 5.

(5) Using ohmmeter, test ground wire for continuity to ground.

(6) If no ground repair as necessary.

(7) If wires test OK and horn does not sound, replace horn.

HORNS SOUND CONTINUOUSLY

CAUTION: Continuous sounding of horns may cause relay to fail.

The horn switch (membrane) sometimes can be the cause without the switch being depressed.

(1) Remove the horn relay from the intelligent power module.

(2) Using a continuity tester, test continuity from the X3 cavity of the horn relay to ground. Refer to the appropriate wiring information. The wiring information includes wiring diagrams, proper wire and connector repair procedures, details of wire harness routing and retention, connector pin-out information and location views for the various wire harness connectors, splices and grounds.

(a) If continuity is detected, proceed to step Step 3.

(b) If NO continuity, replace the horn relay.

(3) Remove the airbag trim cover from the steering wheel and disengage horn connector.

(4) Install horn relay into Integrated Power Module (IPM).

(a) If horn does not sound, replace airbag trim cover.

(b) If horn sounds, repair grounded X3 circuit from IPM to clockspring in the steering column.

HORNS WILL NOT SOUND

Check horn fuse # 8 in the IPM. If fuse is blown, check for a shorted switch in the airbag module. and refer to FUSE BLOWN section. If fuse is OK, refer to FUSE OK section.

HORN (Continued)

FUSE BLOWN

(1) Verify condition of battery terminals and voltage, (Refer to 8 - ELECTRICAL/BATTERY SYSTEM - DIAGNOSIS AND TESTING). If battery connections and battery charge is OK proceed to Step 2.

(2) Using a voltmeter, test for battery voltage at both sides of horn fuse 7. If voltage is OK, on both sides of fuse, proceed to Fuse OK. If voltage is OK, on one side of fuse, the fuse is blown, proceed to Step 3.

(3) Using a suitable ammeter in place of the fuse, test amperage draw of the horn circuit. If amperage draw is greater than 20 amps without the horn switch depressed, a grounded circuit exists between the fuse and the horn relay. Proceed to Step 4. If amperage draw is greater than 20 amps with the horn switch depressed, a grounded circuit exists between the horn relay and the horn. Proceed to step Step 5.

(4) Remove the horn relay from the IPM. If the amperage draw drops to 0 amps, the horn switch or circuit is shorted. If the amperage draw does not drop to 0 amps, repair short at the IPM.

(5) Disengage a wire connector from one of the horns. If amperage drops and the connected horn sounds, replace the faulty horn. If amperage does not drop with both horns disconnected and the horn switch depressed, proceed to Step 6.

(6) Using a continuity tester, with the horns disconnected test continuity of the X2 cavity of the horn relay to ground. If continuity is detected, the circuit is grounded between the Junction Block and the horns. Locate and repair pinched harness.

FUSE OK

(1) Remove the horn relay from the intelligent power module.

(2) Using a continuity tester, Depress horn switch and test continuity from the X3 cavity of the horn relay to ground.

(a) If continuity is detected, proceed to Step 3.

(b) If NO continuity, proceed to Step 4.

(3) Using a suitable jumper wire, jump across the fuse F62 cavity and the X2 cavity of the horn relay in the Junction Block.

(a) If the horn sounds, replace the horn relay.

(b) If the horn does not sound, proceed to Step 4.

(4) Remove airbag trim cover from steering wheel. Refer to ELECTRICAL, RESTRAINTS.

(5) Test continuity across horn switch connectors with horn switch depressed.

(a) If continuity is detected, repair open circuit between the relay and the horn switch.

(b) If NO continuity, replace airbag trim cover.

(6) Install horn relay into intelligent power module.

(7) Disengage wire connectors from horns.

(8) Using a voltmeter, with the horn switch depressed test voltage across horn connector terminals of the wire harness (Fig. 1).

(a) If voltage is detected, replace horns.

(b) If NO voltage, proceed to step Step 9.

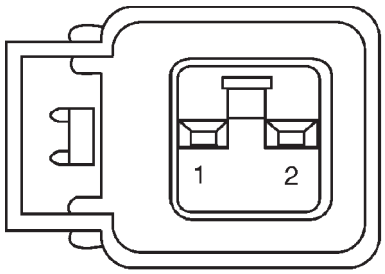

80b6f054

Fig. 1 Horn Connector

(9) With the horn switch depressed, test for voltage between the X2 circuit and ground.

(a) If voltage OK, repair system ground at right cowl area.

(b) If NO voltage, repair open X2 circuit between the relay and the horns.

REMOVAL

(1) Disconnect and isolate the battery negative cable.

(2) Hoist and support the front of the vehicle on safety stands.

(3) From behind the front fascia and forward of the left front wheel, disconnect the wire connectors from horn.

(4) Remove the mounting bracket attaching nut from the bottom of radiator closure panel. Do not remove the horn from mounting bracket.

(5) Separate the horn(s) from vehicle.

INSTALLATION

(1) Install the horns to the vehicle.

(2) Install the mounting bracket fastener.

(3) Reconnect the wire connectors to the horns.

(4) Lower the vehicle.

(5) Reconnect the battery negative cable.

HORN RELAY

DIAGNOSIS AND TESTING - HORN RELAY

(1) Remove horn relay.

(2) Using ohmmeter, test between relay connector terminals 85 to 86 for 70 to 75 ohms resistance. If resistance not OK, replace relay.

(3) Test for continuity between ground and terminal 85 of horn relay.

(a) When the horn switch is not depressed, no continuity should be present.

(b) Continuity to ground when horn switch is depressed.

(c) If continuity is not correct repair horn switch or wiring as necessary.

(4) Using voltmeter, test voltage at:

(a) Terminals 30 and 86 of the horn relay to body ground.

(b) If NO voltage check fuse 8 of the intelligent power module.

(c) If incorrect voltage, repair as necessary.

(5) Insert a jumper wire between terminal 30 and 87 of the intelligent power module.

(a) If horn sounds replace relay.

(b) If the horn does not sound, install horn relay and refer to Horn Test.

REMOVAL

(1) Disconnect and isolate the battery negative cable.

(2) Remove cover from the intelligent power module.

(3) Remove relay from intelligent power module.

INSTALLATION

(1) Push relay into intelligent power module.

(2) Install cover.

(3) Reconnect battery negative cable.

HORN SWITCH

DESCRIPTION

The horn switch is molded into the airbag trim cover. The horn switch can not be serviced separately. For service procedures, refer to ELECTRICAL / RESTRAINTS.

IGNITION CONTROL

TABLE OF CONTENTS

page

IGNITION CONTROL
DESCRIPTION - IGNITION SYSTEM 1
OPERATION - IGNITION SYSTEM 1
SPECIFICATIONS
TORQUE 2
SPARK PLUG CABLE RESISTANCE 2
SPARK PLUG 2
FIRING ORDER 3
AUTO SHUT DOWN RELAY
DESCRIPTION 3
OPERATION 3
CAMSHAFT POSITION SENSOR
DESCRIPTION 3
OPERATION 4
REMOVAL
REMOVAL - 2.4L 4
REMOVAL - 3.3/3.8L 4
INSTALLATION
INSTALLATION - 2.4L 6
INSTALLATION - 3.3/3.8L 6
IGNITION COIL
DESCRIPTION 6
OPERATION 6
REMOVAL
REMOVAL - 2.4L 7
REMOVAL - 3.3/3.8L 7
INSTALLATION
INSTALLATION - 2.4L 7
INSTALLATION - 3.3/3.8L 8
KNOCK SENSOR
DESCRIPTION 8
OPERATION 8
REMOVAL
REMOVAL - 2.4L 8
REMOVAL - 3.8L 8
INSTALLATION
INSTALLATION - 2.4L 8
INSTALLATION - 3.8L 8
SPARK PLUG
DESCRIPTION
DESCRIPTION - STANDARD 4 CYLINDER . . . 9
DESCRIPTION - PLATINUM PLUGS 9
REMOVAL 9
INSTALLATION 10
SPARK PLUG CABLE
DESCRIPTION 10
REMOVAL 10
INSTALLATION 10

IGNITION CONTROL

DESCRIPTION - IGNITION SYSTEM

NOTE: All engines use a fixed ignition timing system. Basic ignition timing is not adjustable. All spark advance is determined by the Powertrain Control Module (PCM).

The distributorless ignition system used on these engines is referred to as the Direct Ignition System (DIS). The system's three main components are the coils, crankshaft position sensor, and camshaft position sensor. The coil on plug ignition system utilizes an ignition coil for every cylinder, it is mounted directly over the each spark plug.

OPERATION - IGNITION SYSTEM

The crankshaft position sensor and camshaft position sensor are hall effect devices. The camshaft position sensor and crankshaft position sensor generate pulses that are inputs to the PCM. The PCM determines engine position from these sensors. The PCM calculates injector sequence and ignition timing from crankshaft & camshaft position. For a description of both sensors, refer to Camshaft Position Sensor and Crankshaft Position Sensor.

IGNITION CONTROL (Continued)

SPECIFICATIONS

TORQUE

DESCRIPTION	N·m	Ft. Lbs.	In. Lbs.
2.4L Target Magnet Screw	3		30
2.4L Camshaft Sensor Screw	12.9		115
3.3/3.8L Camshaft Sensor Screw	14.1		125
2.4L Ignition coil bolts	11.8		105
3.3/3.8LIgnition coil bolts	11.8		105
Spark Plugs	17.5	13	
Knock Sensor	10	7	

SPARK PLUG CABLE RESISTANCE

2.4L

CABLE	Maximum Resistance
1, 2, 3, & 4	10.8K ohms

3.3/3.8L

CABLE	Maximum Resistance
#1	22.5K ohms
#2	22.8K ohms
#3	19.3K ohms
#4	19.3K ohms
#5	13.6K ohms
#6	16.4K ohms

SPARK PLUG

Engine	Spark Plug	Gap	Thread Size
2.4L	RE14MCC5	0.048 TO 0.053	14mm (1 in.) reach

Engine	Spark Plug	Gap	Thread Size
3.3L	RE14PLP5	0.048 TO 0.053	14mm (1 in.) reach
3.8L	RE14PLP5	0.048 TO 0.053	14mm (1 in.) reach

IGNITION CONTROL (Continued)

FIRING ORDER

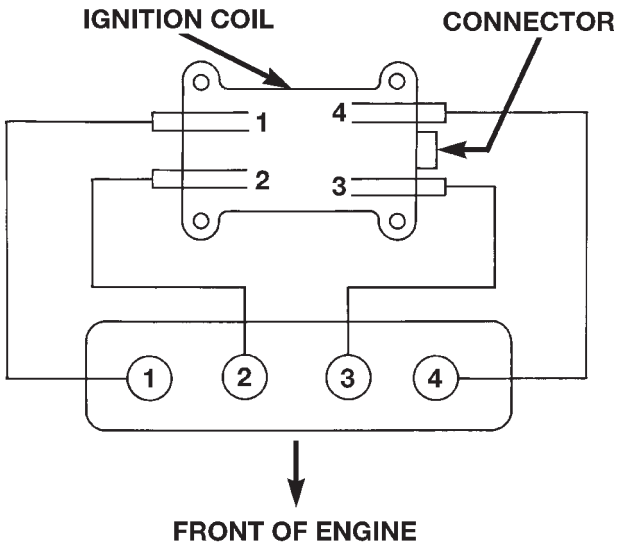

FIRING ORDER 1-3-4-2 8008a549

FIRING ORDER 2.4L

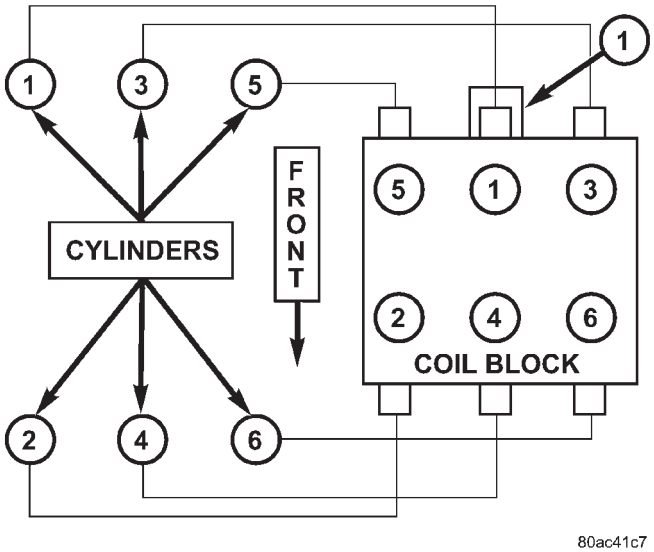

Firing Order 1-2-3-4-5-6 3.3/3.8L

1 - Electrical Connector

AUTO SHUT DOWN RELAY

DESCRIPTION

The relay is located in the Power Distribution Center (PDC). For the location of the relay within the PDC, refer to the PDC cover for location. Check electrical terminals for corrosion and repair as necessary

OPERATION

The ASD sense circuit informs the PCM when the ASD relay energizes. A 12 volt signal at this input indicates to the PCM that the ASD has been activated. This input is used only to sense that the ASD relay is energized.

When energized, the ASD relay supplies battery voltage to the fuel injectors, ignition coils and the heating element in each oxygen sensor.

When energized, the ASD relay provides power to operate the injectors, ignition coil, generator field, O2 sensor heaters (both upstream and downstream), (EGR solenoid and PCV heater if equipped) and also provides a sense circuit to the PCM for diagnostic purposes. If the PCM does not receive 12 volts from this input after grounding the ASD relay, it sets a Diagnostic Trouble Code (DTC). The PCM energizes the ASD any time there is a Crankshaft Position sensor signal that exceeds a predetermined value. The ASD relay can also be energized after the engine has been turned off to perform an O2 sensor heater test, if vehicle is equipped with OBD II diagnostics.

As mentioned earlier, the PCM energizes the ASD relay during an O2 sensor heater test. This test is performed only after the engine has been shut off. The PCM still operates internally to perform several checks, including monitoring the O2 sensor heaters.

CAMSHAFT POSITION SENSOR

DESCRIPTION

The camshaft position sensorfor the 3.3/3.8L is mounted in the front of the timing case cover (Fig. 6) and the camshaft position sensor for the 2.4L is mounted on the end of the cylinder head (Fig. 3).

CAMSHAFT POSITION SENSOR (Continued)

OPERATION

The camshaft position sensor provides cylinder identification to the Powertrain Control Module (PCM) (Fig. 1). The sensor generates pulses as groups of notches on the camshaft sprocket pass underneath it (Fig. 2). The PCM keeps track of crankshaft rotation and identifies each cylinder by the pulses generated by the notches on the camshaft sprocket. Four crankshaft pulses follow each group of camshaft pulses.

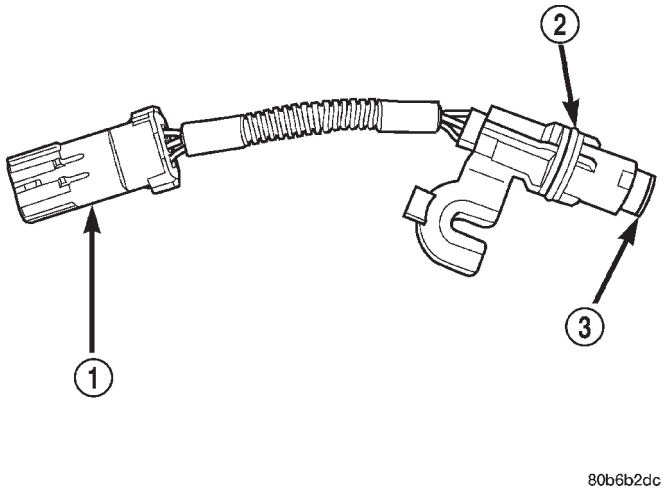

Fig. 1 Camshaft Position Sensor

1 - ELECTRICAL CONNECTOR
2 - O-RING
3 - PAPER SPACER

When the PCM receives 2 cam pulses followed by the long flat spot on the camshaft sprocket, it knows that the crankshaft timing marks for cylinder 1 are next (on driveplate). When the PCM receives one camshaft pulse after the long flat spot on the sprocket, cylinder number 2 crankshaft timing marks are next. After 3 camshaft pulses, the PCM knows cylinder 4 crankshaft timing marks follow. One camshaft pulse after the 3 pulses indicates cylinder 5. The 2 camshaft pulses after cylinder 5 signals cylinder 6 (Fig. 2). The PCM can synchronize on cylinders 1 or 4.

When metal aligns with the sensor, voltage goes low (less than 0.3 volts). When a notch aligns with the sensor, voltage switches high (5.0 volts). As a group of notches pass under the sensor, the voltage switches from low (metal) to high (notch) then back to low. The number of notches determine the amount of pulses. If available, an oscilloscope can display the square wave patterns of each timing event.

Top Dead Center (TDC) does not occur when notches on the camshaft sprocket pass below the cylinder. TDC occurs after the camshaft pulse (or pulses) and after the 4 crankshaft pulses associated with the particular cylinder. The arrows and cylinder call outs on (Fig. 2) represent which cylinder the flat spot and notches identify, they do not indicate TDC position.

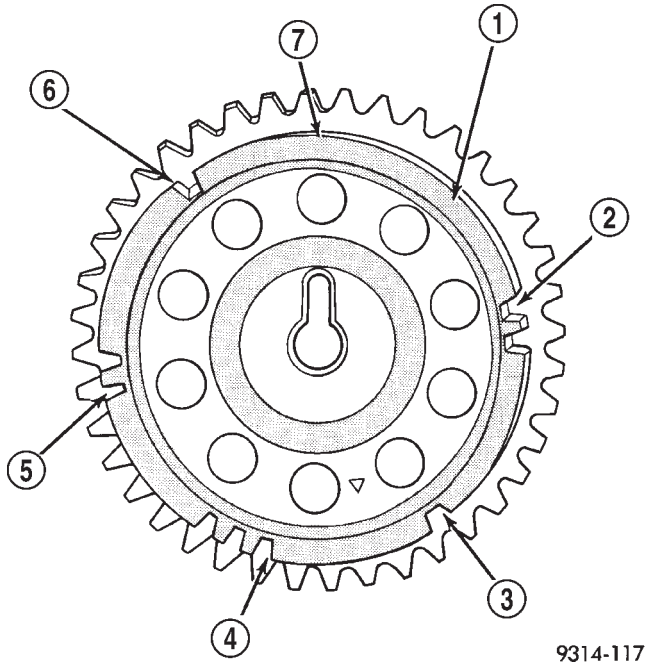

Fig. 2 Camshaft Sprocket

1 - CAMSHAFT SPROCKET
2 - CYL #6
3 - CYL #5
4 - CYL #4
5 - CYL #3
6 - CYL #2
7 - CYL #1

REMOVAL

REMOVAL - 2.4L

The camshaft position sensor is mounted to the rear of the cylinder head.

(1) Remove the negative battery cable.

(2) Disconnect electrical connectors from the camshaft position sensor (Fig. 3).

(3) Remove camshaft position sensor mounting screws. Remove sensor.

(4) Loosen screw attaching target magnet to rear of camshaft and remove magnet (Fig. 4).

REMOVAL - 3.3/3.8L

(1) Disconnect the negative battery cable.

(2) Remove the air box cover and inlet tube (Fig. 5).

(3) Disconnect camshaft position sensor electrical connector from the wiring harness connector (Fig. 6).

(4) Remove bolt holding sensor.

(5) Rotate sensor away from block.

CAMSHAFT POSITION SENSOR (Continued)

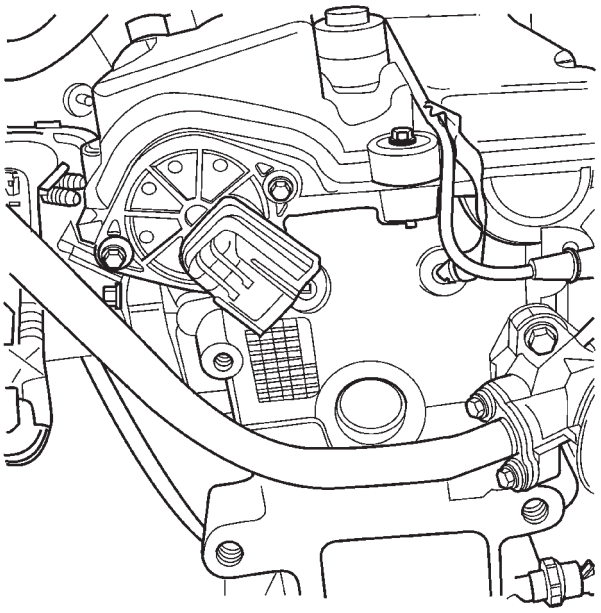

Fig. 3 EGR/CAM SENSOR 2.4L

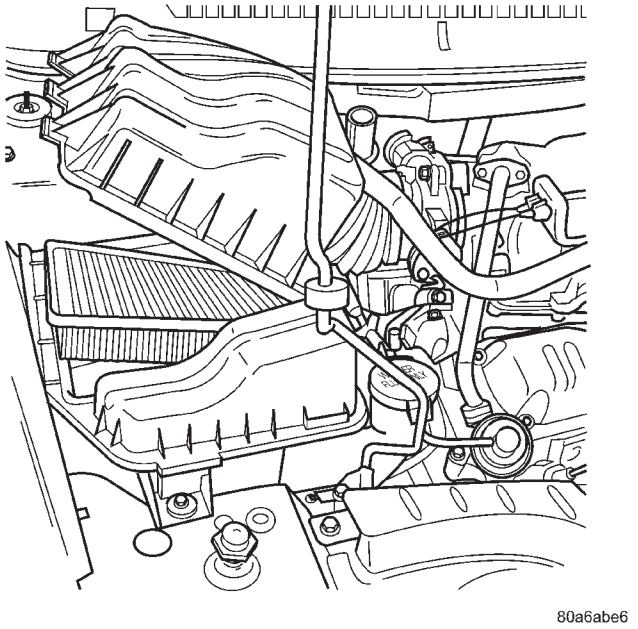

Fig. 5 AIR BOX COVER

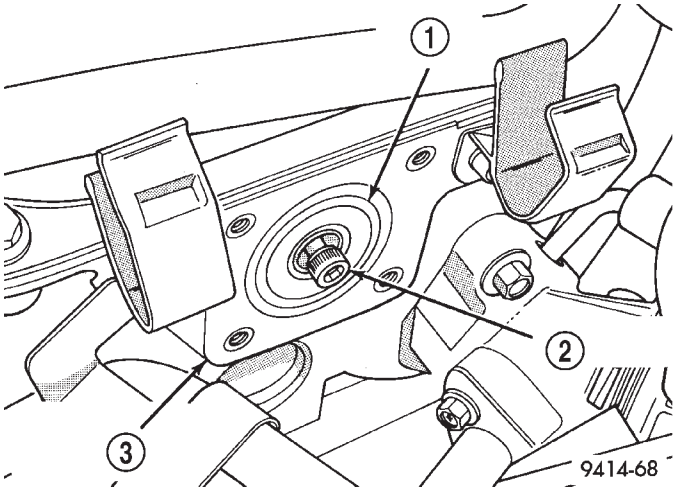

Fig. 4 Target Magnet Removal/Installation

1 - TARGET MAGNET
2 - MOUNTING BOLT
3 - REAR OF CYLINDER HEAD

(6) Pull sensor up out of the chain case cover. **Do not pull on the sensor wiring.** There is an O-ring on the body of the sensor. The O-ring may make removal difficult. A light tap to top of sensor prior to removal may reduce force needed for removal.

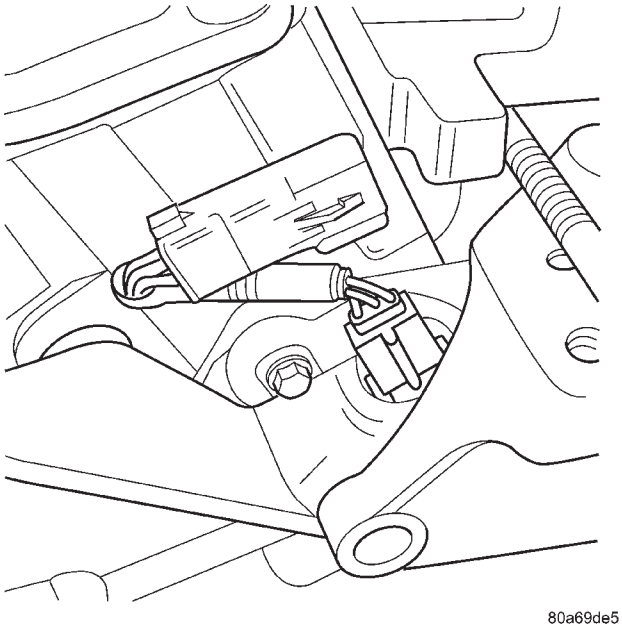

Fig. 6 CAMSHAFT POSITION SENSOR

CAMSHAFT POSITION SENSOR (Continued)

INSTALLATION

INSTALLATION - 2.4L

The target magnet has locating dowels that fit into machined locating holes in the end of the camshaft (Fig. 7).

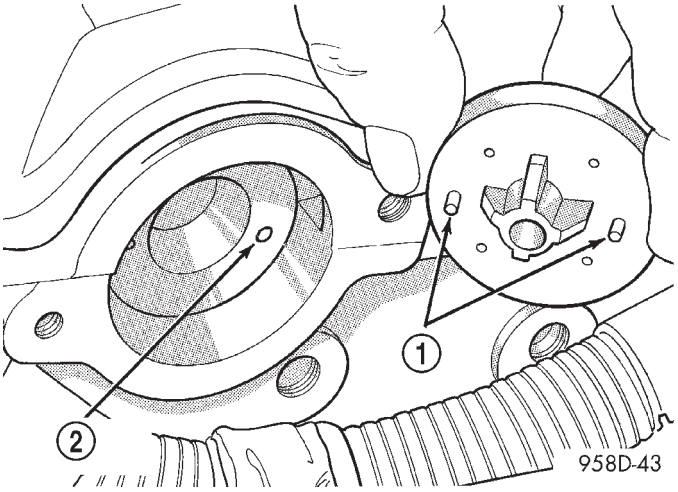

Fig. 7 Target Magnet Installation

1 - LOCATING DOWELS
2 - LOCATING HOLES (2)

(1) Install target magnet in end of camshaft. Tighten mounting screw to 3 N·m (30 in. lbs.) torque. Over torqueing could cause cracks in magnet. If magnet cracks replace it.

(2) Install camshaft position sensor. Tighten sensor mounting screws to 12.9 N·m (115 in. lbs.) torque.

(3) Carefully attach electrical connector to camshaft position sensor.

(4) Connect the negative battery cable.

INSTALLATION - 3.3/3.8L

If the removed sensor is reinstalled, clean off the old spacer on the sensor face. A NEW SPACER must be attached to the face before installation. Inspect O-ring for damage, replace if necessary. If the sensor is being replaced, confirm that the paper spacer is attached to the face and O-ring is positioned in groove of the new sensor (Fig. 8).

(1) Apply a couple drops of clean engine oil to the O-ring prior to installation.

(2) Install sensor in the chain case cover and rotate into position.

(3) Push sensor down until contact is made with the camshaft gear. While holding the sensor in this position, install and tighten the retaining bolt 14 N·m (125 in. lbs.) torque.

(4) Connect camshaft position sensor electrical connector to harness connector.

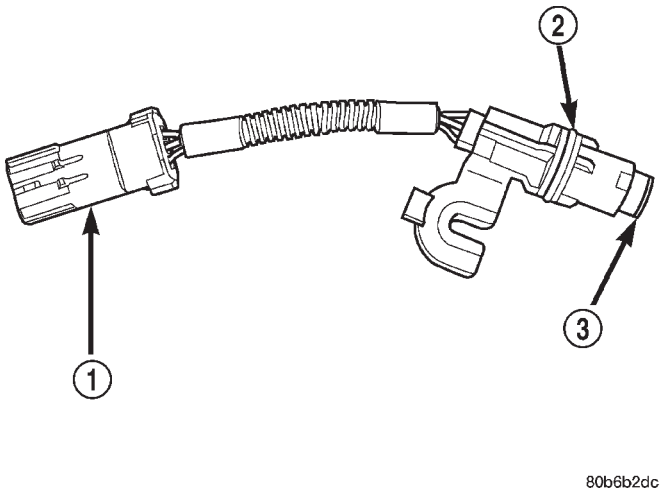

Fig. 8 Camshaft Position Sensor and Spacer

1 - ELECTRICAL CONNECTOR
2 - O-RING
3 - PAPER SPACER

(5) Install the air box cover and inlet hose (Fig. 5).

(6) Connect the negative battery cable.

IGNITION COIL

DESCRIPTION

The ignition coil assembly consists of 2 or 3 independent coils molded together (Fig. 9) or (Fig. 10). The coil assembly for the 3.3/3.8L is mounted on the intake manifold. The coil assembly for the 2.4L is mounted on the cylinder head cover. Spark plug cables route to each cylinder from the coil.

OPERATION

The coil fires two spark plugs every power stroke. One plug is the cylinder under compression, the other cylinder fires on the exhaust stroke. The Powertrain Control Module (PCM) determines which of the coils to charge and fire at the correct time.

The Auto Shutdown (ASD) relay provides battery voltage to the ignition coil. The PCM provides a ground contact (circuit) for energizing the coil. When the PCM breaks the contact, the magnetic energy in the coil transfers to the secondary causing the spark. The PCM will de-energize the ASD relay if it does not receive the crankshaft position sensor and camshaft position sensor inputs. Refer to Auto Shutdown (ASD) Relay—PCM Output, in this section for relay operation.

IGNITION COIL (Continued)

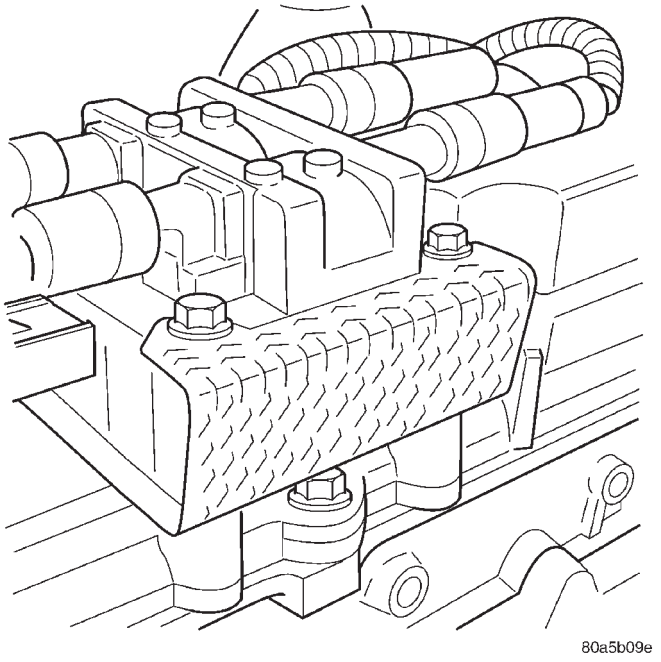

Fig. 9 IGNITION COIL - 2.4L

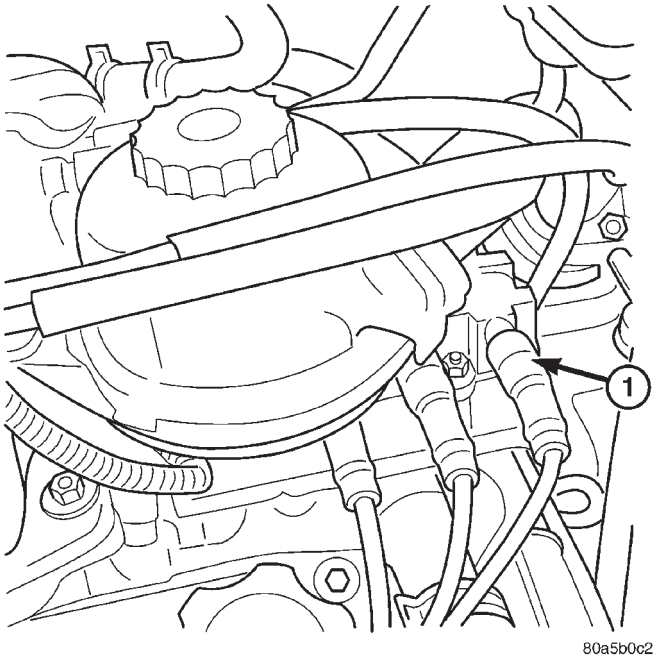

Fig. 10 IGNITION COIL - 3.3/3.8L

1 -Ignition Coil

REMOVAL

REMOVAL - 2.4L

The electronic ignition coil pack attaches directly to the valve cover.

(1) Diconnect the negative battery cable.
(2) Disconnect electrical connector from coil pack
(3) Remove coil pack mounting bolts.
(4) Remove coil pack and heat shield (Fig. 9).

REMOVAL - 3.3/3.8L

(1) Disconnect the negative battery cable.
(2) Remove the throttle and speed control cables from clip.
(3) Remove 2 bolts from the Power steering reservoir to intake manifold.
(4) Loosen the lower nut for the power steering reservoir from stud on ignition coil bracket.
(5) Reposition the Power steering reservoir (Fig. 11).

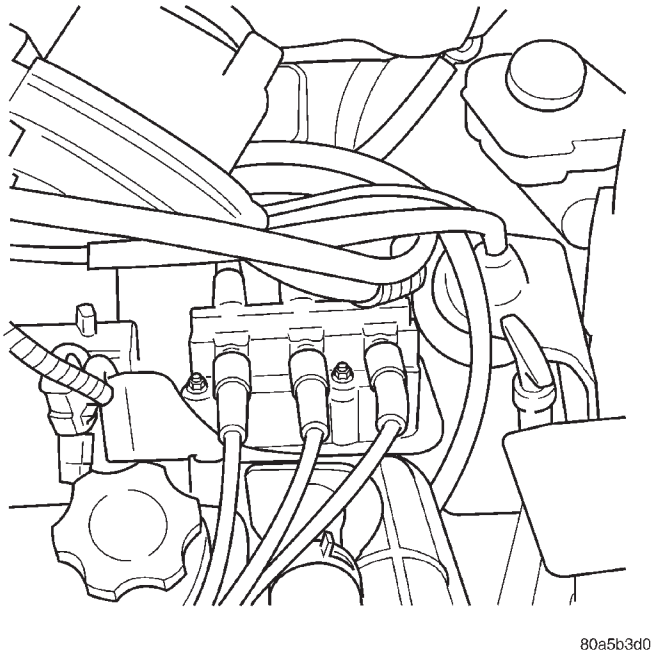

Fig. 11 IGNITION COIL BRACKET 3.3/3.8L

(6) Remove the ignition cables from the ignition coil.
(7) Disconnect the electrical connector from the ignition coil.
(8) Remove 2 nuts from the ignition coil studs.
(9) Remove 2 bolts from ignition coil, remove coil.

INSTALLATION

INSTALLATION - 2.4L

(1) Install ignition coil and heat shield to valve cover and tighten bolts.
(2) Connect the electrical connector to the ignition coil.
(3) Transfer spark plug cables to new coil pack. The coil pack towers are numbered with the cylinder identification. Be sure the ignition cables are fully seated onto the towers.
(4) Connect the negative battery cable.

IGNITION COIL (Continued)

INSTALLATION - 3.3/3.8L

(1) Install coil over studs on bracket.
(2) Install 2 bolts to ignition coil.
(3) Install 2 nuts to the ignition coil studs. Tighten nuts and bolts.
(4) Connect the electrical connector to the ignition coil.
(5) Install the ignition cables to the ignition coil.
(6) Reposition the Power steering reservoir. Slide bracket over the mounting stud (Fig. 11).
(7) Install 2 bolts to the Power steering reservoir to intake manifold.
(8) Tighten the lower nut to stud on ignition coil bracket.
(9) Install the throttle and speed control cables to clip.
(10) Connect the negative battery cable.

KNOCK SENSOR

DESCRIPTION

The knock sensor threads into the cylinder block. The knock sensor is designed to detect engine vibration that is caused by detonation.

OPERATION

When the knock sensor detects a knock in one of the cylinders, it sends an input signal to the PCM. In response, the PCM retards ignition timing for all cylinders by a scheduled amount.

Knock sensors contain a piezoelectric material which constantly vibrates and sends an input voltage (signal) to the PCM while the engine operates. As the intensity of the crystal's vibration increases, the knock sensor output voltage also increases.

The voltage signal produced by the knock sensor increases with the amplitude of vibration. The PCM receives as an input the knock sensor voltage signal. If the signal rises above a predetermined level, the PCM will store that value in memory and retard ignition timing to reduce engine knock. If the knock sensor voltage exceeds a preset value, the PCM retards ignition timing for all cylinders. It is not a selective cylinder retard.

The PCM ignores knock sensor input during engine idle conditions. Once the engine speed exceeds a specified value, knock retard is allowed.

Knock retard uses its own short term and long term memory program.

Long term memory stores previous detonation information in its battery-backed RAM. The maximum authority that long term memory has over timing retard can be calibrated.

Short term memory is allowed to retard timing up to a preset amount under all operating conditions (as long as rpm is above the minimum rpm) except WOT. The PCM, using short term memory, can respond quickly to retard timing when engine knock is detected. Short term memory is lost any time the ignition key is turned off.

NOTE: Over or under tightening affects knock sensor performance, possibly causing improper spark control.

REMOVAL

REMOVAL - 2.4L

The knock sensor threads into the side of the cylinder block in front of the starter (Fig. 12).
(1) Disconnect electrical connector from knock sensor.
(2) Use a crow foot socket to remove the knock sensors.

REMOVAL - 3.8L

The knock sensor threads into the side of the cylinder block in the rear.
(1) Disconnect the negative battery cable.
(2) Raise vehicle and support.
(3) On All Wheel Drive vehicles remove the PTU (Power Transfer Unit), refer to the Transmission section for more information.
(4) Disconnect electrical connector from knock sensor.
(5) Use a crow foot socket to remove the knock sensor.

INSTALLATION

INSTALLATION - 2.4L

The knock sensor threads into the side of the cylinder block in front of the starter (Fig. 12).
(1) Install knock sensor. Tighten knock sensor to 10 N·m (7 ft. lbs.) torque. **Over or under tightening effects knock sensor performance, possibly causing improper spark control.**
(2) Attach electrical connector to knock sensor.

INSTALLATION - 3.8L

The knock sensor threads into the side of the cylinder block in the rear.
(1) Install knock sensor. Tighten knock sensor to 10 N·m (7 ft. lbs.) torque. **Over or under tightening effects knock sensor performance, possibly causing improper spark control.**
(2) Attach electrical connector to knock sensor.

KNOCK SENSOR (Continued)

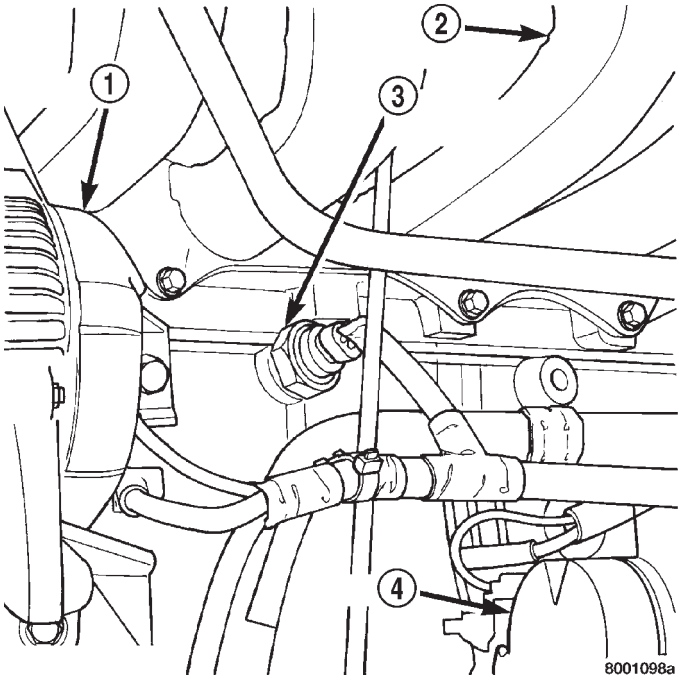

Fig. 12 Knock Sensor

1 - GENERATOR
2 - INTAKE MANIFOLD
3 - KNOCK SENSOR
4 - STARTER

(3) On All Wheel Drive vehicles install the PTU (Power Transfer Unit) for the rear wheels, refer to the Transmission section for more information.
(4) Lower vehicle.
(5) Connect the negative cable.

SPARK PLUG

DESCRIPTION

DESCRIPTION - STANDARD 4 CYLINDER

All engines use resistor spark plugs. They have resistance values ranging from 6,000 to 20,000 ohms when checked with at least a 1000 volt spark plug tester.

Do not use an ohm meter to check the resistance of the spark plugs. This will give an inaccurate reading.

Refer to the Specifications section for gap and type of spark plug.

DESCRIPTION - PLATINUM PLUGS

The V6 engines use platinum resistor spark plugs. They have resistance values of 6,000 to 20,000 ohms when checked with at least a 1000 volt tester. For spark plug identification and specifications, Refer to the Specifications section.

Do not use an ohm meter to check the resistance of the spark plugs. This will give an inaccurate reading.

When the spark plugs use a single or double platinum tips and they have a recommended service life of 100,000 miles for normal driving conditions per schedule A in this manual. The spark plugs have a recommended service life of 75,000 miles for severe driving conditions per schedule B in this manual. A thin platinum pad is welded to both or center electrode end(s) as show in (Fig. 13). Extreme care must be used to prevent spark plug cross threading, misgaping (Fig. 14) and ceramic insulator damage during plug removal and installation.

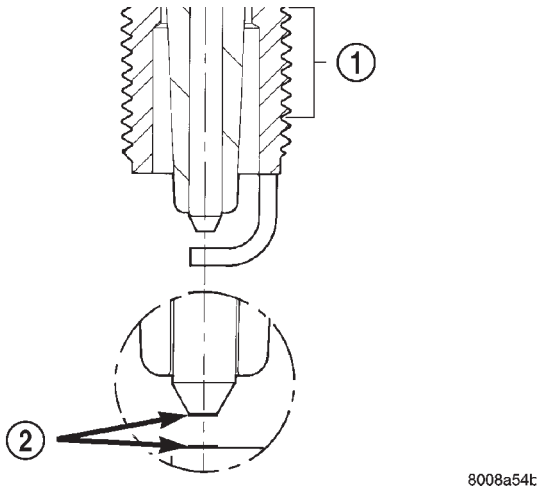

Fig. 13 Platinum Pads

1 - APPLY ANTI-SEIZE COMPOUND HERE ONLY
2 - PLATINUM SPARK SURFACE

CAUTION: Cleaning of the platinum plug may damage the platinum tip.

REMOVAL

When replacing the spark plugs and spark plug cables, route the cables correctly and secure them in the appropriate retainers. Failure to route the cables properly can cause the radio to reproduce ignition noise, cross ignition of the spark plugs or **short circuit the cables to ground.**

Always remove cables by grasping at the boot, rotating the boot 1/2 turn, and pulling straight back in a steady motion.

(1) Prior to removing the spark plug, spray compressed air around the spark plug hole and the area around the spark plug.
(2) Remove the spark plug using a quality socket with a foam insert.
(3) Inspect the spark plug condition.

SPARK PLUG (Continued)

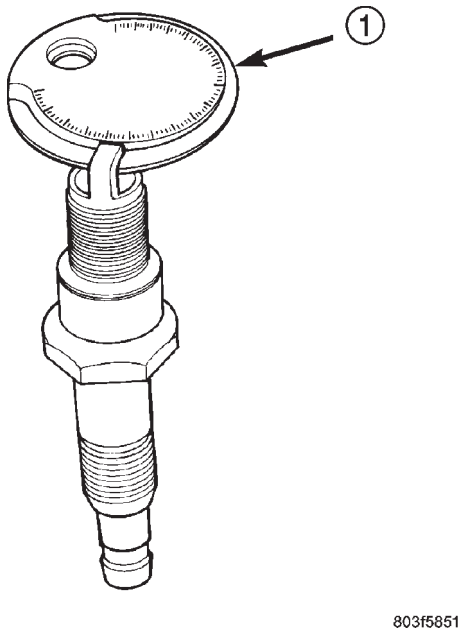

Fig. 14 Setting Spark Plug Electrode Gap

1 - TAPER GAUGE

INSTALLATION

When replacing the spark plugs and spark plug cables, route the cables correctly and secure them in the appropriate retainers. Failure to route the cables properly can cause the radio to reproduce ignition noise, cross ignition of the spark plugs or **short circuit the cables to ground.**

(1) To avoid cross threading, start the spark plug into the cylinder head by hand.

(2) Tighten spark plugs to 17.5 N·m (13 ft. lbs.) torque.

(3) Install spark plug cables over spark plugs. A click will be heard and felt when the cable properly attaches to the spark plug.

SPARK PLUG CABLE

DESCRIPTION

Spark Plug cables are sometimes referred to as secondary ignition wires. The wires transfer electrical current from the ignition coil pack to individual spark plugs at each cylinder. The resistive spark plug cables are of nonmetallic construction. The cables provide suppression of radio frequency emissions from the ignition system.

Check the spark plug cable connections for good contact at the coil, and spark plugs. Terminals should be fully seated. The insulators should be in good condition and should fit tightly on the coil, and spark plugs. Spark plug cables with insulators that are cracked or torn must be replaced.

Clean Spark Plug cables with a cloth moistened with a non-flammable solvent. Wipe the cables dry. Check for brittle or cracked insulation. The spark plug cables and spark plug boots are made from high temperature silicone materials. All spark plug cable leads are properly identified with cylinder numbers. The inside of most the spark plug boot is coated with a special high temperature silicone grease for greater sealing and to minimize boot bonding to the spark plug insulator.

REMOVAL

Failure to route the cables properly could cause the radio to reproduce ignition noise, cross ignition of the spark plugs or short circuit the cables to ground.

Remove spark plug cable from coil first.

Always remove the spark plug cable by grasping the top of the spark plug insulator, turning the boot 1/2 turn and pulling straight up in a steady motion.

INSTALLATION

Failure to route the cables properly could cause the radio to reproduce ignition noise, cross ignition of the spark plugs or short circuit the cables to ground.

Install spark plug insulators over spark plugs. Ensure the top of the spark plug insulator covers the upper end of the spark plug tube, then connect the other end to coil pack.

IGNITION CONTROL

TABLE OF CONTENTS

page

GLOW PLUG
DESCRIPTION 1
OPERATION 1
GLOW PLUG RELAY
DESCRIPTION 1
OPERATION 1

page

CAMSHAFT POSITION SENSOR
DESCRIPTION 2
OPERATION 2
REMOVAL 2
INSTALLATION 2

GLOW PLUG

DESCRIPTION

Glow plugs are used to help start a cold or cool engine (Fig. 1). The glow plugs will heat up and glow to heat the combustion chamber of each cylinder. An individual glow plug is used for each cylinder. Each glow plug is threaded into the left side of the cylinder head below the cylinder head cover/intake manifold.

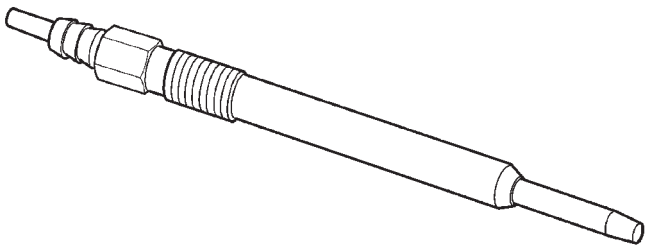

80c46ef8

Fig. 1 GLOW PLUG

OPERATION

Each glow plug will momentarily draw approximately 25 amps of electrical current during the initial key “ON” cycle. This is on a cold or cool engine. After heating the current draw will drop to approximately 9–12 amps per plug.

Total momentary cuurent draw for all four glow plugs is approximately 100 amps on a cold engine dropping to a total of approximately 40 amps after the plugs are heated.

Electrical operation of the glow plugs is controlled by two glow plug relays. Each glow plug relay controls two glow plugs. Refer to glow plug relays for more information.

GLOW PLUG RELAY

DESCRIPTION

There are two glow plug relays. These relays are located in the Power Distribution Center (PDC) in the engine compartment (Fig. 2).

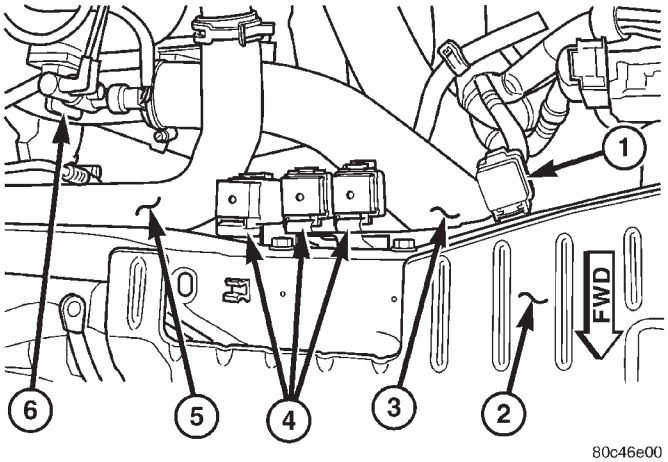

80c46e00

Fig. 2 RELAY LOCATIONS

1 - GLOW PLUG RELAY
2 - RADIATOR SUPPORT
3 - CHARGE AIR COOLER OUTLET HOSE
4 - COOLING FAN RELAY
5 - UPPER RADIATOR HOSE
6 - EGR SOLENOID

OPERATION

When the ignition (key) switch is place in the ON position, a signal is sent to the ECM relating current engine coolant temperature. This signal is sent from the engine coolant temperature sensor.

After receiving this signal, the ECM will determine if, when and for how long of a period the glow plug relays should be activated. This is done before, during and after the engine is started. Whenever the glow plug relays are activated, it will control the 12 volt 100 amp circuit for the operation of the four glow plugs. Each relay control two glow plugs.

GLOW PLUG RELAY (Continued)

The Glow Plug lamp is tied to this circuit. Lamp operation is also controlled by the ECM.

With a cold engine, the glow plug relays and glow plugs may be activated for a maximum time of 200 seconds. Refer to the following Glow Plug Control chart for a temperature/time comparison of the glow plug relay operation.

In this chart, Pre-Heat and Post-Heat times are mentioned. Pre-Heat is the amount of time the glow plug relay control circuit is activated when the ignition (key) is switched ON, without the engine running. Post-Heat is the amount of time the glow plug relay control circuit is activated after the engine is operated. The Glow Plug lamp will not be activated during the post-heat cycle.

Engine Coolant Temperature ″Key ON″	Wait-To Start Lamp ″ON″ (Seconds)	Pre-Heat Cycle (Glow Plugs On Seconds)	Post-Heat Cycle (Seconds)
-30C	20 SEC.	35 SEC.	200 SEC.
-10C	8 SEC.	23 SEC.	180 SEC.
+10C	6 SEC.	21 SEC.	160 SEC.
+30C	5 SEC.	20 SEC.	140 SEC.
+40C	4 SEC.	19 SEC.	70 SEC.
+70C	1 SEC.	16 SEC.	20 SEC.

CAMSHAFT POSITION SENSOR

DESCRIPTION

The camshaft position (CMP) sensor is mounted in the top of cylinder head cover/intake manifold at the rear of the engine. The CMP sensor is a hall effect device (Fig. 3).

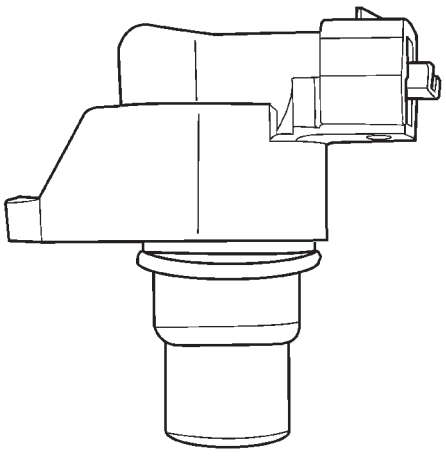

Fig. 3 CAMSHAFT POSITION SENSOR

OPERATION

The CMP sensor is a hall effect switch. A tooth made of a ferromagnetic material is attached to the camshaft. When this tooth passes the CMP sensor an lectronic signal is created. This signal is then sent to the engine control module (ECM). This signal is used by the ECM to determine which cylinder has just entered its compression phase.

REMOVAL

(1) Disconnect negative battery cable.

(2) Remove engine cover (Refer to 9 - ENGINE COVER - REMOVAL).

(3) Disconnect camshaft position sensor electrical connector (Fig. 4).

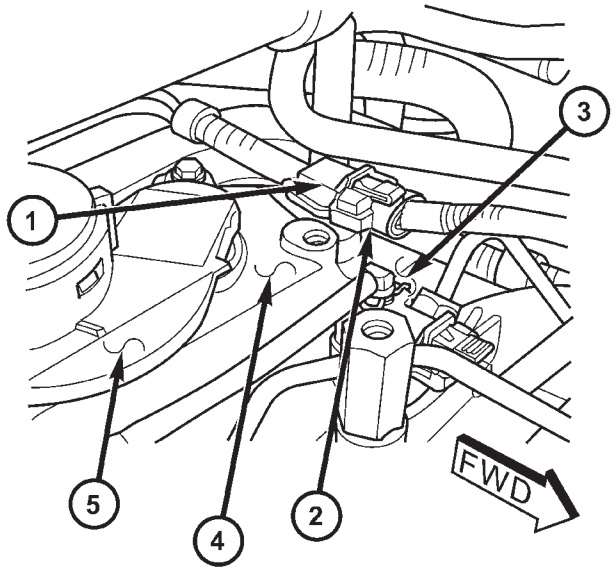

Fig. 4 CAMSHAFT POSITION SENSOR LOCATION

1 - CAMSHAFT POSITION SENSOR
2 - CAMSHAFT POSITION SENSOR ELCTRICAL SENSOR
3 - FUEL INJECTOR
4 - CYLINDER HEAD COVER
5 - OIL SEPARATOR

(4) Remove sensor retaining bolt and remove sensor from cylinder head cover.

INSTALLATION

(1) Lubricate O-ring and install sensor in cylinder head cover. Torque retaining bolt to 5.4 N·m.

(2) Connect camshaft position sensor electrical connector.

(3) Install engine cover (Refer to 9 - ENGINE COVER - INSTALLATION).

(4) Connect negative battery cable.

INSTRUMENT CLUSTER

TABLE OF CONTENTS

	page
INSTRUMENT CLUSTER	
DESCRIPTION	1
OPERATION	1
DIAGNOSIS AND TESTING	
DIAGNOSIS AND TESTING - SELF-DIAGNOSTICS	2
DIAGNOSIS AND TESTING - CLUSTER DIAGNOSIS	2
REMOVAL	11
INSTALLATION	12
CLUSTER LENS	
REMOVAL	12
INSTALLATION	12
MECHANICAL TRANSMISSION RANGE INDICATOR	
REMOVAL	12
INSTALLATION	12
RED BRAKE WARNING INDICATOR	
DESCRIPTION	13
OPERATION	13

INSTRUMENT CLUSTER

DESCRIPTION

The instrumentation gauges are contained in a subdial assembly within the instrument cluster. The individual gauges are not serviceable. If one of the cluster gauges becomes faulty, the entire cluster would require replacement.

The mechanical instrument cluster with a tachometer is equipped with a electronic vacuum fluorescent transmission range indicator (PRND3L), odometer, and trip odometer display.

The mechanical instrument cluster without a tachometer is equipped with a cable operated transmission range indicator (PRND21) and a vacuum fluorescent odometer display. It also has the following indicators:

- Turn Signals
- High Beam
- Oil Pressure
- MIL

The instrument cluster is equipped with the following warning lamps.

- Lift Gate Ajar
- Low Fuel Level
- Low Windshield Washer Fluid Level
- Cruise
- Battery Voltage
- Fasten Seat Belt
- Door Ajar
- Coolant Temperature
- Anti-Lock Brake
- Brake
- Airbag
- Traction Control
- Autostick

The mechanical instrument cluster without a tachometer also has the following warning lamps:

- Turns Signals
- High Beam
- Oil Pressure
- Malfunction Indicator Lamp (MIL)

WATER IN FUEL LAMP - EXPORT

The Water In Fuel Lamp is located in the instrument cluster. When moisture is found within the fuel system, the sensor sends a message via the PCI data bus to the instrument cluster. The sensor is located underneath the vehicle, directly above the rear axle. The sensor is housed within the fuel filter/water separator assembly cover. The sensor is not serviced separately. If found defective, the entire assembly cover must be replaced.

OPERATION

Refer to the vehicle Owner's Manual for operation instructions and conditions for the Instrument Cluster Gauges.

WATER IN FUEL LAMP - EXPORT

The Water In Fuel Sensor is a resistive type switch. It is calibrated to sense the different resistance between diesel fuel and water. When water enters the fuel system, it is caught in the bottom of the fuel filter/water separator assembly, where the sensor is located. Water has less resistance than diesel fuel. The sensor then sends a PCI data bus message to the instrument cluster to illuminate the lamp.

If the lamp is inoperative, perform the self diagnostic test on the instrument cluster to check the lamp operation before continuing diagnosis.

INSTRUMENT CLUSTER (Continued)

DIAGNOSIS AND TESTING

DIAGNOSIS AND TESTING - SELF-DIAGNOSTICS

The instrument clusters are equipped with a self diagnostic test feature to help identify electronic problems. Prior to any test, perform the Self-Diagnostic Test. The self diagnostic system displays instrument cluster stored fault codes in the odometer display, sweeps the gauges to the calibration points, and bulb checks the warning indicators. When the key is in the ON position with the engine not running, the MIL will remain illuminated for regulatory purposes.

To activate the Self-Diagnostic program:

(1) With the ignition switch in the OFF position, depress the TRIP ODOMETER RESET button.

(2) Continue to hold the TRIP ODOMETER RESET button until **Sof** and a number (software version number (i.e. **Sof 3.2**) appears in the odometer window then release the button. If a fault code is present, the cluster will display it in the odometer display. When all fault codes have been displayed, the cluster will display **"end"** in the odometer display. Refer to the INSTRUMENT CLUSTER DTC'S table to determine what each trouble code means.

INSTRUMENT CLUSTER DTC'S

DTC	DESCRIPTION
100.0	LOOP-BACK FAILURE
100.1	ABS COMMUNICATION FAULT
100.2	BCM COMMUNICATION FAULT
100.3	EATX COMMUNICATION FAULT
100.4	FCM COMMUNICATION FAULT
100.5	ORC COMMUNICATION FAULT
100.6	SBEC/DEC/MCM COMMUNICATION FAULT
200.0	AIRBAG LED SHORT
200.1	AIRBAG LED OPEN
200.2	ABS LED SHORT
200.3	ABS LED OPEN
200.6	EL INVERTER TIME-OUT
200.7	EATX MISMATCH

CALIBRATION TEST

The CLUSTER CALIBRATION table contains the proper calibration points for each gauge. If the gauge pointers are not calibrated, a problem exists in the cluster. If any gauge is out of calibration, replace the cluster.

CLUSTER CALIBRATION

SPEEDOMETER	CALIBRATION POINT
1	0 MPH (0 KM/H)
2	20 MPH (40 KM/H)
3	60 MPH (100 KM/H)
4	100 MPH (160 KM/H)
TACHOMETER	
1	0 RPM
2	1000 RPM
3	3000 RPM
4	6000 RPM
FUEL GAUGE	
1	EMPTY
2	1/4 FILLED
3	1/2 FILLED
4	FULL
TEMPERATURE GAUGE	
1	COLD
2	1/4
3	3/4
4	HOT

ODOMETER SEGMENT TEST

If a segment in the odometer does not illuminate normally, a problem exists in the display.

ELECTRONIC TRANSMISSION RANGE INDICATOR SEGMENT TEST

If a segment in the transmission range indicator does not illuminate normally, a problem exists in the display.

DIAGNOSIS AND TESTING - CLUSTER DIAGNOSIS

CONDITIONS

Refer to the following tables for possible problems, causes, and corrections.

- INSTRUMENT CLUSTER DIAGNOSIS
- SPEEDOMETER DIAGNOSIS
- TACHOMETER DIAGNOSIS
- FUEL GAUGE DIAGNOSIS
- TEMPERATURE GAUGE DIAGNOSIS
- ODOMETER DIAGNOSIS
- ELECTRONIC GEAR INDICATOR DISPLAY DIAGNOSIS
- MECHANICAL TRANSMISSION RANGE INDICATOR (PRND21) DIAGNOSIS

INSTRUMENT CLUSTER (Continued)

NOTE: Always check the functionality of the cluster by running the self test prior to troubleshooting.

INSTRUMENT CLUSTER DIAGNOSIS

CONDITION	POSSIBLE CAUSES	CORRECTION
INSTRUMENT CLUSTER INOPERATIVE. NO RESPONSE FROM INSTRUMENT CLUSTER.	NO PCI BUS MESSAGES FROM THE BCM.	USE A DRB III® SCAN TOOL TO CHECK THE BCM. IF OK, LOOK FOR ANOTHER POSSIBLE CAUSE FOR CLUSTER FAILURE. IF NOT OK, REFER TO THE PROPER BODY DIAGNOSTIC PROCEDURES MANUAL.
	SPREAD TERMINAL(S) ON WIRING HARNESS CLUSTER CONNECTOR.	REMOVE CLUSTER FROM INSTRUMENT PANEL AND CHECK WIRING HARNESS CONNECTOR FOR SPREAD TERMINAL. IF OK, LOOK FOR ANOTHER POSSIBLE CAUSE FOR THE CLUSTER FAILURE. IF NOT OK, REPAIR CONNECTOR.
	BCM IS NOT RECEIVING PROPER INPUT FROM THE IGNITION SWITCH.	1. USE A DRB III® SCAN TOOL TO VERIFY IGNITION SWITCH STATUS INTO THE BCM. IF NOT OK, GO TO STEP (2). IF OK, LOOK AT ANOTHER POSSIBLE CAUSE OF FAILURE. 2. CHECK IGNITION SWITCH FUNCTION AND WIRING.
	INTERNAL CLUSTER FAILURE.	REPLACE CLUSTER.
	WAKE UP CIRCUIT FAULTY.	VERIFY CONTINUITY OF WAKE UP CIRCUIT FROM BCM TO MIC. CIRCUIT SHALL BE LOW WHENEVER BCM IS AWAKE.
	POWER OR GROUND MISSING.	IF NO RESPONSE FROM THE MIC, CHECK FOR POWER AND GROUND AT THE MIC CONNECTOR. REFER TO WIRING DIAGRAMS FOR CONNECTOR CALL OUTS.

INSTRUMENT CLUSTER (Continued)

SPEEDOMETER DIAGNOSIS

CONDITION	POSSIBLE CAUSES	CORRECTION
NO POINTER MOVEMENT.	1. INTERNAL CLUSTER FAILURE.	1.A. PERFORM CLUSTER SELF-DIAGNOSTIC TEST AND CHECK FOR FAULT CODES. • IF SPEEDOMETER POINTER MOVES TO CALIBRATION POINTS DURING TEST LOOK FOR ANOTHER POSSIBLE CAUSE OF FAILURE. • IF THE POINTER DOESN'T MOVE DURING TEST, CHECK FOR POWER AND GROUND TO THE MIC. IF POWER AND GROUND ARE PRESENT GO TO STEP 1.B. 1.B. REPLACE CLUSTER. GO TO STEP 1.C. 1.C. CONNECT CLUSTER INTO INSTRUMENT PANEL WIRING HARNESS. PLACE IT BACK INTO THE PROPER POSITION IN THE INSTRUMENT PANEL. PUT IN THE TOP FOUR MOUNTING SCREWS AND SECURE THE CLUSTER TO THE INSTRUMENT PANEL.
	2. NO SPEED PCI BUS MESSAGE OR ZERO MPH PCI SPEED BUS MESSAGE.	2.A. CHECK THE PCM (CODE 10) USING A DRB III® SCAN TOOL. IF OK, GO TO STEP 2.B. IF NOT OK, REFER TO THE PROPER POWERTRAIN DIAGNOSTIC PROCEDURES MANUAL TO REPAIR THE PCM. 2.B. CHECK THE SPEED SIGNAL INPUT INTO THE PCM. THE SPEED SIGNAL ORIGINATES FROM ONE OF THE FOLLOWING SOURCES: • A DISTANCE SENSOR FOR VEHICLES WITH 3 SPEED AUTOMATIC TRANSMISSION. CHECK CONTINUITY FROM DISTANCE SENSOR TO PCM. IF OK, REPLACE DISTANCE SENSOR. IF NOT OK, REPAIR WIRING. • THE TCM FOR VEHICLES WITH THE 4 SPEED ELECTRONIC TRANSMISSIONS. CHECK CONTINUITY FROM TCM TO PCM. IF OK, USE A DRB III® SCAN TOOL TO CHECK TCM. REFER TO THE PROPER TRANSMISSION DIAGNOSTIC PROCEDURES MANUAL TO REPAIR THE TCM. IF NOT OK, REPAIR WIRING.

INSTRUMENT CLUSTER (Continued)

CONDITION	POSSIBLE CAUSES	CORRECTION
ERRATIC POINTER MOVEMENT.	1. ERRATIC MESSAGE FROM ANOTHER MODULE.	1.A. CHECK THE BCM USING A DRB III® SCAN TOOL IF OK, GO TO STEP 1.B. IF NOT OK, REFER TO THE PROPER BODY DIAGNOSTIC PROCEDURES MANUAL TO REPAIR THE BCM. 1.B. CHECK THE PCM USING A DRB III® SCAN TOOL. IF OK, GO TO STEP 1.C. IF NOT OK, REFER TO THE PROPER POWERTRAIN DIAGNOSTIC PROCEDURES MANUAL TO REPAIR THE PCM. 1.C. CHECK THE SPEED SIGNAL INPUT INTO THE PCM. THE SPEED SIGNAL ORIGINATES FROM ONE OF THE FOLLOWING SOURCES: • A DISTANCE SENSOR FOR VEHICLES WITH 3 SPEED AUTOMATIC TRANSMISSION. CHECK CONTINUITY FROM DISTANCE SENSOR TO PCM. IF OK, REPLACE DISTANCE SENSOR. IF NOT OK, REPAIR WIRING. • THE TCM FOR VEHICLES WITH THE 4 SPEED ELECTRONIC TRANSMISSIONS. CHECK CONTINUITY FROM TCM TO PCM. IF OK, USE A DRB III® SCAN TOOL TO CHECK TCM. REFER TO THE PROPER TRANSMISSION DIAGNOSTIC PROCEDURES MANUAL TO REPAIR THE TCM. IF NOT OK, REPAIR WIRING.
	2. INTERNAL CLUSTER FAILURE.	2.A. PERFORM CLUSTER SELF-DIAGNOSTIC TEST AND CHECK FOR FAULT CODES. • IF THE POINTER MOVES DURING TEST BUT STILL APPEARS ERRATIC, THEN GO TO STEP 2.B. 2.B. REPLACE CLUSTER ASSEMBLY.

INSTRUMENT CLUSTER (Continued)

CONDITION	POSSIBLE CAUSES	CORRECTION
SPEEDOMETER INACCURATE.	1. SPEEDOMETER OUT OF CALIBRATION.	1. PERFORM CLUSTER SELF-DIAGNOSTIC TEST. • IF SPEEDOMETER IS ACCURATE TO THE CALIBRATION POINTS THEN LOOK FOR ANOTHER POSSIBLE CAUSE OF INACCURACY. • IF SPEEDOMETER IS NOT ACCURATE TO THE CALIBRATION POINTS, REPLACE CLUSTER ASSEMBLY.
	2. WRONG SPEEDOMETER PINION FOR TIRE SIZE.	2.A. IF VEHICLE HAS A 4 SPEED ELECTRONIC TRANSMISSION GO TO STEP 2.C. OTHERWISE GO TO STEP 2.B. 2.B. CHECK IF CORRECT SPEEDOMETER PINION IS BEING USED WITH TIRES ON VEHICLE. REFER TO TRANSMISSION FOR DIAGNOSIS AND TESTING. • IF THE INCORRECT PINION IS IN TRANSMISSION THEN REPLACE WITH CORRECT PINION. • IF THE CORRECT PINION IS IN THE TRANSMISSION, CHECK TIRE SIZE. 2.C. USE A DRB III® SCAN TOOL TO CHECK THE TCM TO SEE IF THE CORRECT TIRE SIZE HAS BEEN PROGRAMMED INTO THE TCM. • IF THE INCORRECT TIRE SIZE WAS SELECTED, SELECT THE PROPER TIRE SIZE. • IF THE CORRECT TIRE SIZE WAS SELECTED, CHECK SPEED SENSOR.
	3. BAD SPEED SENSOR.	3. REFER TO TRANSMISSION, SPEED SENSOR, DIAGNOSIS AND TESTING.

TACHOMETER DIAGNOSIS

CONDITION	POSSIBLE CAUSES	CORRECTION
NO POINTER MOVEMENT.	1. INTERNAL CLUSTER FAILURE.	1.A. PERFORM CLUSTER SELF-DIAGNOSTIC TEST AND CHECK FOR FAULT CODES. • IF TACHOMETER POINTER MOVES TO CALIBRATION POINTS DURING TEST, LOOK FOR ANOTHER POSSIBLE CAUSE OF FAILURE. • IF THE POINTER DOESN'T MOVE DURING TEST, CHECK FOR POWER AND GROUND TO THE MIC. IF POWER AND GROUND ARE PRESENT GO TO STEP 1.B. 1.B. REPLACE CLUSTER. GO TO STEP 1.C.
	2. ″NO RPM″ PCI BUS MESSAGE OR ″ZERO RPM″ PCI BUS MESSAGE FROM PCM.	2. CHECK THE PCM USING A DRB III® SCAN TOOL. REFER TO THE PROPER POWERTRAIN DIAGNOSTIC PROCEDURES MANUAL TO PROPERLY DIAGNOSE AND REPAIR.

INSTRUMENT CLUSTER (Continued)

CONDITION	POSSIBLE CAUSES	CORRECTION
ERRATIC POINTER MOVEMENT.	1. BAD PCI BUS MESSAGE FROM PCM.	1. CHECK THE PCM USING A DRB III® SCAN TOOL. REFER TO THE PROPER POWERTRAIN DIAGNOSTIC PROCEDURES MANUAL TO PROPERLY DIAGNOSE AND REPAIR.
	2. INTERNAL CLUSTER FAILURE.	2. PERFORM CLUSTER SELF-DIAGNOSTIC TEST AND CHECK FOR FAULT CODES. • IF THE POINTER MOVES DURING TEST BUT STILL APPEARS ERRATIC, REPLACE CLUSTER ASSEMBLY.
TACHOMETER INACCURATE.	TACHOMETER OUT OF CALIBRATION.	PERFORM CLUSTER SELF-DIAGNOSTIC TEST. • IF TACHOMETER IS ACCURATE TO THE CALIBRATION POINTS, LOOK FOR ANOTHER POSSIBLE CAUSE OF INACCURACY. • IF TACHOMETER IS NOT ACCURATE TO THE CALIBRATION POINTS, REPLACE CLUSTER ASSEMBLY.

FUEL GAUGE DIAGNOSIS

CONDITION	POSSIBLE CAUSES	CORRECTION
NO POINTER MOVEMENT.	1. INTERNAL CLUSTER FAILURE.	1. PERFORM CLUSTER SELF-DIAGNOSTIC TEST. • IF FUEL GAUGE POINTER MOVES TO CALIBRATION POINTS, LOOK FOR ANOTHER POSSIBLE CAUSE OF FAILURE. • IF THE POINTER DOESN'T MOVE DURING TEST, VERIFY POWER AND GROUND ARE BEING PROVIDED TO THE CLUSTER. IF YES, REPLACE CLUSTER ASSEMBLY. IF NO, DETERMINE CAUSE OF NO POWER OR GROUND.
	2. NO PCI FUEL MESSAGE OR EMPTY PCI BUS MESSAGE FROM BODY CONTROL MODULE.	2.A. CHECK THE BCM USING A DRB III® SCAN TOOL. IF OK, GO TO STEP 2.B. IF NOT OK, REFER TO THE PROPER BODY DIAGNOSTIC PROCEDURES MANUAL TO PROPERLY DIAGNOSE AND REPAIR. 2.B. REFER TO THE FUEL SECTION OF THE SERVICE MANUAL FOR THE FUEL LEVEL SENDING UNIT TEST PROCEDURE. TEST UNIT AND REPAIR AS INSTRUCTED.

INSTRUMENT CLUSTER (Continued)

CONDITION	POSSIBLE CAUSES	CORRECTION
ERRATIC POINTER MOVEMENT.	1. BAD PCI FUEL MESSAGE FROM THE BODY CONTROLLER.	1. USE A DRB III® SCAN TOOL TO CHECK THE BCM. IF OK, GO TO STEP 2. IF NOT OK, REFER TO THE PROPER BODY DIAGNOSTIC PROCEDURES MANUAL TO PROPERLY DIAGNOSE AND REPAIR.
		2. REFER TO THE FUEL SECTION OF THE SERVICE MANUAL FOR THE FUEL LEVEL SENDING UNIT TEST PROCEDURE. TEST UNIT. IF OK, LOOK FOR ANOTHER POSSIBLE CAUSE FOR FUEL GAUGE FAILURE. IF NOT OK, REPAIR SENDING UNIT.
	2. INTERNAL CLUSTER FAILURE.	2. PERFORM CLUSTER SELF-DIAGNOSTIC TEST AND CHECK FOR FAULT CODES.
		• IF THE POINTER MOVES DURING TEST BUT STILL APPEARS ERRATIC, REPLACE CLUSTER ASSEMBLY.
FUEL GAUGE INACCURATE.	1. FUEL GAUGE OUT OF CALIBRATION.	1. PERFORM CLUSTER SELF-DIAGNOSTIC TEST. IF POINTER IS ACCURATE TO THE CALIBRATION POINTS LOOK FOR ANOTHER POSSIBLE CAUSE OF FAILURE. IF POINTER IS INACCURATE TO THE CALIBRATION POINTS, REPLACE CLUSTER ASSEMBLY.
	2. FUEL LEVEL SENDING UNIT IS OUT OF CALIBRATION.	2. REFER TO THE FUEL SECTION OF THE SERVICE MANUAL FOR TESTING AND REPAIR PROCEDURE.

TEMPERATURE GAUGE DIAGNOSIS

CONDITION	POSSIBLE CAUSES	CORRECTION
NO POINTER MOVEMENT.	1. INTERNAL CLUSTER FAILURE.	1. PERFORM CLUSTER SELF-DIAGNOSTIC TEST AND CHECK.
		• IF TEMPERATURE GAUGE POINTER MOVES TO CALIBRATION POINTS, LOOK FOR ANOTHER POSSIBLE CAUSE OF FAILURE.
		• IF THE POINTER DOESN'T MOVE DURING TEST, VERIFY POWER AND GROUND ARE BEING PROVIDED TO THE CLUSTER. IF YES, REPLACE CLUSTER. IF NO, DETERMINE CAUSE OF NO POWER OR NO GROUND.
	2. NO PCI TEMPERATURE MESSAGE OR COLD PCI BUS MESSAGE FROM THE POWERTRAIN CONTROL MODULE.	2.A. CHECK PCM FAULT CODES USING A DRB III® SCAN TOOL. IF THERE ARE NO FAULTS, GO TO STEP 2.B. IF THERE ARE FAULTS, REFER TO THE PROPER POWERTRAIN DIAGNOSTIC PROCEDURES MANUAL TO PROPERLY DIAGNOSE AND REPAIR.
		2.B. REFER TO FUEL, COOLANT TEMPERATURE SENSOR, DIAGNOSIS AND TESTING. REPAIR SENSOR AS NEEDED.

INSTRUMENT CLUSTER (Continued)

CONDITION	POSSIBLE CAUSES	CORRECTION
ERRATIC POINTER MOVEMENT.	1. BAD PCI BUS MESSAGE FROM THE POWERTRAIN CONTROL MODULE.	1.A. CHECK PCM FAULT CODES USING A DRB III® SCAN TOOL. IF THERE ARE NO FAULTS, GO TO STEP 1.B. IF THERE ARE FAULTS, REFER TO THE PROPER POWERTRAIN DIAGNOSTIC PROCEDURES MANUAL TO PROPERLY DIAGNOSE AND REPAIR. 1.B. REFER TO FUEL, COOLANT TEMPERATURE SENSOR, DIAGNOSIS AND TESTING. REPAIR SENSOR AS NEEDED.
	2. INTERNAL CLUSTER FAILURE.	2. PERFORM CLUSTER SELF-DIAGNOSTIC TEST AND CHECK FOR FAULT CODES. • IF THE POINTER MOVES DURING TEST BUT STILL APPEARS ERRATIC, REPLACE CLUSTER ASSEMBLY.
TEMPERATURE GAUGE INACCURATE.	1. TEMPERATURE GAUGE OUT OF CALIBRATION.	1. PERFORM CLUSTER SELF-DIAGNOSTIC TEST. • IF POINTER IS ACCURATE TO THE CALIBRATION POINTS LOOK FOR ANOTHER POSSIBLE CAUSE OF FAILURE. • IF POINTER IS INACCURATE TO THE CALIBRATION POINTS, REPLACE CLUSTER ASSEMBLY.
	2. COOLANT SENSOR OUT OF CALIBRATION.	2. REFER TO FUEL, COOLANT TEMPERATURE SENSOR FOR TEST AND REPAIR PROCEDURE.

ODOMETER DIAGNOSIS

CONDITION	POSSIBLE CAUSES	CORRECTION
NO DISPLAY.	1. NO PCI BUS ODOMETER MESSAGE FROM BCM.	1. USE A DRB III® SCAN TOOL TO CHECK THE BCM. REFER TO THE PROPER BODY DIAGNOSTIC PROCEDURES MANUAL TO PROPERLY DIAGNOSE AND REPAIR.
	2. INTERNAL CLUSTER FAILURE.	2. PERFORM CLUSTER SELF-DIAGNOSTIC TEST AND CHECK FOR FAULT CODES. **• IF ODOMETER PASSES THE SEGMENT CHECK, LOOK FOR ANOTHER POSSIBLE CAUSE OF FAILURE. IF IT FAILS VERIFY POWER AND GROUND ARE BEING PROVIDED TO THE CLUSTER. IF YES, REPLACE CLUSTER. IF NO, DETERMINE CAUSE OF NO POWER OR GROUND.**

INSTRUMENT CLUSTER (Continued)

CONDITION	POSSIBLE CAUSES	CORRECTION
ERRATIC DISPLAY	1. INTERNAL CLUSTER FAILURE.	1. PERFORM CLUSTER SELF-DIAGNOSTIC TEST AND CHECK FOR FAULT CODES. • IF ODOMETER PASSES THE SEGMENT TEST, FAILURE MAY NOT BE IN THE CLUSTER. LOOK FOR ANOTHER POSSIBLE CAUSE OF FAILURE. 2. VERIFY GOOD POWER AND GROUND CONNECTIONS. IF CONNECTIONS ARE GOOD AND NO OTHER PROBLEMS ARE FOUND, REPLACE CLUSTER ASSEMBLY.
	2. BAD PCI BUS MESSAGE FROM THE BCM.	2. USE A DRB III® SCAN TOOL TO CHECK THE BCM. REFER TO THE PROPER BODY DIAGNOSTIC PROCEDURES MANUAL TO PROPERLY DIAGNOSE AND REPAIR.
ODOMETER WON'T GO INTO TRIP MODE.	TRIP SWITCH DOESN'T WORK.	IF CLUSTER WILL NOT GO INTO SELF DIAGNOSTIC MODE AND CANNOT TOGGLE BETWEEN ODOMETER AND TRIP ODOMETER, REPLACE CLUSTER.
TRIP ODOMETER WON'T RESET.	RESET SWITCH DOESN'T WORK.	IF CLUSTER WILL NOT GO INTO SELF DIAGNOSTIC MODE AND TRIP ODOMETER WILL NOT RESET, REPLACE CLUSTER.

ELECTRONIC GEAR INDICATOR DISPLAY DIAGNOSIS

CONDITION	POSSIBLE CAUSES	CORRECTION
NO DISPLAY.	1. INTERNAL CLUSTER FAILURE.	1. PERFORM CLUSTER SELF-DIAGNOSTIC TEST AND CHECK FOR FAULT CODES. • IF PRND3L (PRND1234 IF AUTOSTICK EQUIPPED) PASSES THE SEGMENT CHECK, THEN FAILURE MAY NOT BE IN THE CLUSTER. LOOK FOR ANOTHER POSSIBLE CAUSE OF FAILURE. IF IT FAILS, REPLACE CLUSTER ASSEMBLY.
ERRATIC DISPLAY.	1. INTERNAL CLUSTER FAILURE.	1. PERFORM CLUSTER SELF-DIAGNOSTIC TEST AND CHECK FOR FAULT CODES. • IF PRND3L (PRND1234 IF AUTOSTICK EQUIPPED) PASSES THE SEGMENT CHECK, THEN FAILURE MAY NOT BE IN THE CLUSTER. LOOK FOR ANOTHER POSSIBLE CAUSE OF FAILURE.
	2. BAD PCI BUS MESSAGE FROM THE TCM.	2. USE A DRB III® SCAN TOOL TO CHECK THE TCM. REFER TO THE PROPER TRANSMISSION DIAGNOSTIC PROCEDURES MANUAL TO PROPERLY DIAGNOSE AND REPAIR.

INSTRUMENT CLUSTER (Continued)

CONDITION	POSSIBLE CAUSES	CORRECTION
ALL SEGMENTS ARE ON.	1. NO PCI BUS MESSAGE FROM THE TCM.	1.A. PERFORM CLUSTER SELF-DIAGNOSTIC TEST. IF PRND3L (PRND1234 IF AUTOSTICK EQUIPPED) PASSES TEST GO TO STEP 1.B. IF PRND3L (PRND1234 IF AUTOSTICK EQUIPPED) FAILS TEST, REPLACE CLUSTER ASSEMBLY. 1.B. CHECK THE TCM USING A DRB III® SCAN TOOL. REFER TO THE PROPER TRANSMISSION DIAGNOSTIC PROCEDURES MANUAL TO PROPERLY DIAGNOSE AND REPAIR.

MECHANICAL TRANSMISSION RANGE INDICATOR (PRND21) DIAGNOSIS

CONDITION	POSSIBLE CAUSES	CORRECTION
INDICATOR DOES NOT SHOW PROPER GEAR OR NO INDICATION.	MIS-ADJUSTED.	1.A. VERIFY TRANSMISSION SHIFT SYSTEM IS CORRECTLY ADJUSTED. 1.B. VERIFY CORRECT ROUTING AND ATTACHMENT OF PRNDL CABLE AND GUIDE TUBE. 1.C. RE-ADJUST PRNDL INDICATOR IN NEUTRAL USING ADJUSTER WHEEL BELOW STEERING COLUMN.
INDICATOR DOES NOT FOLLOW GEAR SHIFT LEVER.	NOT ATTACHED.	1.A. VERIFY INDICATOR CABLE CONNECTED TO SHIFT LEVER PIN IN THE GROOVE. 1.B. VERIFY THAT THE INDICATOR CLIP IS SECURE, AND ATTACHED TO THE MOUNTING BRACKET. MAKE SURE THAT THE CLIP IS NOT BROKEN. IF THE CLIP IS BROKEN, REPLACE CLIP ON INDICATOR.
INDICATOR DOES NOT MAKE FULL TRAVEL (“P” < > “1”).	1. CABLE DISLODGED FROM ITS PATH ON THE INDICATOR BASE. 2. INCORRECT ATTACHMENT OF CABLE TO SHIFT LEVER PIN.	1. VERIFY CORRECT ATTACHMENT OF INDICATOR CABLE TO SHIFT LEVER PIN (UNDER HOOP OF TRANS. SHIFT CABLE) AND CLIP ONTO THE MOUNTING BRACKET. 2. VERIFY INDICATOR TRAVEL BY PULLING ON CABLE GENTLY OVER FULL TRAVEL RANGE. IF THERE IS STILL A PROBLEM, REMOVE CLUSTER TO ACCESS INDICATOR BASE AND CONFIRM CABLE PATH.

REMOVAL

WITH ELECTRONIC TRANSMISSION RANGE INDICATOR

(1) Disconnect and isolate the battery negative cable.
(2) Remove Over Steering Column Bezel by lifting it straight up with a firm pull.
(3) Remove the four cluster bezel attaching screws.
(4) Tilt the steering column in the full down position.
(5) Pull rearward on the cluster bezel and remove.
(6) Remove the four screws holding instrument cluster to instrument panel.
(7) Rotate top of cluster outward.
(8) Disconnect the cluster harness connector.
(9) Remove instrument cluster from instrument panel.

WITH MECHANICAL TRANSMISSION RANGE INDICATOR

(1) Disconnect and isolate the battery negative cable.
(2) Remove the lower steering column cover. Refer to Body, Instrument Panel, Lower Steering Column Cover, Removal.

INSTRUMENT CLUSTER (Continued)

(3) Remove the plastic knee blocker reinforcement. Refer to Body, Instrument Panel, Knee Blocker Reinforcement, Removal.

(4) Disconnect the transmission range indicator cable end from shift lever by flexing the HOOP on the transmission shift cable rearward and slip the indicator cable loop off the lever pin.

(5) Disconnect the clip holding the indicator cable to the mounting bracket.

(6) Remove Over Steering Column Bezel by lifting it straight up with a firm pull.

(7) Remove the four bezel attaching screws.

(8) Tilt the steering column in the full down position.

(9) Pull rearward on the cluster bezel and remove.

(10) Remove the four cluster attaching screws.

(11) Rotate top of the cluster rearward.

(12) Disconnect the cluster harness connector.

(13) Remove the instrument cluster carefully while guiding the range indicator cable and guide tube through the opening to avoid any damage.

INSTALLATION

WITH ELECTRONIC TRANSMISSION RANGE INDICATOR

(1) Connect the instrument cluster wire connector.

(2) Rotate top of cluster inward as placing into instrument panel opening.

(3) Install the four screws holding instrument cluster to instrument panel.

(4) Position cluster bezel into place.

(5) Install the four bezel attaching screws.

(6) Install the Over Steering Column Bezel by firmly snapping into place.

(7) Connect the battery negative cable.

WITH MECHANICAL TRANSMISSION RANGE INDICATOR

(1) Guide the range indicator cable and guide tube through the opening of instrument panel.

(2) Connect the instrument cluster wire connector.

(3) Rotate top of cluster inward as placing into instrument panel opening.

(4) Install the four screws holding instrument cluster to instrument panel.

(5) Position cluster bezel into place.

(6) Install the four bezel attaching screws.

(7) Install the Over Steering Column Bezel by firmly snapping into place.

(8) Connect the clip holding the indicator cable to the mounting bracket.

(9) Connect the transmission range indicator cable end to the shift lever by flexing the HOOP on the transmission shift cable forward and slip the indicator cable loop on the lever pin.

(10) Install the plastic knee blocker reinforcement. Refer to Body, Instrument Panel, Knee Blocker Reinforcement, Installation.

(11) Install the lower steering column cover. Refer to Body, Instrument Panel, Lower Steering Column Cover, Installation.

(12) Connect the battery negative cable.

CLUSTER LENS

REMOVAL

(1) Remove the instrument cluster. Refer to Electrical, Instrument Cluster, Removal.

(2) Remove the screws holding the lens to the instrument cluster.

(3) Press down on the snap features of the lens and remove the lens from the cluster.

INSTALLATION

(1) Insert the lens snap features into the cluster.

(2) Install the screws holding the lens to the instrument cluster.

(3) Install the instrument cluster. Refer to Electrical, Instrument Cluster, Installation.

MECHANICAL TRANSMISSION RANGE INDICATOR

REMOVAL

(1) Remove the instrument cluster and disconnect the range indicator cable at both attaching points. Refer to Electrical, Instrument Cluster, Removal.

(2) From the backside of the cluster, remove two screws holding the mechanical transmission range indicator and then remove it fromt instrument cluster.

INSTALLATION

(1) Insert the mechanical transmission range indicator into the backside of the instrument cluster and install the two screws.

(2) Install the instrument cluster. Refer to Electrical, Instrument Cluster, Installation.

RED BRAKE WARNING INDICATOR

DESCRIPTION

The red BRAKE warning indicator (lamp) is located in the instrument panel cluster and is used to indicate a low brake fluid condition or that the parking brake is applied. In addition, the brake warning indicator is turned on as a bulb check by the ignition switch every time the ignition switch is placed in the crank position.

OPERATION

The red BRAKE warning indicator (lamp) is supplied a 12-volt ignition feed anytime the ignition switch is on. The bulb is then illuminated by completing the ground circuit either through the switch on the parking brake lever, the brake fluid level switch in the master cylinder reservoir, or the ignition switch when it is placed in the crank position.

LAMPS

TABLE OF CONTENTS

	page		page
LAMPS/LIGHTING - EXTERIOR	1	**LAMPS/LIGHTING - INTERIOR**	25

LAMPS/LIGHTING - EXTERIOR

TABLE OF CONTENTS

	page		page
LAMPS/LIGHTING - EXTERIOR		**HEADLAMP**	
DESCRIPTION	2	DIAGNOSIS AND TESTING - HEADLAMP	12
OPERATION	3	REMOVAL	14
WARNING	3	INSTALLATION	14
SPECIFICATIONS		**HEADLAMP - EXPORT**	
EXTERIOR LAMPS	4	REMOVAL	14
BRAKE LAMP SWITCH		INSTALLATION	14
DESCRIPTION	4	**HEADLAMP LEVELING MOTOR - EXPORT**	
OPERATION	4	DIAGNOSIS AND TESTING - HEADLAMP	
DIAGNOSIS AND TESTING - BRAKE LAMP		LEVELING MOTOR - EXPORT	15
SWITCH	4	REMOVAL	15
REMOVAL	5	INSTALLATION	15
INSTALLATION	6	**HEADLAMP LEVELING SWITCH - EXPORT**	
CENTER HIGH MOUNTED STOP LAMP		DESCRIPTION	16
REMOVAL	6	DIAGNOSIS AND TESTING - HEADLAMP	
INSTALLATION	6	LEVELING SWITCH - EXPORT	16
CENTER HIGH MOUNTED STOP LAMP UNIT		**HEADLAMP SWITCH**	
REMOVAL	6	DIAGNOSIS AND TESTING	
INSTALLATION	6	DIAGNOSIS AND TESTING - HEADLAMP	
FOG LAMP		SWITCH	16
DIAGNOSIS AND TESTING - FOG LAMP	7	DIAGNOSIS AND TESTING - HEADLAMP	
REMOVAL	9	SWITCH - EXPORT	17
INSTALLATION	9	REMOVAL	17
FOG LAMP - EXPORT		INSTALLATION	17
REMOVAL	9	**HEADLAMP UNIT**	
INSTALLATION	9	STANDARD PROCEDURE	
FOG LAMP UNIT		STANDARD PROCEDURE - HEADLAMP	
STANDARD PROCEDURE		UNIT ALIGNMENT	17
STANDARD PROCEDURE - FOG LAMP		STANDARD PROCEDURE - HEADLAMP	
UNIT ALIGNMENT	10	UNIT ALIGNMENT - EXPORT	19
STANDARD PROCEDURE - FOG LAMP		REMOVAL	19
UNIT ALIGNMENT - EXPORT	10	INSTALLATION	20
REMOVAL	11	**LICENSE LAMP**	
INSTALLATION	11	REMOVAL	21
FRONT POSITION LAMP - EXPORT		INSTALLATION	21
REMOVAL	11	**MULTI-FUNCTION SWITCH**	
INSTALLATION	11	DESCRIPTION - TURN SIGNAL SYSTEM	21

OPERATION - TURN SIGNAL SYSTEM 21
DIAGNOSIS AND TESTING - MULTI-FUNCTION SWITCH 22
REMOVAL 22
INSTALLATION 22
PARK/TURN SIGNAL LAMP
REMOVAL 22
INSTALLATION 22
PARK/TURN SIGNAL LAMP - EXPORT
REMOVAL 22
INSTALLATION 23
REAR FOG LAMP - EXPORT
DESCRIPTION 23
REPEATER LAMP - EXPORT
REMOVAL 23
INSTALLATION 23
TAIL LAMP
REMOVAL 23
INSTALLATION 23
TAIL LAMP - EXPORT
REMOVAL 23
INSTALLATION 24
TAIL LAMP UNIT
REMOVAL 24
INSTALLATION 24

LAMPS/LIGHTING - EXTERIOR

DESCRIPTION

LAMP SYSTEMS

Lighting circuits are protected by fuses. Lighting circuits require an overload protected power source, on/off device, lamps and body ground to operate properly. Plastic lamps require a wire in the harness to supply body ground to the lamp socket. Replace sockets and bulbs that are corroded.

Some of the interior and exterior lighting functions are governed by the Body Control Module (BCM). The headlamp, dome, and the door ajar switches provide signals to the BCM. The BCM in turn sends a Programmable Communication Interface (PCI) bus message to the Front Control Module (FCM) to enable the necessary drivers to set the required illumination configuration.

Wire connectors can make intermittent contact or become corroded. Before coupling wire connectors, inspect the terminals inside the connector. Male terminals should not be bent or disengaged from the insulator. Female terminals should not be sprung open or disengaged from the insulator. Bent and sprung terminals can be repaired using needle nose pliers and pick tool. Corroded terminals appear chalky or green. Corroded terminals should be replaced to avoid recurrence of the problem symptoms.

Begin electrical system failure diagnosis by testing related fuses in the fuse block and intelligent power module. Verify that bulbs are in good condition and test continuity of the circuit ground. Refer to the appropriate wiring information.

AUTOMATIC HEADLAMP SYSTEM

The Automatic Headlamp system turns the instrumentation and exterior illumination lamps ON when the ambient light levels are Night and the engine RPM is 450 or above, and OFF when light levels are Day.

DAYTIME RUNNING LAMPS

Operating the high-beam headlamps at reduced power provides daytime running lamps, which are required on all new Canadian vehicles.

HEADLAMPS ON WITH WINDSHIELD WIPERS

For vehicles equipped with the Automatic Headlamp System, the instrumentation and exterior illumination lamps will be turned ON when the headlamp switch is in the AUTO position, RPM > 450 and the windshield wipers have been in the intermittent, low or high mode of operation for more than ten seconds. When the windshield wipers are turned OFF the Body Control Module will determine if the instrumentation and exterior illumination lamps should remain ON base upon the current ambient light level.

HEADLAMP SYSTEM

The configuration of the headlamp system of headlamps, park lamps and fog lamps is determined by the BCM. The BCM determines the lighting configuration as a result of the inputs from the ignition switch, headlamp switch and multi-function switch. A PCI bus is transmitted from the BCM to the FCM to enable the necessary drivers to set the illumination configuration. Four wires are connected between the headlamp switch and the BCM. The first wire contains information regarding the position of the headlamp switch (Off, Automatic Headlamps, Automatic Headlamp switch fog, Park with Fog, Head, or Head with Fog Lamps). The second wire contains information regarding the position of the dimmer switch (Dome Lamp, Daytime Brightness, Dimming Level or Off). The third wire is a dedicated signal return (ground) wire. The fourth wire provides power to the front fog lamp indicator.

HEADLAMP TIME DELAY SYSTEM

The headlamp time delay system is controlled by the Body Control Module (BCM) via a PCI bus mes-

sage transmitted by the BCM to the FCM to turn off the headlamps.

OPERATION

AUTOMATIC HEADLAMP SYSTEM

Automatic headlamps are controlled by the Body Control Module (BCM). With the headlamp switch in the AUTO position, the BCM will control the headlamp, parking, side marker, tail and instrumentation lamps based on ambient light levels. Ambient light levels are monitored by the BCM using the Day/Night signal and Electrochromatic Mirror (ECM) present from the Compass Mini Trip (CMTC) located on the front windshield in front of the rear view mirror ECM. Ambient light readings are averaged to limit cycling the lamps ON and OFF when passing through areas with varying light levels. The automatic headlamps will only function when the engine is running with RPM > 450. When the headlamp switch is in the AUTO position (Automatic mode), the Headlamp Time Delay system will function when the ignition switch is placed in any position other than run/start.

DAYTIME RUNNING LAMPS

Power is reduced using pulse-width modulation to the high beams, where by the power is switched on and off rapidly instead of remaining on continuously. The duration and interval of the power pulses is programmed into the FCM.

HEADLAMP SYSTEM

The headlamp system will default to headlamps ON position when ignition switch is ON and when an open or short circuit failure occurs on the headlamp switch input. The system will return to normal operation when the open or short is repaired. A fault will be reported by the BCM when a failure occurs on the dimmer or headlamp switch input.

If the exterior lamps are ON and the headlamp switch is in any position other than OFF or AUTO and with the ignition switch OFF (LOCK) after 3 minutes the BCM sends a message via PCI bus to the FCM informing the FCM to turn off the headlamps, park lamps and fog lamps. This feature prevents the vehicle battery from being discharged when the vehicle lights have been left ON.

HEADLAMP TIME DELAY SYSTEM

The headlamp time delay system is activated by turning the headlamps ON (high or low beam) while the engine is running, turning the ignition switch OFF, and then turning the headlamp switch OFF within 45 seconds. The system will not activate if more than 45 seconds elapse between ignition switch OFF and headlamp switch OFF. The BCM will allow the headlamps to remain ON for 90 seconds (configurable) before they automatically turn off (If the key is in the ignition during the headlamp time delay mode, then both the headlamps and park lamps (including panel dimming) will be ON). Refer to the Owner's Manual for more information.

If the headlamp switch is in the Auto Headlamp Position, the headlamps are ON due to the night signal from the CMTC and the ignition switch is in any position other than run/start, the BCM shall enter a 90 second (configurable) Auto Headlamps time delay mode. If the key is in the ignition during the headlamp time delay mode, then both the headlamps and park lamps (including panel dimming) will be ON. If the key is not in the ignition, then only the headlamps will be ON. The BCM will allow the headlamps to remain ON for 90 seconds before they automatically turn OFF. Refer to the Owner's Manual for more information.

OPTICAL HORN/HIGH BEAMS

When the multi-function switch is pulled to the first detent (optical horn) signal, the headlamps are ON, key-in the ignition the BCM shall send a message via PCI bus to the FCM to turn on the headlamps drivers to illuminate all four filaments (Low and High beams). When the multi-function switch is pulled to the second detent (high beam) signal and the headlamps are ON, the BCM shall send a message via PCI bus to the FCM to turn on the headlamps drivers. The High Beams are illuminated and the Low Beams and Fog Lamps (if ON) are extinguished. If the headlamps were in the high beam configuration when power was removed from the headlamps, the headlamps will be configured as low beam the next time they are activated.

WARNING

WARNING: EYE PROTECTION SHOULD BE USED WHEN SERVICING GLASS COMPONENTS. PERSONAL INJURY CAN RESULT.

CAUTION: Do not touch the glass of halogen bulbs with fingers or other possibly oily surface, reduced bulb life will result. Do not use bulbs other than those indicated in the Bulb Application table. Damage to lamp and/or Daytime Running Lamp Module can result. Do not use fuses, circuit breakers or relays having greater amperage value than indicated on the fuse panel or in the Owners Manual.

CAUTION: Do not use bulbs other than those listed in the Bulb Application Table. Damage to lamp can result. Do not touch halogen bulbs with fingers or other oily surfaces. Bulb life will be reduced.

LAMPS/LIGHTING - EXTERIOR (Continued)

SPECIFICATIONS

EXTERIOR LAMPS

BULB APPLICATION TABLE

LAMP	BULB
BACK-UP	3057
CHMSL	921
FRONT SIDE MARKER/PARK/ TURN	3157A
FOG LAMP	9040
HEADLAMP	9007
LICENSE	168
TAIL, STOP	3057
TURN SIGNAL	3057

BULB APPLICATION TABLE - EXPORT

LAMP	BULB
HEADLAMP	H7
FRONT POSITION	W5W
FRONT TURN SIGNAL	PY21W
SIDE REPEATER	T4W
LICENSE PLATE	W5W/168
REAR TAIL AND STOP	P21/5W
REAR TURN SIGNAL	PY21W
BACK-UP	P21W
REAR FOG	P21W
CHMSL	W16W/921

BRAKE LAMP SWITCH

DESCRIPTION

The brake lamp switch is located under the instrument panel, at the brake pedal arm (Fig. 3). It has three internal switches controlling various functions of the vehicle. It's main function is to control operation of the vehicle's brake lamps. Other functions include speed control deactivation, brake sense for the antilock brake system and brake sense for the brake transmission shift interlock.

CAUTION: The switch can only be adjusted once. That is during initial installation of the switch. If the switch is not adjusted properly or has been removed for some service, a new switch must be installed and adjusted.

OPERATION

When the brake pedal is pressed, the plunger on the outside of the brake lamp switch extends outward. This action opens or closes the contacts of the three switches inside the brake lamp switch.

With the brake pedal pressed down (plunger extended), the switch for terminals 1 and 2 is closed completing the circuit. The switch for terminals 3 and 4 is open and so is the switch for terminals 5 and 6.

When the brake pedal is released (plunger pushed in), the three switches assume the opposite positions. The switch for terminals 1 and 2 is now open while the other two switches are now closed, completing their circuits.

A lever on the back of the switch is used to set the switch into the "adjusted" position. A non-adjusted switch will have the lever set to the diagonal position in relation to the switch housing. The plunger can be moved in and out, but the states of the internal switches will not change.

CAUTION: Never move the adjustment lever of the new brake lamp switch without it being properly installed in the vehicle first. Such action will render the switch unusable and the switch must be discarded.

Once installed in the vehicle as described in the brake lamp switch installation procedure (Refer to 8 - ELECTRICAL/LAMPS/LIGHTING - EXTERIOR/ BRAKE LAMP SWITCH - INSTALLATION), the new switch's adjustment lever is rotated to the adjusted position as indicated (Fig. 4). This action locks the plunger to the internal switches. **Once in this position the switch is permanently adjusted (or locked) and cannot be readjusted or released even if the lever is moved back.**

DIAGNOSIS AND TESTING - BRAKE LAMP SWITCH

NOTE: Before proceeding with this diagnostic test, verify the adjustment lever on the back of the switch is in the adjusted position. If the lever is in the non-adjusted (diagonal) position it may have never been adjusted (Refer to 8 - ELECTRICAL/ LAMPS/LIGHTING - EXTERIOR/BRAKE LAMP SWITCH - OPERATION). For adjustment, (Refer to 8 - ELECTRICAL/LAMPS/LIGHTING - EXTERIOR/ BRAKE LAMP SWITCH - INSTALLATION)

If the electrical circuit has been tested and the brake lamp switch is suspected of being faulty, it can be tested using the following method.

BRAKE LAMP SWITCH (Continued)

(1) Remove the switch from the vehicle. (Refer to 8 - ELECTRICAL/LAMPS/LIGHTING - EXTERIOR/ BRAKE LAMP SWITCH - REMOVAL)

(2) With the switch in the released position (plunger extended), use an ohmmeter to test each of the three internal switches as shown (Fig. 1). You should achieve the results as listed in the figure.

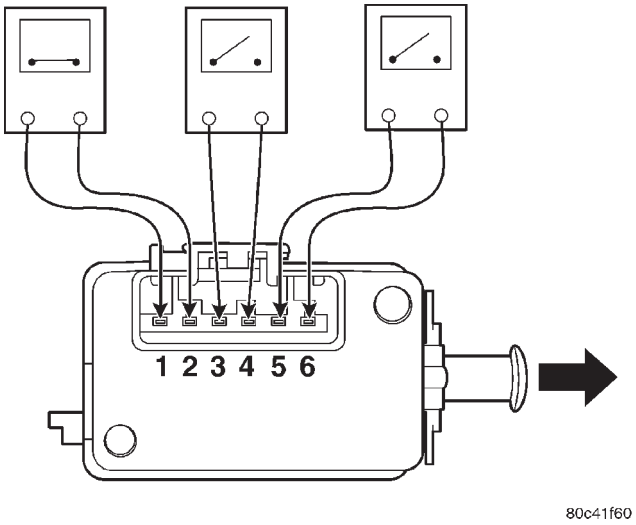

Fig. 1 SWITCH TEST - RELEASED POSITION

(3) Gently push the plunger on the brake lamp switch in until it stops.

(4) With the switch in this depressed position (plunger pushed in), use an ohmmeter to test each of the three internal switches as shown (Fig. 2). You should achieve the results as listed in the figure.

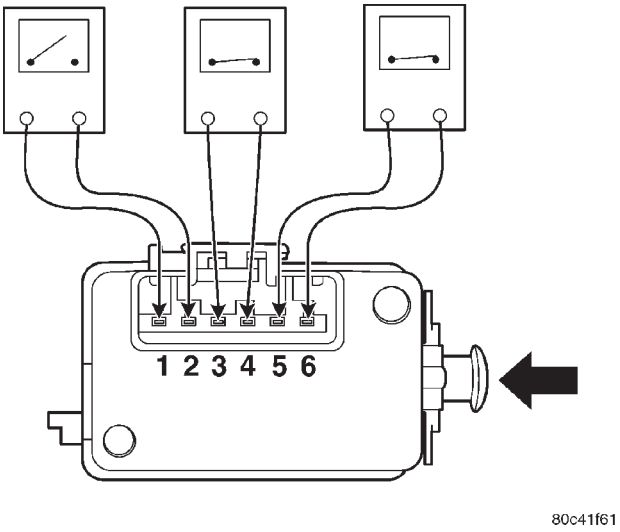

Fig. 2 SWITCH TEST - DEPRESSED POSITION

If you do not achieve the results as listed in both figures, the switch is faulty and must be replaced. Refer to Removal And Installation in this section.

If the switch is found to be operating properly, it may be misadjusted. Do not reinstall the switch, replace it. (Refer to 8 - ELECTRICAL/LAMPS/ LIGHTING - EXTERIOR/BRAKE LAMP SWITCH - INSTALLATION)

CAUTION: The switch can only be adjusted once. That is during initial installation of the switch. If the switch is not adjusted properly or has been removed for any reason, a new switch must be installed and adjusted.

REMOVAL

(1) Disconnect and isolate the battery negative cable from its post on the battery.

(2) Remove silencer panel below steering column and knee blocker.

(3) Remove the brake lamp switch by rotating the switch in a counterclockwise direction approximately 30 degrees and pulling it out of the bracket (Fig. 3).

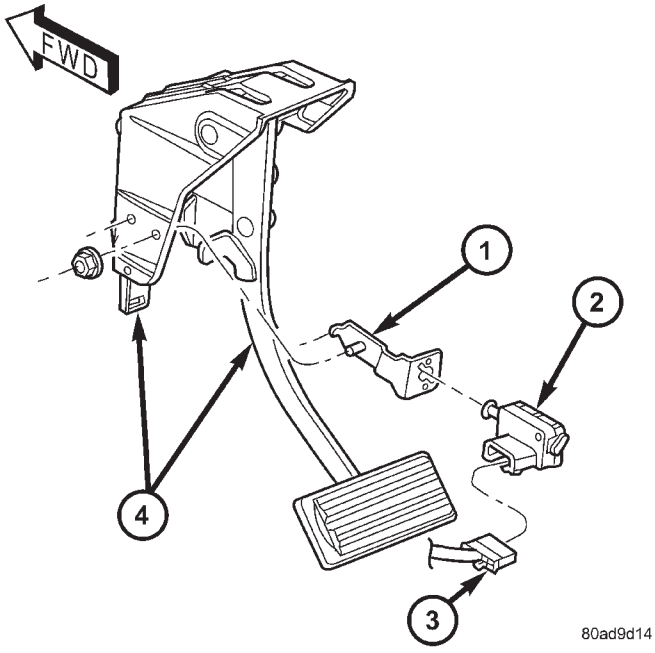

Fig. 3 Pedal And Brake Lamp Switch

1 - SWITCH BRACKET
2 - BRAKE LAMP SWITCH
3 - WIRING CONNECTOR
4 - PEDAL AND BRACKET

(4) Release the locking tab and disconnect the wiring connector from the switch.

(5) Discard the brake lamp switch. It must not be reused.

BRAKE LAMP SWITCH (Continued)

INSTALLATION

CAUTION: Do not reuse the original brake lamp switch. The switch can only be adjusted once. That is during initial installation of the switch. If the switch is not adjusted properly or has been removed for some service, a new switch must be installed and adjusted.

(1) Mount and adjust the NEW brake lamp switch using the following procedure:

(a) Connect the wiring connector to the switch and latch the locking tab.

(b) Install the switch in its bracket by aligning the index tab on the switch with the slot in the mounting bracket.

(c) When the switch is fully seated in its bracket, rotate the switch clockwise approximately 30° to lock the switch into place (Fig. 3).

(d) With the brake pedal in the fully released position, move the lever on the back of the brake lamp switch from the angled non-adjusted position to the full vertical position as shown (Fig. 4). This will adjust the brake lamp switch to the vehicle.

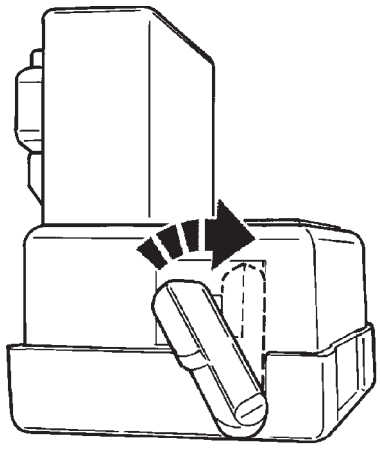

Fig. 4 Adjustment Lever Movement

(2) Install silencer panel below steering column knee blocker.

(3) Reconnect the battery negative terminal.

(4) Check the stop lamps to verify they are operating properly and not staying on when the pedal is in the released position.

(5) Road test the vehicle to ensure proper operation of the brakes including ABS and speed control (if equipped).

CENTER HIGH MOUNTED STOP LAMP

REMOVAL

(1) Disconnect and isolate the battery negative cable.

(2) Remove two retaining screws (Fig. 5).

(3) Twist socket counter-clockwise and remove from lamp.

(4) Pull bulb from socket (Fig. 6).

INSTALLATION

(1) Push bulb into socket.

(2) Install socket into the lamp unit.

(3) Install the retaining screws.

(4) Reconnect the battery negative cable.

CENTER HIGH MOUNTED STOP LAMP UNIT

REMOVAL

(1) Disconnect and isolate the battery negative cable.

(2) Remove the two retaining screws (Fig. 5).

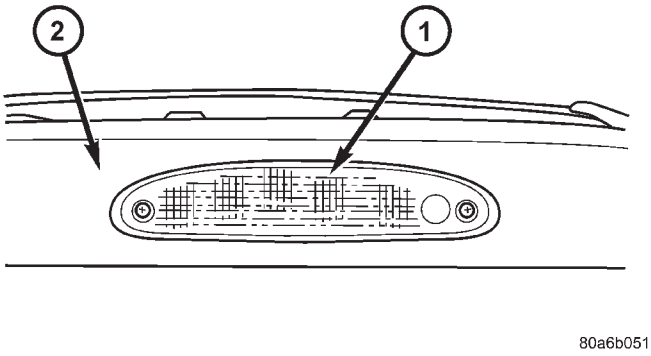

Fig. 5 CHMSL

1 - CHMSL UNIT
2 - LIFTGATE

(3) Disconnect the rear window washer hose.

(4) Remove bulb socket from lamp unit (Fig. 6).

INSTALLATION

(1) Install bulb socket to lamp unit.

(2) Reconnect the rear window washer hose.

CENTER HIGH MOUNTED STOP LAMP UNIT (Continued)

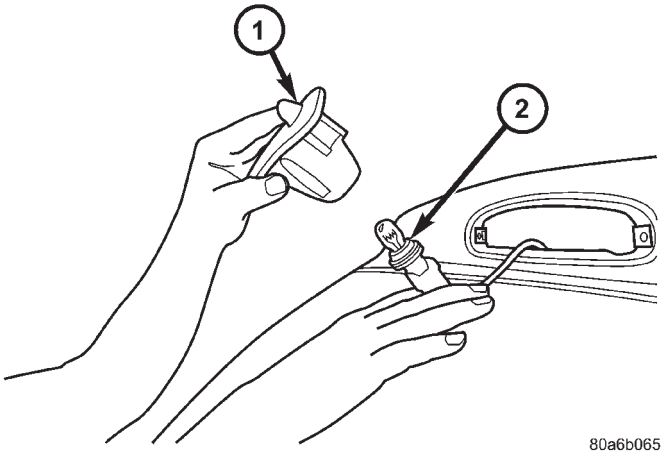

Fig. 6 CHMSL BULB

1 - CHMSL UNIT
2 - CHMSL BULB

(3) Install the retaining screws.
(4) Reconnect the battery negative cable.

FOG LAMP

DIAGNOSIS AND TESTING - FOG LAMP

When a vehicle experiences problems with the fog lamp system, verify the condition of the battery connections, fuses, charging system, fog lamp bulbs, wire connectors, relay, high beam switch, and headlamp switch. Refer to the appropriate wiring information.

Each vehicle is equipped with various lamp assemblies. A good ground is necessary for proper lighting operation. Grounding is provided by the lamp socket when it comes in contact with the metal body, or through a separate ground wire.

When changing lamp bulbs check the socket for corrosion. If corrosion is present, clean it with a wire brush.

When it is necessary to remove components to service another, it should not be necessary to apply excessive force or bend a component to remove it. Before damaging a trim component, verify hidden fasteners or captured edges are not holding the component in place.

FOG LAMP DIAGNOSIS

CONDITION	POSSIBLE CAUSES	CORRECTION
FOG LAMPS ARE DIM WITH ENGINE IDLING OR IGNITION TURNED OFF.	1. Loose or corroded battery cables.	1. Clean and secure battery cable clamps and posts.
	2. Loose or worn generator drive belt.	2. Adjust or replace generator drive belt.
	3. Charging system output too low.	3. Test and repair charging system. Refer to Electrical, Charging,
	4. Battery has insufficient charge.	4. Test battery state-of-charge. Refer to Electrical, Battery System.
	5. Battery is sulfated or shorted.	5. Load test battery. Refer to Electrical, Battery System.
	6. Poor lighting circuit Z349/Z248 ground.	6. Test for voltage drop across Z349/248 ground locations. Refer to Electrical, Wiring Information.
FOG LAMP BULBS BURN OUT FREQUENTLY	1. Charging system output too high.	1. Test and repair charging system. Refer to Electrical, Charging.
	2. Loose or corroded terminals or splices in circuit.	2. Inspect and repair all connectors and splices. Refer to Electrical, Wiring Information.

FOG LAMP (Continued)

CONDITION	POSSIBLE CAUSES	CORRECTION
FOG LAMPS ARE DIM WITH ENGINE RUNNING ABOVE IDLE	1. Charging system output too low.	1. Test and repair charging system. Refer to Electrical, Charging.
	2. Poor lighting circuit Z349/Z248 ground.	2. Test for voltage drop across Z349/Z248 ground locations. Refer to Electrical, Wiring Information.
	3. High resistance in fog lamp circuit.	3. Test amperage draw of fog lamp circuit.
FOG LAMPS FLASH RANDOMLY	1. Poor lighting circuit Z349/Z248 ground.	1. Test for voltage drop across Z349/Z248 ground locations. Refer to Electrical, Wiring Information.
	2. Variable resistance in fog lamp circuit.	2. Test amperage draw of fog lamp circuit.
	3. Faulty fog lamp switch (part of headlamp switch).	3. Replace headlamp switch.
	4. Loose or corroded terminals or splices in circuit.	4. Inspect and repair all connectors and splices. Refer to Electrical, Wiring Information.
	5. Is relay engaging properly?	5. Verify function of fog lamp relay in IPM.
	6. PCI Bus Communication.	6. Verify PCI bus message (fog lamp info) transmitted from BCM and received by FCM.
FOG LAMPS DO NOT ILLUMINATE	1. Blown fuse for fog lamp.	1. Replace fuse. Refer to Electrical, Wiring Information.
	2. No Z349/Z248 ground at fog lamps.	2. Repair circuit ground. Refer to Electrical, Wiring Information.
	3. Faulty fog lamp switch (part of headlamp switch).	3. Replace headlamp switch.
	4. Broken connector terminal or wire splice in fog lamp circuit.	4. Repair connector terminal or wire splice.
	5. Faulty or burned out bulb.	5. Replace bulb.
	6. Is relay engaging?	6. Verify function of fog lamp relay in IPM.
	7. PCI Bus Communication.	7. Verify PCI bus message (fog lamp info) transmitted from BCM and received by FCM.

FOG LAMP (Continued)

REMOVAL

(1) Disconnect and isolate the battery negative cable.

(2) From behind the bumper fascia, twist bulb counter-clockwise, and remove bulb. (Fig. 7).

(3) Remove the wire connector from the fog lamp bulb.

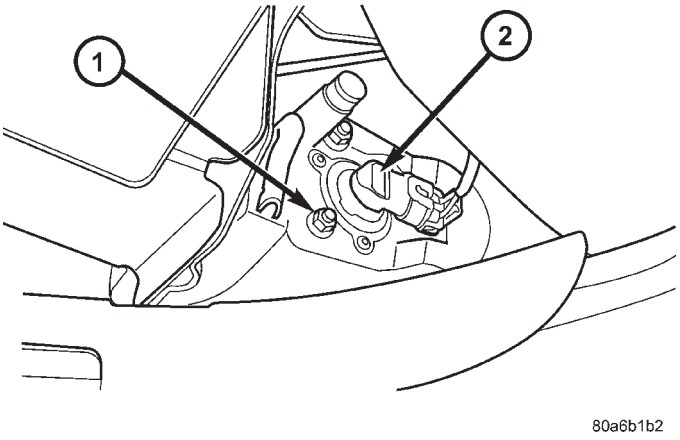

Fig. 7 FOG LAMP

1 - FOGLAMP MOUNTING NUT
2 - FOGLAMP

INSTALLATION

(1) Reconnect wire harness to bulb.
(2) Install bulb and twist clockwise.
(3) Install battery negative cable.

FOG LAMP - EXPORT

REMOVAL

(1) Disconnect and isolate the battery negative cable.

(2) Remove access cover from under bumper fascia.

(3) Disengage spring clip from fog lamp (Fig. 8).

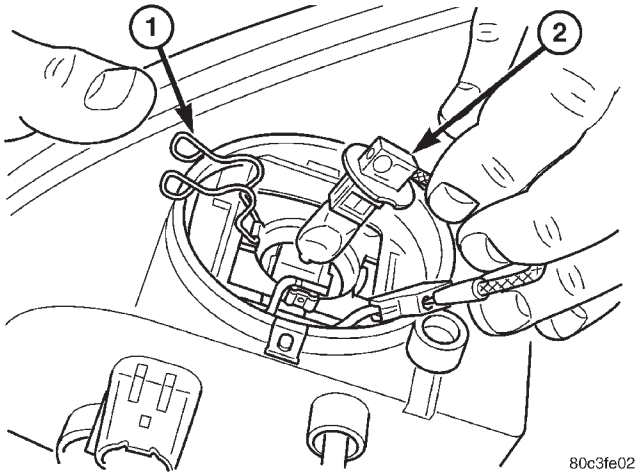

Fig. 8 FOG LAMP

1 - SPRING CLIP
2 - FOG LAMP

(4) Remove bulb from lamp.

(5) Disconnect wire harness connector.

INSTALLATION

(1) Connect wire harness connector.
(2) Install bulb to lamp.
(3) Engage spring clip to fog lamp.
(4) Install access cover under bumper fascia.
(5) Connect battery negative cable.

FOG LAMP UNIT

STANDARD PROCEDURE

STANDARD PROCEDURE - FOG LAMP UNIT ALIGNMENT

FOG LAMP UNIT ALIGNMENT

Prepare an alignment screen (Refer to 8 - ELECTRICAL/LAMPS/LIGHTING - EXTERIOR/HEADLAMP UNIT - STANDARD PROCEDURE). A properly aligned fog lamp will project a pattern on the alignment screen 100 mm (4 in.) below the fog lamp center line and straight ahead (Fig. 9). To improve visual interpretation of the fog lamp pattern on the alignment screen, the headlamps should be in the “off” position.

The fog lamps are adjusted by a adjustment screw located through the lens on Dodge vehicles, and by a knob on the back of the lamp.

STANDARD PROCEDURE - FOG LAMP UNIT ALIGNMENT - EXPORT

Prepare an alignment screen (Refer to 8 - ELECTRICAL/LAMPS/LIGHTING - EXTERIOR/HEADLAMP UNIT - STANDARD PROCEDURE). A properly aligned fog lamp will project a pattern on the alignment screen 200 mm (8 in.) below the fog lamp center line and straight ahead (Fig. 10). To improve visual interpretation of the fog lamp pattern on the alignment screen, the headlamps should be in the “off” position.

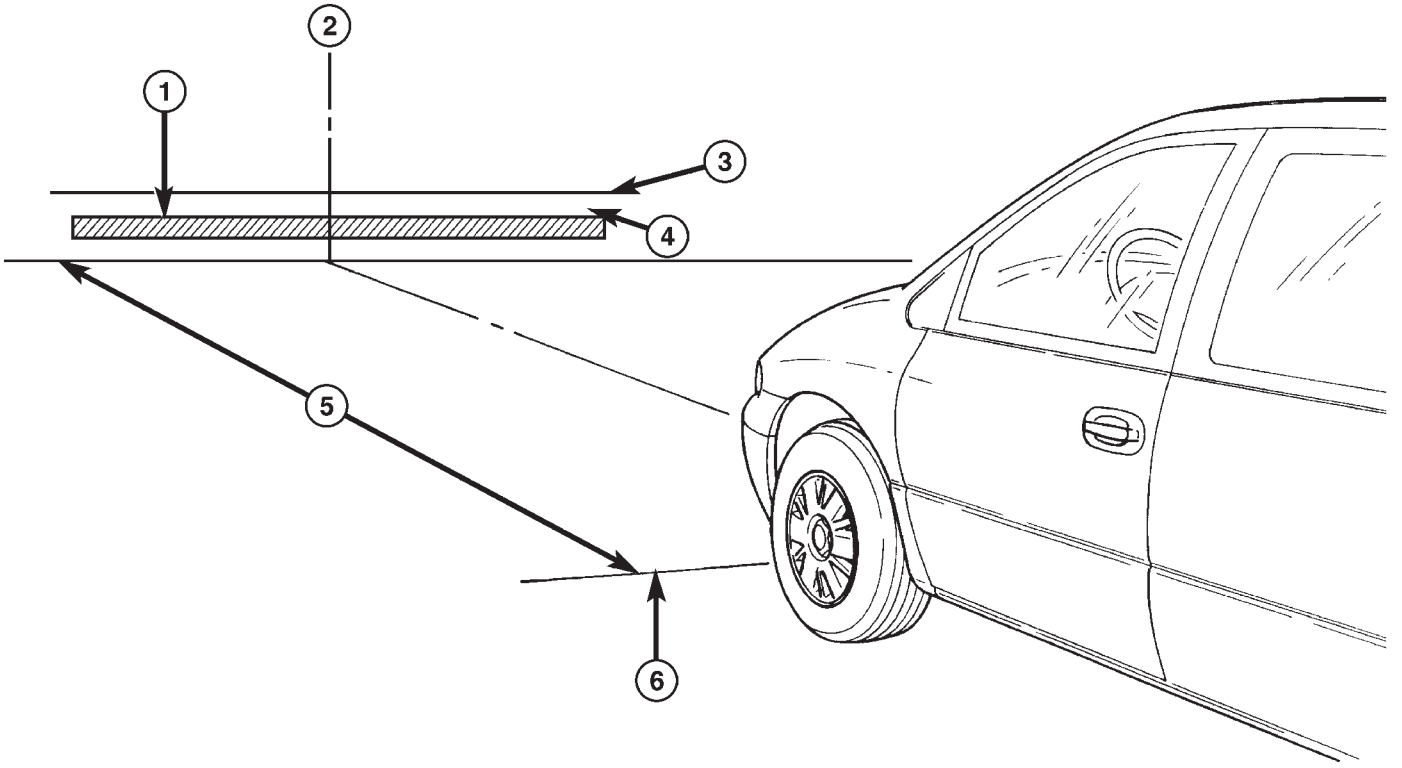

80aac150

Fig. 9 FOG LAMP UNIT ALIGNMENT

1 - HIGH INTENSITY AREA
2 - CENTER OF VEHICLE
3 - HORIZONTAL CENTER OF FOG LAMP
4 - 100MM (4 IN.)
5 - 7.62 METERS (25 FT.)
6 - FRONT OF FOG LAMP

FOG LAMP UNIT (Continued)

The fog lamps are adjusted by a adjustment screw located on the underside of the fog lamp unit.

REMOVAL

(1) Disconnect and isolate the battery negative cable.
(2) From behind the bumper fascia, disconnect the wire harness from the fog lamp bulb (Fig. 7).
(3) Remove mounting nuts.

INSTALLATION

(1) Install mounting nuts.
(2) Reconnect the wire harness to the fog lamp bulb.
(3) Reconnect the battery negative cable.

FRONT POSITION LAMP - EXPORT

REMOVAL

(1) Disconnect and isolate the battery negative cable.
(2) Remove the headlamp unit (Fig. 11).
(3) Remove the plastic cover from the back of the headlamp unit.
(4) Pull front position lamp socket from headlamp unit.
(5) Pull bulb straight out of socket.

INSTALLATION

(1) Push bulb into the bulb socket.
(2) Insert bulb socket into headlamp unit.
(3) Install cover to the back of the headlamp unit.

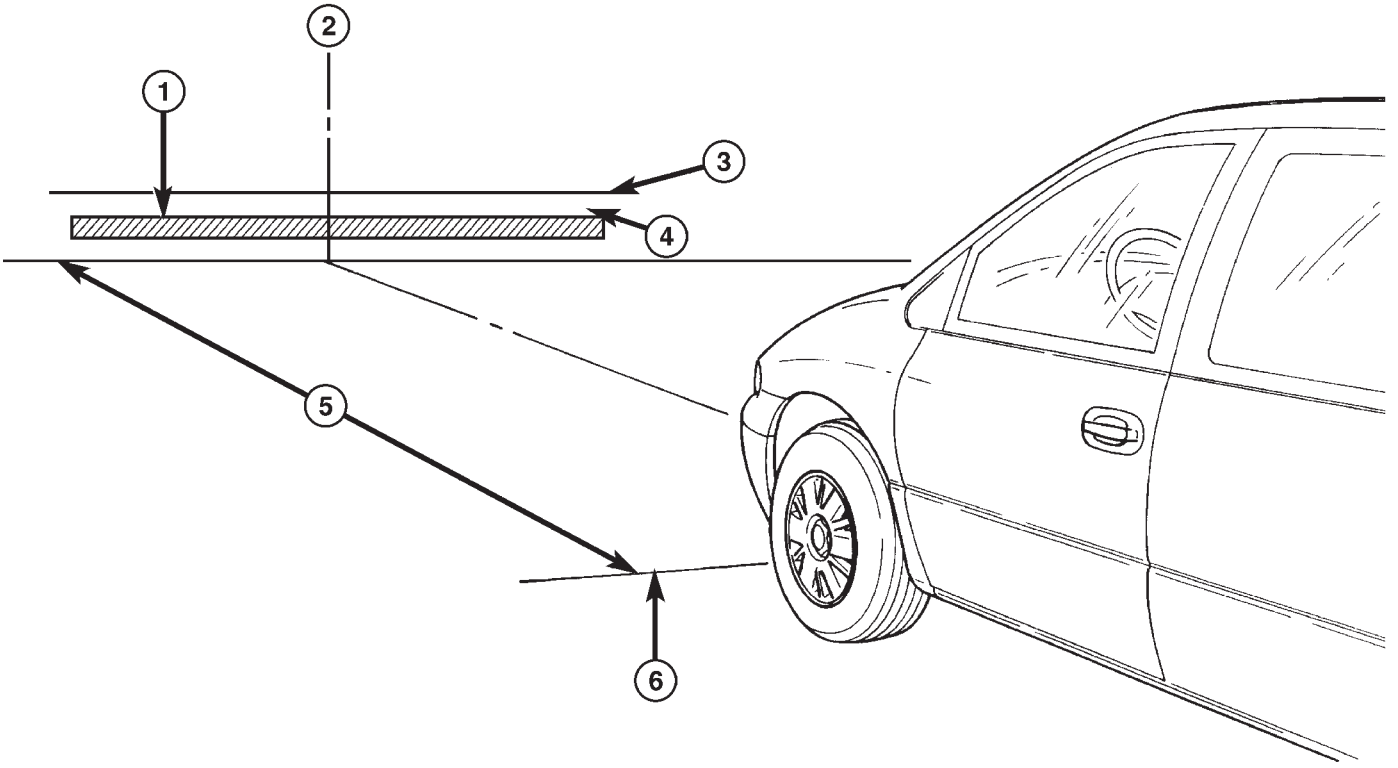

80aac150

Fig. 10 FOG LAMP UNIT ALIGNMENT - EXPORT

1 - HIGH INTENSITY AREA
2 - CENTER OF VEHICLE
3 - HORIZONTAL CENTER OF FOG LAMP UNIT
4 - 200 MM
5 - 10 METERS
6 - FRONT OF FOG LAMP UNIT

FRONT POSITION LAMP - EXPORT (Continued)

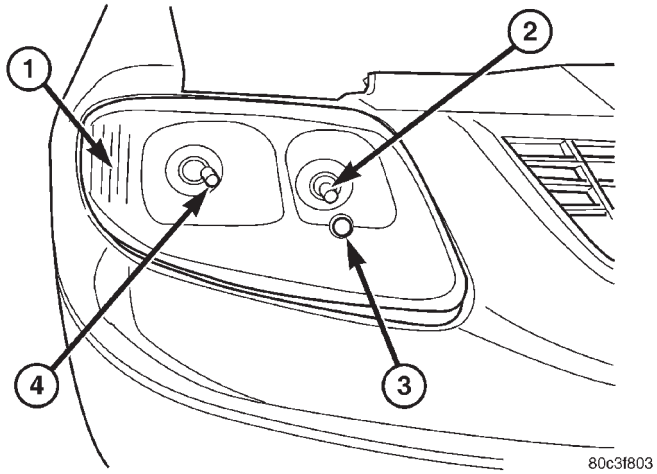

Fig. 11 FRONT POSITION LAMP

1 - TURN SIGNAL LAMP
2 - HIGH BEAM LAMP
3 - FRONT POSITION LAMP
4 - LOW BEAM LAMP

(4) Install the headlamp unit.
(5) Connect the battery negative cable.

HEADLAMP

DIAGNOSIS AND TESTING - HEADLAMP

When a vehicle experiences problems with the headlamp system, verify the condition of the battery connections, fuses, charging system, headlamp bulbs, wire connectors, relay, high beam switch, dimmer switch, and headlamp switch. Refer to the appropriate wiring information.

Each vehicle is equipped with various lamp assemblies. A good ground is necessary for proper lighting operation. Grounding is provided by the lamp socket when it comes in contact with the metal body, or through a separate ground wire.

When changing lamp bulbs check the socket for corrosion. If corrosion is present, clean it with a wire brush.

When it is necessary to remove components to service another, it should not be necessary to apply excessive force or bend a component to remove it. Before damaging a trim component, verify hidden fasteners or captured edges are not holding the component in place.

HEADLAMP DIAGNOSIS

CONDITION	POSSIBLE CAUSES	CORRECTION
HEADLAMPS ARE DIM WITH ENGINE IDLING OR IGNITION TURNED OFF.	1. Loose or corroded battery cables.	1. Clean and secure battery cable clamps and posts.
	2. Loose or worn generator drive belt.	2. Adjust or replace generator drive belt.
	3. Charging system output too low.	3. Test and repair charging system, refer to Electrical, Charging
	4. Battery has insufficient charge.	4. Test battery state-of-charge, refer to Electrical, Battery System.
	5. Battery is sulfated or shorted.	5. Load test battery, refer to Electrical, Battery System.
	6. Poor lighting circuit Z343/Z344-ground.	6. Test for voltage drop across Z343/Z344-ground locations, refer to Electrical, Wiring Diagram Information.
HEADLAMP BULBS BURN OUT FREQUENTLY.	1. Integrated Power Module (IPM) not controlling voltage.	1. Test and repair Integrated Power Module.
	2. Loose or corroded terminals or splices in circuit.	2. Inspect and repair all connectors and splices. Refer to Electrical, Wiring Information.

HEADLAMP (Continued)

CONDITION	POSSIBLE CAUSES	CORRECTION
HEADLAMPS ARE DIM WITH ENGINE RUNNING ABOVE IDLE.	1. Charging system output too low.	1. Test and repair charging system, refer to Electrical, Wiring Information.
	2. Poor lighting circuit Z343/Z344-ground.	2. Test for voltage drop across Z343/Z344-ground locations, refer to Electrical, Wiring Information.
	3. High resistance in headlamp circuit.	3. Test amperage draw of headlamp circuit.
HEADLAMPS FLASH RANDOMLY	1. Poor lighting circuit Z343/Z344-ground.	1. Test for voltage drop across Z343/Z344-ground locations, refer to Electrical, Wiring Information.
	2. Variable resistance in headlamp circuit.	2. Test amperage draw of headlamp circuit.
	3. Loose or corroded terminals or splices in circuit.	3. Inspect and repair all connectors and splices, refer to Electrical, Wiring Information.
	4. Faulty headlamp switch.	4. Replace headlamp switch.
HEADLAMPS DO NOT ILLUMINATE.	1. No voltage to headlamps.	1. Repair open headlamp circuit, refer to Electrical, Wiring Information.
	2. No Z343/Z344-ground at headlamps.	2. Repair circuit ground, refer to Electrical, Wiring Information.
	3. Broken connector terminal or wire splice in headlamp circuit.	3. Repair connector terminal or wire splice.
	4. Faulty or burned out bulb.	4. Replace headlamp bulb(s).
	5. Body Control Module malfunction.	5. Refer to appropriate Body Control Module diagnostics.
	6. PCI Bus Communication	6. Verify messages being transmitted by BCM and received by FCM.
	7. IPM/FCM Malfunction.	7. Refer to appropriate IPM/FCM diagnostics.
HEADLAMPS ON WITH IGNITION IN RUN, WITH HEADLAMP SWITCH OFF.	1. Faulty headlamp switch.	1. Replace headlamp switch (review BCM logged faults).
	2. Diagnostic tool indicates (4.7 - 5.0V) on headlamp switch input to BCM.	2. Inspect and repair terminals, connectors and open circuits.
	3. PCI Bus Communication.	3. Verify messages being transmitted by BCM and received by FCM.

HEADLAMP (Continued)

REMOVAL

(1) Disconnect and isolate the battery negative cable.
(2) Remove headlamp unit retaining screws.
(3) Remove headlamp unit to expose back of unit.
(4) Remove wiring connector from bulb.
(5) Rotate headlamp bulb retaining ring counter-clockwise.

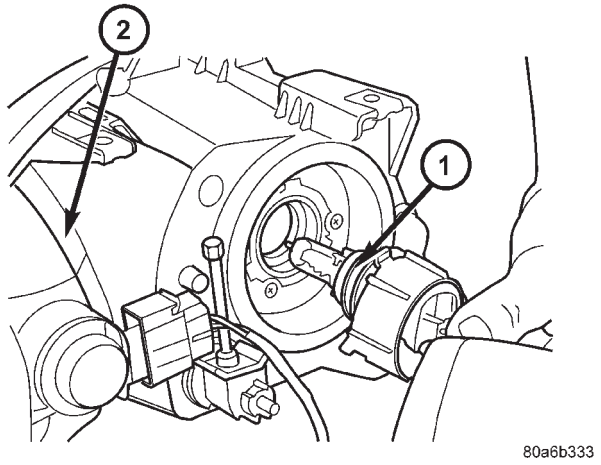

Fig. 12 HEADLAMP

1 - HEADLAMP
2 - HEADLAMP UNIT

(6) Pull headlamp bulb and remove from headlamp unit (Fig. 12).

INSTALLATION

(1) Install headlamp bulb to the headlamp unit.
(2) Install headlamp bulb retaining ring.
(3) Connect wiring connector to bulb.
(4) Install the headlamp unit.
(5) Install headlamp unit retaining screws.
(6) Reconnect the battery negative cable.

HEADLAMP - EXPORT

REMOVAL

(1) Disconnect and isolate the battery negative cable.
(2) Remove the headlamp unit.
(3) Remove the cover (high beam lamp) or rubber boot (low beam lamp) to access bulbs (Fig. 13).

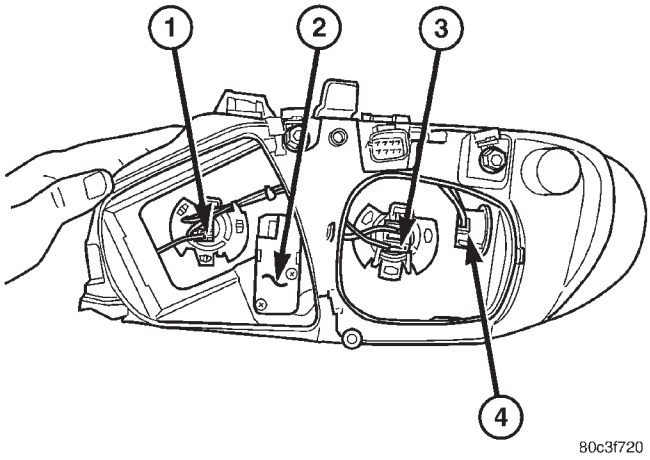

Fig. 13 HEADLAMP UNIT

1 - HIGH BEAM LAMP
2 - HEADLAMP LEVELING MOTOR
3 - LOW BEAM LAMP
4 - TURN LAMP

(4) Disconnect the wire harness connector.
(5) Disengage spring clip from headlamp.
(6) Pull headlamp bulb from back of headlamp unit.

INSTALLATION

(1) Insert headlamp bulb into headlamp unit.
(2) Engage spring clip to headlamp.
(3) Connect wire harness connector.
(4) Install the cover (high beam lamp) or rubber boot (low beam lamp) to headlamp unit.
(5) Install the headlamp unit.
(6) Connect the battery negative cable.

HEADLAMP LEVELING MOTOR - EXPORT

DIAGNOSIS AND TESTING - HEADLAMP LEVELING MOTOR - EXPORT

HEADLAMP LEVELING MOTOR DIAGNOSIS

CONDITION	POSSIBLE CAUSES	CORRECTION
ONE MOTOR DOES NOT OPERATE.	1. Poor electrical connection at motor	1. Check for proper electrical connection at motor
	2. No voltage at motor	2. Repair no voltage condition. Refer to Wiring Diagrams
	3. No ground at motor	3. Repair no ground condition. Refer to Wiring Diagrams
	4. Defective motor	4. Replace leveling motor
BOTH MOTORS DO NOT OPERATE	1. No voltage at or from headlamp leveling switch	1. Repair no voltage condition. Check for proper headlamp leveling switch operation
	2. No voltage at leveling motors	2. Repair no voltage condition. Refer to Wiring Diagrams
	3. No ground at leveling motors	3. Repair no ground condition. Refer to Wiring Diagrams
	4. Both motors defective	4. Replace both motors

REMOVAL

(1) Disconnect and isolate the battery negative cable.
(2) Remove headlamp unit.
(3) Disconnect electrical connector from headlamp leveling motor.
(4) Remove the two mounting screws.
(5) Gently pry motor from headlamp unit (Fig. 14).

INSTALLATION

(1) Press motor into position.
(2) Install the two mounting screws.
(3) Connect the electrical connector to motor.
(4) Install the headlamp unit.
(5) Connect the battery negative cable.

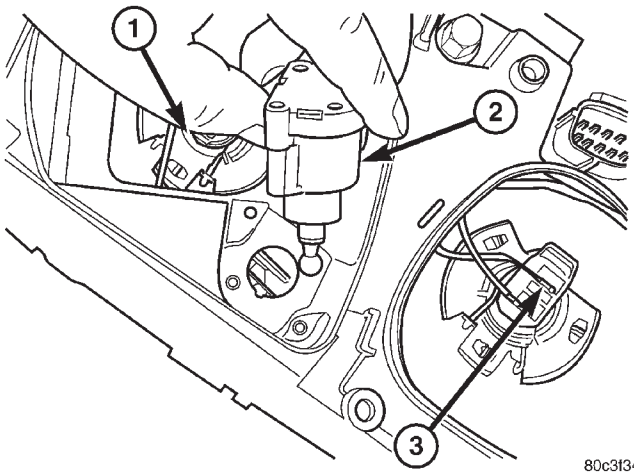

Fig. 14 HEADLAMP LEVELING MOTOR - EXPORT

1 - HIGH BEAM HEADLAMP
2 - HEADLAMP LEVELING MOTOR
3 - LOW BEAM HEADLAMP

HEADLAMP LEVELING SWITCH - EXPORT

DESCRIPTION

Some vehicles are equipped with a remote headlamp leveling system. This system allows the driver to adjust the vertical headlamp aim from the interior of the vehicle to compensate for passenger or cargo load.

The headlamp leveling switch is located next to the headlamp switch on the instrument panel (Fig. 15). If the headlamp leveling switch is faulty or damaged, the headlamp switch must be replaced.

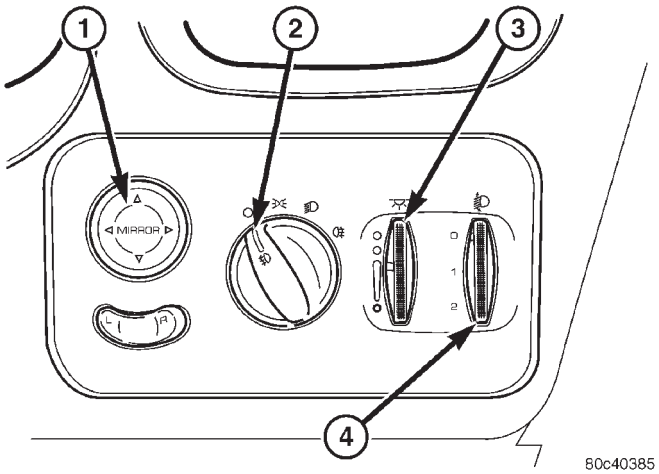

Fig. 15 HEADLAMP LEVELING SWITCH

1 - POWER MIRROR SWITCH
2 - HEADLAMP SWITCH
3 - INTERIOR DIMMER
4 - HEADLAMP LEVELING SWITCH

DIAGNOSIS AND TESTING - HEADLAMP LEVELING SWITCH - EXPORT

The headlamp leveling switch is located next to the headlamp switch on the instrument panel. (Refer to 8 - ELECTRICAL/LAMPS/LIGHTING - EXTERIOR/ HEADLAMP SWITCH - DIAGNOSIS AND TESTING) for diagnosis of the headlamp leveling switch. If the headlamp leveling switch is faulty, the headlamp switch must be replaced.

HEADLAMP SWITCH

DIAGNOSIS AND TESTING

DIAGNOSIS AND TESTING - HEADLAMP SWITCH

Using a Digital Multi-meter, perform the HEADLAMP SWITCH CONTINUITY test and refer to (Fig. 16).

If the Headlamp Switch is not within specifications replace the switch.

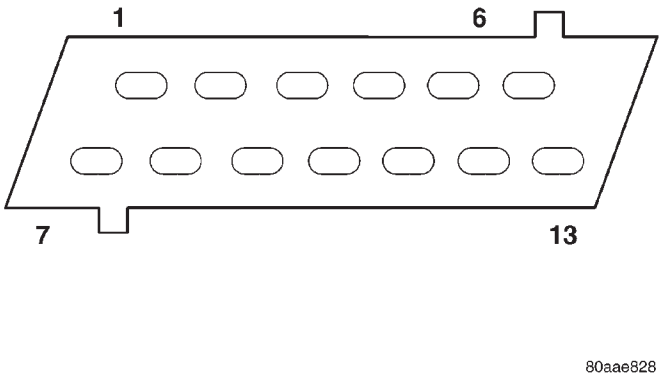

Fig. 16 HEADLAMP SWITCH CONNECTOR

HEADLAMP SWITCH CONTINUITY

HEADLAMP SWITCH POSITION	13 - WAY CONNECTOR TERMINAL	RESISTANCE
OFF	11 TO 6	3651 - 3729 Ω
PARKING LAMPS ON	11 TO 6	1697 - 2517 Ω
PARKING LAMPS WITH FRONT FOG LAMPS ON	11 TO 6	5765 - 5886 Ω
HEADLAMPS ON	11 TO 6	788 - 809 Ω
AUTO ON	11 TO 6	10056 - 10264 Ω
HEADLAMPS ON WITH FRONT FOG LAMPS	11 TO 6	1171 - 1200 Ω
AUTO ON WITH FRONT FOG LAMPS ON	11 TO 6	24278 - 24773 Ω

HEADLAMP SWITCH (Continued)

DIMMER POSITION	13 - WAY CONNECTOR TERMINAL	RESISTANCE
DOME	12 TO 6	15568 - 23357 Ω
PARADE	12 TO 6	5168 - 7757 Ω
DIM HIGH	12 TO 6	2288 - 3437 Ω
DIM LOW	12 TO 6	688 - 1037 Ω
OFF	12 TO 6	240 - 365 Ω

DIAGNOSIS AND TESTING - HEADLAMP SWITCH - EXPORT

Using a Digital Multi-meter, refer to the HEADLAMP SWITCH CONTINUITY table and (Fig. 17).

If the Headlamp Switch is not within specifications, replace as necessary.

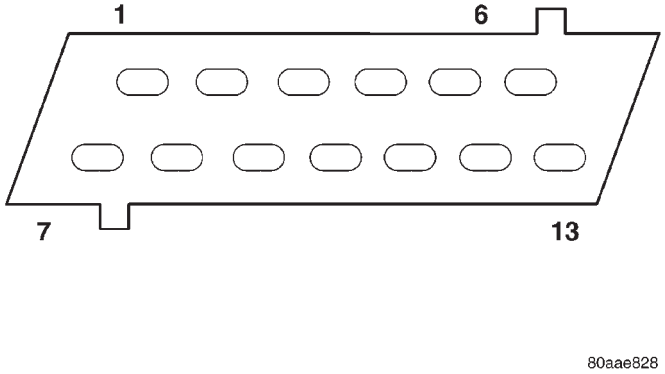

Fig. 17 HEADLAMP SWITCH CONNECTOR

HEADLAMP SWITCH CONTINUITY

HEADLAMP SWITCH POSITION	13 - WAY CONNECTOR TERMINAL	RESISTANCE
OFF	11 TO 6	3651 - 3729 Ω
PARKING LAMPS ON	11 TO 6	1697 - 2517 Ω
PARKING LAMPS WITH FRONT FOG LAMPS ON	11 TO 6	5765 - 5886 Ω
HEADLAMPS ON	11 TO 6	788 - 809 Ω
HEADLAMPS ON WITH FRONT FOG LAMPS	11 TO 6	1171 - 1200 Ω
REAR FOG LAMPS	11 TO 6	271 - 277 Ω
FRONT FOG INDICATOR	10 TO 4	LED
REAR FOG INDICATOR	5 TO 4	LED
ILLUMINATION	8 TO 4	CONTINUITY

DIMMER POSITION	13 - WAY CONNECTOR TERMINAL	RESISTANCE
DOME	12 TO 6	15568 - 23357 Ω
PARADE	12 TO 6	5168 - 7757 Ω
DIM HIGH	12 TO 6	2288 - 3437 Ω
DIM LOW	12 TO 6	688 - 1037 Ω
OFF	12 TO 6	240 - 365 Ω
HEADLAMP LEVELING SWITCH POSITION	**13 - WAY CONNECTOR TERMINAL**	**RESISTANCE**
0	1 TO 7 1 TO 2	3238 - 3456 Ω 3181 - 3400 Ω
1	1 TO 7	1195 - 1225 Ω
2	1 TO 7	746 - 765 Ω

REMOVAL

(1) Disconnect and isolate the battery negative cable.

(2) Remove the Instrument Panel Lower Steering Column Cover. Refer to Body, Instrument Panel, Lower Steering Column Cover, Removal.

(3) Reach up behind the left side of the instrument panel and depress spring clip on top or bottom of headlamp switch. Firmly push out on the headlamp switch assembly.

(4) Disconnect the wiring connectors.

(5) Remove switch from vehicle.

INSTALLATION

(1) Connect the wiring connectors.

(2) Place headlamp switch assembly into position and firmly snap into place.

(3) Install the Instrument Panel Lower Steering Column Cover. Refer to Body, Instrument Panel, Lower Steering Column Cover, Installation.

(4) Connect the battery negative cable.

HEADLAMP UNIT

STANDARD PROCEDURE

STANDARD PROCEDURE - HEADLAMP UNIT ALIGNMENT

HEADLAMP UNIT ALIGNMENT PREPARATION

(1) Verify headlamp dimmer switch and high beam indicator operation.

(2) Inspect and correct damaged or defective components that could interfere with proper headlamp alignment.

HEADLAMP UNIT (Continued)

(3) Verify proper tire inflation.
(4) Clean headlamp lenses.
(5) Verify that luggage area is loaded as the vehicle is routinely used.
(6) Fuel tank should be FULL. Add 2.94 kg (6.5 lbs.) of weight over the fuel tank for each estimated gallon of missing fuel.

ALIGNMENT SCREEN PREPARATION

(1) Position vehicle on a level surface perpendicular to a flat wall 7.62 meters (25 ft.) away from front of headlamp lens (Fig. 18).
(2) If necessary, tape a line on the floor 7.62 meters (25 ft.) away from and parallel to the wall.
(3) Rock vehicle side-to-side three times and allow suspension to stabilize.
(4) Jounce front suspension three times by pushing downward on front bumper and releasing.
(5) Measure the distance from the center of headlamp lens to the floor. Transfer measurement to the alignment screen (with tape). Use this line for up/down adjustment reference.

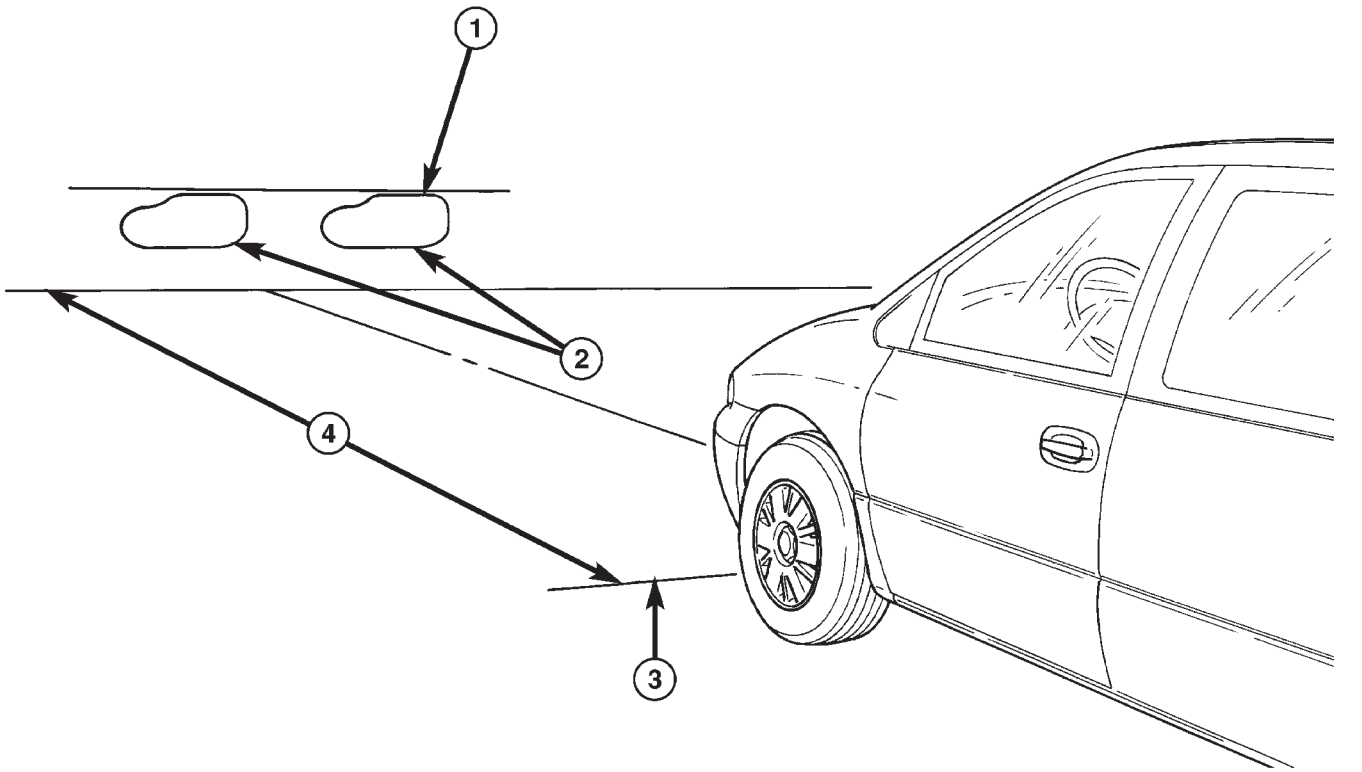

80aabefe

Fig. 18 HEADLAMP ALIGNMENT SCREEN

1 - CENTER OF HEADLAMPS
2 - HEADLAMP BEAM
3 - FRONT OF HEADLAMP
4 - 7.62 METERS (25 FT.)

HEADLAMP UNIT (Continued)

HEADLAMP ADJUSTMENT

The low beam headlamp will project on the screen upper edge of the beam (cut-off) at the horizontal lamp centerline ± 50 mm (2 in.). Horizontal aim is preset and can not be adjusted. The high beam pattern should be correct when the low beams are aligned properly (Fig. 19). To adjust headlamp vertical alignment, rotate adjustment screw to achieve the specified low beam cut-off location.

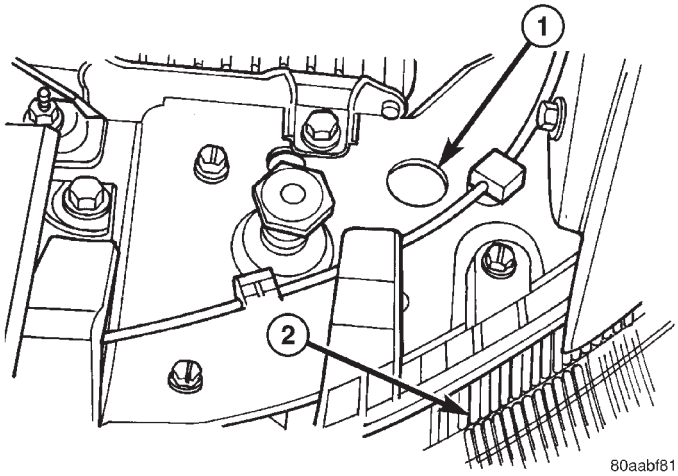

Fig. 19 HEADLAMP ADJUSTMENT

1 - ADJUSTMENT LOCATION
2 - HEADLAMP UNIT

STANDARD PROCEDURE - HEADLAMP UNIT ALIGNMENT - EXPORT

HEADLAMP UNIT ALIGNMENT PREPARATION

(1) Verify headlamp dimmer switch and high beam indicator operation.

(2) Verify that the headlamp leveling switch is in the “0” position.

(3) Inspect and correct damaged or defective components that could interfere with proper headlamp alignment.

(4) Verify proper tire inflation.

(5) Clean headlamp lenses.

(6) Verify that luggage area is loaded as the vehicle is routinely used.

(7) Fuel tank should be FULL. Add 2.94 kg (6.5 lbs.) of weight over the fuel tank for each estimated gallon of missing fuel.

ALIGNMENT SCREEN PREPARATION

(1) Position vehicle on a level surface perpendicular to a flat wall 10 meters (32.8 ft.) away from front of headlamp lens (Fig. 20).

(2) If necessary, tape a line on the floor 10 meters (32.8 ft.) away from and parallel to the wall.

(3) Rock vehicle side-to-side three times and allow suspension to stabilize.

(4) Jounce front suspension three times by pushing downward on front bumper and releasing.

(5) Measure the distance from the center of headlamp lens to the floor. Transfer measurement to the alignment screen (with tape). Use this line for up/down adjustment reference.

HEADLAMP UNIT ADJUSTMENT

The low beam headlamp will project on the screen upper edge of the beam (cut-off) at the horizontal lamp centerline ± 20 mm (0.75 in.). The high beam pattern should be correct when the low beams are aligned properly (Fig. 21). To adjust headlamp alignment, rotate adjustment screws to achieve the specified low beam cut-off location.

REMOVAL

(1) Disconnect and isolate the battery negative cable.

(2) Remove the three retaining screws (Fig. 22).

(3) Disconnect the wiring harness from the bulbs (Fig. 23).

(4) Remove wire harness retainer from back of headlamp unit.

(5) Remove the headlamp unit.

HEADLAMP UNIT (Continued)

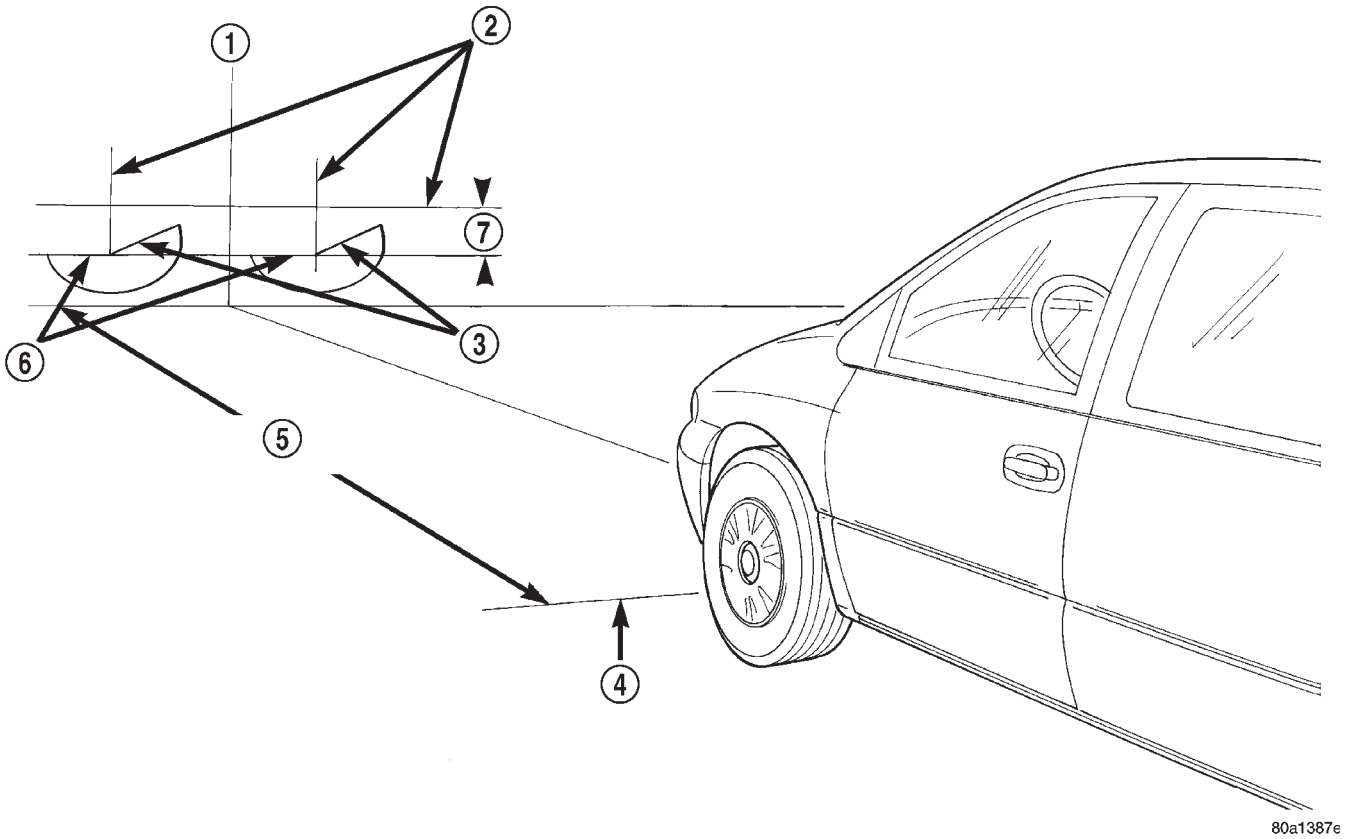

Fig. 20 HEADLAMP UNIT ALIGNMENT SCREEN - EXPORT

1 - CENTER OF VEHICLE
2 - CENTER OF HEADLAMPS
3 - 15° CUT-OFF LINE
4 - FRONT OF HEADLAMP
5 - 10 METERS (32.8 FT.)
6 - HORIZONTAL CUT-OFF LINE
7 - 110 mm (4.3 in.)

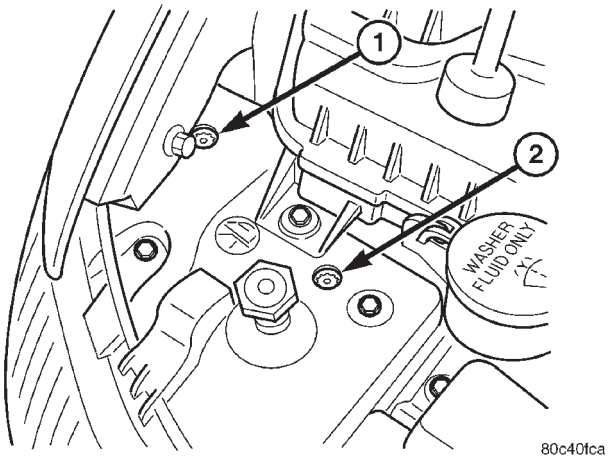

Fig. 21 HEADLAMP UNIT ADJUSTMENT

1 - HEADLAMP ADJUSTMENT - HORIZONTAL
2 - HEADLAMP ADJUSTMENT - VERTICAL

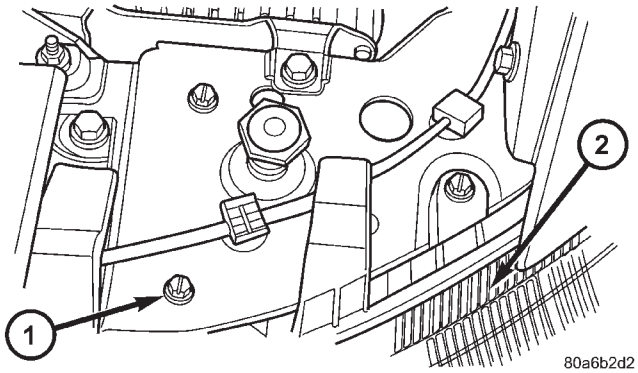

Fig. 22 HEADLAMP UNIT FASTENERS

1 - HEADLAMP UNIT RETAINING SCREW
2 - HEADLAMP UNIT

INSTALLATION

(1) Reconnect wire harness to the bulbs.
(2) Install wire harness retainer to headlamp unit.
(3) Install the three retaining screws.

HEADLAMP UNIT (Continued)

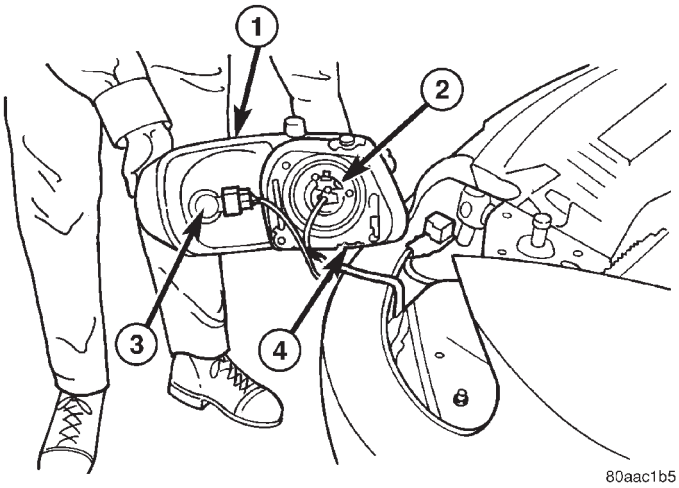

Fig. 23 HEADLAMP UNIT

1 - HEADLAMP UNIT
2 - HEADLAMP
3 - PARK/TURN SIGNAL LAMP
4 - WIRE HARNESS RETAINER

(4) Reconnect the battery negative cable.

LICENSE LAMP

REMOVAL

(1) Disconnect and isolate the battery negative cable.
(2) Remove two screws (Fig. 24).

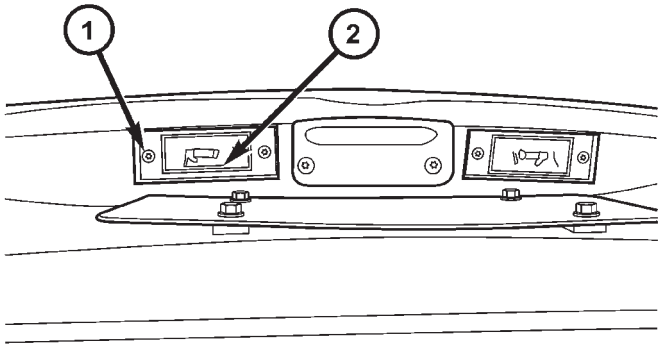

Fig. 24 LICENSE PLATE LAMP UNITS

1 - SCREW
2 - LICENSE PLATE LAMP

(3) Twist bulb socket and remove (Fig. 25).
(4) Pull bulb from socket.

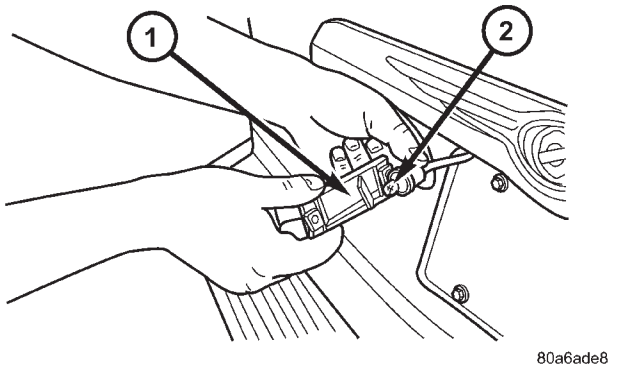

Fig. 25 LICENSE PLATE LAMP - REMOVE/INSTALL

1 - LICENSE PLATE LAMP UNIT
2 - BULB

INSTALLATION

(1) Push bulb into socket.
(2) Install socket into lamp.
(3) Install two screws.
(4) Reconnect the battery negative cable.

MULTI-FUNCTION SWITCH

DESCRIPTION - TURN SIGNAL SYSTEM

The turn signals are actuated with a lever on Multi-Function Switch, located on the left side of the steering wheel. The signals are automatically turned off by a canceling cam (two lobes molded to the clock spring mechanism). The cam comes in contact with the cancel actuator on the turn signal (multi-function) switch assembly. Either cam lobe, pushing on the cancel actuator, returns the switch to the OFF position. The multi-function switch is a resistive MUX switch that feeds inputs to the BCM.

OPERATION - TURN SIGNAL SYSTEM

Lane change signaling is actuated by applying partial turn signal stalk movement toward the direction desired until the indicator lamps flashes in the instrument cluster. When the switch stalk is released the stalk will spring back into the neutral position turning OFF the turn signal.

With the ignition switch ON and the turn signal switch stalk actuated left or right, current flows through the:

- Multi-function switch
- Body Control Module
- Integrated Power Module (IPM)
- Turn indicator lamp
- Front and rear turn signal bulbs.

A chime will sound after the vehicle has traveled a distance of approximately 1.0 mile and a speed of 15 mph, with the turn signal ON.

MULTI-FUNCTION SWITCH (Continued)

DIAGNOSIS AND TESTING - MULTI-FUNCTION SWITCH

To test turn signal, headlamp beam select and optical horn portion of the multi-function switch:

(1) Remove the multi-function switch, refer to Electrical, Lamps/Lighting - Exterior, Multi-Function Switch, Removal, and Installation.

(2) Using an ohmmeter check the resistance readings between multi-function switch pins. Refer to Wiring Diagrams for proper pin numbers and the MULTI-FUNCTION SWITCH RESISTANCE table.

MULTI-FUNCTION SWITCH RESISTANCE

SWITCH POSITION	PIN NUMBER	RESISTANCE
LEFT	2 AND 3	1.7 Ω ± 5%
RIGHT	2 AND 3	1K Ω ± 5%
OPTICAL HORN	1 AND 3	4.87K Ω ± 5%
HI BEAM	1 AND 3	2.32K Ω ± 5%

REMOVAL

(1) Disconnect and isolate battery negative cable.

(2) Remove upper and lower steering column shrouds. Refer to Steering, Column, Shroud, Removal.

(3) Disconnect wire connector from back of multi-function switch.

(4) Remove screws holding multi-function switch to steering column adapter collar.

(5) Remove the multi-function switch.

INSTALLATION

(1) Position the switch on to the steering column.

(2) Install the two retaining screws.

(3) Connect the wire harness connector.

(4) Install the upper and lower steering column shrouds. Refer to Steering, Column, Shroud, Installation.

(5) Connect the battery negative cable.

PARK/TURN SIGNAL LAMP

REMOVAL

(1) Disconnect and isolate battery negative cable.

(2) Remove headlamp retaining screws.

(3) Twist socket counter - clockwise and remove (Fig. 26).

(4) Pull bulb from socket.

INSTALLATION

(1) Push bulb into socket.

(2) Twist socket into headlamp.

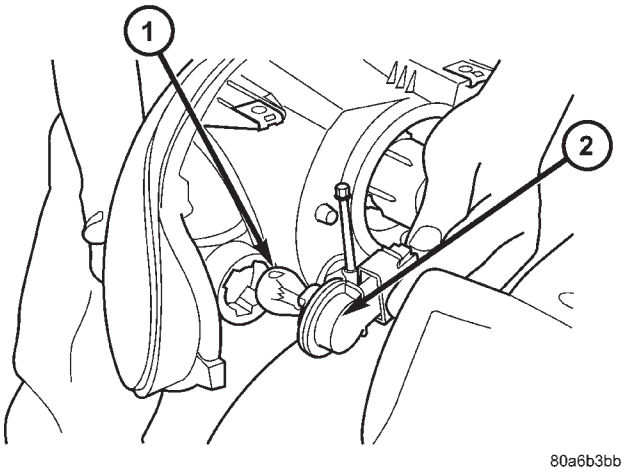

Fig. 26 PARK/TURN SIGNAL LAMP

1 - PARK/TURN SIGNAL LAMP
2 - LAMP SOCKET

(3) Install headlamp retaining screws.

(4) Reconnect battery negative cable.

PARK/TURN SIGNAL LAMP - EXPORT

REMOVAL

(1) Disconnect and isolate the battery negative cable.

(2) Remove the headlamp unit.

(3) Twist bulb socket and remove from headlamp unit (Fig. 27).

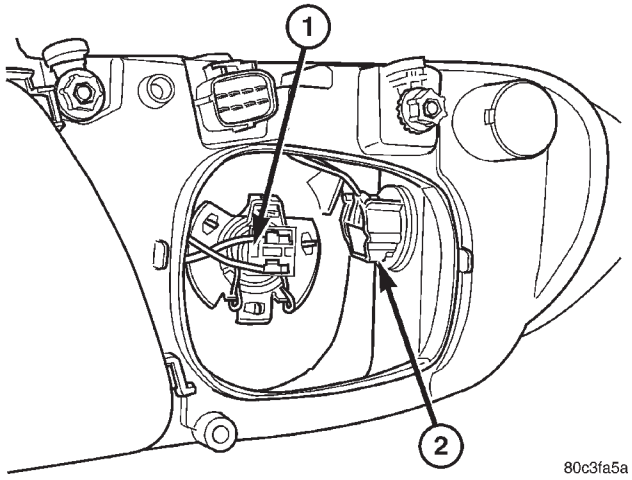

Fig. 27 PARK/TURN SIGNAL LAMP

1 - LOW BEAM HEADLAMP
2 - PARK/TURN SIGNAL LAMP

(4) Twist bulb and remove from bulb socket.

PARK/TURN SIGNAL LAMP - EXPORT (Continued)

INSTALLATION

(1) Install bulb to bulb socket.
(2) Install bulb socket to headlamp unit.
(3) Install headlamp unit.
(4) Connect battery negative cable.

REAR FOG LAMP - EXPORT

DESCRIPTION

The rear fog lamps are incorporated into the tail lamp unit. (Refer to 8 - ELECTRICAL/LAMPS/LIGHTING - EXTERIOR/TAIL LAMP - REMOVAL) for service procedures.

REPEATER LAMP - EXPORT

REMOVAL

(1) Disconnect and isolate the battery negative cable.
(2) Push the side repeater lamp to one side and release retaining tab.
(3) Pull side repeater lamp out and disengage bulb socket from lamp.
(4) Depress, then rotate and pull bulb from socket.

INSTALLATION

(1) Install bulb to socket.
(2) Push lamp socket into the side repeater lamp.
(3) Position side repeater lamp to hole in fender.
(4) Push side repeater lamp to one side and seat retaining tab into fender.
(5) Connect battery negative cable.

TAIL LAMP

REMOVAL

(1) Disconnect and isolate the battery negative cable.
(2) Remove the tail lamp unit. (Refer to 8 - ELECTRICAL/LAMPS/LIGHTING - EXTERIOR/TAIL LAMP UNIT - REMOVAL).
(3) Squeeze the tabs on the bulb socket and remove from tail lamp unit (Fig. 28).
(4) Pull bulb from lamp socket.

INSTALLATION

(1) Push bulb into the lamp socket.
(2) Install bulb socket into the tail lamp unit. Ensure that both retaining tabs engage with an audible click.
(3) Install the tail lamp unit. (Refer to 8 - ELECTRICAL/LAMPS/LIGHTING - EXTERIOR/TAIL LAMP UNIT - INSTALLATION).

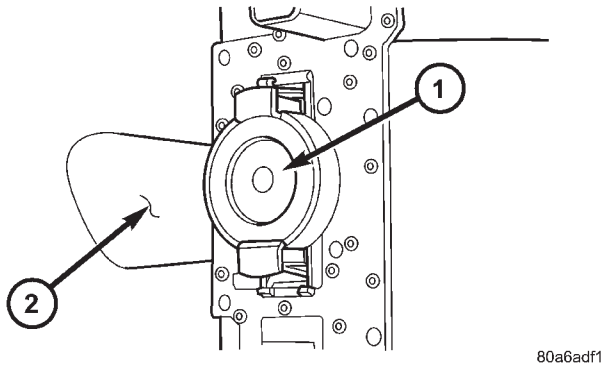

Fig. 28 TAIL LAMP SOCKET

1 - LAMP SOCKET
2 - TAIL LAMP UNIT

(4) Reconnect the battery negative cable.

TAIL LAMP - EXPORT

REMOVAL

(1) Disconnect and isolate the battery negative cable.
(2) Remove the tail lamp unit (Refer to 8 - ELECTRICAL/LAMPS/LIGHTING - EXTERIOR/TAIL LAMP UNIT - REMOVAL).
(3) Squeeze the tabs on housing retaining the bulbs and remove from the tail lamp unit (Fig. 29).

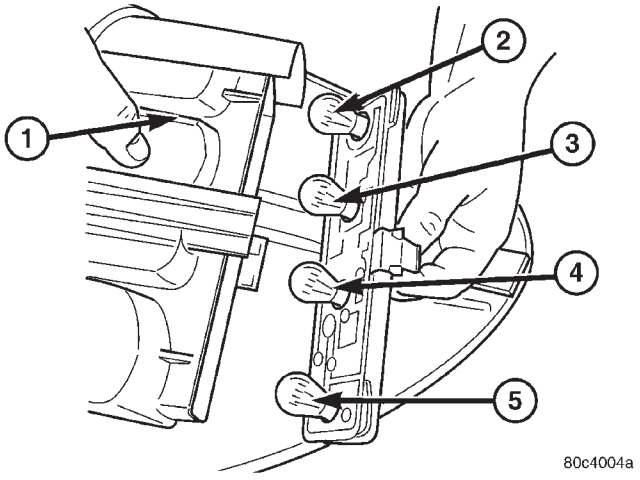

Fig. 29 TAIL LAMP BULBS

1 - TAIL LAMP UNIT
2 - BRAKE/PARK LAMP
3 - TURN SIGNAL LAMP
4 - BACK UP LAMP
5 - REAR FOG LAMP

(4) Remove bulbs by depressing, then turning counter-clockwise.

TAIL LAMP - EXPORT (Continued)

INSTALLATION

(1) Install bulbs by turning clockwise.
(2) Install housing to tail lamp unit.
(3) Install the tail lamp unit (Refer to 8 - ELECTRICAL/LAMPS/LIGHTING - EXTERIOR/TAIL LAMP UNIT - INSTALLATION).
(4) Connect the battery negative cable.

TAIL LAMP UNIT

REMOVAL

(1) Disconnect and isolate the battery negative cable.
(2) Raise the liftgate.
(3) Remove the two retaining fasteners by prying under the head of the fastener with a flat bladed tool (Fig. 30).

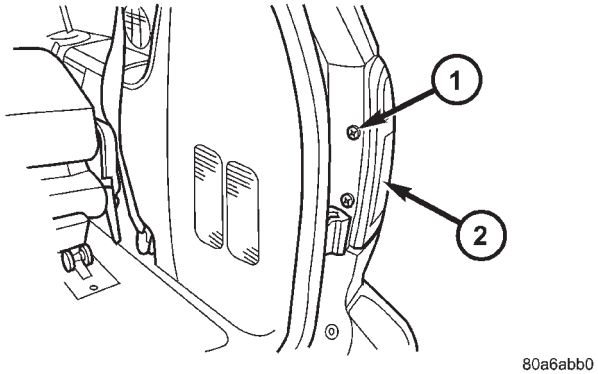

Fig. 30 TAIL LAMP UNIT FASTENERS

1 - TAIL LAMP UNIT FASTENER
2 - TAIL LAMP UNIT

(4) Disengage hook attaching forward end of lamp to quarter panel opening.
(5) Disconnect wire harness connector from tail lamp unit by sliding the red lock, then pressing release tab (Fig. 31).

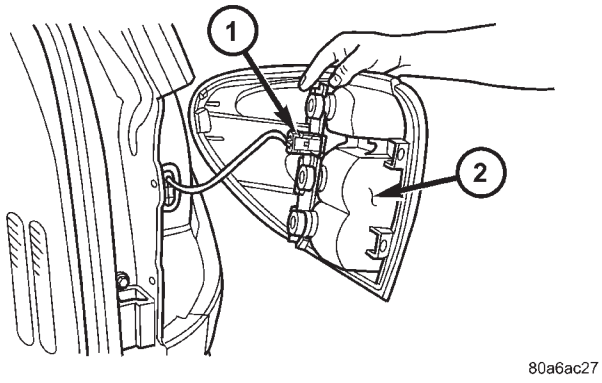

Fig. 31 TAIL LAMP UNIT - REMOVE/INSTALL

1 - WIRE HARNESS CONNECTOR
2 - TAIL LAMP UNIT

INSTALLATION

(1) Reconnect wire harness connector to the tail lamp. Slide lock into position.
(2) Place lamp into position on quarter panel.
(3) Engage hook attaching forward end of lamp to quarter panel.
(4) Insert the two retaining fasteners by pressing into position. Ensure that the head of the fastener is open before inserting.
(5) Close the liftgate.
(6) Reconnect the battery negative cable.

LAMPS/LIGHTING - INTERIOR

TABLE OF CONTENTS

page

LAMPS/LIGHTING - INTERIOR
SPECIFICATIONS
INTERIOR LAMPS 25
CENTER CONSOLE LAMP SWITCH
REMOVAL 26
INSTALLATION 26
CLUSTER ILLUMINATION LAMPS
REMOVAL 26
INSTALLATION 26
COURTESY LAMP
REMOVAL 26
INSTALLATION 26
DOME LAMP
REMOVAL 26
INSTALLATION 26
GLOVE BOX LAMP SWITCH
REMOVAL 26
INSTALLATION 27
LIFTGATE LAMP
REMOVAL 27
INSTALLATION 27
READING LAMP
REMOVAL 27
INSTALLATION 28
VANITY LAMP
REMOVAL 28
INSTALLATION 28

LAMPS/LIGHTING - INTERIOR

SPECIFICATIONS

INTERIOR LAMPS

BULB APPLICATION TABLE

LAMP	BULB
ABS	LED
AIRBAG	LED
ALARM SET	PC74
AUTOSTICK	VFD*
BRAKE SYSTEM WARNING	LED
CONSOLE	194
CRUISE INDICATOR	VFD*
DOME/RAIL LAMPS	578
DOOR AJAR INDICATOR	LED
DOOR COURTESY LAMP	578
FRONT DOOR COURTESY	567
GLOVE BOX	194
HIGH BEAM INDICATOR (BASE CLUSTER)	LED
HIGH BEAM INDICATOR	PC74
CLUSTER ILLUMINATION	PC74
LIFTGATE	578
LIFTGATE AJAR	LED
LOW FUEL INDICATOR	LED
LOW WASHER FLUID INDICATOR	LED
MIL (BASE CLUSTER)	LED
MIL	PC74
OIL INDICATOR (BASE CLUSTER)	LED
OIL INDICATOR	PC74
OVERHEAD CONSOLE READING	PC579
OVERDRIVE OFF INDICATOR	VFD*
READING	578
SEAT BELT INDICATOR	LED
TEMPERATURE INDICATOR	LED
TRAC OFF INDICATOR	VFD*
TURN SIGNAL INDICATOR (BASE CLUSTER)	LED
TURN SIGNAL INDICATOR	PC74
VISOR VANITY	6501966
VOLTAGE INDICATOR	LED
* VFD = VACUUM FLUORESCENT DISPLAY	

CENTER CONSOLE LAMP SWITCH

REMOVAL

(1) Disconnect and isolate the battery negative cable.
(2) Open console lid and remove tray.
(3) Using a flat bladed tool, pry up on the switch.
(4) Remove bulb from switch.

INSTALLATION

(1) Install bulb into switch.
(2) Push switch into console opening.
(3) Install tray and close lid.
(4) Connect battery negative cable.

CLUSTER ILLUMINATION LAMPS

REMOVAL

(1) Remove the Instrument Cluster. Refer to Electrical, Instrument Cluster, Removal.
(2) Turn over cluster and expose the illumination bulb sockets.
(3) Identify which bulb is defective and twist it out of the cluster using a counterclockwise motion.

INSTALLATION

(1) Install the new bulb socket into the cluster using a clockwise motion.
(2) Install the Instrument Cluster. Refer to Electrical, Instrument Cluster, Installation.

COURTESY LAMP

REMOVAL

(1) Disconnect and isolate the battery negative cable.
(2) Using a trim stick, pry lamp from door panel (Fig. 1).
(3) Disconnect wire harness from the lamp.
(4) Remove lens from the lamp and remove bulb.

INSTALLATION

(1) Install bulb and lens to lamp.
(2) Reconnect wire harness to lamp.
(3) Press lamp into the door panel.
(4) Reconnect battery negative cable.

DOME LAMP

REMOVAL

(1) Disconnect and isolate the battery negative cable.

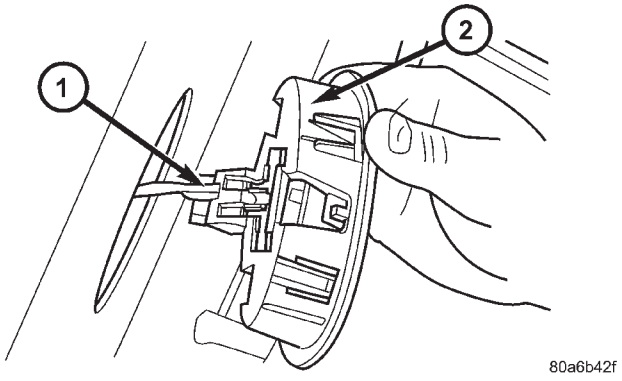

Fig. 1 COURTESY LAMP

1 - WIRE HARNESS
2 - COURTESY LAMP

(2) Using a flat bladed tool, pry off the lamp lens.
(3) Remove bulb from lamp.

INSTALLATION

(1) Install bulb to lamp.
(2) Press lens into place.
(3) Connect battery negative cable.

GLOVE BOX LAMP SWITCH

REMOVAL

(1) Disconnect and isolate the battery negative cable.
(2) Open glove box door.
(3) Push switch through from behind (Fig. 2).

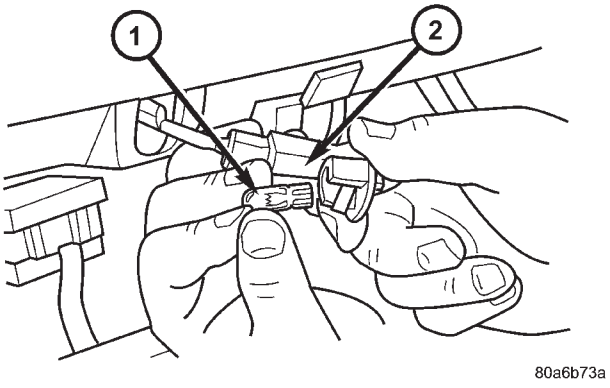

Fig. 2 GLOVE BOX LAMP/SWITCH

1 - GLOVE BOX BULB
2 - GLOVE BOX LAMP SWITCH

(4) Disconnect wire harness from switch.
(5) Pull bulb from switch.

GLOVE BOX LAMP SWITCH (Continued)

INSTALLATION

(1) Push bulb into switch.
(2) Connect wire harness to switch.
(3) Push switch into instrument panel.
(4) Close glove box door.
(5) Reconnect the battery negative cable.

LIFTGATE LAMP

REMOVAL

(1) Disconnect and isolate the battery negative cable.
(2) Using a flat bladed tool, pry lamp from trim panel (Fig. 3).

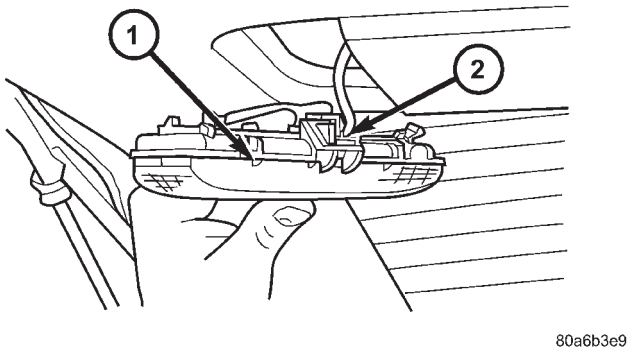

Fig. 3 LIFTGATE LAMP

1 - LIFTGATE LAMP
2 - WIRE HARNESS

(3) Disconnect wire harness connector from lamp.
(4) Pry off lens and remove bulb.

INSTALLATION

(1) Install bulb and snap lens into place.
(2) Reconnect wire harness connector to lamp.
(3) Position lamp onto trim panel and snap into place.
(4) Reconnect battery negative cable.

READING LAMP

REMOVAL

The front reading lamps are incorporated into the overhead console. If the reading lamps require replacement, the overhead console must be replaced. (Refer to 8 - ELECTRICAL/OVERHEAD CONSOLE - REMOVAL). The rear reading lamps are incorporated into the assist handle. If the rear reading lamps require replacement, the assist handle must be replaced. (Refer to 23 - BODY/INTERIOR/ASSIST HANDLE - REMOVAL). The bulbs can be serviced separately.

(1) Disconnect and isolate the battery negative cable.
(2) Using a flat bladed tool, pry off the lamp lens (Fig. 4), (Fig. 5).

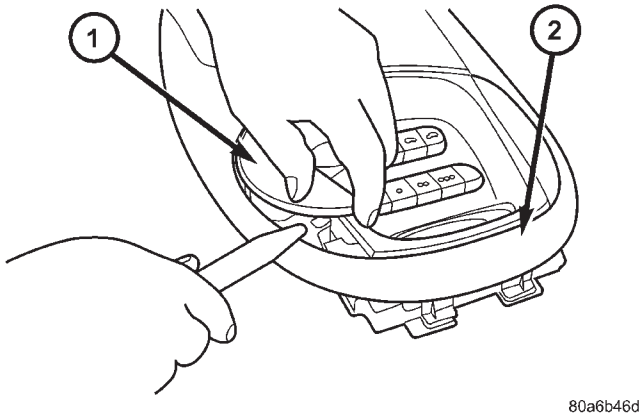

Fig. 4 OVERHEAD CONSOLE

1 - LAMP LENS
2 - OVERHEAD CONSOLE

READING LAMP (Continued)

(3) Remove bulb from lamp (Fig. 6), (Fig. 7).

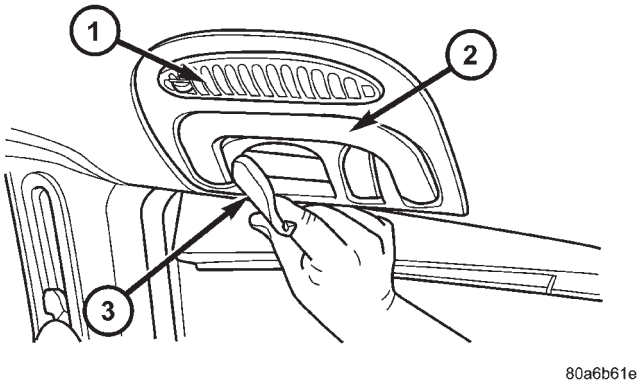

Fig. 5 COURTESY/READING LAMP

1 - HVAC LOUVER
2 - ASSIST HANDLE
3 - LAMP LENS

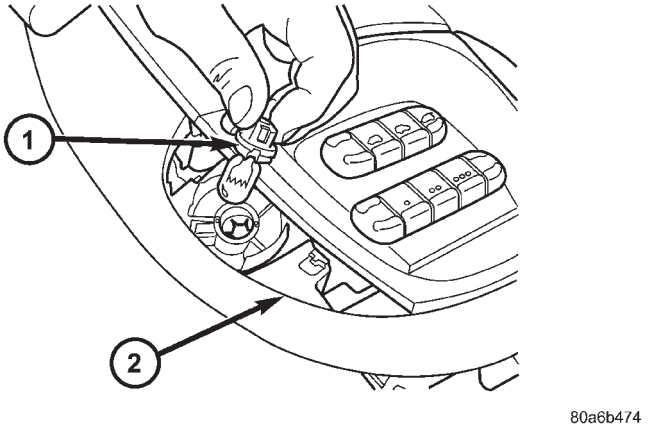

Fig. 6 OVERHEAD CONSOLE LAMP

1 - LAMP
2 - OVERHEAD CONSOLE

INSTALLATION

(1) Install bulb to lamp.
(2) Press lens into place.
(3) Reconnect the battery negative cable.

VANITY LAMP

REMOVAL

The vanity lamp is incorporated into the visor assembly. If the vanity lamp needs to be replaced, the entire visor must be replaced. The bulbs are serviced separately.

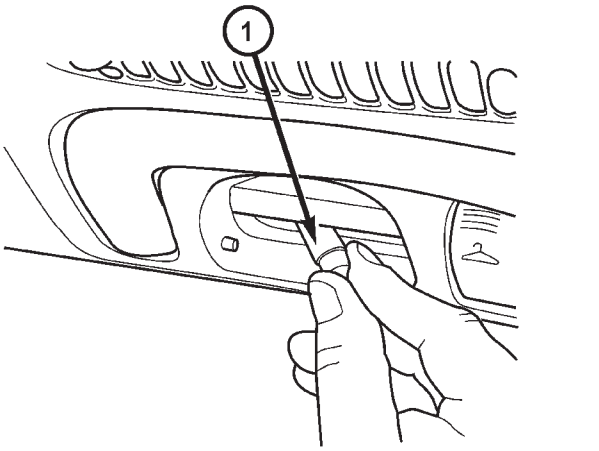

Fig. 7 COURTESY/READING LAMP

1 - COURTESY/READING LAMP

(1) Disconnect and isolate the battery negative cable.
(2) Using a pick or other suitable tool, pry the lens from the lamp (Fig. 8).

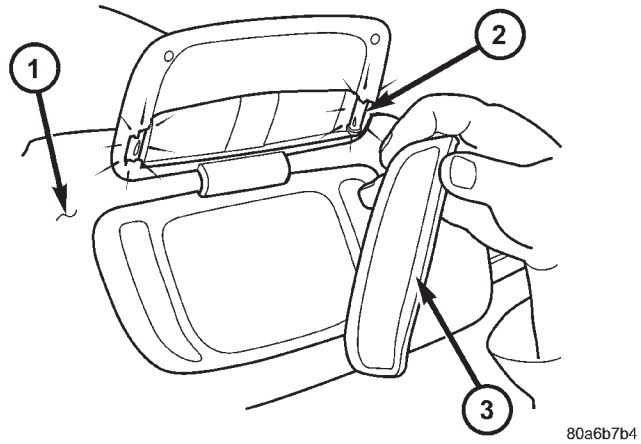

Fig. 8 VANITY LAMP

1 - VISOR
2 - VISOR/VANITY LAMP
3 - LENS

(3) Remove bulb.

INSTALLATION

(1) Install bulb.
(2) Snap lamp lens into position.
(3) Connect the battery negative cable.

MESSAGE SYSTEMS

TABLE OF CONTENTS

page

OVERHEAD CONSOLE
DESCRIPTION 1
OPERATION 2
DIAGNOSIS AND TESTING - OVERHEAD CONSOLE 2
STANDARD PROCEDURE
STANDARD PROCEDURE - READING/ COURTESY LAMP REPLACEMENT 3
STANDARD PROCEDURE - COMPASS CALIBRATION 3
STANDARD PROCEDURE - COMPASS DEMAGNETIZING 4
STANDARD PROCEDURE - COMPASS VARIATION ADJUSTMENT 4
REMOVAL - OVERHEAD CONSOLE 5
INSTALLATION 5
ELECTRONIC VEHICLE INFO CENTER
DESCRIPTION 6
OPERATION 6
DIAGNOSIS AND TESTING - ELECTRONIC VEHICLE INFORMATION CENTER 6
STANDARD PROCEDURE - ELECTRONIC VEHICLE INFORMATION CENTER PROGRAMMING 7

page

REMOVAL 8
INSTALLATION 8
COMPASS/MINI-TRIP COMPUTER
DESCRIPTION 9
OPERATION 9
DIAGNOSIS AND TESTING - COMPASS MINI-TRIP COMPUTER 9
REMOVAL 9
INSTALLATION 9
UNIVERSAL TRANSMITTER
DESCRIPTION 9
OPERATION 10
DIAGNOSIS AND TESTING - UNIVERSAL TRANSMITTER 10
AMBIENT TEMP SENSOR
DESCRIPTION 10
OPERATION 10
DIAGNOSIS AND TESTING
DIAGNOSIS AND TESTING - AMBIENT TEMPERATURE SENSOR 11
DIAGNOSIS AND TESTING - AMBIENT TEMPERATURE SENSOR CIRCUIT 11
REMOVAL 11
INSTALLATION 11

OVERHEAD CONSOLE

DESCRIPTION

Three overhead consoles are available on RS/RG models. These are the Electronic Vehicle Information Center (EVIC), Compass Mini-Trip Computer (CMTC) or a Compass Temperature Computer (CT). All consoles are equipped with two reading/courtesy lamps and if the vehicle is equipped with a power liftgate or power sliding door(s) the overhead console will also include command switches for these features. The overhead console is mounted with one screw and two snap clips to a molded plastic retainer bracket located above the headliner.

DESCRIPTION - COMPASS

All the available overhead consoles on this model include Compass information. While in the compass/ temperature mode, the compass will display the direction in which the vehicle is pointed using the eight major compass headings (Examples: north is N, northeast is NE). The self-calibrating compass unit requires no adjusting in normal use. The only calibration that may prove necessary is to drive the vehicle in three complete circles at 5 to 8 kilometers-per-hour (3 to 5 miles-per-hour), on level ground, in not less than forty-eight seconds. This will reorient the compass unit to its vehicle.

The compass unit also will compensate for magnetism the body of the vehicle may acquire during normal use. However, avoid placing anything magnetic directly on the roof of the vehicle. Magnetic mounts for an antenna, a repair order hat, or a funeral procession flag can exceed the compensating ability of the compass unit if placed on the roof panel. Magnetic bit drivers used on the fasteners that hold the overhead console assembly to the roof header can also affect compass operation. If the vehicle roof should become magnetized, the demagnetizing and calibration procedures found in this section may be required to restore proper compass operation.

DESCRIPTION - TEMPERATURE

All the available overhead consoles on this model include Temperature information. The temperature displays the outside ambient temperature in whole degrees. The temperature display can be toggled

OVERHEAD CONSOLE (Continued)

from Fahrenheit to Celsius by selecting the desired U.S./Metric option from the customer programmable features. The displayed temperature is not an instant reading of conditions, but an average temperature. It may take the temperature display several minutes to respond to a major temperature change, such as driving out of a heated garage into winter temperatures.

When the ignition switch is turned to the Off position, the last displayed temperature reading stays in the electronic control modules (CT, CMTC, EVIC) memory. When the ignition switch is turned to the On position again, the electronic module will display the memory temperature for one minute; then update the display to the current average temperature reading within five minutes.

The temperature function is supported by an ambient temperature sensor. The sensor is mounted outside the passenger compartment near the front and center of the vehicle, and is hard wired to the Front Control Module (FCM). The FCM sends temperature status messages to the module over the J1850 PCI data bus circuit.

Following are general descriptions of the major components used in the overhead console. Refer to Wiring Diagrams for complete circuit schematics.

OPERATION

Refer to the vehicle Owner's Manual for specific operation of each overhead console and its systems.

DIAGNOSIS AND TESTING - OVERHEAD CONSOLE

If the problem with the overhead console is an inaccurate or scrambled display, refer to **Self-Diagnostic Test** below. If the problem with the overhead console is incorrect Vacuum Fluorescent Display (VFD) dimming levels, use a DRB III® scan tool and the proper Diagnostic Procedures manual to test for the correct dimming message inputs being received from the Body Control Module (BCM) or Front Control Module (FCM) over the J1850 Programmable Communications Interface (PCI) data bus circuit. If the problem is a no-display condition, use the following procedures. For complete circuit diagrams, refer to **Overhead Console** in the Wiring Diagrams section of the service manual.

(1) Check the fused B(+) fuse in the integrated power module. If OK, go to Step 2. If not OK, repair the shorted circuit or component as required and replace the faulty fuse.

(2) Check for battery voltage at the fused B(+) fuse in the integrated power module. If OK, go to Step 3. If not OK, repair the open fused B(+) circuit to the fused B(+) fuse in the integrated power module as required.

(3) Check the fused ignition switch output (run/start) fuse in the integrated power module. If OK, go to Step 4. If not OK, repair the shorted circuit or component as required and replace the faulty fuse.

(4) Turn the ignition switch to the On position. Check for battery voltage at the fused ignition switch output (run/start) fuse in the integrated power module. If OK, go to Step 5. If not OK, repair the open fused ignition switch output (run/start) circuit to the ignition switch as required.

(5) Turn the ignition switch to the Off position. Disconnect and isolate the battery negative cable. Remove the overhead console. Check for continuity between the ground circuit cavity of the roof wire harness connector for the electronics module and a good ground. There should be continuity. If OK, go to Step 6. If not OK, repair the open ground circuit to ground as required.

(6) Connect the battery negative cable. Check for battery voltage at the fused B(+) circuit cavity of the roof wire harness connector for the electronics module. If OK, go to Step 7. If not OK, repair the open fused B(+) circuit to the fused B(+) fuse in the integrated power module as required.

(7) Turn the ignition switch to the On position. Check for battery voltage at the fused ignition switch output (run/start) circuit cavity of the roof wire harness connector for the electronics module. If OK, refer to **Self-Diagnostic Test** later this group for further diagnosis of the electronics module and the J1850 PCI data bus circuit. If not OK, repair the open fused ignition switch output (run/start) circuit to the fuse in the integrated power module as required.

SELF-DIAGNOSTIC TEST

A self-diagnostic test is used to determine that the electronics module is operating properly, and that all the J1850 PCI data bus messages are being received for initial operation. Initiate the self-diagnostic test as follows:

(1) With the ignition switch in the Off position, on Electronic Vehicle Information Center (EVIC) and Compass Mini-Trip Computer (CMTC) equipped vehicles simultaneously depress and hold the **STEP and the RESET buttons**. On Compass Temperature Module (CT) equipped vehicles depress the **C/T and the US/M push buttons**.

(2) Turn the ignition switch to the On position.

(3) Following completion of these tests, the electronics module will display one of the following messages:

a. **Pass Self Test (EVIC only), PASS (CT, CMTC)** - The electronics module is working properly.

b. **Failed Self Test (EVIC only), FAIL (CT, CMTC)** - The electronics module has an internal fail-

OVERHEAD CONSOLE (Continued)

ure. The electronics module is faulty and must be replaced.

c. **Failed J1850 Communication (EVIC only), BUS (CT, CMTC)** - The electronics module is not receiving proper message input through the J1850 PCI data bus circuit. This can result from one or more faulty electronic modules in the vehicle, or from a faulty PCI data bus. The use of a DRB III® scan tool and the proper Diagnostic Procedures manual are required for further diagnosis.

NOTE: If the compass functions, but accuracy is suspect, it may be necessary to perform a variation adjustment. This procedure allows the compass unit to accommodate variations in the earth's magnetic field strength, based on geographic location. Refer to Compass Variation Adjustment in the Service Procedures section of this group.

NOTE: If the compass reading displays dashes, and only "CAL" appears in the display, demagnetizing may be necessary to remove excessive residual magnetic fields from the vehicle. Refer to Compass Demagnetizing in the Service Procedures section of this group.

STANDARD PROCEDURE

STANDARD PROCEDURE - READING/ COURTESY LAMP REPLACEMENT

(1) Open hood, disconnect and isolate the negative battery cable remote terminal from the remote battery post.

(2) Remove the reading/courtesy lamp lens. Using a trim stick, gently pry the forward edge of the reading/courtesy lamp lens outward.

(3) Remove the reading/courtesy lamp socket from the overhead console. Rotate the reading/courtesy lamp socket one quarter turn counter clockwise.

(4) Remove the lamp and socket assembly.

(5) Reverse the above procedure to install.

STANDARD PROCEDURE - COMPASS CALIBRATION

CAUTION: Do not place any external magnets, such as magnetic roof mount antennas, in the vicinity of the compass. Do not use magnetic tools when servicing the overhead console.

The electronic compass unit features a self-calibrating design, which simplifies the calibration procedure. This feature automatically updates the compass calibration while the vehicle is being driven. This allows the compass unit to compensate for small changes in the residual magnetism that the vehicle may acquire during normal use. If the compass readings appear to be erratic or out of calibration, perform the following calibration procedure. Also, new service replacement Electronic Modules (EVIC, CMTC, CT) must have their compass calibrated using this procedure. Do not attempt to calibrate the compass near large metal objects such as other vehicles, large buildings, or bridges; or, near overhead or underground power lines.

NOTE: Whenever the compass is calibrated manually, the variance number must also be reset. Refer to Compass Variation Adjustment in this group.

Calibrate the compass manually as follows:

(1) Turn the ignition switch to the On position. If the compass/thermometer data is not currently being displayed, momentarily depress and release the C/T push button to reach the compass/thermometer display.

(2) On Electronic Vehicle Information Center (EVIC) and Compass Mini-Trip Computer (CMTC) equipped vehicles depress the Reset push button and hold the button down until "CAL" appears in the display. This takes about ten seconds, and appears about five seconds after "VAR = XX" is displayed. On Compass Temperature Module (CT) equipped vehicles depress the C/T push button and US/M push button down until "CAL" appears in the display. This takes about ten seconds, and appears about five seconds after "VAR = XX" is displayed.

(3) Release the push button(s).

(4) Drive the vehicle on a level surface, away from large metal objects and power lines, through three or more complete circles at between five and eight kilometers-per-hour (three and five miles-per-hour) in not less than 48 seconds. The "CAL" message will disappear from the display to indicate that the compass is now calibrated.

NOTE: If the "CAL" message remains in the display, either there is excessive magnetism near the compass, or the unit is faulty. Repeat the calibration procedure one more time.

NOTE: If the wrong direction is still indicated in the compass display, the area selected for calibration may be too close to a strong magnetic field. Repeat the calibration procedure in another location.

OVERHEAD CONSOLE (Continued)

STANDARD PROCEDURE - COMPASS DEMAGNETIZING

A degaussing tool (Special Tool 6029) is used to demagnetize, or degauss, the overhead console forward mounting screw and the roof panel above the overhead console. Equivalent units must be rated as continuous duty for 110/115 volts and 60 Hz. They must also have a field strength of over 350 gauss at 7 millimeters (0.25 inch) beyond the tip of the probe.

To demagnetize the roof panel and the overhead console forward mounting screw, proceed as follows:

(1) Be certain that the ignition switch is in the Off position, before you begin the demagnetizing procedure.

(2) Connect the degaussing tool to an electrical outlet, while keeping the tool at least 61 centimeters (2 feet) away from the compass unit.

(3) Slowly approach the head of the overhead console forward mounting screw with the degaussing tool connected.

(4) Contact the head of the screw with the plastic coated tip of the degaussing tool for about two seconds.

(5) With the degaussing tool still energized, slowly back it away from the screw. When the tip of the tool is at least 61 centimeters (2 feet) from the screw head, disconnect the tool.

(6) Place a piece of paper approximately 22 by 28 centimeters (8.5 by 11 inches), oriented on the vehicle lengthwise from front to rear, on the center line of the roof at the windshield header (Fig. 1). The purpose of the paper is to protect the roof panel from scratches, and to define the area to be demagnetized.

(7) Connect the degaussing tool to an electrical outlet, while keeping the tool at least 61 centimeters (2 feet) away from the compass unit.

(8) Slowly approach the center line of the roof panel at the windshield header, with the degaussing tool connected.

(9) Contact the roof panel with the plastic coated tip of the degaussing tool. Be sure that the template is in place to avoid scratching the roof panel. Using a slow, back-and-forth sweeping motion, and allowing 13 millimeters (0.50 inch) between passes, move the tool at least 11 centimeters (4 inches) to each side of the roof center line, and 28 centimeters (11 inches) back from the windshield header.

(10) With the degaussing tool still energized, slowly back it away from the roof panel. When the tip of the tool is at least 61 centimeters (2 feet) from the roof panel, disconnect the tool.

(11) Calibrate the compass and adjust the compass variance (Refer to 8 - ELECTRICAL/OVERHEAD CONSOLE - STANDARD PROCEDURE).

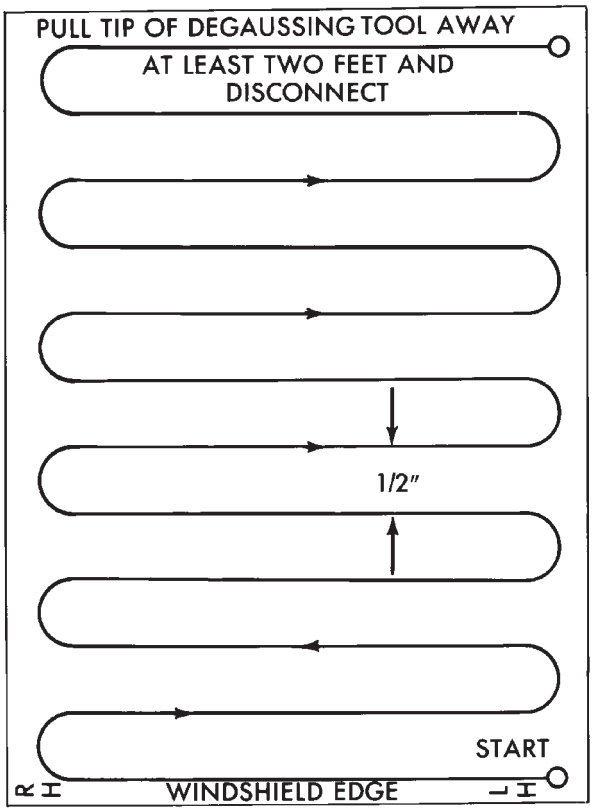

Fig. 1 Roof Demagnetizing Pattern

STANDARD PROCEDURE - COMPASS VARIATION ADJUSTMENT

Compass variance, also known as magnetic declination, is the difference in angle between magnetic north and true geographic north. In some geographic locations, the difference between magnetic and geographic north is great enough to cause the compass to give false readings. If this problem occurs, the compass variance setting may need to be changed.

To set the compass variance:

(1) Using the Variance Settings map, find your geographic location and note the zone number (Fig. 2).

(2) Turn the ignition switch to the On position. If the compass/thermometer data is not currently being displayed, momentarily depress and release the C/T push button to reach the compass/thermometer display.

(3) On Electronic Vehicle Information Center (EVIC) and Compass Mini-Trip Computer (CMTC) equipped vehicles depress the Reset push button and hold the button down until “VAR = XX” appears in the display. This takes about five seconds. On Compass Temperature Module (CT) equipped vehicles depress the C/T push button and US/M push button

OVERHEAD CONSOLE (Continued)

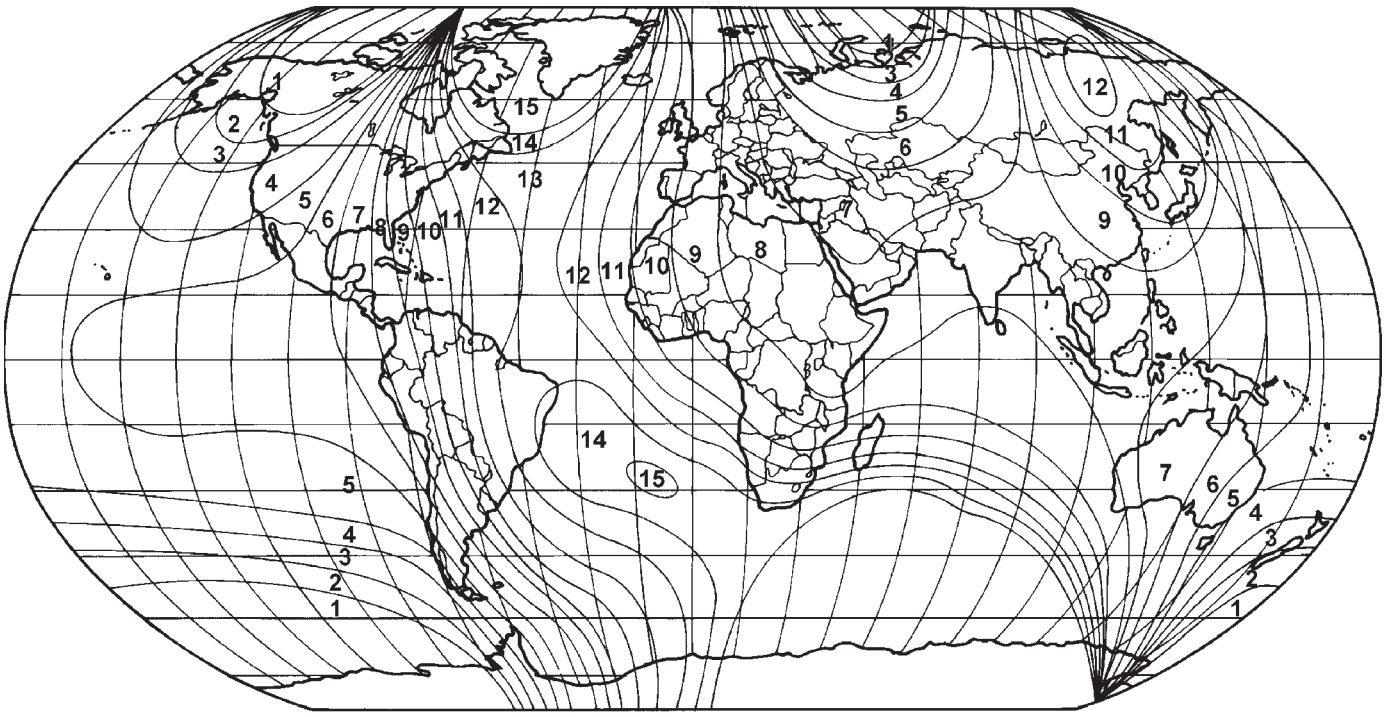

Fig. 2 Variance Settings

down until “VAR = XX” appears in the display. This takes about five seconds.

(4) Release the push button(s). “VAR =XX ” will remain in the display. “XX” equals the current variance zone setting.

(5) On Electronic Vehicle Information Center (EVIC) and Compass Mini-Trip Computer (CMTC) equipped vehicles momentarily depress and release the **Step push button** to step through the zone numbers, until the zone number for your geographic location appears in the display. On Compass Temperature Module (CT) equipped vehicles depress the **US/M push button** to step through the zone numbers, until the zone number for your geographic location appears in the display.

(6) On Electronic Vehicle Information Center (EVIC) and Compass Mini-Trip Computer (CMTC) equipped vehicles momentarily depress and release the **Reset push button** to enter the displayed zone number into the EVIC/CMTC module memory. On Compass Temperature Module (CT) equipped vehicles depress the **C/T push button** to enter the displayed zone number into the electronic module memory.

(7) Confirm that the correct directions are now indicated by the compass.

REMOVAL - OVERHEAD CONSOLE

(1) Disconnect and isolate the remote negative battery cable.

(2) Remove the overhead console retaining screw, located in the front of console.

(3) Using your fingertips, grasp the sides of the overhead console and pull straight down evenly to disengage the two snap clips at the rear of the unit.

(4) Lower the overhead console far enough to access the wire harness connectors.

(5) Disconnect the EVIC, CMTC or CT electronic module and the reading/courtesy lamps electrical connector.

(6) Remove the overhead console from the vehicle.

INSTALLATION

(1) Position the overhead console in the vehicle.

(2) Connect the EVIC, CMTC or CT electronic module and the reading/courtesy lamps electrical connector.

(3) Using your fingertips, grasp the sides of the overhead console and push straight up evenly to engage the two snap clips at the rear of the unit.

CAUTION: DO NOT PRESS ON THE SUNGLASS STORAGE BIN DOOR. DAMAGE TO THE DOOR MAY RESULT.

(4) Install the overhead console retaining screw, located in the front of console. Torque the screw to 1.2 N·m (10 in. lbs.).

(5) Connect the remote negative battery cable.

ELECTRONIC VEHICLE INFO CENTER

DESCRIPTION

The Electronic Vehicle Information Center (EVIC) is a module located in the overhead console on some models. The EVIC module features a large Vacuum Fluorescent Display (VFD) screen for displaying information, and back-lit push button switches labeled C/T (compass/thermometer), RESET, STEP, and MENU.

The EVIC module contains a central processing unit and interfaces with other electronic modules in the vehicle over the Programmable Communications Interface (PCI) J1850 data bus circuit. The PCI data bus circuit allows the sharing of sensor information. This helps to reduce wire harness complexity, reduce internal controller hardware, and reduce component sensor current loads. At the same time, this system provides increased reliability, enhanced diagnostics, and allows the addition of many new feature capabilities.

The EVIC "Menu" push button provides the vehicle operator with a user interface, which allows the selection of several optional customer programmable electronic features to suit individual preferences. Refer to **ELECTRONIC VEHICLE INFORMATION CENTER PROGRAMMING** in the Service Procedures section of this group for more information on the customer programmable feature options.

If the vehicle is equipped with the optional universal transmitter transceiver, the EVIC will also display messages and an icon indicating when the universal transmitter transceiver is being trained, which of the three transmitter buttons is transmitting, and when the transceiver is cleared.

Data input for all EVIC functions, including VFD dimming level, is received through the J1850 PCI data bus circuit. The EVIC module uses its internal programming and all of its data inputs to calculate and display the requested data. If the data displayed is incorrect, perform the self-diagnostic tests as described in this group. If these tests prove inconclusive, the use of a DRBIII® scan tool and the proper Diagnostic Procedures manual are recommended for further testing of the EVIC module and the J1850 PCI data bus circuit.

The EVIC module cannot be repaired, and is available for service only as a unit. This unit includes the plastic module and display lens. If any of these components is faulty or damaged, the complete EVIC module must be replaced.

OPERATION

The EVIC has access to both non-switched and ignition switched sources of battery current so that some of its features remain operational at any time, while others may only operate with the ignition switch in the On position. When the ignition switch is turned to the On position, the EVIC module VFD will return to the last function being displayed before the ignition was turned to the Off position.

The compass/thermometer display is the normal EVIC display. With the ignition switch in the On position, momentarily depressing and releasing the C/T (compass/thermometer) push button switch will cause the EVIC to return to the compass/thermometer/trip computer display mode from any other mode. While in the compass/thermometer/trip computer display mode, momentarily depressing and releasing the Step push button will step through the available trip computer display options.

The EVIC trip computer features several functions that can be reset. The functions that can be reset are: average fuel economy, trip odometer and elapsed time. With the ignition switch in the On position and with one of the functions of the trip computer that can be reset currently displayed, depressing the Reset push button twice within three seconds will perform a global reset, and all of the trip computer information that can be reset will be reset to zero. With the ignition switch in the On position and the function that is to be reset currently displayed, momentarily depressing and releasing the Reset push button once will perform a local reset, and only the value of the displayed function will be reset to zero. A global or local reset will only occur if the function currently displayed is a function that can be reset. The distance to service function can also be reset using the local reset method, but it will reset back to the Service Interval distance that is set in the EVIC programmable features mode. Refer to **ELECTRONIC VEHICLE INFORMATION CENTER PROGRAMMING** in the Service Procedures section of this group for more information on setting the Service Interval.

For more information on the features, control functions and setting procedures for the EVIC module, see the owner's manual in the vehicle glove box.

DIAGNOSIS AND TESTING - ELECTRONIC VEHICLE INFORMATION CENTER

Electronic Vehicle Information Center (EVIC) data is obtained from the Body Control Module (BCM) on the J1850 Data Bus circuit. The EVIC will display dashes (- -) for any of the screens it did not receive the bus messages. The label corresponding to the missing information will be lit. If no EVIC data is displayed, check the J1850 Data Bus circuit commu-

ELECTRONIC VEHICLE INFO CENTER (Continued)

nications and the BCM. If the brightness level is improper check the J1850 Data Bus circuit.

The DRB III® is recommended for checking the J1850 Data Bus circuit and the BCM. Perform the EVIC self diagnosis before replacing the EVIC module.

STANDARD PROCEDURE - ELECTRONIC VEHICLE INFORMATION CENTER PROGRAMMING

EVIC PROGRAMMING MODE

Some vehicles are equipped with a Electronic Vehicle Information Center (EVIC) equipped overhead console. The Electronic Vehicle Information Center (EVIC) provides the vehicle operator with a user interface, which allows the selection of several optional customer programmable electronic features to suit individual preferences. The EVIC must be placed into its programming mode in order to view or change the programmable features. To enter the EVIC programming mode and to view or change the selected programmable features options, proceed as follows:

(1) Turn the ignition switch to the On position.

(2) Depress and release the Menu push button. The first item in the programmable features menu list will appear in the EVIC display.

(3) Momentarily depress and release the Menu push button to step through the programmable features list. Each programmable feature and its currently selected option will appear on the EVIC display in the sequence shown in the Programmable Features list that follows.

(4) Momentarily depress and release the Step push button to step through the available options for the programmable feature being displayed.

(5) The option that last appears in the display with a programmable feature before exiting the programming mode, becomes the newly selected programmable feature option.

(6) The EVIC exits the programming mode and returns to its normal operating mode when the C/T push button is depressed or when the end of the programmable features menu list is reached, whichever occurs first.

PROGRAMMABLE FEATURES

NOTE: TIRE PRESSURE MONITORING (TPM) SYSTEM INFORMATION IS NOT COVERED IN THIS SECTION OF THE SERVICE MANUAL. REFER TO THE TIRES/WHEELS SECTION OF THIS MANUAL FOR DETAILED TPM SYSTEM INFORMATION.

- **LANGUAGE?** - The options include English, Francaise, Deutsch, Italiana, or Espanol. The default is English. All EVIC display nomenclature, including the trip computer functions, warning messages and the programmable features appear in the selected language.
- **DISPLAY U.S. OR METRIC?** - The options include U.S. and M. The default is U.S. This feature toggles the trip computer temperature, fuel economy and odometer display readings between U.S. and metric units of measure. It also changes the odometer display in the instrument cluster.
- **SERVICE INTV. =** - The options include from 1000 to 12000 kilometers in 1000 kilometer increments (2000 to 7500 miles in 500 mile increments). The default is 12000 kilometers (7500 miles). The selected distance becomes the interval at which the Perform Service warning message will be displayed by the EVIC. If a new distance is selected, a second programmable feature appears, **RESET SERVICE DISTANCE?** - The options include No and Yes. The default is Yes. When Yes is selected, the accumulated distance since the last previous Perform Service warning message will be reset to zero because the service interval has been changed. When No is selected, the distance until the next Perform Service warning message is reduced by the accumulated distance since the last previous message.
- **USE FACTORY SETTINGS?** - The options include Yes and No. The default is Yes. When yes is selected all the programmable features will return to there defaults and the rest of the programmable features will not be displayed. If No is selected the rest of the programmable features will be displayed at there default values. This feature will automatically return to the Yes default under two conditions. First, if no programmable features are changed from there defaults. Second, if all the programmable features equal there defaults.
- **AUTO DOOR LOCKS?** - The options include Yes and No. The default is Yes. When Yes is selected, all doors and the liftgate lock automatically when vehicle speed reaches 25 kilometers-per-hour (15 miles-per-hour). If YES is selected, a second programmable feature appears, **AUTO UNLOCK ON EXIT?** - The options again include Yes and No. The default is No. When Yes is selected, following each Auto Door Lock event all doors and the liftgate will automatically unlock when the driver door is opened, if the vehicle is stopped and the transmission gear selector is in Park or Neutral. The Auto Door Unlock event will only occur once following each Auto Door Lock event.
- **REMOTE UNLOCK** - The options include Driver Door 1st and All Doors. The default is Driver Door 1st. When Diver Door 1st is selected, only the

ELECTRONIC VEHICLE INFO CENTER (Continued)

driver door unlocks when the Unlock button of the Remote Keyless Entry (RKE) transmitter is depressed once. The Unlock button of the RKE transmitter must be depressed twice to unlock all doors. When All Doors is selected, all doors unlock when the Unlock button of the RKE transmitter is depressed once.

- **REMOTE LINKED TO MEMORY?** - This programmable feature only applies to vehicles equipped with the optional memory / heated system. The options include Yes and No. The default is No. When Yes is selected, the memory system will recall the Driver 1 or Driver 2 memory settings assigned to the RKE transmitter being used to unlock the vehicle. When No is selected, the memory system will only recall memory settings when the Driver 1 or Driver 2 push buttons of the memory switch on the driver side front door trim panel are depressed.
- **SOUND HORN ON LOCK?** - The options include Yes and No. The default is No. When Yes is selected, a short horn chirp will provide an audible confirmation when the RKE receiver recognizes a valid Lock signal from an RKE transmitter. When No is selected, no horn chirp will occur with the RKE Lock event. This feature may be selected independent of the **FLASH LIGHTS WITH LOCKS?** programmable feature.
- **FLASH LIGHTS WITH LOCKS?** - The options include Yes and No. The default is Yes. When Yes is selected, a single flash of the hazard warning lamps will provide an optical confirmation when the RKE receiver recognizes a valid Lock signal from an RKE transmitter, and two flashes of the same lamps will occur when the RKE receiver recognizes a valid Unlock signal from an RKE transmitter. When No is selected, no lamp flash will occur with the RKE Lock or Unlock event. This feature may be selected independent of the **SOUND HORN ON LOCK?** programmable feature.
- **HEADLAMP DELAY =** - The options include Off, 30 Sec, 60 Sec, and 90 Sec. The default is 90 Sec. When a time interval is selected, the headlamps will remain on for that length of time when the headlamps are turned off after the ignition is turned off, or if the Auto mode is selected on vehicles with the Auto Headlamps option. When Off is selected, the headlamp delay feature is disabled.
- **HEADLAMPS ON WITH WIPERS?** - This programmable feature only applies to vehicles equipped with the optional Auto Headlamps. The options include Yes and No. The default is No. When Yes is selected, the headlamps will turn on automatically when the windshield wipers are turned on. The headlamps will turn off when the wipers are turned off, as long as the headlamp switch is in the Auto or Off positions. When No is selected, the headlamps will only turn on if manually selected or if the Auto mode is selected and the outside ambient light levels dictate that they should be on.
- **RETRAIN TIRE SENSORS?** - This programmable feature only applies to vehicles equipped with the optional Tire Pressure Monitoring System. The options include Yes and No. The default is No. When Yes is selected, and the menu button is depressed the EVIC will enter the training mode, starting with the left front tire.
- **POWER ACCESSORY DELAY?** - The options include Yes and No. The default is Yes. When No is selected, the accessory powered components will turn off automatically when the ignition key is turned off. When Yes is selected, the accessory powered components will remain on for 45 seconds when the ignition key is turned off.

REMOVAL

(1) Disconnect and isolate the battery negative cable.

(2) Remove overhead console. Refer to Overhead Console Removal and Installation in this section(Refer to 8 - ELECTRICAL/OVERHEAD CONSOLE - REMOVAL).

(3) Remove the ten screws holding the EVIC module in the overhead console.

(4) Remove EVIC module from console assembly.

NOTE: IF THE EVIC MODULE IS BEING REPLACED THE TIRE PRESSURE MONITORING SYSTEM (if equipped) MUST BE RETRAINED. REFER TO THE TIRES/WHEELS SECTION OF THIS MANUAL FOR DETAILED INSTRUCTIONS.

INSTALLATION

(1) Position the EVIC module in the overhead console.

(2) Install the ten screws holding the EVIC module in the overhead console.

(3) Install the overhead console (Refer to 8 - ELECTRICAL/OVERHEAD CONSOLE - INSTALLATION).

(4) Connect the battery negative cable.

NOTE: IF THE EVIC MODULE IS BEING REPLACED THE TIRE PRESSURE MONITORING SYSTEM (if equipped) MUST BE RETRAINED. REFER TO THE TIRES/WHEELS SECTION OF THIS MANUAL FOR DETAILED INSTRUCTIONS.

ELECTRONIC VEHICLE INFO CENTER (Continued)

NOTE: IF A NEW EVIC MODULE HAS BEEN INSTALLED, THE COMPASS WILL HAVE TO BE CALIBRATED AND THE VARIANCE SET. REFER TO COMPASS VARIATION ADJUSTMENT AND COMPASS CALIBRATION IN THE SERVICE PROCEDURES SECTION OF THIS GROUP FOR THE PROCEDURES.

COMPASS/MINI-TRIP COMPUTER

DESCRIPTION

The Compass Mini-Trip Computer (CMTC) and Compass Temperature (CT) computer are modules located in the overhead console. Vehicles are equipped with either the CMTC or the CT computers not both. The CMTC is different in the fact that it is equipped with the mini-trip feature. The CMTC, CT consists of a electronic control module with a vacuum fluorescent display (VFD) and function switches. The CMTC, CT consists of a electronic module that displays compass, trip computer (CMTC only), and temperature features. Actuating the STEP push button (CMTC only) will cause the CMTC to change mode of operation when ignition is ON. Actuating the STEP push button (CMTC only) will cause the CMTC to change mode of operation when ignition is ON. Example:

- Average miles per gallon (ECO)
- Distance to empty (DTE)
- Instant miles per gallon (ECO)
- Trip odometer (ODO)
- Elapsed time (ET)
- Off

Actuating the C/T push button will cause the CMTC, CT to change to Compass/Temperature display.

OPERATION

The Compass Mini-Trip Computer (CMTC), Compass Temperature (CT) module in the overhead console has buttons used to select various functions. The CMTC, CT selector buttons will not operate until the ignition is in the RUN position.

When the ignition switch is first turned to the RUN position the CMTC, CT display;

- Blanks momentarily
- All segments of the VFD will light for one second
- Blanks momentarily
- Returns to the last mode setting selected before the ignition was last switched OFF.

DIAGNOSIS AND TESTING - COMPASS MINI-TRIP COMPUTER

Compass Mini-Trip Computer (CMTC) and Compass Temperature (CT) data is obtained from the Body Control Module (BCM) on the J1850 Data Bus circuit. The CMTC and CT will display dashes (- -) for any of the screens it did not receive the bus messages. The label corresponding to the missing information will be lit. If no compass mini-trip computer data is displayed, check the J1850 Data Bus circuit communications and the BCM. If the brightness level is improper check the J1850 Data Bus circuit.

The DRB III® is recommended for checking the J1850 Data Bus circuit and the BCM. Perform the CMTC, CT self diagnosis before replacing the CMTC or CT module.

REMOVAL

(1) Disconnect and isolate the battery negative cable.

(2) Remove overhead console. Refer to Overhead Console Removal and Installation in this section(Refer to 8 - ELECTRICAL/OVERHEAD CONSOLE - REMOVAL).

(3) Remove the screws holding Compass Mini-Trip Computer module in the overhead console.

(4) Remove CMTC module from console assembly.

INSTALLATION

(1) Position the compass mini-trip computer module in the overhead console.

(2) Install the ten screws holding the compass mini-trip computer module in the overhead console.

(3) Install the overhead console. Refer to Overhead Console Removal and Installation in this section.

(4) Connect the battery negative cable.

NOTE: If a new module has been installed, the compass will have to be calibrated and the variance set. Refer to Compass Variation Adjustment and Compass Calibration in the Service Procedures section of this group for the procedures.

UNIVERSAL TRANSMITTER

DESCRIPTION

On some RS models a Universal Transmitter transceiver is standard factory-installed equipment. The universal transmitter transceiver is integral to the Electronic Vehicle Information Center (EVIC) and the Compass Mini-Trip Computer (CMTC), which is located in the overhead console. The only visible component of the universal transmitter are the three transmitter push buttons centered between the mod-

UNIVERSAL TRANSMITTER (Continued)

ules push buttons located just rearward of the display screen in the overhead console. The three universal transmitter push buttons are identified with one, two or three light indicators so that they be easily identified by sight or by feel.

Each of the three universal transmitter push buttons controls an independent radio transmitter channel. Each of these three channels can be trained to transmit a different radio frequency signal for the remote operation of garage door openers, motorized gate openers, home or office lighting, security systems or just about any other device that can be equipped with a radio receiver in the 286 to 399 MegaHertz (MHz) frequency range for remote operation. The universal transmitter is capable of operating systems using either rolling code or non-rolling code technology.

The electronics module displays messages and a small house-shaped icon with one, two or three dots corresponding to the three transmitter buttons to indicate the status of the universal transmitter. The EVIC messages are:

- **Cleared Channels** - Indicates that all of the transmitter codes stored in the universal transmitter have been successfully cleared.
- **Training** - Indicates that the universal transmitter is in its transmitter learning mode.
- **Trained** - Indicates that the universal transmitter has successfully acquired a new transmitter code.
- **Transmit** - Indicates that a trained universal transmitter button has been depressed and that the universal transmitter is transmitting.

The universal transmitter cannot be repaired, and is available for service only as a unit with the EVIC or CMTC modules. If any of these components is faulty or damaged, the complete EVIC or CMTC module must be replaced.

OPERATION

The universal transmitter operates on a non-switched source of battery current so the unit will remain functional, regardless of the ignition switch position. For more information on the features, programming procedures and operation of the universal transmitter, see the owner's manual in the vehicle glove box.

DIAGNOSIS AND TESTING - UNIVERSAL TRANSMITTER

If the universal transmitter is inoperative, but the Electronic Vehicle Information Center (EVIC) or Compass Mini-Trip Computer is operating normally, see the owner's manual in the vehicle glove box for instructions on training the universal transmitter. Retrain the universal transmitter with a known good transmitter as instructed in the owner's manual and test the universal transmitter operation again. If the unit is still inoperative, replace the faulty universal transmitter and EVIC/CMTC module as a unit. If both the universal transmitter and the EVIC/CMTC module are inoperative, refer to **Overhead Console Diagnosis and Testing** earlier in this group for further diagnosis. For complete circuit diagrams, refer to **Overhead Console** in Wiring Diagrams.

AMBIENT TEMP SENSOR

DESCRIPTION

Ambient air temperature is monitored by the overhead console through ambient temperature messages received from the Front Control Module (FCM) over the Programmable Communications Interface (PCI) J1850 data bus circuit. The FCM receives a hard wired input from the ambient temperature sensor. The ambient temperature sensor is a variable resistor mounted to a bracket that is secured with a screw to the right side of the headlamp mounting module grille opening, behind the radiator grille and in front of the engine compartment.

Refer to **Front Control Module** in Electronic Control Modules. For complete circuit diagrams, refer to the appropriate wiring information. The ambient temperature sensor cannot be adjusted or repaired and, if faulty or damaged, it must be replaced.

OPERATION

The ambient temperature sensor is a variable resistor that operates on a five-volt reference signal sent to it by the Front Control Module. The resistance in the sensor changes as temperature changes, changing the temperature sensor signal circuit voltage to the Front Control Module. Based upon the resistance in the sensor, the Front Control Module senses a specific voltage on the temperature sensor signal circuit, which it is programmed to correspond to a specific temperature. The Front Control Module then sends the proper ambient temperature messages to the EVIC, CMTC over the PCI J1850 data bus.

The thermometer function is supported by the ambient temperature sensor, a wiring circuit, the Front Control Module, the Programmable Communications Interface (PCI) data bus, and a portion of the Electronics module. If any portion of the ambient temperature sensor circuit fails, the Front Control Module will self-diagnose the circuit.

The ambient temperature sensor circuit can also be diagnosed by referring to **Diagnosis and Testing - Ambient Temperature Sensor, and Diagnosis and Testing - Ambient Temperature Sensor Circuit**. If the temperature sensor and circuit are con-

firmed to be OK, but the temperature display is inoperative or incorrect, refer to **Diagnosis and Testing - Overhead Console** in this group. For complete circuit diagrams, refer to the appropriate wiring information.

DIAGNOSIS AND TESTING

DIAGNOSIS AND TESTING - AMBIENT TEMPERATURE SENSOR

(1) Turn the ignition switch to the Off position. Disconnect and isolate the battery negative cable. Disconnect the ambient temperature sensor wire harness connector.

(2) Measure the resistance of the ambient temperature sensor. At –40° C (–40° F), the sensor resistance is 336.6 kilohms. At 60° C (140° F), the sensor resistance is 2.49 kilohms. The sensor resistance should read between these two values. If OK, refer to **Diagnosis and Testing - Ambient Temperature Sensor Circuit** in this group. If not OK, replace the faulty ambient temperature sensor.

DIAGNOSIS AND TESTING - AMBIENT TEMPERATURE SENSOR CIRCUIT

(1) Turn the ignition switch to the Off position. Disconnect and isolate the battery negative cable. Disconnect the ambient temperature sensor wire harness connector and the Front Control Module wire harness connector.

(2) Connect a jumper wire between the two terminals in the body half of the ambient temperature sensor wire harness connector.

(3) Check for continuity between the sensor return circuit and the ambient temperature sensor signal circuit cavities of the Front Control Module wire harness connector. There should be continuity. If OK, go to Step 4. If not OK, repair the open sensor return circuit or ambient temperature sensor signal circuit to the ambient temperature sensor as required.

(4) Remove the jumper wire from the body half of the ambient temperature sensor wire harness connector. Check for continuity between the sensor return circuit cavity of the Front Control Module wire harness connector and a good ground. There should be no continuity. If OK, go to Step 5. If not OK, repair the shorted sensor return circuit as required.

(5) Check for continuity between the ambient temperature sensor signal circuit cavity of the Front Control Module wire harness connector and a good ground. There should be no continuity. If OK, refer to **Diagnosis and Testing - Overhead Console** in this group. If not OK, repair the shorted ambient temperature sensor signal circuit as required.

REMOVAL

(1) Disconnect and isolate the battery negative cable.

(2) Raise and support vehicle on safety stands.

(3) From behind front bumper fascia, remove screw holding sensor to radiator closure panel.

(4) Remove sensor from vehicle.

INSTALLATION

(1) Position the sensor in the vehicle.

(2) From behind the front bumper fascia, install the screw holding sensor to radiator closure panel.

(3) Connect the battery negative cable.

POWER SYSTEMS

TABLE OF CONTENTS

page

POWER LIFTGATE SYSTEM 1
POWER SLIDING DOOR SYSTEM 18
POWER LOCKS 39
POWER MIRRORS 46
POWER SEAT SYSTEM 51
POWER WINDOWS 64

POWER LIFTGATE SYSTEM

TABLE OF CONTENTS

page

POWER LIFTGATE SYSTEM
DESCRIPTION 2
OPERATION 3
DIAGNOSIS AND TESTING - POWER LIFTGATE SYSTEM 4
STANDARD PROCEDURE
STANDARD PROCEDURE - LIFTGATE ADJUSTMENT 8
STANDARD PROCEDURE - POWER LIFTGATE LEARN CYCLE 9
PINCH SENSOR
DESCRIPTION 9
OPERATION 9
REMOVAL 9
INSTALLATION 9
FULL OPEN SWITCH
DESCRIPTION 10
OPERATION 10
REMOVAL 10
INSTALLATION 10
LIFTGATE MOTOR
DESCRIPTION 10
OPERATION 11
REMOVAL 11
INSTALLATION 11
ENGAGE ACTUATOR
DESCRIPTION 11
OPERATION 11
REMOVAL 12
INSTALLATION 12
TRANSVERSE BRACKET
DESCRIPTION 12
OPERATION 12
REMOVAL 13
INSTALLATION 13
LIFT GEAR & LINK ROD
DESCRIPTION 13
OPERATION 14
REMOVAL 14
INSTALLATION 14
LATCH
DESCRIPTION 14
OPERATION 15
REMOVAL 15
INSTALLATION 15
LATCH ACTUATOR
DESCRIPTION 15
OPERATION 15
REMOVAL 15
INSTALLATION 16
EXTERIOR HANDLE SWITCH
DESCRIPTION 16
OPERATION 16
REMOVAL 16
INSTALLATION 16
CHIME/THERMISTOR
DESCRIPTION 17
OPERATION 17
REMOVAL 17
INSTALLATION 17

POWER LIFTGATE SYSTEM

DESCRIPTION

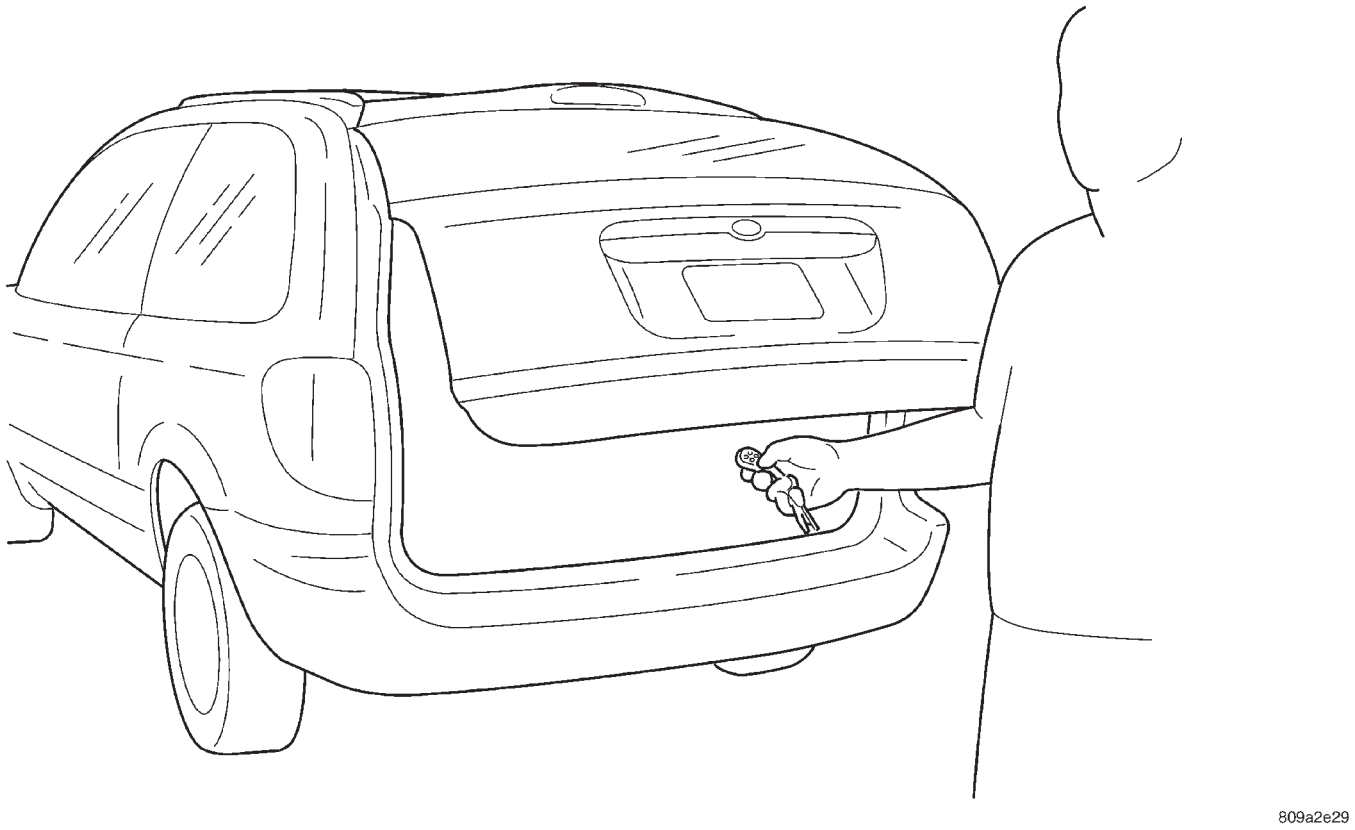

Fig. 1 POWER LIFTGATE INTRODUCTION

Some vehicles are equipped with an automatic opening and closing power liftgate system (Fig. 1). This power liftgate system is a complex system consisting of many components. Some of these components are the liftgate gear motor assembly, latch assembly, lift gear and rod, liftgate control module, chime/thermistor, full open switch, engage actuator, pinch sensor, liftgate handle switch, overhead console switch, key fob switches (Fig. 2), pawl switch and ratchet switch.

The power liftgate system has its own door control module, located on the vehicles left body D-pillar behind the trim panel. (Refer to 8 - ELECTRICAL/ ELECTRONIC CONTROL MODULES/DOOR CONTROL MODULE - DESCRIPTION) The power liftgate gear motor assembly is located just above the control module. The latch assembly is located in the bottom center of the power liftgate, below the exterior liftgate handle switch. The power liftgate full open switch, engage actuator, lift gear and rod are part of the liftgate gear motor assembly. The pawl and ratchet switches are part of the latch assembly. The pinch sensor or sensors are located along the right and left sides of the power liftgate, just above the body line. The liftgate handle switch is an power release switch and is located in the rear light bar assembly, just above the license plate. The overhead console switch is an power open and close command switch located in the vehicles overhead console.

Safety is of the utmost concern with the power liftgate system. Software technology has enabled the power liftgate control module to detect resistance to liftgate travel, which allows the power liftgate to stop and reverse direction anytime an obstruction is felt or any of the command switches are operated (only in closing direction). Battery voltage is supplied to the power liftgate system through a 40 amp fuse, located in the Intelligent Power Module (IPM) assembly (Fig. 3). In the unlikely event that the power liftgate system develops a fault the power liftgate can still be operated manually with a key, just like a standard manual liftgate.

POWER LIFTGATE SYSTEM (Continued)

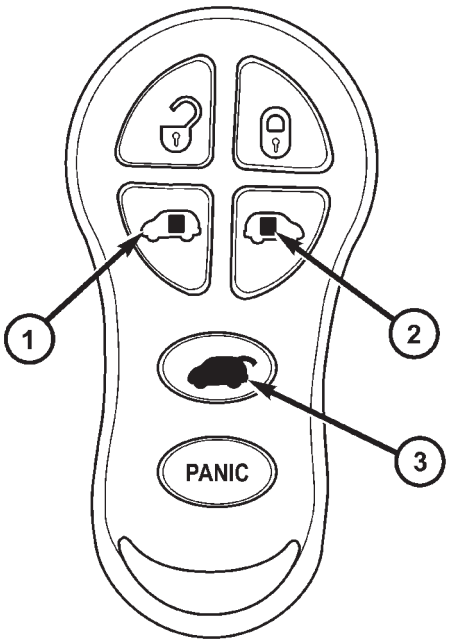

Fig. 2 KEY FOB

1 - Left Sliding Door Switch
2 - Right Sliding Door Switch
3 - Liftgate Switch

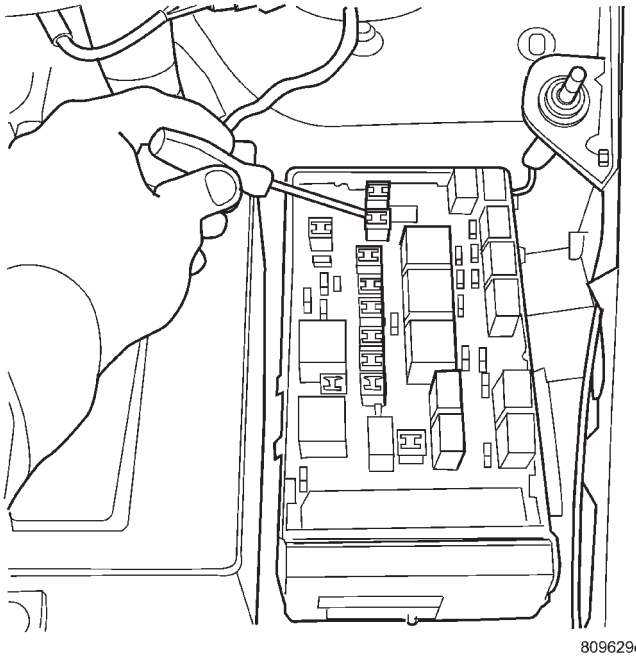

Fig. 3 LIFTGATE FUSE LOCATION

The power liftgate control module communicates on the J1850 Programmable Communication Interface (PCI) Bus Circuit. Therefore, the power liftgate control module can generate and store its own Diagnostic Trouble Codes (DTC). The vehicles Body Control Module (BCM) receives and supplies messages to the power liftgate control module via the PCI bus circuit. A diagnostic scan tool, such as the DRB III® is used to read and troubleshoot these Diagnostic Trouble Codes (DTC). Refer to the Body Diagnostic Manual for a complete list of diagnostic routines.

For additional information refer to Power Liftgate Operation. For a complete system wiring schematic refer to Wiring Diagrams. For system operation instructions refer to the vehicles owner manual. **Refer to the Body section of the service manual** for additional information on liftgate components such as the prop rods, hinges, door alignment and striker alignment.

WARNING: BE CERTAIN TO READ ALL WARNINGS AND CAUTIONS (NOTED BELOW) IN POWER LIFTGATE SYSTEM OPERATION BEFORE ATTEMPTING ANY SERVICE OF THE POWER LIFTGATE SYSTEM OR COMPONENTS.

OPERATION

With the push of a power liftgate open/close command switch (key fob or overhead console mounted) a signal is sent out on the J1850 PCI Data Bus circuit. This signal is detected at the body control module (BCM). The BCM then sends a signal out on the J1850 PCI Data Bus circuit to the power liftgate module. The power liftgate module then signals the power liftgate motor to start an open or close cycle, depending on what position the liftgate is in open or closed.

During a liftgate open or close cycle, if the power liftgate module detects sufficient resistance to liftgate travel, such as an obstruction in the liftgates path, the power liftgate control module will immediately stop the liftgate movement and reverse travel to the full open or closed position. The ability for the power liftgate module to detect resistance to liftgate travel is accomplished by hall effect sensors, drive motor speed and pinch sensors (tape switches).

The power liftgate control module has the ability to learn. Anytime the liftgate is opened or closed using the power liftgate system the module learns from its cycle. If a replacement power liftgate component is installed or a liftgate adjustment is made, the module will relearn the effort and/or time required to open or close the door. This learn cycle can be performed with a Diagnostic Scan Tool, such as the DRB III® or with a complete cycle of the liftgate, using any one of the command switches. Refer to Standard Procedures in this section for detailed instructions.

The power liftgate system is designed with a number of system inhibitors. These inhibitors are necessary for safety and / or feasibility of the power liftgate system. Refer to power liftgate system inhibitors noted below:

POWER LIFTGATE SYSTEM INHIBITORS

- The Power Liftgate may not operate in extreme temperatures. These extreme temperatures will be approximately -12° F (-24.4° C) on the low side and 143° F (61.6° C) for the high side. A chime/thermister assembly in the rear light bar assembly monitors the outside temperature.
- The vehicles transmission must be in park or neutral for the power liftgate to start a cycle.
- If multiple obstacles are detected during the same power open or close cycle the liftgate goes into manual operation.
- If severe Diagnostic Trouble Codes (DTC) are stored in the power liftgate control module.

POWER LIFTGATE SYSTEM CAUTIONS AND WARNINGS

WARNING: ALWAYS DISCONNECT THE NEGATIVE BATTERY CABLE BEFORE ATTEMPTING ANY POWER LIFTGATE SYSTEM SERVICE.

WARNING: THERE IS A SMALL AREA ON BOTH SIDES OF THE LOWER POWER LIFTGATE WHICH ARE NOT PROTECTED BY PINCH SENSORS. EXTREME CARE MUST BE TAKEN TO PREVENT OBJECTS FROM ENTERING THIS AREA ONCE THE LIFTGATE REACHES THE SECONDARY LATCH CONTACT (APPROXIMATELY 1/2 INCH BEFORE FULLY CLOSED).

WARNING: NEVER ATTEMPT TO ENTER OR EXIT THE VEHICLE WITH THE LIFTGATE IN MOTION. YOU COULD DAMAGE THE POWER LIFTGATE SYSTEM AND/OR COMPONENTS AND/OR CAUSE PERSONAL INJURY.

WARNING: NEVER STICK OBJECTS IN THE POWER LIFTGATE WHEN CINCHING CLOSED. YOU COULD DAMAGE THE VEHICLE, POWER LIFTGATE SYSTEM COMPONENTS AND/OR CAUSE PERSONAL INJURY.

DIAGNOSIS AND TESTING - POWER LIFTGATE SYSTEM

The power opening and closing power liftgate system is a complex system containing many components and modules. In order to obtain conclusive testing the Programmable Communications Interface (J1850) data bus network and all of the electronic modules that provide inputs to, or receive outputs from the power liftgate system must be checked.

The power liftgate system was designed to be diagnosed with an appropriate diagnostic scan tool, such as the DRB III®. The most reliable, efficient, and accurate means to diagnose the power liftgate system requires the use of a DRB III® scan tool and the proper Body Diagnostic Procedures manual. The DRB III® can be used to observe various switch statuses throughout the power liftgate system to help the technician diagnose a defective switch or component. The DRB III® can also be used to actuate various components throughout the power liftgate system to help the technician diagnose a defective component.

Before any testing of the power liftgate system is attempted, the battery should be fully charged, all built-in power liftgate system inhibitors read and understood (Refer to power liftgate system operation) and all wire harness and ground connections inspected around the affected areas on the vehicle.

Following are quick reference diagnostic tables to help when diagnosing and testing the power liftgate system.

POWER LIFTGATE SYSTEM (Continued)

LIFTGATE SYSTEM DIAGNOSIS

CONDITION	POSSIBLE CAUSES	CORRECTION
Liftgate opens unexpectedly	Failure of Power Liftgate or Body Control module	Disconnect then reconnect battery to reset module, function liftgate, if no function exists check for loose wire connections, see Body Diagnostic Manual for detailed procedures
	Failure of latch assembly	Check wiring connections and for blown fuse
		Check for trouble codes, replace latch if necessary
	Failure of open/close command switch	Check for shorted or defective switch
Liftgate will not open from outside of vehicle manually	Failure of key cylinder assembly	Check for broken key cylinder assembly
		Check link rod connections at the latch and key cylinder assembly
		Check for binds or kinks in link rod Check for foreign matter preventing the operation of key cylinder assembly Replace the necessary components
	Failure of latch assembly	Check wire connections and for blown fuse
		Check for foreign matter preventing the operation of latch assembly Replace latch assembly, if necessary
	Binding or sticking of components	Check for foreign matter preventing the operation of door
		Establish location of binding
		Replace necessary components
Liftgate will not open/close under power	Failure of Power Liftgate or Body Control Module	Disconnect then reconnect battery to reset module, function liftgate, if no function exists check for loose wire connections, see Body Diagnostic Manual for detailed procedures
	Failure of latch assembly	Check wire connections and for blown fuse
		Check for foreign matter preventing the operation of latch assembly Troubleshoot using Body Diagnostic Manual Replace latch assembly, if necessary
	Failure of motor assembly	Troubleshoot using Body Diagnostic Manual
	Failure of full open switch	Troubleshoot using Body Diagnostic Manual

POWER LIFTGATE SYSTEM (Continued)

CONDITION	POSSIBLE CAUSES	CORRECTION
	Binding or sticking of components	Establish location of binding and replace necessary components
	Wiring problems (system or vehicle)	Troubleshoot using electrical schematics. Refer to wiring diagrams
Power loss during Liftgate operation	Wiring problems (system or vehicle)	Troubleshoot using electrical schematics. Refer to wiring diagrams
	Low battery voltage	Charge battery
	Failure of Power Liftgate or Body Control Module	Disconnect then reconnect battery to reset module, function liftgate, if no function exists check for loose wire connections, see Body Diagnostic Manual for detailed procedures
	Failure of motor assembly	Check for no drive condition
No power latching in primary and/or secondary positions	Failure of latch assembly	Check wire connections and for blown fuse
		Check for foreign matter preventing the operation of latch assembly Troubleshoot using Body Diagnostic Manual. Replace latch assembly, if necessary
	Binding or sticking of components	Establish location of binding and replace necessary components
	Failure of Power Liftgate or Body Control Module	Disconnect then reconnect battery to reset module, function liftgate, if no function exists check for loose wire connections, see Body Diagnostic Manual for detailed procedures
	Door seal force too high	Inspect seals for damage, mis-assembly, foreign matter or other possible obstruction
	Failure of motor assembly	Check for no drive condition
Latch will not fully release from primary position	Failure of latch assembly	Check wire connections and for blown fuse
		Check for foreign matter or damaged components preventing the operation of latch assembly Troubleshoot using body electrical troubleshooting manual Replace latch assembly, if necessary
	Failure of outside handle switch	Troubleshoot using Body Diagnostic Manual Replace switch, if necessary
	Failure of Power Liftgate or Body Control Module	Disconnect then reconnect battery to reset module, function liftgate, if no function exists check for loose wire connections, see Body Diagnostic Manual for detailed procedures
	Binding or sticking of components	Establish location of binding and replace necessary components

POWER LIFTGATE SYSTEM (Continued)

CONDITION	POSSIBLE CAUSES	CORRECTION
Key fob, Outside Handle or overhead console switches do not power operate liftgate	Blown Fuse	Check fuse and replace
	Battery voltage low	Charge or replace battery in key fob or vehicle
	Failure of latch assembly	Check for foreign matter preventing the operation of latch assembly
		Check wire connection Pawl and/or ratchet switch inoperative Replace latch if necessary
	Wiring problems (system or vehicle)	Troubleshoot using electrical schematics. Refer to wiring diagrams
	Failure of Body Control Module (BCM)	Check electrical connections
		Refer to the Body electrical troubleshooting guide for additional checks Replace BCM if necessary
	Failure of key fob	Reprogram key fob
		Replace key fob if necessary
	Failure of Power Liftgate Module	Disconnect then reconnect battery to reset module, function liftgate, if no function exists check for loose wire connections, see Body Diagnostic Manual for detailed procedures
	Failure of liftgate motor assembly	Check for foreign matter preventing the operation of gear motor assembly
		Check wire connections Motor clutch does not engage, replace assembly Full open switch inoperative, replace switch, if necessary Troubleshoot using Body Diagnostic Manual Replace motor, if necessary
Liftgate does not stay open	Failure of liftgate prop rods	Replace prop rods, if necessary
		Check for broken attachments
High inside/outside opening effort	Failure of liftgate prop rods	Replace prop rods, if necessary
		Check for broken attachments
	Gear motor did not disengage	Troubleshoot using Body Diagnostic Manual Replace components, if necessary
	Binding or sticking of components	Establish location of binding and replace necessary components

POWER LIFTGATE SYSTEM (Continued)

CONDITION	POSSIBLE CAUSES	CORRECTION
Liftgate continues to cinch closed during power mode	Failure of latch assembly	Check wire connections and for blown fuse
		Check for foreign matter preventing the operation of latch assembly Troubleshoot using Body Diagnostic Manual Replace components, if necessary
	Failure of Power Liftgate or Body Control Module	Disconnect then reconnect battery to reset module, function liftgate, if no function exists check for loose wire connections, see Body Diagnostic Manual for detailed procedures
	Wiring problems (system or vehicle)	Troubleshoot using electrical schematics. Refer to wiring diagrams
Liftgate continues to open during power mode (runaway motor)	Failure of Power Liftgate or Body Control Module	Disconnect then reconnect battery to reset module, function liftgate, if no function exists check for loose wire connections, see Body Diagnostic Manual for detailed procedures
	Failure of full open switch	Check wire connections
		Replace switch, if necessary
	Failure of motor assembly	Check for continuous drive condition
	Wiring problems (system or vehicle)	Troubleshoot using electrical schematics. Refer to Wiring Diagrams
Liftgate opens very slowly	Failure of liftgate motor assembly	Check wire connections
		Replace motor assembly, if necessary
	Failure of liftgate prop rods	Replace prop rods, if necessary
	Binding or sticking of components	Establish location of binding and replace necessary components
	Grade of vehicle too steep for power operation	Operate liftgate manually
Squeaks, Noises and rattles	Foreign material in door compartment	Remove foreign material
	Loose components	Check and tighten loose components

STANDARD PROCEDURE

STANDARD PROCEDURE - LIFTGATE ADJUSTMENT

In order for the power liftgate system to function properly the liftgate must move freely and smoothly. The power liftgate system can acommodate for some minor changes in the effort required to move the liftgate. However, in extreme conditions the liftgate may need to be mechanicaly adjusted for proper fit and finish. Refer to the Liftgate Adjustment procedure in the Body section of the service manual for detailed instructions.

If a problem exists with the power liftgate and it is suspected to be extreme effort check the liftgate prop rods and hinges for free movement. Use a known good vehicle for liftgate effort comparison.

NOTE: Routine application of Mopar MP-50® or equivalent on the chrome prop rod shafts and liftgate latch and hinges will help keep the liftgate in good working order.

POWER LIFTGATE SYSTEM (Continued)

STANDARD PROCEDURE - POWER LIFTGATE LEARN CYCLE

Any time a power liftgate component is removed, replaced or a liftgate adjustment is performed a learn cycle must be performed. This learn cycle enables the power liftgate control module to learn or relearn information (travel limits, resistance to door travel, etc.) which allows it to perform properly and safely. To perform a learn cycle do the following:

(1) Obtain a DRB III® scan tool.

(2) Connect the DRB III® to the vehicle and check for any power liftgate system stored trouble codes, correct and erase any stored codes.

(3) Using the DRB III®, Go into Test Routine Menu and select the power open command.

(4) Select the power close command.

(5) The liftgate learn cycle is complete.

If a DRB III® scan tool is not available the learn cycle can be performed by actuating the liftgate by using any of the normal command switches. Be certain to cycle the liftgate through a complete open and close cycle before returning the vehicle to service.

NOTE: If the power liftgate will not complete a full cycle a problem exists with the power liftgate system. (Refer to 8 - ELECTRICAL/POWER DOORS - DIAGNOSIS AND TESTING).

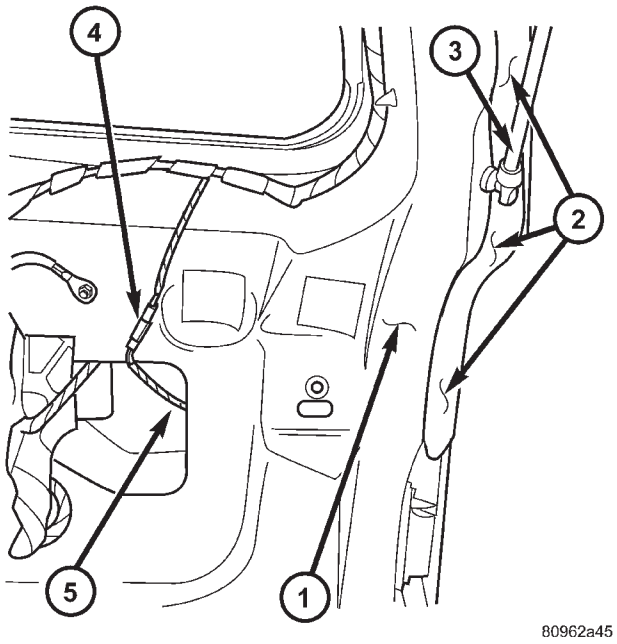

Fig. 4 PINCH SENSOR LOCATION

1 - LIFTGATE
2 - PINCH SENSOR ASSEMBLY
3 - POWER LIFTGATE LINK ROD
4 - PINCH SENSOR WIRE HARNESS CONNECTOR
5 - PINCH SENSOR WIRE HARNESS

PINCH SENSOR

DESCRIPTION

Vehicles equipped with a power liftgate utilize two pinch sensors, one is located on each side of the liftgate (Fig. 4). These sensors look like weather-strips, however they consist of pieces of electrically conductive rubber (tapeswitch), wires, resistor, double sided tape, and a plastic carrier. They are used to indicate an obstruction during a power close cycle.

OPERATION

During a power liftgate close cycle, if either of the two conductive rubber strips (tapeswitch) of the pinch sensor come in contact with an obstacle, the pinch sensor circuit is completed. This tells the power liftgate control module that a obstruction is felt. The control module will stop the liftgate immediately and return it to the full open position.

REMOVAL

(1) Disconnect and isolate the negative battery cable.

(2) Remove trim panel from liftgate. Refer to Body for the procedure.

(3) Disconnect the pinch sensor wire harness connector (Fig. 4).

(4) Remove screws holding the pinch sensor to liftgate.

(5) Feed the pinch sensor wire harness out of the liftgate and remove the sensor from the vehicle.

INSTALLATION

(1) Position the pinch sensor and install screws holding the sensor to the liftgate. Torque screws to 25 in. lbs.

(2) Install wire harness grommet in liftgate flange and route, connect the pinch sensor wire harness connector.

(3) Install the trim panel on the liftgate. Refer to the Body section for the procedure.

(4) Connect the negative battery cable.

(5) Using an appropriate scan tool, check and erase any power liftgate control module diagnostic trouble codes related to the pinch sensor.

(6) Verify power liftgate system and pinch sensor operation. Cycle the power liftgate through one complete open and close cycle, during the final close cycle press the pinch sensor to verify the power liftgate detects an obstruction and returns to the full open position.

PINCH SENSOR (Continued)

WARNING: USE EXTREME CAUTION WHEN TESTING PINCH SENSOR OPERATION.

FULL OPEN SWITCH

DESCRIPTION

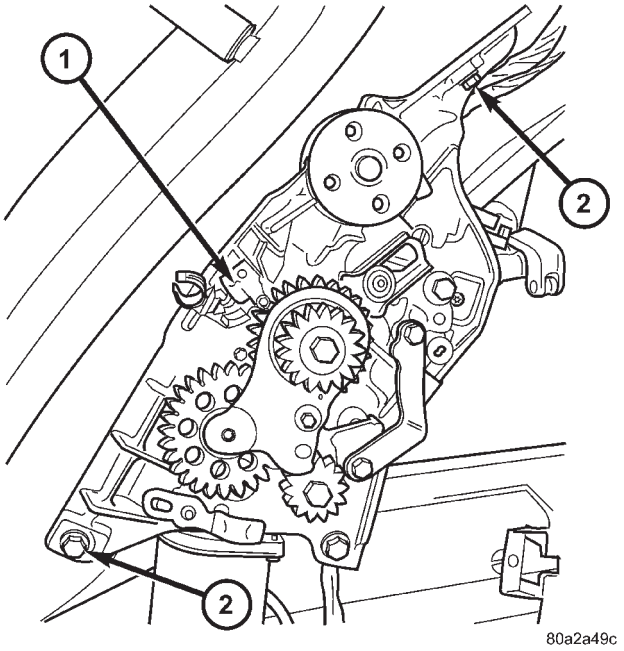

Fig. 5 FULL OPEN SWITCH LOCATION

1 - FULL OPEN SWITCH
2 - GEAR MOTOR ASSEMBLY RETAINING BOLT (1 OF 3)

Vehicles equipped with a power liftgate utilize a full open switch. This switch is located on the gear motor housing (Fig. 5) and is used to signal the power liftgate module when the liftgate is in the full open position. Two wires are used from the full open switch contacts to the gear motor assemblies main electrical connector.

The full open switch is a serviceable component. Consult your Mopar parts catalog for a specific part number.

OPERATION

When the power liftgate reaches the full open position, the gear motor housing mounted full open switch electrical contacts come in contact with each other. This sends a ground signal to the power liftgate control module, telling the module that the liftgate has reached the full open position.

REMOVAL

(1) Disconnect and isolate the negative battery cable.

(2) Remove the lift gear and link rod assembly from the vehicle(Refer to 8 - ELECTRICAL/POWER DOORS/CONTROL ROD - REMOVAL).

(3) Cut the two wires leading to the full open switch or back the wires out of the electrical connector (Fig. 5). Refer to the Wiring section of the service manual for detailed instructions.

(4) Remove the full open switch retaining screw and remove the full open switch from the gear motor housing assembly.

INSTALLATION

(1) Perform a wiring repair on the full open switch wires following the approved procedure in the Wiring section of the service manual. Or install new terminals on the wire ends and reinstall in the main liftgate motor electrical connector.

(2) Position and install the full open switch retaining screw.

(3) Install the power liftgate lift gear and link rod assembly. (Refer to 8 - ELECTRICAL/POWER DOORS/CONTROL ROD - INSTALLATION)

(4) Connect the negative battery cable.

(5) Using an appropriate scan tool, check any erase any power liftgate control module diagnostic trouble codes.

(6) Verify power liftgate system and full open switch operation. Cycle the power liftgate through one complete open and close cycle, this will allow the power liftgate control module to relearn its cycle with the new components.

LIFTGATE MOTOR

DESCRIPTION

Vehicles equipped with a power liftgate, utilize a liftgate gear motor assembly (Fig. 6). The gear motor assembly consists of a DC motor, hall effect sensor, engage actuator, full open switch, lift gear, aluminum housing, drive gears and wire harness. The gears and motor portion of the assembly provides the power and torque required to open or close the liftgate under the worst case conditions. The hall effect sensor is used to provide the liftgate control module with a speed reading, which is used to monitor the resistance of liftgate travel. This speed reading also allows the power liftgate control module to detect obstructions and move the liftgate accordingly. The engage actuator is used to toggle between power open/close mode and full manual mode when desired. The full open switch is used to let the power liftgate control module know when the liftgate is approaching the full open position.

LIFTGATE MOTOR (Continued)

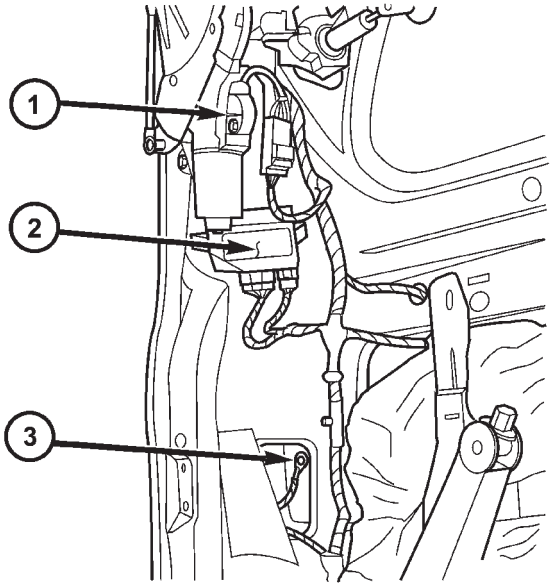

Fig. 6 POWER LIFTGATE COMPONENTS

1 - POWER LIFTGATE GEAR MOTOR ASSEMBLY
2 - POWER LIFTGATE CONTROL MODULE
3 - ELECTRICAL GROUND LOCATION

Serviceable components of the power liftgate gear motor assembly are the complete gear motor assembly, motor and wire harness, lift gear and control rod, engage actuator, full open switch and the transverse bracket. Refer to additional information in this group for more component details.

OPERATION

With the push of a power liftgate command switch (liftgate closed), the power liftgate control module will signal the latch assembly to release the door from its primary closed and latched position to the released and movable position. The liftgate motor mounted, engage actuator then engages the liftgate motor assembly, which moves the liftgate into the open position. The liftgate motor provides the torque and power to move the door to its full open or closed position(Refer to 8 - ELECTRICAL/POWER DOORS - OPERATION) for additional information.

REMOVAL

The power liftgate motor can be serviced in two different ways. The first of which is called out here, the complete gear motor assembly. The second way includes the motor, aluminum housing, drive gears and wire harness assembly. To perform this service procedure, use the following procedure to remove the gear motor assembly from the vehicle. Then refer to the other procedures called out this section to transfer the remaining components (engage actuator, full open switch, transverse bracket and lift gear and rod) to the replacement motor assembly.

(1) Disconnect and isolate the negative battery cable.

(2) Remove the left rear D-pillar trim panel from the vehicle. Refer to the Body section for the procedure.

(3) Disconnect the wire harness connector from the motor assembly (Fig. 6).

(4) Remove the two bolts from the motor housing and the one bolt from the transverse mount bracket.

(5) Grab the liftgate motor assembly and lift upward and out to unhook the motor assembly from the D-pillar.

(6) Remove the liftgate motor assembly from the vehicle.

INSTALLATION

(1) Using the motor housing tab, hook the liftgate motor assembly on the D-pillar.

(2) Install the three motor assembly retaining bolts. Torque the two rear most bolts first to 9.5 N·m (85 in. lbs.). Torque the remaining bolt next to the window actuator to 9.5 N·m (85 in. lbs.).

(3) Connect the liftgate motor assembly electrical connector.

(4) Install the D-pillar trim panel on the vehicle. Refer to Body for the procedure.

(5) Connect the negative battery cable.

(6) Using an appropriate scan tool, check any erase any power liftgate control module diagnostic trouble codes related to the door motor assembly.

(7) Verify power liftgate system operation. Cycle the power liftgate through one complete open and close cycle, this will allow the power liftgate control module to relearn its cycle with the new components.

ENGAGE ACTUATOR

DESCRIPTION

Vehicles equipped with a power liftgate utilize a power liftgate engage actuator (Fig. 7). The 12 volt engage actuator provides the engagement and disengagement of the liftgate gear motor to the lift gear by way of an over center link, activated by a lever.

The engage actuator is a serviceable component and cannot be repaired, if found to be faulty it must be replaced.

OPERATION

The engage actuators normal position is disengaged. When a power liftgate open or close command is generated from any of the command switches, the power liftgate control module signals the engage

ENGAGE ACTUATOR (Continued)

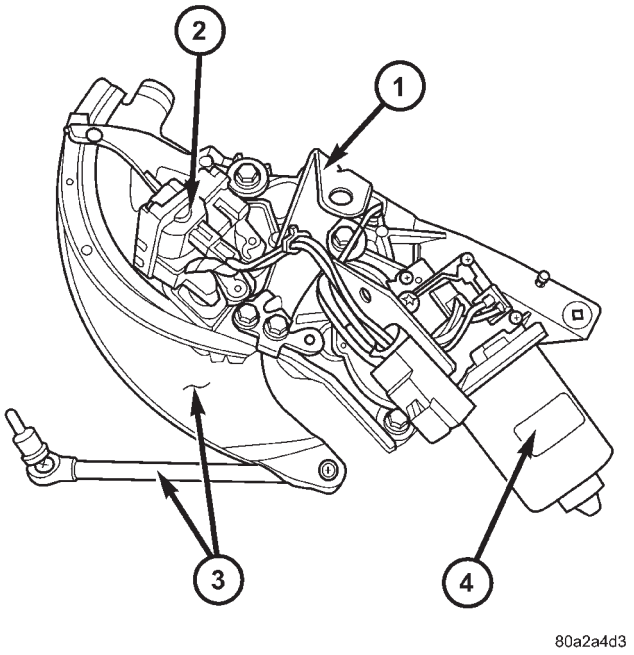

Fig. 7 LIFTGATE GEAR MOTOR ASSEMBLY

1 - TRANSVERSE BRACKET
2 - ENGAGE ACTUATOR
3 - LIFT GEAR AND ROD ASSEMBLY
4 - LIFTGATE MOTOR

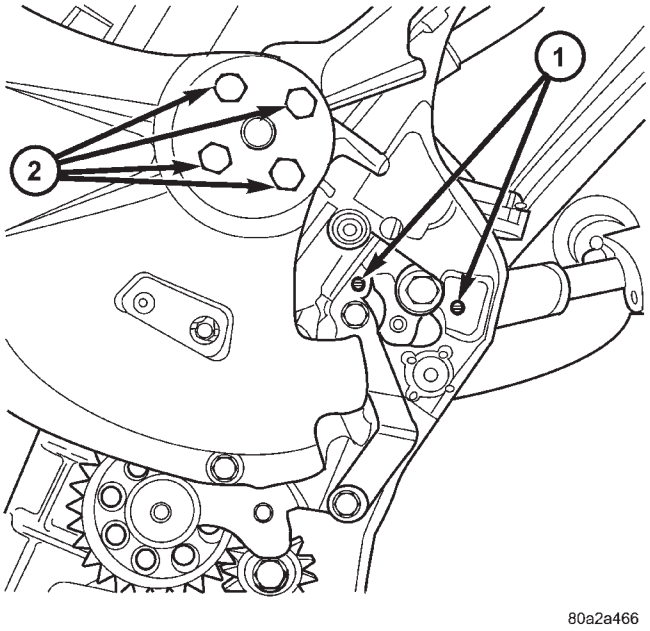

Fig. 8 LIFTGATE GEAR MOTOR ASSEMBLY

1 - ENGAGE ACTUATOR RETAINING SCREWS
2 - LIFT GEAR RETAINING BOLTS

actuator to move its lever to the engaged position. This engages the gear motor to the lift gear, so when the motor turns the lift gate moves upward or downwards depending on its current position.

During a manual liftgate open or close cycle the engage actuator is disengaged, allowing unrestricted liftgate movement.

REMOVAL

(1) Disconnect and isolate the negative battery cable.

(2) Remove the left rear D-pillar trim from the vehicle. Refer to Body for the procedure.

(3) Using your hand manually engage the actuator link rod, this must be done to access one of the engage actuator retaining screws.

(4) Remove the two engage actuator retaining screws (Fig. 8).

(5) Disconnect the engage actuator electrical connector and remove the engage actuator from the vehicle.

INSTALLATION

(1) Position the engage actuator and connect the engage actuator electrical connector.

(2) Install the two engage actuator retaining screws.

(3) Manually disengage the actuator.

(4) Install the left rear D-pillar trim on the vehicle. Refer to Body for the procedure.

(5) Connect the negative battery cable.

(6) Using an appropriate scan tool, check and erase any power liftgate control module diagnostic trouble codes.

(7) Verify power liftgate system and engage actuator operation. Cycle the power liftgate through one complete open and close cycle.

TRANSVERSE BRACKET

DESCRIPTION

Vehicles equipped with a power liftgate utilize a transverse bracket (Fig. 9). This bracket is not different than any other metal bracket which is used to support and secure the power liftgate gear motor assembly to the vehicles left rear body D-pillar.

The transverse bracket is a serviceable power liftgate component. Consult your Mopar™ parts catalog for a specific part number.

OPERATION

The power liftgate transverse bracket supports the gear motor assembly by supplying an additional attachment point. Located on the leading edge of the gear motor assembly, one end of the transverse bracket attaches to the motor assembly the other to the leading edge of the vehicles D-pillar.

TRANSVERSE BRACKET (Continued)

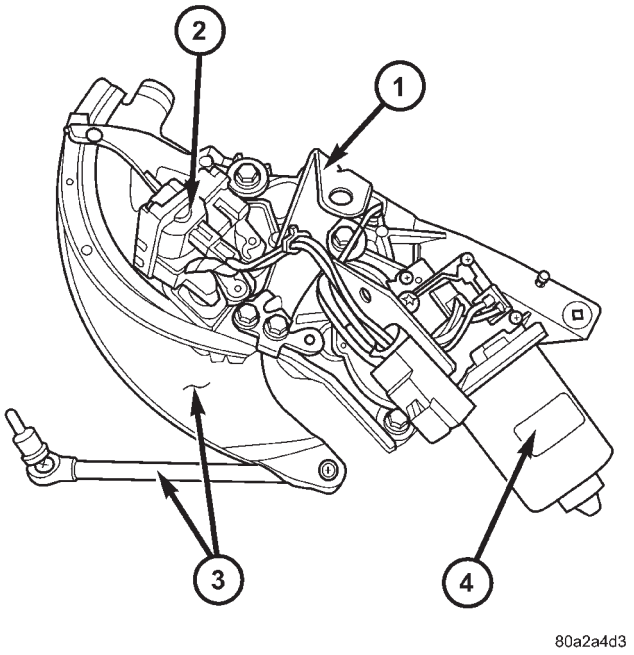

Fig. 9 LIFTGATE GEAR MOTOR ASSEMBLY

1 - TRANSVERSE BRACKET
2 - ENGAGE ACTUATOR
3 - LIFT GEAR AND ROD ASSEMBLY
4 - LIFTGATE MOTOR

REMOVAL

(1) Disconnect and isolate the negative battery cable.

(2) Remove the left D-pillar trim from the vehicle. Refer to Body for the procedure.

(3) Disconnect the gear motor assembly electrical connector and disengage retaining pushpin.

(4) Loosen the gear motor assembly retaining bolts to allow room for transverse bracket to be removed.

(5) Remove the transverse bracket retaining bolts (Fig. 10).

(6) Remove the transverse bracket from the vehicle.

INSTALLATION

(1) Position the transverse bracket in the vehicle. Be certain the transverse bracket is properly positioned. The bracket should just touch the engage actuator arm and be positioned between the actuator arm and the motor housing.

(2) Torque the transverse bracket retaining bolts to the gear motor assembly to 9.5 N·m (85 in. lbs.).. Do not tighten the transverse bracket retaining bolt, located under the window actuator at this time.

(3) Torque the gear motor assembly retaining bolts to 9.5 N·m (85 in. lbs.)..

(4) Torque the final transverse bracket retaining bolt to 9.5 N·m (85 in. lbs.).

(5) Connect the gear motor assembly electrical connector and engage retaining pushpin.

(6) Install the appropriate D-pillar trim from the vehicle. Refer to Body for the procedure.

LIFT GEAR & LINK ROD

DESCRIPTION

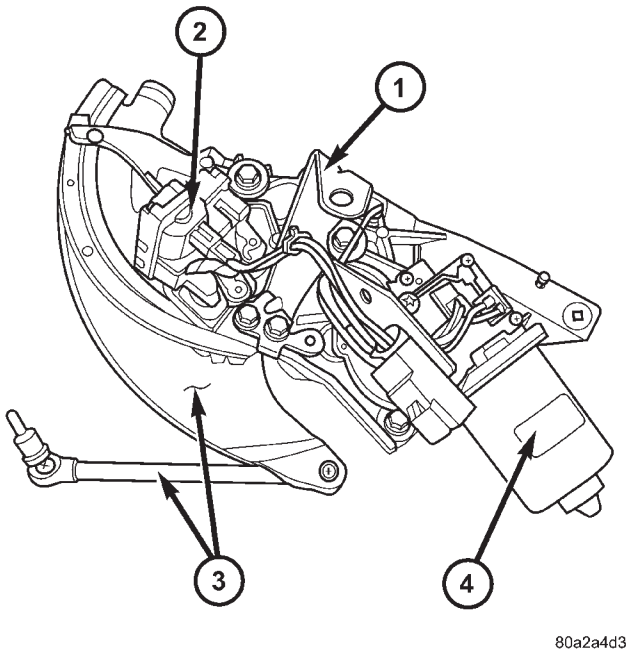

Fig. 10 LIFTGATE GEAR MOTOR ASSEMBLY

1 - TRANSVERSE BRACKET
2 - ENGAGE ACTUATOR
3 - LIFT GEAR AND ROD ASSEMBLY
4 - LIFTGATE MOTOR

Vehicles equipped with a power liftgate utilize a lift gear and rod assembly. This lift gear and rod assembly are located in the left rear of the vehicle and are visible without removing the D-pillar trim (Fig. 10). The lift gear provides the leverage to move the liftgate from the closed to the open position. The lift gear attaches to a bearing on the gear motor assembly with four bolts. On the outboard side of the lift gear are rivited on teeth, which mesh with the gear motor assembly drive gears during a open or close operation. The rod assembly is a steel shaft, equipped with two spherical rod ends which attaches the lift gear to the liftgate.

The lift gear and rod assembly are serviceable components. Consult your Mopar™ parts catalog for a part number.

LIFT GEAR & LINK ROD (Continued)

OPERATION

One end of the rod assembly is attached to the liftgate, the other attached to the lift gear. When the lift gear is driven by the gear motor assembly the liftgate is moved to the open or closed position.

REMOVAL

(1) Remove the left rear D-pillar trim from the vehicle. Refer to Body for the procedure.

(2) Remove the lift gear retaining bolts (Fig. 11).

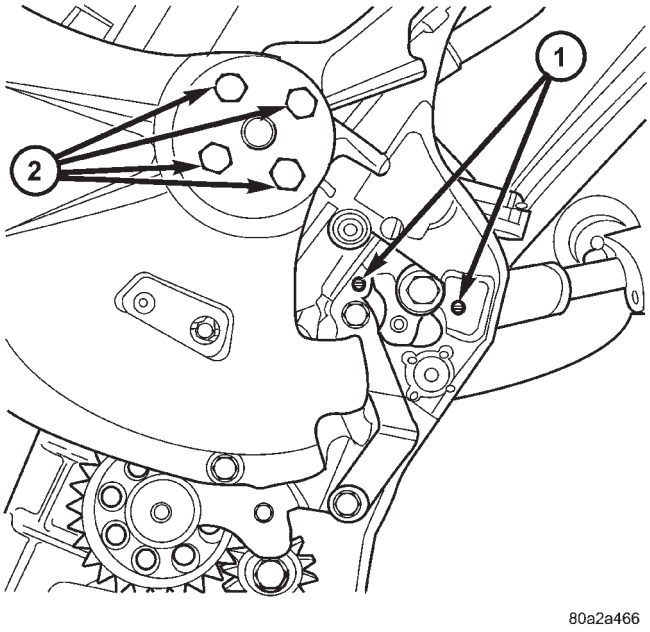

Fig. 11 LIFTGATE GEAR MOTOR ASSEMBLY

1 - ENGAGE ACTUATOR RETAINING SCREWS
2 - LIFT GEAR RETAINING BOLTS

(3) Remove the lift gear and rod from the vehicle.

INSTALLATION

(1) Position the lift gear assembly and install the retaining bolts. Torque the bolts to 28 N·m (21 ft. lbs.).

(2) Install the left rear D-pillar trim on the vehicle. Refer to Body for the procedure.

CAUTION: Torque link rod to liftgate attachment bolt to 250 in. lbs. Care must be taken not to overtorque link rod bolt.

LATCH

DESCRIPTION

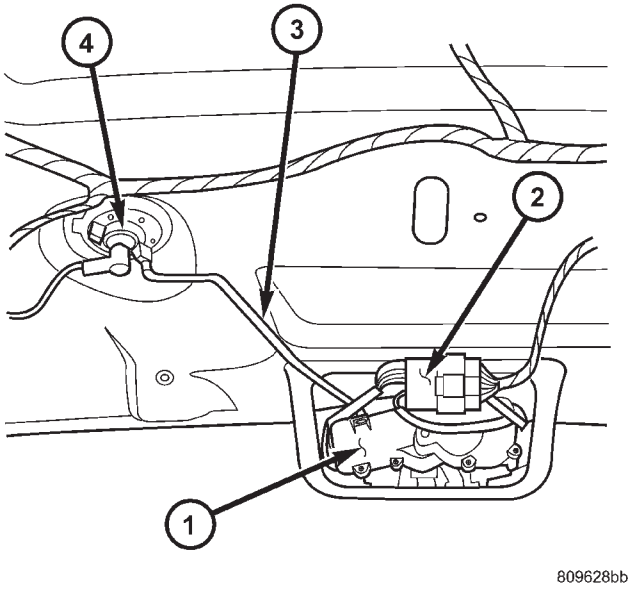

Fig. 12 POWER LATCH ORIENTATION

1 - LATCH & ACTUATOR ASSEMBLY
2 - LATCH ELECTRICAL CONNECTOR
3 - LOCK CYLINDER LINK ROD
4 - LIFTGATE LOCK CYLINDER

Vehicles equipped with a power liftgate, utilize a power cinch/release latch. This latch performs the same features as a manual liftgate latch as well as the power cinch and / or release capability. A second type of power latch can also be found on some RS models, this latch is designed to perform a power release only. The power cinch and release capability is accomplished by an actuator mounted to the leading edge of the latch assembly. The latch is located in the lower center of the liftgate assembly (Fig. 12) and contains integral pawl and ratchet switches. The ratchet switch acts as a liftgate ajar switch.

The power latch assembly can be serviced as a complete assembly, latch without actuator or just the actuator. Consult your Mopar parts catalog for specific part numbers.

LATCH (Continued)

OPERATION

On the power cinch/release latch, the latch mounted actuator provides the torque required to close the power liftgate from the secondary to the primary closed and latched position. On the power cinch/release latch and the power release only latch, the actuator releases the liftgate from the primary closed and latched position to the fully unlatched and movable position.

REMOVAL

(1) Open the hood, disconnect and isolate the negative battery cable.

(2) Open the liftgate and remove the liftgate trim panel. Refer to Body for the procedure.

(3) Disconnect the power latch electrical connector (Fig. 12).

(4) Remove the power latch retaining bolts.

(5) Disconnect the liftgate lock cylinder link rod from the key cylinder or latch assembly. To disconnect from latch, rotate the plastic retaining clip 90 ° to unsnap clip from linkrod. Then pull link rod straight out of latch arm.

INSTALLATION

(1) Connect the liftgate lock cylinder link rod on the cinch latch assembly. Rotate the plastic retaining clip 90 ° to lock retaining clip on linkrod.

(2) Connect the link rod on the lock cylinder.

(3) Install the power latch retaining bolts. Torque to 10 N·m (90 in. lbs.).

(4) Connect the power latch electrical connector and secure push pin retainers.

(5) Connect the negative battery cable.

(6) Using an appropriate scan tool, check and erase any power liftgate control module diagnostic trouble codes related to the power latch.

(7) Verify power liftgate system and power cinch / release latch operation. Cycle the power liftgate through one complete open and close cycle, this will allow the power liftgate control module to relearn its cycle with the new components.

(8) Verify power liftgate manual operation. Using liftgate key rotate the lock cylinder to verify door operation. Pull door open using exterior liftgate handle / switch.

(9) Install the liftgate trim panel. Refer to Body for the procedure.

LATCH ACTUATOR

DESCRIPTION

Vehicles equipped with a power liftgate utilize a power cinch latch or power release latch (Fig. 13). The power cinch and/or power release is made possible by a latch actuator attached to the leading edge of the power latch assembly. This 12 volt latch actuator contains a small drive gear that meshes with the latch assemblies internal gears to perform the power cinch close / power release operations. Refer to the Latch assembly for more information.

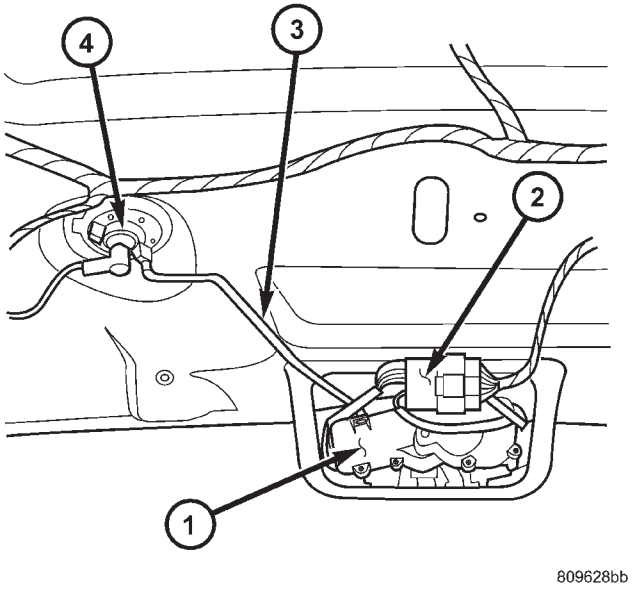

Fig. 13 POWER LATCH ORIENTATION

1 - LATCH & ACTUATOR ASSEMBLY
2 - LATCH ELECTRICAL CONNECTOR
3 - LOCK CYLINDER LINK ROD
4 - LIFTGATE LOCK CYLINDER

The power cinch/release actuator is serviceable component. Consult your Mopar™ parts catalog for specific part numbers.

OPERATION

During a power close cycle, the power cinch actuator provides the torque required to close the power liftgate from the secondary to the primary closed and latched position. During a power open cycle, the power release actuator releases the liftgate from the primary closed and latched position to the fully unlatched and movable position.

REMOVAL

(1) Disconnect and isolate the negative battery cable.

(2) Open the liftgate and remove the lower liftgate trim panel. Refer to Body for the procedure.

(3) Disconnect the power latch electrical connector (Fig. 13).

(4) Remove the three latch retaining bolts.

LATCH ACTUATOR (Continued)

(5) Grab the latch assembly and unhook the key cylinder link rod from the key cylinder (Fig. 13).

(6) Place the latch assembly on a bench and locate the three wires leading from the actuator portion of the latch assembly.

(7) Disengage the main connector retaining push pins from the latch actuator housing.

(8) Back the three wires out of the main latch electrical connector. Refer to the wiring section of the service manual for detailed instructions.

(9) Flip the latch assembly over and remove the latch actuator retaining screw(s).

(10) Remove the latch actuator from the latch assembly.

INSTALLATION

(1) Install the latch actuator on the latch assembly.

(2) Install the three latch actuator retaining screws. Torque the screws to 4 in. lbs.

(3) Install the three wires in the main latch electrical connector. Refer to the wiring section of the service manual for detailed instructions.

NOTE: Be certain wires are reinstalled in the correct wire cavities. Failure to do so could result in damage to the latch actuator. Refer to Wiring Diagrams if previous notes were not made.

(4) Secure the main connector retaining push pins on the latch actuator housing.

(5) Grab the latch assembly and hook the key cylinder link rod on the key cylinder.

(6) Position the latch and install the three latch retaining bolts. Torque to 10 N·m (90 in. lbs.).

(7) Connect the power latch electrical connector.

(8) Install the lower liftgate trim panel. Refer to Body for the procedure.

(9) Connect the negative battery cable.

EXTERIOR HANDLE SWITCH

DESCRIPTION

Vehicles equipped with a power liftgate or power locks utilize a exterior handle switch. The exterior handle switch is a electronic release switch mounted to the rear license plate lamp housing assembly, located just above the license plate. This switch controls the power liftgate release function and is also capable of reversing the power liftgate when it is in motion. A full power open cycle cannot be performed using this switch, only one of the power open command switches (key fob and overhead console mounted) can be used to perform a full power open cycle.

The exterior handle switch is a serviceable component. Consult your Mopar™ parts catalog for a specific part number.

OPERATION

When the exterior handle switch is depressed, with the liftgate in the closed position. A message is sent to the Body Control Module (BCM). The Body Control Module then sends a signal to the power liftgate control module via the J1850 PCI data bus circuit. The power liftgate control module then sends a signal to the power latch mounted actuator, which moves the liftgate from the primary closed and latched position to the open and movable position. If the liftgate is not pulled open once the latch releases within a few seconds, the latch will cinch closed again.

REMOVAL

(1) Disconnect and isolate the negative battery cable.

(2) Open the liftgate and remove the liftgate trim panel. Refer to the Body section of the service manual for the procedure.

(3) Remove the rear lamp bar assembly from the vehicle. Refer to the Body section of the service manual for the procedure.

(4) Locate the two wires going to the exterior handle switch. Cut the tie strap and trace the wires to the large electrical connector and back the wires out of the large connector and through the grommet. Refer to the Wiring section of the service manual for detailed instructions.

(5) Depress the two exterior handle switch retaining tabs and roll the switch out of the light bar assembly (Fig. 14).

INSTALLATION

(1) Install the handle switch in the light bar assembly.

(2) Locate the two wires going to the exterior handle switch. Install the wires through the grommet and in the large connector. Secure with a tie strap. Refer to the Wiring section of the service manual for detailed instructions.

NOTE: Be certain wires are reinstalled in the correct wire cavities. Failure to do so could result in damage to the handle switch. Refer to Wiring Diagrams if previous notes were not made.

(3) Install the rear light bar. Refer to the Body section of the service manual for the procedure.

(4) Install the liftgate trim panel. Refer to the Body section of the service manual for the procedure.

(5) Connect the negative battery cable.

EXTERIOR HANDLE SWITCH (Continued)

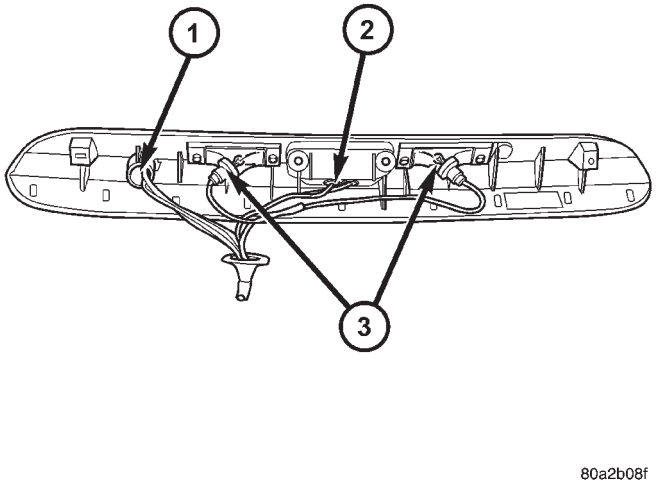

Fig. 14 REAR LIGHT BAR

1 - CHIME / THERMISTOR
2 - ELECTRIC RELEASE HANDLE SWITCH
3 - LICENSE PLATE LAMPS

(6) Using an appropriate scan tool, check any erase any power liftgate control module diagnostic trouble codes.

(7) Verify power liftgate system and handle switch operation. Cycle the power liftgate through one complete open and close cycle, this will allow the power liftgate control module to relearn its cycle with the new components.

CHIME/THERMISTOR

DESCRIPTION

Vehicles equipped with a power liftgate utilize a chime/thermistor assembly. The chime/thermistor assembly is a small capacitor shaped electrical component mounted to the rear license plate lamp housing assembly (Fig. 15) , located just above the license plate. The chime portion of the assembly controls the audible chime sound heard at the rear of the vehicle when the power liftgate is in motion. The thermistor portion of the assembly is a temperature sensor, used by the power liftgate module.

The chime/thermistor assembly is a serviceable component. Consult your Mopar™ parts catalog for a specific part number.

OPERATION

The chime/thermistor assembly performs two different functions for the power liftgate system. First, the chime portion provides an audible chime sound which is controlled by the power liftgate module. The chime/thermistor assembly is hardwired to the power liftgate module. Second the thermistor provides a outside temperature reading by way of a resistance reading (Ω - ohms) supplied to the power liftgate module. As temperature increases the resistance reading (Ω - ohms) increases , as temperature decreases the resistance reading (Ω - ohms) decreases.

REMOVAL

(1) Disconnect and isolate the negative battery cable.

(2) Remove the rear light bar assembly from the vehicle. Refer to Body for the procedure.

(3) Using your hands, grasp the light bar at its sides next to thermistor/chime assembly and gently pull the two sides of the light bar apart until the thermistor/chime assembly can be removed.

INSTALLATION

(1) Gently pull the two sides of the light bar apart until the thermistor/chime assembly can be installed.

(2) Install the rear light bar assembly on the vehicle. Refer to the Body section of the service manual for the procedure.

(3) Connect the negative battery cable.

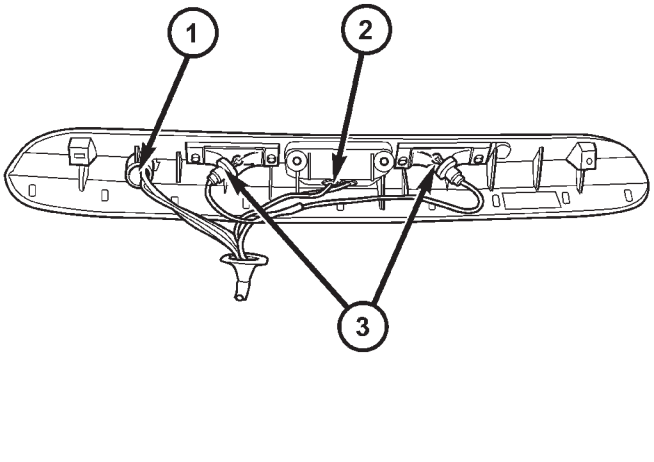

Fig. 15 REAR LIGHT BAR

1 - CHIME / THERMISTOR
2 - ELECTRIC RELEASE HANDLE SWITCH
3 - LICENSE PLATE LAMPS

POWER SLIDING DOOR SYSTEM

TABLE OF CONTENTS

page

POWER SLIDING DOOR SYSTEM
- DESCRIPTION . . . 18
- OPERATION . . . 20
- DIAGNOSIS AND TESTING - POWER SLIDING DOOR SYSTEM . . . 21
- STANDARD PROCEDURE
  - STANDARD PROCEDURE - WELLNUT REPLACEMENT . . . 27
  - STANDARD PROCEDURE - POWER DOOR LEARN CYCLE . . . 27
  - STANDARD PROCEDURE - SLIDING DOOR ADJUSTMENT . . . 27

LATCH
- DESCRIPTION . . . 28
- OPERATION . . . 28
- REMOVAL . . . 28
- INSTALLATION . . . 29

SLIDING DOOR MOTOR
- DESCRIPTION . . . 29
- OPERATION . . . 29
- REMOVAL . . . 29
- INSTALLATION . . . 30

FULL OPEN SWITCH
- DESCRIPTION . . . 30
- OPERATION . . . 30

LEFT B-PILLAR SWITCH
- DESCRIPTION . . . 31
- OPERATION . . . 31
- REMOVAL . . . 31
- INSTALLATION . . . 31

page

RIGHT B-PILLAR SWITCH
- DESCRIPTION . . . 31
- OPERATION . . . 31
- REMOVAL . . . 31
- INSTALLATION . . . 31

LOWER DRIVE UNIT
- DESCRIPTION . . . 31
- OPERATION . . . 31
- REMOVAL . . . 32
- INSTALLATION . . . 32

LOWER DRIVE UNIT TRACK & RACK
- DESCRIPTION . . . 33
- OPERATION . . . 33
- REMOVAL . . . 33
- INSTALLATION . . . 33

WIRING HARNESS
- DESCRIPTION . . . 34
- OPERATION . . . 34
- REMOVAL . . . 34
- INSTALLATION . . . 35

FLEX DRIVE
- DESCRIPTION . . . 35
- OPERATION . . . 36
- REMOVAL . . . 36
- INSTALLATION . . . 36

SLIDING DOOR MODULE
- DESCRIPTION . . . 37
- OPERATION . . . 37
- REMOVAL . . . 38
- INSTALLATION . . . 38

POWER SLIDING DOOR SYSTEM

DESCRIPTION

Some vehicles are equipped with a power opening and closing sliding door system (Fig. 1). Depending on how the vehicle is ordered it may be equipped with only a right side power door or right and left side power doors. This power sliding door system is a complex system consisting of many components. Some of these components are the door motor, latch assembly, sliding door control module, lower drive unit, flex drive assembly, wire harness and track, lower drive unit track and rack assembly, full open switch, B-pillar switch, overhead console switch, key fob switches (Fig. 2), pawl switch, ratchet switch and child lockout and handle switches.

Each power side door has its own door control module, located in the center of the door behind the door trim panel. (Refer to 8 - ELECTRICAL/ELECTRONIC CONTROL MODULES/DOOR CONTROL MODULE - DESCRIPTION) The power side door motor is located in the front portion of the door, on the inner door panel sheet metal. The latch assembly is located in the rear of the power side door, near the body line. The lower drive unit is attached to the lower door hinge. The flex drive assembly connects the door motor to the lower drive unit. The wire harness and track and the lower drive unit track are visible with the door open in the lower door sill area. The power side door full open switch is located under the lower drive unit and is part of the hold open latch assembly. The pawl, ratchet, handle and child lockout switches are all located on the power side door latch assembly. The B-pillar switch, as it will be

POWER SLIDING DOOR SYSTEM (Continued)

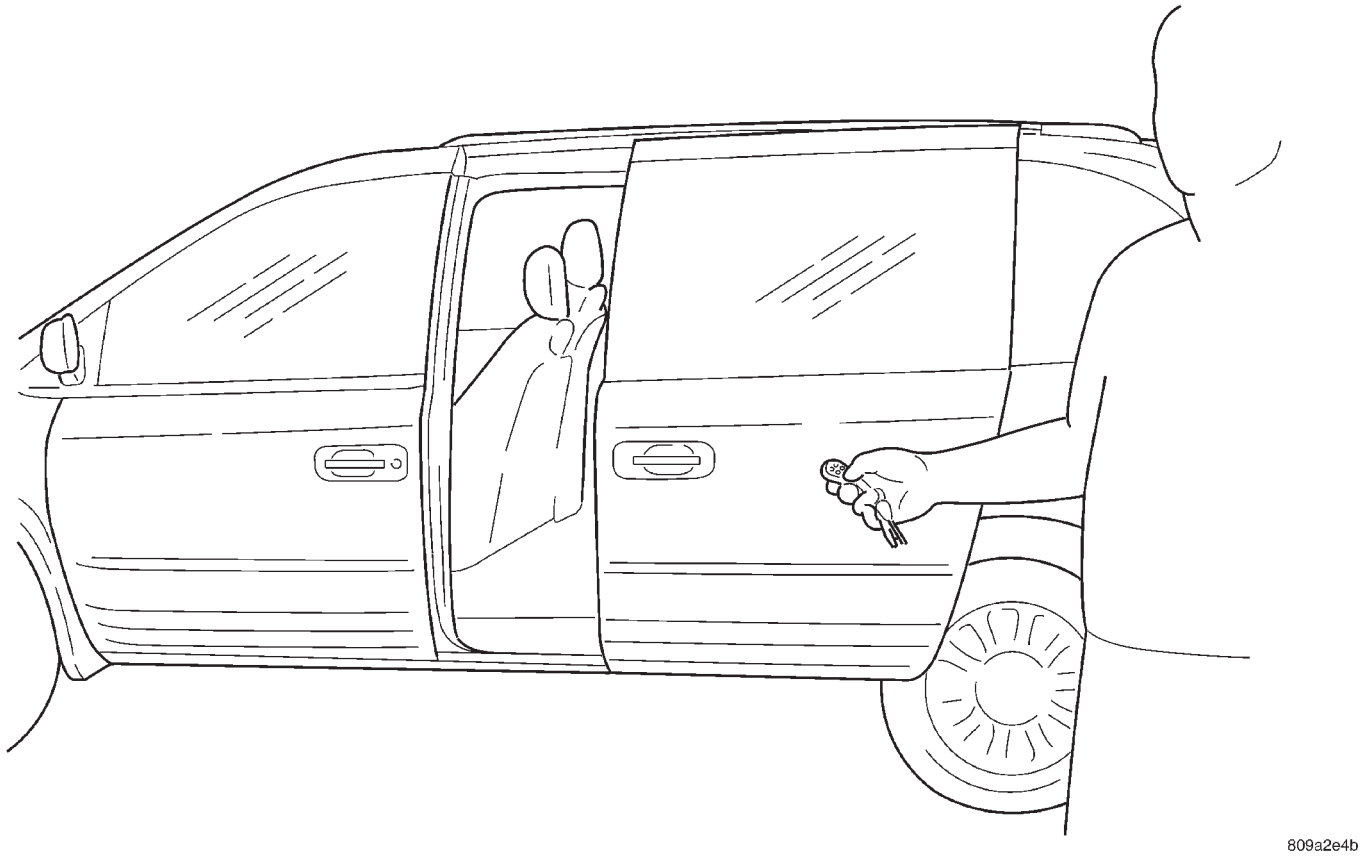

Fig. 1 Power Sliding Door Introduction

referred to, is an open and close command switch located on the vehicles interior body side B-pillar trim. The overhead console switch, is an open and close command switch located in the vehicle's overhead console. More detailed information can be found on these components later in this section.

Safety is of the utmost concern with the power sliding door system. Software technology has enabled the power sliding door control module to detect resistance to door travel. This allows the power sliding door to stop and reverse direction any time an obstruction is felt or any of the command switches are operated (while closing only). Battery voltage is supplied to the power sliding door system through a 40 amp fuse, located in the Intelligent Power Module (IPM) assembly (Fig. 3). The child lockout switch prevents children from opening or actuating the power sliding door system when desired. In the unlikely event that the power sliding door system develops a fault, the power sliding door can still be operated manually from the interior or exterior door handle, just like a standard manual sliding door.

The power sliding door control module communicates on the J1850 PCI Data Bus Circuit. Therefore, the power sliding door control module can generate and store its own diagnostic trouble codes (DTC). A diagnostic scan tool, such as the DRB III® is used to

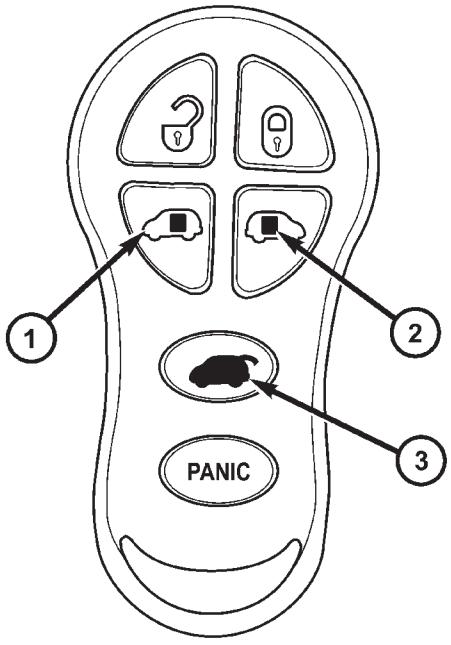

Fig. 2 Key Fob

1 - Left Sliding Door Switch
2 - Right Sliding Door Switch
3 - Liftgate Switch

POWER SLIDING DOOR SYSTEM (Continued)

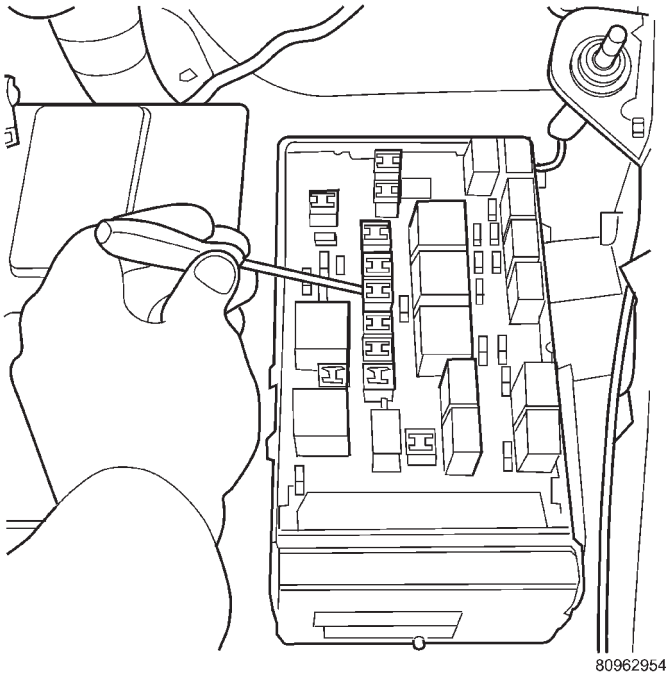

Fig. 3 Power Side Door Fuse Location

read and diagnose these trouble codes. Refer to the Body Diagnostic Manual for a complete list of diagnostic routines.

NOTE: It may be possible to generate Sliding Door Diagnostic Trouble Codes during normal power sliding door operation. Refer to the Body Diagnostic Manual for a complete list of diagnostic routines.

For additional information, (Refer to 8 - ELECTRICAL/POWER DOORS - OPERATION). For a complete power sliding door system wiring schematic, refer to Wiring Diagrams. For power sliding door system operation instructions, refer to the vehicle owner manual.

WARNING: BE CERTAIN TO READ ALL WARNINGS AND CAUTIONS IN POWER SLIDING DOOR OPERATION BEFORE ATTEMPTING ANY SERVICE OF POWER SLIDING DOOR SYSTEM OR COMPONENTS.

OPERATION

With the push of a power sliding door open/close command switch (key fob, overhead console or B-pillar mounted) a signal is sent out to the Body Control Module (BCM). The BCM then sends a signal out on the PCI Data Bus circuit (J1850) to the power sliding door module. The power sliding door module then signals the power sliding door latch to release the door to the unlatched and movable position. The motor then starts an open cycle.

During the door open cycle, if the power sliding door module detects sufficient resistance to door travel, such as an obstruction in the door's path, the power sliding door module will immediately stop door movement and reverse door travel to the full open or closed position. The ability for the power sliding door module to detect resistance to door travel is accomplished by hall effect sensors and the door motor speed.

The power sliding door control module has the ability to learn. Anytime a door is opened or closed using the power sliding door system the module learns from its cycle. If a replacement power sliding door component is installed or a door adjustment is made, the module must re-learn the effort required to open or close the door. A learn cycle can be performed with a Diagnostic Scan Tool, such as the DRB III®, or with a complete cycle of the door, using any one of the command switches. Refer to Standard Procedures in this section for detailed instructions.

The power sliding door system is designed with a number of system inhibitors. These inhibitors are necessary for safety and/or feasibility of the power sliding door system. See the power sliding door system inhibitors noted below:

POWER SLIDING DOOR SYSTEM INHIBITORS

- The power sliding door must be in the **full** open or closed position in order for the power sliding door system to start a cycle. If the door is not in this position (based on the input from the full open, pawl or ratchet switches) the door control module will not respond to command switch inputs.
- The vehicles transmission must be in **park or neutral** in order for the power sliding door system to start a cycle.
- The vehicles child lockout switch must be in the "UNLOCKED" position in order for the power sliding door systems B-pillar switches to function.
- If multiple obstacles are detected during the same power open or close cycle the power sliding door may go into full manual mode.
- If severe Diagnostic Trouble Codes (DTC) are stored in the power sliding door control module the power sliding door may go into full manual mode.
- Due to the high pressure created in the passenger compartment with the blower motor on high, the power sliding door may not complete a power close cycle unless a window is cracked, allowing the pressure to escape. This situation will only be experienced on some vehicles, or vehicles with brand new side door weather seals installed. Refer to the Side Door Adjustment procedure in the Standard Procedures section of this group.
- The vehicles fuel tank filler door must be in the closed position. Due to the sliding door interference

with the open fuel tank filler door, mechanical linkage prevents the side door from opening and striking the fuel door. Refer to the Body section of this manual for detailed information on the fuel door lockout feature.

POWER SLIDING DOOR SYSTEM WARNINGS

WARNING: ALWAYS DISCONNECT THE NEGATIVE BATTERY CABLE BEFORE ATTEMPTING ANY POWER SLIDING DOOR SYSTEM SERVICE.

WARNING: EXTREME CARE MUST BE TAKEN TO PREVENT OBJECTS FROM ENTERING THE DOORS PATH ONCE THE DOOR REACHES THE CINCH MOTOR CONTACT (APPROXIMATELY 1 INCH BEFORE FULLY CLOSED).

WARNING: NEVER ATTEMPT TO ENTER OR EXIT THE VEHICLE WHILE THE POWER SLIDING DOOR IS IN MOTION. YOU COULD DAMAGE THE POWER SLIDING DOOR SYSTEM OR COMPONENTS AND/OR CAUSE PERSONAL INJURY.

WARNING: NEVER ATTEMPT TO DRIVE AWAY WITH THE POWER SLIDING DOOR IN MOTION. YOU COULD DAMAGE THE POWER SLIDING DOOR SYSTEM OR COMPONENTS AND/OR CAUSE PERSONAL INJURY.

WARNING: NEVER PLACE OBJECTS IN THE POWER SLIDING DOOR WHEN CINCHING CLOSED. YOU COULD DAMAGE THE VEHICLE, POWER SLIDING DOOR SYSTEM OR COMPONENTS AND/OR CAUSE PERSONAL INJURY.

DIAGNOSIS AND TESTING - POWER SLIDING DOOR SYSTEM

The power opening and closing power sliding door system is a complex system containing many components and modules. In order to obtain conclusive testing, the Programmable Communications Interface (J1850) data bus network and all of the electronic modules that provide inputs to, or receive outputs from the power sliding door system must be checked.

The power sliding door system was designed to be diagnosed with an appropriate diagnostic scan tool, such as the DRB III®. The most reliable, efficient, and accurate means to diagnose the power sliding door system requires the use of a DRB III® scan tool and the proper Body Diagnostic Procedures manual. The DRB III® can be used to observe various switch statuses throughout the power sliding door system to help the technician diagnose a defective switch or component. The DRB III® can also be used to actuate various components throughout the power sliding door system to help the technician diagnose a defective component.

Before any testing of the power sliding door system is attempted, the battery should be fully charged, all built-in power sliding door system inhibitors read and understood (Refer to 8 - ELECTRICAL/POWER DOORS - OPERATION) and all wire harness and ground connections inspected around the affected areas on the vehicle.

The following are quick reference diagnostic tables to help when diagnosing and testing the power sliding door system.

POWER SLIDING DOOR SYSTEM (Continued)

POWER SLIDING DOOR SYSTEM DIAGNOSIS

CONDITION	POSSIBLE CAUSES	CORRECTION
Door opens unexpectedly	Failure of sliding door control or body control module	Disconnect then reconnect battery to reset module, function door, if no function exists check for loose wire connections, Refer to the Body Diagnostic Manual for detailed procedures
	Failure of latch assembly	Check wiring/cable connections and for blown fuse
		Check for trouble codes, replace latch if necessary
	Failure of open/close command switch	Check for shorted or defective switch
	Failure of striker	Striker misaligned or loose
		Striker damaged Replace striker if necessary
Door will not open manually using inside handle	Failure of inside handle assembly	Check for broken inside handle assembly
		Check cable connections at latch and handle assembly.
		Check for binds or kinks in cable.
		Check for foreign matter preventing the operation of handle assembly Replace the handle if necessary
	Failure of latch assembly	Check cable connections
		Check for foreign matter preventing the operation of latch assembly Replace latch if necessary
	Failure of inside handle cable assembly	Check cable for binding
		Check cable for broken condition Replace the cable, if necessary
	Binding or sticking of components	Check for foreign matter preventing the operation of door
		Establish location of binding Replace necessary components
Door will not open manually using outside handle	Failure of outside handle assembly	Check for broken outside handle assembly
		Check cable connections at latch and handle assembly.
		Check for binds or kinks in cable. Check for foreign matter preventing the operation of handle assembly

POWER SLIDING DOOR SYSTEM (Continued)

CONDITION	POSSIBLE CAUSES	CORRECTION
		Replace the handle if necessary
	Failure of latch assembly	Check cable connections
		Check for foreign matter preventing the operation of latch assembly
		Replace latch assembly, if necessary
	Failure of outside handle cable assembly	Check cable for binding
		Check cable for broken condition
		Replace the cable, if necessary
	Binding or sticking of components	Check for foreign matter preventing the operation of door
		Establish location of binding
		Replace necessary components
Sliding door will not open/close manually	Binding or sticking of components	Establish location of binding. Disconnect flex drive and recheck. Replace necessary components
	Failure of latch assembly	Check cable connections
		Check for foreign matter preventing the operation of latch assembly
		Replace latch assembly, if necessary
Sliding door will not open/close under power	Failure of sliding door control or body control module	Disconnect then reconnect battery to reset module, function door, if no function exists check for loose wire connections, see Body Diagnostic Manual for detailed procedures
	Failure of latch assembly	Check wire connections and for blown fuse
		Check cable connections
		Check for foreign matter preventing the operation of latch assembly
		Troubleshoot using body diagnostic manual
		Replace latch assembly, if necessary
	Failure of motor assembly	Troubleshoot using body diagnostic manual
	Failure of full open switch assembly	Troubleshoot using body diagnostic manual
	Failure of flex drive assembly	Disconnect flex drive and check for broken condition
	Failure of lower drive unit assembly	Remove lower drive unit and check for broken condition
	Binding or sticking of components	Establish location of binding and replace necessary components
	Wiring problems (system or vehicle)	Troubleshoot using electrical schematics. Refer to wiring diagrams
Power loss during power door operation	Wiring problems (system or vehicle)	Troubleshoot using electrical schematics. Refer to wiring diagrams

POWER SLIDING DOOR SYSTEM (Continued)

CONDITION	POSSIBLE CAUSES	CORRECTION
	Low battery voltage	Charge battery
	Failure of sliding door control or body control module	Disconnect then reconnect battery to reset module, function door, if no function exists check for loose wire connections, see Body Diagnostic Manual for detailed procedures
	Failure of drive assembly	Remove lower drive unit and check for no drive condition
No latching in primary and/or secondary positions	Failure of inside/outside handle assembly	Go to that ″POSSIBLE CAUSE″ and review ″CORRECTIONS″
	Failure of latch assembly	Check wire connections and for blown fuse
		Check cable connections Check for foreign matter preventing the operation of latch assembly Troubleshoot using body diagnostic manual Replace latch assembly, if necessary
	Binding or sticking of components	Establish location of binding and replace necessary components
	Failure of sliding door control or body control module	Disconnect then reconnect battery to reset module, function door, if no function exists check for loose wire connections, see Body Diagnostic Manual for detailed procedures
	Door seal force too high	Inspect seals for damage, mis-assembly, foreign matter. Refer to Door adjustment in the Body section of the service manual for specifications
	Failure of drive assembly	Remove lower drive unit and check for no drive condition
	Failure of striker	Striker misaligned or loose
		Striker damaged Replace striker if necessary
Latch will not fully release from primary position	Failure of latch assembly	Check wire connections and for blown fuse
		Check cable connections Check for foreign matter preventing the operation of latch assembly Troubleshoot using body diagnostic manual Replace latch assembly, if necessary
	Failure of fuel filler door lockout mechanism	Check operation of fuel filler door lockout mechanism. Refer to the Body section for information
	Failure of sliding door control or body control module	Disconnect then reconnect battery to reset module, function door, if no function exists check for loose wire connections, see Body Diagnostic Manual for detailed procedures
	Failure of striker	Striker misaligned or loose

POWER SLIDING DOOR SYSTEM (Continued)

CONDITION	POSSIBLE CAUSES	CORRECTION
		Striker damaged Replace striker if necessary
	Cables worn and stretched	Replace cables as necessary
	Binding or sticking of components	Establish location of binding and replace necessary components
Key fob, B-pillar or overhead console switch does not power operate door	Blown Fuse	Check fuse and replace
	Battery voltage low	Charge or replace battery
	Failure of latch assembly	Check for foreign matter preventing the operation of latch assembly
		Check wire connection Pawl and/or ratchet switch inoperative Replace latch if necessary
	Wiring problems (system or vehicle)	Troubleshoot using electrical schematics. Refer to wiring diagrams
	Failure of body control module	Check electrical connections
		Refer to the body diagnostic manual for additional checks Replace BCM if necessary
	Failure of key fob	Replace key fob battery
		Replace key fob if necessary
	Failure of sliding door control module	Disconnect then reconnect battery to reset module, function door, if no function exists check for loose wire connections, see Body Diagnostic Manual for detailed procedures
	Failure of door motor assembly	Check for foreign matter preventing the operation of gear motor assembly
		Check wire connections Gear motor clutch does not engage, replace assembly Full open switch inoperative, replace hold open latch assembly Replace motor assembly. if necessary
Door does not stay open	Failure of hold open latch assembly	Check wire/cable connections
		Replace hold open latch, if necessary
	Failure of hold open latch striker	Replace hold open latch striker, if necessary
High inside/outside opening effort	Failure of latch assembly	Check wire connections and for blown fuse
		Check cable connections

POWER SLIDING DOOR SYSTEM (Continued)

CONDITION	POSSIBLE CAUSES	CORRECTION
		Check for foreign matter preventing the operation of latch assembly Troubleshoot using body diagnostic manual Replace latch assembly, if necessary
	Failure of inside/outside handle assembly	Go to that ″POSSIBLE CAUSE″ and review ″CORRECTIONS″
	Binding or sticking of components	Establish location of binding and replace necessary components
Door continues to cinch closed during power mode	Failure of latch assembly	Check wire connections and for blown fuse
		Check for foreign matter preventing the operation of latch assembly Troubleshoot using body diagnostic manual Replace latch assembly, if necessary
	Failure of sliding door control or body control module	Disconnect then reconnect battery to reset module, function door, if no function exists check for loose wire connections, see Body Diagnostic Manual for detailed procedures
	Wiring problems (system or vehicle)	Troubleshoot using electrical schematics. Refer to wiring diagrams
Door continues to open during power mode (runaway motor)	Failure of sliding door control or body control module	Disconnect then reconnect battery to reset module, function door, if no function exists check for loose wire connections, see Body Diagnostic Manual for detailed procedures
	Failure of hold open latch assembly	Check wire/cable connections
		Replace hold open latch, if necessary
	Failure of drive assembly	Remove lower drive unit and check for no drive condition
	Wiring problems (system or vehicle)	Troubleshoot using electrical schematics. Refer to wiring diagrams
Door opens very slowly	Failure of door motor assembly	Check wire/cable connections
		Replace motor assembly, if necessary
	Binding or sticking of components	Establish location of binding and replace necessary components
Squeaks, Noises and rattles	Foreign material in door compartment	Remove foreign material
	Loose components	Check and tighten loose components
	Poor door track lubrication	Lubricate the front portions of the side door tracks with ″Door Ease®″ or equivalent

POWER SLIDING DOOR SYSTEM (Continued)

STANDARD PROCEDURE

STANDARD PROCEDURE - WELLNUT REPLACEMENT

Vehicles equipped with a power sliding door utilize wellnuts. These wellnuts are used to hold and isolate the power sliding door motor to and from the door inner panel. The wellnut functions like a expandable rubber core plug, as the screw fastener is threaded into the wellnut and tightened the wellnuts diameter increases. This secures the door motor assembly to the inner panel and keeps the audible motor vibrations to a minimum. If a wellnut shows signs of wear, it must be replaced. Follow the procedure below if replacement is necessary.

(1) Remove the door motor from the door inner panel. (Refer to 8 - ELECTRICAL/POWER DOORS/ MOTOR - REMOVAL).

(2) Remove the wellnuts from the inner panel by pulling them straight out (Fig. 4). If a wellnut is difficult to remove, use a high leverage cutting tool to cut the wellnut in half and remove the two halves from the door assembly.

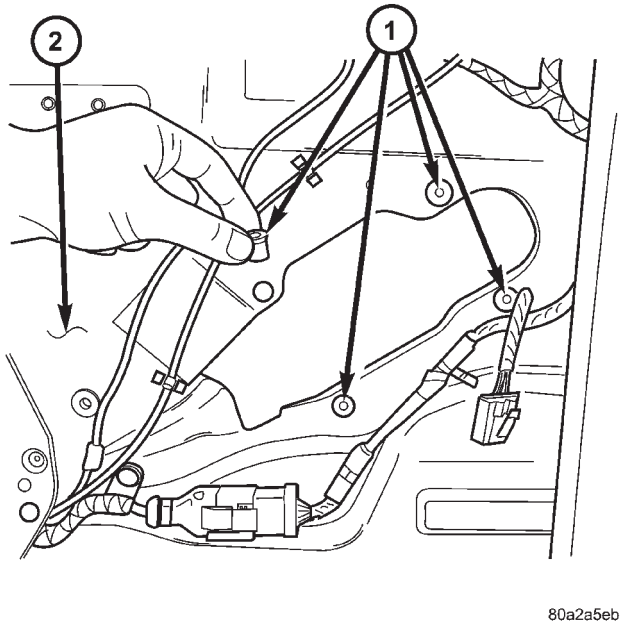

Fig. 4 Side Door Motor Wellnuts

1 - Wellnuts
2 - Side Door Inner Panel

(3) Install the replacement wellnuts in the inner panel and install the door motor(Refer to 8 - ELECTRICAL/POWER DOORS/MOTOR - INSTALLATION) .

CAUTION: Be certain to use the correct torque specification (35 in.lbs.) when installing the door motor retaining screws.

STANDARD PROCEDURE - POWER DOOR LEARN CYCLE

Any time a power side door component is removed, replaced, door adjustment is performed or diagnostic trouble codes are addressed and erased, a learn cycle **must** be performed. This learn cycle enables the power side door control module to learn or relearn its critical information (travel limits, resistance to door travel, etc.) which allows it to perform properly and safely. It also tells the technician that the system is performing properly and is able to be returned to service. To perform a power door learn cycle do the following:

(1) Obtain a DRB III® scan tool.

Connect the DRB III® to the vehicle and check for any power side door system stored diagnostic trouble codes, erase any stored codes. Operate the system and check to see if any trouble codes return. If any diagnostic trouble codes return, diagnose, correct and erase the codes before performing the learn cycle. If a DRB III® scan tool is not available, the learn cycle can be performed by opening and closing the power side door using any of the normal open/close command switches. Be certain to cycle the side door through a complete open **and** close cycle or the procedure will not be complete.

(2) Using the DRB III®, Go into Test Routine Menu and select a power open command.

(3) Select a power close command.

(4) The power side door learn cycle is complete.

NOTE: If the power side door will not complete a full cycle, a problem exists with the power side door system. Refer to Power Side Door Diagnosis and Testing.

STANDARD PROCEDURE - SLIDING DOOR ADJUSTMENT

In order for the power sliding door system to function properly the door must move freely and smoothly. The power sliding door system can accommodate for some minor changes in the effort required to move the door. However, in extreme conditions the door may need to be mechanically adjusted for proper fit. (Refer to 23 - BODY/DOORS - SLIDING/SLIDING DOOR - ADJUSTMENTS).

If a problem exists with the power sliding door and it is suspected to be extreme effort, check for proper door alignment and adjustment first, then check the door tracks and drive unit for free manual operation.

POWER SLIDING DOOR SYSTEM (Continued)

Use a known good vehicle for side door comparison data. Refer to the Side Door Adjustment procedure in the Body section of the service manual for detailed instructions.

LATCH

DESCRIPTION

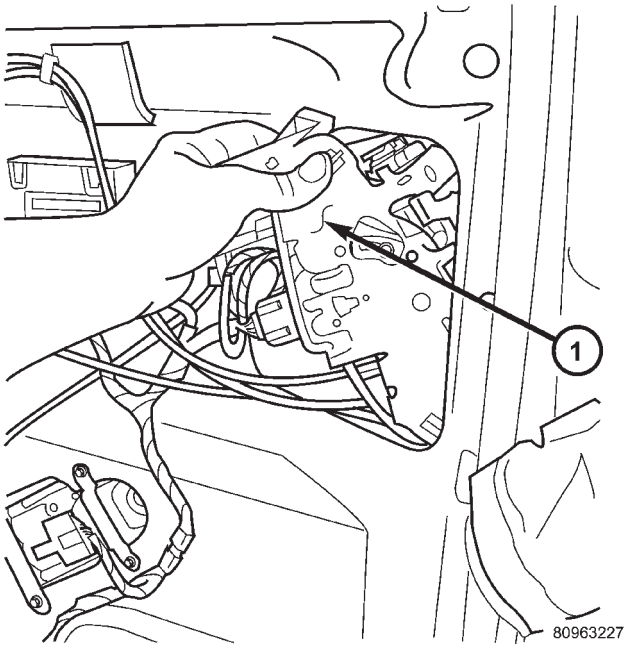

Fig. 5 Removing/Installing Power Latch in Sliding Door

1 - Power Latch Assembly

Vehicles equipped with a power side door or doors utilize a power latch. One power latch is used for each power door. The latch is located on the trailing edge of the side door assembly (Fig. 5). This power latch assembly is comprised of many different components which have the ability to perform the power cinch, release, lock, unlock and safety related operations. These components are the door latch, lock/unlock actuator, cinch/release actuator and child lockout, pawl, ratchet and handle switches. The pawl and ratchet switches are used to indicate the primary and secondary latched positions. The cinch latch also provides a connection point for the interior handle, exterior handle and hold open latch cables.

The power latch is a replaceable component. Consult your Mopar parts catalog for specific part numbers.

OPERATION

The power latch performs the same operation as a full manual door latch as well as power cinch, release, lock and unlock operations. The power latch mounted actuator cinches the door closed and latches it in its primary latched position. During a power close cycle, the power cinch actuator will not operate until the side door has reached its secondary latch position (determined by pawl and ratchet switches). During a power open cycle, the power release actuator will stop once the side door has moved from primary latch position.

The power latch uses inputs from the lock/unlock actuator, power side door control module and child lockout, pawl, ratchet and handle switches to provide safe power cinch and release operations. Refer to Power Side Door Operation for additional information.

REMOVAL

(1) Disconnect and isolate the negative battery cable.

(2) Remove the appropriate side door trim panel. Refer to the Body section for the procedure.

(3) Remove the weather shield if necessary. Refer to the Body section for the procedure.

(4) Open the side door all the way and remove the door latch retaining bolts (Fig. 6).

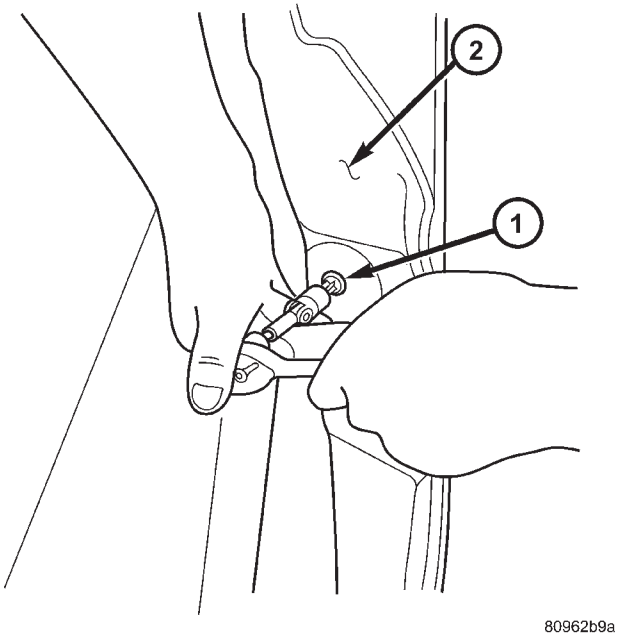

Fig. 6 Removing Latch Retaining Bolts

1 - Latch Retaining Bolts
2 - Side Door

LATCH (Continued)

(5) Partially close the door and pull the latch assembly out of the side door inner panel.
(6) Disconnect all electrical connectors leading to the latch assembly.
(7) Disconnect the inside and outside handle cables from the latch assembly. Refer to the Body Section of the service manual for the procedure.
(8) Disconnect the hold open latch cable from the latch assembly. Refer to the Body Section of the service manual for the procedure.
(9) Disconnect lock actuator link rod from the latch assembly.
(10) Remove the latch assembly from the vehicle.

INSTALLATION

(1) Position the latch assembly in the vehicle. Be certain all latch mounted components are installed on the replacement latch assembly. If not, transfer components from the old latch to the new latch assembly.
(2) Connect the lock actuator link rod on the latch assembly.
(3) Connect the hold open latch cable on the latch assembly. Refer to the procedure in this section for detailed instructions.
(4) Connect the inside and outside handle cables on the latch assembly. Refer to the procedure in the Body section for detailed instructions.
(5) Connect all electrical connectors leading to the latch assembly.
(6) With assistance from another person, position the side door and install the door latch retaining bolts. Torque to 10 - 12 N·m (100 in. lbs.).
(7) Install the weathershield if necessary. Refer to the procedure in the Body section for detailed instructions.
(8) Install the appropriate side door trim panel. Refer to the procedure in the Body section for detailed instructions.
(9) Connect the negative battery cable.

SLIDING DOOR MOTOR

DESCRIPTION

Vehicles equipped with a power sliding door utilize a door motor assembly. The door motor is located in the center of the side door (Fig. 7) and is comprised of three parts. The three parts of the door motor assembly are the motor, gear reduction and clutch assembly. The door motor assembly provides the power and torque to move the sliding door from the open/closed position to full closed/open position, after the power latching mechanism has released.

Special wellnuts and screws are used in the side door inner panel to retain the door motor to the door panel. Refer to Standard Procedures in this section for additional wellnut information.

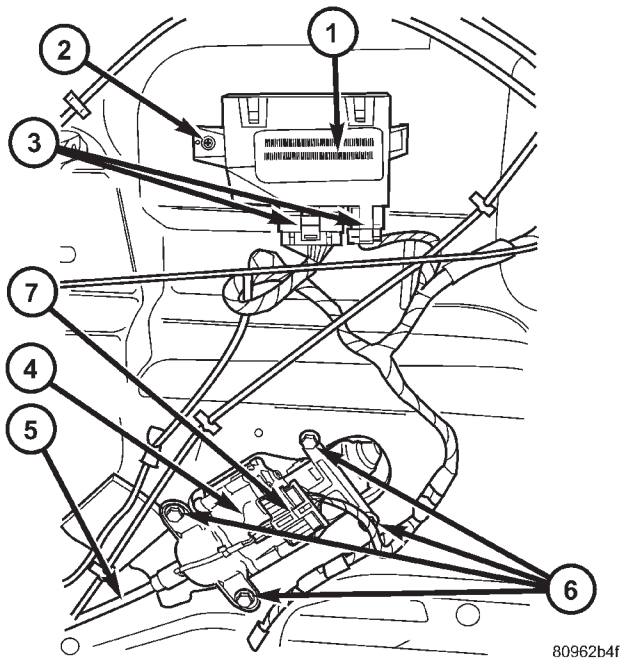

Fig. 7 Side Door Components

1 - Sliding Door Control Module
2 - Module Retaining Screw
3 - Module Electrical Connectors
4 - Door Motor Assembly
5 - Flex Drive Assembly
6 - Door Motor Retaining Fasteners
7 - Door Motor Electrical Connector

The door motor is replaced as a complete assembly, which includes the DC motor, gear reduction and clutch assemblies. Consult your Mopar parts catalog for specific part numbers.

OPERATION

With the push of a Power Side Door (PSD) command switch, the PSD control module will signal the latch assembly to release the door from its primary locked position. The drive motor will then take over to provide the power to open the door to its full open or closed position. The gear reduction portion of the motor assembly reduces the speed of the motor from 5800 to 260 rpm and also increases the torque to the lower drive unit. The clutch portion of the motor assembly engages the motor to drive the door under power and disengages it so the door can be moved easily under manual operation.

REMOVAL

(1) Disconnect and isolate the negative battery cable.

SLIDING DOOR MOTOR (Continued)

(2) Remove the door trim panel from the appropriate side door. Refer to the Body section for the procedure.

(3) Remove water shield as necessary to gain access to motor assembly.

(4) Remove retaining clip holding flex drive assembly to the motor (Fig. 8). Pull flex drive cable straight out of the motor assembly.

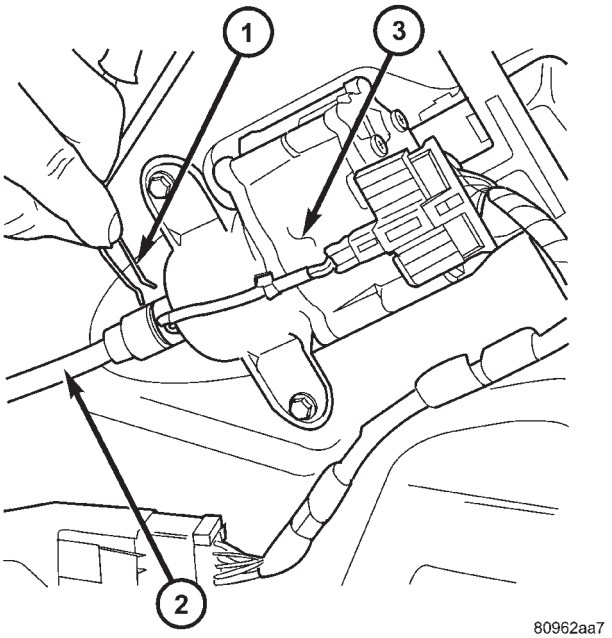

Fig. 8 Flex Drive Retaining Clip

1 - Flex Drive Cable Retaining Clip
2 - Flex Drive Cable
3 - Side Door Motor Assembly

(5) Disconnect door motor electrical connector.

(6) Remove the 4 screws holding the motor to the inner door panel.

(7) Remove the motor assembly from the vehicle.

INSTALLATION

(1) Position the motor assembly on the door inner panel.

(2) Install the 4 screws holding the motor to the inner door panel. Torque to 35 in. lbs.

(3) Install the flex shaft by lining up the square shaped drive shaft with corresponding hole in motor drive unit and push straight in.

(4) Install the E-clip to secure flex-shaft.

(5) Connect the negative battery cable.

(6) Install the weather shield. Refer to the Body section of the service manual for the procedure.

(7) Install the door trim panel on the side door. Refer to Body for the procedure.

FULL OPEN SWITCH

DESCRIPTION

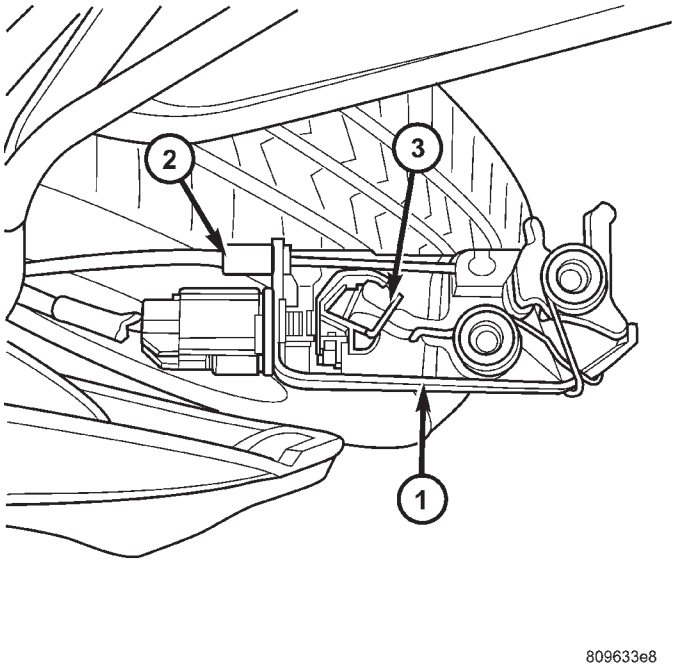

Fig. 9 Full Open Switch Position & Orientation

1 - Hold Open Latch Assembly
2 - Hold Open Latch Cable
3 - Full Open Switch

Vehicles equipped with a power sliding door utilize a full open switch. This switch is located in the hold open latch (Fig. 9) under the side door lower hinge. When the power side door module receives a ground signal input from the full open switch, and as long as the cinching latch actuator is not in power mode or the handle switch is open, the signal indicates that the door is at the full open position.

The full open switch is incorporated into the hold open latch. If the full open switch proves faulty, the entire hold open latch assembly must be replaced.

OPERATION

The full open switch is triggered by a pawl lever in the hold open latch. When the full open switch is closed (circuit to ground) the ratchet has engaged on the hold open striker and the pawl lever has engaged on the ratchet, locking the latch from opening and holding the door in the full open position.

LEFT B-PILLAR SWITCH

DESCRIPTION

Vehicles equipped with power sliding side door/s utilize B-pillar switches. These switches are located on the interior of the vehicle, on the B-pillar trim panels. These switches serve as an open and close command switch for the appropriate power side door.

The B-pillar switches are replaceable. Consult your Mopar parts catalog for a specific part number.

OPERATION

When the Pillar switch is depressed a signal is sent to the Body Control Module (BCM), this signal is then sent to the Power Sliding Door Module, telling it to start a power open or close cycle. The child lockout feature must be disabled and the side door must be unlocked in order for the Pillar switch to function.

REMOVAL

(1) Disconnect and isolate the negative battery cable.

(2) Using a trim stick or other small flat-bladed pry tool, gently pry the leading upper edge of the B-pillar switch away from the B-pillar trim.

(3) Once the upper edge is free from pillar trim, rock the switch out of the switch opening.

(4) Disconnect the B-pillar switch electrical connector. First, slide the connector lock away from the switch then, depress connector retaining tab while pulling straight apart.

(5) Remove the B-pillar switch from the vehicle.

INSTALLATION

(1) Connect the B-pillar switch electrical connector. Slide connector lock toward the switch to lock in place.

(2) Hook the lower edge of the B-pillar switch on the B-pillar trim and then push the switch firmly into position.

(3) Connect the negative battery cable.

RIGHT B-PILLAR SWITCH

DESCRIPTION

Vehicles equipped with power sliding side door/s utilize B-pillar switches. These switches are located on the interior of the vehicle, on the B-pillar trim panels. These switches serve as an open and close command switch for the appropriate power side door.

The B-pillar switches are replaceable. Consult your Mopar parts catalog for a specific part number.

OPERATION

When the Pillar switch is depressed a signal is sent to the Body Control Module (BCM), this signal is then sent to the Power Sliding Door Module, telling it to start a power open or close cycle. The child lockout feature must be disabled and the side door must be unlocked in order for the Pillar switch to function.

REMOVAL

(1) Disconnect and isolate the negative battery cable.

(2) Using a trim stick or other small flat-bladed pry tool, gently pry the leading upper edge of the B-pillar switch away from the B-pillar trim.

(3) Once the upper edge is free from pillar trim, rock the switch out of the switch opening.

(4) Disconnect the B-pillar switch electrical connector. First, slide the connector lock away from the switch then, depress connector retaining tab while pulling straight apart.

(5) Remove the B-pillar switch from the vehicle.

INSTALLATION

(1) Connect the B-pillar switch electrical connector. Slide connector lock toward the switch to lock in place.

(2) Hook the lower edge of the B-pillar switch on the B-pillar trim and then push the switch firmly into position.

(3) Connect the negative battery cable.

LOWER DRIVE UNIT

DESCRIPTION

Vehicles equipped with a power sliding side door utilize a lower drive unit. The lower drive unit is located on the sliding door lower hinge assembly (Fig. 10). This drive unit is used to transfer the lateral rotation of the flex drive assembly into longitudinal movement via the drive unit gear and door track rack teeth (Fig. 10).

The lower drive unit is a replaceable component. Consult your Mopar parts catalog for specific part numbers.

OPERATION

During a power open or close cycle, the power drive unit is driven by the flex drive assembly. The lower drive units main gear engages the lower door tracks rack teeth, this moves the side door assembly accordingly.

LOWER DRIVE UNIT (Continued)

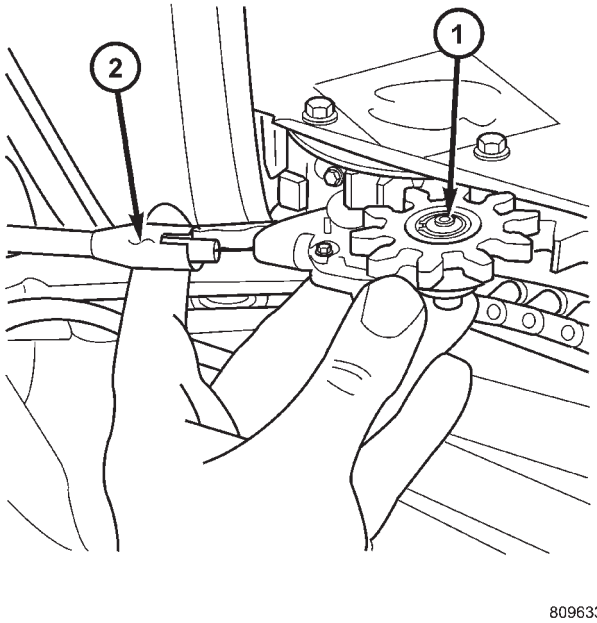

Fig. 10 Lower Drive Unit

1 - Lower Drive Unit
2 - Flex Drive Assembly

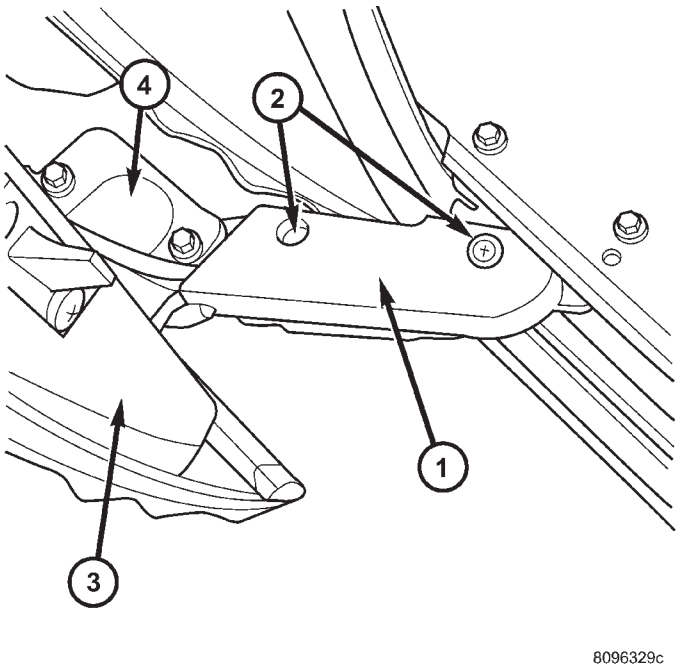

Fig. 11 Sliding Door Lower Hinge Assembly

1 - Lower Drive Unit Cover
2 - Lower Drive Unit Cover Retaining Screws
3 - Sliding Door
4 - Lower Hinge Arm Bracket

REMOVAL

(1) Disconnect and isolate the negative battery cable.

(2) Open the appropriate side door and remove the lower drive unit cover retaining screws (Fig. 11).

(3) Remove the lower drive unit retaining fasteners (Fig. 12).

(4) Disconnect the flex drive assembly from the lower drive unit. Expand the flex drive collar until the lower drive unit can be pulled straight off.

(5) Remove the lower drive unit from the vehicle.

INSTALLATION

(1) Position the lower drive unit near the lower hinge.

(2) Connect the flex drive assembly on the lower drive unit. Push the flex drive collar straight on until the it snaps in place (Fig. 12).

(3) Install the lower drive unit retaining fasteners (Fig. 12). Torque the larger allen headed center stud to 9 N·m (80 in. lbs.). Torque the smaller screw to 3 N·m (28 in. lbs.).

(4) Install the lower drive unit cover and retaining screws (Fig. 11).

(5) Connect the negative battery cable.

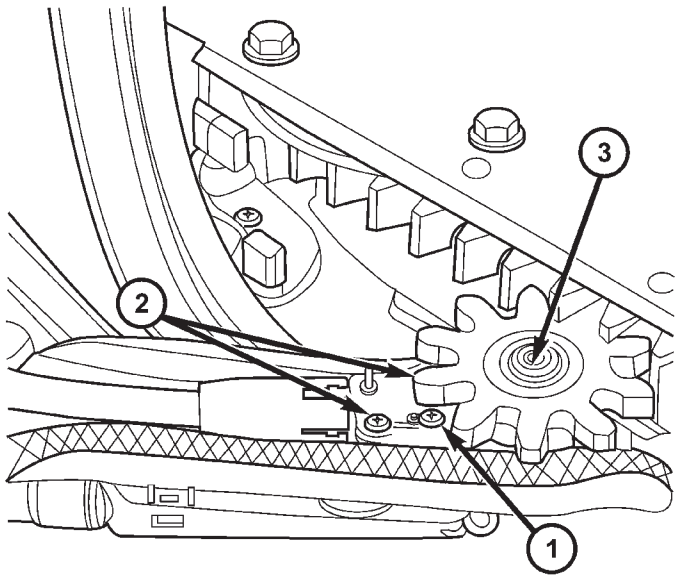

Fig. 12 Lower Drive Unit Retaining Fasteners

1 - Lower Drive Unit Retaining Screw
2 - Do Not Remove
3 - Lower Drive Unit Retaining Bolt

LOWER DRIVE UNIT TRACK & RACK

DESCRIPTION

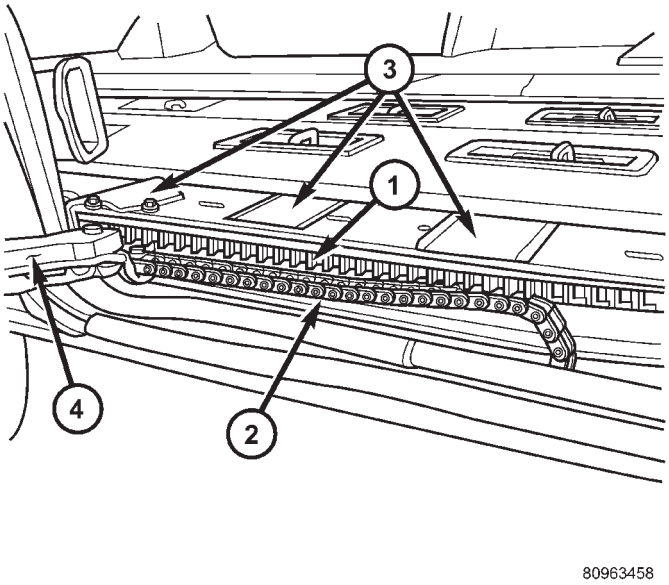

Fig. 13 Rack Access Hole Locations

1 - Lower Door Track and Rack Assembly
2 - Wire Harness
3 - Rack Access Hole Sealing Patches
4 - Lower Drive Unit Cover

Vehicles equipped with a power sliding side door utilize a lower drive unit track or door track and rack assembly. This track provides a mating rack gear (Fig. 13) for the lower drive unit to engage. The track also accepts the lower hinge rollers, which helps support the weight of the side door as well as providing a smooth surface for the hinge rollers to move upon.

The lower door track is a replaceable component. Consult your Mopar parts catalog for specific part numbers.

OPERATION

With the start of a power door open cycle, the door motor drives the flex drive assembly. The flex drive assembly drives the lower drive unit. A metal drive gear which is part of the lower drive unit, meshes with the door track rack teeth and moves the door into the full open position. The same operation repeats itself, during a power close cycle only the system rotates in the opposite direction.

REMOVAL

(1) Disconnect and isolate the negative battery cable.

(2) Remove the side door sill plate from the lower of the door opening. Refer to the Body section for the procedure.

(3) Remove the hold-open striker. Refer to Body for the procedure.

(4) Position a floor jack, with a block of wood under the leading edge of the side door to support it (Fig. 14).

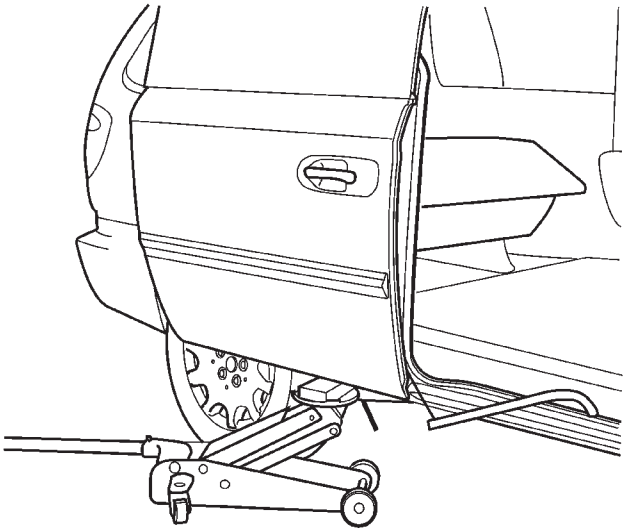

Fig. 14 Supporting Side Door

(5) Remove the lower hinge assembly from the door. Refer to the Body section of the service manual for the procedure.

(6) Position the wire harness assembly out of door opening (Fig. 13), this will allow sufficient room to remove the door track.

(7) Pull back the sealing patches (Fig. 13) and remove the lower track retaining nuts (Fig. 15).

(8) Carefully remove the lower door track from the vehicle.

INSTALLATION

(1) Carefully position the lower door track in the vehicle.

(2) Install the lower track retaining nuts (Fig. 15) and install the sealing patches. Torque the fasteners to 70 in. lbs.

(3) Install the lower hinge assembly on the door. Refer to the Body section of the service manual for the procedure.

LOWER DRIVE UNIT TRACK & RACK (Continued)

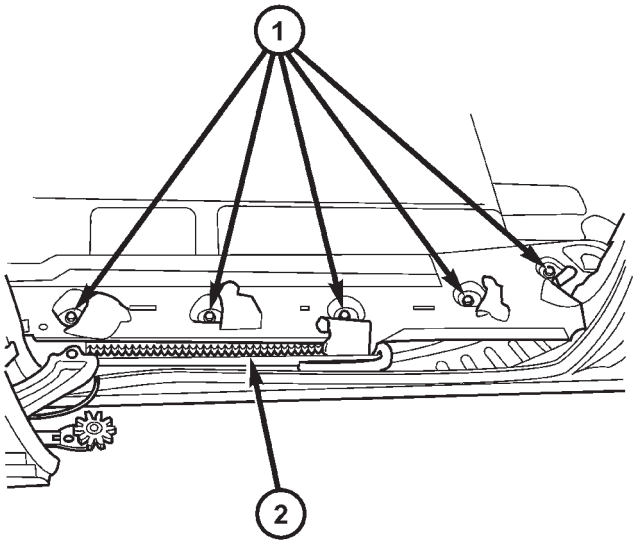

80963356

Fig. 15 Lower Track Retaining Bolts

1 - Lower Track Retaining Bolts
2 - Lower Door Track

NOTE: Take care to locate the lower hinge assembly on the door in its original position (ie. match screw washer with rings left on hinge). Adjust door fit if required.

(4) Remove the floor jack (Fig. 14).
(5) Install the hold-open striker. Refer to the Body section for the procedure.
(6) Install the side door sill plate on the lower of the door opening. Refer to the Body section for the procedure.
(7) Connect the negative battery cable.

WIRING HARNESS

DESCRIPTION

The wire harness supplies power (12v), ground and various electrical signals to the side sliding door for various power door functions. A plastic chain or wiring track covers the wire harness assembly (Fig. 16) and is used to protect the wire harness from abrasion and/or tangling. This wiring track is replaced with the wire harness assembly.

The wire harness assembly is a replaceable component. Consult your Mopar parts catalog for specific part numbers.

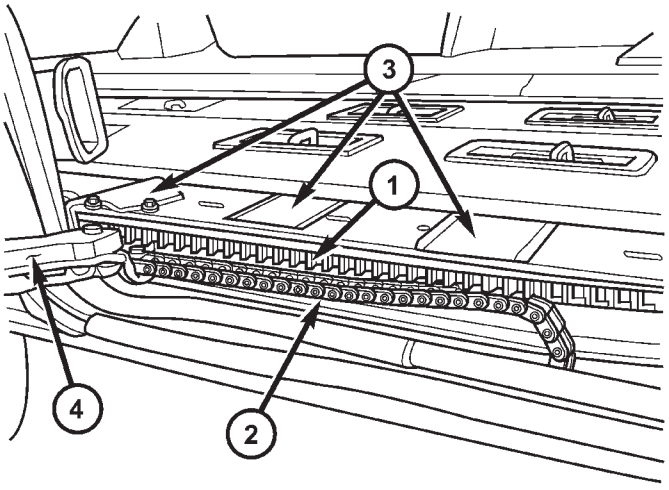

80963458

Fig. 16 Wire Harness Position and Orientation

1 - Lower Door Track and Rack Assembly
2 - Wire Harness
3 - Rack Access Hole Sealing Patches
4 - Lower Drive Unit Cover

OPERATION

The wire harness and plastic wiring track provide a safe and reliable means of supplying power, ground and other various electrical connections to the side sliding door. During sliding door movement the wiring track folds and unfolds like the links in a chain.

REMOVAL

(1) Disconnect and isolate the negative battery cable.
(2) Remove the appropriate door trim panel from the sliding side door. Refer to the Body section for the procedure.
(3) Remove the lower drive unit cover retaining screws and remove the cover (Fig. 17).
(4) Disconnect the power side door electrical connector, located just behind the lower drive unit assembly.
(5) Disengage retaining pushpin and pull wire harness away from its power side door mounting location (Fig. 16).
(6) Using a flat bladed screwdriver, unsnap the wire harness retaining clip from the lower drive unit.
(7) Slide the wire harness off the forward lower drive unit stud.
(8) Using a pushpin removal tool, unsnap wire harness retaining pushpins from the rocker panel.

WIRING HARNESS (Continued)

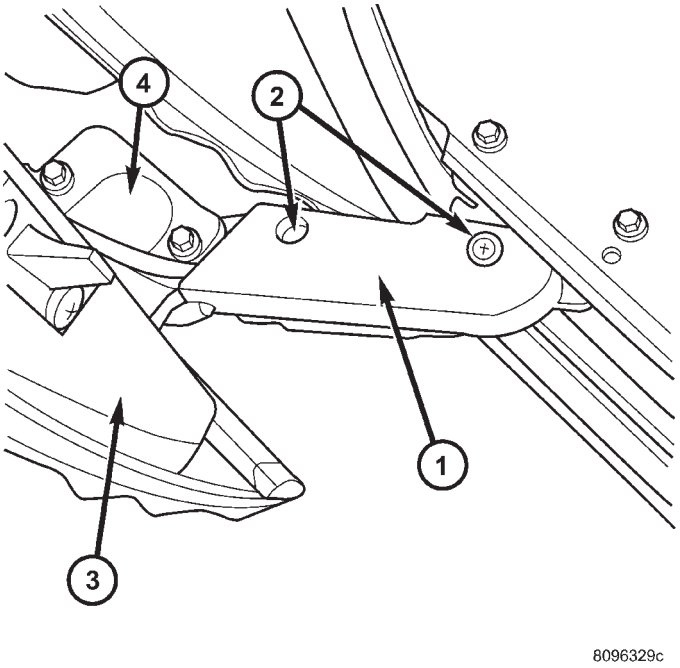

Fig. 17 Lower Hinge/Drive Assembly

1 - Lower Drive Unit Cover
2 - Lower Drive Unit Cover Retaining Screws
3 - Sliding Door
4 - Lower Hinge Arm Bracket

(9) Remove side door lower sill plate. Refer to Body for the procedure.

(10) Pull back the rearward edge of the B-pillar trim to access the wire harness connector and disconnect connector.

(11) Remove the wire harness assembly from the vehicle.

INSTALLATION

(1) Position the wire harness assembly in the vehicle.

(2) Connect the wire harness connector located at the rearward edge of the B-pillar.

(3) Install the side door lower sill plate. Refer to the Body section for the procedure.

(4) Snap the wire harness retaining pushpins in the rocker panel.

(5) Slide the wire harness on the lower drive unit stud.

(6) Install the wire harness retaining clip on the lower drive unit stud.

(7) Connect the power side door electrical connector, located just behind the lower drive unit.

(8) Install the lower drive unit cover and retaining screws.

(9) Install the appropriate door trim panel on the sliding side door. Refer to the Body section for the procedure.

(10) Connect the negative battery cable.

FLEX DRIVE

DESCRIPTION

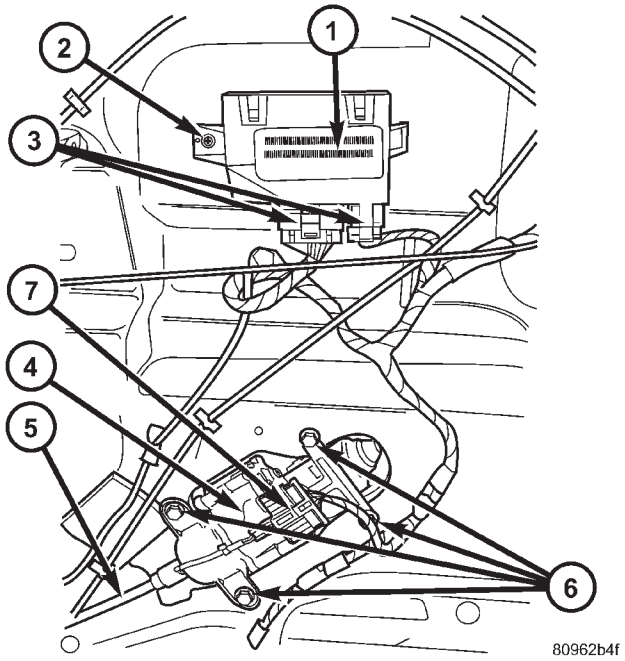

Fig. 18 Side Door Components

1 - Sliding Door Control Module
2 - Module Retaining Screw
3 - Module Electrical Connectors
4 - Door Motor Assembly
5 - Flex Drive Assembly
6 - Door Motor Retaining Fasteners
7 - Door Motor Electrical Connector

Vehicles equipped with a power sliding side door utilize a flex drive assembly. The flex drive assembly is located in the lower portion of the door (Fig. 18) and is used to connect the door motor to the lower drive unit. An E-clip is used to secure the flexdrive to the motor assembly, while the flex drive collar is used to secure the drive to the lower drive unit. The flex drive assembly is basically a flexible drive shaft for the power side door system.

The flex drive assembly is a replaceable component. Consult your Mopar parts catalog for specific part numbers.

FLEX DRIVE (Continued)

OPERATION

With one end of the flex drive attached to the door motor and the other attached to the lower drive unit, the flex drive transfers the power and torque from the motor to the drive unit. A square shaped drive cable, inside the flex drive assembly engages the motor drive and rotates to move the door accordingly.

REMOVAL

(1) Disconnect and isolate the negative cable.

(2) Remove the side door trim panel from the vehicle. Refer to the Body section for the procedure.

(3) Remove the weathershield. Refer to the Body section for the procedure.

(4) Remove the E-clip from the flex drive assembly (Fig. 19).

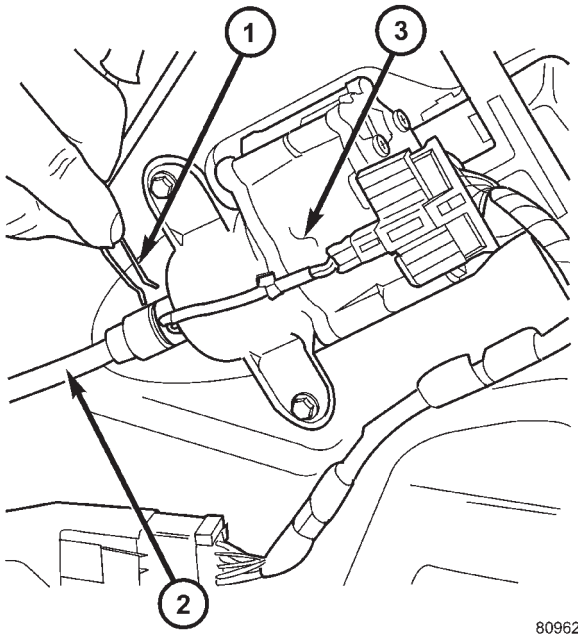

Fig. 19 Flex Drive E-Clip

1 - Flex Drive Cable Retaining Clip
2 - Flex Drive Cable
3 - Side Door Motor Assembly

(5) Pull the flex drive straight out of the motor assembly.

(6) Remove the lower drive unit cover retaining screws and remove the cover (Fig. 20).

(7) Expand the flex drive collar, next to the lower drive unit until the flex drive can be pulled straight off the lower drive unit.

(8) Remove the flex drive assembly from the vehicle.

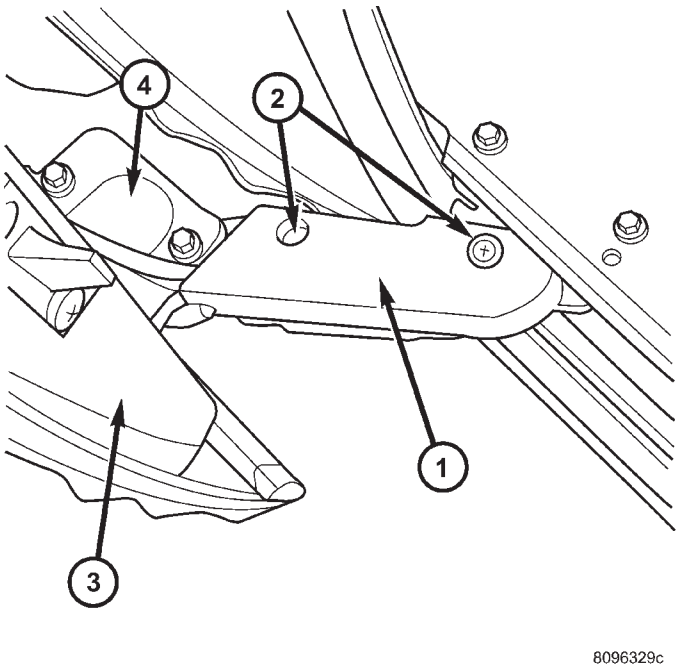

Fig. 20 Lower Hinge/Drive Assembly

1 - Lower Drive Unit Cover
2 - Lower Drive Unit Cover Retaining Screws
3 - Sliding Door
4 - Lower Hinge Arm Bracket

INSTALLATION

(1) Position the flex drive assembly in the vehicle.

(2) Install the flex drive on the lower drive unit. Push straight on until it snaps in place. It may be necessary to rotate drive unit gear slightly until the flex drive seats in place.

(3) Install the lower drive unit cover and retaining screws.

(4) Install the flex drive in the motor assembly. Line up the square shaped inner shaft and push straight on (Fig. 21).

(5) Install the E-clip on the flex drive assembly (Fig. 19).

(6) Install the weathershield. Refer to Body for the procedure.

(7) Install the side door trim panel on the vehicle. Refer to Body for the procedure.

(8) Connect the negative cable.

FLEX DRIVE (Continued)

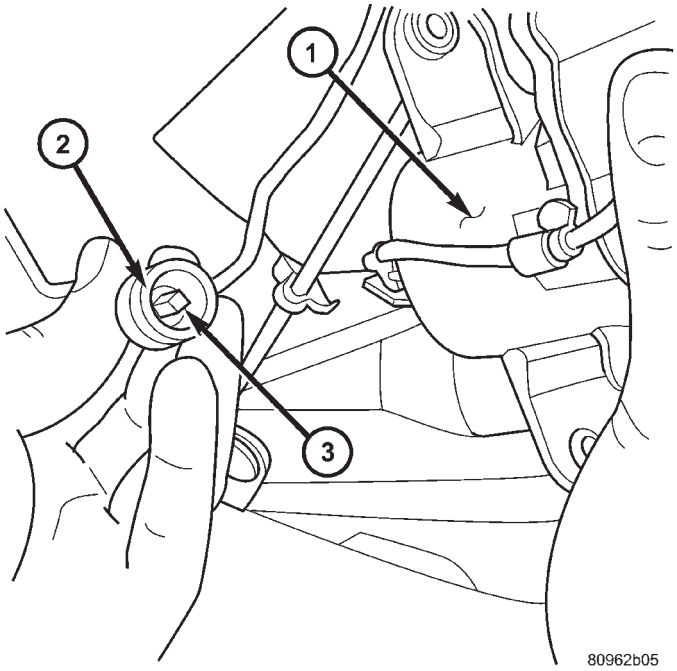

Fig. 21 Flex Drive Cable

1 - Door Motor
2 - Flex Drive Collar
3 - Flex Drive Inner Shaft

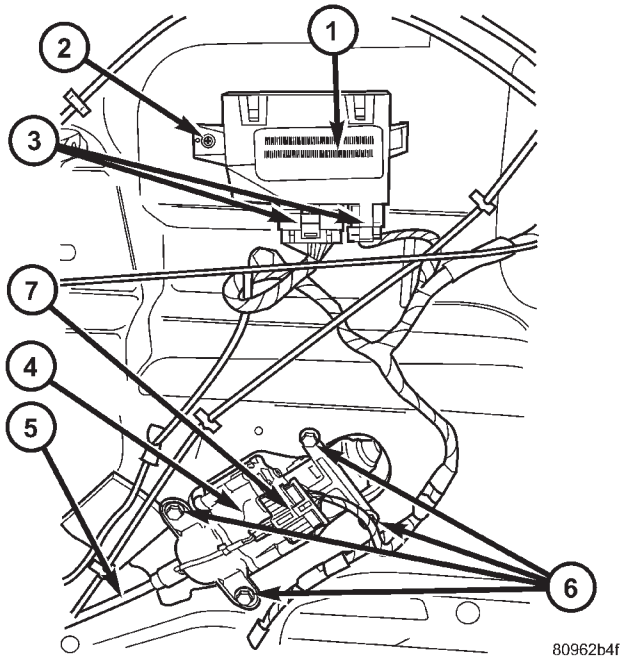

Fig. 22 Side Door Components

1 - Sliding Door Control Module
2 - Module Retaining Screw
3 - Module Electrical Connectors
4 - Door Motor Assembly
5 - Flex Drive Assembly
6 - Door Motor Retaining Fasteners
7 - Door Motor Electrical Connector

SLIDING DOOR MODULE

DESCRIPTION

Vehicles equipped with a power sliding door utilize a sliding door control module. The sliding door control module is located behind the sliding door trim panel in the center of the door, just above the sliding door motor (Fig. 22). This module controls the operation of the door through the Programmable Communication Interface (PCI) J1850 data bus circuit and the Body Control Module. The sliding door control module contains software technology which enables it to detect resistance to door travel and to reverse door travel in order to avoid damage to the door or to avoid possible personal injury if the obstruction is a person. This feature functions in both the opening and closing cycles. If the power sliding door system develops any problems the control module will store and recall Diagnostic Trouble Codes (DTC). The use of a diagnostic scan tool, such as the DRB III® is required to read and troubleshoot these trouble codes. The sliding door control module can be reflashed if necessary. Refer to the latest Technical Service Bulletin (TSB) Information for any updates.

The power door control module is a replaceable component and cannot be repaired, if found to be faulty it must be replaced. Consult your Mopar™ parts catalog for a specific part number.

OPERATION

The power sliding door control module serves as the main computer for the power sliding side door system. All power door functions are processed through the power door control module and/or the vehicles body control module (BCM). At the start of a power open command, a signal is sent to the BCM and then to the power door control module via the J1850 data bus circuit. This signal, generated by any of the power door command switches, tells the power door control module to activate a power latch release, engage the clutch assembly and drive the door into the full open position. If an obstacle is felt during this power open cycle, the module will reverse direction and close the door. This process is also enabled during a power close cycle. This process will repeat three times, and if a fourth obstacle is detected, the door will go into full manual mode. Once the full open position is obtained, a hold open latch assembly mounted full open switch tells the control module that the door has reached the full open position. If the power sliding door system develops any problems the control module will store and recall Diagnostic Trouble Codes (DTC). The use of a diagnostic scan tool, such as the DRB III® is required to read and troubleshoot these trouble codes.

SLIDING DOOR MODULE (Continued)

REMOVAL

(1) Disconnect and isolate the negative battery cable.

(2) Remove the appropriate door trim panel from the vehicle. Refer to Body for the procedure.

(3) Remove the weather shield. Refer to Body for the procedure.

(4) Disconnect the power door control module electrical connectors. Slide the red locking tab out (away from module) and depress connector retaining tab, while pulling straight apart.

(5) Remove the control module retaining screw (Fig. 22).

(6) Remove the module from the vehicle.

INSTALLATION

(1) Position the control module and install the retaining screw.

(2) Connect the control module electrical connectors. Slide the locking tab into the locked position.

(3) Install the appropriate door trim panel on the vehicle. Refer to Body for the procedure.

(4) Install the weather shield. Refer to Body for the procedure.

(5) Connect the negative battery cable.

(6) Using an appropriate scan tool, check and erase any power door control module diagnostic trouble codes.

(7) Verify power door system operation. Cycle the power door through one complete open and close cycle.

POWER LOCKS

TABLE OF CONTENTS

page

POWER LOCKS
DESCRIPTION 39
OPERATION 40
DOOR CYLINDER LOCK SWITCH
DESCRIPTION 41
OPERATION 41
DIAGNOSIS AND TESTING - DOOR CYLINDER LOCK SWITCH 41
REMOVAL 42
INSTALLATION 42
DOOR LOCK MOTOR
DIAGNOSIS AND TESTING - DOOR LOCK MOTOR 42
DOOR LOCK SWITCH
DIAGNOSIS AND TESTING - DOOR LOCK SWITCH 42
REMOVAL 43
INSTALLATION 43
KEYLESS ENTRY TRANSMITTER
STANDARD PROCEDURE
STANDARD PROCEDURE - HORN CHIRP PREFERENCE 43

page

STANDARD PROCEDURE - BATTERY REPLACEMENT 43
SPECIFICATIONS
RANGE 43
BATTERY 43
REMOTE KEYLESS ENTRY MODULE
DESCRIPTION 44
OPERATION 44
DIAGNOSIS AND TESTING - REMOTE KEYLESS ENTRY MODULE 44
STANDARD PROCEDURE - PROGRAMMING RKE MODULE 44
REMOVAL 44
INSTALLATION 45
SLIDING DOOR LOCK MOTOR
REMOVAL 45
INSTALLATION 45

POWER LOCKS

DESCRIPTION

POWER DOOR LOCK SYSTEM

The front doors, sliding door(s) and liftgate are equipped with actuator motors to lock or unlock the latch mechanisms. The door lock actuator motor is not serviced separately from the door latch, except for the sliding door(s).

AUTOMATIC DOOR LOCK

The vehicle comes with two options for power door locks:

- Rolling automatic lock (ENABLE), doors automatically lock at approximately at 25.7 Km/h (16 mph).
- No rolling automatic lock (DISABLE), doors do not automatically lock when the vehicle is moving.

AUTOMATIC DOOR UNLOCK

The doors will unlock automatically on vehicles equipped with power door locks if:

- Auto door locks feature is enabled and automatic unlock is enabled.
- The transmission was in gear and speed is above zero.
- The transmission in park or neutral and speed is zero.
- Any door (excluding liftgate) opens.

DOOR LOCK INHIBIT

The BCM cancels out the door lock switch actuation, when the key is in the Ignition Switch and either front door is open.

Pressing the key fob RKE lock/unlock under these conditions results in normal lock/unlock activation.

CENTRAL LOCKING

If equipped with Vehicle Theft Security System (VTSS), all the doors can be locked with the key by using any of the door lock cylinders. Turning the key to the lock position will lock all the doors.

DOOR LOCK CIRCUIT PROTECTION

The door lock system is protected by a 40 amp fuse located in the IPM. The BCM receives lock/unlock input and will turn on the appropriate drivers and provide a voltage level to the door lock motor for a specific time. The IPM is located along the side of the vehicle battery in the engine compartment.

POWER LOCKS (Continued)

REMOTE KEYLESS ENTRY SYSTEM

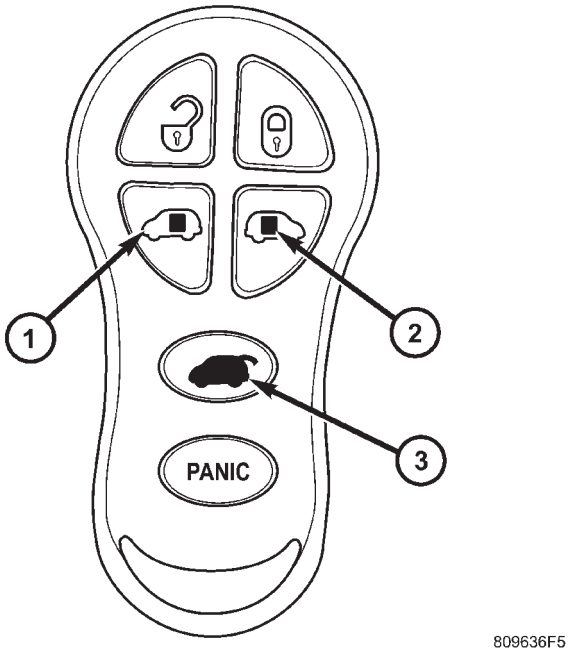

Fig. 1 KEY FOB

1 - LEFT SLIDING DOOR BUTTON
2 - RIGHT SLIDING DOOR BUTTON
3 - LIFTGATE SWITCH

The key fob transmitter (Fig. 1) has six buttons. Three of them, LOCK, UNLOCK, and PANIC, are used to actuate parts of, and program the Remote Keyless Entry (RKE) system via the customer programming mode. It is not necessary to use the PANIC button with the DRB III® scan tool mode of programming.

OPERATION

POWER DOOR LOCK SYSTEM

The Body Control Module (BCM) locks or unlocks the doors when an actuation input signal from a door lock switch or Remote Keyless Entry Module (RKE) is received. The BCM turns on the output drivers and provides a voltage level to the door lock motor for a specified time. The BCM locks the doors automatically when the vehicle is driven beyond the speed of 25.7 Km/h (16 mph). The rolling door lock feature can be disabled if desired. All doors and liftgate can be locked or unlocked using mechanical button or key cylinder methods (Liftgate cylinder does not lock/unlock vehicle. It only unlocks the liftgate).

AUTOMATIC DOOR LOCKS

The BCM is equipped with a disable feature to stop the speed sensitive automatic door locks from functioning. The DISABLE feature can be switched ON or OFF as desired. When the system is DISABLED the door locks will operate normally, but will not lock automatically when the vehicle is rolling. When the door locks are ENABLED the door locks will automatically lock when the vehicle is moving at about 25.7 Km/h (16 mph). All doors are closed, the PCM has set the “OK TO LOCK” bit, and doors were not previously locked.

DOOR LOCK INHIBIT

If the key is in the ignition, in any position, and either front door is ajar, all power door lock functioning shall be disabled when activating either door lock switch. Also, if the Vehicle Theft Alarm (VTA) is armed, the door lock switch “UNLOCK” feature will be disabled until the vehicle is disarmed. Pressing the RKE lock/unlock button under these conditions will result in a normal lock/unlock activation.

After the key is removed from the Ignition Switch, or the doors are closed, the power door locks will operate normally.

CENTRAL LOCKING

If equipped with Vehicle Theft Security System (VTSS), all the doors can be locked with the key by using any of the door lock cylinders. Turning the key to the LOCK position will lock all the doors.

When either of the front key cylinder switches is detected active, the BCM will activate the illuminated entry feature and the individual front doors will become mechanically unlocked. To central unlock all doors, a second transition from OFF to UNLOCK has to occur within 2 seconds of the first complete UNLOCK cycle.

To central unlock the driver door, turn the key to the rear of the vehicle. This indicates an unlock signal to the BCM. For the passenger door, turn the key toward the front of the vehicle. When either key cylinder switch is detected as active, the BCM will activate the illuminated entry feature. The individual doors will become mechanically unlocked.

To central lock the vehicle, the driver door lock cylinder is turned toward the front of the vehicle. The passenger door lock cylinder is turned toward the rear of the vehicle. When a lock input from either key cylinder is detected as active, the BCM will cancel the illuminated entry feature and perform the central lock operation.

POWER LOCKS (Continued)

DOOR LOCK CIRCUIT PROTECTION

The BCM controls the door lock output drivers. If the door lock switch is actuated continuously for more than one second the BCM will turn the output driver OFF (the BCM would consider the switch stuck). The lock motors are protected with Positive Temperature Coefficient (PTC) device that prevents motor burn out.

REMOTE KEYLESS ENTRY SYSTEM

- **LOCK**: Pressing the LOCK button locks all doors and sounds horn (chirp) and arm the Vehicle Theft Security System, if equipped. The chirp verifies that the RKE receiver has sent a message to the BCM for door lock operation. If a door has not been closed before pressing the LOCK button, the vehicle may not be secured and the VTSS will not arm until the door is closed.
- **UNLOCK**: Pressing the UNLOCK button once will unlock the driver's side doors and activate the illuminated entry system and disarm Vehicle Theft Security System, if equipped. Pressing the UNLOCK button twice within five seconds will unlock all doors and activate the illuminated entry system.
- **LEFT SLIDING DOOR**: Pressing the LEFT SLIDING DOOR BUTTON opens/closes the left power sliding door remotely.
- **RIGHT SLIDING DOOR**: Pressing the RIGHT SLIDING DOOR BUTTON opens/closes the right power sliding door remotely.
- **LIFTGATE**: Pressing the LIFTGATE BUTTON opens/closes the liftgate remotely, if equipped.If not equipped with power liftgate, pressing the liftgate button will allow a one time 30 second access to liftgate.
- **PANIC**: Pressing the PANIC button sounds the horns at half second intervals, flashes the exterior lamps, and turns ON the interior lamps. The panic alarm will remain on for three minutes, or until the PANIC button is actuated again or the ignition switch is turned to the RUN position.

The Remote Keyless Entry Module is capable of retaining the transmitter Vehicle Access Code(s) (VAC) in its memory even after vehicle power has been interrupted.

NOTE: Additional features available to the customer are described in the Vehicle Owners Manual.

The RKE system activates the optional memory seat, mirror system and adjustable pedals, if equipped. Two primary key fob transmitters can be programmed to actuate memory seat and mirror setting 1 or 2. Two additional key fob transmitters can be added, but they will not be able to operate the memory seat and mirror system (Refer to 8 - ELECTRICAL/POWER SEATS - OPERATION) and (Refer to 8 - ELECTRICAL/POWER MIRRORS - OPERATION).

DOOR CYLINDER LOCK SWITCH

DESCRIPTION

The Door Cylinder Lock Switch is used to:

- Unlock/Lock all the doors via the Central Locking feature.
- Arm/Disarm the Vehicle Theft Security System.
- Trigger the Illuminated Entry feature.

The door cylinder lock switch is mounted to the rear of the driver and passenger door lock cylinders. When installed on the rear of the cylinder, there is a tab on the lock cylinder that aligns with the switch to prevent it from turning. An anti-rotating device. The door cylinder lock switch is a one time use switch. Once it is removed from the rear of the door lock cylinder, it may not be reinstalled and a new switch must be used.

OPERATION

When the Door Cylinder Lock Switch is turned either way using the door key cylinder, the BCM reads a direct message signal from the switch, via the Programmable Communication Interface (PCI) bus.

If turning the key cylinder once, toward the front of the vehicle (for either driver or passenger doors), this will:

(1) Mechanically unlock the door lock.

(2) Disarm the Vehicle Theft Security System (if equipped).

(3) Turn on the Illuminated Entry (if equipped) for approximately 30 seconds.

If the key cylinder is turned to the unlock position (toward the front of vehicle) twice within two seconds, all the doors and liftgate will unlock (if equipped with the central locking feature).

To lock the vehicle using the door cylinder lock switch, turn the key cylinder toward the rear of the vehicle (either passenger or driver doors) once. This will lock the door that you are using the key on. If equipped with the central locking feature, this will lock all the other doors and liftgate. Furthermore, this will arm the vehicle theft security system and turn off the illuminated entry.

DIAGNOSIS AND TESTING - DOOR CYLINDER LOCK SWITCH

(1) Visually inspect the switch for proper installation. Make sure it is seated on the rear of the key cylinder, with the tab of the door key cylinder properly aligned with the slot on the door cylinder lock switch.

(2) Disconnect the switch at the harness connector and check the resistance in each switch position.

DOOR CYLINDER LOCK SWITCH (Continued)

CAUTION: Do not disconnect the switch from the rear of the door key cylinder. This switch is a one time use switch. Once it is removed from the rear of the switch, it is not reusable and must be replaced. Test the switch at the harness connector.

DOOR CYLINDER LOCK SWITCH RESISTANCE

SWITCH POSITION	RESISTANCE VALUE
COUNTERCLOCKWISE	5.4K OHMS
NEUTRAL	18.4K OHMS
CLOCKWISE	2K OHMS

REMOVAL

(1) Disconnect and isolate the battery negative cable.
(2) Remove the door trim panel of the effected door cylinder lock switch (Refer to 23 - BODY/DOOR - FRONT/TRIM PANEL - REMOVAL).
(3) Close the door window.
(4) Disconnect the door cylinder lock switch wire connector from the door harness, and wiring clip from the impact beam.
(5) Remove the outer door handle from the door.
(6) Remove the switch from the key cylinder in the door handle and remove from vehicle.

INSTALLATION

(1) Install the switch on the key cylinder in the door handle.
(2) Install the door handle.
(3) Connect the door cylinder lock switch wire connector to the door harness, and the wiring clip to the impact beam.
(4) Install the door trim panel of the affected door cylinder lock switch (Refer to 23 - BODY/DOOR - FRONT/TRIM PANEL - INSTALLATION).
(5) Connect the battery negative cable.
(6) Verify system operation.

DOOR LOCK MOTOR

DIAGNOSIS AND TESTING - DOOR LOCK MOTOR

Verify battery condition before testing door lock motor(s) (Refer to 8 - ELECTRICAL/BATTERY SYSTEM/BATTERY - DIAGNOSIS AND TESTING).

To determine which motor is faulty, check each individual door for electrical lock and unlock or disconnect the motor connectors one at a time, while operating the door lock switch. In the event that none of the motors work, the problem may be caused by a shorted motor or a bad switch. Disconnecting the defective motor will allow the others to work.

To test an individual door lock motor, disconnect the electrical connector from the motor. To lock the door, connect a 12 volt power source to the positive pin of the lock motor and a ground wire to the other pin. Refer to the appropriate wiring information. The wiring information includes wiring diagrams, proper wire and connector repair procedures, further details on wire harness routing and retention, as well as pin-out and location views for the various wire harness connectors, splices and grounds. To unlock the door reverse the wire connections at the motor pin terminals. If these results are NOT obtained, replace the motor.

DOOR LOCK SWITCH

DIAGNOSIS AND TESTING - DOOR LOCK SWITCH

(1) Remove door trim panel. Refer to Body, Door - Front, Trim Panel, Removal and Installation.
(2) Disconnect wire connector from back of door lock switch.
(3) Depress switch to LOCK position.
(4) Using an ohmmeter, test switch resistance between Pins 2 and 3. Refer to the DOOR LOCK SWITCH CONTINUITY test and (Fig. 2).
(5) Depress switch to UNLOCK position.
(6) Test resistance between Pins 2 and 3.
(7) Test resistance between pins 2 and 3 while switch is in its normal unactuated mode.
(8) If resistance values are not within the parameters shown replace the door lock switch.

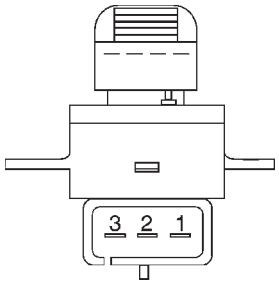

Fig. 2 DOOR LOCK SWITCH

DOOR LOCK SWITCH CONTINUITY

SWITCH POSITION	CONTINUITY BETWEEN	RESISTANCE VALUE
LOCK	2 and 3	5.3K Ohm ± 5%
UNLOCK	2 and 3	2.0K Ohm ± 5%
UNACTUATED	2 and 3	18.3K Ohms ± 5%

DOOR LOCK SWITCH (Continued)

REMOVAL

(1) Disconnect and isolate the battery negative cable.
(2) Remove door trim panel. Refer to Body, Door - Front, Trim Panel, Removal.
(3) Disconnect wire connector from back of door lock switch.
(4) Remove two screws to door lock switch.
(5) Remove switch from vehicle.

INSTALLATION

(1) Install the switch into the vehicle.
(2) Install the two screws to door lock switch.
(3) Connect wire connector to back of door lock switch.
(4) Install door trim panel. Refer to Body, Door - Front, Trim Panel, Installation.
(5) Connect the battery negative cable.

KEYLESS ENTRY TRANSMITTER

STANDARD PROCEDURE

STANDARD PROCEDURE - HORN CHIRP PREFERENCE

DISABLING

The horn chirp can be toggled using a DRB III® or by using the Remote Keyless Entry (RKE) transmitter.

To DISABLE (cancelling) the horn chirp feature, press and hold the transmitter LOCK button for a minimum of five seconds. While pressing the LOCK button in, press the UNLOCK button. The horn chirp feature will not function until the above procedure is repeated.

ENABLING

The horn chirp can be toggled using a DRB III® or by using the Remote Keyless Entry (RKE) transmitter.

To ENABLE (reinstate) the horn chirp feature, use any one of the four key fob transmitters and reverse the above procedures. It will ENABLE the horn chirp feature for all transmitters.

STANDARD PROCEDURE - BATTERY REPLACEMENT

(1) With the transmitter buttons facing down, use a coin (a penny is suggested) to pry the two halves of the transmitter apart (Fig. 3). Make sure not to damage the rubber gasket during separation of the housing halves.

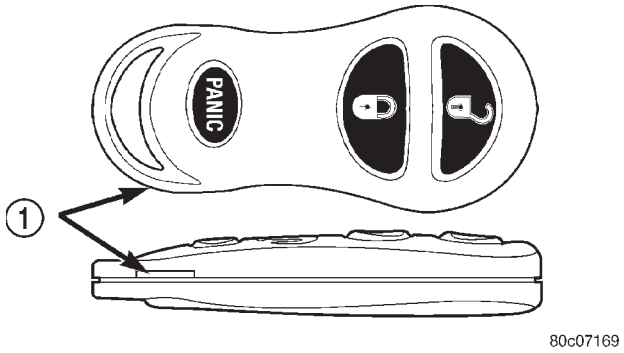

Fig. 3 RKE TRANSMITTER BATTERY REPLACEMENT - TYPICAL

1 - INSERT THIN COIN

(2) Remove the battery from the transmitter back housing holder.
(3) Replace the batteries. Avoid touching the new batteries with your fingers, Skin oils may cause battery deterioration. If you touch a battery, clean it off with rubbing alcohol.
(4) To assemble the transmitter case, snap the two halves together.

SPECIFICATIONS

RANGE

Normal operation range is up to a distance of 7 meters (23 ft.) of the vehicle. Range may be better or worse depending on the environment around the vehicle. Closeness to a radio frequency transmitter such as a radio station tower that is broadcasting on 105 MHz FM or a 156 MHz 2–way communication station, may degrade operational range, while range in an open field will be enhanced.

BATTERY

The batteries can be removed without special tools and are readily available at local retail stores. The recommended battery is Duracell DL 2016 or equivalent, TWO cells are required. Battery life is about three years minimum.

CAUTION: Do not touch the battery terminals or handle the batteries any more than necessary. Hands must be clean and dry.

REMOTE KEYLESS ENTRY MODULE

DESCRIPTION

The RKE module is capable of retaining up to four different Vehicle Access Codes.

OPERATION

Whenever the vehicle battery power is interrupted the RKE Module will retain all vehicle access codes in its memory. When replacing or adding a key fob transmitter (maximum 4) a DRB III® scan tool is required to program the RKE Module to accept the new Vehicle Access Code if a customer owned transmitter is not available. Refer to Electrical, Remote Keyless Entry Module, Standard Procedure - Programming RKE Module or the Proper Body Diagnostic Procedures manual.

DIAGNOSIS AND TESTING - REMOTE KEYLESS ENTRY MODULE

Refer to the appropriate wiring information. The wiring information includes wiring diagrams, proper wire and connector repair procedures, further details on wire harness routing and retention, as well as pin-out and location views for the various wire harness connectors, splices and grounds. Refer to the proper Body Diagnostic Procedures Manual for testing the Remote Keyless Entry system using a DRB III® scan tool. Also refer to other interrelated systems groups within this manual:

- Vehicle Theft Security System
- Power Seats
- Power Mirrors

STANDARD PROCEDURE - PROGRAMMING RKE MODULE

(1) Using a functional key fob transmitter, unlock the vehicle and disarm the Vehicle Theft Security System.

(2) Insert ignition key into the ignition switch.

(3) Turn the ignition switch to RUN position without starting engine.

(4) Using a functional key fob transmitter, press and hold the UNLOCK button for a minimum five seconds (maximum ten seconds).

(5) While still holding UNLOCK button, and before ten seconds passes, press the PANIC button and release both at the same time. A single chime will sound to verify that the RKE module is set to receive the new Vehicle Access Code(s).

(6) Within 30 seconds of the chime, press and release the “LOCK” and “UNLOCK” buttons on the transmitter at the same time. Then press and release any one of the buttons. The BCM will sound an abbreviated chime to acknowledge that the programming of the transmitter has been completed and was successful.

(7) Repeat step 6 for all transmitters that will be used with this vehicle (up to 4 total).

(8) Programming mode will last for 30 seconds. To get out of programming mode sooner, turn the ignition OFF. A single chime will sound to verify that the RKE module will no longer accept additional Vehicle Access Code(s).

(9) When Vehicle Access Code(s) programming is complete, turn the ignition switch to the OFF position and verify RKE system operation using each key fob.

NOTE:
Only the two key fob transmitters that have been programmed to the memory seat and mirror system will operate it. If any key fob is replaced, the memory seat and mirror module will require programming. (Refer to 8 - ELECTRICAL/POWER SEATS - DIAGNOSIS AND TESTING).

REMOVAL

(1) Disconnect and isolate the battery negative cable.

(2) Remove instrument panel top cover (Refer to 23 - BODY/INSTRUMENT PANEL/INSTRUMENT PANEL TOP PAD - REMOVAL).

(3) Remove screws holding RKE module to instrument panel.

(4) Disconnect wire connector from RKE module (Fig. 4).

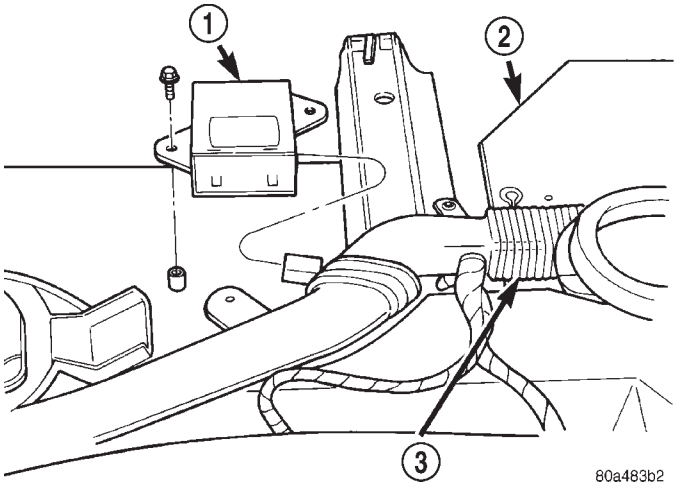

Fig. 4 RKE MODULE

1 - REMOTE KEYLESS ENTRY MODULE
2 - INSTRUMENT PANEL
3 - DEMISTER DUCT

(5) Remove the RKE module from vehicle.

REMOTE KEYLESS ENTRY MODULE (Continued)

INSTALLATION

(1) Position the RKE module and install the screws.
(2) Connect the wire connector to the RKE module (Fig. 4).
(3) Install the instrument panel top pad.
(4) Connect the battery negative cable.

SLIDING DOOR LOCK MOTOR

REMOVAL

(1) Disconnect and isolate the negative battery cable.
(2) Remove sliding door trim panel (Refer to 23 - BODY/DOORS - SLIDING/TRIM PANEL - REMOVAL).
(3) Remove sound pad as necessary.
(4) Remove latch/lock control cover.
(5) Remove latch/lock control.
(6) Remove screws holding door lock motor to latch/lock control (Fig. 5).
(7) Remove lock motor from control.

INSTALLATION

(1) Position the lock motor on the latch/lock.
(2) Install the screws retaining the motor to the latch/lock.
(3) Install the latch/lock control.

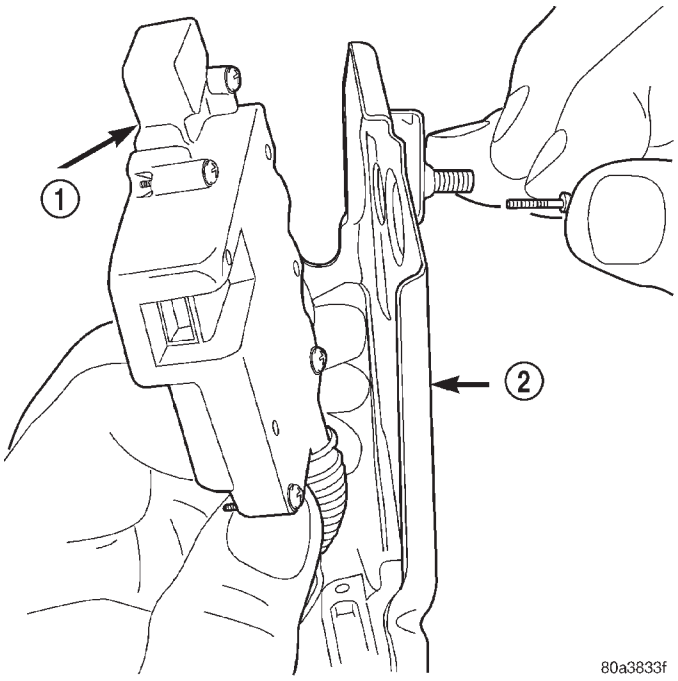

Fig. 5 SLIDING DOOR LOCK MOTOR

1 - SLIDING DOOR POWER LOCK MOTOR
2 - LATCH/LOCK CONTROL

(4) Install the latch/lock control cover.
(5) Install the sound pad and trim panel to the sliding door.

POWER MIRRORS

TABLE OF CONTENTS

page

POWER MIRRORS
DESCRIPTION 46
OPERATION 46
DIAGNOSIS AND TESTING - POWER MIRRORS 46
AUTOMATIC DAY / NIGHT MIRROR
DESCRIPTION 47
OPERATION 47
DIAGNOSIS AND TESTING - AUTOMATIC DAY / NIGHT MIRROR 48
REMOTE SWITCH
DIAGNOSIS AND TESTING - REMOTE SWITCH 49
REMOVAL 49
INSTALLATION 49
SIDEVIEW MIRROR
REMOVAL 49
POWER FOLDAWAY MIRROR SWITCH - EXPORT
DESCRIPTION 49
OPERATION 50
REMOVAL 50
INSTALLATION 50

POWER MIRRORS

DESCRIPTION

If equipped with power mirrors, the control switch is located on the instrument panel to the left of the headlamp switch.

OPERATION

The power mirrors are connected to battery feed at all times. Each mirror head contains two electric motors, two drive mechanisms, an electric heating element, and the mirror glass. If the vehicle is equipped with the optional memory system, each mirror head also contains both a horizontal and a vertical motor position sensor. One motor and drive controls mirror up-and-down movement, and the other controls right-and-left movement.

An optional driver side outside electrochromic mirror is able to automatically change its reflectance level. This mirror is controlled by the circuitry of the automatic day/night inside rear view mirror. A thin layer of electrochromic material between two pieces of conductive glass make up the face of the mirror. Two photocell sensors on the inside rear view mirror are used to monitor light levels and adjust the reflectance of both the inside and driver side outside mirrors. This change in reflectance helps to reduce the glare of headlamps approaching the vehicle from the rear. (Refer to 8 - ELECTRICAL/POWER MIRRORS/ AUTOMATIC DAY / NIGHT MIRROR - DESCRIPTION) for more information on this system.

The motors which operate the mirrors are part of the mirror assembly and cannot be serviced separately.

DIAGNOSIS AND TESTING - POWER MIRRORS

(1) Remove Power Mirror Switch. (Refer to 8 - ELECTRICAL/POWER MIRRORS/POWER MIRROR SWITCH - REMOVAL).

(2) Disconnect wiring harness connector to the power mirror switch and headlamp switch.

(3) Using two jumper wires:

- Connect one to a 12-volt source
- Connect the other to a good body ground
- Refer to the Mirror Test Chart for wire hookups at the switch connector (Fig. 1).

POWER MIRRORS (Continued)

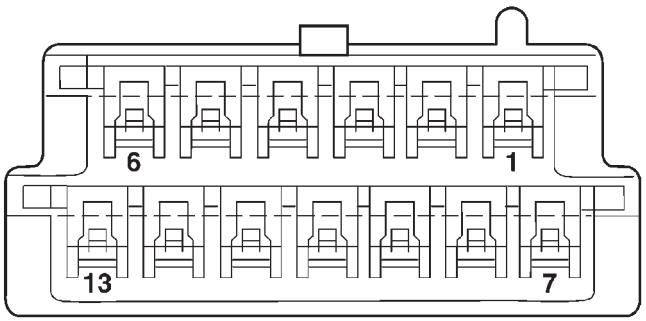

Fig. 1 Power Mirror Connector

POWER MIRROR MOTOR TEST

SWITCH CONNECTOR			
12 Volts	Ground	MIRROR REACTION	
		Right	Left
PIN 12	PIN 6	—	UP
PIN 7	PIN 6	—	LEFT
PIN 6	PIN 12	—	DOWN
PIN 6	PIN 7	—	RIGHT
PIN 13	PIN 1	UP	—
PIN 8	PIN 1	LEFT	—
PIN 1	PIN 13	DOWN	—
PIN 1	PIN 8	RIGHT	—
PIN 5	PIN 11	LAMP	LAMP

(4) If results shown in table are not obtained, check for broken or shorted circuit, or replace mirror assembly as necessary.

AUTOMATIC DAY / NIGHT MIRROR

DESCRIPTION

An automatic dimming inside day/night rear view mirror and an automatic dimming driver side outside rear view mirror are available factory-installed options on this model. Following is a general description of this optional equipment.

The automatic day/night mirror is able to automatically change its reflectance. A thin layer of electrochromic material between two pieces of conductive glass make up the face of the mirror. Two photocell sensors are used to monitor light levels and adjust the reflectance of the mirror to reduce the glare of headlamps approaching the vehicle from the rear.

For removal procedures, (Refer to 23 - BODY/INTERIOR/REAR VIEW MIRROR - REMOVAL).

OPERATION

The ambient photocell sensor faces forward, to detect the outside light levels. A second sensor faces rearward to detect the light level received through the vehicles back window. When the difference between the two light levels becomes too great (the light level received at the rear of the mirror is much higher than that at the front of the mirror), the mirror begins to darken.

AUTOMATIC DAY / NIGHT MIRROR (Continued)

The mirror switch allows the driver a manual control of whether the automatic dimming feature is operational. When AUTO is selected a small Light-Emitting Diode (LED), to the right of the mirror switch, is illuminated. The automatic dimming feature will only operate when the ignition switch is in the On position. The mirror also senses the backup lamp circuit, and will automatically disable its self-dimming feature whenever the transmission gear selector is in the Reverse position.

NOTE: The mirror always defaults to an ON state upon ignition.

The driver side automatic dimming mirror is standard with the automatic dimming inside mirror. The signal to control the dimming of that mirror is generated by the automatic day/night inside rear view mirror circuitry. That signal is then delivered to the driver side outside rear view mirror on a hard wired circuit.

The automatic day/night mirror cannot be repaired. If faulty or damaged, the entire inside rear view mirror assembly must be replaced.

DIAGNOSIS AND TESTING - AUTOMATIC DAY / NIGHT MIRROR

For circuit descriptions and diagrams, refer to the appropriate wiring information. The wiring information includes wiring diagrams, proper wire and connector repair procedures, details of wire harness routing and retention, connector pin-out information and location views for the various wire harness connectors, splices and grounds.

(1) Check the fuse in the intelligent power module. If OK, go to Step 2. If not OK, repair the shorted circuit or component as required and replace the faulty fuse.

(2) Turn the ignition switch to the On position. Check for battery voltage at the fuse in the intelligent power module. If OK, go to Step 3. If not OK, repair the open circuit to the ignition switch as required.

(3) Unplug the wire harness connector from the automatic day/night mirror. Check for battery voltage at the fused ignition switch output circuit cavity of the automatic day/night mirror wire harness connector. If OK, go to Step 4. If not OK, repair the open circuit to the junction block as required.

(4) Turn the ignition switch to the Off position. Check for continuity between the ground circuit cavity of the automatic day/night mirror wire harness connector and a good ground. There should be continuity. If OK, go to Step 5. If not OK, repair the circuit to ground as required.

(5) Turn the ignition switch to the On position. Set the parking brake. Place the transmission gear selector lever in the Reverse position. Check for battery voltage at the backup lamp switch output circuit cavity of the automatic day/night mirror wire harness connector. If voltage is present, reinstall the automatic day/night mirror wire harness connector and go to Step 6. If not OK, repair the open circuit as required.

(6) Place the transmission gear selector lever in the Neutral position. Place the automatic day/night mirror switch in the On (LED in the switch is lighted) position. Cover the forward facing ambient photocell sensor to keep out any ambient light.

NOTE: The ambient photocell sensor must be covered completely, so that no light reaches the sensor. Use a finger pressed tightly against the sensor, or cover the sensor completely with electrical tape.

(7) Shine a light into the rearward facing headlamp photocell sensor. The automatic day/night mirror should darken. The automatic day/night mirror should darken within 2 minutes if testing for the first time. For immediate response, turn the vehicle OFF and back ON with the forward-facing light sensor still covered. This defeats the day-detect logic. If OK, go to Step 8. If not OK, replace the faulty mirror unit.

(8) With the mirror darkened, place the transmission gear selector lever in the Reverse position. The automatic day/night mirror should return to its normal reflectance. If not OK, replace the faulty mirror unit.

Bench testing both mirrors can be done, of care is exercised. For an inside mirror, the pin closest to he mount is 12V (+), the next is 12V (-). The third is reverse override. The fourth is outside mirror (+), and the fifth is outside mirror (-). **Do not apply 12 volts to the fourth and fifth pins.** With 12 volts on pins 1 and 2, the mirror can be tested by blocking the rear sensor and shining a light into the forward sensor. For an outside mirror, there is a 2–pin connector. Applying 1.2 volts will cause the mirror to dim. If the mirror does not dim, the entire glass assembly can be replaced just as it is when the glass is broken.

WARNING: Do not apply 12 volts to the outside mirror. Damage to the mirror will result.

REMOTE SWITCH

DIAGNOSIS AND TESTING - REMOTE SWITCH

(1) Remove power mirror switch. (Refer to 8 - ELECTRICAL/POWER MIRRORS/POWER MIRROR SWITCH - REMOVAL).

(2) Disconnect wiring harness at switch connector.

(3) Using a ohmmeter, test for continuity between the terminals of the switch (Fig. 2).

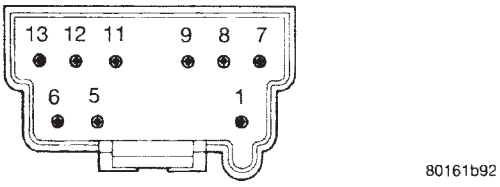

Fig. 2 Mirror Switch

MIRROR SWITCH TEST

MIRROR SELECT SWITCH IN "LEFT" POSITION	
Move Button	**Continuity Between**
UP	PIN 9 - PIN 12, PIN 6 - PIN 11, PIN 9 - PIN 13
LEFT	PIN 9 - PIN 7, PIN 6 - PIN 11, PIN 9 - PIN 8
DOWN	PIN 9 - PIN 6, PIN 12 - PIN 11, PIN 13 - PIN 11
RIGHT	PIN 9 - PIN 6, PIN 7 - PIN 11, PIN 8 - PIN 11
MIRROR SELECT SWITCH IN "RIGHT" POSITION	
Move Button	**Continuity Between**
UP	PIN 9 - PIN 13, PIN 1 - PIN 11, PIN 9 - PIN 12
LEFT	PIN 9 - PIN 8, PIN 1 - PIN 11, PIN 9 - PIN 7
DOWN	PIN 9 - PIN 1, PIN 13 - PIN 11, PIN 12 - PIN 11
RIGHT	PIN 9 - PIN 1, PIN 8 - PIN 11, PIN 7 - PIN 11
LAMP	PIN 5 - PIN 11

(4) If results shown in the table are not obtained, replace the switch.

REMOVAL

(1) Disconnect and isolate the battery negative cable.

(2) Remove instrument panel lower cover.

(3) From behind headlamp switch assembly, depress retaining tabs and push switch from instrument panel.

(4) Disconnect wire connector from power mirror switch.

(5) Disengage lock tabs above and below the mirror switch.

(6) Remove power mirror switch from headlamp switch bezel.

INSTALLATION

(1) Install power mirror switch to the headlamp switch bezel.

(2) Connect wire connector to the power mirror switch.

(3) Insert headlamp switch assembly into instrument panel.

(4) Install instrument panel lower cover.

(5) Connect battery negative cable.

SIDEVIEW MIRROR

REMOVAL

For service procedures, (Refer to 23 - BODY/EXTERIOR/SIDE VIEW MIRROR - REMOVAL).

POWER FOLDAWAY MIRROR SWITCH - EXPORT

DESCRIPTION

These vehicles may be equipped with Power Foldaway Mirrors. This feature allows both the driver and passenger side view mirrors to fold inward (retract) on demand. The vehicle has an additional switch located on the steering column that controls the folding function of the mirror assembly (Fig. 3).

The fold-away side view mirror is attached to the vehicle's door in the same manner as mirrors without the fold-away option. The fold-away mirrors unique option is the internal motor which allows the mirrors to fold inward on demand. The fold-away mirror motor is not serviceable separately and if a motor is found to be faulty the entire side view mirror must be replaced.

POWER FOLDAWAY MIRROR SWITCH - EXPORT (Continued)

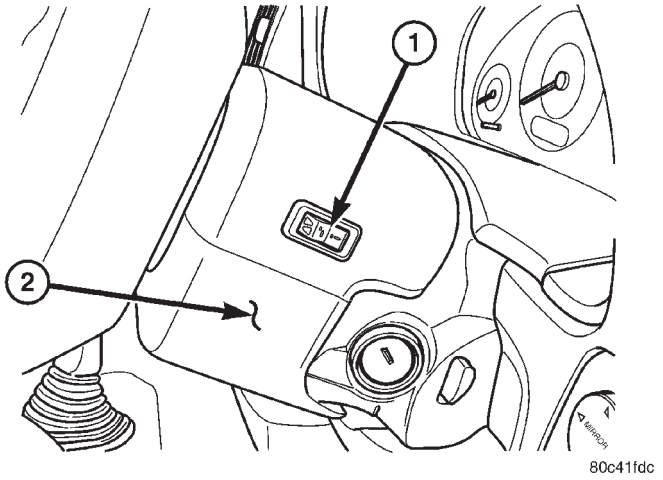

Fig. 3 POWER FOLDAWAY MIRROR SWITCH

1 - POWER FOLDAWAY MIRROR SWITCH
2 - STEERING COLUMN

OPERATION

When the mirror retract switch is depressed, both of the side view mirrors will fold inward, Thus making the overall width of the vehicle the smallest possible. This can be helpful were parking space is a absolute minimum.

When the driver's door is opened, only the driver's door mirror will unfold. If the passenger door is opened, both mirrors will unfold.

The power fold away mirror system consists of the following components: mirror switch, side view mirror, relay, wires and fuse. Refer to the appropriate wiring information. The wiring information includes wiring diagrams, proper wire and connector repair procedures, details of wire harness routing and retention, connector pin-out information and location views for the various wire harness connectors, splices and grounds.

REMOVAL

(1) Disconnect and isolate the battery negative cable.

(2) Remove the upper and lower steering column shroud (Refer to 19 - STEERING/COLUMN/LOWER SHROUD - REMOVAL).

(3) Disconnect electrical harness connector.

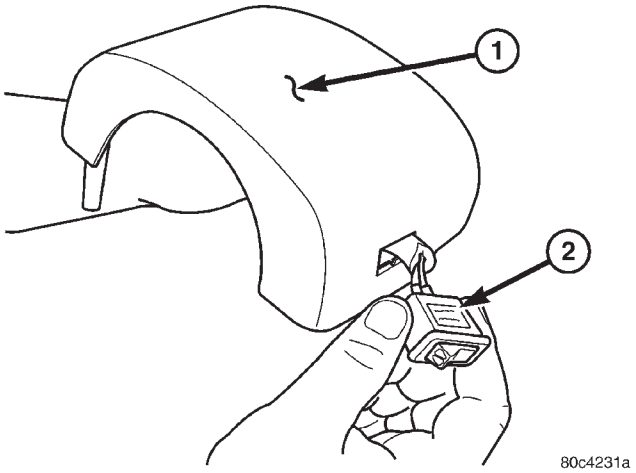

Fig. 4 POWER FOLDING MIRROR SWITCH

1 - STEERING COLUMN SHROUD
2 - POWER FOLDAWAY SWITCH

(4) Remove switch from steering column shroud (Fig. 4).

INSTALLATION

(1) Install switch to steering column shroud.

(2) Connect wire harness connector.

(3) Install the upper and lower steering column shroud (Refer to 19 - STEERING/COLUMN/LOWER SHROUD - INSTALLATION).

(4) Connect the battery negative cable.

POWER SEAT SYSTEM

TABLE OF CONTENTS

page

POWER SEAT SYSTEM
DESCRIPTION
DESCRIPTION 51
DESCRIPTION - MEMORY SYSTEM 52
OPERATION
OPERATION - POWER SEAT SYSTEM 53
OPERATION - MEMORY SYSTEM 53
DIAGNOSIS AND TESTING
DIAGNOSIS AND TESTING - POWER SEAT SYSTEM 53
DIAGNOSIS AND TESTING - MEMORY SYSTEM 54
DRIVER SEAT SWITCH
DESCRIPTION 54
OPERATION 55
DIAGNOSIS AND TESTING - DRIVER SEAT SWITCH 55
REMOVAL 55
INSTALLATION 56
MEMORY SET SWITCH
DESCRIPTION 56
OPERATION 56
DIAGNOSIS AND TESTING - MEMORY SWITCH 57
REMOVAL 57
INSTALLATION 57
PASSENGER SEAT SWITCH
DESCRIPTION 57
OPERATION 57
DIAGNOSIS AND TESTING - PASSENGER SEAT SWITCH 58
REMOVAL 58
INSTALLATION 59
MEMORY MIRROR/SEAT MODULE
DESCRIPTION 59
OPERATION 59
DIAGNOSIS AND TESTING - MEMORY MIRROR/SEAT MODULE 59
REMOVAL 59
INSTALLATION 59
DRIVER POWER SEAT TRACK
DESCRIPTION 60
OPERATION 60
DIAGNOSIS AND TESTING - DRIVER POWER SEAT TRACK 60
REMOVAL 61
INSTALLATION 61
PASSENGER POWER SEAT TRACK
DESCRIPTION 61
OPERATION 62
DIAGNOSIS AND TESTING - POWER SEAT TRACK 62
REMOVAL 62
INSTALLATION 63

POWER SEAT SYSTEM

DESCRIPTION

DESCRIPTION

The power seat system option allows the driver and front seat passenger to electrically adjust their seating positions for optimum control and comfort using the power seat switches located on the outboard seat cushion side shield of each front seat. Both power front seats can be adjusted in eight different directions up, down, front up, front down, rear up, rear down, forward, rearward and recliner forward and rearward.

The power seat system receives battery current through a 40 amp fuse in the Intelligent Power Module and a 30 amp circuit breaker under the seat so that the power seats remain operational, regardless of the ignition switch position.

WARNING: SOME VEHICLES ARE EQUIPPED WITH SEATBACK MOUNTED AIRBAGS (Fig. 1). BEFORE ATTEMPTING TO DIAGNOSE OR SERVICE ANY SEAT OR POWER SEAT SYSTEM COMPONENT YOU MUST FIRST DISCONNECT AND ISOLATE THE BATTERY NEGATIVE CABLE. THEN WAIT TWO MINUTES FOR THE SYSTEM CAPACITOR TO DISCHARGE BEFORE FURTHER SYSTEM SERVICE. THIS IS THE ONLY SURE WAY TO DISABLE THE AIRBAG SYSTEM. FAILURE TO DO SO COULD RESULT IN ACCIDENTAL AIRBAG DEPLOYMENT AND POSSIBLE PERSONAL INJURY.

A eight-way power seat is standard on highline models and optional on others. This option includes a eight-way adjustable seat cushion track and a two-way power seat back.

POWER SEAT SYSTEM (Continued)

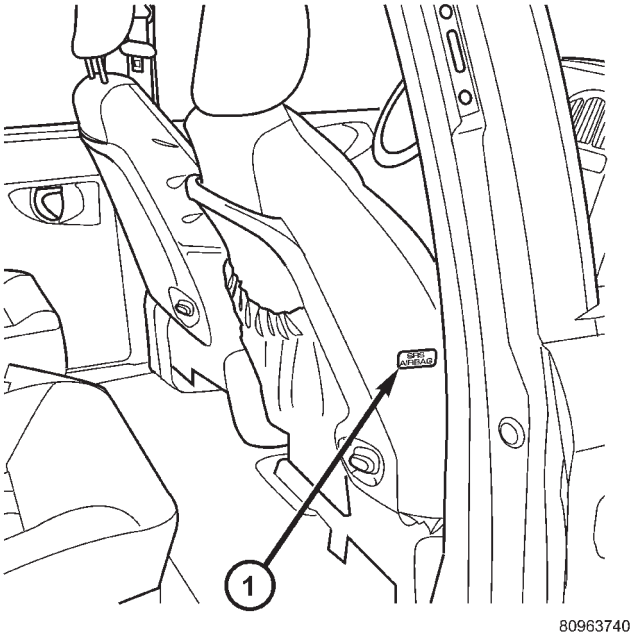

Fig. 1 Identifying a Side Airbag Equipped Seat

1 - Airbag Label

The eight-way power seat is also available with the heated seat and memory seat system that automatically positions the power seat for two different drivers. Refer to **Heated Seats** for more information on the heated seat option. Refer to **Description Memory Seat System** in this section for more information on the memory seat system.

The power seat system includes the following components:

- Power seat recliners
- Power seat switches
- Power seat tracks
- Circuit breaker

The power seat system with memory and heated seat options includes the following components:

- Power seat recliner
- Power seat switch
- Power seat track.
- Memory Seat Mirror Module (MSMM)
- Memory set switch
- Heated Seat Module (HSM)
- Heated seat switch
- Electronic Vehicle Information Center (EVIC)
- Programmable Communications Interface (PCI) data bus network

Refer to Wiring Diagrams for complete circuit diagrams. Following are general descriptions and operations for the major components in the power seat system and memory seat system.

DESCRIPTION - MEMORY SYSTEM

An electronic memory system is available on some models. The memory system is able to store and recall the driver side power seat positions (including the power recliner position) and both outside side view mirrors positions for two drivers. On vehicles equipped with a factory radio, the memory system is also able to store and recall radio station presets for two drivers. The memory system also will store and recall the last station listened to for each driver, even if it is not one of the preset stations.

The memory system will automatically return to its preset settings when the corresponding numbered button of the memory switch is depressed, or when the doors are unlocked using the corresponding Remote Keyless Entry (RKE) transmitter. A customer programmable feature of the memory system allows the RKE recall of memory features to be disabled, if desired. This programmable feature is internal in the EVIC module, which is located in the overhead console.

A Memory Seat Mirror Module (MSMM) is used on some models to control and integrate the many electronic functions and features included in the memory seat and mirror systems.

The memory system includes the following components:

- Memory Seat Mirror Module (MSMM)
- Memory set switch
- Position potentiometers on both outside side view mirrors
- Position potentiometers on the driver side power seat track and power seat recliner motors.
- Electronic Vehicle Information Center (EVIC)
- Radio receiver (if PCI data bus capable).

Certain functions of the memory system rely upon resources shared with other electronic modules in the vehicle over the Programmable Communications Interface (PCI) J1850 data bus network. The PCI data bus network allows the sharing of sensor information. This helps to reduce wire harness complexity, internal controller hardware, and component sensor current loads. At the same time, this system provides increased reliability, enhanced diagnostics, and allows the addition of many new feature capabilities. Initial diagnosis of these electronic modules or the PCI data bus network requires the use of a DRB III® scan tool and the proper Diagnostic Procedures manual. If this method does not prove conclusive, the use of a automotive meter such as the Fluke®, the proper wiring schematics and the service manual diagnostic routines are required.

The other electronic modules that may affect memory system operation are as follows:

POWER SEAT SYSTEM (Continued)

- **Body Control Module (BCM)** - Refer to **Body Control Module** in Electronic Control Modules for more information.
- **Powertrain Control Module (PCM)** - Refer to **Powertrain Control Module** in Electronic Control Modules for more information.

Refer to **Heated Seat System** for more information on the heated seat system. Refer to **Remote Keyless Entry System** in Power Lock Systems for more information on the RKE system.

Refer to **Wiring Diagrams** for complete circuit diagrams. Following are descriptions, theory of operation, diagnosis/testing procedures and removal/installation procedures of the major components in the memory and power seat systems.

OPERATION

OPERATION - POWER SEAT SYSTEM

The power seat system receives battery current through fuse #22 in the Intelligent Power Module and a circuit breaker under the front seats, regardless of the ignition switch position.

When a power seat switch control knob or knobs are actuated, a battery feed and a ground path are applied through the switch contacts to the appropriate power seat track adjuster motor. The selected adjuster motor operates to move the seat track through its drive unit in the selected direction until the switch is released, or until the travel limit of the seat track is reached. When the switch is moved in the opposite direction, the battery feed and ground path to the motor are reversed through the switch contacts. This causes the adjuster motor to run in the opposite direction.

No power seat switch should be held applied in any direction after the seat track has reached its travel limit. The power seat track each contain a self-resetting circuit breaker to protect them from overload. However, consecutive or frequent resetting of the circuit breaker must not be allowed to continue, or the motor may be damaged. Refer to the owner's manual in the vehicle glove box for more information on the features, use and operation of the power seat system.

OPERATION - MEMORY SYSTEM

The memory system receives battery current through fuse #22 in the Intelligent Power Module and the power seat system circuit breaker, located under each front seat near the rear edge of the seat cushion pans. The Memory Seat Mirror Module (MSMM) will drive a maximum of 2 motors at a time in a given direction. If conflicting directions are requested, the priority for response will be as follows:

- Seat Track Rearward or Forward
- Seat Front Down or Up
- Seat Rear Down or Up
- Recliner Rearward or Forward

The inputs from these switches to the MSMM is a current limited battery source fed by the MSMM. This protects the MSMM printed circuit board traces from acting as fuses. All of these switch contact inputs to the MSMM are normally closed to ground, except when actuated.

See the owner's manual in the vehicle glove box for more information on the features, use and operation of the memory system. For diagnosis of the MSMM, the PCI data bus, or the other electronic modules on the PCI data bus that provide inputs and outputs for the memory system, the use of a DRBIII® scan tool and the proper Diagnostic Procedures manual are recommended.

ELECTRONIC VEHICLE INFORMATION CENTER

The Electronic Vehicle Information Center (EVIC) serves as the user interface for the memory system. It displays memory system status messages and provides the user with the means for enabling and disabling the many customer programmable features available on the vehicle, including those for the memory system.

See the owner's manual in the vehicle glove box for more information on the features, use and operation of the EVIC. Refer to **Electronic Vehicle Information Center** in Overhead Console Systems for more information on the EVIC.

DIAGNOSIS AND TESTING

DIAGNOSIS AND TESTING - POWER SEAT SYSTEM

Following are tests that will help to diagnose the hard wired components and circuits of the power seat system. However, if the vehicle is also equipped with the optional memory system, these tests may not prove conclusive in the diagnosis of the driver side power seat. In order to obtain conclusive testing of the driver side power seat with the memory system option, the Programmable Communications Interface (PCI) data bus network and all of the electronic modules that provide inputs to, or receive outputs from the memory system components must be checked.

The most reliable, efficient, and accurate means to diagnose the driver side power seat with the memory system option requires the use of a DRB III® scan tool and the proper Diagnostic Procedures manual. The DRB III® scan tool can provide confirmation that the PCI data bus is functional, that all of the electronic modules are sending and receiving the proper messages on the PCI data bus, and that the memory

system is receiving the proper hard wired inputs and relaying the proper hard wired outputs to perform its driver side power seat functions.

WARNING: SOME VEHICLES ARE EQUIPPED WITH SEATBACK MOUNTED AIRBAGS. BEFORE ATTEMPTING TO DIAGNOSE OR SERVICE ANY SEAT OR POWER SEAT SYSTEM COMPONENT YOU MUST FIRST DISCONNECT AND ISOLATE THE BATTERY NEGATIVE CABLE. THEN WAIT TWO MINUTES FOR THE SYSTEM CAPACITOR TO DISCHARGE BEFORE FURTHER SYSTEM SERVICE. THIS IS THE ONLY SURE WAY TO DISABLE THE AIRBAG SYSTEM. FAILURE TO DO SO COULD RESULT IN ACCIDENTAL AIRBAG DEPLOYMENT AND POSSIBLE PERSONAL INJURY.

(1) If the driver power seat exhibits a interrupted or jerky motion, there is a possibility that the wires leading from the memory seat module to the memory seat motor are mis-wired. To check the concern, obtain a DRB III® scan tool and energize each axis one at a time. If any axis stops in approximately 2 seconds (without hitting the end of travel), the feedback for that axis may have an open, short or be miswired. Check the wiring to that axis (module to motor). Fix any wiring problems and retry that axis.

(2) If any power seat is not operational in any direction, check the power seat circuit breaker, located under the trailing edge of the appropriate power seat. Refer to the Power Distribution section of this service manual for the circuit breaker diagnosis and testing procedure.

(3) If the power seat circuit breaker is OK, check for proper 12v and ground connections at the power seat switch and/or memory seat module. Fix any wiring problems and retry.

(4) Check the power seat system wire harness connections and pins to ensure proper circuit continuity and ground paths. For complete circuit diagrams, refer to **Wiring Diagrams**.

(5) With the dome lamp on, apply the power seat switch in the direction of the failure. If the dome lamp dims, the seat may be jamming. Check under and behind the seat for binding or obstructions. If the dome lamp does not dim, proceed with testing of the individual components and circuits in the power seat system.

DIAGNOSIS AND TESTING - MEMORY SYSTEM

In order to obtain conclusive testing of the memory system, the Programmable Communications Interface (PCI) data bus network and all of the electronic modules that provide inputs to, or receive outputs from the memory system components must be checked.

The most reliable, efficient, and accurate means to diagnose the memory system requires the use of a DRB III® scan tool and the proper Diagnostic Procedures manual. The DRB III® scan tool can provide confirmation that the PCI data bus is functional, that all of the electronic modules are sending and receiving the proper messages on the PCI data bus, and that the memory system is receiving the proper hard wired inputs and relaying the proper hard wired outputs to perform its functions.

(1) If the driver power seat exhibits a interrupted or jerky motion, there is a possibility that the wires leading from the memory seat module to the memory seat motor are mis-wired. To check the concern, obtain a DRB III® scan tool and energize each axis one at a time. If any axis stops in approximately 2 seconds (without hitting the end of travel), the feedback for that axis may have an open, short or be miswired. Check the wiring to that axis (module to motor). Fix any wiring problems and retry that axis. Refer to Wiring Diagrams for complete circuit schematic or connector pin-out information.

DRIVER SEAT SWITCH

DESCRIPTION

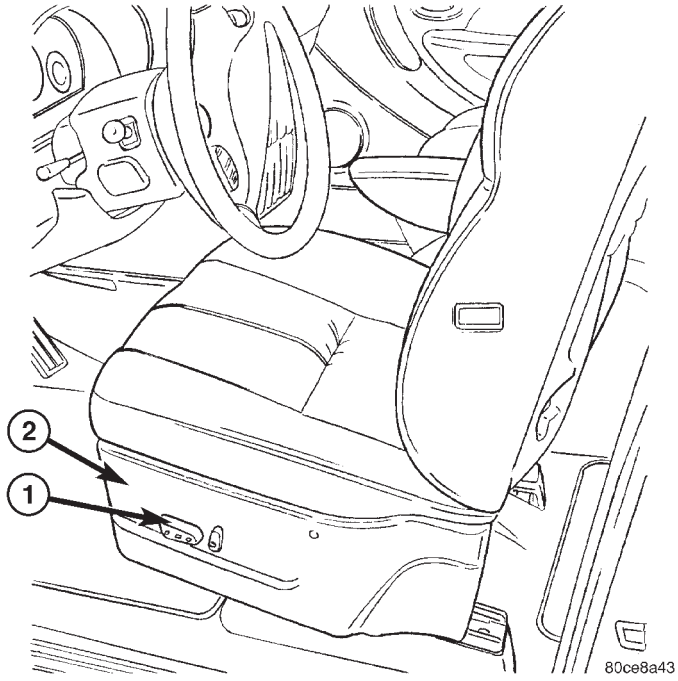

Fig. 2 Power Seat Switch Location

1 - Power Seat Switch
2 - Seat Cushion Side Shield

Vehicles equipped with power seats utilize a eight-way power seat switch. This eight-way power seat switch features two knobs ganged together on the outboard seat cushion side shield (Fig. 2).

DRIVER SEAT SWITCH (Continued)

The switch is secured to the back of the seat cushion side shield with two screws. However, the control knobs for the seat switch unit must be removed before the seat switch can be removed from the side shield.

The power seat switch cannot be repaired. If one switch is damaged or faulty, the entire power seat switch unit must be replaced.

OPERATION

When a power seat switch control knob or knobs are actuated, a battery feed and a ground path are applied through the switch contacts to the power seat track or recliner adjuster motor. The selected adjuster motor operates to move the seat track or recliner through its drive unit in the selected direction until the switch is released, or until the travel limit of the adjuster is reached. When the switch is moved in the opposite direction, the battery feed and ground path to the motor are reversed through the switch contacts. This causes the adjuster motor to run in the opposite direction.

No power seat switch should be held applied in any direction after the adjuster has reached its travel limit. The power seat adjuster motors each contain a self-resetting circuit breaker to protect them from overload. However, consecutive or frequent resetting of the circuit breaker must not be allowed to continue, or the motor may be damaged. See the owner's manual in the vehicle glove box for more information on the power seat switch functions and the seat adjusting procedures.

DIAGNOSIS AND TESTING - DRIVER SEAT SWITCH

(1) Remove the power seat switch, refer to the Switch Removal and Installation procedures in this section.

(2) Using an ohmmeter, check pin #1 of the power seat switch connector for continuity to ground. It should be present, If OK go to Step 3 , If NOT OK repair the open ground circuit as required.

(3) Using an voltmeter, check pin #5 of the power seat switch connector for approx. 12v. It should be present, If OK go to Step 4 , If NOT OK repair the open voltage supply circuit as required.

(4) Using an ohmmeter, verify the Seat Switch Continuity Test table, using the seat switch connector (Fig. 3). If there is no continuity at any of the switch positions, replace the power seat switch.

DRIVER SEAT SWITCH CONTINUITY TEST TABLE

SWITCH POSITION	CONTINUITY BETWEEN PINS
	DRIVER
OFF	PIN 5 & 4 PIN 5 & 3 PIN 5 & 2 PIN 5 & 10 PIN 5 & 9 PIN 5 & 8 PIN 5 & 7 PIN 5 & 6
FRONT RISER UP	PIN 5 & 6 PIN 1 & 9
FRONT RISER DOWN	PIN 5 & 9 PIN 1 & 6
CENTER SWITCH FORWARD	PIN 5 & 3 PIN 1 & 10
CENTER SWITCH REARWARD	PIN 5 & 10 PIN 3 & 1
REAR RISER UP	PIN 5 & 7 PIN 1 & 8
REAR RISER DOWN	PIN 5 & 8 PIN 1 & 7
RECLINER UP	PIN 5 & 2 PIN 4 & 1
RECLINER DOWN	PIN 5 & 4 PIN 2 & 1

REMOVAL

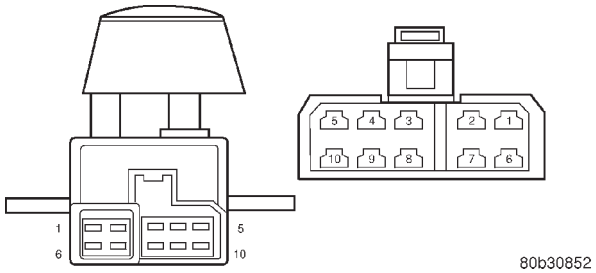

Fig. 3 Seat Switch Pin Call-Out

(1) Disconnect and isolate the battery negative cable.

(2) On models equipped with the eight-way power seat, using a push pin remover or another suitable wide flat-bladed tool, gently pry the power seat and power recliner switch knobs off of the switch levers (Fig. 4).

DRIVER SEAT SWITCH (Continued)

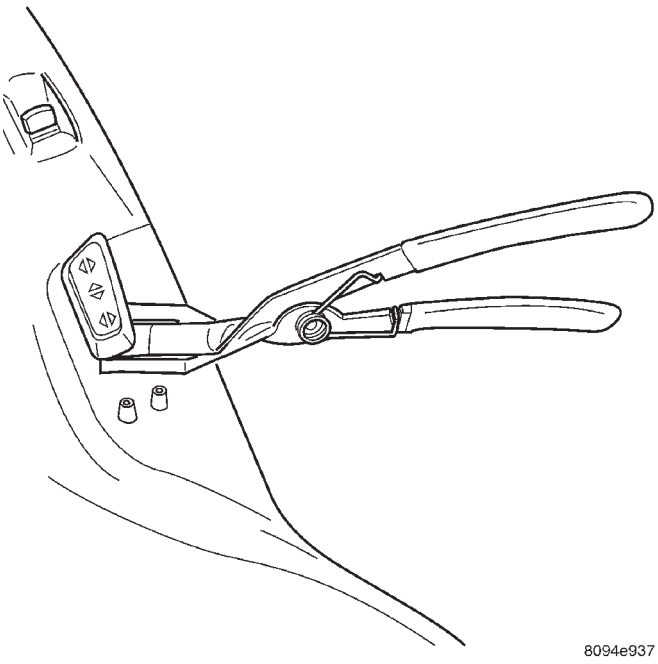

Fig. 4 Removing Switch Control Knobs - Typical

(3) Remove the screws that secure the outboard seat cushion side shield to the seat cushion frame. Refer to the Body section of the service manual for the procedure.

(4) Pull the outboard seat cushion side shield away from the seat cushion frame far enough to access the power seat switch wire harness connector.

(5) Disconnect the power seat wire harness connector from the power seat switch connector receptacle.

(6) Remove the screws that secure the power seat switch to the inside of the outboard seat cushion side shield.

(7) Remove the power seat switch from the outboard seat cushion side shield.

INSTALLATION

(1) Position the power seat switch onto the outboard seat cushion side shield.

(2) Install and tighten the screws that secure the power seat switch to the inside of the outboard seat cushion side shield. Tighten the screws to 1.5 N·m (14 in. lbs.).

(3) Reconnect the power seat wire harness connector to the power seat switch connector receptacle.

(4) Position the outboard seat cushion side shield onto the seat cushion frame

(5) Install and tighten the screws that secure the outboard seat cushion side shield to the seat cushion frame. Tighten the screws to 1.5 N·m (14 in. lbs.).

(6) Install the switch knobs on the switch control levers, if equipped.

(7) Reconnect the battery negative cable.

MEMORY SET SWITCH

DESCRIPTION

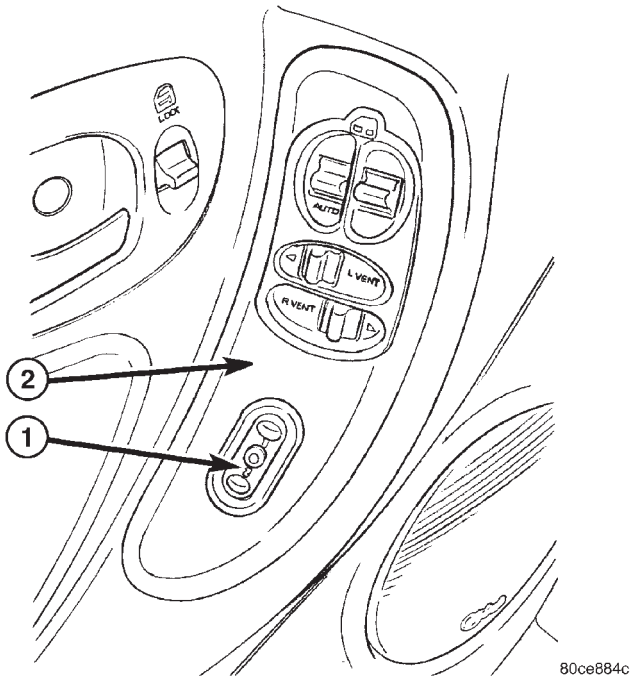

Fig. 5 Memory Switch Location

1 - Memory Switch
2 - Switch Bezel

Vehicles equipped with the memory system have a memory switch mounted to the driver side front door trim panel (Fig. 5). This switch is used to set and recall all of the memory system settings for up to two drivers. The memory switch is a resistor multiplexed unit that is hard wired to the Body Control Module (BCM). The BCM sends out the memory system set and recall requests to the other electronic modules over the Programmable Communications Interface (PCI) data bus.

The memory switch cannot be adjusted or repaired and, if faulty or damaged, it must be replaced. For complete circuit diagrams, refer to **Wiring Diagrams**.

OPERATION

The memory switch has three momentary switch buttons labeled Set, 1 and 2. The Driver 1 and Driver 2 buttons are back-lit with Light-Emitting Diodes (LED) for visibility. When the memory set switch is depressed, a resistance value is sent to the Body Control Module via hard wired connections. When the memory system is in “set” mode a chime will be generated by the body control module.

MEMORY SET SWITCH (Continued)

See the owner's manual in the vehicle glove box for more information on the features, use and operation of the memory switch.

DIAGNOSIS AND TESTING - MEMORY SWITCH

(1) Remove the memory set switch from the drivers door panel (Refer to 8 - ELECTRICAL/POWER SEATS/MEMORY SET SWITCH - REMOVAL).

(2) Using an ohmmeter, check for continuity on the memory select switch MUX circuit between the body control module C2 electrical connector and the memory switch connector. Continuity should be present, If OK go to Step 3, If NOT OK repair the open or shorted MUX circuit as required.

(3) Using an ohmmeter, check for continuity on the memory select switch RETURN circuit between the body control module C2 electrical connector and the memory switch connector. Continuity should be present, If OK go to Step 4, If NOT OK repair the open or shorted RETURN circuit as required.

(4) Using an ohmmeter, test the resistances of the memory switch in each switch position. See the Memory Switch Test Table. If OK, refer to **Diagnosis and Testing Memory System** in this section. If not OK, replace the faulty memory set switch.

MEMORY SWITCH TEST TABLE

MEMORY SWITCH POSITION	RESISTANCE BETWEEN PINS	RESISTANCE RANGE (OHMS)
NEUTRAL	1&2	24650 ± 5% (24.65 k)
MEMORY 1	1&2	6850 ± 5% (6.85 k)
MEMORY 2	1&2	2100 ± 5% (2.10 k)
SET	1&2	4490 ± 5% (4.49 k)

REMOVAL

(1) Disconnect and isolate the battery negative cable.

(2) Remove the front door trim panel switch bezel from the driver side front door. Using a thin flat-bladed pry tool, gently pry the switch bezel away from the drivers door trim panel.

(3) Disconnect the memory switch wire harness connector from the memory switch.

(4) Remove the two screws that secure the memory switch to the back of the driver side front door trim panel switch bezel.

(5) Remove the memory switch.

INSTALLATION

(1) Position the memory switch and install and tighten the two screws that secure the memory switch to the back of the driver side front door trim panel switch bezel. Tighten the screws to 2.2 N·m (20 in. lbs.).

(2) Reconnect the memory switch wire harness connector to the memory switch.

(3) Install the trim panel switch bezel onto the driver side front door.

(4) Reconnect the battery negative cable.

PASSENGER SEAT SWITCH

DESCRIPTION

Vehicles equipped with power seats utilize a ten-way power seat switch. This ten-way power seat switch features two knobs ganged together on the outboard seat cushion side shield.

The switch is secured to the back of the seat cushion side shield with two screws. However, the control knobs for the seat switch unit must be removed before the seat switch can be removed from the side shield.

The power seat switch cannot be repaired. If one switch is damaged or faulty, the entire power seat switch unit must be replaced.

OPERATION

When a power seat switch control knob or knobs are actuated, a battery feed and a ground path are applied through the switch contacts to the power seat track or recliner adjuster motor. The selected adjuster motor operates to move the seat track or recliner through its drive unit in the selected direction until the switch is released, or until the travel limit of the adjuster is reached. When the switch is moved in the opposite direction, the battery feed and ground path to the motor are reversed through the switch contacts. This causes the adjuster motor to run in the opposite direction.

No power seat switch should be held applied in any direction after the adjuster has reached its travel limit. The power seat adjuster motors each contain a self-resetting circuit breaker to protect them from overload. However, consecutive or frequent resetting of the circuit breaker must not be allowed to continue, or the motor may be damaged. See the owner's manual in the vehicle glove box for more information on the power seat switch functions and the seat adjusting procedures.

PASSENGER SEAT SWITCH (Continued)

DIAGNOSIS AND TESTING - PASSENGER SEAT SWITCH

(1) Remove the power seat switch, refer to the Switch Removal and Installation procedures in this section.

(2) Using an ohmmeter, check pin #1 of the power seat switch connector for continuity to ground. It should be present, If OK go to Step 3 , If NOT OK repair the open ground circuit as required.

(3) Using an voltmeter, check pin #5 of the power seat switch connector for approx. 12v. It should be present, If OK go to Step 4 , If NOT OK repair the open voltage supply circuit as required.

(4) Using an ohmmeter, perform the Seat Switch Continuity Test table using (Fig. 6). If there is no continuity at any of the switch positions, replace the power seat switch.

PASSENGER SEAT SWITCH CONTINUITY TEST TABLE

SWITCH POSITION	CONTINUITY BETWEEN PINS
	PASSENGER
OFF	PIN 5 & 4 PIN 5 & 3 PIN 5 & 2 PIN 5 & 10 PIN 5 & 9 PIN 5 & 8 PIN 5 & 7 PIN 5 & 6
FRONT RISER UP	PIN 5 & 9 PIN 1 & 6
FRONT RISER DOWN	PIN 5 & 6 PIN 1 & 9
CENTER SWITCH FORWARD	PIN 5 & 3 PIN 1 & 10
CENTER SWITCH REARWARD	PIN 5 & 10 PIN 3 & 1
REAR RISER UP	PIN 5 & 8 PIN 1 & 7
REAR RISER DOWN	PIN 5 & 7 PIN 1 & 8
RECLINER UP	PIN 5 & 2 PIN 4 & 1
RECLINER DOWN	PIN 5 & 4 PIN 2 & 1

REMOVAL

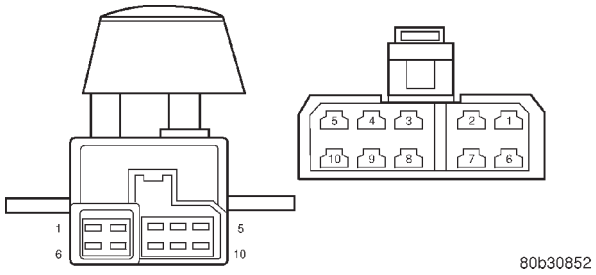

Fig. 6 Seat Switch Pin Call-Out

(1) Disconnect and isolate the battery negative cable.

(2) On models equipped with the eight-way power seat, using a push pin remover or another suitable wide flat-bladed tool, gently pry the power seat and power recliner switch knobs off of the switch levers (Fig. 7).

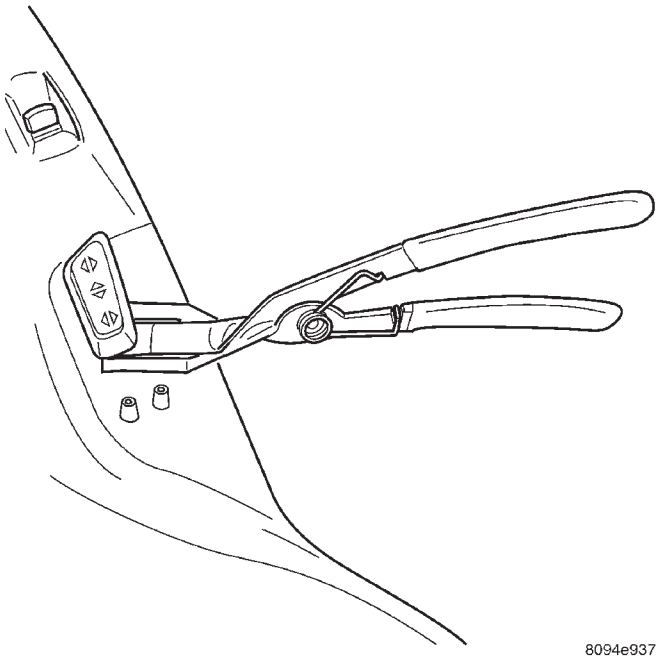

Fig. 7 Removing Switch Control Knobs - Typical

(3) Remove the screws that secure the outboard seat cushion side shield to the seat cushion frame. Refer to the Body section of the service manual for the procedure.

(4) Pull the outboard seat cushion side shield away from the seat cushion frame far enough to access the power seat switch wire harness connector.

(5) Disconnect the power seat wire harness connector from the power seat switch connector receptacle.

(6) Remove the screws that secure the power seat switch to the inside of the outboard seat cushion side shield.

PASSENGER SEAT SWITCH (Continued)

(7) Remove the power seat switch from the outboard seat cushion side shield.

INSTALLATION

(1) Position the power seat switch onto the outboard seat cushion side shield.

(2) Install and tighten the screws that secure the power seat switch to the inside of the outboard seat cushion side shield. Tighten the screws to 1.5 N·m (14 in. lbs.).

(3) Reconnect the power seat wire harness connector to the power seat switch connector receptacle.

(4) Position the outboard seat cushion side shield onto the seat cushion frame

(5) Install and tighten the screws that secure the outboard seat cushion side shield to the seat cushion frame. Tighten the screws to 1.5 N·m (14 in. lbs.).

(6) Install the switch knobs on the switch control levers, if equipped.

(7) Reconnect the battery negative cable.

MEMORY MIRROR/SEAT MODULE

DESCRIPTION

Vehicles equipped with the memory mirror/seat option, utilize a memory module located under the drivers front seat. This module is basically wired in-line between the power seat switch and the power seat track/adjuster motors, or in-line between the power mirror switch and the power side view mirror. The MSMM contains a central processing unit that communicates with other modules on the Programmable Communications Interface (PCI) data bus network.

The Memory Seat/Mirror Module (MSMM) receives hard wired inputs from the driver power seat switch and the potentiometers on each of the driver side power seat track motors, or from the power mirror switch and the potentiometers on the side view mirror. The MSMM receives messages over the PCI data bus from the Body Control Module (BCM) (memory switch status), the Powertrain Control Module (PCM) (vehicle speed status). The MSMM will prevent the seat memory recall function from being initiated if the driver side seat belt is buckled, if the transmission gear selector lever is not in the Park or Neutral positions, or if the vehicle is moving.

For diagnosis of the MSMM or the PCI data bus, a DRBIII® scan tool and the proper Diagnostic Procedures manual are recommended. The MSMM cannot be repaired and, if faulty or damaged, it must be replaced. Refer to **Memory System** in the Power Seat or Power Mirror section of this manual for more information on the memory system option.

OPERATION

When memory system operation is requested (depressing of the memory switch), a resistor multiplexed signal is sent from the memory switch to the body control module (BCM). The body control module will then send the appropriate signals out to the memory/mirror seat module, the memory/mirror seat module then applies the voltage supply to the power seat track or side-view mirror if the proper requirements are met. The vehicle speed must equal zero and the transmission must be in park or neutral in order for the memory system to function.

DIAGNOSIS AND TESTING - MEMORY MIRROR/SEAT MODULE

Visually inspect the related wiring harness connectors. Look for broken, bent, pushed out, or corroded terminals. If any of the above conditions are present, repair as necessary. If not, use a DRB III® scan tool and the proper Diagnostic Procedures Manual to test the memory/mirror seat module. For complete circuit diagrams, refer to **Wiring Diagrams**.

REMOVAL

(1) Disconnect and isolate the battery negative cable.

(2) Remove the driver side front bucket seat retaining nuts from under the vehicle (Refer to 23 - BODY/SEATS/SEAT - REMOVAL).

(3) Lift the drivers seat up and out of the mounting holes in the floor pan and lay the seat rearward to access the module located under the seat. It is not necessary to disconnect the seat electrical, just use care not to damage the wiring by over-extending.

(4) Disconnect the memory/mirror seat module electrical connectors. Depress the retaining tab and pull straight apart.

(5) Remove the module retaining bolts and remove the module from the bracket.

INSTALLATION

(1) Position and install the module retaining bolts.

(2) Connect the memory/mirror seat module electrical connectors.

(3) Position the drivers seat in the mounting holes in the floor pan.

(4) Install the driver side front bucket seat retaining nuts from under the vehicle (Refer to 23 - BODY/SEATS/SEAT - INSTALLATION).

(5) Connect the battery negative cable.

DRIVER POWER SEAT TRACK

DESCRIPTION

The eight-way power seat option includes a electrically operated power seat track located under each front seat. The left side power seat track also provides the mounting location for the body control module on this vehicle. The power seat circuit breakers are mounted on the rear of each power seat track, just behind the seat rear trim panel. The lower half of the power seat track is secured to the floor panel via four studs and nuts that must be accessed from the underside of the vehicle. Four bolts secure the bottom of the seat cushion pan to the upper half of the power seat track unit. Four additional bolts secure the seat back frame to the power seat track unit.

The power seat track unit includes four reversible electric motors that are secured to the upper half of the track unit. Each motor moves the seat adjuster through a combination of worm-drive gearboxes and screw-type drive units. Each of the four power seat track motors used on models equipped with the optional memory system incorporates a position potentiometer integral to the motor assembly, which electronically monitors the motor position. This enables the memory system to function by referencing the motor positions programmed into the memory seat/mirror module.

The front and rear of the seat are operated by two separate vertical adjustment motors. These motors can be operated independently of each other, tilting the entire seat assembly forward or rearward; or, they can be operated in unison by selecting the proper power seat switch functions, which will raise or lower the entire seat assembly. A third motor is the horizontal adjustment motor, which moves the seat track in the forward and rearward directions. The forth motor is the recliner adjustment motor, which moves the seat back in the forward and rearward directions.

The power seat track unit cannot be repaired, and is serviced only as a complete unit. If any component in this unit is faulty or damaged, the entire power seat track unit must be replaced.

OPERATION

When a power seat switch control knob or knobs are actuated, a battery feed and a ground path are applied through the switch contacts to the power seat track or recliner adjuster motor. The selected adjuster motor operates to move the seat track or recliner through its drive unit in the selected direction until the switch is released, or until the travel limit of the adjuster is reached. When the switch is moved in the opposite direction, the battery feed and ground path to the motor are reversed through the switch contacts. This causes the adjuster motor to run in the opposite direction.

No power seat switch should be held applied in any direction after the adjuster has reached its travel limit. The power seat adjuster motors each contain a self-resetting circuit breaker to protect them from overload. However, consecutive or frequent resetting of the circuit breaker must not be allowed to continue, or the motor may be damaged.

See the owner's manual in the vehicle glove box for more information on the power seat switch functions and the seat adjusting procedures.

DIAGNOSIS AND TESTING - DRIVER POWER SEAT TRACK

WARNING: SOME VEHICLES ARE EQUIPPED WITH SEATBACK MOUNTED AIRBAGS. BEFORE ATTEMPTING TO DIAGNOSE OR SERVICE ANY SEAT OR POWER SEAT SYSTEM COMPONENT YOU MUST FIRST DISCONNECT AND ISOLATE THE BATTERY NEGATIVE CABLE. THEN WAIT TWO MINUTES FOR THE SYSTEM CAPACITOR TO DISCHARGE BEFORE FURTHER SYSTEM SERVICE. THIS IS THE ONLY SURE WAY TO DISABLE THE AIRBAG SYSTEM. FAILURE TO DO SO COULD RESULT IN ACCIDENTAL AIRBAG DEPLOYMENT AND POSSIBLE PERSONAL INJURY.

Actuate the power seat switch to move all three power seat track adjusters in each direction. The power seat track adjusters should move in each of the selected directions. If a power seat track adjuster fails to operate in only one direction, move the adjuster a short distance in the opposite direction and test again to be certain that the adjuster is not at its travel limit. If the power seat track adjuster still fails to operate in only one direction, refer to **Diagnosis and Testing Power Seat Switch** in this section. If the power seat track adjuster fails to operate in more than one direction, perform the following tests. For complete circuit diagrams, refer to **Wiring Diagrams**.

TESTING POWER SEAT TRACK MOTORS

(1) Check the power seat circuit breaker under the seat. If OK, go to Step 2. If not OK, replace the faulty power seat circuit breaker.

(2) Check for battery voltage at the power seat circuit breaker under the seat. If OK, go to Step 3. If not OK, repair the open fused B(+) circuit to the fuse in the Intelligent Power Module as required.

(3) Remove the outboard seat cushion side shield from the seat. Disconnect the seat wire harness connector from the power seat switch connector recepta-

DRIVER POWER SEAT TRACK (Continued)

cle. Check for battery voltage at the fused B(+) circuit cavity of the power seat wire harness connector for the power seat switch. If OK, go to Step 4. If not OK, repair the open fused B(+) circuit to the power seat circuit breaker under the seat as required.

(4) Check for continuity between the ground circuit cavity of the power seat wire harness connector for the power seat switch and a good ground. There should be continuity. If OK, go to Step 5. If not OK, repair the open ground circuit to ground as required.

(5) Test the power seat switch. Refer to **Diagnosis and Testing Power Seat Switch** in this section. If the switch tests OK, test the circuits of the power seat wire harness between the inoperative power seat track adjuster motor and the power seat switch for shorts or opens. If the circuits check OK, replace the faulty power seat track unit. If the circuits are not OK, repair the power seat wire harness as required.

REMOVAL

WARNING: SOME VEHICLES ARE EQUIPPED WITH SEATBACK MOUNTED AIRBAGS. BEFORE ATTEMPTING TO DIAGNOSE OR SERVICE ANY SEAT OR POWER SEAT SYSTEM COMPONENT YOU MUST FIRST DISCONNECT AND ISOLATE THE BATTERY NEGATIVE CABLE. THEN WAIT TWO MINUTES FOR THE SYSTEM CAPACITOR TO DISCHARGE BEFORE FURTHER SYSTEM SERVICE. THIS IS THE ONLY SURE WAY TO DISABLE THE AIRBAG SYSTEM. FAILURE TO DO SO COULD RESULT IN ACCIDENTAL AIRBAG DEPLOYMENT AND POSSIBLE PERSONAL INJURY.

(1) Remove the appropriate seat from the vehicle and place it on a clean work surface(Refer to 23 - BODY/SEATS/SEAT - REMOVAL).

(2) Remove the Body Control Module retaining screws.

(3) Disconnect the body control module electrical connectors and remove the body control module from the power seat track.

(4) Remove the rear fabric blocker trim panel from the rear of the front seat.

(5) Remove the seat side cover and power seat switch as an assembly (Refer to 23 - BODY/SEATS/SEAT CUSHION SIDE COVERS - REMOVAL).

(6) Disconnect all electrical connectors connecting the power seat track to the seat assembly.

(7) Pull the seat back trim cover up slightly to access and remove the two seat back frame mounting bolts and also remove two seat back recliner bolts.

(8) Remove four seat track mounting bolts from the seat cushion pan.

(9) Remove the power seat track from the seat.

INSTALLATION

(1) Position the seat cushion on the seat track.

(2) Install the four seat track retaining bolts in the seat cushion pan. Torque the bolts to 28.5 N·m.

(3) Position the seat back and install the two seat back frame mounting bolts and the two seat back recliner bolts. Torque the bolts to 55 N·m.

(4) Route and connect the electrical connectors between the power seat track and the seat assembly.

(5) Install the seat side cover and power seat switch as an assembly (Refer to 23 - BODY/SEATS/SEAT CUSHION SIDE COVERS - INSTALLATION).

(6) Install the rear fabric blocker trim panel on the rear of the front seat.

(7) Position the body control module and connect the body control module electrical connectors.

(8) Install the Body Control Module retaining screws.

(9) Install the seat assembly in the vehicle (Refer to 23 - BODY/SEATS/SEAT - INSTALLATION).

PASSENGER POWER SEAT TRACK

DESCRIPTION

The eight-way power seat option includes a electrically operated power seat track unit located under each front seat. The power seat circuit breaker is mounted on the rear of the power seat track, just behind the seat rear trim panel. The lower half of the power seat track is secured to the floor panel via four studs and nuts that must be accessed from the underside of the vehicle. Four bolts secure the bottom of the seat cushion frame to the upper half of the power seat track unit. Four additional bolts secure the seat back frame to the power seat track unit.

The power seat track unit includes four reversible electric motors that are secured to the upper half of the track unit. Each motor moves the seat adjuster through a combination of worm-drive gearboxes and screw-type drive units.

The front and rear of the seat are operated by two separate vertical adjustment motors. These motors can be operated independently of each other, tilting the entire seat assembly forward or rearward; or, they can be operated in unison by selecting the proper power seat switch functions, which will raise or lower the entire seat assembly. A third motor is the horizontal adjustment motor, which moves the seat track in the forward and rearward directions. The forth motor is the recliner adjustment motor, which moves the seat back in the forward and rearward directions.

PASSENGER POWER SEAT TRACK (Continued)

The power seat track unit cannot be repaired, and is serviced only as a complete unit. If any component in this unit is faulty or damaged, the entire power seat track unit must be replaced.

OPERATION

When a power seat switch control knob or knobs are actuated, a battery feed and a ground path are applied through the switch contacts to the power seat track or recliner adjuster motor. The selected adjuster motor operates to move the seat track or recliner through its drive unit in the selected direction until the switch is released, or until the travel limit of the adjuster is reached. When the switch is moved in the opposite direction, the battery feed and ground path to the motor are reversed through the switch contacts. This causes the adjuster motor to run in the opposite direction.

No power seat switch should be held applied in any direction after the adjuster has reached its travel limit. The power seat adjuster motors each contain a self-resetting circuit breaker to protect them from overload. However, consecutive or frequent resetting of the circuit breaker must not be allowed to continue, or the motor may be damaged.

See the owner's manual in the vehicle glove box for more information on the power seat switch functions and the seat adjusting procedures.

DIAGNOSIS AND TESTING - POWER SEAT TRACK

WARNING: SOME VEHICLES ARE EQUIPPED WITH SEATBACK MOUNTED AIRBAGS. BEFORE ATTEMPTING TO DIAGNOSE OR SERVICE ANY SEAT OR POWER SEAT SYSTEM COMPONENT YOU MUST FIRST DISCONNECT AND ISOLATE THE BATTERY NEGATIVE CABLE. THEN WAIT TWO MINUTES FOR THE SYSTEM CAPACITOR TO DISCHARGE BEFORE FURTHER SYSTEM SERVICE. THIS IS THE ONLY SURE WAY TO DISABLE THE AIRBAG SYSTEM. FAILURE TO DO SO COULD RESULT IN ACCIDENTAL AIRBAG DEPLOYMENT AND POSSIBLE PERSONAL INJURY.

Actuate the power seat switch to move all three power seat track adjusters in each direction. The power seat track adjusters should move in each of the selected directions. If a power seat track adjuster fails to operate in only one direction, move the adjuster a short distance in the opposite direction and test again to be certain that the adjuster is not at its travel limit. If the power seat track adjuster still fails to operate in only one direction, refer to **Diagnosis and Testing Power Seat Switch** in this section. If the power seat track adjuster fails to operate in more than one direction, perform the following tests. For complete circuit diagrams, refer to **Wiring Diagrams**.

(1) Check the power seat circuit breaker under the seat. If OK, go to Step 2. If not OK, replace the faulty power seat circuit breaker.

(2) Check for battery voltage at the power seat circuit breaker under the seat. If OK, go to Step 3. If not OK, repair the open fused B(+) circuit to the fuse in the Intelligent Power Module as required.

(3) Remove the outboard seat cushion side shield from the seat. Disconnect the seat wire harness connector from the power seat switch connector receptacle. Check for battery voltage at the fused B(+) circuit cavity of the power seat wire harness connector for the power seat switch. If OK, go to Step 4. If not OK, repair the open fused B(+) circuit to the power seat circuit breaker under the seat as required.

(4) Check for continuity between the ground circuit cavity of the power seat wire harness connector for the power seat switch and a good ground. There should be continuity. If OK, go to Step 5. If not OK, repair the open ground circuit to ground as required.

(5) Test the power seat switch. Refer to **Diagnosis and Testing Power Seat Switch** in this section. If the switch tests OK, test the circuits of the power seat wire harness between the inoperative power seat track adjuster motor and the power seat switch for shorts or opens. If the circuits check OK, replace the faulty power seat track unit. If the circuits are not OK, repair the power seat wire harness as required.

REMOVAL

WARNING: SOME VEHICLES ARE EQUIPPED WITH SEATBACK MOUNTED AIRBAGS. BEFORE ATTEMPTING TO DIAGNOSE OR SERVICE ANY SEAT OR POWER SEAT SYSTEM COMPONENT YOU MUST FIRST DISCONNECT AND ISOLATE THE BATTERY NEGATIVE CABLE. THEN WAIT TWO MINUTES FOR THE SYSTEM CAPACITOR TO DISCHARGE BEFORE FURTHER SYSTEM SERVICE. THIS IS THE ONLY SURE WAY TO DISABLE THE AIRBAG SYSTEM. FAILURE TO DO SO COULD RESULT IN ACCIDENTAL AIRBAG DEPLOYMENT AND POSSIBLE PERSONAL INJURY.

PASSENGER POWER SEAT TRACK (Continued)

(1) Remove the appropriate seat from the vehicle (Refer to 23 - BODY/SEATS/SEAT - REMOVAL).

(2) Remove the rear fabric blocker trim panel from the rear of the front seat.

(3) Remove the seat side cover and power seat switch as an assembly (Refer to 23 - BODY/SEATS/SEAT CUSHION SIDE COVERS - REMOVAL).

(4) Disconnect all electrical connectors connecting the power seat track to the seat assembly.

(5) Pull the seat back trim cover up slightly to access and remove the two seat back frame mounting bolts and seat back recliner bolts.

(6) Remove four seat track mounting bolts from the seat cushion pan.

(7) Remove the power seat track from the seat.

INSTALLATION

(1) Position the seat cushion on the seat track.

(2) Install the four seat track retaining bolts in the seat cushion pan. Torque the bolts to 28.5 N·m.

(3) Position the seat back and install the two seat back frame mounting bolts and the two seat back recliner bolts. Torque the bolts to 55 N·m.

(4) Route and connect the electrical connectors between the power seat track and the seat assembly.

(5) Install the seat side cover and power seat switch as an assembly (Refer to 23 - BODY/SEATS/SEAT CUSHION - INSTALLATION).

(6) Install the rear fabric blocker trim panel on the rear of the front seat.

(7) Install the seat assembly in the vehicle (Refer to 23 - BODY/SEATS/SEAT - INSTALLATION).

POWER WINDOWS

TABLE OF CONTENTS

page

POWER WINDOWS
DESCRIPTION 64
OPERATION 64
DIAGNOSIS AND TESTING - POWER WINDOWS 64
VENT WINDOW MOTOR
DIAGNOSIS AND TESTING - VENT WINDOW MOTOR 65
REMOVAL 65
INSTALLATION 65
WINDOW MOTOR
REMOVAL 66
WINDOW SWITCH
DIAGNOSIS AND TESTING - WINDOW SWITCH 66
REMOVAL 67
INSTALLATION 67

POWER WINDOWS

DESCRIPTION

The Power Window System is activated through switches mounted on the driver and passenger door panels.

OPERATION

Front door window lift motors use permanent type magnets. The B+ and ground applied at the motor terminal pins will cause the motor to rotate in one direction. Reversing current through the motor terminals will cause the motor to rotate in the opposite direction.

The power window motors ground through the master switch in the driver door by a black wire attached to the left cowl panel. Refer to the appropriate wiring information. The wiring information includes wiring diagrams, proper wire and connector repair procedures, details of wire harness routing and retention, connector pin-out information and location views for the various wire harness connectors, splices and grounds.

The power rear vent windows, if equipped, are operated by switches mounted in the driver door switch bezel. A separate switch is used for each window. Permanent magnet type motors connected to a crank system are used to open and close the rear vent windows. A battery positive and negative connection to either of the two motor terminals will cause the motor to rotate in one direction. Reversing current through these same two connections will cause the motor to rotate in the opposite direction. Refer to the appropriate wiring information. The wiring information includes wiring diagrams, proper wire and connector repair procedures, details of wire harness routing and retention, connector pin-out information and location views for the various wire harness connectors, splices and grounds.

DIAGNOSIS AND TESTING - POWER WINDOWS

POWER WINDOW MOTOR TEST

If the power window motor is receiving proper current and ground and does not operate, proceed with motor test. Refer to the appropriate wiring information. The wiring information includes wiring diagrams, proper wire and connector repair procedures, details of wire harness routing and retention, connector pin-out information and location views for the various wire harness connectors, splices and grounds.

(1) Remove front door trim panel and sound pad as necessary to gain access to power window motor wire connector, (Refer to 23 - BODY/DOOR - FRONT/ TRIM PANEL - REMOVAL).

(2) Disconnect power window motor wire connector from door harness.

(3) Using two jumper wires, connect one to a battery (+) source and the other to a good ground (-).

(4) Connect the Negative (-) jumper probe to one of the motor connector terminals.

(5) Momentarily touch the Positive (+) jumper probe to the other motor connector terminal.

When positive probe is connected the motor should rotate in one direction to either move window up or down. If window is all the way up or down the motor will grunt and the inner door panel will flex when actuated in that one direction.

(6) Reverse jumper probes at the motor connector terminals and window should now move in opposite direction. If window does not move or grunt, replace the motor.

POWER WINDOWS (Continued)

If window moved completely up or down, reverse the jumper probes and cycle window to the opposite position to verify full operation.

If motor grunts and does not move, verify that regulator is not binding.

WIRING VOLTAGE TEST

The following wiring test determines whether or not voltage is continuous through the body harness to switch.

(1) Remove the power window switch and bezel assembly from the driver door. (Refer to 8 - ELECTRICAL/POWER WINDOWS/POWER WINDOW SWITCH - REMOVAL).

(2) Disconnect wire connector from back of power window switch.

(3) Switch ignition ON position.

(4) Connect the clip end of a 12 volt test light to Pin 13 in door harness connector at the window switch. Touch the test light probe to Pin 9 and then to Pin 11.

- If the test light illuminates, the wiring circuit between the battery and switch is OK.
- If the lamp does not illuminate, first check the 25 amp circuit breaker attached to the electrical distribution wiring bracket. If the circuit breaker is OK, then check the 40 amp fuse (#28) in the Integrated Power Module (IPM). If both components are OK, then check for a broken wire.
- Refer to the appropriate wiring information. The wiring information includes wiring diagrams, proper wire and connector repair procedures, details of wire harness routing and retention, connector pin-out information and location views for the various wire harness connectors, splices and grounds.

VENT WINDOW MOTOR

DIAGNOSIS AND TESTING - VENT WINDOW MOTOR

If the power vent window motor is receiving proper current and ground and does not operate proceed with motor test. Refer to the appropriate wiring information. The wiring information includes wiring diagrams, proper wire and connector repair procedures, details of wire harness routing and retention, connector pin-out information and location views for the various wire harness connectors, splices and grounds.

(1) Remove D-pillar trim panel necessary to gain access to power vent window motor wire connector, (Refer to 23 - BODY/INTERIOR/LEFT D-PILLAR TRIM PANEL - REMOVAL) or (Refer to 23 - BODY/INTERIOR/RIGHT D-PILLAR TRIM PANEL - REMOVAL).

(2) Disconnect power vent window motor wire connector from body harness.

(3) Using two jumper wires, connect one to a battery (+) source and the other to a good ground (-).

(4) Connect the Negative (-) jumper probe to one of the motor connector terminals.

(5) Momentarily touch the Positive (+) jumper probe to the other motor connector terminal.

When positive probe is connected the motor should rotate in one direction to either move window open or closed. If window is all the way open or closed the motor will grunt and the crank system will flex when actuated in that one direction.

Reverse jumper probes at the motor connector terminals and window should now move in opposite direction. If window does not move or grunt, replace the motor.

If window moved completely open or closed, reverse the jumper probes and cycle window to the opposite position to verify full operation.

If motor grunts and does not move, verify that crank system is not binding.

REMOVAL

(1) Disconnect and isolate the battery negative cable.

(2) Remove D-pillar trim panel. (Refer to 23 - BODY/INTERIOR/LEFT D-PILLAR TRIM PANEL - REMOVAL) or (Refer to 23 - BODY/INTERIOR/RIGHT D-PILLAR TRIM PANEL - REMOVAL).

(3) Disconnect wire connector from power vent motor.

(4) Using a flat bladed tool, carefully lift the circular actuator link tab. Remove link from window ball socket.

(5) Remove bolts holding power vent motor to D-pillar (Fig. 1).

(6) Remove power vent motor.

INSTALLATION

(1) Obtain new vent window motor.

(2) Snap the actuator link socket onto the quarter window ball socket. Using a soft rubber mallet, push the circular link tab flush with link surface.

(3) Install bolts holding power vent motor to D-pillar.

(4) Reconnect wire connector to power vent motor.

(5) Reconnect the battery negative cable.

(6) Cycle quarter window open/close to verify function.

(7) Install D-pillar trim panel.

VENT WINDOW MOTOR (Continued)

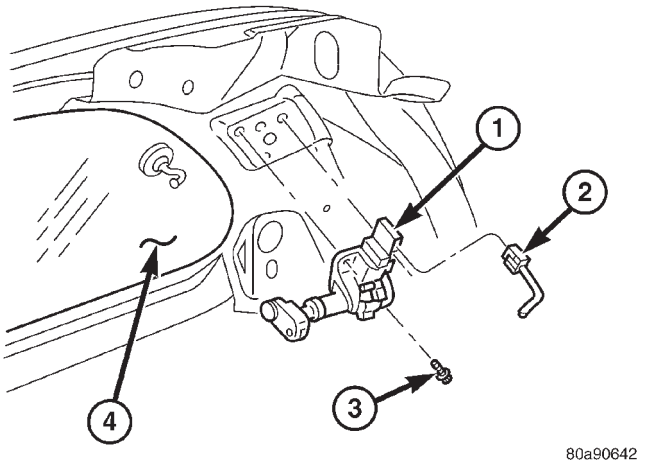

Fig. 1 VENT WINDOW MOTOR

1 - VENT WINDOW MOTOR
2 - WIRE HARNESS CONNECTOR
3 - BOLT
4 - VENT WINDOW

WINDOW MOTOR

REMOVAL

The window motor is incorporated into the window regulator assembly. If the window motor requires replacement, the window regulator must be replaced. (Refer to 23 - BODY/DOOR - FRONT/WINDOW REGULATOR - REMOVAL).

WINDOW SWITCH

DIAGNOSIS AND TESTING - WINDOW SWITCH

(1) Remove the desired switch to be tested from the door trim panel. Driver's side (master) or passenger side. (Refer to 8 - ELECTRICAL/POWER WINDOWS/POWER WINDOW SWITCH - REMOVAL).

(2) Using an ohmmeter, Test driver door switch for continuity as described in (Fig. 2).

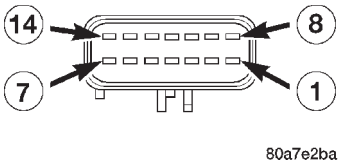

Fig. 2 Power Window Master Switch Connector

POWER WINDOW MASTER SWITCH TEST

SWITCH POSITION	CONTINUITY BETWEEN
OFF	13 and 1
	13 and 2
	13 and 3
	13 and 4
	13 and 5
	13 and 6
	13 and 7
	13 and 8
UP DRIVER	11 and 8
*DOWN DRIVER	11 and 6
*X DOWN DRIVER	11and 6
UP PASSENGER	9 and 4
DOWN PASSENGER	9 and 2
LEFT VENT OPEN	11 and 7
LEFT VENT CLOSE	9 and 3
RIGHT VENT OPEN	9 and 1
RIGHT VENT CLOSE	11 and 5

* MUST TEST WITH B+ ON PIN 9 AND GROUND ON PIN 13 FOR CONTINUITY BETWEEN PINS 11 AND 6

(3) If the result are not OK, replace the driver side window lift switch.

(4) Test passenger door switch for continuity as described in (Fig. 3).

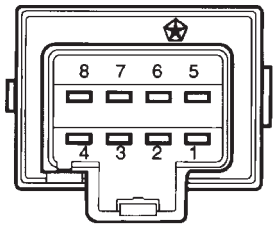

Fig. 3 Passenger Door Power Window Switch

WINDOW SWITCH (Continued)

PASSENGER WINDOW SWITCH TEST

SWITCH POSITION	CONTINUITY BETWEEN
OFF	3 AND 8
OFF	2 AND 5
UP	1 AND 8
DOWN	1 AND 5

(5) If the results are not OK, replace the switch.

The power window master switch has a Auto-Down feature. The switch is equipped with two detent positions when actuating the power window OPEN. The first detent position allows the window to roll down and stop when the switch is released. The second detent position actuates an integral express roll down relay that rolls the window down after the switch is released. When the express down circuit senses stall current (window has reached end of down travel), the switch will turn current off to the motor. The AUTO feature can be cancelled by actuating the switch UP or DOWN while window is in motion. If the electronic circuit in the switch fails to detect a stall current, the auto down circuit will time out within 9 to 13 seconds.

REMOVAL

(1) Disconnect and isolate the battery negative cable.

(2) Using a trim stick, start at the bottom of the switch and bezel assembly and pry up to remove the switch and bezel assembly from the door trim panel (Fig. 4).

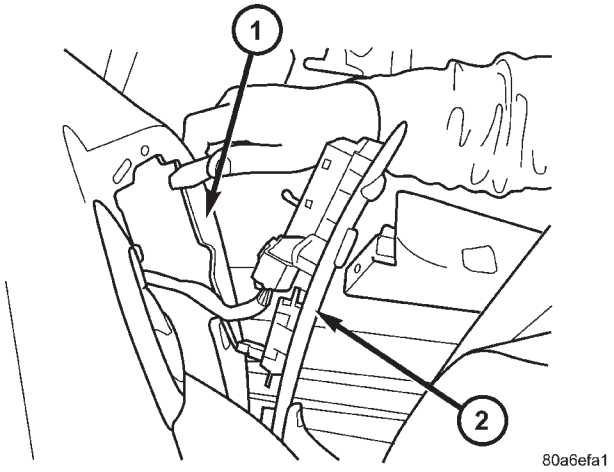

Fig. 4 POWER WINDOW SWITCH

1 - DOOR TRIM PANEL
2 - POWER WINDOW SWITCH AND BEZEL ASSEMBLY

(3) Unlatch the locking tab on the harness side connector of the switch.

(4) Disconnect wire harness connectors from switch.

INSTALLATION

(1) Reconnect wire harness connector to switch.

(2) Insert switch into door trim panel and press into place.

(3) Reconnect battery negative cable.

RESTRAINTS

TABLE OF CONTENTS

page

RESTRAINTS
DESCRIPTION . . . 2
OPERATION . . . 2
WARNING . . . 2
DIAGNOSIS AND TESTING - AIRBAG SYSTEM . 2
CLOCK SPRING
DESCRIPTION . . . 3
OPERATION . . . 3
STANDARD PROCEDURE - CLOCK SPRING CENTERING . . . 3
REMOVAL . . . 3
INSTALLATION . . . 3
DRIVER AIRBAG
DESCRIPTION . . . 3
OPERATION . . . 3
STANDARD PROCEDURE - CLEAN UP . . . 4
REMOVAL . . . 4
INSTALLATION . . . 4
DRIVER AIRBAG TRIM COVER
REMOVAL . . . 4
INSTALLATION . . . 5
OCCUPANT RESTRAINT CONTROLLER
DESCRIPTION . . . 5
OPERATION . . . 5
REMOVAL . . . 5
INSTALLATION . . . 5
PASSENGER AIRBAG
DESCRIPTION . . . 6
OPERATION . . . 6
STANDARD PROCEDURE - CLEAN UP . . . 6
REMOVAL . . . 6
INSTALLATION . . . 6
SEAT AIRBAG
DESCRIPTION . . . 7
OPERATION . . . 7
SEAT BELT OUTBOARD FRONT
REMOVAL . . . 7
INSTALLATION . . . 7
SEAT BELT FIRST ROW ANCHOR BRACKET - LWB
REMOVAL . . . 8
INSTALLATION . . . 8
SEAT BELT LEFT FIRST ROW OUTBOARD - SWB THREE DOOR
REMOVAL . . . 8
INSTALLATION . . . 8

page

SEAT BELT FIRST ROW OUTBOARD - SWB FOUR DOOR
REMOVAL . . . 9
INSTALLATION . . . 9
SEAT BELT FIRST ROW OUTBOARD - LWB FOUR DOOR
REMOVAL . . . 10
INSTALLATION . . . 10
SEAT BELT SECOND RIGHT ROW OUTBOARD - LWB
REMOVAL . . . 10
INSTALLATION . . . 10
SEAT BELT SECOND RIGHT ROW OUTBOARD - LBW WITH REAR HVAC
REMOVAL . . . 11
INSTALLATION . . . 11
SEAT BELT SECOND ROW OUTBOARD - SWB
REMOVAL . . . 12
INSTALLATION . . . 12
SEAT BELT BUCKLE - FRONT INBOARD
REMOVAL . . . 13
INSTALLATION . . . 13
SEAT BELT BUCKLE FIRST ROW QUAD BUCKET
REMOVAL . . . 13
INSTALLATION . . . 13
SEAT BELT BUCKLE FIRST ROW - TWO PASSENGER BENCH
REMOVAL . . . 14
INSTALLATION . . . 14
SEAT BELT BUCKLE SECOND ROW - THREE PASSENGER BENCH
REMOVAL . . . 14
INSTALLATION . . . 14
SEAT BELT TENSIONER
DESCRIPTION . . . 14
OPERATION . . . 14
SHOULDER BELT HEIGHT ADJUSTER
REMOVAL . . . 15
INSTALLATION . . . 15
SHOULDER BELT HEIGHT ADJUSTER KNOB
REMOVAL . . . 15
INSTALLATION . . . 15
SIDE IMPACT AIRBAG CONTROL MODULE
DESCRIPTION . . . 16
OPERATION . . . 16
REMOVAL . . . 16
INSTALLATION . . . 16

RESTRAINTS

DESCRIPTION

This vehicle is equipped with a Frontal Impact Airbag System, which utilizes the driver/passenger airbags and seatbelt pretensioners. This system is designed to protect occupants in the event of a front impact collision. These airbags and seatbelt pretensioners are all serviceable parts. If these pyrotechnics are deployed or defective, they must be replaced, as well as the Occupant Restraint Controller (ORC) must be diagnosed following procedures outlined in the service/diagnostic manuals.

Vehicles equipped with the Side Impact Airbag System, the seat back assembly must be replaced, as well as the Side Impact Airbag Control Module (SIACM) must be diagnosed following procedures outlined in the service/diagnostic manuals.

OPERATION

The Occupant Restraint Controller (ORC) controls the driver/passenger airbags and seatbelt pretensioners. If the ORC determines the impact is severe enough, the driver/passenger airbags and seatbelt pretensioners will inflate. Once a deployment occurs, these devices, and all damaged parts must be replaced, as well as the ORC must be diagnosed following procedures outlined in the service/diagnostic manuals.

The Side Impact Airbag Control Module (SIACM), the seat back assemblies and all damaged parts must be replaced, as well as the SIACM must be diagnosed following procedures outlined in the service/diagnostic manuals.

WARNING

WARNING: THIS SYSTEM IS A SENSITIVE, COMPLEX ELECTRO–MECHANICAL UNIT. DISCONNECT AND ISOLATE THE BATTERY NEGATIVE CABLE BEFORE BEGINNING AIRBAG SYSTEM COMPONENT REMOVAL OR INSTALLATION PROCEDURES. THIS WILL DISABLE THE AIRBAG SYSTEM. FAILURE TO DISCONNECT THE BATTERY COULD RESULT IN ACCIDENTAL AIRBAG DEPLOYMENT AND POSSIBLE PERSONAL INJURY.
ALLOW SYSTEM CAPACITOR TO DISCHARGE FOR TWO MINUTES BEFORE REMOVING AIRBAG COMPONENTS.
DO NOT PLACE AN INTACT UNDEPLOYED AIRBAG FACE DOWN ON A SOLID SURFACE, THE AIRBAG WILL PROPEL INTO THE AIR IF ACCIDENTALLY DEPLOYED AND COULD RESULT IN PERSONAL INJURY. WHEN CARRYING OR HANDLING AN UNDEPLOYED AIRBAG MODULE, THE TRIM SIDE OF THE AIRBAG SHOULD BE POINTING AWAY FROM THE BODY TO MINIMIZE POSSIBILITY OF INJURY IF ACCIDENTAL DEPLOYMENT OCCURS.
REPLACE AIRBAG SYSTEM COMPONENTS WITH MOPAR® REPLACEMENT PARTS. SUBSTITUTE PARTS MAY APPEAR INTERCHANGEABLE, BUT INTERNAL DIFFERENCES MAY RESULT IN INFERIOR OCCUPANT PROTECTION.
WEAR SAFETY GLASSES, RUBBER GLOVES, AND LONG SLEEVED CLOTHING WHEN CLEANING POWDER RESIDUE FROM VEHICLE AFTER AIRBAG DEPLOYMENT. SODIUM HYDROXIDE POWDER RESIDUE EMITTED FROM A DEPLOYED AIRBAG CAN CAUSE SKIN IRRITATION. FLUSH AFFECTED AREA WITH COOL WATER IF IRRITATION IS EXPERIENCED. IF NASAL OR THROAT IRRITATION IS EXPERIENCED, EXIT THE VEHICLE FOR FRESH AIR UNTIL THE IRRITATION CEASES. IF IRRITATION CONTINUES, SEE A PHYSICIAN.
DO NOT USE A REPLACEMENT AIRBAG THAT IS NOT IN THE ORIGINAL PACKAGING, IMPROPER DEPLOYMENT AND PERSONAL INJURY CAN RESULT.
THE FACTORY INSTALLED FASTENERS, SCREWS AND BOLTS USED TO FASTEN AIRBAG COMPONENTS HAVE A SPECIAL COATING AND ARE SPECIFICALLY DESIGNED FOR THE AIRBAG SYSTEM. DO NOT USE SUBSTITUTE FASTENERS, USE ONLY ORIGINAL EQUIPMENT FASTENERS LISTED IN THE PARTS CATALOG WHEN FASTENER REPLACEMENT IS REQUIRED.

CAUTION:
Deployed and Nondeployed Air Bags may or may not have live pyrotechnic material within the air bag inflator. Do not dispose of Driver and Passenger Airbags unless you are sure of complete deployment. Please refer to the Hazardous Substance Control System for Proper Disposal. Dispose of deployed air bags in a manner consistent with state, provincial, local, and federal regulations.

DIAGNOSIS AND TESTING - AIRBAG SYSTEM

(1) Connect a DRB lll® scan tool to the Data Link Connector (DLC), located at left side of the steering column and at the lower edge of the lower instrument panel.

(2) Turn the ignition key to ON position. Exit vehicle with scan tool. Use the latest version of the proper cartridge.

(3) After checking that no one is inside the vehicle, connect the battery negative terminal.

(4) Using the DRB lll® scan tool, read and record active diagnostic code data.

(5) Read and record any stored diagnostic codes.

(6) Refer to the proper Body Diagnostic Procedures manual if any diagnostic codes are found in Step 4 or Step 5.

(7) Erase stored diagnostic codes if there are no active diagnostic codes. If problems remain, diagnostic codes will not erase. Refer to the Proper Body Diagnostic Procedures Manual to diagnose the problem. **If airbag warning lamp either fails to light, or goes on and stays on, there is a system malfunction. Refer to the proper Body Diagnostic Procedures manual to diagnose the problem.**

CLOCK SPRING

DESCRIPTION

The clock spring is screwed to a plastic mounting platform on the steering column behind the steering wheel. The clock spring is used to maintain a continuous electrical circuit between the wiring harness and the drivers airbag.

OPERATION

This assembly consists of a flat ribbon like electrically conductive tape which winds and unwinds with the steering wheel rotation. The clock spring cannot be repaired. If the clock spring is faulty, damaged, or if the airbag has been deployed, the clock spring must be replaced.

STANDARD PROCEDURE - CLOCK SPRING CENTERING

If the rotating tape (wire coil) in the clock spring is not positioned properly with the steering wheel and the front wheels, the clock spring may fail. The following procedure MUST BE USED to center the clock spring if it is not known to be properly positioned, or if the front wheels were moved from the straight ahead position.

(1) Adjust the steering wheel so that the tires are in a straight ahead position.

(2) Remove Driver Airbag from steering wheel.

(3) Disconnect wire connectors from back of airbag.

(4) Remove steering wheel.

(5) Rotate the clock spring rotor clockwise until the rotor stops. Do not apply excessive force.

(6) From the end of travel, rotate the rotor two turns counterclockwise until the wires end up at the top.

(7) Install steering wheel and airbag.

WARNING: DO NOT CONNECT THE BATTERY NEGATIVE CABLE. REFER TO ELECTRICAL, RESTRAINTS, DIAGNOSIS AND TESTING - AIRBAG SYSTEM FIRST.

REMOVAL

(1) Position steering wheel and front wheels straight ahead.

(2) Release hood latch and open hood. Disconnect and isolate the battery negative cable.

(3) Remove driver airbag from steering wheel.

(4) Disconnect wire connectors from back of driver airbag.

(5) Disconnect the 2–way connector from remote radio control harness and the 4-way connector from the speed control/horn harness.

(6) Remove steering wheel.

(7) Remove steering column shrouds.

(8) Disconnect 4-way and 6-way connectors between the clock spring and the instrument panel wiring harness.

(9) Remove clock spring from housing assembly by removing the two retaining screws retaining the clock spring.

INSTALLATION

(1) Position the clock spring into the housing. Install the two retaining screws to clock spring.

(2) Connect the 4-way and 6-way harness between the clock spring and the instrument panel.

(3) Install the steering wheel. Refer to Steering, Column, Steering Wheel, Installation.

(4) Connect the harness connector to the driver airbag.

(5) Connect the remote radio control harness and the speed control/horn harness.

(6) Install the driver airbag into the steering wheel.

(7) Install the steering column upper and lower shrouds.

WARNING: DO NOT CONNECT THE BATTERY NEGATIVE CABLE. REFER TO ELECTRICAL, RESTRAINTS, DIAGNOSIS AND TESTING - AIRBAG SYSTEM FIRST.

DRIVER AIRBAG

DESCRIPTION

The Driver Airbag is located in the center of the steering wheel. The most visible part of the airbag is the cover/horn switch.

OPERATION

The Driver Airbag cover contains the horn switch, inflator device, and a fabric bag. The airbag cover/horn switch is serviced separately from the inflator and bag components.

DRIVER AIRBAG (Continued)

When the front airbag system is deployed, the following **MUST** be replaced:

- Complete Steering Column Assembly.
- Lower Steering Column Coupler.
- Steering Wheel.
- Clock Spring.
- Driver Airbag
- Passenger Airbag
- Upper Instrument Panel with Pad.

CARE OF UNDEPLOYED AIRBAGS

Airbags must be stored in their original special container until used for service. At no time should a source of electricity be permitted near the inflator on the back of an airbag. When carrying or handling an undeployed airbag, the trim side of the airbag should be pointing away from the body to minimize possibility of injury if accidental deployment occurs. Do not place undeployed airbag face down on a solid surface, the airbag will propel into the air if accidental deployment occurs.

STANDARD PROCEDURE - CLEAN UP

Roll or fold the driver airbag towards the steering wheel and then tape the bag to the steering wheel.

Use a vacuum cleaner to remove any residual powder from the vehicle interior. Work from the outside in to avoid kneeling or sitting in a contaminated area. Vacuum the heater and A/C outlets as well. If HVAC was in RECIRC mode at time of airbag deployment, operate HVAC blower on low speed/heat and vacuum powder residue expelled from the heat outlets. Multiple vacuum cleaning may be necessary to decontaminate the interior of the vehicle.

REMOVAL

DEPLOYED AIRBAG

The Driver Airbag and Driver Airbag Cover/Horn Pad are serviced separately from each other.

(1) Clean powder residue from interior of vehicle, (Refer to 8 - ELECTRICAL/RESTRAINTS/DRIVER AIRBAG - STANDARD PROCEDURE) Cleanup.

(2) Remove two screws attaching Driver Airbag to steering wheel.

(3) Remove the driver airbag from steering wheel.

(4) Disconnect wire connectors from Airbag and Clock Spring.

(5) Adjust the steering wheel so that the tires are in a straight ahead position. Remove steering wheel, (Refer to 19 - STEERING/COLUMN/STEERING WHEEL - REMOVAL)

(6) Disconnect the 2-way and 4-way connectors between the clock spring and the instrument panel wiring harness.

(7) Remove upper and lower steering column shrouds.

(8) Remove clock spring from the housing assembly by depressing the 2 tabs on the clock spring.

UNDEPLOYED AIRBAG

(1) Remove screws attaching airbag/horn switch to steering wheel.

(2) Remove Driver Airbag from steering wheel.

(3) Disconnect wire connectors from driver airbag and clock spring.

INSTALLATION

DEPLOYED AIRBAG

(1) Perform cleanup procedure.(Refer to 8 - ELECTRICAL/RESTRAINTS/DRIVER AIRBAG - STANDARD PROCEDURE)

(2) Install a new steering column assembly and lower steering column coupler. Refer to Steering, Column, Installation.

(3) Install the clock spring.

(4) Install the driver airbag and the two screws retaining the airbag. Tighten screws to 10 N·m (90 in. lbs.)

WARNING: DO NOT CONNECT THE BATTERY NEGATIVE CABLE. REFER TO ELECTRICAL, RESTRAINTS, DIAGNOSIS AND TESTING - AIRBAG SYSTEM FIRST.

UNDEPLOYED AIRBAG

(1) Position a new airbag into the airbag cavity.

(2) Install the two screws retaining the airbag. Tighten screws to 10 N·m (90 in. lbs.)

WARNING: DO NOT CONNECT THE BATTERY NEGATIVE CABLE. REFER TO ELECTRICAL, RESTRAINTS, DIAGNOSIS AND TESTING - AIRBAG SYSTEM FIRST.

DRIVER AIRBAG TRIM COVER

REMOVAL

The horn switch is integral to the driver airbag trim cover. If either component is faulty or damaged, the entire driver airbag trim cover and horn switch unit must be replaced.

(1) Disconnect and isolate the battery negative cable.

WARNING: WAIT TWO MINUTES FOR THE AIRBAG SYSTEM RESERVE CAPACITOR TO DISCHARGE.

DRIVER AIRBAG TRIM COVER (Continued)

(2) Remove the driver airbag from the steering wheel (Refer to 8 - ELECTRICAL/RESTRAINTS/ DRIVER AIRBAG - REMOVAL).

(3) Remove the plastic wire retainer that captures the horn switch feed pigtail wire between the upper left inflator stud and the inflator on the back of the driver airbag housing.

(4) Remove the four nuts that secure the upper and lower trim cover retainers to the studs on the back of the driver airbag housing.

(5) Remove the upper and lower trim cover retainers from the airbag housing studs.

(6) Remove the horn switch ground pigtail wire eyelet terminal from the upper right airbag housing stud.

(7) Disengage the six trim cover locking blocks from the lip around the outside edge of the driver airbag housing and remove the housing from the cover.

INSTALLATION

(1) Install the housing into the cover. Engage the six trim cover locking blocks to the lip around the outside edge of the driver airbag housing.

(2) Install the horn switch ground pigtail wire eyelet terminal to the upper right airbag housing stud.

(3) Install the upper and lower trim cover retainers to the airbag housing studs.

(4) Install the four nuts that secure the upper and lower trim cover retainers to the studs on the back of the driver airbag housing.

(5) Install the plastic wire retainer that captures the horn switch feed pigtail wire between the upper left inflator stud and the inflator on the back of the driver airbag housing.

(6) Install the driver airbag onto the steering wheel (Refer to 8 - ELECTRICAL/RESTRAINTS/ DRIVER AIRBAG - INSTALLATION).

WARNING: DO NOT CONNECT THE BATTERY NEGATIVE CABLE. FIRST (Refer to 8 - ELECTRICAL/RESTRAINTS/DIAGNOSIS AND TESTING - AIRBAG SYSTEM).

OCCUPANT RESTRAINT CONTROLLER

DESCRIPTION

The front driver and passenger airbag system is designed to reduce the risk of fatality or serious injury, caused by a frontal impact of the vehicle.

The Occupant Restraint Controller (ORC) contains the impact sensor and energy reserve capacitor. It is mounted on a bracket, under the instrument panel, just forward of the storage bin. The ORC monitors the system to determine the system readiness. The ORC contains on-board diagnostics and will light the AIRBAG warning lamp in the message center when a problem occurs.

OPERATION

The impact sensor provides verification of the direction and severity of the impact. One impact sensor is used. It is located inside the Occupant Restraint Controller (ORC). The impact sensor is an accelerometer that senses deceleration. The deceleration pulses are sent to a microprocessor which contains a decision algorithm. When an impact is severe enough to require airbag protection, the ORC microprocessor sends a signal that completes the electrical circuit to the driver and passenger airbags. The impact sensor is calibrated for the specific vehicle and reacts to the severity and direction of an impact.

REMOVAL

NOTE: Diagnose the ORC using the service/diagnostic manual.

(1) Disconnect and isolate the battery negative cable.

(2) Remove storage bin from instrument panel. Refer to Body, Instrument Panel, Storage Bin, Removal.

(3) Remove three bolts holding ORC to floor bracket.

(4) Disconnect the wire connector from ORC.

(5) Remove the ORC assembly from vehicle.

INSTALLATION

WARNING: DO NOT INSTALL ORC IF MOUNTING LOCATION IS DEFORMED OR DAMAGED.

CAUTION: Use correct screws when installing the ORC.

(1) Install the ORC assembly into vehicle.

(2) Connect the wire connector to the ORC.

(3) Install three bolts holding ORC to floor bracket. Torque bolts to 7.3 - 9.6 N·m (65 to 85 in. lbs.)

(4) Install the storage bin onto the instrument panel. Refer to Body, Instrument Panel, Storage Bin, Installation.

WARNING: DO NOT CONNECT THE BATTERY NEGATIVE CABLE. REFER TO ELECTRICAL, RESTRAINTS, DIAGNOSIS AND TESTING - AIRBAG SYSTEM FIRST.

PASSENGER AIRBAG

DESCRIPTION

WARNING: NEVER DISASSEMBLE THE PASSENGER AIRBAG, THE PASSENGER AIRBAG HAS NO SERVICEABLE PARTS.

The Passenger Airbag is located beneath the instrument panel and pad assembly. The airbag is mounted to the back side of the instrument panel reinforcement.

The instrument panel top pad is the most visible part of the passenger airbag system. Located under the instrument panel top pad are the airbag door, the passenger airbag cushion and the airbag cushion supporting components.

The passenger airbag includes a magnesium housing within which the cushion and inflator are mounted and sealed.

Following a passenger airbag deployment, the passenger airbag and the instrument panel must be replaced. The passenger airbag cannot be repaired, and must be replaced if deployed or damaged in any way.

OPERATION

The passenger airbag is equipped with two inflators, each with three levels of pressure output. The inflators seal the hole in the airbag cushion so it can discharge the gas it produces directly into the cushion when supplied with the proper electrical signal. Following an airbag deployment, the airbag cushion quickly deflates by venting this gas through the cushion material towards the instrument panel.

The passenger airbag is secured with screws to the instrument panel beneath the instrument panel top pad and above the glove box opening. The instrument panel top pad above the glove box opening conceals the airbag door and a predetermined hinge line beneath its decorative cover. Upon airbag deployment, the top pad will bend at the hinge line and the door will fold back out of the way onto the top of the instrument panel.

When the front airbag system is deployed, the following **MUST** be replaced:

- Complete Steering Column Assembly.
- Lower Steering Column Coupler.
- Steering Wheel.
- Clock Spring.
- Driver Airbag.
- Passenger Airbag.
- Upper Instrument Panel with Pad.

CARE OF UNDEPLOYED AIRBAGS

Airbags must be stored in their original special container until used for service. At no time should a source of electricity be permitted near the inflator on the back of an airbag. When carrying or handling an undeployed airbag, the trim side of the airbag should be pointing away from the body to minimize possibility of injury if accidental deployment occurs. Do not place undeployed airbag face down on a solid surface, the airbag will propel into the air if accidental deployment occurs.

STANDARD PROCEDURE - CLEAN UP

Roll or fold the passenger airbag towards the instrument panel surface and close the door over the folded bag. Then tape the door shut.

Use a vacuum cleaner to remove any residual powder from the vehicle interior. Work from the outside in to avoid kneeling or sitting in a contaminated area. Vacuum the heater and A/C outlets as well. If HVAC was in RECIRC mode at time of airbag deployment, operate HVAC blower on low speed/heat and vacuum powder residue expelled from the heat outlets. Multiple vacuum cleaning may be necessary to decontaminate the interior of the vehicle.

REMOVAL

DEPLOYED AIRBAG

(1) Clean powder residue from interior of vehicle. Refer to Electrical, Restraints, Passenger Airbag, Standard Procedure - Passenger Airbag Clean Up.

(2) Remove instrument panel. Refer to Body, Instrument Panel, Removal.

(3) Remove all reusable components from the upper instrument panel and transfer to the new instrument panel.

UNDEPLOYED AIRBAG

(1) Remove instrument panel. Refer to Body, Instrument Panel, Removal.

(2) De-trim the instrument panel enough to gain access to the passenger airbag fasteners.

(3) Disconnect yellow wire connector from passenger airbag.

(4) Remove three bolts to the passenger airbag.

(5) Remove airbag from instrument panel through rear of instrument panel.

INSTALLATION

DEPLOYED AIRBAG

Transfer all reusable components to the new instrument panel.

(1) Install new Passenger Airbag into instrument panel.

PASSENGER AIRBAG (Continued)

(2) Install airbag attaching bolts to the instrument panel.
(3) Connect yellow wire connector from passenger airbag.
(4) Install Instrument panel. Refer to Body, Instrument Panel, Installation.

WARNING: DO NOT CONNECT THE BATTERY NEGATIVE CABLE. REFER TO ELECTRICAL, RESTRAINTS, DIAGNOSIS AND TESTING - AIRBAG SYSTEM FIRST.

UNDEPLOYED AIRBAG

(1) Install Passenger Airbag into instrument panel.
(2) Install airbag attaching bolts to the instrument panel.
(3) Connect yellow wire connector from passenger airbag.
(4) Install Instrument panel. Refer to Body, Instrument Panel, Installation.

WARNING: DO NOT CONNECT THE BATTERY NEGATIVE CABLE. REFER TO ELECTRICAL, RESTRAINTS, DIAGNOSIS AND TESTING - AIRBAG SYSTEM FIRST.

SEAT AIRBAG

DESCRIPTION

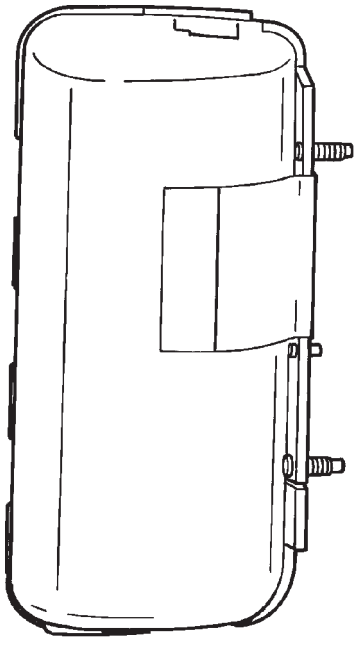

Fig. 1 SEAT AIRBAG - TYPICAL

The side impact airbag system Seat Airbags are located in the outboard side of the front seat backs. One in each front seat. The seat airbag inflator assembly is within the airbag housing (Fig. 1). Each airbag is mounted to the seat back frame. If deployed or defective, the entire seat back assembly must be replaced.

OPERATION

Only the Side Impact Airbag Control Module (SIACM) can deploy the side airbags. When supplied with the proper electrical signal, the seat airbag inflator will produce a gas and discharge the bag directly between the occupant and the side of the vehicle, protecting the occupant. Upon deployment, the seat back trim cover will tear open and allow the side airbag to fully inflate and quickly deflate.

SEAT BELT OUTBOARD FRONT

REMOVAL

Inspect the condition of the shoulder belt and lap belt. Replace any belt that is cut, frayed, torn, or damaged in any way. Also, replace the shoulder belt if the retractor is either damaged or inoperative.
(1) Remove shoulder harness height adjuster knob by pulling it straight away from adjuster.
(2) Remove cover from seat belt turning loop.
(3) Remove bolt attaching turning loop to shoulder belt height adjuster (Fig. 2).
(4) Remove turning loop from B-pillar.
(5) Remove lower B-pillar trim cover or quarter trim panel.
(6) Remove bolt attaching seat belt retractor to B-pillar (Fig. 2).
(7) Lift retractor upward and disengage arrow head retainer attaching retractor to B-pillar.
(8) Remove seat belt from vehicle.

INSTALLATION

Inspect the condition of the shoulder belt and lap belt. Replace any belt that is cut, frayed, torn, or damaged in any way. Also, replace the shoulder belt if the retractor is either damaged or inoperative.
(1) Place seat belt into position.
(2) Lower retractor into position B-pillar.
(3) Install bolt attaching seat belt retractor to B-pillar. Tighten all seat belt anchor bolts to 39 N·m (29 ft. lbs.) torque.
(4) Install turning loop onto B-pillar.
(5) Install lower B-pillar trim cover or quarter trim panel.
(6) Install bolt attaching turning loop to shoulder belt height adjuster. Tighten all seat belt anchor bolts to 39 N·m (29 ft. lbs.) torque.
(7) Press cover onto the seat belt turning loop.

SEAT BELT OUTBOARD FRONT (Continued)

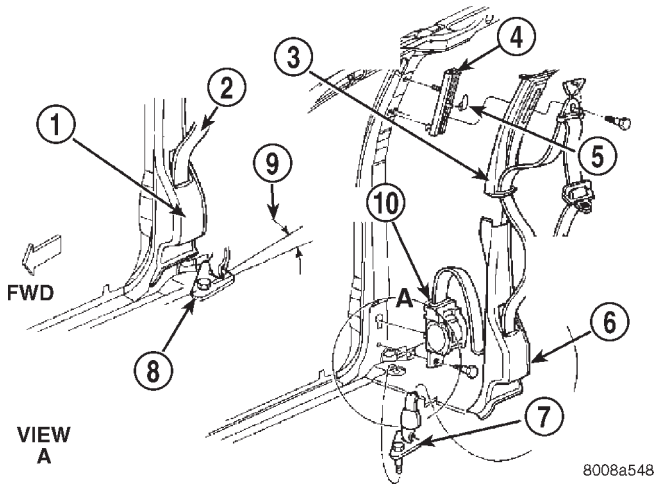

Fig. 2 SEAT BELT - OUTBOARD FRONT

1 - B-PILLAR TRIM LOWER
2 - BELT
3 - B-PILLAR TRIM UPPER
4 - HEIGHT ADJUSTER
5 - KNOB
6 - B-PILLAR TRIM LOWER
7 - FLOOR ANCHOR
8 - FLOOR ANCHOR
9 - 30° OUTBOARD
10 - RETRACTOR

(8) Install shoulder harness height adjuster knob by pushing onto the adjuster.

SEAT BELT FIRST ROW ANCHOR BRACKET - LWB

REMOVAL

(1) Remove lower quarter trim panel.
(2) Remove bolt attaching first row seat belt anchor bracket to floor.
(3) Remove bracket from vehicle.

INSTALLATION

(1) Position bracket to vehicle.
(2) Install bolt attaching first row seat belt anchor bracket to floor.
(3) Install lower quarter trim panel.

NOTE: The tightening specification for all seat belt anchor bolts is 39 N·m (29 ft. lbs.) torque.

SEAT BELT LEFT FIRST ROW OUTBOARD - SWB THREE DOOR

REMOVAL

(1) Remove first and second row seats. Refer to Owner's manual for proper procedures.
(2) Remove shoulder harness height adjuster knob by pulling it straight away from adjuster.
(3) Slide floor anchor cover from over the anchor bolt.
(4) Remove floor anchor bolt (Fig. 3).
(5) Remove anchor from floor.
(6) Open clam shell cover from over seat belt turning loop.
(7) Remove bolt attaching turning loop to shoulder belt height adjuster.
(8) Remove turning loop from C-pillar.
(9) Remove B-pillar upper trim cover.
(10) Remove C-pillar upper trim cover.
(11) Remove lower quarter trim panel.
(12) Route seat belt webbing and turning loop through access hole in lower quarter trim panel.
(13) Remove bolt attaching seat belt retractor to quarter panel.
(14) Lift retractor upward and disengage arrow head retainer attaching retractor to quarter panel (Fig. 3).
(15) Remove seat belt from vehicle.

INSTALLATION

(1) Install seat belt into position.
(2) Lower retractor into position to quarter panel.
(3) Install bolt attaching seat belt retractor to quarter panel. Tighten all seat belt anchor bolts to 39 N·m (29 ft. lbs.) torque.
(4) Install lower quarter trim panel.
(5) Install C-pillar upper trim cover.
(6) Route seat belt webbing and turning loop through access hole in lower quarter trim panel.
(7) Install B-pillar upper trim cover.
(8) Install turning loop onto C-pillar. Tighten all seat belt anchor bolts to 39 N·m (29 ft. lbs.) torque.
(9) Press clam shell cover over seat belt turning loop.
(10) Install anchor to floor.
(11) Slide floor anchor cover over the anchor bolt.
(12) Install shoulder harness height adjuster knob by pushing it onto adjuster.

SEAT BELT LEFT FIRST ROW OUTBOARD - SWB THREE DOOR (Continued)

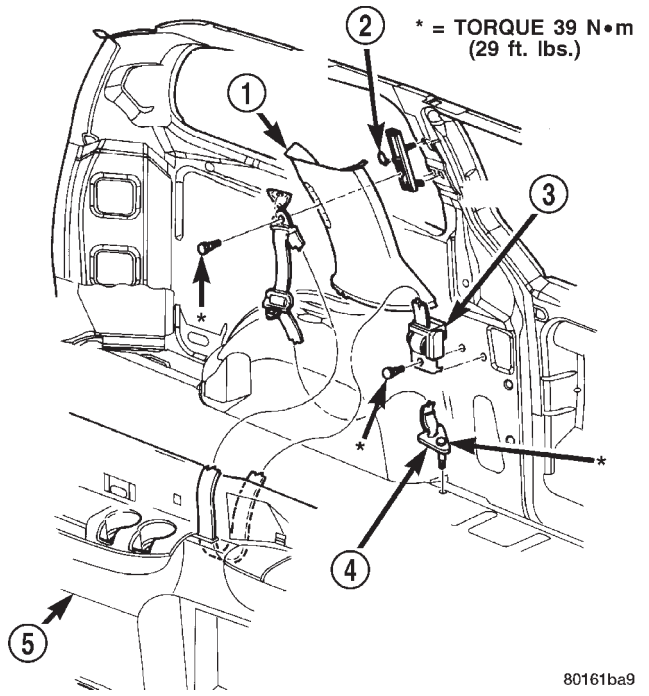

Fig. 3 SEAT BELT LEFT FIRST ROW OUTBOARD – SWB THREE DOOR

1 - C-PILLAR TRIM
2 - KNOB
3 - RETRACTOR
4 - LOWER ANCHOR
5 - QUARTER TRIM

(13) Install first and second row seats.

SEAT BELT FIRST ROW OUTBOARD - SWB FOUR DOOR

REMOVAL

(1) Remove first and second row seats. Refer to Owner's manual for proper procedures.

(2) Remove shoulder harness height adjuster knob by pulling it straight away from adjuster.

(3) Slide floor anchor cover from over the anchor bolt.

(4) Remove floor anchor bolt (Fig. 4).

(5) Remove anchor from floor.

(6) Open clam shell cover from over seat belt turning loop.

(7) Remove bolt attaching turning loop to shoulder belt height adjuster (Fig. 4).

(8) Remove turning loop from C-pillar.

(9) Remove lower quarter trim panel.

(10) Route seat belt webbing and turning loop through access hole in lower quarter trim panel.

(11) Remove bolt attaching seat belt retractor to quarter panel (Fig. 4).

(12) Lift retractor upward and disengage arrow head retainer holding retractor to quarter panel.

(13) Remove seat belt from vehicle.

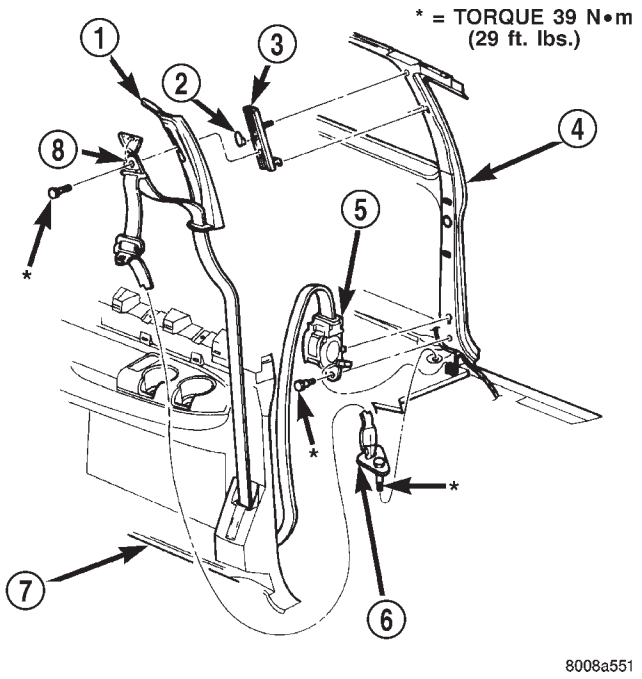

Fig. 4 SEAT BELT FIRST ROW OUTBOARD - SWB FOUR DOOR

1 - UPPER C-PILLAR TRIM
2 - KNOB
3 - HEIGHT ADJUSTER
4 - C-PILLAR
5 - RETRACTOR
6 - FLOOR ANCHOR
7 - QUARTER TRIM PANEL
8 - TURNING LOOP

INSTALLATION

(1) Install seat belt into position.

(2) Lower retractor into position to quarter panel.

(3) Install bolt attaching seat belt retractor to quarter panel. Tighten seat belt anchor bolts to 39 N·m (29 ft. lbs.) torque.

(4) Route seat belt webbing and turning loop through access hole in lower quarter trim panel.

(5) Install lower quarter trim panel.

(6) Install turning loop in position on C-pillar. Tighten seat belt anchor bolts to 39 N·m (29 ft. lbs.) torque.

(7) Install bolt attaching turning loop to shoulder belt height adjuster. Tighten seat belt anchor bolts to 39 N·m (29 ft. lbs.) torque.

(8) Close clam shell cover over seat belt turning loop.

(9) Place anchor in position on floor.

SEAT BELT FIRST ROW OUTBOARD - SWB FOUR DOOR (Continued)

(10) Install floor anchor bolt. Tighten seat belt anchor bolts to 39 N·m (29 ft. lbs.) torque.
(11) Slide floor anchor cover over the anchor bolt.
(12) Install shoulder harness height adjuster knob by pushing knob on the adjuster.

SEAT BELT FIRST ROW OUTBOARD - LWB FOUR DOOR

REMOVAL

(1) Remove first and second row seats. Refer to Owner's manual for proper procedures.
(2) Remove shoulder harness height adjuster knob by pulling it straight away from adjuster.
(3) Slide floor anchor cover from over the anchor bolt.
(4) Remove floor anchor bolt.
(5) Remove anchor from floor.
(6) Open clam shell cover from over seat belt turning loop.
(7) Remove bolt attaching turning loop to shoulder belt height adjuster.
(8) Remove turning loop from C-pillar.
(9) Remove lower quarter trim panel.
(10) Route seat belt webbing and turning loop through access hole in lower quarter trim panel.
(11) Remove bolt attaching seat belt retractor to quarter panel.
(12) Lift retractor upward and disengage arrow head retainer attaching retractor to quarter panel.
(13) Remove seat belt from vehicle.

INSTALLATION

(1) Position seat belt to vehicle.
(2) Install arrow head retainer to quarter panel and push downward to seat retainer.
(3) Install bolt attaching seat belt retractor to quarter panel.
(4) Route seat belt webbing and turning loop through access hole in lower quarter trim panel.
(5) Install lower quarter trim panel.
(6) Position turning loop to C-pillar.
(7) Install bolt attaching turning loop to shoulder belt height adjuster.
(8) Close clam shell cover from over seat belt turning loop.
(9) Position anchor to floor.
(10) Install floor anchor bolt.
(11) Slide floor anchor cover over the anchor bolt.
(12) Install shoulder harness height adjuster knob by pushing it straight onto adjuster.
(13) Install first and second row seats. Refer to Owner's manual for proper procedures.

NOTE: The tightening specification for all seat belt anchor bolts is 39 N·m (29 ft. lbs.) torque.

SEAT BELT SECOND RIGHT ROW OUTBOARD - LWB

REMOVAL

(1) Remove second row seat from vehicle. Refer to Owner's Manual for proper procedures.
(2) Slide lower anchor cover from over the anchor shoulder-nut.
(3) Remove lower anchor shoulder-nut (Fig. 5).
(4) Remove lower anchor from wheelhouse.
(5) Fold upper turning loop extension cover downward to gain access to anchor bolt.
(6) Remove bolt attaching turning loop to extension bracket above quarter glass (Fig. 5).
(7) Remove turning loop from extension bracket.
(8) Remove D-pillar trim panel.
(9) Remove quarter trim bolster.
(10) Route seat belt webbing and turning loop through access hole in quarter trim.
(11) Remove bolt attaching retractor to inner quarter panel (Fig. 5).
(12) Remove screw attaching retractor to inner quarter panel.
(13) Remove second row seat belt retractor from vehicle.

INSTALLATION

(1) Position second row seat belt retractor in vehicle.
(2) Install screw attaching retractor to inner quarter panel.
(3) Install bolt attaching retractor to inner quarter panel. Tightening specifications for all seat belt bolts is 39 N·m (29 ft. lbs.) torque.
(4) Route seat belt webbing and turning loop through access hole in quarter trim.
(5) Install quarter trim bolster.
(6) Install D-pillar trim panel.
(7) Position turning loop to extension bracket.
(8) Install bolt attaching turning loop to extension bracket above quarter glass. Tightening specifications for all seat belt bolts is 39 N·m (29 ft. lbs.) torque.
(9) Install upper turning loop extension cover.
(10) Position lower anchor to wheelhouse.
(11) Install lower anchor shoulder-nut. Tightening shoulder nut to 39 N·m (29 ft. lbs.) torque.
(12) Install lower anchor cover over the anchor shoulder-nut.

SEAT BELT SECOND RIGHT ROW OUTBOARD - LWB (Continued)

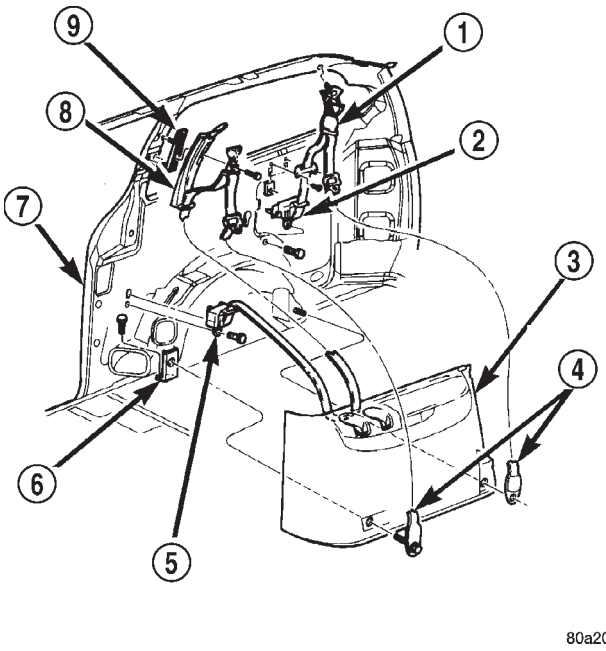

Fig. 5 SECOND RIGHT ROW OUTBOARD SEAT BELT - LWB

1 - TURNING LOOP GUIDE
2 - RETRACTOR 2nd REAR
3 - LOWER QUARTER TRIM
4 - LOWER ANCHOR
5 - RETRACTOR 1st REAR
6 - ANCHOR BRACKET
7 - QUARTER PANEL
8 - C-PILLAR TRIM
9 - HEIGHT ADJUSTER

(13) Install second row seat to vehicle. Refer to Owner's Manual for proper procedures.

SEAT BELT SECOND RIGHT ROW OUTBOARD - LBW WITH REAR HVAC

REMOVAL

(1) Remove second row seat from vehicle. Refer to Owner's Manual for proper procedures.

(2) Slide lower anchor cover from over the anchor shoulder-nut.

(3) Remove lower anchor shoulder-nut.

(4) Remove lower anchor from wheelhouse.

(5) Fold upper turning loop extension cover downward to gain access to anchor bolt.

(6) Remove bolt attaching turning loop to extension bracket above quarter glass.

(7) Remove turning loop from extension bracket.

(8) Remove D-pillar trim panel.

(9) Remove quarter trim bolster.

(10) Remove quarter trim panel as necessary to gain access to HVAC unit.

(11) Route seat belt webbing and turning loop through access hole in quarter trim.

(12) Loosen HVAC unit enough to gain access to seat belt retractor fasteners.

(a) Remove bracket around HVAC unit (Fig. 6).

(b) Remove air duct (Fig. 7).

(c) Remove fasteners attaching HVAC unit to inner quarter panel (Fig. 8).

(d) Remove screws attaching upper evaporator housing to lower evaporator housing.

(e) Remove coolant line retaining bracket hold down bolt.

(13) Remove bolts attaching seat belt guide loop to inner quarter panel.

(14) Pull outward on HVAC unit and remove bolt attaching retractor to inner quarter panel.

(15) Remove screw attaching retractor to inner quarter panel.

(16) Remove second row seat belt retractor from vehicle.

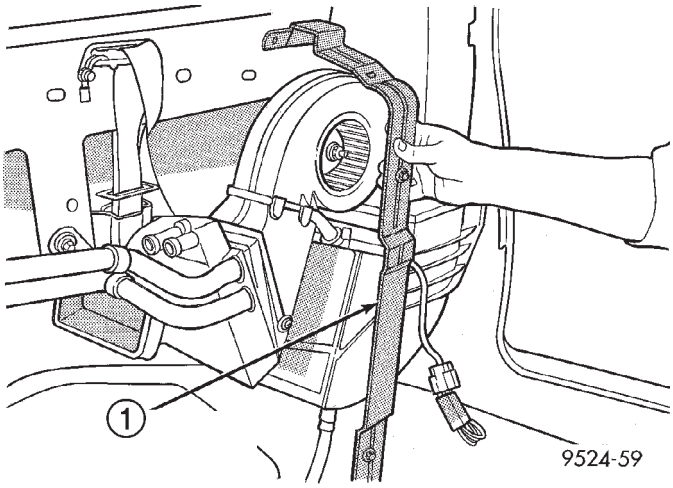

Fig. 6 TRIM PANEL MOUNTING BRACKET

1 - TRIM PANEL MOUNTING BRACKET

INSTALLATION

(1) Position second row seat belt retractor to vehicle.

(2) Install screw attaching retractor to inner quarter panel.

(3) Pull outward on HVAC unit and install bolt attaching retractor to inner quarter panel. Tightening specifications for all seat belt bolts is 39 N·m (29 ft. lbs.) torque.

(4) Install bolts attaching seat belt guide loop to inner quarter panel.

(5) Install coolant line retaining bracket hold down bolt.

SEAT BELT SECOND RIGHT ROW OUTBOARD - LBW WITH REAR HVAC (Continued)

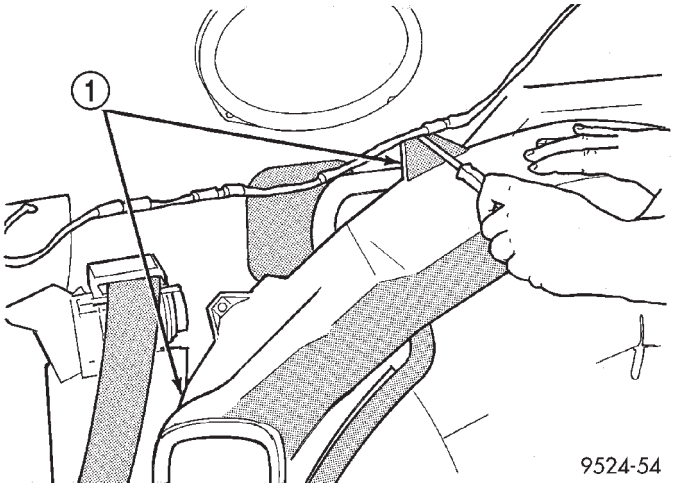

Fig. 7 LOWER HEATER DUCT

1 - LOWER HEAT DUCT MOUNTING

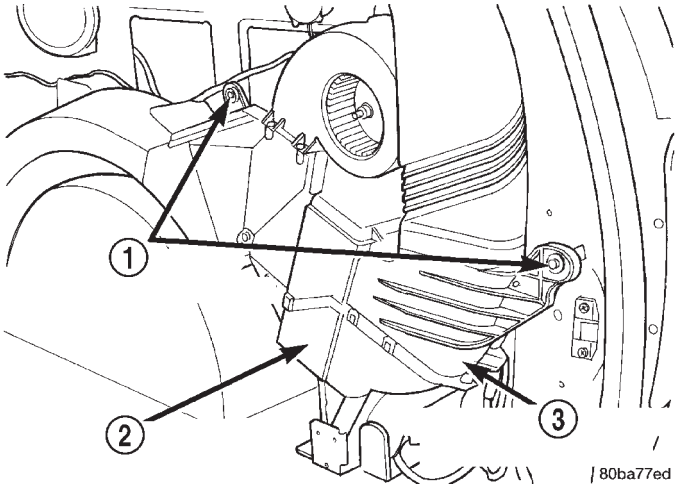

Fig. 8 REAR HVAC MOUNTING

1 - REAR HVAC MODULE MOUNTING
2 - REAR EVAPORATOR LOWER HOUSING
3 - REAR EVAPORATOR UPPER HOUSING

(6) Install screws attaching upper evaporator housing to lower evaporator housing.

(7) Install fasteners attaching HVAC unit to inner quarter panel.

(8) Install air duct.

(9) Install bracket around HVAC unit.

(10) Route seat belt webbing and turning loop through access hole in quarter trim.

(11) Install quarter trim panel as necessary to gain access to HVAC unit.

(12) Install quarter trim bolster.

(13) Install D-pillar trim panel.

(14) Position turning loop to extension bracket.

(15) Install bolt attaching turning loop to extension bracket above quarter glass. Tightening seat belt bolt to 39 N·m (29 ft. lbs.) torque.

(16) Pull upper turning loop extension cover upward over anchor bolt.

(17) Install lower anchor shoulder-nut. Tightening seat belt bolt to 39 N·m (29 ft. lbs.) torque.

(18) Slide lower anchor cover over anchor shoulder-nut.

(19) Install second row seat from vehicle. Refer to Owner's Manual for proper procedures.

SEAT BELT SECOND ROW OUTBOARD - SWB

REMOVAL

(1) Remove second row seat from vehicle. Refer to Owner's Manual for proper procedures.

(2) Slide lower anchor cover from over the anchor shoulder-nut.

(3) Remove lower anchor shoulder-nut.

(4) Remove lower anchor from wheelhouse (Fig. 9).

(5) Remove D-pillar trim panel.

(6) Route seat belt webbing and turning loop through access hole in quarter trim.

(7) Remove bolts attaching seat belt guide loop to inner quarter panel.

(8) Remove anchor bolt attaching retractor to inner quarter panel.

(9) Remove second row seat belt retractor from vehicle (Fig. 9).

INSTALLATION

(1) Place second row seat belt retractor into position.

(2) Install anchor bolt attaching retractor to inner quarter panel. Tighten all seat belts to 39 N·m (29 ft. lbs.) torque.

(3) Install bolts attaching seat belt guide loop to inner quarter panel.

(4) Route seat belt webbing and turning loop through access hole in quarter trim.

(5) Install D-pillar trim panel.

(6) Install lower anchor to the wheelhouse.

(7) Install lower anchor shoulder-nut. Tighten all seat belts to 39 N·m (29 ft. lbs.) torque.

(8) Slide lower anchor cover over the anchor shoulder-nut.

SEAT BELT SECOND ROW OUTBOARD - SWB (Continued)

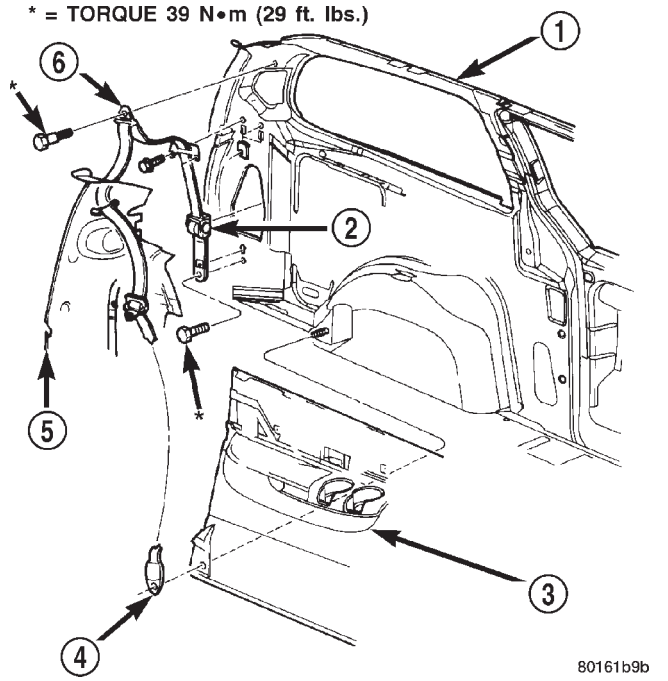

Fig. 9 SEAT BELT SECOND ROW OUTBOARD - SWB

1 - QUARTER PANEL
2 - RETRACTOR
3 - QUARTER TRIM PANEL
4 - LOWER ANCHOR
5 - D-PILLAR TRIM
6 - TURNING LOOP

(9) Install second row seat into position. Refer to Owner's Manual for proper procedures.

SEAT BELT BUCKLE - FRONT INBOARD

REMOVAL

(1) Remove screws attaching front inboard side cover to seat cushion frame.
(2) Remove side cover from vehicle.
(3) Remove bolt attaching seat belt buckle to front seat track (Fig. 10).
(4) Remove buckle from vehicle.

INSTALLATION

(1) Place buckle into position.
(2) Install bolt attaching seat belt buckle to front seat track. Tighten seat belt anchor bolts to 39 N·m (29 ft. lbs.) torque.
(3) Install side cover into position.
(4) Install screws attaching front inboard side cover to seat cushion frame.

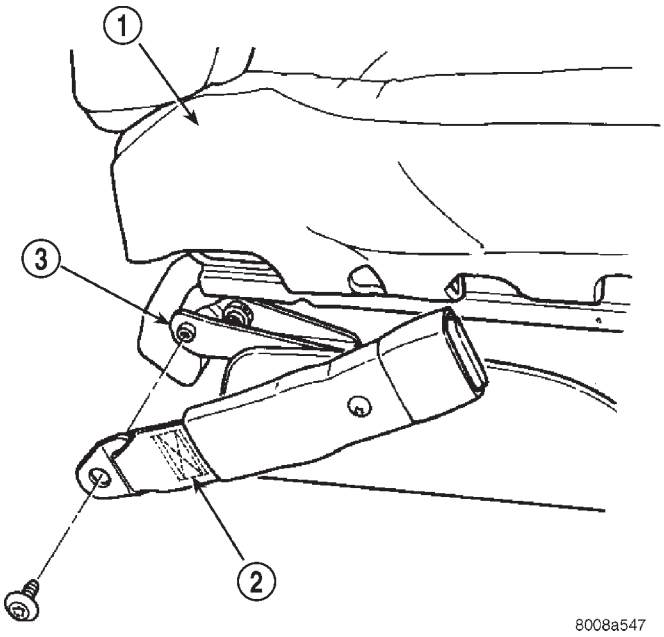

Fig. 10 SEAT BELT BUCKLE - FRONT INBOARD

1 - SEAT CUSHION
2 - SEAT BELT BUCKLE
3 - SEAT TRACK

SEAT BELT BUCKLE FIRST ROW QUAD BUCKET

REMOVAL

(1) Remove seat from vehicle.
(2) Remove screws attaching inboard side cover to seat cushion.
(3) Remove side cover from seat.
(4) Remove bolts attaching recliner bracket to seat cushion.
(5) Remove recliner bracket from seat.
(6) Remove bolt attaching seat belt buckle to seat track (Fig. 10).
(7) Remove buckle from vehicle.

INSTALLATION

(1) Place buckle into position.
(2) Install bolt attaching seat belt buckle to seat track. Tighten all seat belt anchor bolts to 39 N·m (29 ft. lbs.) torque.
(3) Install recliner bracket onto the seat.
(4) Install bolts attaching recliner bracket to seat cushion.
(5) Install side cover from seat.
(6) Install screws attaching inboard side cover to seat cushion.
(7) Install seat into position. Tighten all seat belt anchor bolts to 39 N·m (29 ft. lbs.) torque.

SEAT BELT BUCKLE FIRST ROW - TWO PASSENGER BENCH

REMOVAL

(1) Remove seat from vehicle.
(2) Remove bolt attaching inboard seat belt buckle to seat frame (Fig. 11).
(3) Remove belt from seat.

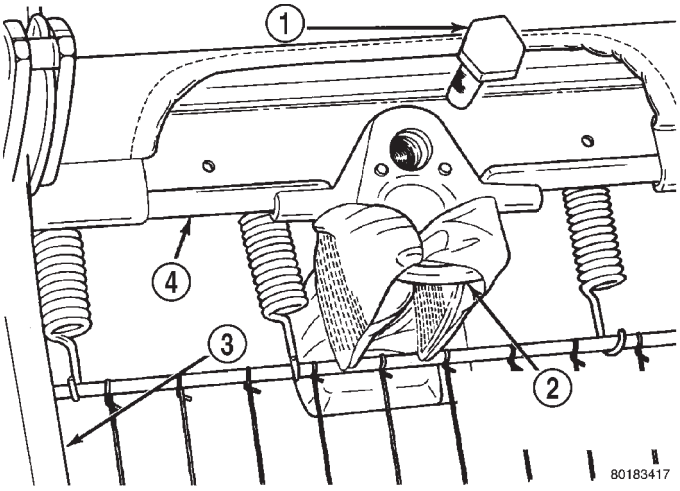

Fig. 11 SEAT BELT BUCKLE FIRST ROW - TWO PASSENGER BENCH

1 - ANCHOR BOLT
2 - TWO (2) PASS REAR SEAT BELT BUCKLE
3 - RISER
4 - REAR FRAME

INSTALLATION

(1) Place seat belt into position to the seat.
(2) Install bolt attaching inboard seat belt buckle to seat frame. Tighten all seat belt anchor bolts to 39 N·m (29 ft. lbs.) torque.
(3) Install seat into position.

SEAT BELT BUCKLE SECOND ROW - THREE PASSENGER BENCH

REMOVAL

(1) Remove bolt attaching seat belt buckle to seat rear frame rail (Fig. 12).
(2) Remove seat belt buckle from seat.

INSTALLATION

(1) Place seat belt buckle in position on seat.

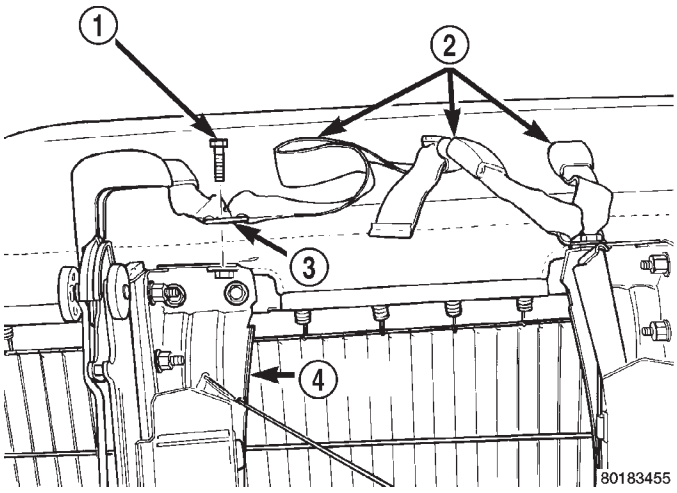

Fig. 12 SEAT BELT BUCKLE SECOND ROW - THREE PASSENGER BENCH

1 - ANCHOR BOLT
2 - SEAT BELTS
3 - ANCHOR
4 - RISER

(2) Install bolt to attach seat belt buckle to seat rear frame rail. Tighten all seat belt bolts to 39 N·m (29 ft. lbs.) torque.

SEAT BELT TENSIONER

DESCRIPTION

The seat belt system incorporates Seat Belt Tensioners. The tensioner is designed to hold the occupant in their respective seat by retracting the seat belt up to four inches. They are integral to the front seat belt buckles and cannot be serviced. If found defective they must be replaced. After an airbag deployment, the tensioner must be replaced.

OPERATION

At the onset of an impact event, each tensioner uses a pyrotechnic device which is triggered simultaneously with the airbags to rapidly retract the seat belts. With the slack removed, the occupant's forward motion in an impact will be reduced as will the likelihood of contacting interior components. After an impact that deploys the airbags, the seat belt tensioner assembly must be replaced.

The Occupant Restraint Controller (ORC) monitors the seat belt tensioner circuit resistance and reports active and stored Diagnostic Trouble Codes (DTC's) if any problem is found.

SEAT BELT TENSIONER (Continued)

Once a vehicle has been in an accident, the tensioner must be replaced along with any deployed airbags and broken or damaged parts. Refer to the proper Body Diagnostic Procedures manual for diagnosis and testing.

WARNING: WHEN THE FRONT AIRBAG IS DEPLOYED, THE TENSIONER WILL HAVE DEPLOYED ALSO AND SHOULD BE REPLACED.

SHOULDER BELT HEIGHT ADJUSTER

REMOVAL

(1) Remove B or C-pillar trim cover.
(2) Remove screws attaching shoulder belt height adjuster to pillar.
(3) Remove height adjuster from vehicle (Fig. 13).

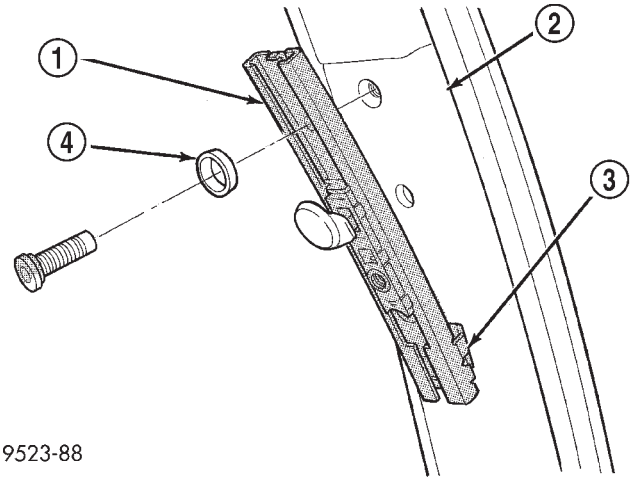

Fig. 13 SHOULDER BELT HEIGHT ADJUSTER

1 - SHOULDER HARNESS HEIGHT ADJUSTER
2 - PILLAR
3 - HOOK
4 - BUSHING

INSTALLATION

(1) Place height adjuster into position.
(2) Install screws attaching shoulder belt height adjuster to pillar. Tighten seat belt anchor bolts to 39 N·m (29 ft. lbs.) torque.
(3) Install B or C-pillar trim cover.

SHOULDER BELT HEIGHT ADJUSTER KNOB

REMOVAL

(1) Disengage clips attaching clam shell cover to seat belt turning loop and open cover.
(2) Using a trim tool, pry knob from shoulder belt height adjuster (Fig. 14).

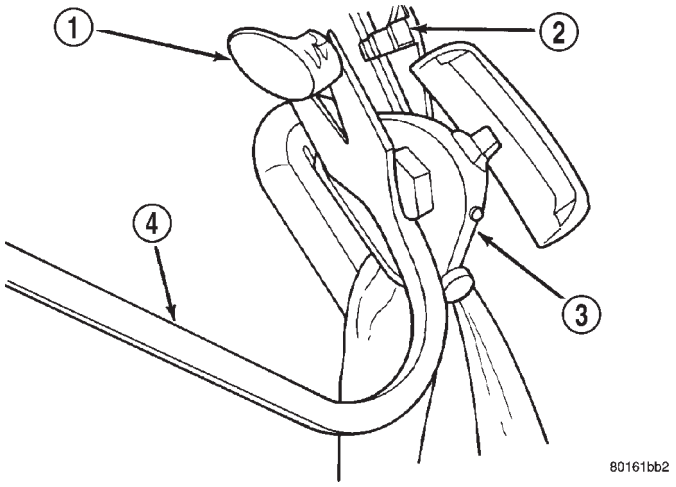

Fig. 14 SHOULDER BELT HEIGHT ADJUSTER KNOB

1 - KNOB
2 - HEIGHT ADJUSTER
3 - SEAT BELT TURNING LOOP
4 - SNAP-ON TRIM TOOL A179A

INSTALLATION

(1) Place shoulder belt height adjuster knob in position on height adjuster.
(2) Push knob on until retainers engage.

SIDE IMPACT AIRBAG CONTROL MODULE

DESCRIPTION

The side airbag system is a safety devise designed to reduce the risk of fatality or serious injury, caused by a side impact of the vehicle.

Vehicles equipped with side impact airbags use two Side Impact Airbag Control Modules (SIACM). One is located on each respective side body B-pillar. Each contains an impact sensor that senses a side impact occurrence. The SIACM communicates with the ORC via the PCI bus in order to notify the driver of any potential side airbag system problem.

OPERATION

The impact sensor provides verification of the direction and severity of the side impact. The right side SIACM controls the right seat airbag. The left side SIACM controls the left seat airbag. In the event of a side impact the appropriate SIACM will send an electronic signal to its airbag, deploying the airbag. The SIACM communicates with the Occupant Restraint Controller (ORC) via the PCI bus circuit.

The accelerometer pulses are sent to a microprocessor, which contains a decision algorithm. When an impact is severe enough to require airbag protection, the SIACM microprocessor sends a signal to deploy the side airbag that completes the electrical circuits to the right or left side airbag. The sensor is calibrated for the specific vehicle and reacts to the severity and direction of the impact.

REMOVAL

NOTE: Diagnose the SIACM using the service/diagnostic manual.

(1) Disconnect and isolate the battery negative cable terminal.

(2) Remove the lower B-pillar trim from the appropriate side of the vehicle. Refer to Body, Interior, B-Pillar Lower Trim, Removal.

(3) Remove the three SIACM retaining screws and remove the module from the vehicle.

(4) Disconnect the SIACM electrical connector.

INSTALLATION

WARNING: DO NOT INSTALL THE SIACM IF THE MOUNTING LOCATION IS DEFORMED OR DAMAGED.

(1) Connect the SIACM electrical connector.

(2) Place the module in the slot on their respective B-pillar. Install the three SIACM retaining screws. Torque screws to 5.7 - 7.9 N·m (50 - 70 lbs.)

CAUTION: Use the correct screws when installing the SIACM.

(3) Install the lower B-pillar trim on the appropriate side of the vehicle. Refer to Body, Interior, B-Pillar Lower Trim, Installation.

WARNING: DO NOT CONNECT THE BATTERY NEGATIVE CABLE. REFER TO ELECTRICAL, RESTRAINTS, DIAGNOSIS AND TESTING - AIRBAG SYSTEM FIRST.

SPEED CONTROL

TABLE OF CONTENTS

page

SPEED CONTROL
DESCRIPTION 1
OPERATION
OPERATION 1
OPERATION - INTERACTIVE SPEED CONTROL (4 Speed EATX Only) 2
DIAGNOSIS AND TESTING - ROAD TEST 3
SPECIFICATIONS - TORQUE 3
CABLE
DESCRIPTION 4
OPERATION 4
REMOVAL 4
INSTALLATION 4
SERVO
DESCRIPTION 4
OPERATION 4
REMOVAL 4
INSTALLATION 5
SWITCH
DESCRIPTION 5
OPERATION 5
REMOVAL 5
INSTALLATION 6
VACUUM RESERVOIR
DESCRIPTION 6
OPERATION 6
REMOVAL 6
INSTALLATION 6

SPEED CONTROL

DESCRIPTION

The speed control system is electronically controlled and vacuum operated. The electronic control is integrated into the Powertrain Control Module. The controls are located on the steering wheel. The ON/OFF, and SET buttons are located on the left side of the airbag module. The RESUME/ACCEL, CANCEL and COAST buttons are located on the right side of the airbag module (Fig. 1).

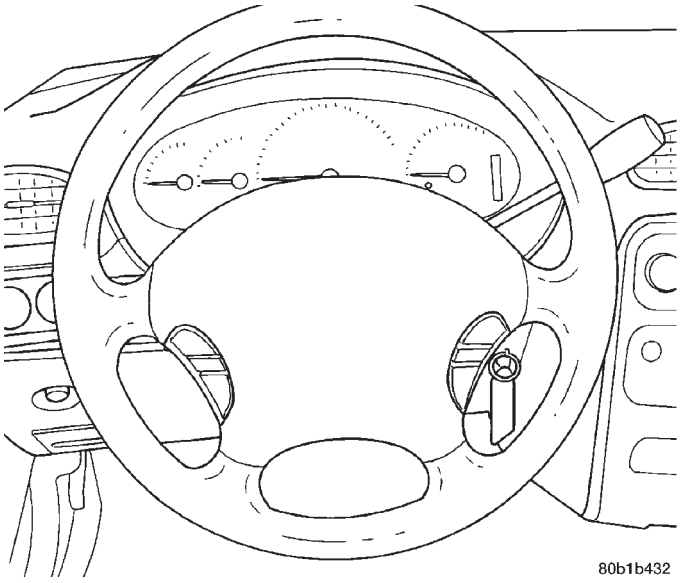

Fig. 1 SPEED CONTROL SWITCHES - Typical

The system is designed to operate at speeds above 30 mph (48 km/h).

WARNING: THE USE OF SPEED CONTROL IS NOT RECOMMENDED WHEN DRIVING CONDITIONS DO NOT PERMIT MAINTAINING A CONSTANT SPEED, SUCH AS IN HEAVY TRAFFIC OR ON ROADS THAT ARE WINDING, ICY, SNOW COVERED, OR SLIPPERY.

OPERATION

OPERATION

When speed control is activated by depressing the ON switch, the PCM allows a set speed to be stored in RAM for speed control. To store a set speed, depress and release the SET switch while the vehicle is moving at a speed between 25 and 85 mph. In order for the speed control to engage, the brakes cannot be applied, nor can the gear selector be indicating the transmission is in Park or Neutral. The speed control can be disengaged manually by:

- Stepping on the brake pedal
- Depressing the OFF switch
- Depressing the CANCEL switch.
- Depressing the clutch pedal
- Operating in 1st or 2nd gear (autostick, if equipped)

SPEED CONTROL (Continued)

NOTE: Turning the system off by depressing the OFF switch or turning off the ignition switch will erase the set speed stored in the PCM.

For added safety, the speed control system is programmed to disengage for any of the following conditions:

- An indication of Park or Neutral
- A rapid increase rpm (indicates that the clutch has been disengaged)
- Excessive engine rpm (indicates that the transmission may be in a low gear)
- The speed signal increases at a rate of 10 mph per second (indicates that the co-efficient of friction between the road surface and tires is extremely low)
- The speed signal decreases at a rate of 10 mph per second (indicates that the vehicle may have decelerated at an extremely high rate)
- If the actual speed is greater than 20 mph over the set speed.
- Autostick shifts into 1st or 2nd gear (autostick, if equipped)

Once the speed control has been disengaged, depressing the RESUME switch when speed is greater than 20 mph allows the vehicle to resume control to the target speed that was stored in the PCM.

While the speed control is engaged, the driver can increase the vehicle speed by depressing the ACCEL switch. The new target speed is stored in the PCM when the ACCEL switch is released. The PCM also has a ″tap-up″ feature in which target speed increases by 2 mph for each momentary switch activation of the ACCEL switch. The PCM also provides a means to decelerate to a new lower target speed without disengaging speed control. Depress and hold the COAST switch until the desired speed is reached, then release the switch.

The PCM also has a “Tap Down” feature in which target speed decreases at 1 mph for each momentary switch activation of the coast switch.

OPERATION - INTERACTIVE SPEED CONTROL (4 Speed EATX Only)

Interactive means that communication between the PCM and the TCM is taking place. Interactive speed control avoids unnecessary shifting for smoother, quieter operation and when downshifts are required, makes the shifts smoother.

CLIMBING A GRADE

DESCRIPTION

When climbing a grade the interactive speed control tries to maintain the set speed by increasing the throttle opening, while inhibiting/delaying downshifts.

OPERATION

If opening the throttle alone cannot maintain the set speed and the vehicle speed drops more than three mph below the set speed, the transmission will downshift to third gear. If the vehicle continues to lose speed, by more than 6 mph, the transmission will downshift again to maintain the set speed. After the vehicle encounters a less-steep grade, or has crested the grade (reduced the load on the powertrain) and can maintain the set speed at a reduced throttle position, the transmission will upshift, as appropriate, until the set speed can be maintained in Overdrive.

GRADE HUNTING

DESCRIPTION

All vehicles equipped with a four speed automatic transmission have a grade hunting feature for the 2nd to 3rd gear upshift and the 3rd to Overdrive upshift.

OPERATION

The TCM identifies the powertrain loading conditions and selects the proper gear to maintain the current vehicle speed. Under moderate loading conditions the transaxle will stay in 3rd gear until the top of the grade is reached or the powertrain loading is reduced.

If powertrain loading is severe, the transaxle may shift into 2nd gear and remain there until powertrain loading is reduced, then a 2nd to 3rd gear upshift will be scheduled. Grade hunting features always operate regardless of whether or not the interactive speed control is engaged. **If the interactive speed control is not engaged and powertrain loading is not reduced, the driver may have to completely lift off of the throttle before an upshift will occur**. If the driver does lift off the throttle to induce an upshift under these conditions, vehicle speed will reduce and the Overdrive to 3rd and 3rd to 2nd gear downshifts will reoccur when the throttle is reapplied. If grade hunting is repeatedly induced by the driver, transaxle damage may result.

AUTOMATIC SPEED CONTROL OVERSPEED REDUCTION

DESCRIPTION

Transmission control software includes an automatic speed control overspeed reduction feature. This maintains vehicle speed at the selected set point when descending a grade.

SPEED CONTROL (Continued)

OPERATION

The Transmission Control Module (TCM) first senses that the speed control is set. If the set speed is exceeded by more than 4 mph (6.5 km/hr) and the throttle is closed, the TCM causes the transaxle to downshift to THIRD gear. After downshifting, the automatic speed control resumes normal operation. To ensure that an upshift is appropriate after the set speed is reached, the TCM waits until the speed control system opens the throttle at least 6 degrees before upshifting to OVERDRIVE again.

If the driver applies the brakes, canceling automatic speed control operation with the transaxle still in THIRD gear, the TCM maintains this gear until the driver opens the throttle at least 6 degrees to avoid an inappropriate upshift. The upshift is also delayed for 2.5 seconds after reaching the 6 degrees throttle opening in anticipation that the driver might open the throttle enough to require THIRD gear. This will avoid unnecessary and disturbing transmission cycling. If the automatic speed control RESUME feature is used after braking, the upshift is delayed until the set speed is achieved to reduce cycling and provide better response.

DIAGNOSIS AND TESTING - ROAD TEST

Perform a vehicle road test to verify reports of speed control system malfunction. The road test should include attention to the speedometer. Speedometer operation should be smooth and without flutter at all speeds.

Flutter in the speedometer indicates a problem which might cause surging in the speed control system. The cause of any speedometer problems should be corrected before proceeding. Refer to the Instrument Cluster for speedometer diagnosis.

If a road test verifies an inoperative system, and the speedometer operates properly, check for:

- A Diagnostic Trouble Code (DTC). If a DTC exists, conduct tests per the Powertrain Diagnostic Procedures manual.
- A misadjusted brake (stop) lamp switch. This could also cause an intermittent problem.
- Loose or corroded electrical connections at the servo. Corrosion should be removed from electrical terminals and a light coating of Mopar Multipurpose Grease, or equivalent, applied.
- Leaking vacuum reservoir.
- Loose or leaking vacuum hoses or connections.
- Defective one-way vacuum check valve.
- Secure attachment at both ends of the speed control servo cable.
- Smooth operation of throttle linkage and throttle body air valve.
- Conduct electrical test at PCM.
- Failed speed control servo. Do the servo vacuum test.

CAUTION: When test probing for voltage or continuity at electrical connectors, care must be taken not to damage connector, terminals or seals. If these components are damaged, intermittent or complete system failure may occur.

SPECIFICATIONS - TORQUE

DESCRIPTION	N·m	Ft. Lbs.	In. Lbs.
Servo Mounting Bracket Nuts	14	10.3	123.9
Servo Mounting Bracket Bolts	14	10.3	123.9
Servo Mounting Nuts	6.7		60

CABLE

DESCRIPTION

The speed control servo cable is connected between the speed control vacuum servo diaphragm and the throttle body control linkage.

OPERATION

This cable causes the throttle control linkage to open or close the throttle valve in response to movement of the vacuum servo diaphragm.

REMOVAL

(1) Disconnect the negative battery cable.
(2) Remove speed control cable from throttle cam by sliding clasp out hole used for throttle cable.
(3) Compress the retaining tabs on the cable and slide cable out of bracket.
(4) Disconnect electrical connectors and vacuum hose from servo.
(5) Remove two nuts attaching speed control cable and mounting bracket to servo.
(6) Pull cable away from servo to expose retaining clip and remove clip attaching cable to servo.
(7) Remove speed control cable.

INSTALLATION

(1) Slide cable into throttle cable bracket and engage retaining tabs.
(2) Rotate the throttle cam forward to the wide open position and install speed control cable clasp.
(3) Rotate the throttle cam forward to the wide open position and install throttle cable clasp.
(4) Install retaining clip that attaches cable to servo.
(5) Insert servo studs through holes in the mounting bracket and speed control cable.
(6) Install nuts, tighten to 6.7 N·m (60 in. lbs.).
(7) Connect vacuum hose to servo.
(8) Connect electrical connector.
(9) Install servo and bracket and tighten nuts and bolt.
(10) Connect negative battery cable.

SERVO

DESCRIPTION

The servo unit consists of a solenoid valve body, and a vacuum chamber. The solenoid valve body contains three solenoids:

- Vacuum
- Vent
- Dump

The vacuum chamber contains a diaphragm with a cable attached to control the throttle linkage.

OPERATION

The PCM controls the solenoid valve body. The solenoid valve body controls the application and release of vacuum to the diaphragm of the vacuum servo. The servo unit cannot be repaired and is serviced only as a complete assembly.

Power is supplied to the servo by the PCM through the brake switch. The PCM controls the ground path for the vacuum and vent solenoids.

The dump solenoid is energized anytime it receives power. If power to the dump solenoid is interrupted, the solenoid dumps vacuum in the servo. This provides a safety backup to the vent and vacuum solenoids.

The vacuum and vent solenoids must be grounded by the PCM to operate. When the PCM grounds the vacuum servo solenoid, the solenoid allows vacuum to enter the servo and pull open the throttle plate using the cable. When the PCM breaks the ground, the solenoid closes and no more vacuum is allowed to enter the servo. The PCM also operates the vent solenoid via ground. The vent solenoid opens and closes a passage to bleed or hold vacuum in the servo as required.

The PCM cycles the vacuum and vent solenoids to maintain the set speed, or to accelerate and decelerate the vehicle. To increase throttle opening, the PCM grounds the vacuum and vent solenoids. To decrease throttle opening, the PCM removes the grounds from the vacuum and vent solenoids.

REMOVAL

(1) Release hood latch and open hood.
(2) Disconnect the negative battery cable.
(3) Disconnect the throttle and speed control cable ends from throttle body (Fig. 2).

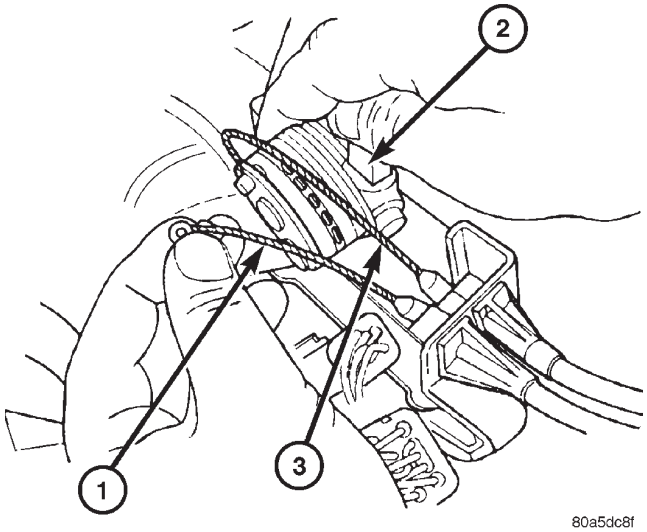

Fig. 2 Speed Control Cable End

1 - SPEED CONTROL VACUUM HOSE
2 - THROTTLE BODY
3 - SPEED CONTROL CABLE

SERVO (Continued)

(4) Depress lock tabs holding speed control and throttle cable casing to cable mount bracket.

(5) Disconnect vacuum line from speed control servo that leads to the battery tray/vacuum reservoir.

(6) Remove battery tray/vacuum reservoir, refer to the Battery section for more information (Fig. 3).

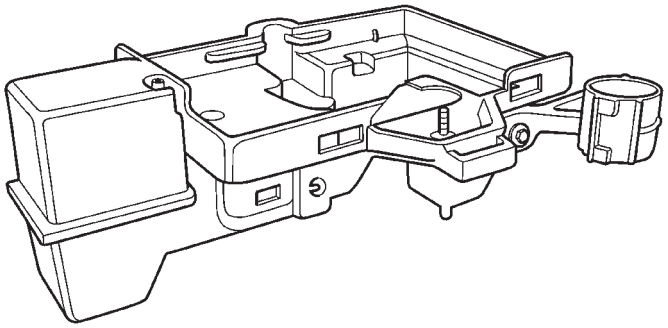

Fig. 3 BATTERY TRAY/VACUUM RESERVOIR

(7) Remove speed control servo and bracket (Fig. 4).

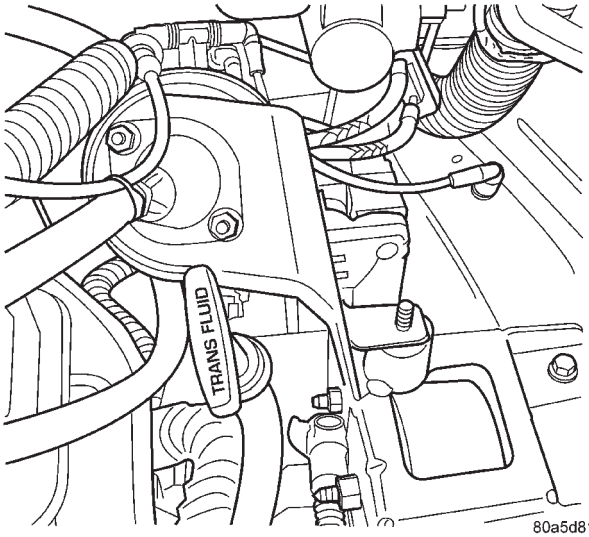

Fig. 4 SPEED CONTROL SERVO

(8) Disconnect wire connector from speed control servo.

(9) Remove speed control servo.

INSTALLATION

Transfer speed control cable to replacement speed control servo.

(1) Install retaining clip to cable at servo.

(2) Install 2 nuts at cable to servo and servo bracket, tighten to 7 N·m (60 ins. lbs.).

(3) Connect electrical connector to servo.

(4) Connect vacuum line to speed control servo that leads to the battery tray/vacuum reservoir.

(5) Install speed control servo and bracket.

(6) Install battery tray/vacuum reservoir, refer to the Battery section for more information.

(7) Install speed control and throttle cable casing to cable mount bracket.

(8) Connect the throttle and speed control cable ends to throttle body.

(9) Connect the negative battery cable.

SWITCH

DESCRIPTION

There are two separate switch pods that operate the speed control system and are located on the steering wheel.

OPERATION

The speed control system has five separate resistive switches that provide a single multiplexed (MUX) voltage inputs to the PCM.The switch names are: ON, OFF, SET, COAST, RESUME, ACCEL, TAP-UP, COAST, and CANCEL. Based on conditions when the buttons are pushed (and released), the five voltages ranges provided to the PCM result in the following functions: ON, OFF, SET, COAST, RESUME, ACCEL, TAP-UP, TAP-DOWN, COAST, and CANCEL. Refer to the Speed Control Section for more information

Also the PCM receives an input from the brake switch to sense whether the brake pedal has been depressed. When the PCM receives the brake depressed input, it turns off power to the speed control servo and disengages speed control. Also the power to the servo is supplied through the brake switch, which opens the circuit when the brake pedal is depressed.

The individual switches cannot be repaired. If one switch fails, the entire switch module must be replaced.

REMOVAL

The speed control switches are mounted in the steering wheel and wired through the clock spring device under the airbag module.

WARNING: IF REMOVAL OF AIRBAG MODULE IS NECESSARY, REFER TO THE RESTRAINT SYSTEMS SECTION FOR MORE INFORMATION.

(1) Remove the negative battery cable.

SWITCH (Continued)

(2) Turn off ignition.
(3) Remove the air bag, refer to the restraint section for more information.
(4) Remove the screw from bottom of the switch.
(5) Remove switch from steering wheel.
(6) Disconnect two-way electrical connector.
(7) Repeat for the other switch.

INSTALLATION

The speed control switches are mounted in the steering wheel and wired through the clock spring device under the airbag module.

WARNING: IF REMOVAL OF AIRBAG MODULE IS NECESSARY, REFER TO THE RESTRAINT SYSTEMS SECTION FOR MORE INFORMATION.

(1) Connect two-way electrical connector.
(2) Install switch.
(3) Install screw for the switch.
(4) Repeat for the other switch.
(5) Install the air bag, refer to the restraint section for more information.
(6) Install the negative battery cable.

VACUUM RESERVOIR

DESCRIPTION

The vacuum reservoir is located in the engine compartment. It is made of plastic.

OPERATION

The reservoir stores engine vacuum. Manifold vacuum is supplied from the brake booster check valve. The speed control vacuum supply hose has a check valve at the source (brake booster) to maintain the highest available vacuum level in the servo, reservoir and vacuum hoses. When engine vacuum drops, as in climbing a grade while driving, the reservoir supplies the vacuum needed to maintain proper speed control operation. The vacuum reservoir cannot be repaired and must be replaced if faulty.

REMOVAL

(1) Release hood latch and open hood.
(2) Disconnect the negative battery cable.
(3) Disconnect the vacuum line to the battery tray/vacuum reservoir.
(4) Remove battery tray/vacuum reservoir, refer to the Battery section for more information.

INSTALLATION

(1) Install battery tray/vacuum reservoir, refer to the Battery section for more information.
(2) Connect vacuum line that leads to the battery tray/vacuum reservoir.
(3) Connect the negative battery cable.

VEHICLE THEFT SECURITY

TABLE OF CONTENTS

page

VEHICLE THEFT SECURITY
DESCRIPTION 1
OPERATION 1
DIAGNOSIS AND TESTING
DIAGNOSIS AND TESTING - SENTRY KEY IMMOBILIZER SYSTEM 3
DIAGNOSIS AND TESTING - VEHICLE THEFT SECURITY SYSTEM 3
HOOD AJAR SWITCH
REMOVAL 3
INSTALLATION 3
TRANSPONDER KEY
DESCRIPTION 3
OPERATION 3
STANDARD PROCEDURE - TRANSPONDER PROGRAMMING 4
VTSS/SKIS INDICATOR LAMP
DESCRIPTION 5
OPERATION 5

VEHICLE THEFT SECURITY

DESCRIPTION

VEHICLE THEFT SECURITY SYSTEM

The Vehicle Theft Security System (VTSS) is designed to protect against whole vehicle theft. The system monitors vehicle doors, hood, liftgate, and ignition action for unauthorized operation. The alarm activates:

- Sounding of the horn
- Flashing of the park and tail lamps
- Flashing of the headlamps
- An engine kill feature (without SKIS)

SENTRY KEY IMMOBILIZER SYSTEM

The Sentry Key Immobilizer System (SKIS) is available as a factory-installed option on this vehicle. It is designed to provide passive protection against unauthorized vehicle use by disabling the engine, after two (2) seconds of running, whenever an invalid key is used to start the vehicle. The SKIS is active whenever the ignition is on and does not require any customer intervention. The primary components of the system are the Sentry Key Immobilizer Module (SKIM), Sentry Key (ignition key w/ a transponder molded into the head), indicator light, Body Control Module (BCM), and the Powertrain Control Module (PCM). The SKIM is mounted to the steering column with the molded, integral antenna mounted on the ignition housing. The indicator light, is located in the message center.

OPERATION

VEHICLE THEFT SECURITY SYSTEM

Upon failure of proper SKIM communication to the PCM, the PCM will shut off fuel after two seconds of run time. The engine will not re-crank on the key cycle that the failure occurred, a full key down sequence must be performed for the engine to crank again. After six consecutive fuel shut-offs, the engine will no longer crank on subsequent key cycles. The failure must be corrected and a valid communication process between the SKIM and the PCM must occur for the engine to crank and start again.

The electronics for the VTSS are part of the Body Control Module (BCM). The system is armed when the vehicle is locked using the:

- Power door lock switches (with any door ajar)
- Remote Keyless Entry transmitter.
- Door Cylinder Lock Switches.

For vehicles equipped with SKIS, the doors do not have to be locked to enable the fuel shut off feature.

After the vehicle is locked and the last door is closed, the set LED indicator in the top cover will flash quickly for 16 seconds, indicating that arming is in progress. If no monitored systems are activated during this period, the system will arm. The LED will extinguish unless the liftgate is open. If the liftgate is open, the LED will flash at a slower rate.

This indicates that the system is armed. If fault is detected on any key cylinder input, the indicator LED will remain solid during the arming process, although the system will still arm. If the indicator LED does not illuminate at all upon door closing it indicates that the system is not arming.

VEHICLE THEFT SECURITY (Continued)

Passive disarming occurs upon normal vehicle entry by unlocking either door with the ignition key/ remote transmitter. This disarming will also halt the alarm once it has been activated.

A tamper alert exists to notify the driver that the VTSS had been activated. This alert consists of 3 horn pulses when the vehicle is disarmed.

NOTE: The VTSS will not arm by pushing down the door lock mechanism. This will manually override the system.

For Door Cylinder Lock Switch Removal and Installation, refer to Electrical, Power Locks, Door Cylinder Lock Switch.

If the VTSS is triggered, the horn will pulse, headlamps/marker lamps will flash, and the VTSS warning lamp will flash. If BCM determines the threat to be false and the VTSS is not triggered again, the system will shut down and rearm itself after three minutes. If a trigger is still active, the alarm will continue for an additional 15 minutes without the horn. The VTSS monitoring portion of the system is split into two sections. The engine compartment section and the passenger compartment section. If a malfunction occurs in the engine compartment section, the passenger compartment section would still arm and function normally.

NOTE: If hood is not secure during the arming sequence, the lamp will stay lit and not flash. The system will arm with hood not secured (hood ajar switch closed) and the liftgate open (liftgate ajar switch closed). System will not arm if passenger compartment is not secure (all switches closed)

ARMING THE VTSS - METHOD A

(1) With the key removed from the ignition lock and any door open (excluding liftgate), actuate one of the following:

- Power door lock button to LOCK,
- Key fob LOCK button
- Door lock key cylinder to locked position.

(2) Close all opened doors. Liftgate can remain open.

(3) After the last door is closed, an arming time-out period of sixteen seconds will start, then the VTSS will become armed.

ARMING THE VTSS - METHOD B

Actuating the key fob transmitter LOCK button, key locking the front doors with the doors closed and the ignition locked will begin the arming time-out period. If method A, 16 second time-out sequence was in process when method B was actuated, the 16 second time-out will restart from the time of the second actuation.

If the security lamp does not illuminate at all upon final door closure, it indicates that the system is not arming.

The current VTSS status armed or disarmed shall be maintained in memory to prevent battery disconnects from disarming the system.

TRIGGERING THE VTSS

After the VTSS is armed, the following actions will trigger the alarm:

- Opening any door (excluding liftgate).
- Opening the hood
- Turning the ignition to the ACC, or UNLOCK position.

NOTE: When the VTSS is ARMED, the interior power door lock switch “UNLOCK” will be disabled until the vehicle is disarmed.

CAUTION: The VTSS indicator LED will trigger and engine will continue to run if the vehicle is equipped with SKIS and the proper key is used to start the vehicle. This condition will occur if the VTSS has been triggered. If valid key is used, VTSS will disarm

SENTRY KEY IMMOBILIZER SYSTEM

The SKIS includes keys from the factory which are pre-programmed. Each SKIM will recognize a maximum of eight Sentry Keys. If the customer would like to own additional keys other than those provided with the vehicle, they can be purchased from any authorized dealer. These keys must be programmed to the SKIM on the vehicle in order for the system to recognize them as valid keys. This can be done by the dealer with a DRB III® scan tool or by a customer if this feature is available in their market and they have two (2) valid keys already available to them. Refer to the Service Procedures portion of this system for additional details. The SKIS performs a self-test each time the ignition switch is turned to the ON position and will store Diagnostic Trouble Codes (DTC’s) if a system malfunction is detected. The SKIS can be diagnosed and any stored DTC’s can be retrieved using a DRB III® scan tool as described in the appropriate Body Diagnostic Procedures manual.

VEHICLE THEFT SECURITY (Continued)

DIAGNOSIS AND TESTING

DIAGNOSIS AND TESTING - SENTRY KEY IMMOBILIZER SYSTEM

WARNING: ON VEHICLES EQUIPPED WITH AIRBAGS, REFER TO ELECTRICAL, RESTRAINTS, WARNINGS, BEFORE ATTEMPTING COMPONENT DIAGNOSIS OR SERVICE. FAILURE TO TAKE THE PROPER PRECAUTIONS COULD RESULT IN ACCIDENTAL AIRBAG DEPLOYMENT AND POSSIBLE PERSONAL INJURY.

NOTE: The following tests may not prove conclusive in the diagnosis of this system. The most reliable, efficient, and accurate means to diagnose the Sentry Key Immobilizer System involves the use of a DRB III® scan tool. Refer to the proper Body Diagnostic Procedures Manual.

The Sentry Key Immobilizer System (SKIS) and the Programmable Communication Interface (PCI) bus network should be diagnosed using a DRB III® scan tool. The DRB III® will allow confirmation that the PCI bus is functional, that the Sentry Key Immobilizer Module (SKIM) is placing the proper messages on the PCI bus, and that the Powertrain Control Module (PCM) is receiving the PCI bus messages. Refer to the proper Body Diagnostic Procedures manual, and Wiring Diagrams for complete circuit descriptions and diagrams.

(1) Check the fuses in the Integrated Power Module (IPM). If OK, go to Step 2. If not OK, repair the shorted circuit or component as required and replace the faulty fuse.

(2) Disconnect and isolate the battery negative remote cable from the remote terminal. Unplug the wire harness connector at the SKIM. Check for continuity between the ground circuit cavity of the SKIM wire harness connector and a good ground. There should be continuity. If OK, go to Step 3. If not OK, repair the open circuit to ground as required.

(3) Connect the battery negative cable. Check for battery voltage at the fused B(+) circuit cavity of the SKIM wire harness connector. If OK, go to Step 4. If not OK, repair the open circuit to the fuse in the IPM as required.

(4) Turn the ignition switch to the ON position. Check for battery voltage at the fused ignition switch output (run/start) circuit cavity of the SKIM wire harness connector. If OK, use a DRB III® scan tool and the proper Body Diagnostic Procedures manual to complete the diagnosis of the SKIS. If not OK, repair the open circuit to the fuse in the IPM as required.

DIAGNOSIS AND TESTING - VEHICLE THEFT SECURITY SYSTEM

Refer to the appropriate wiring information. The wiring information includes wiring diagrams, proper wire and connector repair procedures, further details on wire harness routing and retention, as well as pin-out and location views for the various wire harness connectors, splices and grounds. Using a DRB III® scan tool. Refer to the proper Body Diagnostic Procedures Manual for test procedures.

HOOD AJAR SWITCH

REMOVAL

(1) Disconnect and isolate the battery negative cable.

(2) Using a small flat blade screwdriver, pry trigger switch from the bracket on the left fender well.

(3) Disconnect the hood ajar switch from the wire connector and remove from vehicle.

INSTALLATION

(1) Connect the hood ajar switch to the wire conector.

(2) Press the hood ajar switch into position on the bracket located on the left inner fender well.

(3) Reconnect the battery negative cable.

(4) Close the hood and check for proper operation.

TRANSPONDER KEY

DESCRIPTION

The Sentry Key Immobilizer System (SKIS) uses a transponder chip that is integral to each ignition key (Fig. 1) to communicate with the Sentry Key Immobilizer Module (SKIM). Ignition keys are supplied with the vehicle when it is shipped from the factory. The transponder chip is undermolded within the head of the key. This undermold is hidden beneath an overmolded rubber cap.

OPERATION

Each Sentry Key has a unique transponder identification code permanently programmed into it by the manufacturer. Likewise, the SKIM has a unique ″Secret Key″ code programmed into it by the manufacturer as well. When a Sentry Key is programmed into the memory of the SKIM, the SKIM stores the transponder identification code from the Sentry Key, and the Sentry Key learns the ″Secret Key″ code from the SKIM. Once the Sentry Key learns the ″Secret Key″ code of the SKIM, it is also permanently programmed into the transponder's memory. Therefore, blank keys for the SKIS must be programmed by the

TRANSPONDER KEY (Continued)

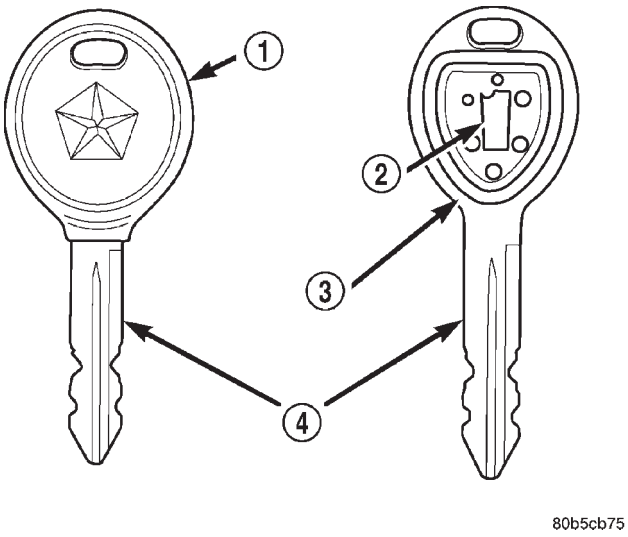

Fig. 1 TRANSPONDER KEY - TYPICAL

1 - MOLDED CAP
2 - TRANSPONDER
3 - MOLDED CAP REMOVED
4 - SENTRY KEY

SKIM in addition to being cut to match the mechanical coding of the ignition lock cylinder. Refer to Electrical, Vehicle Theft Security, Transponder Key, Standard Procedure - Transponder Programming.

The Sentry Key's transponder is within the range of the SKIM's transceiver antenna ring when it is inserted into the ignition lock cylinder. When the ignition switch is turned to the ON position, the SKIM communicates with the Sentry Key via a radio frequency (RF) signal. The SKIM determines if a valid key is present based on the information it receives from the Sentry Key. If a valid key is detected, that fact is communicated to the PCM via the PCI bus and the vehicle is allowed to continue running. If an invalid key is received by the PCM or no status at all is communicated, the vehicle will stall after two (2) seconds of running. The indicator light will be flashing at this point. The Sentry Key's transponder can not be repaired. If it is faulty or damaged, it must be replaced.

Common communication problems:

- Two transponder keys too close together.
- Speed Pass too close to transponder key.

Solid indicator that there is a system failure.

- Loss of PCM communication.
- Failed antenna circuit.

STANDARD PROCEDURE - TRANSPONDER PROGRAMMING

USING A DRB III® SCAN TOOL

All Sentry Keys included with the vehicle are pre-programmed to work with the Sentry Key Immobilizer System (SKIS) when it is shipped from the factory. The Sentry Key Immobilizer Module (SKIM) can be programmed to recognize up to a total of eight Sentry Keys. When programming a blank Sentry Key transponder, the key must first be cut to match the ignition lock cylinder of the vehicle for which it will be used. The vehicle's four digit PIN code will be required to complete this task since you will need it to enter the Secured Access Mode in the SKIM. The following steps must be completed using a DRB III® scan tool:

(1) Insert the blank key into the ignition and turn it to the RUN position.

(2) Using a DRB III® scan tool, select ″Theft Alarm,″ ″SKIM,″ ″Miscellaneous,″ and then ″Program New Key.″

(3) Enter the four digit PIN code using the DRB III® scan tool. When programming is completed, the SKIM will exit Secured Access Mode and the DRB III® scan tool will display the results of your attempt to program the key. One of five distinct results may be displayed. All five are listed below:

- ″**Programming Successful**″ is displayed if the Sentry Key programming is successful.
- ″**Learned Key in Ignition**″ is displayed if the key in the ignition has already been programmed into that vehicle's SKIM.
- ″**Eight Keys Already Learned (At The Maximum) Programming Not Done**″ is displayed if eight keys have already been programmed into the SKIM. In this case, if a new key needs to be added due to a lost or defective key, the ″Erase All Keys″ command (which requires entering the Secured Access Mode) has to be performed. Following the ″Erase All Keys″ command, all keys that will be used to operate the vehicle **MUST** be reprogrammed to the SKIM.
- ″**Programming Not Attempted**″ is displayed after an ″Erase All Keys″ function is executed.
- ″**Programming Key Failed**″ is displayed if further diagnosis is required.

To learn additional keys, turn the ignition OFF, remove the learned key, insert the next new blank key, and repeat the steps from the beginning.

"CUSTOMER LEARN" MODE

This feature is only available on domestic vehicles or those which have a U.S. country code designator. This procedure requires access to at least two valid Sentry Keys. If two valid Sentry Keys are not avail-

TRANSPONDER KEY (Continued)

able, Sentry Key programming will require the use of a DRB III® scan tool.

The steps required to program Sentry Keys with two valid Sentry Keys follows:

(1) Obtain the blank Sentry Key(s) that need to be programmed. Cut the keys to match the ignition lock cylinder mechanical key codes.

(2) Insert one of the two valid Sentry Keys into the ignition switch and turn the ignition switch to the ON position.

(3) After the ignition switch has been in the ON position for longer than three seconds, but no more than fifteen seconds, cycle the ignition switch back to the OFF position. Replace the first valid Sentry Key in the ignition lock cylinder with the second valid Sentry Key and turn the ignition switch back to the ON position. The second valid Sentry Key must be inserted within 15 seconds of removing the first valid Sentry key.

(4) About ten seconds after the completion of Step 3, the indicator light will start to flash and a single audible chime tone will sound to indicate that the system has entered the ″Customer Learn″ programming mode.

(5) Within sixty seconds of entering the ″Customer Learn″ programming mode, turn the ignition switch to the OFF position, replace the valid Sentry Key with a blank Sentry Key transponder, and turn the ignition switch back to the ON position.

(6) About ten seconds after the completion of Step 5, a single audible chime tone will sound and the indicator light will stop flashing and stay on solid for three seconds and then turn off to indicate that the blank Sentry Key has been successfully programmed. The SKIS will immediately exit the ″Customer Learn″ programming mode and the vehicle may be started using the newly programmed Sentry Key.

These steps must be completed in their entirety for each additional Sentry Key to be programmed. If any of the above steps are not completed in the given sequence, or within the allotted time, the SKIS will exit the ″Customer Learn″ programming mode and the programming will be unsuccessful. The SKIS will also automatically exit the ″Customer Learn″ programming mode if:

- It sees a non-blank Sentry Key when it should see a blank.
- If it has already programmed eight (8) valid Sentry Keys.
- If the ignition switch is turned to the OFF position for more than about fifty (50) seconds.

NOTE: If you attempt to start the vehicle while in “Customer Learn” mode (LED flashing), the vehicle will behave as though an invalid key is being used (i.e. the engine will stall after two (2) seconds of running). No faults will be logged.

NOTE: Once a Sentry Key has been programmed to a particular vehicle, it cannot be used on any other vehicle.

VTSS/SKIS INDICATOR LAMP

DESCRIPTION

The Sentry Key Immobilizer System (SKIS) uses an indicator light to convey information on the status of the system to the customer. This light is shared with the Vehicle Theft Security System (VTSS). The light is located in the Message Center. The indicator light is controlled by the Body Control Module (BCM) based upon messages it receives from the Sentry Key Immobilizer Module (SKIM) on the PCI bus.

OPERATION

The BCM performs a four second bulb check, regardless of SKIM messages. After the bulb check, the lamp is controlled according to SKIM messages. Then, the SKIM sends messages to the BCM to operate the light based upon the results of the SKIS self tests. The light may be actuated in two possible ways, flashing or on solid. If the light comes on and stays on solid after a power-up test, this indicates that the SKIM has detected a system malfunction. If the SKIM detects an invalid key when the ignition switch is moved to the ON position, it sends a message on the PCI bus to the BCM, to flash the light. The SKIM can also send a message to flash the light and generate a single audible chime at the same time. These two events occurring simultaneously indicate that the SKIS has been placed into the ″Customer Learn″ mode. Refer to Electrical, Vehicle Theft Security, Transponder Key, Standard Procedure - Transponder Programming for more information on the ″Customer Learn″ mode. If the light comes on and stays on after the power-up test, diagnosis of the SKIS should be performed using a DRB III® scan tool and the appropriate Body Diagnostic Procedures manual. The light is not a serviceable component.

WIPERS/WASHERS

TABLE OF CONTENTS

page

WIPERS/WASHERS
DESCRIPTION 1
OPERATION 2
DIAGNOSIS AND TESTING
DIAGNOSIS AND TESTING - FRONT WIPER SYSTEM 2
DIAGNOSIS AND TESTING - FRONT WIPER/WASHER SWITCH 2
DIAGNOSIS AND TESTING - FAILED PARK SWITCH 3
DIAGNOSIS AND TESTING - REAR WIPER SYSTEM 5
DIAGNOSIS AND TESTING - WASHER SYSTEM 5
FRONT WASHER PUMP MOTOR
REMOVAL 9
INSTALLATION 9
FRONT WIPER ARMS
STANDARD PROCEDURE - FRONT WIPER ARM ALIGNMENT 9
REMOVAL 10
INSTALLATION 10
FRONT WIPER MOTOR
REMOVAL 10
INSTALLATION 10
HEADLAMP WASHERS - EXPORT
DESCRIPTION 11
OPERATION 11
DIAGNOSIS AND TESTING - HEADLAMP WASHERS - EXPORT 11
REMOVAL 13
INSTALLATION 13
HEADLAMP WASHER HOSE - EXPORT
REMOVAL 13
INSTALLATION 13

page

HEADLAMP WASHER PUMP MOTOR - EXPORT
REMOVAL 13
INSTALLATION 14
REAR WASHER PUMP MOTOR
REMOVAL 14
INSTALLATION 15
REAR WIPER ARM
REMOVAL 15
INSTALLATION 15
REAR WIPER MOTOR
REMOVAL 16
INSTALLATION 16
REAR WIPER/WASHER SWITCH
DESCRIPTION 16
OPERATION 16
WASHER FLUID LEVEL SWITCH
REMOVAL 16
INSTALLATION 17
WASHER HOSES
REMOVAL 17
INSTALLATION 17
WASHER RESERVOIR
REMOVAL 18
INSTALLATION 18
WIPER BLADES
REMOVAL 18
CLEANING 19
INSTALLATION 19
WIPER LINKAGE
REMOVAL 19
INSTALLATION 19
WIPER MODULE
REMOVAL 19
INSTALLATION 20

WIPERS/WASHERS

DESCRIPTION

FRONT WIPER/WASHER SYSTEM

The windshield wipers can be operated with the windshield wiper switch when the ignition switch is in the RUN or ACCESSORY positions. The windshield wiper system is protected by a 30 amp fuse (9) located in the Power Distribution Center (PDC) part of the Integrated Power Module (IPM) in the engine compartment. The wiper/washer switch is integral to the multi-function switch. It is a resistive MUX switch that sends inputs to the BCM to operate the wiper/washer system.

REAR WIPER/WASHER SYSTEM

The rear windshield wiper and washers can be operated when the ignition switch is in the RUN or ACCESSORY positions.

OPERATION

FRONT WIPER/WASHER SYSTEM

The windshield washer circuit is protected by a 15 amp Cartridge Fuse located in the IPM. The wiper motor has permanent magnetic fields. The speeds are determined by current flow to the appropriate set of brushes inside the motor. The current flow is controlled by the multi-function switch. The high speed/low speed relays are located in the IPM. The speed sensitive intermittent wiper is controlled by the Body Control Module (BCM). The intermittent mode, with the vehicle traveling greater than 10.4 mph, has a range of 0.5 to 18 seconds. With the vehicle traveling less than 10.4 mph, the time delay doubles to a range of 1 to 36 seconds. The wiper arms will park at the base of the windshield just above the cowl cover after the wiper switch is turned OFF.

The windshield wiper motor and linkage is located in an integral wiper unit at the rear of the engine compartment. The wiper unit must be removed to gain access to the wiper motor.

REAR WIPER/WASHER SYSTEM

When continuous rear wiper operation is required, the BCM will provide ignition ON voltage to the rear wiper motor. When the wiper switch is turned OFF, the BCM provides circuit ground to operate the motor until the wipe cycle is complete and the wiper arm returns to the base of the rear window.

When intermittent rear wiper mode is selected, the wiper motor will cycle every 7 seconds. The intermittent delay time is also adjusted based upon vehicle speed. With the vehicle traveling greater than 50 mph, the cycle changes to every 5 seconds.

DIAGNOSIS AND TESTING

DIAGNOSIS AND TESTING - FRONT WIPER SYSTEM

The windshield wiper system operates in several modes:

- Low and high speed normal wipe
- Speed sensitive intermittent wipe
- Wipe after wash
- Park (switch OFF)

The windshield wiper circuits are continuously monitored and controlled by the Body Control Module (BCM). If a problem occurs in the electronic components, wiring, switch (except integral motor park switch) and wiper motor a Diagnostic Trouble Code (DTC) will be stored in the BCM memory. DTC's can be retrieved using a DRB III® scan tool. Refer to the proper Body Diagnostic Procedures manual for DTC descriptions and retrieval information.

The windshield wiper park switch and circuit is monitored by the BCM. The park switch and circuit can be tested using the Wiper System Diagnosis table.

DIAGNOSIS AND TESTING - FRONT WIPER/WASHER SWITCH

(1) Remove the multi-function switch (Refer to 8 - ELECTRICAL/LAMPS/LIGHTING - EXTERIOR/MULTI-FUNCTION SWITCH - REMOVAL).

(2) Using an ohmmeter check resistance readings between switch pins. Refer to the WIPER/WASHER SWITCH RESISTANCE table.

WIPER/WASHER SWITCH RESISTANCE

SWITCH POSITION	RESISTANCE BETWEEN
OFF	4 AND 3 = OPEN CIRCUIT
DELAY POSITION	
1ST	3 AND 4 = 3.3K Ω ± 5%
2ND	3 AND 4 = 1.7K Ω ± 5%
3RD	3 AND 4 = 1K Ω ± 5%
4TH	3 AND 4 = 620 Ω ± 5%
5TH	3 AND 4 = 620 Ω ± 5%
LOW	3 AND 4 = 430 Ω ± 5%
HIGH	3 AND 4 = 240 Ω ± 5%
WASH	1 AND 3 = 5.9K Ω ± 5%

WIPERS/WASHERS (Continued)

DIAGNOSIS AND TESTING - FAILED PARK SWITCH

If the wiper park switch has failed, the windshield wipers will operate as follows:

- **SWITCH OFF** - Wipers stop in current location regardless of the park signal.
- **INTERMITTENT MODE** - Wipers operate continuously or at low speed for one or more extra wipes.
- **LOW SPEED** - Wipers operate at low speed.
- **HIGH SPEED** - Wipers operate at high speed.
- **WIPE AFTER WASH** - Wipers operate at low speed in any mode setting. Wipers operate only while the wash button is depressed with switch in the OFF mode and wipers stop in mid-cycle when button is released.

The windshield wiper park switch and circuit is monitored by the BCM. The park switch and circuit can be tested using the WIPER SYSTEM DIAGNOSIS table.

WIPER SYSTEM DIAGNOSIS

CONDITION	POSSIBLE CAUSES	CORRECTION
WIPER BLADES DO NOT PARK PROPERLY	1. WIPER ARMS IMPROPERLY PARKED.	1. REMOVE WIPER ARMS AND REPARK. REFER TO WIPER ARM REMOVAL AND INSTALLATION.
	2. WIPER ARMS ARE LOOSE ON PIVOT SHAFT.	2. REMOVE WIPER ARM AND REPARK. REFER TO WIPER ARM REMOVAL AND INSTALLATION.
	3. MOTOR CRANK LOOSE AT OUTPUT SHAFT.	3. REMOVE WIPER ARM, RUN WIPER MOTOR TO PARK POSITION AND REMOVE THE MODULE. WITHOUT ROTATING THE MOTOR OUTPUT SHAFT, REMOVE THE CRANK AND CLEAN ANY FOREIGN MATTER FROM THE MOTOR SHAFT. INSTALL THE MOTOR CRANK IN ITS ORIGINAL POSITION.
	4. STRIPPED WIPER ARM HEAD.	4. REPLACE WIPER ARM.
MOTOR STOPS IN ANY POSITION WHEN THE SWITCH IS TURNED OFF	OPEN PARK CIRCUIT.	CHECK PARK SWITCH BY DISCONNECTING THE WIRE CONNECTOR AND APPLY BATTERY VOLTAGE TO PIN 4. PLACE A JUMPER WIRE FROM PIN 2 TO PIN 3 AND THEN TO AN EXTERNAL GROUND. REPLACE MOTOR IF MOTOR DOES NOT PARK.
MOTOR WILL NOT STOP WHEN THE SWITCH IS TURNED OFF	1. FAULTY SWITCH.	1. CHECK SWITCH IN LOW, HIGH AND INTERMITTENT POSITION.
	2. LACK OF DYNAMIC BRAKE ON WET GLASS.	2. ENSURE PARK SWITCH HAS CLEAN GROUND.
WIPER BLADES SLAP AGAINST COWL SCREEN OR WINDOW MOLDINGS.	WIPER ARMS ARE PARKED INCORRECTLY.	PARK WIPER ARMS. REFER TO WIPER ARM ADJUSTMENT.
BLADES CHATTER	1. FOREIGN SUBSTANCE SUCH AS POLISH ON GLASS OR BLADES.	1. CLEAN GLASS AND BLADE ELEMENT WITH NON-ABRASIVE CLEANER.
	2. ARMS TWISTED, BLADE AT WRONG ANGLE ON GLASS.	2. REPLACE ARM.

WIPERS/WASHERS (Continued)

CONDITION	POSSIBLE CAUSES	CORRECTION
	3. BLADE STRUCTURE BENT.	3. REPLACE BLADE.
	4. BLADE ELEMENT HAS PERMANENT SET.	4. REPLACE BLADE.
WIPER KNOCK AT REVERSAL	1. LINKAGE BUSHINGS WORN.	1. REPLACE WORN LINK. REFER TO WIPER LINKAGE REMOVAL AND INSTALLATION.
	2. ARMATURE ENDPLAY IN MOTOR.	2. REPLACE WIPER MOTOR. REFER TO WIPER MOTOR REMOVAL AND INSTALLATION.
WIPER MOTOR WILL NOT RUN	1. BLOWN FUSE.	1. REPLACE FUSE, AND RUN SYSTEM.
	2. NEW FUSE BLOWS.	2. CHECK FOR SHORT IN WIRING OR SWITCH.
	3. NEW FUSE BLOWS.	3. REPLACE FUSE, REMOVE MOTOR CONNECTOR, TURN SWITCH ON, FUSE DOES NOT BLOW, REPLACE MOTOR.
	4. NO VOLTAGE AT MOTOR.	4. CHECK SWITCH AND WIRING HARNESS. REFER TO WIRING DIAGRAMS.
	5. POOR GROUND.	5. REPAIR GROUND WIRE CONNECTION AS NECESSARY.

WIPERS/WASHERS (Continued)

DIAGNOSIS AND TESTING - REAR WIPER SYSTEM

The rear window wiper system operates in several modes:

- Continuous wipe
- Intermittent wipe
- Wash
- Wipe after wash

The windshield wiper circuits are continuously monitored and controlled by the Body Control Module (BCM). If a problem occurs in the electronic components, wiring, switch (except integral motor park switch) and wiper motor a Diagnostic Trouble Code (DTC) will be stored in the BCM memory. The DTC(s) can be retrieved using a DRB III® scan tool.

DIAGNOSIS AND TESTING - WASHER SYSTEM

WASHER SYSTEM DIAGNOSIS

CONDITION	POSSIBLE CAUSES	CORRECTION
WASHER MOTOR	1. IPM FUSE #33 BLOWN OR DEFECTIVE.	1. CHECK FUSE #33 IN THE IPM. REPLACE IF NOT OK.
	2. IPM FUSE #33 LOOSE.	2. PROPERLY INSTALL IPM FUSE #33 IN SOCKET.
BLOWN FUSE WHEN IGNITION SWITCH IS IN THE RUN OR ACCESSORY POSITION.	1. SHORT IN IPM BETWEEN FUSE #33 AND PIN 11 OR PIN 1.	1. REFER TO IPM DIAGNOSTIC PROCEDURES IN WIRING DIAGRAMS.
	2. SHORT IN MOTOR POWER CIRCUIT.	2. SHORT OR DEFECTIVE CIRCUIT BETWEEN IPM PIN 11 AND WASHER MOTOR CONNECTOR POSITIVE TERMINAL 2. IF NOT OK, REPAIR CIRCUIT.
	3. SHORT IN WASHER PUMP MOTOR.	3. REPLACE WASHER PUMP MOTOR.
WASHER MOTOR RUNS WHEN IGNITION SWITCH IN RUN OR ACCESSORY POSITION.	1. SHORT IN IPM BETWEEN WASHER PUMP MOTOR LSD AND PIN 20.	1. REFER TO IPM DIAGNOSTIC PROCEDURES IN WIRING DIAGRAMS.
	2. DEFECTIVE FRONT WASHER LSD IN IPM.	2. REFER TO IPM DIAGNOSTIC PROCEDURES IN WIRING DIAGRAMS.
	3. SHORT IN MOTOR GROUND CIRCUIT.	3. SHORT OR DEFECTIVE CIRCUIT BETWEEN IPM PIN 20 AND MOTOR CONNECTOR NEGATIVE TERMINAL 1. IF NOT OK, REPAIR CIRCUIT.

WIPERS/WASHERS (Continued)

CONDITION	POSSIBLE CAUSES	CORRECTION
WASHER SYSTEM WILL NOT FLOW WASHER FLUID.	1. NO WASHER FLUID IN RESERVOIR.	1. FILL WASHER RESERVOIR.
	2. IPM FUSE #33 BLOWN.	2. SHORT OR DEFECTIVE CIRCUIT BETWEEN IPM PIN 11 AND WASHER PUMP MOTOR CONNECTOR POSITIVE TERMINAL 2. INTERNAL SHORT IN IPM. IF NOT OK, REPAIR CIRCUIT OR REFER TO IPM DIAGNOSTIC PROCEDURES IN WIRING DIAGRAMS.
	3. WASHER HOSE NOT FLOWING WASHER FLUID.	3. ASSURE WASHER HOSE IS NOT PINCHED, LOOSE, BROKEN OR DISCONNECTED. IF NOT OK, PROPERLY ROUTE OR REPAIR WASHER HOSE.
	4. MOTOR CONNECTOR LOOSE.	4. PROPERLY SEAT AND LOCK CONNECTOR TO MOTOR.
	5. MOTOR CONNECTOR TERMINALS BENT.	5. REPAIR TERMINALS AND PROPERLY SEAT CONNECTOR TO MOTOR.
	6. OPEN CIRCUIT TO OR FROM WASHER SELECT SWITCH.	6. OPEN OR DEFECTIVE CIRCUIT BETWEEN IPM BODY CONTROLLER PIN 27 AND WASHER SELECT SWITCH PIN 4, OR OPEN OR DEFECTIVE CIRCUIT BETWEEN IPM BODY CONTROLLER PIN 22 AND WASHER SELECT SWITCH PIN 2. IF NOT OK, REPAIR CIRCUIT.
	7. OPEN OR DEFECTIVE WASHER SELECT SWITCH.	7. (Refer to 8 - ELECTRICAL/LAMPS/ LIGHTING - EXTERIOR/MULTI-FUNCTION SWITCH - DIAGNOSIS AND TESTING).
	8. OPEN POWER CIRCUIT TO MOTOR.	8. OPEN OR DEFECTIVE CIRCUIT BETWEEN IPM CONNECTOR TERMINAL 11 AND WASHER MOTOR CONNECTOR POSITIVE TERMINAL 2. INTERNAL OPEN IN IPM. IF NOT OK, REPAIR CIRCUIT OR REFER TO IPM DIAGNOSTIC PROCEDURES IN WIRING DIAGRAMS.
	9. OPEN OR DEFECTIVE MOTOR GROUND CIRCUIT.	9. OPEN OR DEFECTIVE CIRCUIT BETWEEN IPM CONNECTOR TERMINAL 20 AND WASHER MOTOR CONNECTOR NEGATIVE TERMINAL 1. INTERNAL OPEN IN IPM. IF NOT OK, REPAIR CIRCUIT OR REFER TO IPM DIAGNOSTIC PROCEDURES IN WIRING DIAGRAMS.
	10. OPEN CIRCUIT IN MOTOR.	10. CHECK FOR OPEN CIRCUIT IN MOTOR BETWEEN POSITIVE TERMINAL 2 AND NEGATIVE TERMINAL 1. IF NOT OK, REPLACE WASHER MOTOR.
	11. SEIZED MOTOR BEARINGS.	11. APPLY DIRECT BATTERY VOLTAGE TO MOTOR TERMINALS. IF MOTOR DOES NOT RUN, REPLACE MOTOR.

WIPERS/WASHERS (Continued)

CONDITION	POSSIBLE CAUSES	CORRECTION
COWL GRILLE NOZZLE WILL NOT FLOW.	1. FROZEN NOZZLE.	1. MOVE VEHICLE INTO HEATED AREA TO ALLOW TIME TO THAW NOZZLE. ASSURE WASHER FLUID IS PROPERLY BLENDED FOR AMBIENT OUTSIDE TEMPERATURES.
	2. NOZZLE HOSE NOT FLOWING.	2. ASSURE NOZZLE HOSE IS NOT PINCHED, LOOSE, BROKEN, OR DISCONNECTED. IF NOT OK, PROPERLY ROUTE OR REPAIR NOZZLE HOSE.
	3. NOZZLE HOSE PLUGGED BY CONTAMINATION.	3. CLEAN NOZZLE HOSE OF CONTAMINATION. DETERMINE SOURCE OF CONTAMINATION. INSPECT RESERVOIR FOR EXCESSIVE CONTAMINATION. CLEAN SYSTEM AS REQUIRED.
	4. NOZZLE PLUGGED BY CONTAMINATION.	4. CLEAN NOZZLE OF CONTAMINATION OR REPLACE NOZZLE. DETERMINE SOURCE OF CONTAMINATION. INSPECT RESERVOIR FOR EXCESSIVE CONTAMINATION. CLEAN SYSTEM AS REQUIRED.
	5. DEFECTIVE WASHER HOSE CHECK VALVE.	5. REPLACE COWL GRILLE PANEL WASHER HOSE/CHECK VALVE ASSEMBLY.
WASHER FLUID OUTPUT IS LOW.	1. PARTIALLY PINCHED HOSE.	1. ASSURE WASHER HOSE IS NOT PARTIALLY PINCHED. IF NOT OK, PROPERLY ROUTE HOSE.
	2. REVERSE POLARITY TO PUMP.	2. CHECK FOR CROSSED CIRCUIT TO PUMP. IF NOT OK, REPAIR CIRCUIT.
	3. WORN OUT WASHER PUMP.	3. REPLACE WASHER PUMP.
COWL GRILLE NOZZLE STREAM OVERSHOOTS WINDSHIELD.	1. NOZZLE NOT SEATED IN COWL GRILLE.	1. ASSURE NOZZLE IS SNAPPED IN PLACE.
	2. NOZZLE JET(S) OUT OF ADJUSTMENT.	2. ADJUST NOZZLE JET(S) USING A SAFETY PIN.
WIPER WILL NOT CYCLE WHEN WASHER SELECT SWITCH IS DEPRESSED.	1. DEFECTIVE IPM.	1. REFER TO IPM DIAGNOSTIC PROCEDURES IN WIRING DIAGRAMS.
	2. DEFECTIVE IPM/BODY CONTROLLER.	2. REFER TO IPM/BODY CONTROLLER DIAGNOSTIC PROCEDURES IN WIRING DIAGRAMS.
WASHER OPERATES INTERMITTENTLY.	1. INTERMITTENT MOTOR GROUND.	INTERMITTENT GROUND BETWEEN MOTOR CONNECTOR TERMINAL 1 AND IPM PIN 20.
	2. INTERMITTENT OPEN IN WASHER SELECT SWITCH.	2. (Refer to 8 - ELECTRICAL/LAMPS/ LIGHTING - EXTERIOR/MULTI-FUNCTION SWITCH - DIAGNOSIS AND TESTING).
	3. DEFECTIVE WASHER MOTOR.	3. REPLACE WASHER MOTOR.

WIPERS/WASHERS (Continued)

CONDITION	POSSIBLE CAUSES	CORRECTION
LOW WASHER FLUID LEVEL INDICATOR INOPERATIVE.	1. LOOSE FLUID LEVEL SENSOR CONNECTOR.	1. PROPERLY SEAT CONNECTOR TO LOW FLUID LEVEL SENSOR AND LOCK.
	2. OPEN POWER CIRCUIT TO FLUID LEVEL SENSOR.	2. OPEN OR DEFECTIVE CIRCUIT BETWEEN IPM CONNECTOR TERMINAL 7 AND THE LOW FLUID LEVEL SENSOR CONNECTOR TERMINAL 2. IF NOT OK, REPAIR CIRCUIT.
	3. OPEN GROUND CIRCUIT.	3. OPEN OR DEFECTIVE CIRCUIT BETWEEN FLUID LEVEL SENSOR CONNECTOR TERMINAL 1 AND FLOOR GROUND 1.
	4. DEFECTIVE IPM.	4. REFER TO IPM DIAGNOSTIC PROCEDURES IN WIRING DIAGRAMS.
	5. FLUID LEVEL SENSOR SWITCH OPEN OR DEFECTIVE.	5. APPLY OHMMETER TO THE SWITCH TERMINALS TO CHECK FOR COMPLETE CIRCUIT. CYCLE SWITCH FLOAT BACK AND FORTH BY FILLING AND DEPLETING RESERVOIR OF WASHER FLUID TO CHECK FOR PROPER SWITCH FUNCTION. IF NOT OK, REPLACE LOW FLUID LEVEL SENSOR SWITCH.
LEAKING WASHER FLUID.	1. PUMP OR SENSOR GROMMET DEFECTIVE.	1. PROPERLY SEAT PUMP OR SENSOR IN GROMMET. IF NOT OK, REPLACE PUMP OR SENSOR GROMMET.
	2. LEAKING WASHER PUMP.	2. REPLACE WASHER PUMP.
	3. LEAKING FLUID LEVEL SENSOR.	3. REPLACE FLUID LEVEL SENSOR.
	4. LEAKING OR DEFECTIVE RESERVOIR BODY.	4. REPLACE RESERVOIR BODY.

FRONT WASHER PUMP MOTOR

REMOVAL

(1) Disconnect and isolate the battery negative cable.

(2) Remove the engine fresh air housing inside the engine compartment (Refer to 9 - ENGINE/AIR INTAKE SYSTEM/AIR CLEANER HOUSING - REMOVAL).

(3) Disconnect the washer hose at the in-line connector forward of the cowl grille so that the in-line connector remains with the washer hose from the fresh air plenum.

(4) Disconnect the washer hose from the hose clip located on the front fender side shield.

(5) Remove the filler tube screw.

(6) Hoist and support vehicle on hoist or jack stands.

(7) Remove the right front wheel and tire assembly (Refer to 22 - TIRES/WHEELS - REMOVAL).

(8) Disconnect the left right front wheelhouse splash shield and move aside (Refer to 23 - BODY/EXTERIOR/WHEELHOUSE SPLASH SHIELD - REMOVAL).

(9) Drain washer fluid from the reservoir and into a suitable clean container. This can be done by disconnecting the windshield washer hose from the front (outboard) washer pump and allowing the washer fluid to drain into a container through a temporary jumper hose connected to the front washer pump.

(10) Disconnect the electrical body harness connectors to the washer pump motors and the fluid level sensor. Slide the red lock on the connector to the release position, then, depress the black tab and pull the connector off the pump or sensor.

(11) Remove the two reservoir mounting screws.

(12) Disconnect the reservoir from the body mount by raising the reservoir upward slightly and then down so that the reservoir filler neck and front washer hose pull through the opening in the front fender side shield.

(13) Remove pump from reservoir by pulling pump upper retention tab away from reservoir cavity and then lifting pump up from mounting grommet. Do not damage reservoir/pump sealing surface or puncture reservoir during removal.

(14) Remove pump grommet and discard.

INSTALLATION

(1) Use new grommet when installing a new pump assembly.

(2) Assure pump upper retention tab is pressed into reservoir slot and that pump is rotated flat against the reservoir and that pump connector is facing up in the fully seated position. Assure the pump is aligned to and fully seated in the reservoir cavity.

(3) Push filler neck and front washer hose through the opening in the front fender side shield. Connect the reservoir to the body mount by lowering the reservoir down.

(4) Install the two reservoir mounting screws. Torque screws to 8.5 - 11.3 N·m (75 - 100 in. lbs.).

(5) Connect the electrical body harness connectors to the washer pump motors and the fluid level sensor. Slide the red lock on the connector to the closed or locked position.

(6) Assure that washer hose is properly routed to prevent pinching and possible inoperative washers.

(7) Connect the left right front wheelhouse splash shield and move aside (Refer to 23 - BODY/EXTERIOR/WHEELHOUSE SPLASH SHIELD - INSTALLATION).

(8) Install the right front wheel and tire assembly (Refer to 22 - TIRES/WHEELS - INSTALLATION).

(9) lower vehicle from hoist or jack stands.

(10) Install the filler tube screw. Torque screw to 8.5 - 11.3 N·m (75 - 100 in. lbs.).

(11) Connect the washer hose to the hose clip located on the front fender side shield.

(12) Connect the washer hose at the in-line connector forward of the cowl grille.

(13) Install the engine fresh air housing inside the engine compartment (Refer to 9 - ENGINE/AIR INTAKE SYSTEM/AIR CLEANER HOUSING - INSTALLATION).

(14) Connect the battery negative cable.

(15) Verify system operation.

FRONT WIPER ARMS

STANDARD PROCEDURE - FRONT WIPER ARM ALIGNMENT

(1) Verify wiper blade element condition and wiper arm spring tension. Run wipers in low speed mode while applying water to the windshield. Observe the wiper blade that is chattering or skipping across the windshield. If the wiper element is not rolling over when the wiper direction reverses, align the wiper arm. The extension bar portion of the wiper arm must be twisted in the proper direction to allow the wiper element to roll over when the direction reverses.

(2) Place two small adjustable wrenches placed 50 mm (2 in.) apart on the wiper arm extension rod.

(3) Twist the extension rod slightly in the opposite direction that the element is laying on the windshield while holding the wrench closest to the pivot stationary.

FRONT WIPER ARMS (Continued)

(4) Repeat Step 1, and align as necessary until wiper stops chattering and wipes the windshield clear.

REMOVAL

CAUTION: The driver side wiper arm must be parked above the passenger side. Failure to do so will result in damage to the arms, blades or system.

(1) Lift the arm cap upward.
(2) Remove the nut holding wiper arm to the wiper pivot.
(3) Using a suitable two jaw puller, separate the wiper arm from the wiper pivot (Fig. 1).

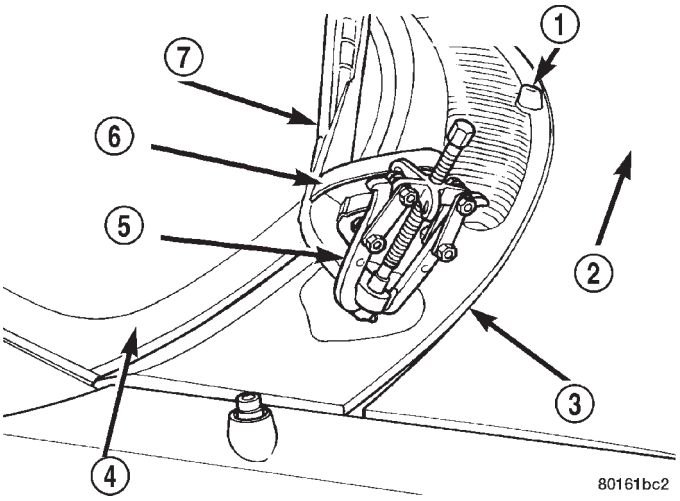

Fig. 1 WIPER ARM REMOVAL

1 - WASHER NOZZLE
2 - HOOD
3 - COWL COVER
4 - WINDSHIELD
5 - TWO JAW PULLER
6 - ARM CAP
7 - WINDSHIELD WIPER ARM

INSTALLATION

(1) Verify that the wiper motor and linkage are in the park position.
(2) Place the wiper arm in position over the wiper pivot (Fig. 2).
(3) Install the nut to hold the wiper arm to the wiper pivot. Torque nut to 35 N·m (26 ft. lbs.).

CAUTION: It is important to torque the wiper arm nut properly to insure that the wiper arm head does not strip and damage the arm, blade, and pivot of both wiper arms.

(4) Push the arm cap cover down.

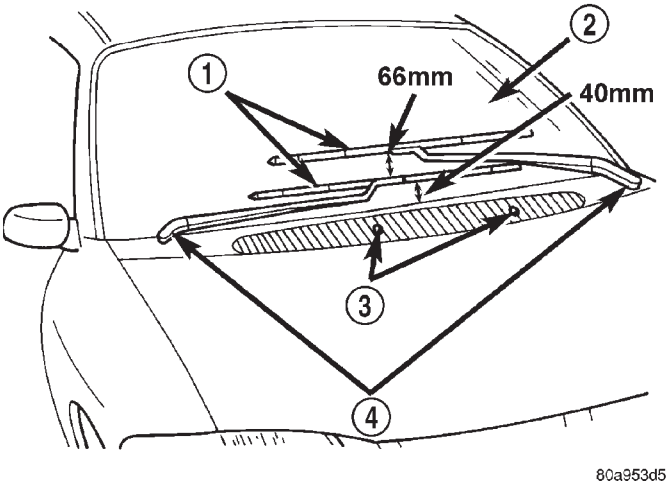

Fig. 2 WIPER ARM ADJUSTMENT

1 - WIPER BLADES
2 - WINDSHIELD
3 - WASHER NOZZLES
4 - WIPER ARMS

FRONT WIPER MOTOR

REMOVAL

(1) Remove the front wiper motor from vehicle (Refer to 8 - ELECTRICAL/WIPERS/WASHERS/ WIPER MODULE - REMOVAL).
(2) Remove four backwall bolts and four brace nuts.
(3) Remove wiper linkage from wiper module.
(4) Disconnect wire connectors from back of wiper motor.
(5) Remove wiper linkage from motor crank. DO NOT remove crank from motor.
(6) Remove bolts holding wiper motor and remove motor.

INSTALLATION

(1) Place wiper module on a suitable work surface.
(2) Install wiper linkage into wiper unit.
(3) Connect wire connectors to wiper motor.
(4) Place the wiper module into engine compartment and connect wiper module wire connector to engine wire harness (Fig. 10).
(5) Install the four backwall bolts and four brace nuts to wiper module.
(6) Operate wiper motor and verify that the wiper motor parks when wiper switch is turned OFF.

HEADLAMP WASHERS - EXPORT

DESCRIPTION

The headlamp washers (Fig. 3) work in conjunction with the windshield washers. The headlamp washers are enabled with the headlamps ON and the windshield washers activated. With the windshield washers activated, the headlamp washers will spray twice for a predetermined amount of time.

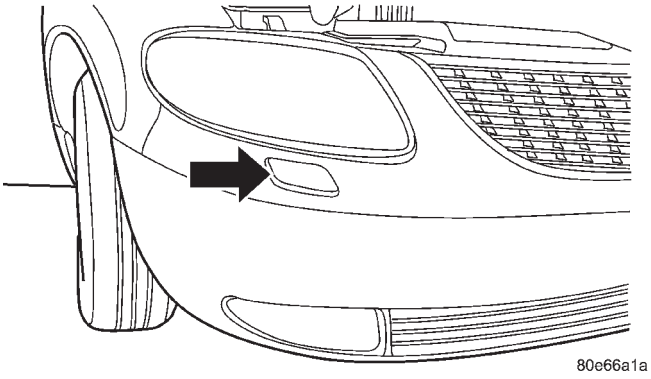

Fig. 3 HEADLAMP WASHER LOCATION

OPERATION

The headlamp washer system utilizes a separate high pressure pump that is attached to the windshield washer reservoir. The headlamp washer pump feeds nozzles that are mounted in the front fascia of the vehicle. The nozzle bodies have a telescopic action that will extend the nozzles in front of the headlamp assembly. These nozzles spray the headlamps when the system is activated.

To activate the headlamp washers, turn ON the headlamps and them press the windshield washer control knob (Fig. 4). The switch sends an input to the Body Control Module (BCM), and then the BCM will signal the windshield washers to operate and direct two timed high pressure sprays onto the headlamp lens. When the criteria is met to activate the headlamp washers (headlamps ON and windshield washer control depressed), the headlamp washers will spray its two timed pulses every fourth request from the washer control.

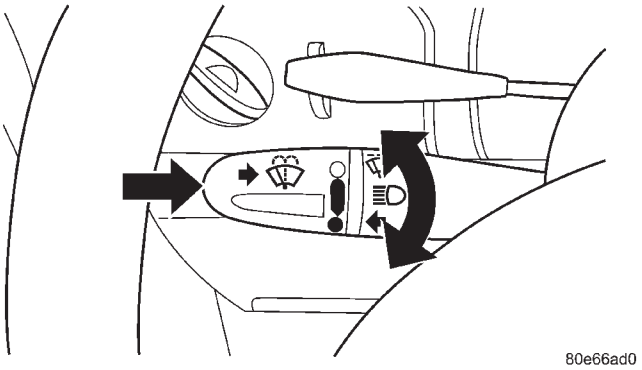

Fig. 4 WINDSHIELD WASHER CONTROL

DIAGNOSIS AND TESTING - HEADLAMP WASHERS - EXPORT

The headlamp washer pump pick-up is located above the low washer fluid level sensor. First of all check the fluid level in the reservoir.

(1) Check fuse #30 for continuity. If no continuity, go to Step 3.

(2) If the headlamp washers do not pop up when a headlamp wash is requested, disconnect the headlamp washer hose. To disconnect the headlamp washer hose, push down on the latch at any connector with slight force and pull apart. When reattaching, push till you hear a snap. With a regulated 20 psi of air pressure, apply it to the washer hose. The headlamp washers should pop up out of the front fascia. If not, check for leaks/connections in the hose.

WARNING: IF MORE THAN 20 PSI IS APPLIED TO THE WASHER HOSE, WASHER FLUID MAY SPRAY OUT OF THE HEADLAMP WASHER. WEAR SAFETY GLASSES AND DO NOT HAVE AIMING DIRECTLY TOWARD FACE.

(3) If the hose and washer spray assembly are OK, check the washer pump for ground and 12v power during a washer request. If defective, repair circuit as necessary.

HEADLAMP WASHERS - EXPORT (Continued)

HEADLAMP WASHER TEST

CONDITION	POSSIBLE CAUSE	CORRECTION
HEADLAMP WASHER SYSTEM WILL NOT FLOW WASHER FLUID.	1. NO WASHER FLUID IN RESERVOIR.	1. FILL RESERVOIR.
	2. JUNCTION BLOCK FUSE #5 BLOWN.	2. SHORT CIRCUIT BETWEEN JUNCTION BLOCK FUSE #5 AND WIPER SWITCH TERMINAL #1. SHORT IN WIPER SWITCH. IF NOT OK, REPAIR CIRCUIT OR REFER TO WIPER/WASHER SWITCH DIAGNOSTIC PROCEDURES.
	3. HEADLAMP WASHER HOSE NOT FLOWING FLUID.	3. ASSURE WASHER HOSE IS NOT PINCHED, LOOSE, BROKEN, OR DISCONNECTED. IF NOT OK, PROPERLY ROUTE OR REPAIR WASHER HOSE.
	4. MOTOR CONNECTOR LOOSE.	4. PROPERLY SEAT CONNECTOR TO MOTOR.
	5. MOTOR CONNECTOR TERMINALS BENT.	5. REPAIR TERMINALS AND PROPERLY SEAT CONNECTOR TO MOTOR.
	6. OPEN POWER CIRCUIT TO SWITCH.	6. OPEN OR DEFECTIVE CIRCUIT BETWEEN JUNCTION BLOCK FUSE #5 AND WASHER SWITCH CONNECTOR TERMINAL #1. IF NOT OK, REPAIR CIRCUIT.
	7. OPEN OR DEFECTIVE WIPER/WASHER SWITCH.	7. CONNECT AN OHMMETER ACROSS WIPER/WASHER SWITCH TERMINAL #1 AND #2 AND DEPRESS WASHER BUTTON AND CHECK FOR CONTINUITY. IF NOT OK, REFER TO WIPER/WASHER SWITCH DIAGNOSTIC PROCEDURES.
	8. OPEN POWER CIRCUIT TO MOTOR.	8. OPEN OR DEFECTIVE CIRCUIT BETWEEN WIPER/WASHER SWITCH CONNECTOR TERMINAL #2 AND MOTOR CONNECTOR TERMINAL #1. IF NOT OK, REPAIR CIRCUIT.
	9. OPEN OR DEFECTIVE MOTOR GROUND CIRCUIT.	9. OPEN OR DEFECTIVE CIRCUIT BETWEEN WASHER MOTOR CONNECTOR GROUND TERMINAL #2 AND LEFT HEADLAMP GROUND #5 OR ENGINE GROUND #1 OR 2.
	10. OPEN CIRCUIT IN HEADLAMP WASHER MOTOR.	10. CHECK FOR AN OPEN CIRCUIT ON MOTOR BETWEEN POWER TERMINAL #1 AND GROUND TERMINAL #2. IF NOT OK, REPLACE WASHER MOTOR.
	11. SEIZED MOTOR BEARINGS.	11. APPLY DIRECT BATTERY VOLTAGE TO MOTOR TERMINALS. IF MOTOR DOES NOT RUN, REPLACE MOTOR.
	12. DEFECTIVE HEADLAMP WASHER RELAY.	12. REPLACE THE HEADLAMP WASHER RELAY.
ONE HEADLAMP WASHER NOZZLE WILL NOT FLOW WASHER FLUID.	1. HEADLAMP WASHER HOSE NOT FLOWING FLUID.	1. REPAIR OR REPLACE THE HEADLAMP WASHER HOSE.
	2. PLUGGED HEADLAMP WASHER NOZZLE.	2. REPLACE HEADLAMP WASHER NOZZLE.

HEADLAMP WASHERS - EXPORT (Continued)

REMOVAL

(1) Disconnect and isolate the battery negative cable.
(2) Hoist vehicle or support on jack stands.
(3) Disconnect the hose from the nozzle inlet. To disconnect the headlamp washer hose, push down on the latch with slight force and pull apart.
(4) Apply a regulated 20 psi of compressed air to the inlet, so as to fully extend the telescopic unit.

WARNING: IF MORE THAN 20 PSI IS APPLIED TO THE WASHER INLET, WASHER FLUID MAY SPRAY OUT OF THE HEADLAMP WASHER. WEAR SAFETY GLASSES AND DO NOT HAVE AIMING DIRECTLY TOWARD FACE.

(5) Unsnap cover from telescopic assembly.
(6) Disconnect air supply from washer inlet to fully retract the telescopic unit.
(7) Remove two screws holding the nozzle assembly to the front fascia.
(8) Remove the nozzle assembly from behind fascia.

INSTALLATION

(1) Place the nozzle assembly in behind the fascia.
(2) Install the two screws holding the nozzle assembly to the front fascia.
(3) Snap cover onto telescopic assembly.

WARNING: IF MORE THAN 20 PSI IS APPLIED TO THE WASHER INLET, WASHER FLUID MAY SPRAY OUT OF THE HEADLAMP WASHER. WEAR SAFETY GLASSES AND DO NOT HAVE AIMING DIRECTLY TOWARD FACE.

On the new washer unit, there is a white tab with pull ring holding the telescopic unit up approximately an inch. This is to ease the installation process. Once cover is snapped on, you may either pull up on the unit to remove the tab, or apply regulated compressed air.
(4) Apply a regulated 20 psi of compressed air the inlet, so as to fully extend the telescopic unit.
(5) With unit extended, pull white tab out from the bottom of the telescopic unit and discard.
(6) Remove the air supply from the washer unit.
(7) Connect the washer hose to the telescopic unit. Press firmly until snap is heard.
(8) Remove vehicle from hoist or jack stands.
(9) Connect the battery negative cable.
(10) Verify vehicle and system operation.

HEADLAMP WASHER HOSE - EXPORT

REMOVAL

The headlamp washer hose is a special high pressure hose with specific fittings, and must be replaced as a unit.
(1) Disconnect and isolate the battery negative cable.
(2) Hoist vehicle or support on jack stands.
(3) Remove parts as necessary to replace high pressure headlamp washer hose. When disconnecting hose, press down firmly on latch at headlamp washer pump motor and telescopic washer assembly and pull apart.

INSTALLATION

The headlamp washer hose is a special high pressure hose with specific fittings, and must be replaced as a unit.
(1) Install the new high pressure headlamp washer hose assembly. Push fitting on until a snap is heard.
(2) Install the parts that were removed to replace high pressure headlamp washer hose.
(3) Remove vehicle from hoist or jack stands.
(4) Connect the battery negative cable.
(5) Verify vehicle and system operation.

HEADLAMP WASHER PUMP MOTOR - EXPORT

REMOVAL

(1) Disconnect and isolate the battery negative cable.
(2) Remove the engine fresh air housing inside the engine compartment (Refer to 9 - ENGINE/AIR INTAKE SYSTEM/AIR CLEANER HOUSING - REMOVAL).
(3) Disconnect the washer hose at the in-line connector forward of the cowl grille so that the in-line connector remains with the washer hose from the fresh air plenum.
(4) Disconnect the washer hose from the hose clip located on the front fender side shield.
(5) Remove the filler tube screw.
(6) Hoist and support vehicle on hoist or jack stands.
(7) Remove the right front wheel and tire assembly (Refer to 22 - TIRES/WHEELS - REMOVAL).
(8) Disconnect the left right front wheelhouse splash shield and move aside (Refer to 23 - BODY/EXTERIOR/WHEELHOUSE SPLASH SHIELD - REMOVAL).

HEADLAMP WASHER PUMP MOTOR - EXPORT (Continued)

(9) Drain washer fluid from the reservoir and into a suitable clean container. This can be done by disconnecting the windshield washer hose from the front (outboard) washer pump and allowing the washer fluid to drain into a container through a temporary jumper hose connected to the front washer pump.

(10) Disconnect the rear washer pump hose from washer pump.

(11) Disconnect the high pressure headlamp washer pump hose by pressing down firmly on latch and pulling hose off.

(12) Disconnect the electrical body harness connectors to the washer pump motors and the fluid level sensor. Slide the red lock on the connector to the release position, then, depress the black tab and pull the connector off the pump or sensor.

(13) Remove the two reservoir mounting screws.

(14) Disconnect the reservoir from the body mount by raising the reservoir upward slightly and then down so that the reservoir filler neck and front washer hose pull through the opening in the front fender side shield.

(15) Remove pump from reservoir by pulling pump up and away from reservoir cavity and out of mounting grommet. Do not damage reservoir/pump sealing surface or puncture reservoir during removal.

(16) Remove pump grommet and discard.

INSTALLATION

(1) Use new grommet when installing a new pump assembly.

(2) Assure pump upper retention tab is pressed into reservoir slot and assure the pump is aligned to and fully seated in the reservoir cavity.

(3) Push filler neck and front washer hose through the opening in the front fender side shield. Connect the reservoir to the body mount by lowering the reservoir down.

(4) Install the two reservoir mounting screws. Torque screws to 8.5 - 11.3 N·m (75 - 100 in. lbs.).

(5) Connect the electrical body harness connectors to the washer pump motors and the fluid level sensor. Slide the red lock on the connector to the closed or locked position.

(6) Connect front and rear washer pump hoses and assure that they are properly routed to prevent pinching and possible inoperative washers.

(7) Connect the high pressure headlamp washer hose by firmly pushing hose onto inlet until a snap is heard.

(8) Connect the left right front wheelhouse splash shield and move aside (Refer to 23 - BODY/EXTERIOR/WHEELHOUSE SPLASH SHIELD - INSTALLATION).

(9) Install the right front wheel and tire assembly (Refer to 22 - TIRES/WHEELS - INSTALLATION).

(10) lower vehicle from hoist or jack stands.

(11) Install the filler tube screw. Torque screw to 8.5 - 11.3 N·m (75 - 100 in. lbs.).

(12) Connect the washer hose to the hose clip located on the front fender side shield.

(13) Connect the washer hose at the in-line connector forward of the cowl grille.

(14) Install the engine fresh air housing inside the engine compartment (Refer to 9 - ENGINE/AIR INTAKE SYSTEM/AIR CLEANER HOUSING - INSTALLATION).

(15) Connect the battery negative cable.

(16) Verify vehicle and system operation.

REAR WASHER PUMP MOTOR

REMOVAL

(1) Disconnect and isolate the battery negative cable.

(2) Remove the engine fresh air housing inside the engine compartment (Refer to 9 - ENGINE/AIR INTAKE SYSTEM/AIR CLEANER HOUSING - REMOVAL).

(3) Disconnect the washer hose at the in-line connector forward of the cowl grille so that the in-line connector remains with the washer hose from the fresh air plenum.

(4) Disconnect the washer hose from the hose clip located on the front fender side shield.

(5) Remove the filler tube screw.

(6) Hoist and support vehicle on hoist or jack stands.

(7) Remove the right front wheel and tire assembly (Refer to 22 - TIRES/WHEELS - REMOVAL).

(8) Disconnect the left right front wheelhouse splash shield and move aside (Refer to 23 - BODY/EXTERIOR/WHEELHOUSE SPLASH SHIELD - REMOVAL).

(9) Drain washer fluid from the reservoir and into a suitable clean container. This can be done by disconnecting the windshield washer hose from the front (outboard) washer pump and allowing the washer fluid to drain into a container through a temporary jumper hose connected to the front washer pump.

(10) Disconnect the electrical body harness connectors to the washer pump motors and the fluid level sensor. Slide the red lock on the connector to the release position, then, depress the black tab and pull the connector off the pump or sensor.

(11) Remove the two reservoir mounting screws.

REAR WASHER PUMP MOTOR (Continued)

(12) Disconnect the reservoir from the body mount by raising the reservoir upward slightly and then down so that the reservoir filler neck and front washer hose pull through the opening in the front fender side shield.

(13) Remove pump from reservoir by pulling pump upper retention tab away from reservoir cavity and then lifting pump up from mounting grommet. Do not damage reservoir/pump sealing surface or puncture reservoir during removal.

(14) Remove pump grommet and discard.

INSTALLATION

(1) Use new grommet when installing a new pump assembly.

(2) Assure pump upper retention tab is pressed into reservoir slot and that pump is rotated flat against the reservoir and that pump connector is facing up in the fully seated position. Assure the pump is aligned to and fully seated in the reservoir cavity.

(3) Push filler neck and front washer hose through the opening in the front fender side shield. Connect the reservoir to the body mount by lowering the reservoir down.

(4) Install the two reservoir mounting screws. Torque screws to 8.5 - 11.3 N·m (75 - 100 in. lbs.).

(5) Connect the electrical body harness connectors to the washer pump motors and the fluid level sensor. Slide the red lock on the connector to the closed or locked position.

(6) Assure that washer hose is properly routed to prevent pinching and possible inoperative washers.

(7) Connect the left right front wheelhouse splash shield and move aside (Refer to 23 - BODY/EXTERIOR/WHEELHOUSE SPLASH SHIELD - INSTALLATION).

(8) Install the right front wheel and tire assembly (Refer to 22 - TIRES/WHEELS - INSTALLATION).

(9) lower vehicle from hoist or jack stands.

(10) Install the filler tube screw. Torque screw to 8.5 - 11.3 N·m (75 - 100 in. lbs.).

(11) Connect the washer hose to the hose clip located on the front fender side shield.

(12) Connect the washer hose at the in-line connector forward of the cowl grille.

(13) Install the engine fresh air housing inside the engine compartment (Refer to 9 - ENGINE/AIR INTAKE SYSTEM/AIR CLEANER HOUSING - INSTALLATION).

(14) Connect the battery negative cable.

(15) Verify system operation.

REAR WIPER ARM

REMOVAL

(1) Lift and hold wiper blade away from rear window.

(2) Lift lock holding wiper arm to wiper pivot upward.

(3) Allow wiper arm to rest against lock.

(4) Pull wiper from pivot by rocking back and forth (Fig. 5).

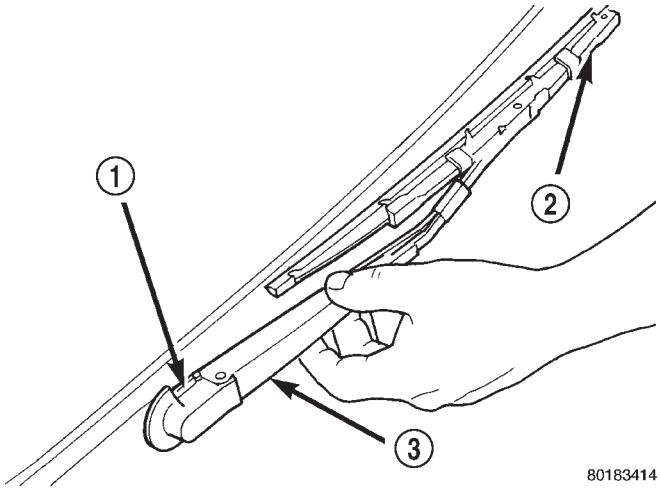

Fig. 5 REAR WIPER ARM

1 - LOCK
2 - WIPER BLADE
3 - REAR WIPER ARM

INSTALLATION

(1) Position arm on pivot.

(2) Pull up on arm and release lock

(3) Allow wiper arm to rest on rear window.

REAR WIPER MOTOR

REMOVAL

(1) Disconnect and isolate the battery negative cable.

(2) Remove rear wiper arm. (Refer to 8 - ELECTRICAL/WIPERS/WASHERS/REAR WIPER ARM - REMOVAL) in this section.

(3) Open liftgate.

(4) Remove liftgate trim panel. (Refer to 23 - BODY/DECKLID/HATCH/LIFTGATE/TAILGATE/ TRIM PANEL - REMOVAL).

(5) Disconnect wire connector from rear wiper motor.

(6) Remove screws holding rear wiper motor to liftgate (Fig. 6).

(7) Remove wiper motor from liftgate.

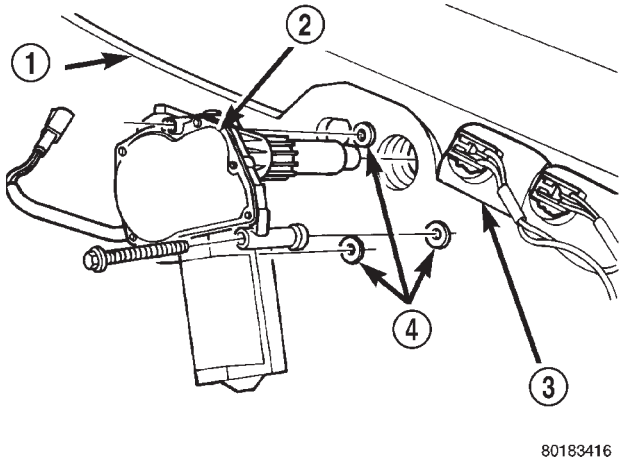

Fig. 6 REAR WINDOW WIPER MOTOR

1 - REAR WINDOW
2 - REAR WIPER MOTOR
3 - CHMSL
4 - WELL NUTS

INSTALLATION

(1) Position the wiper motor in the liftgate.

(2) Install the retaining screws.

(3) Connect the wire harness connector.

(4) Install the liftgate trim panel. (Refer to 23 - BODY/DECKLID/HATCH/LIFTGATE/TAILGATE/ TRIM PANEL - INSTALLATION).

(5) Connect wire connector to rear wiper motor.

(6) Install the screws holding rear wiper motor to liftgate (Fig. 6).

(7) Install the wiper motor to the liftgate (Fig. 6).

(8) Close the liftgate.

(9) Install the wiper arm. (Refer to 8 - ELECTRICAL/WIPERS/WASHERS/REAR WIPER ARM - INSTALLATION) in this section.

(10) Connect the battery negative cable.

REAR WIPER/WASHER SWITCH

DESCRIPTION

The rear window wiper/washer switches are located on the center bezel with the hazard and heated seat switches (Fig. 7). They are not serviceable separately from the hazard and heated seat switches. If defective, the entire switch assembly must be replaced.

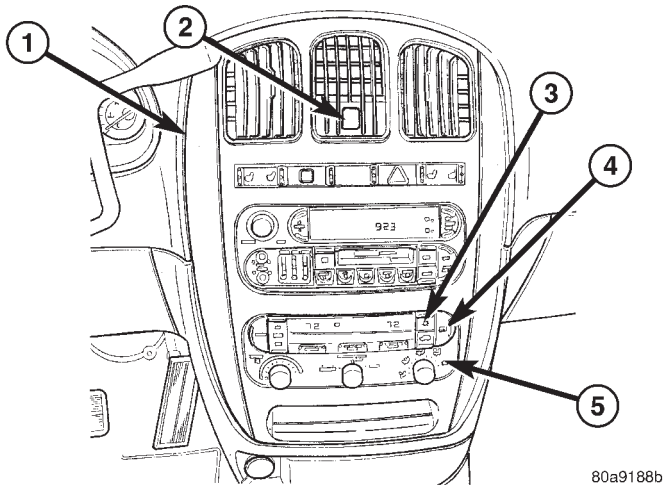

Fig. 7 HVAC CONTROL PANEL

1 - TRIM BEZEL
2 - IN CAR TEMPERATURE SENSOR
3 - A/C REQUEST SWITCH
4 - REAR WINDOW DEFOGGER/HEATED MIRRORS SWITCH COMBO
5 - FRONT WINDOW DEFROSTER MODE SELECTOR

OPERATION

Refer to the vehicle Owner's Manual for operating instructions for the rear window wiper and washer.

WASHER FLUID LEVEL SWITCH

REMOVAL

(1) Disconnect and isolate the battery negative cable.

(2) Remove the engine fresh air housing inside the engine compartment (Refer to 9 - ENGINE/AIR INTAKE SYSTEM/AIR CLEANER HOUSING - REMOVAL).

(3) Disconnect the washer hose at the in-line connector forward of the cowl grille so that the in-line connector remains with the washer hose from the fresh air plenum.

(4) Disconnect the washer hose from the hose clip located on the front fender side shield.

(5) Remove the filler tube screw.

WASHER FLUID LEVEL SWITCH (Continued)

(6) Hoist and support vehicle on hoist or jack stands.

(7) Remove the right front wheel and tire assembly (Refer to 22 - TIRES/WHEELS - REMOVAL).

(8) Disconnect the left right front wheelhouse splash shield and move aside (Refer to 23 - BODY/EXTERIOR/WHEELHOUSE SPLASH SHIELD - REMOVAL).

(9) Drain washer fluid from the reservoir and into a suitable clean container. This can be done by disconnecting the windshield washer hose from the front (outboard) washer pump and allowing the washer fluid to drain into a container through a temporary jumper hose connected to the front washer pump.

(10) Disconnect the electrical body harness connectors to the washer pump motors and the fluid level sensor. Slide the red lock on the connector to the release position, then, depress the black tab and pull the connector off the pump or sensor.

(11) Remove the two reservoir mounting screws.

(12) Disconnect the reservoir from the body mount by raising the reservoir upward slightly and then down so that the reservoir filler neck and front washer hose pull through the opening in the front fender side shield.

(13) Remove the sensor from reservoir by using a side foot to gently pry the sensor from the body of the reservoir. Do not damage the reservoir/sensor sealing surface or puncture reservoir during removal.

CAUTION: To avoid damage to the sensor, assure the reservoir is in an upright position before removing the sensor from the reservoir. Do not rotate the sensor during removal.

INSTALLATION

(1) Use a new grommet when installing a new sensor assembly.

(2) Assure that the flat of the sensor is aligned under the ridge of the reservoir and that the sensor connector is facing down in the fully seated position. This will allow for proper operation of the sensor float switch.

(3) Push filler neck and front washer hose through the opening in the front fender side shield. Connect the reservoir to the body mount by lowering the reservoir down.

(4) Install the two reservoir mounting screws. Torque screws to 8.5 - 11.3 N·m (75 - 100 in. lbs.).

(5) Connect the electrical body harness connectors to the washer pump motors and the fluid level sensor. Slide the red lock on the connector to the closed or locked position.

(6) Assure that washer hose is properly routed to prevent pinching and possible inoperative washers.

(7) Connect the left right front wheelhouse splash shield and move aside (Refer to 23 - BODY/EXTERIOR/WHEELHOUSE SPLASH SHIELD - INSTALLATION).

(8) Install the right front wheel and tire assembly (Refer to 22 - TIRES/WHEELS - INSTALLATION).

(9) lower vehicle from hoist or jack stands.

(10) Install the filler tube screw. Torque screw to 8.5 - 11.3 N·m (75 - 100 in. lbs.).

(11) Connect the washer hose to the hose clip located on the front fender side shield.

(12) Connect the washer hose at the in-line connector forward of the cowl grille.

(13) Install the engine fresh air housing inside the engine compartment (Refer to 9 - ENGINE/AIR INTAKE SYSTEM/AIR CLEANER HOUSING - INSTALLATION).

(14) Connect the battery negative cable.

(15) Verify system operation.

WASHER HOSES

REMOVAL

(1) Remove washer reservoir from vehicle (Refer to 8 - ELECTRICAL/WIPERS/WASHERS/WASHER RESERVOIR - REMOVAL).

(2) Disconnect washer hose front the reservoir cavity.

(3) Disconnect the washer hose from the reservoir pump.

(4) Remove parts as necessary to replace washer hose (engine compartment, interior components, etc.).

INSTALLATION

(1) Install parts as necessary to after replacing washer hose (engine compartment, interior components, etc.).

(2) Connect the washer hose to the reservoir pump.

(3) Connect washer hose to the reservoir cavity.

(4) Install the washer reservoir into vehicle (Refer to 8 - ELECTRICAL/WIPERS/WASHERS/WASHER RESERVOIR - INSTALLATION).

WASHER RESERVOIR

REMOVAL

(1) Disconnect and isolate the battery negative cable.

(2) Remove the engine fresh air housing inside the engine compartment (Refer to 9 - ENGINE/AIR INTAKE SYSTEM/AIR CLEANER HOUSING - REMOVAL).

(3) Disconnect the washer hose at the in-line connector forward of the cowl grille so that the in-line connector remains with the washer hose from the fresh air plenum.

(4) Disconnect the washer hose from the hose clip located on the front fender side shield.

(5) Remove the filler tube screw.

(6) Hoist and support vehicle on hoist or jack stands.

(7) Remove the right front wheel and tire assembly (Refer to 22 - TIRES/WHEELS - REMOVAL).

(8) Disconnect the left right front wheelhouse splash shield and move aside (Refer to 23 - BODY/EXTERIOR/WHEELHOUSE SPLASH SHIELD - REMOVAL).

(9) Drain washer fluid from the reservoir and into a suitable clean container. This can be done by disconnecting the windshield washer hose from the front (outboard) washer pump and allowing the washer fluid to drain into a container through a temporary jumper hose connected to the front washer pump.

(10) Disconnect the electrical body harness connectors to the washer pump motors and the fluid level sensor. Slide the red lock on the connector to the release position, then, depress the black tab and pull the connector off the pump or sensor.

(11) Remove the two reservoir mounting screws.

(12) Disconnect the reservoir from the body mount by raising the reservoir upward slightly and then down so that the reservoir filler neck and front washer hose pull through the opening in the front fender side shield.

INSTALLATION

(1) Push filler neck and front washer hose through the opening in the front fender side shield. Connect the reservoir to the body mount by lowering the reservoir down.

(2) Install the two reservoir mounting screws. Torque screws to 8.5 - 11.3 N·m (75 - 100 in. lbs.).

(3) Connect the electrical body harness connectors to the washer pump motors and the fluid level sensor. Slide the red lock on the connector to the closed or locked position.

(4) Assure that washer is properly routed to prevent pinching and possible inoperative washers.

(5) Connect the left right front wheelhouse splash shield and move aside (Refer to 23 - BODY/EXTERIOR/WHEELHOUSE SPLASH SHIELD - INSTALLATION).

(6) Install the right front wheel and tire assembly (Refer to 22 - TIRES/WHEELS - INSTALLATION).

(7) lower vehicle from hoist or jack stands.

(8) Install the filler tube screw. Torque screw to 8.5 - 11.3 N·m (75 - 100 in. lbs.).

(9) Connect the washer hose to the hose clip located on the front fender side shield.

(10) Connect the washer hose at the in-line connector forward of the cowl grille.

(11) Install the engine fresh air housing inside the engine compartment (Refer to 9 - ENGINE/AIR INTAKE SYSTEM/AIR CLEANER HOUSING - INSTALLATION).

(12) Connect the battery negative cable.

(13) Verify system operation.

WIPER BLADES

REMOVAL

(1) Lift the wiper arm away from the glass.

(2) Disengage the release tab holding the wiper blade to the wiper arm and remove the wiper blade from the wiper arm (Fig. 8) and (Fig. 9).

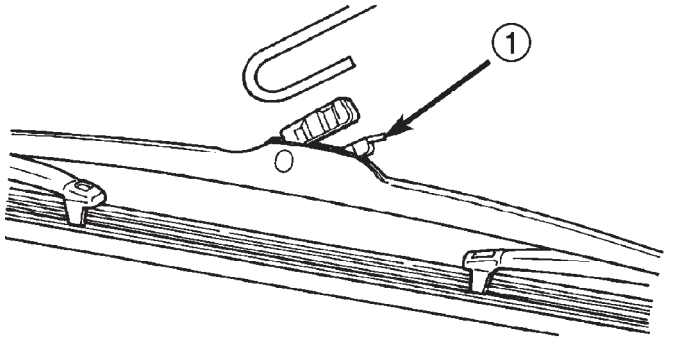

Fig. 8 WINDSHIELD WIPER BLADE

1 - RELEASE TAB

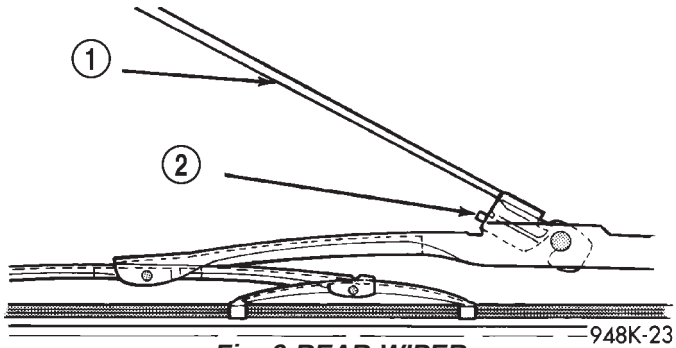

Fig. 9 REAR WIPER

1 - WIPER ARM
2 - BLADE LATCH

WIPER BLADES (Continued)

CLEANING

Wiper blades exposed to the weather for a long period of time tend to lose their wiping effectiveness. Periodic cleaning of the wiper blade is recommended to remove the accumulation of salt and road grime. The wiper blades, arms and windshield should be cleaned with a sponge or cloth and a mild detergent or nonabrasive cleaner. If the wiper blades continue to streak or smear, they should be replaced. The wiper blade should run smoothly across the windshield in both directions. The wiper blade should slightly roll over center when the blade reverses direction. A wiper blade insert that has lost flexibility or a wiper arm that has lost spring tension, will cause the blade to skip or chatter across the windshield. If the wiper blades are new and the wiper arm spring tension is OK and a chattering sound is emitted from the wiper(s), the wiper blade is not rolling over center. If this condition exists, (refer to 8 - ELECTRICAL/WIPERS/WASHERS/WIPER ARMS - ADJUSTMENTS).

INSTALLATION

(1) Position the blade onto the arm.
(2) Engage the blade to the retainer by pulling up on the blade until the tabs snap into position (Fig. 8).

WIPER LINKAGE

REMOVAL

(1) Remove the front windshield wiper unit from vehicle (Refer to 8 - ELECTRICAL/WIPERS/WASHERS/WIPER MODULE - REMOVAL).
(2) Place the wiper unit on a suitable work surface.
(3) Remove nuts holding the cowl cover brackets to the wiper unit.
(4) Remove cowl cover brackets from the wiper unit.
(5) Remove nuts holding linkage to the wiper unit.
(6) Remove the wiper linkage from the wiper unit.
(7) Disconnect the wire connectors from back of the wiper motor.

INSTALLATION

(1) Connect the wire harness connector.
(2) Install the linkage on the wiper unit.
(3) Install the nut holding the linkage to the wiper unit.
(4) Install the cowl cover brackets to the wiper nut.
(5) Install the front wiper unit (Refer to 8 - ELECTRICAL/WIPERS/WASHERS/WIPER MODULE - INSTALLATION).
(6) Install the cowl cover.
(7) Install the wiper arms and blades.

WIPER MODULE

REMOVAL

(1) Release the hood latch and open hood.
(2) Disconnect and isolate the battery negative cable.
(3) Remove the wiper arms.
(4) Remove the cowl cover (Refer to 23 - BODY/EXTERIOR/COWL GRILLE - REMOVAL).
(5) Disconnect the positive lock on the wiper module wire connector (Fig. 10).

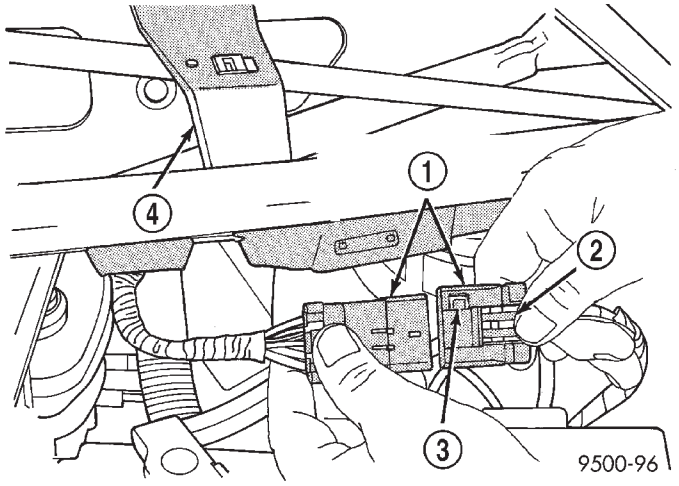

Fig. 10 WIPER MODULE WIRE CONNECTOR

1 - WIPER SYSTEM WIRE CONNECTOR
2 - LOCK TAB
3 - POSITIVE LOCK
4 - WIPER MODULE

(6) Disconnect the wiper module wire connector from the engine compartment wire harness.
(7) Disconnect the windshield washer hose from coupling outside the module.
(8) Disconnect the drain tubes from nipples on bottom of the wiper module.
(9) Remove nuts holding wiper module to lower windshield fence.
(10) Remove bolts holding the wiper module to the dash panel (Fig. 11).
(11) Lift wiper module from weld-studs on lower windshield fence.

CAUTION: Do not allow wiper module to rest on brake master cylinder reservoir, damage to brake system can result.

(12) Remove wiper module.

WIPER MODULE (Continued)

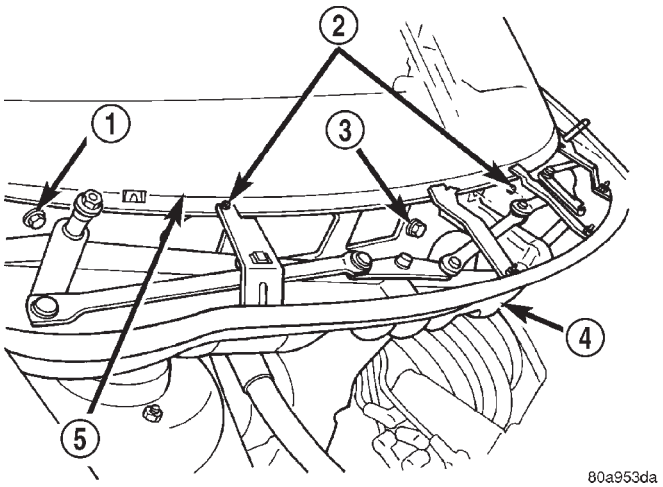

Fig. 11 WIPER MODULE

1 - BOLT
2 - NUTS
3 - BOLT
4 - WIPER MODULE
5 - WINDSHIELD

INSTALLATION

(1) Position the wiper module into the cowl.
(2) Install the bolts that secure the wiper module to the dash (Fig. 11).
(3) Install the nuts that retain the wiper module.
(4) Connect the drain tubes to the nipples on the wiper module.
(5) Connect the windshield washer tube.
(6) Connect the wire harness connector to the wiper module (Fig. 11).
(7) Connect the positive lock on the wiper module wire connector (Fig. 10).

CAUTION: Do not allow wiper module to rest on brake master cylinder reservoir, damage to brake system can result.

(8) Install the cowl cover (Refer to 23 - BODY/EXTERIOR/COWL GRILLE - INSTALLATION).
(9) Install the wiper arms and blades.
(10) Connect the battery negative cable.
(11) Close the hood.

WIRING

TABLE OF CONTENTS

	page		page
WIRING DIAGRAM INFORMATION	8W-01-1	MESSAGE CENTER	8W-46-1
COMPONENT INDEX	8W-02-1	AUDIO SYSTEM	8W-47-1
POWER DISTRIBUTION	8W-10-1	REAR WINDOW DEFOGGER	8W-48-1
GROUND DISTRIBUTION	8W-15-1	OVERHEAD CONSOLE	8W-49-1
BUS COMMUNICATIONS	8W-18-1	FRONT LIGHTING	8W-50-1
CHARGING SYSTEM	8W-20-1	REAR LIGHTING	8W-51-1
STARTING SYSTEM	8W-21-1	TURN SIGNALS	8W-52-1
FUEL/IGNITION SYSTEM	8W-30-1	WIPERS	8W-53-1
TRANSMISSION CONTROL SYSTEM	8W-31-1	TRAILER TOW	8W-54-1
VEHICLE SPEED CONTROL	8W-33-1	POWER WINDOWS	8W-60-1
ANTILOCK BRAKES	8W-35-1	POWER DOOR LOCKS	8W-61-1
VEHICLE THEFT SECURITY SYSTEM	8W-39-1	POWER MIRRORS	8W-62-1
INSTRUMENT CLUSTER	8W-40-1	POWER SEATS	8W-63-1
HORN/CIGAR LIGHTER/POWER OUTLET	8W-41-1	SPLICE INFORMATION	8W-70-1
AIR CONDITIONING-HEATER	8W-42-1	CONNECTOR PIN-OUTS	8W-80-1
AIRBAG SYSTEM	8W-43-1	CONNECTOR/GROUND/SPLICE LOCATION	8W-91-1
INTERIOR LIGHTING	8W-44-1	POWER DISTRIBUTION SYSTEM	8W-97-1
BODY CONTROL MODULE	8W-45-1		

8W-01 WIRING DIAGRAM INFORMATION

TABLE OF CONTENTS

page

WIRING DIAGRAM INFORMATION
DESCRIPTION
DESCRIPTION - HOW TO USE WIRING DIAGRAMS 1
DESCRIPTION - CIRCUIT INFORMATION 5
DESCRIPTION - CIRCUIT FUNCTIONS 6
DESCRIPTION - SECTION IDENTIFICATION AND INFORMATION 6
DESCRIPTION - CONNECTOR, GROUND AND SPLICE INFORMATION 7
WARNING
WARNINGS - GENERAL 7
DIAGNOSIS AND TESTING - WIRING HARNESS 7
STANDARD PROCEDURE
STANDARD PROCEDURE - ELECTROSTATIC DISCHARGE (ESD) SENSITIVE DEVICES 8
STANDARD PROCEDURE - TESTING OF VOLTAGE POTENTIAL 9
STANDARD PROCEDURE - TESTING FOR CONTINUITY 9

page

STANDARD PROCEDURE - TESTING FOR A SHORT TO GROUND 9
STANDARD PROCEDURE - TESTING FOR A SHORT TO GROUND ON FUSES POWERING SEVERAL LOADS 10
STANDARD PROCEDURE - TESTING FOR A VOLTAGE DROP 10
SPECIAL TOOLS
WIRING/TERMINAL 10
CONNECTOR
REMOVAL 11
INSTALLATION 11
DIODE
REMOVAL 14
INSTALLATION 14
TERMINAL
REMOVAL 14
INSTALLATION 14
WIRE
STANDARD PROCEDURE - WIRE SPLICING . . 15

WIRING DIAGRAM INFORMATION

DESCRIPTION

DESCRIPTION - HOW TO USE WIRING DIAGRAMS

DaimlerChrysler Corporation wiring diagrams are designed to provide information regarding the vehicles wiring content. In order to effectively use the wiring diagrams to diagnose and repair DaimlerChrysler Corporation vehicles, it is important to understand all of their features and characteristics.

Diagrams are arranged such that the power (B+) side of the circuit is placed near the top of the page, and the ground (B-) side of the circuit is placed near the bottom of the page (Fig. 1).

All switches, components, and modules are shown in the at rest position with the doors closed and the key removed from the ignition (Fig. 2).

Components are shown two ways. A solid line around a component indicates that the component is complete. A dashed line around the component indicates that the component is being shown is not complete. Incomplete components have a reference number to indicate the page where the component is shown complete.

It is important to realize that no attempt is made on the diagrams to represent components and wiring as they appear on the vehicle. For example, a short piece of wire is treated the same as a long one. In addition, switches and other components are shown as simply as possible, with regard to function only.

SYMBOLS

International symbols are used throughout the wiring diagrams. These symbols are consistent with those being used around the world (Fig. 3).

WIRING DIAGRAM INFORMATION (Continued)

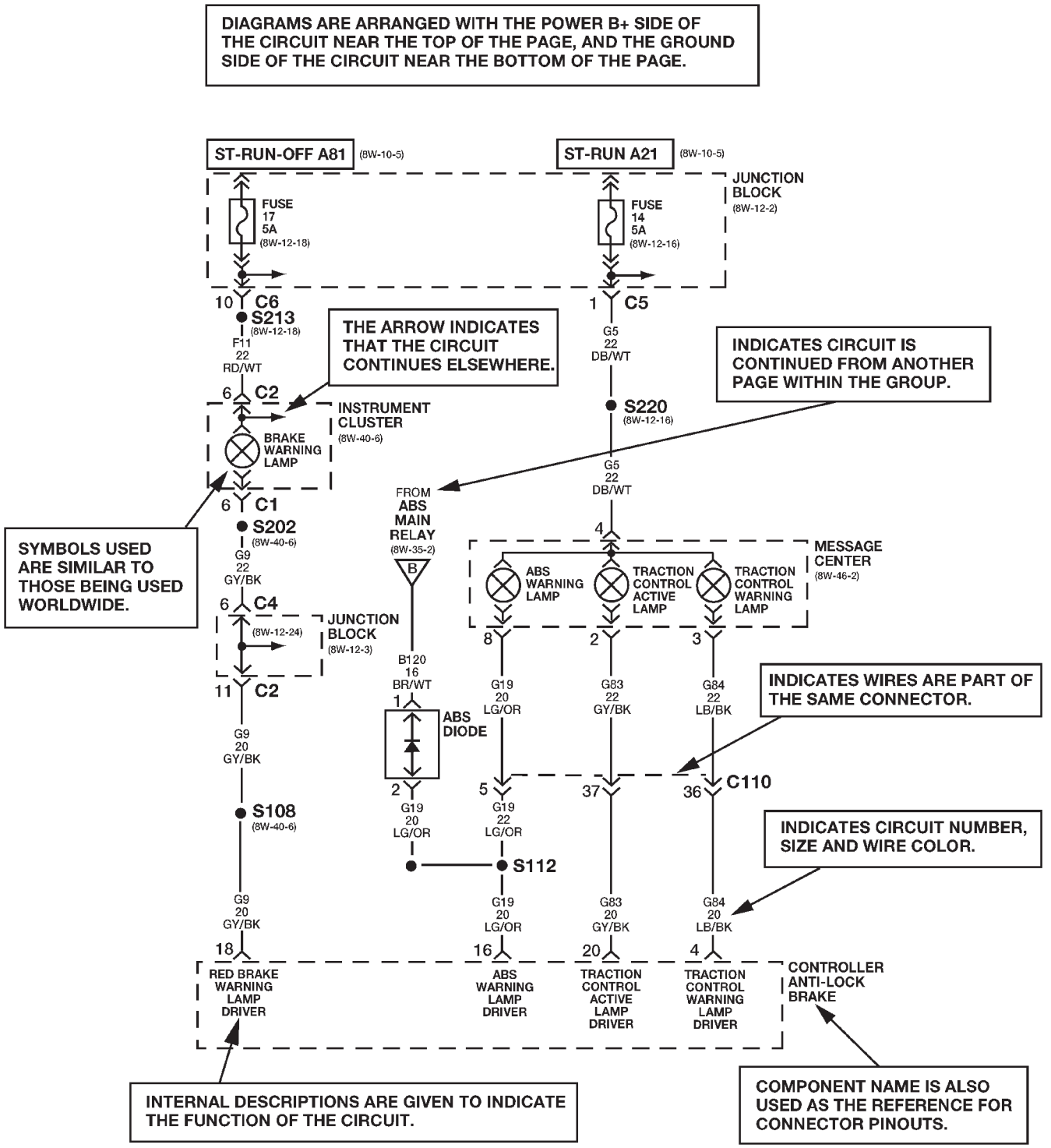

The System shown here is an EXAMPLE ONLY. It does not represent the actual circuit shown in the WIRING DIAGRAM SECTION.

80c06d01

Fig. 1 WIRING DIAGRAM EXAMPLE 1

WIRING DIAGRAM INFORMATION (Continued)

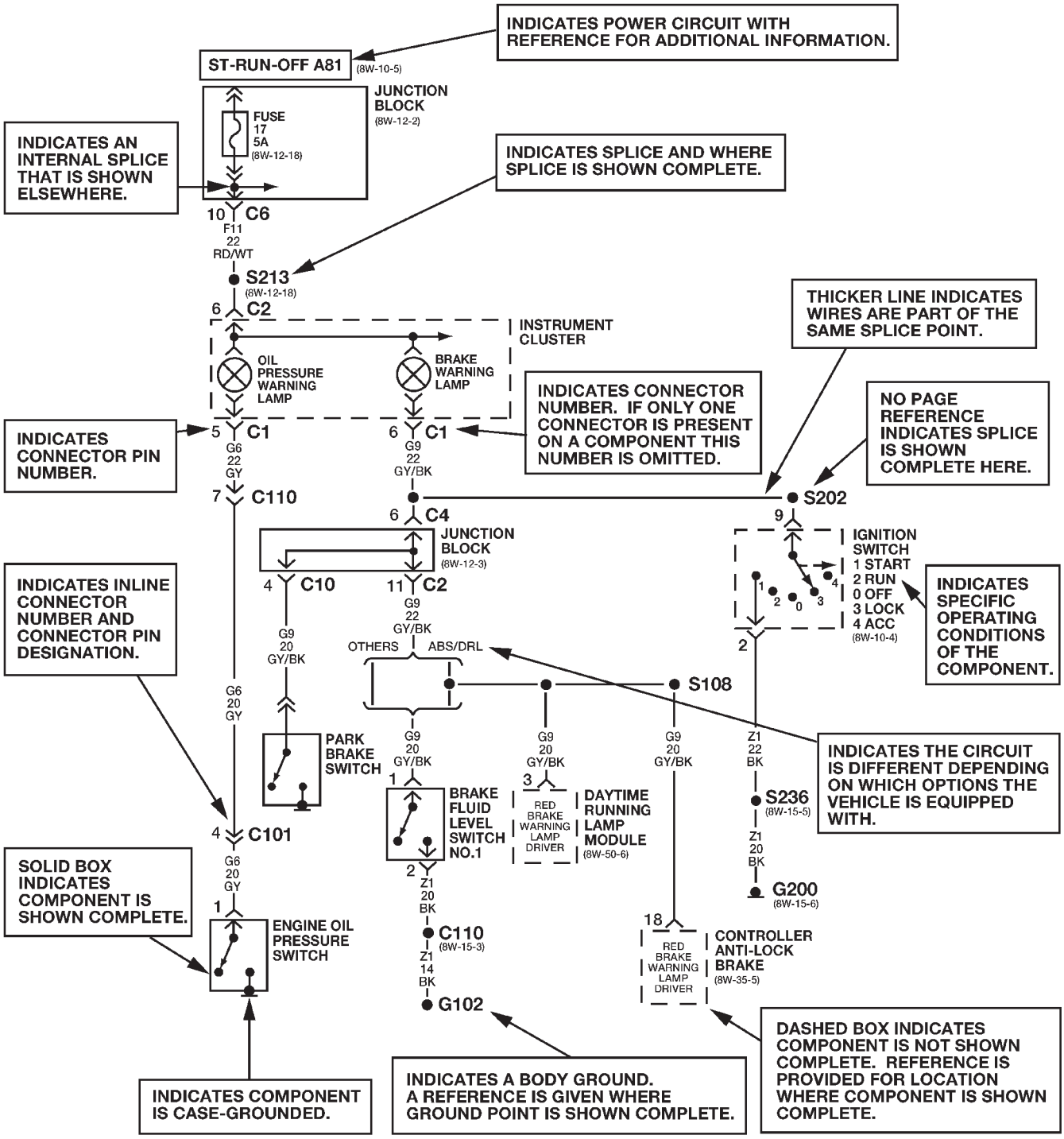

The System shown here is an EXAMPLE ONLY. It does not represent the actual circuit shown in the WIRING DIAGRAM SECTION.

80c06d02

Fig. 2 WIRING DIAGRAM EXAMPLE 2

WIRING DIAGRAM INFORMATION (Continued)

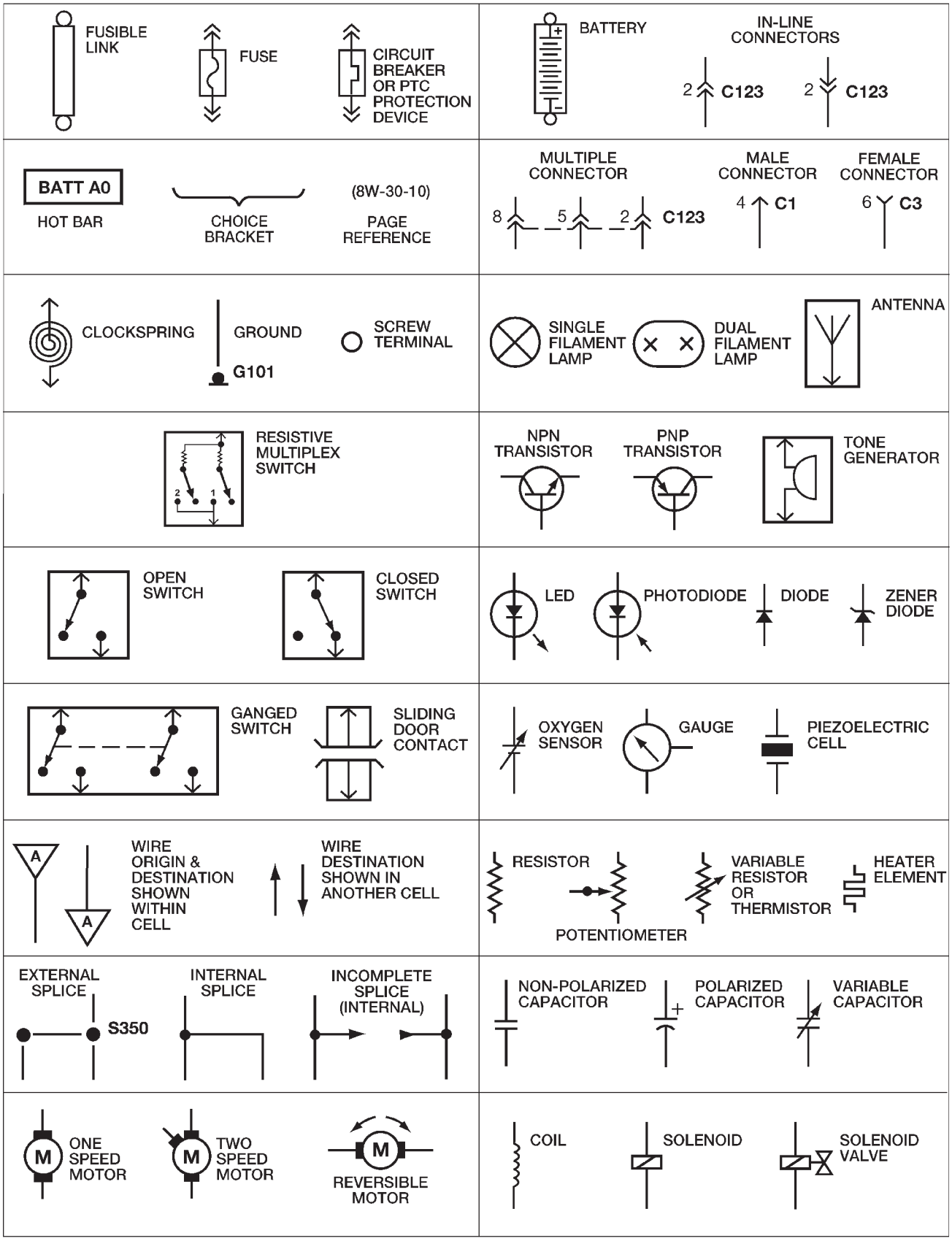

80910c6b

Fig. 3 WIRING DIAGRAM SYMBOLS

WIRING DIAGRAM INFORMATION (Continued)

TERMINOLOGY

This is a list of terms and definitions used in the wiring diagrams.

LHD . . . . . Left Hand Drive Vehicles
RHD . . . . . Right Hand Drive Vehicles
ATX . . Automatic Transmissions-Front Wheel Drive
MTX . . . . Manual Transmissions-Front Wheel Drive
AT . . . . Automatic Transmissions-Rear Wheel Drive
MT . . . . . Manual Transmissions-Rear Wheel Drive
SOHC . . . . . Single Over Head Cam Engine
DOHC . . . . . Double Over Head Cam Engine
Built-Up-Export . . . . . Vehicles Built For Sale In Markets Other Than North America
Except Built-Up-Export . . Vehicles Built For Sale In North America

DESCRIPTION - CIRCUIT INFORMATION

Each wire shown in the diagrams contains a code which identifies the main circuit, part of the main circuit, gage of wire, and color (Fig. 4).

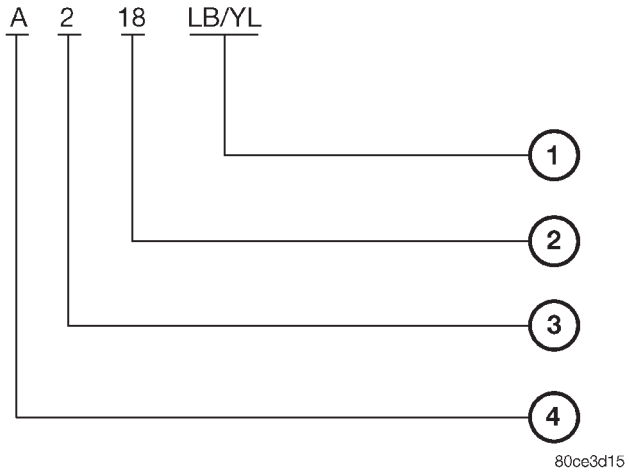

Fig. 4 WIRE CODE IDENTIFICATION

1 - COLOR OF WIRE (LIGHT BLUE WITH YELLOW TRACER
2 - GAGE OF WIRE (18 GAGE)
3 - PART OF MAIN CIRCUIT (VARIES DEPENDING ON EQUIPMENT)
4 - MAIN CIRCUIT IDENTIFICATION

WIRE COLOR CODE CHART

COLOR CODE	COLOR
BL	BLUE
BK	BLACK
BR	BROWN
DB	DARK BLUE
DG	DARK GREEN
GY	GRAY
LB	LIGHT BLUE
LG	LIGHT GREEN
OR	ORANGE
PK	PINK
RD	RED
TN	TAN
VT	VIOLET
WT	WHITE
YL	YELLOW
*	WITH TRACER

WIRING DIAGRAM INFORMATION (Continued)

DESCRIPTION - CIRCUIT FUNCTIONS

All circuits in the diagrams use an alpha/numeric code to identify the wire and it's function. To identify which circuit code applies to a system, refer to the Circuit Identification Code Chart. This chart shows the main circuits only and does not show the secondary codes that may apply to some models.

CIRCUIT IDENTIFICATION CODE CHART

CIRCUIT	FUNCTION
A	BATTERY FEED
B	BRAKE CONTROLS
C	CLIMATE CONTROLS
D	DIAGNOSTIC CIRCUITS
E	DIMMING ILLUMINATION CIRCUITS
F	FUSED CIRCUITS
G	MONITORING CIRCUITS (GAUGES)
H	OPEN
I	NOT USED
J	OPEN
K	POWERTRAIN CONTROL MODULE
L	EXTERIOR LIGHTING
M	INTERIOR LIGHTING
N	NOT USED
O	NOT USED
P	POWER OPTION (BATTERY FEED)
Q	POWER OPTIONS (IGNITION FEED)
R	PASSIVE RESTRAINT
S	SUSPENSION/STEERING
T	TRANSMISSION/TRANSAXLE/ TRANSFER CASE
U	OPEN
V	SPEED CONTROL, WIPER/ WASHER
W	OPEN
X	AUDIO SYSTEMS
Y	OPEN
Z	GROUNDS

DESCRIPTION - SECTION IDENTIFICATION AND INFORMATION

The wiring diagrams are grouped into individual sections. If a component is most likely found in a particular group, it will be shown complete (all wires, connectors, and pins) within that group. For example, the Auto Shutdown Relay is most likely to be found in Group 30, so it is shown there complete. It can, however, be shown partially in another group if it contains some associated wiring.

Splice diagrams in Section 8W-70 show the entire splice and provide references to other sections the splices serves. Section 8W-70 only contains splice diagrams that are not shown in their entirety somewhere else in the wiring diagrams.

Section 8W-80 shows each connector and the circuits involved with that connector. The connectors are identified using the name/number on the diagram pages.

WIRING SECTION CHART

GROUP	TOPIC
8W-01 thru 8W-09	General information and Diagram Overview
8W-10 thru 8W-19	Main Sources of Power and Vehicle Grounding
8W-20 thru 8W-29	Starting and Charging
8W-30 thru 8W-39	Powertrain/Drivetrain Systems
8W-40 thru 8W-49	Body Electrical items and A/C
8W-50 thru 8W-59	Exterior Lighting, Wipers and Trailer Tow
8W-60 thru 8W-69	Power Accessories
8W-70	Splice Information
8W-80	Connector Pin Outs
8W-91	Connector, Ground and Splice Locations

WIRING DIAGRAM INFORMATION (Continued)

DESCRIPTION - CONNECTOR, GROUND AND SPLICE INFORMATION

CAUTION: Not all connectors are serviced. Some connectors are serviced only with a harness. A typical example might be the Supplemental Restraint System connectors. Always check parts availability before attempting a repair.

IDENTIFICATION

In-line connectors are identified by a number, as follows:

- In-line connectors located in the engine compartment are C100 series numbers
- In-line connectors located in the Instrument Panel area are C200 series numbers.
- In-line connectors located in the body are C300 series numbers.
- Jumper harness connectors are C400 series numbers.
- Grounds and ground connectors are identified with a "G" and follow the same series numbering as the in-line connectors.
- Splices are identified with an "S" and follow the same series numbering as the in-line connectors.
- Component connectors are identified by the component name instead of a number. Multiple connectors on a component use a C1, C2, etc. identifier.

LOCATIONS

Section 8W-91 contains connector/ground/splice location illustrations. The illustrations contain the connector name (or number)/ground number/splice number and component identification. Connector/ground/splice location charts in section 8W-91 reference the figure numbers of the illustrations.

The abbreviation T/O is used in the component location section to indicate a point in which the wiring harness branches out to a component. The abbreviation N/S means Not Shown in the illustrations

WARNING

WARNINGS - GENERAL

WARNINGS provide information to prevent personal injury and vehicle damage. Below is a list of general warnings that should be followed any time a vehicle is being serviced.

WARNING: ALWAYS WEAR SAFETY GLASSES FOR EYE PROTECTION.

WARNING: USE SAFETY STANDS ANYTIME A PROCEDURE REQUIRES BEING UNDER A VEHICLE.

WARNING: BE SURE THAT THE IGNITION SWITCH ALWAYS IS IN THE OFF POSITION, UNLESS THE PROCEDURE REQUIRES IT TO BE ON.

WARNING: SET THE PARKING BRAKE WHEN WORKING ON ANY VEHICLE. AN AUTOMATIC TRANSMISSION SHOULD BE IN PARK. A MANUAL TRANSMISSION SHOULD BE IN NEUTRAL.

WARNING: OPERATE THE ENGINE ONLY IN A WELL-VENTILATED AREA.

WARNING: KEEP AWAY FROM MOVING PARTS WHEN THE ENGINE IS RUNNING, ESPECIALLY THE FAN AND BELTS.

WARNING: TO PREVENT SERIOUS BURNS, AVOID CONTACT WITH HOT PARTS SUCH AS THE RADIATOR, EXHAUST MANIFOLD(S), TAIL PIPE, CATALYTIC CONVERTER AND MUFFLER.

WARNING: DO NOT ALLOW FLAME OR SPARKS NEAR THE BATTERY. GASES ARE ALWAYS PRESENT IN AND AROUND THE BATTERY.

WARNING: ALWAYS REMOVE RINGS, WATCHES, LOOSE HANGING JEWELRY AND AVOID LOOSE CLOTHING.

DIAGNOSIS AND TESTING - WIRING HARNESS

TROUBLESHOOTING TOOLS

When diagnosing a problem in an electrical circuit there are several common tools necessary. These tools are listed and explained below.

- Jumper Wire - This is a test wire used to connect two points of a circuit. It can be used to bypass an open in a circuit.

WARNING: NEVER USE A JUMPER WIRE ACROSS A LOAD, SUCH AS A MOTOR, CONNECTED BETWEEN A BATTERY FEED AND GROUND.

- Voltmeter - Used to check for voltage on a circuit. Always connect the black lead to a known good ground and the red lead to the positive side of the circuit.

CAUTION: Most of the electrical components used in today's vehicles are Solid State. When checking voltages in these circuits, use a meter with a 10 - megohm or greater impedance rating.

WIRING DIAGRAM INFORMATION (Continued)

• Ohmmeter - Used to check the resistance between two points of a circuit. Low or no resistance in a circuit means good continuity.

CAUTION: Most of the electrical components used in today's vehicles are Solid State. When checking resistance in these circuits use a meter with a 10 - megohm or greater impedance rating. In addition, make sure the power is disconnected from the circuit. Circuits that are powered up by the vehicle's electrical system can cause damage to the equipment and provide false readings.

• Probing Tools - These tools are used for probing terminals in connectors (Fig. 5). Select the proper size tool from Special Tool Package 6807, and insert it into the terminal being tested. Use the other end of the tool to insert the meter probe.

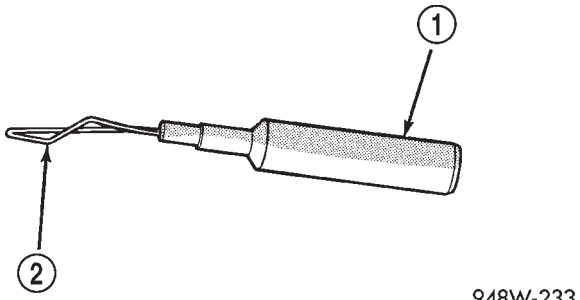

Fig. 5 PROBING TOOL

1 - SPECIAL TOOL 6801
2 - PROBING END

INTERMITTENT AND POOR CONNECTIONS

Most intermittent electrical problems are caused by faulty electrical connections or wiring. It is also possible for a sticking component or relay to cause a problem. Before condemning a component or wiring assembly, check the following items.

- Connectors are fully seated
- Spread terminals, or terminal push out
- Terminals in the wiring assembly are fully seated into the connector/component and locked into position
- Dirt or corrosion on the terminals. Any amount of corrosion or dirt could cause an intermittent problem
- Damaged connector/component casing exposing the item to dirt or moisture
- Wire insulation that has rubbed through causing a short to ground
- Some or all of the wiring strands broken inside of the insulation
- Wiring broken inside of the insulation

TROUBLESHOOTING WIRING PROBLEMS

When troubleshooting wiring problems there are six steps which can aid in the procedure. The steps are listed and explained below. Always check for non-factory items added to the vehicle before doing any diagnosis. If the vehicle is equipped with these items, disconnect them to verify these add-on items are not the cause of the problem.

(1) Verify the problem.

(2) Verify any related symptoms. Do this by performing operational checks on components that are in the same circuit. Refer to the wiring diagrams.

(3) Analyze the symptoms. Use the wiring diagrams to determine what the circuit is doing, where the problem most likely is occurring and where the diagnosis will continue.

(4) Isolate the problem area.

(5) Repair the problem area.

(6) Verify the proper operation. For this step, check for proper operation of all items on the repaired circuit. Refer to the wiring diagrams.

STANDARD PROCEDURE

STANDARD PROCEDURE - ELECTROSTATIC DISCHARGE (ESD) SENSITIVE DEVICES

All ESD sensitive components are solid state and a symbol (Fig. 6) is used to indicate this. When handling any component with this symbol, comply with the following procedures to reduce the possibility of electrostatic charge build up on the body and inadvertent discharge into the component. If it is not known whether the part is ESD sensitive, assume that it is.

(1) Always touch a known good ground before handling the part. This should be repeated while handling the part and more frequently after sliding across a seat, sitting down from a standing position, or walking a distance.

(2) Avoid touching electrical terminals of the part, unless instructed to do so by a written procedure.

(3) When using a voltmeter, be sure to connect the ground lead first.

(4) Do not remove the part form it's protective packing until it is time to install the part.

(5) Before removing the part from it's pakage, ground the pakage to a known good ground on the vehicle.

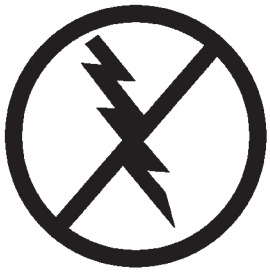

Fig. 6 ELECTROSTATIC DISCHARGE SYMBOL

WIRING DIAGRAM INFORMATION (Continued)

STANDARD PROCEDURE - TESTING OF VOLTAGE POTENTIAL

(1) Connect the ground lead of a voltmeter to a known good ground (Fig. 7).

(2) Connect the other lead of the voltmeter to the selected test point. The vehicle ignition may need to be turned ON to check voltage. Refer to the appropriate test procedure.

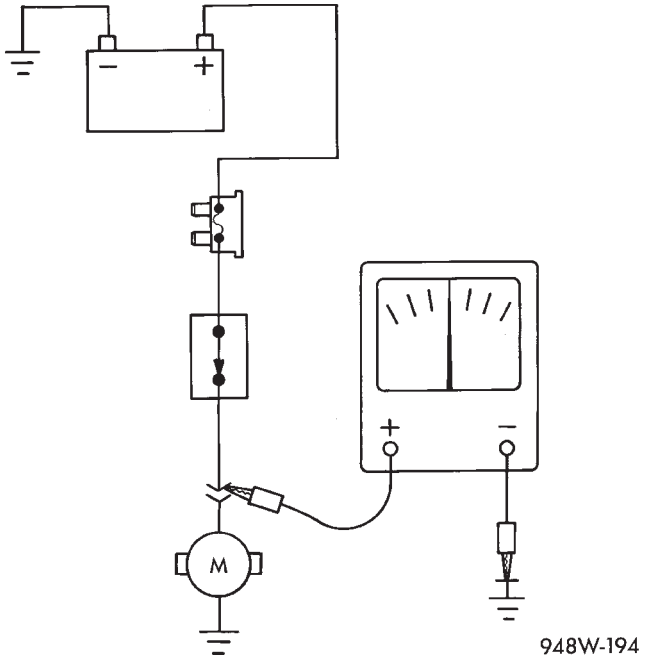

Fig. 7 TESTING FOR VOLTAGE POTENTIAL

STANDARD PROCEDURE - TESTING FOR CONTINUITY

(1) Remove the fuse for the circuit being checked or, disconnect the battery.

(2) Connect one lead of the ohmmeter to one side of the circuit being tested (Fig. 8).

(3) Connect the other lead to the other end of the circuit being tested. Low or no resistance means good continuity.

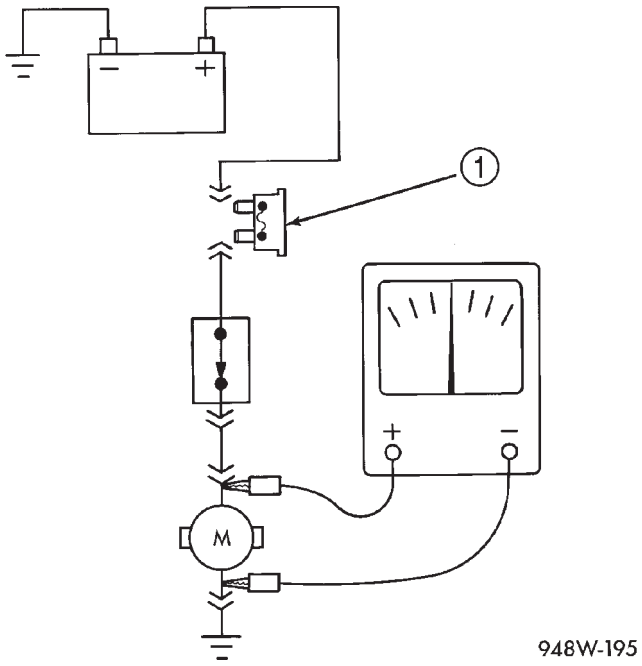

Fig. 8 TESTING FOR CONTINUITY

1 - FUSE REMOVED FROM CIRCUIT

STANDARD PROCEDURE - TESTING FOR A SHORT TO GROUND

(1) Remove the fuse and disconnect all items involved with the fuse.

(2) Connect a test light or a voltmeter across the terminals of the fuse.

(3) Starting at the fuse block, wiggle the wiring harness about six to eight inches apart and watch the voltmeter/test lamp.

(4) If the voltmeter registers voltage or the test lamp glows, there is a short to ground in that general area of the wiring harness.

WIRING DIAGRAM INFORMATION (Continued)

STANDARD PROCEDURE - TESTING FOR A SHORT TO GROUND ON FUSES POWERING SEVERAL LOADS

(1) Refer to the wiring diagrams and disconnect or isolate all items on the suspected fused circuits.
(2) Replace the blown fuse.
(3) Supply power to the fuse by turning ON the ignition switch or re-connecting the battery.
(4) Start connecting or energizing the items in the fuse circuit one at a time. When the fuse blows the circuit with the short to ground has been isolated.

STANDARD PROCEDURE - TESTING FOR A VOLTAGE DROP

(1) Connect the positive lead of the voltmeter to the side of the circuit closest to the battery (Fig. 9).
(2) Connect the other lead of the voltmeter to the other side of the switch, component or circuit.
(3) Operate the item.
(4) The voltmeter will show the difference in voltage between the two points.

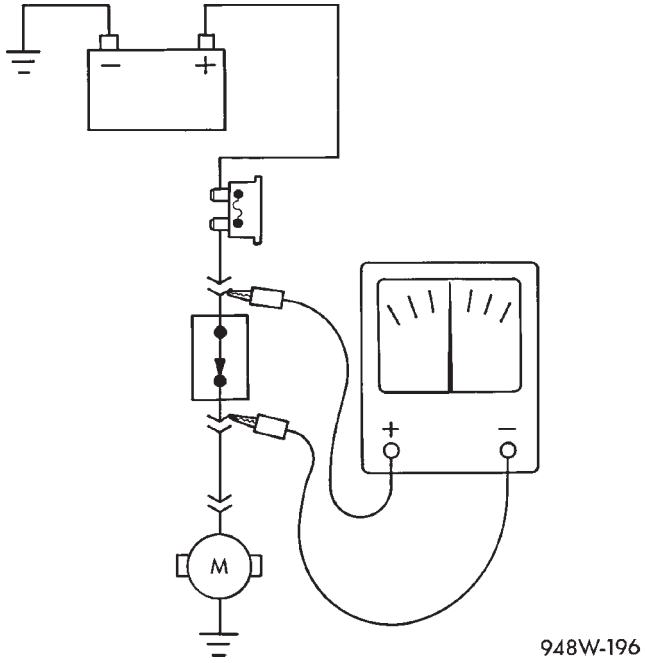

Fig. 9 TESTING FOR VOLTAGE DROP

SPECIAL TOOLS

WIRING/TERMINAL

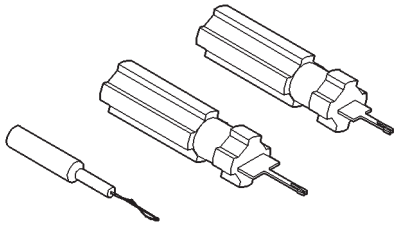

PROBING TOOL PACKAGE 6807

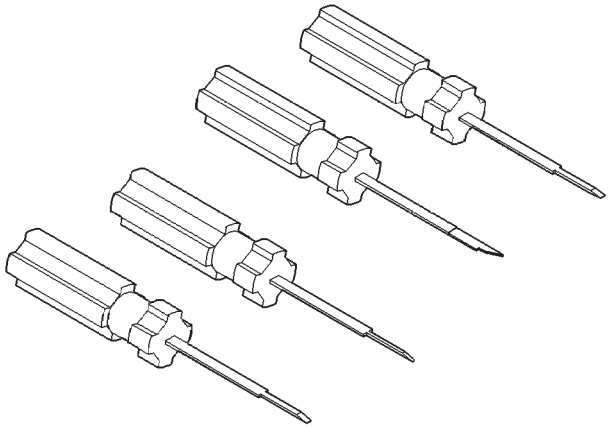

TERMINAL PICK TOOL SET 6680

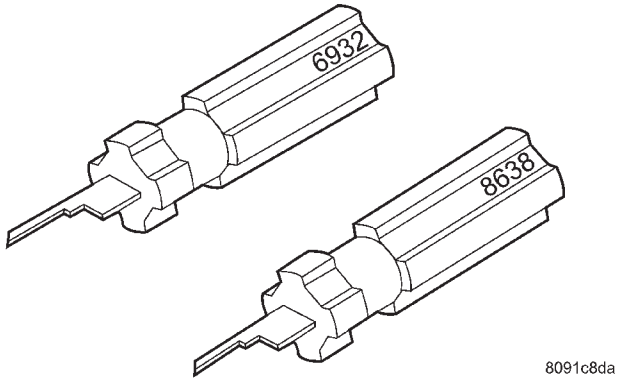

TERMINAL REMOVING TOOLS 6932 AND 8638

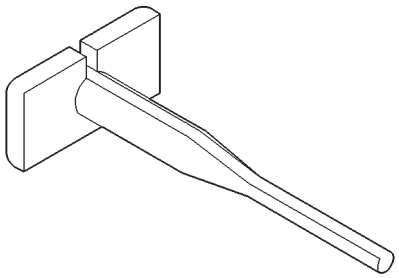

TERMINAL REMOVING TOOL 6934

CONNECTOR

REMOVAL

(1) Disconnect battery.
(2) Release Connector Lock (Fig. 10).
(3) Disconnect the connector being repaired from its mating half/component.
(4) Remove the dress cover (if applicable) (Fig. 10).

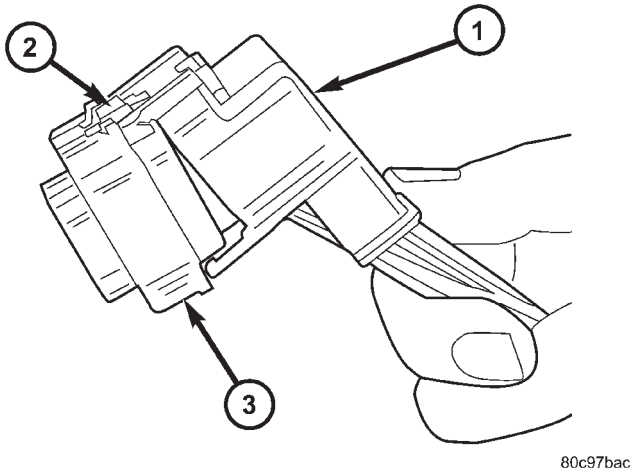

Fig. 10 REMOVAL OF DRESS COVER

1 - DRESS COVER
2 - CONNECTOR LOCK
3 - CONNECTOR

(5) Release the Secondary Terminal Lock, if required (Fig. 11).
(6) Position the connector locking finger away from the terminal using the proper special tool. Pull on the wire to remove the terminal from the connector (Fig. 12).

INSTALLATION

(1) Insert the removed terminal in the same cavity on the repair connector.
(2) Repeat steps for each terminal in the connector, being sure that all wires are inserted into the proper cavities. For additional connector pin-out identification, refer to the wiring diagrams.
(3) When the connector is re-assembled, the secondary terminal lock must be placed in the locked position to prevent terminal push out.
(4) Replace dress cover (if applicable).
(5) Connect connector to its mating half/component.
(6) Connect battery and test all affected systems.

CONNECTOR (Continued)

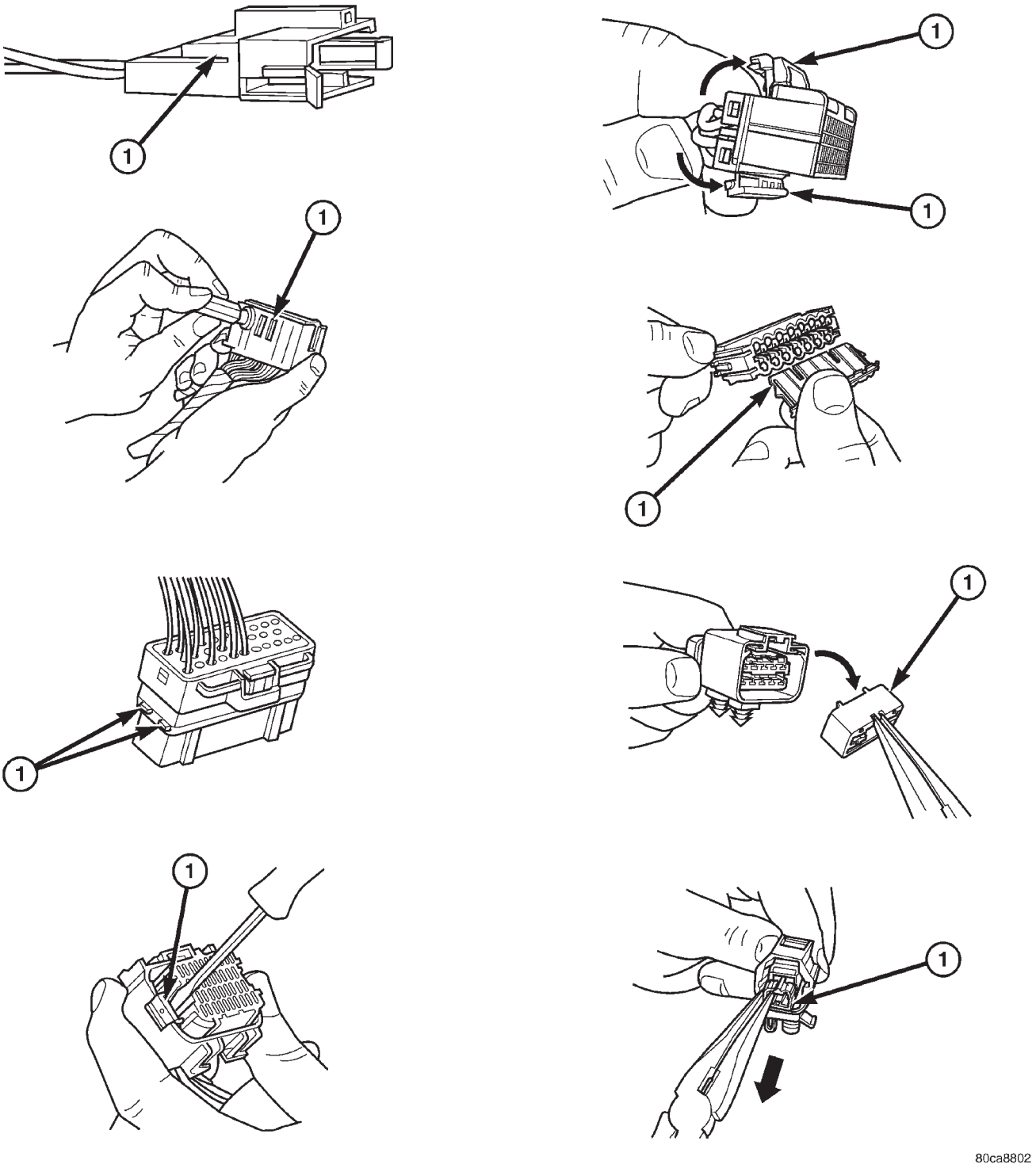

Fig. 11 EXAMPLES OF CONNECTOR SECONDARY TERMINAL LOCKS

1 - Secondary Terminal Lock

CONNECTOR (Continued)

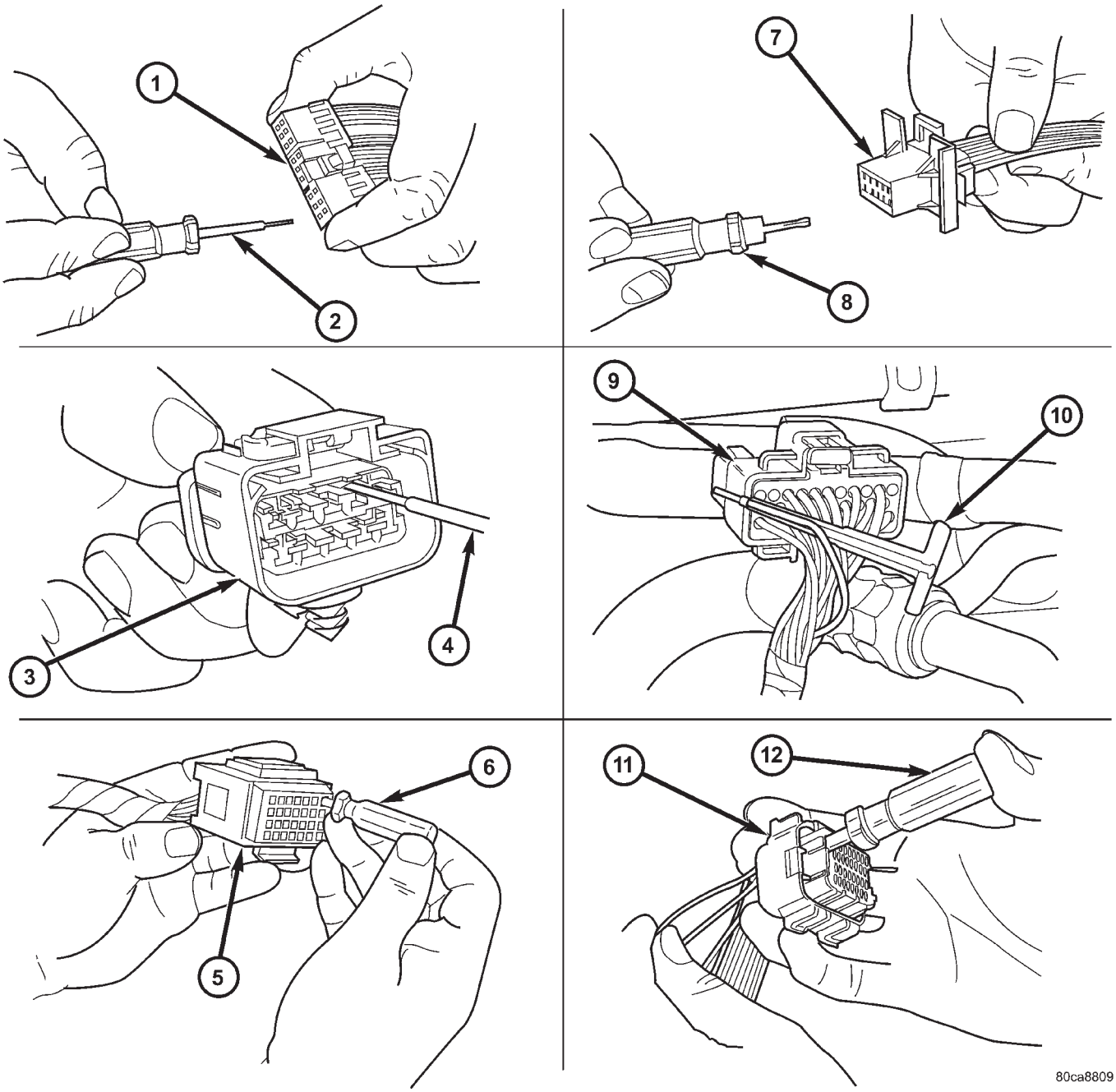

Fig. 12 TERMINAL REMOVAL

1 - TYPICAL CONNECTOR
2 - PICK FROM SPECIAL TOOL KIT 6680
3 - APEX CONNECTOR
4 - PICK FROM SPECIAL TOOL KIT 6680
5 - AUGAT CONNECTOR
6 - SPECIAL TOOL 6932
7 - MOLEX CONNECTOR
8 - SPECIAL TOOL 6742
9 - THOMAS AND BETTS CONNECTOR
10 - SPECIAL TOOL 6934
11 - TYCO CONNECTOR
12 - SPECIAL TOOL 8638

DIODE

REMOVAL

(1) Disconnect the battery.
(2) Locate the diode in the harness, and remove the protective covering.
(3) Remove the diode from the harness, pay attention to the current flow direction (Fig. 13).

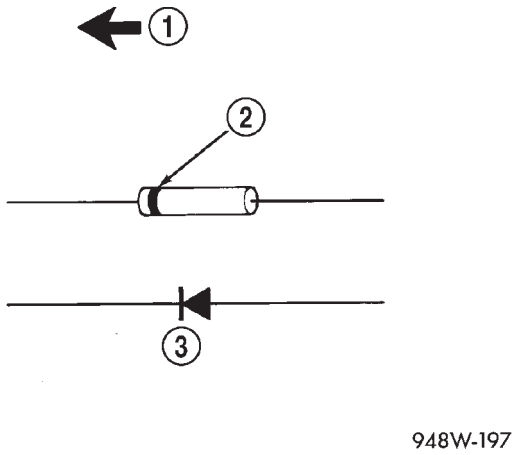

Fig. 13 DIODE IDENTIFICATION

1 - CURRENT FLOW
2 - BAND AROUND DIODE INDICATES CURRENT FLOW
3 - DIODE AS SHOWN IN THE DIAGRAMS

INSTALLATION

(1) Remove the insulation from the wires in the harness. Only remove enough insulation to solder in the new diode.
(2) Install the new diode in the harness, making sure current flow is correct. If necessary, refer to the appropriate wiring diagram for current flow (Fig. 13).
(3) Solder the connection together using rosin core type solder only. **Do not use acid core solder.**
(4) Tape the diode to the harness using electrical tape. Make sure the diode is completely sealed from the elements.
(5) Re-connect the battery and test affected systems.

TERMINAL

REMOVAL

(1) Follow steps for removing terminals described in the connector removal section.
(2) Cut the wire 6 inches from the back of the connector.

INSTALLATION

(1) Select a wire from the terminal repair kit that best matches the color and gage of the wire being repaired.
(2) Cut the repair wire to the proper length and remove one–half (1/2) inch of insulation.
(3) Splice the repair wire to the wire harness (see wire splicing procedure).
(4) Insert the repaired wire into the connector.
(5) Install the connector locking wedge, if required, and reconnect the connector to its mating half/component.
(6) Re-tape the wire harness starting at 1–1/2 inches behind the connector and 2 inches past the repair.
(7) Connect battery and test all affected systems.

WIRE

STANDARD PROCEDURE - WIRE SPLICING

When splicing a wire, it is important that the correct gage be used as shown in the wiring diagrams.

(1) Remove one-half (1/2) inch of insulation from each wire that needs to be spliced.

(2) Place a piece of adhesive lined heat shrink tubing on one side of the wire. Make sure the tubing will be long enough to cover and seal the entire repair area.

(3) Place the strands of wire overlapping each other inside of the splice clip (Fig. 14).

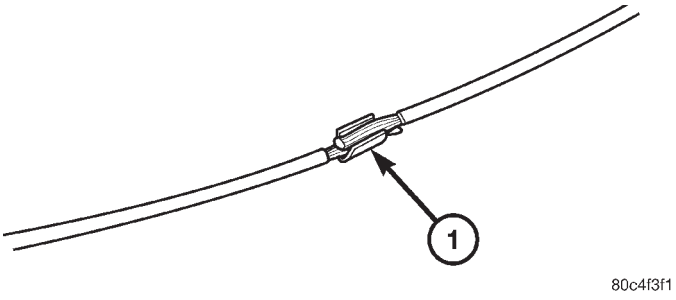

Fig. 14 SPLICE BAND

1 - SPLICE BAND

(4) Using crimping tool, Mopar p/n 05019912AA, crimp the splice clip and wires together (Fig. 15).

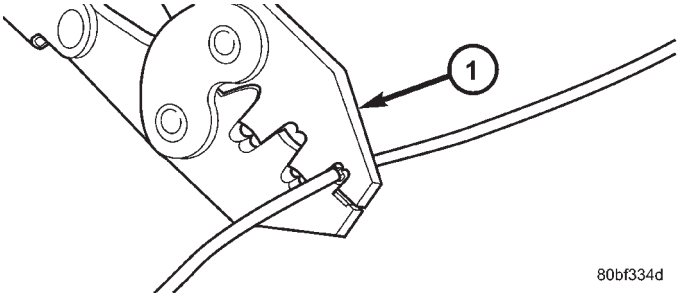

Fig. 15 CRIMPING TOOL

1 - CRIMPING TOOL

(5) Solder the connection together using rosin core type solder only (Fig. 16).

CAUTION: DO NOT USE ACID CORE SOLDER.

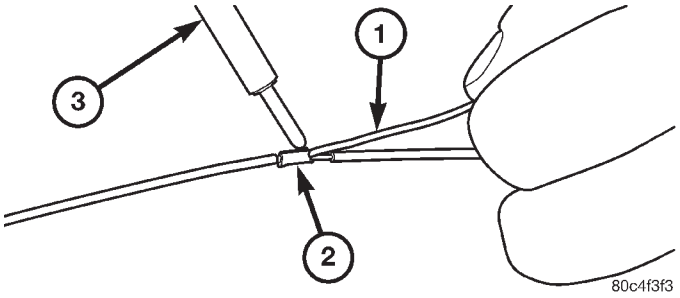

Fig. 16 SOLDER SPLICE

1 - SOLDER
2 - SPLICE BAND
3 - SOLDERING IRON

(6) Center the heat shrink tubing over the joint and heat using a heat gun. Heat the joint until the tubing is tightly sealed and sealant comes out of both ends of the tubing (Fig. 17).

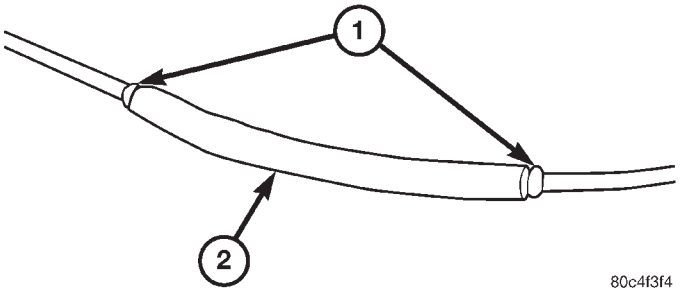

Fig. 17 HEAT SHRINK TUBE

1 - SEALANT
2 - HEAT SHRINK TUBE

8W-02 COMPONENT INDEX

Component	Page
A/C Compressor Clutch Relay	8W-42
A/C Compressor Clutch	8W-42
A/C- Heater Control	8W-42
A/C Pressure Sensor	8W-42
A/C-Heater Control	8W-42
Accelerator Pedal Position Sensor	8W-30
Accessory Relay	8W-10
Adjustable Pedals Module	8W-30
Adjustable Pedals Switch	8W-30
Airbag Control Module	8W-43
Ambient Temp Sensor	8W-49
Antenna	8W-47
Auto Shut Down Relay	8W-30
Auto Temp Control	8W-42
Automatic Day/Night Mirror	8W-49
Back-Up Lamp Switch	8W-51
Battery Temperature Sensor	8W-20
Battery	8W-20
Blend Door Actuators	8W-42
Body Control Module	8W-45
Boost Pressure Sensor	8W-30
B-Pillar Switches	8W-61
Brake Lamp Switch	8W-30, 51
Brake Transmission Shift Interlock Solenoid	8W-31
Cabin Heater Assist	8W-30
Camshaft Position Sensor	8W-30
CD Changer	8W-47
Center High Mounted Stop Lamp	8W-51
Cinch/Release Motors	8W-61
Clockspring	8W-33, 41, 43, 47
Clutch Pedal Interlock Switch Jumper	8W-10
Clutch Pedal Interlock Switch	8W-10
Combination Relays	8W-54
Controller Antilock Brake	8W-35
Crank Case Ventilation Heater	8W-30
Crankshaft Position Sensor	8W-30
Cylinder Lock Switches	8W-39
Data Link Connector	8W-18
Diagnostic Junction Port	8W-18
Door Ajar Switches	8W-39
Door Lock Motor/Ajar Switches	8W-61
Door Lock Switches	8W-61
Driver Airbag	8W-43
EGR Solenoid	8W-30
Electric Wiper De-Icer	8W-48
Engine Control Module	8W-30
Engine Coolant Temp Sensor	8W-30
Engine Oil Pressure Switch	8W-30
EVAP/Purge Solenoid	8W-30
Evaporator Temperature Sensor	8W-42
Floor Console Lamp	8W-44

Component	Page
Fog Lamps	8W-50
Front Blower Module	8W-42
Front Blower Motor Relay	8W-42
Front Blower Motor	8W-42
Front Cigar Lighter	8W-41
Front Control Module	8W-10
Front Fog Lamp Relay	8W-50
Front Intrusion Sensor	8W-39
Front Washer Pump Motor	8W-53
Front Wiper On/Off Relay	8W-53
Fuel Heater	8W-30
Fuel Injectors	8W-30
Fuel Pressure Solenoid	8W-30
Fuel Pump Module	8W-30
Full Open Switches	8W-61
Fuselink	8W-10
Fuses	8W-10
Generator	8W-20
Glow Plug Relay	8W-30
Glow Plugs	8W-30
Grounds	8W-15
Halo Lamp	8W-44
Headlamp Leveling Motors	8W-50
Headlamp Switch	8W-50
Headlamp Washer Relay	8W-53
Headlamps	8W-50
Heated Seat Backs	8W-63
Heated Seat Cushions	8W-63
Heated Seat Modules	8W-63
High Beam Lamps	8W-50
High Note Horn	8W-41
Horn Relay	8W-41
Idle Air Control Motor	8W-30
Ignition Coil	8W-30
Ignition Switch	8W-10
Inlet Air Temperature Sensor	8W-30
Instrument Cluster	8W-40
Instrument Panel Switch Bank	8W-44, 52, 53, 63
Integrated Power Module	8W-10
Knock Sensor	8W-30
License Lamp	8W-51
Lift Pump Motor	8W-30
Liftgate Ajar Switch	8W-39, 61
Liftgate Cinch/Release Motor	8W-61
Liftgate Cylinder Lock Switch	8W-39
Liftgate Flood Lamps	8W-44
Liftgate Right Pinch Sensor	8W-61
Low Beam Lamps	8W-50-9
Manifold Absolute Pressure Sensor	8W-30
Mass Air Flow Sensor	8W-30
Memory Seat/Mirror Module	8W-62, 63
Memory Set Switch	8W-63

Component	Page
Mid Reading Lamps	8W-44
Mode Door Actuator	8W-42
Multi- Function Switch	8W-50, 52, 53
Output Speed Sensor	8W-31
Overhead Console	8W-49
Oxygen Sensor 1/1 Upstream	8W-30
Oxygen Sensor 1/2 Downstream	8W-30
Park Lamp Relay	8W-10
Park Lamps	8W-50
Park/Turn Signal Lamps	8W-50
Parking Brake Switch	8W-40
Passenger Airbag	8W-43
Positive Temperature Coefficients	8W-10
Power Liftgate Module	8W-61
Power Liftgate Motor	8W-61
Power Mirror Switch	8W-62
Power Mirrors	8W-62
Power Outlet	8W-41
Power Seat Circuit Breaker	8W-10
Power Seat Front Riser Motors	8W-63
Power Seat Horizontal Motors	8W-63
Power Seat Horizontal Position Sensors	8W-63
Power Seat Rear Riser Motors	8W-63
Power Seat Rear Riser Position Sensors	8W-63
Power Seat Recliner Motors	8W-63
Power Seat Switches	8W-63
Power Window Circuit Breaker	8W-10
Power Window Motors	8W-60
Power Window Switches	8W-60
Powertrain Control Module	8W-30
Radiator Fan Relays	8W-42
Radiator Fans	8W-42
Radio Choke	8W-47
Radio	8W-47
Reading Lamps	8W-44
Rear A/C-Heater Unit	8W-42
Rear Auto Temp Control Switch	8W-42
Rear Blower Front Control Switch	8W-42
Rear Blower Motor Power Module	8W-42
Rear Blower Motor Relay	8W-42
Rear Blower Motor	8W-42
Rear Blower Rear Control Switch	8W-42
Rear Intrusion Sensor	8W-39
Rear Lamp Assemblies	8W-51
Rear Mode Motor	8W-42
Rear Power Outlet	8W-41
Rear Temperature Motor	8W-42
Rear Washer Pump Motor	8W-53
Rear Window Defogger Grid	8W-48
Recirculation Door Actuator	8W-42
Remote Keyless Entry Antenna	8W-61
Remote Radio Switches	8W-47
Repeater Lamps	8W-52
Seat Airbag	8W-43
Seat Belt Tensioners	8W-43
Sentry Key Immobilizer Module	8W-39
Side Impact Airbag Control Modules	8W-43
Siren	8W-39
Sliding Door Control Modules	8W-61
Sliding Door Latch Sensing Switches	8W-61
Sliding Door Lock Motor/Ajar Switches	8W-61
Sliding Door Lock Motors	8W-61
Sliding Door Motors	8W-61
Solenoid/Pressure Switch Assy	8W-31
Speakers	8W-47
Speed Control Servo	8W-33
Speed Control Switches	8W-33
Splice Information	8W-70
Starter Motor Relay	8W-21
Starter Motor	8W-21
Stop/Turn Signal Relays	8W-54
Thatcham Alarm Module	8W-39
Throttle Position Sensor	8W-30
Torque Converter Clutch Solenoid	8W-31
Traction Control Switch	8W-35
Trailer Tow Connector	8W-54
Transmission Control Module	8W-31
Transmission Range Sensor	8W-31
Turn Signal Lamps	8W-52
TXV Solenoid	8W-42
Vehicle Speed Sensor	8W-30
Vent Motors	8W-60
Visor/Vanity Lamps	8W-44
Washer Fluid Level Switch	8W-53
Water In Fuel Sensor	8W-30
Wheel Speed Sensors	8W-35

8W-10 POWER DISTRIBUTION

Component	Page
A/C Compressor Clutch	8W-10-22, 24, 45, 47
A/C Compressor Clutch Relay	8W-10-22, 24, 44, 45, 47
Accessory Relay	8W-10-16, 31, 64
Adjustable Pedals Module	8W-10-40, 46
Airbag Control Module	8W-10-63, 68
Ambient Temp Sensor	8W-10-61
Auto Shut Down Relay	8W-10-21, 41
Auto Temp Control	8W-10-40
Back-Up Lamp Switch	8W-10-65
Battery	8W-10-13, 14, 15, 41, 47
Blower Motor Resistor	8W-10-19, 38
Body Control Module	8W-10-25, 40, 45, 48, 49, 51, 53, 54, 55, 56, 68
Brake Fluid Level Switch	8W-10-64
Brake Lamp Switch	8W-10-26, 51, 66
Brake Transmission Shift Interlock Solenoid	8W-10-62
Cabin Heater Assist	8W-10-23, 43, 59
Camshaft Position Sensor	8W-10-44
Center High Mounted Stop Lamp	8W-10-66
Clockspring	8W-10-60
Clutch Pedal Interlock Switch	8W-10-18, 37, 53, 54, 60
Clutch Pedal Interlock Switch Jumper	8W-10-18, 37, 53, 54, 60
Controller Antilock Brake	8W-10-18, 25, 37, 49, 55, 61, 66
Crank Case Ventilation Heater	8W-10-48
Data Link Connector	8W-10-36, 68
Defogger Relay	8W-10-19, 20, 39, 63
Diagnostic Junction Port	8W-10-61
Driver Door Lock Switch	8W-10-33, 35
Driver Heated Seat Module	8W-10-49
Driver Power Seat Switch	8W-10-49
Driver Power Window Switch	8W-10-34, 35
ECM/PCM Relay	8W-10-23, 43
EGR Solenoid	8W-10-44, 46
Electric Wiper De-Icer	8W-10-33
Engine Control Module	8W-10-18, 23, 24, 37, 43, 44, 47, 48, 65, 66
Floor Console Lamp	8W-10-32
Floor Console Power Outlet	8W-10-32, 36
Front Blower Module	8W-10-19, 38
Front Blower Motor Relay	8W-10-18, 19, 38, 63
Front Cigar Lighter	8W-10-16, 32
Front Control Module	8W-10-15, 16, 17, 18, 19, 20, 22, 24, 26, 27, 28, 29, 30, 31, 36, 37, 38, 39, 45, 47, 52, 53, 54, 57, 58, 59, 60, 61, 62, 63, 64, 65, 66, 68
Front Fog Lamp Relay	8W-10-15, 27, 63
Front Washer Pump Motor	8W-10-16, 31, 68
Front Wiper Hi/Low Relay	8W-10-16, 30, 64
Front Wiper On/Off Relay	8W-10-16, 30, 59
Fuel Heater	8W-10-48
Fuel Heater Relay	8W-10-24, 47, 64
Fuel Injector No. 1	8W-10-42
Fuel Injector No. 2	8W-10-42
Fuel Injector No. 3	8W-10-42
Fuel Injector No. 4	8W-10-42
Fuel Injector No. 5	8W-10-42
Fuel Injector No. 6	8W-10-42
Fuel Pressure Solenoid	8W-10-44
Fuel Pump Module	8W-10-22, 45
Fuel Pump Relay	8W-10-22, 45, 64
Fuse 1	8W-10-15, 16, 27
Fuse 2	8W-10-15, 28, 29
Fuse 3	8W-10-15, 28, 29
Fuse 4	8W-10-15, 16, 17, 30
Fuse 5	8W-10-16, 31
Fuse 6	8W-10-16, 31
Fuse 8	8W-10-17, 36
Fuse 9	8W-10-17, 18, 19, 37
Fuse 10	8W-10-19, 38
Fuse 11	8W-10-16, 31
Fuse 12	8W-10-19, 38
Fuse 13	8W-10-20, 39
Fuse 14	8W-10-20, 21, 23, 39, 59
Fuse 15	8W-10-20, 21, 22, 23, 24, 41, 43
Fuse 16	8W-10-21, 23, 41, 43
Fuse 17	8W-10-21, 22, 23, 24, 45, 47
Fuse 18	8W-10-22, 24, 25, 45, 47
Fuse 19	8W-10-22, 24, 25, 26, 49
Fuse 20	8W-10-25, 49
Fuse 21	8W-10-25, 49
Fuse 22	8W-10-25, 49
Fuse 23	8W-10-25, 53, 54
Fuse 24	8W-10-25, 51
Fuse 26	8W-10-25, 26, 51
Fuse 27	8W-10-26, 51
Fuse 28	8W-10-16, 31
Fuse 30	8W-10-26, 52
Fuse 31	8W-10-26, 52
Fuse 32	8W-10-26, 52
Fuse 33	8W-10-16, 31
Fuselink	8W-10-13, 14
G100	8W-10-55
G101	8W-10-41, 47
G103	8W-10-68
G300	8W-10-57, 58
Generator	8W-10-13, 14, 42, 44
Glow Plug Relay	8W-10-13, 44
Headlamp Switch	8W-10-29, 62

Component	Page
Headlamp Washer Pump Motor	8W-10-26, 52
Headlamp Washer Relay	8W-10-26, 52, 63
High Note Horn	8W-10-36
Horn Relay	8W-10-17, 36, 59
Ignition Coil	8W-10-42
Ignition Switch	8W-10-18, 25, 37, 45, 46, 48, 53, 54, 60
Instrument Cluster	8W-10-25, 51
Integrated Power Module	8W-10-3, 4, 5, 13, 15, 16, 17, 18, 19, 20, 21, 22, 23, 24, 25, 26, 27, 28, 29, 30, 31, 32, 33, 36, 37, 38, 39, 40, 41, 42, 43, 44, 45, 46, 47, 48, 49, 51, 52, 53, 54, 55, 56, 57, 58, 59, 60, 61, 62, 63, 64, 65, 66, 68
Leak Detection Pump	8W-10-46
Left B-Pillar Switch	8W-10-33
Left Combination Relay	8W-10-67
Left Fog Lamp	8W-10-15, 27
Left Front Park/Turn Signal Lamp	8W-10-15, 28, 56, 65
Left Headlamp	8W-10-57
Left Headlamp Leveling Motor	8W-10-29, 62, 65
Left High Beam Lamp	8W-10-58
Left Low Beam Lamp	8W-10-58
Left Park Lamp	8W-10-29, 65
Left Power Mirror	8W-10-39
Left Rear Lamp Assembly	8W-10-28, 29, 65, 66, 67
Left Repeater Lamp	8W-10-51
Left Side Impact Airbag Control Module	8W-10-62
Left Sliding Door Control Module	8W-10-52
Left Stop/Turn Signal Relay	8W-10-67
Left Turn Signal Lamp	8W-10-56
License Lamp	8W-10-28, 29, 65
Lift Pump Motor	8W-10-23, 43
Lift Pump Relay	8W-10-23, 43
Low Note Horn	8W-10-36
Mass Air Flow Sensor	8W-10-44
Memory Seat/Mirror Module	8W-10-49
Message Center	8W-10-51
Name Brand Speaker Relay	8W-10-20, 39, 59
Overhead Console	8W-10-40
Oxygen Sensor 1/1 Upstream	8W-10-42
Oxygen Sensor 1/2 Downstream	8W-10-42
Park Lamp Relay	8W-10-15, 28, 29, 59
Park/Neutral Position Switch	8W-10-65
Passenger Door Lock Switch	8W-10-31, 33
Passenger Folding Mirror Relay	8W-10-22, 24, 45, 47
Passenger Heated Seat Module	8W-10-50
Passenger Power Seat Switch	8W-10-50
Passenger Power Window Switch	8W-10-31
Power Liftgate Module	8W-10-26, 52
Power Mirror Switch	8W-10-22, 24, 46, 47
Power Outlet	8W-10-36
Power Seat Circuit Breaker	8W-10-25, 49
Power Window Circuit Breaker	8W-10-16, 31
Power Window Switch	8W-10-34
Powertrain Control Module	8W-10-18, 21, 22, 37, 41, 42, 45, 46, 55
PTC 4	8W-10-20, 39
PTC 7	8W-10-16, 17, 18, 36
Radiator Fan Relay	8W-10-26, 51, 55
Radiator Fan Relay No. 1	8W-10-13, 44
Radiator Fan Relay No. 2	8W-10-26, 44, 51
Radiator Fan Relay No. 3	8W-10-44
Radio	8W-10-32, 40
Radio Choke	8W-10-20, 39
Rear A/C-Heater Unit	8W-10-19, 38
Rear Blower Motor Power Module	8W-10-19, 38
Rear Blower Motor Relay	8W-10-19, 20, 38, 63
Rear Power Outlet	8W-10-16, 31, 32
Rear Washer Pump Motor	8W-10-16, 31, 68
Rear Window Defogger Grid	8W-10-20, 39
Rear Wiper Motor	8W-10-33
Remote Keyless Entry Module	8W-10-40
Right B-Pillar Switch	8W-10-33
Right Combination Relay	8W-10-67
Right Fog Lamp	8W-10-15, 27
Right Front Park/Turn Signal Lamp	8W-10-15, 28, 56, 60
Right Headlamp	8W-10-57
Right Headlamp Leveling Motor	8W-10-29, 60, 62
Right High Beam Lamp	8W-10-58
Right Low Beam Lamp	8W-10-58
Right Park Lamp	8W-10-29, 60
Right Power Mirror	8W-10-39
Right Rear Lamp Assembly	8W-10-15, 28, 29, 66
Right Repeater Lamp	8W-10-51
Right Side Impact Airbag Control Module	8W-10-62
Right Sliding Door Control Module	8W-10-52
Right Stop/Turn Signal Relay	8W-10-67
Right Turn Signal Lamp	8W-10-56
Sentry Key Immobilizer Module	8W-10-40, 46, 48, 53, 54
Solenoid/Pressure Switch Assy	8W-10-41
Starter Motor	8W-10-13, 14, 18, 37
Starter Motor Relay	8W-10-18, 37, 53, 54
Thatcham Alarm Module	8W-10-46, 48, 54, 68
Torque Converter Clutch Solenoid	8W-10-46
Trailer Tow Connector	8W-10-28, 65
Transmission Control Module	8W-10-18, 21, 37, 41, 61, 62
Transmission Control Relay	8W-10-21, 41
Transmission Range Sensor	8W-10-65
TXV Solenoid	8W-10-38
Vehicle Speed Sensor	8W-10-43
Washer Fluid Level Switch	8W-10-60
Wiper Module	8W-10-16, 30, 59

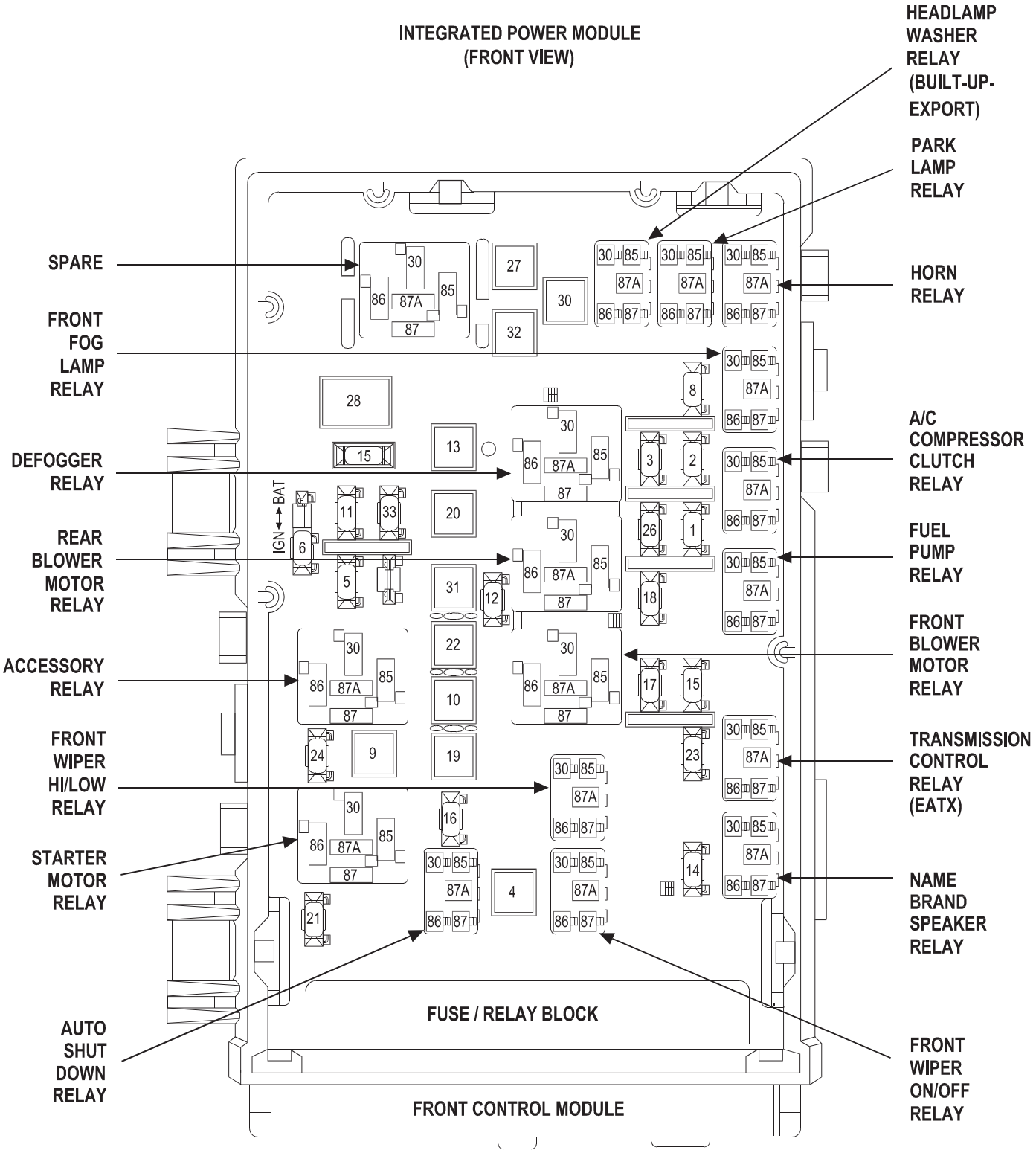
INTEGRATED POWER MODULE
(FRONT VIEW)
HEADLAMP WASHER RELAY (BUILT-UP-EXPORT)
PARK LAMP RELAY
SPARE
HORN RELAY
FRONT FOG LAMP RELAY
A/C COMPRESSOR CLUTCH RELAY
DEFOGGER RELAY
FUEL PUMP RELAY
REAR BLOWER MOTOR RELAY
FRONT BLOWER MOTOR RELAY
ACCESSORY RELAY
TRANSMISSION CONTROL RELAY (EATX)
FRONT WIPER HI/LOW RELAY
NAME BRAND SPEAKER RELAY
STARTER MOTOR RELAY
FRONT WIPER ON/OFF RELAY
AUTO SHUT DOWN RELAY
IGN BAT
FUSE / RELAY BLOCK
FRONT CONTROL MODULE

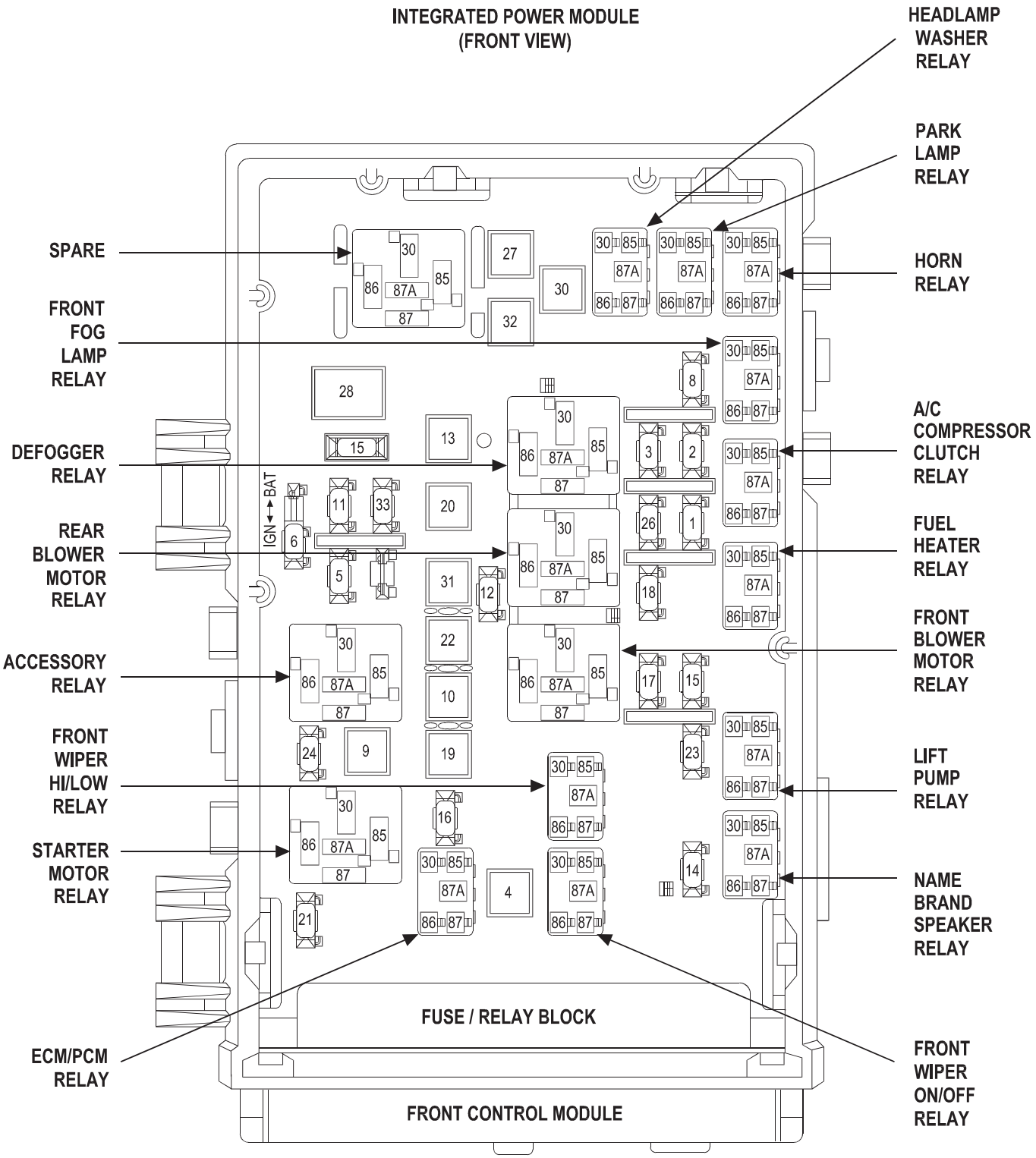
INTEGRATED POWER MODULE
(FRONT VIEW)
HEADLAMP WASHER RELAY
PARK LAMP RELAY
SPARE
HORN RELAY
FRONT FOG LAMP RELAY
A/C COMPRESSOR CLUTCH RELAY
DEFOGGER RELAY
FUEL HEATER RELAY
REAR BLOWER MOTOR RELAY
FRONT BLOWER MOTOR RELAY
ACCESSORY RELAY
LIFT PUMP RELAY
FRONT WIPER HI/LOW RELAY
NAME BRAND SPEAKER RELAY
STARTER MOTOR RELAY
FUSE / RELAY BLOCK
ECM/PCM RELAY
FRONT WIPER ON/OFF RELAY
FRONT CONTROL MODULE
IGN
BAT

INTEGRATED POWER MODULE
(REAR VIEW)

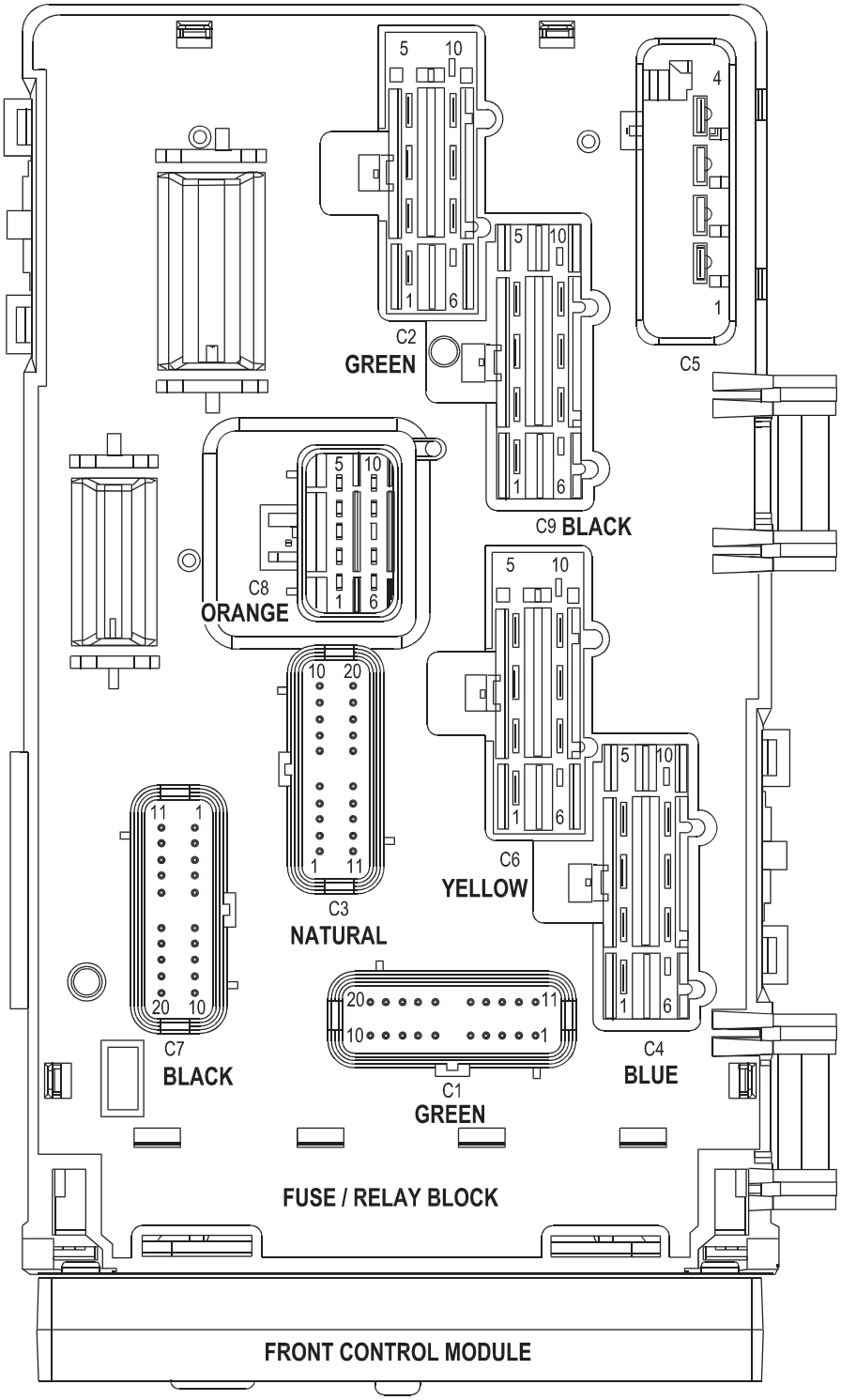

FUSES

FUSE NO.	AMPS	FUSED CIRCUIT	FUNCTION
1	20A	INTERNAL	FUSED B(+)
2	15A	INTERNAL	FUSED PARK LAMP RELAY OUTPUT
3	15A	INTERNAL	FUSED PARK LAMP RELAY OUTPUT
4	30A	INTERNAL	FUSED B(+)
5	20A	F306 16DB/PK	FUSED ACCESSORY RELAY OUTPUT
6	20A	F307 16LB/PK ▲	FUSED B(+)
6	20A	F307 16LB/PK ▲▲	FUSED ACCESSORY RELAY OUTPUT
8	20A	INTERNAL	FUSED B(+)
9	40A	INTERNAL	FUSED B(+)
10	40A	C7 12DB	FUSED FRONT BLOWER MOTOR RELAY OUTPUT
11	20A	F302 18GY/PK	FUSED ACCESSORY RELAY OUTPUT
12	25A	C51 12LB/BR	FUSED REAR BLOWER MOTOR RELAY OUTPUT
13	40A	C15 12DB/WT	FUSED REAR WINDOW DEFOGGER RELAY OUTPUT
14	15A	INTERNAL	FUSED B(+) (I.O.D.)
15	20A	INTERNAL ■	FUSED B(+)
15	20A	INTERNAL ◒◒	FUSED B(+)
16	25A	INTERNAL	FUSED B(+)
17	20A	INTERNAL	FUSED B(+)
18	15A	INTERNAL	FUSED B(+)
19	40A	A101 12VT/RD	FUSED B(+)
20	40A	A102 12WT/RD	FUSED B(+)
21	25A	A111 12DG/RD	FUSED B(+)
22	40A	A110 12OR/RD	FUSED B(+)
23	10A	A106 20LB/RD	FUSED B(+)
24	20A	A701 16BR/RD	FUSED B(+) (HAZARD)
26	20A	A103 18GY/RD	FUSED B(+)
27	40A	A112 12OR/RD	FUSED B(+)
28	40A	F30 12PK/YL	FUSED ACCESSORY RELAY OUTPUT
30	40A	INTERNAL ◪◪	FUSED B(+)
31	40A	A113 12WT/RD	FUSED B(+)
32	40A	A115 12YL/RD	FUSED B(+)
33	15A	INTERNAL	FUSED ACCESSORY RELAY OUTPUT

▲ BATTERY POSITION
▲▲ ACCESSORY RELAY POSITION
■ EATX
◪◪ BUILT-UP-EXPORT
◒◒ DIESEL

POSITIVE TEMPERATURE COEFFICIENTS

PTC NO.	AMPS	FUSED CIRCUIT	FUNCTION
4	8A	C16 18DB/GY	FUSED REAR WINDOW DEFOGGER RELAY OUTPUT
7	13A	A105 18DB/RD	FUSED B(+)

RELAYS

A/C COMPRESSOR CLUTCH RELAY

CAVITY	CIRCUIT	FUNCTION
30	INTERNAL	FUSED B(+)
85	C13 18LB/OR ◒	A/C COMPRESSOR CLUTCH RELAY CONTROL
85	C13 20LB/OR ◒◒	A/C COMPRESSOR CLUTCH RELAY CONTROL
86	F202 18PK/GY ◒	FUSED IGNITION SWITCH OUTPUT (RUN-START)
86	K342 16BR/WT ◒◒	POWERTRAIN CONTROL MODULE RELAY OUTPUT
87	C3 18DB/YL	A/C COMPRESSOR CLUTCH RELAY OUTPUT
87A	-	-

ACCESSORY RELAY

CAVITY	CIRCUIT	FUNCTION
30	INTERNAL	B(+)
85	FCM 35	ACCESSORY RELAY CONTROL (RUN-ACC)
86	INTERNAL	B(+)
87	INTERNAL	FUSED ACCESSORY RELAY OUTPUT
87A	-	-

AUTO SHUT DOWN RELAY (GAS)

CAVITY	CIRCUIT	FUNCTION
30	K342 16BR/WT	AUTOMATIC SHUTDOWN RELAY OUTPUT
85	K51 18BR/WT	AUTOMATIC SHUTDOWN RELAY CONTROL
86	INTERNAL	FUSED B(+)
87	INTERNAL	FUSED B(+)
87A	-	-

◒ GAS
◒◒ DIESEL

DEFOGGER RELAY

CAVITY	CIRCUIT	FUNCTION
30	INTERNAL	B(+)
85	FCM 31	REAR WINDOW DEFOGGER RELAY CONTROL
86	INTERNAL	B(+)
87	INTERNAL	FUSED REAR WINDOW DEFOGGER RELAY OUTPUT
87A	-	-

ECM/PCM RELAY (DIESEL)

CAVITY	CIRCUIT	FUNCTION
30	K342 16BR/WT	ECM/PCM RELAY OUTPUT
85	K51 20BR/WT	ECM/PCM RELAY CONTROL
86	INTERNAL	FUSED B(+)
87	INTERNAL	FUSED B(+)
87A	-	-

FRONT BLOWER MOTOR RELAY

CAVITY	CIRCUIT	FUNCTION
30	INTERNAL	B(+)
85	FCM 30	FRONT BLOWER MOTOR RELAY CONTROL
86	INTERNAL	B(+)
87	C7 12DB	FUSED FRONT BLOWER MOTOR RELAY OUTPUT
87A	-	-

FRONT FOG LAMP RELAY

CAVITY	CIRCUIT	FUNCTION
30	INTERNAL	FUSED B(+)
85	FCM 33	FRONT FOG LAMP RELAY CONTROL
86	INTERNAL	FUSED B(+)
87	INTERNAL	FRONT FOG LAMP RELAY OUTPUT
87A	-	-

FRONT WIPER HI/LOW RELAY

CAVITY	CIRCUIT	FUNCTION
30	INTERNAL	FRONT WIPER ON/OFF RELAY OUTPUT
85	FCM 34	FRONT WIPER HIGH/LOW RELAY CONTROL
86	INTERNAL	FORNT WIPER ON/OFF RELAY OUTPUT
87	W4 12BR/OR	FRONT WIPER HIGH/LOW RELAY HIGH SPEED OUTPUT
87A	W3 12BR/WT	FRONT WIPER HIGH/LOW RELAY LOW SPEED OUTPUT

FRONT WIPER ON/OFF RELAY

CAVITY	CIRCUIT	FUNCTION
30	INTERNAL	FRONT WIPER ON/OFF RELAY OUTPUT
85	INTERNAL	FUSED B(+)
86	FCM 14	FRONT WIPER ON/OFF RELAY CONTROL
87	INTERNAL	FUSED B(+)
87A	INTERNAL	GROUND

FUEL HEATER RELAY (DIESEL)

CAVITY	CIRCUIT	FUNCTION
30	N1 16DB/OR	FUEL HEATER RELAY OUTPUT
85	Z114 18BK/LG	GROUND
86	INTERNAL	FUSED IGNITION SWITCH OUTPUT (RUN-START)
87	INTERNAL	FUSED B(+)
87A	-	-

FUEL PUMP RELAY (GAS)

CAVITY	CIRCUIT	FUNCTION
30	N1 16DB/OR	FUEL PUMP RELAY OUTPUT
85	K31 18BR	FUEL PUMP RELAY CONTROL
86	INTERNAL	FUSED IGNITION SWITCH OUTPUT (RUN-START)
87	INTERNAL	FUSED B(+)
87A	-	-

HEADLAMP WASHER RELAY (BUILT-UP -EXPORT)

CAVITY	CIRCUIT	FUNCTION
30	INTERNAL	FUSED B(+)
85	FCM 32	HEADLAMP WASHER RELAY CONTROL
86	INTERNAL	FUSED B(+)
87	V53 12BR/OR	HEADLAMP WASHER RELAY OUTPUT
87A	-	-

HORN RELAY

CAVITY	CIRCUIT	FUNCTION
30	INTERNAL	FUSED B(+)
85	FCM 10	HORN RELAY CONTROL
86	INTERNAL	FUSED B(+)
87	X2 18DG/OR	HORN RELAY OUTPUT
87A	-	-

LIFT PUMP RELAY (DIESEL)

CAVITY	CIRCUIT	FUNCTION
30	N2 18DB/YL	LIFT PUMP RELAY OUTPUT
85	N21 20DB/TN	LIFT PUMP RELAY CONTROL
86	F202 18PK/GY	FUSED IGNITION SWITCH OUTPUT (RUN-START)
87	INTERNAL	FUSED B(+)
87A	-	-

NAME BRAND SPEAKER RELAY

CAVITY	CIRCUIT	FUNCTION
30	INTERNAL	FUSED B(+) (I.O.D.)
85	FCM 11	NAME BRAND SPEAKER (NBS) RELAY CONTROL
86	INTERNAL	FUSED B(+) (I.O.D.)
87	X1 16DG/BR	NAME BRAND SPEAKER (NBS) RELAY OUTPUT
87A	-	-

PARK LAMP RELAY

CAVITY	CIRCUIT	FUNCTION
30	INTERNAL	B(+)
85	FCM 13	PARK LAMP RELAY CONTROL
86	INTERNAL	B(+)
87	INTERNAL	PARK LAMP RELAY OUTPUT
87A	-	-

REAR BLOWER MOTOR RELAY

CAVITY	CIRCUIT	FUNCTION
30	INTERNAL	B(+)
85	FCM 30	REAR BLOWER MOTOR RELAY CONTROL
86	INTERNAL	B(+)
87	C51 12LB/BR	FUSED REAR BLOWER MOTOR RELAY OUTPUT
87A	-	-

STARTER MOTOR RELAY

CAVITY	CIRCUIT	FUNCTION
30	INTERNAL	FUSED B(+)
85	T752 18DG/OR ◒	ENGINE STARTER MOTOR RELAY CONTROL
85	T752 20DG/OR ◒◒	ENGINE STARTER MOTOR RELAY CONTROL
86	INTERNAL	FUSED IGNITION SWITCH OUTPUT (START)
87	T750 12YL/GY	ENGINE STARTER MOTOR RELAY OUTPUT
87A	-	-

TRANSMISSION CONTROL RELAY (EATX)

CAVITY	CIRCUIT	FUNCTION
30	T16 18YL/OR	TRANSMISSION CONTROL RELAY OUTPUT
85	Z115 18BK/OR △	GROUND
85	Z115 20BK/OR △△	GROUND
86	T15 18YL/BR	TRANSMISSION CONTROL RELAY CONTROL
87	INTERNAL	FUSED B(+)
87A	-	-

◒ GAS △ 2.4L
◒◒ DIESEL △△ 3.3L/3.8L

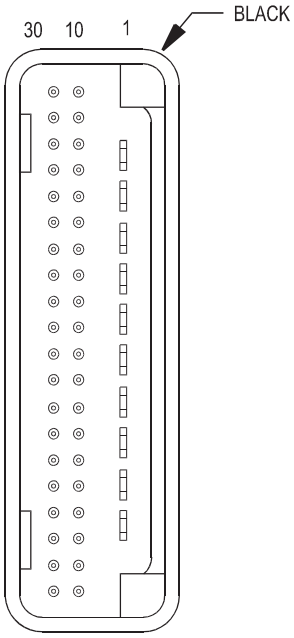

FRONT CONTROL MODULE

CAV	CIRCUIT	FUNCTION
1	A1	B(+)
2	A1	B(+)
3	L43	LEFT LOW BEAM DRIVER
4	L34	RIGHT HIGH BEAM DRIVER
5	L33	LEFT HIGH BEAM DRIVER
6	L44	RIGHT LOW BEAM DRIVER
7	-	NOT USED
8	Z117, Z118, Z343, Z344	GROUND
9	A1	B(+)
10	FCM 10	HORN RELAY CONTROL
11	FCM 11	NAME BRAND SPEAKER RELAY CONTROL
12	-	SPARE
13	FCM 13	PARK LAMP RELAY CONTROL
14	FCM 14	FRONT WIPER ON/OFF RELAY CONTROL
15	C41 ◒◒	CABIN HEATER ASSIST CONTROL
16	W7	FRONT WIPER PARK SWITCH SENSE
17	X3	HORN SWITCH SENSE
18	W1	WASHER FLUID LEVEL SWITCH SENSE
19	FCM 19 ◒	IGNITION SWITCH OUTPUT (START)
20	A114	FUSED B(+) (I.O.D.)
21	L78	FUSED PARK LAMP RELAY OUTPUT (RIGHT)
22	D25	PCI BUS
23	G931	AMBIENT TEMPERATURE SENSOR RETURN
24	-	SPARE
25	G31	AMBIENT TEMPERATURE SENSOR SIGNAL
26	L13 ◪◪	HEADLAMP ADJUST SIGNAL
27	F1, F2	FCM OUTPUT (UNLOCK-RUN-START)
28	F214	FCM OUTPUT (RUN-START) (SIACM)
29	F100	FCM OUTPUT (ORC RUN ONLY DRIVER)
30	FCM 30	FRONT/REAR BLOWER MOTOR RELAY CONTROL
31	FCM 31	REAR WINDOW DEFOGGER RELAY CONTROL
32	FCM 32 ◪◪	HEADLAMP WASHER RELAY CONTROL
33	FCM 33	FRONT FOG LAMP RELAY CONTROL
34	FCM 34	FRONT WIPER HIGH/LOW RELAY CONTROL
35	FCM 35	ACCESSORY RELAY CONTROL (RUN-ACC)
36	B20	BRAKE FLUID LEVEL SWITCH SENSE
37	F20	IGNITION SWITCH OUTPUT (RUN-START)
38	A1	B(+) (WHEN IPM C-5 CPA IS NOT ENGAGED)
39	T2	TRS REVERSE SENSE
40	T753 ◒◒	IGNITION SWITCH OUTPUT (START)
41	L77	FUSED PARK LAMP RELAY OUTPUT (LEFT)
42	D23	FLASH PROGRAM ENABLE
43	Z116	GROUND
44	L50	PRIMARY BRAKE SWITCH SIGNAL
45	W10	FRONT WASHER PUMP MOTOR CONTROL
46	W20	REAR WASHER PUMP MOTOR CONTROL
47	K32	BRAKE TRANSMISSION SHIFT INTERLOCK SOLENOID CONTROL
48	F201	FCM OUTPUT (RUN-START) (ORC)
49	-	NOT USED

◒ GAS
◒◒ DIESEL
◪◪ BUILT-UP-EXPORT

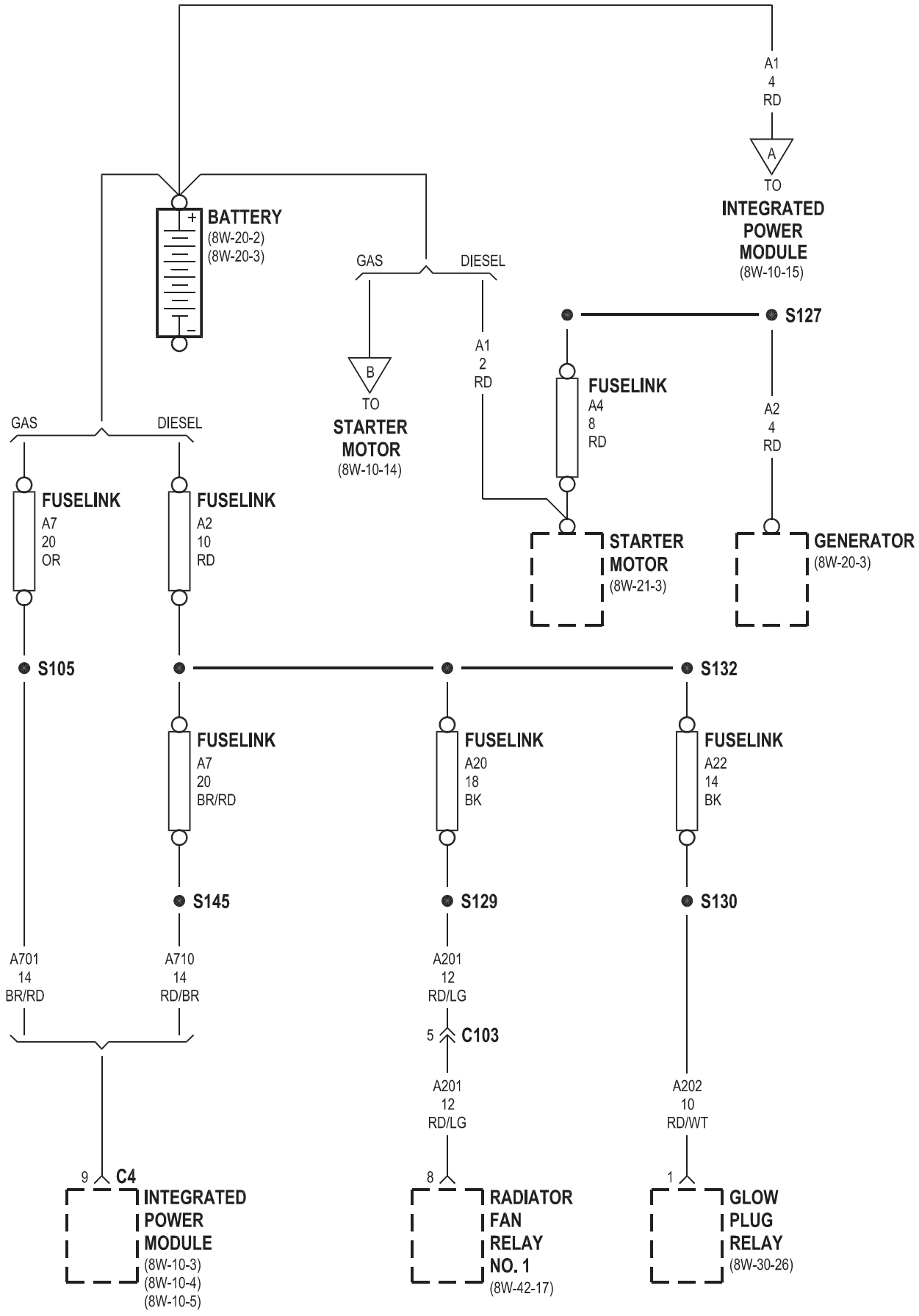
A1
4
RD
A
TO
INTEGRATED
POWER
MODULE
(8W-10-15)
BATTERY
(8W-20-2)
(8W-20-3)
GAS
DIESEL
B
TO
STARTER
MOTOR
(8W-10-14)
A1
2
RD
S127
FUSELINK
A4
8
RD
A2
4
RD
GAS
DIESEL
FUSELINK
A7
20
OR
FUSELINK
A2
10
RD
STARTER
MOTOR
(8W-21-3)
GENERATOR
(8W-20-3)
S105
S132
FUSELINK
A7
20
BR/RD
FUSELINK
A20
18
BK
FUSELINK
A22
14
BK
S145
S129
S130
A701
14
BR/RD
A710
14
RD/BR
A201
12
RD/LG
5 C103
A201
12
RD/LG
A202
10
RD/WT
9 C4
INTEGRATED
POWER
MODULE
(8W-10-3)
(8W-10-4)
(8W-10-5)
8
RADIATOR
FAN
RELAY
NO. 1
(8W-42-17)
1
GLOW
PLUG
RELAY
(8W-30-26)

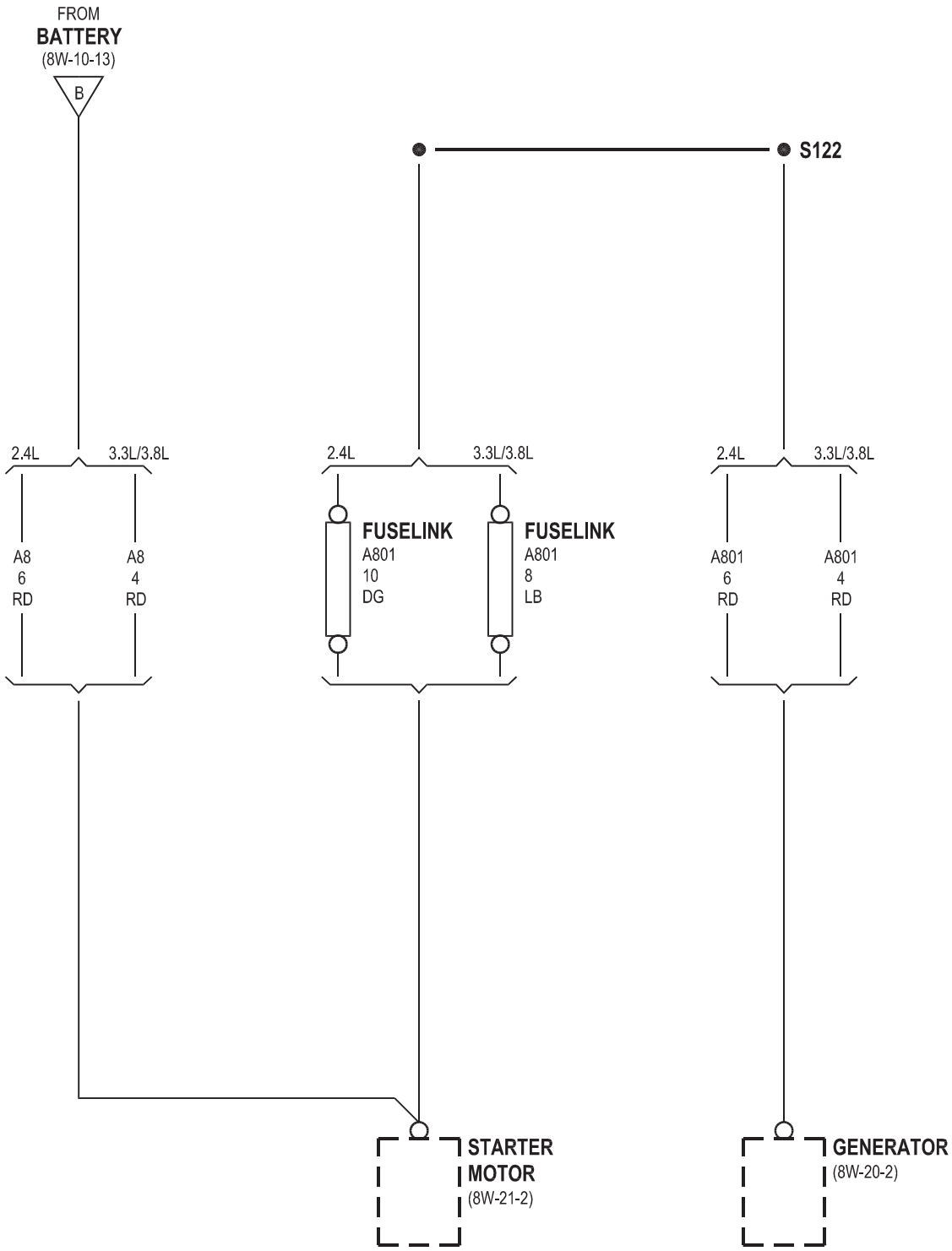
FROM
BATTERY
(8W-10-13)
B
S122
2.4L
3.3L/3.8L
A8
6
RD
A8
4
RD
2.4L
3.3L/3.8L
FUSELINK
A801
10
DG
FUSELINK
A801
8
LB
2.4L
3.3L/3.8L
A801
6
RD
A801
4
RD
STARTER
MOTOR
(8W-21-2)
GENERATOR
(8W-20-2)

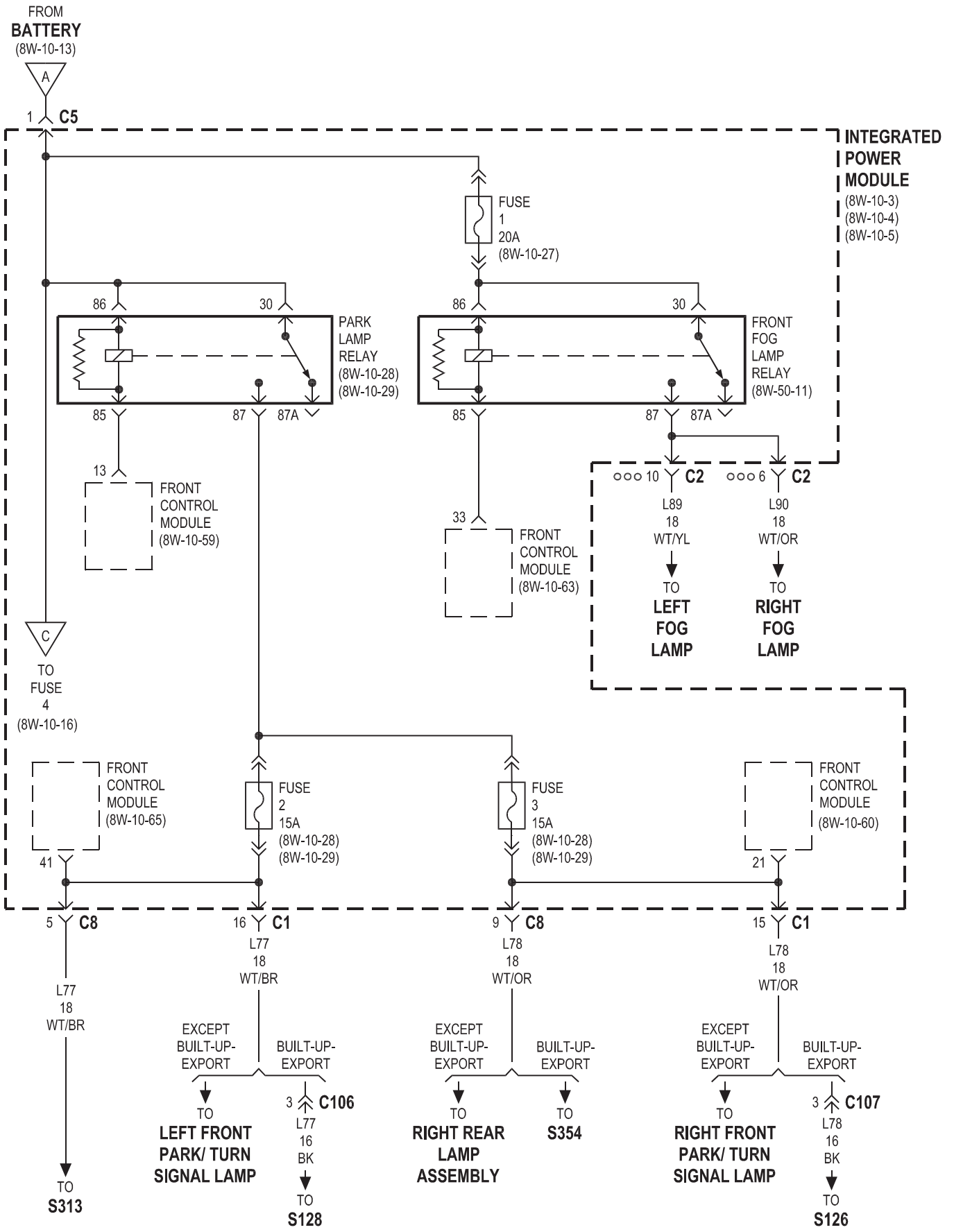
FROM
BATTERY
(8W-10-13)
A
1 C5
INTEGRATED
POWER
MODULE
(8W-10-3)
(8W-10-4)
(8W-10-5)
FUSE
1
20A
(8W-10-27)
86
30
PARK
LAMP
RELAY
(8W-10-28)
(8W-10-29)
85
87
87A
13
FRONT
CONTROL
MODULE
(8W-10-59)
86
30
FRONT
FOG
LAMP
RELAY
(8W-50-11)
85
87
87A
33
FRONT
CONTROL
MODULE
(8W-10-63)
10 C2
6 C2
L89
18
WT/YL
L90
18
WT/OR
TO
LEFT
FOG
LAMP
TO
RIGHT
FOG
LAMP
C
TO
FUSE
4
(8W-10-16)
FRONT
CONTROL
MODULE
(8W-10-65)
41
FUSE
2
15A
(8W-10-28)
(8W-10-29)
FUSE
3
15A
(8W-10-28)
(8W-10-29)
FRONT
CONTROL
MODULE
(8W-10-60)
21
5 C8
16 C1
9 C8
15 C1
L77
18
WT/BR
L77
18
WT/BR
L78
18
WT/OR
L78
18
WT/OR
EXCEPT
BUILT-UP-
EXPORT
BUILT-UP-
EXPORT
EXCEPT
BUILT-UP-
EXPORT
BUILT-UP-
EXPORT
EXCEPT
BUILT-UP-
EXPORT
BUILT-UP-
EXPORT
TO
S313
TO
LEFT FRONT
PARK/ TURN
SIGNAL LAMP
3 C106
L77
16
BK
TO
S128
TO
RIGHT REAR
LAMP
ASSEMBLY
TO
S354
TO
RIGHT FRONT
PARK/ TURN
SIGNAL LAMP
3 C107
L78
16
BK
TO
S126
EXCEPT BASE

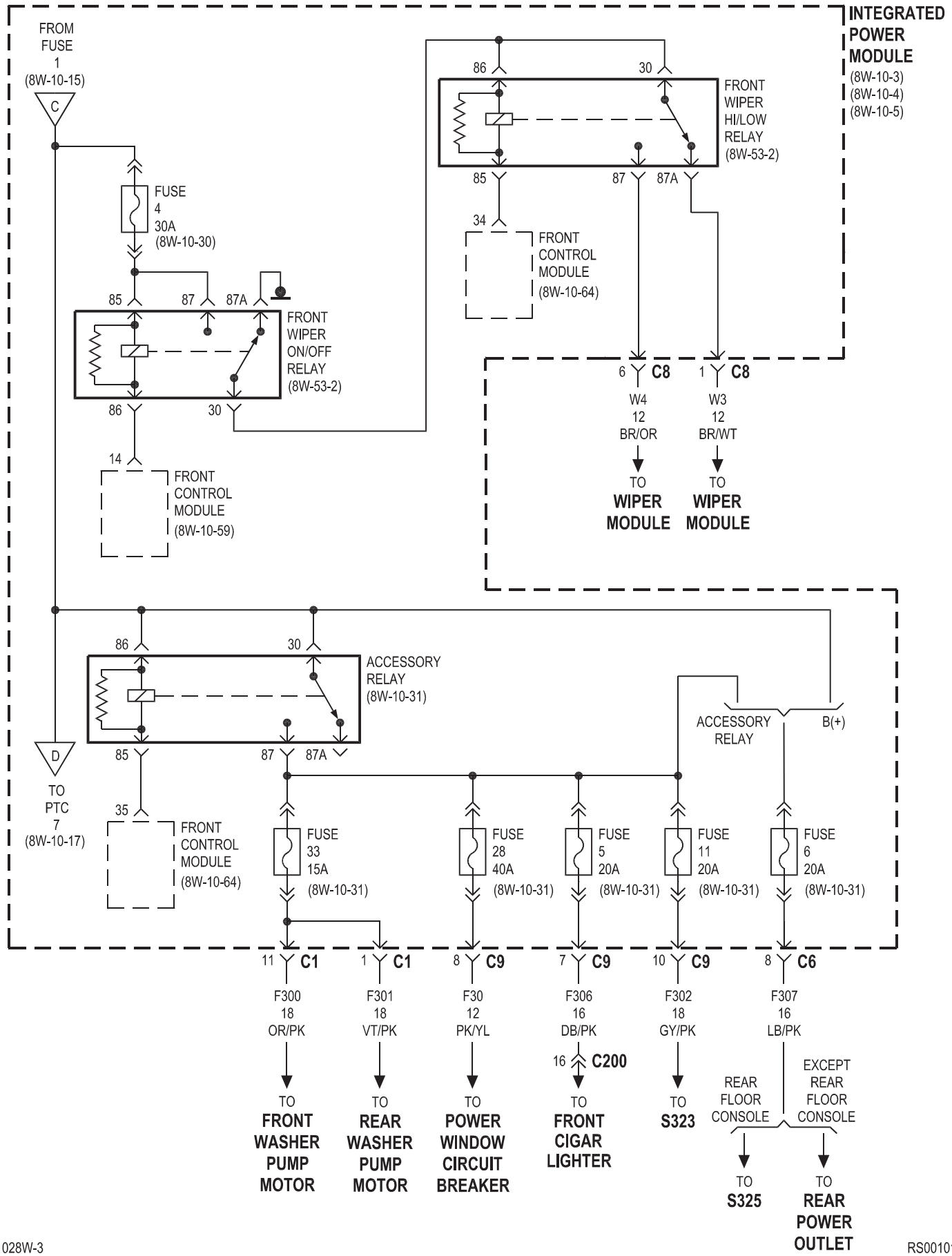
INTEGRATED POWER MODULE
(8W-10-3)
(8W-10-4)
(8W-10-5)
FROM FUSE 1 (8W-10-15)
C
FUSE 4 30A (8W-10-30)
85
87
87A
FRONT WIPER ON/OFF RELAY (8W-53-2)
86
30
14
FRONT CONTROL MODULE (8W-10-59)
86
30
FRONT WIPER HI/LOW RELAY (8W-53-2)
85
87
87A
34
FRONT CONTROL MODULE (8W-10-64)
6 C8
1 C8
W4 12 BR/OR
W3 12 BR/WT
TO WIPER MODULE
TO WIPER MODULE
D
TO PTC 7 (8W-10-17)
86
30
ACCESSORY RELAY (8W-10-31)
85
87
87A
35
FRONT CONTROL MODULE (8W-10-64)
ACCESSORY RELAY
B(+)
FUSE 33 15A (8W-10-31)
FUSE 28 40A (8W-10-31)
FUSE 5 20A (8W-10-31)
FUSE 11 20A (8W-10-31)
FUSE 6 20A (8W-10-31)
11 C1
1 C1
8 C9
7 C9
10 C9
8 C6
F300 18 OR/PK
F301 18 VT/PK
F30 12 PK/YL
F306 16 DB/PK
F302 18 GY/PK
F307 16 LB/PK
16 C200
TO FRONT WASHER PUMP MOTOR
TO REAR WASHER PUMP MOTOR
TO POWER WINDOW CIRCUIT BREAKER
TO FRONT CIGAR LIGHTER
TO S323
REAR FLOOR CONSOLE
EXCEPT REAR FLOOR CONSOLE
TO S325
TO REAR POWER OUTLET

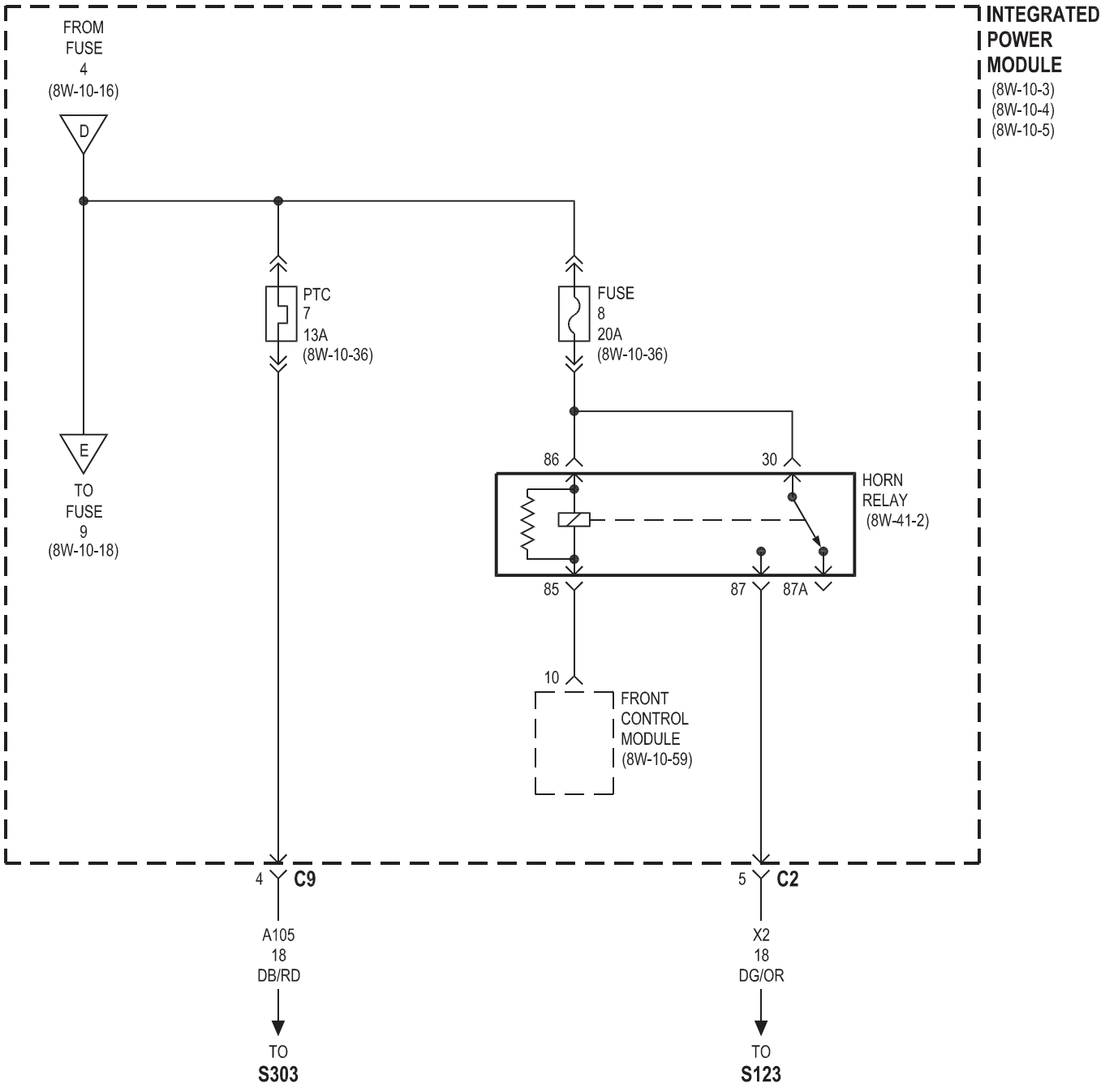
INTEGRATED
POWER
MODULE
(8W-10-3)
(8W-10-4)
(8W-10-5)
FROM
FUSE
4
(8W-10-16)
D
E
TO
FUSE
9
(8W-10-18)
PTC
7
13A
(8W-10-36)
FUSE
8
20A
(8W-10-36)
86
30
HORN
RELAY
(8W-41-2)
85
87
87A
10
FRONT
CONTROL
MODULE
(8W-10-59)
4 C9
A105
18
DB/RD
TO
S303
5 C2
X2
18
DG/OR
TO
S123

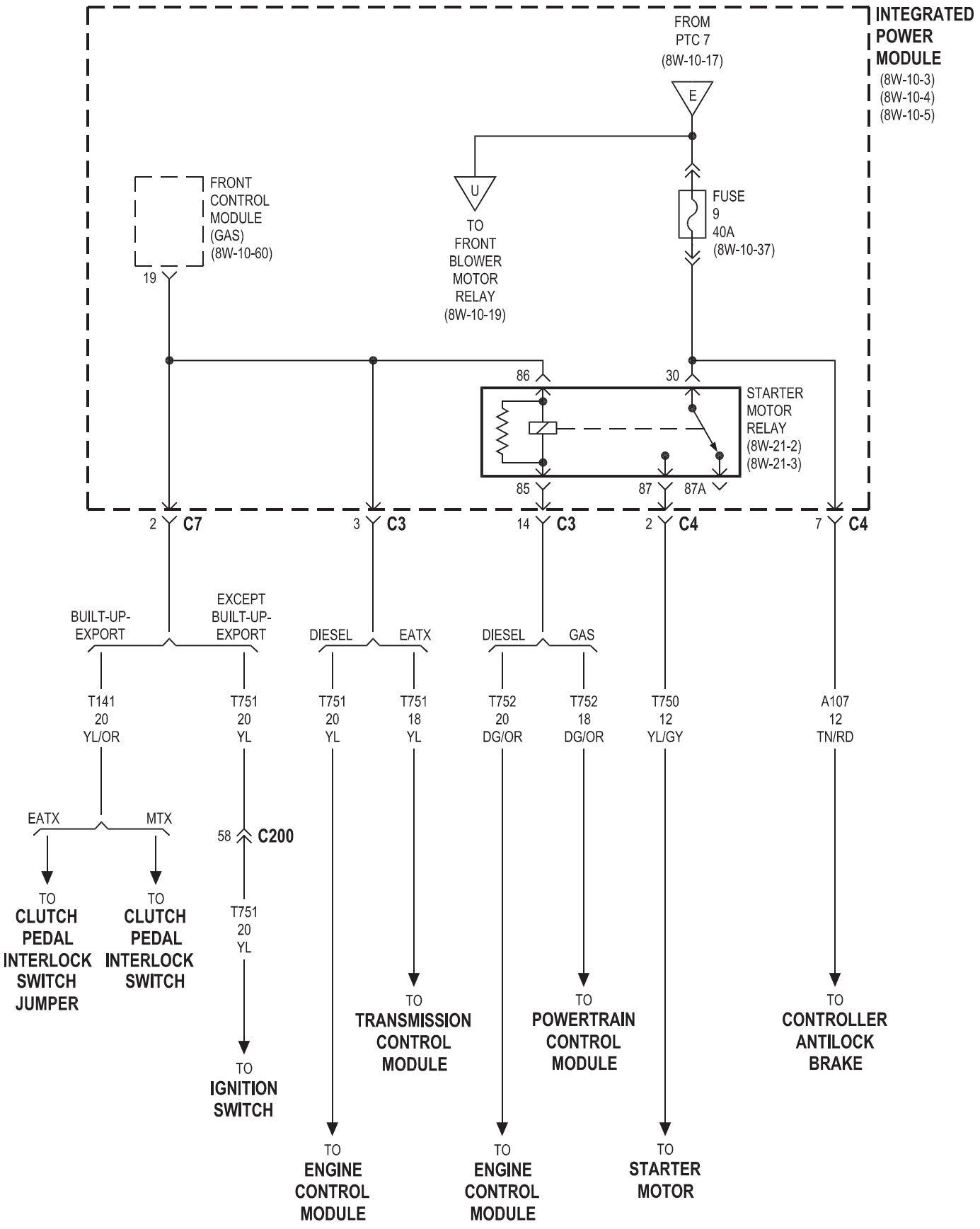
INTEGRATED POWER MODULE
(8W-10-3)
(8W-10-4)
(8W-10-5)
FROM PTC 7
(8W-10-17)
E
U
TO FRONT BLOWER MOTOR RELAY
(8W-10-19)
FUSE 9 40A
(8W-10-37)
FRONT CONTROL MODULE (GAS)
(8W-10-60)
19
86
30
STARTER MOTOR RELAY
(8W-21-2)
(8W-21-3)
85
87
87A
2 C7
3 C3
14 C3
2 C4
7 C4
BUILT-UP-EXPORT
EXCEPT BUILT-UP-EXPORT
DIESEL
EATX
DIESEL
GAS
T141 20 YL/OR
T751 20 YL
T751 20 YL
T751 18 YL
T752 20 DG/OR
T752 18 DG/OR
T750 12 YL/GY
A107 12 TN/RD
EATX
MTX
58 C200
TO CLUTCH PEDAL INTERLOCK SWITCH JUMPER
TO CLUTCH PEDAL INTERLOCK SWITCH
T751 20 YL
TO IGNITION SWITCH
TO TRANSMISSION CONTROL MODULE
TO POWERTRAIN CONTROL MODULE
TO CONTROLLER ANTILOCK BRAKE
TO ENGINE CONTROL MODULE
TO ENGINE CONTROL MODULE
TO STARTER MOTOR

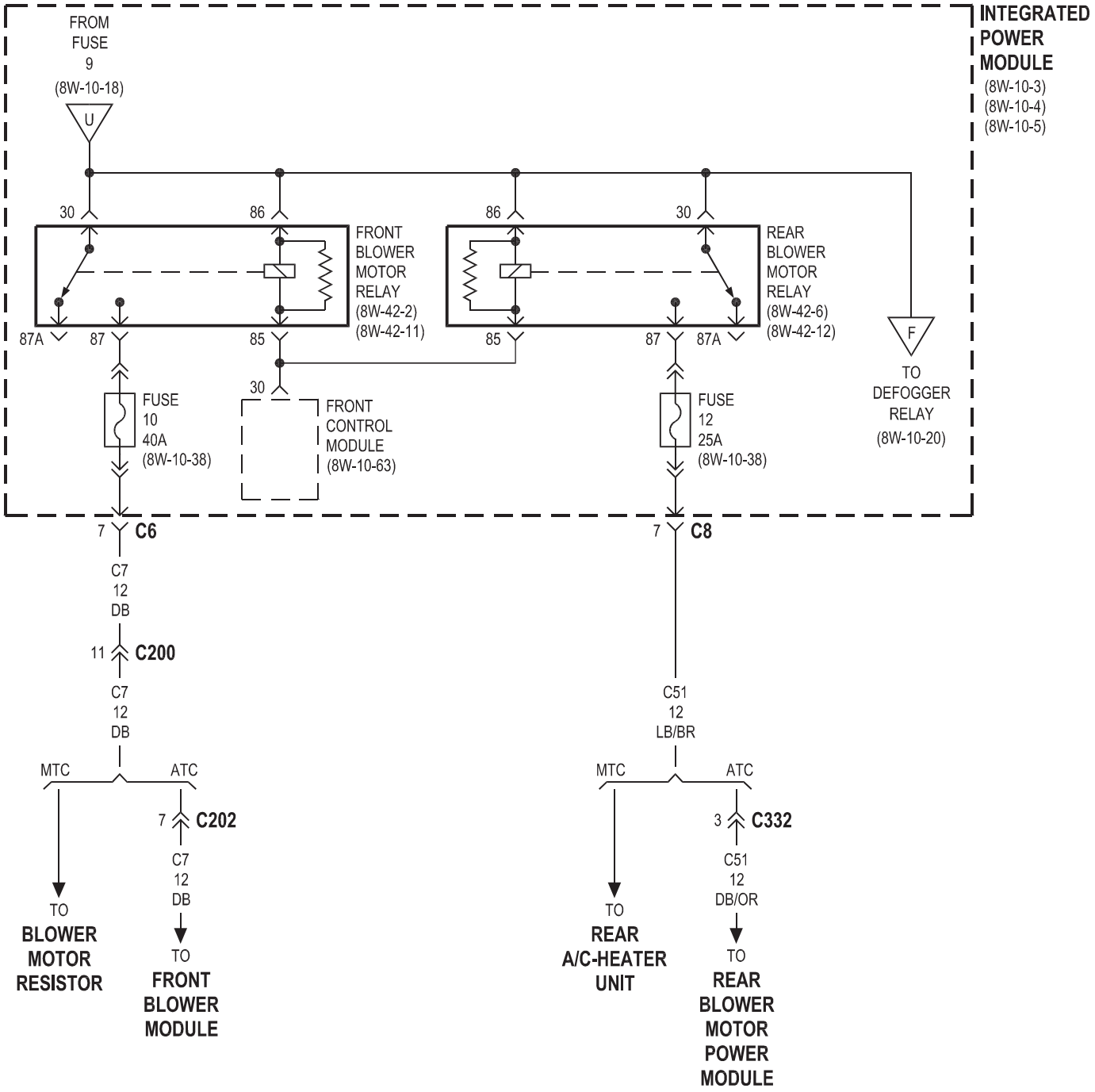
INTEGRATED POWER MODULE
(8W-10-3)
(8W-10-4)
(8W-10-5)
FROM FUSE 9
(8W-10-18)
U
30
86
FRONT BLOWER MOTOR RELAY
(8W-42-2)
(8W-42-11)
86
30
REAR BLOWER MOTOR RELAY
(8W-42-6)
(8W-42-12)
87A
87
85
85
87
87A
F
TO DEFOGGER RELAY
(8W-10-20)
FUSE 10 40A
(8W-10-38)
30
FRONT CONTROL MODULE
(8W-10-63)
FUSE 12 25A
(8W-10-38)
7 C6
7 C8
C7 12 DB
11 C200
C7 12 DB
C51 12 LB/BR
MTC
ATC
MTC
ATC
7 C202
3 C332
C7 12 DB
C51 12 DB/OR
TO BLOWER MOTOR RESISTOR
TO FRONT BLOWER MODULE
TO REAR A/C-HEATER UNIT
TO REAR BLOWER MOTOR POWER MODULE

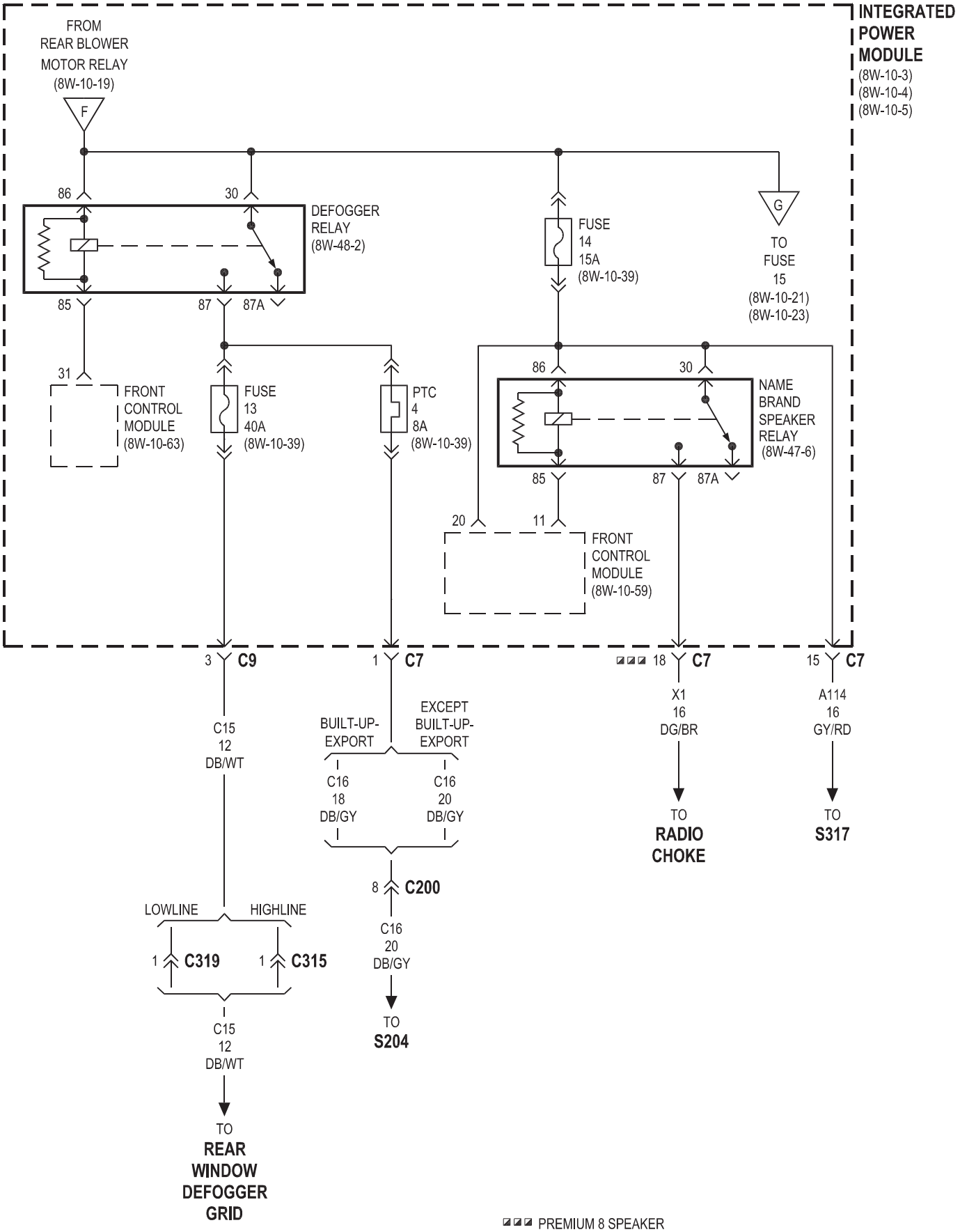
INTEGRATED POWER MODULE
(8W-10-3)
(8W-10-4)
(8W-10-5)
FROM REAR BLOWER MOTOR RELAY (8W-10-19)
F
86
30
DEFOGGER RELAY (8W-48-2)
85
87
87A
31
FRONT CONTROL MODULE (8W-10-63)
FUSE 13 40A (8W-10-39)
PTC 4 8A (8W-10-39)
FUSE 14 15A (8W-10-39)
G
TO FUSE 15 (8W-10-21) (8W-10-23)
NAME BRAND SPEAKER RELAY (8W-47-6)
20
11
FRONT CONTROL MODULE (8W-10-59)
3 C9
1 C7
18 C7
15 C7
C15 12 DB/WT
BUILT-UP-EXPORT
EXCEPT BUILT-UP-EXPORT
C16 18 DB/GY
C16 20 DB/GY
X1 16 DG/BR
A114 16 GY/RD
TO RADIO CHOKE
TO S317
8 C200
C16 20 DB/GY
TO S204
LOWLINE
HIGHLINE
1 C319
1 C315
C15 12 DB/WT
TO REAR WINDOW DEFOGGER GRID
PREMIUM 8 SPEAKER

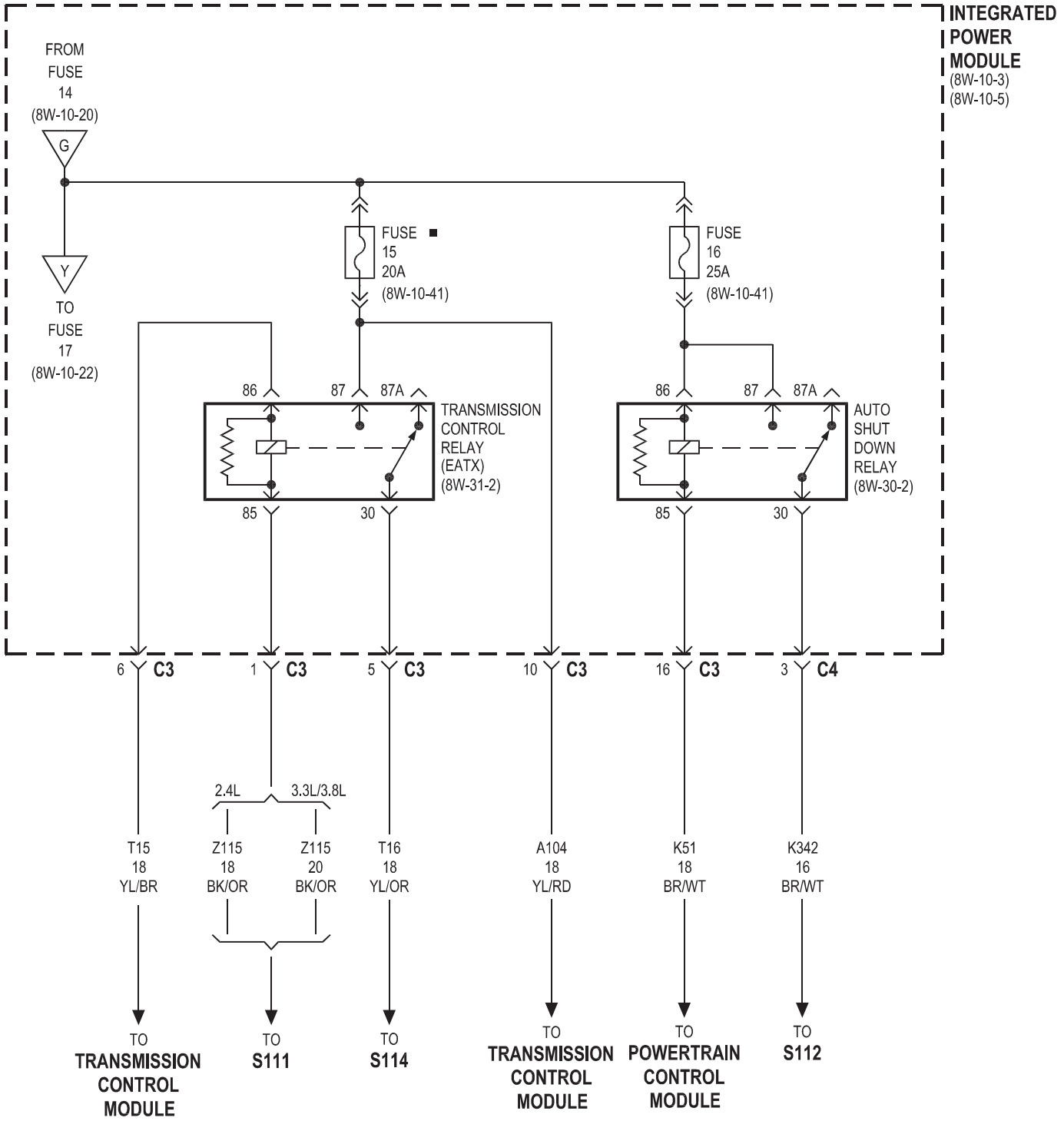
INTEGRATED POWER MODULE
(8W-10-3)
(8W-10-5)
FROM FUSE 14
(8W-10-20)
G
Y
TO FUSE 17
(8W-10-22)
FUSE ■ 15 20A
(8W-10-41)
FUSE 16 25A
(8W-10-41)
86
87
87A
85
30
TRANSMISSION CONTROL RELAY (EATX)
(8W-31-2)
AUTO SHUT DOWN RELAY
(8W-30-2)
6 C3
1 C3
5 C3
10 C3
16 C3
3 C4
2.4L
3.3L/3.8L
T15 18 YL/BR
Z115 18 BK/OR
Z115 20 BK/OR
T16 18 YL/OR
A104 18 YL/RD
K51 18 BR/WT
K342 16 BR/WT
TO TRANSMISSION CONTROL MODULE
TO S111
TO S114
TO TRANSMISSION CONTROL MODULE
TO POWERTRAIN CONTROL MODULE
TO S112

■ EATX

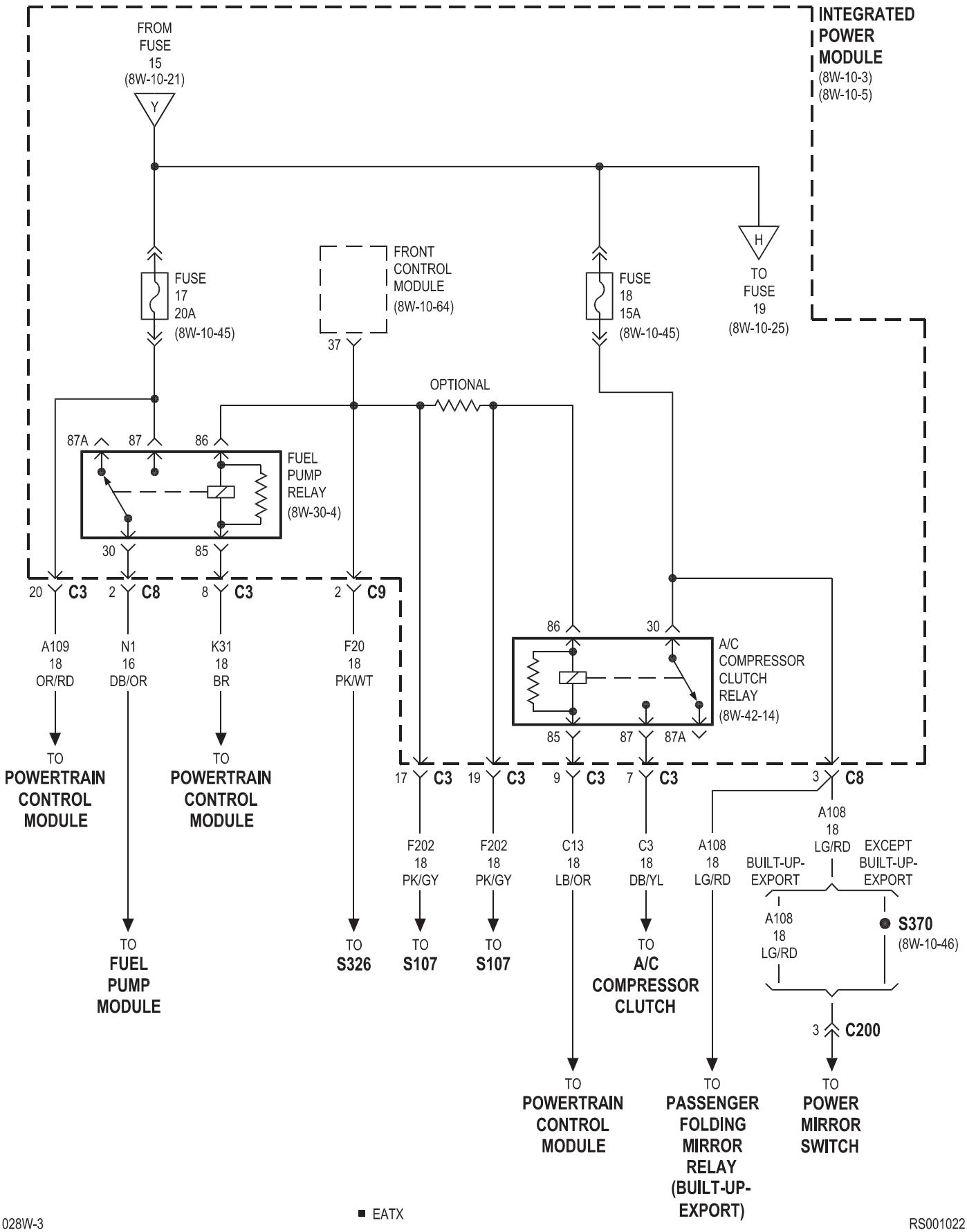
INTEGRATED POWER MODULE
(8W-10-3)
(8W-10-5)
FROM FUSE 15 (8W-10-21)
Y
FUSE 17 20A (8W-10-45)
FRONT CONTROL MODULE (8W-10-64)
37
FUSE 18 15A (8W-10-45)
H
TO FUSE 19 (8W-10-25)
OPTIONAL
87A
87
86
FUEL PUMP RELAY (8W-30-4)
30
85
20 C3
2 C8
8 C3
2 C9
A109 18 OR/RD
N1 16 DB/OR
K31 18 BR
F20 18 PK/WT
TO POWERTRAIN CONTROL MODULE
TO POWERTRAIN CONTROL MODULE
TO FUEL PUMP MODULE
TO S326
86
30
A/C COMPRESSOR CLUTCH RELAY (8W-42-14)
85
87
87A
17 C3
19 C3
9 C3
7 C3
3 C8
F202 18 PK/GY
F202 18 PK/GY
C13 18 LB/OR
C3 18 DB/YL
A108 18 LG/RD
A108 18 LG/RD
BUILT-UP-EXPORT
EXCEPT BUILT-UP-EXPORT
A108 18 LG/RD
S370 (8W-10-46)
3 C200
TO S107
TO S107
TO A/C COMPRESSOR CLUTCH
TO POWERTRAIN CONTROL MODULE
TO PASSENGER FOLDING MIRROR RELAY (BUILT-UP-EXPORT)
TO POWER MIRROR SWITCH

■ EATX

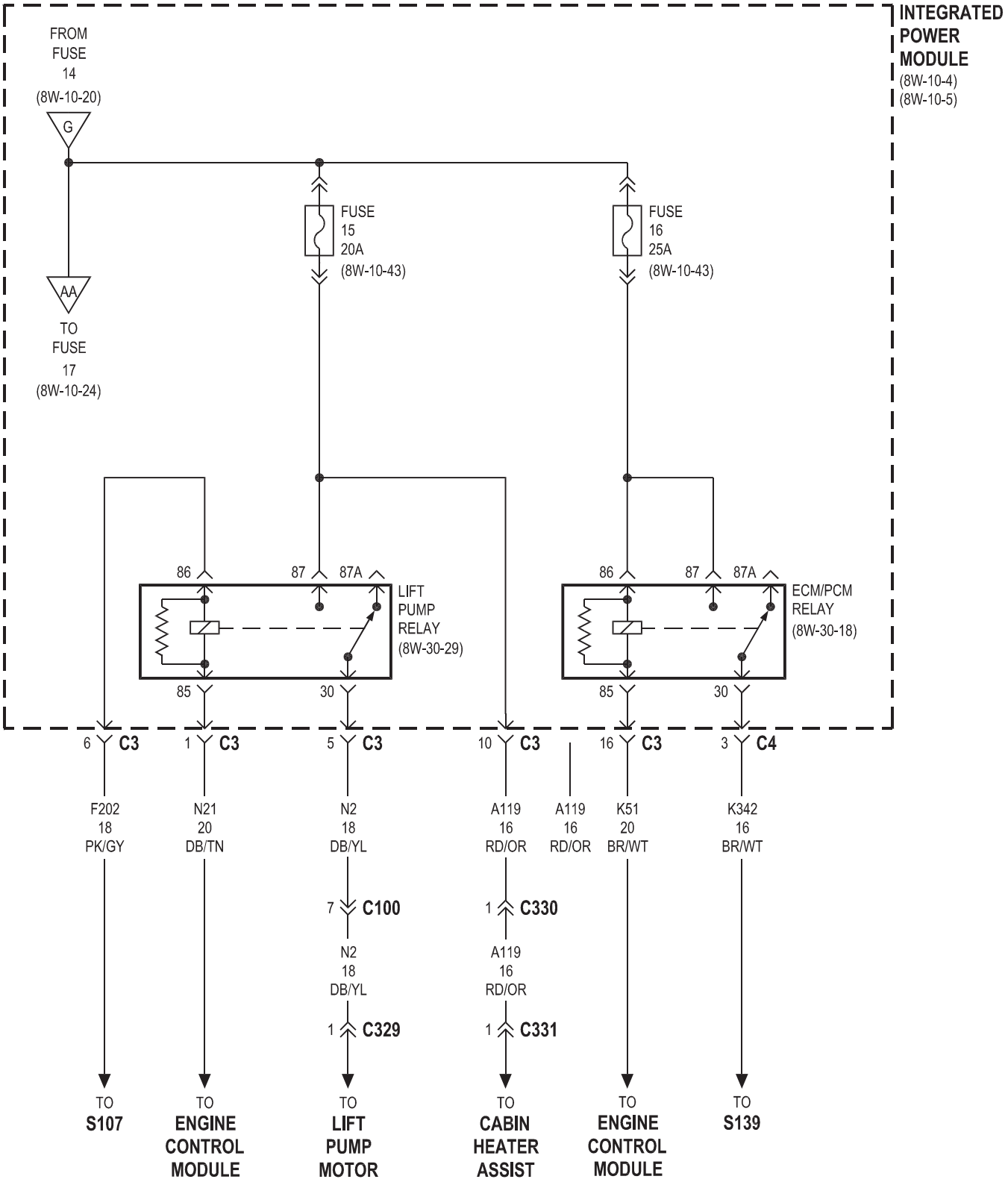
INTEGRATED POWER MODULE
(8W-10-4)
(8W-10-5)
FROM FUSE 14
(8W-10-20)
G
AA
TO FUSE 17
(8W-10-24)
FUSE 15 20A
(8W-10-43)
FUSE 16 25A
(8W-10-43)
86
87
87A
85
30
LIFT PUMP RELAY
(8W-30-29)
ECM/PCM RELAY
(8W-30-18)
6 C3
1 C3
5 C3
10 C3
16 C3
3 C4
F202 18 PK/GY
N21 20 DB/TN
N2 18 DB/YL
A119 16 RD/OR
A119 16 RD/OR
K51 20 BR/WT
K342 16 BR/WT
7 C100
N2 18 DB/YL
1 C329
1 C330
A119 16 RD/OR
1 C331
TO S107
TO ENGINE CONTROL MODULE
TO LIFT PUMP MOTOR
TO CABIN HEATER ASSIST
TO ENGINE CONTROL MODULE
TO S139

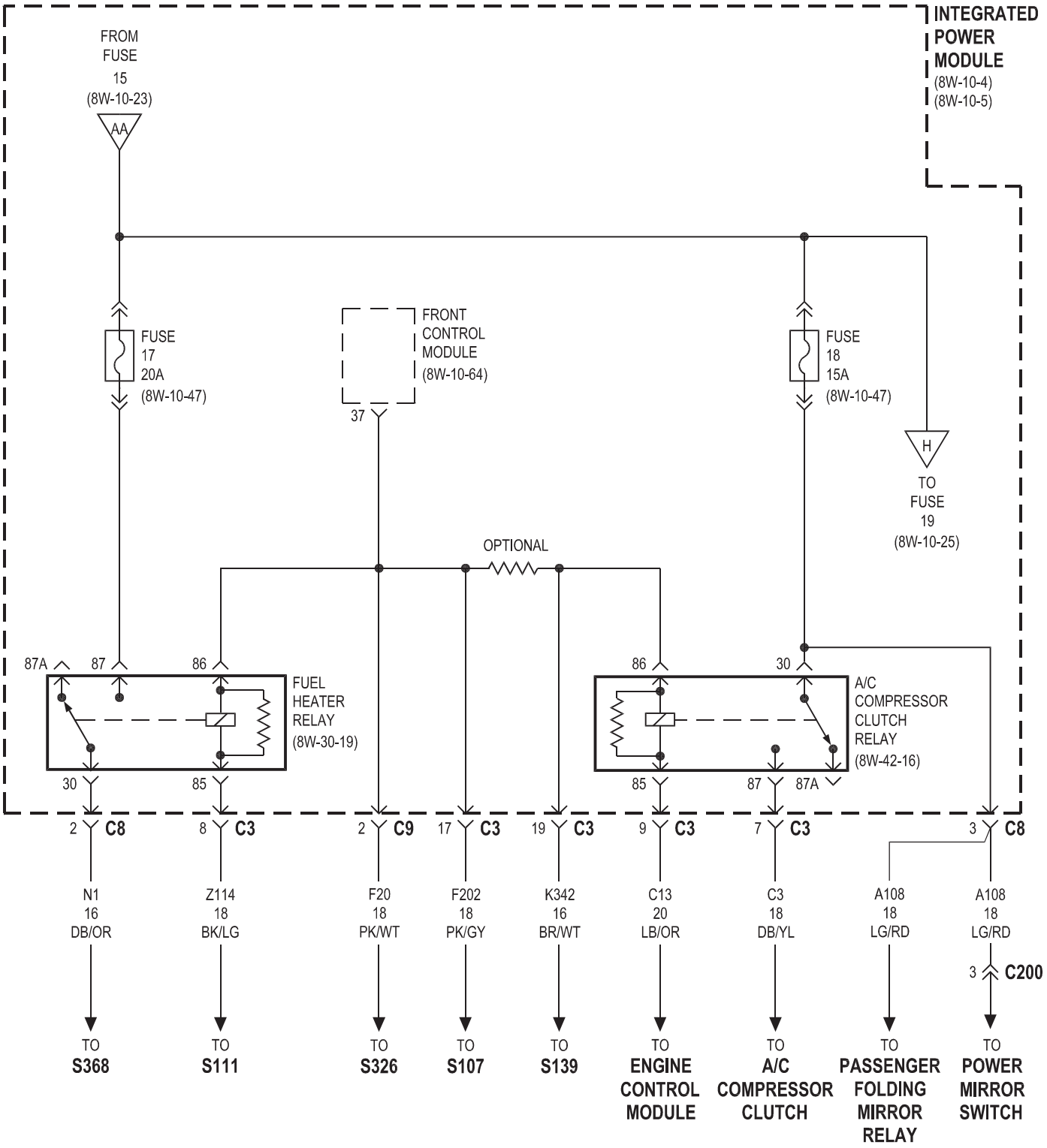
INTEGRATED POWER MODULE
(8W-10-4)
(8W-10-5)
FROM FUSE 15
(8W-10-23)
AA
FUSE 17 20A
(8W-10-47)
FRONT CONTROL MODULE
(8W-10-64)
37
FUSE 18 15A
(8W-10-47)
H
TO FUSE 19
(8W-10-25)
OPTIONAL
87A
87
86
FUEL HEATER RELAY
(8W-30-19)
30
85
86
30
A/C COMPRESSOR CLUTCH RELAY
(8W-42-16)
85
87
87A
2 C8
8 C3
2 C9
17 C3
19 C3
9 C3
7 C3
3 C8
N1 16 DB/OR
Z114 18 BK/LG
F20 18 PK/WT
F202 18 PK/GY
K342 16 BR/WT
C13 20 LB/OR
C3 18 DB/YL
A108 18 LG/RD
A108 18 LG/RD
3 C200
TO S368
TO S111
TO S326
TO S107
TO S139
TO ENGINE CONTROL MODULE
TO A/C COMPRESSOR CLUTCH
TO PASSENGER FOLDING MIRROR RELAY
TO POWER MIRROR SWITCH

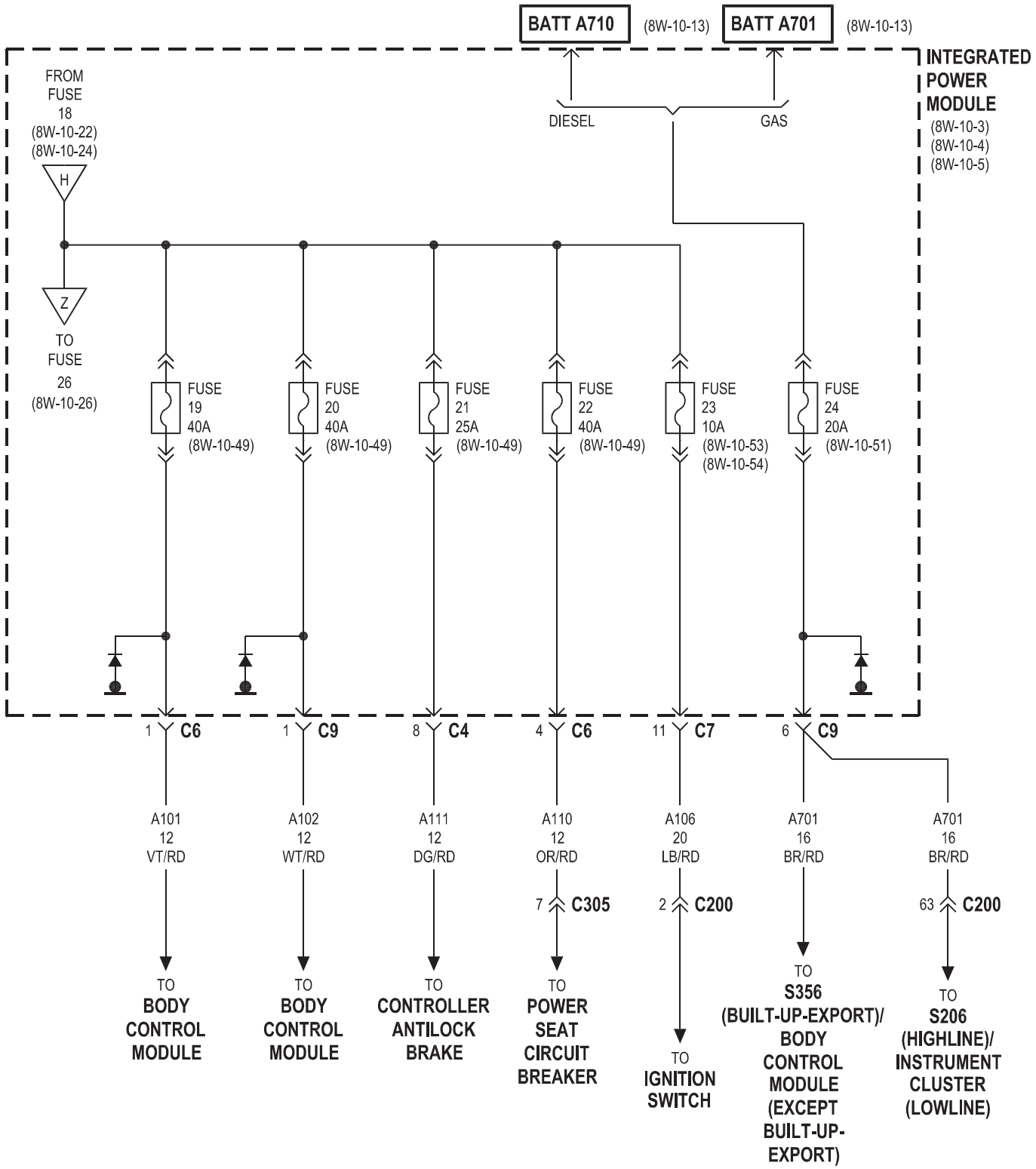
BATT A710
(8W-10-13)
BATT A701
(8W-10-13)
DIESEL
GAS
INTEGRATED POWER MODULE
(8W-10-3)
(8W-10-4)
(8W-10-5)
FROM FUSE 18 (8W-10-22) (8W-10-24)
H
Z
TO FUSE 26 (8W-10-26)
FUSE 19 40A (8W-10-49)
FUSE 20 40A (8W-10-49)
FUSE 21 25A (8W-10-49)
FUSE 22 40A (8W-10-49)
FUSE 23 10A (8W-10-53) (8W-10-54)
FUSE 24 20A (8W-10-51)
1 C6
1 C9
8 C4
4 C6
11 C7
6 C9
A101 12 VT/RD
A102 12 WT/RD
A111 12 DG/RD
A110 12 OR/RD
A106 20 LB/RD
A701 16 BR/RD
A701 16 BR/RD
7 C305
2 C200
63 C200
TO BODY CONTROL MODULE
TO BODY CONTROL MODULE
TO CONTROLLER ANTILOCK BRAKE
TO POWER SEAT CIRCUIT BREAKER
TO IGNITION SWITCH
TO S356 (BUILT-UP-EXPORT)/ BODY CONTROL MODULE (EXCEPT BUILT-UP-EXPORT)
TO S206 (HIGHLINE)/ INSTRUMENT CLUSTER (LOWLINE)

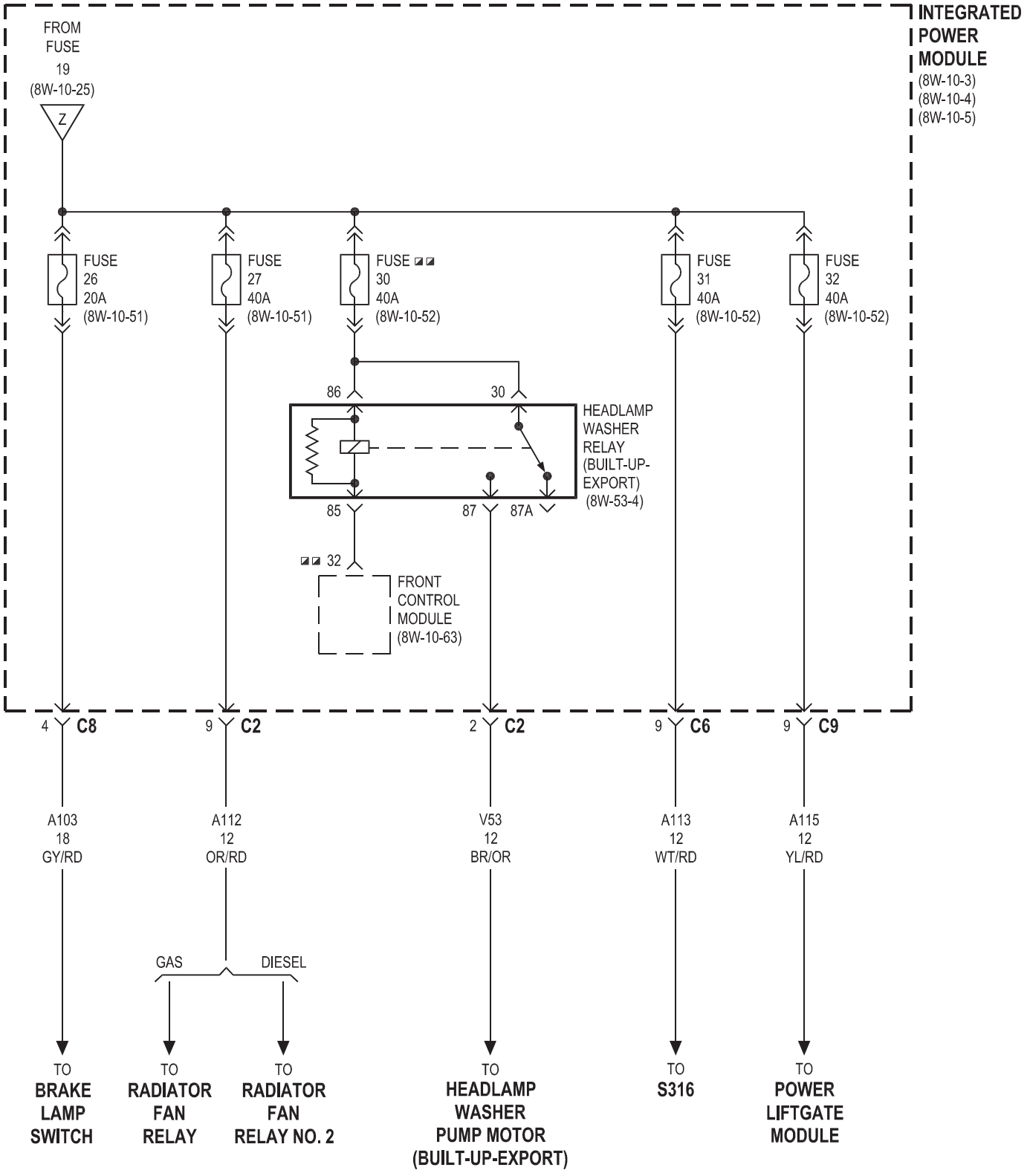

◪◪ BUILT-UP-EXPORT

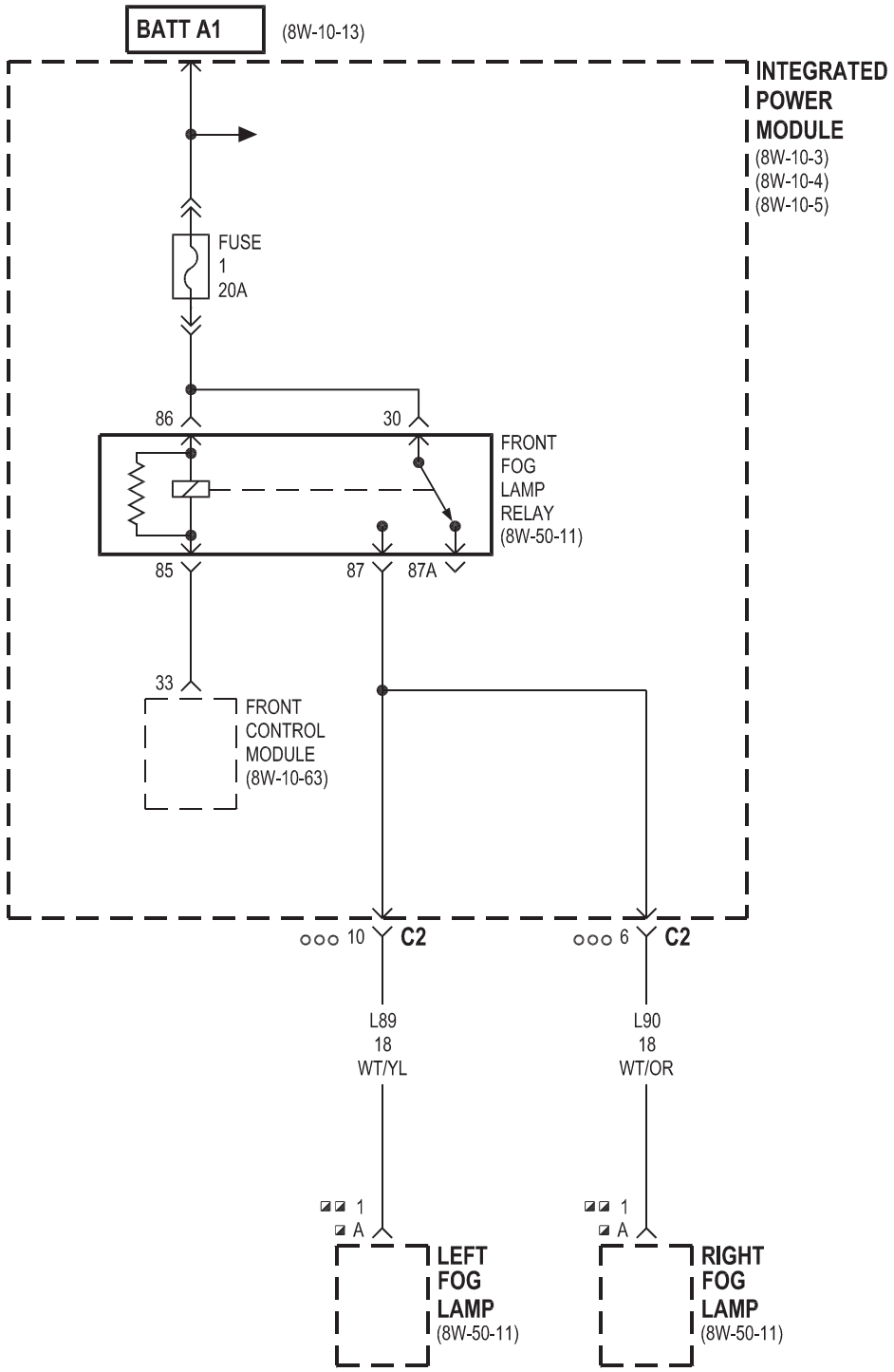

◪ EXCEPT BUILT-UP-EXPORT
◪◪ BUILT-UP-EXPORT
○○○ EXCEPT BASE

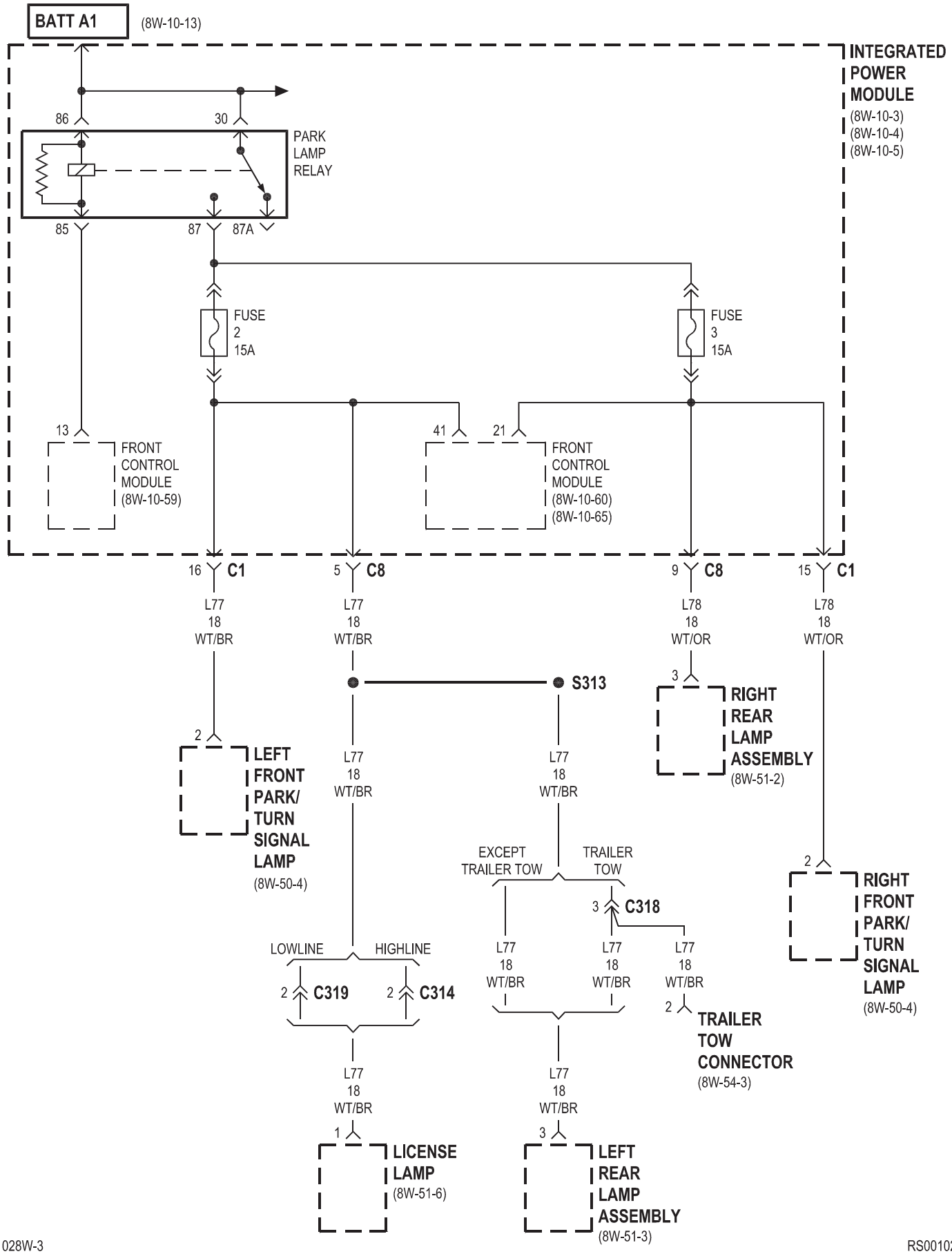
BATT A1
(8W-10-13)
INTEGRATED POWER MODULE
(8W-10-3)
(8W-10-4)
(8W-10-5)
86
30
PARK LAMP RELAY
85
87
87A
FUSE 2 15A
FUSE 3 15A
13
FRONT CONTROL MODULE
(8W-10-59)
41
21
FRONT CONTROL MODULE
(8W-10-60)
(8W-10-65)
16 C1
5 C8
9 C8
15 C1
L77 18 WT/BR
L77 18 WT/BR
L78 18 WT/OR
L78 18 WT/OR
S313
2
LEFT FRONT PARK/ TURN SIGNAL LAMP
(8W-50-4)
3
RIGHT REAR LAMP ASSEMBLY
(8W-51-2)
L77 18 WT/BR
L77 18 WT/BR
EXCEPT TRAILER TOW
TRAILER TOW
3 C318
2
RIGHT FRONT PARK/ TURN SIGNAL LAMP
(8W-50-4)
LOWLINE
HIGHLINE
2 C319
2 C314
L77 18 WT/BR
L77 18 WT/BR
L77 18 WT/BR
2
TRAILER TOW CONNECTOR
(8W-54-3)
L77 18 WT/BR
L77 18 WT/BR
1
LICENSE LAMP
(8W-51-6)
3
LEFT REAR LAMP ASSEMBLY
(8W-51-3)

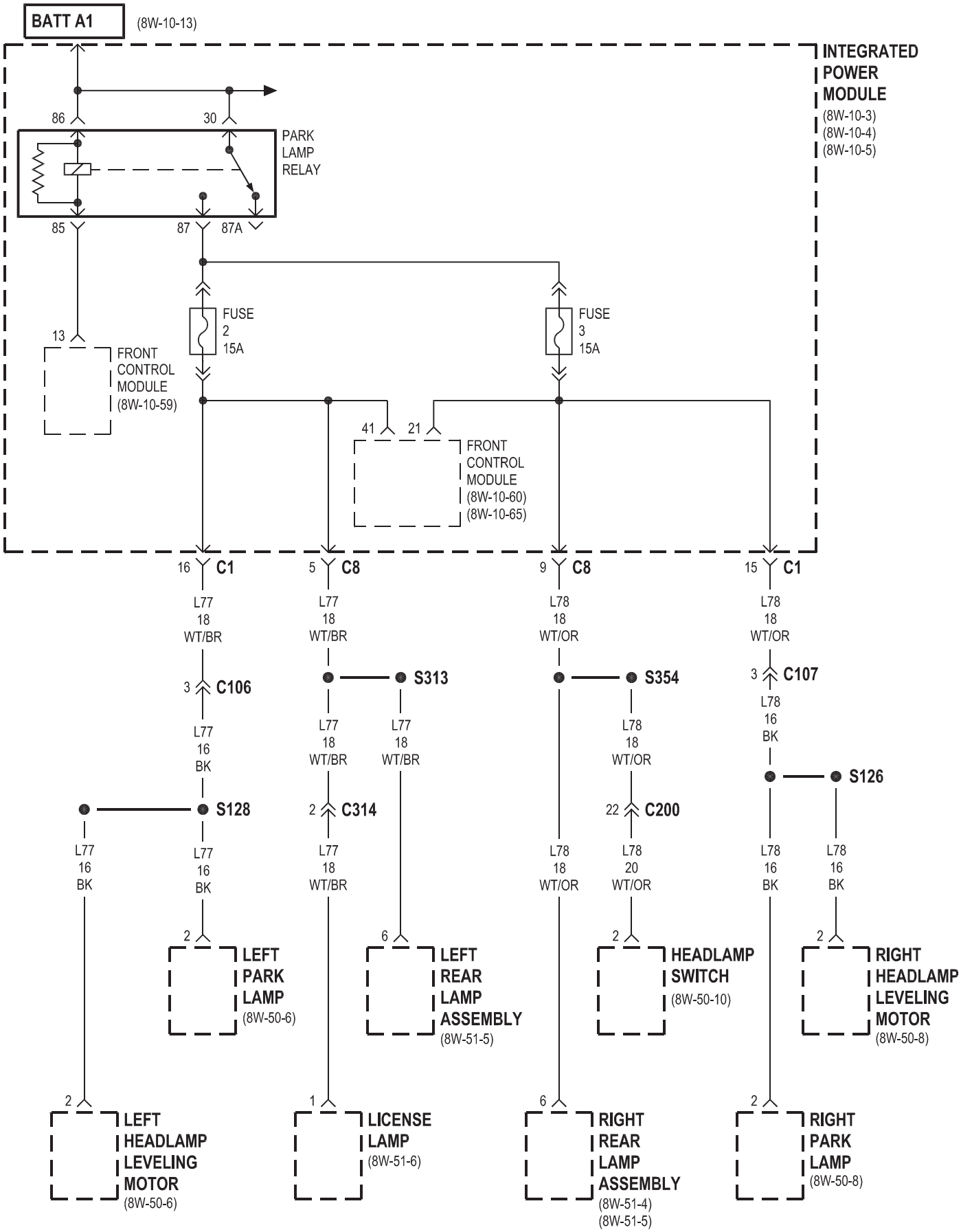
BATT A1
(8W-10-13)
INTEGRATED POWER MODULE
(8W-10-3)
(8W-10-4)
(8W-10-5)
86
30
PARK LAMP RELAY
85
87
87A
FUSE 2 15A
FUSE 3 15A
13
FRONT CONTROL MODULE
(8W-10-59)
41
21
FRONT CONTROL MODULE
(8W-10-60)
(8W-10-65)
16 C1
5 C8
9 C8
15 C1
L77 18 WT/BR
L77 18 WT/BR
L78 18 WT/OR
L78 18 WT/OR
3 C106
S313
S354
3 C107
L77 16 BK
L77 18 WT/BR
L78 18 WT/OR
L78 16 BK
S126
S128
2 C314
22 C200
L77 16 BK
L77 16 BK
L77 18 WT/BR
L78 18 WT/OR
L78 20 WT/OR
L78 16 BK
L78 16 BK
2
LEFT PARK LAMP
(8W-50-6)
6
LEFT REAR LAMP ASSEMBLY
(8W-51-5)
2
HEADLAMP SWITCH
(8W-50-10)
2
RIGHT HEADLAMP LEVELING MOTOR
(8W-50-8)
2
LEFT HEADLAMP LEVELING MOTOR
(8W-50-6)
1
LICENSE LAMP
(8W-51-6)
6
RIGHT REAR LAMP ASSEMBLY
(8W-51-4)
(8W-51-5)
2
RIGHT PARK LAMP
(8W-50-8)

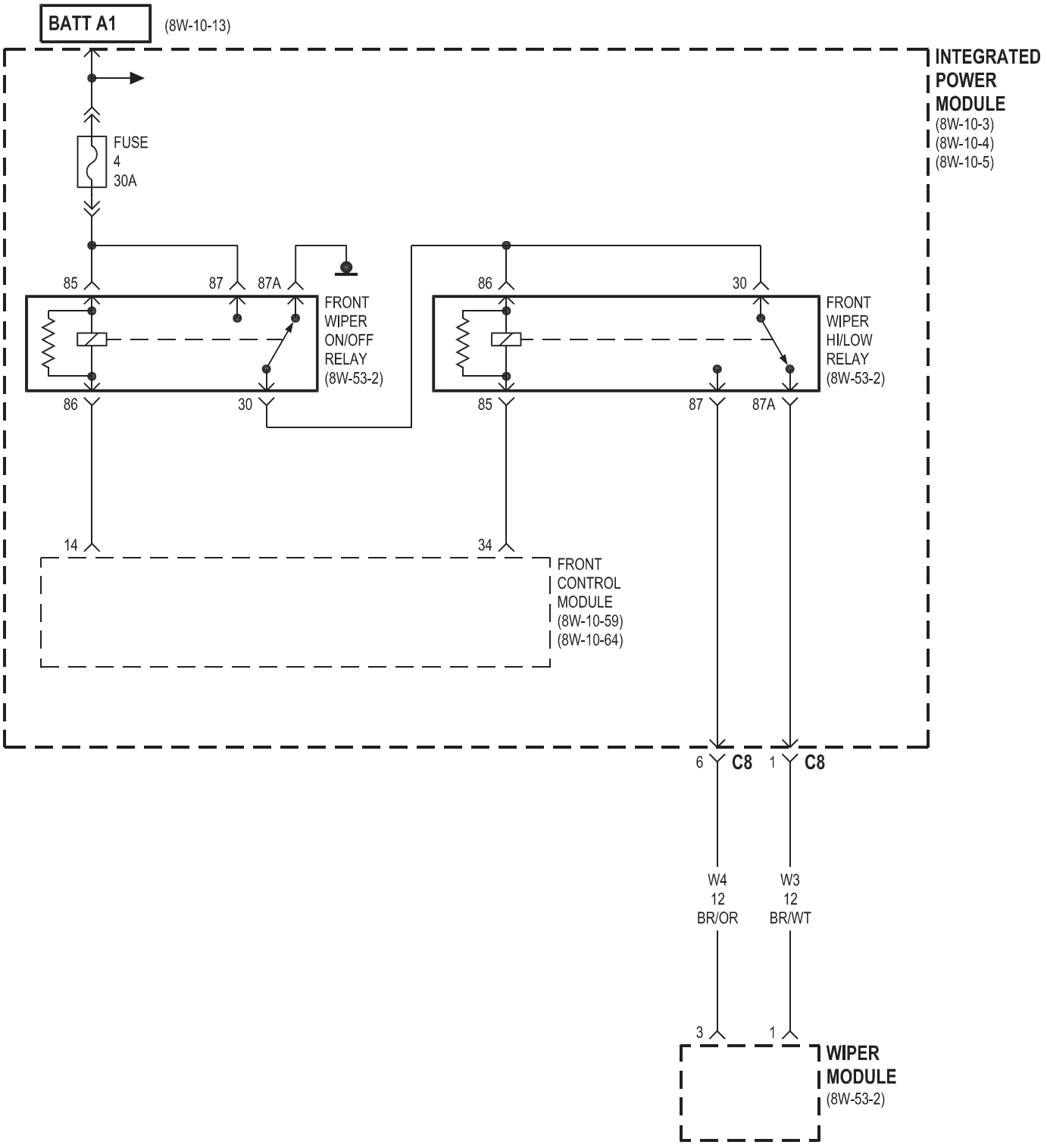
BATT A1
(8W-10-13)
INTEGRATED POWER MODULE
(8W-10-3)
(8W-10-4)
(8W-10-5)
FUSE
4
30A
85
87
87A
86
30
FRONT WIPER ON/OFF RELAY
(8W-53-2)
FRONT WIPER HI/LOW RELAY
(8W-53-2)
86
30
85
87
87A
14
34
FRONT CONTROL MODULE
(8W-10-59)
(8W-10-64)
6 C8
1 C8
W4
12
BR/OR
W3
12
BR/WT
3
1
WIPER MODULE
(8W-53-2)

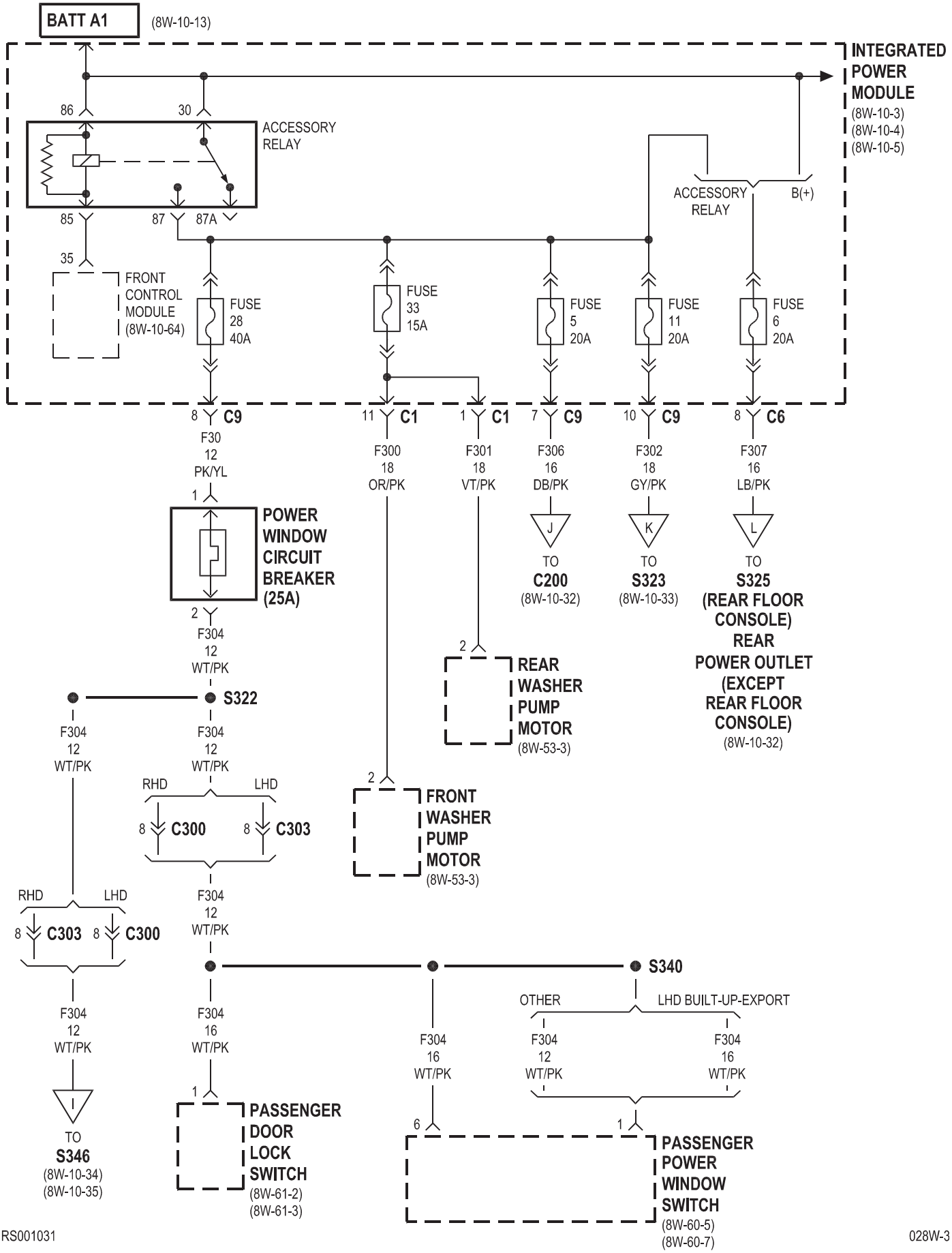
BATT A1
(8W-10-13)
INTEGRATED POWER MODULE
(8W-10-3)
(8W-10-4)
(8W-10-5)
86
30
ACCESSORY RELAY
85
87
87A
35
FRONT CONTROL MODULE (8W-10-64)
FUSE 28 40A
FUSE 33 15A
FUSE 5 20A
FUSE 11 20A
FUSE 6 20A
ACCESSORY RELAY
B(+)
8 C9
11 C1
1 C1
7 C9
10 C9
8 C6
F30 12 PK/YL
F300 18 OR/PK
F301 18 VT/PK
F306 16 DB/PK
F302 18 GY/PK
F307 16 LB/PK
J
K
L
TO C200 (8W-10-32)
TO S323 (8W-10-33)
TO S325 (REAR FLOOR CONSOLE) REAR POWER OUTLET (EXCEPT REAR FLOOR CONSOLE) (8W-10-32)
POWER WINDOW CIRCUIT BREAKER (25A)
F304 12 WT/PK
REAR WASHER PUMP MOTOR (8W-53-3)
S322
FRONT WASHER PUMP MOTOR (8W-53-3)
RHD
LHD
C300
C303
S340
OTHER
LHD BUILT-UP-EXPORT
F304 16 WT/PK
I
TO S346 (8W-10-34) (8W-10-35)
PASSENGER DOOR LOCK SWITCH (8W-61-2) (8W-61-3)
PASSENGER POWER WINDOW SWITCH (8W-60-5) (8W-60-7)

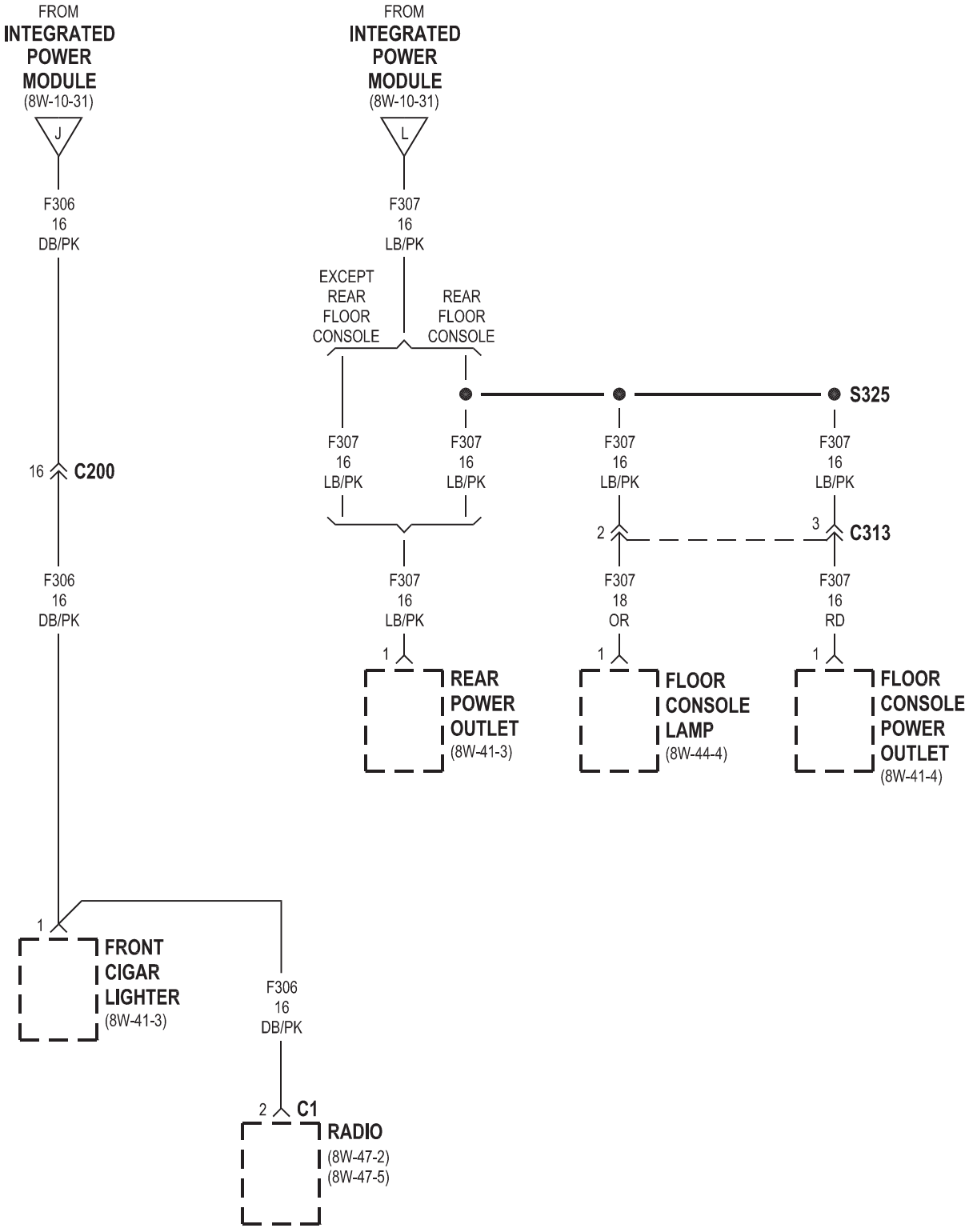
FROM
INTEGRATED
POWER
MODULE
(8W-10-31)
J
F306
16
DB/PK
16 C200
F306
16
DB/PK
1
FRONT
CIGAR
LIGHTER
(8W-41-3)
F306
16
DB/PK
2 C1
RADIO
(8W-47-2)
(8W-47-5)
FROM
INTEGRATED
POWER
MODULE
(8W-10-31)
L
F307
16
LB/PK
EXCEPT
REAR
FLOOR
CONSOLE
REAR
FLOOR
CONSOLE
S325
F307
16
LB/PK
F307
16
LB/PK
F307
16
LB/PK
F307
16
LB/PK
2
3 C313
F307
16
LB/PK
F307
18
OR
F307
16
RD
1
REAR
POWER
OUTLET
(8W-41-3)
1
FLOOR
CONSOLE
LAMP
(8W-44-4)
1
FLOOR
CONSOLE
POWER
OUTLET
(8W-41-4)

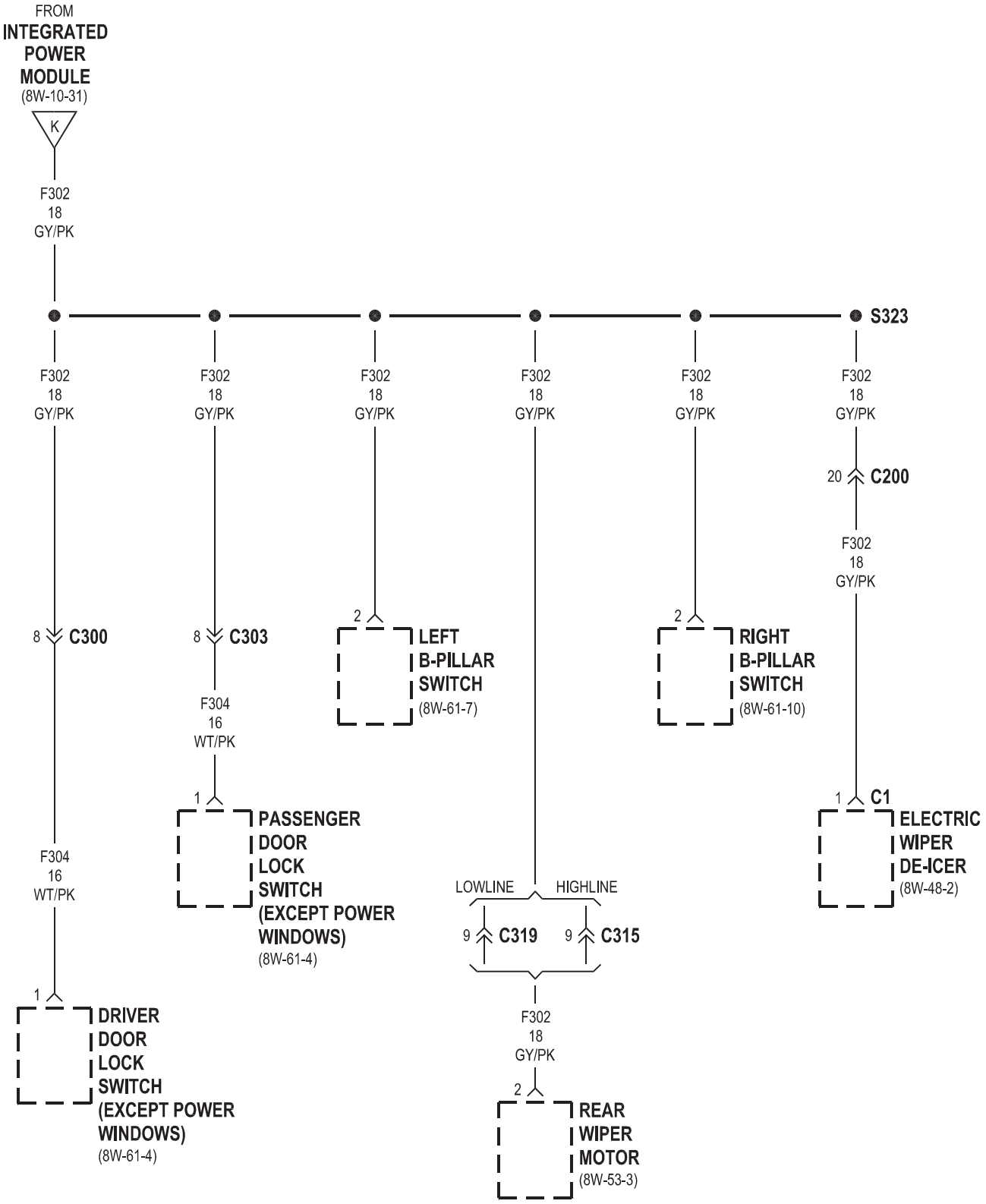
FROM
INTEGRATED
POWER
MODULE
(8W-10-31)
K
F302
18
GY/PK
S323
F302
18
GY/PK
8
C300
F304
16
WT/PK
1
DRIVER
DOOR
LOCK
SWITCH
(EXCEPT POWER
WINDOWS)
(8W-61-4)
8
C303
F304
16
WT/PK
1
PASSENGER
DOOR
LOCK
SWITCH
(EXCEPT POWER
WINDOWS)
(8W-61-4)
2
LEFT
B-PILLAR
SWITCH
(8W-61-7)
LOWLINE
HIGHLINE
9
C319
9
C315
F302
18
GY/PK
2
REAR
WIPER
MOTOR
(8W-53-3)
2
RIGHT
B-PILLAR
SWITCH
(8W-61-10)
20
C200
F302
18
GY/PK
1
C1
ELECTRIC
WIPER
DE-ICER
(8W-48-2)

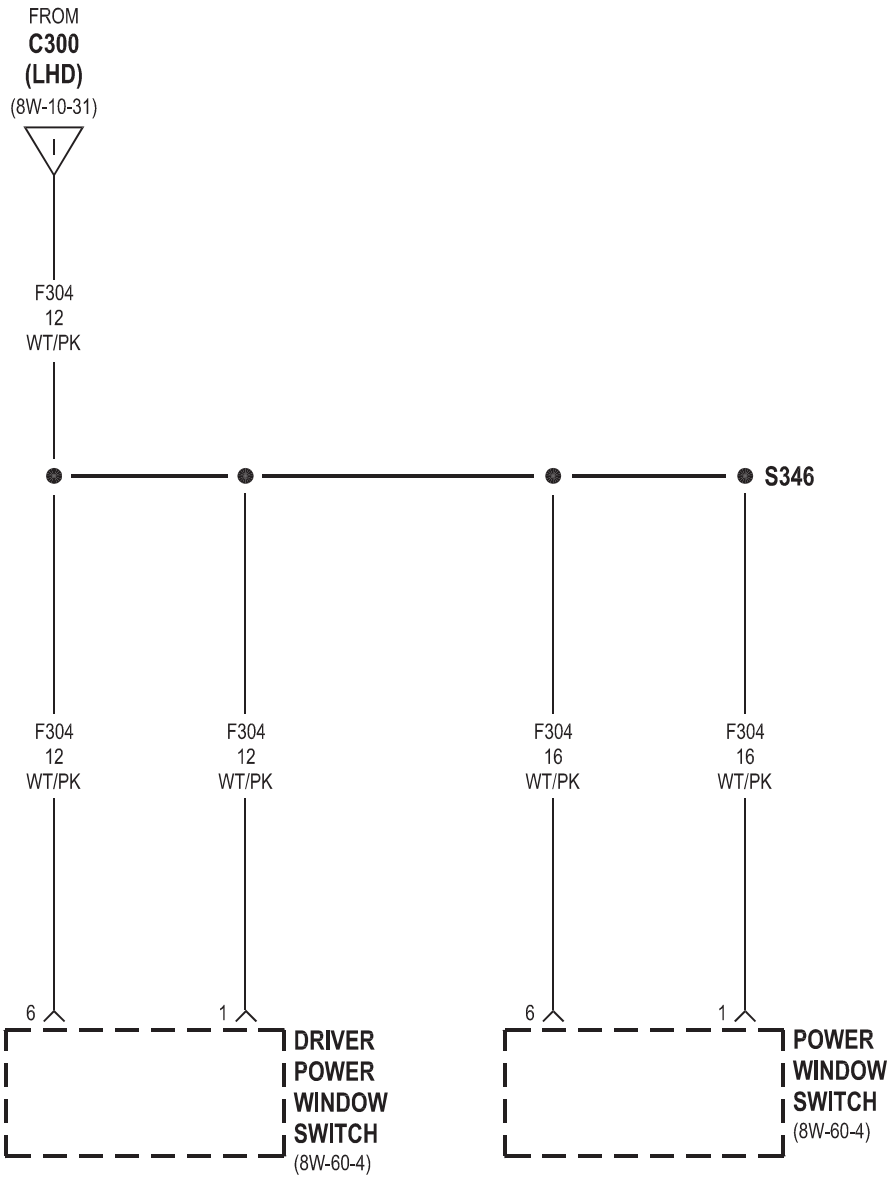
FROM
C300
(LHD)
(8W-10-31)
I
F304
12
WT/PK
S346
F304
12
WT/PK
F304
12
WT/PK
F304
16
WT/PK
F304
16
WT/PK
6
1
6
1
DRIVER
POWER
WINDOW
SWITCH
(8W-60-4)
POWER
WINDOW
SWITCH
(8W-60-4)

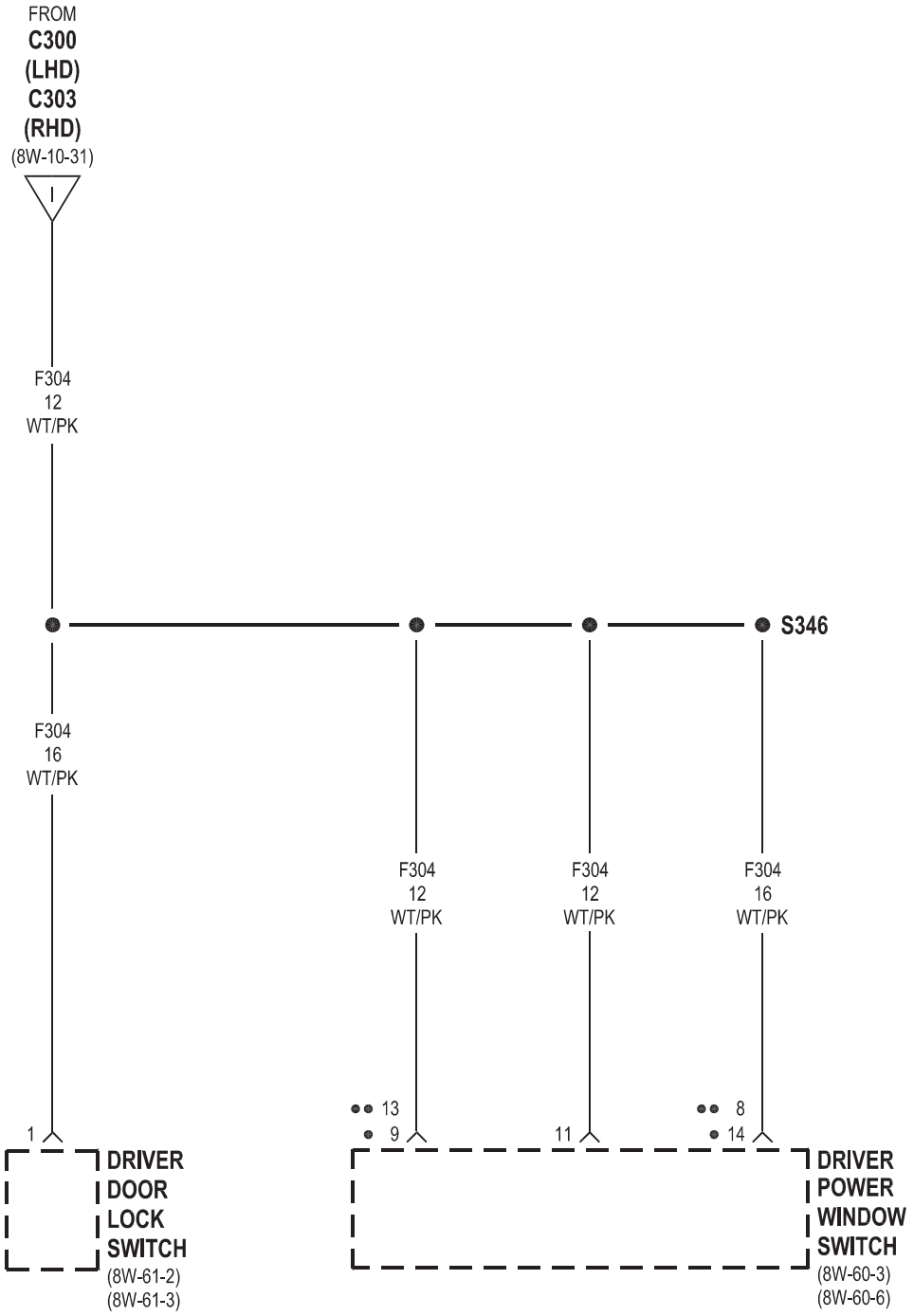
FROM
C300
(LHD)
C303
(RHD)
(8W-10-31)
I
F304
12
WT/PK
S346
F304
16
WT/PK
F304
12
WT/PK
F304
12
WT/PK
F304
16
WT/PK
1
13
9
11
8
14
DRIVER
DOOR
LOCK
SWITCH
(8W-61-2)
(8W-61-3)
DRIVER
POWER
WINDOW
SWITCH
(8W-60-3)
(8W-60-6)
LHD
RHD

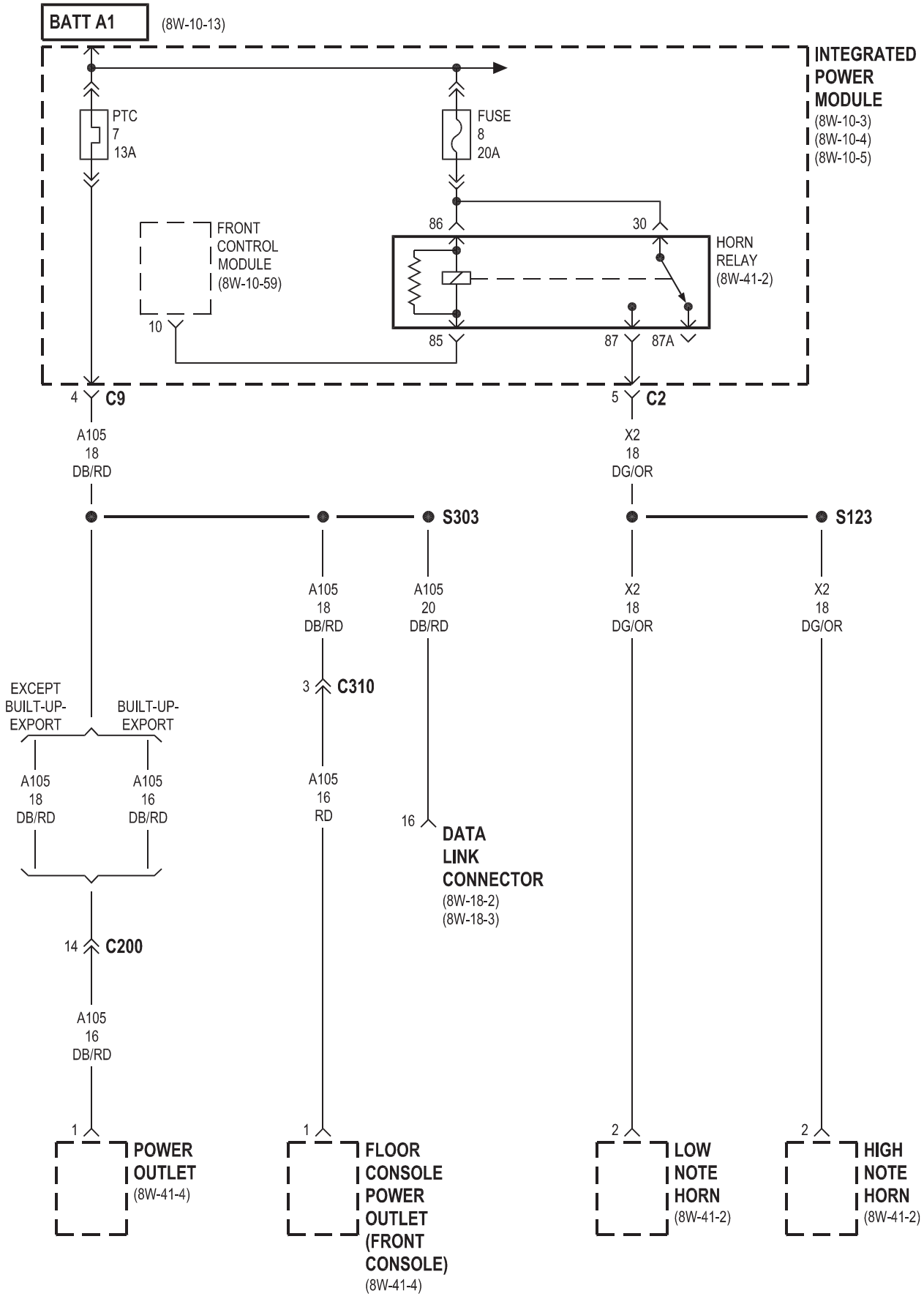
BATT A1
(8W-10-13)
INTEGRATED POWER MODULE
(8W-10-3)
(8W-10-4)
(8W-10-5)
PTC
7
13A
FUSE
8
20A
FRONT CONTROL MODULE
(8W-10-59)
86
30
HORN RELAY
(8W-41-2)
10
85
87
87A
4 C9
5 C2
A105
18
DB/RD
X2
18
DG/OR
S303
S123
A105
18
DB/RD
A105
20
DB/RD
X2
18
DG/OR
X2
18
DG/OR
EXCEPT BUILT-UP-EXPORT
BUILT-UP-EXPORT
3 C310
A105
18
DB/RD
A105
16
DB/RD
A105
16
RD
16
DATA LINK CONNECTOR
(8W-18-2)
(8W-18-3)
14 C200
A105
16
DB/RD
1
POWER OUTLET
(8W-41-4)
1
FLOOR CONSOLE POWER OUTLET (FRONT CONSOLE)
(8W-41-4)
2
LOW NOTE HORN
(8W-41-2)
2
HIGH NOTE HORN
(8W-41-2)

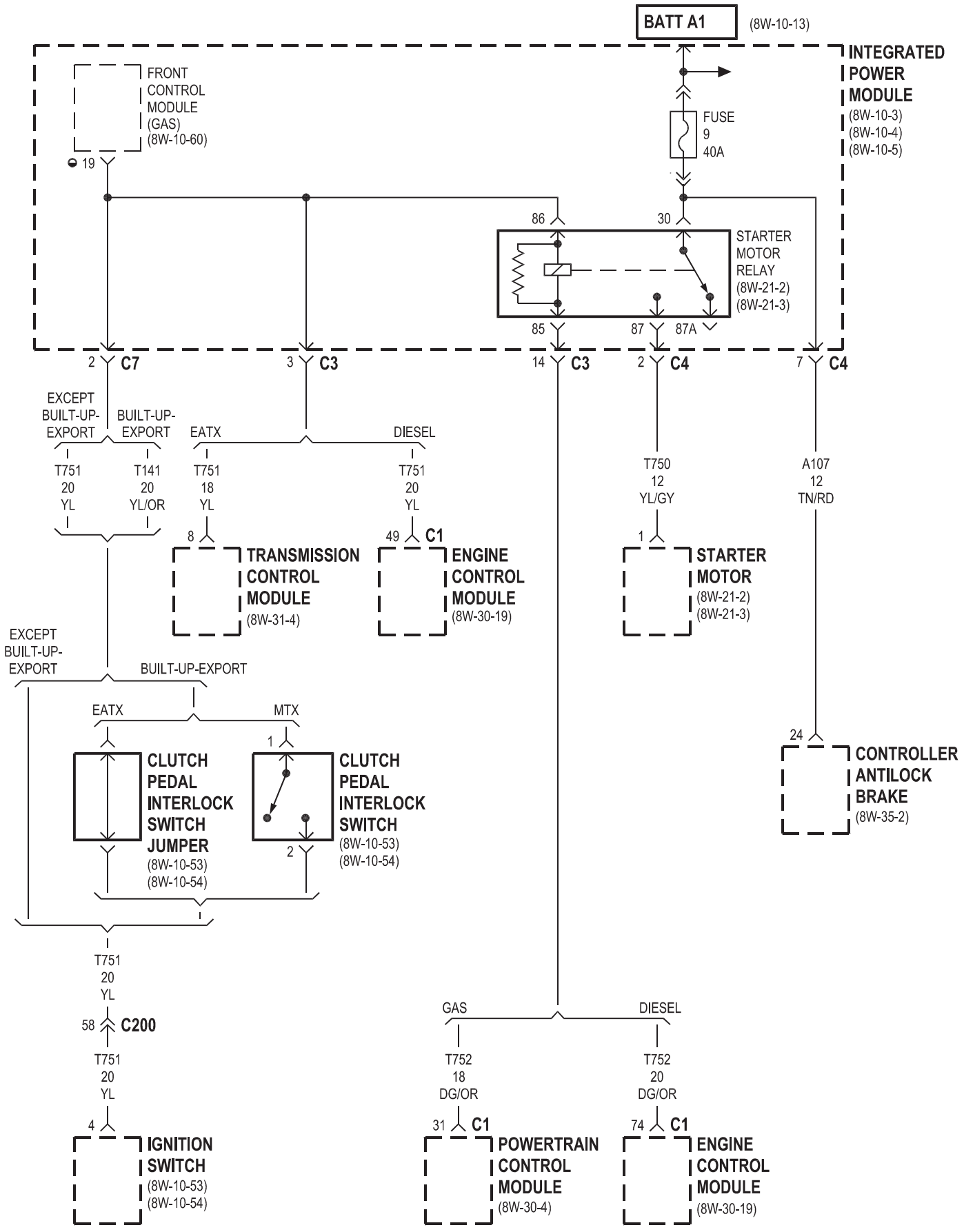
BATT A1
(8W-10-13)
INTEGRATED POWER MODULE
(8W-10-3)
(8W-10-4)
(8W-10-5)
FRONT CONTROL MODULE (GAS)
(8W-10-60)
19
FUSE 9 40A
86
30
STARTER MOTOR RELAY
(8W-21-2)
(8W-21-3)
85
87
87A
2 C7
3 C3
14 C3
2 C4
7 C4
EXCEPT BUILT-UP-EXPORT
BUILT-UP-EXPORT
EATX
DIESEL
T751 20 YL
T141 20 YL/OR
T751 18 YL
T751 20 YL
T750 12 YL/GY
A107 12 TN/RD
8
49 C1
1
TRANSMISSION CONTROL MODULE
(8W-31-4)
ENGINE CONTROL MODULE
(8W-30-19)
STARTER MOTOR
(8W-21-2)
(8W-21-3)
EXCEPT BUILT-UP-EXPORT
BUILT-UP-EXPORT
EATX
MTX
1
2
CLUTCH PEDAL INTERLOCK SWITCH JUMPER
(8W-10-53)
(8W-10-54)
CLUTCH PEDAL INTERLOCK SWITCH
(8W-10-53)
(8W-10-54)
24
CONTROLLER ANTILOCK BRAKE
(8W-35-2)
T751 20 YL
58 C200
T751 20 YL
4
IGNITION SWITCH
(8W-10-53)
(8W-10-54)
GAS
DIESEL
T752 18 DG/OR
T752 20 DG/OR
31 C1
74 C1
POWERTRAIN CONTROL MODULE
(8W-30-4)
ENGINE CONTROL MODULE
(8W-30-19)
GAS

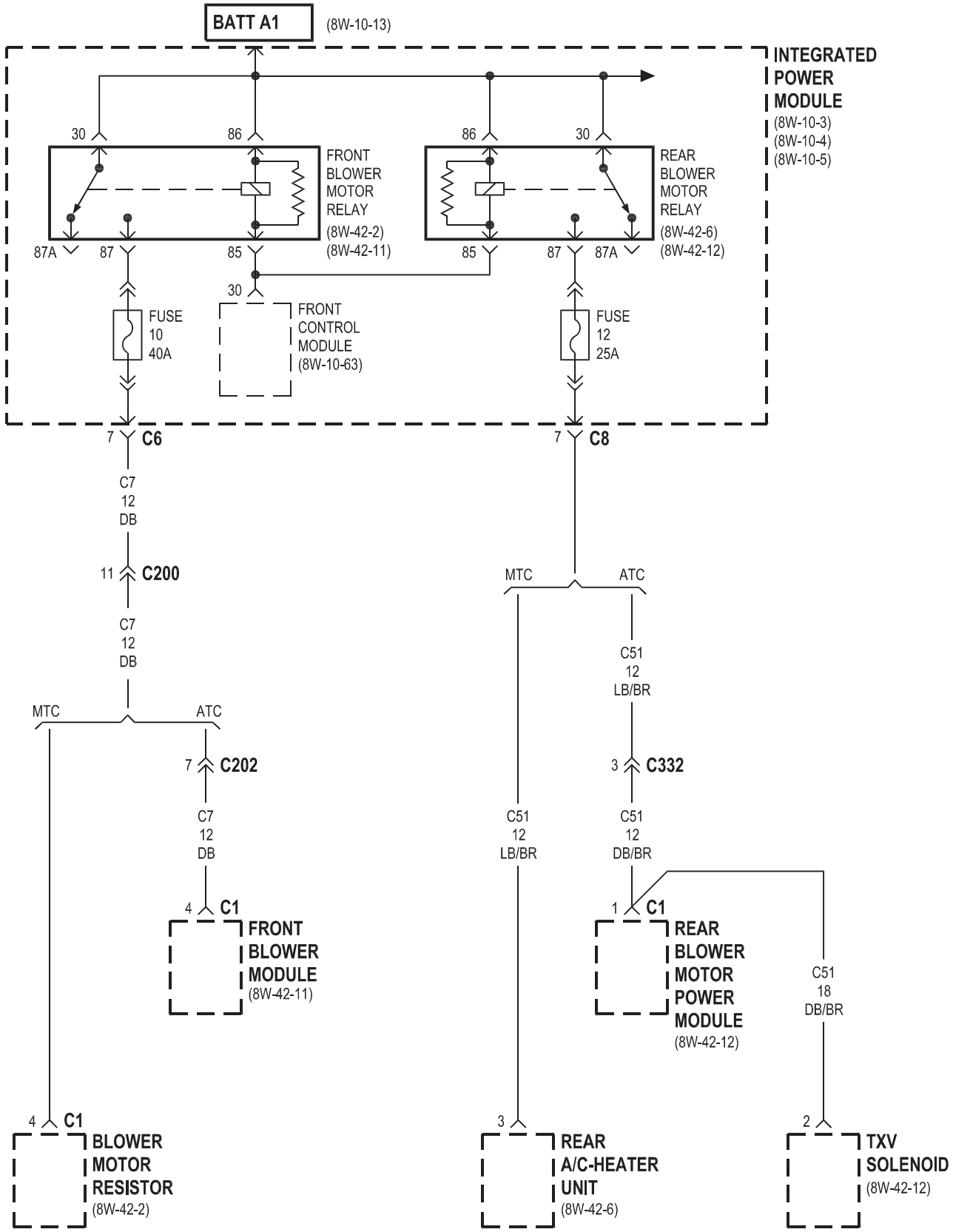
BATT A1
(8W-10-13)
INTEGRATED POWER MODULE
(8W-10-3)
(8W-10-4)
(8W-10-5)
30
86
FRONT BLOWER MOTOR RELAY
(8W-42-2)
(8W-42-11)
87A
87
85
86
30
REAR BLOWER MOTOR RELAY
(8W-42-6)
(8W-42-12)
85
87
87A
30
FUSE 10 40A
FRONT CONTROL MODULE
(8W-10-63)
FUSE 12 25A
7 C6
7 C8
C7 12 DB
11 C200
C7 12 DB
MTC
ATC
7 C202
C7 12 DB
4 C1
FRONT BLOWER MODULE
(8W-42-11)
4 C1
BLOWER MOTOR RESISTOR
(8W-42-2)
MTC
ATC
C51 12 LB/BR
3 C332
C51 12 LB/BR
C51 12 DB/BR
1 C1
REAR BLOWER MOTOR POWER MODULE
(8W-42-12)
C51 18 DB/BR
3 REAR A/C-HEATER UNIT
(8W-42-6)
2 TXV SOLENOID
(8W-42-12)

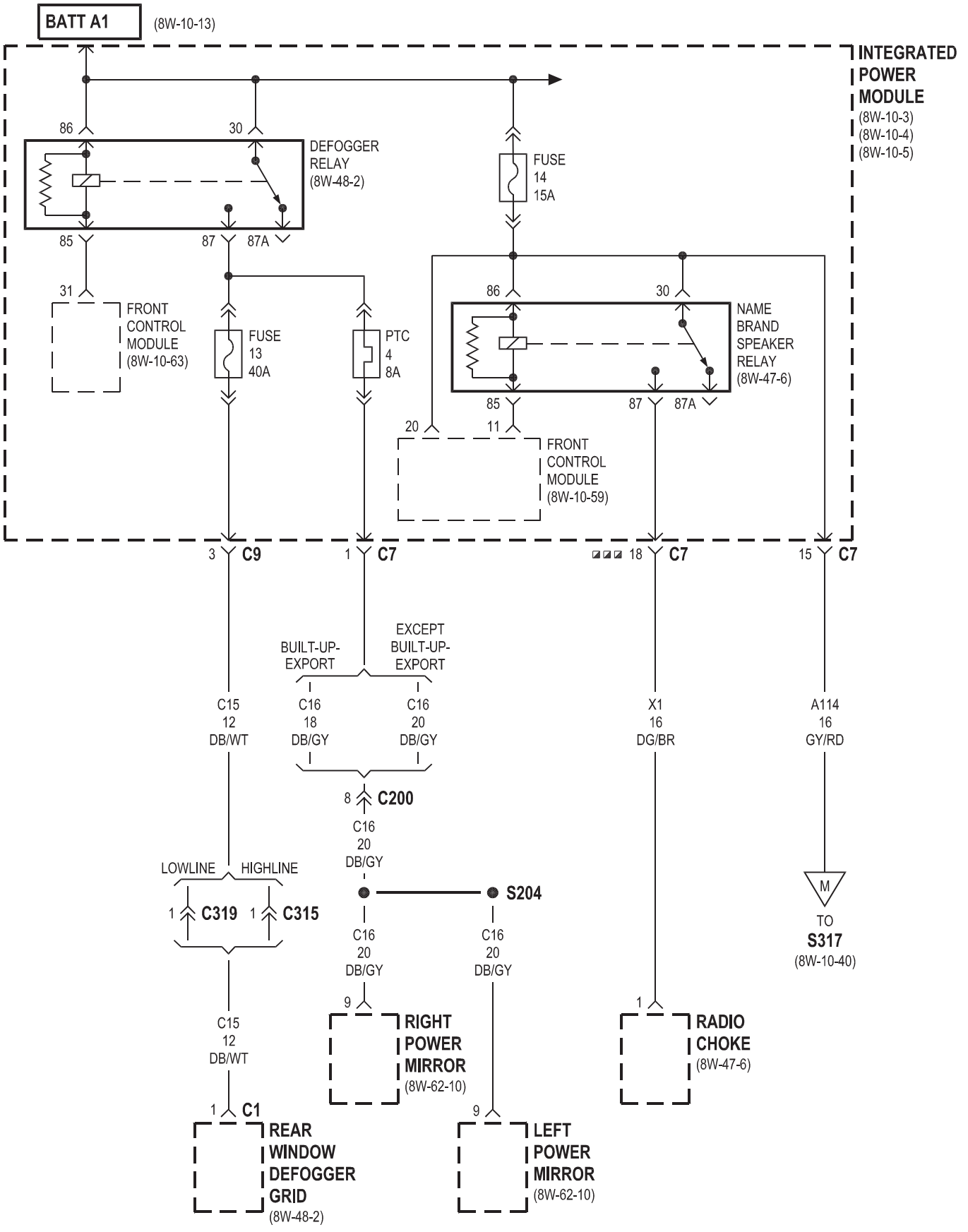
BATT A1
(8W-10-13)
INTEGRATED POWER MODULE
(8W-10-3)
(8W-10-4)
(8W-10-5)
86
30
DEFOGGER RELAY
(8W-48-2)
85
87
87A
31
FRONT CONTROL MODULE
(8W-10-63)
FUSE
13
40A
PTC
4
8A
FUSE
14
15A
86
30
NAME BRAND SPEAKER RELAY
(8W-47-6)
85
87
87A
20
11
FRONT CONTROL MODULE
(8W-10-59)
3 C9
1 C7
18 C7
15 C7
BUILT-UP-EXPORT
EXCEPT BUILT-UP-EXPORT
C15
12
DB/WT
C16
18
DB/GY
C16
20
DB/GY
X1
16
DG/BR
A114
16
GY/RD
8 C200
C16
20
DB/GY
LOWLINE
HIGHLINE
1 C319
1 C315
S204
C16
20
DB/GY
C16
20
DB/GY
M
TO S317
(8W-10-40)
C15
12
DB/WT
9
RIGHT POWER MIRROR
(8W-62-10)
1
RADIO CHOKE
(8W-47-6)
1 C1
REAR WINDOW DEFOGGER GRID
(8W-48-2)
9
LEFT POWER MIRROR
(8W-62-10)
PREMIUM 8 SPEAKER

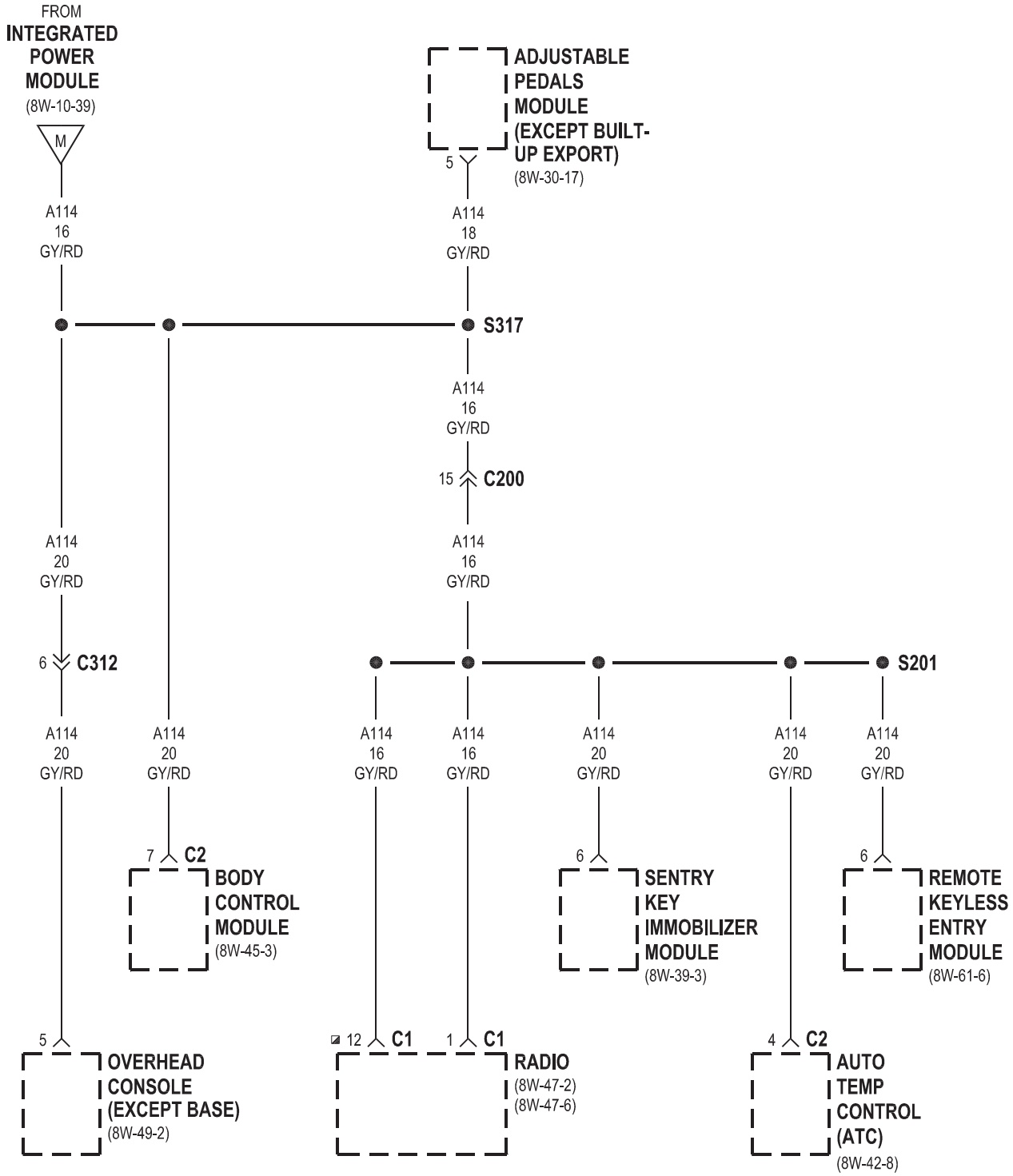

◪ EXCEPT BUILT-UP-EXPORT

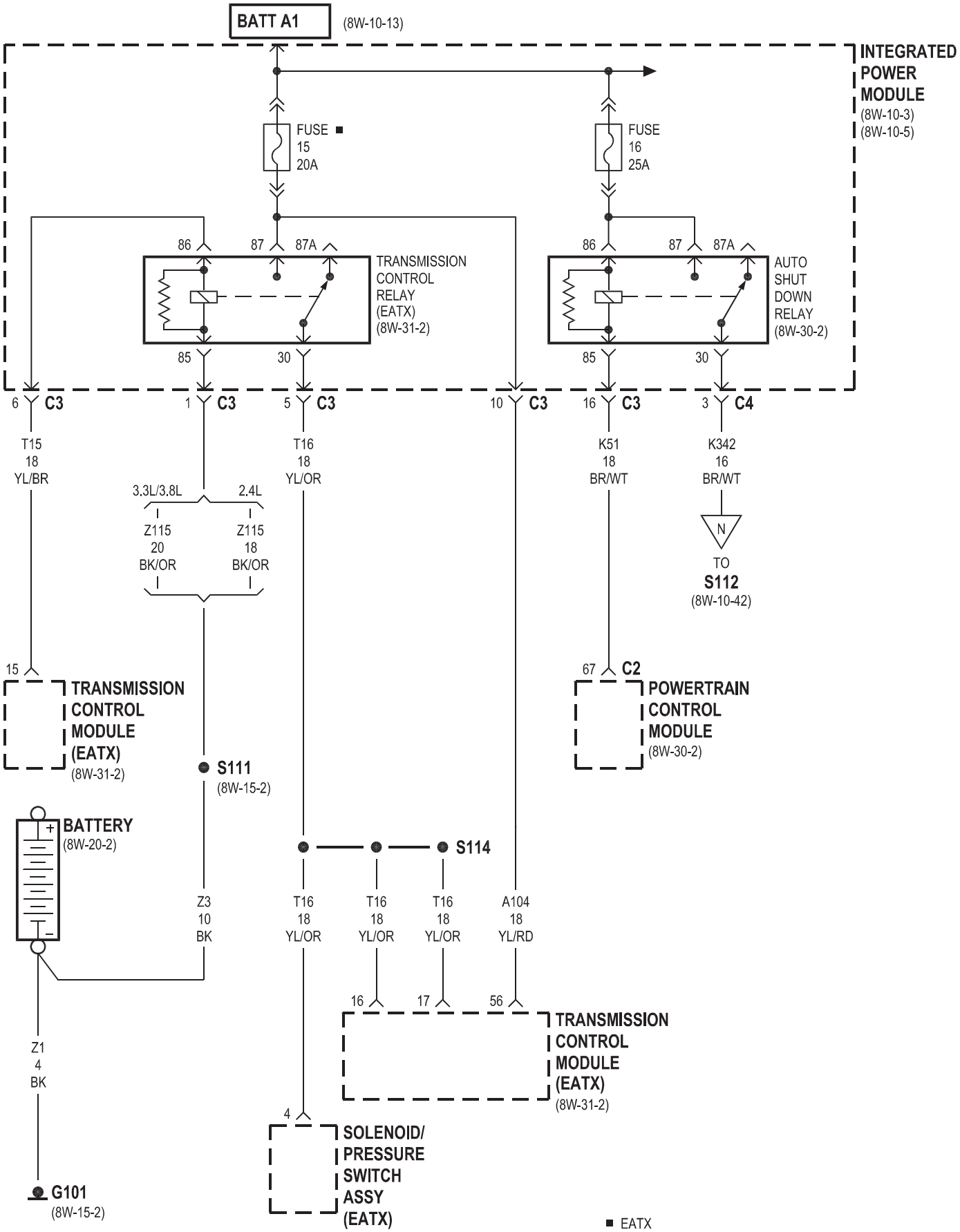
BATT A1
(8W-10-13)
INTEGRATED POWER MODULE
(8W-10-3)
(8W-10-5)
FUSE 15 20A
FUSE 16 25A
86
87
87A
TRANSMISSION CONTROL RELAY (EATX) (8W-31-2)
AUTO SHUT DOWN RELAY (8W-30-2)
85
30
6 C3
1 C3
5 C3
10 C3
16 C3
3 C4
T15 18 YL/BR
3.3L/3.8L
2.4L
Z115 20 BK/OR
Z115 18 BK/OR
T16 18 YL/OR
K51 18 BR/WT
K342 16 BR/WT
N
TO S112
(8W-10-42)
15
TRANSMISSION CONTROL MODULE (EATX)
(8W-31-2)
67 C2
POWERTRAIN CONTROL MODULE
(8W-30-2)
S111
(8W-15-2)
BATTERY
(8W-20-2)
S114
Z3 10 BK
T16 18 YL/OR
T16 18 YL/OR
T16 18 YL/OR
A104 18 YL/RD
16
17
56
TRANSMISSION CONTROL MODULE (EATX)
(8W-31-2)
Z1 4 BK
4
SOLENOID/ PRESSURE SWITCH ASSY (EATX)
(8W-31-6)
(8W-31-7)
G101
(8W-15-2)
EATX

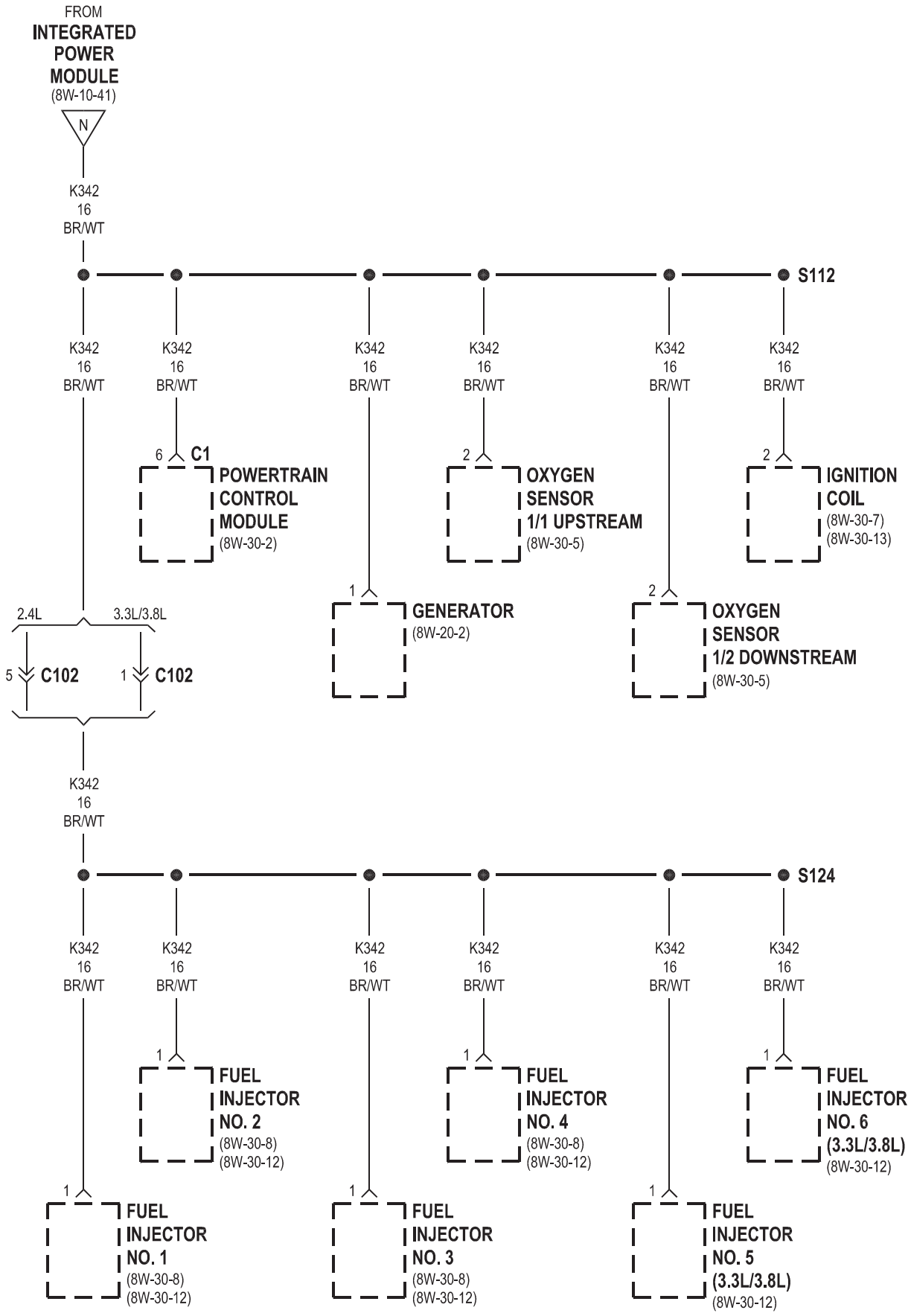
FROM
INTEGRATED POWER MODULE
(8W-10-41)
N
K342
16
BR/WT
S112
K342
16
BR/WT
6 C1
POWERTRAIN CONTROL MODULE
(8W-30-2)
2
OXYGEN SENSOR 1/1 UPSTREAM
(8W-30-5)
2
IGNITION COIL
(8W-30-7)
(8W-30-13)
1
GENERATOR
(8W-20-2)
2
OXYGEN SENSOR 1/2 DOWNSTREAM
(8W-30-5)
2.4L
3.3L/3.8L
5 C102
1 C102
S124
1
FUEL INJECTOR NO. 2
(8W-30-8)
(8W-30-12)
FUEL INJECTOR NO. 4
(8W-30-8)
(8W-30-12)
FUEL INJECTOR NO. 6 (3.3L/3.8L)
(8W-30-12)
FUEL INJECTOR NO. 1
(8W-30-8)
(8W-30-12)
FUEL INJECTOR NO. 3
(8W-30-8)
(8W-30-12)
FUEL INJECTOR NO. 5 (3.3L/3.8L)
(8W-30-12)

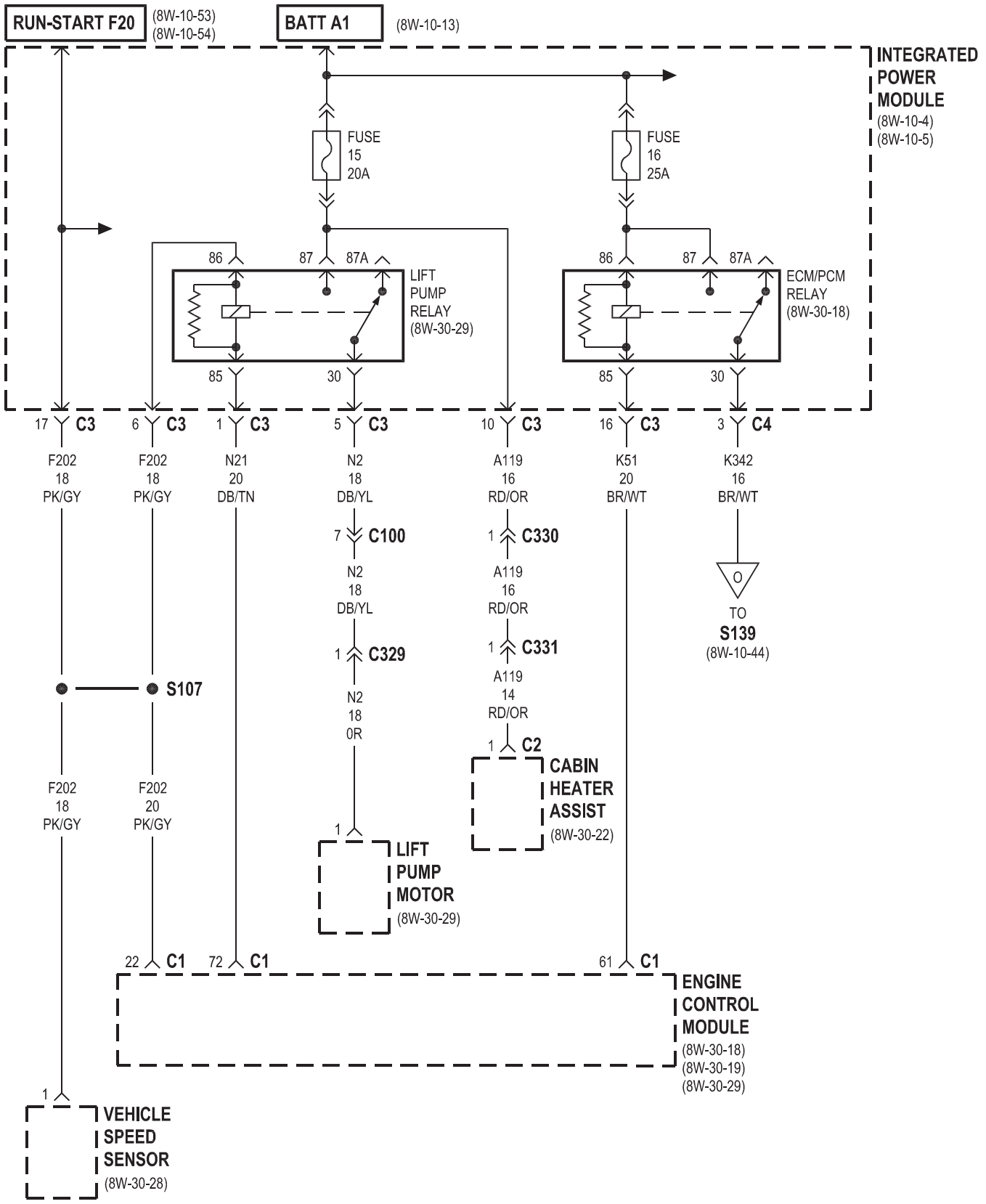
RUN-START F20
(8W-10-53)
(8W-10-54)
BATT A1
(8W-10-13)
INTEGRATED POWER MODULE
(8W-10-4)
(8W-10-5)
FUSE 15 20A
FUSE 16 25A
86
87
87A
85
30
LIFT PUMP RELAY
(8W-30-29)
ECM/PCM RELAY
(8W-30-18)
17 C3
6 C3
1 C3
5 C3
10 C3
16 C3
3 C4
F202 18 PK/GY
F202 18 PK/GY
N21 20 DB/TN
N2 18 DB/YL
A119 16 RD/OR
K51 20 BR/WT
K342 16 BR/WT
7 C100
N2 18 DB/YL
1 C329
N2 18 0R
1 C330
A119 16 RD/OR
1 C331
A119 14 RD/OR
1 C2
CABIN HEATER ASSIST
(8W-30-22)
O
TO S139
(8W-10-44)
S107
F202 18 PK/GY
F202 20 PK/GY
LIFT PUMP MOTOR
(8W-30-29)
22 C1
72 C1
61 C1
ENGINE CONTROL MODULE
(8W-30-18)
(8W-30-19)
(8W-30-29)
VEHICLE SPEED SENSOR
(8W-30-28)

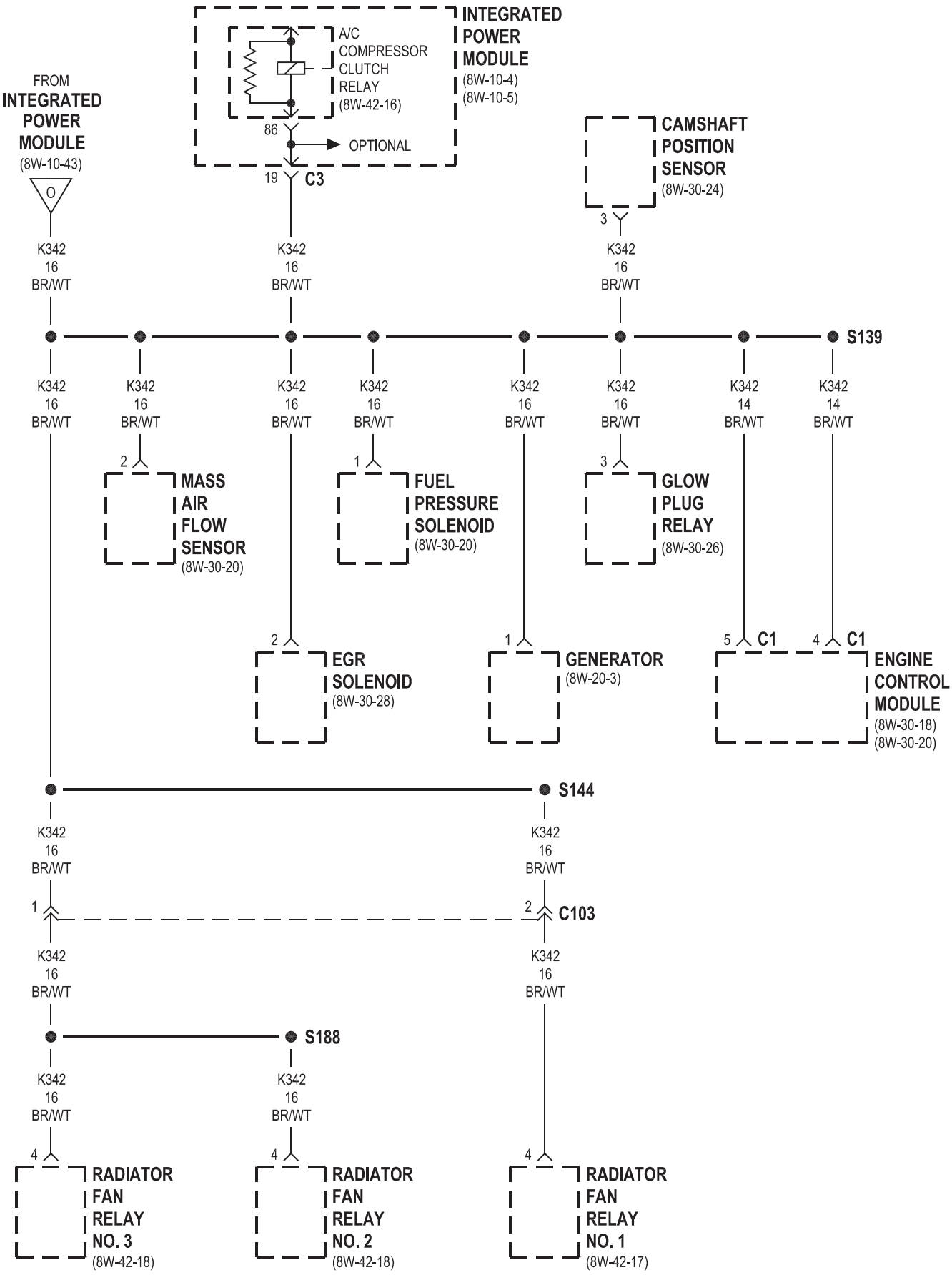
INTEGRATED POWER MODULE
(8W-10-4)
(8W-10-5)
A/C COMPRESSOR CLUTCH RELAY
(8W-42-16)
86
OPTIONAL
19
C3
FROM INTEGRATED POWER MODULE
(8W-10-43)
O
CAMSHAFT POSITION SENSOR
(8W-30-24)
3
K342 16 BR/WT
S139
K342 14 BR/WT
2
MASS AIR FLOW SENSOR
(8W-30-20)
1
FUEL PRESSURE SOLENOID
(8W-30-20)
3
GLOW PLUG RELAY
(8W-30-26)
EGR SOLENOID
(8W-30-28)
GENERATOR
(8W-20-3)
5
C1
4
ENGINE CONTROL MODULE
(8W-30-18)
(8W-30-20)
S144
C103
S188
RADIATOR FAN RELAY NO. 3
(8W-42-18)
RADIATOR FAN RELAY NO. 2
(8W-42-18)
RADIATOR FAN RELAY NO. 1
(8W-42-17)

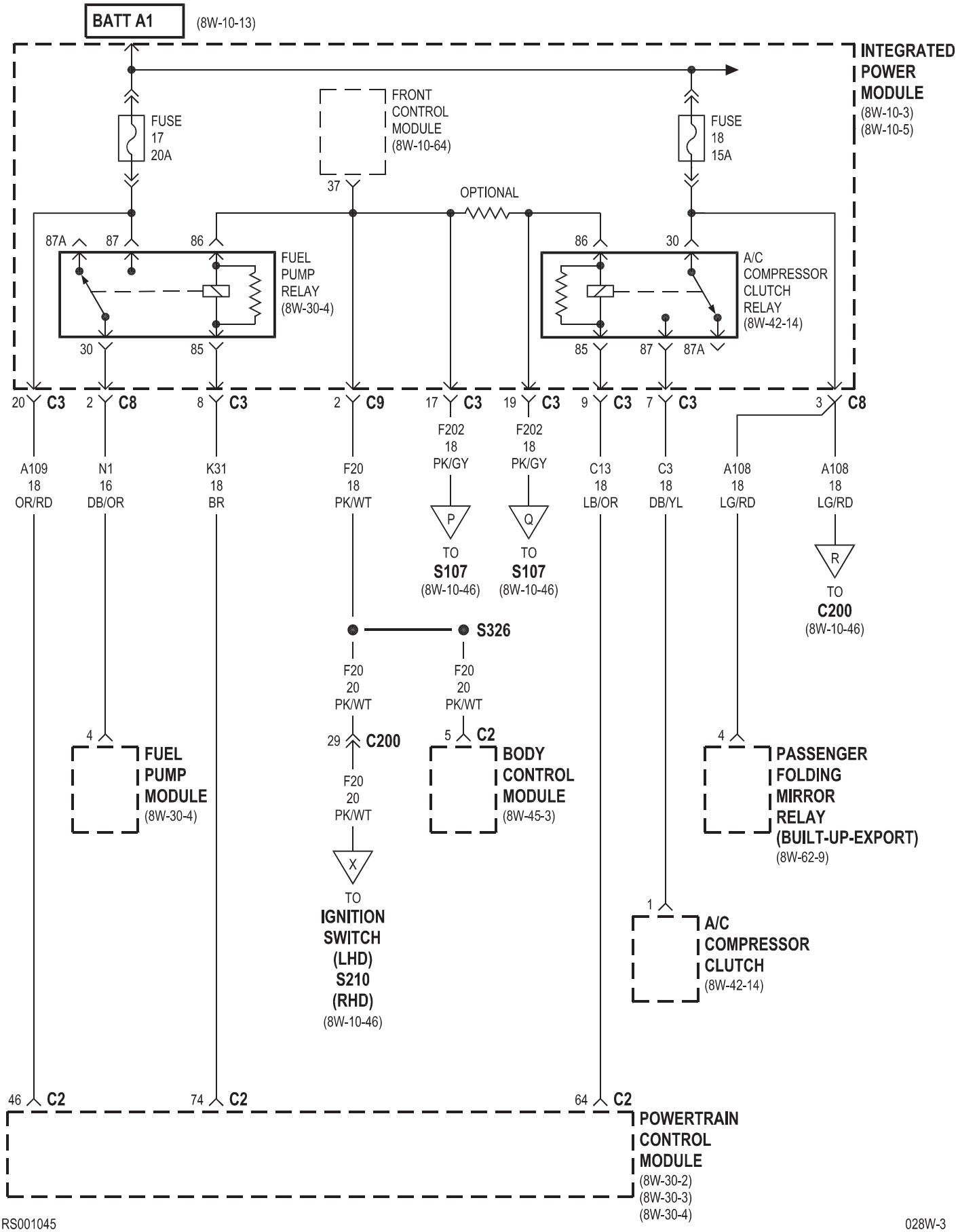
BATT A1
(8W-10-13)
INTEGRATED POWER MODULE
(8W-10-3)
(8W-10-5)
FUSE 17 20A
FRONT CONTROL MODULE
(8W-10-64)
FUSE 18 15A
OPTIONAL
FUEL PUMP RELAY
(8W-30-4)
A/C COMPRESSOR CLUTCH RELAY
(8W-42-14)
20 C3
2 C8
8 C3
2 C9
17 C3
19 C3
9 C3
7 C3
3 C8
A109 18 OR/RD
N1 16 DB/OR
K31 18 BR
F20 18 PK/WT
F202 18 PK/GY
F202 18 PK/GY
C13 18 LB/OR
C3 18 DB/YL
A108 18 LG/RD
A108 18 LG/RD
TO S107 (8W-10-46)
TO S107 (8W-10-46)
TO C200 (8W-10-46)
S326
F20 20 PK/WT
F20 20 PK/WT
29 C200
5 C2
F20 20 PK/WT
TO IGNITION SWITCH (LHD) S210 (RHD)
(8W-10-46)
FUEL PUMP MODULE
(8W-30-4)
BODY CONTROL MODULE
(8W-45-3)
PASSENGER FOLDING MIRROR RELAY (BUILT-UP-EXPORT)
(8W-62-9)
A/C COMPRESSOR CLUTCH
(8W-42-14)
46 C2
74 C2
64 C2
POWERTRAIN CONTROL MODULE
(8W-30-2)
(8W-30-3)
(8W-30-4)

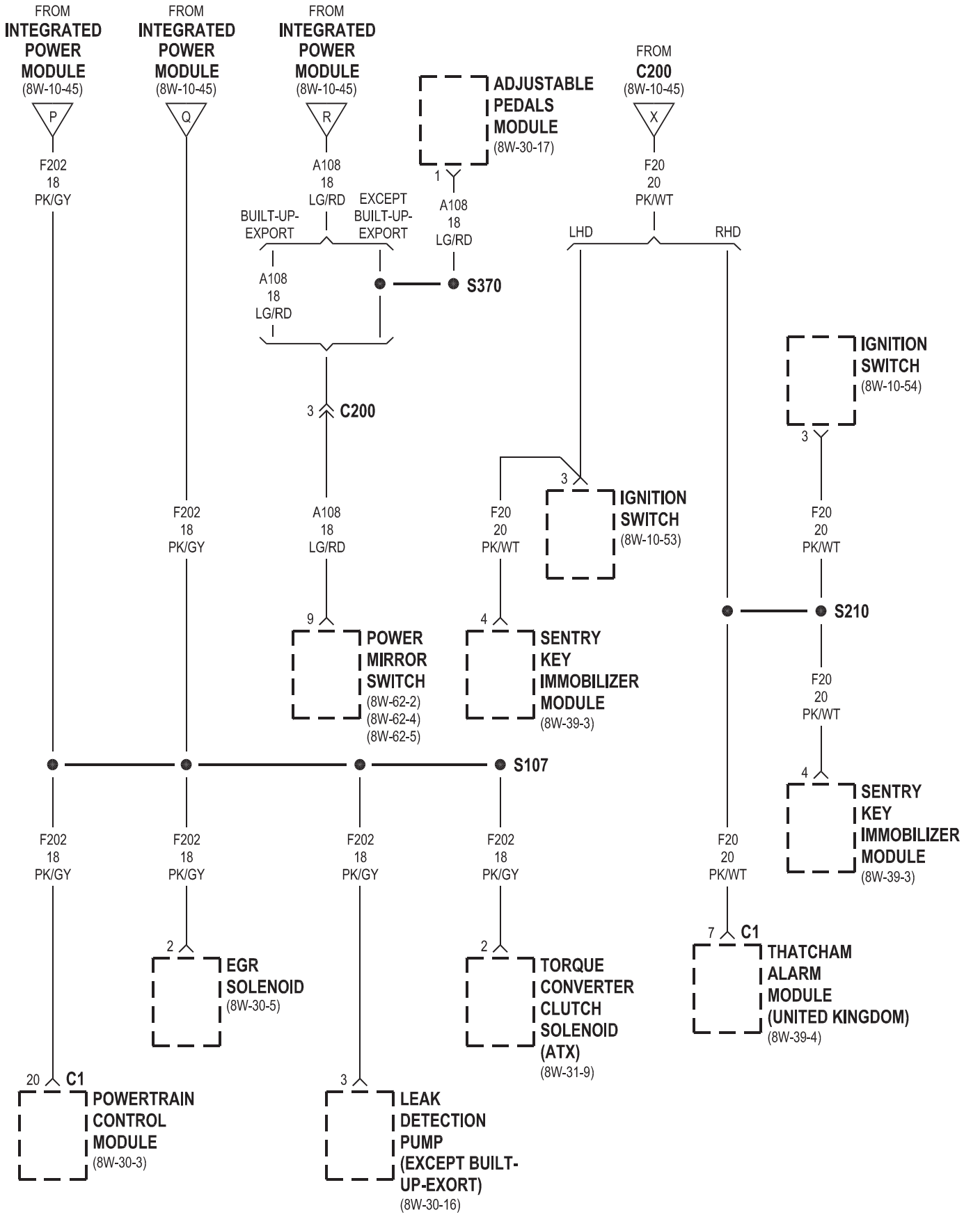
FROM INTEGRATED POWER MODULE (8W-10-45)
P
F202 18 PK/GY
FROM INTEGRATED POWER MODULE (8W-10-45)
Q
F202 18 PK/GY
FROM INTEGRATED POWER MODULE (8W-10-45)
R
A108 18 LG/RD
BUILT-UP-EXPORT
EXCEPT BUILT-UP-EXPORT
A108 18 LG/RD
3 C200
A108 18 LG/RD
9 POWER MIRROR SWITCH (8W-62-2) (8W-62-4) (8W-62-5)
ADJUSTABLE PEDALS MODULE (8W-30-17)
1
A108 18 LG/RD
S370
FROM C200 (8W-10-45)
X
F20 20 PK/WT
LHD
RHD
3 IGNITION SWITCH (8W-10-53)
F20 20 PK/WT
4 SENTRY KEY IMMOBILIZER MODULE (8W-39-3)
3 IGNITION SWITCH (8W-10-54)
F20 20 PK/WT
S210
F20 20 PK/WT
4 SENTRY KEY IMMOBILIZER MODULE (8W-39-3)
S107
F202 18 PK/GY
F202 18 PK/GY
2 EGR SOLENOID (8W-30-5)
F202 18 PK/GY
F202 18 PK/GY
2 TORQUE CONVERTER CLUTCH SOLENOID (ATX) (8W-31-9)
F20 20 PK/WT
7 C1 THATCHAM ALARM MODULE (UNITED KINGDOM) (8W-39-4)
20 C1 POWERTRAIN CONTROL MODULE (8W-30-3)
3 LEAK DETECTION PUMP (EXCEPT BUILT-UP-EXORT) (8W-30-16)

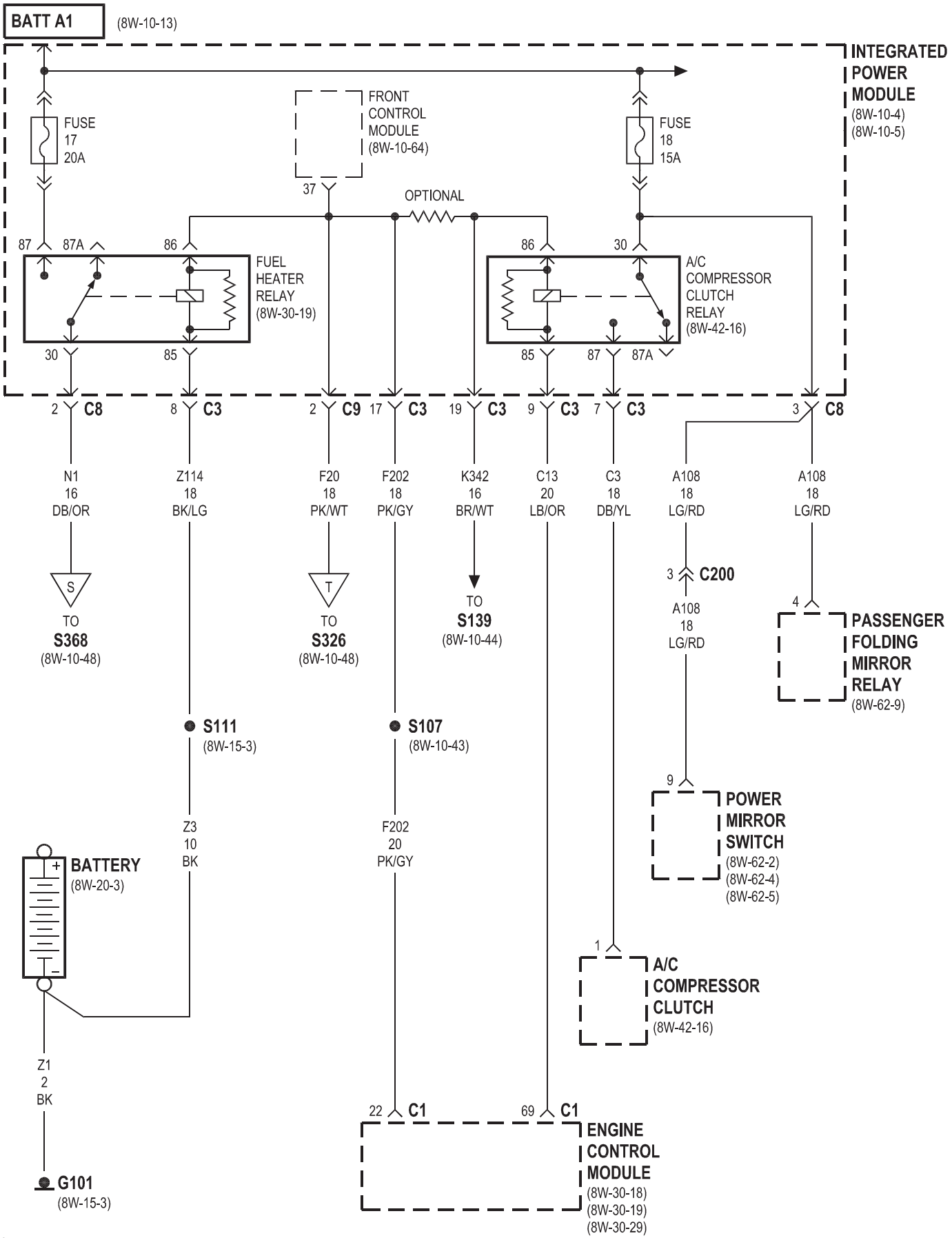
BATT A1
(8W-10-13)
INTEGRATED POWER MODULE
(8W-10-4)
(8W-10-5)
FUSE 17 20A
FRONT CONTROL MODULE
(8W-10-64)
FUSE 18 15A
37
OPTIONAL
87
87A
86
FUEL HEATER RELAY
(8W-30-19)
30
85
86
30
A/C COMPRESSOR CLUTCH RELAY
(8W-42-16)
85
87
87A
2 C8
8 C3
2 C9
17 C3
19 C3
9 C3
7 C3
3 C8
N1 16 DB/OR
Z114 18 BK/LG
F20 18 PK/WT
F202 18 PK/GY
K342 16 BR/WT
C13 20 LB/OR
C3 18 DB/YL
A108 18 LG/RD
A108 18 LG/RD
S
TO S368
(8W-10-48)
T
TO S326
(8W-10-48)
TO S139
(8W-10-44)
3 C200
A108 18 LG/RD
4
PASSENGER FOLDING MIRROR RELAY
(8W-62-9)
S111
(8W-15-3)
S107
(8W-10-43)
9
POWER MIRROR SWITCH
(8W-62-2)
(8W-62-4)
(8W-62-5)
Z3 10 BK
F202 20 PK/GY
BATTERY
(8W-20-3)
1
A/C COMPRESSOR CLUTCH
(8W-42-16)
Z1 2 BK
22 C1
69 C1
ENGINE CONTROL MODULE
(8W-30-18)
(8W-30-19)
(8W-30-29)
G101
(8W-15-3)

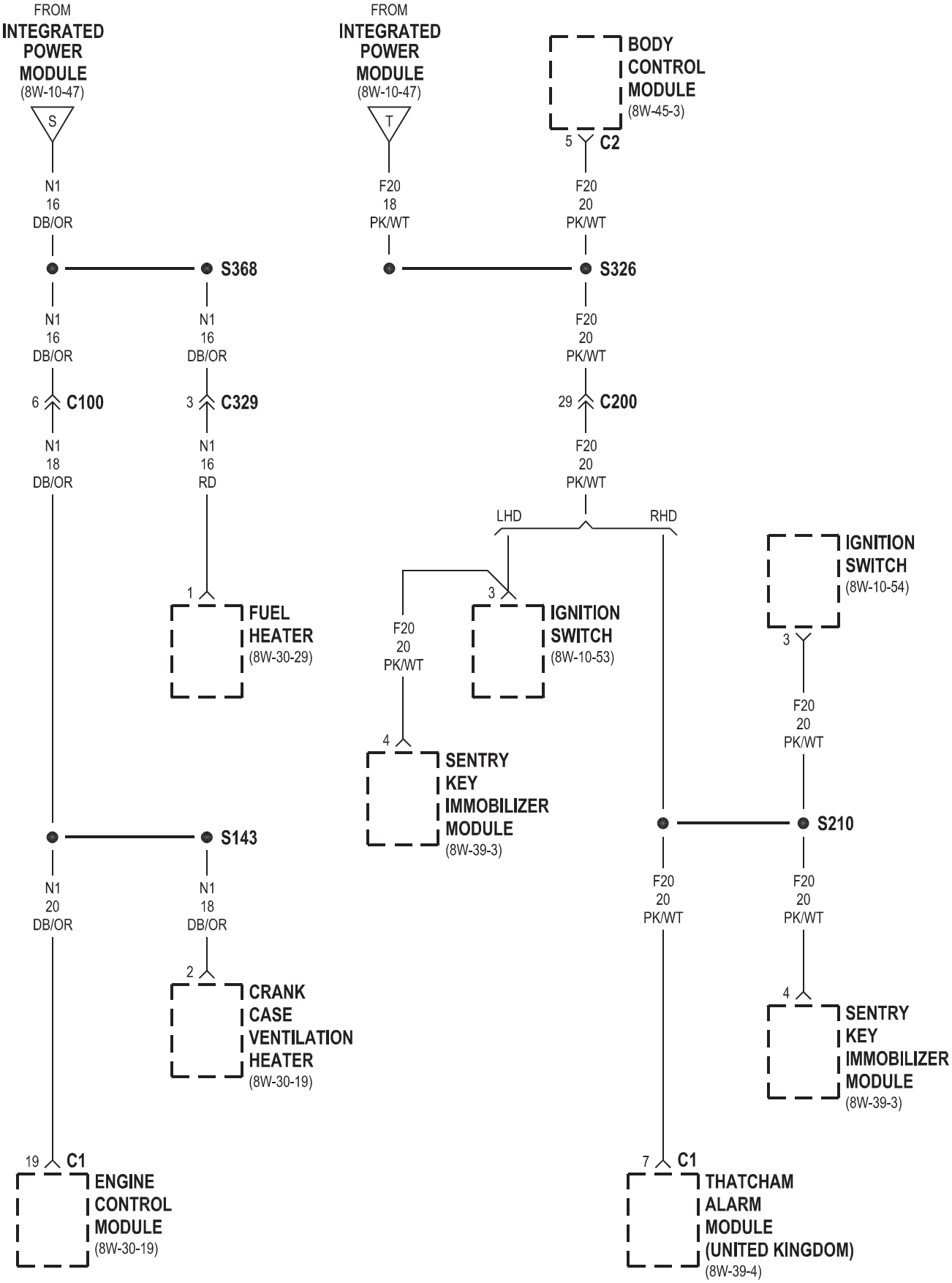
FROM
INTEGRATED POWER MODULE
(8W-10-47)
S
N1
16
DB/OR
S368
N1
16
DB/OR
6 C100
N1
18
DB/OR
S143
N1
20
DB/OR
19 C1
ENGINE CONTROL MODULE
(8W-30-19)
N1
16
DB/OR
3 C329
N1
16
RD
1
FUEL HEATER
(8W-30-29)
N1
18
DB/OR
2
CRANK CASE VENTILATION HEATER
(8W-30-19)
FROM
INTEGRATED POWER MODULE
(8W-10-47)
T
F20
18
PK/WT
S326
BODY CONTROL MODULE
(8W-45-3)
5 C2
F20
20
PK/WT
F20
20
PK/WT
29 C200
F20
20
PK/WT
LHD
RHD
3
IGNITION SWITCH
(8W-10-53)
F20
20
PK/WT
4
SENTRY KEY IMMOBILIZER MODULE
(8W-39-3)
IGNITION SWITCH
(8W-10-54)
3
F20
20
PK/WT
S210
F20
20
PK/WT
F20
20
PK/WT
4
SENTRY KEY IMMOBILIZER MODULE
(8W-39-3)
7 C1
THATCHAM ALARM MODULE (UNITED KINGDOM)
(8W-39-4)

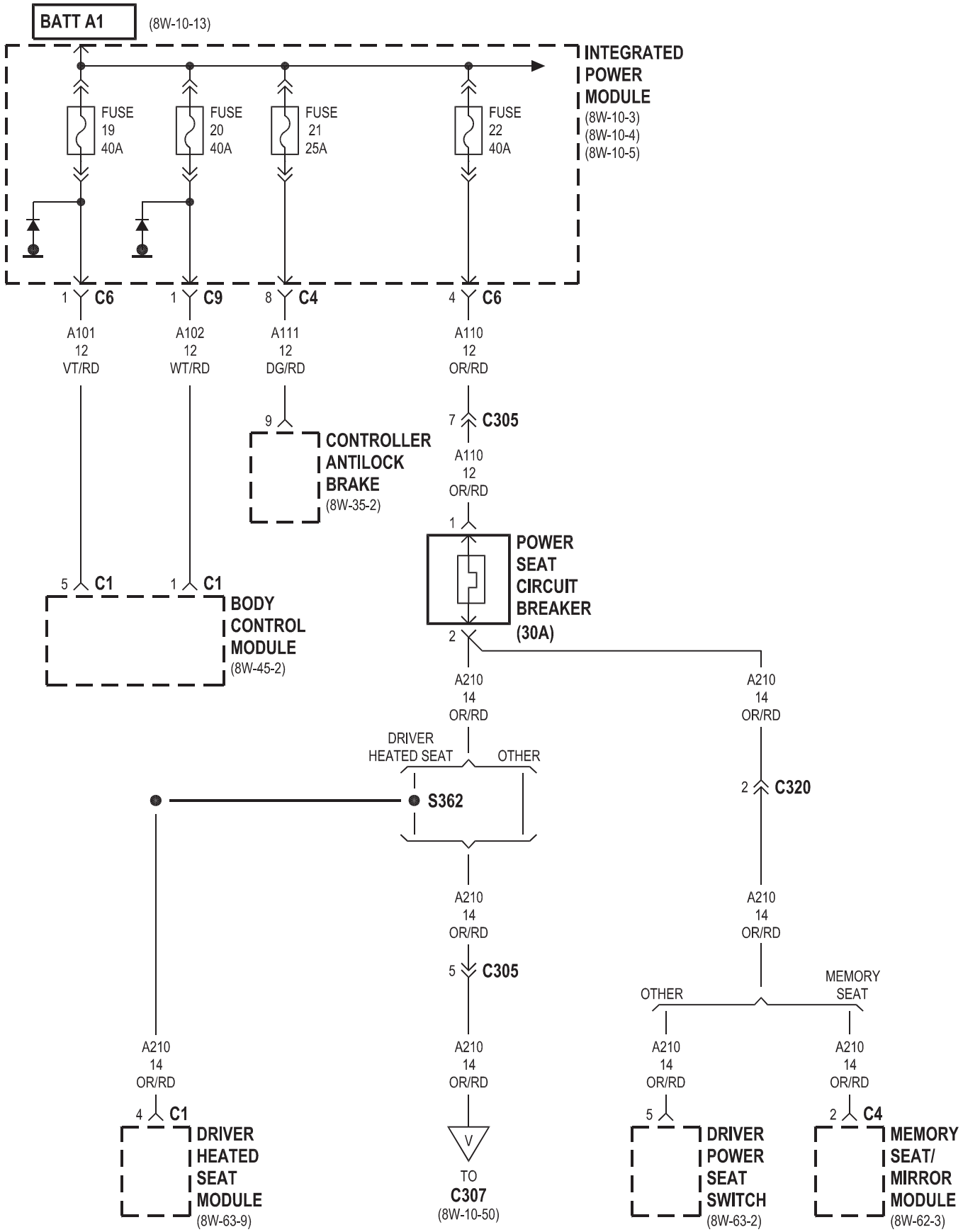
BATT A1
(8W-10-13)
INTEGRATED POWER MODULE
(8W-10-3)
(8W-10-4)
(8W-10-5)
FUSE 19 40A
FUSE 20 40A
FUSE 21 25A
FUSE 22 40A
1 C6
1 C9
8 C4
4 C6
A101 12 VT/RD
A102 12 WT/RD
A111 12 DG/RD
A110 12 OR/RD
9
CONTROLLER ANTILOCK BRAKE
(8W-35-2)
7 C305
A110 12 OR/RD
1
POWER SEAT CIRCUIT BREAKER (30A)
2
5 C1
1 C1
BODY CONTROL MODULE
(8W-45-2)
A210 14 OR/RD
A210 14 OR/RD
DRIVER HEATED SEAT
OTHER
S362
2 C320
A210 14 OR/RD
A210 14 OR/RD
5 C305
OTHER
MEMORY SEAT
A210 14 OR/RD
A210 14 OR/RD
A210 14 OR/RD
A210 14 OR/RD
4 C1
DRIVER HEATED SEAT MODULE
(8W-63-9)
V
TO C307
(8W-10-50)
5
DRIVER POWER SEAT SWITCH
(8W-63-2)
2 C4
MEMORY SEAT/ MIRROR MODULE
(8W-62-3)

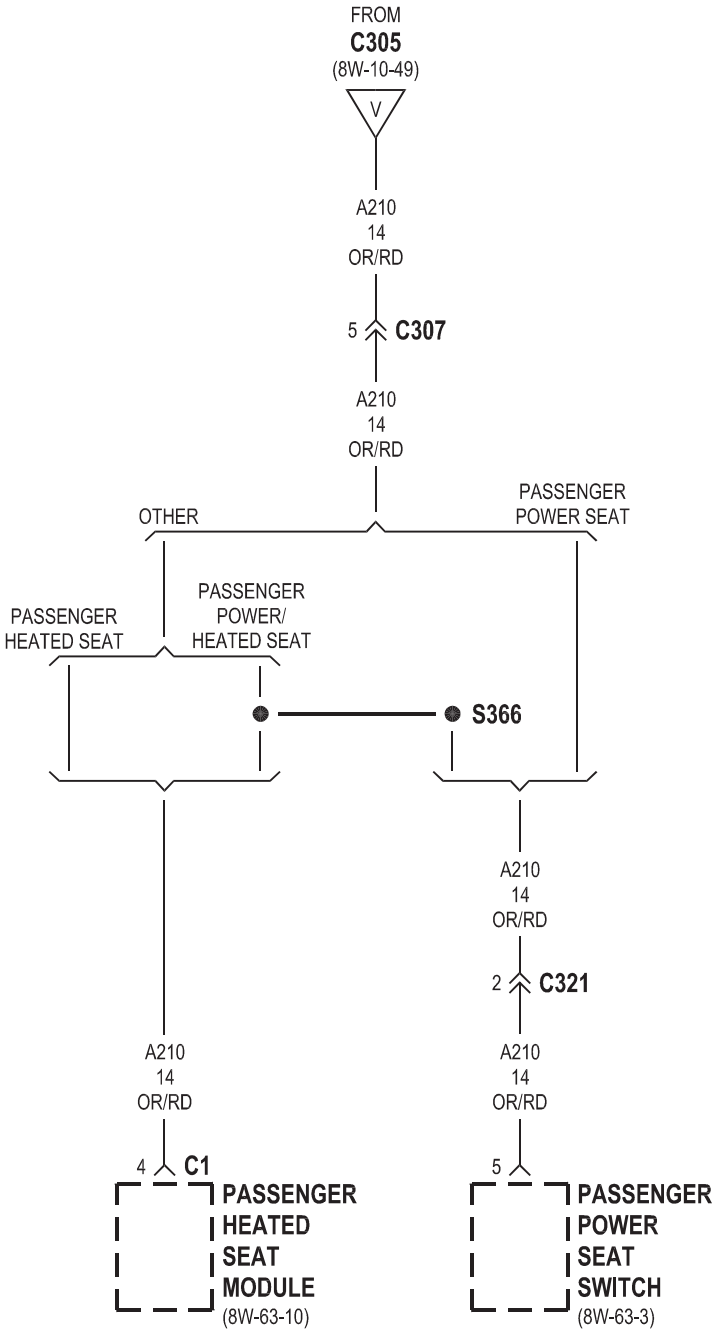
FROM
C305
(8W-10-49)
V
A210
14
OR/RD
5
C307
A210
14
OR/RD
OTHER
PASSENGER
POWER SEAT
PASSENGER
HEATED SEAT
PASSENGER
POWER/
HEATED SEAT
S366
A210
14
OR/RD
2
C321
A210
14
OR/RD
A210
14
OR/RD
4
C1
5
PASSENGER
HEATED
SEAT
MODULE
(8W-63-10)
PASSENGER
POWER
SEAT
SWITCH
(8W-63-3)

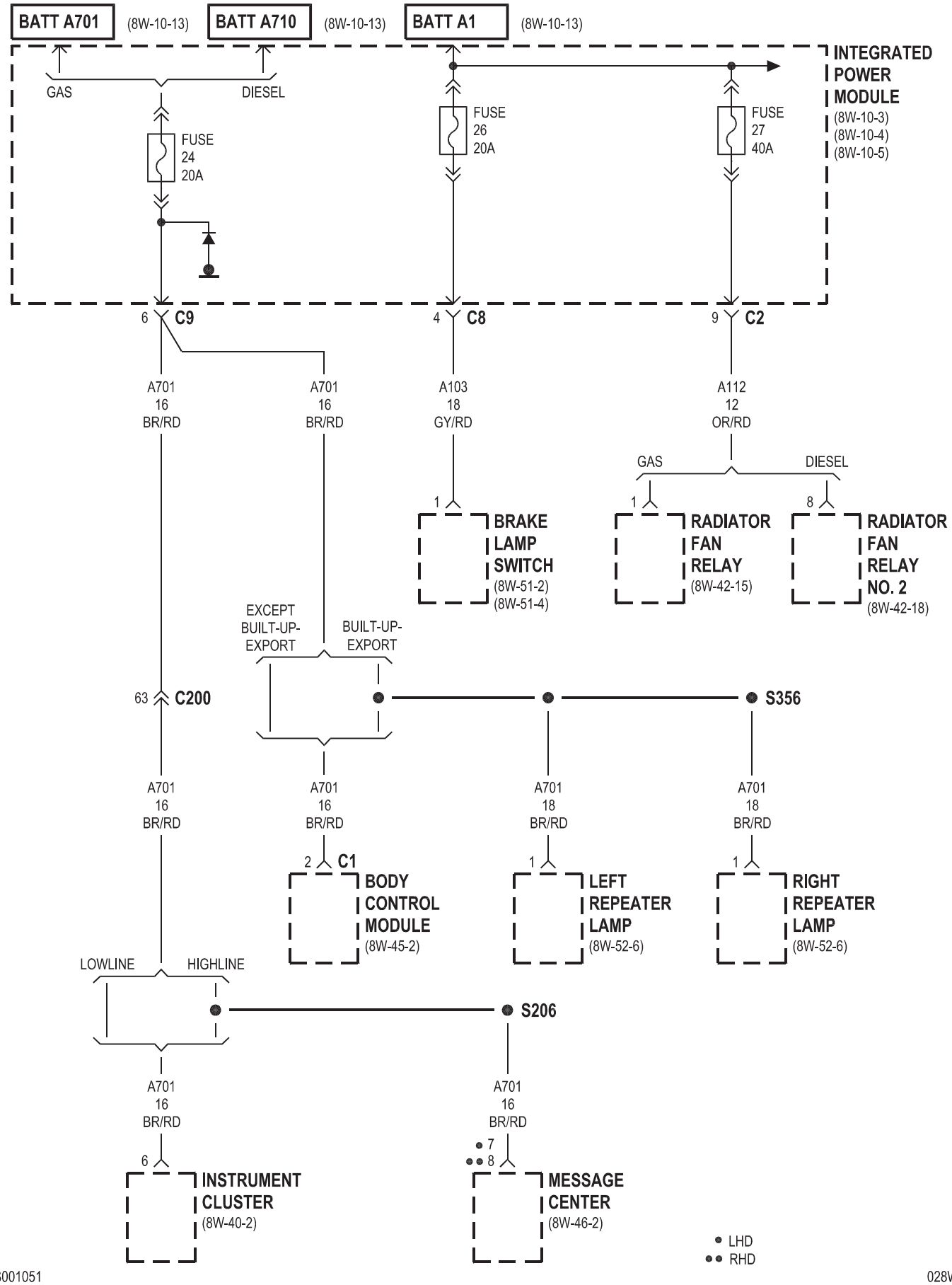
BATT A701
(8W-10-13)
BATT A710
(8W-10-13)
BATT A1
(8W-10-13)
GAS
DIESEL
FUSE 24 20A
FUSE 26 20A
FUSE 27 40A
INTEGRATED POWER MODULE
(8W-10-3)
(8W-10-4)
(8W-10-5)
6 C9
4 C8
9 C2
A701 16 BR/RD
A701 16 BR/RD
A103 18 GY/RD
A112 12 OR/RD
GAS
DIESEL
1
BRAKE LAMP SWITCH
(8W-51-2)
(8W-51-4)
1
RADIATOR FAN RELAY
(8W-42-15)
8
RADIATOR FAN RELAY NO. 2
(8W-42-18)
EXCEPT BUILT-UP-EXPORT
BUILT-UP-EXPORT
63 C200
S356
A701 16 BR/RD
A701 16 BR/RD
A701 18 BR/RD
A701 18 BR/RD
2 C1
BODY CONTROL MODULE
(8W-45-2)
1
LEFT REPEATER LAMP
(8W-52-6)
1
RIGHT REPEATER LAMP
(8W-52-6)
LOWLINE
HIGHLINE
S206
A701 16 BR/RD
A701 16 BR/RD
6
INSTRUMENT CLUSTER
(8W-40-2)
7
8
MESSAGE CENTER
(8W-46-2)
LHD
RHD

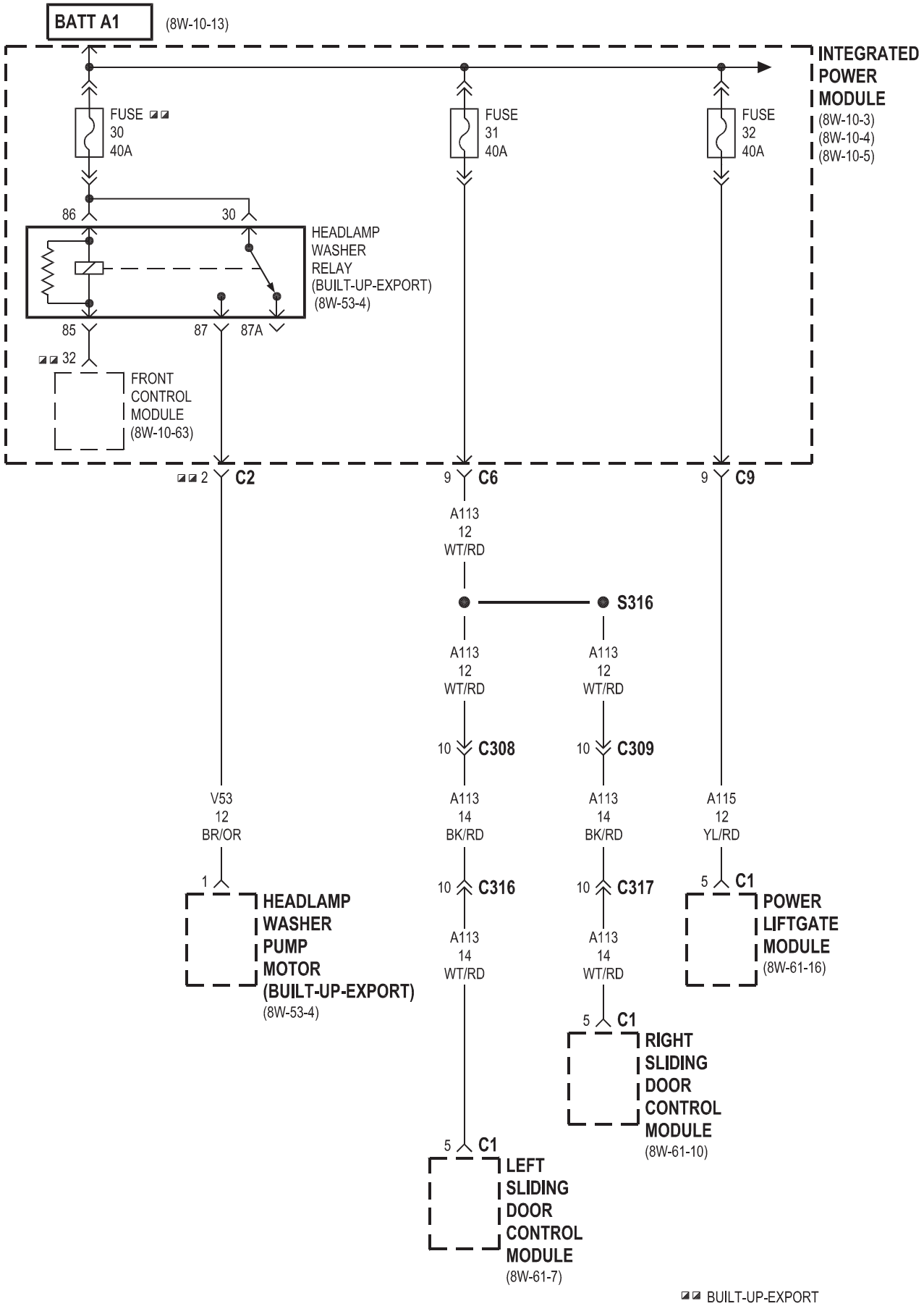
BATT A1
(8W-10-13)
INTEGRATED POWER MODULE
(8W-10-3)
(8W-10-4)
(8W-10-5)
FUSE 30 40A
FUSE 31 40A
FUSE 32 40A
86
30
HEADLAMP WASHER RELAY (BUILT-UP-EXPORT) (8W-53-4)
85
87
87A
32
FRONT CONTROL MODULE (8W-10-63)
2 C2
9 C6
9 C9
A113 12 WT/RD
S316
A113 12 WT/RD
A113 12 WT/RD
10 C308
10 C309
V53 12 BR/OR
A113 14 BK/RD
A113 14 BK/RD
A115 12 YL/RD
1
10 C316
10 C317
5 C1
HEADLAMP WASHER PUMP MOTOR (BUILT-UP-EXPORT)
(8W-53-4)
A113 14 WT/RD
A113 14 WT/RD
POWER LIFTGATE MODULE
(8W-61-16)
5 C1
RIGHT SLIDING DOOR CONTROL MODULE
(8W-61-10)
5 C1
LEFT SLIDING DOOR CONTROL MODULE
(8W-61-7)
BUILT-UP-EXPORT

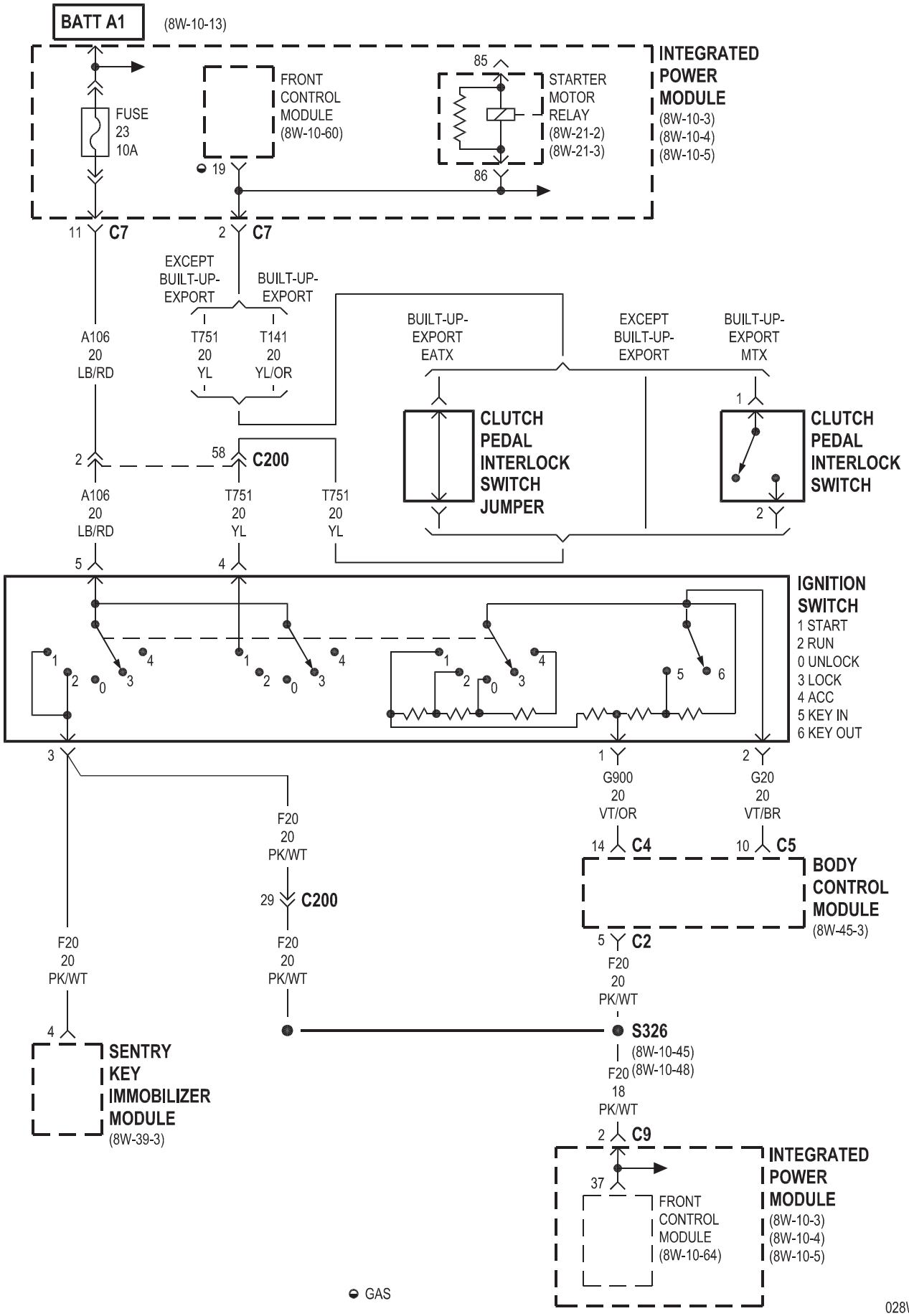
BATT A1
(8W-10-13)
INTEGRATED POWER MODULE
(8W-10-3)
(8W-10-4)
(8W-10-5)
FUSE 23 10A
FRONT CONTROL MODULE (8W-10-60)
STARTER MOTOR RELAY
(8W-21-2)
(8W-21-3)
85
86
19
11 C7
2 C7
EXCEPT BUILT-UP-EXPORT
BUILT-UP-EXPORT
A106 20 LB/RD
T751 20 YL
T141 20 YL/OR
BUILT-UP-EXPORT EATX
EXCEPT BUILT-UP-EXPORT
BUILT-UP-EXPORT MTX
CLUTCH PEDAL INTERLOCK SWITCH JUMPER
CLUTCH PEDAL INTERLOCK SWITCH
2
58 C200
A106 20 LB/RD
T751 20 YL
T751 20 YL
5
4
IGNITION SWITCH
1 START
2 RUN
0 UNLOCK
3 LOCK
4 ACC
5 KEY IN
6 KEY OUT
3
1
2
F20 20 PK/WT
G900 20 VT/OR
G20 20 VT/BR
29 C200
14 C4
10 C5
BODY CONTROL MODULE
(8W-45-3)
5 C2
F20 20 PK/WT
F20 20 PK/WT
F20 20 PK/WT
4
S326
(8W-10-45)
(8W-10-48)
SENTRY KEY IMMOBILIZER MODULE
(8W-39-3)
F20 18 PK/WT
2 C9
37
FRONT CONTROL MODULE (8W-10-64)
INTEGRATED POWER MODULE
(8W-10-3)
(8W-10-4)
(8W-10-5)
GAS

RHD

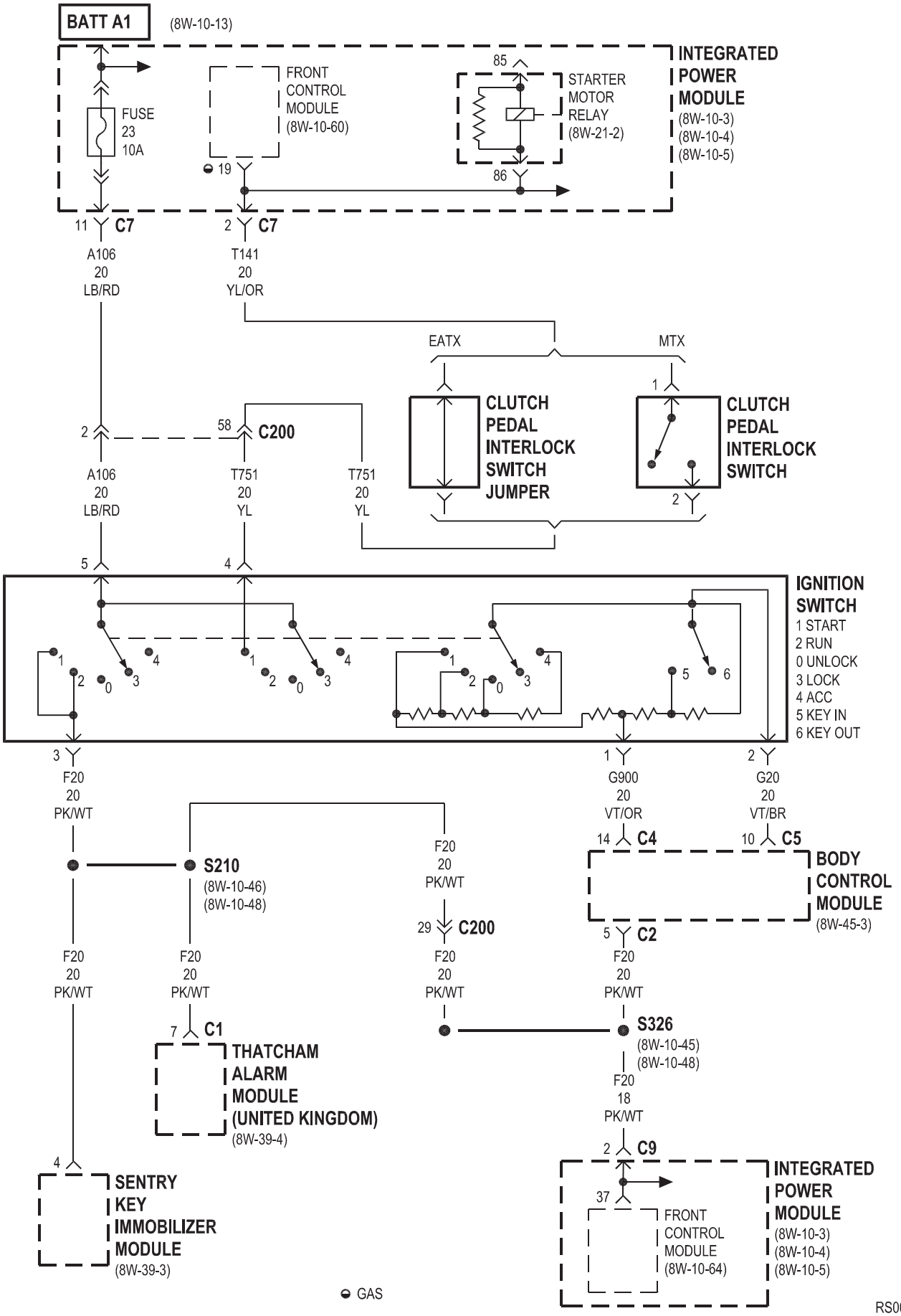
BATT A1
(8W-10-13)
FUSE 23 10A
FRONT CONTROL MODULE (8W-10-60)
STARTER MOTOR RELAY (8W-21-2)
INTEGRATED POWER MODULE (8W-10-3) (8W-10-4) (8W-10-5)
85
86
19
11 C7
2 C7
A106 20 LB/RD
T141 20 YL/OR
EATX
MTX
CLUTCH PEDAL INTERLOCK SWITCH JUMPER
CLUTCH PEDAL INTERLOCK SWITCH
2
58 C200
A106 20 LB/RD
T751 20 YL
T751 20 YL
1
2
5
4
IGNITION SWITCH
1 START
2 RUN
0 UNLOCK
3 LOCK
4 ACC
5 KEY IN
6 KEY OUT
3 F20 20 PK/WT
1 G900 20 VT/OR
2 G20 20 VT/BR
S210 (8W-10-46) (8W-10-48)
F20 20 PK/WT
F20 20 PK/WT
F20 20 PK/WT
29 C200
F20 20 PK/WT
14 C4
10 C5
BODY CONTROL MODULE (8W-45-3)
5 C2
F20 20 PK/WT
7 C1
THATCHAM ALARM MODULE (UNITED KINGDOM) (8W-39-4)
S326 (8W-10-45) (8W-10-48)
F20 18 PK/WT
2 C9
4
SENTRY KEY IMMOBILIZER MODULE (8W-39-3)
37
FRONT CONTROL MODULE (8W-10-64)
INTEGRATED POWER MODULE (8W-10-3) (8W-10-4) (8W-10-5)
GAS

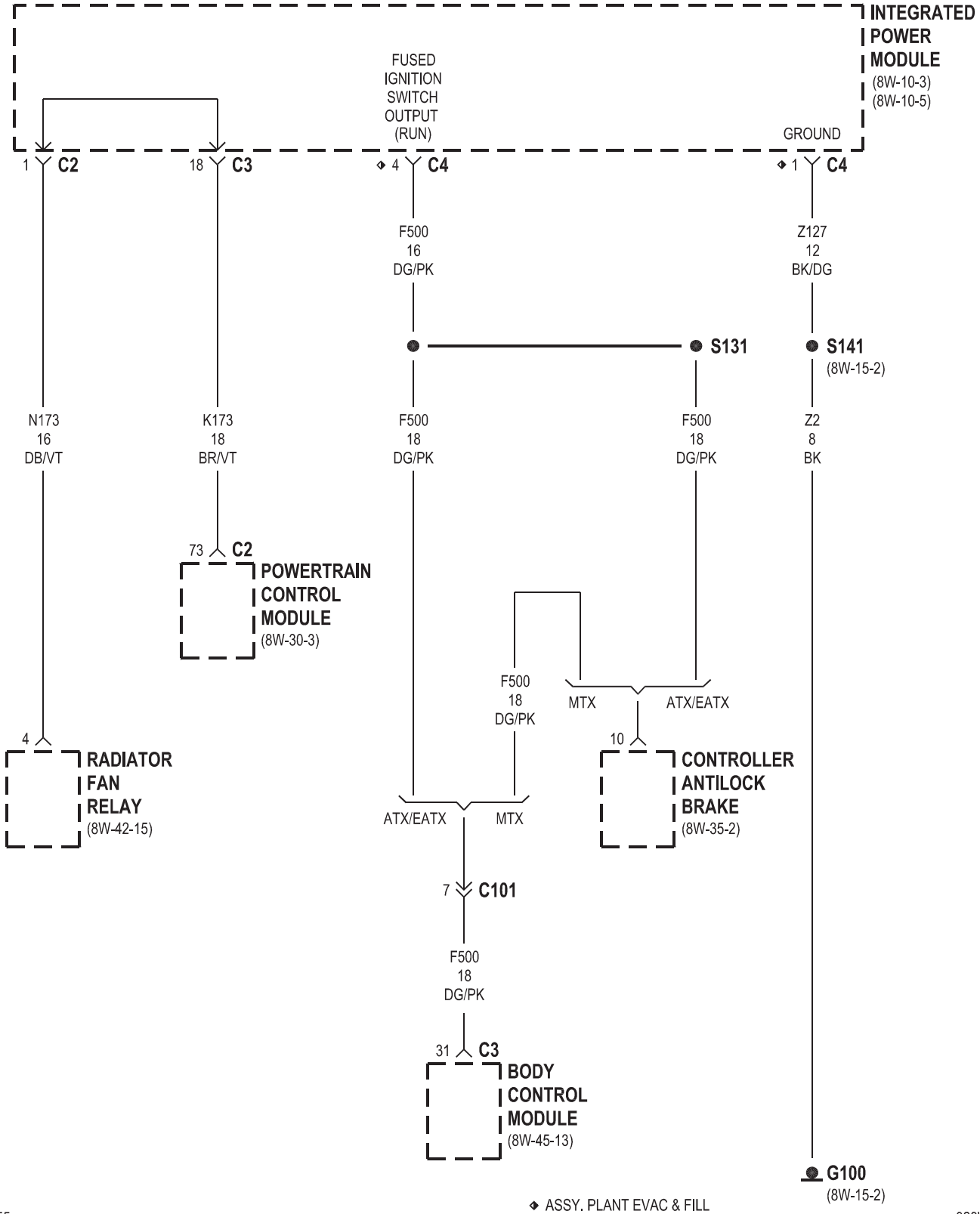
INTEGRATED POWER MODULE
(8W-10-3)
(8W-10-5)
FUSED IGNITION SWITCH OUTPUT (RUN)
GROUND
1 C2
18 C3
4 C4
1 C4
F500 16 DG/PK
Z127 12 BK/DG
S131
S141
(8W-15-2)
N173 16 DB/VT
K173 18 BR/VT
F500 18 DG/PK
F500 18 DG/PK
Z2 8 BK
73 C2
POWERTRAIN CONTROL MODULE
(8W-30-3)
F500 18 DG/PK
MTX
ATX/EATX
4
RADIATOR FAN RELAY
(8W-42-15)
10
CONTROLLER ANTILOCK BRAKE
(8W-35-2)
ATX/EATX
MTX
7 C101
F500 18 DG/PK
31 C3
BODY CONTROL MODULE
(8W-45-13)
G100
(8W-15-2)
◆ ASSY. PLANT EVAC & FILL

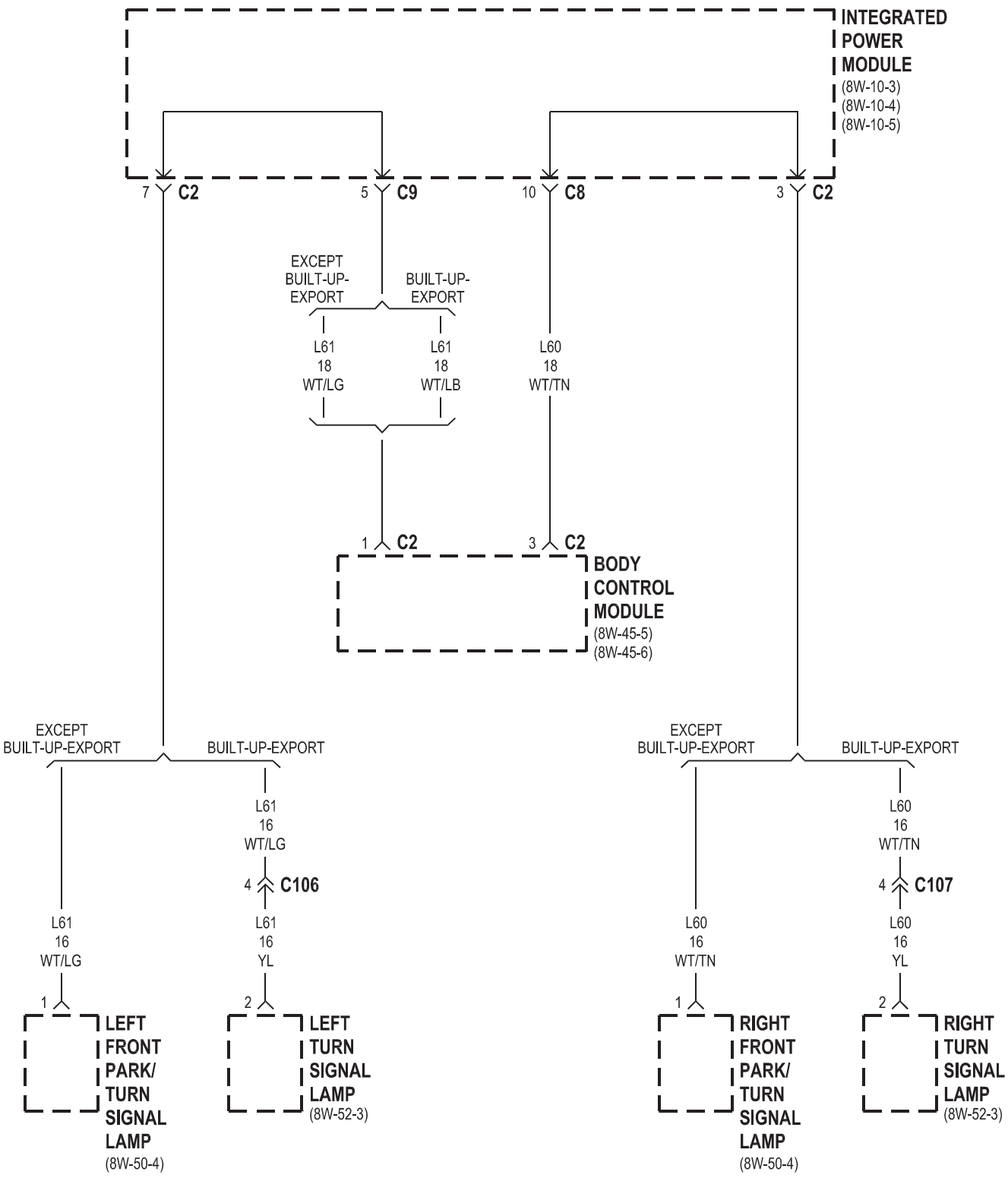
INTEGRATED POWER MODULE
(8W-10-3)
(8W-10-4)
(8W-10-5)
7 C2
5 C9
10 C8
3 C2
EXCEPT BUILT-UP-EXPORT
BUILT-UP-EXPORT
L61 18 WT/LG
L61 18 WT/LB
L60 18 WT/TN
1 C2
3 C2
BODY CONTROL MODULE
(8W-45-5)
(8W-45-6)
EXCEPT BUILT-UP-EXPORT
BUILT-UP-EXPORT
L61 16 WT/LG
4 C106
L61 16 WT/LG
1
LEFT FRONT PARK/ TURN SIGNAL LAMP
(8W-50-4)
L61 16 YL
2
LEFT TURN SIGNAL LAMP
(8W-52-3)
EXCEPT BUILT-UP-EXPORT
BUILT-UP-EXPORT
L60 16 WT/TN
4 C107
L60 16 WT/TN
1
RIGHT FRONT PARK/ TURN SIGNAL LAMP
(8W-50-4)
L60 16 YL
2
RIGHT TURN SIGNAL LAMP
(8W-52-3)

FRONT CONTROL MODULE EXCEPT BUILT-UP-EXPORT

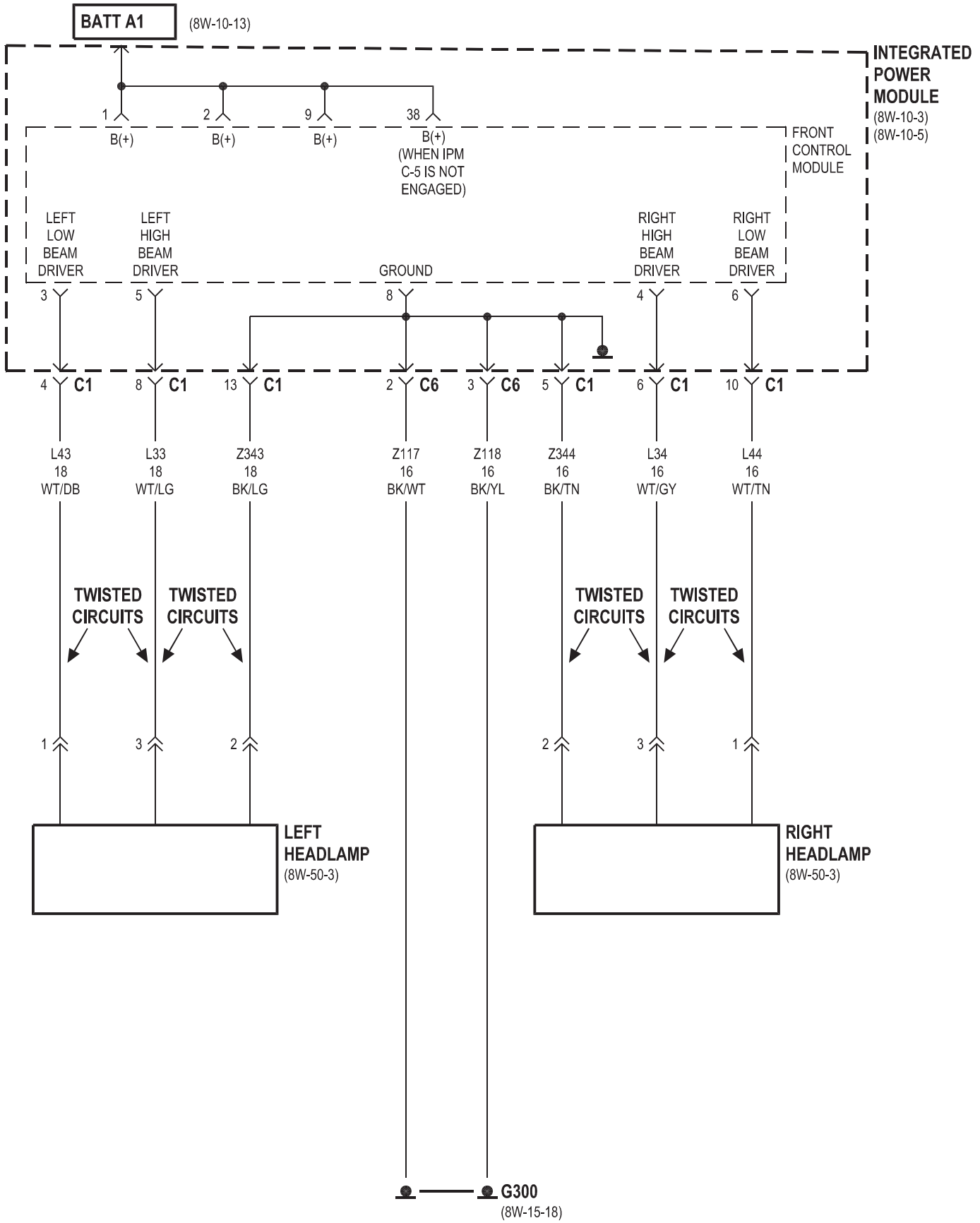

FRONT CONTROL MODULE BUILT-UP-EXPORT

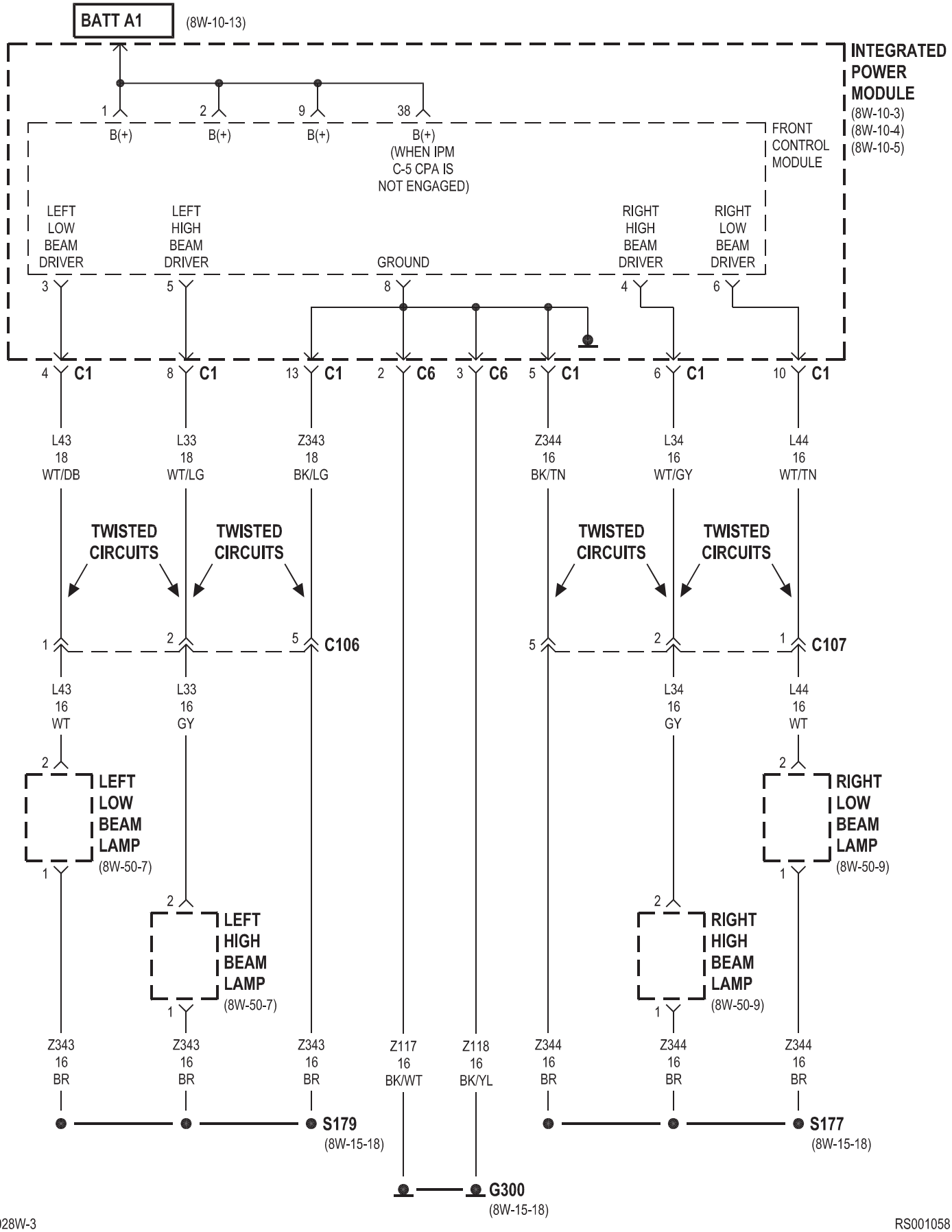

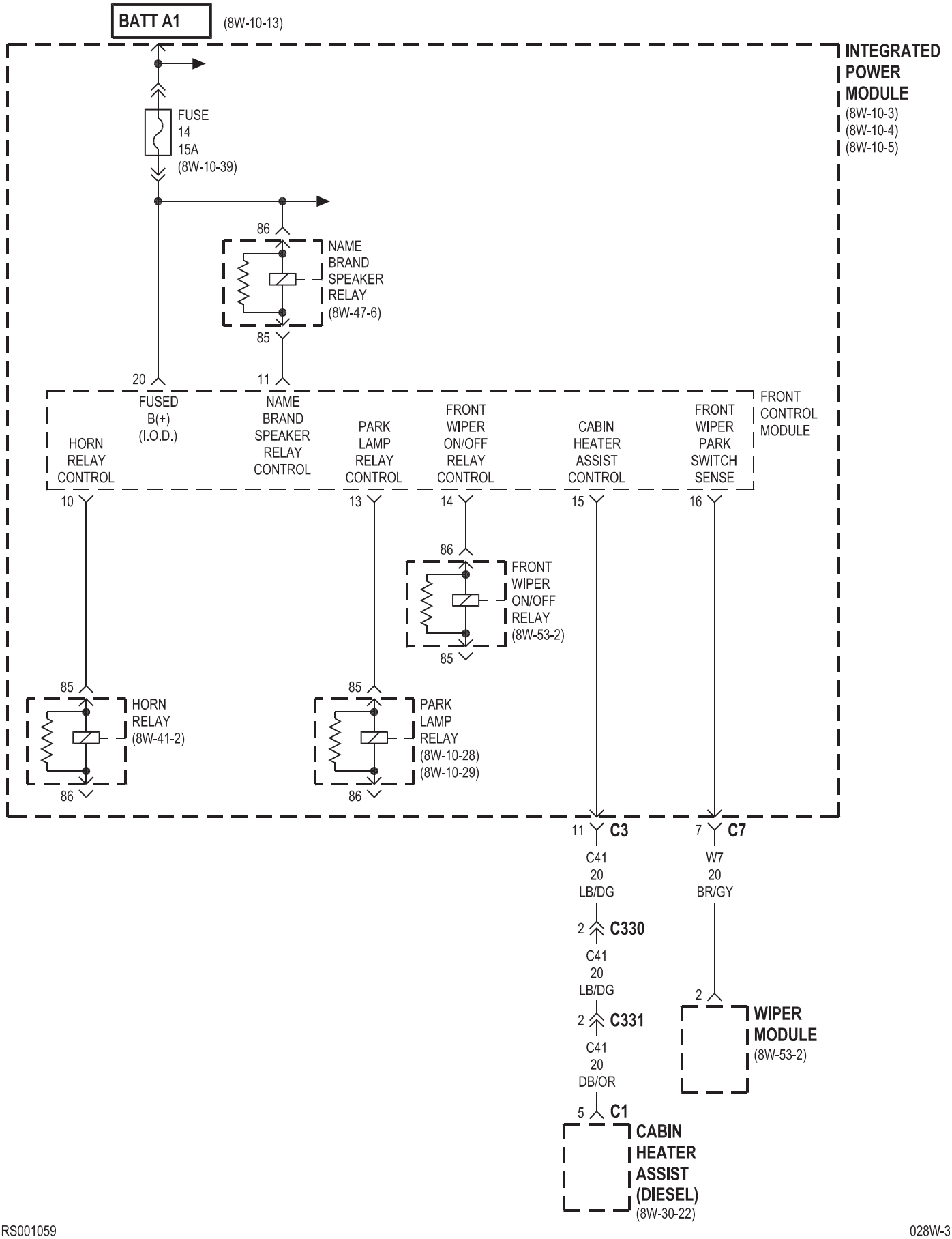
BATT A1
(8W-10-13)
INTEGRATED POWER MODULE
(8W-10-3)
(8W-10-4)
(8W-10-5)
FUSE
14
15A
(8W-10-39)
86
NAME BRAND SPEAKER RELAY
(8W-47-6)
85
20
11
FUSED B(+)
(I.O.D.)
NAME BRAND SPEAKER RELAY CONTROL
FRONT CONTROL MODULE
HORN RELAY CONTROL
PARK LAMP RELAY CONTROL
FRONT WIPER ON/OFF RELAY CONTROL
CABIN HEATER ASSIST CONTROL
FRONT WIPER PARK SWITCH SENSE
10
13
14
15
16
86
FRONT WIPER ON/OFF RELAY
(8W-53-2)
85
85
HORN RELAY
(8W-41-2)
86
85
PARK LAMP RELAY
(8W-10-28)
(8W-10-29)
86
11 C3
7 C7
C41
20
LB/DG
W7
20
BR/GY
2 C330
C41
20
LB/DG
2 C331
C41
20
DB/OR
5 C1
2
WIPER MODULE
(8W-53-2)
CABIN HEATER ASSIST (DIESEL)
(8W-30-22)

FRONT CONTROL MODULE

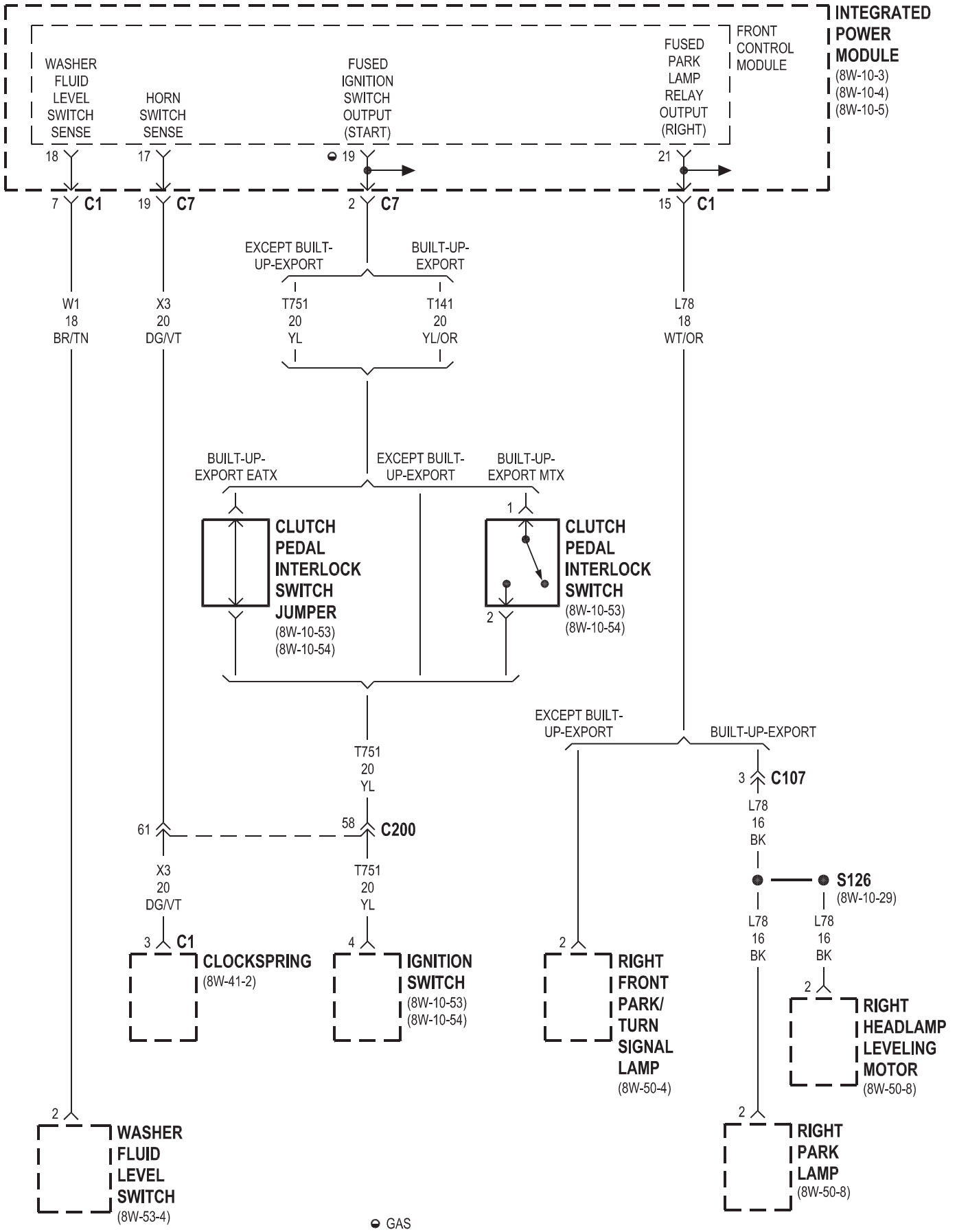

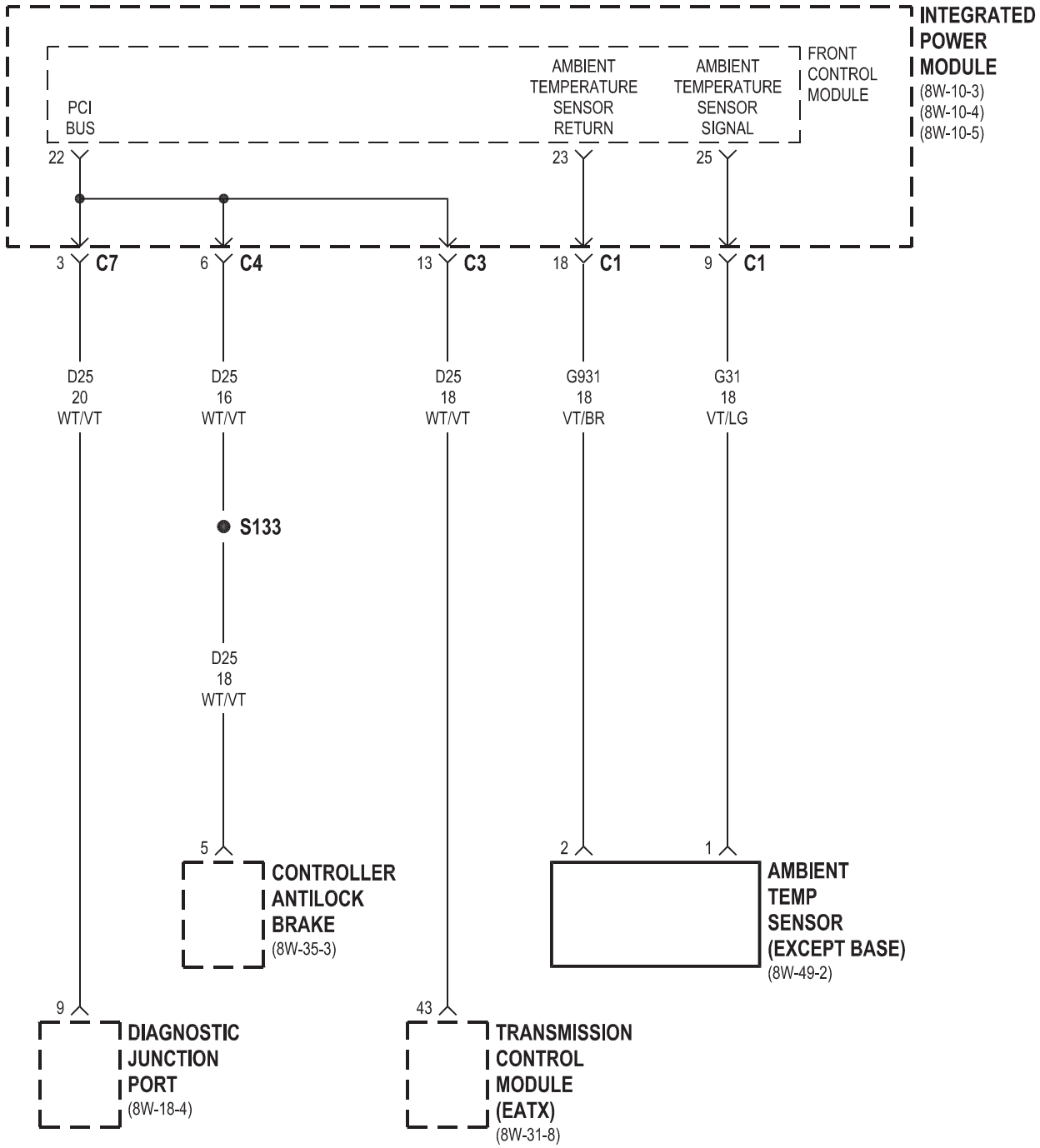
INTEGRATED POWER MODULE
(8W-10-3)
(8W-10-4)
(8W-10-5)
FRONT CONTROL MODULE
PCI BUS
AMBIENT TEMPERATURE SENSOR RETURN
AMBIENT TEMPERATURE SENSOR SIGNAL
22
23
25
3 C7
6 C4
13 C3
18 C1
9 C1
D25 20 WT/VT
D25 16 WT/VT
D25 18 WT/VT
G931 18 VT/BR
G31 18 VT/LG
S133
D25 18 WT/VT
5
2
1
CONTROLLER ANTILOCK BRAKE
(8W-35-3)
AMBIENT TEMP SENSOR (EXCEPT BASE)
(8W-49-2)
9
43
DIAGNOSTIC JUNCTION PORT
(8W-18-4)
TRANSMISSION CONTROL MODULE (EATX)
(8W-31-8)

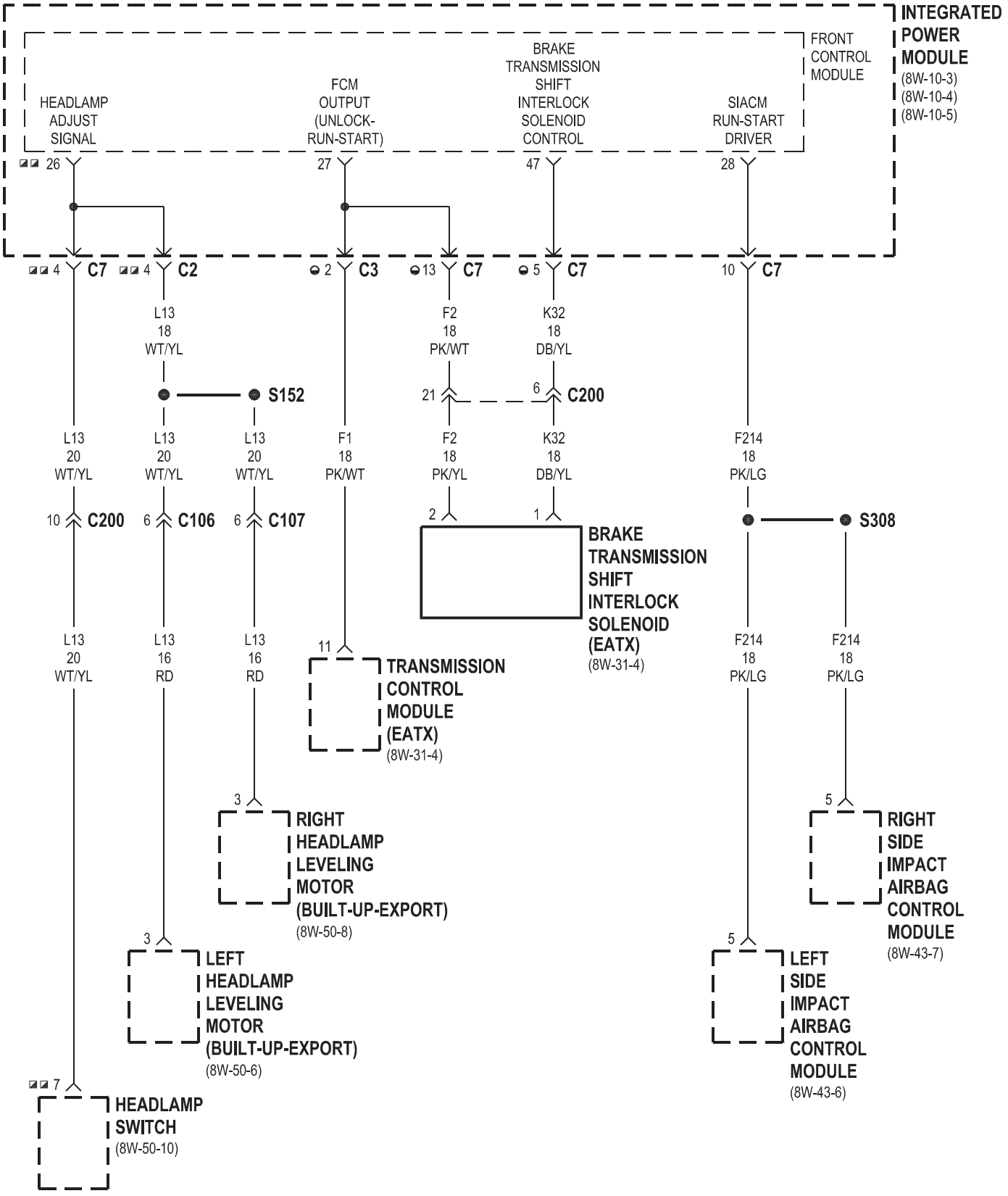
INTEGRATED POWER MODULE
(8W-10-3)
(8W-10-4)
(8W-10-5)
FRONT CONTROL MODULE
HEADLAMP ADJUST SIGNAL
FCM OUTPUT (UNLOCK-RUN-START)
BRAKE TRANSMISSION SHIFT INTERLOCK SOLENOID CONTROL
SIACM RUN-START DRIVER
26
27
47
28
4 C7
4 C2
2 C3
13 C7
5 C7
10 C7
L13 18 WT/YL
F2 18 PK/WT
K32 18 DB/YL
S152
21
6 C200
L13 20 WT/YL
L13 20 WT/YL
L13 20 WT/YL
F1 18 PK/WT
F2 18 PK/YL
K32 18 DB/YL
F214 18 PK/LG
10 C200
6 C106
6 C107
2
1
S308
BRAKE TRANSMISSION SHIFT INTERLOCK SOLENOID (EATX)
(8W-31-4)
L13 20 WT/YL
L13 16 RD
L13 16 RD
11
F214 18 PK/LG
F214 18 PK/LG
TRANSMISSION CONTROL MODULE (EATX)
(8W-31-4)
3
5
RIGHT HEADLAMP LEVELING MOTOR (BUILT-UP-EXPORT)
(8W-50-8)
RIGHT SIDE IMPACT AIRBAG CONTROL MODULE
(8W-43-7)
3
5
LEFT HEADLAMP LEVELING MOTOR (BUILT-UP-EXPORT)
(8W-50-6)
LEFT SIDE IMPACT AIRBAG CONTROL MODULE
(8W-43-6)
7
HEADLAMP SWITCH
(8W-50-10)
GAS
BUILT-UP-EXPORT

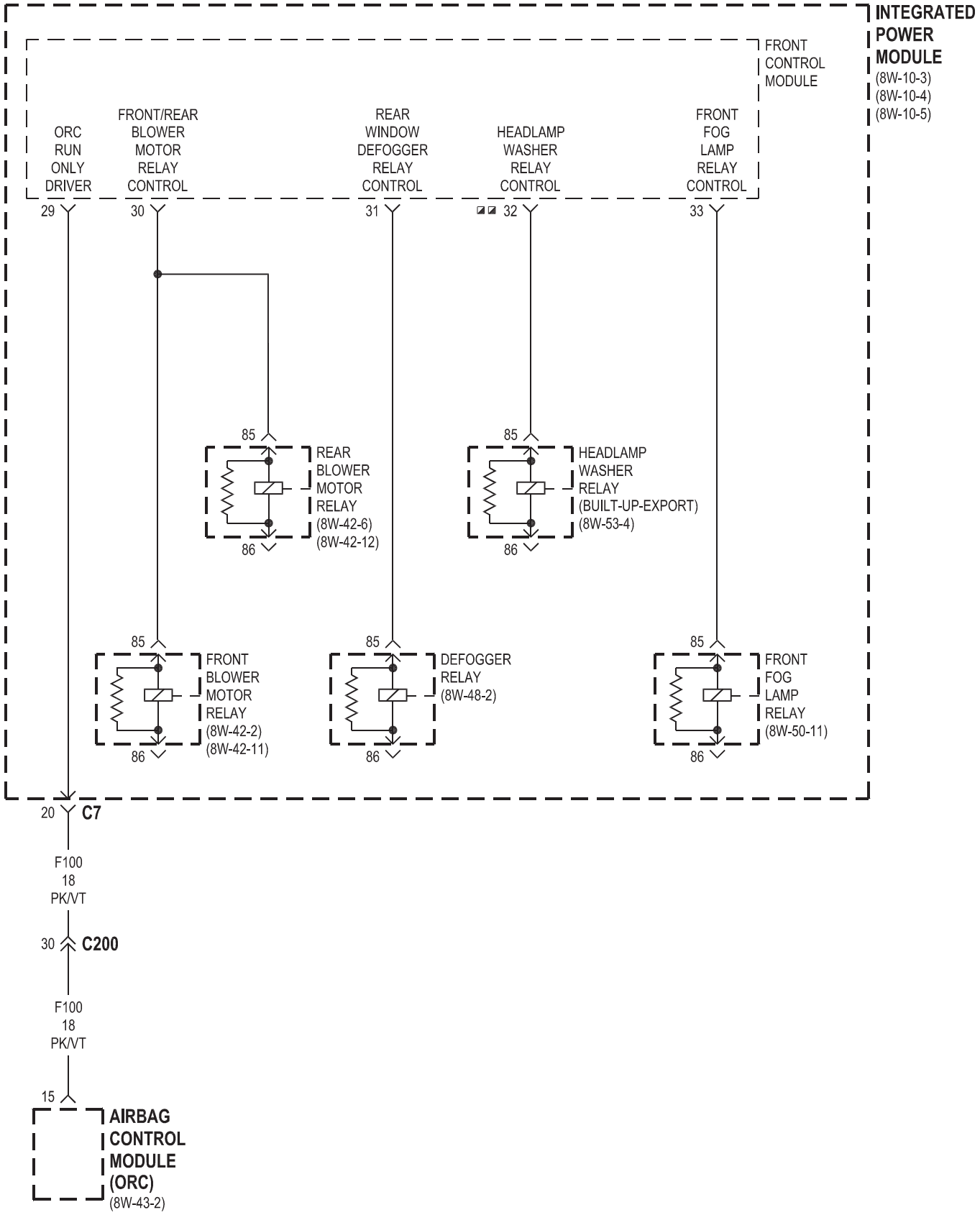
INTEGRATED POWER MODULE
(8W-10-3)
(8W-10-4)
(8W-10-5)
FRONT CONTROL MODULE
ORC RUN ONLY DRIVER
FRONT/REAR BLOWER MOTOR RELAY CONTROL
REAR WINDOW DEFOGGER RELAY CONTROL
HEADLAMP WASHER RELAY CONTROL
FRONT FOG LAMP RELAY CONTROL
29
30
31
32
33
85
86
REAR BLOWER MOTOR RELAY (8W-42-6) (8W-42-12)
HEADLAMP WASHER RELAY (BUILT-UP-EXPORT) (8W-53-4)
FRONT BLOWER MOTOR RELAY (8W-42-2) (8W-42-11)
DEFOGGER RELAY (8W-48-2)
FRONT FOG LAMP RELAY (8W-50-11)
20 C7
F100 18 PK/VT
30 C200
F100 18 PK/VT
15
AIRBAG CONTROL MODULE (ORC)
(8W-43-2)
BUILT-UP-EXPORT

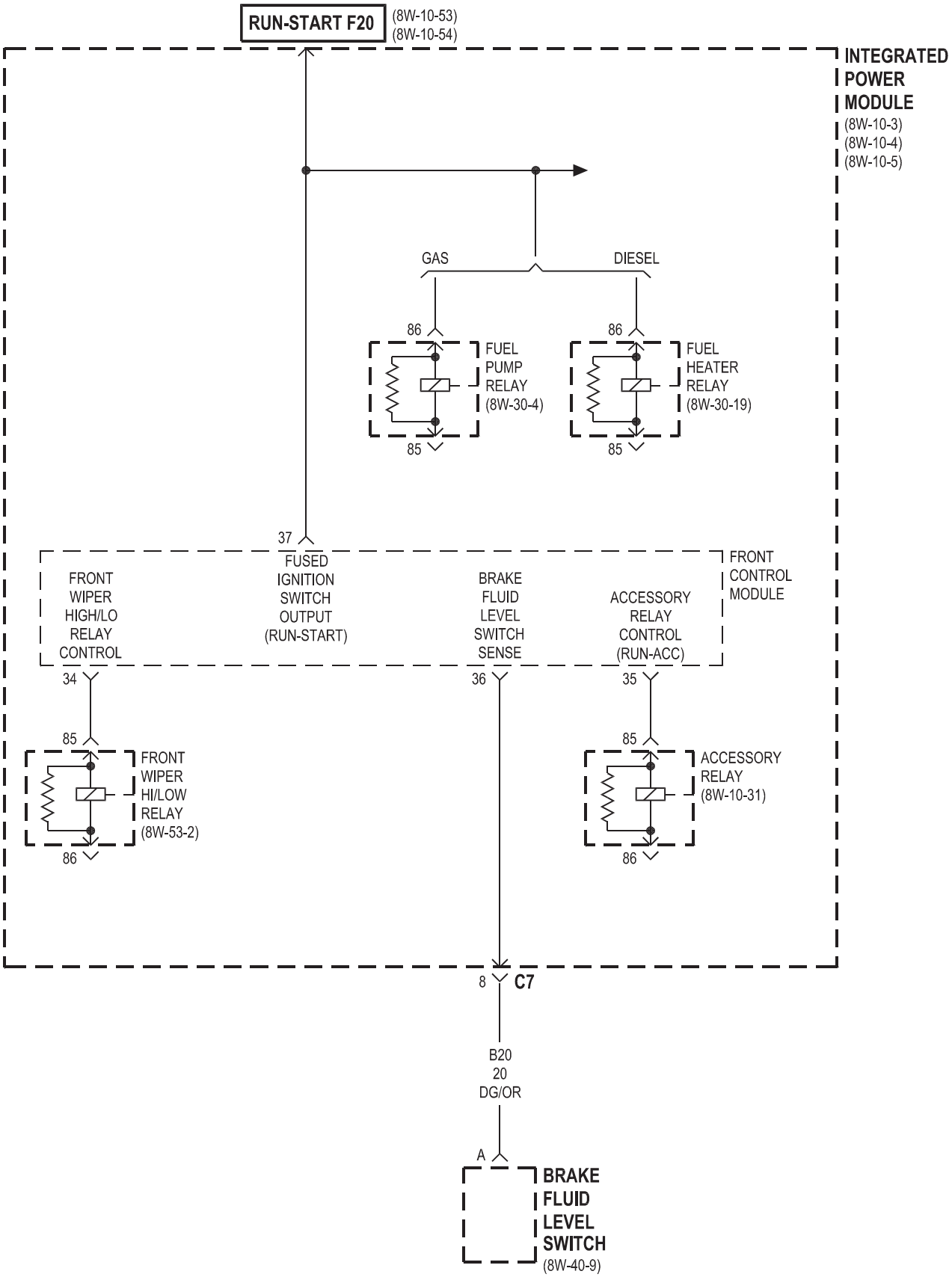
RUN-START F20
(8W-10-53)
(8W-10-54)
INTEGRATED POWER MODULE
(8W-10-3)
(8W-10-4)
(8W-10-5)
GAS
DIESEL
86
85
FUEL PUMP RELAY
(8W-30-4)
FUEL HEATER RELAY
(8W-30-19)
37
FUSED IGNITION SWITCH OUTPUT (RUN-START)
FRONT CONTROL MODULE
FRONT WIPER HIGH/LO RELAY CONTROL
BRAKE FLUID LEVEL SWITCH SENSE
ACCESSORY RELAY CONTROL (RUN-ACC)
34
36
35
FRONT WIPER HI/LOW RELAY
(8W-53-2)
ACCESSORY RELAY
(8W-10-31)
8
C7
B20
20
DG/OR
A
BRAKE FLUID LEVEL SWITCH
(8W-40-9)

FRONT CONTROL MODULE

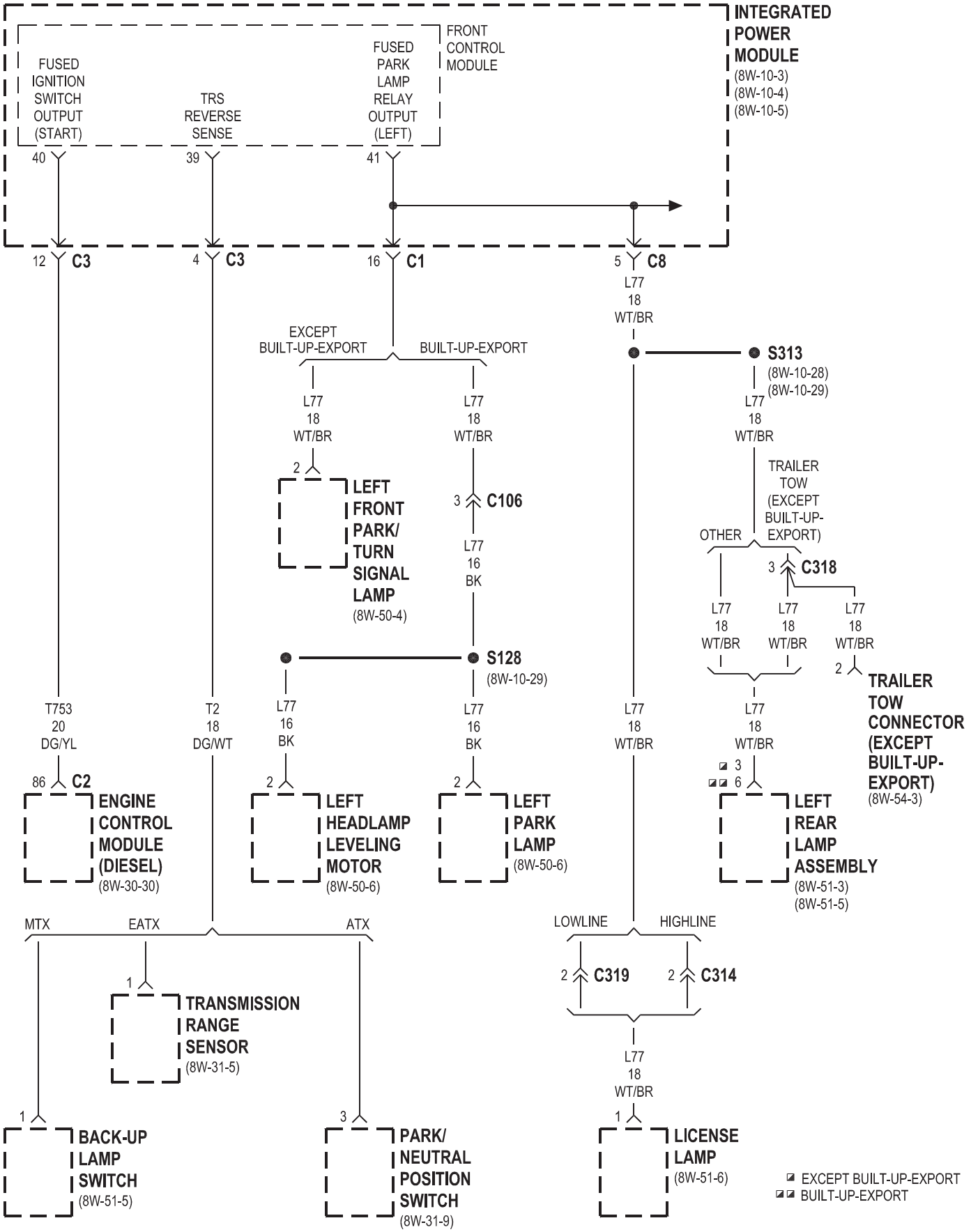

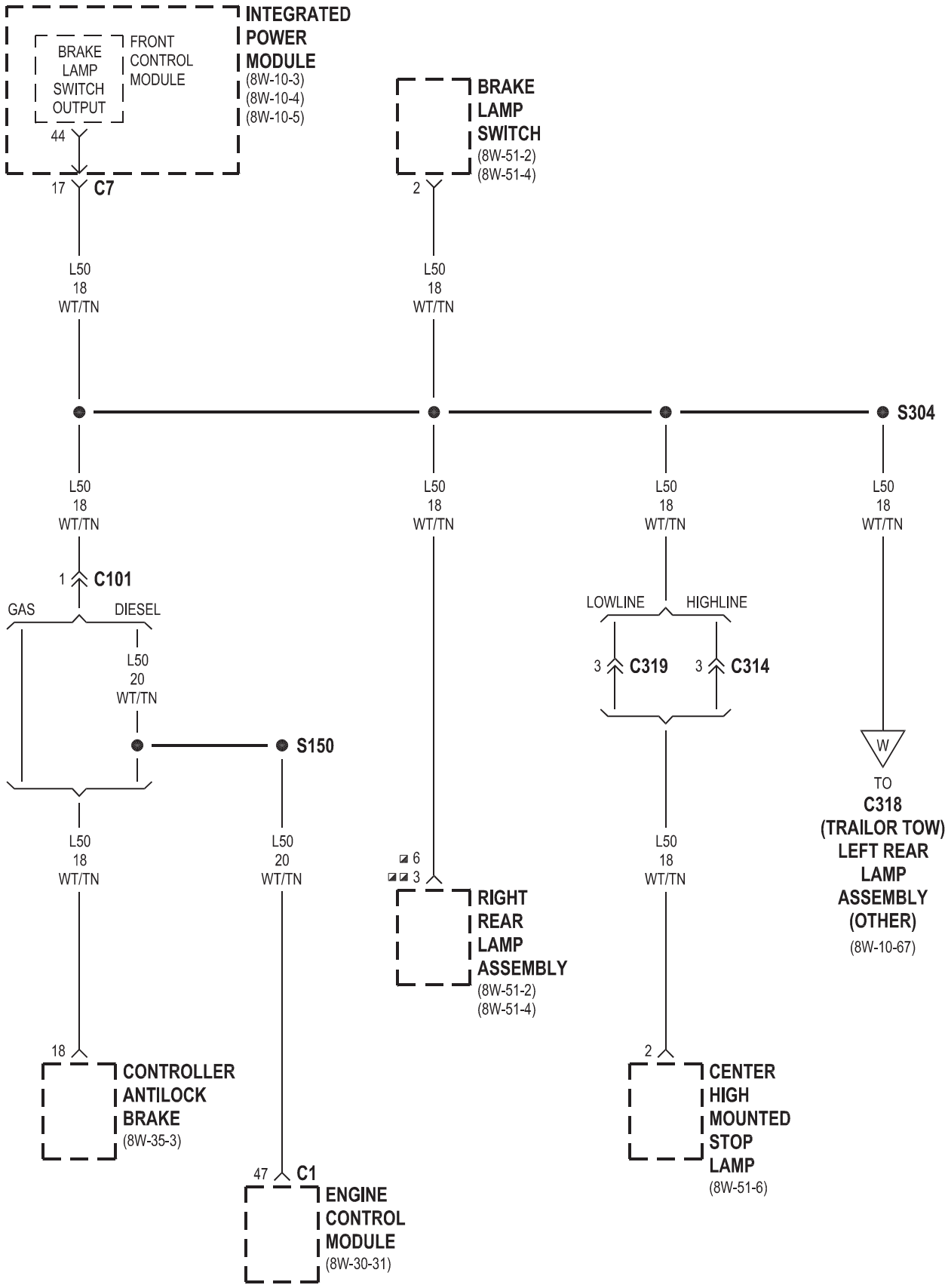
INTEGRATED POWER MODULE
(8W-10-3)
(8W-10-4)
(8W-10-5)
BRAKE LAMP SWITCH OUTPUT
FRONT CONTROL MODULE
44
17 C7
BRAKE LAMP SWITCH
(8W-51-2)
(8W-51-4)
2
L50 18 WT/TN
S304
1 C101
GAS
DIESEL
L50 20 WT/TN
S150
LOWLINE
HIGHLINE
3 C319
3 C314
W
TO C318 (TRAILOR TOW) LEFT REAR LAMP ASSEMBLY (OTHER)
(8W-10-67)
6
3
RIGHT REAR LAMP ASSEMBLY
(8W-51-2)
(8W-51-4)
18
CONTROLLER ANTILOCK BRAKE
(8W-35-3)
47 C1
ENGINE CONTROL MODULE
(8W-30-31)
2
CENTER HIGH MOUNTED STOP LAMP
(8W-51-6)
EXCEPT BUILT-UP-EXPORT
BUILT-UP-EXPORT

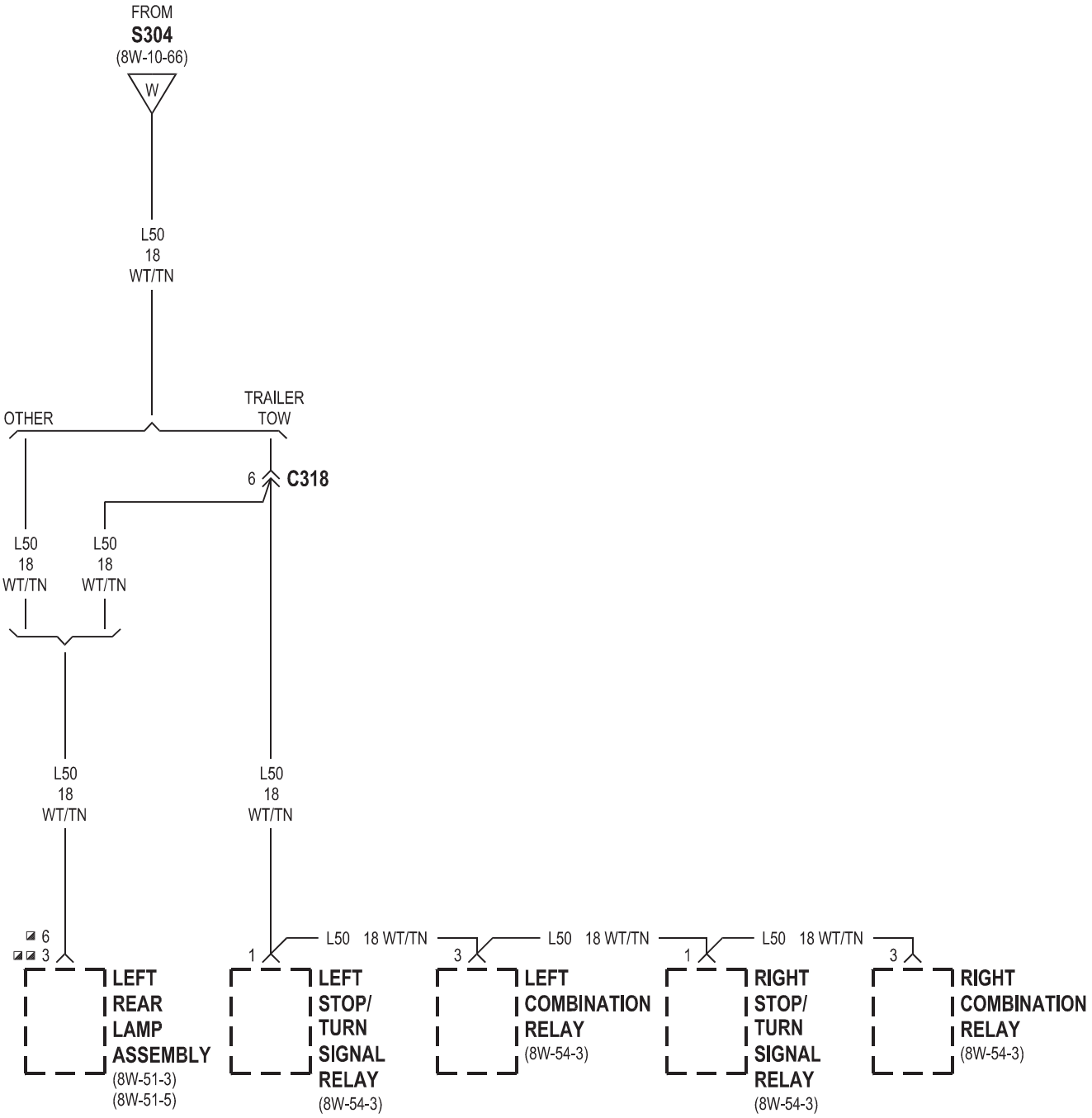

◪ EXCEPT BUILT-UP-EXPORT
◪◪ BUILT-UP-EXPORT

FRONT CONTROL MODULE

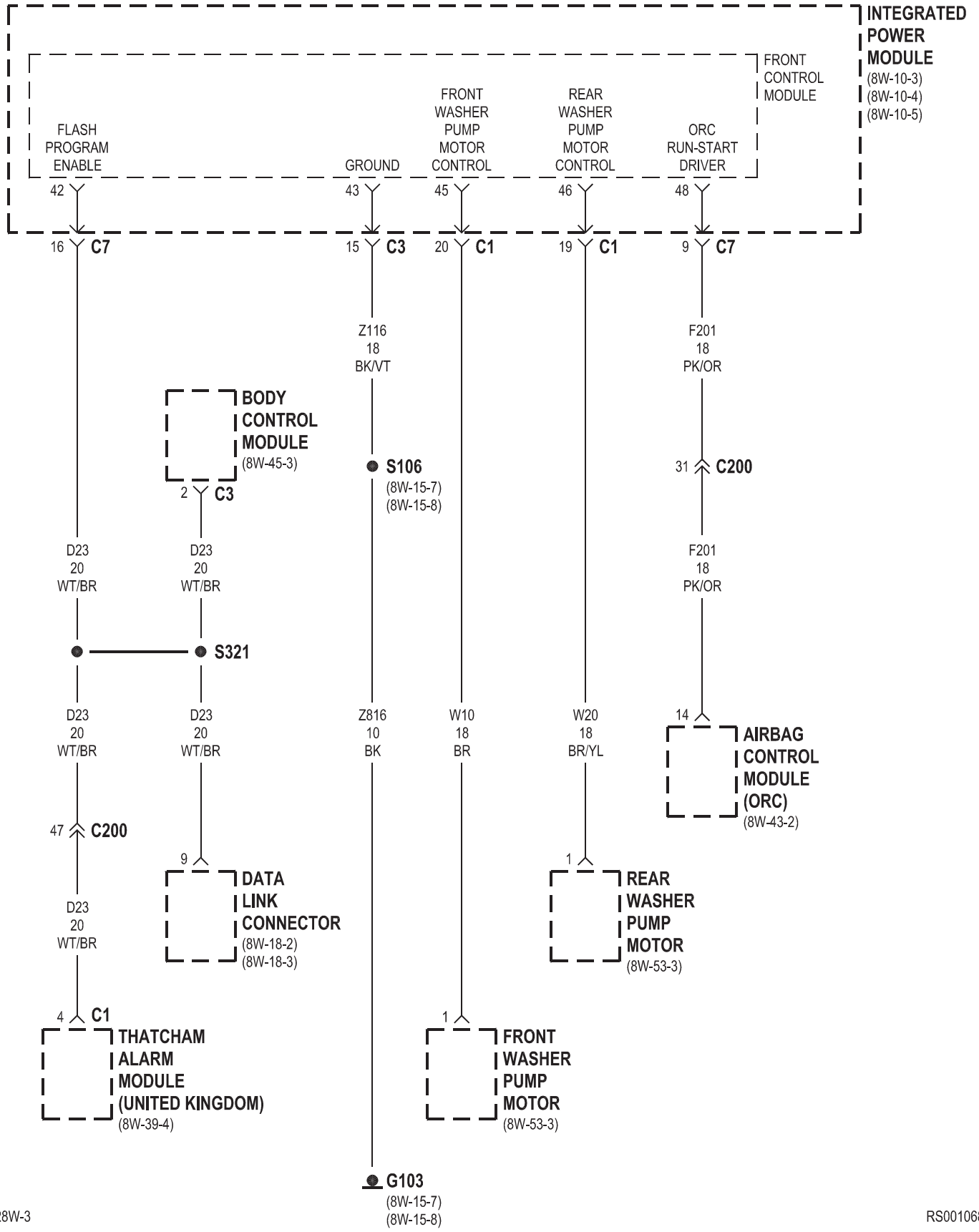

8W-15 GROUND DISTRIBUTION

Component	Page
A/C Compressor Clutch	8W-15-7, 8
A/C- Heater Control	8W-15-9, 11
Adjustable Pedals Module	8W-15-17
Airbag Control Module	8W-15-12
Auto Temp Control	8W-15-9
Automatic Day/Night Mirror	8W-15-21
Autostick Switch	8W-15-10
Back-Up Lamp Switch	8W-15-3, 7
Battery	8W-15-2, 3
Body Control Module	8W-15-22
Brake Fluid Level Switch	8W-15-17
Brake Lamp Switch	8W-15-17
Cabin Heater Assist	8W-15-8
Center Dome Lamp	8W-15-21
Center High Mounted Stop Lamp	8W-15-26
Clutch Pedal Upstop Switch	8W-15-18
Controller Antilock Brake	8W-15-2, 3
Crank Case Ventilation Heater	8W-15-8
Crankshaft Position Sensor	8W-15-3
Data Link Connector	8W-15-2, 3, 17
Dosing Pump	8W-15-8
Driver Door Courtesy Lamp	8W-15-15, 20
Driver Door Lock Switch	8W-15-15, 20
Driver Heated Seat Cushion	8W-15-11
Driver Heated Seat Module	8W-15-11
Driver Power Seat Switch	8W-15-11
Driver Power Window Switch	8W-15-15, 20
Engine Control Module	8W-15-3
Floor Console Lamp	8W-15-25
Floor Console Power Outlet	8W-15-25
Front Blower Module	8W-15-11
Front Cigar Lighter	8W-15-9
Front Control Module	8W-15-7, 8, 18
Front Reading Lamps/Switch	8W-15-21
Fuel Heater	8W-15-25
Fuel Heater Relay	8W-15-3
Fuel Pump Module	8W-15-25
G100	8W-15-2, 3
G101	8W-15-2, 3
G102	8W-15-4, 5, 6
G103	8W-15-7, 8
G200	8W-15-9, 10, 11
G201	8W-15-12
G202	8W-15-13
G300	8W-15-14, 16, 17, 18
G301	8W-15-19, 20, 21, 22
G302	8W-15-23, 24, 25
G400	8W-15-25, 26
Glove Box Lamp	8W-15-10
Halo Lamp	8W-15-10
Headlamp Switch	8W-15-9
Headlamp Washer Pump Motor	8W-15-6
High Note Horn	8W-15-5, 6
Hood Ajar Switch	8W-15-18
Instrument Cluster	8W-15-9
Instrument Panel Switch Bank	8W-15-10
Integrated Power Module	8W-15-2, 3, 7, 8, 18
Left B-Pillar Switch	8W-15-17
Left Cinch/Release Motor	8W-15-14
Left Combination Relay	8W-15-24
Left Cylinder Lock Switch	8W-15-15, 16
Left Door Speaker	8W-15-13
Left Fog Lamp	8W-15-5, 6
Left Front Door Ajar Switch	8W-15-16
Left Front Door Lock Motor/Ajar Switch	8W-15-15, 16
Left Front Park/Turn Signal Lamp	8W-15-5
Left Full Open Switch	8W-15-14
Left Headlamp	8W-15-18
Left Headlamp Leveling Motor	8W-15-6
Left High Beam Lamp	8W-15-18
Left Liftgate Flood Lamp	8W-15-26
Left Low Beam Lamp	8W-15-18
Left Mid Reading Lamp	8W-15-21
Left Park Lamp	8W-15-18
Left Power Mirror	8W-15-10
Left Rear Lamp Assembly	8W-15-24
Left Rear Reading Lamp	8W-15-21
Left Side Impact Airbag Control Module	8W-15-12
Left Sliding Door Control Module	8W-15-14
Left Sliding Door Latch Sensing Switch	8W-15-14
Left Sliding Door Lock Motor	8W-15-14
Left Sliding Door Lock Motor/Ajar Switch	8W-15-14
Left Sliding Door Motor	8W-15-14
Left Stop/Turn Signal Relay	8W-15-24
Left Turn Signal Lamp	8W-15-18
Left Visor/Vanity Lamp	8W-15-21
License Lamp	8W-15-23, 26
Lift Pump Motor	8W-15-25
Liftgate Ajar Switch	8W-15-26
Liftgate Cinch/Release Motor	8W-15-23
Liftgate Cylinder Lock Switch	8W-15-26
Liftgate Right Pinch Sensor	8W-15-23
Low Note Horn	8W-15-5, 6
Memory Seat/Mirror Module	8W-15-11
Overhead Console	8W-15-21
Oxygen Sensor 1/2 Downstream	8W-15-7
Park/Neutral Position Switch	8W-15-7
Passenger Door Courtesy Lamp	8W-15-16, 20
Passenger Door Lock Switch	8W-15-16, 20
Passenger Heated Seat Module	8W-15-22
Passenger Power Seat Switch	8W-15-22
Passenger Power Window Switch	8W-15-16, 20
Power Folding Mirror Switch	8W-15-11
Power Liftgate Module	8W-15-23
Power Liftgate Motor	8W-15-23
Power Mirror Switch	8W-15-11
Power Outlet	8W-15-9
Power Window Switch	8W-15-15
Powertrain Control Module	8W-15-2
Radiator Fan No. 1	8W-15-4
Radiator Fan No. 2	8W-15-4
Radiator Fan Relay	8W-15-4
Radiator Fan Relay No. 3	8W-15-4
Radio	8W-15-13
Rear Auto Temp Control Switch	8W-15-17
Rear Blower Front Control Switch	8W-15-11
Rear Blower Motor Power Module	8W-15-11, 25
Rear Blower Rear Control Switch	8W-15-17
Rear Dome Lamp	8W-15-21
Rear Power Outlet	8W-15-25
Rear Window Defogger Grid	8W-15-26
Rear Wiper Motor	8W-15-26
Remote Keyless Entry Module	8W-15-10
Right B-Pillar Switch	8W-15-22
Right Cinch/Release Motor	8W-15-19
Right Combination Relay	8W-15-24
Right Cylinder Lock Switch	8W-15-20
Right Door Speaker	8W-15-13
Right Fog Lamp	8W-15-5, 6
Right Front Door Ajar Switch	8W-15-20
Right Front Door Lock Motor/Ajar Switch	8W-15-20
Right Front Park/Turn Signal Lamp	8W-15-5
Right Full Open Switch	8W-15-19
Right Headlamp	8W-15-18
Right Headlamp Leveling Motor	8W-15-6
Right High Beam Lamp	8W-15-18
Right Liftgate Flood Lamp	8W-15-26
Right Low Beam Lamp	8W-15-18
Right Mid Reading Lamp	8W-15-21
Right Park Lamp	8W-15-18
Right Power Mirror	8W-15-10
Right Rear Lamp Assembly	8W-15-25
Right Rear Reading Lamp	8W-15-21
Right Side Impact Airbag Control Module	8W-15-12
Right Sliding Door Control Module	8W-15-19
Right Sliding Door Latch Sensing Switch	8W-15-19
Right Sliding Door Lock Motor	8W-15-19
Right Sliding Door Lock Motor/Ajar Switch	8W-15-19
Right Sliding Door Motor	8W-15-19
Right Stop/Turn Signal Relay	8W-15-24
Right Turn Signal Lamp	8W-15-18
Right Visor/Vanity Lamp	8W-15-21
Sentry Key Immobilizer Module	8W-15-10
Speed Control Servo	8W-15-7
Traction Control Switch	8W-15-10
Trailer Tow Connector	8W-15-24
Transmission Control Module	8W-15-2
Transmission Control Relay	8W-15-2
Transmission Range Sensor	8W-15-7
Washer Fluid Level Switch	8W-15-5, 6
Wiper Module	8W-15-17

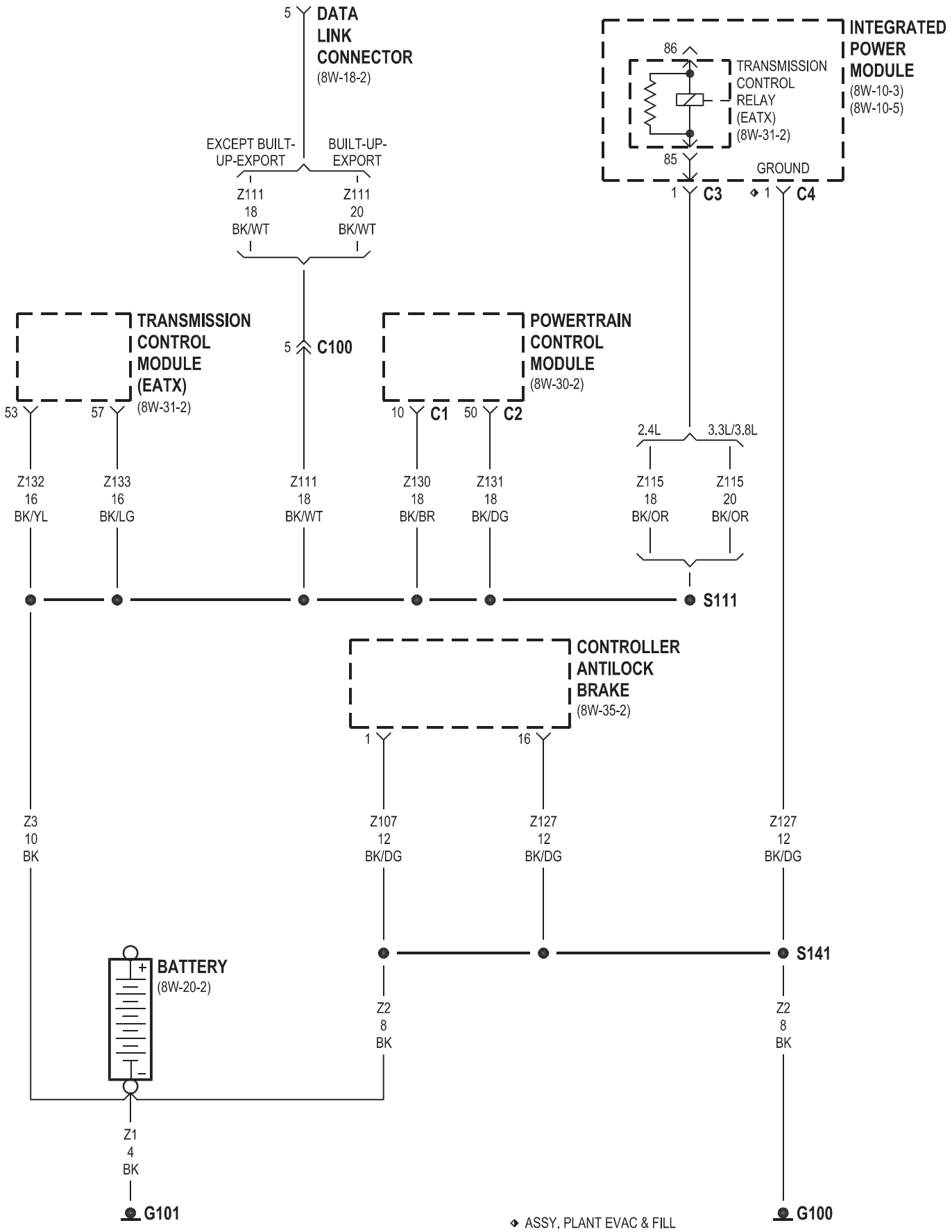
5 DATA LINK CONNECTOR (8W-18-2)
EXCEPT BUILT-UP-EXPORT
BUILT-UP-EXPORT
Z111 18 BK/WT
Z111 20 BK/WT
5 C100
INTEGRATED POWER MODULE (8W-10-3) (8W-10-5)
86
TRANSMISSION CONTROL RELAY (EATX) (8W-31-2)
85
GROUND
1 C3
1 C4
TRANSMISSION CONTROL MODULE (EATX) (8W-31-2)
53
57
POWERTRAIN CONTROL MODULE (8W-30-2)
10 C1
50 C2
2.4L
3.3L/3.8L
Z132 16 BK/YL
Z133 16 BK/LG
Z111 18 BK/WT
Z130 18 BK/BR
Z131 18 BK/DG
Z115 18 BK/OR
Z115 20 BK/OR
S111
CONTROLLER ANTILOCK BRAKE (8W-35-2)
1
16
Z3 10 BK
Z107 12 BK/DG
Z127 12 BK/DG
Z127 12 BK/DG
S141
BATTERY (8W-20-2)
Z2 8 BK
Z2 8 BK
Z1 4 BK
G101
G100
◆ ASSY. PLANT EVAC & FILL

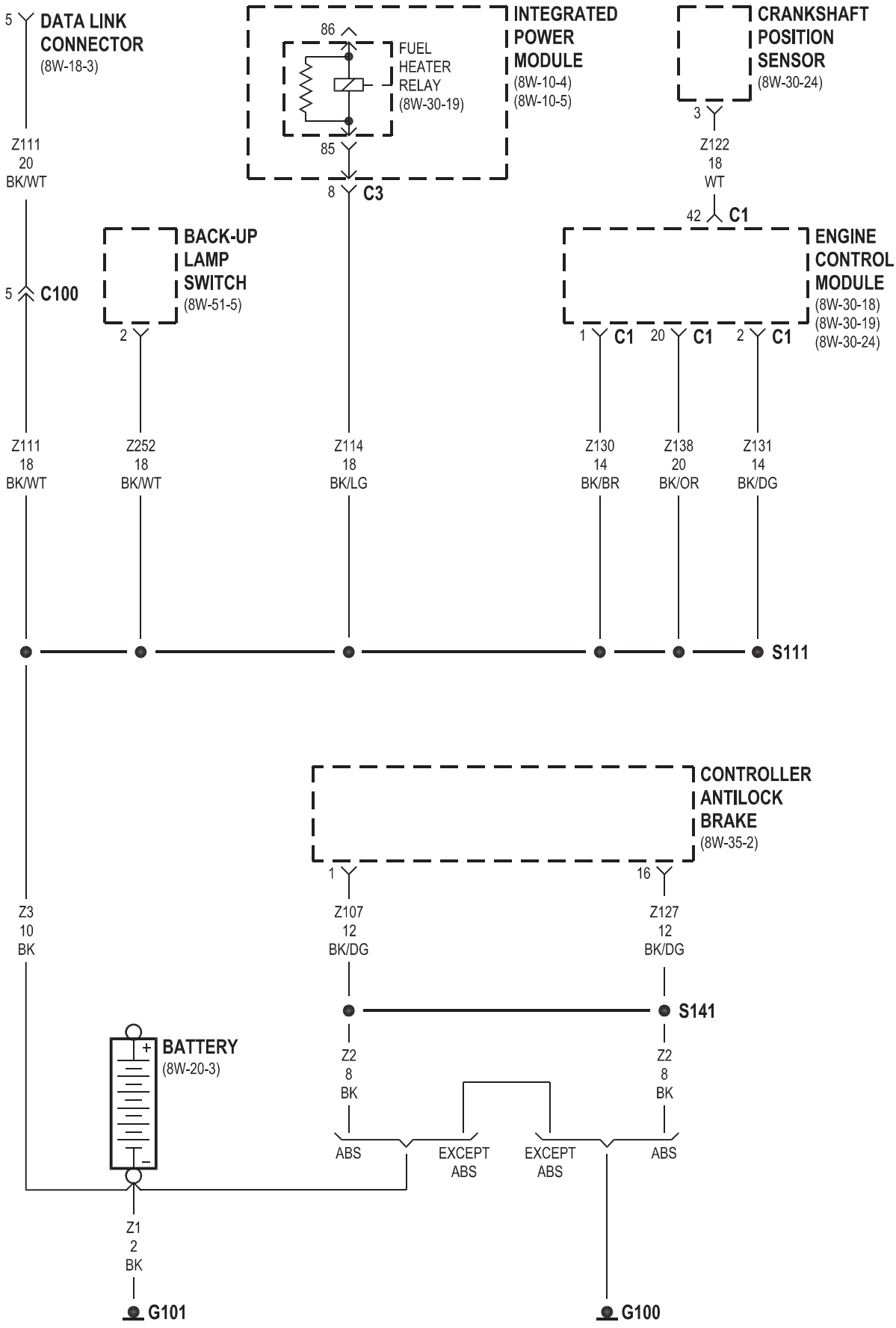
5 DATA LINK CONNECTOR (8W-18-3)
Z111 20 BK/WT
5 C100
Z111 18 BK/WT
86
FUEL HEATER RELAY (8W-30-19)
85
INTEGRATED POWER MODULE (8W-10-4) (8W-10-5)
8 C3
Z114 18 BK/LG
CRANKSHAFT POSITION SENSOR (8W-30-24)
3
Z122 18 WT
42 C1
BACK-UP LAMP SWITCH (8W-51-5)
2
Z252 18 BK/WT
ENGINE CONTROL MODULE (8W-30-18) (8W-30-19) (8W-30-24)
1 C1
20 C1
2 C1
Z130 14 BK/BR
Z138 20 BK/OR
Z131 14 BK/DG
S111
CONTROLLER ANTILOCK BRAKE (8W-35-2)
1
16
Z107 12 BK/DG
Z127 12 BK/DG
Z3 10 BK
S141
BATTERY (8W-20-3)
Z2 8 BK
Z2 8 BK
ABS
EXCEPT ABS
EXCEPT ABS
ABS
Z1 2 BK
G101
G100

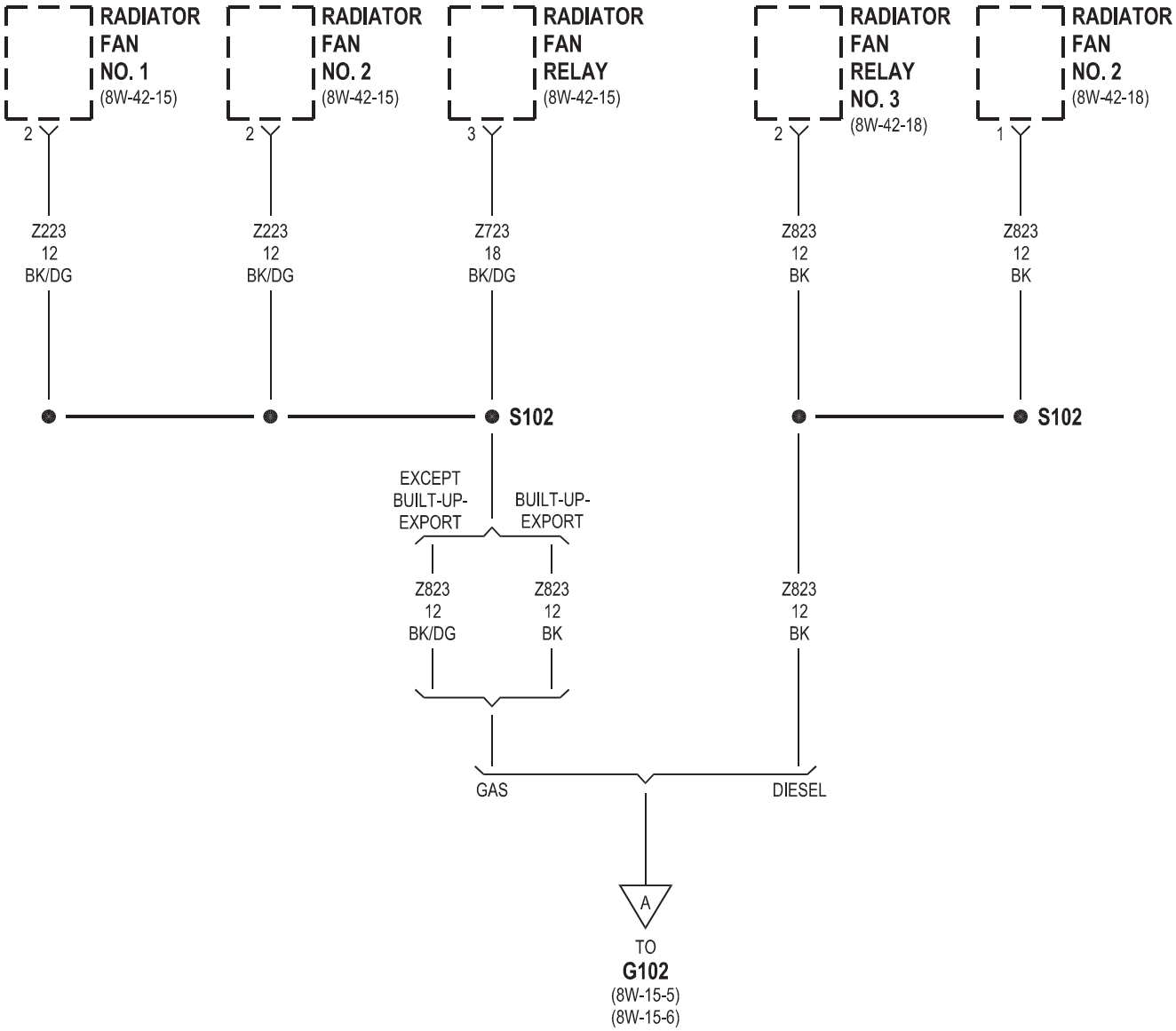
RADIATOR FAN NO. 1
(8W-42-15)
2
Z223
12
BK/DG
RADIATOR FAN NO. 2
(8W-42-15)
2
Z223
12
BK/DG
RADIATOR FAN RELAY
(8W-42-15)
3
Z723
18
BK/DG
RADIATOR FAN RELAY NO. 3
(8W-42-18)
2
Z823
12
BK
RADIATOR FAN NO. 2
(8W-42-18)
1
Z823
12
BK
S102
S102
EXCEPT BUILT-UP-EXPORT
BUILT-UP-EXPORT
Z823
12
BK/DG
Z823
12
BK
Z823
12
BK
GAS
DIESEL
A
TO
G102
(8W-15-5)
(8W-15-6)

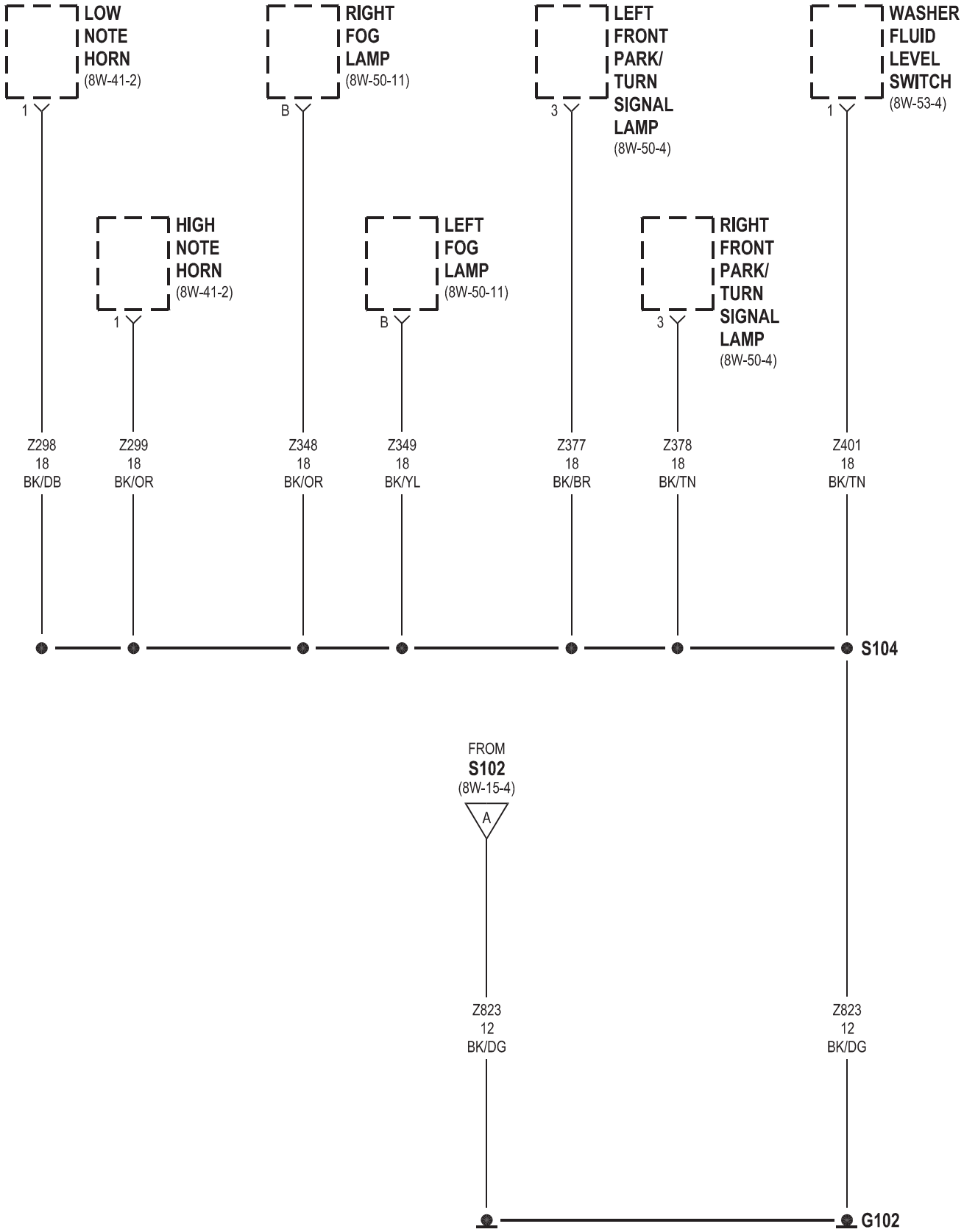
LOW NOTE HORN (8W-41-2)
1
RIGHT FOG LAMP (8W-50-11)
B
LEFT FRONT PARK/ TURN SIGNAL LAMP (8W-50-4)
3
WASHER FLUID LEVEL SWITCH (8W-53-4)
1
HIGH NOTE HORN (8W-41-2)
1
LEFT FOG LAMP (8W-50-11)
B
RIGHT FRONT PARK/ TURN SIGNAL LAMP (8W-50-4)
3
Z298 18 BK/DB
Z299 18 BK/OR
Z348 18 BK/OR
Z349 18 BK/YL
Z377 18 BK/BR
Z378 18 BK/TN
Z401 18 BK/TN
S104
FROM S102 (8W-15-4)
A
Z823 12 BK/DG
Z823 12 BK/DG
G102

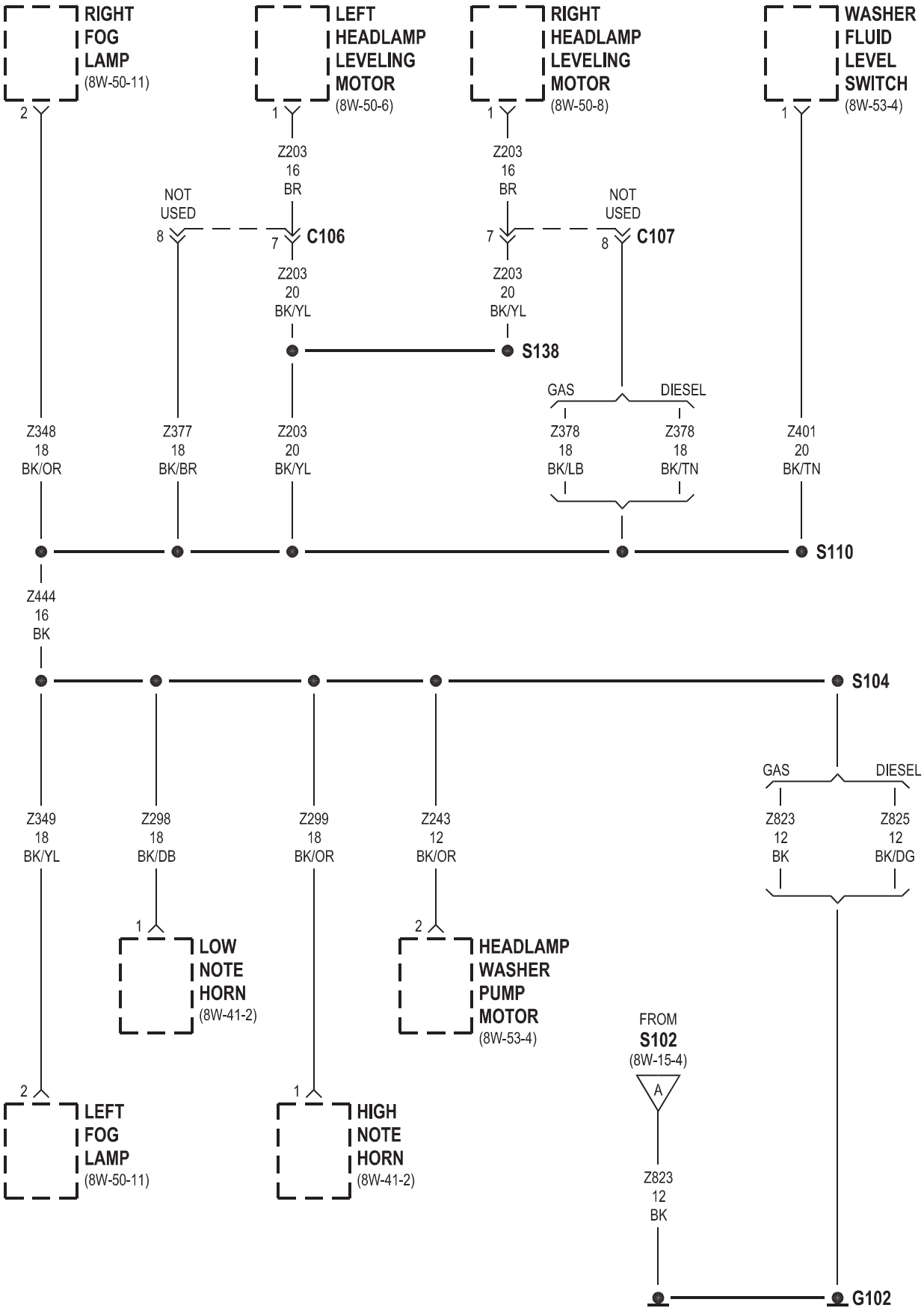
RIGHT FOG LAMP (8W-50-11)
LEFT HEADLAMP LEVELING MOTOR (8W-50-6)
RIGHT HEADLAMP LEVELING MOTOR (8W-50-8)
WASHER FLUID LEVEL SWITCH (8W-53-4)
NOT USED
C106
C107
Z203 16 BR
Z203 20 BK/YL
S138
GAS
DIESEL
Z348 18 BK/OR
Z377 18 BK/BR
Z378 18 BK/LB
Z378 18 BK/TN
Z401 20 BK/TN
S110
Z444 16 BK
S104
Z349 18 BK/YL
Z298 18 BK/DB
Z299 18 BK/OR
Z243 12 BK/OR
Z823 12 BK
Z825 12 BK/DG
LOW NOTE HORN (8W-41-2)
HEADLAMP WASHER PUMP MOTOR (8W-53-4)
FROM S102 (8W-15-4)
A
LEFT FOG LAMP (8W-50-11)
HIGH NOTE HORN (8W-41-2)
G102

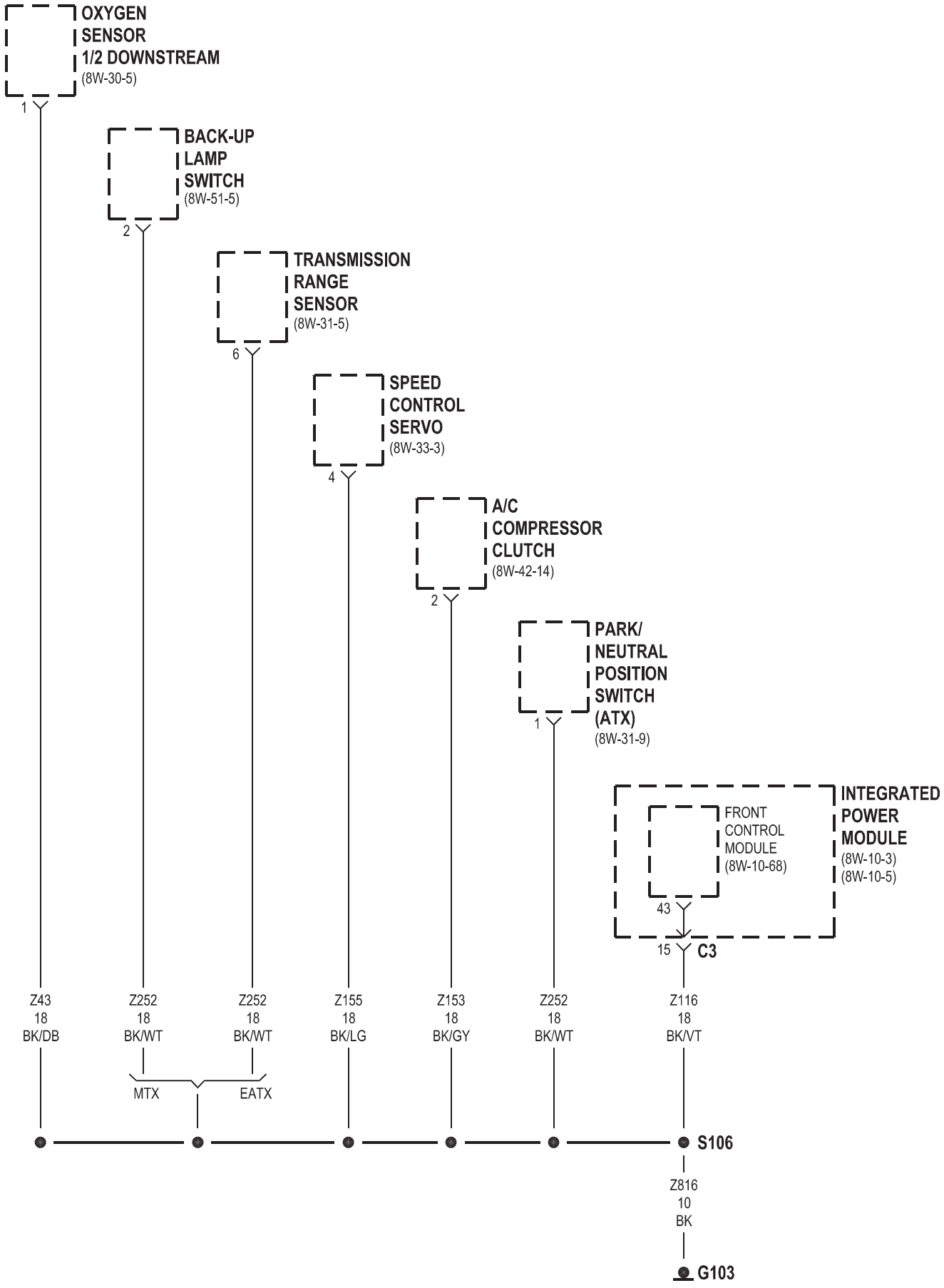
OXYGEN SENSOR 1/2 DOWNSTREAM
(8W-30-5)
1
BACK-UP LAMP SWITCH
(8W-51-5)
2
TRANSMISSION RANGE SENSOR
(8W-31-5)
6
SPEED CONTROL SERVO
(8W-33-3)
4
A/C COMPRESSOR CLUTCH
(8W-42-14)
2
PARK/ NEUTRAL POSITION SWITCH (ATX)
(8W-31-9)
1
INTEGRATED POWER MODULE
(8W-10-3)
(8W-10-5)
FRONT CONTROL MODULE
(8W-10-68)
43
15
C3
Z43 18 BK/DB
Z252 18 BK/WT
Z252 18 BK/WT
Z155 18 BK/LG
Z153 18 BK/GY
Z252 18 BK/WT
Z116 18 BK/VT
MTX
EATX
S106
Z816 10 BK
G103

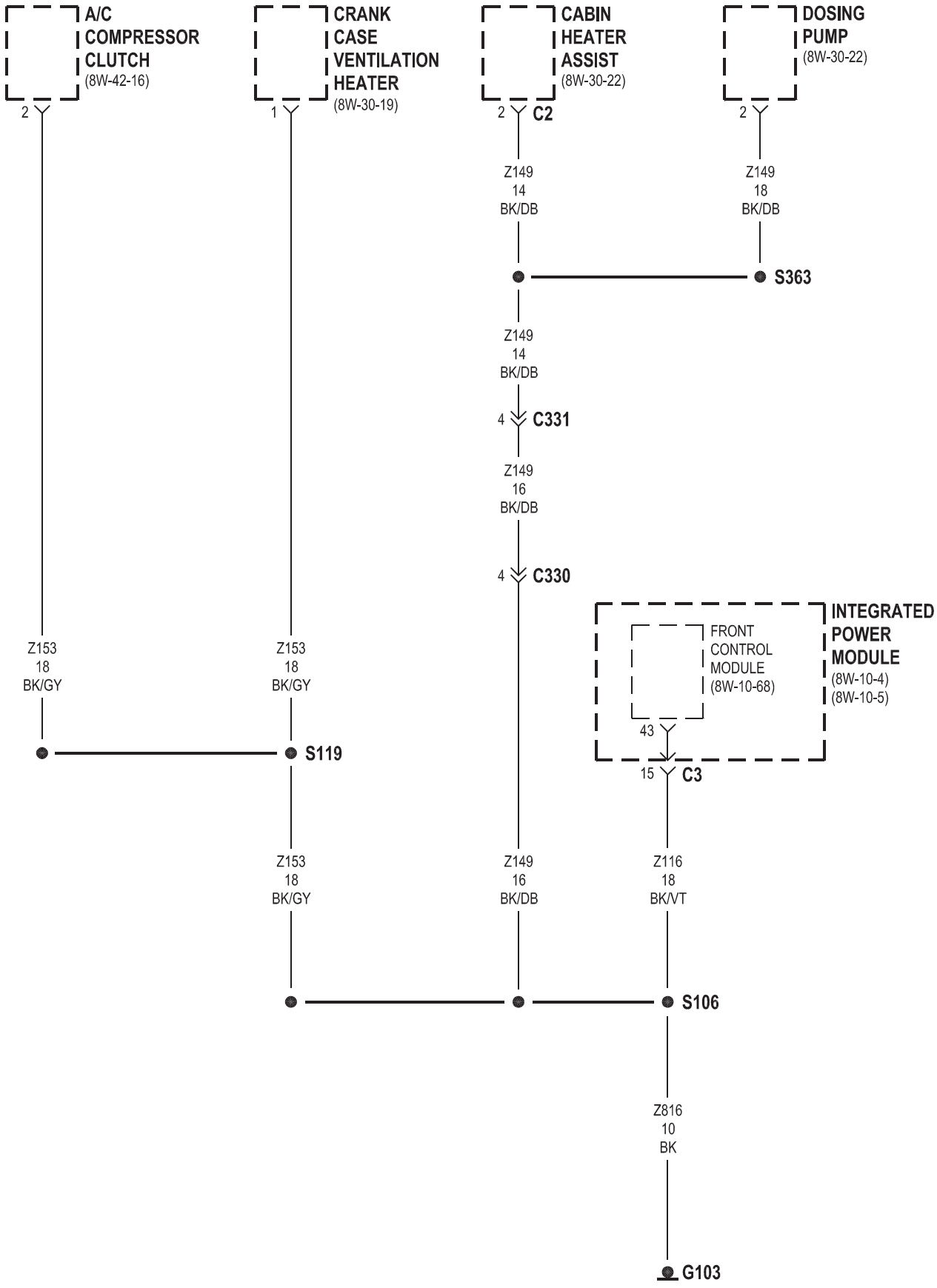
A/C COMPRESSOR CLUTCH
(8W-42-16)
2
CRANK CASE VENTILATION HEATER
(8W-30-19)
1
CABIN HEATER ASSIST
(8W-30-22)
2
C2
DOSING PUMP
(8W-30-22)
2
Z149
14
BK/DB
Z149
18
BK/DB
S363
Z149
14
BK/DB
4
C331
Z149
16
BK/DB
4
C330
INTEGRATED POWER MODULE
(8W-10-4)
(8W-10-5)
FRONT CONTROL MODULE
(8W-10-68)
43
15
C3
Z153
18
BK/GY
Z153
18
BK/GY
S119
Z153
18
BK/GY
Z149
16
BK/DB
Z116
18
BK/VT
S106
Z816
10
BK
G103

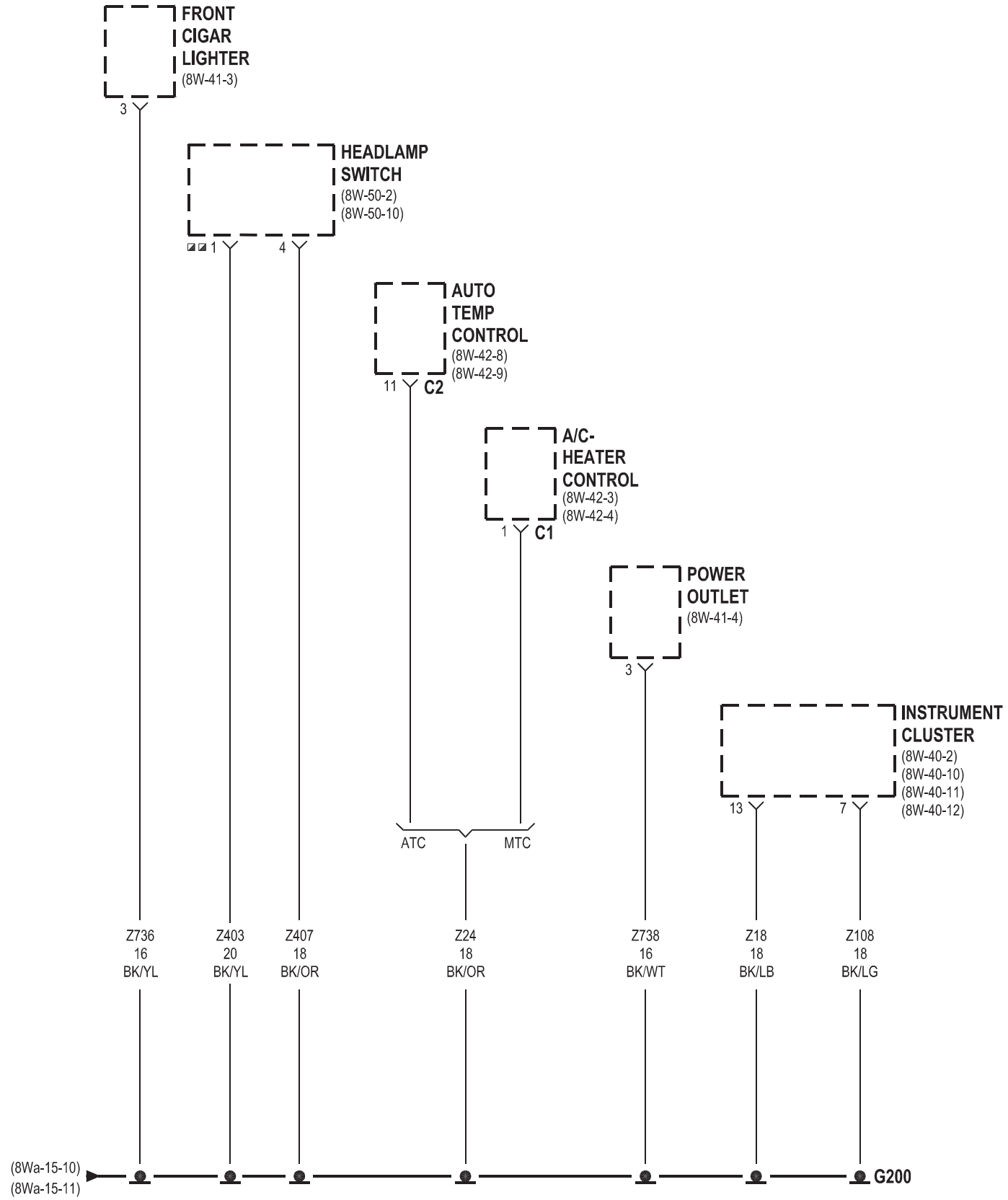

BUILT-UP-EXPORT

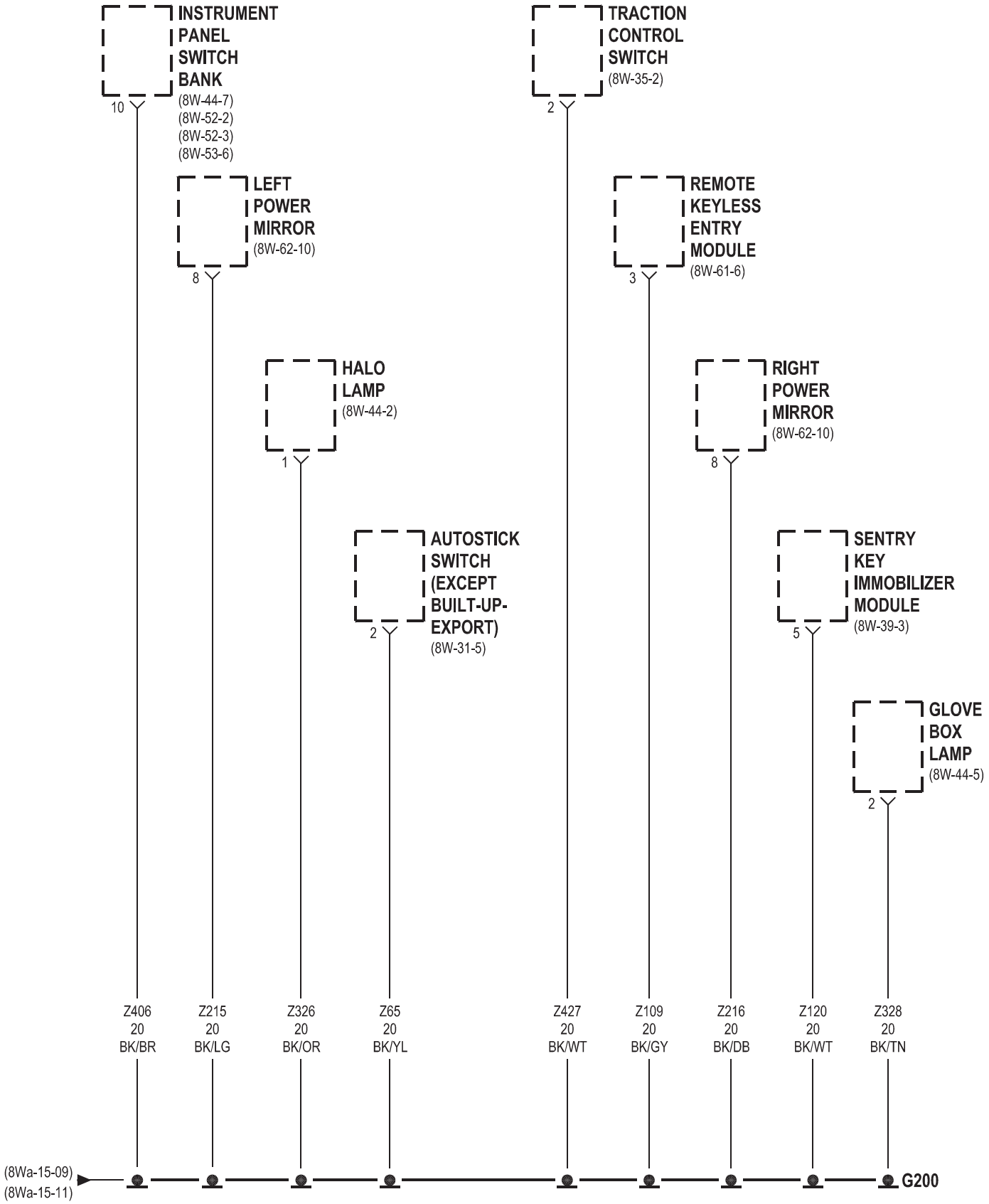
INSTRUMENT PANEL SWITCH BANK
(8W-44-7)
(8W-52-2)
(8W-52-3)
(8W-53-6)
10
LEFT POWER MIRROR
(8W-62-10)
8
HALO LAMP
(8W-44-2)
1
AUTOSTICK SWITCH (EXCEPT BUILT-UP-EXPORT)
(8W-31-5)
2
TRACTION CONTROL SWITCH
(8W-35-2)
2
REMOTE KEYLESS ENTRY MODULE
(8W-61-6)
3
RIGHT POWER MIRROR
(8W-62-10)
8
SENTRY KEY IMMOBILIZER MODULE
(8W-39-3)
5
GLOVE BOX LAMP
(8W-44-5)
2
Z406 20 BK/BR
Z215 20 BK/LG
Z326 20 BK/OR
Z65 20 BK/YL
Z427 20 BK/WT
Z109 20 BK/GY
Z216 20 BK/DB
Z120 20 BK/WT
Z328 20 BK/TN
(8Wa-15-09)
(8Wa-15-11)
G200

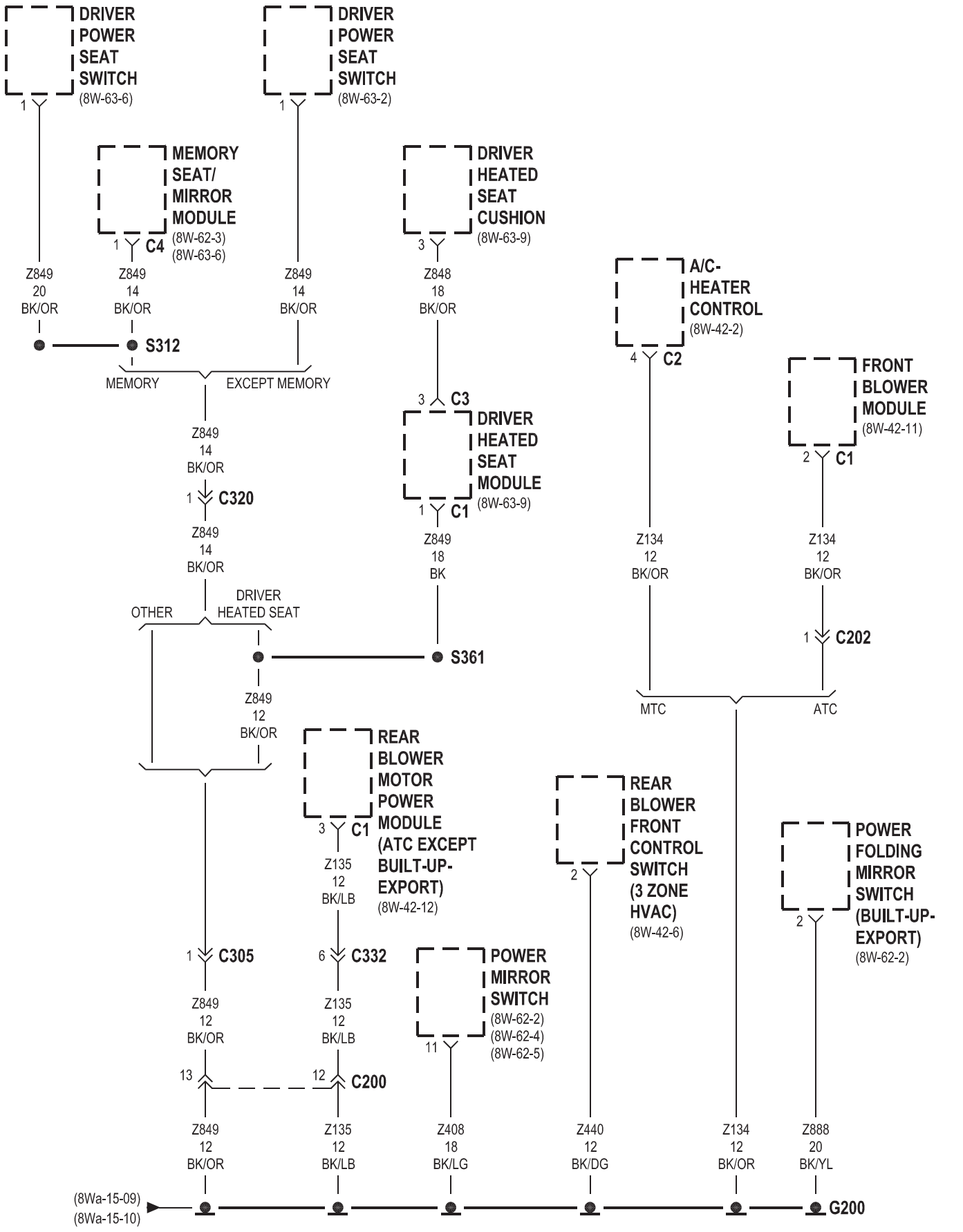
DRIVER POWER SEAT SWITCH (8W-63-6)
DRIVER POWER SEAT SWITCH (8W-63-2)
MEMORY SEAT/ MIRROR MODULE (8W-62-3) (8W-63-6)
DRIVER HEATED SEAT CUSHION (8W-63-9)
A/C-HEATER CONTROL (8W-42-2)
FRONT BLOWER MODULE (8W-42-11)
Z849 20 BK/OR
Z849 14 BK/OR
Z849 14 BK/OR
Z848 18 BK/OR
Z134 12 BK/OR
Z134 12 BK/OR
S312
MEMORY
EXCEPT MEMORY
C4
C3
C2
C1
Z849 14 BK/OR
C320
DRIVER HEATED SEAT MODULE (8W-63-9)
Z849 18 BK
C1
C202
Z849 14 BK/OR
OTHER
DRIVER HEATED SEAT
S361
MTC
ATC
Z849 12 BK/OR
REAR BLOWER MOTOR POWER MODULE (ATC EXCEPT BUILT-UP-EXPORT) (8W-42-12)
REAR BLOWER FRONT CONTROL SWITCH (3 ZONE HVAC) (8W-42-6)
POWER FOLDING MIRROR SWITCH (BUILT-UP-EXPORT) (8W-62-2)
Z135 12 BK/LB
C305
C332
POWER MIRROR SWITCH (8W-62-2) (8W-62-4) (8W-62-5)
Z849 12 BK/OR
Z135 12 BK/LB
C200
Z849 12 BK/OR
Z135 12 BK/LB
Z408 18 BK/LG
Z440 12 BK/DG
Z134 12 BK/OR
Z888 20 BK/YL
(8Wa-15-09)
(8Wa-15-10)
G200

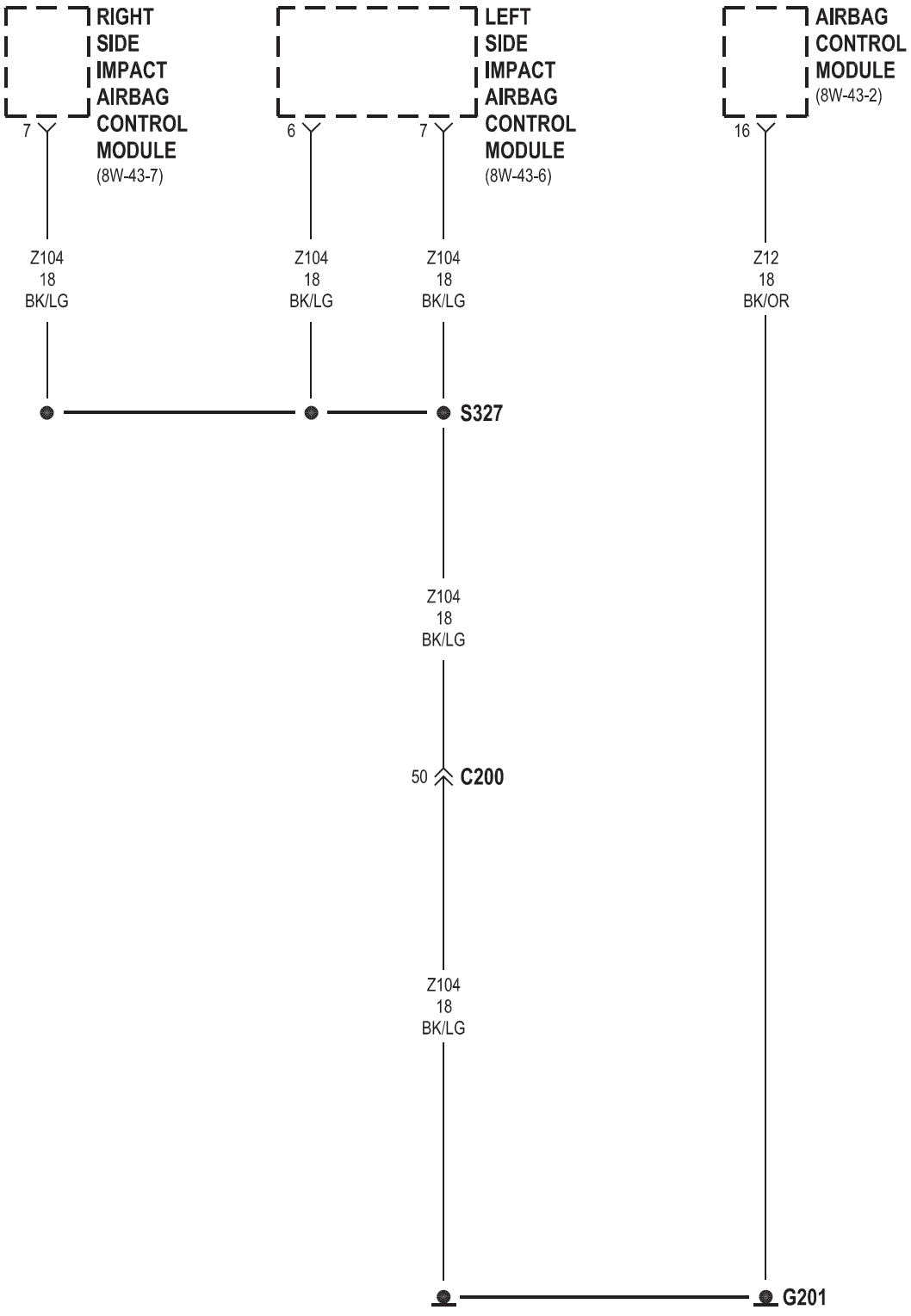
RIGHT SIDE IMPACT AIRBAG CONTROL MODULE
(8W-43-7)
7
LEFT SIDE IMPACT AIRBAG CONTROL MODULE
(8W-43-6)
6
7
AIRBAG CONTROL MODULE
(8W-43-2)
16
Z104 18 BK/LG
Z104 18 BK/LG
Z104 18 BK/LG
Z12 18 BK/OR
S327
Z104 18 BK/LG
50
C200
Z104 18 BK/LG
G201

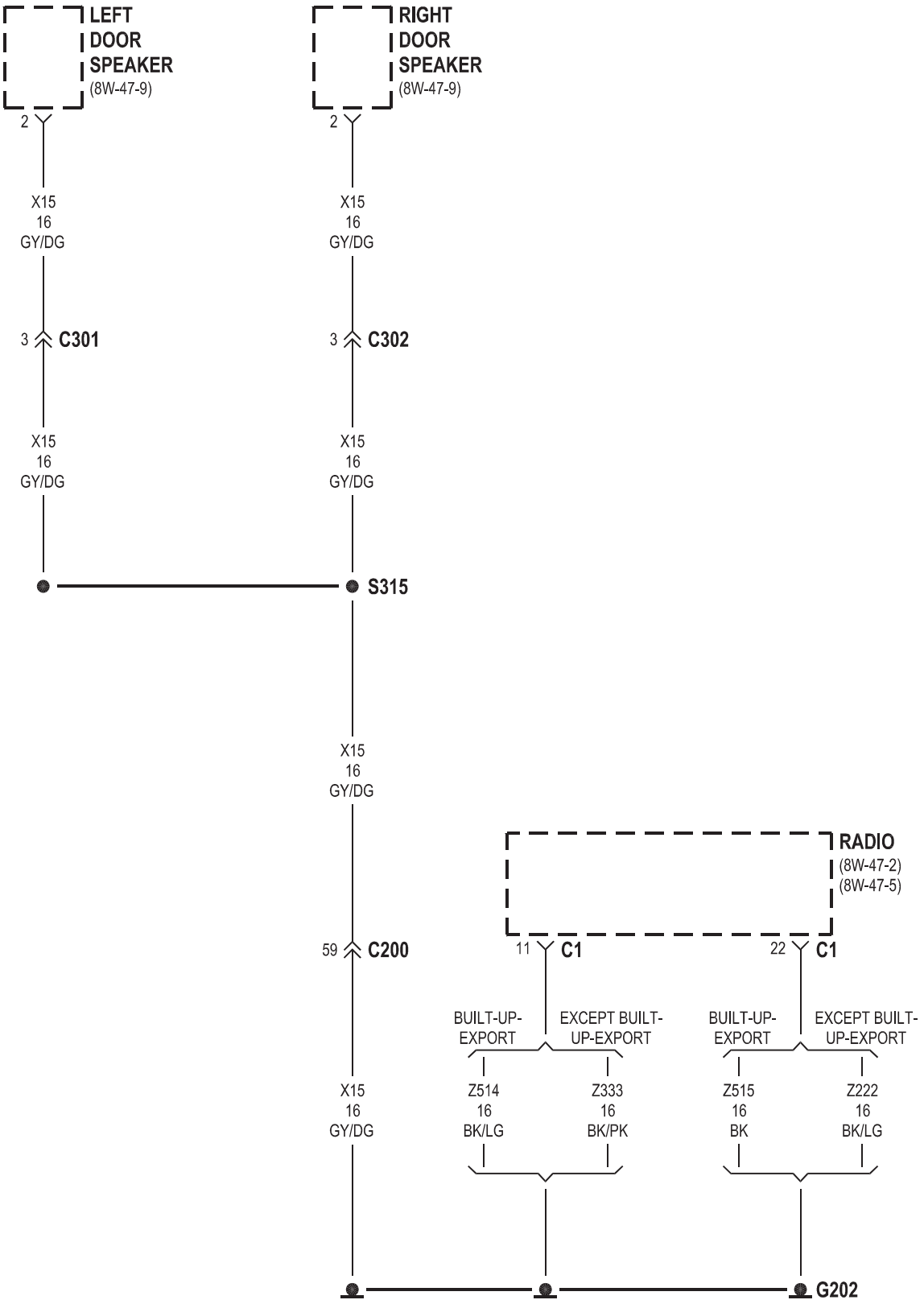
LEFT
DOOR
SPEAKER
(8W-47-9)
RIGHT
DOOR
SPEAKER
(8W-47-9)
2
2
X15
16
GY/DG
X15
16
GY/DG
3 C301
3 C302
X15
16
GY/DG
X15
16
GY/DG
S315
X15
16
GY/DG
RADIO
(8W-47-2)
(8W-47-5)
59 C200
11 C1
22 C1
BUILT-UP-EXPORT
EXCEPT BUILT-UP-EXPORT
BUILT-UP-EXPORT
EXCEPT BUILT-UP-EXPORT
X15
16
GY/DG
Z514
16
BK/LG
Z333
16
BK/PK
Z515
16
BK
Z222
16
BK/LG
G202

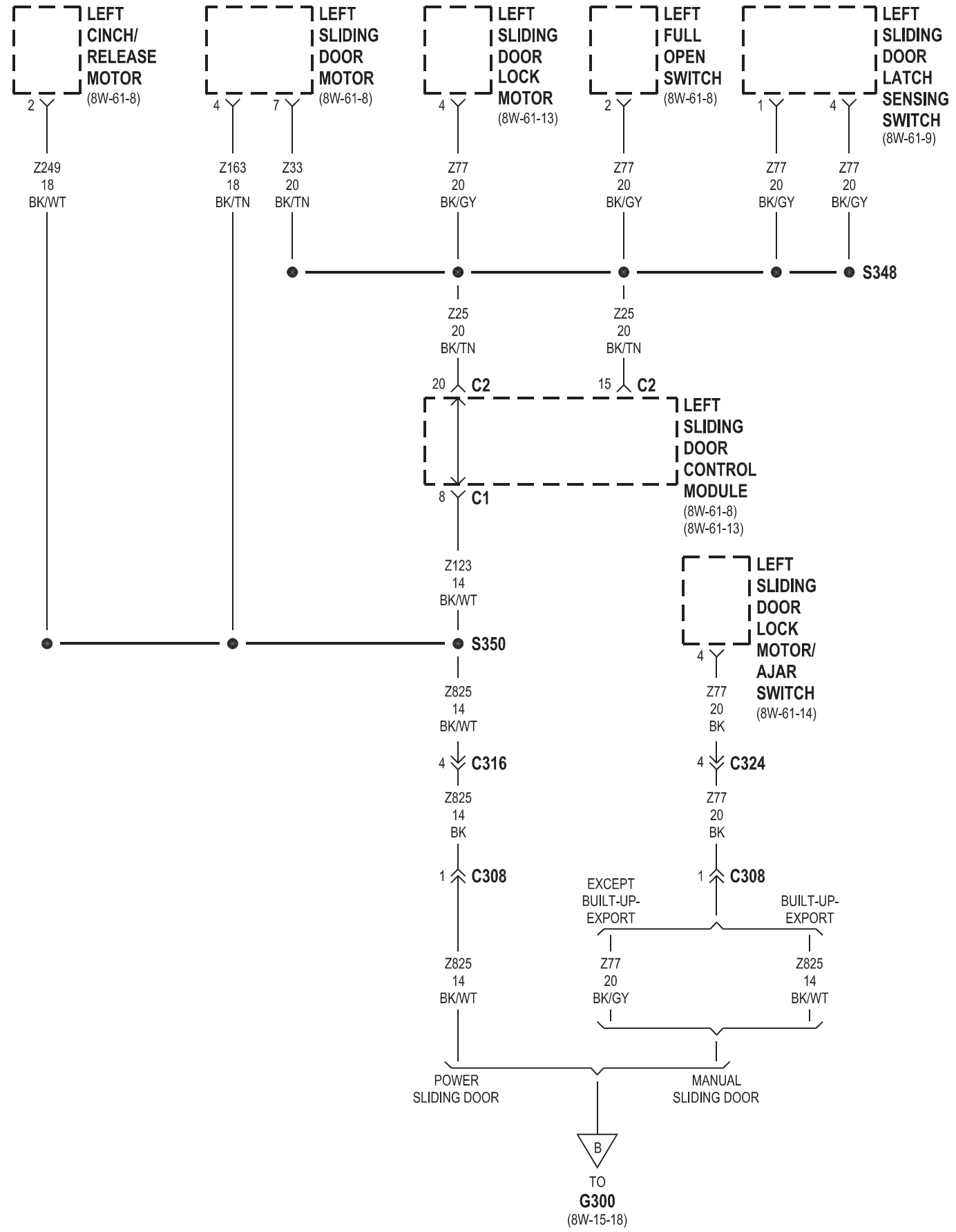
LEFT CINCH/ RELEASE MOTOR (8W-61-8)
2
Z249 18 BK/WT
LEFT SLIDING DOOR MOTOR (8W-61-8)
4
7
Z163 18 BK/TN
Z33 20 BK/TN
LEFT SLIDING DOOR LOCK MOTOR (8W-61-13)
4
Z77 20 BK/GY
LEFT FULL OPEN SWITCH (8W-61-8)
2
Z77 20 BK/GY
LEFT SLIDING DOOR LATCH SENSING SWITCH (8W-61-9)
1
4
Z77 20 BK/GY
Z77 20 BK/GY
S348
Z25 20 BK/TN
Z25 20 BK/TN
20 C2
15 C2
LEFT SLIDING DOOR CONTROL MODULE (8W-61-8) (8W-61-13)
8 C1
Z123 14 BK/WT
S350
LEFT SLIDING DOOR LOCK MOTOR/ AJAR SWITCH (8W-61-14)
4
Z77 20 BK
Z825 14 BK/WT
4 C316
4 C324
Z825 14 BK
Z77 20 BK
1 C308
1 C308
EXCEPT BUILT-UP-EXPORT
BUILT-UP-EXPORT
Z77 20 BK/GY
Z825 14 BK/WT
Z825 14 BK/WT
POWER SLIDING DOOR
MANUAL SLIDING DOOR
B
TO G300 (8W-15-18)

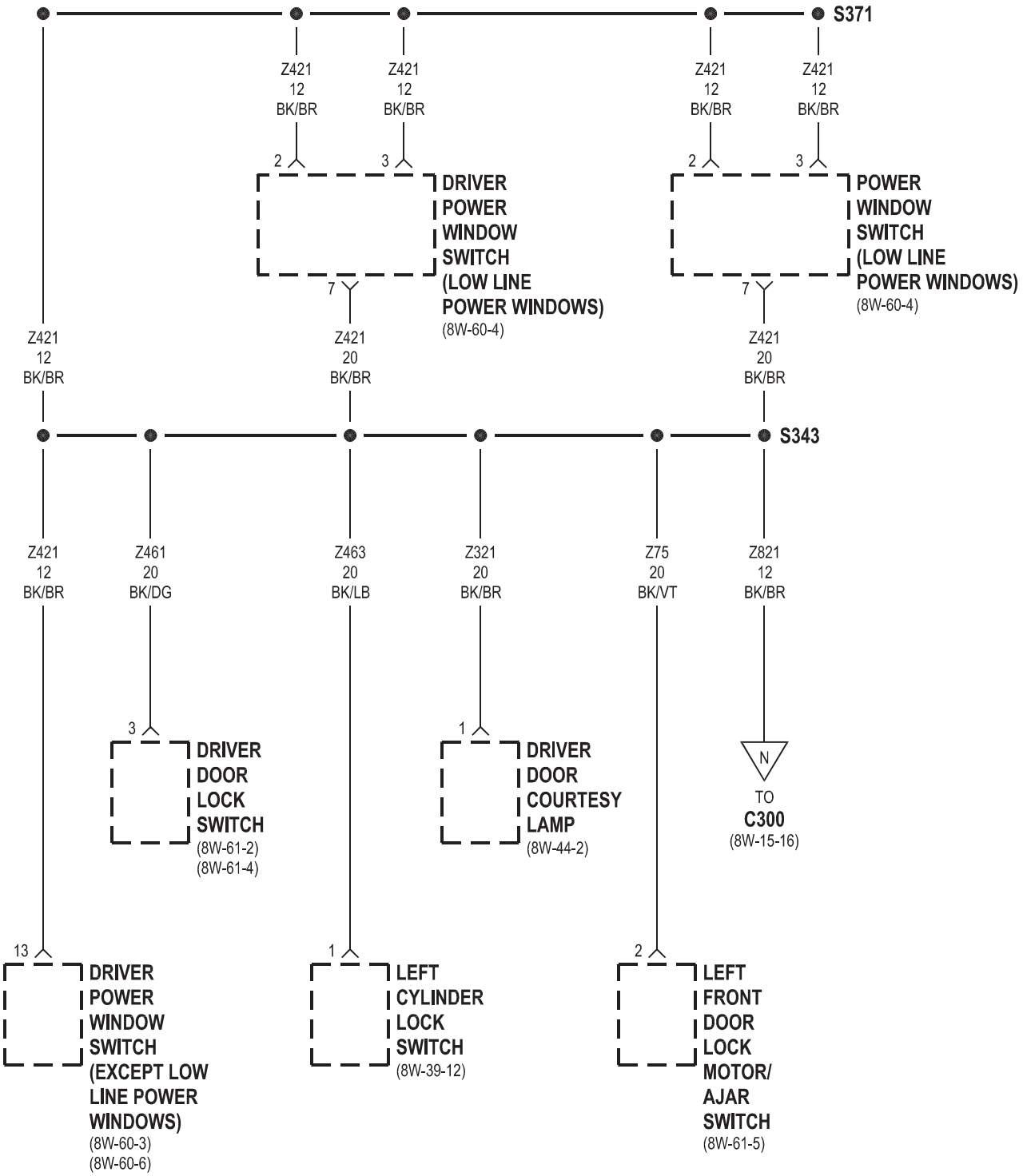
S371
Z421
12
BK/BR
Z421
12
BK/BR
Z421
12
BK/BR
Z421
12
BK/BR
2
3
2
3
DRIVER
POWER
WINDOW
SWITCH
(LOW LINE
POWER WINDOWS)
(8W-60-4)
POWER
WINDOW
SWITCH
(LOW LINE
POWER WINDOWS)
(8W-60-4)
7
7
Z421
12
BK/BR
Z421
20
BK/BR
Z421
20
BK/BR
S343
Z421
12
BK/BR
Z461
20
BK/DG
Z463
20
BK/LB
Z321
20
BK/BR
Z75
20
BK/VT
Z821
12
BK/BR
3
1
N
DRIVER
DOOR
LOCK
SWITCH
(8W-61-2)
(8W-61-4)
DRIVER
DOOR
COURTESY
LAMP
(8W-44-2)
TO
C300
(8W-15-16)
13
1
2
DRIVER
POWER
WINDOW
SWITCH
(EXCEPT LOW
LINE POWER
WINDOWS)
(8W-60-3)
(8W-60-6)
LEFT
CYLINDER
LOCK
SWITCH
(8W-39-12)
LEFT
FRONT
DOOR
LOCK
MOTOR/
AJAR
SWITCH
(8W-61-5)

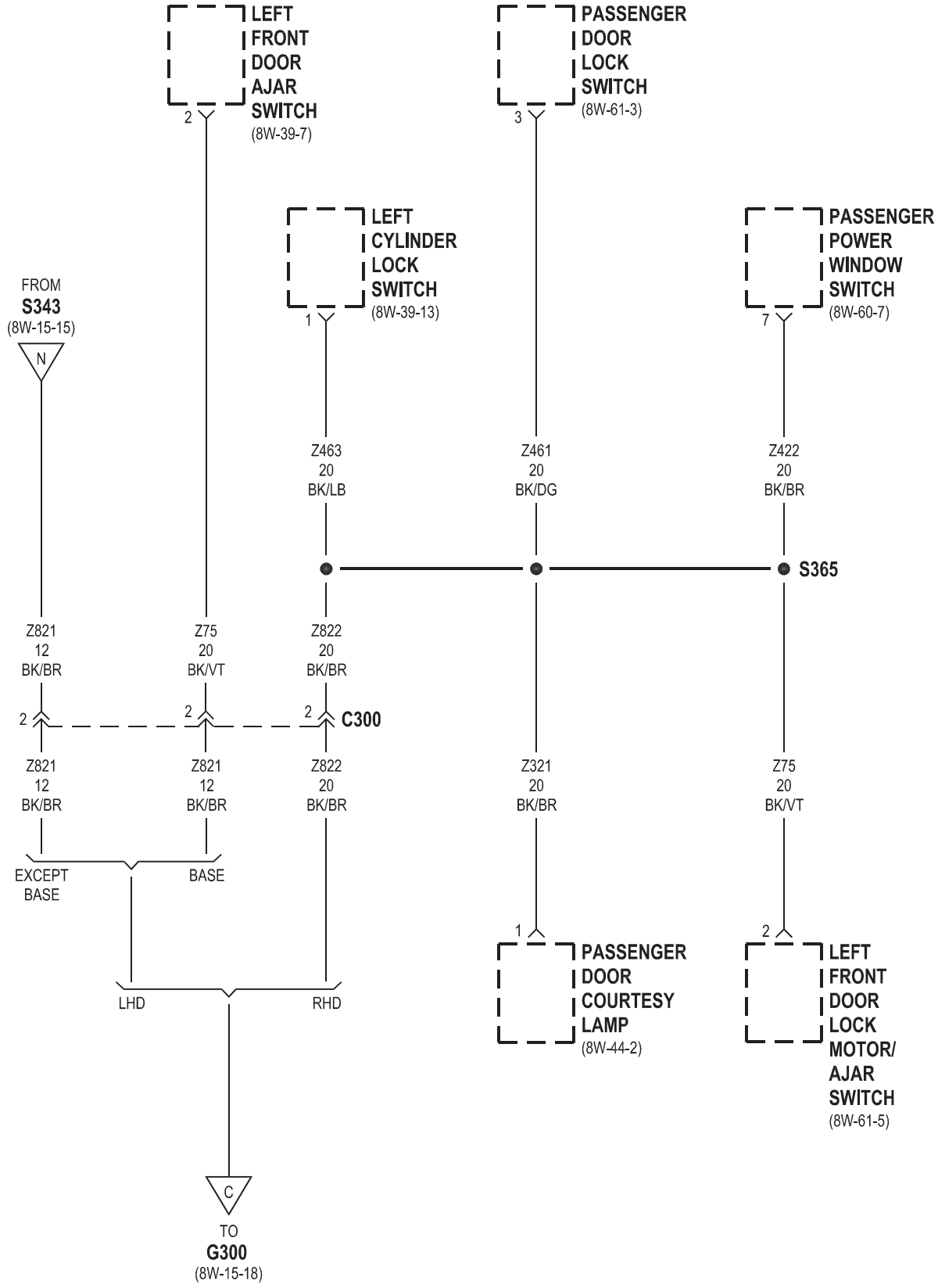
LEFT FRONT DOOR AJAR SWITCH
(8W-39-7)
2
PASSENGER DOOR LOCK SWITCH
(8W-61-3)
3
LEFT CYLINDER LOCK SWITCH
(8W-39-13)
1
PASSENGER POWER WINDOW SWITCH
(8W-60-7)
7
FROM
S343
(8W-15-15)
N
Z463
20
BK/LB
Z461
20
BK/DG
Z422
20
BK/BR
S365
Z821
12
BK/BR
Z75
20
BK/VT
Z822
20
BK/BR
2
2
2
C300
Z821
12
BK/BR
Z821
12
BK/BR
Z822
20
BK/BR
Z321
20
BK/BR
Z75
20
BK/VT
EXCEPT BASE
BASE
1
2
PASSENGER DOOR COURTESY LAMP
(8W-44-2)
LEFT FRONT DOOR LOCK MOTOR/ AJAR SWITCH
(8W-61-5)
LHD
RHD
C
TO
G300
(8W-15-18)

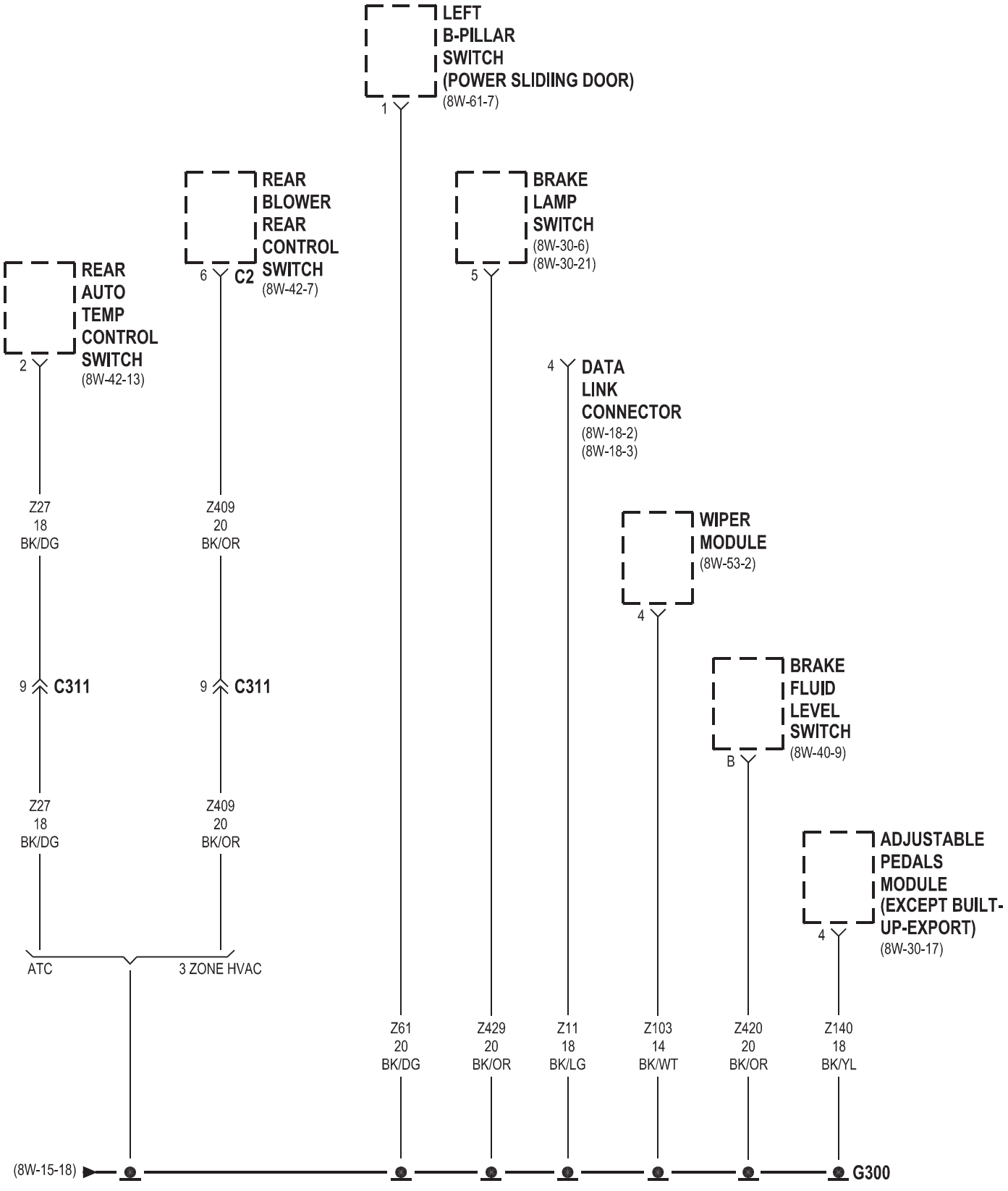
LEFT
B-PILLAR
SWITCH
(POWER SLIDIING DOOR)
(8W-61-7)
1
REAR
BLOWER
REAR
CONTROL
SWITCH
(8W-42-7)
6
C2
BRAKE
LAMP
SWITCH
(8W-30-6)
(8W-30-21)
5
REAR
AUTO
TEMP
CONTROL
SWITCH
(8W-42-13)
2
4
DATA
LINK
CONNECTOR
(8W-18-2)
(8W-18-3)
WIPER
MODULE
(8W-53-2)
4
BRAKE
FLUID
LEVEL
SWITCH
(8W-40-9)
B
ADJUSTABLE
PEDALS
MODULE
(EXCEPT BUILT-
UP-EXPORT)
(8W-30-17)
4
Z27
18
BK/DG
Z409
20
BK/OR
9
C311
9
C311
Z27
18
BK/DG
Z409
20
BK/OR
ATC
3 ZONE HVAC
Z61
20
BK/DG
Z429
20
BK/OR
Z11
18
BK/LG
Z103
14
BK/WT
Z420
20
BK/OR
Z140
18
BK/YL
(8W-15-18)
G300

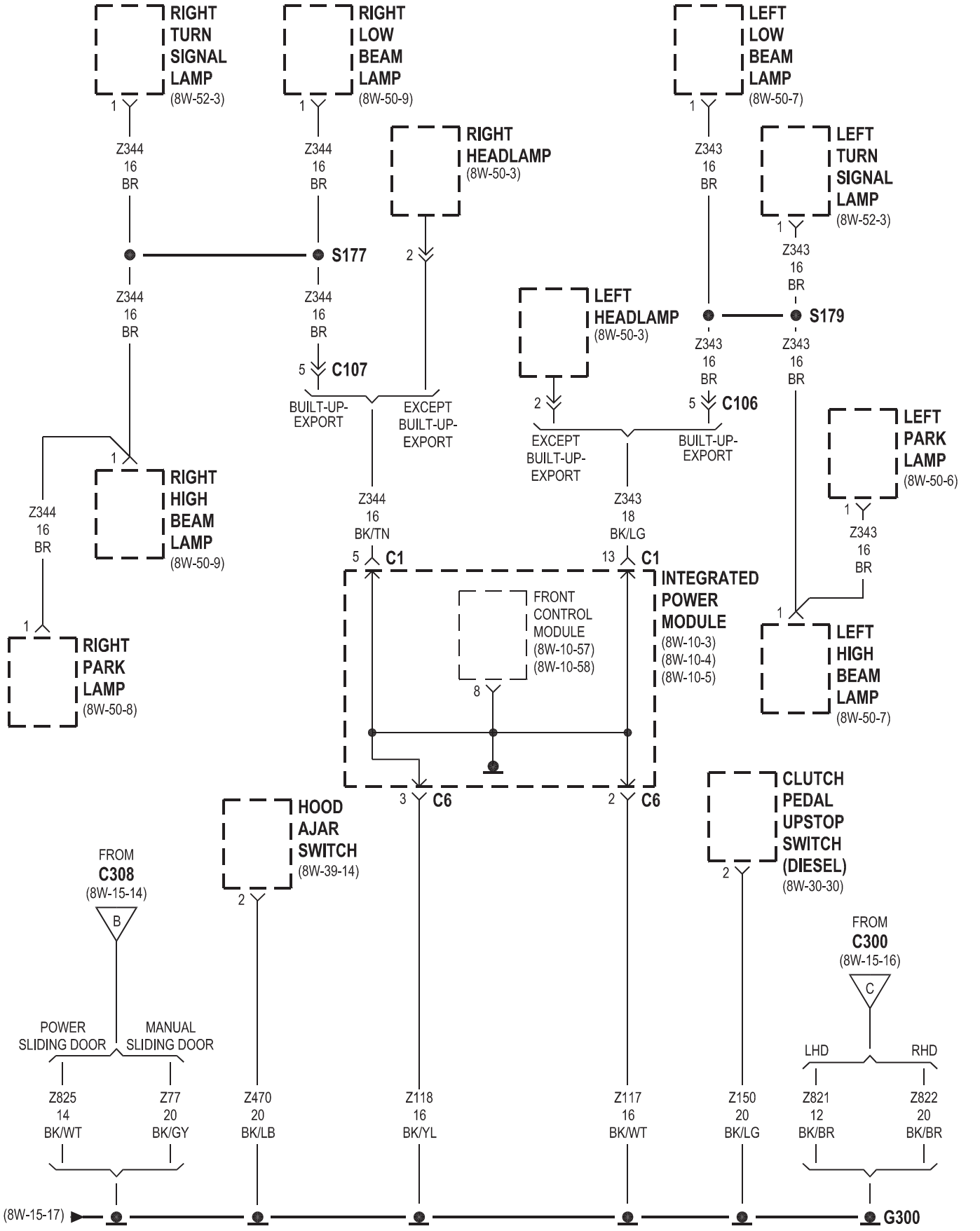
RIGHT TURN SIGNAL LAMP (8W-52-3)
RIGHT LOW BEAM LAMP (8W-50-9)
RIGHT HEADLAMP (8W-50-3)
LEFT LOW BEAM LAMP (8W-50-7)
LEFT TURN SIGNAL LAMP (8W-52-3)
LEFT HEADLAMP (8W-50-3)
Z344 16 BR
Z343 16 BR
S177
S179
C107
C106
BUILT-UP-EXPORT
EXCEPT BUILT-UP-EXPORT
RIGHT HIGH BEAM LAMP (8W-50-9)
LEFT HIGH BEAM LAMP (8W-50-7)
LEFT PARK LAMP (8W-50-6)
RIGHT PARK LAMP (8W-50-8)
Z344 16 BK/TN
Z343 18 BK/LG
C1
INTEGRATED POWER MODULE (8W-10-3) (8W-10-4) (8W-10-5)
FRONT CONTROL MODULE (8W-10-57) (8W-10-58)
C6
HOOD AJAR SWITCH (8W-39-14)
CLUTCH PEDAL UPSTOP SWITCH (DIESEL) (8W-30-30)
FROM C308 (8W-15-14)
FROM C300 (8W-15-16)
POWER SLIDING DOOR
MANUAL SLIDING DOOR
LHD
RHD
Z825 14 BK/WT
Z77 20 BK/GY
Z470 20 BK/LB
Z118 16 BK/YL
Z117 16 BK/WT
Z150 20 BK/LG
Z821 12 BK/BR
Z822 20 BK/BR
(8W-15-17)
G300

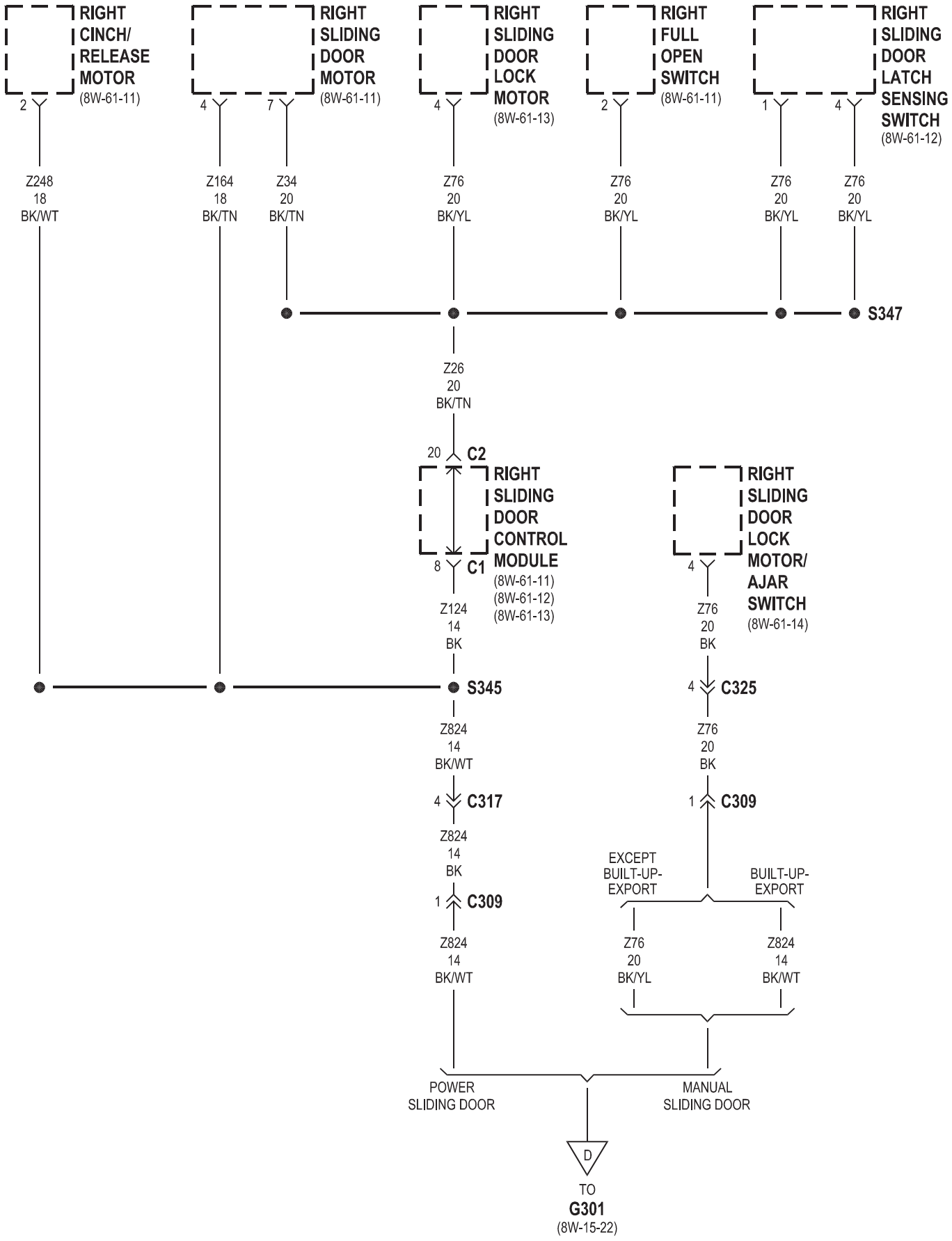
RIGHT CINCH/ RELEASE MOTOR (8W-61-11)
2
Z248 18 BK/WT
RIGHT SLIDING DOOR MOTOR (8W-61-11)
4
7
Z164 18 BK/TN
Z34 20 BK/TN
RIGHT SLIDING DOOR LOCK MOTOR (8W-61-13)
4
Z76 20 BK/YL
RIGHT FULL OPEN SWITCH (8W-61-11)
2
Z76 20 BK/YL
RIGHT SLIDING DOOR LATCH SENSING SWITCH (8W-61-12)
1
4
Z76 20 BK/YL
Z76 20 BK/YL
S347
Z26 20 BK/TN
20
C2
RIGHT SLIDING DOOR CONTROL MODULE (8W-61-11) (8W-61-12) (8W-61-13)
8
C1
Z124 14 BK
S345
Z824 14 BK/WT
4
C317
Z824 14 BK
1
C309
Z824 14 BK/WT
RIGHT SLIDING DOOR LOCK MOTOR/ AJAR SWITCH (8W-61-14)
4
Z76 20 BK
4
C325
Z76 20 BK
1
C309
EXCEPT BUILT-UP-EXPORT
BUILT-UP-EXPORT
Z76 20 BK/YL
Z824 14 BK/WT
POWER SLIDING DOOR
MANUAL SLIDING DOOR
D
TO G301 (8W-15-22)

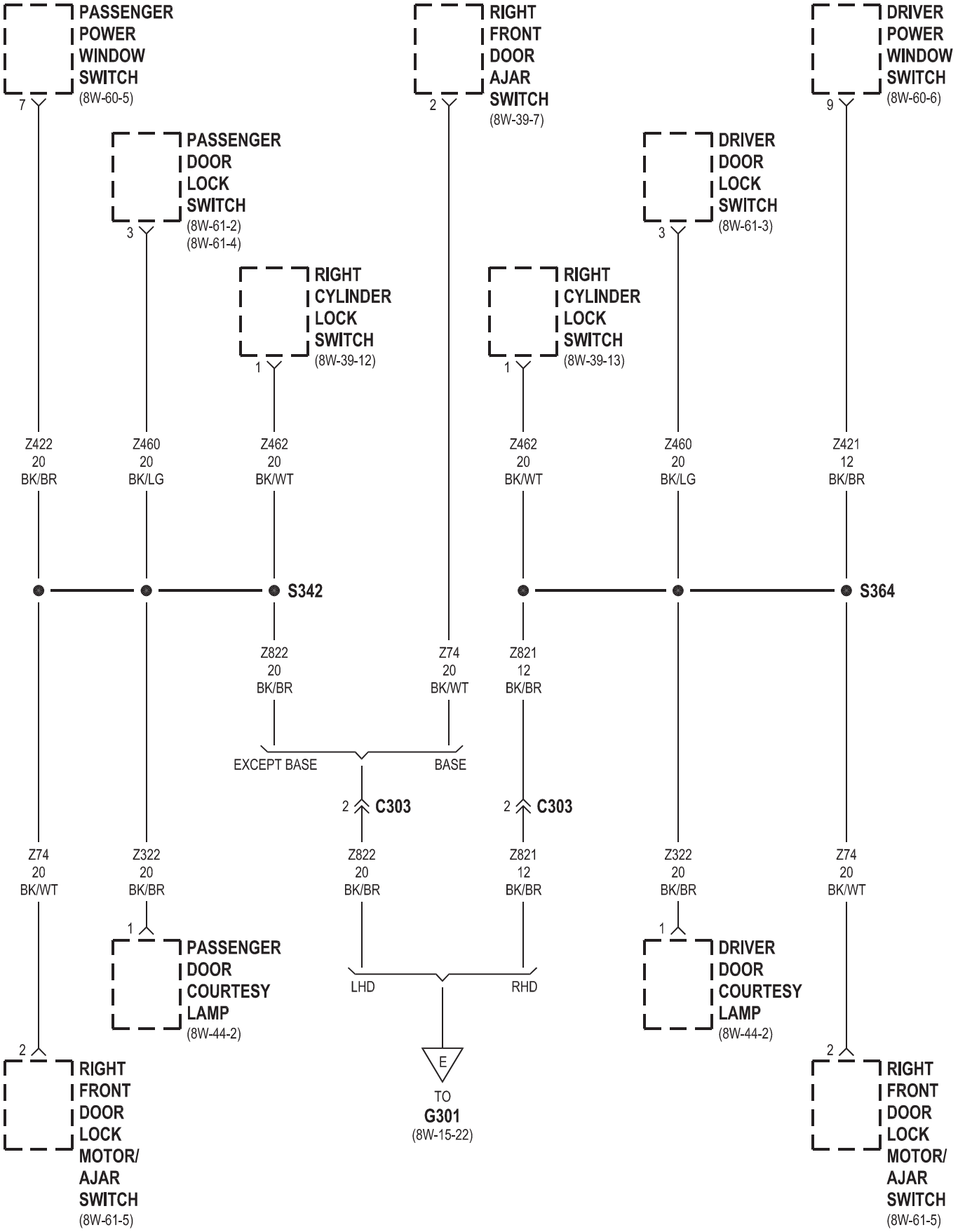
PASSENGER POWER WINDOW SWITCH (8W-60-5)
7
PASSENGER DOOR LOCK SWITCH (8W-61-2) (8W-61-4)
3
RIGHT CYLINDER LOCK SWITCH (8W-39-12)
1
RIGHT FRONT DOOR AJAR SWITCH (8W-39-7)
2
DRIVER DOOR LOCK SWITCH (8W-61-3)
3
RIGHT CYLINDER LOCK SWITCH (8W-39-13)
1
DRIVER POWER WINDOW SWITCH (8W-60-6)
9
Z422 20 BK/BR
Z460 20 BK/LG
Z462 20 BK/WT
Z462 20 BK/WT
Z460 20 BK/LG
Z421 12 BK/BR
S342
S364
Z822 20 BK/BR
Z74 20 BK/WT
Z821 12 BK/BR
EXCEPT BASE
BASE
2 C303
2 C303
Z74 20 BK/WT
Z322 20 BK/BR
Z822 20 BK/BR
Z821 12 BK/BR
Z322 20 BK/BR
Z74 20 BK/WT
1
PASSENGER DOOR COURTESY LAMP (8W-44-2)
1
DRIVER DOOR COURTESY LAMP (8W-44-2)
LHD
RHD
E
TO G301 (8W-15-22)
2
RIGHT FRONT DOOR LOCK MOTOR/ AJAR SWITCH (8W-61-5)
2
RIGHT FRONT DOOR LOCK MOTOR/ AJAR SWITCH (8W-61-5)

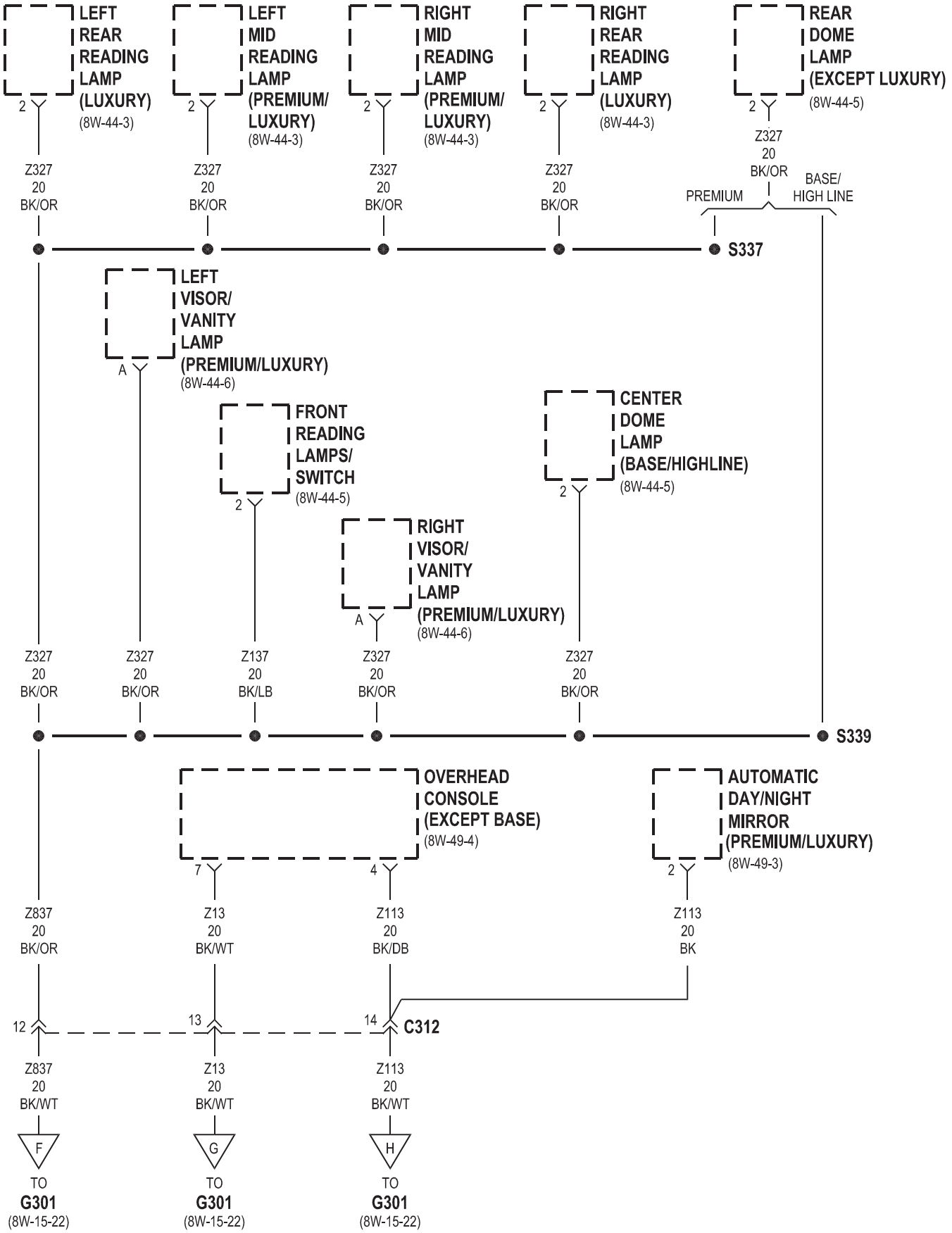
LEFT REAR READING LAMP (LUXURY)
(8W-44-3)
LEFT MID READING LAMP (PREMIUM/ LUXURY)
(8W-44-3)
RIGHT MID READING LAMP (PREMIUM/ LUXURY)
(8W-44-3)
RIGHT REAR READING LAMP (LUXURY)
(8W-44-3)
REAR DOME LAMP (EXCEPT LUXURY)
(8W-44-5)
Z327 20 BK/OR
PREMIUM
BASE/ HIGH LINE
S337
LEFT VISOR/ VANITY LAMP (PREMIUM/LUXURY)
(8W-44-6)
FRONT READING LAMPS/ SWITCH
(8W-44-5)
CENTER DOME LAMP (BASE/HIGHLINE)
(8W-44-5)
RIGHT VISOR/ VANITY LAMP (PREMIUM/LUXURY)
(8W-44-6)
Z137 20 BK/LB
S339
OVERHEAD CONSOLE (EXCEPT BASE)
(8W-49-4)
AUTOMATIC DAY/NIGHT MIRROR (PREMIUM/LUXURY)
(8W-49-3)
Z837 20 BK/OR
Z13 20 BK/WT
Z113 20 BK/DB
Z113 20 BK
C312
Z837 20 BK/WT
Z13 20 BK/WT
Z113 20 BK/WT
TO G301 (8W-15-22)

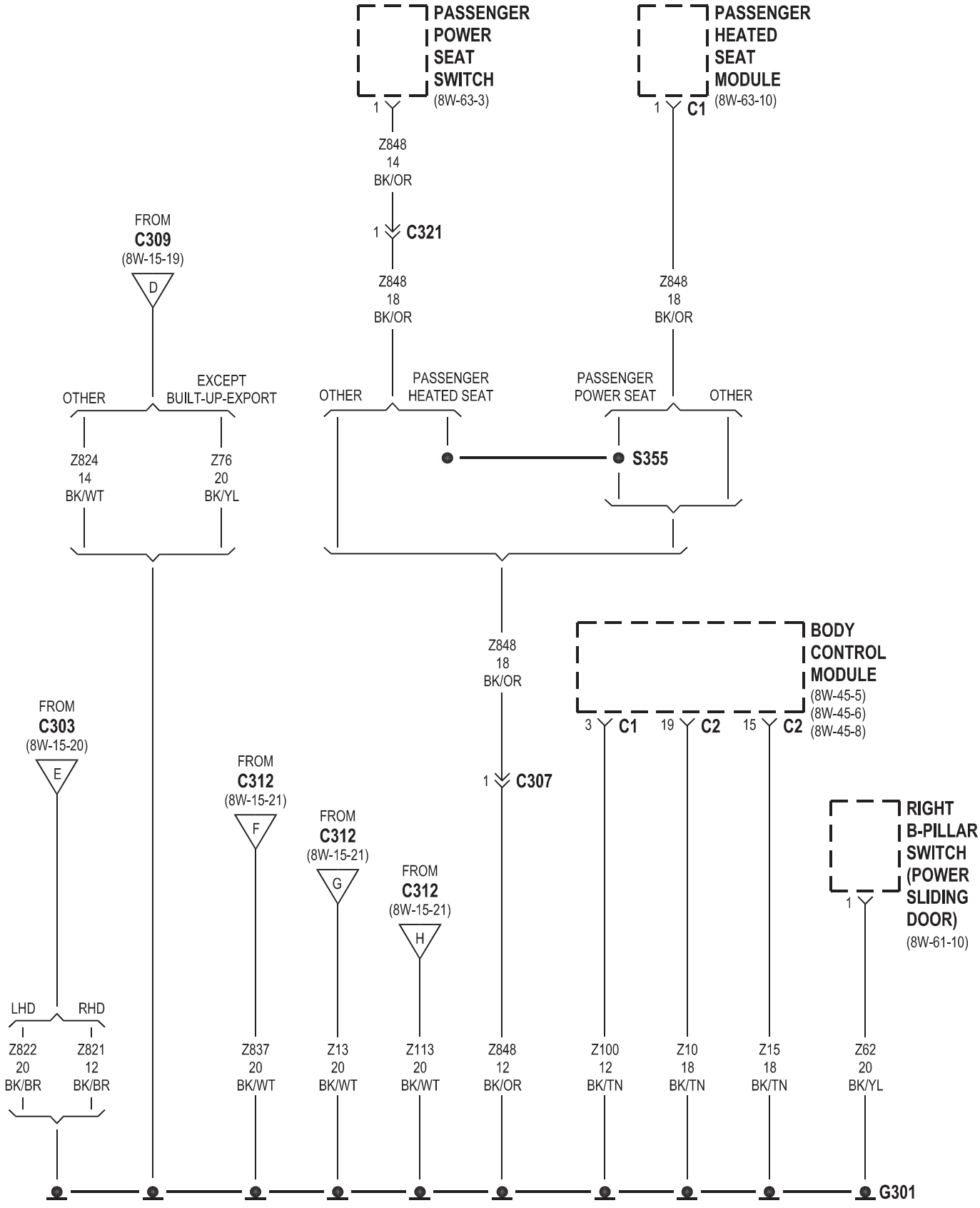
PASSENGER POWER SEAT SWITCH
(8W-63-3)
1
Z848
14
BK/OR
1 C321
Z848
18
BK/OR
PASSENGER HEATED SEAT MODULE
(8W-63-10)
1 C1
Z848
18
BK/OR
FROM
C309
(8W-15-19)
D
OTHER
EXCEPT
BUILT-UP-EXPORT
Z824
14
BK/WT
Z76
20
BK/YL
OTHER
PASSENGER
HEATED SEAT
PASSENGER
POWER SEAT
OTHER
S355
Z848
18
BK/OR
BODY CONTROL MODULE
(8W-45-5)
(8W-45-6)
(8W-45-8)
3 C1
19 C2
15 C2
1 C307
FROM
C303
(8W-15-20)
E
FROM
C312
(8W-15-21)
F
FROM
C312
(8W-15-21)
G
FROM
C312
(8W-15-21)
H
RIGHT B-PILLAR SWITCH (POWER SLIDING DOOR)
(8W-61-10)
1
LHD
RHD
Z822
20
BK/BR
Z821
12
BK/BR
Z837
20
BK/WT
Z13
20
BK/WT
Z113
20
BK/WT
Z848
12
BK/OR
Z100
12
BK/TN
Z10
18
BK/TN
Z15
18
BK/TN
Z62
20
BK/YL
G301

POWER LIFTGATE

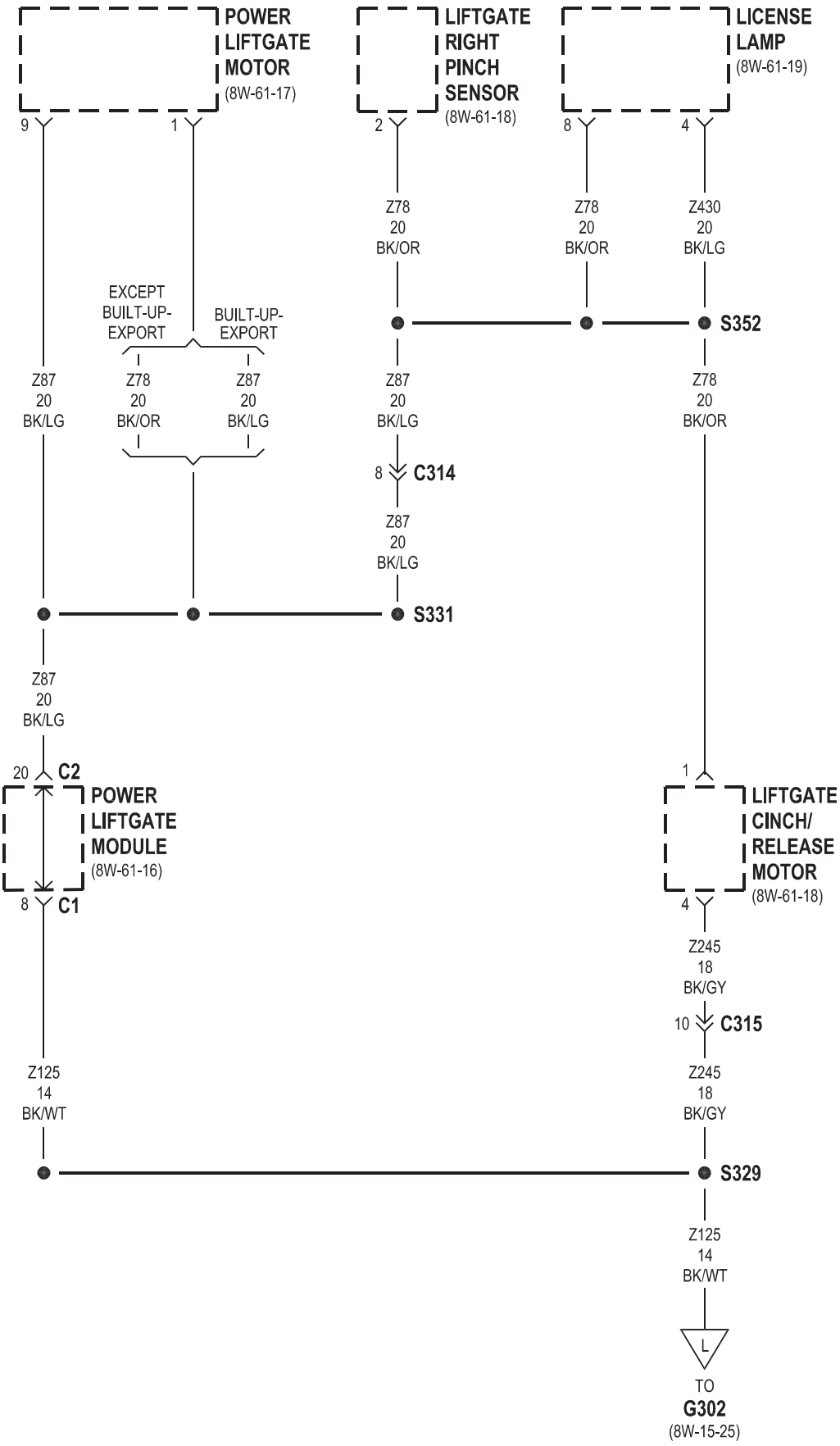

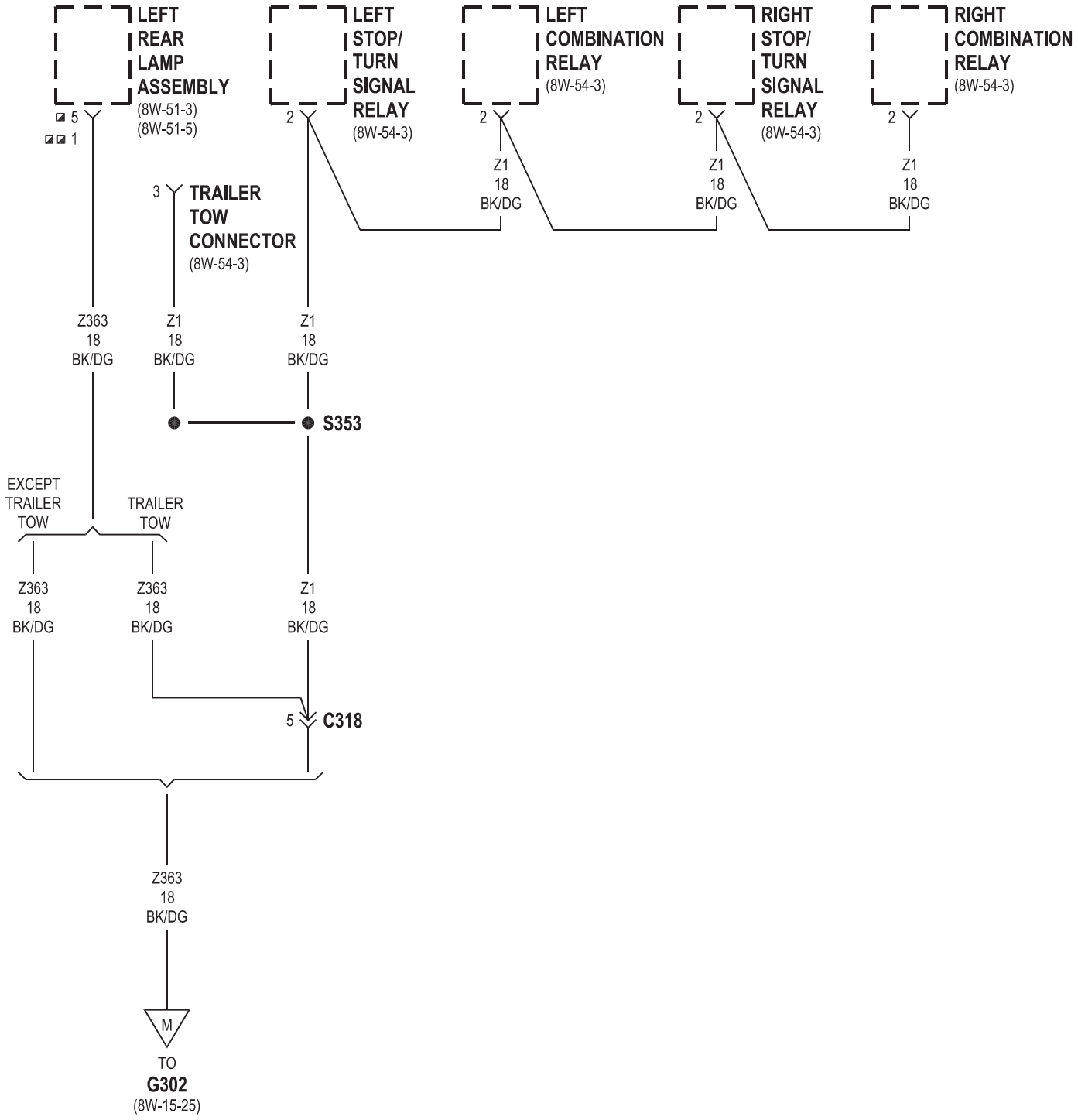

◪ EXCEPT BUILT-UP-EXPORT
◪◪ BUILT-UP-EXPORT

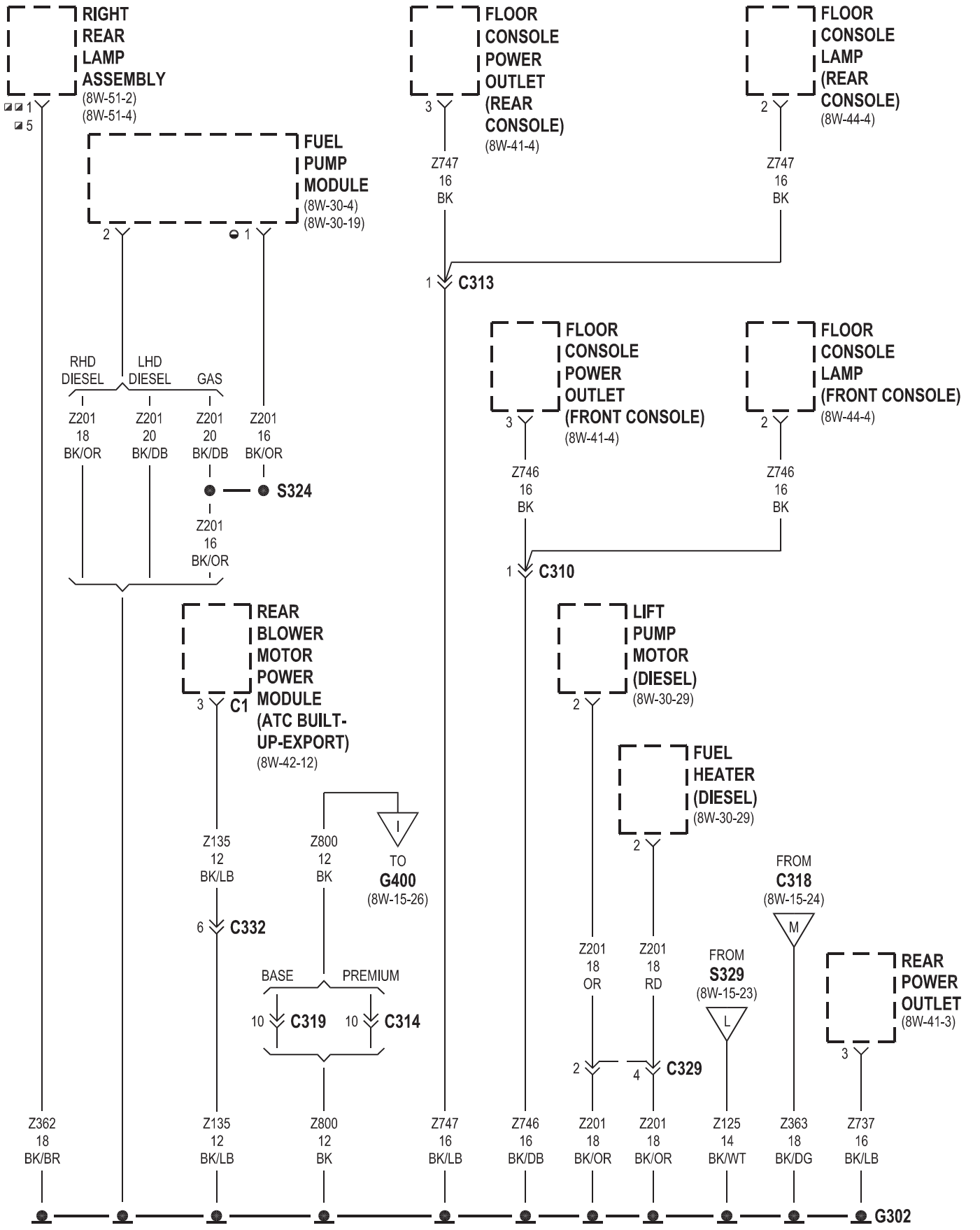

GAS ◒ BUILT-UP-EXPORT ◪◪ EXCEPT BUILT-UP-EXPORT ◪

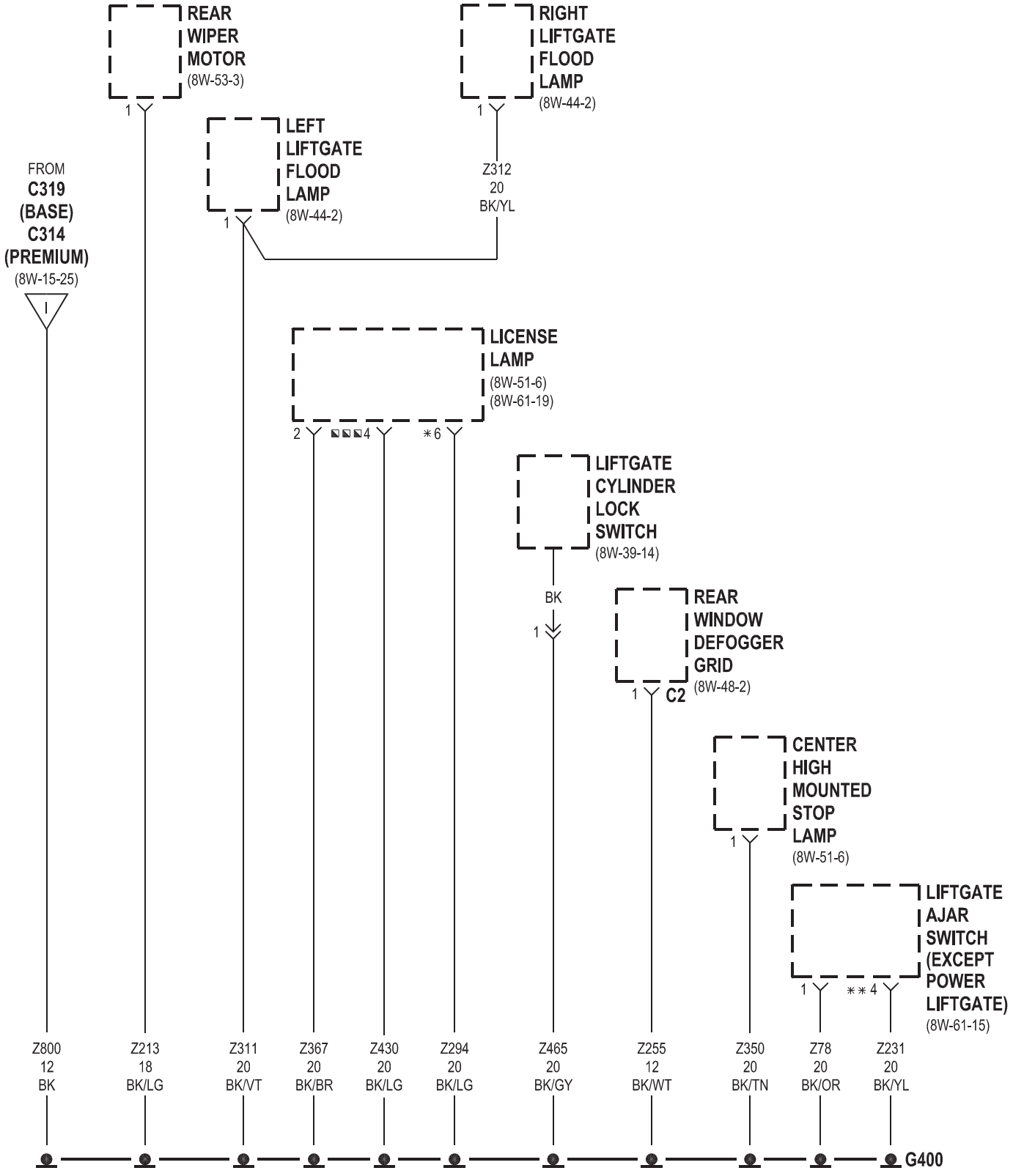

* POWER LIFTGATE
** POWER RELEASE
◥◥◥ EXCEPT MANUAL RELEASE

RS001526

8W-18 BUS COMMUNICATIONS

Component	Page
A/C- Heater Control	8W-18-4
Adjustable Pedals Module	8W-18-5
Airbag Control Module	8W-18-4
Auto Temp Control	8W-18-4
Battery	8W-18-2, 3
Body Control Module	8W-18-2, 3, 4
Cabin Heater Assist	8W-18-3
CD Changer	8W-18-4
Controller Antilock Brake	8W-18-4
Data Link Connector	8W-18-2, 3, 4
Diagnostic Junction Port	8W-18-2, 3, 4, 5
Engine Control Module	8W-18-3, 5
Front Control Module	8W-18-2, 3, 4
G100	8W-18-2, 3
G101	8W-18-2, 3
G300	8W-18-2, 3
Instrument Cluster	8W-18-4
Integrated Power Module	8W-18-2, 3
Integrated Power Module	8W-18-4
Left Side Impact Airbag Control Module	8W-18-5
Left Sliding Door Control Module	8W-18-5
Memory Seat/Mirror Module	8W-18-5
Overhead Console	8W-18-4
Power Liftgate Module	8W-18-5
Powertrain Control Module	8W-18-2, 5
PTC 7	8W-18-2, 3
Radio	8W-18-4
Right Side Impact Airbag Control Module	8W-18-5
Right Sliding Door Control Module	8W-18-5
Sentry Key Immobilizer Module	8W-18-5
Thatcham Alarm Module	8W-18-2, 3, 5
Transmission Control Module	8W-18-2, 4

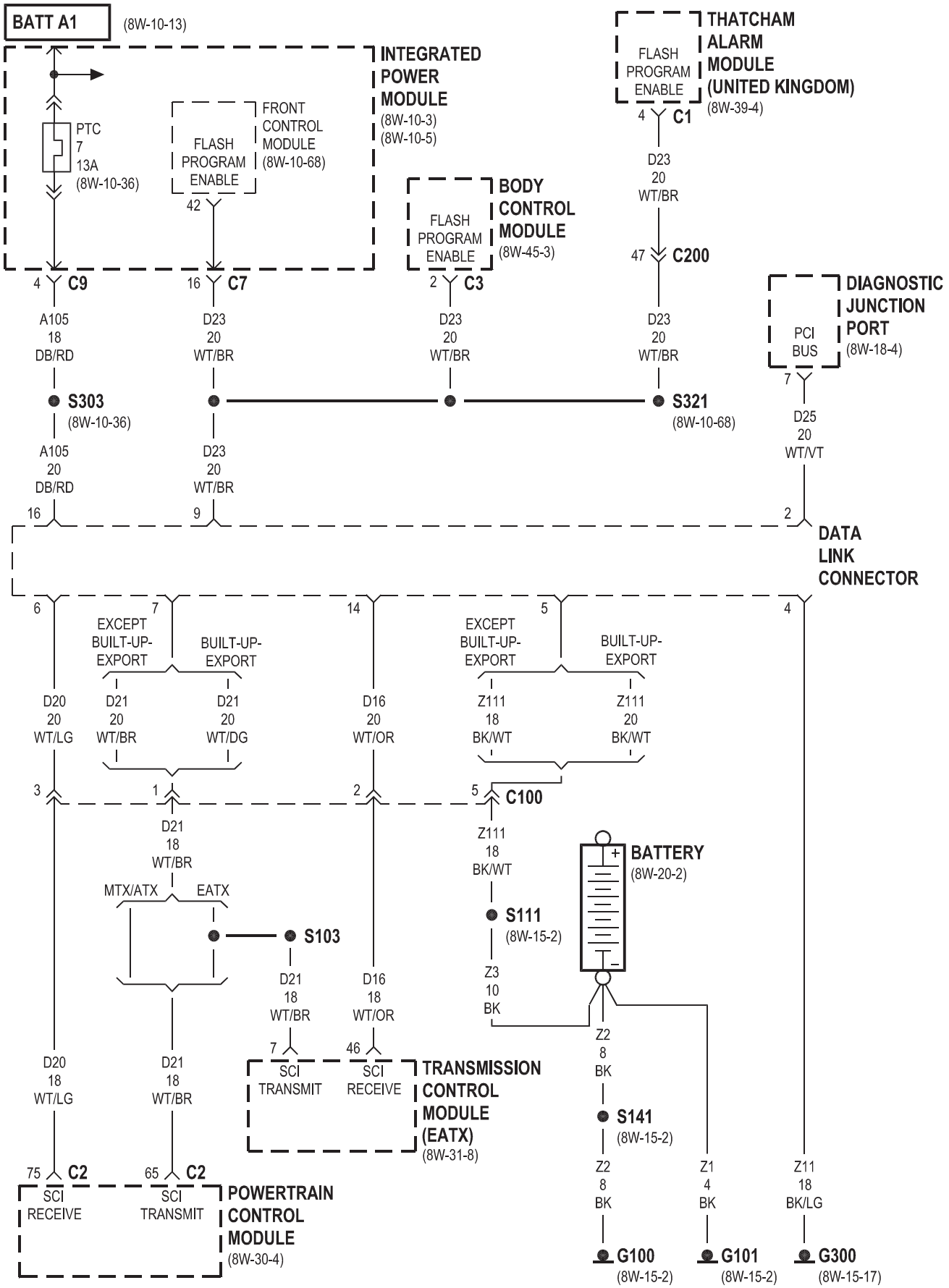
BATT A1
(8W-10-13)
INTEGRATED POWER MODULE
(8W-10-3)
(8W-10-5)
PTC
7
13A
(8W-10-36)
FLASH PROGRAM ENABLE
FRONT CONTROL MODULE
(8W-10-68)
42
FLASH PROGRAM ENABLE
BODY CONTROL MODULE
(8W-45-3)
FLASH PROGRAM ENABLE
THATCHAM ALARM MODULE (UNITED KINGDOM)
(8W-39-4)
4 C1
D23
20
WT/BR
47 C200
4 C9
16 C7
2 C3
A105
18
DB/RD
D23
20
WT/BR
D23
20
WT/BR
D23
20
WT/BR
DIAGNOSTIC JUNCTION PORT
(8W-18-4)
PCI BUS
7
D25
20
WT/VT
S303
(8W-10-36)
S321
(8W-10-68)
A105
20
DB/RD
D23
20
WT/BR
16
9
2
DATA LINK CONNECTOR
6
7
14
5
4
EXCEPT BUILT-UP-EXPORT
BUILT-UP-EXPORT
EXCEPT BUILT-UP-EXPORT
BUILT-UP-EXPORT
D20
20
WT/LG
D21
20
WT/BR
D21
20
WT/DG
D16
20
WT/OR
Z111
18
BK/WT
Z111
20
BK/WT
3
1
2
5 C100
D21
18
WT/BR
MTX/ATX
EATX
Z111
18
BK/WT
BATTERY
(8W-20-2)
S103
S111
(8W-15-2)
Z3
10
BK
D21
18
WT/BR
D16
18
WT/OR
7
46
Z2
8
BK
D20
18
WT/LG
D21
18
WT/BR
SCI TRANSMIT
SCI RECEIVE
TRANSMISSION CONTROL MODULE (EATX)
(8W-31-8)
S141
(8W-15-2)
75 C2
65 C2
Z2
8
BK
Z1
4
BK
Z11
18
BK/LG
SCI RECEIVE
SCI TRANSMIT
POWERTRAIN CONTROL MODULE
(8W-30-4)
G100
(8W-15-2)
G101
(8W-15-2)
G300
(8W-15-17)

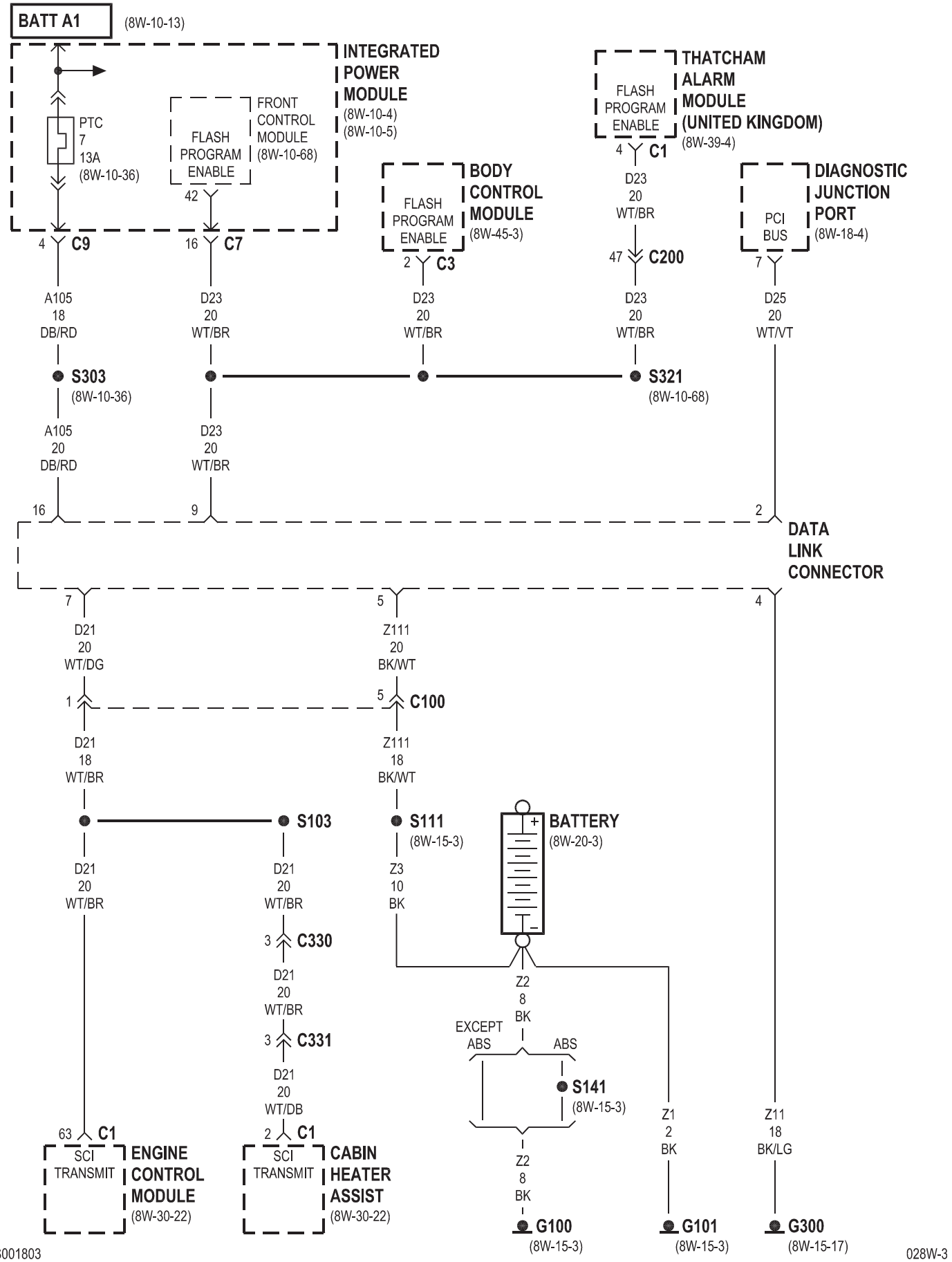
BATT A1
(8W-10-13)
INTEGRATED POWER MODULE
(8W-10-4)
(8W-10-5)
PTC
7
13A
(8W-10-36)
FLASH PROGRAM ENABLE
FRONT CONTROL MODULE
(8W-10-68)
42
4 C9
16 C7
A105
18
DB/RD
D23
20
WT/BR
S303
(8W-10-36)
A105
20
DB/RD
D23
20
WT/BR
16
9
FLASH PROGRAM ENABLE
BODY CONTROL MODULE
(8W-45-3)
2 C3
D23
20
WT/BR
S321
(8W-10-68)
FLASH PROGRAM ENABLE
THATCHAM ALARM MODULE (UNITED KINGDOM)
(8W-39-4)
4 C1
D23
20
WT/BR
47 C200
D23
20
WT/BR
PCI BUS
DIAGNOSTIC JUNCTION PORT
(8W-18-4)
7
D25
20
WT/VT
2
DATA LINK CONNECTOR
7
D21
20
WT/DG
1
D21
18
WT/BR
5
Z111
20
BK/WT
5 C100
Z111
18
BK/WT
S103
S111
(8W-15-3)
BATTERY
(8W-20-3)
D21
20
WT/BR
D21
20
WT/BR
3 C330
D21
20
WT/BR
3 C331
D21
20
WT/DB
2 C1
Z3
10
BK
Z2
8
BK
EXCEPT ABS
ABS
S141
(8W-15-3)
Z2
8
BK
63 C1
SCI TRANSMIT
ENGINE CONTROL MODULE
(8W-30-22)
2 C1
SCI TRANSMIT
CABIN HEATER ASSIST
(8W-30-22)
G100
(8W-15-3)
Z1
2
BK
G101
(8W-15-3)
Z11
18
BK/LG
G300
(8W-15-17)

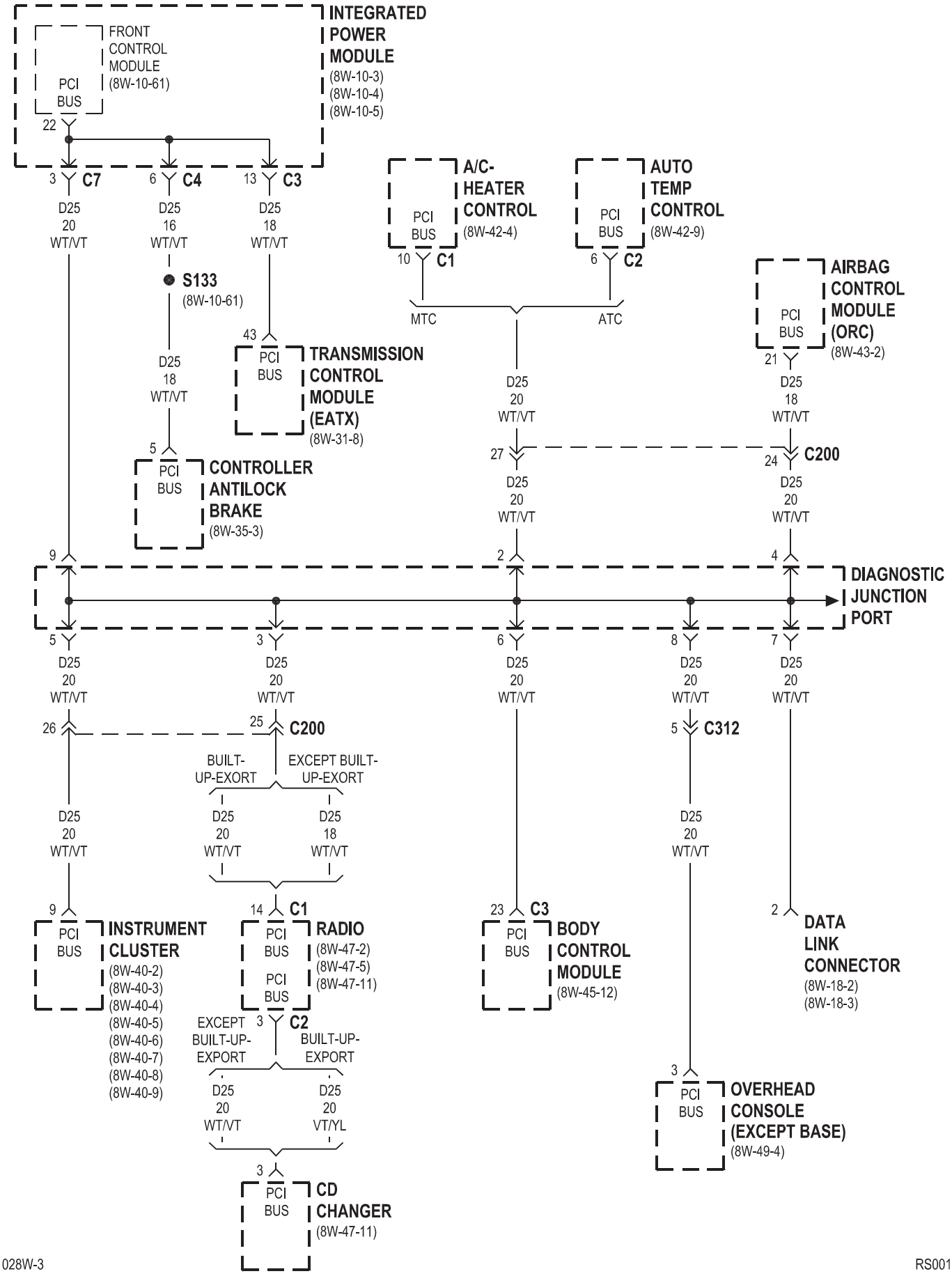
INTEGRATED POWER MODULE
(8W-10-3)
(8W-10-4)
(8W-10-5)
FRONT CONTROL MODULE
(8W-10-61)
PCI BUS
22
3 C7
6 C4
13 C3
D25 20 WT/VT
D25 16 WT/VT
D25 18 WT/VT
S133
(8W-10-61)
A/C-HEATER CONTROL
(8W-42-4)
10 C1
AUTO TEMP CONTROL
(8W-42-9)
6 C2
MTC
ATC
AIRBAG CONTROL MODULE (ORC)
(8W-43-2)
21
43
TRANSMISSION CONTROL MODULE (EATX)
(8W-31-8)
5
CONTROLLER ANTILOCK BRAKE
(8W-35-3)
27
24 C200
9
2
4
DIAGNOSTIC JUNCTION PORT
5
3
6
8
7
26
25 C200
BUILT-UP-EXORT
EXCEPT BUILT-UP-EXORT
5 C312
INSTRUMENT CLUSTER
(8W-40-2)
(8W-40-3)
(8W-40-4)
(8W-40-5)
(8W-40-6)
(8W-40-7)
(8W-40-8)
(8W-40-9)
14 C1
RADIO
(8W-47-2)
(8W-47-5)
(8W-47-11)
EXCEPT BUILT-UP-EXPORT
3 C2
BUILT-UP-EXPORT
VT/YL
CD CHANGER
(8W-47-11)
23 C3
BODY CONTROL MODULE
(8W-45-12)
DATA LINK CONNECTOR
(8W-18-2)
(8W-18-3)
OVERHEAD CONSOLE (EXCEPT BASE)
(8W-49-4)

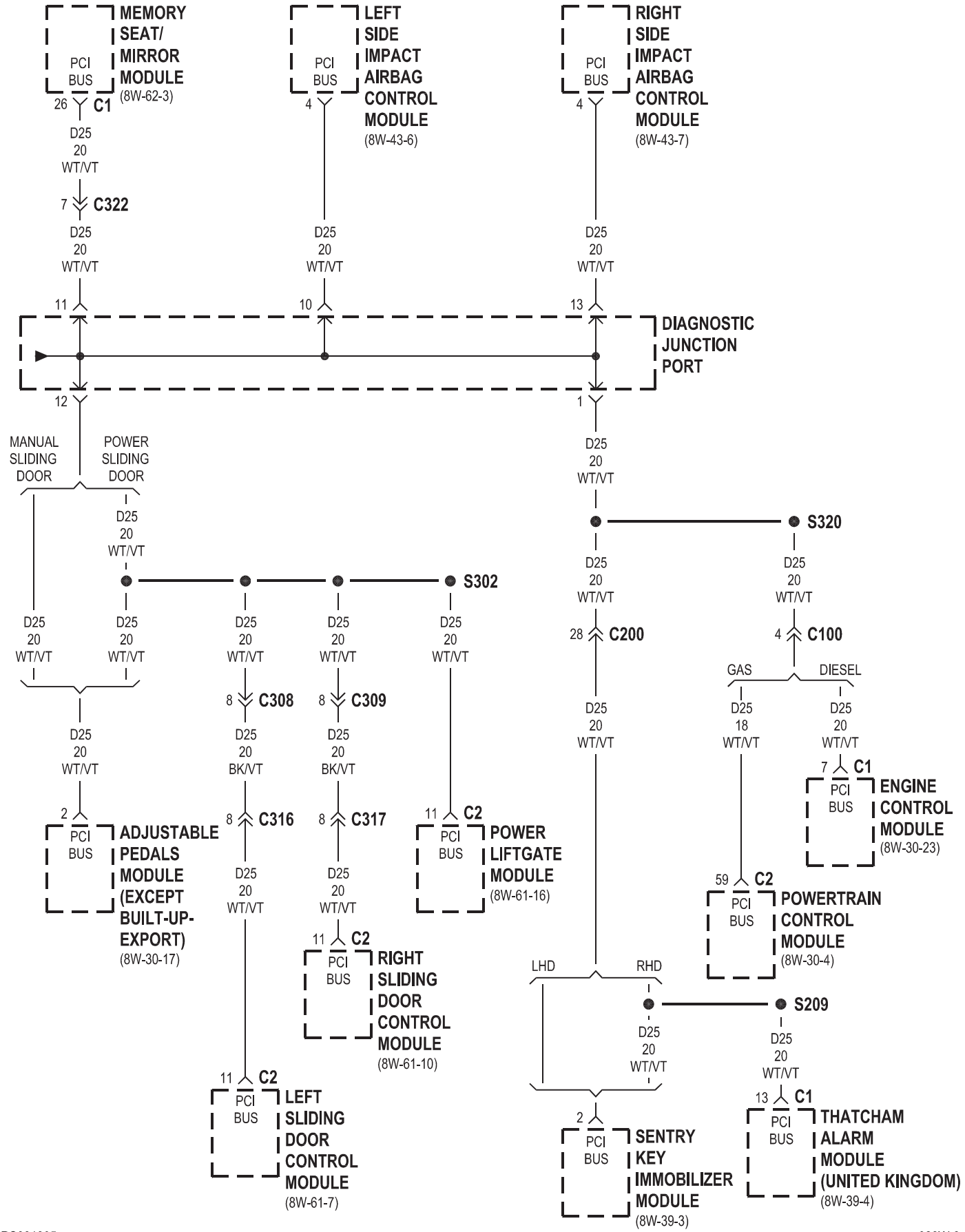
MEMORY SEAT/ MIRROR MODULE (8W-62-3)
PCI BUS
26 C1
D25 20 WT/VT
7 C322
D25 20 WT/VT
11
LEFT SIDE IMPACT AIRBAG CONTROL MODULE (8W-43-6)
4
D25 20 WT/VT
10
RIGHT SIDE IMPACT AIRBAG CONTROL MODULE (8W-43-7)
4
D25 20 WT/VT
13
DIAGNOSTIC JUNCTION PORT
12
1
MANUAL SLIDING DOOR
POWER SLIDING DOOR
D25 20 WT/VT
S302
S320
D25 20 WT/VT
28 C200
4 C100
GAS
DIESEL
D25 18 WT/VT
D25 20 WT/VT
8 C308
8 C309
D25 20 BK/VT
2
ADJUSTABLE PEDALS MODULE (EXCEPT BUILT-UP-EXPORT) (8W-30-17)
8 C316
8 C317
11 C2
POWER LIFTGATE MODULE (8W-61-16)
7 C1
ENGINE CONTROL MODULE (8W-30-23)
59 C2
POWERTRAIN CONTROL MODULE (8W-30-4)
RIGHT SLIDING DOOR CONTROL MODULE (8W-61-10)
LHD
RHD
S209
11 C2
LEFT SLIDING DOOR CONTROL MODULE (8W-61-7)
2
SENTRY KEY IMMOBILIZER MODULE (8W-39-3)
13 C1
THATCHAM ALARM MODULE (UNITED KINGDOM) (8W-39-4)

8W-20 CHARGING SYSTEM

Component	Page
Auto Shut Down Relay	8W-20-2
Battery	8W-20-2, 3
Battery Temperature Sensor	8W-20-3
ECM/PCM Relay	8W-20-3
Engine Control Module	8W-20-3
Fuse 16	8W-20-2, 3
Fuse 17	8W-20-2
Fuselink	8W-20-2, 3
G100	8W-20-2, 3
G101	8W-20-2, 3
Generator	8W-20-2, 3
Integrated Power Module	8W-20-2, 3
Powertrain Control Module	8W-20-2
Starter Motor	8W-20-2, 3

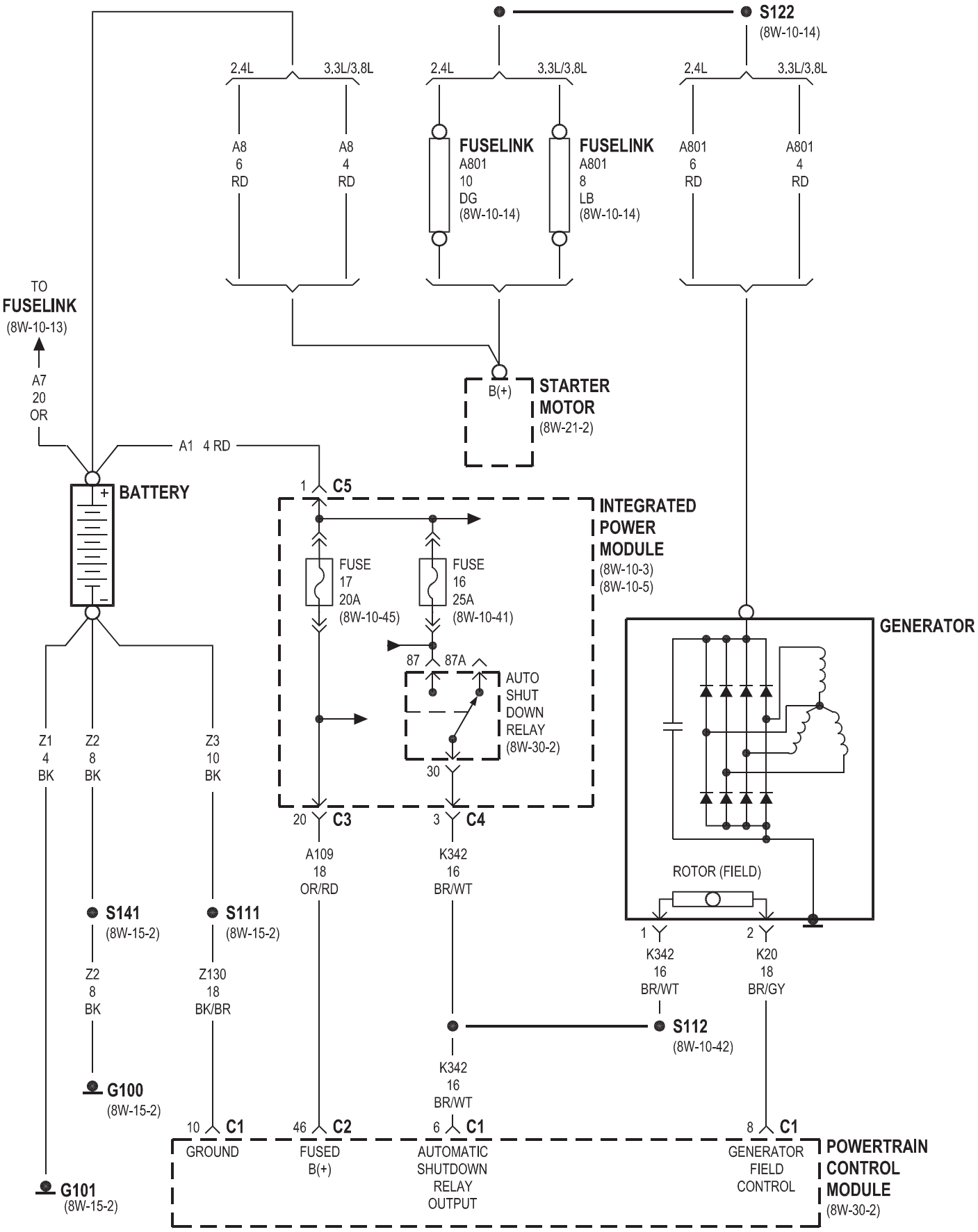
S122
(8W-10-14)
2.4L
3.3L/3.8L
A8
6
RD
A8
4
RD
FUSELINK
A801
10
DG
(8W-10-14)
FUSELINK
A801
8
LB
(8W-10-14)
A801
6
RD
A801
4
RD
TO
FUSELINK
(8W-10-13)
A7
20
OR
B(+)
STARTER
MOTOR
(8W-21-2)
A1 4 RD
BATTERY
1 C5
INTEGRATED
POWER
MODULE
(8W-10-3)
(8W-10-5)
FUSE
17
20A
(8W-10-45)
FUSE
16
25A
(8W-10-41)
87
87A
AUTO
SHUT
DOWN
RELAY
(8W-30-2)
30
GENERATOR
Z1
4
BK
Z2
8
BK
Z3
10
BK
20 C3
3 C4
A109
18
OR/RD
K342
16
BR/WT
ROTOR (FIELD)
1
2
K342
16
BR/WT
K20
18
BR/GY
S141
(8W-15-2)
S111
(8W-15-2)
Z2
8
BK
Z130
18
BK/BR
S112
(8W-10-42)
K342
16
BR/WT
G100
(8W-15-2)
10 C1
46 C2
6 C1
8 C1
GROUND
FUSED
B(+)
AUTOMATIC
SHUTDOWN
RELAY
OUTPUT
GENERATOR
FIELD
CONTROL
POWERTRAIN
CONTROL
MODULE
(8W-30-2)
G101
(8W-15-2)

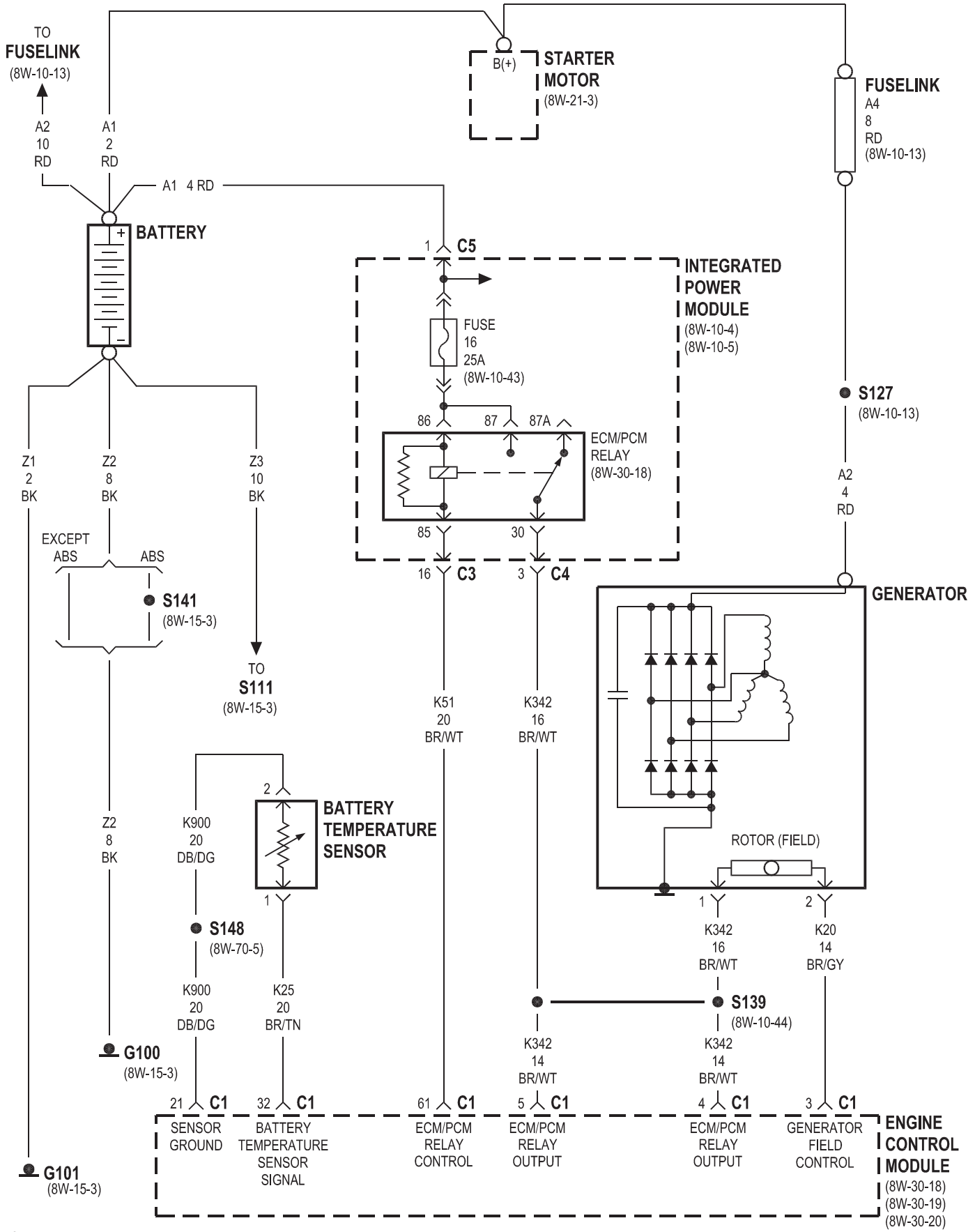
TO
FUSELINK
(8W-10-13)
A2
10
RD
A1
2
RD
B(+)
STARTER
MOTOR
(8W-21-3)
FUSELINK
A4
8
RD
(8W-10-13)
A1 4 RD
BATTERY
1
C5
INTEGRATED
POWER
MODULE
(8W-10-4)
(8W-10-5)
FUSE
16
25A
(8W-10-43)
86
87
87A
ECM/PCM
RELAY
(8W-30-18)
85
30
S127
(8W-10-13)
A2
4
RD
Z1
2
BK
Z2
8
BK
Z3
10
BK
EXCEPT
ABS
ABS
S141
(8W-15-3)
TO
S111
(8W-15-3)
16
C3
3
C4
GENERATOR
K51
20
BR/WT
K342
16
BR/WT
2
BATTERY
TEMPERATURE
SENSOR
Z2
8
BK
K900
20
DB/DG
1
ROTOR (FIELD)
1
2
K342
16
BR/WT
K20
14
BR/GY
S148
(8W-70-5)
K900
20
DB/DG
K25
20
BR/TN
S139
(8W-10-44)
K342
14
BR/WT
K342
14
BR/WT
G100
(8W-15-3)
21
C1
32
C1
61
C1
5
C1
4
C1
3
C1
SENSOR
GROUND
BATTERY
TEMPERATURE
SENSOR
SIGNAL
ECM/PCM
RELAY
CONTROL
ECM/PCM
RELAY
OUTPUT
ECM/PCM
RELAY
OUTPUT
GENERATOR
FIELD
CONTROL
ENGINE
CONTROL
MODULE
(8W-30-18)
(8W-30-19)
(8W-30-20)
G101
(8W-15-3)

8W-21 STARTING SYSTEM

Component	Page
Battery	8W-21-2, 3
Clutch Pedal Interlock Switch	8W-21-2, 3
Clutch Pedal Interlock Switch Jumper	8W-21-2
Engine Control Module	8W-21-3
Front Control Module	8W-21-2
Fuse 9	8W-21-2, 3
Fuselink	8W-21-2, 3
G101	8W-21-2, 3
Generator	8W-21-2, 3
Ignition Switch	8W-21-2, 3
Integrated Power Module	8W-21-2, 3
Powertrain Control Module	8W-21-2
Starter Motor	8W-21-2, 3
Starter Motor Relay	8W-21-2, 3

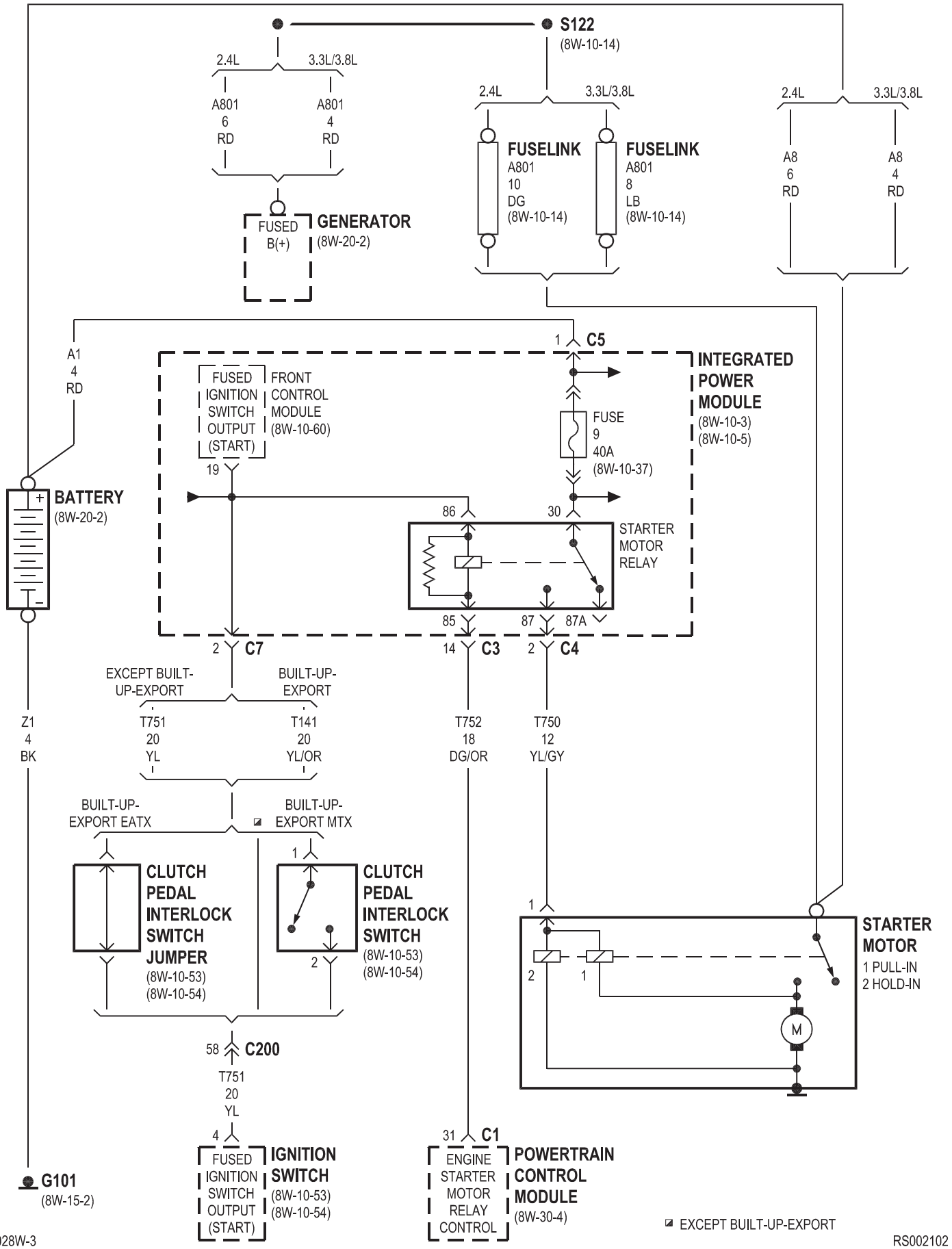
S122
(8W-10-14)
2.4L
3.3L/3.8L
A801
6
RD
A801
4
RD
GENERATOR
FUSED
B(+)
(8W-20-2)
FUSELINK
A801
10
DG
(8W-10-14)
FUSELINK
A801
8
LB
(8W-10-14)
A8
6
RD
A8
4
RD
A1
4
RD
C5
INTEGRATED
POWER
MODULE
(8W-10-3)
(8W-10-5)
FUSED
IGNITION
SWITCH
OUTPUT
(START)
FRONT
CONTROL
MODULE
(8W-10-60)
FUSE
9
40A
(8W-10-37)
BATTERY
(8W-20-2)
STARTER
MOTOR
RELAY
C7
C3
C4
EXCEPT BUILT-
UP-EXPORT
BUILT-UP-
EXPORT
Z1
4
BK
T751
20
YL
T141
20
YL/OR
T752
18
DG/OR
T750
12
YL/GY
BUILT-UP-
EXPORT EATX
BUILT-UP-
EXPORT MTX
CLUTCH
PEDAL
INTERLOCK
SWITCH
JUMPER
(8W-10-53)
(8W-10-54)
CLUTCH
PEDAL
INTERLOCK
SWITCH
(8W-10-53)
(8W-10-54)
STARTER
MOTOR
1 PULL-IN
2 HOLD-IN
M
C200
T751
20
YL
G101
(8W-15-2)
IGNITION
SWITCH
(8W-10-53)
(8W-10-54)
C1
ENGINE
STARTER
MOTOR
RELAY
CONTROL
POWERTRAIN
CONTROL
MODULE
(8W-30-4)
EXCEPT BUILT-UP-EXPORT

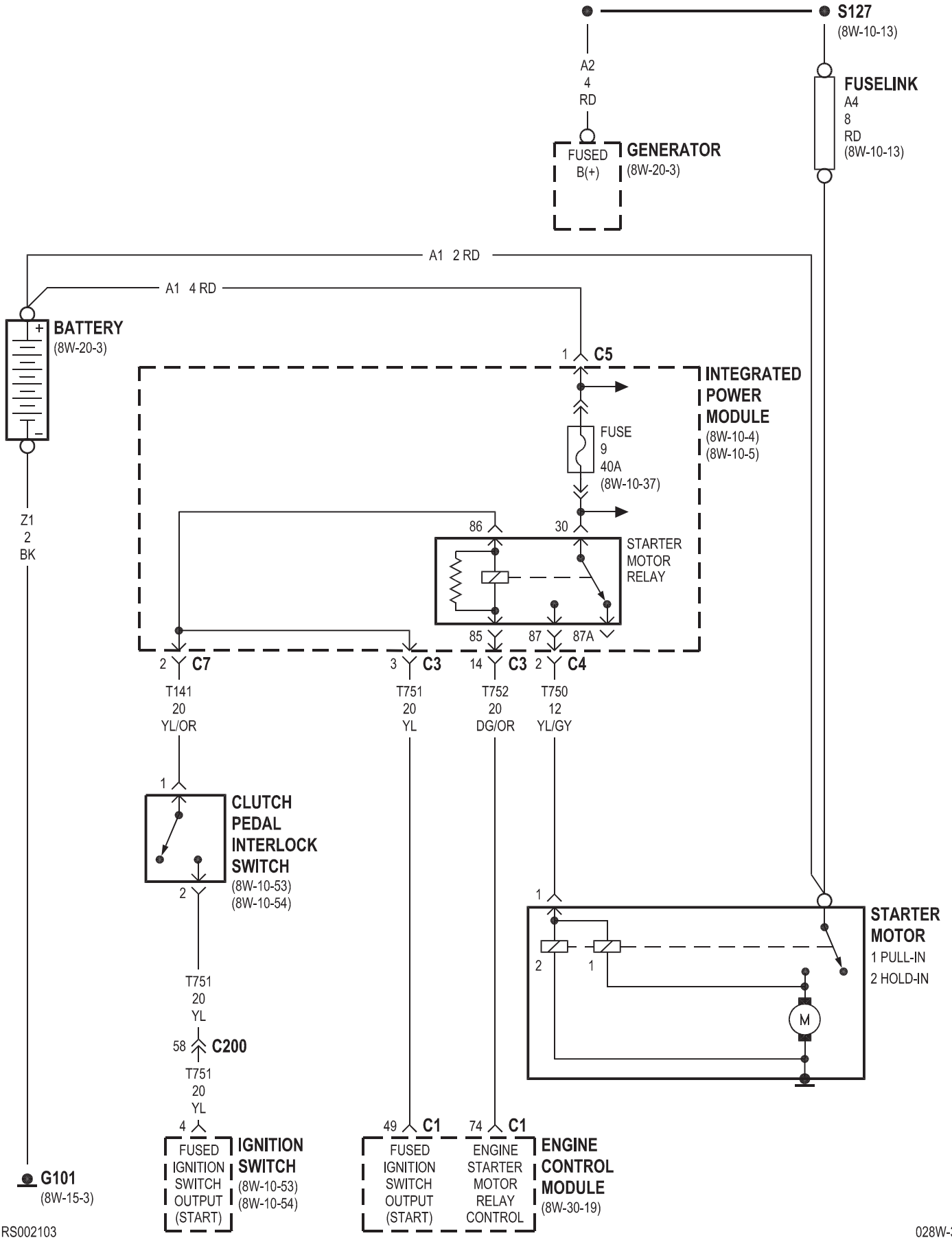
S127
(8W-10-13)
A2
4
RD
FUSELINK
A4
8
RD
(8W-10-13)
FUSED
B(+)
GENERATOR
(8W-20-3)
A1 2 RD
A1 4 RD
BATTERY
(8W-20-3)
1 C5
INTEGRATED
POWER
MODULE
(8W-10-4)
(8W-10-5)
FUSE
9
40A
(8W-10-37)
86
30
STARTER
MOTOR
RELAY
85
87
87A
Z1
2
BK
2 C7
3 C3
14 C3
2 C4
T141
20
YL/OR
T751
20
YL
T752
20
DG/OR
T750
12
YL/GY
1
CLUTCH
PEDAL
INTERLOCK
SWITCH
(8W-10-53)
(8W-10-54)
2
T751
20
YL
58 C200
T751
20
YL
4
1
2
1
STARTER
MOTOR
1 PULL-IN
2 HOLD-IN
M
G101
(8W-15-3)
FUSED
IGNITION
SWITCH
OUTPUT
(START)
IGNITION
SWITCH
(8W-10-53)
(8W-10-54)
49 C1
74 C1
FUSED
IGNITION
SWITCH
OUTPUT
(START)
ENGINE
STARTER
MOTOR
RELAY
CONTROL
ENGINE
CONTROL
MODULE
(8W-30-19)

8W-30 FUEL/IGNITION SYSTEM

Component	Page
A/C Compressor Clutch	8W-30-18
A/C Compressor Clutch Relay	8W-30-3, 18
A/C Pressure Sensor	8W-30-9, 15, 25
Accelerator Pedal Position Sensor	8W-30-32
Adjustable Pedals Module	8W-30-17
Adjustable Pedals Switch	8W-30-17
Auto Shut Down Relay	8W-30-2, 5, 7, 8, 12, 13
Battery	8W-30-2, 18, 26
Battery Temperature Sensor	8W-30-25
Body Control Module	8W-30-4, 19
Boost Pressure Sensor	8W-30-25
Brake Lamp Switch	8W-30-6, 21, 31
Cabin Heater Assist	8W-30-22
Camshaft Position Sensor	8W-30-7, 13, 24
Clockspring	8W-30-3, 23
Clutch Pedal Upstop Switch	8W-30-30
Crank Case Ventilation Heater	8W-30-19
Crankshaft Position Sensor	8W-30-7, 13, 24
Data Link Connector	8W-30-4, 22
Diagnostic Junction Port	8W-30-4, 23, 17
Dosing Pump	8W-30-22
ECM/PCM Relay	8W-30-18, 20, 24, 26, 28
EGR Solenoid	8W-30-5, 28
Engine Control Module	8W-30-18, 19, 20, 21, 22, 23, 24, 25, 26, 27, 28, 29, 30, 31, 32
Engine Coolant Temp Sensor	8W-30-9, 15, 25
Engine Oil Pressure Sensor	8W-30-21
Engine Oil Pressure Switch	8W-30-6
Engine Oil Temperature Sensor	8W-30-24
Evap/Purge Solenoid	8W-30-3
Front Control Module	8W-30-3, 4, 17, 22, 30
Fuel Heater	8W-30-29
Fuel Heater Relay	8W-30-19, 29
Fuel Injector No. 1	8W-30-8, 12, 27
Fuel Injector No. 2	8W-30-8, 12, 27
Fuel Injector No. 3	8W-30-8, 12, 27
Fuel Injector No. 4	8W-30-8, 12, 27
Fuel Injector No. 5	8W-30-12
Fuel Injector No. 6	8W-30-12
Fuel Pressure Sensor	8W-30-31
Fuel Pressure Solenoid	8W-30-20
Fuel Pump Module	8W-30-4, 19
Fuel Pump Relay	8W-30-4
Fuse 14	8W-30-17
Fuse 15	8W-30-22, 29
Fuse 16	8W-30-2, 5, 7, 8, 12, 13, 18, 20, 24, 26, 28
Fuse 17	8W-30-2, 4, 19, 29
Fuse 18	8W-30-18, 17
Fuse 26	8W-30-31
Fuselink	8W-30-26
G100	8W-30-2
G101	8W-30-2, 18
G103	8W-30-5, 6, 18, 19, 22
G300	8W-30-6, 17, 21, 30
G302	8W-30-4, 19, 29
Generator	8W-30-2, 19
Glow Plug No. 1	8W-30-26
Glow Plug No. 2	8W-30-26
Glow Plug No. 3	8W-30-26
Glow Plug No. 4	8W-30-26
Glow Plug Relay	8W-30-26
Idle Air Control Motor	8W-30-11, 14
Ignition Coil	8W-30-7, 13
Ignition Switch	8W-30-16
Inlet Air Temperature Sensor	8W-30-10, 14
Integrated Power Module	8W-30-2, 3, 4, 5, 7, 8, 12, 13, 18, 19, 20, 22, 24, 26, 28, 29, 30, 31
Knock Sensor	8W-30-9, 15
Leak Detection Pump	8W-30-16
Left Speed Control Switch	8W-30-3, 23
Lift Pump Motor	8W-30-29
Lift Pump Relay	8W-30-29
Manifold Absolute Pressure Sensor	8W-30-9, 15
Mass Air Flow Sensor	8W-30-20
Oxygen Sensor 1/1 Upstream	8W-30-5
Oxygen Sensor 1/2 Downstream	8W-30-5
Park/Neutral Position Switch	8W-30-11
Power Mirror Switch	8W-30-17
Powertrain Control Module	8W-30-2, 3, 4, 5, 6, 10, 11, 7, 8, 9, 12, 13, 14, 15, 16
Radiator Fan Relay	8W-30-3
Radiator Fan Relay No. 1	8W-30-31
Radiator Fan Relay No. 2	8W-30-31
Radiator Fan Relay No. 3	8W-30-31
Right Speed Control Switch	8W-30-3, 23
Speed Control Servo	8W-30-6
Starter Motor Relay	8W-30-4, 19
Throttle Position Sensor	8W-30-10, 14
Torque Converter Clutch Solenoid	8W-30-16
Transmission Control Module	8W-30-7, 10, 11, 14
Transmission Range Sensor	8W-30-11, 14
Vehicle Speed Sensor	8W-30-7, 11, 28
Water In Fuel Sensor	8W-30-30

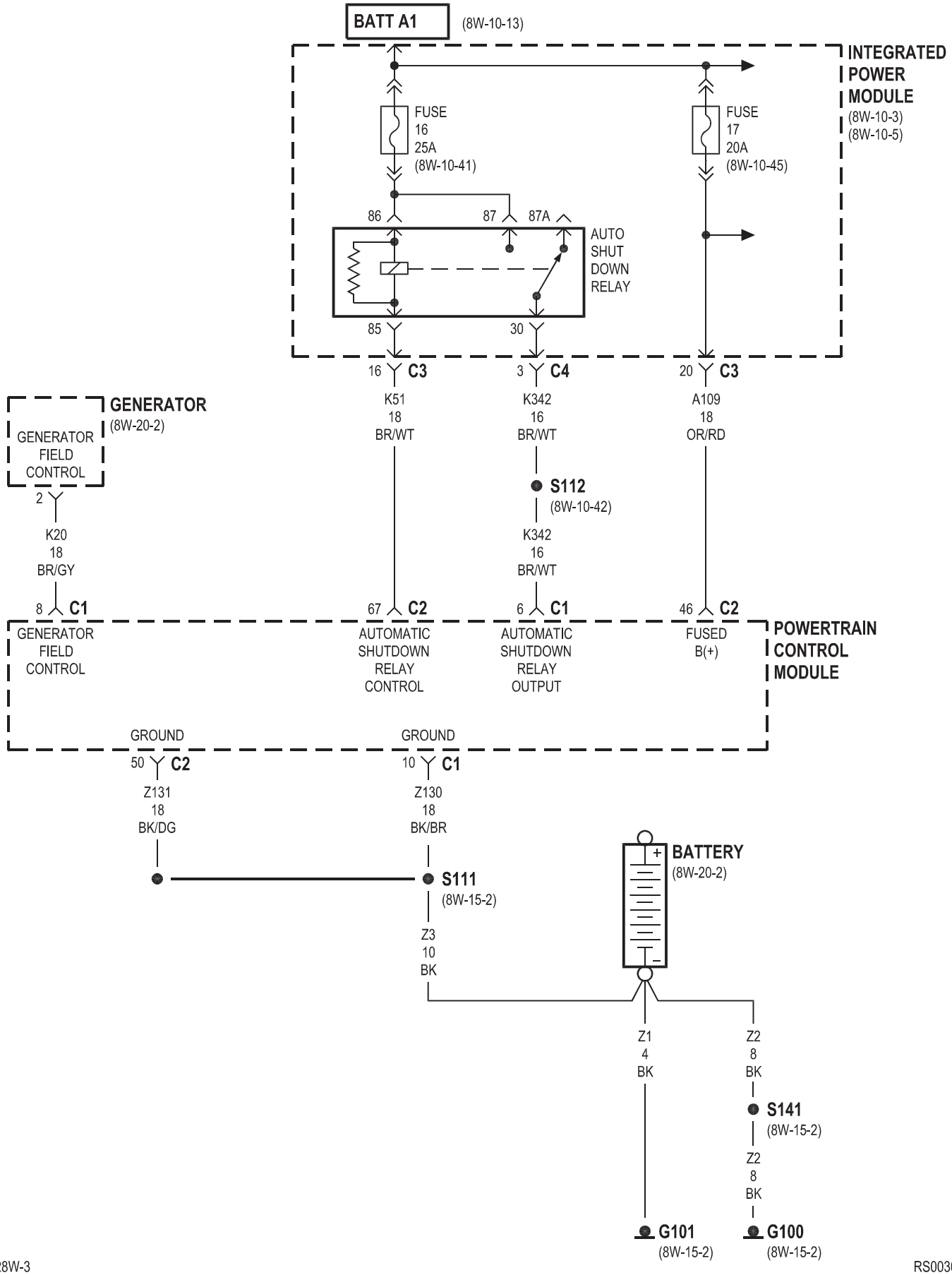
BATT A1
(8W-10-13)
INTEGRATED POWER MODULE
(8W-10-3)
(8W-10-5)
FUSE 16 25A (8W-10-41)
FUSE 17 20A (8W-10-45)
86
87
87A
AUTO SHUT DOWN RELAY
85
30
16 C3
3 C4
20 C3
K51 18 BR/WT
K342 16 BR/WT
A109 18 OR/RD
S112
(8W-10-42)
K342 16 BR/WT
GENERATOR
(8W-20-2)
GENERATOR FIELD CONTROL
2
K20 18 BR/GY
8 C1
67 C2
6 C1
46 C2
GENERATOR FIELD CONTROL
AUTOMATIC SHUTDOWN RELAY CONTROL
AUTOMATIC SHUTDOWN RELAY OUTPUT
FUSED B(+)
POWERTRAIN CONTROL MODULE
GROUND
GROUND
50 C2
10 C1
Z131 18 BK/DG
Z130 18 BK/BR
S111
(8W-15-2)
Z3 10 BK
BATTERY
(8W-20-2)
Z1 4 BK
Z2 8 BK
S141
(8W-15-2)
Z2 8 BK
G101
(8W-15-2)
G100
(8W-15-2)

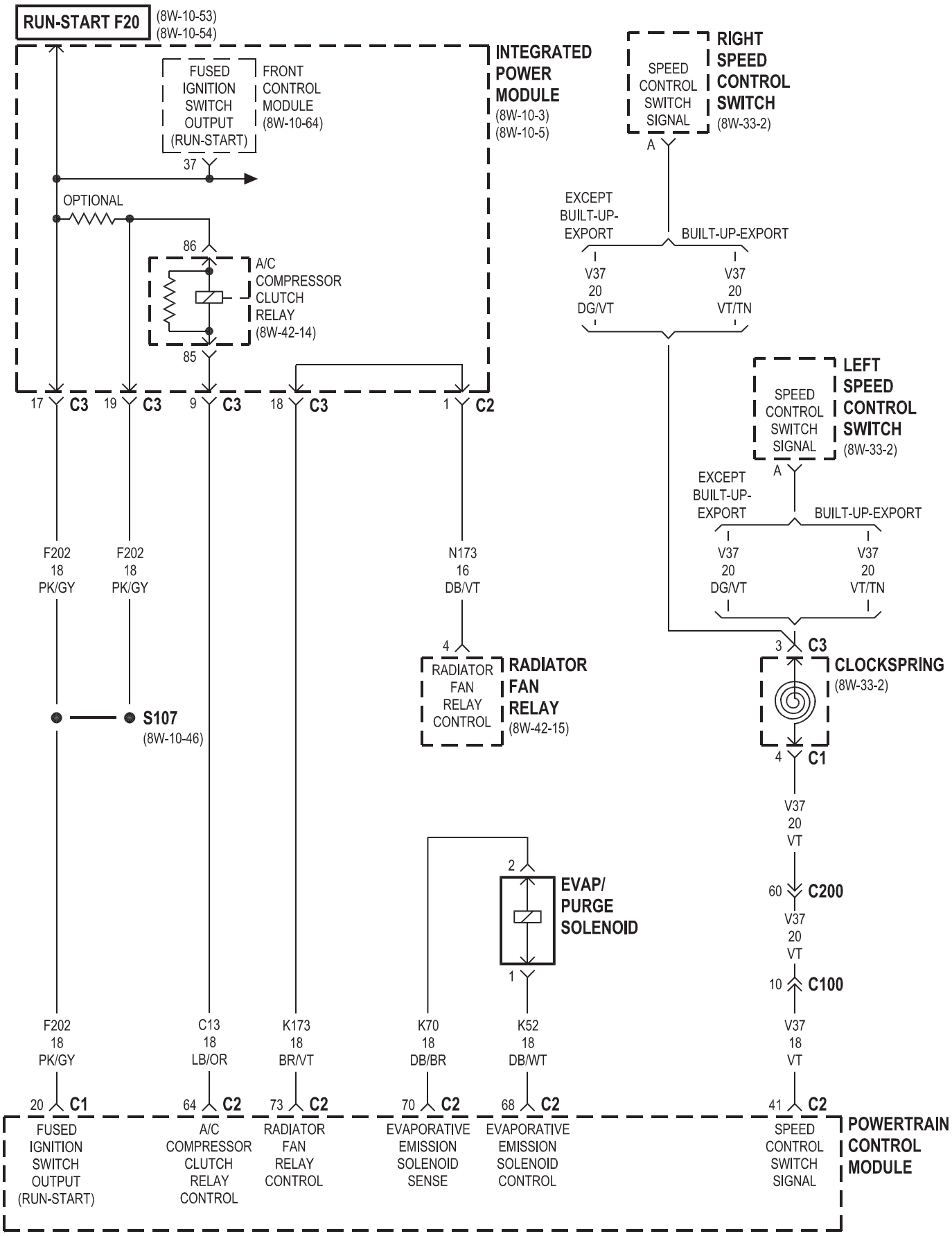
RUN-START F20
(8W-10-53)
(8W-10-54)
INTEGRATED POWER MODULE
(8W-10-3)
(8W-10-5)
FUSED IGNITION SWITCH OUTPUT (RUN-START)
FRONT CONTROL MODULE
(8W-10-64)
37
OPTIONAL
86
A/C COMPRESSOR CLUTCH RELAY
(8W-42-14)
85
17 C3
19 C3
9 C3
18 C3
1 C2
F202 18 PK/GY
F202 18 PK/GY
S107
(8W-10-46)
N173 16 DB/VT
4
RADIATOR FAN RELAY CONTROL
RADIATOR FAN RELAY
(8W-42-15)
SPEED CONTROL SWITCH SIGNAL
RIGHT SPEED CONTROL SWITCH
(8W-33-2)
A
EXCEPT BUILT-UP-EXPORT
BUILT-UP-EXPORT
V37 20 DG/VT
V37 20 VT/TN
SPEED CONTROL SWITCH SIGNAL
LEFT SPEED CONTROL SWITCH
(8W-33-2)
A
EXCEPT BUILT-UP-EXPORT
BUILT-UP-EXPORT
V37 20 DG/VT
V37 20 VT/TN
3 C3
CLOCKSPRING
(8W-33-2)
4 C1
V37 20 VT
60 C200
V37 20 VT
10 C100
V37 18 VT
2
EVAP/ PURGE SOLENOID
1
F202 18 PK/GY
C13 18 LB/OR
K173 18 BR/VT
K70 18 DB/BR
K52 18 DB/WT
20 C1
64 C2
73 C2
70 C2
68 C2
41 C2
FUSED IGNITION SWITCH OUTPUT (RUN-START)
A/C COMPRESSOR CLUTCH RELAY CONTROL
RADIATOR FAN RELAY CONTROL
EVAPORATIVE EMISSION SOLENOID SENSE
EVAPORATIVE EMISSION SOLENOID CONTROL
SPEED CONTROL SWITCH SIGNAL
POWERTRAIN CONTROL MODULE

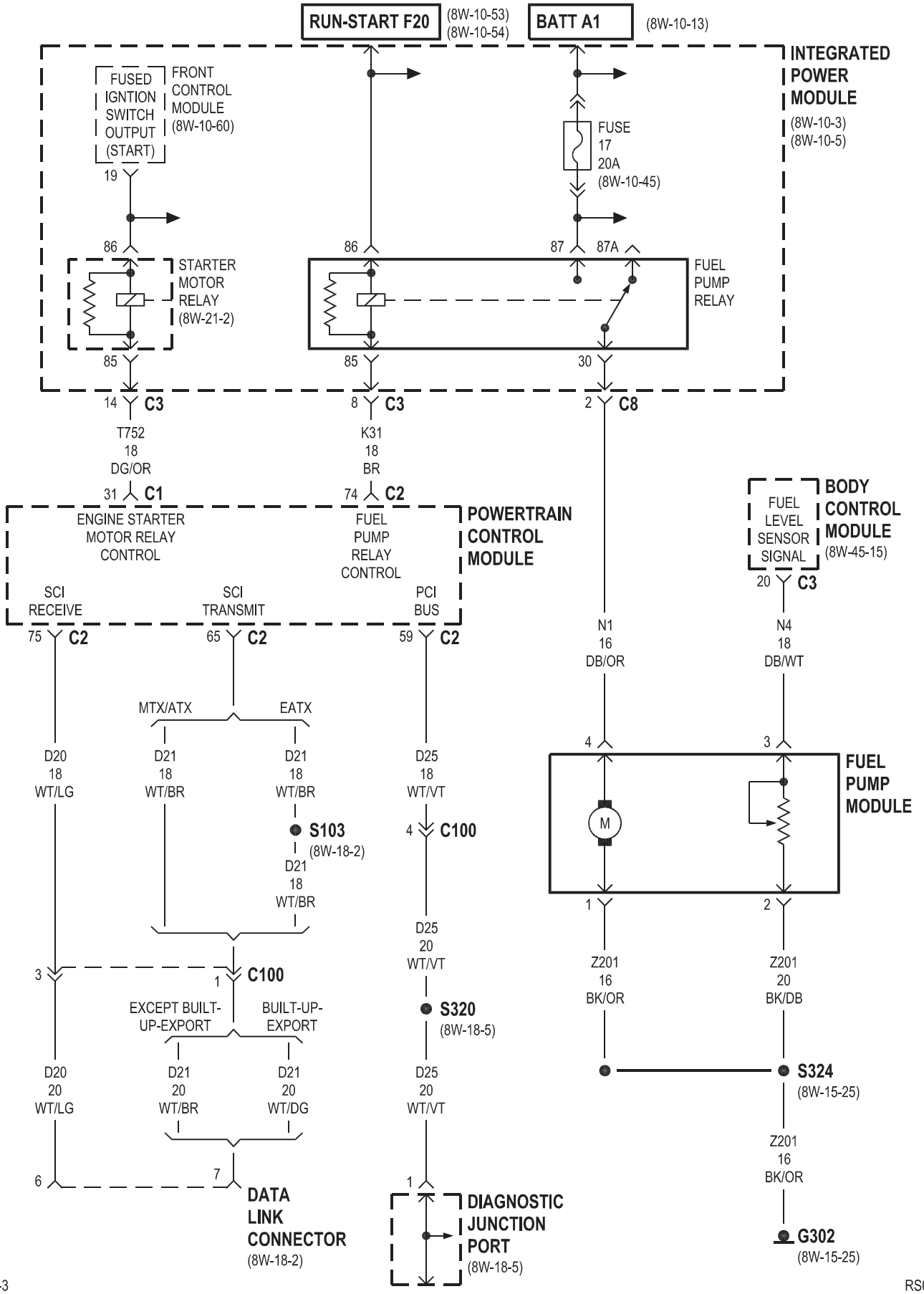
RUN-START F20
(8W-10-53)
(8W-10-54)
BATT A1
(8W-10-13)
INTEGRATED POWER MODULE
(8W-10-3)
(8W-10-5)
FUSED IGNTION SWITCH OUTPUT (START)
FRONT CONTROL MODULE
(8W-10-60)
19
FUSE 17 20A
(8W-10-45)
86
87
87A
STARTER MOTOR RELAY
(8W-21-2)
FUEL PUMP RELAY
85
30
14 C3
8 C3
2 C8
T752 18 DG/OR
K31 18 BR
31 C1
74 C2
POWERTRAIN CONTROL MODULE
ENGINE STARTER MOTOR RELAY CONTROL
FUEL PUMP RELAY CONTROL
SCI RECEIVE
SCI TRANSMIT
PCI BUS
75 C2
65 C2
59 C2
BODY CONTROL MODULE
(8W-45-15)
FUEL LEVEL SENSOR SIGNAL
20 C3
N1 16 DB/OR
N4 18 DB/WT
MTX/ATX
EATX
D20 18 WT/LG
D21 18 WT/BR
D21 18 WT/BR
D25 18 WT/VT
S103
(8W-18-2)
D21 18 WT/BR
4 C100
4
3
FUEL PUMP MODULE
M
1
2
3 C100
1 C100
D25 20 WT/VT
Z201 16 BK/OR
Z201 20 BK/DB
EXCEPT BUILT-UP-EXPORT
BUILT-UP-EXPORT
S320
(8W-18-5)
S324
(8W-15-25)
D20 20 WT/LG
D21 20 WT/BR
D21 20 WT/DG
D25 20 WT/VT
Z201 16 BK/OR
6
7
1
DATA LINK CONNECTOR
(8W-18-2)
DIAGNOSTIC JUNCTION PORT
(8W-18-5)
G302
(8W-15-25)

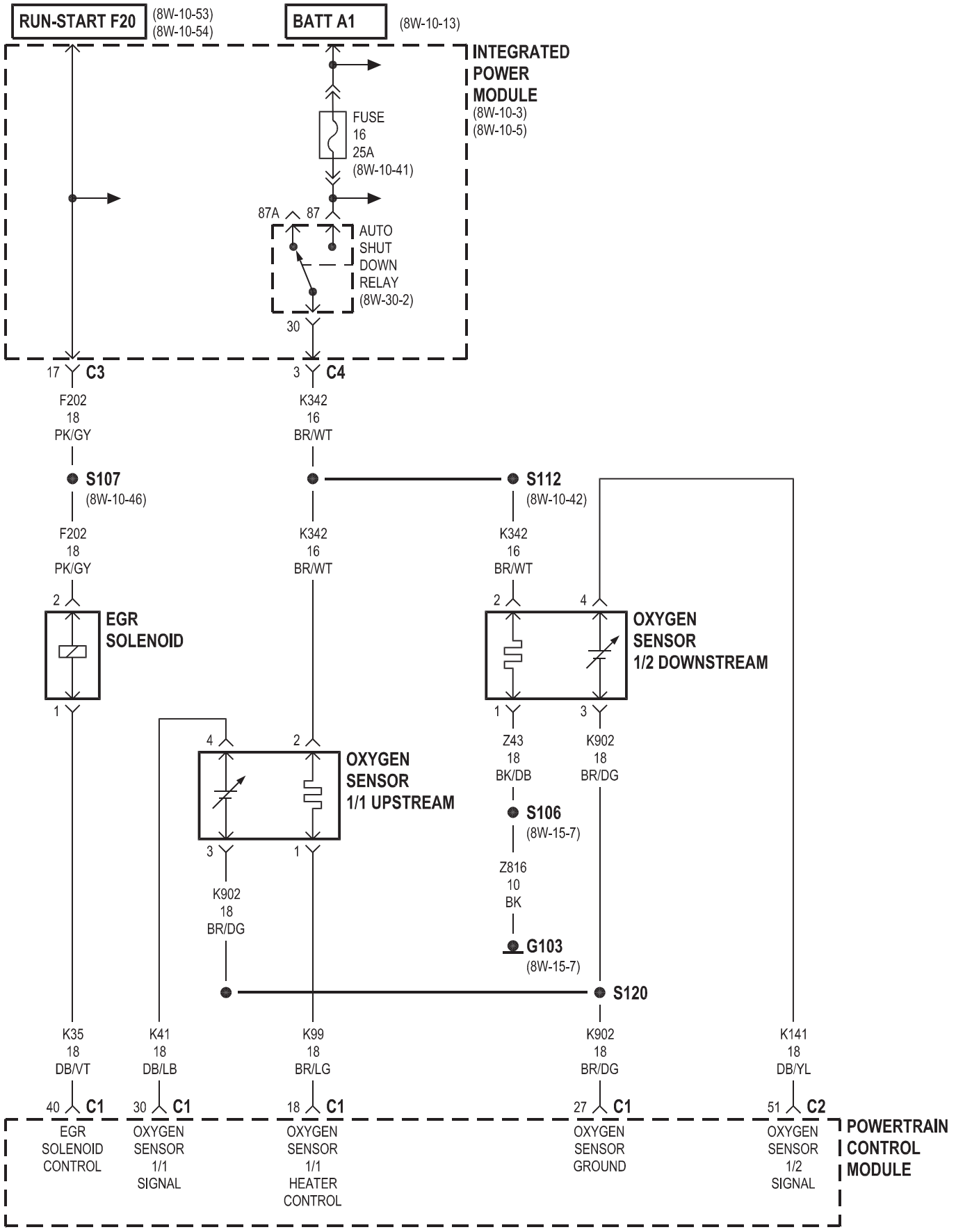
RUN-START F20
(8W-10-53)
(8W-10-54)
BATT A1
(8W-10-13)
INTEGRATED POWER MODULE
(8W-10-3)
(8W-10-5)
FUSE 16 25A
(8W-10-41)
87A
87
AUTO SHUT DOWN RELAY
(8W-30-2)
30
17 C3
3 C4
F202 18 PK/GY
K342 16 BR/WT
S107
(8W-10-46)
S112
(8W-10-42)
F202 18 PK/GY
K342 16 BR/WT
K342 16 BR/WT
2
EGR SOLENOID
1
2
4
OXYGEN SENSOR 1/2 DOWNSTREAM
1
3
Z43 18 BK/DB
K902 18 BR/DG
S106
(8W-15-7)
Z816 10 BK
G103
(8W-15-7)
4
2
OXYGEN SENSOR 1/1 UPSTREAM
3
1
K902 18 BR/DG
S120
K35 18 DB/VT
K41 18 DB/LB
K99 18 BR/LG
K902 18 BR/DG
K141 18 DB/YL
40 C1
30 C1
18 C1
27 C1
51 C2
EGR SOLENOID CONTROL
OXYGEN SENSOR 1/1 SIGNAL
OXYGEN SENSOR 1/1 HEATER CONTROL
OXYGEN SENSOR GROUND
OXYGEN SENSOR 1/2 SIGNAL
POWERTRAIN CONTROL MODULE

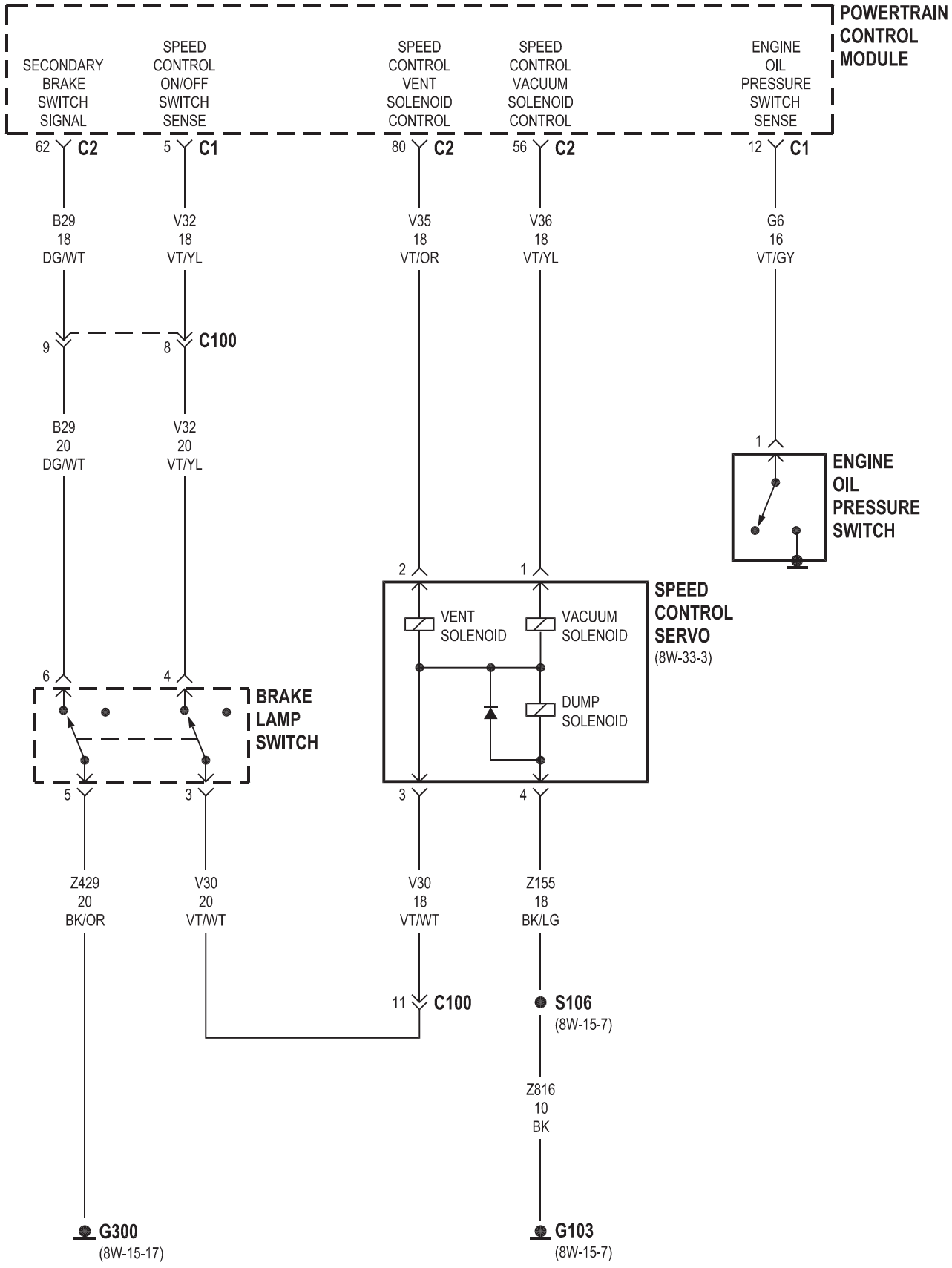
POWERTRAIN CONTROL MODULE
SECONDARY BRAKE SWITCH SIGNAL
SPEED CONTROL ON/OFF SWITCH SENSE
SPEED CONTROL VENT SOLENOID CONTROL
SPEED CONTROL VACUUM SOLENOID CONTROL
ENGINE OIL PRESSURE SWITCH SENSE
62 C2
5 C1
80 C2
56 C2
12 C1
B29 18 DG/WT
V32 18 VT/YL
V35 18 VT/OR
V36 18 VT/YL
G6 16 VT/GY
9
8 C100
B29 20 DG/WT
V32 20 VT/YL
1
ENGINE OIL PRESSURE SWITCH
2
1
SPEED CONTROL SERVO (8W-33-3)
VENT SOLENOID
VACUUM SOLENOID
DUMP SOLENOID
6
4
BRAKE LAMP SWITCH
5
3
3
4
Z429 20 BK/OR
V30 20 VT/WT
V30 18 VT/WT
Z155 18 BK/LG
11 C100
S106 (8W-15-7)
Z816 10 BK
G300 (8W-15-17)
G103 (8W-15-7)

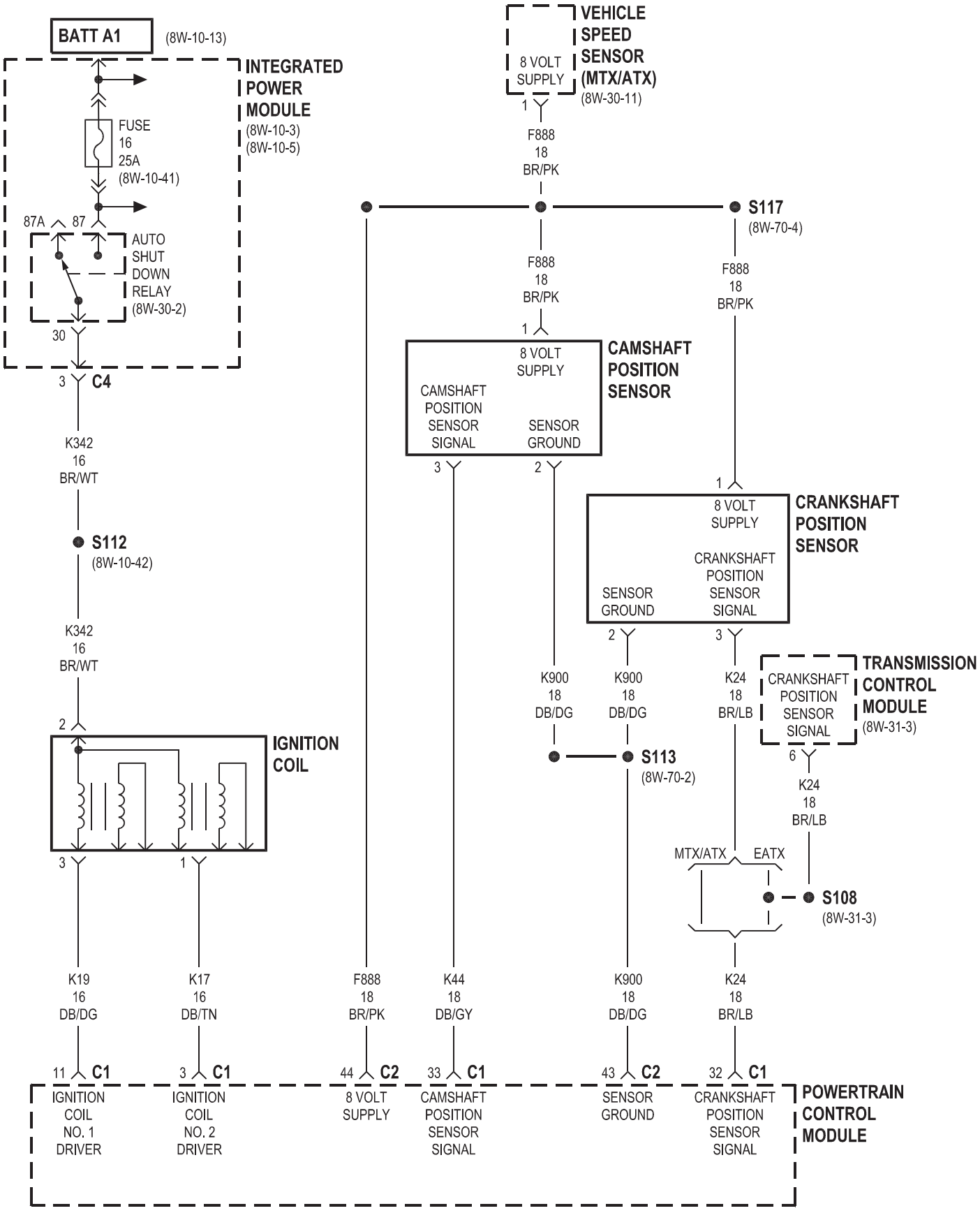
BATT A1
(8W-10-13)
INTEGRATED POWER MODULE
(8W-10-3)
(8W-10-5)
FUSE 16 25A
(8W-10-41)
87A
87
AUTO SHUT DOWN RELAY
(8W-30-2)
30
3
C4
K342 16 BR/WT
S112
(8W-10-42)
K342 16 BR/WT
2
IGNITION COIL
3
1
K19 16 DB/DG
K17 16 DB/TN
11
C1
3
C1
IGNITION COIL NO. 1 DRIVER
IGNITION COIL NO. 2 DRIVER
VEHICLE SPEED SENSOR (MTX/ATX)
(8W-30-11)
8 VOLT SUPPLY
1
F888 18 BR/PK
S117
(8W-70-4)
F888 18 BR/PK
F888 18 BR/PK
1
CAMSHAFT POSITION SENSOR
8 VOLT SUPPLY
CAMSHAFT POSITION SENSOR SIGNAL
SENSOR GROUND
3
2
F888 18 BR/PK
K44 18 DB/GY
44
C2
33
C1
8 VOLT SUPPLY
CAMSHAFT POSITION SENSOR SIGNAL
1
CRANKSHAFT POSITION SENSOR
8 VOLT SUPPLY
CRANKSHAFT POSITION SENSOR SIGNAL
SENSOR GROUND
2
3
K900 18 DB/DG
K900 18 DB/DG
S113
(8W-70-2)
K900 18 DB/DG
43
C2
SENSOR GROUND
K24 18 BR/LB
TRANSMISSION CONTROL MODULE
(8W-31-3)
CRANKSHAFT POSITION SENSOR SIGNAL
6
K24 18 BR/LB
MTX/ATX
EATX
S108
(8W-31-3)
K24 18 BR/LB
32
C1
CRANKSHAFT POSITION SENSOR SIGNAL
POWERTRAIN CONTROL MODULE

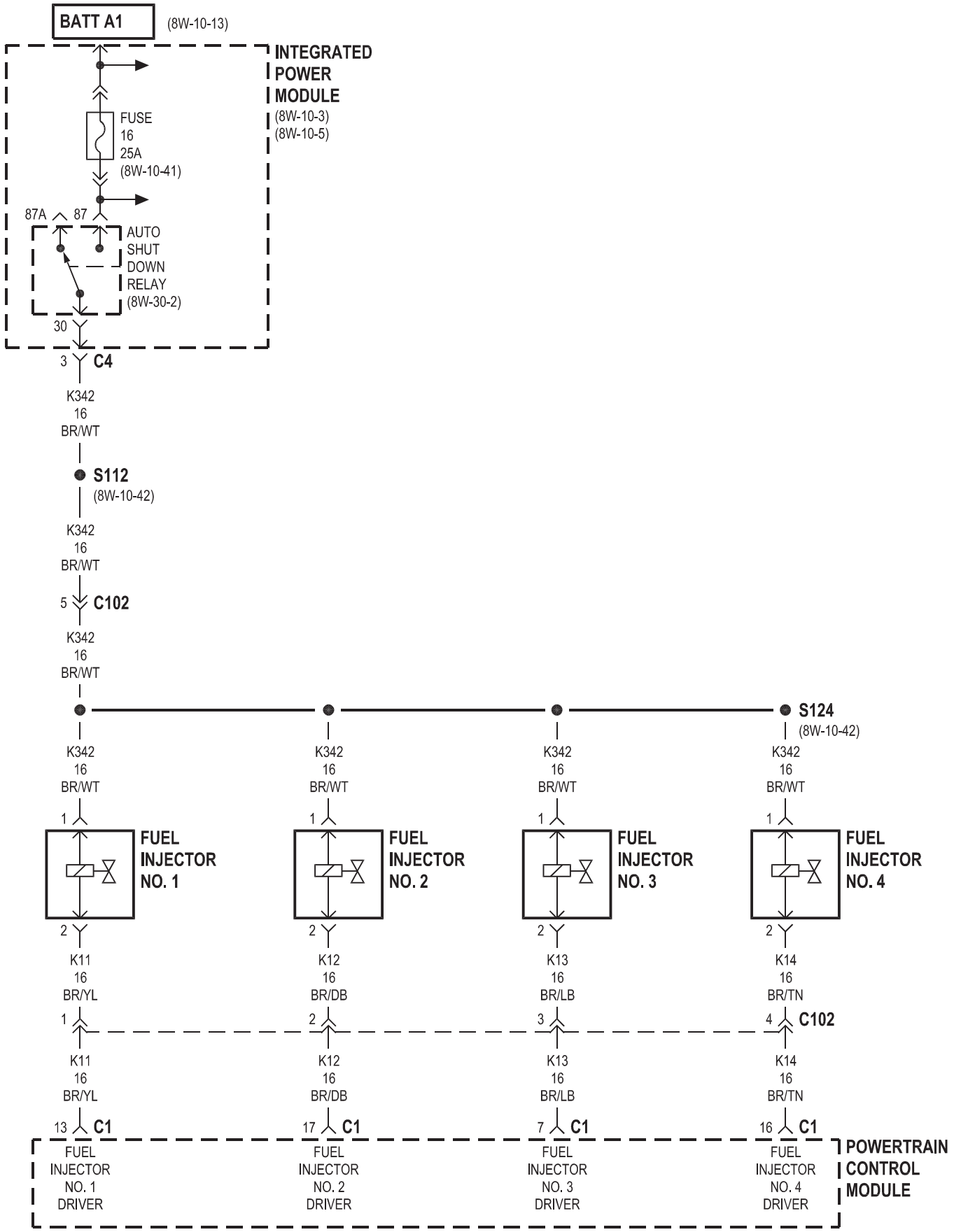
BATT A1
(8W-10-13)
INTEGRATED POWER MODULE
(8W-10-3)
(8W-10-5)
FUSE 16 25A
(8W-10-41)
87A
87
AUTO SHUT DOWN RELAY
(8W-30-2)
30
3
C4
K342 16 BR/WT
S112
(8W-10-42)
K342 16 BR/WT
5
C102
K342 16 BR/WT
S124
(8W-10-42)
K342 16 BR/WT
1
FUEL INJECTOR NO. 1
2
K11 16 BR/YL
K342 16 BR/WT
1
FUEL INJECTOR NO. 2
2
K12 16 BR/DB
K342 16 BR/WT
1
FUEL INJECTOR NO. 3
2
K13 16 BR/LB
K342 16 BR/WT
1
FUEL INJECTOR NO. 4
2
K14 16 BR/TN
1
K11 16 BR/YL
2
K12 16 BR/DB
3
K13 16 BR/LB
4
C102
K14 16 BR/TN
13
C1
17
C1
7
C1
16
C1
FUEL INJECTOR NO. 1 DRIVER
FUEL INJECTOR NO. 2 DRIVER
FUEL INJECTOR NO. 3 DRIVER
FUEL INJECTOR NO. 4 DRIVER
POWERTRAIN CONTROL MODULE

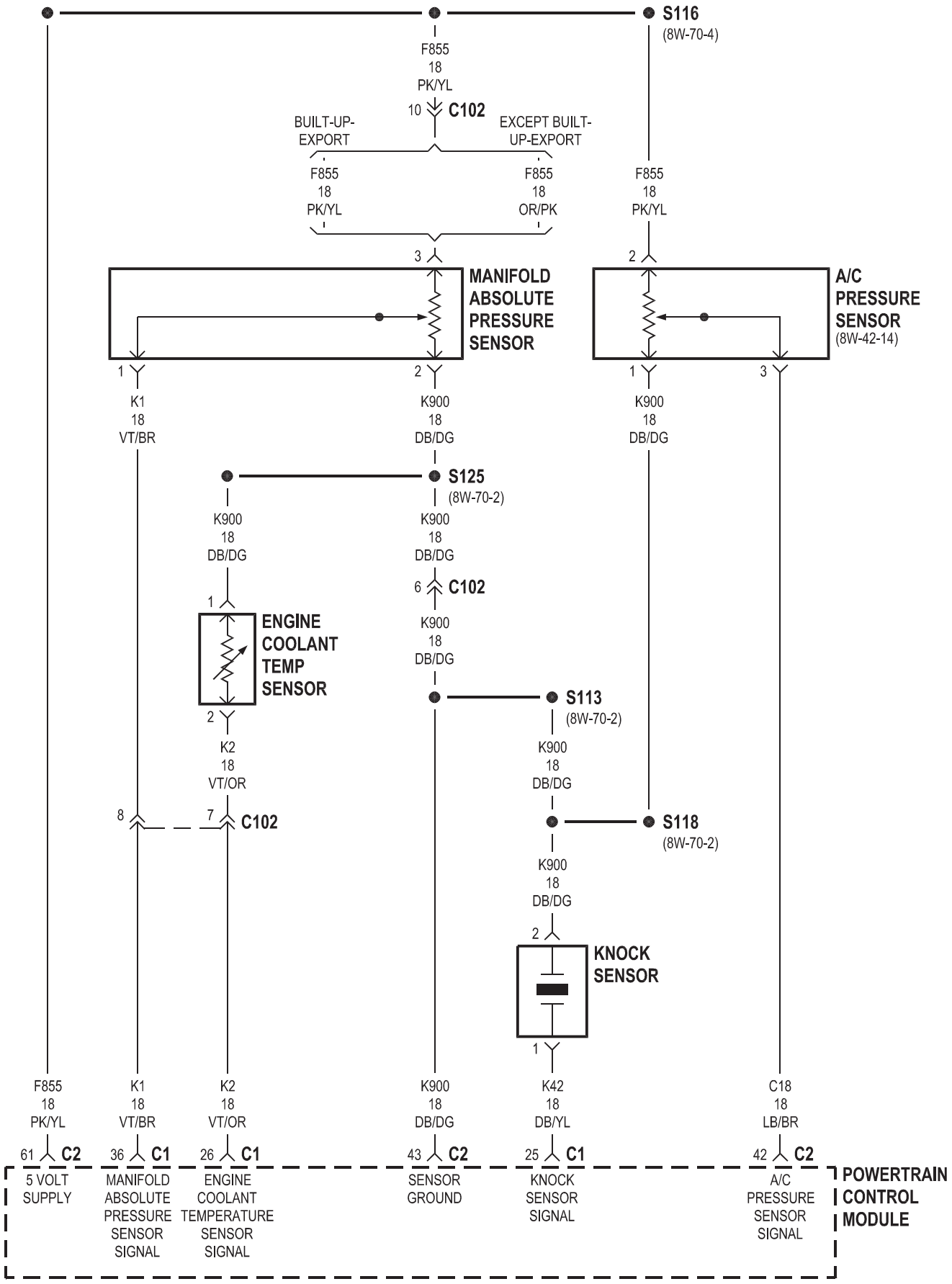
S116
(8W-70-4)
F855
18
PK/YL
10
C102
BUILT-UP-EXPORT
EXCEPT BUILT-UP-EXPORT
F855
18
PK/YL
F855
18
OR/PK
F855
18
PK/YL
3
2
MANIFOLD ABSOLUTE PRESSURE SENSOR
A/C PRESSURE SENSOR
(8W-42-14)
1
2
1
3
K1
18
VT/BR
K900
18
DB/DG
K900
18
DB/DG
S125
(8W-70-2)
K900
18
DB/DG
K900
18
DB/DG
1
6
C102
ENGINE COOLANT TEMP SENSOR
K900
18
DB/DG
S113
(8W-70-2)
2
K2
18
VT/OR
K900
18
DB/DG
8
7
C102
S118
(8W-70-2)
K900
18
DB/DG
2
KNOCK SENSOR
1
F855
18
PK/YL
K1
18
VT/BR
K2
18
VT/OR
K900
18
DB/DG
K42
18
DB/YL
C18
18
LB/BR
61
C2
36
C1
26
C1
43
C2
25
C1
42
C2
5 VOLT SUPPLY
MANIFOLD ABSOLUTE PRESSURE SENSOR SIGNAL
ENGINE COOLANT TEMPERATURE SENSOR SIGNAL
SENSOR GROUND
KNOCK SENSOR SIGNAL
A/C PRESSURE SENSOR SIGNAL
POWERTRAIN CONTROL MODULE

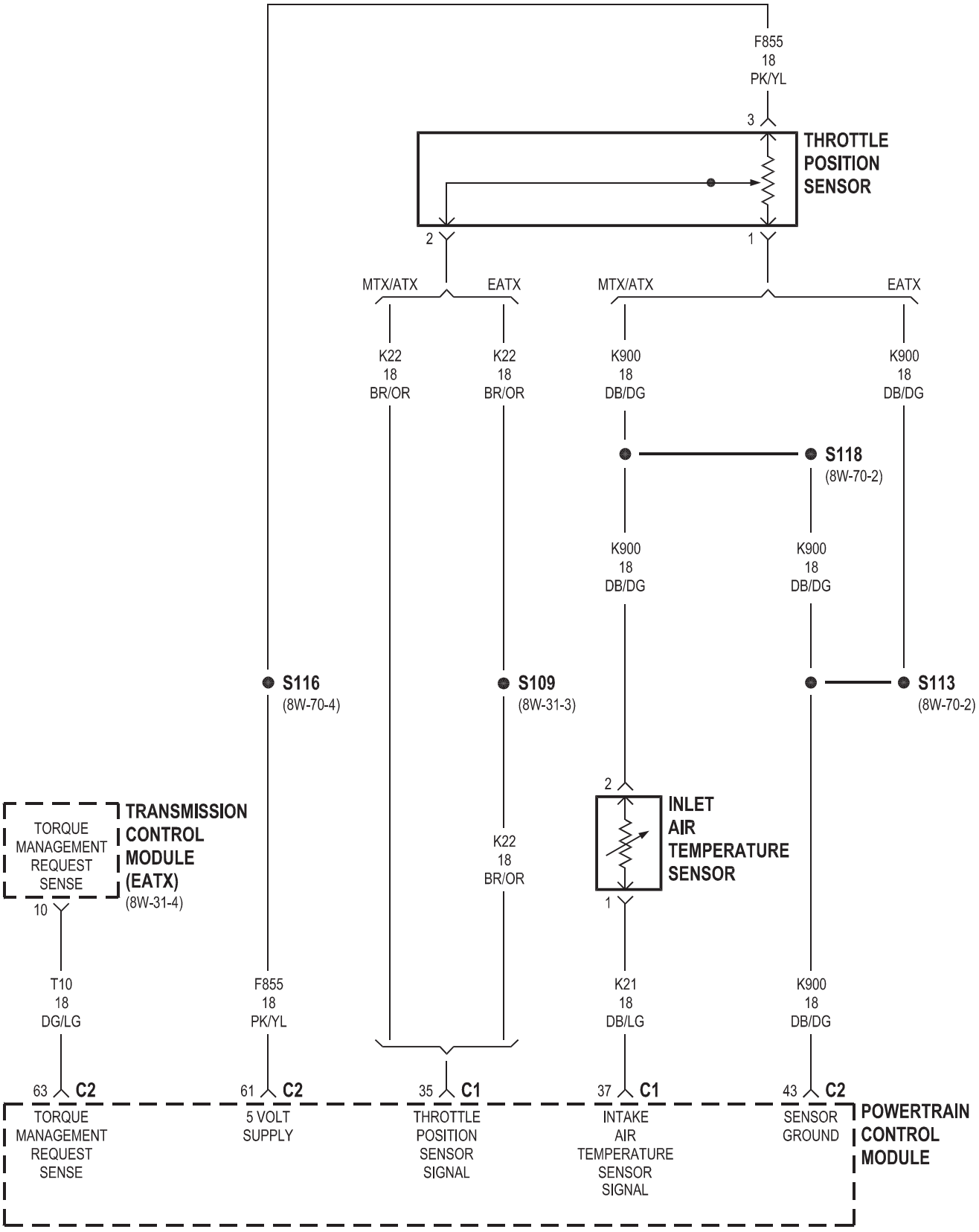
F855
18
PK/YL
3
THROTTLE
POSITION
SENSOR
2
1
MTX/ATX
EATX
MTX/ATX
EATX
K22
18
BR/OR
K22
18
BR/OR
K900
18
DB/DG
K900
18
DB/DG
S118
(8W-70-2)
K900
18
DB/DG
K900
18
DB/DG
S116
(8W-70-4)
S109
(8W-31-3)
S113
(8W-70-2)
2
INLET
AIR
TEMPERATURE
SENSOR
1
TORQUE
MANAGEMENT
REQUEST
SENSE
TRANSMISSION
CONTROL
MODULE
(EATX)
(8W-31-4)
10
K22
18
BR/OR
T10
18
DG/LG
F855
18
PK/YL
K21
18
DB/LG
K900
18
DB/DG
63 C2
61 C2
35 C1
37 C1
43 C2
TORQUE
MANAGEMENT
REQUEST
SENSE
5 VOLT
SUPPLY
THROTTLE
POSITION
SENSOR
SIGNAL
INTAKE
AIR
TEMPERATURE
SENSOR
SIGNAL
SENSOR
GROUND
POWERTRAIN
CONTROL
MODULE

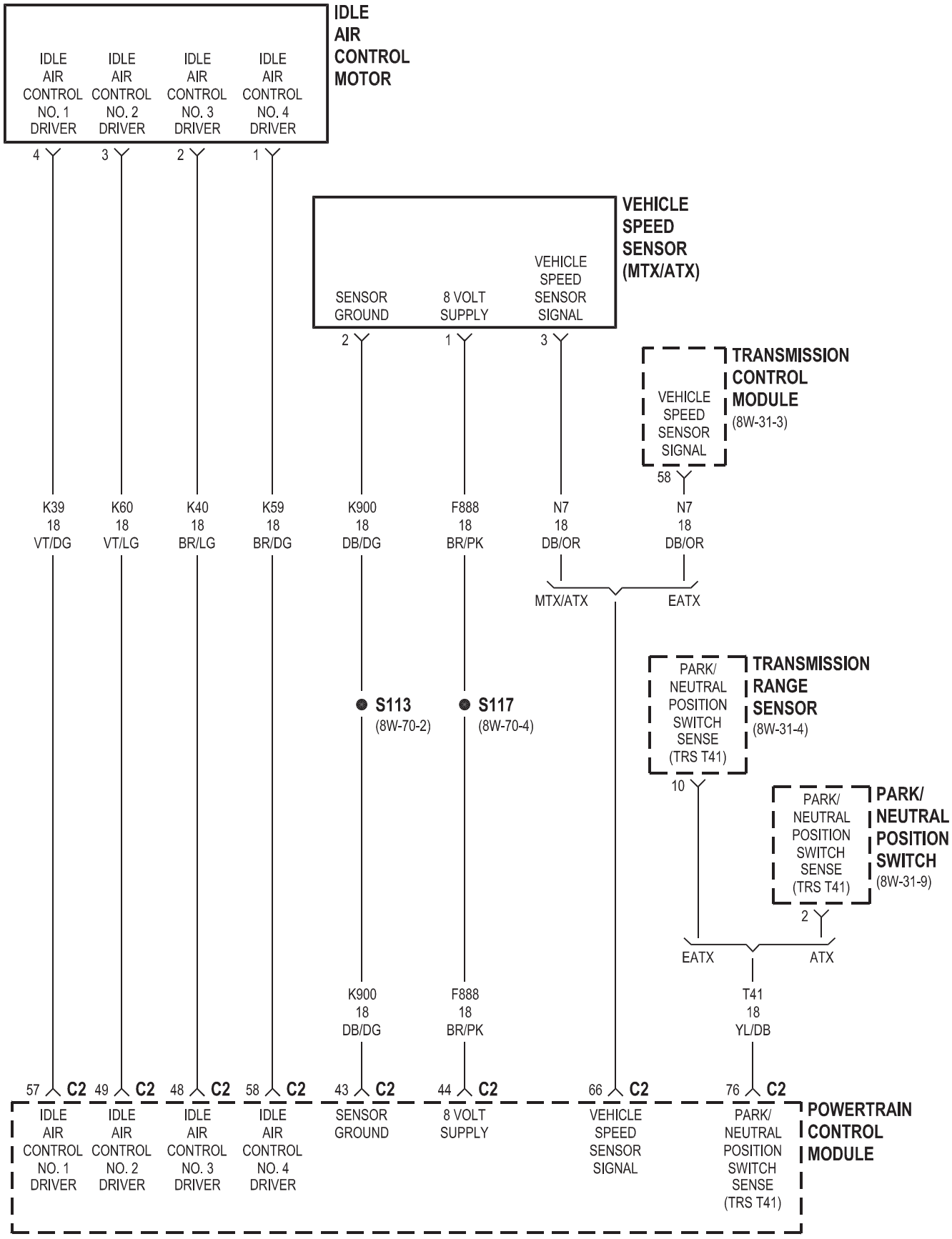
IDLE AIR CONTROL MOTOR
IDLE AIR CONTROL NO. 1 DRIVER
IDLE AIR CONTROL NO. 2 DRIVER
IDLE AIR CONTROL NO. 3 DRIVER
IDLE AIR CONTROL NO. 4 DRIVER
4
3
2
1
VEHICLE SPEED SENSOR (MTX/ATX)
SENSOR GROUND
8 VOLT SUPPLY
VEHICLE SPEED SENSOR SIGNAL
2
1
3
TRANSMISSION CONTROL MODULE
(8W-31-3)
VEHICLE SPEED SENSOR SIGNAL
58
K39 18 VT/DG
K60 18 VT/LG
K40 18 BR/LG
K59 18 BR/DG
K900 18 DB/DG
F888 18 BR/PK
N7 18 DB/OR
N7 18 DB/OR
MTX/ATX
EATX
S113
(8W-70-2)
S117
(8W-70-4)
TRANSMISSION RANGE SENSOR
(8W-31-4)
PARK/ NEUTRAL POSITION SWITCH SENSE (TRS T41)
10
PARK/ NEUTRAL POSITION SWITCH
(8W-31-9)
PARK/ NEUTRAL POSITION SWITCH SENSE (TRS T41)
2
EATX
ATX
K900 18 DB/DG
F888 18 BR/PK
T41 18 YL/DB
57 C2
49 C2
48 C2
58 C2
43 C2
44 C2
66 C2
76 C2
IDLE AIR CONTROL NO. 1 DRIVER
IDLE AIR CONTROL NO. 2 DRIVER
IDLE AIR CONTROL NO. 3 DRIVER
IDLE AIR CONTROL NO. 4 DRIVER
SENSOR GROUND
8 VOLT SUPPLY
VEHICLE SPEED SENSOR SIGNAL
PARK/ NEUTRAL POSITION SWITCH SENSE (TRS T41)
POWERTRAIN CONTROL MODULE

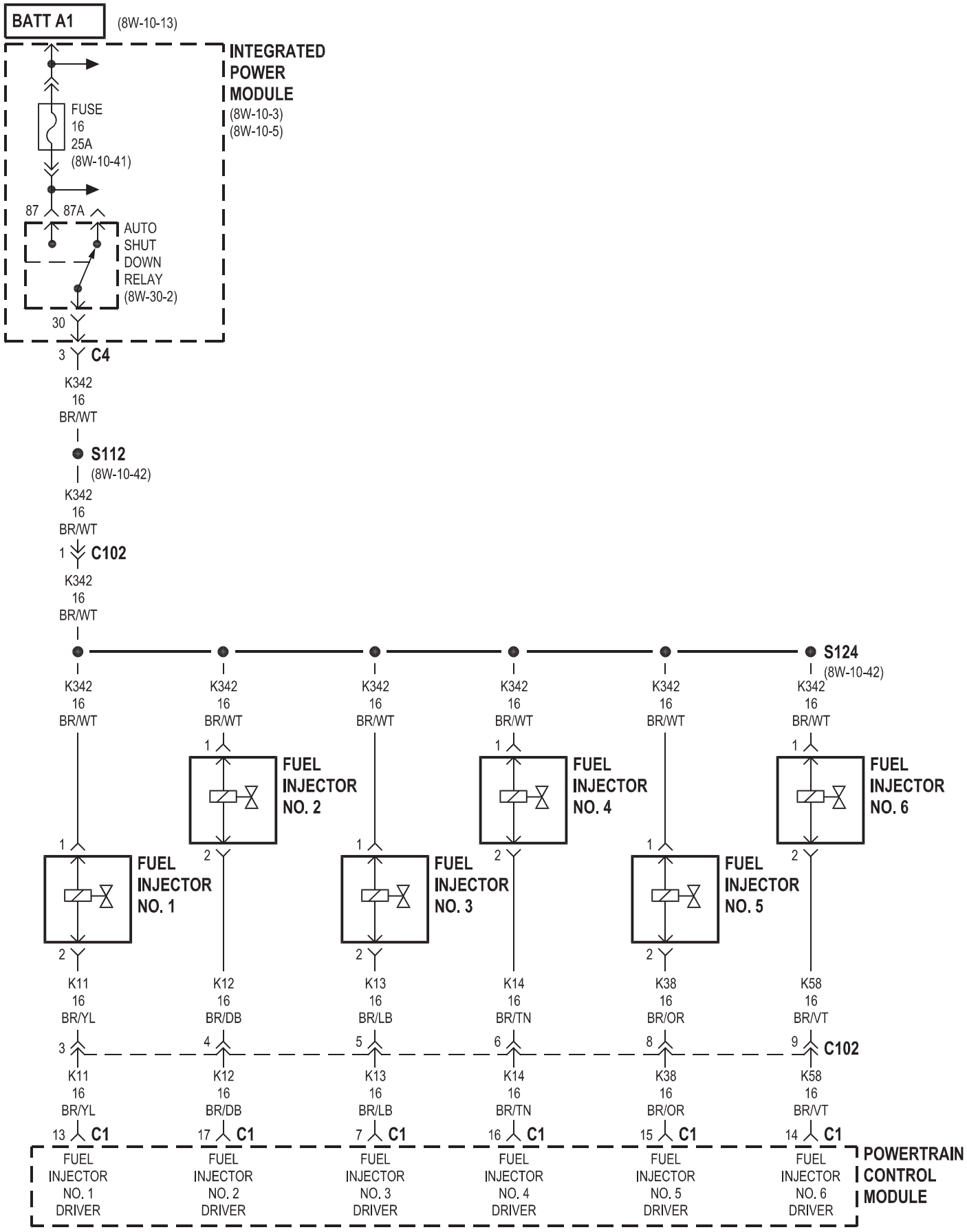
BATT A1
(8W-10-13)
INTEGRATED POWER MODULE
(8W-10-3)
(8W-10-5)
FUSE 16 25A
(8W-10-41)
87
87A
AUTO SHUT DOWN RELAY
(8W-30-2)
30
3
C4
K342 16 BR/WT
S112
(8W-10-42)
K342 16 BR/WT
1
C102
K342 16 BR/WT
S124
(8W-10-42)
FUEL INJECTOR NO. 1
FUEL INJECTOR NO. 2
FUEL INJECTOR NO. 3
FUEL INJECTOR NO. 4
FUEL INJECTOR NO. 5
FUEL INJECTOR NO. 6
K11 16 BR/YL
K12 16 BR/DB
K13 16 BR/LB
K14 16 BR/TN
K38 16 BR/OR
K58 16 BR/VT
C102
13 C1
17 C1
7 C1
16 C1
15 C1
14 C1
FUEL INJECTOR NO. 1 DRIVER
FUEL INJECTOR NO. 2 DRIVER
FUEL INJECTOR NO. 3 DRIVER
FUEL INJECTOR NO. 4 DRIVER
FUEL INJECTOR NO. 5 DRIVER
FUEL INJECTOR NO. 6 DRIVER
POWERTRAIN CONTROL MODULE

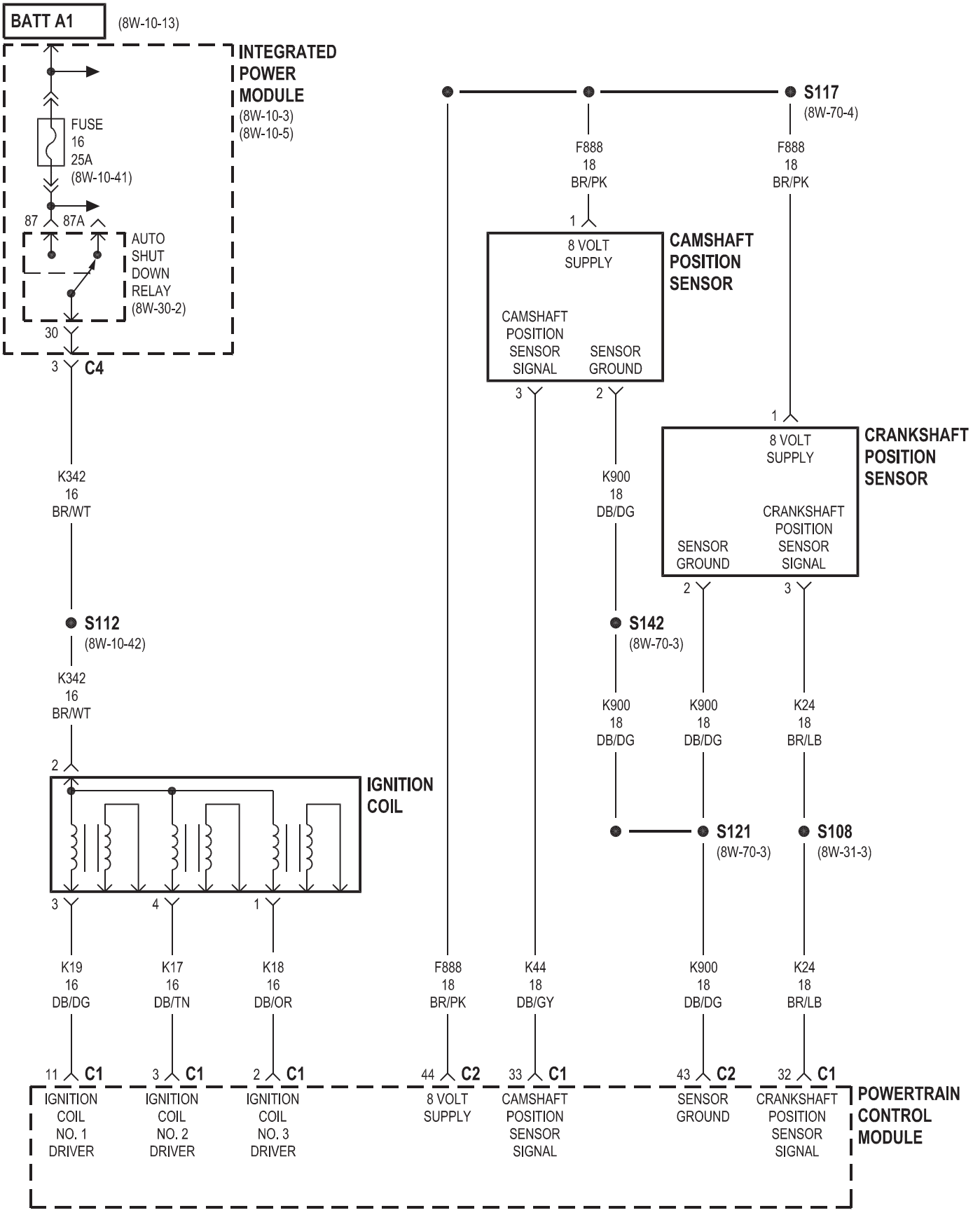
BATT A1
(8W-10-13)
INTEGRATED POWER MODULE
(8W-10-3)
(8W-10-5)
FUSE 16 25A
(8W-10-41)
87
87A
AUTO SHUT DOWN RELAY
(8W-30-2)
30
3
C4
K342 16 BR/WT
S112
(8W-10-42)
K342 16 BR/WT
2
IGNITION COIL
3
4
1
K19 16 DB/DG
K17 16 DB/TN
K18 16 DB/OR
11
C1
3
C1
2
C1
IGNITION COIL NO. 1 DRIVER
IGNITION COIL NO. 2 DRIVER
IGNITION COIL NO. 3 DRIVER
F888 18 BR/PK
S117
(8W-70-4)
F888 18 BR/PK
1
8 VOLT SUPPLY
CAMSHAFT POSITION SENSOR
CAMSHAFT POSITION SENSOR SIGNAL
SENSOR GROUND
3
2
K900 18 DB/DG
S142
(8W-70-3)
K900 18 DB/DG
F888 18 BR/PK
44
C2
8 VOLT SUPPLY
K44 18 DB/GY
33
C1
CAMSHAFT POSITION SENSOR SIGNAL
1
8 VOLT SUPPLY
CRANKSHAFT POSITION SENSOR
SENSOR GROUND
CRANKSHAFT POSITION SENSOR SIGNAL
2
3
K900 18 DB/DG
S121
(8W-70-3)
K900 18 DB/DG
43
C2
SENSOR GROUND
K24 18 BR/LB
S108
(8W-31-3)
K24 18 BR/LB
32
C1
CRANKSHAFT POSITION SENSOR SIGNAL
POWERTRAIN CONTROL MODULE

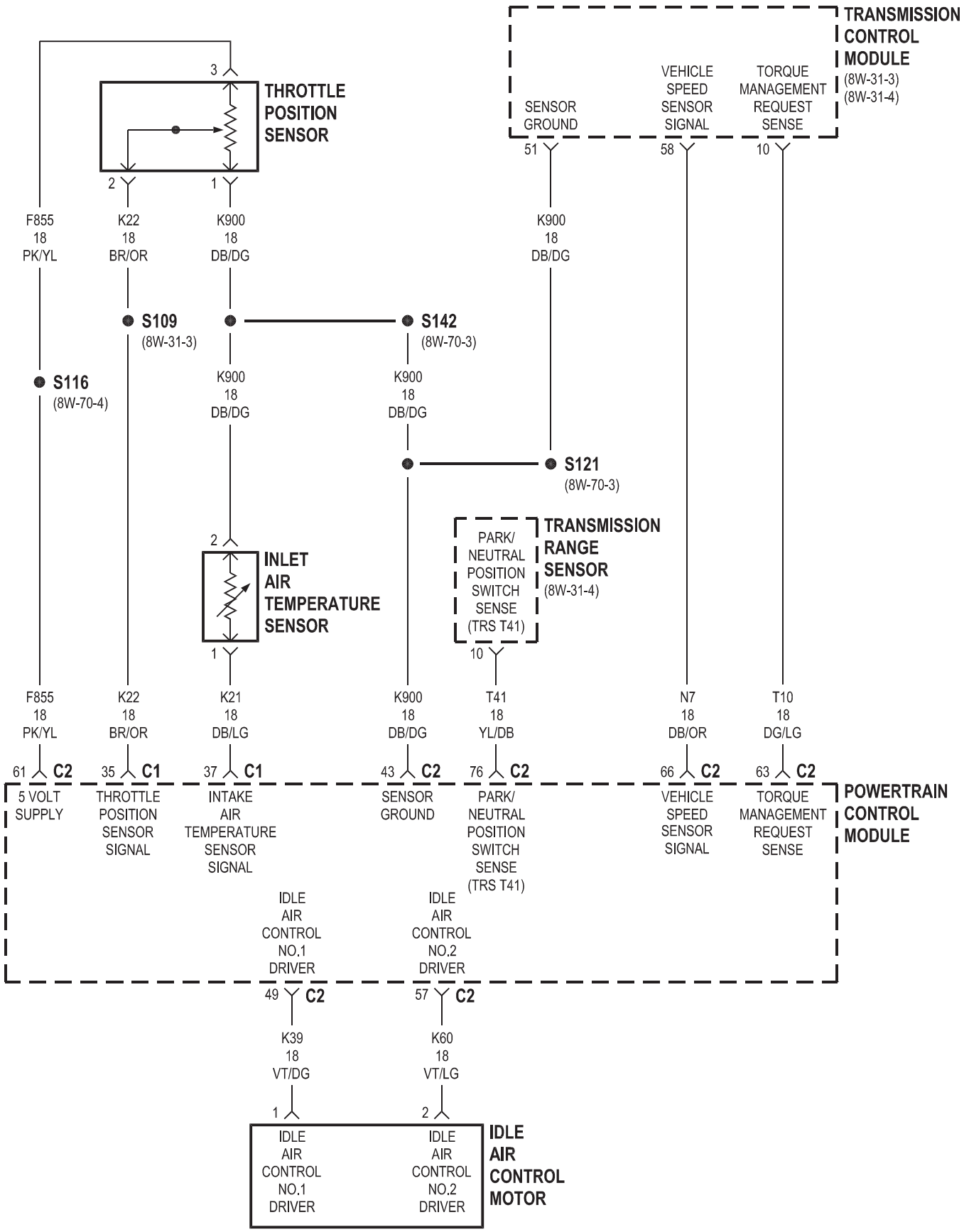
TRANSMISSION CONTROL MODULE
(8W-31-3)
(8W-31-4)
SENSOR GROUND
VEHICLE SPEED SENSOR SIGNAL
TORQUE MANAGEMENT REQUEST SENSE
51
58
10
THROTTLE POSITION SENSOR
3
2
1
F855 18 PK/YL
K22 18 BR/OR
K900 18 DB/DG
K900 18 DB/DG
S109
(8W-31-3)
S142
(8W-70-3)
S116
(8W-70-4)
K900 18 DB/DG
K900 18 DB/DG
S121
(8W-70-3)
INLET AIR TEMPERATURE SENSOR
2
1
PARK/ NEUTRAL POSITION SWITCH SENSE (TRS T41)
TRANSMISSION RANGE SENSOR
(8W-31-4)
10
F855 18 PK/YL
K22 18 BR/OR
K21 18 DB/LG
K900 18 DB/DG
T41 18 YL/DB
N7 18 DB/OR
T10 18 DG/LG
61 C2
35 C1
37 C1
43 C2
76 C2
66 C2
63 C2
5 VOLT SUPPLY
THROTTLE POSITION SENSOR SIGNAL
INTAKE AIR TEMPERATURE SENSOR SIGNAL
SENSOR GROUND
PARK/ NEUTRAL POSITION SWITCH SENSE (TRS T41)
VEHICLE SPEED SENSOR SIGNAL
TORQUE MANAGEMENT REQUEST SENSE
POWERTRAIN CONTROL MODULE
IDLE AIR CONTROL NO.1 DRIVER
IDLE AIR CONTROL NO.2 DRIVER
49 C2
57 C2
K39 18 VT/DG
K60 18 VT/LG
1
2
IDLE AIR CONTROL NO.1 DRIVER
IDLE AIR CONTROL NO.2 DRIVER
IDLE AIR CONTROL MOTOR

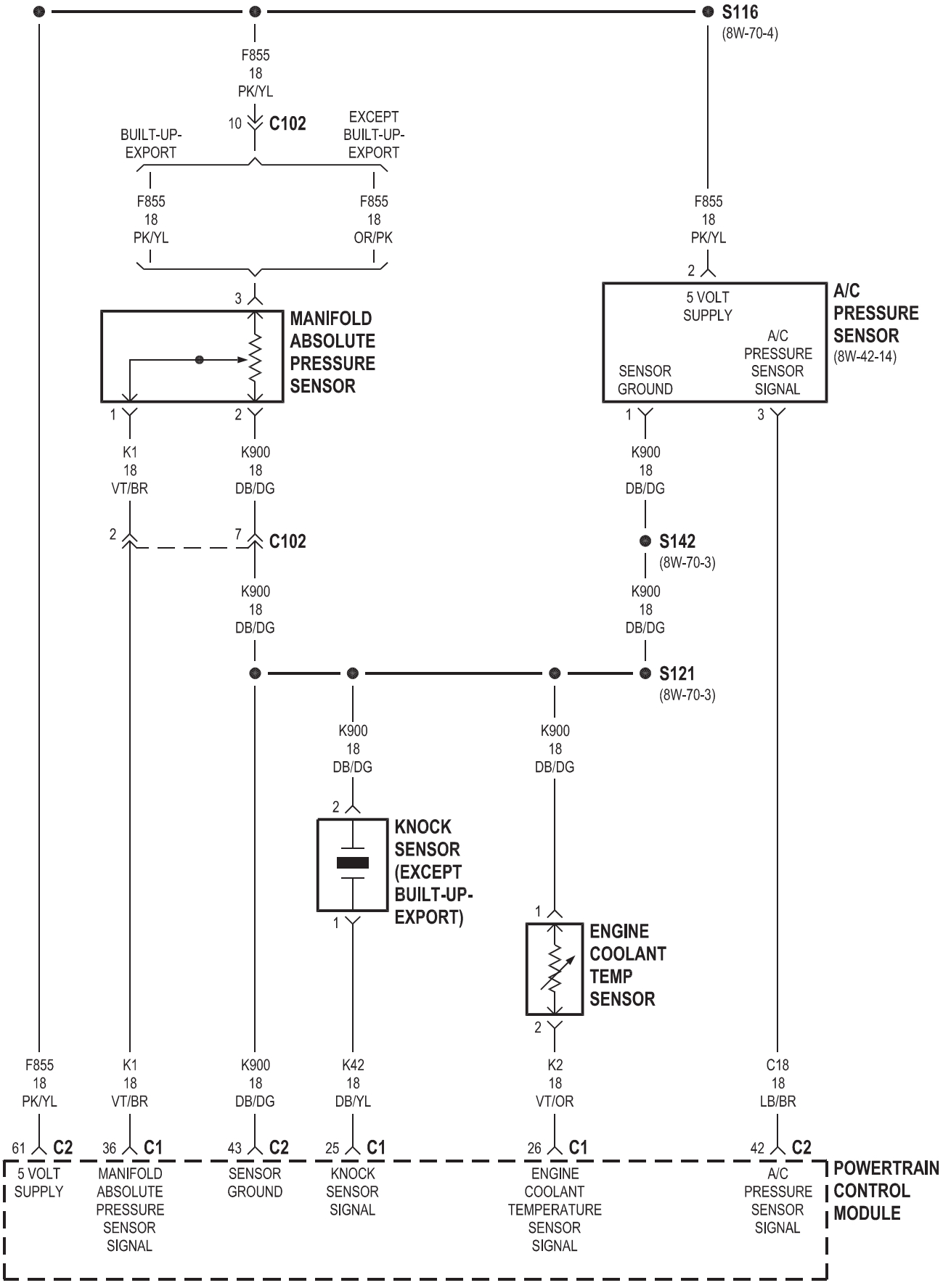
S116
(8W-70-4)
F855
18
PK/YL
10
C102
BUILT-UP-EXPORT
EXCEPT BUILT-UP-EXPORT
F855
18
PK/YL
F855
18
OR/PK
F855
18
PK/YL
2
3
MANIFOLD ABSOLUTE PRESSURE SENSOR
5 VOLT SUPPLY
A/C PRESSURE SENSOR SIGNAL
SENSOR GROUND
A/C PRESSURE SENSOR
(8W-42-14)
1
2
1
3
K1
18
VT/BR
K900
18
DB/DG
K900
18
DB/DG
2
7
C102
S142
(8W-70-3)
K900
18
DB/DG
K900
18
DB/DG
S121
(8W-70-3)
K900
18
DB/DG
K900
18
DB/DG
2
KNOCK SENSOR (EXCEPT BUILT-UP-EXPORT)
1
1
ENGINE COOLANT TEMP SENSOR
2
F855
18
PK/YL
K1
18
VT/BR
K900
18
DB/DG
K42
18
DB/YL
K2
18
VT/OR
C18
18
LB/BR
61
C2
36
C1
43
C2
25
C1
26
C1
42
C2
5 VOLT SUPPLY
MANIFOLD ABSOLUTE PRESSURE SENSOR SIGNAL
SENSOR GROUND
KNOCK SENSOR SIGNAL
ENGINE COOLANT TEMPERATURE SENSOR SIGNAL
A/C PRESSURE SENSOR SIGNAL
POWERTRAIN CONTROL MODULE

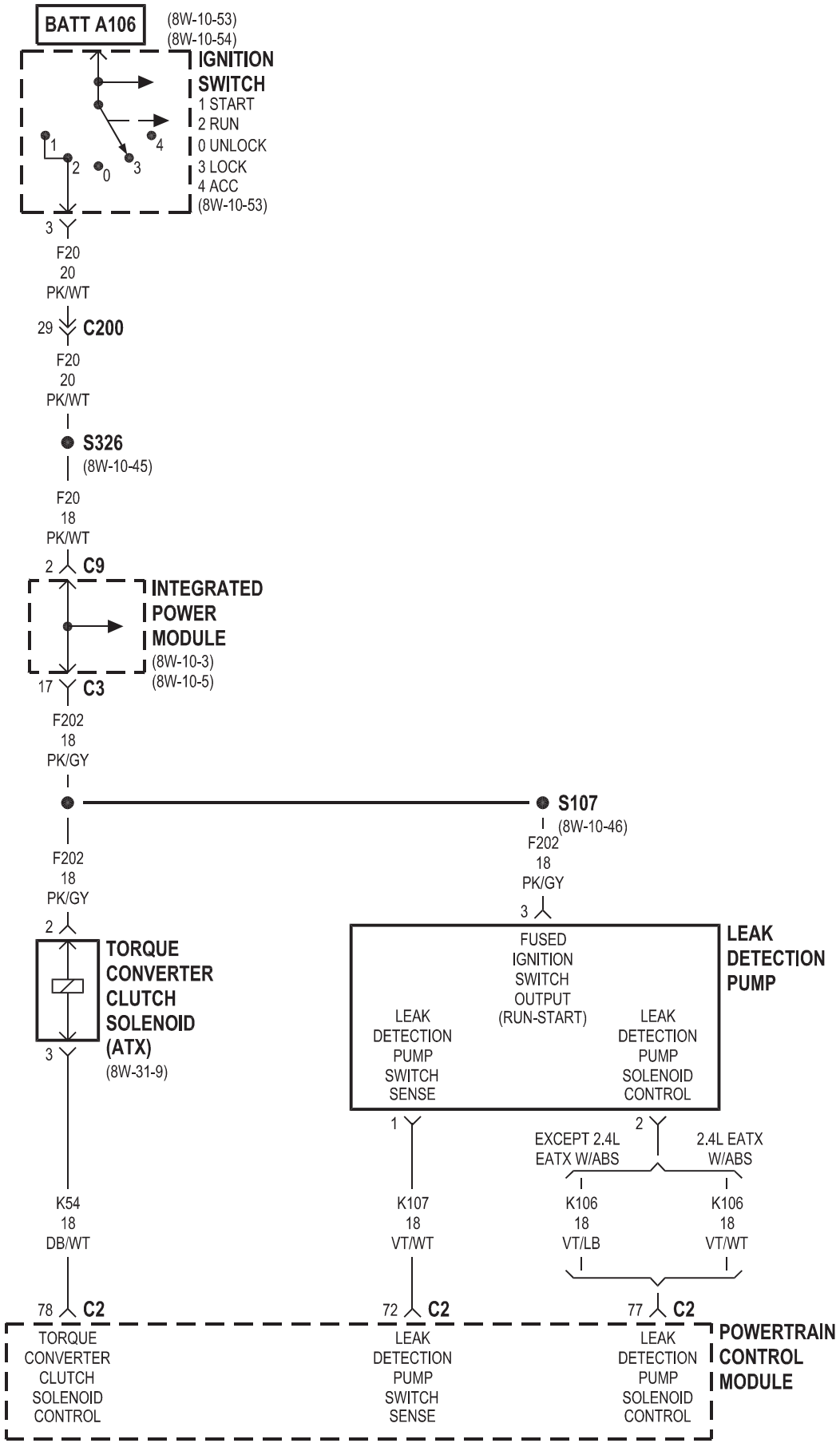
BATT A106
(8W-10-53)
(8W-10-54)
IGNITION SWITCH
1 START
2 RUN
0 UNLOCK
3 LOCK
4 ACC
(8W-10-53)
3
F20
20
PK/WT
29 C200
F20
20
PK/WT
S326
(8W-10-45)
F20
18
PK/WT
2 C9
INTEGRATED POWER MODULE
(8W-10-3)
(8W-10-5)
17 C3
F202
18
PK/GY
S107
(8W-10-46)
F202
18
PK/GY
3
F202
18
PK/GY
2
TORQUE CONVERTER CLUTCH SOLENOID (ATX)
(8W-31-9)
3
FUSED IGNITION SWITCH OUTPUT (RUN-START)
LEAK DETECTION PUMP SWITCH SENSE
LEAK DETECTION PUMP SOLENOID CONTROL
LEAK DETECTION PUMP
1
2
EXCEPT 2.4L EATX W/ABS
2.4L EATX W/ABS
K54
18
DB/WT
K107
18
VT/WT
K106
18
VT/LB
K106
18
VT/WT
78 C2
72 C2
77 C2
TORQUE CONVERTER CLUTCH SOLENOID CONTROL
LEAK DETECTION PUMP SWITCH SENSE
LEAK DETECTION PUMP SOLENOID CONTROL
POWERTRAIN CONTROL MODULE

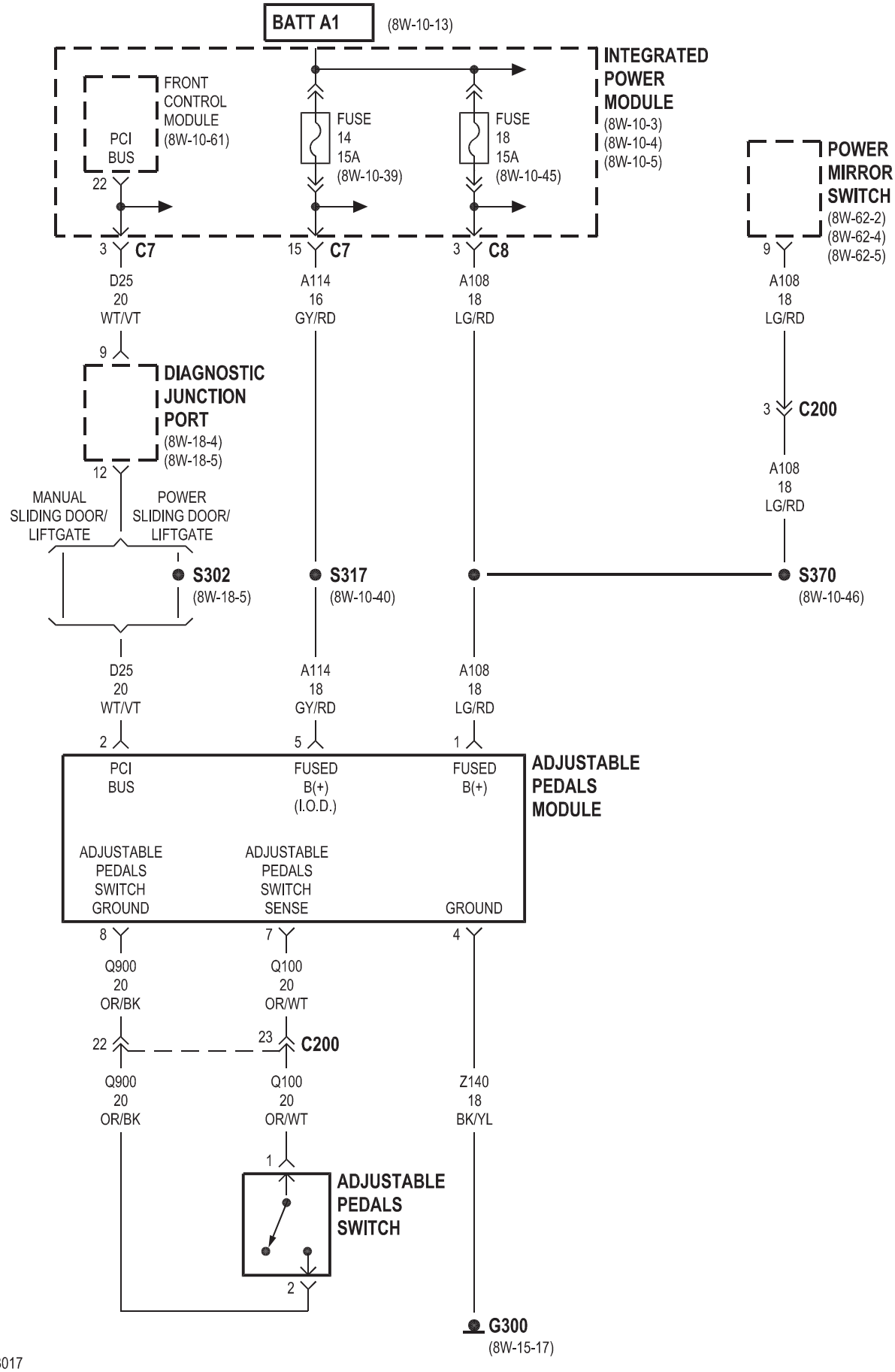
BATT A1
(8W-10-13)
INTEGRATED POWER MODULE
(8W-10-3)
(8W-10-4)
(8W-10-5)
FRONT CONTROL MODULE
(8W-10-61)
PCI BUS
22
FUSE 14 15A
(8W-10-39)
FUSE 18 15A
(8W-10-45)
POWER MIRROR SWITCH
(8W-62-2)
(8W-62-4)
(8W-62-5)
3 C7
15 C7
3 C8
9
D25 20 WT/VT
A114 16 GY/RD
A108 18 LG/RD
A108 18 LG/RD
DIAGNOSTIC JUNCTION PORT
(8W-18-4)
(8W-18-5)
3 C200
12
A108 18 LG/RD
MANUAL SLIDING DOOR/ LIFTGATE
POWER SLIDING DOOR/ LIFTGATE
S302
(8W-18-5)
S317
(8W-10-40)
S370
(8W-10-46)
D25 20 WT/VT
A114 18 GY/RD
A108 18 LG/RD
2
5
1
PCI BUS
FUSED B(+) (I.O.D.)
FUSED B(+)
ADJUSTABLE PEDALS MODULE
ADJUSTABLE PEDALS SWITCH GROUND
ADJUSTABLE PEDALS SWITCH SENSE
GROUND
8
7
4
Q900 20 OR/BK
Q100 20 OR/WT
22
23 C200
Q900 20 OR/BK
Q100 20 OR/WT
Z140 18 BK/YL
1
ADJUSTABLE PEDALS SWITCH
2
G300
(8W-15-17)

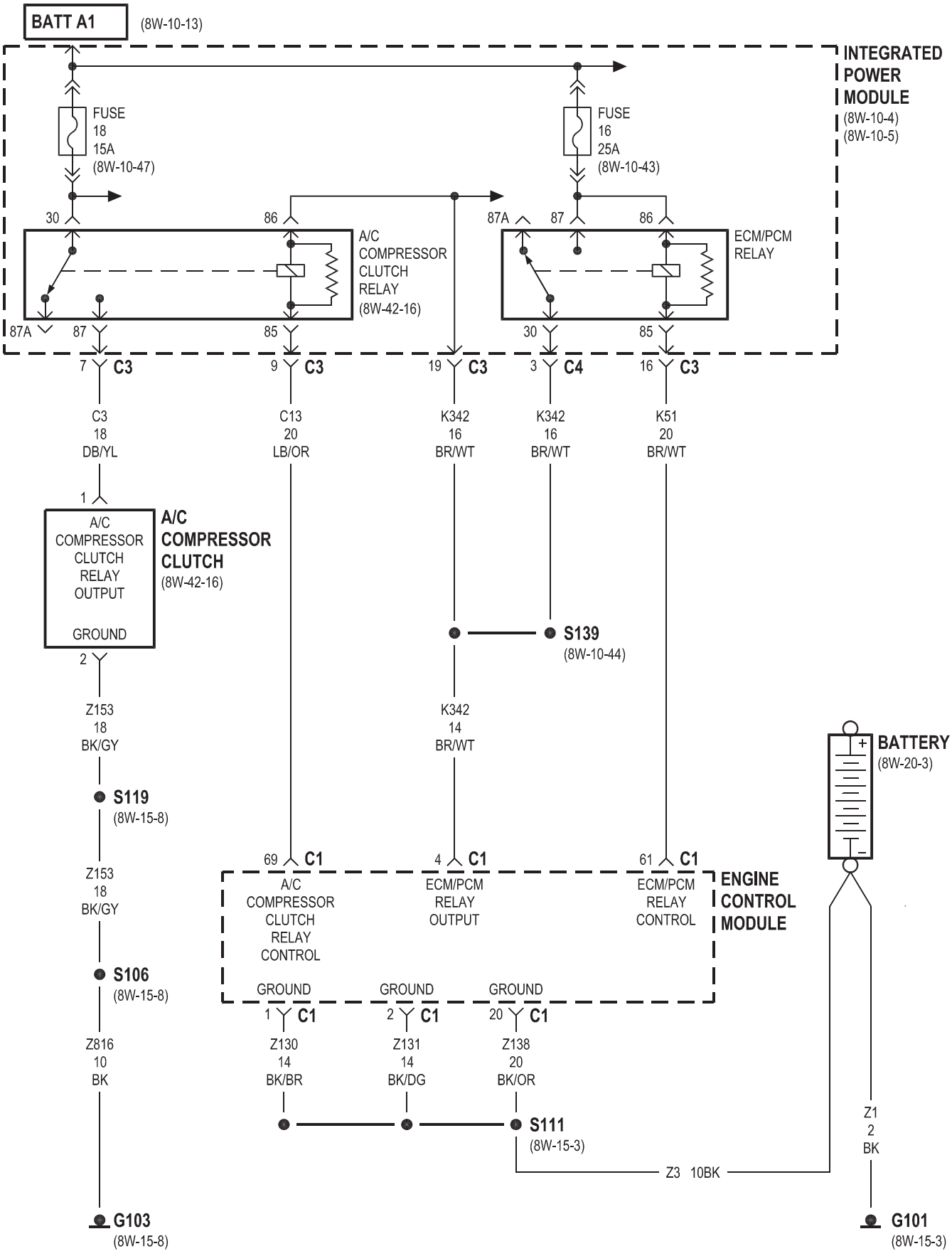
BATT A1
(8W-10-13)
INTEGRATED POWER MODULE
(8W-10-4)
(8W-10-5)
FUSE 18 15A (8W-10-47)
FUSE 16 25A (8W-10-43)
30
86
87A
87
86
A/C COMPRESSOR CLUTCH RELAY (8W-42-16)
ECM/PCM RELAY
87A
87
85
30
85
7 C3
9 C3
19 C3
3 C4
16 C3
C3 18 DB/YL
C13 20 LB/OR
K342 16 BR/WT
K342 16 BR/WT
K51 20 BR/WT
1
A/C COMPRESSOR CLUTCH RELAY OUTPUT
GROUND
A/C COMPRESSOR CLUTCH (8W-42-16)
2
S139
(8W-10-44)
Z153 18 BK/GY
K342 14 BR/WT
S119
(8W-15-8)
BATTERY
(8W-20-3)
69 C1
4 C1
61 C1
A/C COMPRESSOR CLUTCH RELAY CONTROL
ECM/PCM RELAY OUTPUT
ECM/PCM RELAY CONTROL
ENGINE CONTROL MODULE
Z153 18 BK/GY
S106
(8W-15-8)
GROUND
GROUND
GROUND
1 C1
2 C1
20 C1
Z816 10 BK
Z130 14 BK/BR
Z131 14 BK/DG
Z138 20 BK/OR
S111
(8W-15-3)
Z3 10BK
Z1 2 BK
G103
(8W-15-8)
G101
(8W-15-3)

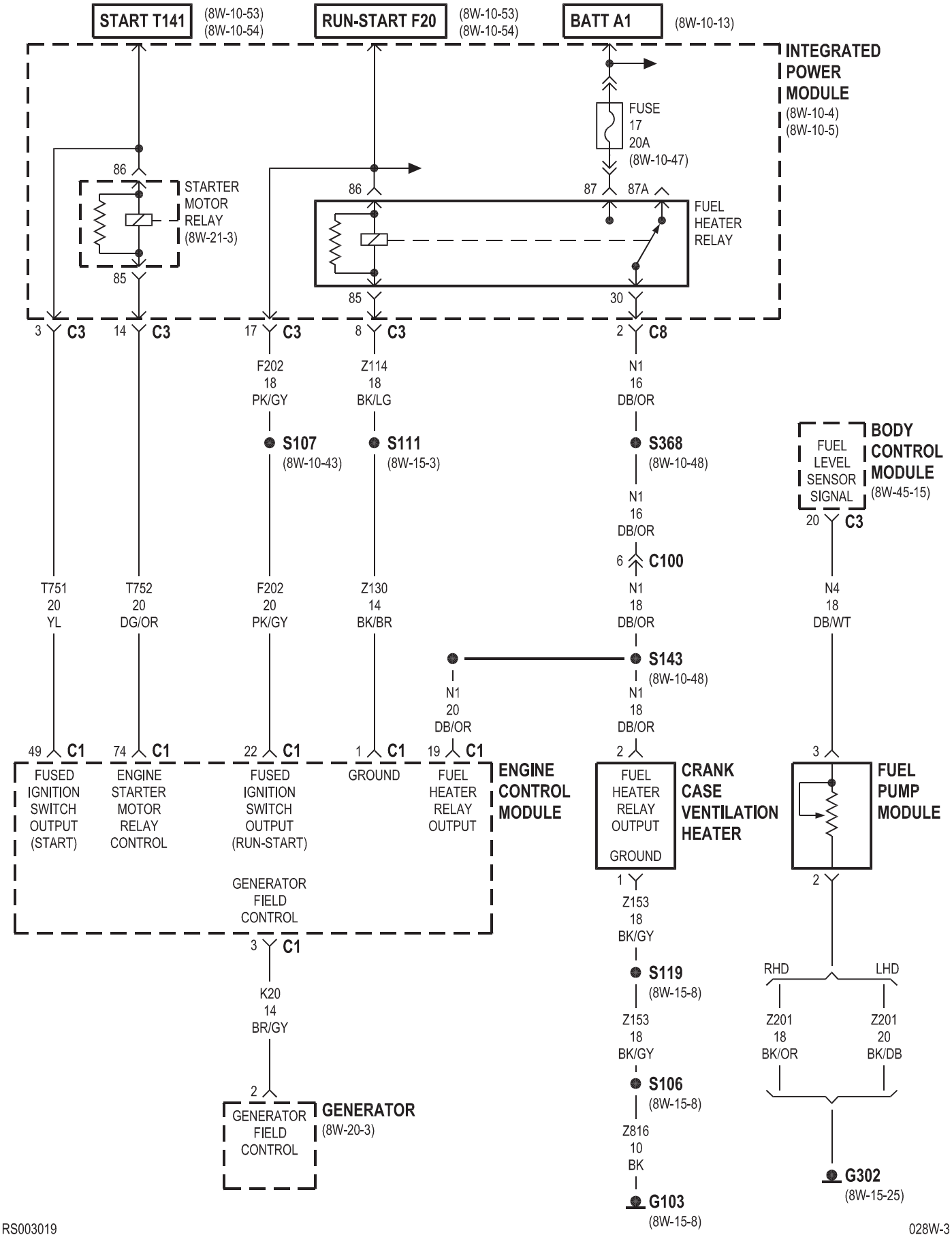
START T141
(8W-10-53)
(8W-10-54)
RUN-START F20
(8W-10-53)
(8W-10-54)
BATT A1
(8W-10-13)
INTEGRATED POWER MODULE
(8W-10-4)
(8W-10-5)
FUSE 17 20A
(8W-10-47)
STARTER MOTOR RELAY
(8W-21-3)
FUEL HEATER RELAY
86
85
87
87A
30
3 C3
14 C3
17 C3
8 C3
2 C8
F202 18 PK/GY
Z114 18 BK/LG
N1 16 DB/OR
S107
(8W-10-43)
S111
(8W-15-3)
S368
(8W-10-48)
N1 16 DB/OR
6 C100
N1 18 DB/OR
S143
(8W-10-48)
N1 20 DB/OR
N1 18 DB/OR
FUEL LEVEL SENSOR SIGNAL
BODY CONTROL MODULE
(8W-45-15)
20 C3
N4 18 DB/WT
T751 20 YL
T752 20 DG/OR
F202 20 PK/GY
Z130 14 BK/BR
49 C1
74 C1
22 C1
1 C1
19 C1
2
3
FUSED IGNITION SWITCH OUTPUT (START)
ENGINE STARTER MOTOR RELAY CONTROL
FUSED IGNITION SWITCH OUTPUT (RUN-START)
GROUND
FUEL HEATER RELAY OUTPUT
ENGINE CONTROL MODULE
FUEL HEATER RELAY OUTPUT
GROUND
CRANK CASE VENTILATION HEATER
FUEL PUMP MODULE
GENERATOR FIELD CONTROL
3 C1
K20 14 BR/GY
2
GENERATOR FIELD CONTROL
GENERATOR
(8W-20-3)
1
Z153 18 BK/GY
S119
(8W-15-8)
Z153 18 BK/GY
S106
(8W-15-8)
Z816 10 BK
G103
(8W-15-8)
RHD
LHD
Z201 18 BK/OR
Z201 20 BK/DB
G302
(8W-15-25)

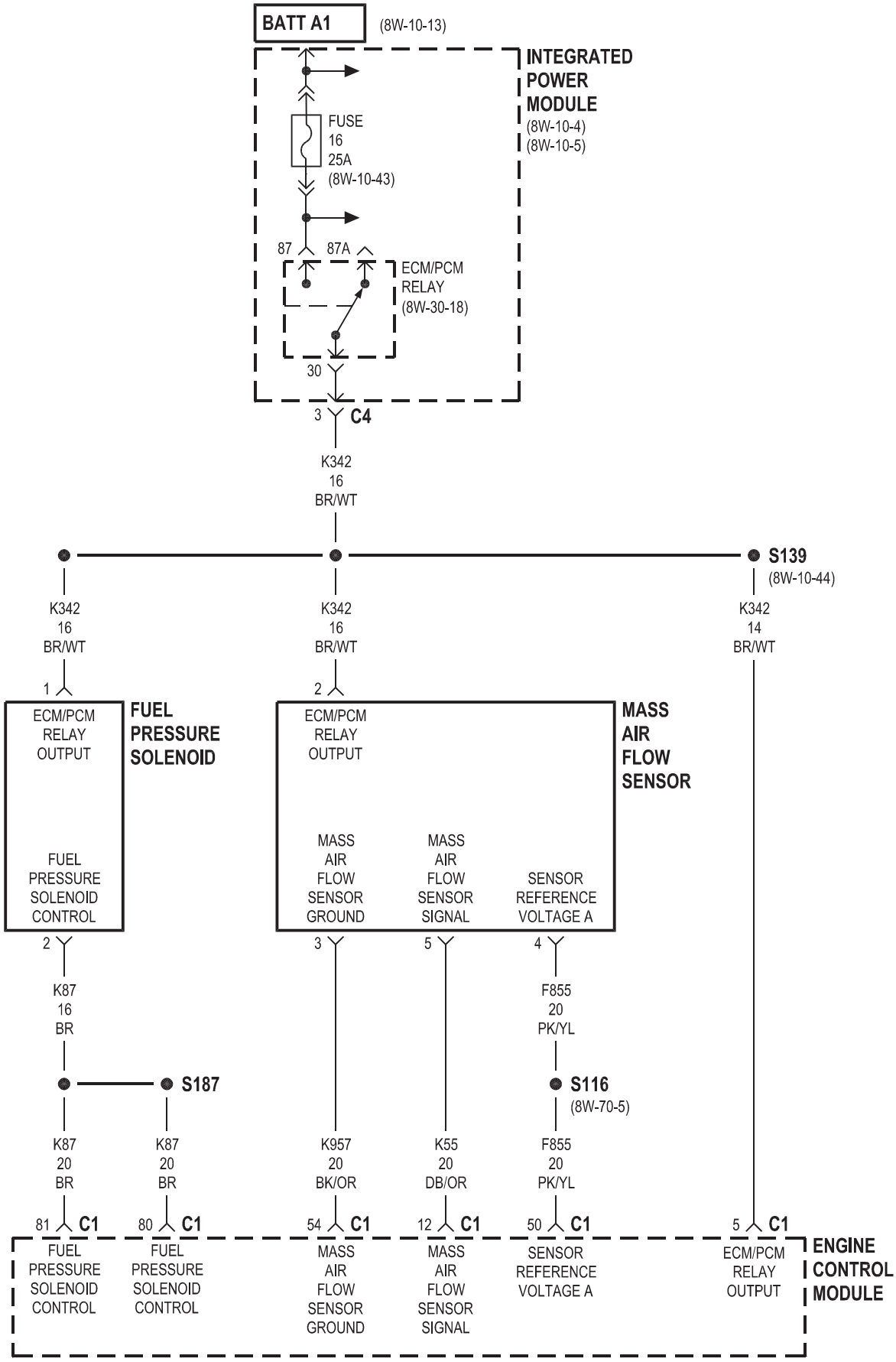
BATT A1
(8W-10-13)
INTEGRATED POWER MODULE
(8W-10-4)
(8W-10-5)
FUSE 16 25A
(8W-10-43)
87
87A
ECM/PCM RELAY
(8W-30-18)
30
3
C4
K342 16 BR/WT
S139
(8W-10-44)
K342 16 BR/WT
K342 16 BR/WT
K342 14 BR/WT
1
2
ECM/PCM RELAY OUTPUT
FUEL PRESSURE SOLENOID
FUEL PRESSURE SOLENOID CONTROL
ECM/PCM RELAY OUTPUT
MASS AIR FLOW SENSOR
MASS AIR FLOW SENSOR GROUND
MASS AIR FLOW SENSOR SIGNAL
SENSOR REFERENCE VOLTAGE A
2
3
5
4
K87 16 BR
F855 20 PK/YL
S187
S116
(8W-70-5)
K87 20 BR
K87 20 BR
K957 20 BK/OR
K55 20 DB/OR
F855 20 PK/YL
81
C1
80
C1
54
C1
12
C1
50
C1
5
C1
FUEL PRESSURE SOLENOID CONTROL
FUEL PRESSURE SOLENOID CONTROL
MASS AIR FLOW SENSOR GROUND
MASS AIR FLOW SENSOR SIGNAL
SENSOR REFERENCE VOLTAGE A
ECM/PCM RELAY OUTPUT
ENGINE CONTROL MODULE

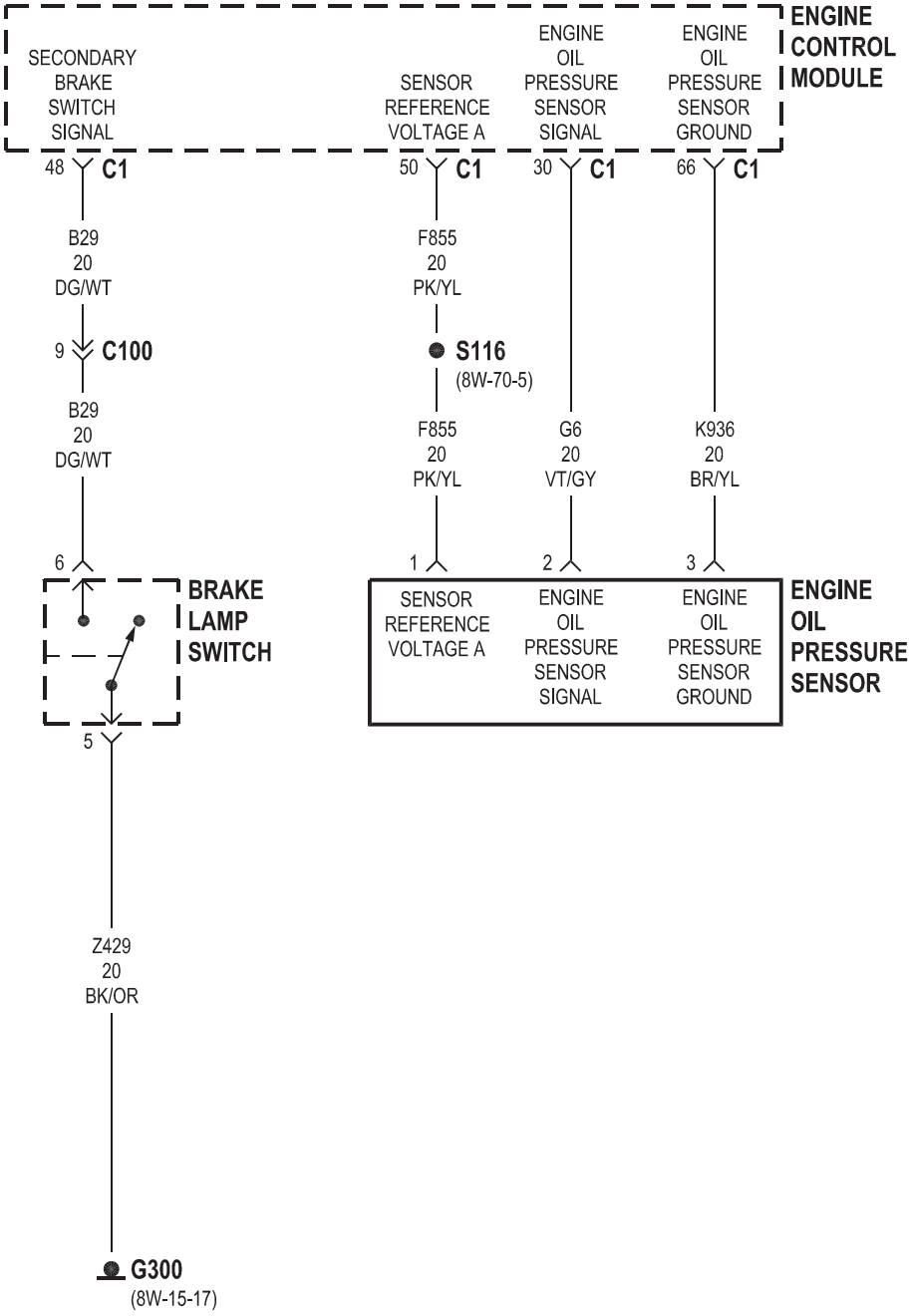
ENGINE CONTROL MODULE
SECONDARY BRAKE SWITCH SIGNAL
SENSOR REFERENCE VOLTAGE A
ENGINE OIL PRESSURE SENSOR SIGNAL
ENGINE OIL PRESSURE SENSOR GROUND
48 C1
50 C1
30 C1
66 C1
B29 20 DG/WT
9 C100
B29 20 DG/WT
6
F855 20 PK/YL
S116
(8W-70-5)
F855 20 PK/YL
G6 20 VT/GY
K936 20 BR/YL
1
2
3
BRAKE LAMP SWITCH
5
SENSOR REFERENCE VOLTAGE A
ENGINE OIL PRESSURE SENSOR SIGNAL
ENGINE OIL PRESSURE SENSOR GROUND
ENGINE OIL PRESSURE SENSOR
Z429 20 BK/OR
G300
(8W-15-17)

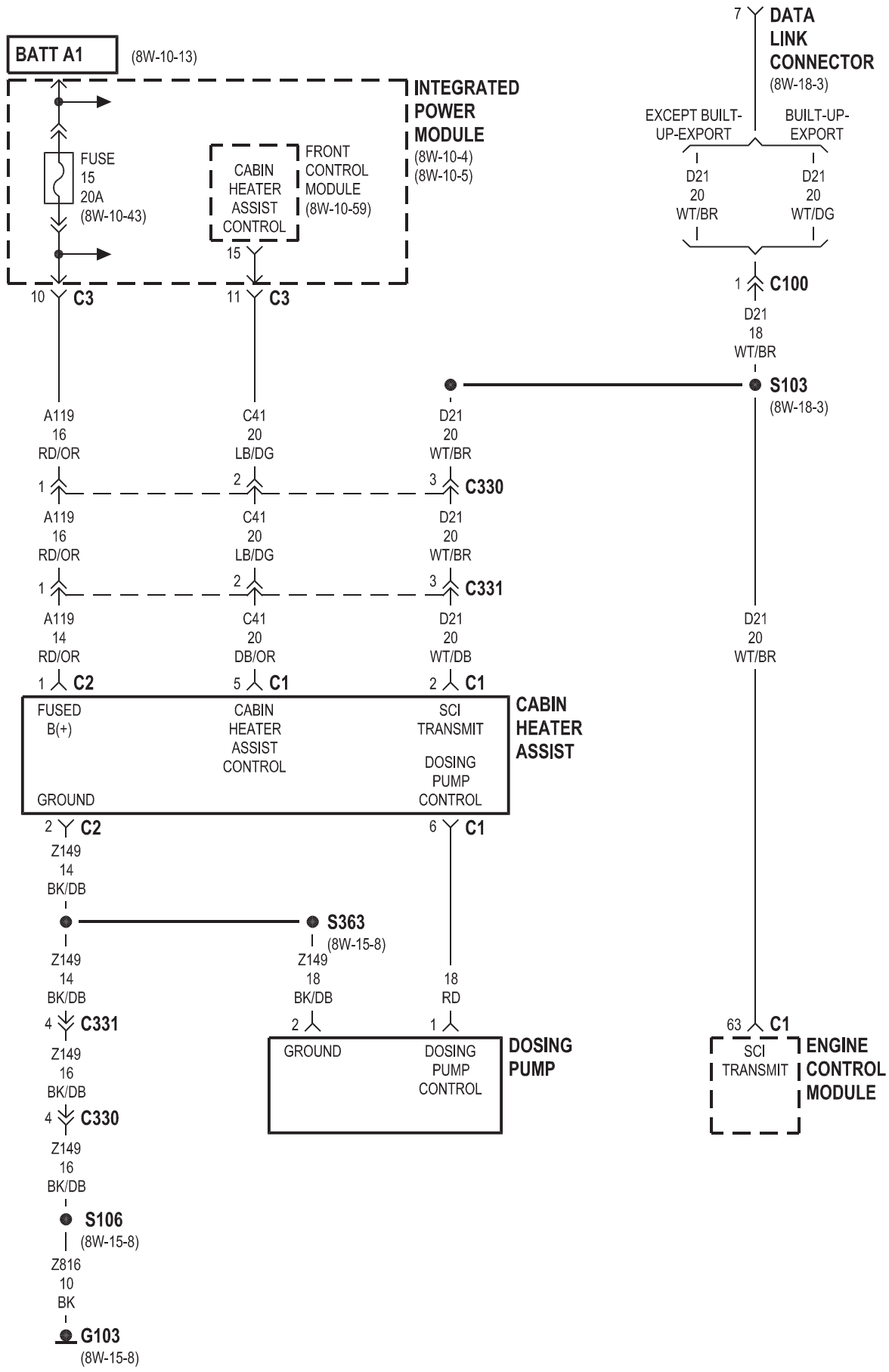
BATT A1
(8W-10-13)
INTEGRATED POWER MODULE
(8W-10-4)
(8W-10-5)
FUSE 15 20A
(8W-10-43)
CABIN HEATER ASSIST CONTROL
FRONT CONTROL MODULE
(8W-10-59)
10 C3
11 C3
15
7 DATA LINK CONNECTOR
(8W-18-3)
EXCEPT BUILT-UP-EXPORT
BUILT-UP-EXPORT
D21 20 WT/BR
D21 20 WT/DG
1 C100
D21 18 WT/BR
S103
(8W-18-3)
A119 16 RD/OR
C41 20 LB/DG
D21 20 WT/BR
1 2 3 C330
A119 16 RD/OR
C41 20 LB/DG
D21 20 WT/BR
1 2 3 C331
A119 14 RD/OR
C41 20 DB/OR
D21 20 WT/DB
1 C2
5 C1
2 C1
FUSED B(+)
CABIN HEATER ASSIST CONTROL
SCI TRANSMIT
DOSING PUMP CONTROL
GROUND
CABIN HEATER ASSIST
2 C2
6 C1
Z149 14 BK/DB
S363
(8W-15-8)
Z149 14 BK/DB
Z149 18 BK/DB
18 RD
4 C331
2 1
GROUND
DOSING PUMP CONTROL
DOSING PUMP
Z149 16 BK/DB
4 C330
Z149 16 BK/DB
S106
(8W-15-8)
Z816 10 BK
G103
(8W-15-8)
D21 20 WT/BR
63 C1
SCI TRANSMIT
ENGINE CONTROL MODULE

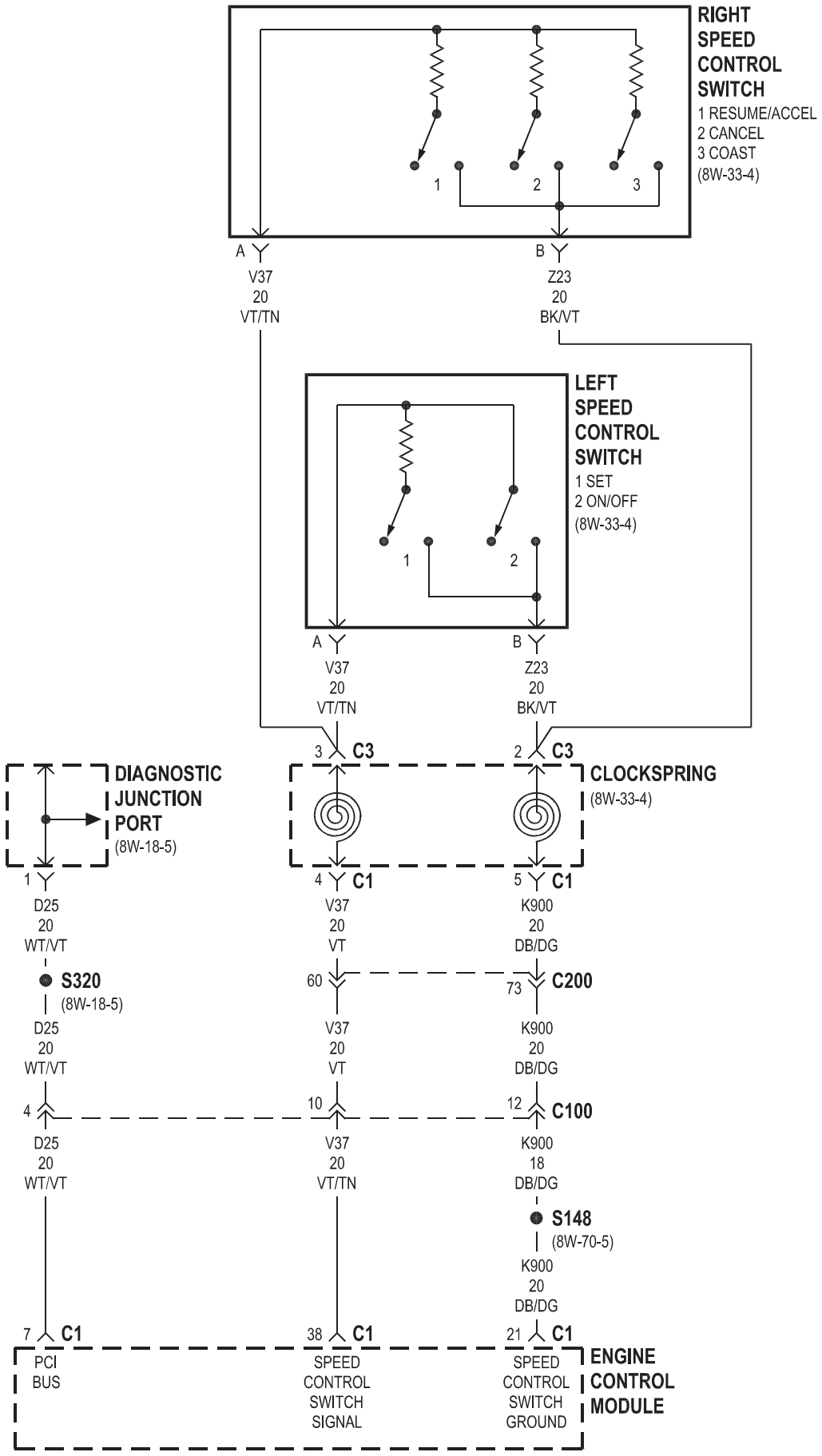
RIGHT SPEED CONTROL SWITCH
1 RESUME/ACCEL
2 CANCEL
3 COAST
(8W-33-4)
1
2
3
A
V37
20
VT/TN
B
Z23
20
BK/VT
LEFT SPEED CONTROL SWITCH
1 SET
2 ON/OFF
(8W-33-4)
1
2
A
V37
20
VT/TN
B
Z23
20
BK/VT
3 C3
2 C3
DIAGNOSTIC JUNCTION PORT
(8W-18-5)
CLOCKSPRING
(8W-33-4)
1
D25
20
WT/VT
S320
(8W-18-5)
D25
20
WT/VT
4
D25
20
WT/VT
7 C1
PCI
BUS
4 C1
V37
20
VT
60
V37
20
VT
10
V37
20
VT/TN
38 C1
SPEED
CONTROL
SWITCH
SIGNAL
5 C1
K900
20
DB/DG
73 C200
K900
20
DB/DG
12 C100
K900
18
DB/DG
S148
(8W-70-5)
K900
20
DB/DG
21 C1
SPEED
CONTROL
SWITCH
GROUND
ENGINE CONTROL MODULE

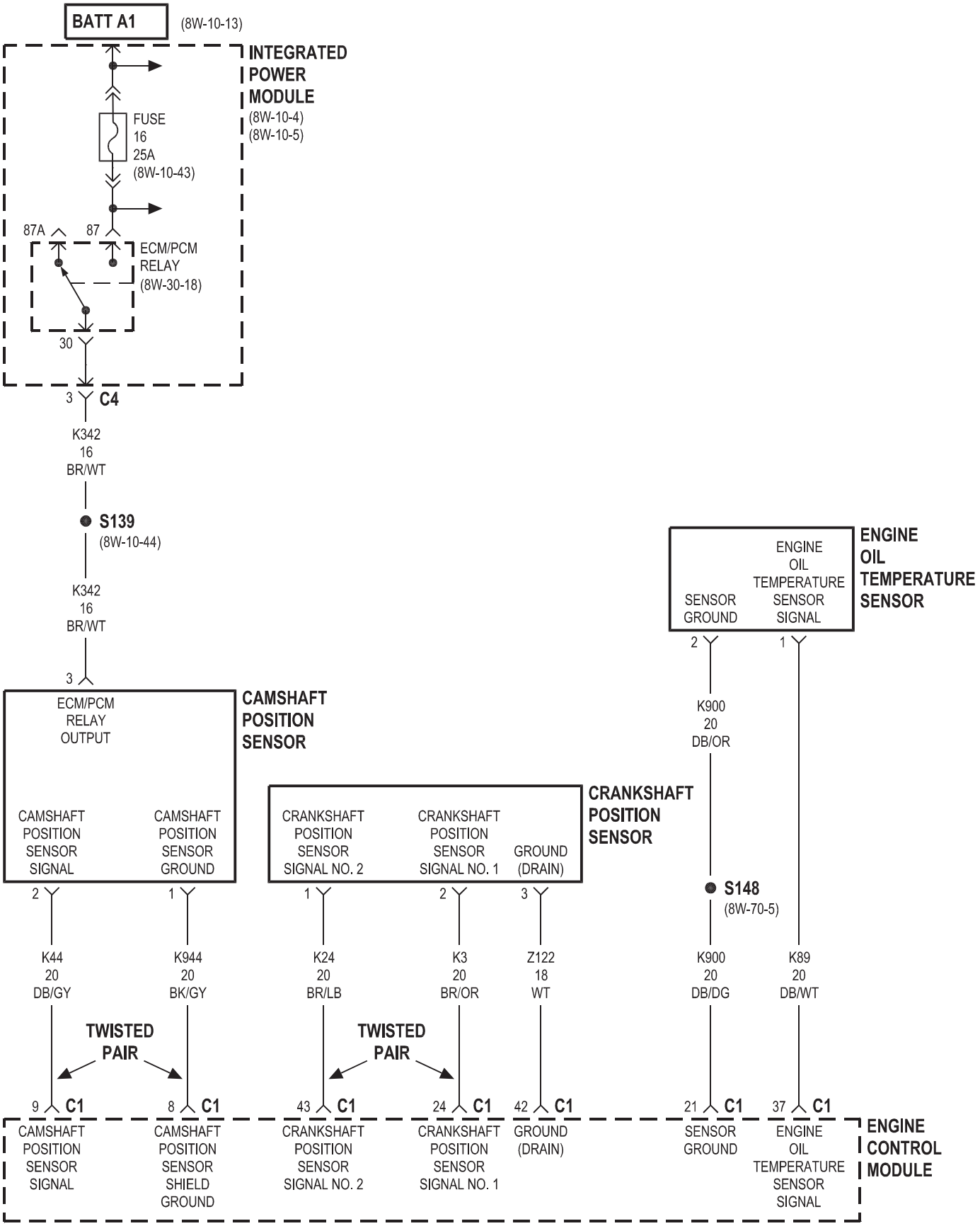
BATT A1
(8W-10-13)
INTEGRATED POWER MODULE
(8W-10-4)
(8W-10-5)
FUSE 16 25A
(8W-10-43)
87A
87
ECM/PCM RELAY
(8W-30-18)
30
3
C4
K342 16 BR/WT
S139
(8W-10-44)
K342 16 BR/WT
3
ECM/PCM RELAY OUTPUT
CAMSHAFT POSITION SENSOR
CAMSHAFT POSITION SENSOR SIGNAL
CAMSHAFT POSITION SENSOR GROUND
2
1
K44 20 DB/GY
K944 20 BK/GY
TWISTED PAIR
9 C1
8 C1
CRANKSHAFT POSITION SENSOR
CRANKSHAFT POSITION SENSOR SIGNAL NO. 2
CRANKSHAFT POSITION SENSOR SIGNAL NO. 1
GROUND (DRAIN)
1
2
3
K24 20 BR/LB
K3 20 BR/OR
Z122 18 WT
TWISTED PAIR
43 C1
24 C1
42 C1
ENGINE OIL TEMPERATURE SENSOR
SENSOR GROUND
ENGINE OIL TEMPERATURE SENSOR SIGNAL
2
1
K900 20 DB/OR
S148
(8W-70-5)
K900 20 DB/DG
K89 20 DB/WT
21 C1
37 C1
ENGINE CONTROL MODULE
CAMSHAFT POSITION SENSOR SIGNAL
CAMSHAFT POSITION SENSOR SHIELD GROUND
CRANKSHAFT POSITION SENSOR SIGNAL NO. 2
CRANKSHAFT POSITION SENSOR SIGNAL NO. 1
GROUND (DRAIN)
SENSOR GROUND
ENGINE OIL TEMPERATURE SENSOR SIGNAL

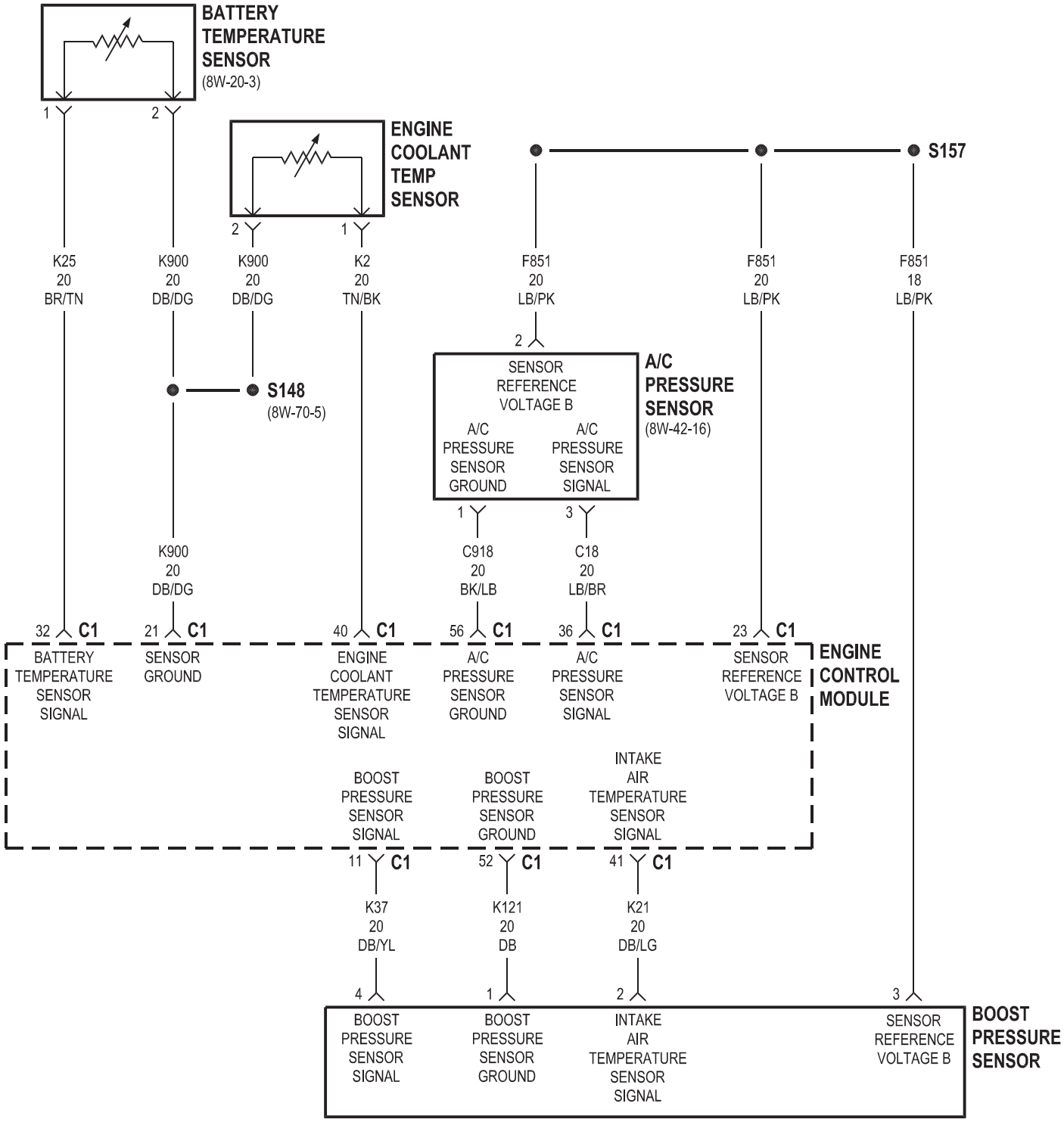
BATTERY TEMPERATURE SENSOR
(8W-20-3)
1
2
ENGINE COOLANT TEMP SENSOR
2
1
S157
K25 20 BR/TN
K900 20 DB/DG
K900 20 DB/DG
K2 20 TN/BK
F851 20 LB/PK
F851 20 LB/PK
F851 18 LB/PK
2
SENSOR REFERENCE VOLTAGE B
A/C PRESSURE SENSOR GROUND
A/C PRESSURE SENSOR SIGNAL
A/C PRESSURE SENSOR
(8W-42-16)
S148
(8W-70-5)
1
3
K900 20 DB/DG
C918 20 BK/LB
C18 20 LB/BR
32 C1
21 C1
40 C1
56 C1
36 C1
23 C1
BATTERY TEMPERATURE SENSOR SIGNAL
SENSOR GROUND
ENGINE COOLANT TEMPERATURE SENSOR SIGNAL
A/C PRESSURE SENSOR GROUND
A/C PRESSURE SENSOR SIGNAL
SENSOR REFERENCE VOLTAGE B
ENGINE CONTROL MODULE
BOOST PRESSURE SENSOR SIGNAL
BOOST PRESSURE SENSOR GROUND
INTAKE AIR TEMPERATURE SENSOR SIGNAL
11 C1
52 C1
41 C1
K37 20 DB/YL
K121 20 DB
K21 20 DB/LG
4
1
2
3
BOOST PRESSURE SENSOR SIGNAL
BOOST PRESSURE SENSOR GROUND
INTAKE AIR TEMPERATURE SENSOR SIGNAL
SENSOR REFERENCE VOLTAGE B
BOOST PRESSURE SENSOR

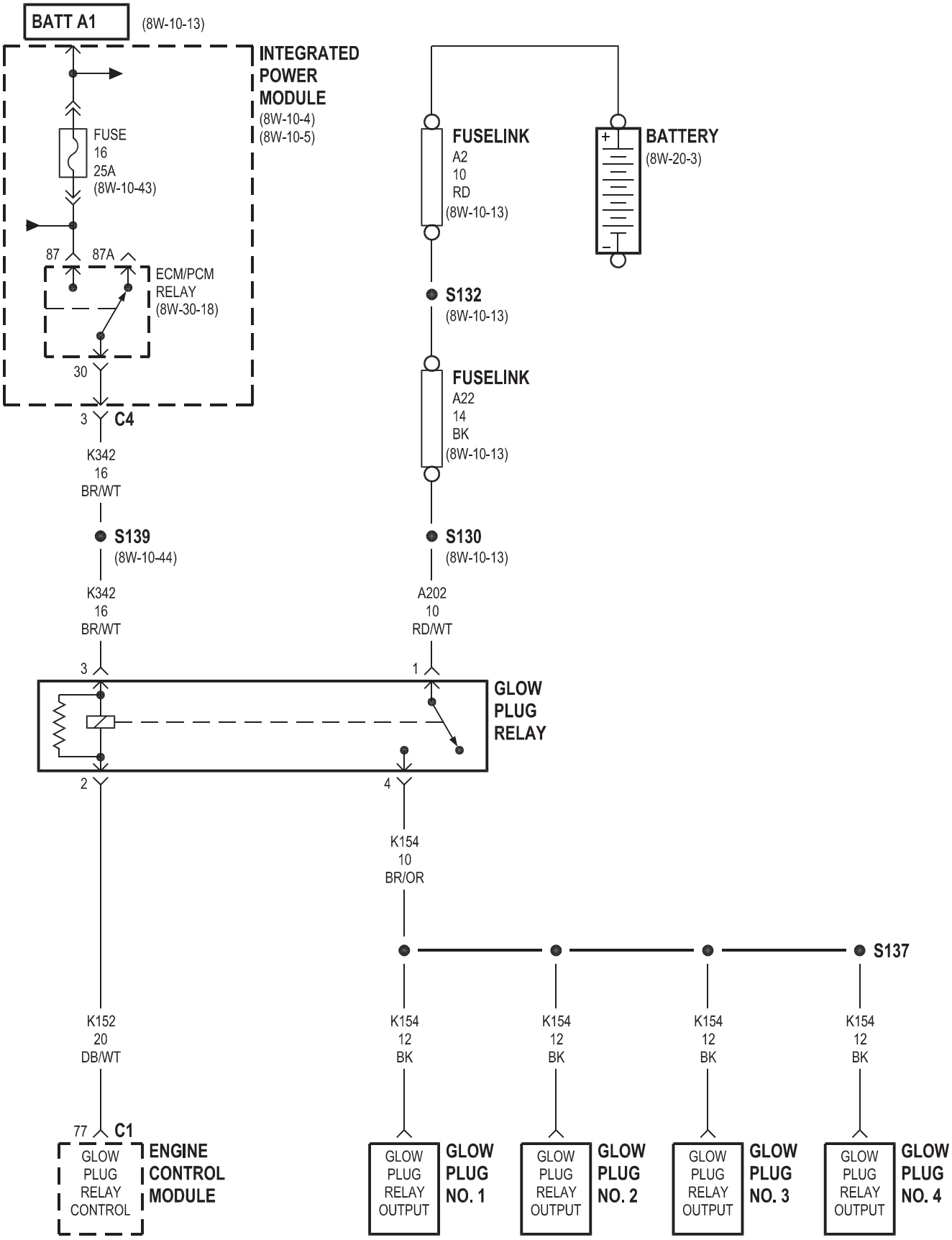
BATT A1
(8W-10-13)
INTEGRATED POWER MODULE
(8W-10-4)
(8W-10-5)
FUSE 16 25A (8W-10-43)
87
87A
ECM/PCM RELAY (8W-30-18)
30
3
C4
K342 16 BR/WT
S139
(8W-10-44)
K342 16 BR/WT
3
2
FUSELINK A2 10 RD (8W-10-13)
S132
(8W-10-13)
FUSELINK A22 14 BK (8W-10-13)
S130
(8W-10-13)
A202 10 RD/WT
1
4
BATTERY
(8W-20-3)
GLOW PLUG RELAY
K154 10 BR/OR
S137
K152 20 DB/WT
77
C1
GLOW PLUG RELAY CONTROL
ENGINE CONTROL MODULE
K154 12 BK
GLOW PLUG RELAY OUTPUT
GLOW PLUG NO. 1
K154 12 BK
GLOW PLUG RELAY OUTPUT
GLOW PLUG NO. 2
K154 12 BK
GLOW PLUG RELAY OUTPUT
GLOW PLUG NO. 3
K154 12 BK
GLOW PLUG RELAY OUTPUT
GLOW PLUG NO. 4

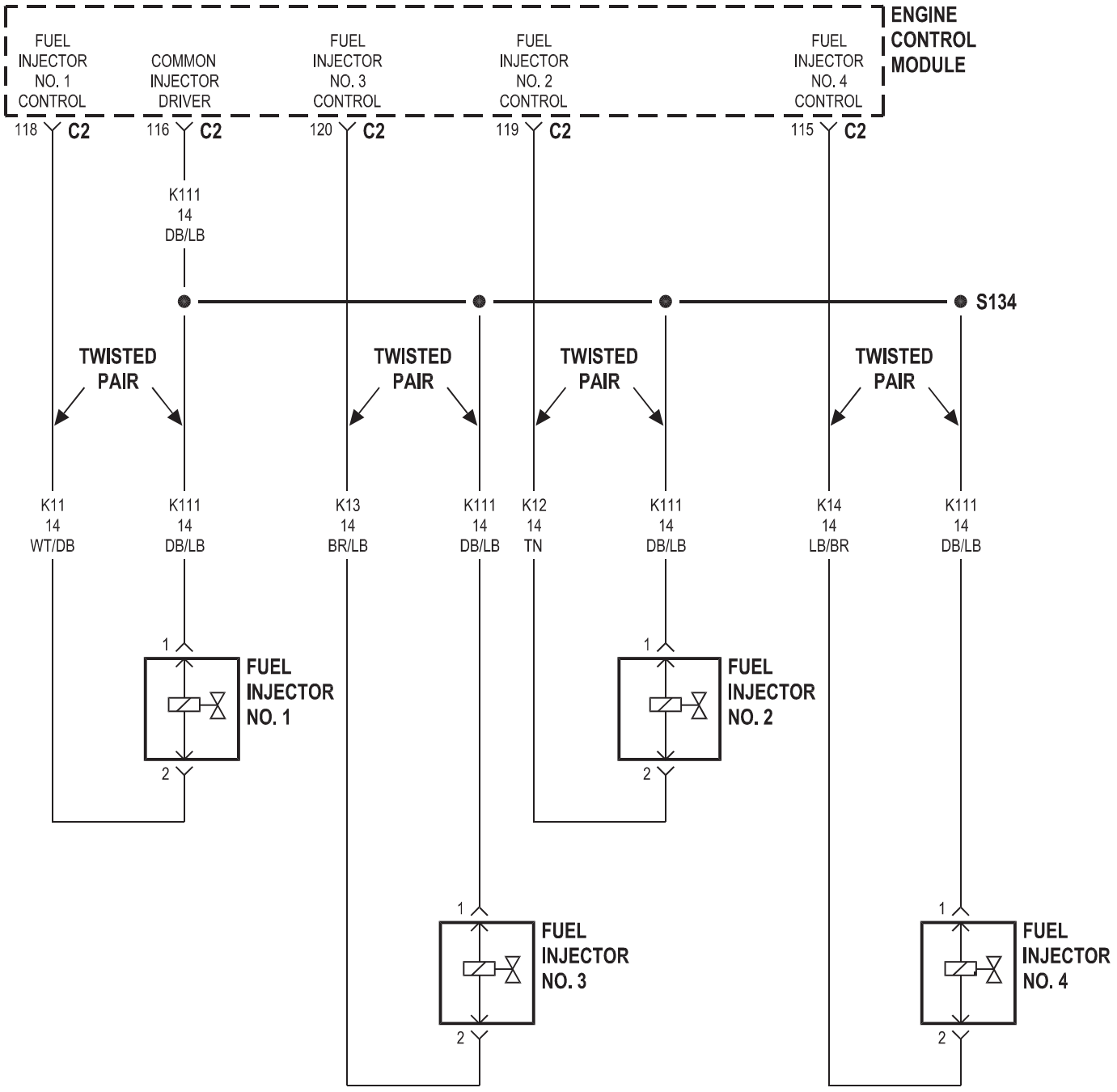
ENGINE CONTROL MODULE
FUEL INJECTOR NO. 1 CONTROL
COMMON INJECTOR DRIVER
FUEL INJECTOR NO. 3 CONTROL
FUEL INJECTOR NO. 2 CONTROL
FUEL INJECTOR NO. 4 CONTROL
118 C2
116 C2
120 C2
119 C2
115 C2
K111 14 DB/LB
S134
TWISTED PAIR
TWISTED PAIR
TWISTED PAIR
TWISTED PAIR
K11 14 WT/DB
K111 14 DB/LB
K13 14 BR/LB
K111 14 DB/LB
K12 14 TN
K111 14 DB/LB
K14 14 LB/BR
K111 14 DB/LB
FUEL INJECTOR NO. 1
FUEL INJECTOR NO. 2
FUEL INJECTOR NO. 3
FUEL INJECTOR NO. 4

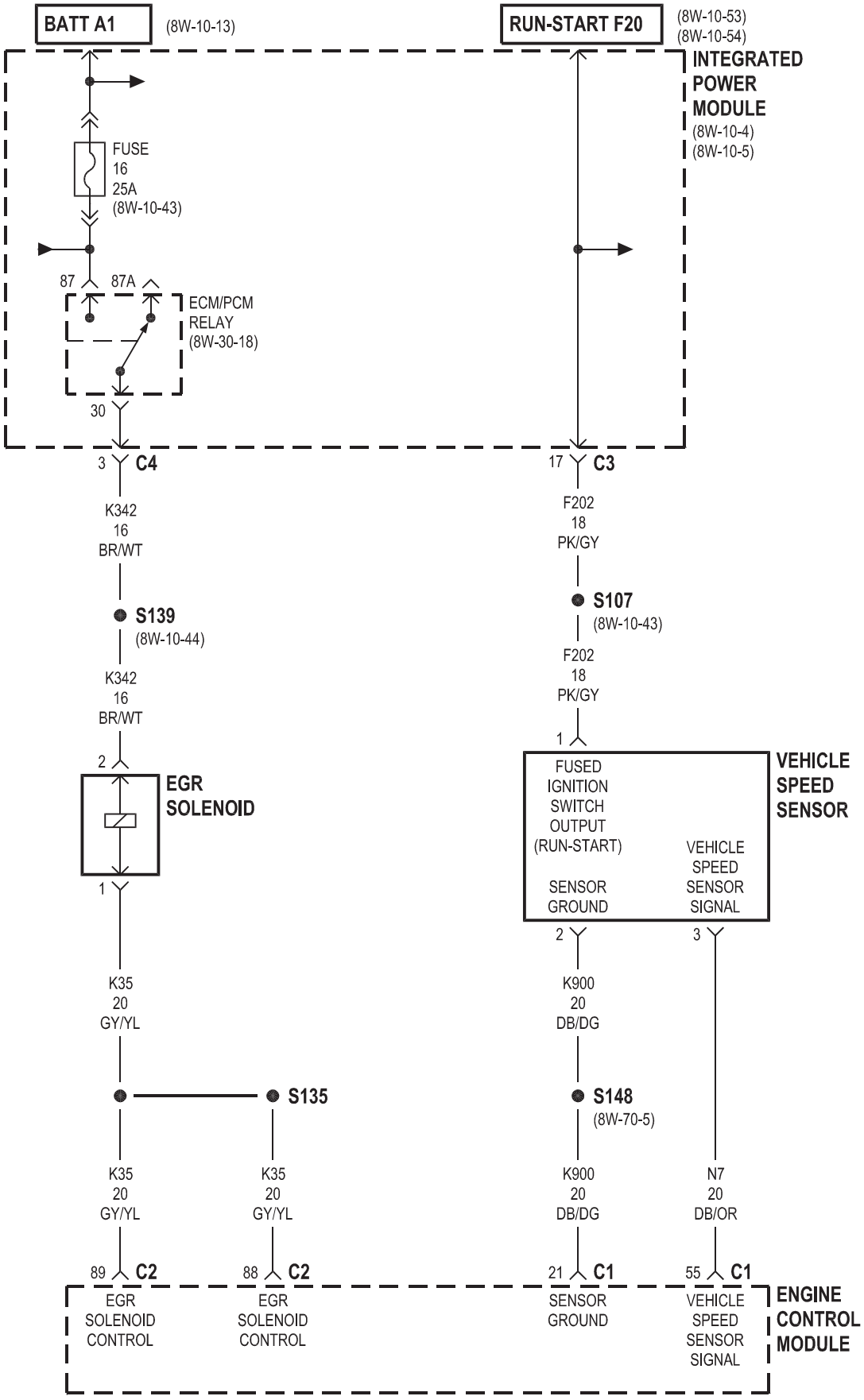
BATT A1
(8W-10-13)
RUN-START F20
(8W-10-53)
(8W-10-54)
INTEGRATED POWER MODULE
(8W-10-4)
(8W-10-5)
FUSE 16 25A (8W-10-43)
87
87A
ECM/PCM RELAY (8W-30-18)
30
3 C4
17 C3
K342 16 BR/WT
F202 18 PK/GY
S139
(8W-10-44)
S107
(8W-10-43)
K342 16 BR/WT
F202 18 PK/GY
2
1
EGR SOLENOID
FUSED IGNITION SWITCH OUTPUT (RUN-START)
SENSOR GROUND
VEHICLE SPEED SENSOR SIGNAL
VEHICLE SPEED SENSOR
2
3
K35 20 GY/YL
K900 20 DB/DG
S135
S148
(8W-70-5)
K35 20 GY/YL
K35 20 GY/YL
K900 20 DB/DG
N7 20 DB/OR
89 C2
88 C2
21 C1
55 C1
EGR SOLENOID CONTROL
EGR SOLENOID CONTROL
SENSOR GROUND
VEHICLE SPEED SENSOR SIGNAL
ENGINE CONTROL MODULE

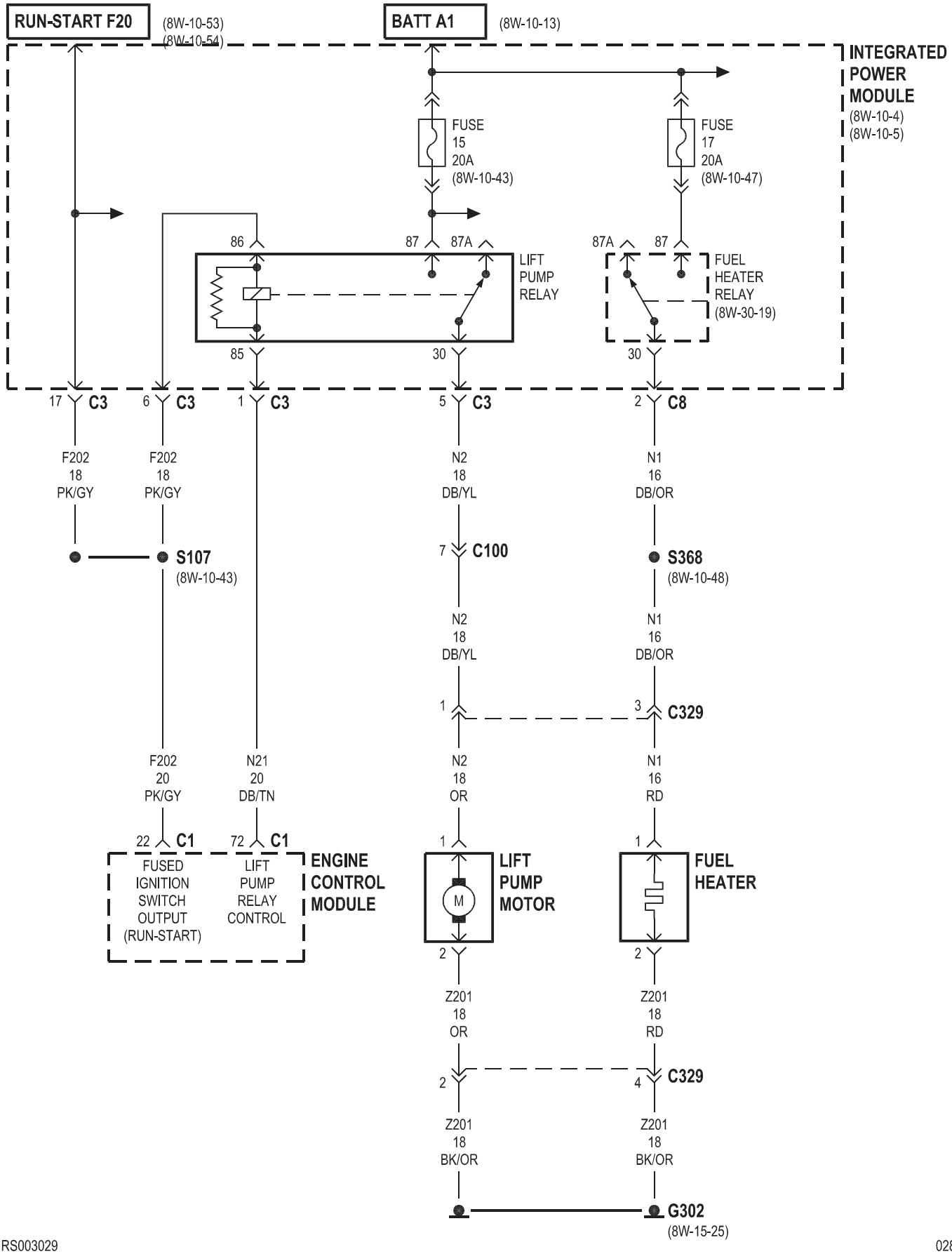
RUN-START F20
(8W-10-53)
(8W-10-54)
BATT A1
(8W-10-13)
INTEGRATED POWER MODULE
(8W-10-4)
(8W-10-5)
FUSE 15 20A (8W-10-43)
FUSE 17 20A (8W-10-47)
86
87
87A
LIFT PUMP RELAY
87A
87
FUEL HEATER RELAY (8W-30-19)
85
30
30
17 C3
6 C3
1 C3
5 C3
2 C8
F202 18 PK/GY
F202 18 PK/GY
N2 18 DB/YL
N1 16 DB/OR
S107
(8W-10-43)
7 C100
S368
(8W-10-48)
N2 18 DB/YL
N1 16 DB/OR
1
3 C329
F202 20 PK/GY
N21 20 DB/TN
N2 18 OR
N1 16 RD
22 C1
72 C1
1
1
FUSED IGNITION SWITCH OUTPUT (RUN-START)
LIFT PUMP RELAY CONTROL
ENGINE CONTROL MODULE
M
LIFT PUMP MOTOR
FUEL HEATER
2
2
Z201 18 OR
Z201 18 RD
2
4 C329
Z201 18 BK/OR
Z201 18 BK/OR
G302
(8W-15-25)

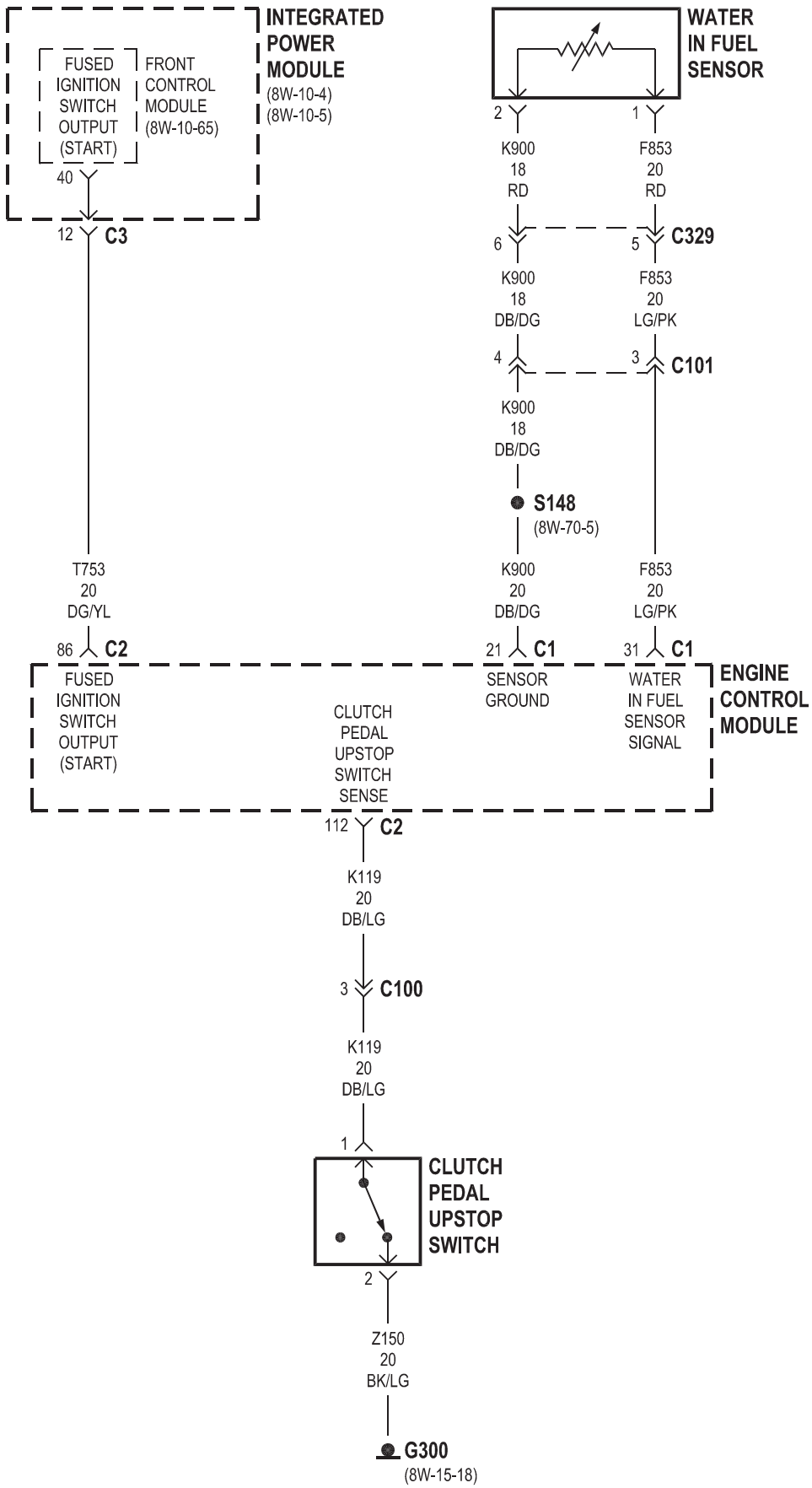
INTEGRATED POWER MODULE
(8W-10-4)
(8W-10-5)
FUSED IGNITION SWITCH OUTPUT (START)
FRONT CONTROL MODULE
(8W-10-65)
40
12 C3
T753
20
DG/YL
86 C2
WATER IN FUEL SENSOR
2
1
K900
18
RD
F853
20
RD
6
5 C329
K900
18
DB/DG
F853
20
LG/PK
4
3 C101
K900
18
DB/DG
S148
(8W-70-5)
K900
20
DB/DG
F853
20
LG/PK
21 C1
31 C1
SENSOR GROUND
WATER IN FUEL SENSOR SIGNAL
ENGINE CONTROL MODULE
FUSED IGNITION SWITCH OUTPUT (START)
CLUTCH PEDAL UPSTOP SWITCH SENSE
112 C2
K119
20
DB/LG
3 C100
K119
20
DB/LG
1
CLUTCH PEDAL UPSTOP SWITCH
2
Z150
20
BK/LG
G300
(8W-15-18)

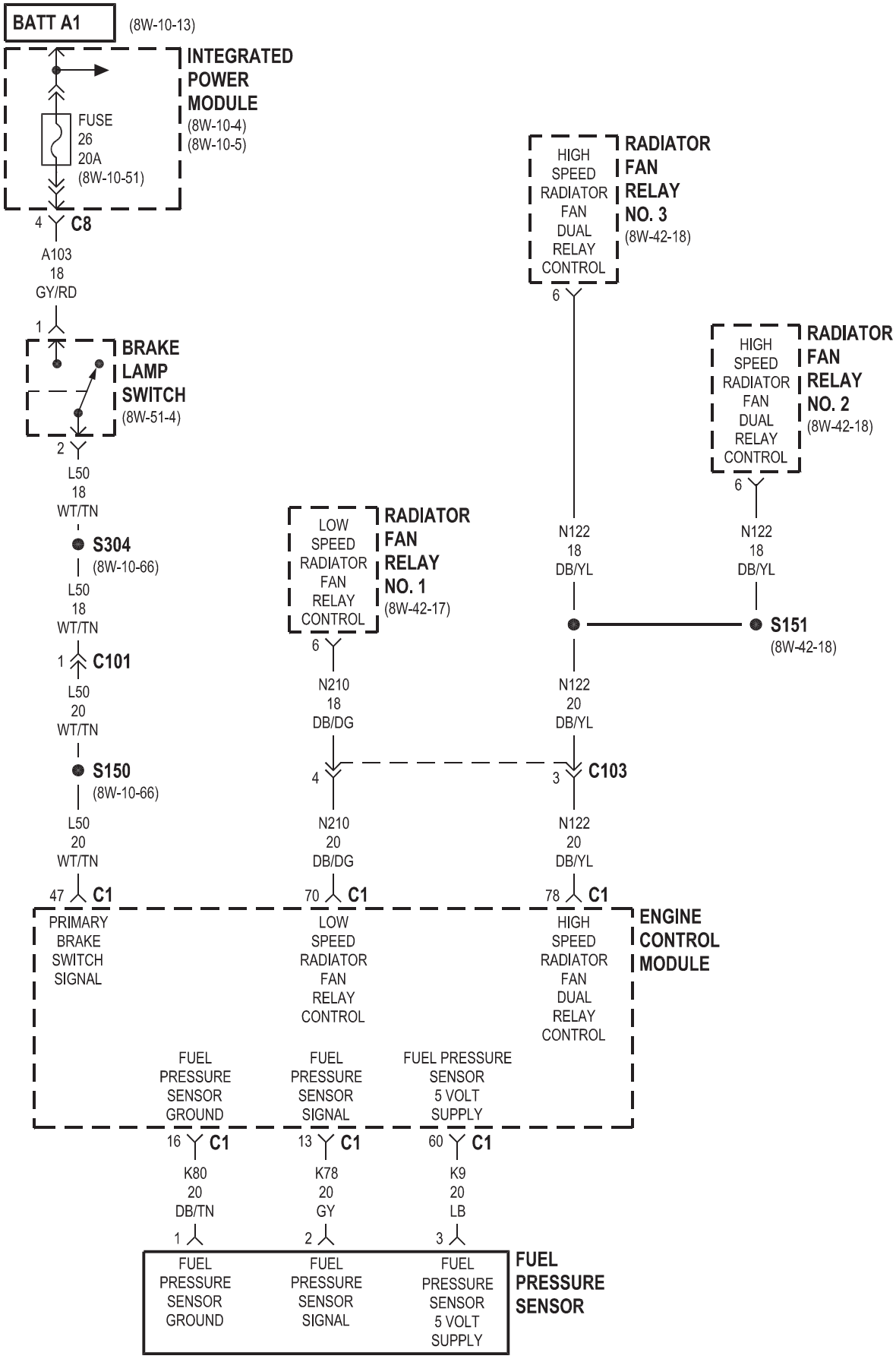
BATT A1
(8W-10-13)
INTEGRATED POWER MODULE
(8W-10-4)
(8W-10-5)
FUSE 26 20A
(8W-10-51)
4 C8
A103 18 GY/RD
1
BRAKE LAMP SWITCH
(8W-51-4)
2
L50 18 WT/TN
S304
(8W-10-66)
L50 18 WT/TN
1 C101
L50 20 WT/TN
S150
(8W-10-66)
L50 20 WT/TN
47 C1
PRIMARY BRAKE SWITCH SIGNAL
HIGH SPEED RADIATOR FAN DUAL RELAY CONTROL
RADIATOR FAN RELAY NO. 3
(8W-42-18)
6
N122 18 DB/YL
HIGH SPEED RADIATOR FAN DUAL RELAY CONTROL
RADIATOR FAN RELAY NO. 2
(8W-42-18)
6
N122 18 DB/YL
S151
(8W-42-18)
LOW SPEED RADIATOR FAN RELAY CONTROL
RADIATOR FAN RELAY NO. 1
(8W-42-17)
6
N210 18 DB/DG
4
N210 20 DB/DG
70 C1
LOW SPEED RADIATOR FAN RELAY CONTROL
N122 20 DB/YL
3 C103
N122 20 DB/YL
78 C1
HIGH SPEED RADIATOR FAN DUAL RELAY CONTROL
ENGINE CONTROL MODULE
FUEL PRESSURE SENSOR GROUND
16 C1
K80 20 DB/TN
1
FUEL PRESSURE SENSOR SIGNAL
13 C1
K78 20 GY
2
FUEL PRESSURE SENSOR 5 VOLT SUPPLY
60 C1
K9 20 LB
3
FUEL PRESSURE SENSOR GROUND
FUEL PRESSURE SENSOR SIGNAL
FUEL PRESSURE SENSOR 5 VOLT SUPPLY
FUEL PRESSURE SENSOR

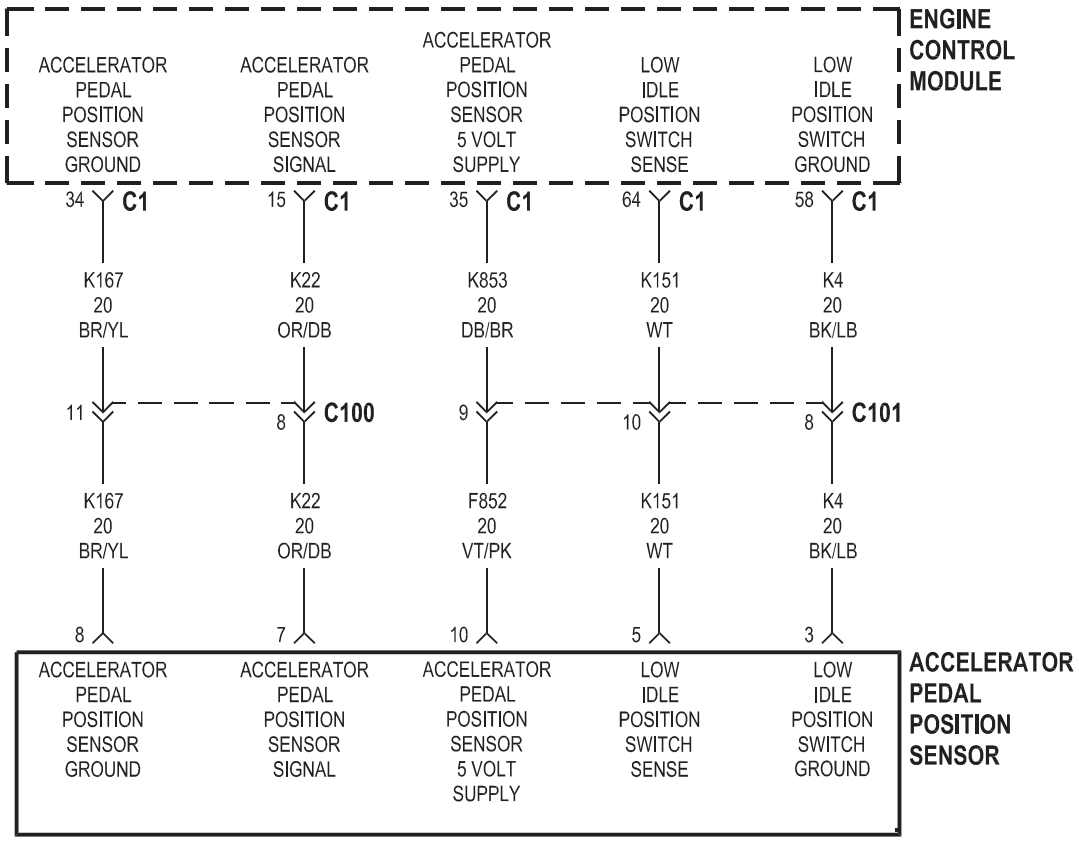
ENGINE CONTROL MODULE
ACCELERATOR PEDAL POSITION SENSOR GROUND
ACCELERATOR PEDAL POSITION SENSOR SIGNAL
ACCELERATOR PEDAL POSITION SENSOR 5 VOLT SUPPLY
LOW IDLE POSITION SWITCH SENSE
LOW IDLE POSITION SWITCH GROUND
34 C1
15 C1
35 C1
64 C1
58 C1
K167 20 BR/YL
K22 20 OR/DB
K853 20 DB/BR
K151 20 WT
K4 20 BK/LB
11
8 C100
9
10
8 C101
K167 20 BR/YL
K22 20 OR/DB
F852 20 VT/PK
K151 20 WT
K4 20 BK/LB
8
7
10
5
3
ACCELERATOR PEDAL POSITION SENSOR GROUND
ACCELERATOR PEDAL POSITION SENSOR SIGNAL
ACCELERATOR PEDAL POSITION SENSOR 5 VOLT SUPPLY
LOW IDLE POSITION SWITCH SENSE
LOW IDLE POSITION SWITCH GROUND
ACCELERATOR PEDAL POSITION SENSOR

8W-31 TRANSMISSION CONTROL SYSTEM

Component	Page
Autostick Switch	8W-31-5
Battery	8W-31-2
Brake Transmission Shift Interlock Solenoid	8W-31-4
Crankshaft Position Sensor	8W-31-3
Data Link Connector	8W-31-8
Front Control Module	8W-31-4, 5, 8, 9
Fuse 15	8W-31-2, 6, 7
G100	8W-31-2
G101	8W-31-2
G103	8W-31-5, 9
G200	8W-31-5
Ignition Switch	8W-31-9
Input Speed Sensor	8W-31-5
Integrated Power Module	8W-31-2, 4, 5, 6, 7, 8, 9
Output Speed Sensor	8W-31-5
Park/Neutral Position Switch	8W-31-9
Powertrain Control Module	8W-31-3, 4, 8, 9
Solenoid/Pressure Switch Assy	8W-31-6, 7
Throttle Position Sensor	8W-31-3
Torque Converter Clutch Solenoid	8W-31-9
Transmission Control Module	8W-31-2, 3, 4, 5, 6, 7, 8
Transmission Control Relay	8W-31-2, 6, 7
Transmission Range Sensor	8W-31-4, 5

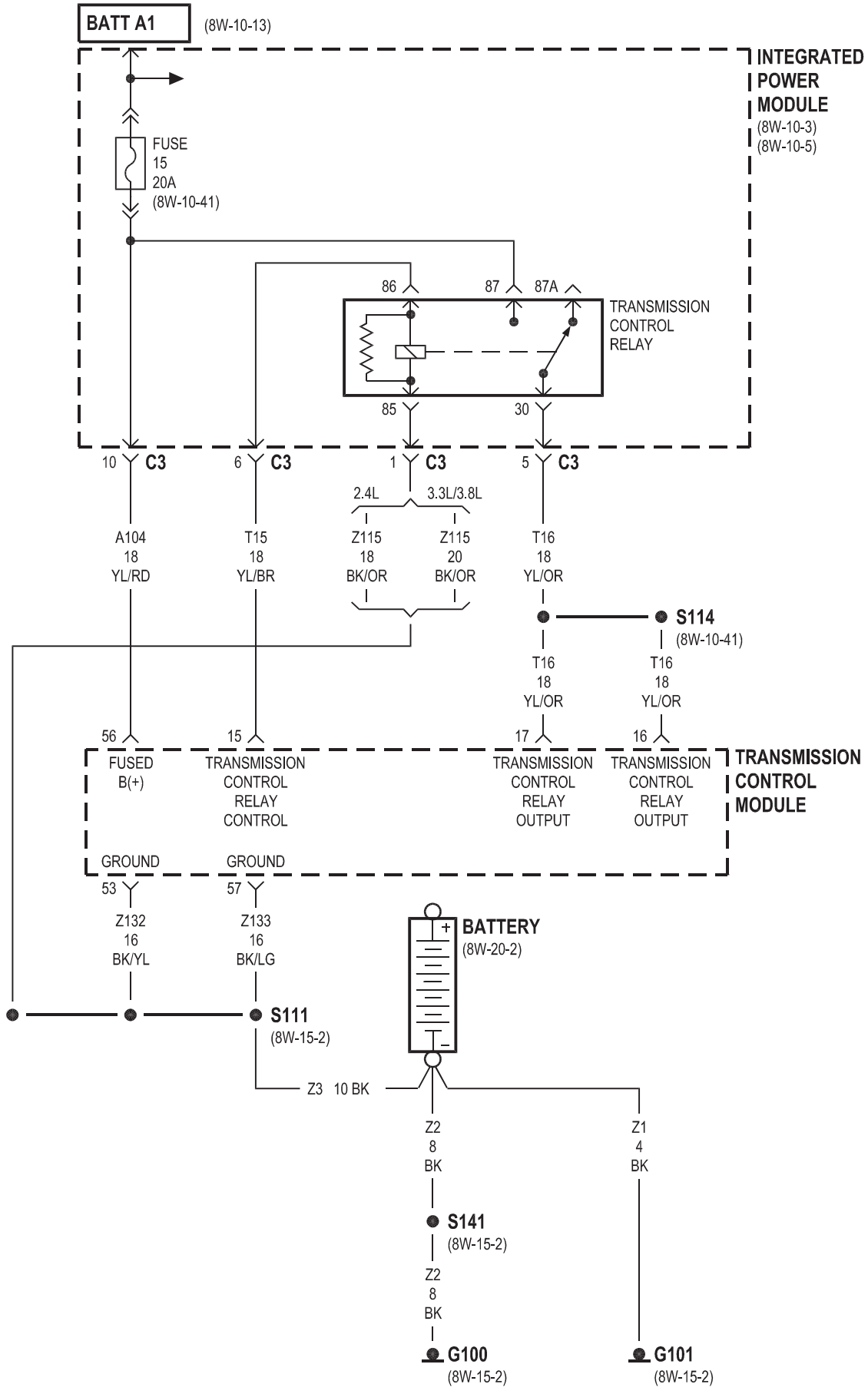
BATT A1
(8W-10-13)
INTEGRATED POWER MODULE
(8W-10-3)
(8W-10-5)
FUSE
15
20A
(8W-10-41)
86
87
87A
TRANSMISSION CONTROL RELAY
85
30
10 C3
6 C3
1 C3
5 C3
2.4L
3.3L/3.8L
A104
18
YL/RD
T15
18
YL/BR
Z115
18
BK/OR
Z115
20
BK/OR
T16
18
YL/OR
S114
(8W-10-41)
T16
18
YL/OR
T16
18
YL/OR
56
15
17
16
FUSED B(+)
TRANSMISSION CONTROL RELAY CONTROL
TRANSMISSION CONTROL RELAY OUTPUT
TRANSMISSION CONTROL RELAY OUTPUT
TRANSMISSION CONTROL MODULE
GROUND
GROUND
53
57
Z132
16
BK/YL
Z133
16
BK/LG
BATTERY
(8W-20-2)
S111
(8W-15-2)
Z3 10 BK
Z2
8
BK
Z1
4
BK
S141
(8W-15-2)
Z2
8
BK
G100
(8W-15-2)
G101
(8W-15-2)

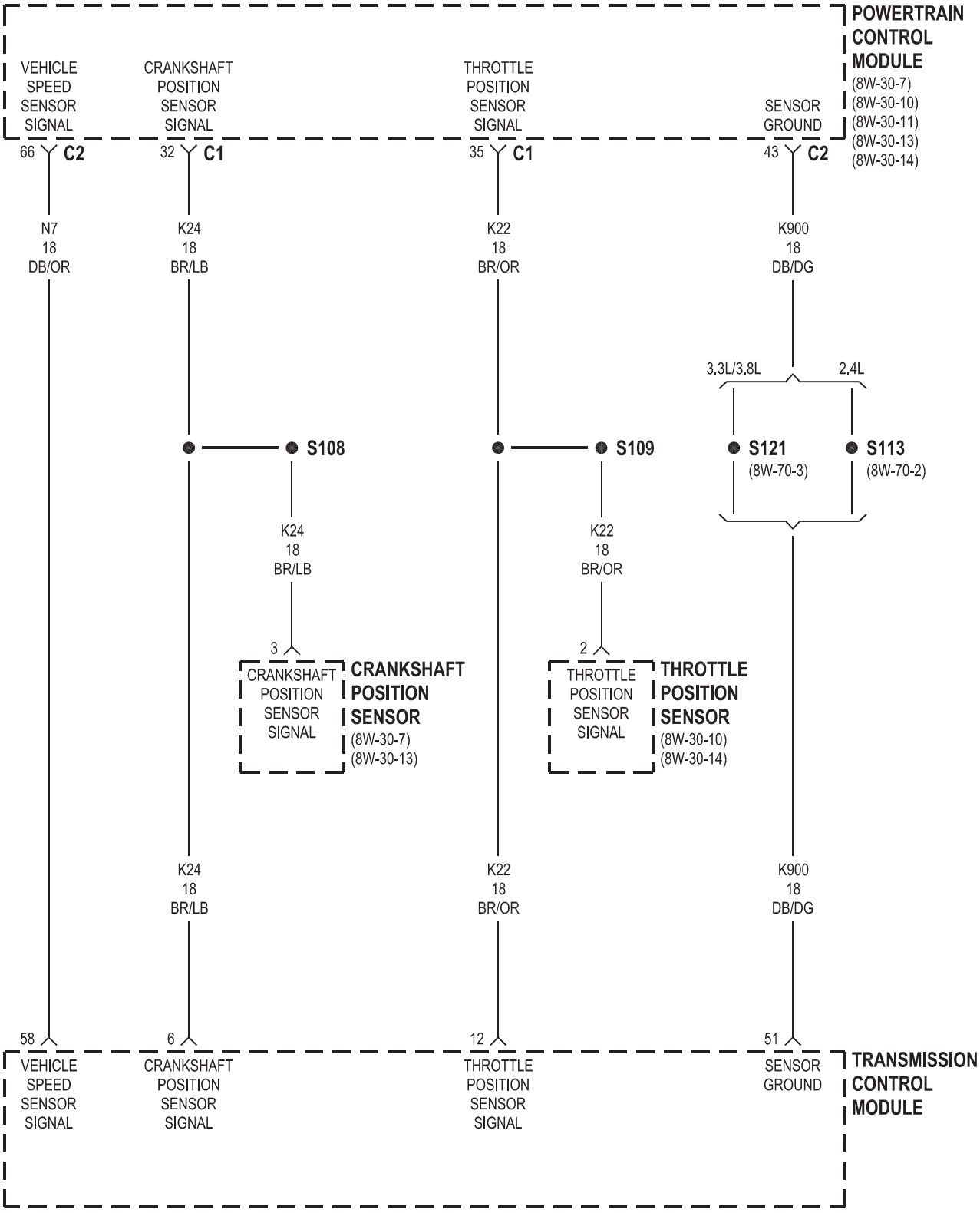
POWERTRAIN CONTROL MODULE
(8W-30-7)
(8W-30-10)
(8W-30-11)
(8W-30-13)
(8W-30-14)
VEHICLE SPEED SENSOR SIGNAL
CRANKSHAFT POSITION SENSOR SIGNAL
THROTTLE POSITION SENSOR SIGNAL
SENSOR GROUND
66 C2
32 C1
35 C1
43 C2
N7 18 DB/OR
K24 18 BR/LB
K22 18 BR/OR
K900 18 DB/DG
3.3L/3.8L
2.4L
S108
S109
S121
(8W-70-3)
S113
(8W-70-2)
K24 18 BR/LB
K22 18 BR/OR
3
2
CRANKSHAFT POSITION SENSOR SIGNAL
CRANKSHAFT POSITION SENSOR
(8W-30-7)
(8W-30-13)
THROTTLE POSITION SENSOR SIGNAL
THROTTLE POSITION SENSOR
(8W-30-10)
(8W-30-14)
K24 18 BR/LB
K22 18 BR/OR
K900 18 DB/DG
58
6
12
51
VEHICLE SPEED SENSOR SIGNAL
CRANKSHAFT POSITION SENSOR SIGNAL
THROTTLE POSITION SENSOR SIGNAL
SENSOR GROUND
TRANSMISSION CONTROL MODULE

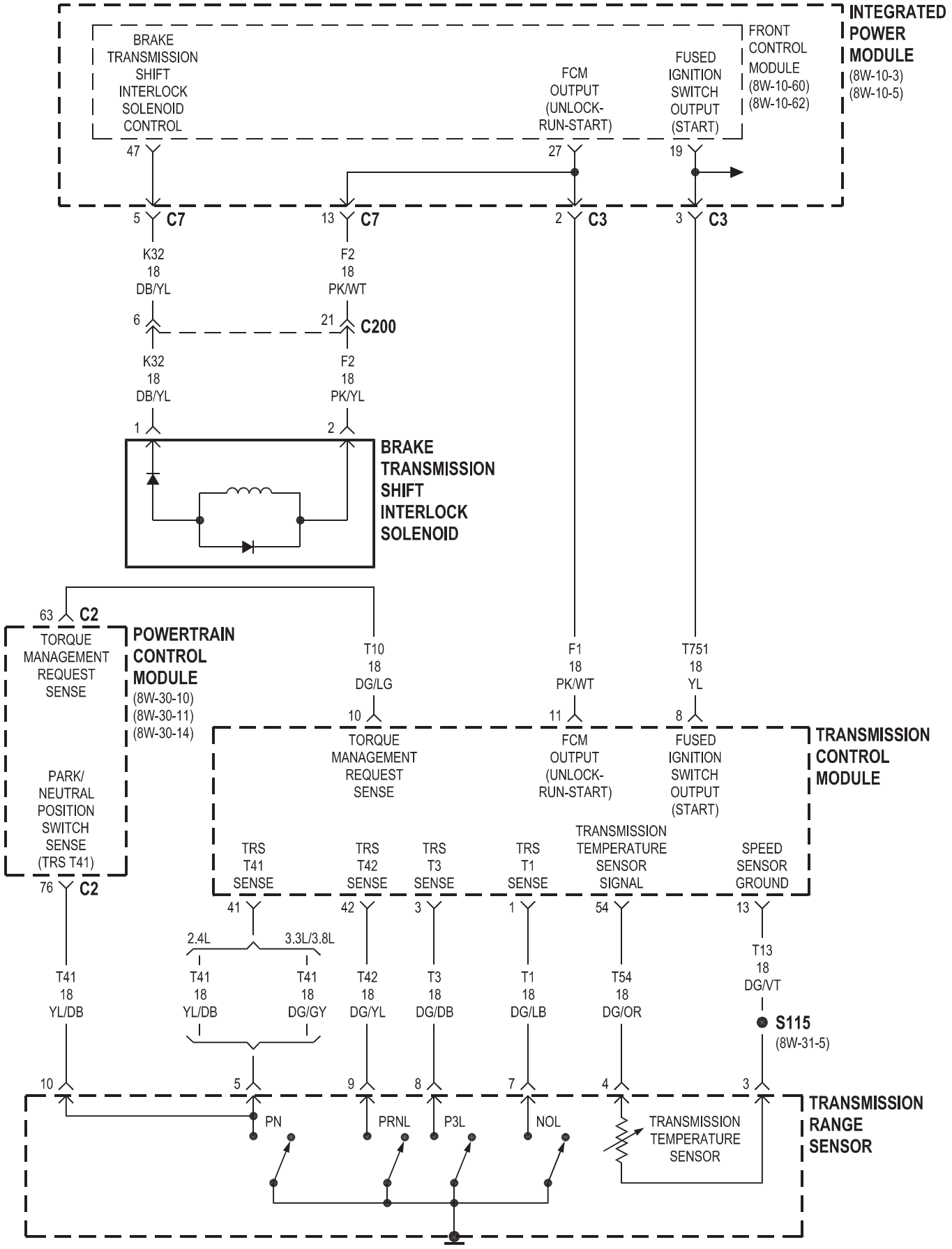
INTEGRATED POWER MODULE
(8W-10-3)
(8W-10-5)
BRAKE TRANSMISSION SHIFT INTERLOCK SOLENOID CONTROL
FRONT CONTROL MODULE
(8W-10-60)
(8W-10-62)
FCM OUTPUT (UNLOCK-RUN-START)
FUSED IGNITION SWITCH OUTPUT (START)
47
27
19
5 C7
13 C7
2 C3
3 C3
K32 18 DB/YL
F2 18 PK/WT
6
21 C200
K32 18 DB/YL
F2 18 PK/YL
1
2
BRAKE TRANSMISSION SHIFT INTERLOCK SOLENOID
63 C2
POWERTRAIN CONTROL MODULE
(8W-30-10)
(8W-30-11)
(8W-30-14)
TORQUE MANAGEMENT REQUEST SENSE
T10 18 DG/LG
F1 18 PK/WT
T751 18 YL
10
11
8
TRANSMISSION CONTROL MODULE
TORQUE MANAGEMENT REQUEST SENSE
FCM OUTPUT (UNLOCK-RUN-START)
FUSED IGNITION SWITCH OUTPUT (START)
PARK/ NEUTRAL POSITION SWITCH SENSE (TRS T41)
76 C2
TRS T41 SENSE
TRS T42 SENSE
TRS T3 SENSE
TRS T1 SENSE
TRANSMISSION TEMPERATURE SENSOR SIGNAL
SPEED SENSOR GROUND
41
42
3
1
54
13
2.4L
3.3L/3.8L
T41 18 YL/DB
T41 18 YL/DB
T41 18 DG/GY
T42 18 DG/YL
T3 18 DG/DB
T1 18 DG/LB
T54 18 DG/OR
T13 18 DG/VT
S115
(8W-31-5)
10
5
9
8
7
4
3
PN
PRNL
P3L
NOL
TRANSMISSION TEMPERATURE SENSOR
TRANSMISSION RANGE SENSOR

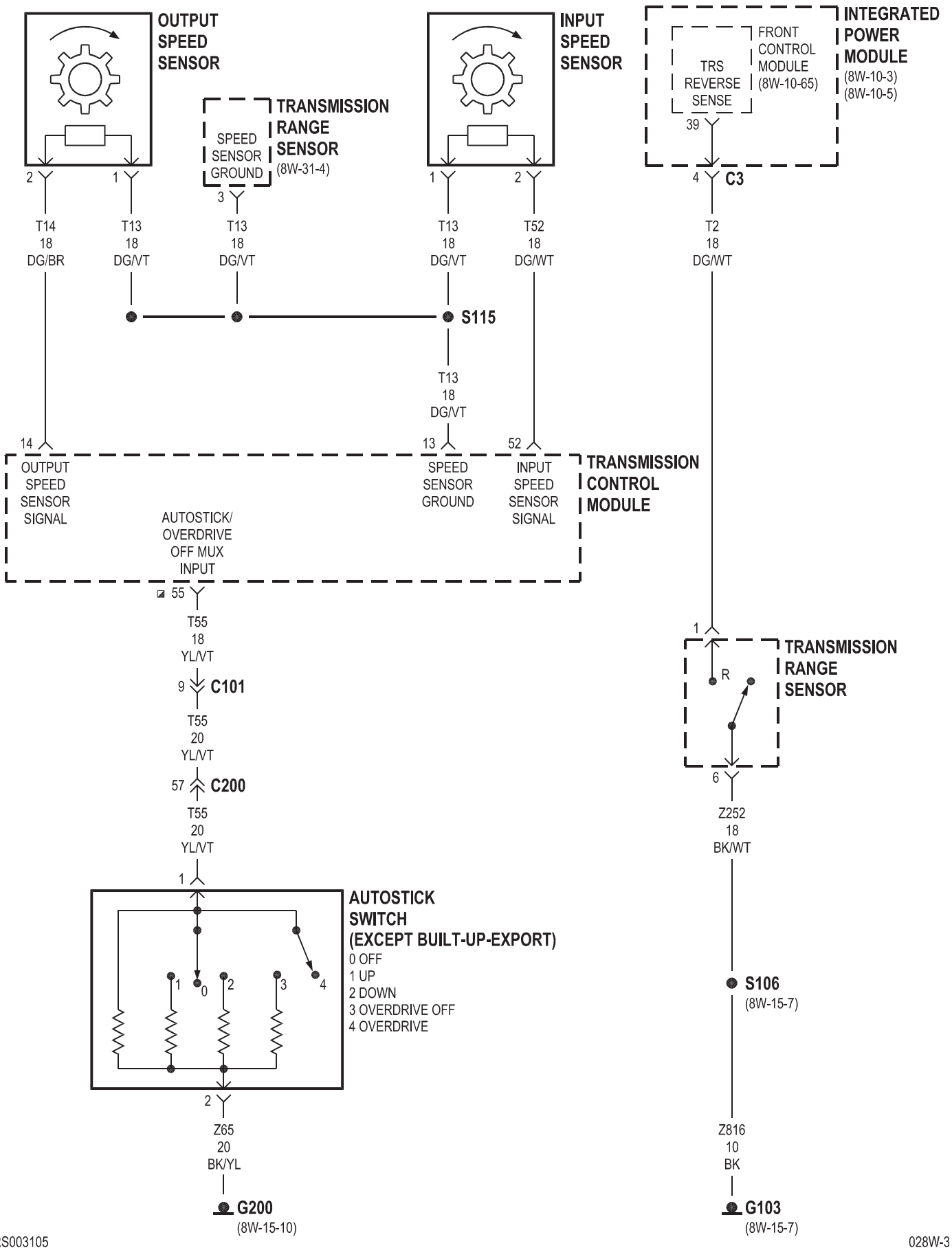
OUTPUT SPEED SENSOR
2
1
T14 18 DG/BR
T13 18 DG/VT
SPEED SENSOR GROUND
3
TRANSMISSION RANGE SENSOR
(8W-31-4)
T13 18 DG/VT
INPUT SPEED SENSOR
1
2
T13 18 DG/VT
T52 18 DG/WT
INTEGRATED POWER MODULE
(8W-10-3)
(8W-10-5)
TRS REVERSE SENSE
FRONT CONTROL MODULE
(8W-10-65)
39
4
C3
T2 18 DG/WT
S115
T13 18 DG/VT
14
13
52
OUTPUT SPEED SENSOR SIGNAL
SPEED SENSOR GROUND
INPUT SPEED SENSOR SIGNAL
TRANSMISSION CONTROL MODULE
AUTOSTICK/ OVERDRIVE OFF MUX INPUT
55
T55 18 YL/VT
9
C101
T55 20 YL/VT
57
C200
T55 20 YL/VT
1
AUTOSTICK SWITCH (EXCEPT BUILT-UP-EXPORT)
0 OFF
1 UP
2 DOWN
3 OVERDRIVE OFF
4 OVERDRIVE
2
Z65 20 BK/YL
G200
(8W-15-10)
1
R
6
TRANSMISSION RANGE SENSOR
Z252 18 BK/WT
S106
(8W-15-7)
Z816 10 BK
G103
(8W-15-7)

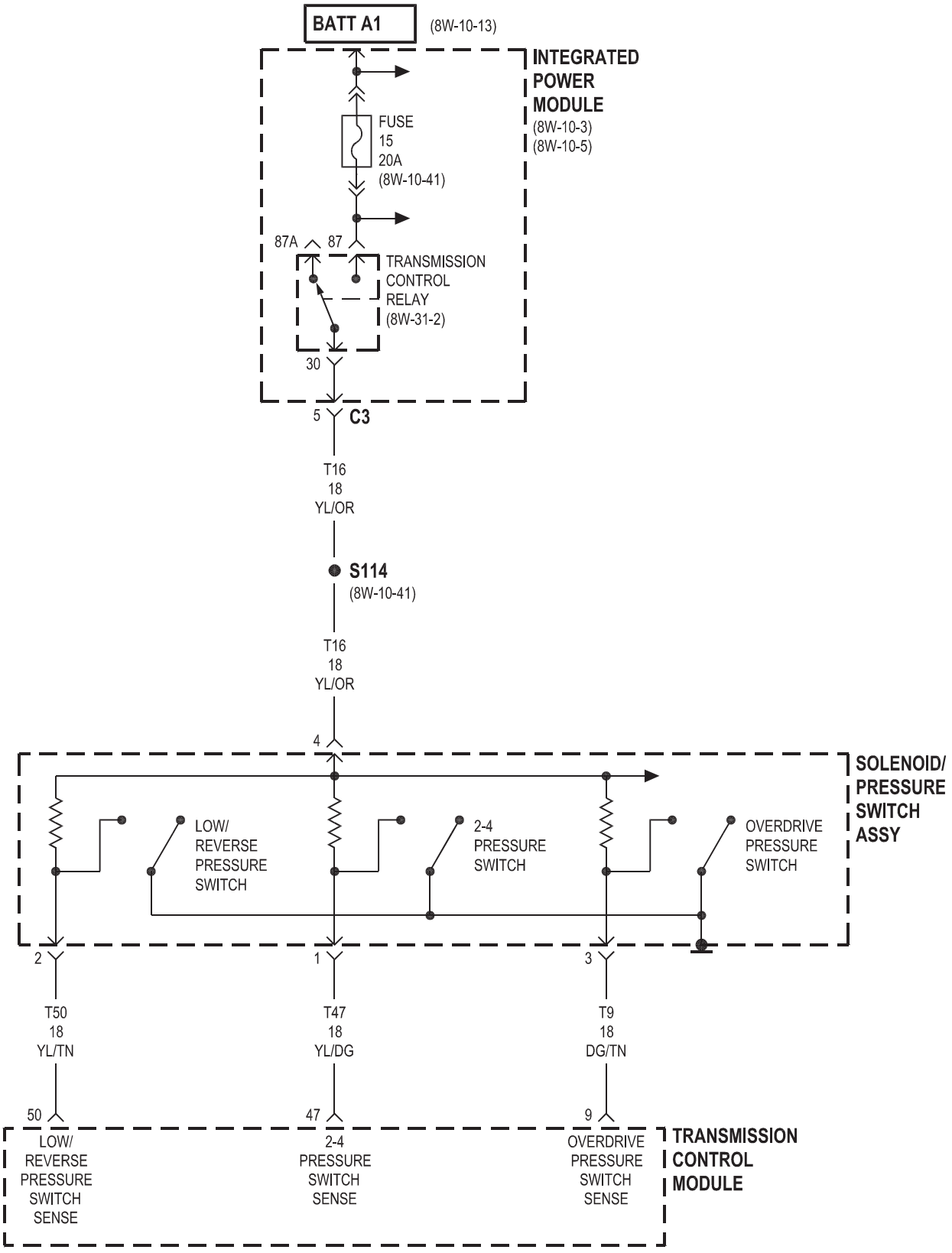
BATT A1
(8W-10-13)
INTEGRATED POWER MODULE
(8W-10-3)
(8W-10-5)
FUSE 15 20A
(8W-10-41)
87A
87
TRANSMISSION CONTROL RELAY
(8W-31-2)
30
5
C3
T16 18 YL/OR
S114
(8W-10-41)
T16 18 YL/OR
4
SOLENOID/ PRESSURE SWITCH ASSY
LOW/ REVERSE PRESSURE SWITCH
2-4 PRESSURE SWITCH
OVERDRIVE PRESSURE SWITCH
2
1
3
T50 18 YL/TN
T47 18 YL/DG
T9 18 DG/TN
50
47
9
LOW/ REVERSE PRESSURE SWITCH SENSE
2-4 PRESSURE SWITCH SENSE
OVERDRIVE PRESSURE SWITCH SENSE
TRANSMISSION CONTROL MODULE

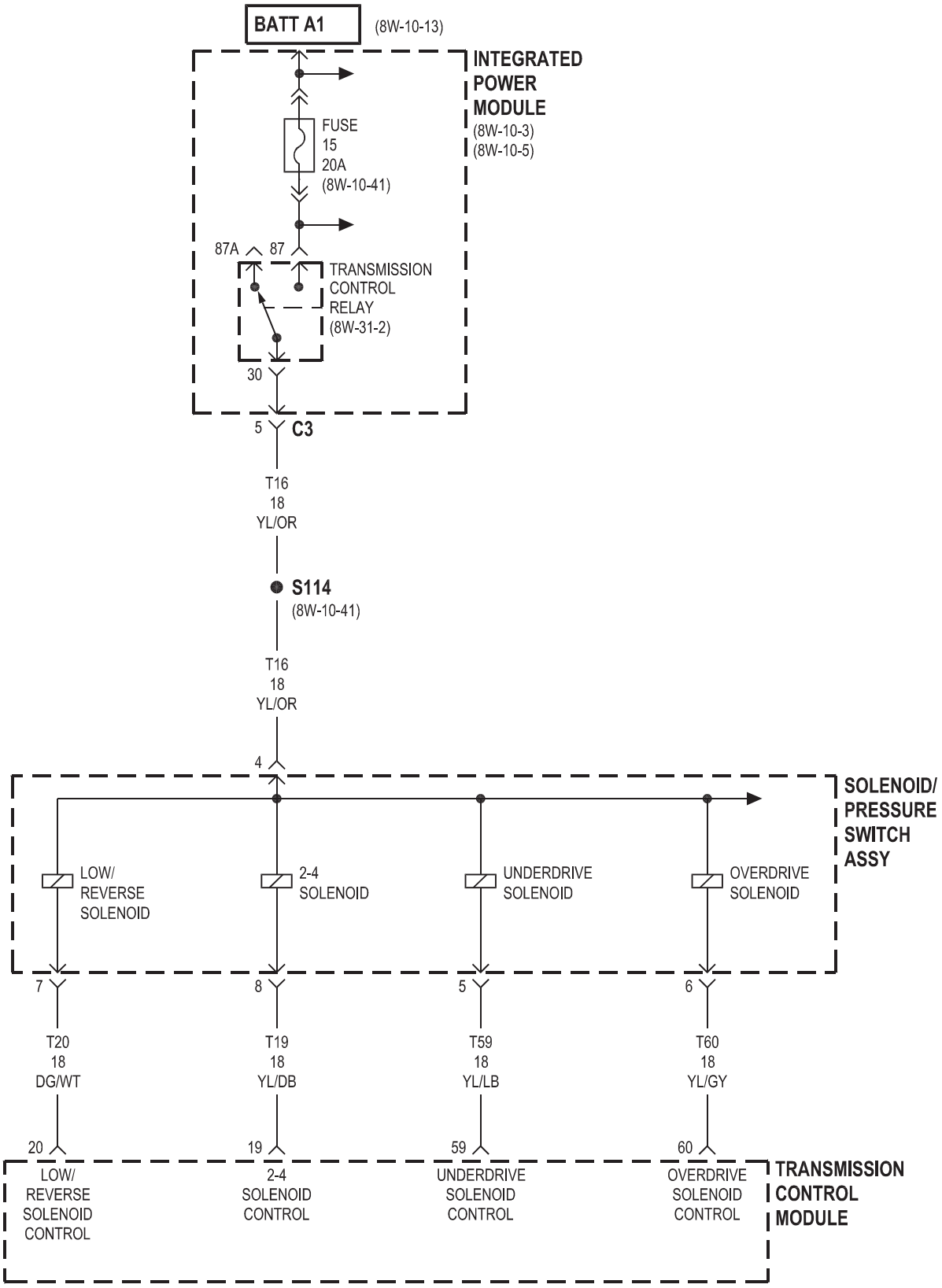
BATT A1
(8W-10-13)
INTEGRATED POWER MODULE
(8W-10-3)
(8W-10-5)
FUSE 15 20A
(8W-10-41)
87A
87
TRANSMISSION CONTROL RELAY
(8W-31-2)
30
5
C3
T16 18 YL/OR
S114
(8W-10-41)
T16 18 YL/OR
4
SOLENOID/ PRESSURE SWITCH ASSY
LOW/ REVERSE SOLENOID
2-4 SOLENOID
UNDERDRIVE SOLENOID
OVERDRIVE SOLENOID
7
8
5
6
T20 18 DG/WT
T19 18 YL/DB
T59 18 YL/LB
T60 18 YL/GY
20
19
59
60
LOW/ REVERSE SOLENOID CONTROL
2-4 SOLENOID CONTROL
UNDERDRIVE SOLENOID CONTROL
OVERDRIVE SOLENOID CONTROL
TRANSMISSION CONTROL MODULE

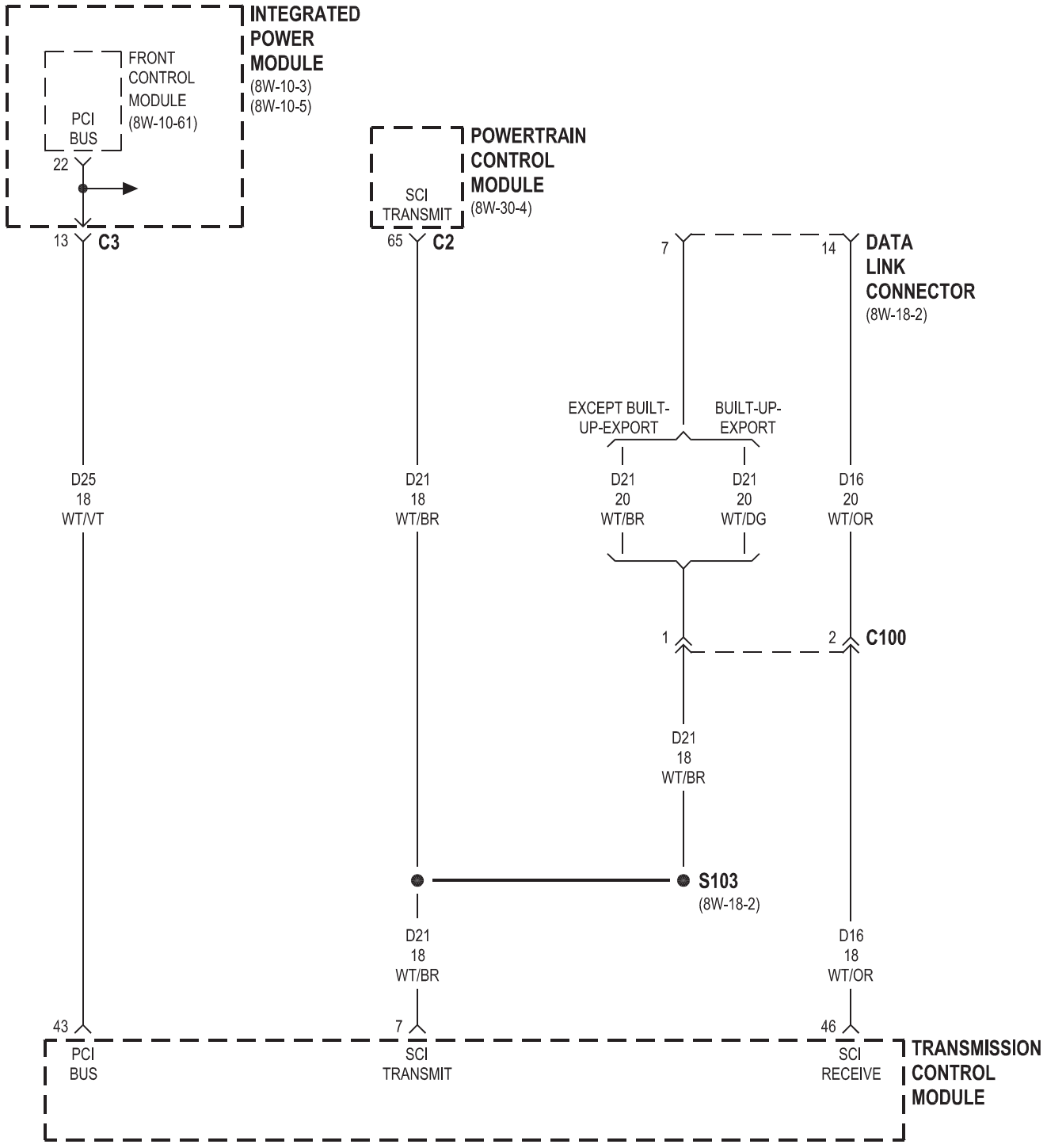
INTEGRATED POWER MODULE
(8W-10-3)
(8W-10-5)
FRONT CONTROL MODULE
(8W-10-61)
PCI BUS
22
13 C3
POWERTRAIN CONTROL MODULE
(8W-30-4)
SCI TRANSMIT
65 C2
7
14 DATA LINK CONNECTOR
(8W-18-2)
EXCEPT BUILT-UP-EXPORT
BUILT-UP-EXPORT
D25 18 WT/VT
D21 18 WT/BR
D21 20 WT/BR
D21 20 WT/DG
D16 20 WT/OR
1
2 C100
D21 18 WT/BR
S103
(8W-18-2)
D21 18 WT/BR
D16 18 WT/OR
43
7
46
PCI BUS
SCI TRANSMIT
SCI RECEIVE
TRANSMISSION CONTROL MODULE

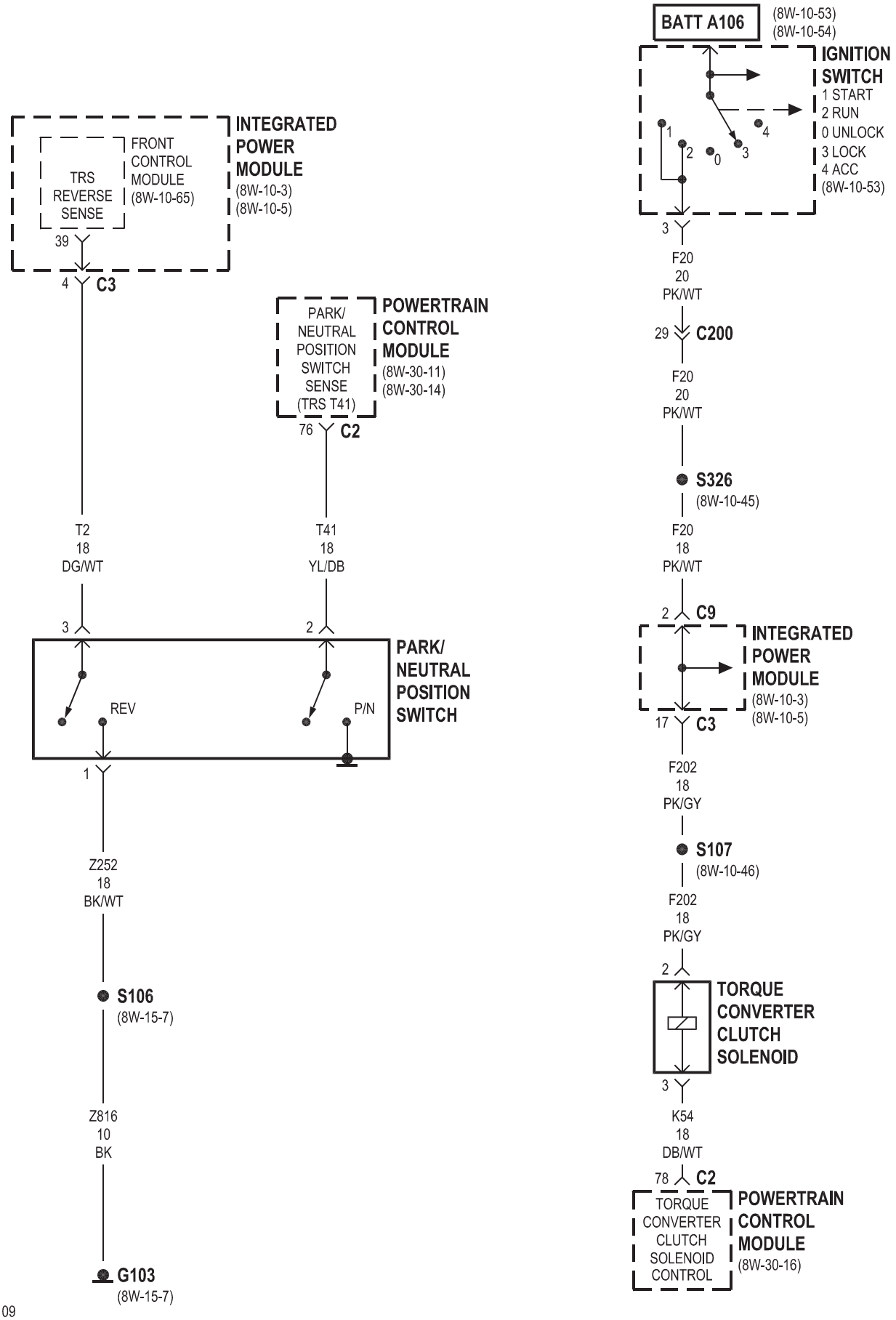
BATT A106
(8W-10-53)
(8W-10-54)
IGNITION SWITCH
1 START
2 RUN
0 UNLOCK
3 LOCK
4 ACC
(8W-10-53)
1
2
0
3
4
3
F20
20
PK/WT
29
C200
F20
20
PK/WT
S326
(8W-10-45)
F20
18
PK/WT
2
C9
INTEGRATED POWER MODULE
(8W-10-3)
(8W-10-5)
17
C3
F202
18
PK/GY
S107
(8W-10-46)
F202
18
PK/GY
2
TORQUE CONVERTER CLUTCH SOLENOID
3
K54
18
DB/WT
78
C2
TORQUE CONVERTER CLUTCH SOLENOID CONTROL
POWERTRAIN CONTROL MODULE
(8W-30-16)
INTEGRATED POWER MODULE
(8W-10-3)
(8W-10-5)
FRONT CONTROL MODULE
(8W-10-65)
TRS REVERSE SENSE
39
4
C3
T2
18
DG/WT
3
PARK/ NEUTRAL POSITION SWITCH SENSE (TRS T41)
76
C2
T41
18
YL/DB
2
PARK/ NEUTRAL POSITION SWITCH
REV
P/N
1
Z252
18
BK/WT
S106
(8W-15-7)
Z816
10
BK
G103
(8W-15-7)

8W-33 VEHICLE SPEED CONTROL

Component	Page
Brake Lamp Switch	8W-33-3
Clockspring	8W-33-2, 4
Clutch Pedal Upstop Switch	8W-33-4
Engine Control Module	8W-33-4
G103	8W-33-3
G300	8W-33-4
Left Speed Control Switch	8W-33-2, 4
Powertrain Control Module	8W-33-2, 3
Right Speed Control Switch	8W-33-2, 4
Speed Control Servo	8W-33-3
Transmission Control Module	8W-33-2
Vehicle Speed Sensor	8W-33-2, 4

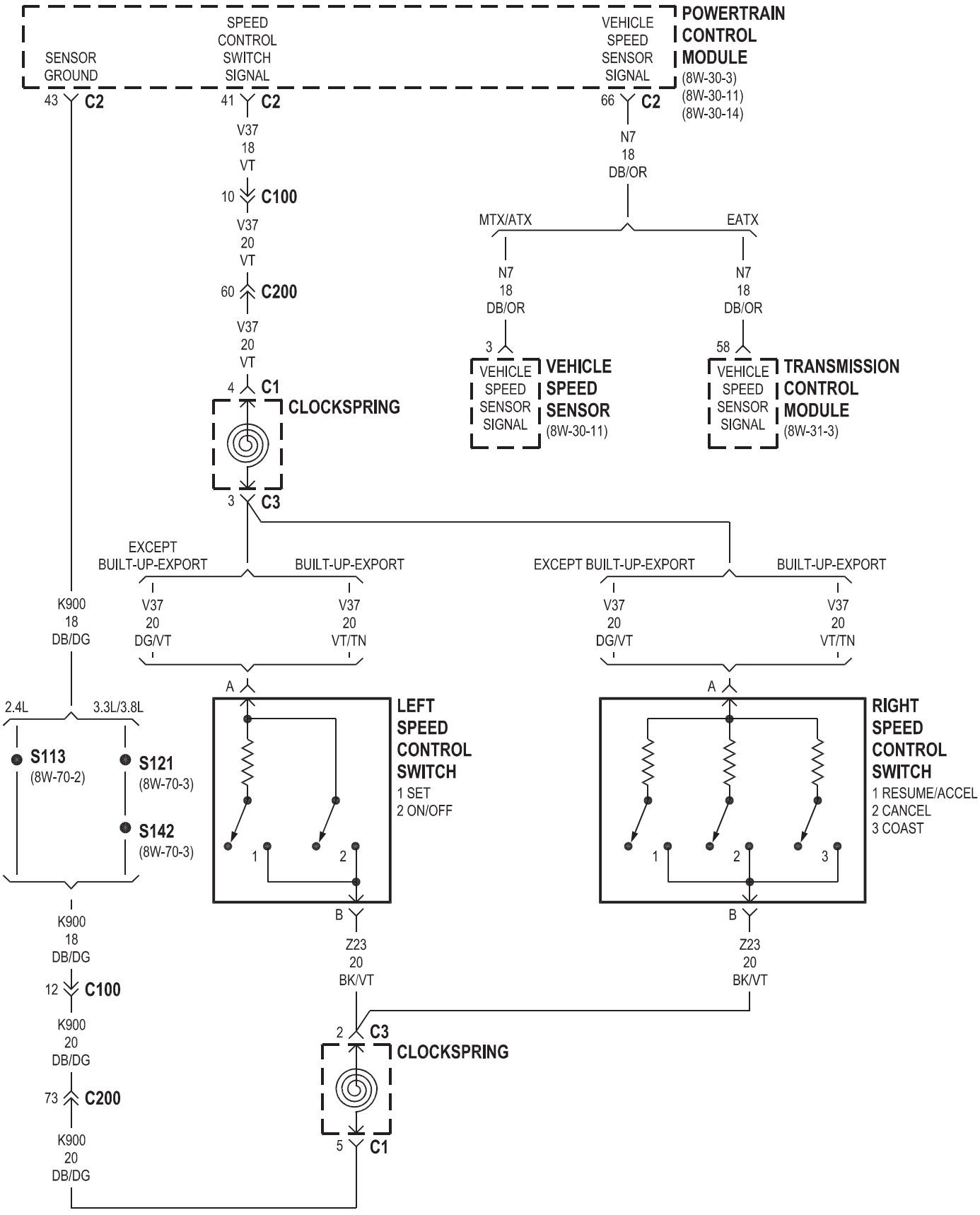
POWERTRAIN CONTROL MODULE
(8W-30-3)
(8W-30-11)
(8W-30-14)
SENSOR GROUND
SPEED CONTROL SWITCH SIGNAL
VEHICLE SPEED SENSOR SIGNAL
43 C2
41 C2
66 C2
V37 18 VT
10 C100
V37 20 VT
60 C200
V37 20 VT
4 C1
CLOCKSPRING
3 C3
N7 18 DB/OR
MTX/ATX
EATX
N7 18 DB/OR
N7 18 DB/OR
3
58
VEHICLE SPEED SENSOR SIGNAL
VEHICLE SPEED SENSOR
(8W-30-11)
VEHICLE SPEED SENSOR SIGNAL
TRANSMISSION CONTROL MODULE
(8W-31-3)
EXCEPT BUILT-UP-EXPORT
BUILT-UP-EXPORT
EXCEPT BUILT-UP-EXPORT
BUILT-UP-EXPORT
K900 18 DB/DG
V37 20 DG/VT
V37 20 VT/TN
V37 20 DG/VT
V37 20 VT/TN
A
A
2.4L
3.3L/3.8L
S113
(8W-70-2)
S121
(8W-70-3)
S142
(8W-70-3)
LEFT SPEED CONTROL SWITCH
1 SET
2 ON/OFF
RIGHT SPEED CONTROL SWITCH
1 RESUME/ACCEL
2 CANCEL
3 COAST
1
2
1
2
3
B
B
K900 18 DB/DG
Z23 20 BK/VT
Z23 20 BK/VT
12 C100
K900 20 DB/DG
2 C3
CLOCKSPRING
73 C200
K900 20 DB/DG
5 C1
K900 20 DB/DG

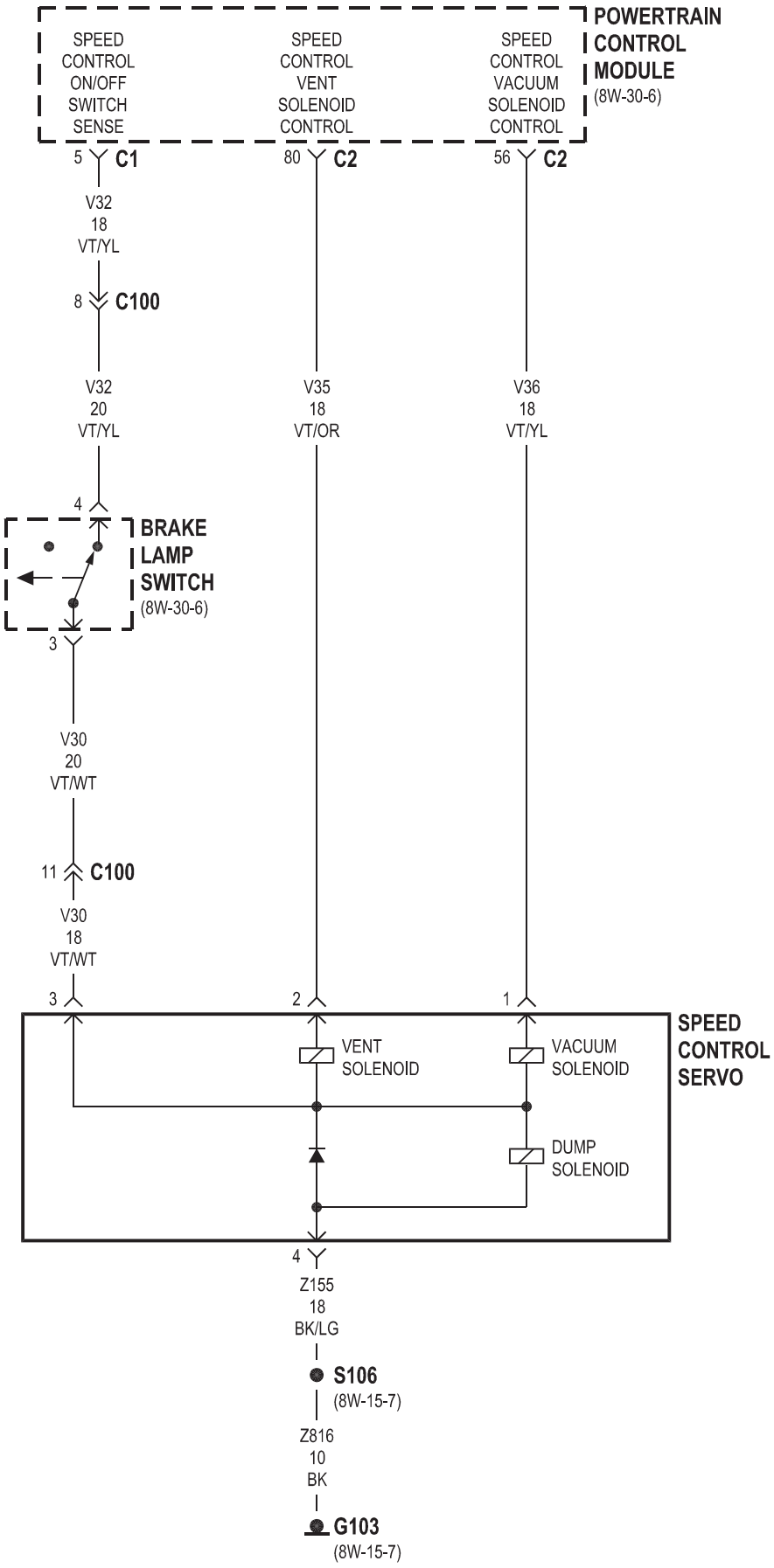
POWERTRAIN CONTROL MODULE
(8W-30-6)
SPEED CONTROL ON/OFF SWITCH SENSE
SPEED CONTROL VENT SOLENOID CONTROL
SPEED CONTROL VACUUM SOLENOID CONTROL
5 C1
80 C2
56 C2
V32 18 VT/YL
8 C100
V32 20 VT/YL
V35 18 VT/OR
V36 18 VT/YL
4
BRAKE LAMP SWITCH
(8W-30-6)
3
V30 20 VT/WT
11 C100
V30 18 VT/WT
3
2
1
SPEED CONTROL SERVO
VENT SOLENOID
VACUUM SOLENOID
DUMP SOLENOID
4
Z155 18 BK/LG
S106
(8W-15-7)
Z816 10 BK
G103
(8W-15-7)

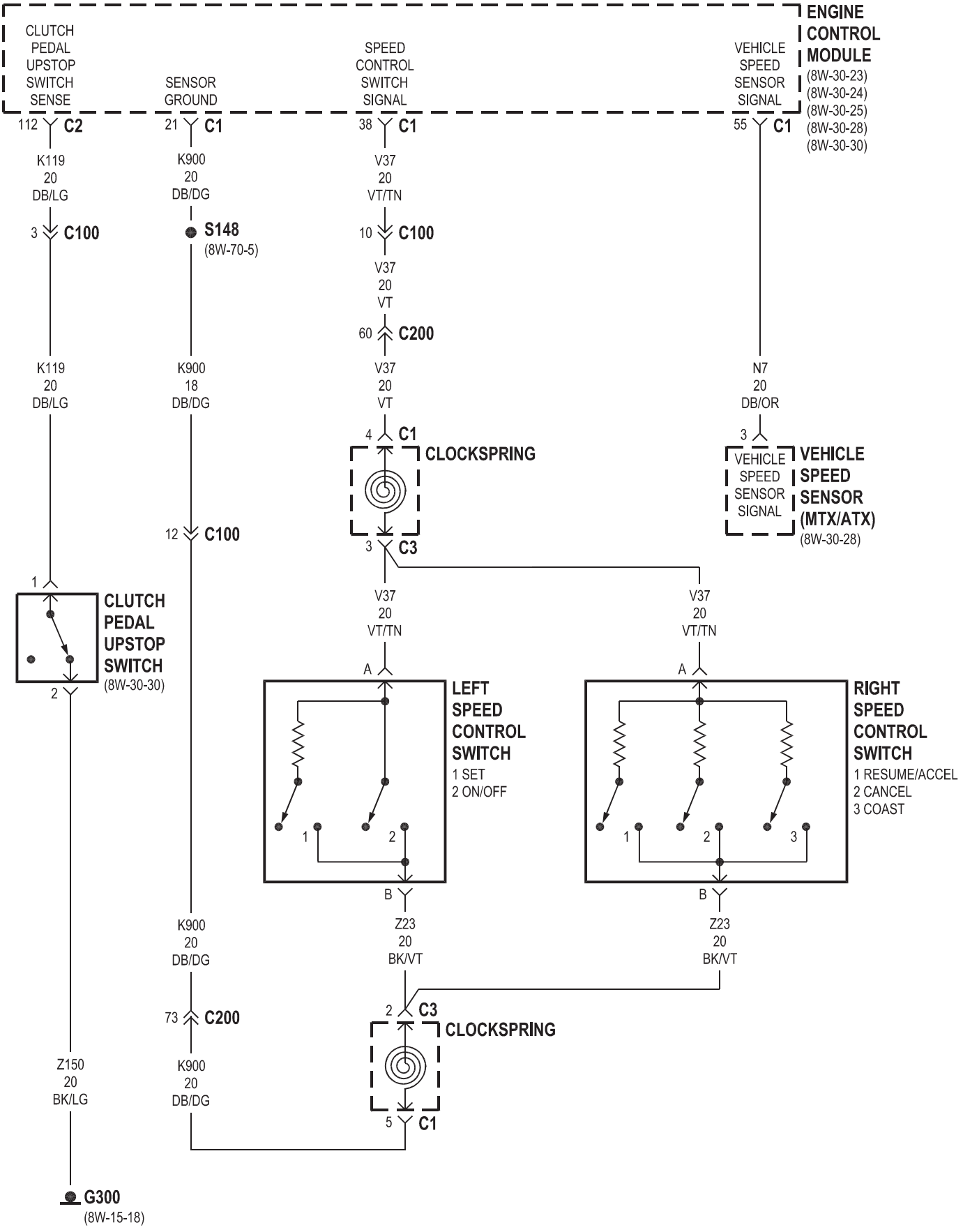
ENGINE CONTROL MODULE
(8W-30-23)
(8W-30-24)
(8W-30-25)
(8W-30-28)
(8W-30-30)
CLUTCH PEDAL UPSTOP SWITCH SENSE
SENSOR GROUND
SPEED CONTROL SWITCH SIGNAL
VEHICLE SPEED SENSOR SIGNAL
112 C2
21 C1
38 C1
55 C1
K119 20 DB/LG
K900 20 DB/DG
V37 20 VT/TN
3 C100
S148
(8W-70-5)
10 C100
V37 20 VT
60 C200
K119 20 DB/LG
K900 18 DB/DG
V37 20 VT
N7 20 DB/OR
4 C1
CLOCKSPRING
3
VEHICLE SPEED SENSOR SIGNAL
VEHICLE SPEED SENSOR (MTX/ATX)
(8W-30-28)
12 C100
3 C3
1
CLUTCH PEDAL UPSTOP SWITCH
(8W-30-30)
V37 20 VT/TN
V37 20 VT/TN
A
A
LEFT SPEED CONTROL SWITCH
1 SET
2 ON/OFF
RIGHT SPEED CONTROL SWITCH
1 RESUME/ACCEL
2 CANCEL
3 COAST
1 2
1 2 3
2
B
B
K900 20 DB/DG
Z23 20 BK/VT
Z23 20 BK/VT
73 C200
2 C3
CLOCKSPRING
Z150 20 BK/LG
K900 20 DB/DG
5 C1
G300
(8W-15-18)

8W-35 ANTILOCK BRAKES

Component	Page
Body Control Module	8W-35-2
Brake Lamp Switch	8W-35-3
Controller Antilock Brake	8W-35-2, 3, 4
Diagnostic Junction Port	8W-35-3
Engine Control Module	8W-35-3
Front Control Module	8W-35-3
Fuse 9	8W-35-2
Fuse 21	8W-35-2
Fuse 26	8W-35-3
G100	8W-35-2
G200	8W-35-2
G300	8W-35-3
Integrated Power Module	8W-35-2, 3
Left Front Wheel Speed Sensor	8W-35-4
Left Rear Wheel Speed Sensor	8W-35-4
Powertrain Control Module	8W-35-3
Right Front Wheel Speed Sensor	8W-35-4
Right Rear Wheel Speed Sensor	8W-35-4
Traction Control Switch	8W-35-2

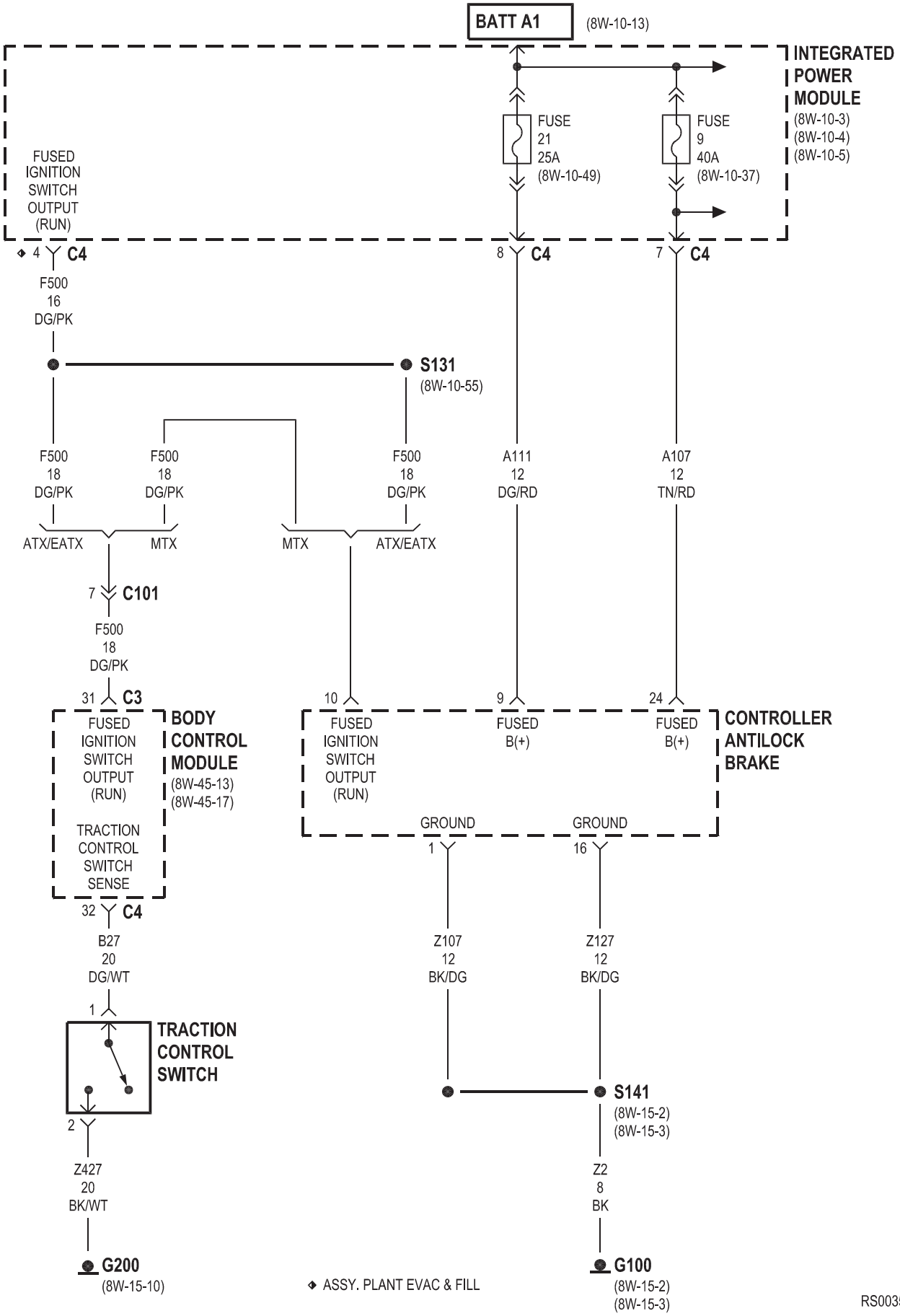
BATT A1
(8W-10-13)
INTEGRATED POWER MODULE
(8W-10-3)
(8W-10-4)
(8W-10-5)
FUSE 21 25A (8W-10-49)
FUSE 9 40A (8W-10-37)
FUSED IGNITION SWITCH OUTPUT (RUN)
◆ 4 C4
8 C4
7 C4
F500 16 DG/PK
S131
(8W-10-55)
F500 18 DG/PK
F500 18 DG/PK
F500 18 DG/PK
A111 12 DG/RD
A107 12 TN/RD
ATX/EATX
MTX
MTX
ATX/EATX
7 C101
F500 18 DG/PK
31 C3
10
9
24
BODY CONTROL MODULE
(8W-45-13)
(8W-45-17)
FUSED IGNITION SWITCH OUTPUT (RUN)
TRACTION CONTROL SWITCH SENSE
FUSED IGNITION SWITCH OUTPUT (RUN)
FUSED B(+)
FUSED B(+)
CONTROLLER ANTILOCK BRAKE
GROUND
GROUND
1
16
32 C4
B27 20 DG/WT
Z107 12 BK/DG
Z127 12 BK/DG
1
TRACTION CONTROL SWITCH
S141
(8W-15-2)
(8W-15-3)
2
Z427 20 BK/WT
Z2 8 BK
G200
(8W-15-10)
◆ ASSY. PLANT EVAC & FILL
G100
(8W-15-2)
(8W-15-3)

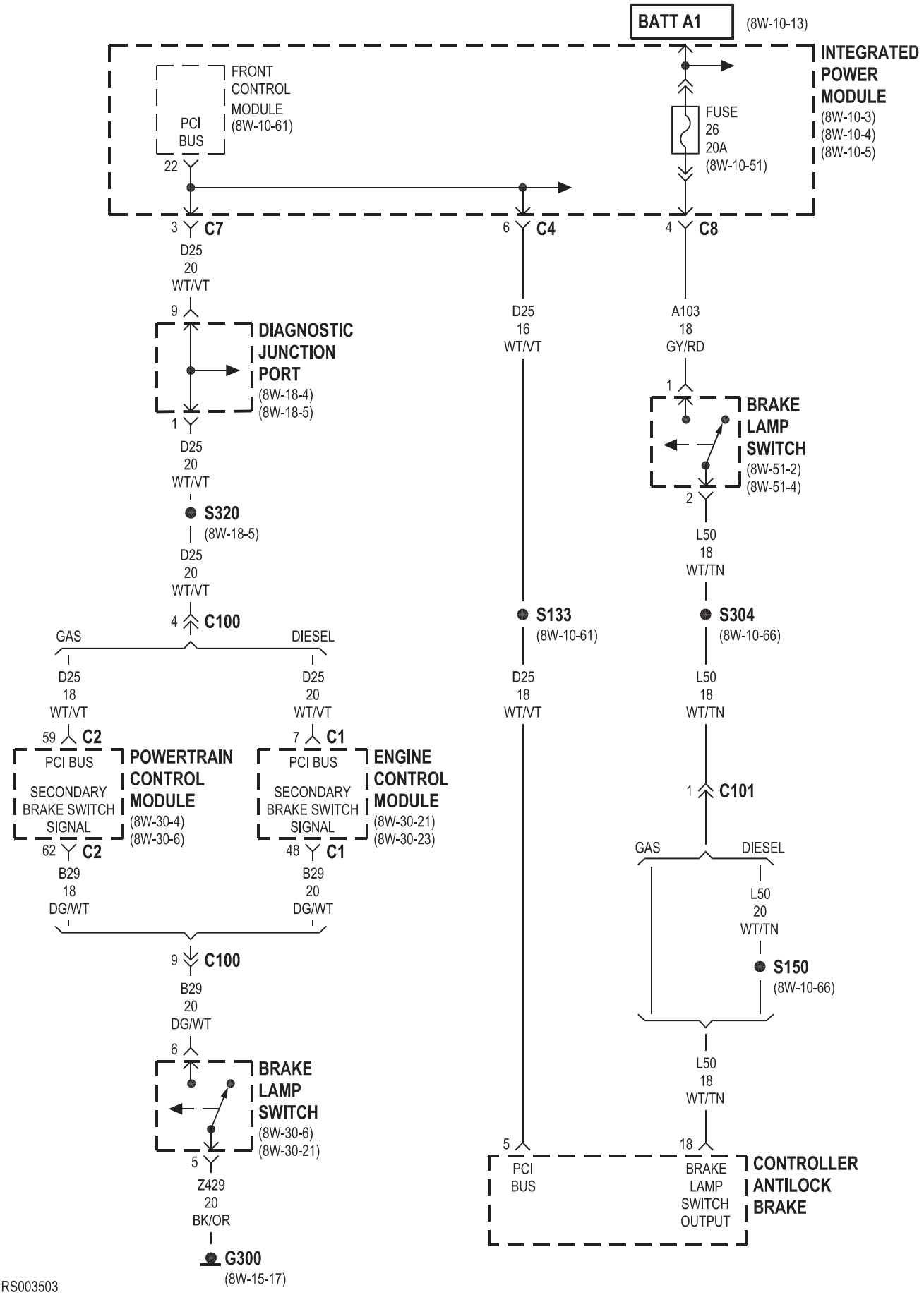
BATT A1
(8W-10-13)
INTEGRATED POWER MODULE
(8W-10-3)
(8W-10-4)
(8W-10-5)
FRONT CONTROL MODULE
(8W-10-61)
PCI BUS
22
FUSE 26 20A
(8W-10-51)
3 C7
6 C4
4 C8
D25 20 WT/VT
9
DIAGNOSTIC JUNCTION PORT
(8W-18-4)
(8W-18-5)
1
D25 20 WT/VT
S320
(8W-18-5)
D25 20 WT/VT
4 C100
D25 16 WT/VT
A103 18 GY/RD
1
BRAKE LAMP SWITCH
(8W-51-2)
(8W-51-4)
2
L50 18 WT/TN
S133
(8W-10-61)
S304
(8W-10-66)
GAS
DIESEL
D25 18 WT/VT
D25 20 WT/VT
D25 18 WT/VT
L50 18 WT/TN
59 C2
PCI BUS
SECONDARY BRAKE SWITCH SIGNAL
62 C2
POWERTRAIN CONTROL MODULE
(8W-30-4)
(8W-30-6)
7 C1
PCI BUS
SECONDARY BRAKE SWITCH SIGNAL
48 C1
ENGINE CONTROL MODULE
(8W-30-21)
(8W-30-23)
1 C101
GAS
DIESEL
B29 18 DG/WT
B29 20 DG/WT
L50 20 WT/TN
S150
(8W-10-66)
9 C100
B29 20 DG/WT
L50 18 WT/TN
6
BRAKE LAMP SWITCH
(8W-30-6)
(8W-30-21)
5
Z429 20 BK/OR
G300
(8W-15-17)
5
18
PCI BUS
BRAKE LAMP SWITCH OUTPUT
CONTROLLER ANTILOCK BRAKE

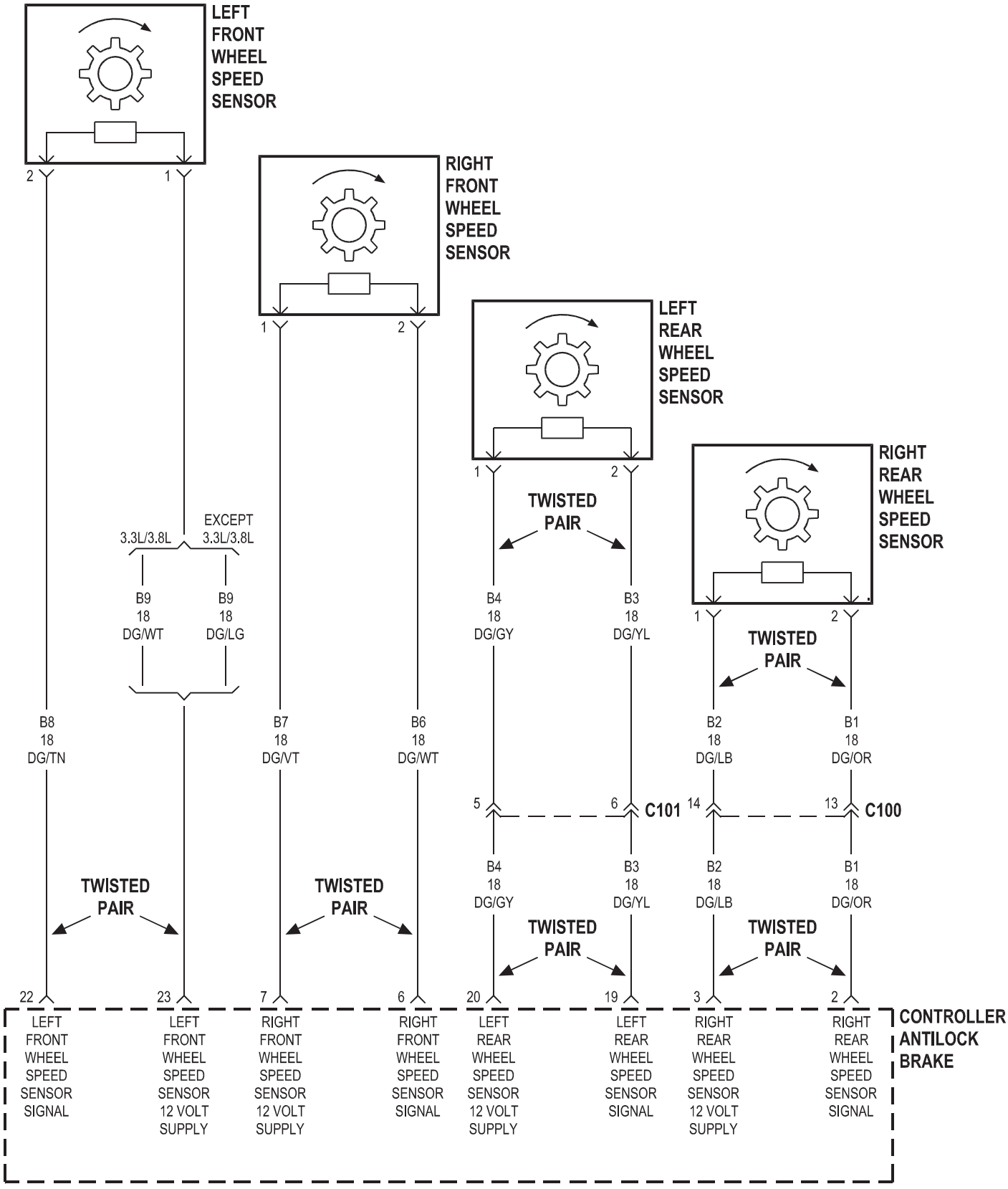
LEFT FRONT WHEEL SPEED SENSOR
2
1
RIGHT FRONT WHEEL SPEED SENSOR
1
2
LEFT REAR WHEEL SPEED SENSOR
1
2
RIGHT REAR WHEEL SPEED SENSOR
1
2
TWISTED PAIR
EXCEPT 3.3L/3.8L
3.3L/3.8L
B9 18 DG/WT
B9 18 DG/LG
B4 18 DG/GY
B3 18 DG/YL
TWISTED PAIR
B2 18 DG/LB
B1 18 DG/OR
B8 18 DG/TN
B7 18 DG/VT
B6 18 DG/WT
5
6
C101
14
13
C100
B4 18 DG/GY
B3 18 DG/YL
B2 18 DG/LB
B1 18 DG/OR
TWISTED PAIR
TWISTED PAIR
TWISTED PAIR
TWISTED PAIR
22
23
7
6
20
19
3
2
LEFT FRONT WHEEL SPEED SENSOR SIGNAL
LEFT FRONT WHEEL SPEED SENSOR 12 VOLT SUPPLY
RIGHT FRONT WHEEL SPEED SENSOR 12 VOLT SUPPLY
RIGHT FRONT WHEEL SPEED SENSOR SIGNAL
LEFT REAR WHEEL SPEED SENSOR 12 VOLT SUPPLY
LEFT REAR WHEEL SPEED SENSOR SIGNAL
RIGHT REAR WHEEL SPEED SENSOR 12 VOLT SUPPLY
RIGHT REAR WHEEL SPEED SENSOR SIGNAL
CONTROLLER ANTILOCK BRAKE

8W-39 VEHICLE THEFT SECURITY SYSTEM

Component	Page
Body Control Module	8W-39-2, 4, 7, 8, 9, 10, 11, 12, 13, 14, 15
Clockspring	8W-39-6
Data Link Connector	8W-39-4
Diagnostic Junction Port	8W-39-4
Driver Door Lock Switch	8W-39-12, 13
Engine Control Module	8W-39-3
Front Control Module	8W-39-4, 6
Front Intrusion Sensor	8W-39-5
Fuse 8	8W-39-6
Fuse 14	8W-39-2
Fuse 24	8W-39-2
G102	8W-39-6
G200	8W-39-3
G300	8W-39-7, 8, 9, 10, 11, 12, 13, 14
G301	8W-39-7, 8, 9, 10, 11, 12, 13
G302	8W-39-15
G400	8W-39-14, 15
High Note Horn	8W-39-6
Hood Ajar Switch	8W-39-14
Horn Relay	8W-39-6
Horn Switch	8W-39-6
Ignition Switch	8W-39-3, 4
Integrated Power Module	8W-39-2, 4, 6
Left Cylinder Lock Switch	8W-39-12, 13
Left Front Door Ajar Switch	8W-39-7
Left Front Door Lock Motor/Ajar Switch	8W-39-7, 8
Left Sliding Door Control Module	8W-39-9, 10
Left Sliding Door Latch Sensing Switch	8W-39-9
Left Sliding Door Lock Motor	8W-39-10
Left Sliding Door Lock Motor/Ajar Switch	8W-39-11
Liftgate Ajar Switch	8W-39-15
Liftgate Cinch/Release Motor	8W-39-15
Liftgate Cylinder Lock Switch	8W-39-14
Low Note Horn	8W-39-6
Message Center	8W-39-2
Passenger Door Lock Switch	8W-39-12, 13
Power Liftgate Module	8W-39-15
Powertrain Control Module	8W-39-3
Rear Intrusion Sensor	8W-39-5
Remote Keyless Entry Module	8W-39-2
Right Cylinder Lock Switch	8W-39-12, 13
Right Front Door Ajar Switch	8W-39-7
Right Front Door Lock Motor/Ajar Switch	8W-39-7, 8
Right Sliding Door Control Module	8W-39-9, 10
Right Sliding Door Latch Sensing Switch	8W-39-9
Right Sliding Door Lock Motor	8W-39-10
Right Sliding Door Lock Motor/Ajar Switch	8W-39-11
Sentry Key Immobilizer Module	8W-39-2, 3
Siren	8W-39-4
Thatcham Alarm Indicator	8W-39-5
Thatcham Alarm Module	8W-39-4, 5

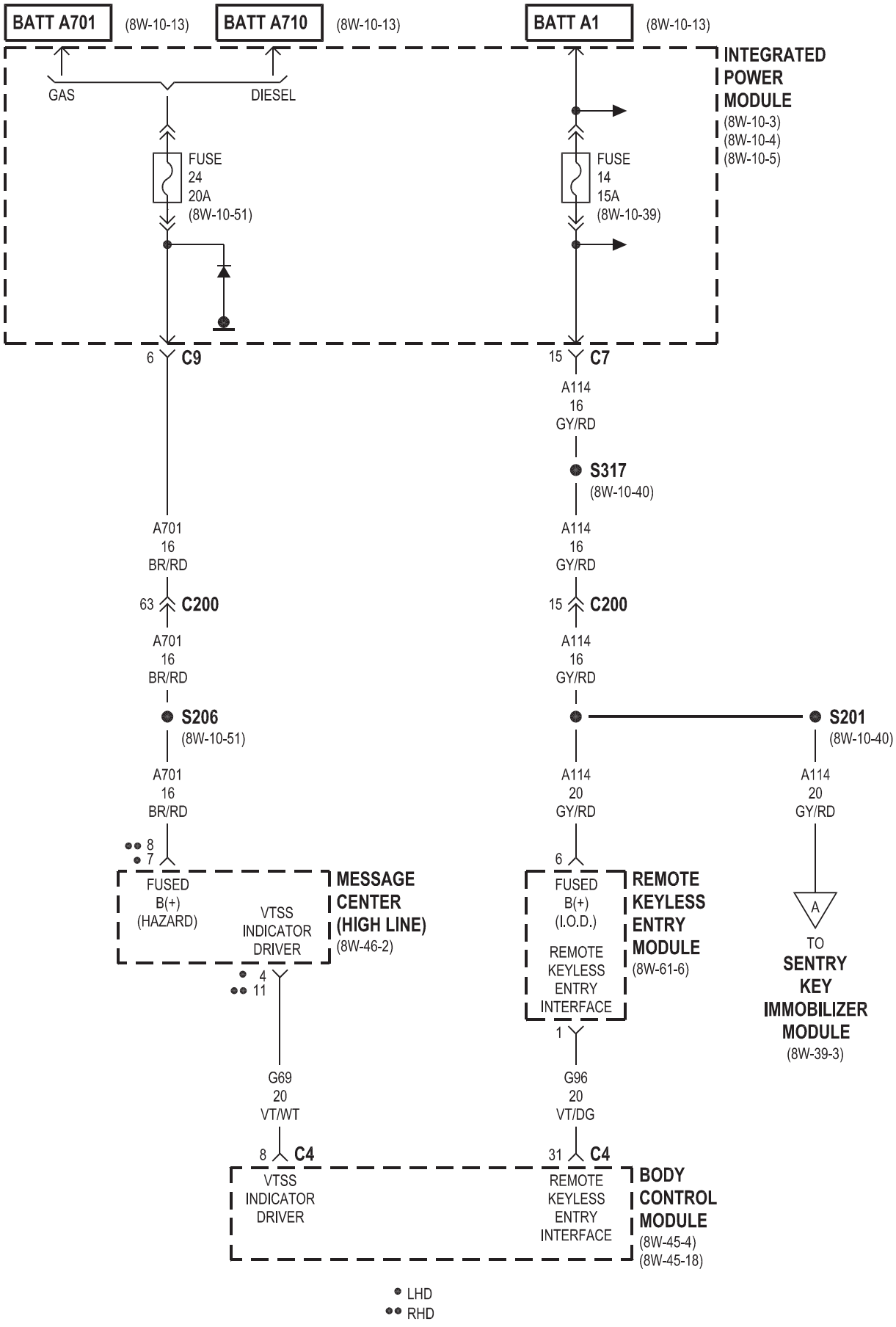
BATT A701
(8W-10-13)
BATT A710
(8W-10-13)
BATT A1
(8W-10-13)
INTEGRATED POWER MODULE
(8W-10-3)
(8W-10-4)
(8W-10-5)
GAS
DIESEL
FUSE 24 20A (8W-10-51)
FUSE 14 15A (8W-10-39)
6 C9
15 C7
A114 16 GY/RD
S317
(8W-10-40)
A701 16 BR/RD
A114 16 GY/RD
63 C200
15 C200
A701 16 BR/RD
A114 16 GY/RD
S206
(8W-10-51)
S201
(8W-10-40)
A701 16 BR/RD
A114 20 GY/RD
A114 20 GY/RD
8
7
6
FUSED B(+) (HAZARD)
VTSS INDICATOR DRIVER
MESSAGE CENTER (HIGH LINE)
(8W-46-2)
FUSED B(+) (I.O.D.)
REMOTE KEYLESS ENTRY INTERFACE
REMOTE KEYLESS ENTRY MODULE
(8W-61-6)
A
TO SENTRY KEY IMMOBILIZER MODULE
(8W-39-3)
4
11
1
G69 20 VT/WT
G96 20 VT/DG
8 C4
31 C4
VTSS INDICATOR DRIVER
REMOTE KEYLESS ENTRY INTERFACE
BODY CONTROL MODULE
(8W-45-4)
(8W-45-18)
LHD
RHD

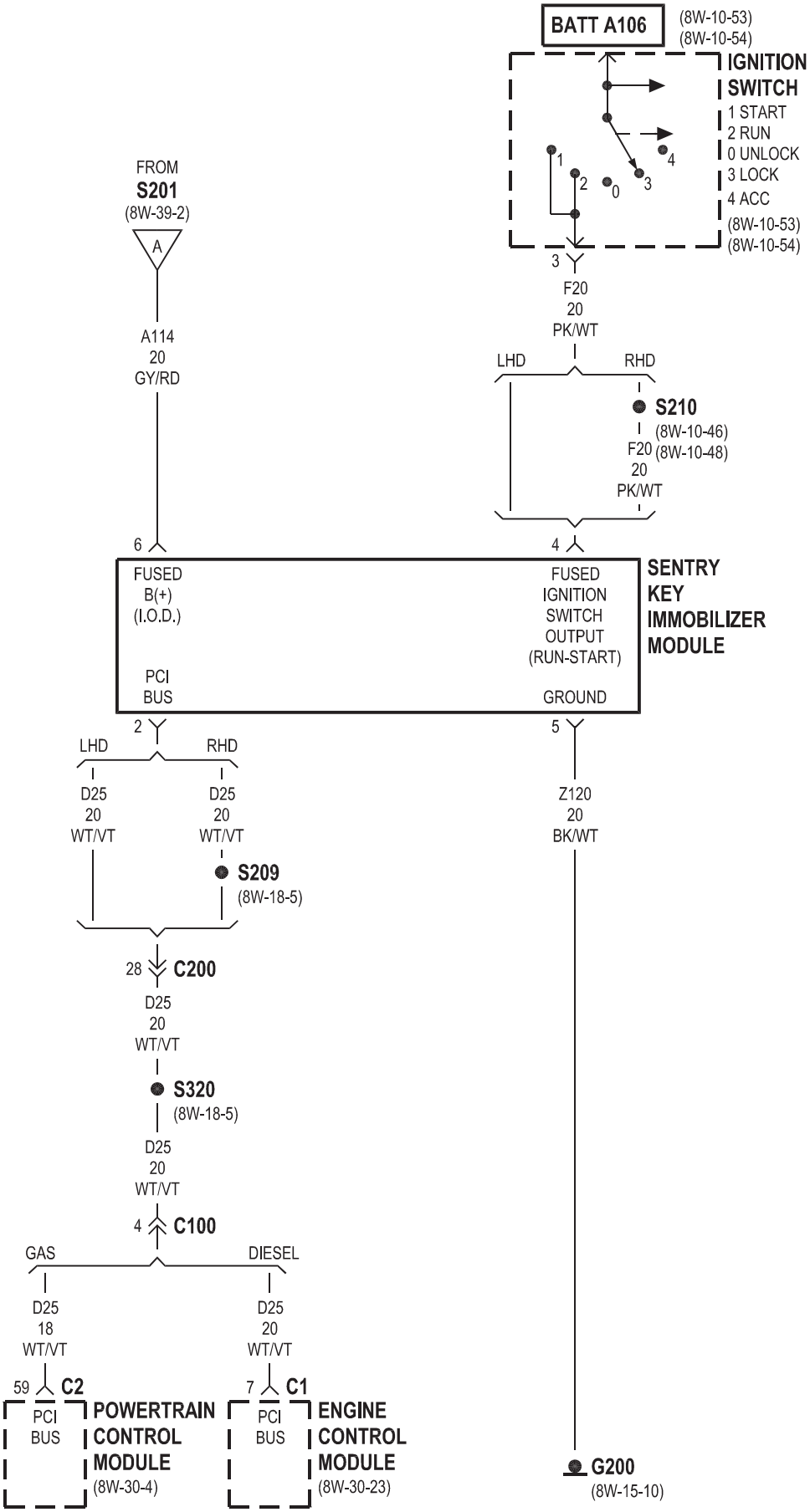
BATT A106
(8W-10-53)
(8W-10-54)
IGNITION SWITCH
1 START
2 RUN
0 UNLOCK
3 LOCK
4 ACC
(8W-10-53)
(8W-10-54)
1
2
0
3
4
3
F20
20
PK/WT
LHD
RHD
S210
(8W-10-46)
(8W-10-48)
F20
20
PK/WT
FROM
S201
(8W-39-2)
A
A114
20
GY/RD
6
4
FUSED
B(+)
(I.O.D.)
PCI
BUS
FUSED
IGNITION
SWITCH
OUTPUT
(RUN-START)
GROUND
SENTRY
KEY
IMMOBILIZER
MODULE
2
5
LHD
RHD
D25
20
WT/VT
D25
20
WT/VT
Z120
20
BK/WT
S209
(8W-18-5)
28
C200
D25
20
WT/VT
S320
(8W-18-5)
D25
20
WT/VT
4
C100
GAS
DIESEL
D25
18
WT/VT
D25
20
WT/VT
59
C2
7
C1
PCI
BUS
POWERTRAIN
CONTROL
MODULE
(8W-30-4)
PCI
BUS
ENGINE
CONTROL
MODULE
(8W-30-23)
G200
(8W-15-10)

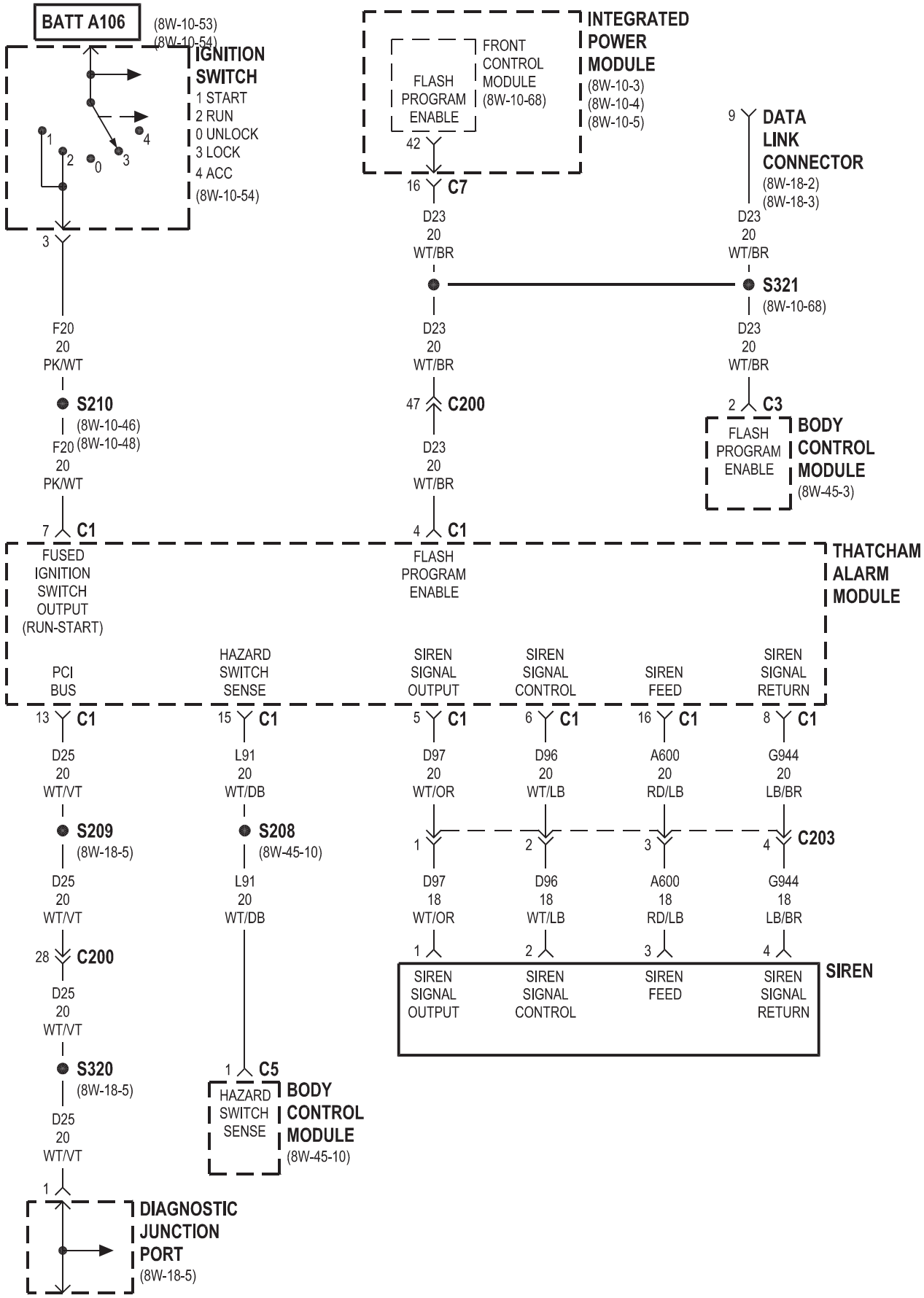
BATT A106
(8W-10-53)
(8W-10-54)
IGNITION SWITCH
1 START
2 RUN
0 UNLOCK
3 LOCK
4 ACC
(8W-10-54)
INTEGRATED POWER MODULE
(8W-10-3)
(8W-10-4)
(8W-10-5)
FLASH PROGRAM ENABLE
FRONT CONTROL MODULE
(8W-10-68)
DATA LINK CONNECTOR
(8W-18-2)
(8W-18-3)
S321
(8W-10-68)
S210
(8W-10-46)
(8W-10-48)
C7
C200
C3
C1
BODY CONTROL MODULE
(8W-45-3)
THATCHAM ALARM MODULE
FUSED IGNITION SWITCH OUTPUT (RUN-START)
FLASH PROGRAM ENABLE
PCI BUS
HAZARD SWITCH SENSE
SIREN SIGNAL OUTPUT
SIREN SIGNAL CONTROL
SIREN FEED
SIREN SIGNAL RETURN
F20 20 PK/WT
D23 20 WT/BR
D25 20 WT/VT
L91 20 WT/DB
D97 20 WT/OR
D96 20 WT/LB
A600 20 RD/LB
G944 20 LB/BR
D97 18 WT/OR
D96 18 WT/LB
A600 18 RD/LB
G944 18 LB/BR
S209
(8W-18-5)
S208
(8W-45-10)
S320
(8W-18-5)
C203
C5
BODY CONTROL MODULE
(8W-45-10)
SIREN
DIAGNOSTIC JUNCTION PORT
(8W-18-5)

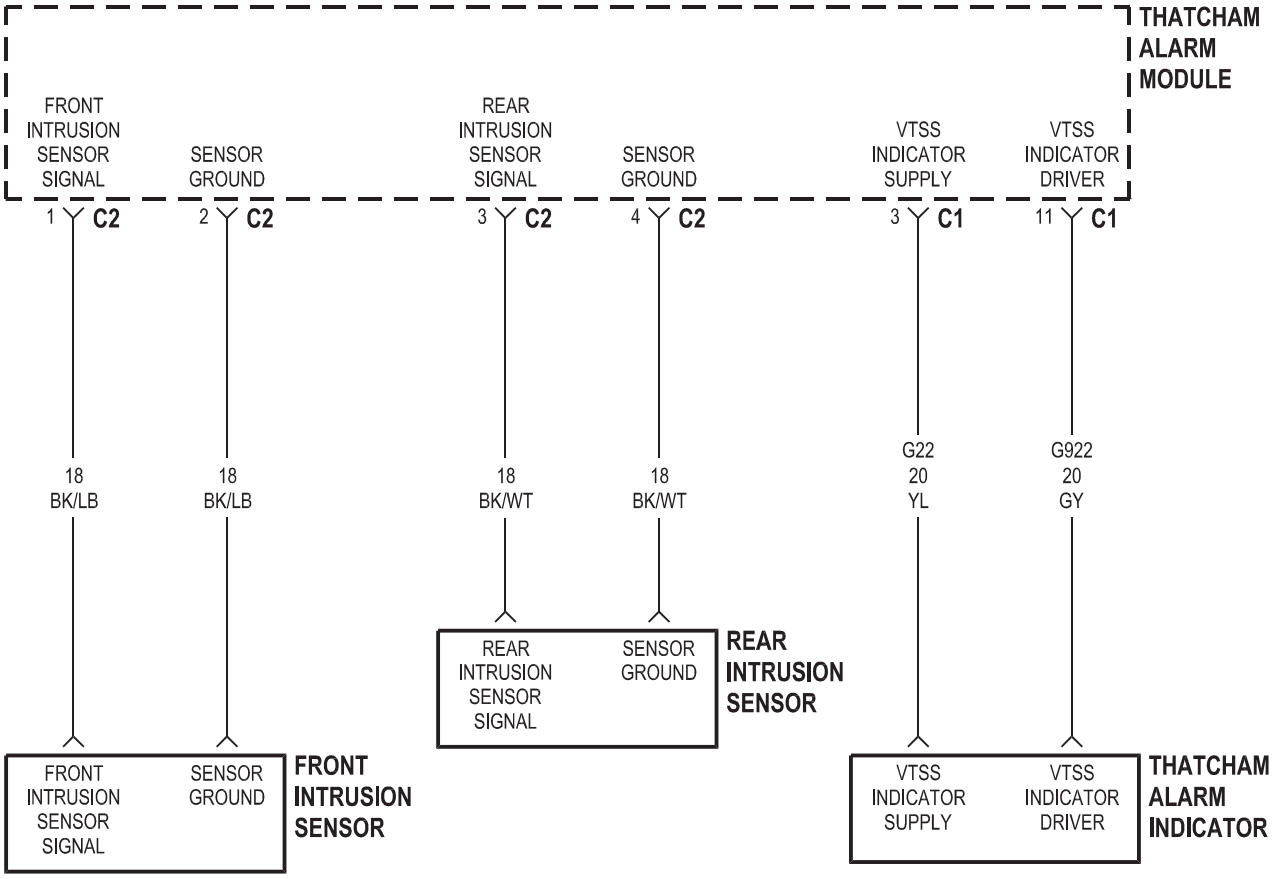
THATCHAM ALARM MODULE
FRONT INTRUSION SENSOR SIGNAL
SENSOR GROUND
REAR INTRUSION SENSOR SIGNAL
SENSOR GROUND
VTSS INDICATOR SUPPLY
VTSS INDICATOR DRIVER
1 C2
2 C2
3 C2
4 C2
3 C1
11 C1
18 BK/LB
18 BK/LB
18 BK/WT
18 BK/WT
G22 20 YL
G922 20 GY
REAR INTRUSION SENSOR SIGNAL
SENSOR GROUND
REAR INTRUSION SENSOR
FRONT INTRUSION SENSOR SIGNAL
SENSOR GROUND
FRONT INTRUSION SENSOR
VTSS INDICATOR SUPPLY
VTSS INDICATOR DRIVER
THATCHAM ALARM INDICATOR

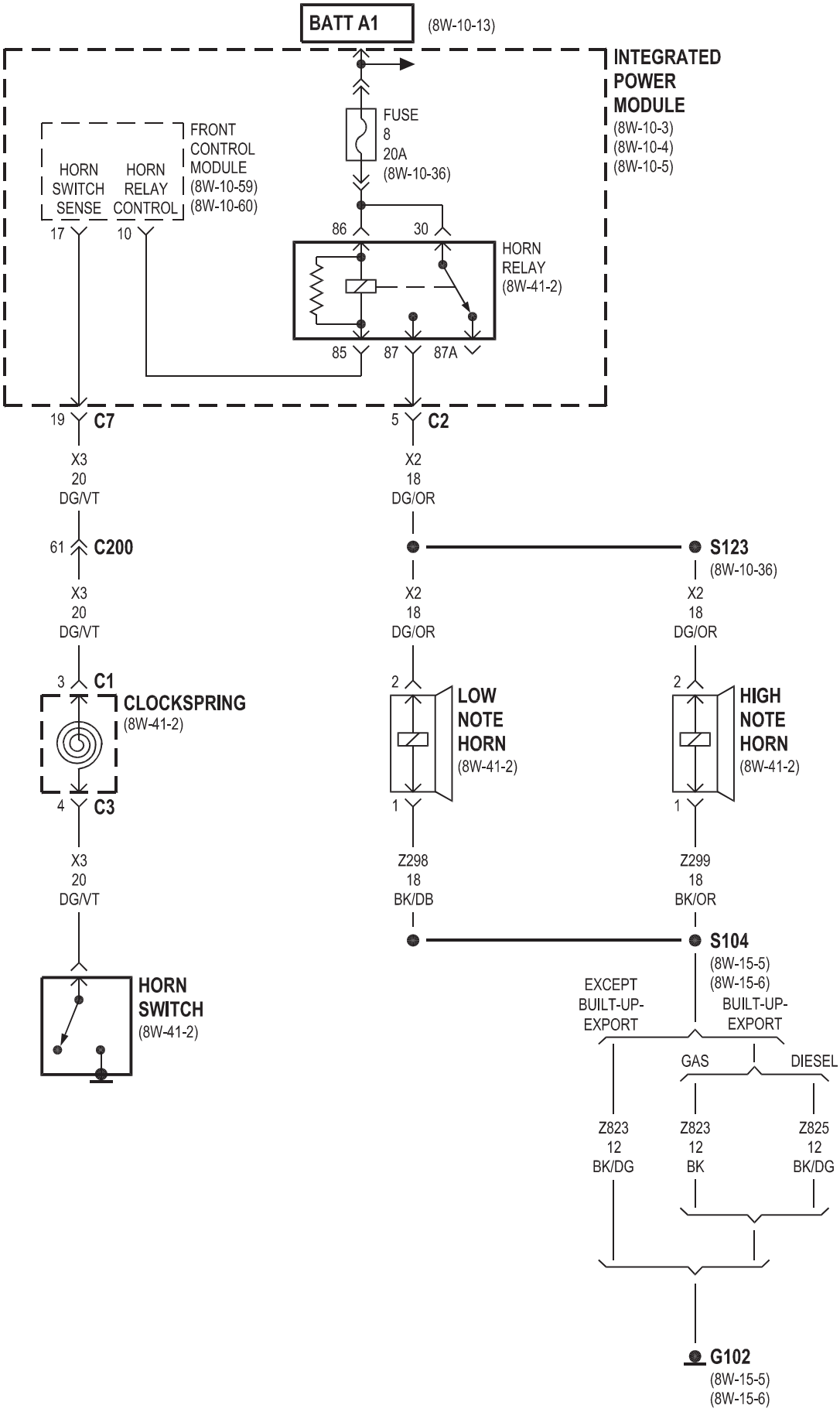
BATT A1
(8W-10-13)
INTEGRATED POWER MODULE
(8W-10-3)
(8W-10-4)
(8W-10-5)
FUSE
8
20A
(8W-10-36)
FRONT CONTROL MODULE
(8W-10-59)
(8W-10-60)
HORN SWITCH SENSE
HORN RELAY CONTROL
17
10
86
30
HORN RELAY
(8W-41-2)
85
87
87A
19 C7
5 C2
X3
20
DG/VT
X2
18
DG/OR
61 C200
S123
(8W-10-36)
3 C1
CLOCKSPRING
(8W-41-2)
4 C3
2
LOW NOTE HORN
(8W-41-2)
HIGH NOTE HORN
(8W-41-2)
1
Z298
18
BK/DB
Z299
18
BK/OR
HORN SWITCH
(8W-41-2)
S104
(8W-15-5)
(8W-15-6)
EXCEPT BUILT-UP-EXPORT
BUILT-UP-EXPORT
GAS
DIESEL
Z823
12
BK/DG
Z823
12
BK
Z825
12
BK/DG
G102
(8W-15-5)
(8W-15-6)

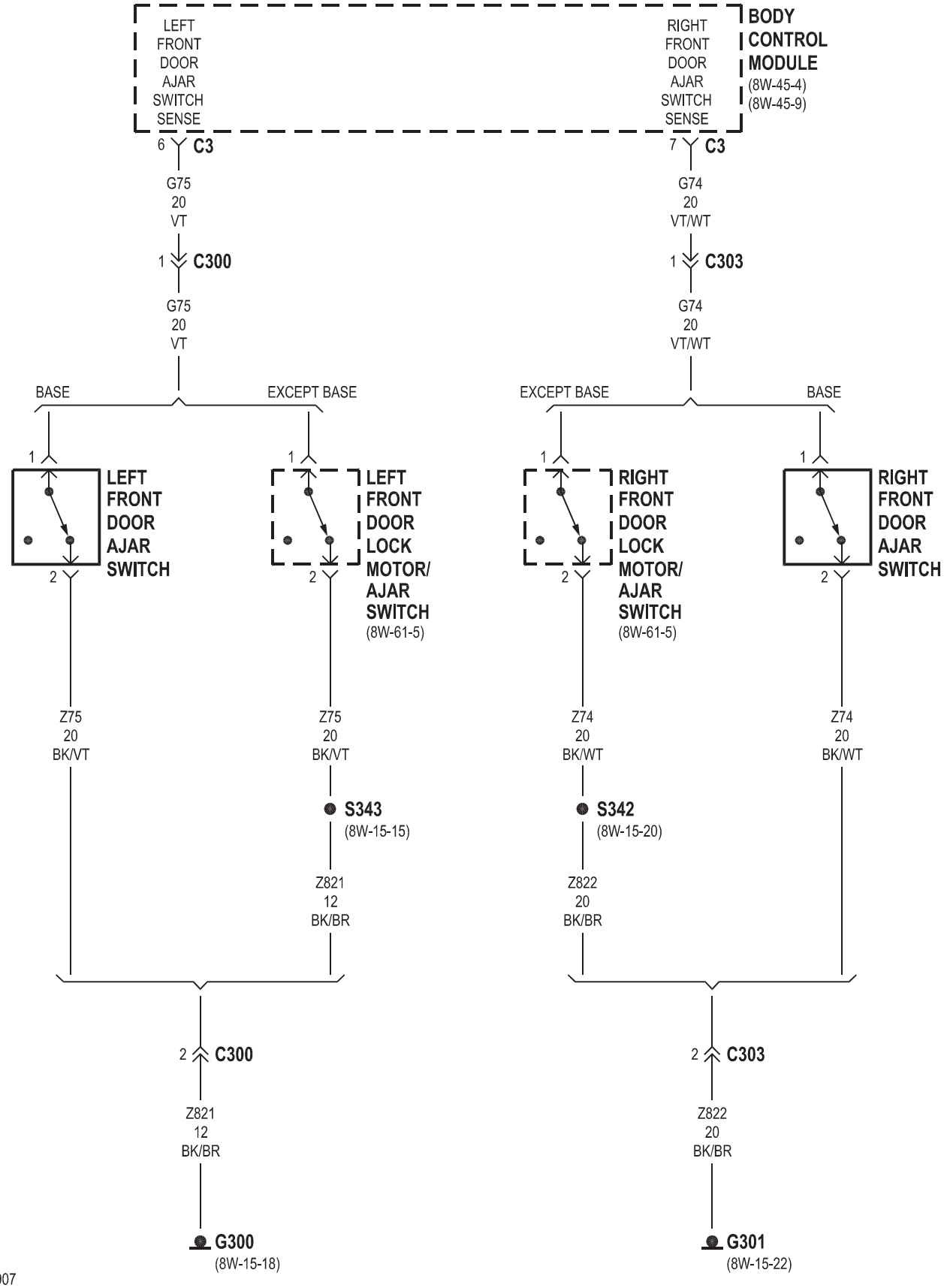
LEFT FRONT DOOR AJAR SWITCH SENSE
RIGHT FRONT DOOR AJAR SWITCH SENSE
BODY CONTROL MODULE
(8W-45-4)
(8W-45-9)
6 C3
7 C3
G75 20 VT
G74 20 VT/WT
1 C300
1 C303
G75 20 VT
G74 20 VT/WT
BASE
EXCEPT BASE
EXCEPT BASE
BASE
LEFT FRONT DOOR AJAR SWITCH
LEFT FRONT DOOR LOCK MOTOR/ AJAR SWITCH
(8W-61-5)
RIGHT FRONT DOOR LOCK MOTOR/ AJAR SWITCH
(8W-61-5)
RIGHT FRONT DOOR AJAR SWITCH
Z75 20 BK/VT
Z75 20 BK/VT
Z74 20 BK/WT
Z74 20 BK/WT
S343
(8W-15-15)
S342
(8W-15-20)
Z821 12 BK/BR
Z822 20 BK/BR
2 C300
2 C303
Z821 12 BK/BR
Z822 20 BK/BR
G300
(8W-15-18)
G301
(8W-15-22)

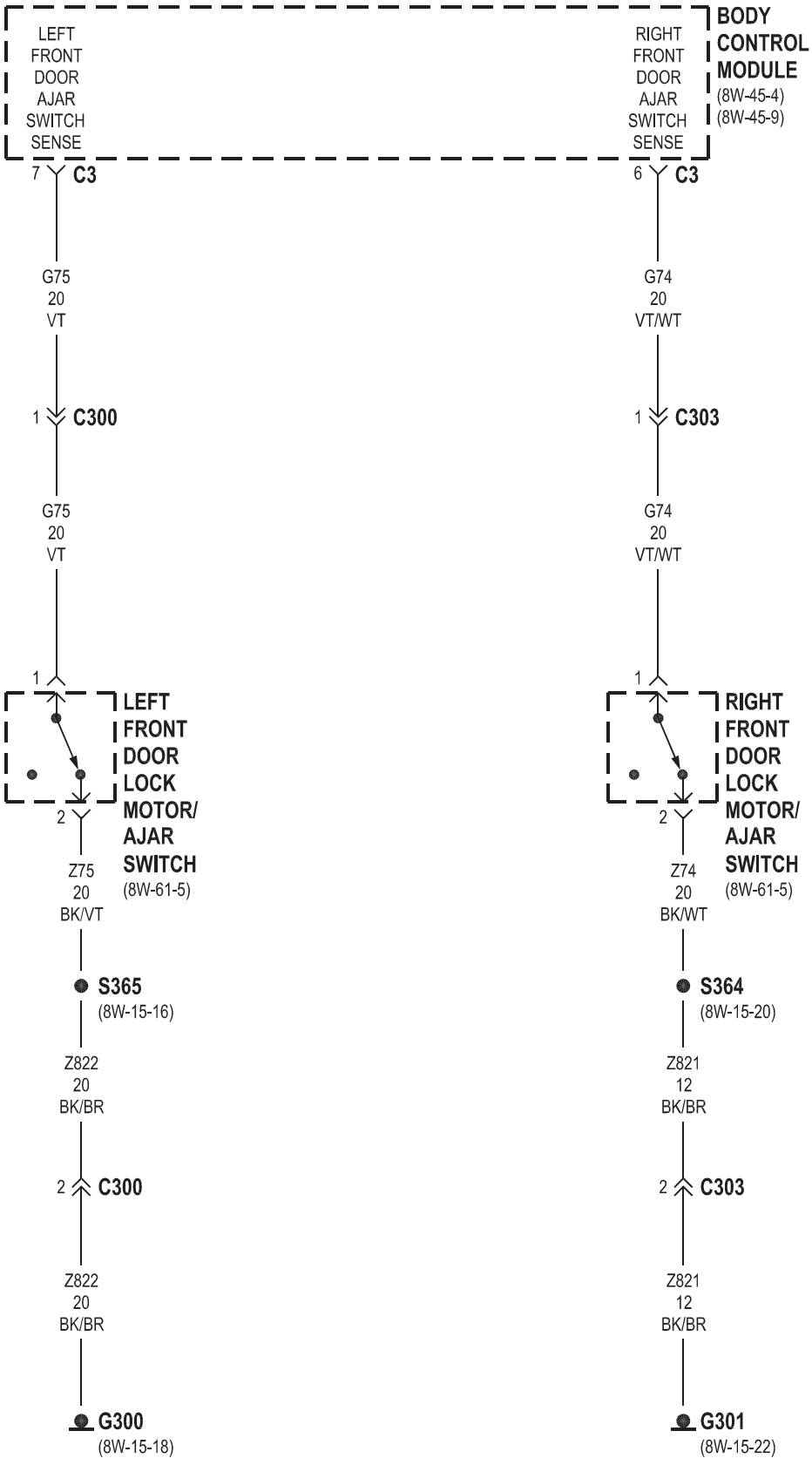
LEFT FRONT DOOR AJAR SWITCH SENSE
RIGHT FRONT DOOR AJAR SWITCH SENSE
BODY CONTROL MODULE
(8W-45-4)
(8W-45-9)
7 C3
6 C3
G75 20 VT
G74 20 VT/WT
1 C300
1 C303
G75 20 VT
G74 20 VT/WT
1
1
LEFT FRONT DOOR LOCK MOTOR/ AJAR SWITCH
(8W-61-5)
RIGHT FRONT DOOR LOCK MOTOR/ AJAR SWITCH
(8W-61-5)
2
2
Z75 20 BK/VT
Z74 20 BK/WT
S365
(8W-15-16)
S364
(8W-15-20)
Z822 20 BK/BR
Z821 12 BK/BR
2 C300
2 C303
Z822 20 BK/BR
Z821 12 BK/BR
G300
(8W-15-18)
G301
(8W-15-22)

POWER SLIDING DOOR

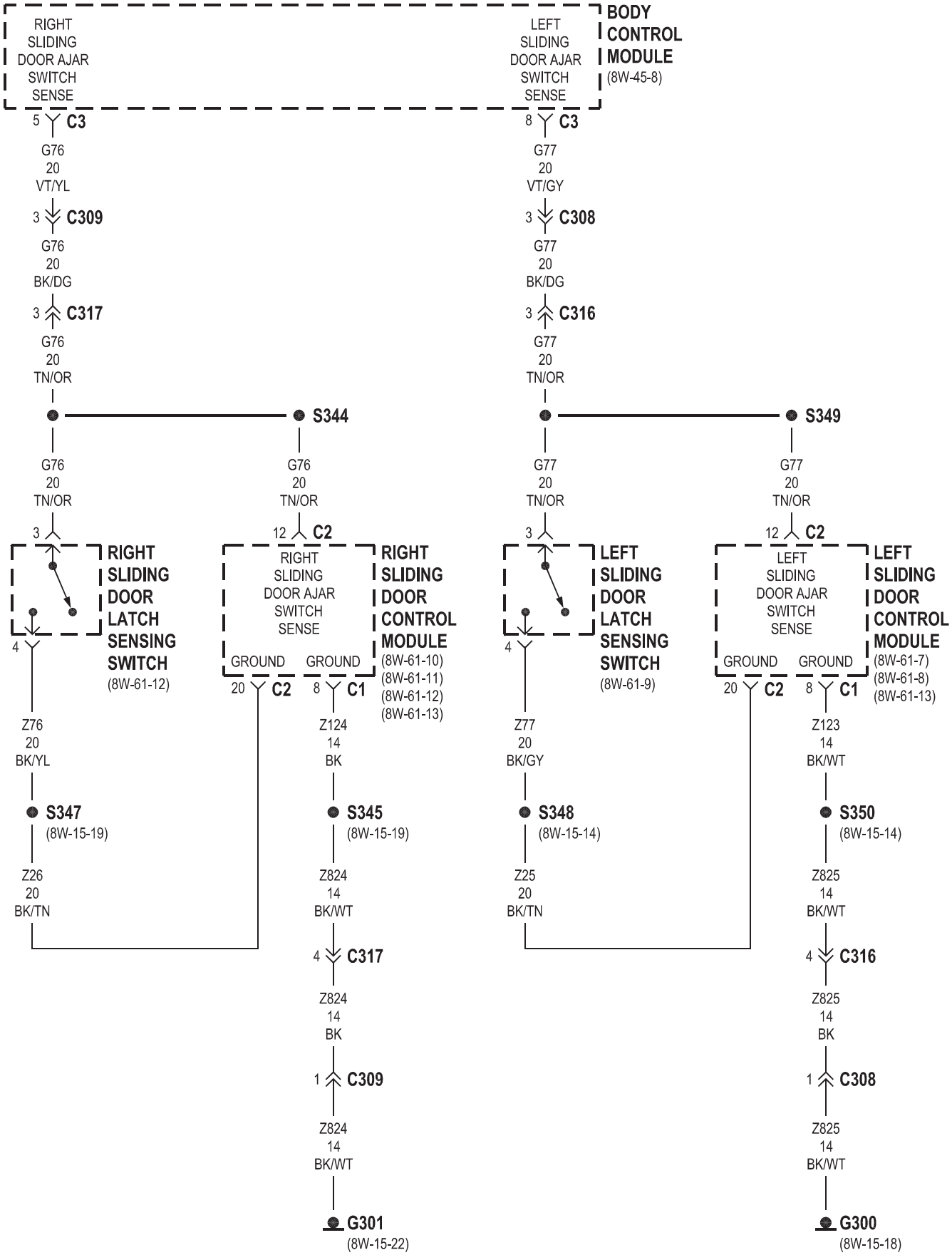

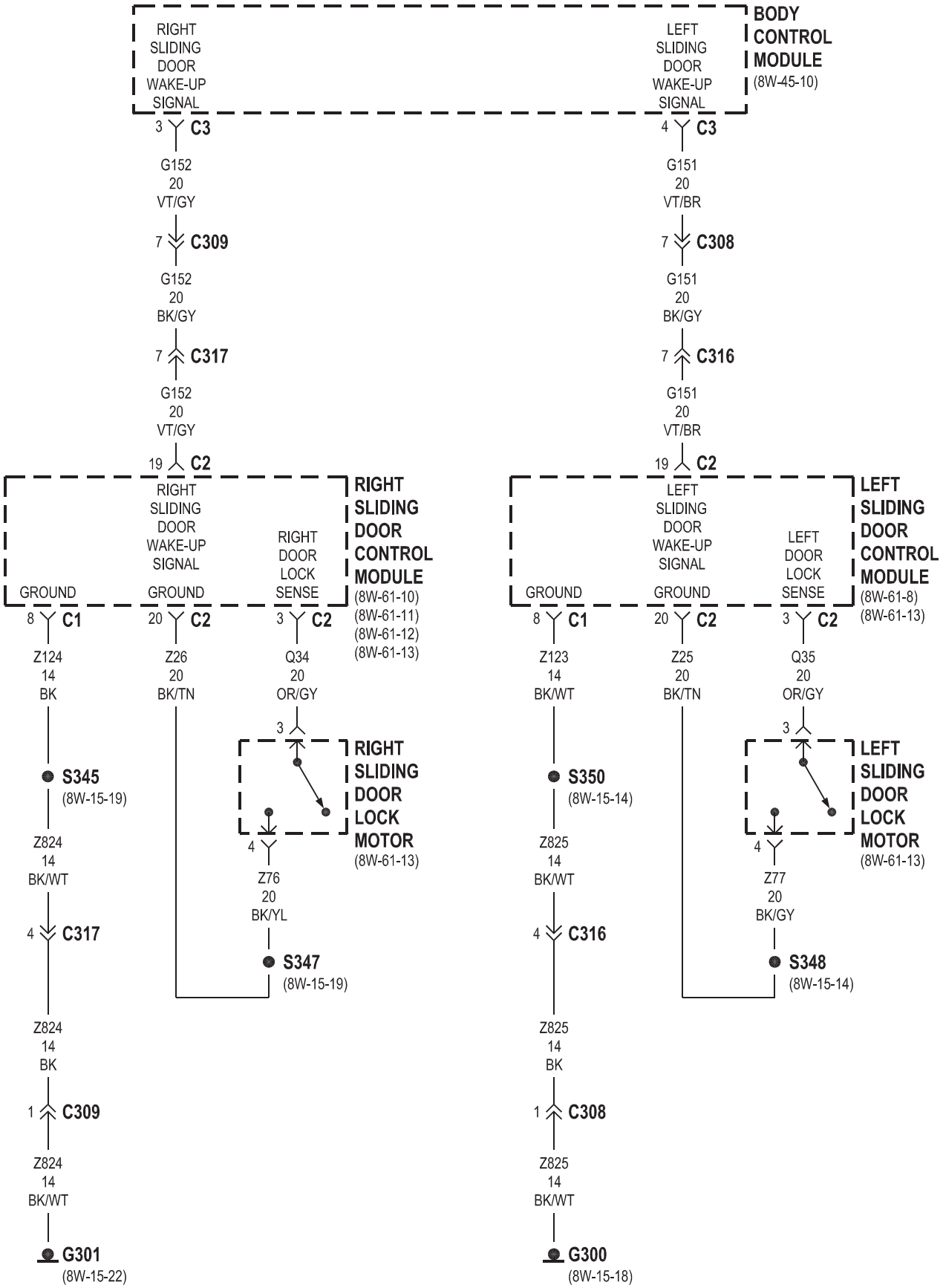
BODY CONTROL MODULE
(8W-45-10)
RIGHT SLIDING DOOR WAKE-UP SIGNAL
LEFT SLIDING DOOR WAKE-UP SIGNAL
3 C3
4 C3
G152 20 VT/GY
G151 20 VT/BR
7 C309
7 C308
G152 20 BK/GY
G151 20 BK/GY
7 C317
7 C316
G152 20 VT/GY
G151 20 VT/BR
19 C2
19 C2
RIGHT SLIDING DOOR CONTROL MODULE
(8W-61-10)
(8W-61-11)
(8W-61-12)
(8W-61-13)
LEFT SLIDING DOOR CONTROL MODULE
(8W-61-8)
(8W-61-13)
GROUND
RIGHT SLIDING DOOR WAKE-UP SIGNAL
RIGHT DOOR LOCK SENSE
LEFT SLIDING DOOR WAKE-UP SIGNAL
LEFT DOOR LOCK SENSE
8 C1
20 C2
3 C2
Z124 14 BK
Z26 20 BK/TN
Q34 20 OR/GY
Z123 14 BK/WT
Z25 20 BK/TN
Q35 20 OR/GY
S345 (8W-15-19)
S350 (8W-15-14)
RIGHT SLIDING DOOR LOCK MOTOR
(8W-61-13)
LEFT SLIDING DOOR LOCK MOTOR
(8W-61-13)
Z824 14 BK/WT
Z825 14 BK/WT
4 C317
4 C316
Z76 20 BK/YL
Z77 20 BK/GY
S347 (8W-15-19)
S348 (8W-15-14)
Z824 14 BK
Z825 14 BK
1 C309
1 C308
Z824 14 BK/WT
Z825 14 BK/WT
G301 (8W-15-22)
G300 (8W-15-18)

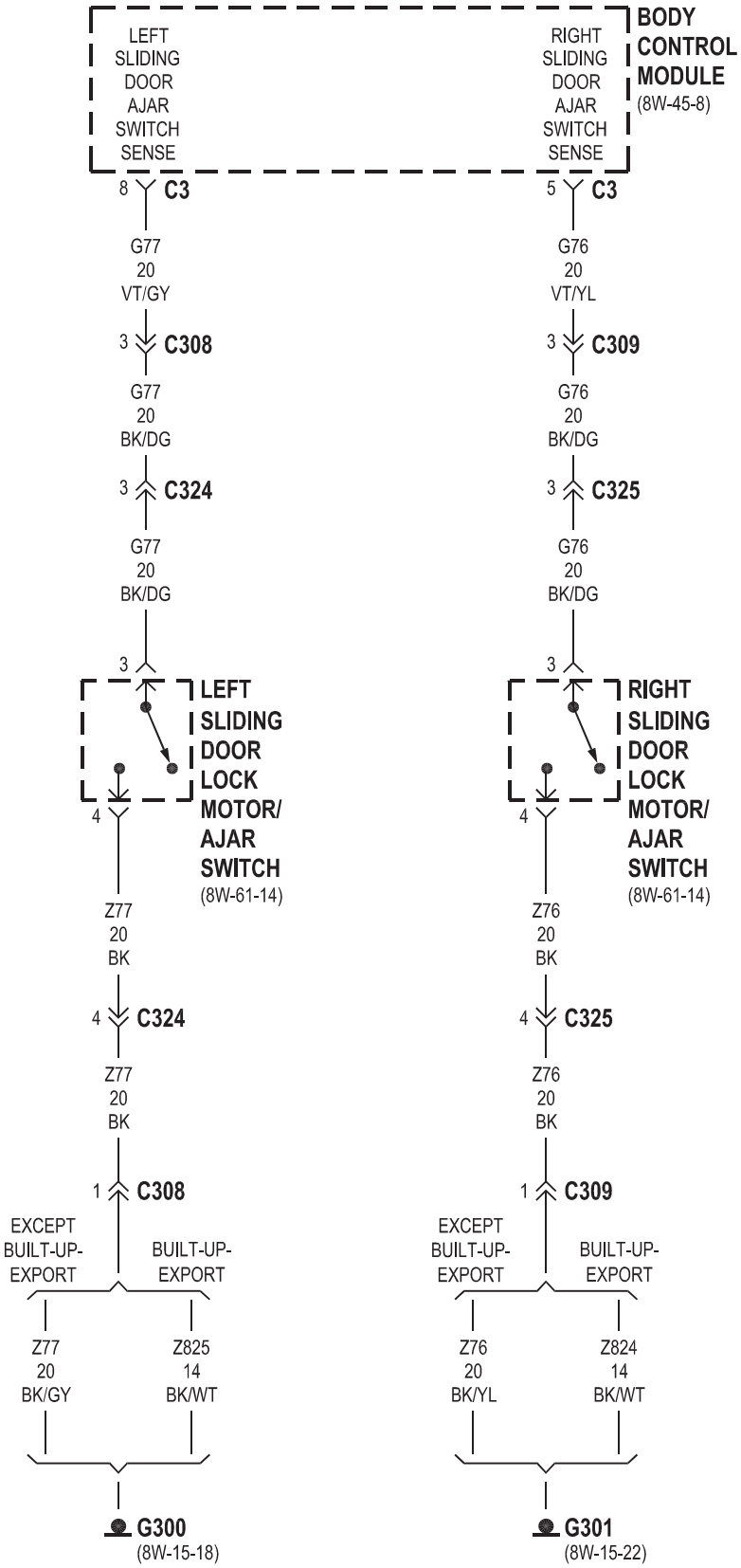
LEFT SLIDING DOOR AJAR SWITCH SENSE
RIGHT SLIDING DOOR AJAR SWITCH SENSE
BODY CONTROL MODULE
(8W-45-8)
8 C3
5 C3
G77 20 VT/GY
G76 20 VT/YL
3 C308
3 C309
G77 20 BK/DG
G76 20 BK/DG
3 C324
3 C325
G77 20 BK/DG
G76 20 BK/DG
3
3
LEFT SLIDING DOOR LOCK MOTOR/ AJAR SWITCH
(8W-61-14)
RIGHT SLIDING DOOR LOCK MOTOR/ AJAR SWITCH
(8W-61-14)
4
4
Z77 20 BK
Z76 20 BK
4 C324
4 C325
Z77 20 BK
Z76 20 BK
1 C308
1 C309
EXCEPT BUILT-UP-EXPORT
BUILT-UP-EXPORT
EXCEPT BUILT-UP-EXPORT
BUILT-UP-EXPORT
Z77 20 BK/GY
Z825 14 BK/WT
Z76 20 BK/YL
Z824 14 BK/WT
G300
(8W-15-18)
G301
(8W-15-22)

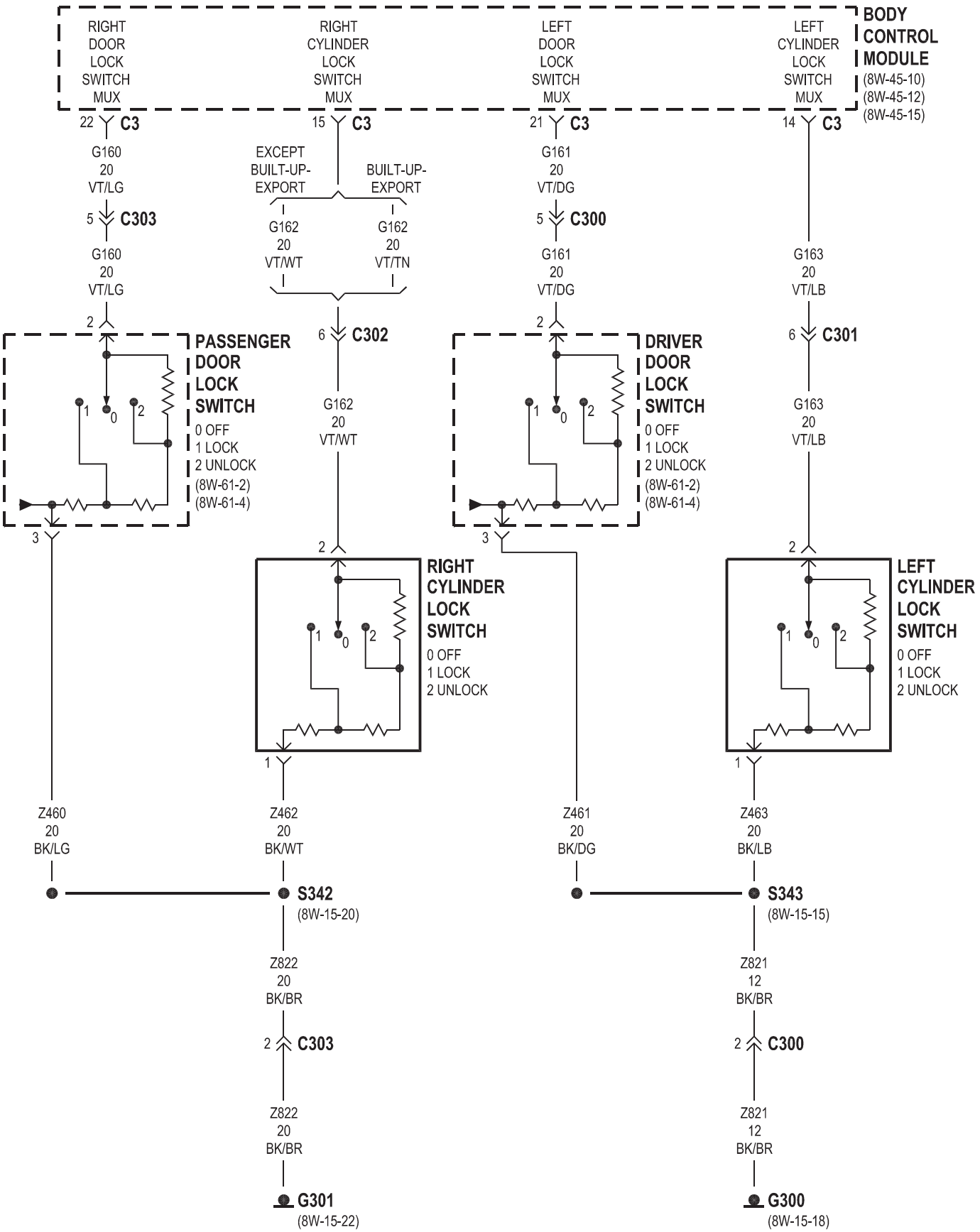
BODY CONTROL MODULE
(8W-45-10)
(8W-45-12)
(8W-45-15)
RIGHT DOOR LOCK SWITCH MUX
RIGHT CYLINDER LOCK SWITCH MUX
LEFT DOOR LOCK SWITCH MUX
LEFT CYLINDER LOCK SWITCH MUX
22 C3
15 C3
21 C3
14 C3
G160 20 VT/LG
5 C303
G160 20 VT/LG
2
EXCEPT BUILT-UP-EXPORT
BUILT-UP-EXPORT
G162 20 VT/WT
G162 20 VT/TN
6 C302
G161 20 VT/DG
5 C300
G161 20 VT/DG
2
G163 20 VT/LB
6 C301
PASSENGER DOOR LOCK SWITCH
0 OFF
1 LOCK
2 UNLOCK
(8W-61-2)
(8W-61-4)
G162 20 VT/WT
DRIVER DOOR LOCK SWITCH
0 OFF
1 LOCK
2 UNLOCK
(8W-61-2)
(8W-61-4)
G163 20 VT/LB
3
2
RIGHT CYLINDER LOCK SWITCH
0 OFF
1 LOCK
2 UNLOCK
3
2
LEFT CYLINDER LOCK SWITCH
0 OFF
1 LOCK
2 UNLOCK
1
1
Z460 20 BK/LG
Z462 20 BK/WT
Z461 20 BK/DG
Z463 20 BK/LB
S342
(8W-15-20)
S343
(8W-15-15)
Z822 20 BK/BR
Z821 12 BK/BR
2 C303
2 C300
Z822 20 BK/BR
Z821 12 BK/BR
G301
(8W-15-22)
G300
(8W-15-18)

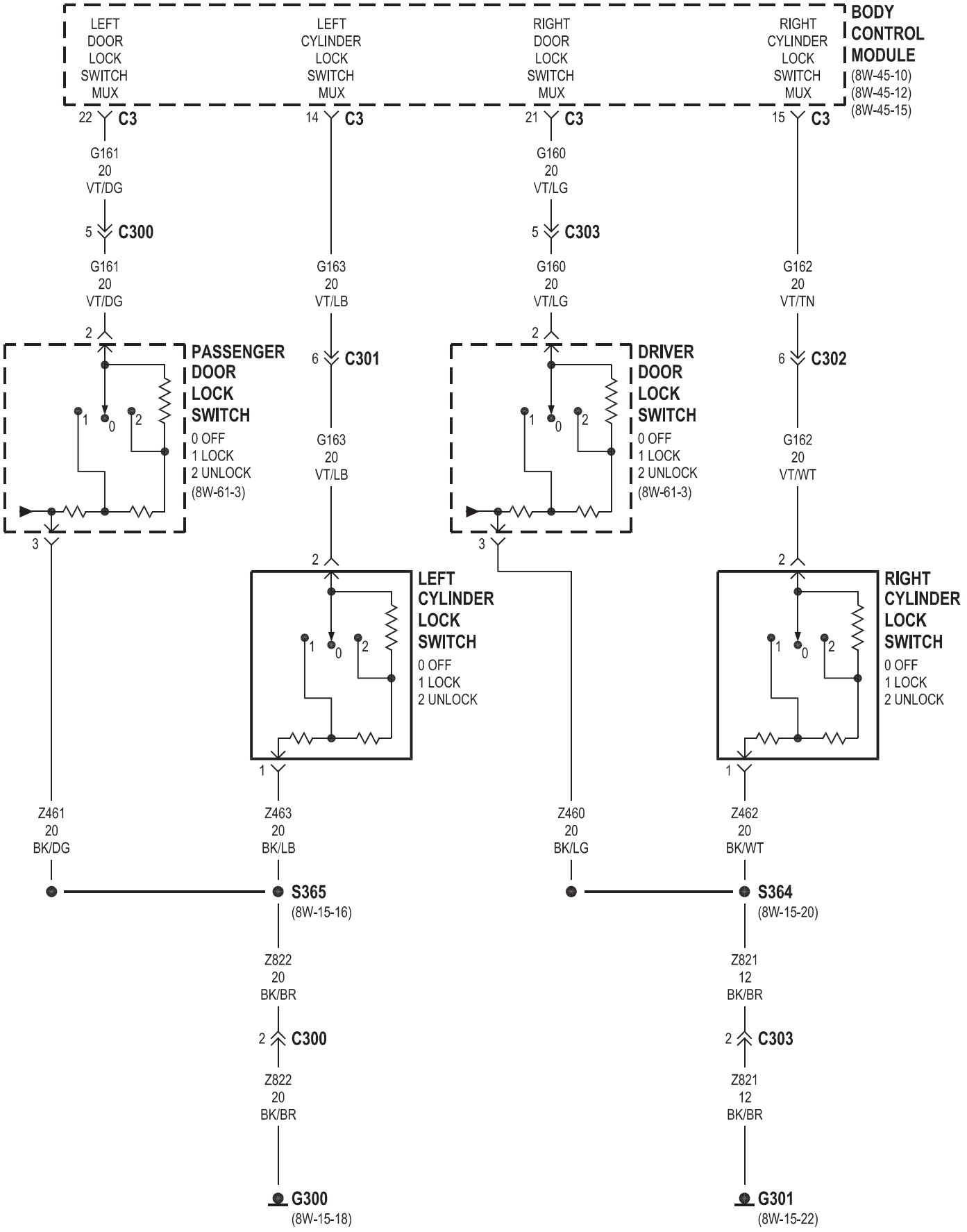
LEFT DOOR LOCK SWITCH MUX
LEFT CYLINDER LOCK SWITCH MUX
RIGHT DOOR LOCK SWITCH MUX
RIGHT CYLINDER LOCK SWITCH MUX
BODY CONTROL MODULE
(8W-45-10)
(8W-45-12)
(8W-45-15)
22 C3
14 C3
21 C3
15 C3
G161 20 VT/DG
G160 20 VT/LG
5 C300
5 C303
G161 20 VT/DG
G163 20 VT/LB
G160 20 VT/LG
G162 20 VT/TN
2
6 C301
6 C302
PASSENGER DOOR LOCK SWITCH
0 OFF
1 LOCK
2 UNLOCK
(8W-61-3)
DRIVER DOOR LOCK SWITCH
0 OFF
1 LOCK
2 UNLOCK
(8W-61-3)
G163 20 VT/LB
G162 20 VT/WT
3
2
LEFT CYLINDER LOCK SWITCH
0 OFF
1 LOCK
2 UNLOCK
RIGHT CYLINDER LOCK SWITCH
0 OFF
1 LOCK
2 UNLOCK
1
Z461 20 BK/DG
Z463 20 BK/LB
Z460 20 BK/LG
Z462 20 BK/WT
S365
(8W-15-16)
S364
(8W-15-20)
Z822 20 BK/BR
Z821 12 BK/BR
2 C300
2 C303
Z822 20 BK/BR
Z821 12 BK/BR
G300
(8W-15-18)
G301
(8W-15-22)

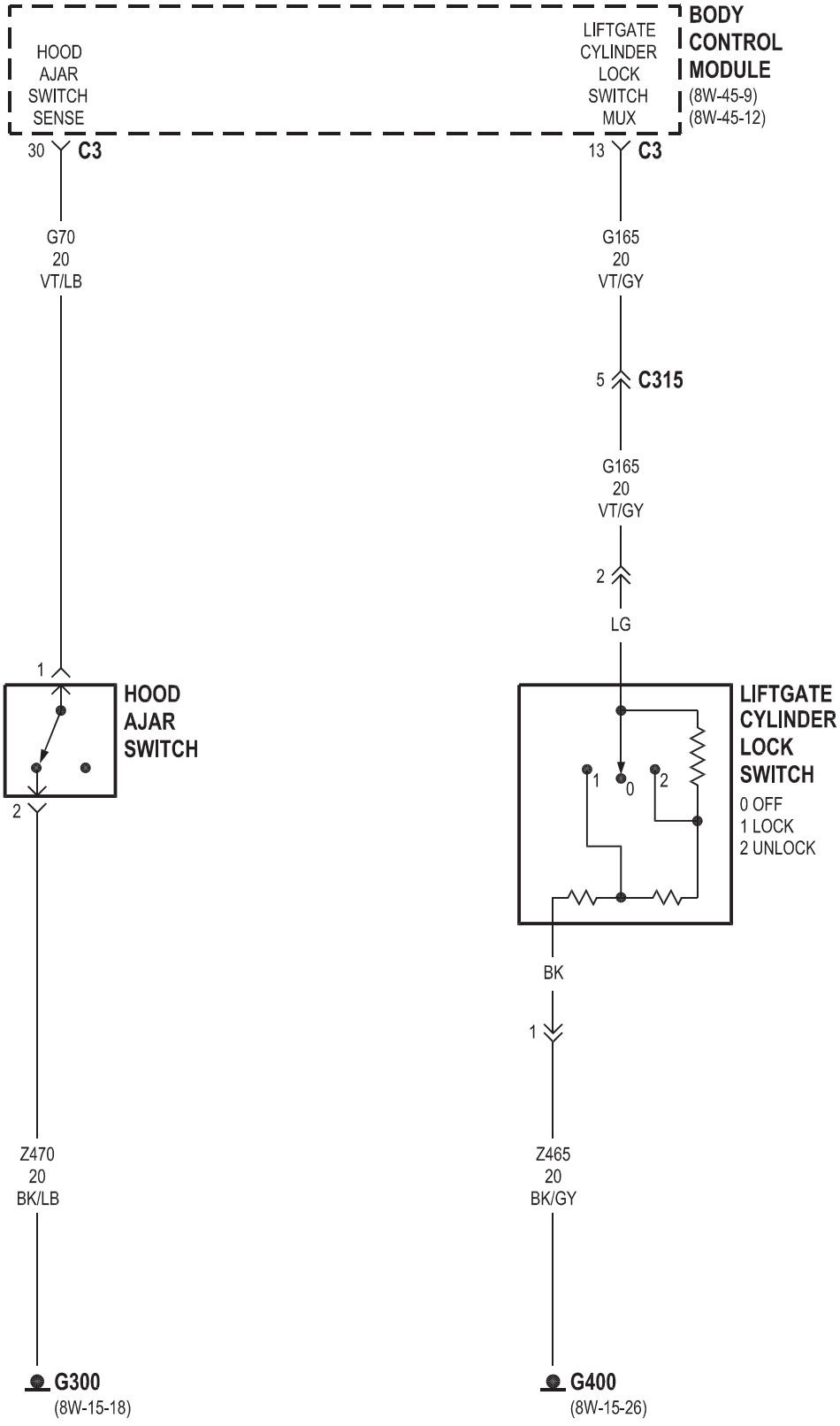
BODY CONTROL MODULE
(8W-45-9)
(8W-45-12)
HOOD AJAR SWITCH SENSE
LIFTGATE CYLINDER LOCK SWITCH MUX
30
C3
13
C3
G70
20
VT/LB
G165
20
VT/GY
5
C315
G165
20
VT/GY
2
LG
1
HOOD AJAR SWITCH
2
LIFTGATE CYLINDER LOCK SWITCH
0 OFF
1 LOCK
2 UNLOCK
1
0
2
BK
1
Z470
20
BK/LB
Z465
20
BK/GY
G300
(8W-15-18)
G400
(8W-15-26)

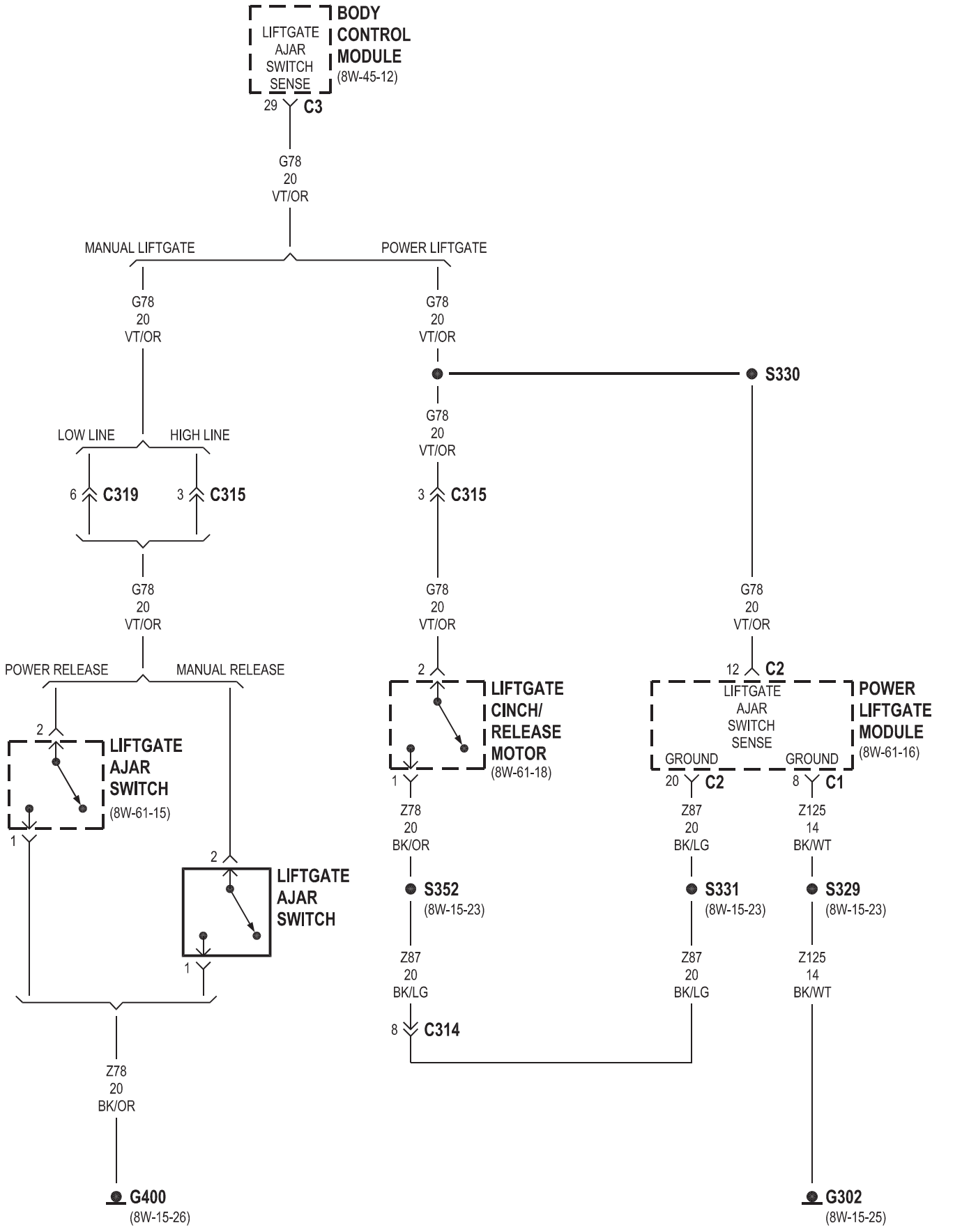
BODY CONTROL MODULE
(8W-45-12)
LIFTGATE AJAR SWITCH SENSE
29 C3
G78 20 VT/OR
MANUAL LIFTGATE
POWER LIFTGATE
G78 20 VT/OR
G78 20 VT/OR
S330
LOW LINE
HIGH LINE
6 C319
3 C315
3 C315
G78 20 VT/OR
G78 20 VT/OR
G78 20 VT/OR
POWER RELEASE
MANUAL RELEASE
2
LIFTGATE AJAR SWITCH
(8W-61-15)
1
2
LIFTGATE AJAR SWITCH
1
2
LIFTGATE CINCH/ RELEASE MOTOR
(8W-61-18)
1
12 C2
LIFTGATE AJAR SWITCH SENSE
POWER LIFTGATE MODULE
(8W-61-16)
GROUND
GROUND
20 C2
8 C1
Z78 20 BK/OR
Z87 20 BK/LG
Z125 14 BK/WT
S352
(8W-15-23)
S331
(8W-15-23)
S329
(8W-15-23)
Z87 20 BK/LG
Z87 20 BK/LG
Z125 14 BK/WT
8 C314
Z78 20 BK/OR
G400
(8W-15-26)
G302
(8W-15-25)

8W-40 INSTRUMENT CLUSTER

Component	Page
Airbag Control Module	8W-40-2
Body Control Module	8W-40-2, 3, 4, 5, 6, 7, 8, 9, 10, 11
Brake Fluid Level Switch	8W-40-9
Clockspring	8W-40-9
Diagnostic Junction Port	8W-40-2, 3, 4, 5, 6, 7, 8, 9, 12
Engine Control Module	8W-40-8, 9, 12
Engine Coolant Temp Sensor	8W-40-7, 8
Engine Oil Pressure Sensor	8W-40-12
Engine Oil Pressure Switch	8W-40-12
Front Control Module	8W-40-9
Fuel Pump Module	8W-40-2
Fuse 24	8W-40-2
G200	8W-40-2, 10, 11, 12
G300	8W-40-9
Instrument Cluster	8W-40-2, 3, 4, 5, 6, 7, 8, 9, 10, 11, 12
Integrated Power Module	8W-40-2, 9
Left Front Door Ajar Switch	8W-40-3
Left Front Door Lock Motor/Ajar Switch	8W-40-3
Left Sliding Door Control Module	8W-40-4
Left Sliding Door Latch Sensing Switch	8W-40-4
Left Sliding Door Lock Motor/Ajar Switch	8W-40-4
Left Speed Control Switch	8W-40-9
Liftgate Ajar Switch	8W-40-3
Liftgate Cinch/Release Motor	8W-40-3
Message Center	8W-40-6, 12
Multi- Function Switch	8W-40-6
Parking Brake Switch	8W-40-10, 11
Powertrain Control Module	8W-40-7, 9, 12
Right Front Door Ajar Switch	8W-40-3
Right Front Door Lock Motor/Ajar Switch	8W-40-3
Right Sliding Door Control Module	8W-40-5
Right Sliding Door Latch Sensing Switch	8W-40-5
Right Sliding Door Lock Motor/Ajar Switch	8W-40-5
Right Speed Control Switch	8W-40-9
Traction Control Switch	8W-40-7, 8
Transmission Control Module	8W-40-7
Vehicle Speed Sensor	8W-40-7, 8
Washer Fluid Level Switch	8W-40-9

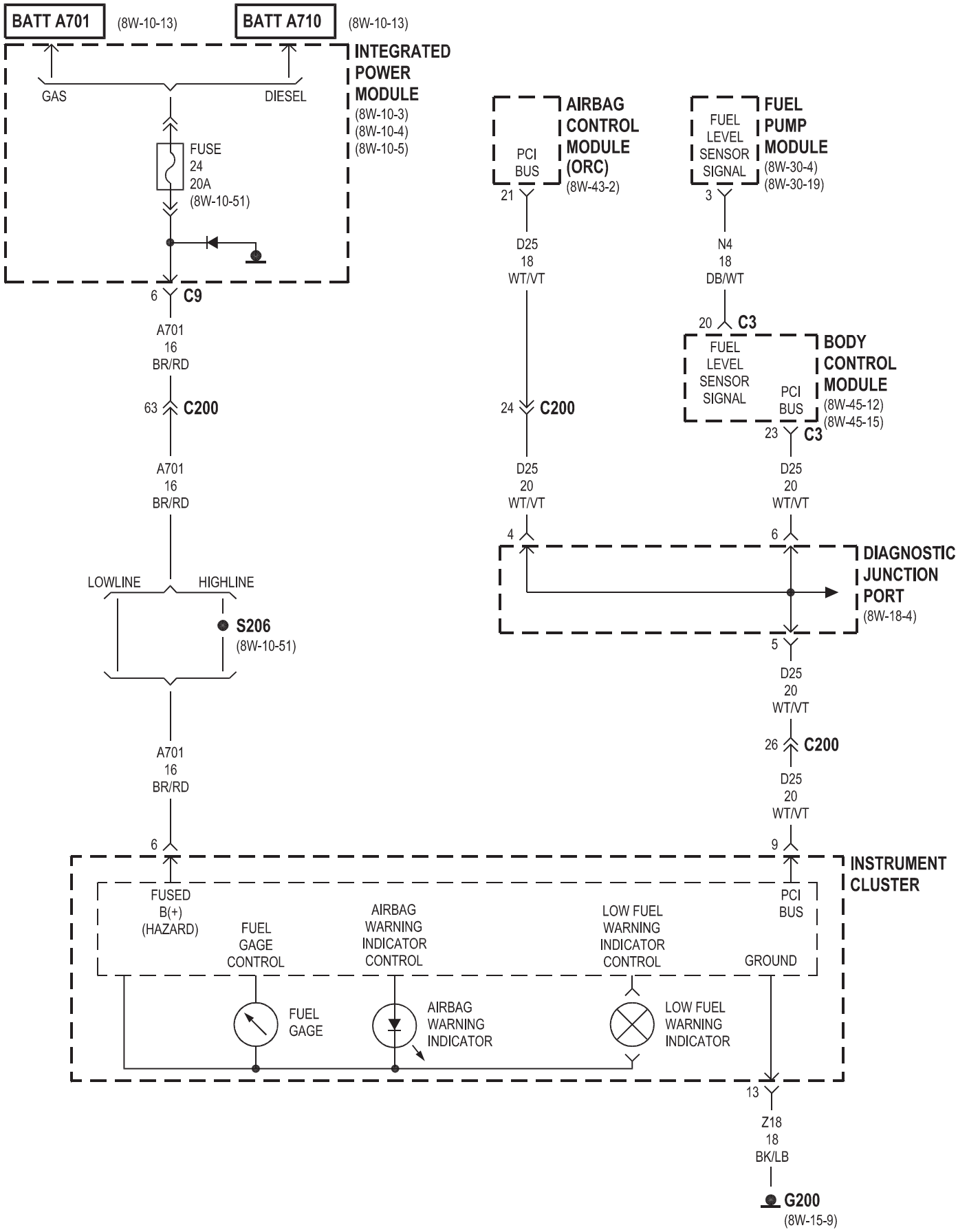
BATT A701
(8W-10-13)
BATT A710
(8W-10-13)
INTEGRATED POWER MODULE
(8W-10-3)
(8W-10-4)
(8W-10-5)
GAS
DIESEL
FUSE 24 20A
(8W-10-51)
6 C9
A701 16 BR/RD
63 C200
A701 16 BR/RD
LOWLINE
HIGHLINE
S206
(8W-10-51)
A701 16 BR/RD
6
AIRBAG CONTROL MODULE (ORC)
(8W-43-2)
PCI BUS
21
D25 18 WT/VT
24 C200
D25 20 WT/VT
4
FUEL PUMP MODULE
(8W-30-4)
(8W-30-19)
FUEL LEVEL SENSOR SIGNAL
3
N4 18 DB/WT
20 C3
BODY CONTROL MODULE
(8W-45-12)
(8W-45-15)
FUEL LEVEL SENSOR SIGNAL
PCI BUS
23 C3
D25 20 WT/VT
6
DIAGNOSTIC JUNCTION PORT
(8W-18-4)
5
D25 20 WT/VT
26 C200
D25 20 WT/VT
9
INSTRUMENT CLUSTER
FUSED B(+) (HAZARD)
FUEL GAGE CONTROL
AIRBAG WARNING INDICATOR CONTROL
LOW FUEL WARNING INDICATOR CONTROL
PCI BUS
GROUND
FUEL GAGE
AIRBAG WARNING INDICATOR
LOW FUEL WARNING INDICATOR
13
Z18 18 BK/LB
G200
(8W-15-9)

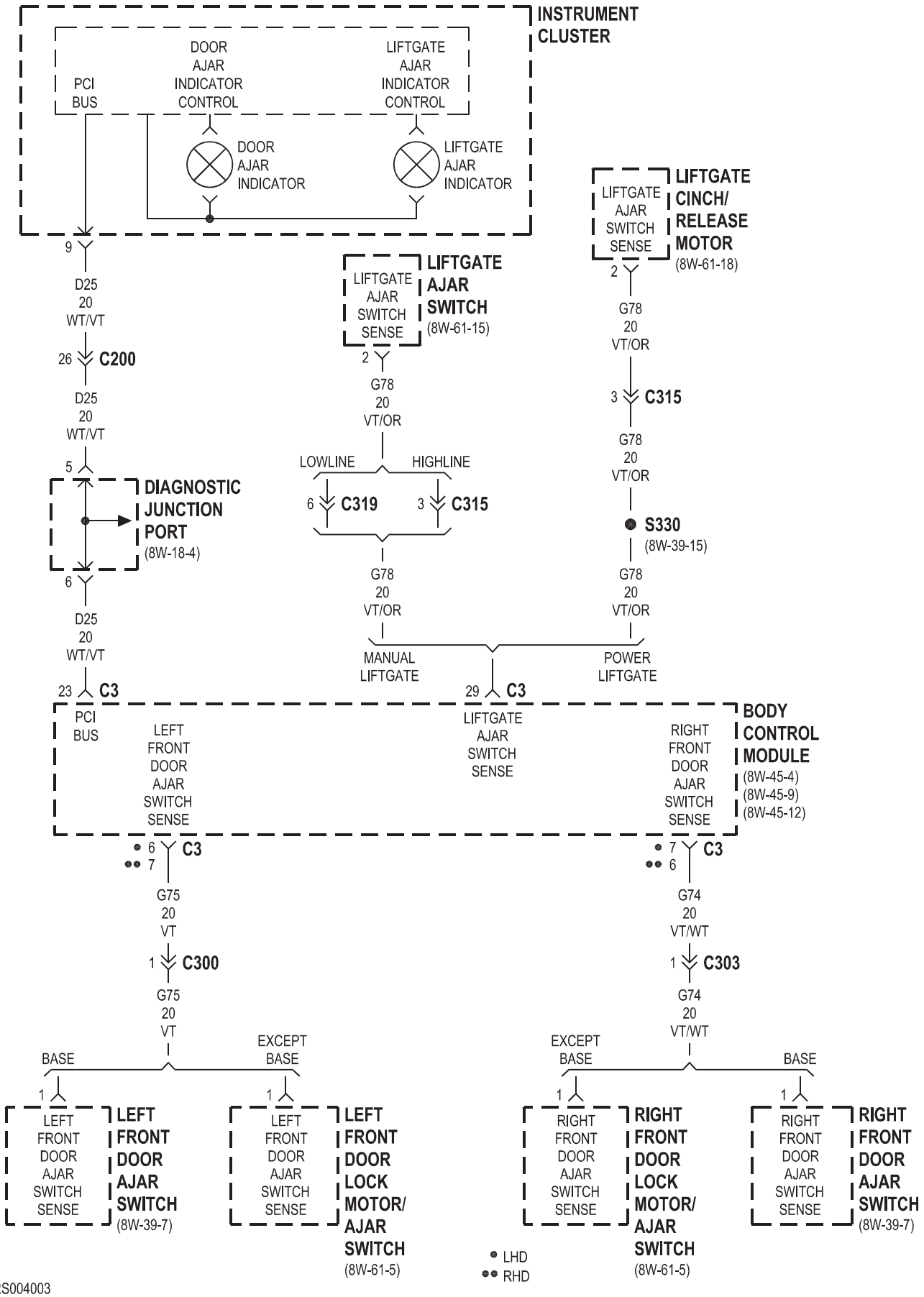
INSTRUMENT CLUSTER
PCI BUS
DOOR AJAR INDICATOR CONTROL
LIFTGATE AJAR INDICATOR CONTROL
DOOR AJAR INDICATOR
LIFTGATE AJAR INDICATOR
9
D25 20 WT/VT
26 C200
D25 20 WT/VT
5
DIAGNOSTIC JUNCTION PORT (8W-18-4)
6
D25 20 WT/VT
23 C3
PCI BUS
LIFTGATE AJAR SWITCH SENSE
LIFTGATE AJAR SWITCH (8W-61-15)
2
G78 20 VT/OR
LOWLINE
HIGHLINE
6 C319
3 C315
G78 20 VT/OR
MANUAL LIFTGATE
29 C3
LIFTGATE AJAR SWITCH SENSE
LIFTGATE AJAR SWITCH SENSE
LIFTGATE CINCH/ RELEASE MOTOR (8W-61-18)
2
G78 20 VT/OR
3 C315
G78 20 VT/OR
S330 (8W-39-15)
G78 20 VT/OR
POWER LIFTGATE
BODY CONTROL MODULE (8W-45-4) (8W-45-9) (8W-45-12)
LEFT FRONT DOOR AJAR SWITCH SENSE
RIGHT FRONT DOOR AJAR SWITCH SENSE
• 6 •• 7 C3
G75 20 VT
1 C300
G75 20 VT
BASE
EXCEPT BASE
1
LEFT FRONT DOOR AJAR SWITCH SENSE
LEFT FRONT DOOR AJAR SWITCH (8W-39-7)
1
LEFT FRONT DOOR AJAR SWITCH SENSE
LEFT FRONT DOOR LOCK MOTOR/ AJAR SWITCH (8W-61-5)
• 7 •• 6 C3
G74 20 VT/WT
1 C303
G74 20 VT/WT
EXCEPT BASE
BASE
1
RIGHT FRONT DOOR AJAR SWITCH SENSE
RIGHT FRONT DOOR LOCK MOTOR/ AJAR SWITCH (8W-61-5)
1
RIGHT FRONT DOOR AJAR SWITCH SENSE
RIGHT FRONT DOOR AJAR SWITCH (8W-39-7)
• LHD
•• RHD

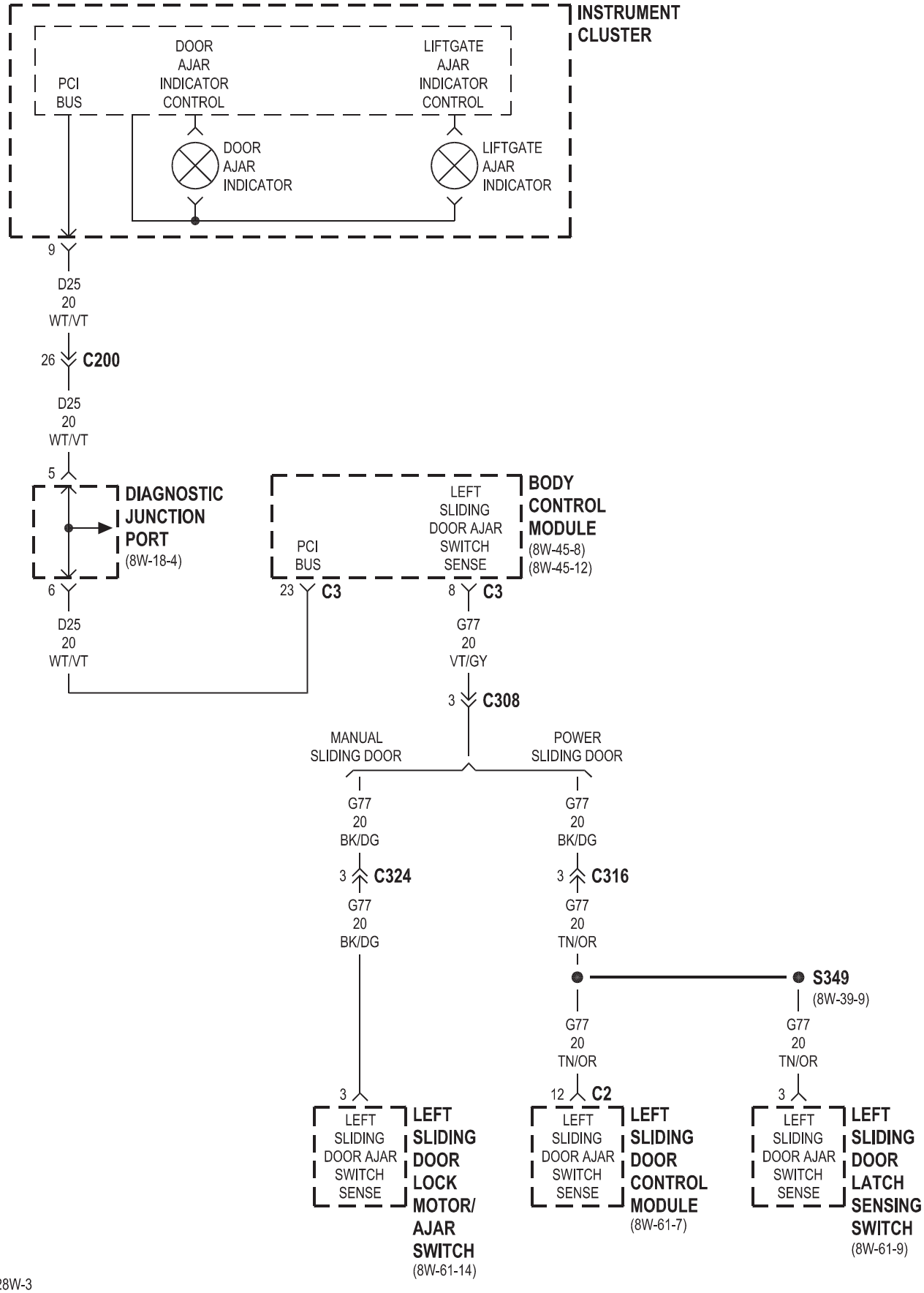
INSTRUMENT CLUSTER
PCI BUS
DOOR AJAR INDICATOR CONTROL
LIFTGATE AJAR INDICATOR CONTROL
DOOR AJAR INDICATOR
LIFTGATE AJAR INDICATOR
9
D25
20
WT/VT
26
C200
D25
20
WT/VT
5
DIAGNOSTIC JUNCTION PORT
(8W-18-4)
6
D25
20
WT/VT
BODY CONTROL MODULE
(8W-45-8)
(8W-45-12)
PCI BUS
23
C3
LEFT SLIDING DOOR AJAR SWITCH SENSE
8
C3
G77
20
VT/GY
3
C308
MANUAL SLIDING DOOR
POWER SLIDING DOOR
G77
20
BK/DG
3
C324
G77
20
BK/DG
G77
20
BK/DG
3
C316
G77
20
TN/OR
S349
(8W-39-9)
G77
20
TN/OR
G77
20
TN/OR
3
LEFT SLIDING DOOR AJAR SWITCH SENSE
LEFT SLIDING DOOR LOCK MOTOR/ AJAR SWITCH
(8W-61-14)
12
C2
LEFT SLIDING DOOR AJAR SWITCH SENSE
LEFT SLIDING DOOR CONTROL MODULE
(8W-61-7)
3
LEFT SLIDING DOOR AJAR SWITCH SENSE
LEFT SLIDING DOOR LATCH SENSING SWITCH
(8W-61-9)

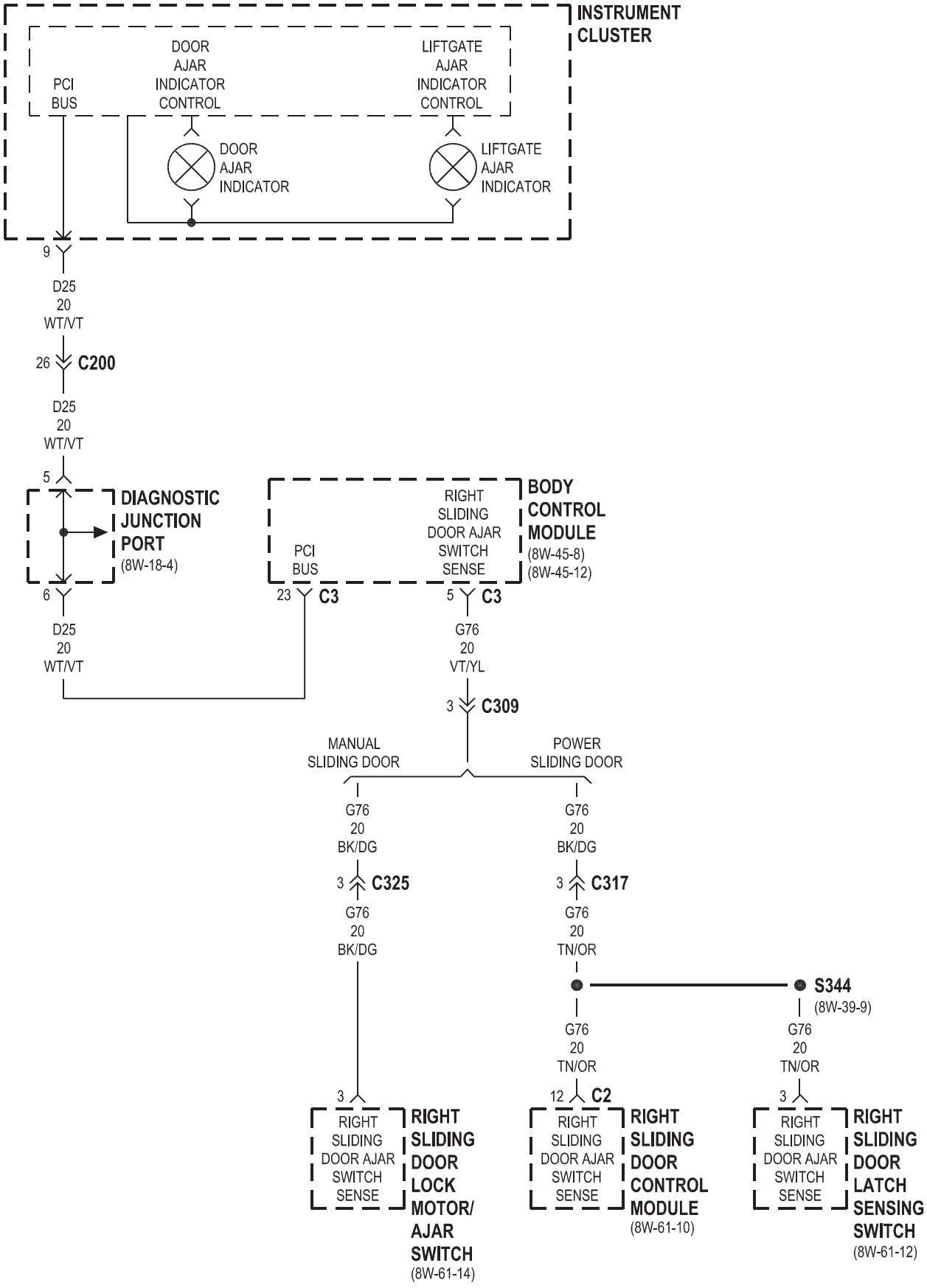
INSTRUMENT CLUSTER
PCI BUS
DOOR AJAR INDICATOR CONTROL
LIFTGATE AJAR INDICATOR CONTROL
DOOR AJAR INDICATOR
LIFTGATE AJAR INDICATOR
9
D25
20
WT/VT
26
C200
D25
20
WT/VT
5
DIAGNOSTIC JUNCTION PORT
(8W-18-4)
6
D25
20
WT/VT
PCI BUS
RIGHT SLIDING DOOR AJAR SWITCH SENSE
BODY CONTROL MODULE
(8W-45-8)
(8W-45-12)
23
C3
5
C3
G76
20
VT/YL
3
C309
MANUAL SLIDING DOOR
POWER SLIDING DOOR
G76
20
BK/DG
3
C325
G76
20
BK/DG
G76
20
BK/DG
3
C317
G76
20
TN/OR
S344
(8W-39-9)
G76
20
TN/OR
G76
20
TN/OR
3
12
C2
3
RIGHT SLIDING DOOR AJAR SWITCH SENSE
RIGHT SLIDING DOOR LOCK MOTOR/ AJAR SWITCH
(8W-61-14)
RIGHT SLIDING DOOR AJAR SWITCH SENSE
RIGHT SLIDING DOOR CONTROL MODULE
(8W-61-10)
RIGHT SLIDING DOOR AJAR SWITCH SENSE
RIGHT SLIDING DOOR LATCH SENSING SWITCH
(8W-61-12)

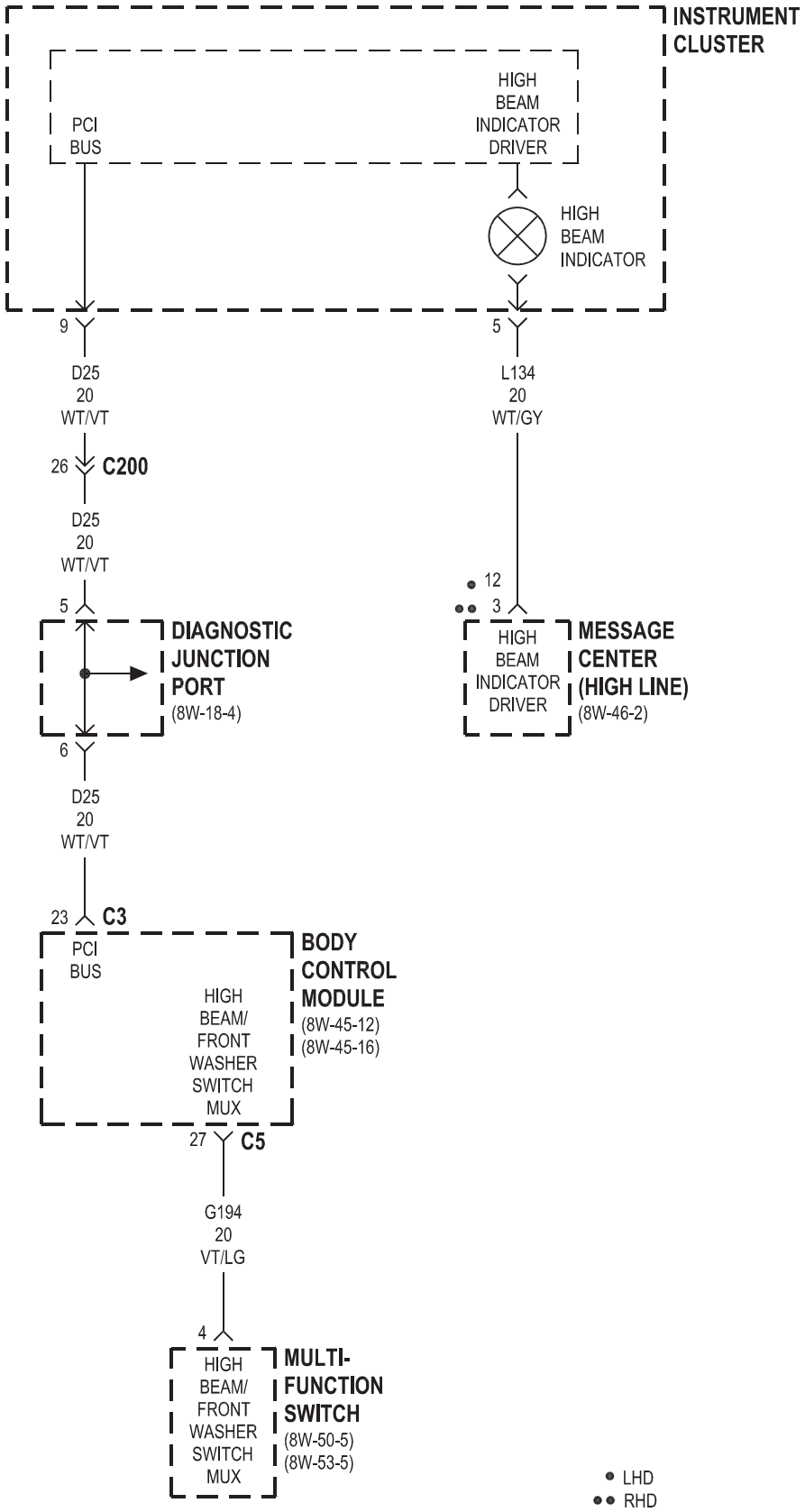
INSTRUMENT CLUSTER
PCI BUS
HIGH BEAM INDICATOR DRIVER
HIGH BEAM INDICATOR
9
5
D25 20 WT/VT
L134 20 WT/GY
26 C200
D25 20 WT/VT
12
3
5
DIAGNOSTIC JUNCTION PORT
(8W-18-4)
HIGH BEAM INDICATOR DRIVER
MESSAGE CENTER (HIGH LINE)
(8W-46-2)
6
D25 20 WT/VT
23 C3
PCI BUS
HIGH BEAM/ FRONT WASHER SWITCH MUX
BODY CONTROL MODULE
(8W-45-12)
(8W-45-16)
27 C5
G194 20 VT/LG
4
HIGH BEAM/ FRONT WASHER SWITCH MUX
MULTI-FUNCTION SWITCH
(8W-50-5)
(8W-53-5)
LHD
RHD

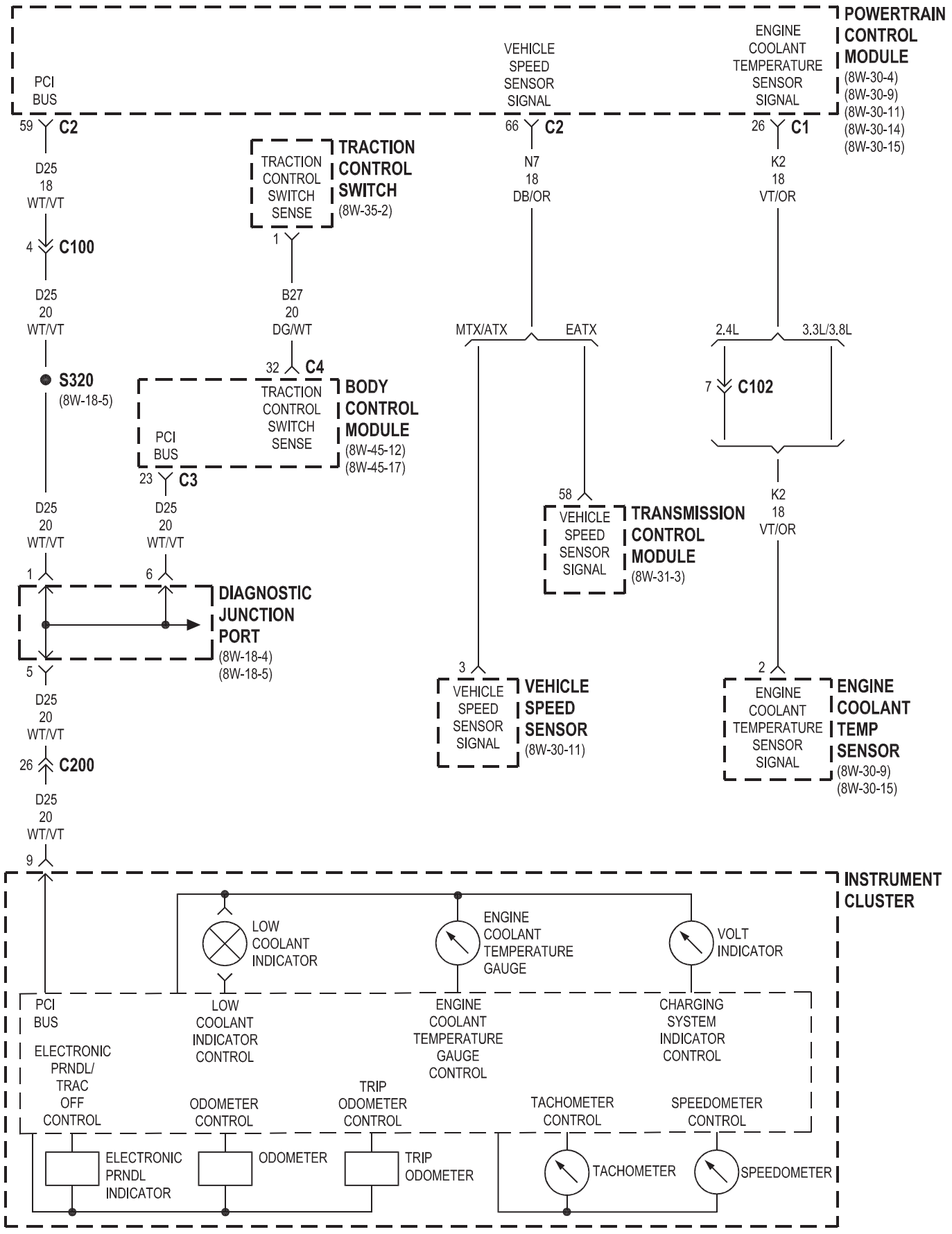
POWERTRAIN CONTROL MODULE
(8W-30-4)
(8W-30-9)
(8W-30-11)
(8W-30-14)
(8W-30-15)
PCI BUS
59 C2
D25 18 WT/VT
4 C100
D25 20 WT/VT
S320
(8W-18-5)
D25 20 WT/VT
1
D25 20 WT/VT
26 C200
D25 20 WT/VT
9
VEHICLE SPEED SENSOR SIGNAL
66 C2
N7 18 DB/OR
MTX/ATX
EATX
3
VEHICLE SPEED SENSOR SIGNAL
VEHICLE SPEED SENSOR
(8W-30-11)
ENGINE COOLANT TEMPERATURE SENSOR SIGNAL
26 C1
K2 18 VT/OR
2.4L
3.3L/3.8L
7 C102
K2 18 VT/OR
2
ENGINE COOLANT TEMPERATURE SENSOR SIGNAL
ENGINE COOLANT TEMP SENSOR
(8W-30-9)
(8W-30-15)
TRACTION CONTROL SWITCH SENSE
TRACTION CONTROL SWITCH
(8W-35-2)
1
B27 20 DG/WT
32 C4
TRACTION CONTROL SWITCH SENSE
BODY CONTROL MODULE
(8W-45-12)
(8W-45-17)
PCI BUS
23 C3
D25 20 WT/VT
6
DIAGNOSTIC JUNCTION PORT
(8W-18-4)
(8W-18-5)
5
58
VEHICLE SPEED SENSOR SIGNAL
TRANSMISSION CONTROL MODULE
(8W-31-3)
INSTRUMENT CLUSTER
LOW COOLANT INDICATOR
ENGINE COOLANT TEMPERATURE GAUGE
VOLT INDICATOR
PCI BUS
ELECTRONIC PRNDL/ TRAC OFF CONTROL
LOW COOLANT INDICATOR CONTROL
ENGINE COOLANT TEMPERATURE GAUGE CONTROL
CHARGING SYSTEM INDICATOR CONTROL
ODOMETER CONTROL
TRIP ODOMETER CONTROL
TACHOMETER CONTROL
SPEEDOMETER CONTROL
ELECTRONIC PRNDL INDICATOR
ODOMETER
TRIP ODOMETER
TACHOMETER
SPEEDOMETER

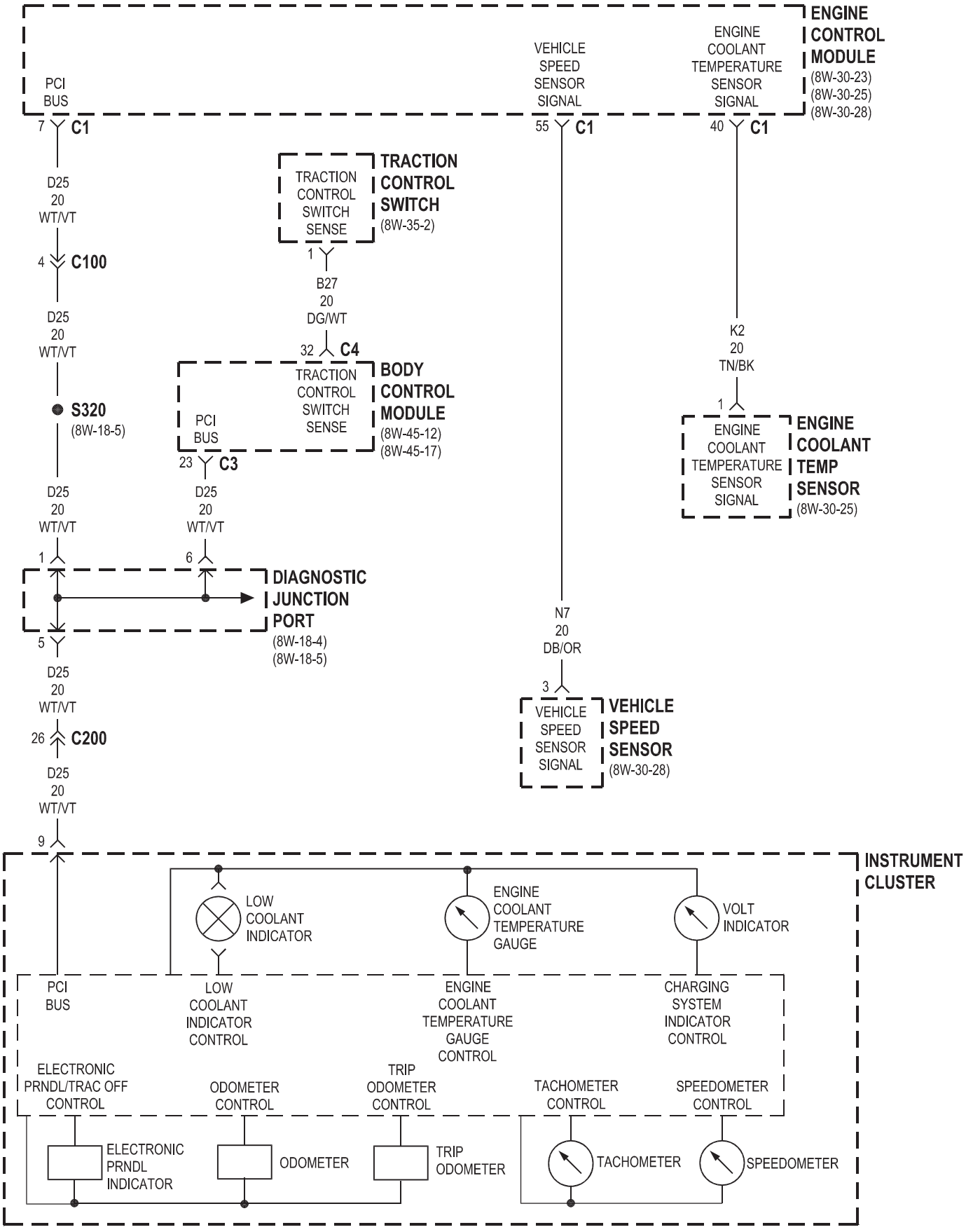
ENGINE CONTROL MODULE
(8W-30-23)
(8W-30-25)
(8W-30-28)
PCI BUS
7 C1
VEHICLE SPEED SENSOR SIGNAL
55 C1
ENGINE COOLANT TEMPERATURE SENSOR SIGNAL
40 C1
D25 20 WT/VT
4 C100
D25 20 WT/VT
S320
(8W-18-5)
TRACTION CONTROL SWITCH SENSE
TRACTION CONTROL SWITCH
(8W-35-2)
1
B27 20 DG/WT
32 C4
TRACTION CONTROL SWITCH SENSE
BODY CONTROL MODULE
(8W-45-12)
(8W-45-17)
PCI BUS
23 C3
K2 20 TN/BK
1
ENGINE COOLANT TEMPERATURE SENSOR SIGNAL
ENGINE COOLANT TEMP SENSOR
(8W-30-25)
D25 20 WT/VT
1
D25 20 WT/VT
6
DIAGNOSTIC JUNCTION PORT
(8W-18-4)
(8W-18-5)
5
D25 20 WT/VT
26 C200
D25 20 WT/VT
9
N7 20 DB/OR
3
VEHICLE SPEED SENSOR SIGNAL
VEHICLE SPEED SENSOR
(8W-30-28)
INSTRUMENT CLUSTER
LOW COOLANT INDICATOR
ENGINE COOLANT TEMPERATURE GAUGE
VOLT INDICATOR
PCI BUS
LOW COOLANT INDICATOR CONTROL
ENGINE COOLANT TEMPERATURE GAUGE CONTROL
CHARGING SYSTEM INDICATOR CONTROL
ELECTRONIC PRNDL/TRAC OFF CONTROL
ODOMETER CONTROL
TRIP ODOMETER CONTROL
TACHOMETER CONTROL
SPEEDOMETER CONTROL
ELECTRONIC PRNDL INDICATOR
ODOMETER
TRIP ODOMETER
TACHOMETER
SPEEDOMETER

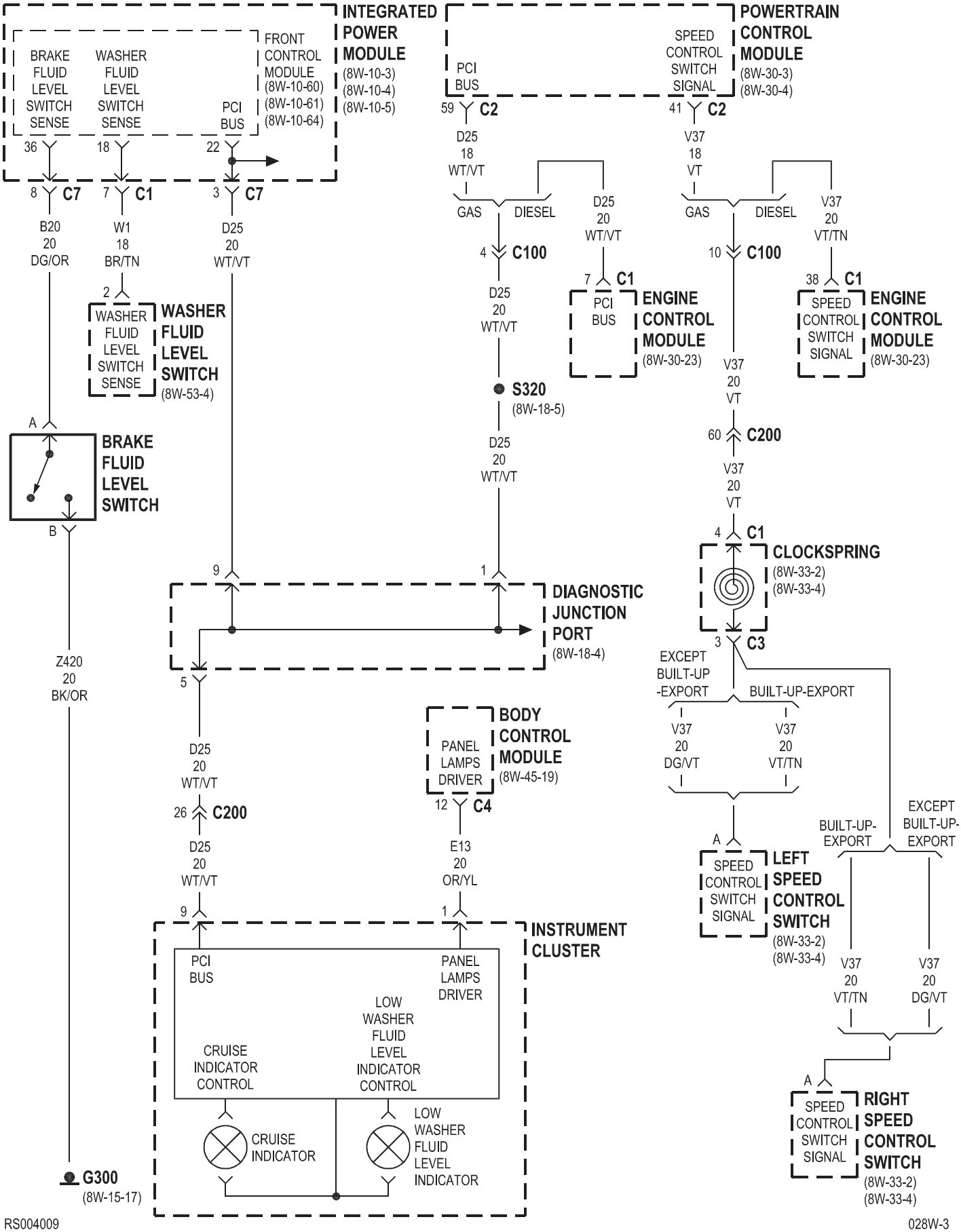
INTEGRATED POWER MODULE (8W-10-3) (8W-10-4) (8W-10-5)
FRONT CONTROL MODULE (8W-10-60) (8W-10-61) (8W-10-64)
BRAKE FLUID LEVEL SWITCH SENSE
WASHER FLUID LEVEL SWITCH SENSE
PCI BUS
36
18
22
8 C7
7 C1
3 C7
B20 20 DG/OR
W1 18 BR/TN
D25 20 WT/VT
2
WASHER FLUID LEVEL SWITCH SENSE
WASHER FLUID LEVEL SWITCH (8W-53-4)
A
BRAKE FLUID LEVEL SWITCH
B
Z420 20 BK/OR
G300 (8W-15-17)
POWERTRAIN CONTROL MODULE (8W-30-3) (8W-30-4)
PCI BUS
SPEED CONTROL SWITCH SIGNAL
59 C2
41 C2
D25 18 WT/VT
V37 18 VT
GAS
DIESEL
4 C100
10 C100
D25 20 WT/VT
V37 20 VT/TN
7 C1
38 C1
PCI BUS
SPEED CONTROL SWITCH SIGNAL
ENGINE CONTROL MODULE (8W-30-23)
S320 (8W-18-5)
V37 20 VT
60 C200
4 C1
CLOCKSPRING (8W-33-2) (8W-33-4)
3 C3
EXCEPT BUILT-UP-EXPORT
BUILT-UP-EXPORT
V37 20 DG/VT
V37 20 VT/TN
A
SPEED CONTROL SWITCH SIGNAL
LEFT SPEED CONTROL SWITCH (8W-33-2) (8W-33-4)
BUILT-UP-EXPORT
EXCEPT BUILT-UP-EXPORT
V37 20 VT/TN
V37 20 DG/VT
A
SPEED CONTROL SWITCH SIGNAL
RIGHT SPEED CONTROL SWITCH (8W-33-2) (8W-33-4)
9
1
DIAGNOSTIC JUNCTION PORT (8W-18-4)
5
D25 20 WT/VT
26 C200
D25 20 WT/VT
9
BODY CONTROL MODULE (8W-45-19)
PANEL LAMPS DRIVER
12 C4
E13 20 OR/YL
1
INSTRUMENT CLUSTER
PCI BUS
PANEL LAMPS DRIVER
LOW WASHER FLUID LEVEL INDICATOR CONTROL
CRUISE INDICATOR CONTROL
CRUISE INDICATOR
LOW WASHER FLUID LEVEL INDICATOR

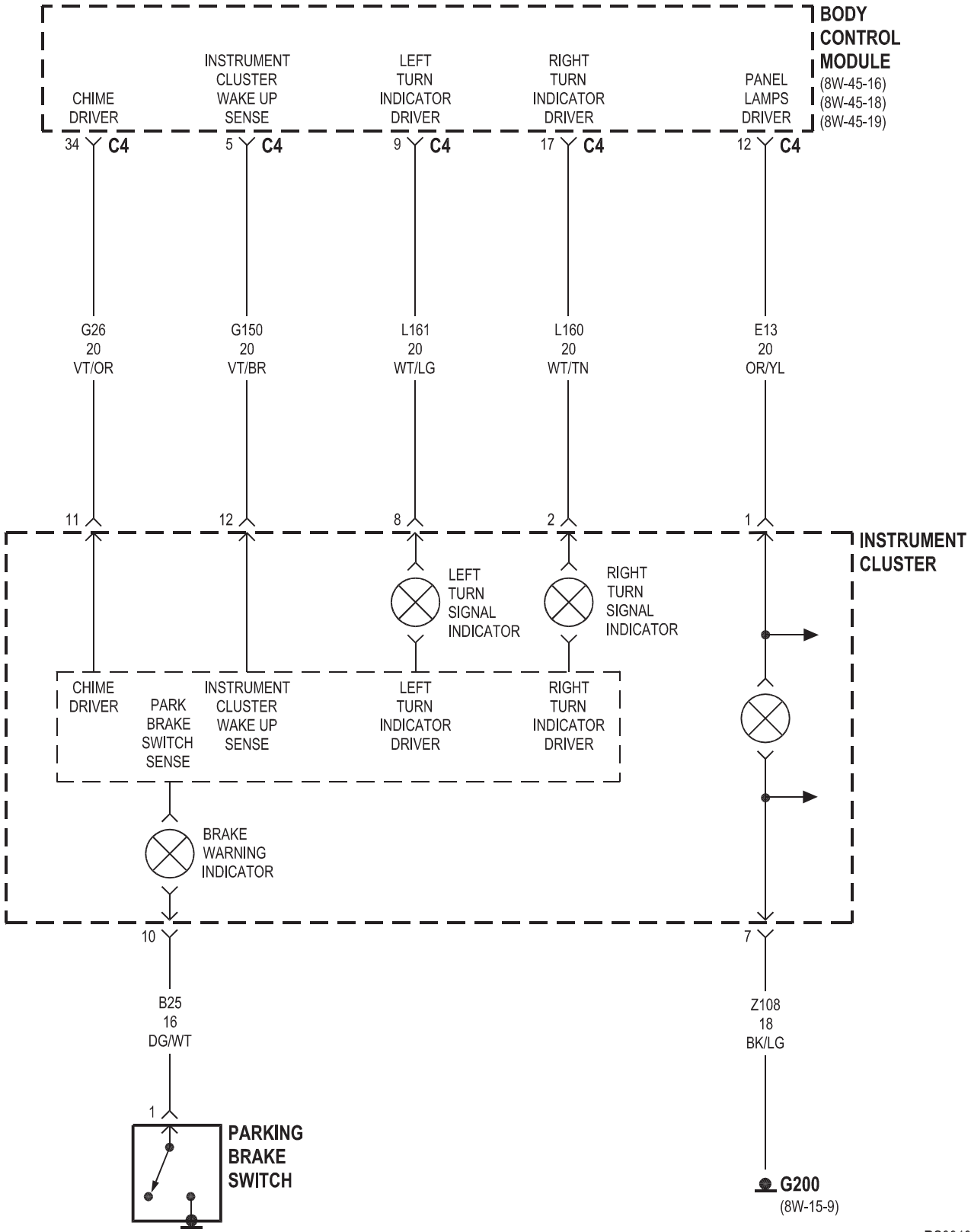
BODY CONTROL MODULE
(8W-45-16)
(8W-45-18)
(8W-45-19)
CHIME DRIVER
INSTRUMENT CLUSTER WAKE UP SENSE
LEFT TURN INDICATOR DRIVER
RIGHT TURN INDICATOR DRIVER
PANEL LAMPS DRIVER
34 C4
5 C4
9 C4
17 C4
12 C4
G26 20 VT/OR
G150 20 VT/BR
L161 20 WT/LG
L160 20 WT/TN
E13 20 OR/YL
11
12
8
2
1
INSTRUMENT CLUSTER
LEFT TURN SIGNAL INDICATOR
RIGHT TURN SIGNAL INDICATOR
CHIME DRIVER
PARK BRAKE SWITCH SENSE
INSTRUMENT CLUSTER WAKE UP SENSE
LEFT TURN INDICATOR DRIVER
RIGHT TURN INDICATOR DRIVER
BRAKE WARNING INDICATOR
10
7
B25 16 DG/WT
Z108 18 BK/LG
1
PARKING BRAKE SWITCH
G200
(8W-15-9)

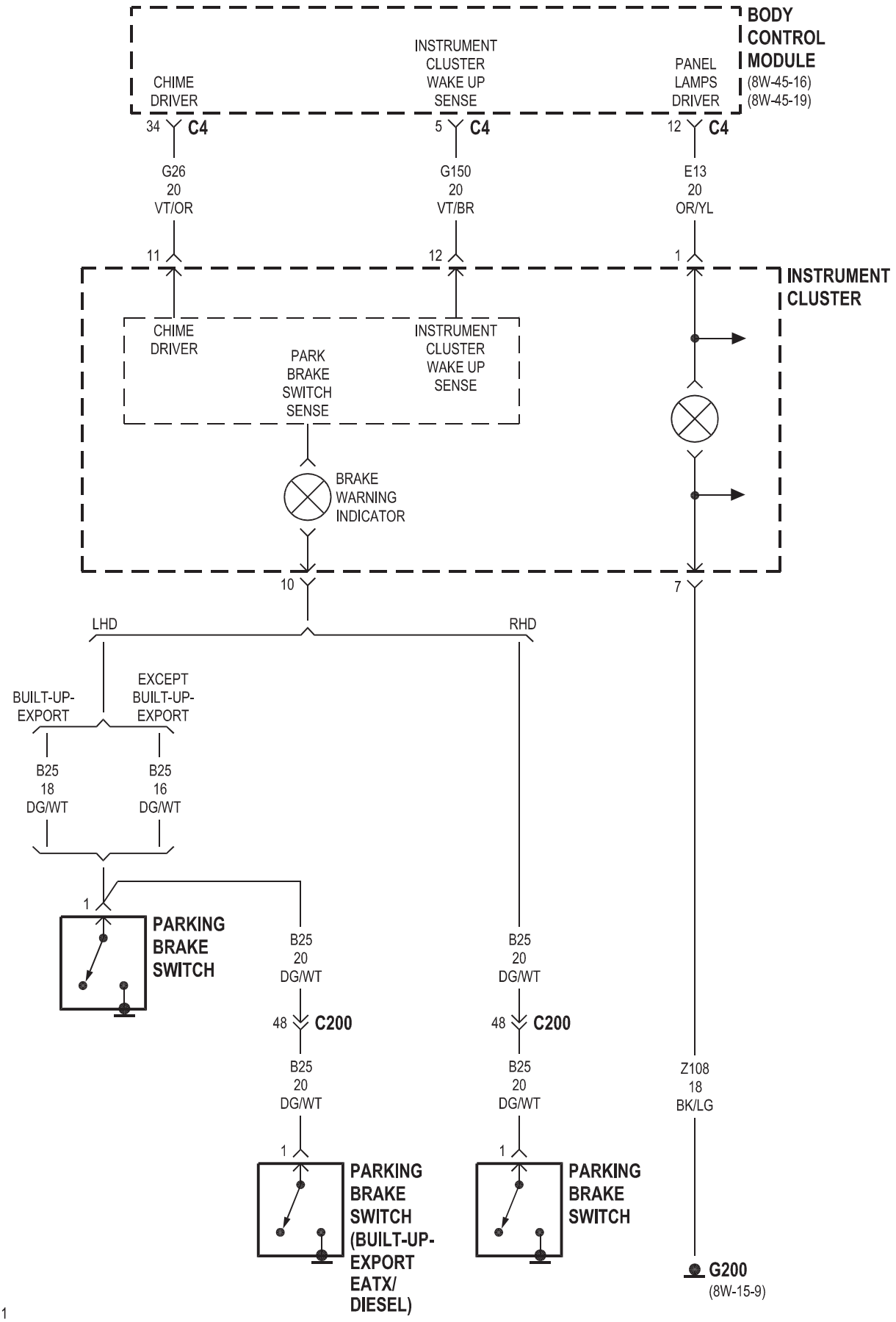
BODY CONTROL MODULE
(8W-45-16)
(8W-45-19)
CHIME DRIVER
INSTRUMENT CLUSTER WAKE UP SENSE
PANEL LAMPS DRIVER
34 C4
5 C4
12 C4
G26 20 VT/OR
G150 20 VT/BR
E13 20 OR/YL
11
12
1
INSTRUMENT CLUSTER
CHIME DRIVER
PARK BRAKE SWITCH SENSE
INSTRUMENT CLUSTER WAKE UP SENSE
BRAKE WARNING INDICATOR
10
7
LHD
RHD
BUILT-UP-EXPORT
EXCEPT BUILT-UP-EXPORT
B25 18 DG/WT
B25 16 DG/WT
1
PARKING BRAKE SWITCH
B25 20 DG/WT
48 C200
B25 20 DG/WT
48 C200
B25 20 DG/WT
B25 20 DG/WT
Z108 18 BK/LG
1
1
PARKING BRAKE SWITCH (BUILT-UP-EXPORT EATX/ DIESEL)
PARKING BRAKE SWITCH
G200
(8W-15-9)

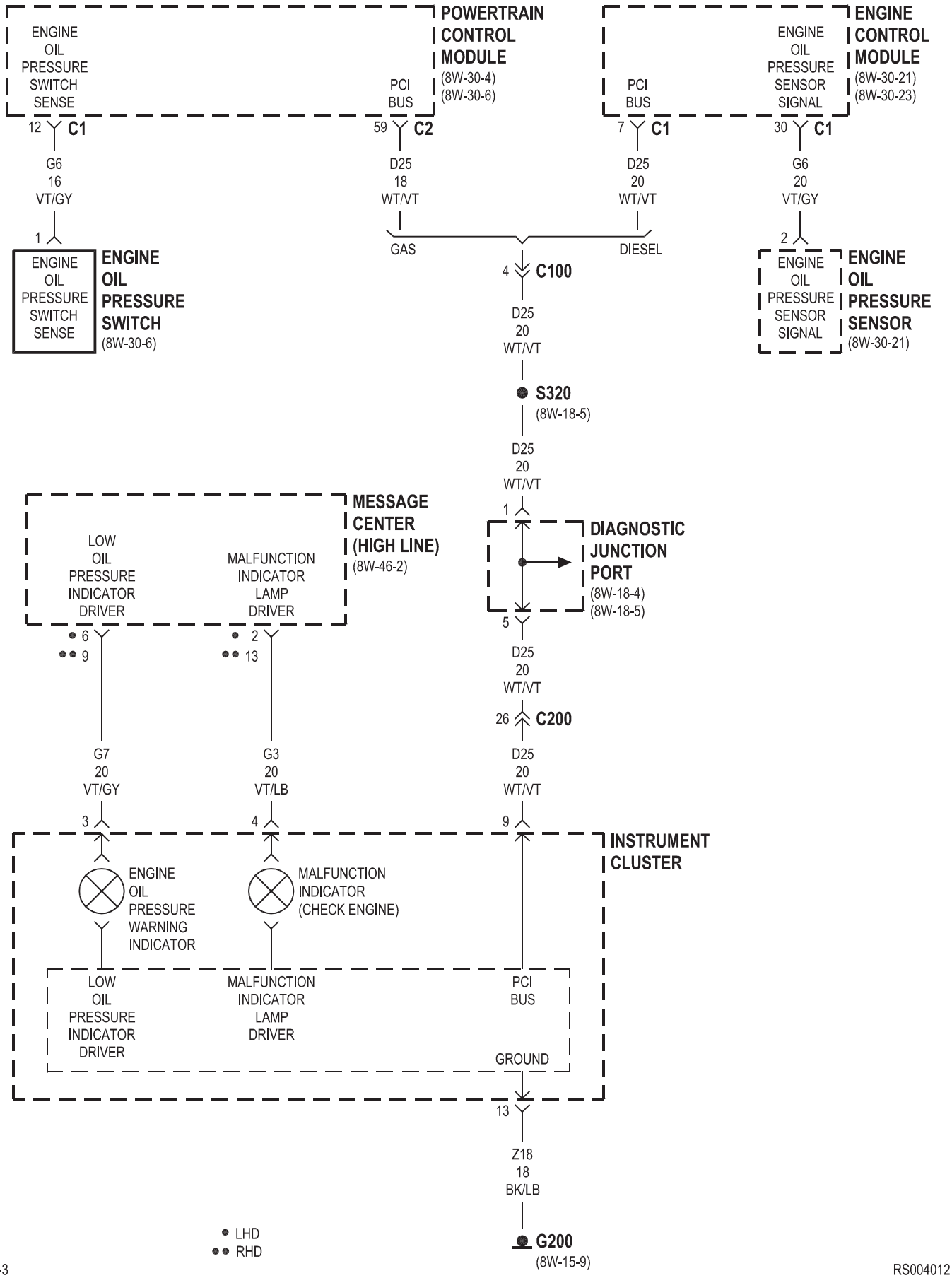
POWERTRAIN CONTROL MODULE
(8W-30-4)
(8W-30-6)
ENGINE OIL PRESSURE SWITCH SENSE
PCI BUS
12 C1
59 C2
G6 16 VT/GY
D25 18 WT/VT
1
ENGINE OIL PRESSURE SWITCH SENSE
ENGINE OIL PRESSURE SWITCH
(8W-30-6)
GAS
DIESEL
4 C100
D25 20 WT/VT
S320
(8W-18-5)
D25 20 WT/VT
1
DIAGNOSTIC JUNCTION PORT
(8W-18-4)
(8W-18-5)
5
D25 20 WT/VT
26 C200
D25 20 WT/VT
9
ENGINE CONTROL MODULE
(8W-30-21)
(8W-30-23)
PCI BUS
ENGINE OIL PRESSURE SENSOR SIGNAL
7 C1
30 C1
D25 20 WT/VT
G6 20 VT/GY
2
ENGINE OIL PRESSURE SENSOR SIGNAL
ENGINE OIL PRESSURE SENSOR
(8W-30-21)
MESSAGE CENTER (HIGH LINE)
(8W-46-2)
LOW OIL PRESSURE INDICATOR DRIVER
MALFUNCTION INDICATOR LAMP DRIVER
6
9
2
13
G7 20 VT/GY
G3 20 VT/LB
3
4
INSTRUMENT CLUSTER
ENGINE OIL PRESSURE WARNING INDICATOR
MALFUNCTION INDICATOR (CHECK ENGINE)
LOW OIL PRESSURE INDICATOR DRIVER
MALFUNCTION INDICATOR LAMP DRIVER
PCI BUS
GROUND
13
Z18 18 BK/LB
G200
(8W-15-9)
LHD
RHD

8W-41 HORN/CIGAR LIGHTER/POWER OUTLET

Component	Page
Accessory Relay	8W-41-3, 4
Body Control Module	8W-41-3
Clockspring	8W-41-2
Floor Console Power Outlet	8W-41-4
Front Cigar Lighter	8W-41-3
Front Control Module	8W-41-2, 3, 4
Fuse 5	8W-41-3, 4
Fuse 6	8W-41-3, 4
Fuse 8	8W-41-2
G102	8W-41-2
G200	8W-41-3, 4
G302	8W-41-3, 4
High Note Horn	8W-41-2
Horn Relay	8W-41-2
Horn Switch	8W-41-2
Integrated Power Module	8W-41-2, 3, 4
Low Note Horn	8W-41-2
Power Outlet	8W-41-4
PTC 7	8W-41-4
Radio	8W-41-3
Rear Power Outlet	8W-41-3

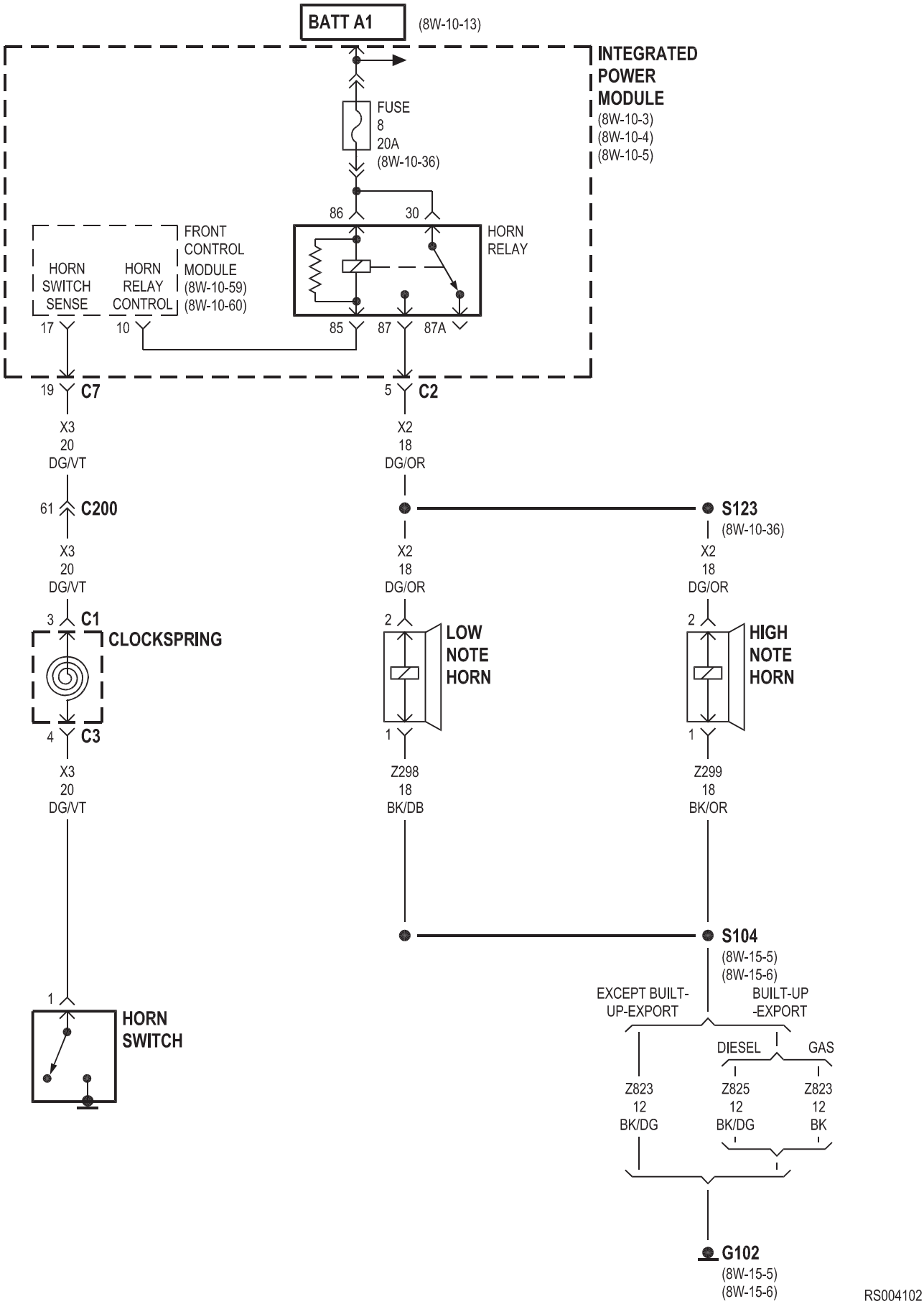
BATT A1
(8W-10-13)
INTEGRATED POWER MODULE
(8W-10-3)
(8W-10-4)
(8W-10-5)
FUSE
8
20A
(8W-10-36)
86
30
HORN RELAY
FRONT CONTROL MODULE
(8W-10-59)
(8W-10-60)
HORN SWITCH SENSE
HORN RELAY CONTROL
17
10
85
87
87A
19
C7
5
C2
X3
20
DG/VT
X2
18
DG/OR
61
C200
S123
(8W-10-36)
3
C1
CLOCKSPRING
4
C3
2
LOW NOTE HORN
1
HIGH NOTE HORN
Z298
18
BK/DB
Z299
18
BK/OR
1
HORN SWITCH
S104
(8W-15-5)
(8W-15-6)
EXCEPT BUILT-UP-EXPORT
BUILT-UP -EXPORT
DIESEL
GAS
Z823
12
BK/DG
Z825
12
BK/DG
Z823
12
BK
G102
(8W-15-5)
(8W-15-6)

RS004102

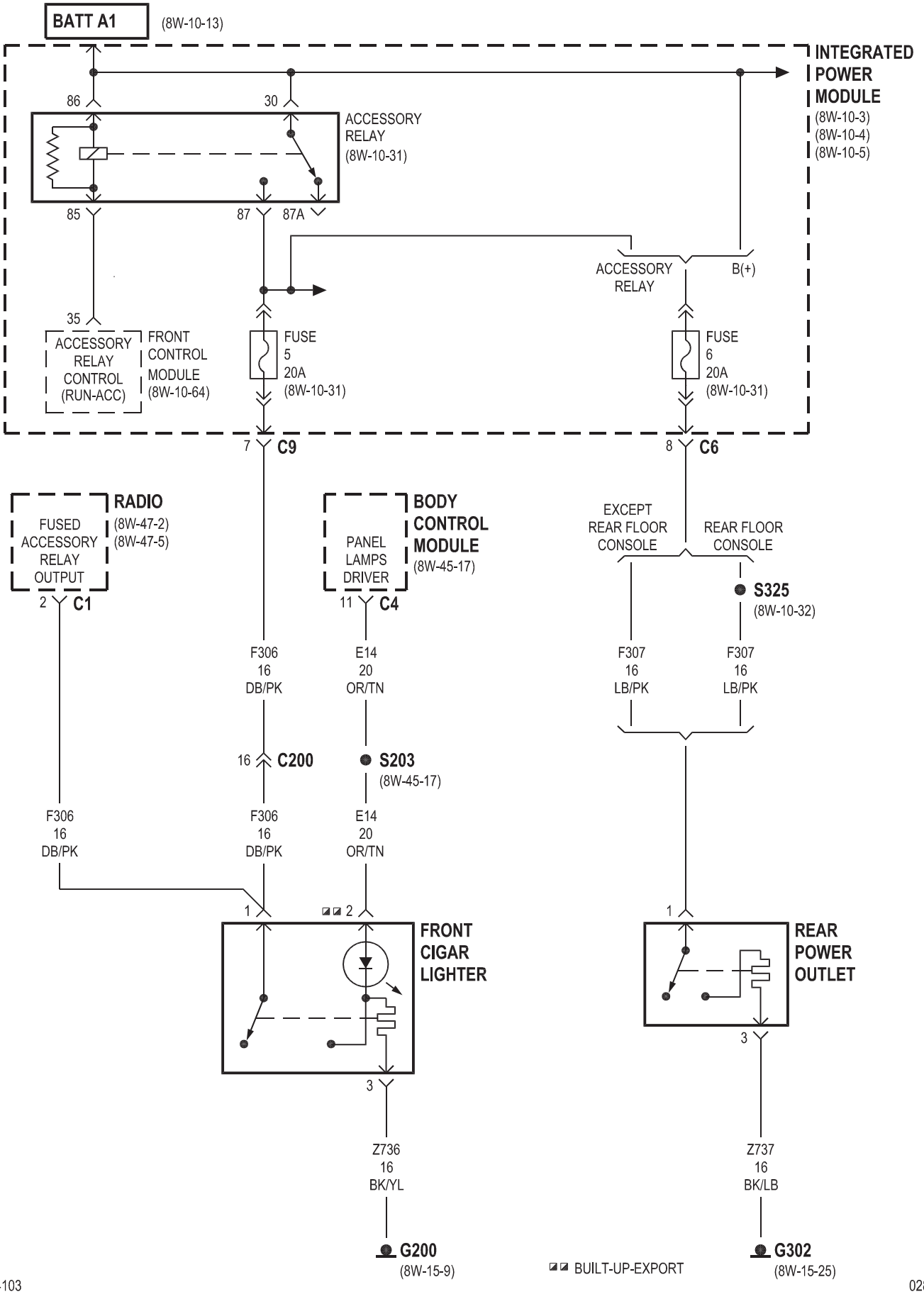
BATT A1
(8W-10-13)
INTEGRATED POWER MODULE
(8W-10-3)
(8W-10-4)
(8W-10-5)
86
30
ACCESSORY RELAY
(8W-10-31)
85
87
87A
ACCESSORY RELAY
B(+)
35
ACCESSORY RELAY CONTROL (RUN-ACC)
FRONT CONTROL MODULE
(8W-10-64)
FUSE 5 20A
(8W-10-31)
FUSE 6 20A
(8W-10-31)
7 C9
8 C6
RADIO
FUSED ACCESSORY RELAY OUTPUT
(8W-47-2)
(8W-47-5)
2 C1
BODY CONTROL MODULE
(8W-45-17)
PANEL LAMPS DRIVER
11 C4
EXCEPT REAR FLOOR CONSOLE
REAR FLOOR CONSOLE
S325
(8W-10-32)
F306 16 DB/PK
E14 20 OR/TN
F307 16 LB/PK
F307 16 LB/PK
16 C200
S203
(8W-45-17)
F306 16 DB/PK
F306 16 DB/PK
E14 20 OR/TN
1
2
1
FRONT CIGAR LIGHTER
REAR POWER OUTLET
3
3
Z736 16 BK/YL
Z737 16 BK/LB
G200
(8W-15-9)
BUILT-UP-EXPORT
G302
(8W-15-25)

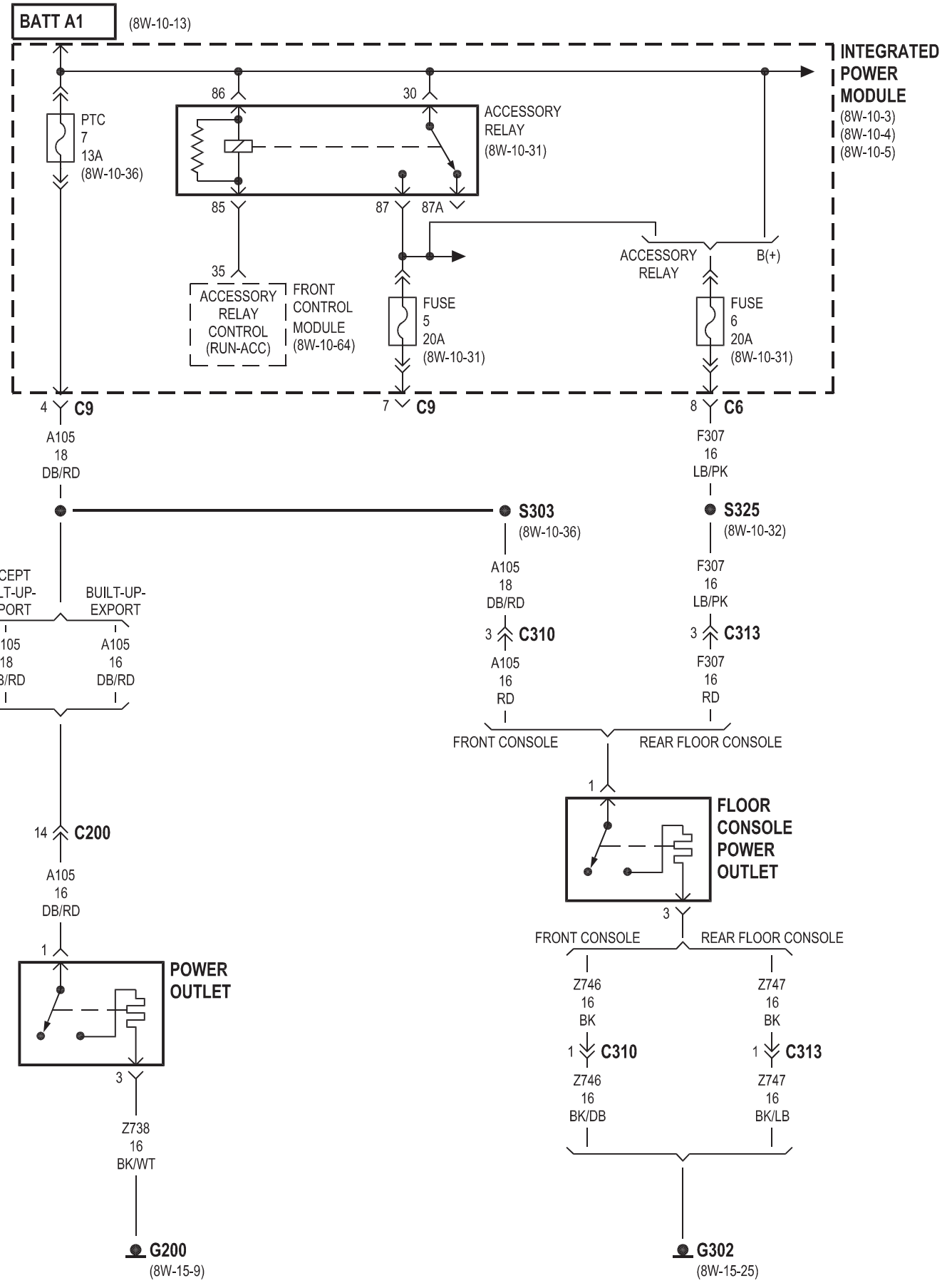
BATT A1
(8W-10-13)
INTEGRATED POWER MODULE
(8W-10-3)
(8W-10-4)
(8W-10-5)
PTC
7
13A
(8W-10-36)
86
30
ACCESSORY RELAY
(8W-10-31)
85
87
87A
35
ACCESSORY RELAY CONTROL (RUN-ACC)
FRONT CONTROL MODULE
(8W-10-64)
FUSE
5
20A
(8W-10-31)
ACCESSORY RELAY
B(+)
FUSE
6
20A
(8W-10-31)
4 C9
7 C9
8 C6
A105
18
DB/RD
F307
16
LB/PK
S303
(8W-10-36)
S325
(8W-10-32)
EXCEPT BUILT-UP-EXPORT
BUILT-UP-EXPORT
A105
18
DB/RD
A105
16
DB/RD
3 C310
3 C313
A105
16
RD
F307
16
RD
FRONT CONSOLE
REAR FLOOR CONSOLE
1
FLOOR CONSOLE POWER OUTLET
3
14 C200
A105
16
DB/RD
1
POWER OUTLET
3
Z738
16
BK/WT
G200
(8W-15-9)
FRONT CONSOLE
REAR FLOOR CONSOLE
Z746
16
BK
Z747
16
BK
1 C310
1 C313
Z746
16
BK/DB
Z747
16
BK/LB
G302
(8W-15-25)

8W-42 AIR CONDITIONING-HEATER

Component	Page
A/C Compressor Clutch	8W-42-14, 16
A/C Compressor Clutch Relay	8W-42-14, 16
A/C Pressure Sensor	8W-42-14, 16
A/C- Heater Control	8W-42-2, 3, 4, 5, 7
ATC Remote Sensor	8W-42-11
Auto Temp Control	8W-42-8, 9, 10, 11, 12, 13
Battery	8W-42-17
Blower Motor Resistor	8W-42-2
Body Control Module	8W-42-4, 7, 9, 13
Diagnostic Junction Port	8W-42-4, 9
Driver Blend Door Actuator	8W-42-5, 10
ECM/PCM Relay	8W-42-17
Electric Wiper De-Icer	8W-42-3, 8
Engine Control Module	8W-42-16, 17
Evaporator Temperature Sensor	8W-42-5, 10
Front Blower Module	8W-42-11
Front Blower Motor	8W-42-2, 11
Front Blower Motor Relay	8W-42-2, 11
Front Control Module	8W-42-2, 6, 11, 12
Fuse 10	8W-42-2, 11
Fuse 12	8W-42-6, 12
Fuse 14	8W-42-8
Fuse 16	8W-42-17
Fuse 18	8W-42-14, 16
Fuse 27	8W-42-15, 18
Fuselink	8W-42-17
G102	8W-42-15, 18
G103	8W-42-14, 16
G200	8W-42-2, 3, 4, 6, 8, 9, 11, 12
G300	8W-42-7, 13
G302	8W-42-12
Integrated Power Module	8W-42-2, 6, 8, 11, 12, 14, 15, 16, 17, 18
Mode Door Actuator	8W-42-5, 10
Passenger Blend Door Actuator	8W-42-5, 10
Powertrain Control Module	8W-42-14, 15
Radiator Fan No. 1	8W-42-15, 17, 18
Radiator Fan No. 2	8W-42-15, 18
Radiator Fan Relay	8W-42-15
Radiator Fan Relay No. 1	8W-42-17, 18
Radiator Fan Relay No. 2	8W-42-18
Radiator Fan Relay No. 3	8W-42-18
Rear A/C-Heater Unit	8W-42-6, 7
Rear Auto Temp Control Switch	8W-42-13
Rear Blower Front Control Switch	8W-42-6
Rear Blower Motor	8W-42-12
Rear Blower Motor Power Module	8W-42-12
Rear Blower Motor Relay	8W-42-6, 12
Rear Blower Rear Control Switch	8W-42-6, 7
Rear Mode Motor	8W-42-12
Rear Temperature Motor	8W-42-12
Recirculation Door Actuator	8W-42-5, 10
TXV Solenoid	8W-42-12

2002 RS Service Manual
Publication No. 81-370-02062
TSB 26-12-01 December, 2001

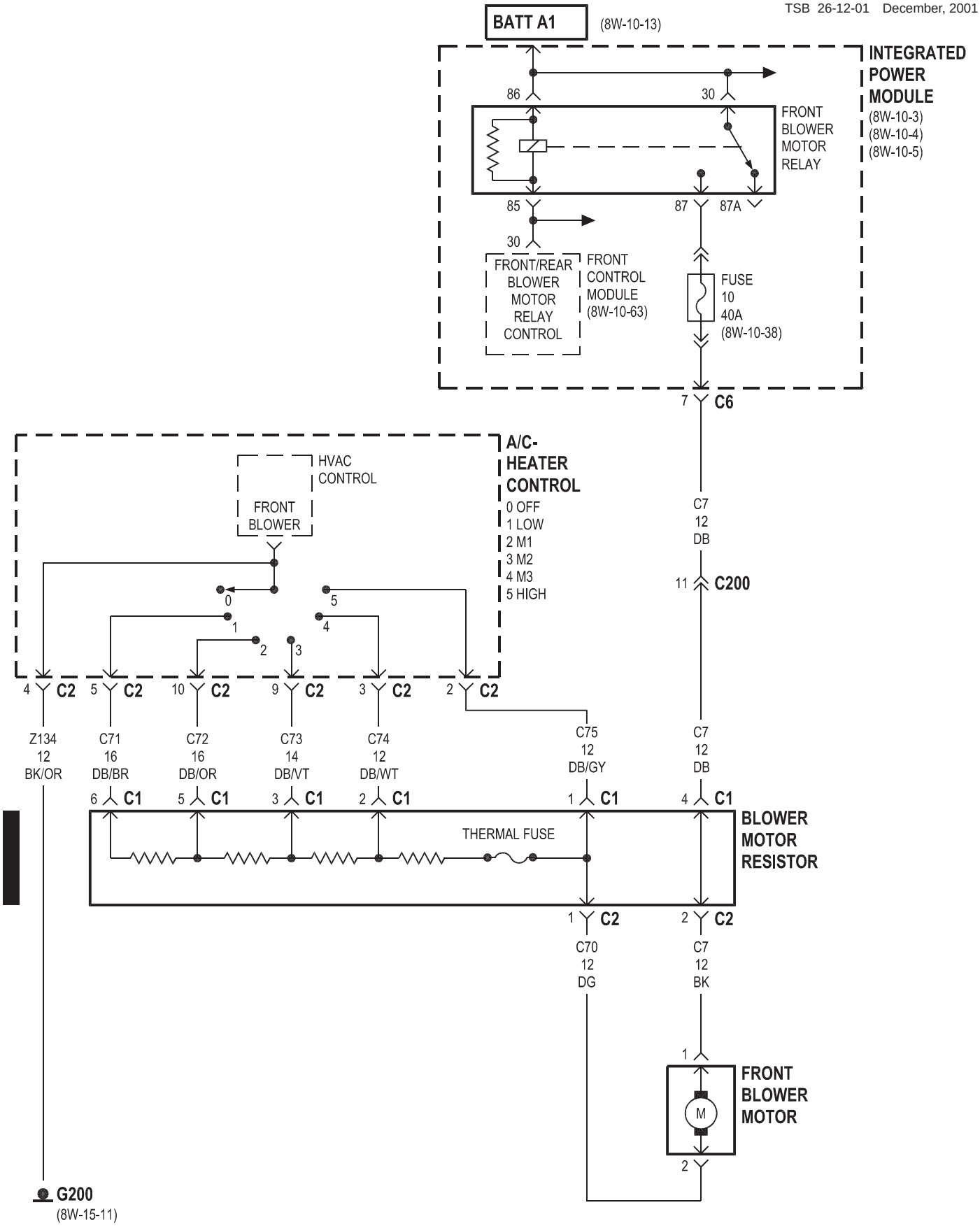

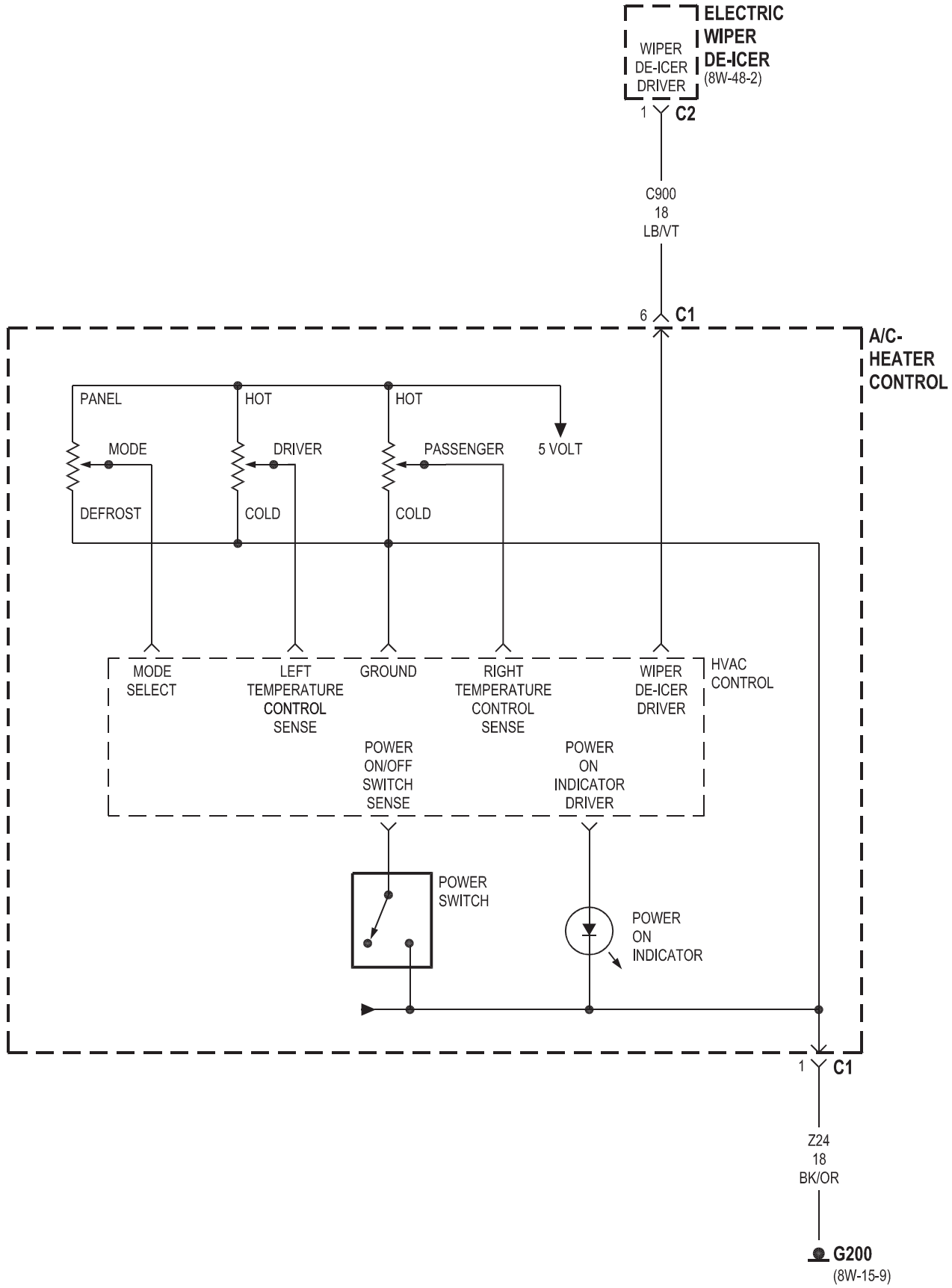
ELECTRIC WIPER DE-ICER
(8W-48-2)
WIPER DE-ICER DRIVER
1
C2
C900
18
LB/VT
6
C1
A/C-HEATER CONTROL
PANEL
HOT
HOT
MODE
DRIVER
PASSENGER
5 VOLT
DEFROST
COLD
COLD
MODE SELECT
LEFT TEMPERATURE CONTROL SENSE
GROUND
RIGHT TEMPERATURE CONTROL SENSE
WIPER DE-ICER DRIVER
HVAC CONTROL
POWER ON/OFF SWITCH SENSE
POWER ON INDICATOR DRIVER
POWER SWITCH
POWER ON INDICATOR
1
C1
Z24
18
BK/OR
G200
(8W-15-9)

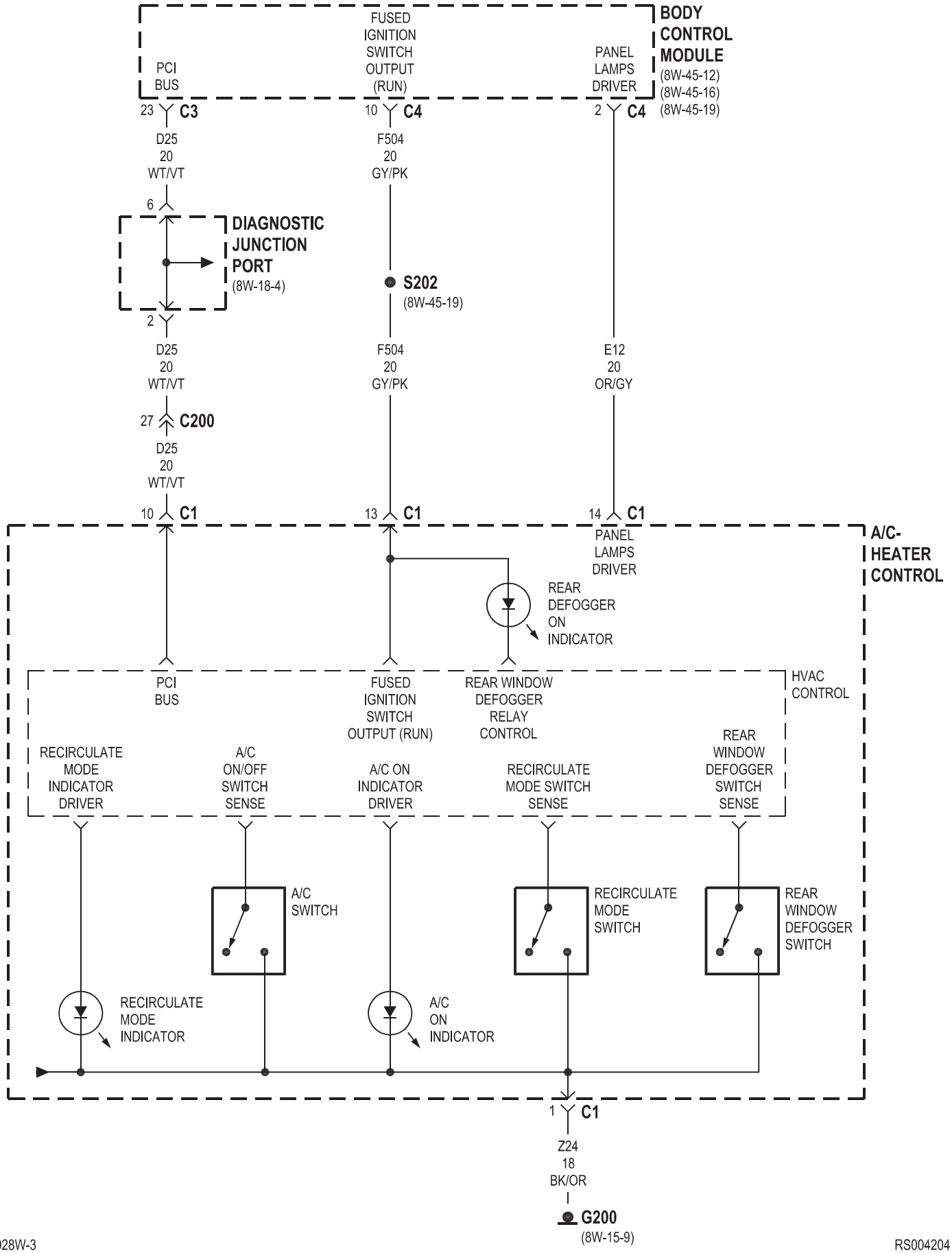
BODY CONTROL MODULE
(8W-45-12)
(8W-45-16)
(8W-45-19)
PCI BUS
FUSED IGNITION SWITCH OUTPUT (RUN)
PANEL LAMPS DRIVER
23 C3
10 C4
2 C4
D25 20 WT/VT
F504 20 GY/PK
E12 20 OR/GY
6
2
DIAGNOSTIC JUNCTION PORT
(8W-18-4)
S202
(8W-45-19)
27 C200
10 C1
13 C1
14 C1
A/C-HEATER CONTROL
REAR DEFOGGER ON INDICATOR
HVAC CONTROL
REAR WINDOW DEFOGGER RELAY CONTROL
RECIRCULATE MODE INDICATOR DRIVER
A/C ON/OFF SWITCH SENSE
A/C ON INDICATOR DRIVER
RECIRCULATE MODE SWITCH SENSE
REAR WINDOW DEFOGGER SWITCH SENSE
A/C SWITCH
RECIRCULATE MODE SWITCH
REAR WINDOW DEFOGGER SWITCH
RECIRCULATE MODE INDICATOR
A/C ON INDICATOR
1 C1
Z24 18 BK/OR
G200
(8W-15-9)

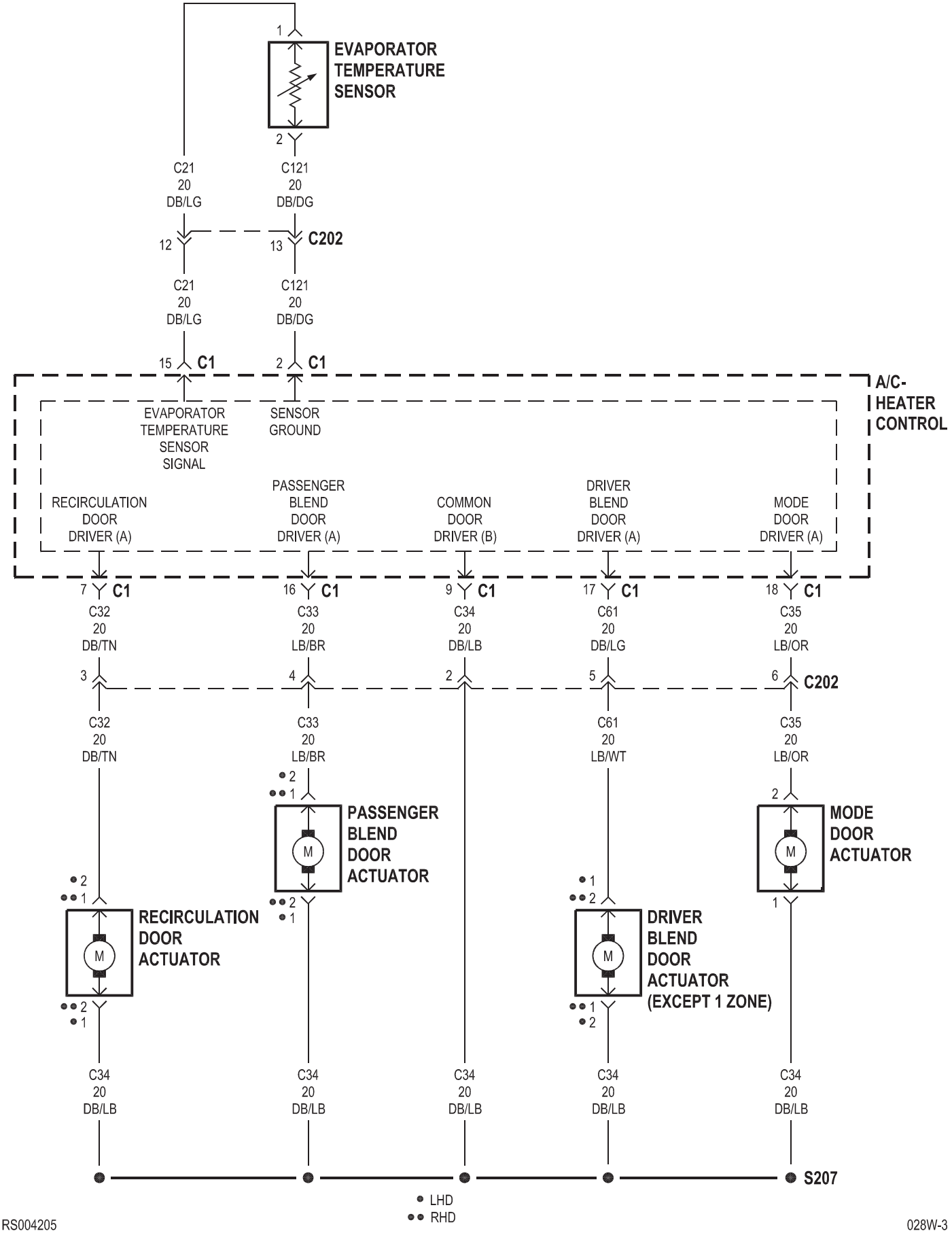
1
EVAPORATOR TEMPERATURE SENSOR
2
C21 20 DB/LG
C121 20 DB/DG
12
13
C202
C21 20 DB/LG
C121 20 DB/DG
15 C1
2 C1
A/C-HEATER CONTROL
EVAPORATOR TEMPERATURE SENSOR SIGNAL
SENSOR GROUND
RECIRCULATION DOOR DRIVER (A)
PASSENGER BLEND DOOR DRIVER (A)
COMMON DOOR DRIVER (B)
DRIVER BLEND DOOR DRIVER (A)
MODE DOOR DRIVER (A)
7 C1
16 C1
9 C1
17 C1
18 C1
C32 20 DB/TN
C33 20 LB/BR
C34 20 DB/LB
C61 20 DB/LG
C35 20 LB/OR
3
4
2
5
6
C202
C32 20 DB/TN
C33 20 LB/BR
C61 20 LB/WT
C35 20 LB/OR
PASSENGER BLEND DOOR ACTUATOR
MODE DOOR ACTUATOR
RECIRCULATION DOOR ACTUATOR
DRIVER BLEND DOOR ACTUATOR (EXCEPT 1 ZONE)
M
C34 20 DB/LB
C34 20 DB/LB
C34 20 DB/LB
C34 20 DB/LB
C34 20 DB/LB
S207
LHD
RHD

2002 RS Service Manual
Publication No. 81-370-02062
TSB 26-12-01 December, 2001

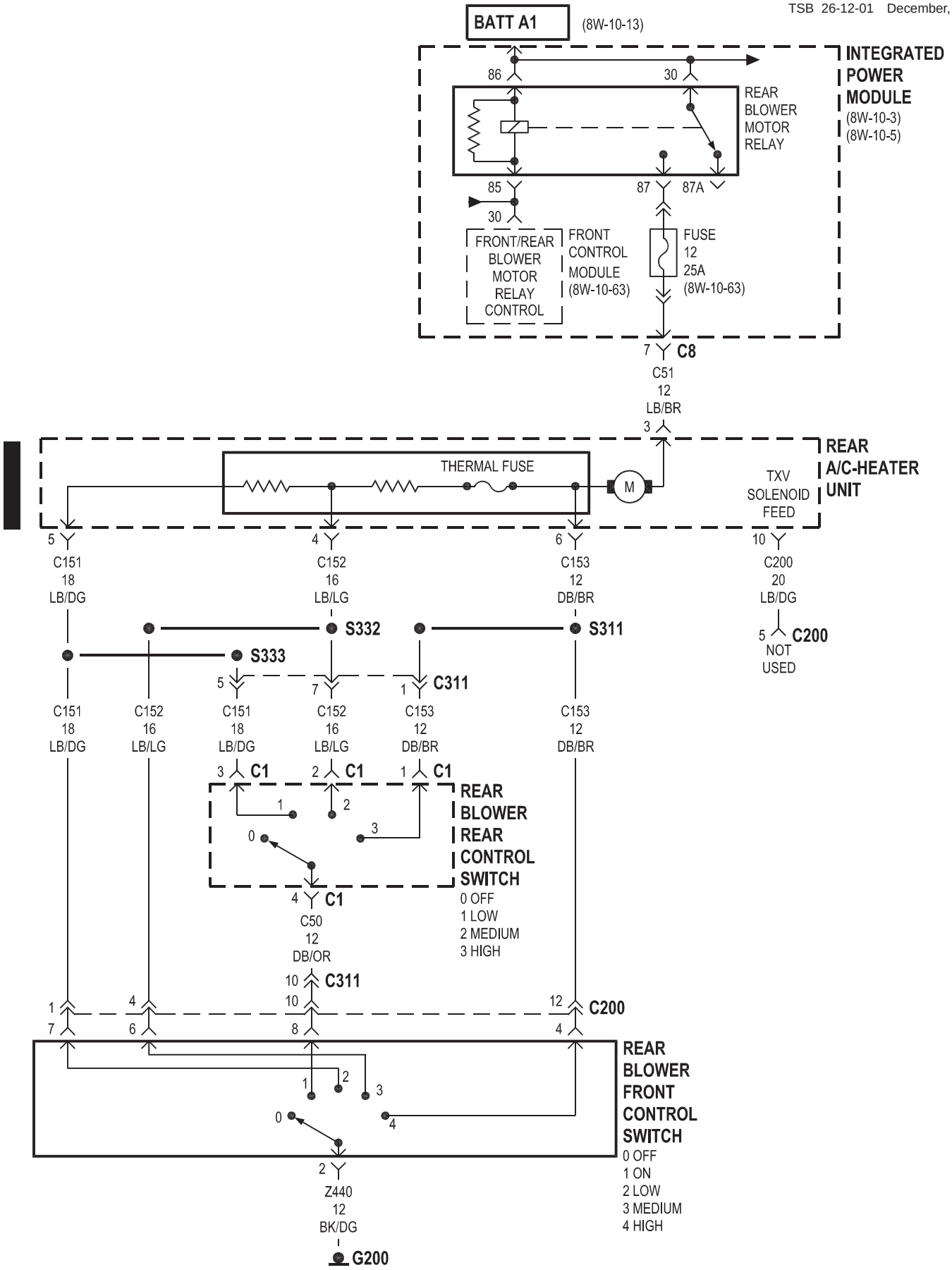

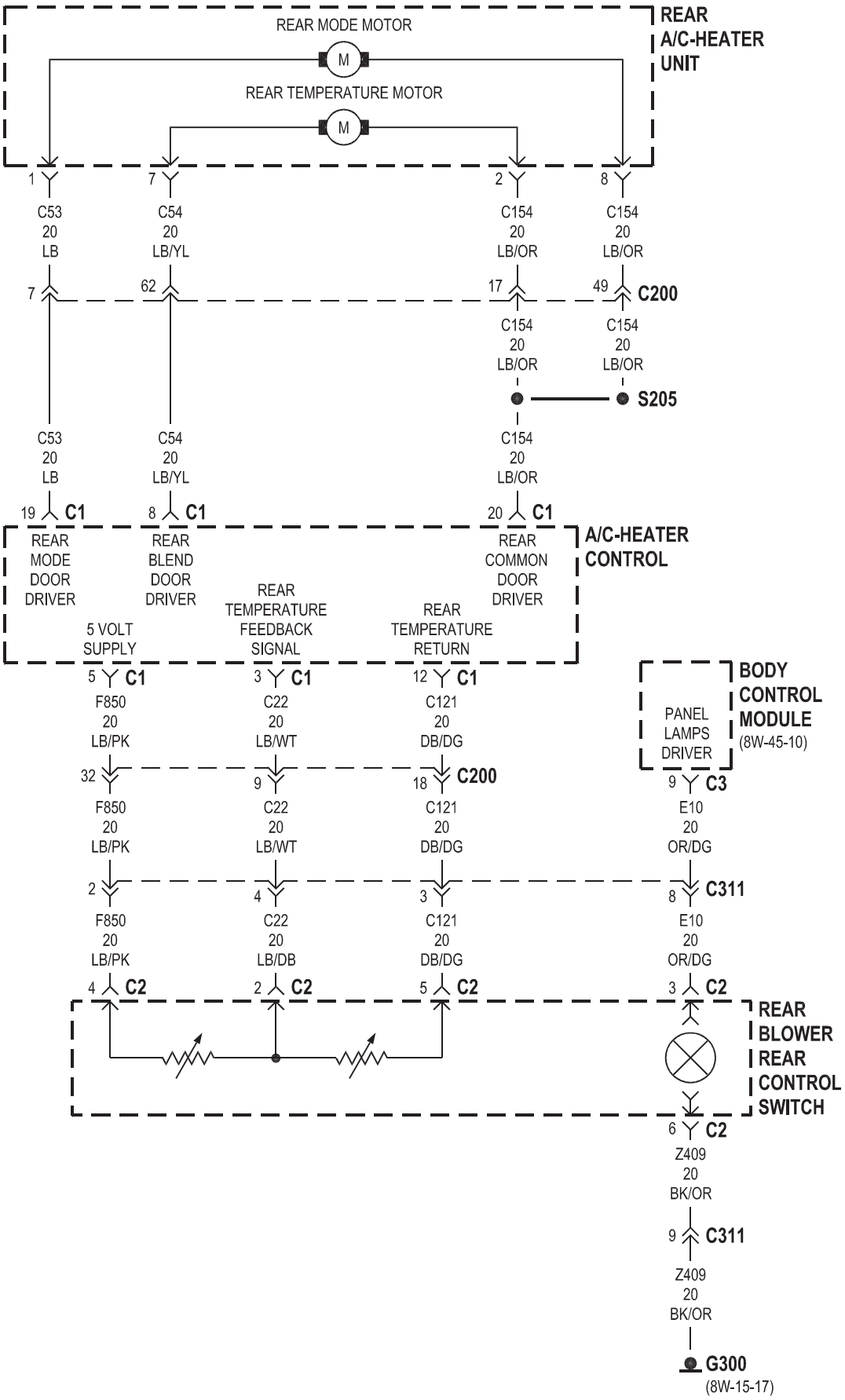
REAR
A/C-HEATER
UNIT
REAR MODE MOTOR
M
REAR TEMPERATURE MOTOR
M
1
7
2
8
C53
20
LB
C54
20
LB/YL
C154
20
LB/OR
C154
20
LB/OR
7
62
17
49
C200
C154
20
LB/OR
C154
20
LB/OR
S205
C53
20
LB
C54
20
LB/YL
C154
20
LB/OR
19 C1
8 C1
20 C1
REAR
MODE
DOOR
DRIVER
REAR
BLEND
DOOR
DRIVER
REAR
COMMON
DOOR
DRIVER
A/C-HEATER
CONTROL
5 VOLT
SUPPLY
REAR
TEMPERATURE
FEEDBACK
SIGNAL
REAR
TEMPERATURE
RETURN
5 C1
3 C1
12 C1
F850
20
LB/PK
C22
20
LB/WT
C121
20
DB/DG
BODY
CONTROL
MODULE
(8W-45-10)
PANEL
LAMPS
DRIVER
9 C3
32
9
18 C200
F850
20
LB/PK
C22
20
LB/WT
C121
20
DB/DG
E10
20
OR/DG
2
4
3
8 C311
F850
20
LB/PK
C22
20
LB/DB
C121
20
DB/DG
E10
20
OR/DG
4 C2
2 C2
5 C2
3 C2
REAR
BLOWER
REAR
CONTROL
SWITCH
6 C2
Z409
20
BK/OR
9 C311
Z409
20
BK/OR
G300
(8W-15-17)

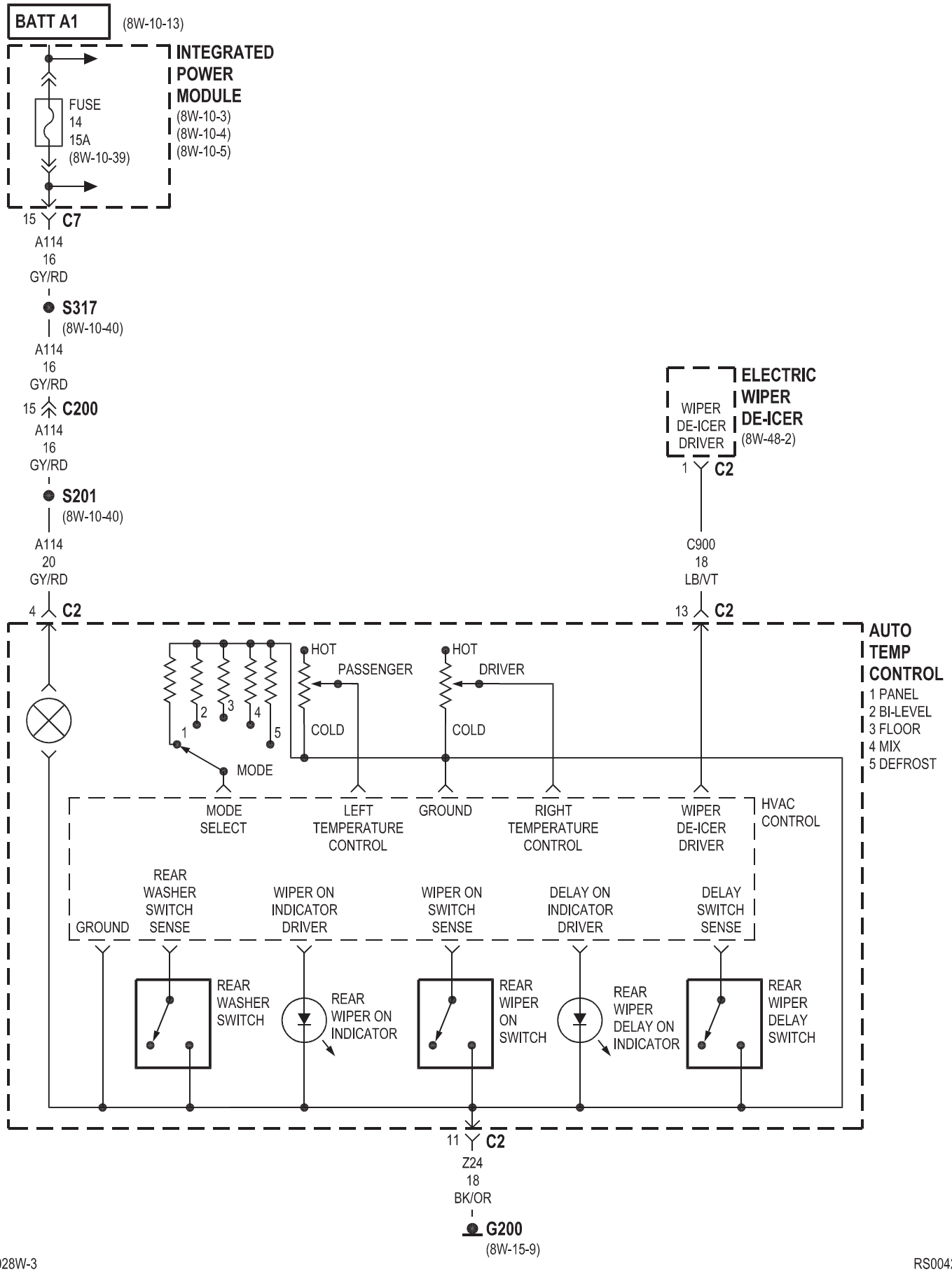
BATT A1
(8W-10-13)
INTEGRATED POWER MODULE
(8W-10-3)
(8W-10-4)
(8W-10-5)
FUSE 14 15A
(8W-10-39)
15 C7
A114 16 GY/RD
S317
(8W-10-40)
A114 16 GY/RD
15 C200
A114 16 GY/RD
S201
(8W-10-40)
A114 20 GY/RD
4 C2
ELECTRIC WIPER DE-ICER
(8W-48-2)
WIPER DE-ICER DRIVER
1 C2
C900 18 LB/VT
13 C2
AUTO TEMP CONTROL
1 PANEL
2 BI-LEVEL
3 FLOOR
4 MIX
5 DEFROST
HOT
PASSENGER
COLD
HOT
DRIVER
COLD
MODE
MODE SELECT
LEFT TEMPERATURE CONTROL
GROUND
RIGHT TEMPERATURE CONTROL
WIPER DE-ICER DRIVER
HVAC CONTROL
GROUND
REAR WASHER SWITCH SENSE
WIPER ON INDICATOR DRIVER
WIPER ON SWITCH SENSE
DELAY ON INDICATOR DRIVER
DELAY SWITCH SENSE
REAR WASHER SWITCH
REAR WIPER ON INDICATOR
REAR WIPER ON SWITCH
REAR WIPER DELAY ON INDICATOR
REAR WIPER DELAY SWITCH
11 C2
Z24 18 BK/OR
G200
(8W-15-9)

ATC

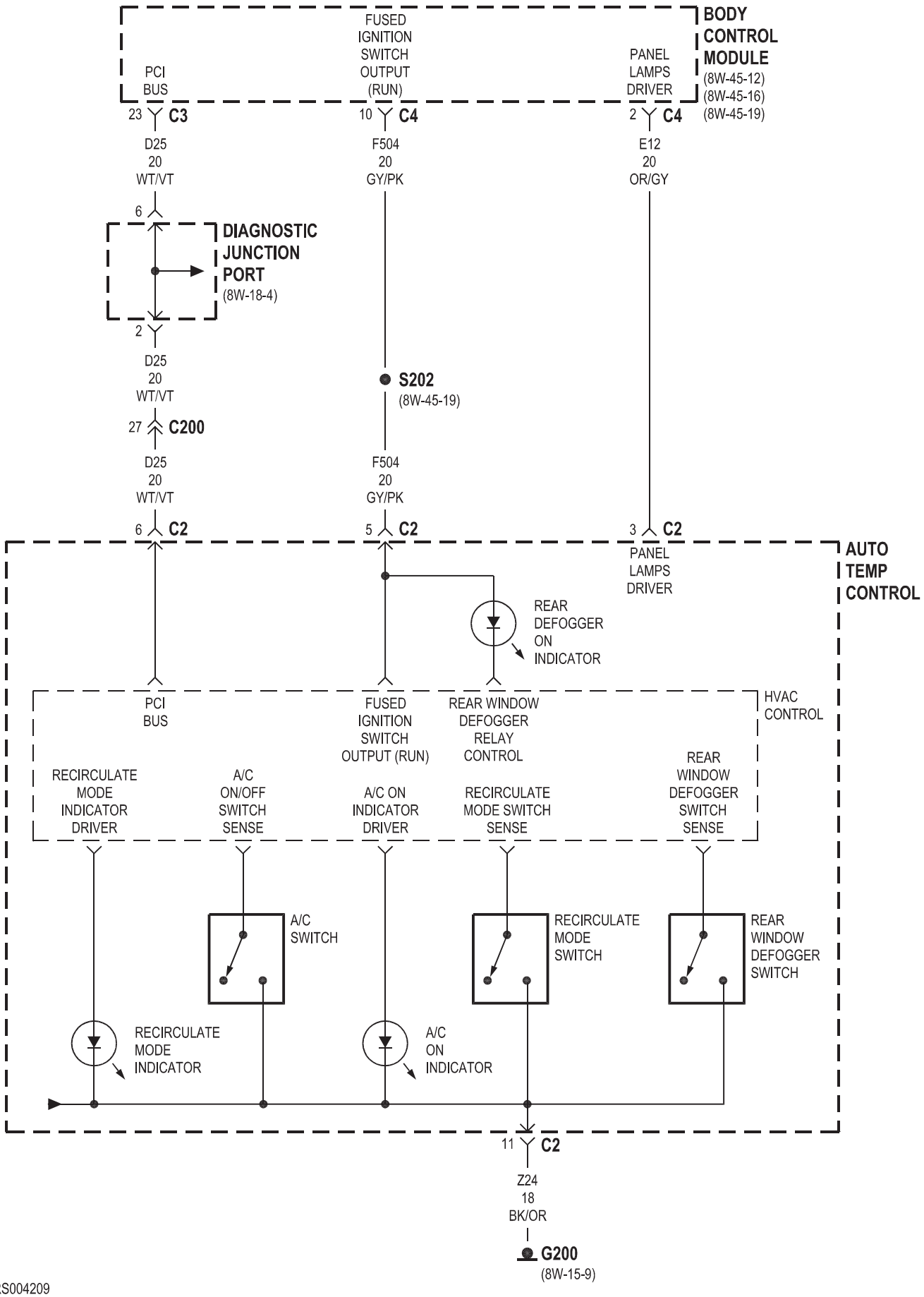
BODY CONTROL MODULE
(8W-45-12)
(8W-45-16)
(8W-45-19)
PCI BUS
FUSED IGNITION SWITCH OUTPUT (RUN)
PANEL LAMPS DRIVER
23 C3
10 C4
2 C4
D25 20 WT/VT
F504 20 GY/PK
E12 20 OR/GY
6
DIAGNOSTIC JUNCTION PORT
(8W-18-4)
2
D25 20 WT/VT
S202
(8W-45-19)
27 C200
D25 20 WT/VT
F504 20 GY/PK
6 C2
5 C2
3 C2
PANEL LAMPS DRIVER
AUTO TEMP CONTROL
REAR DEFOGGER ON INDICATOR
HVAC CONTROL
PCI BUS
FUSED IGNITION SWITCH OUTPUT (RUN)
REAR WINDOW DEFOGGER RELAY CONTROL
RECIRCULATE MODE INDICATOR DRIVER
A/C ON/OFF SWITCH SENSE
A/C ON INDICATOR DRIVER
RECIRCULATE MODE SWITCH SENSE
REAR WINDOW DEFOGGER SWITCH SENSE
A/C SWITCH
RECIRCULATE MODE SWITCH
REAR WINDOW DEFOGGER SWITCH
RECIRCULATE MODE INDICATOR
A/C ON INDICATOR
11 C2
Z24 18 BK/OR
G200
(8W-15-9)

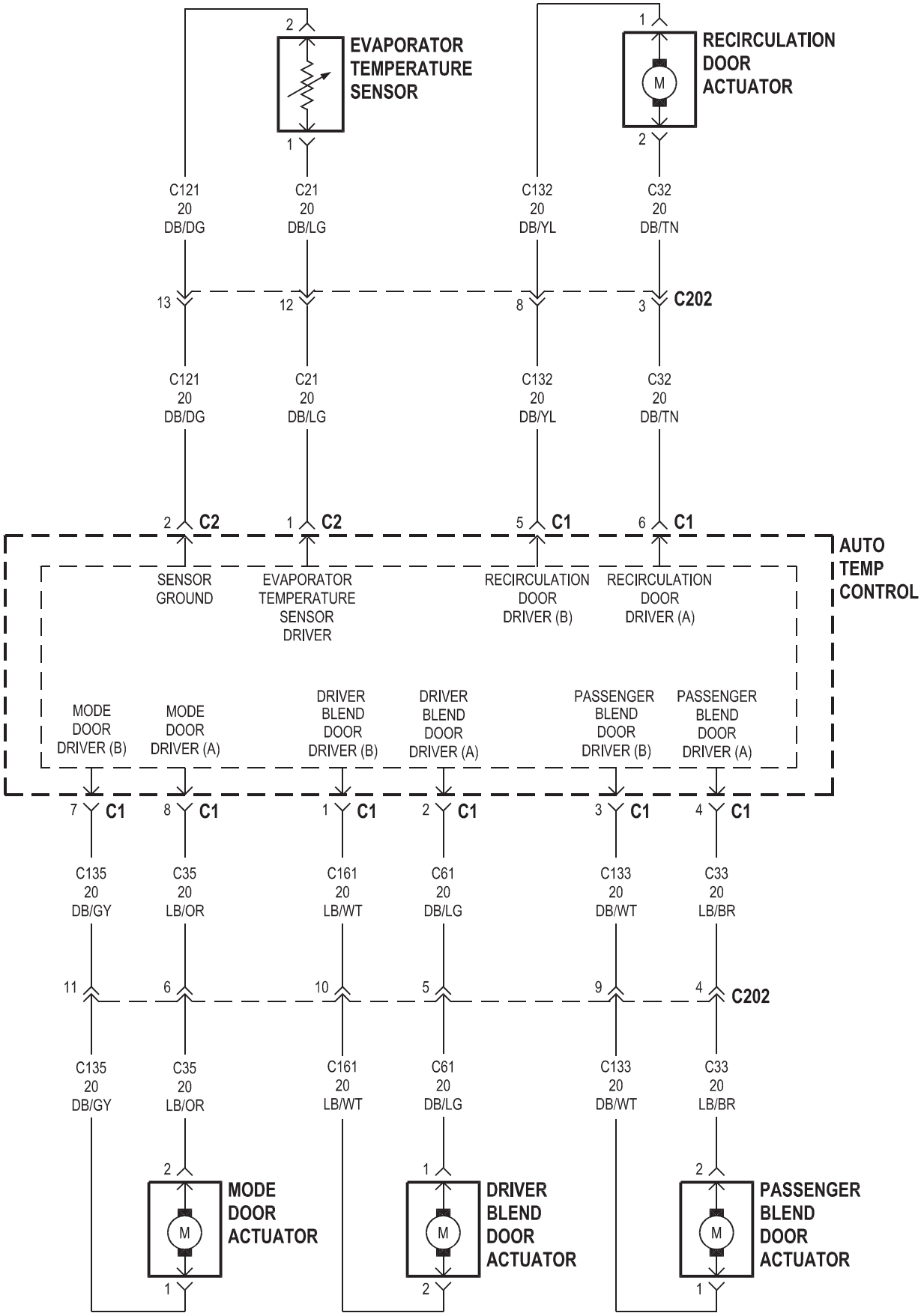
EVAPORATOR TEMPERATURE SENSOR
RECIRCULATION DOOR ACTUATOR
C121 20 DB/DG
C21 20 DB/LG
C132 20 DB/YL
C32 20 DB/TN
C202
AUTO TEMP CONTROL
SENSOR GROUND
EVAPORATOR TEMPERATURE SENSOR DRIVER
RECIRCULATION DOOR DRIVER (B)
RECIRCULATION DOOR DRIVER (A)
MODE DOOR DRIVER (B)
MODE DOOR DRIVER (A)
DRIVER BLEND DOOR DRIVER (B)
DRIVER BLEND DOOR DRIVER (A)
PASSENGER BLEND DOOR DRIVER (B)
PASSENGER BLEND DOOR DRIVER (A)
C135 20 DB/GY
C35 20 LB/OR
C161 20 LB/WT
C61 20 DB/LG
C133 20 DB/WT
C33 20 LB/BR
MODE DOOR ACTUATOR
DRIVER BLEND DOOR ACTUATOR
PASSENGER BLEND DOOR ACTUATOR

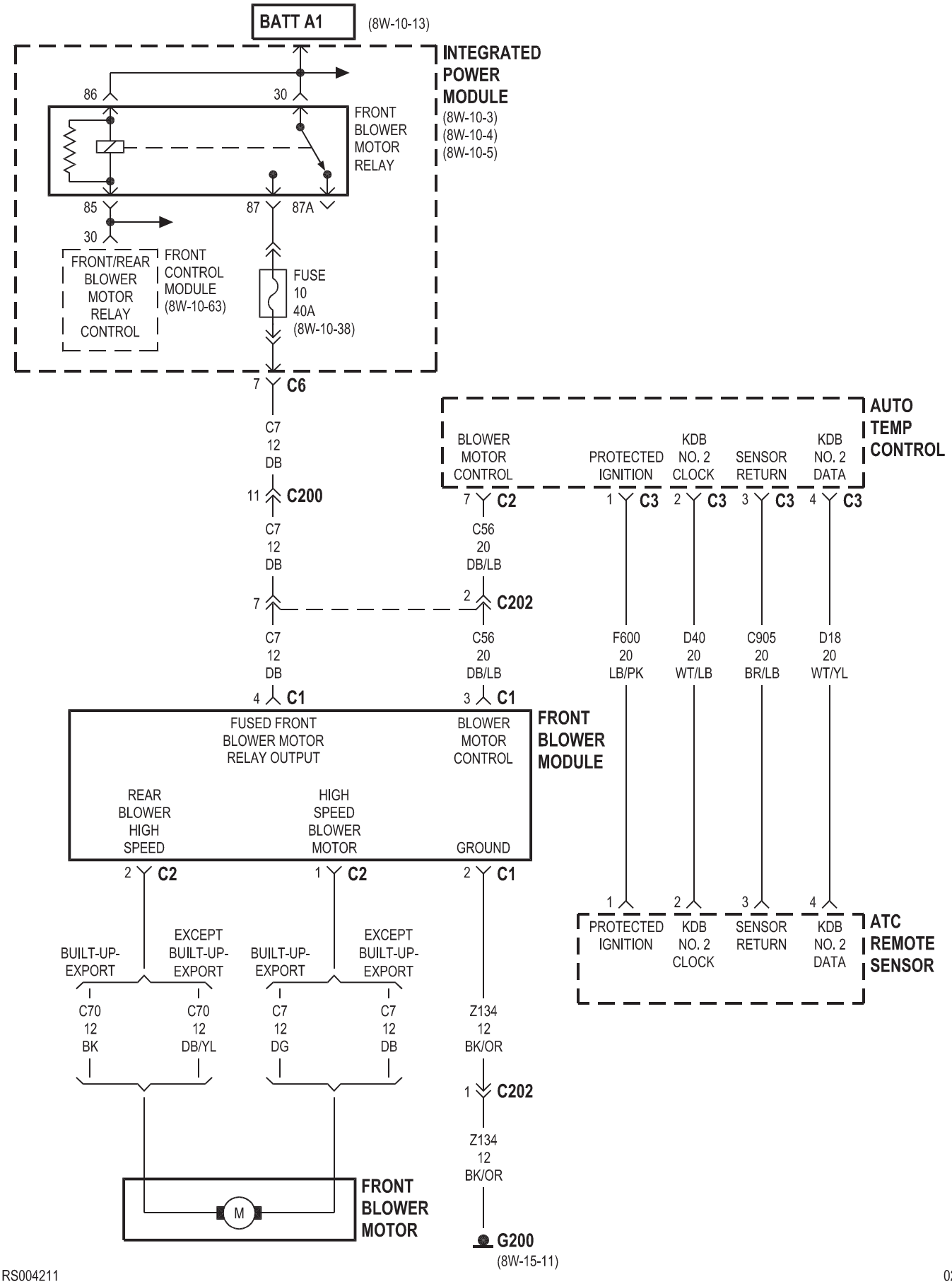
BATT A1
(8W-10-13)
INTEGRATED POWER MODULE
(8W-10-3)
(8W-10-4)
(8W-10-5)
86
30
FRONT BLOWER MOTOR RELAY
85
87
87A
30
FRONT/REAR BLOWER MOTOR RELAY CONTROL
FRONT CONTROL MODULE
(8W-10-63)
FUSE 10 40A
(8W-10-38)
7 C6
C7 12 DB
11 C200
C7 12 DB
7
C7 12 DB
4 C1
AUTO TEMP CONTROL
BLOWER MOTOR CONTROL
7 C2
C56 20 DB/LB
2 C202
C56 20 DB/LB
3 C1
PROTECTED IGNITION
1 C3
KDB NO. 2 CLOCK
2 C3
SENSOR RETURN
3 C3
KDB NO. 2 DATA
4 C3
F600 20 LB/PK
D40 20 WT/LB
C905 20 BR/LB
D18 20 WT/YL
FUSED FRONT BLOWER MOTOR RELAY OUTPUT
BLOWER MOTOR CONTROL
FRONT BLOWER MODULE
REAR BLOWER HIGH SPEED
HIGH SPEED BLOWER MOTOR
GROUND
2 C2
1 C2
2 C1
1
2
3
4
PROTECTED IGNITION
KDB NO. 2 CLOCK
SENSOR RETURN
KDB NO. 2 DATA
ATC REMOTE SENSOR
BUILT-UP-EXPORT
EXCEPT BUILT-UP-EXPORT
BUILT-UP-EXPORT
EXCEPT BUILT-UP-EXPORT
C70 12 BK
C70 12 DB/YL
C7 12 DG
C7 12 DB
Z134 12 BK/OR
1 C202
Z134 12 BK/OR
M
FRONT BLOWER MOTOR
G200
(8W-15-11)

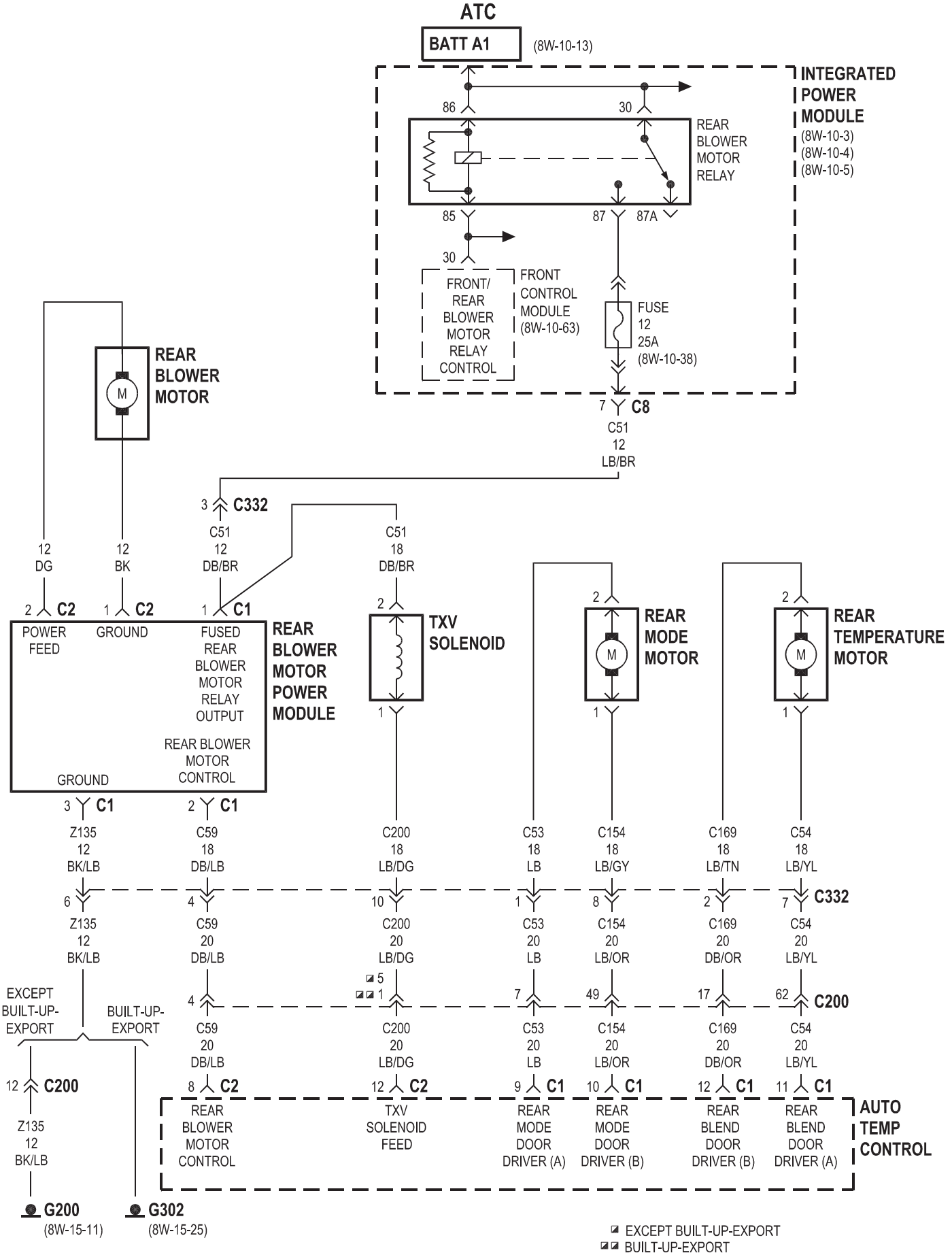
ATC
BATT A1
(8W-10-13)
INTEGRATED POWER MODULE
(8W-10-3)
(8W-10-4)
(8W-10-5)
86
30
REAR BLOWER MOTOR RELAY
85
87
87A
30
FRONT/ REAR BLOWER MOTOR RELAY CONTROL
FRONT CONTROL MODULE
(8W-10-63)
FUSE 12 25A
(8W-10-38)
7 C8
C51 12 LB/BR
REAR BLOWER MOTOR
3 C332
C51 12 DB/BR
C51 18 DB/BR
12 DG
12 BK
2 C2
1 C2
1 C1
POWER FEED
GROUND
FUSED REAR BLOWER MOTOR RELAY OUTPUT
REAR BLOWER MOTOR CONTROL
REAR BLOWER MOTOR POWER MODULE
GROUND
3 C1
2 C1
TXV SOLENOID
2
1
REAR MODE MOTOR
REAR TEMPERATURE MOTOR
Z135 12 BK/LB
C59 18 DB/LB
C200 18 LB/DG
C53 18 LB
C154 18 LB/GY
C169 18 LB/TN
C54 18 LB/YL
6
4
10
1
8
2
7 C332
Z135 12 BK/LB
C59 20 DB/LB
C200 20 LB/DG
C53 20 LB
C154 20 LB/OR
C169 20 DB/OR
C54 20 LB/YL
EXCEPT BUILT-UP-EXPORT
BUILT-UP-EXPORT
5
1
7
49
17
62 C200
4
C59 20 DB/LB
C200 20 LB/DG
C53 20 LB
C154 20 LB/OR
C169 20 DB/OR
C54 20 LB/YL
12 C200
Z135 12 BK/LB
8 C2
12 C2
9 C1
10 C1
12 C1
11 C1
REAR BLOWER MOTOR CONTROL
TXV SOLENOID FEED
REAR MODE DOOR DRIVER (A)
REAR MODE DOOR DRIVER (B)
REAR BLEND DOOR DRIVER (B)
REAR BLEND DOOR DRIVER (A)
AUTO TEMP CONTROL
G200
(8W-15-11)
G302
(8W-15-25)
EXCEPT BUILT-UP-EXPORT
BUILT-UP-EXPORT

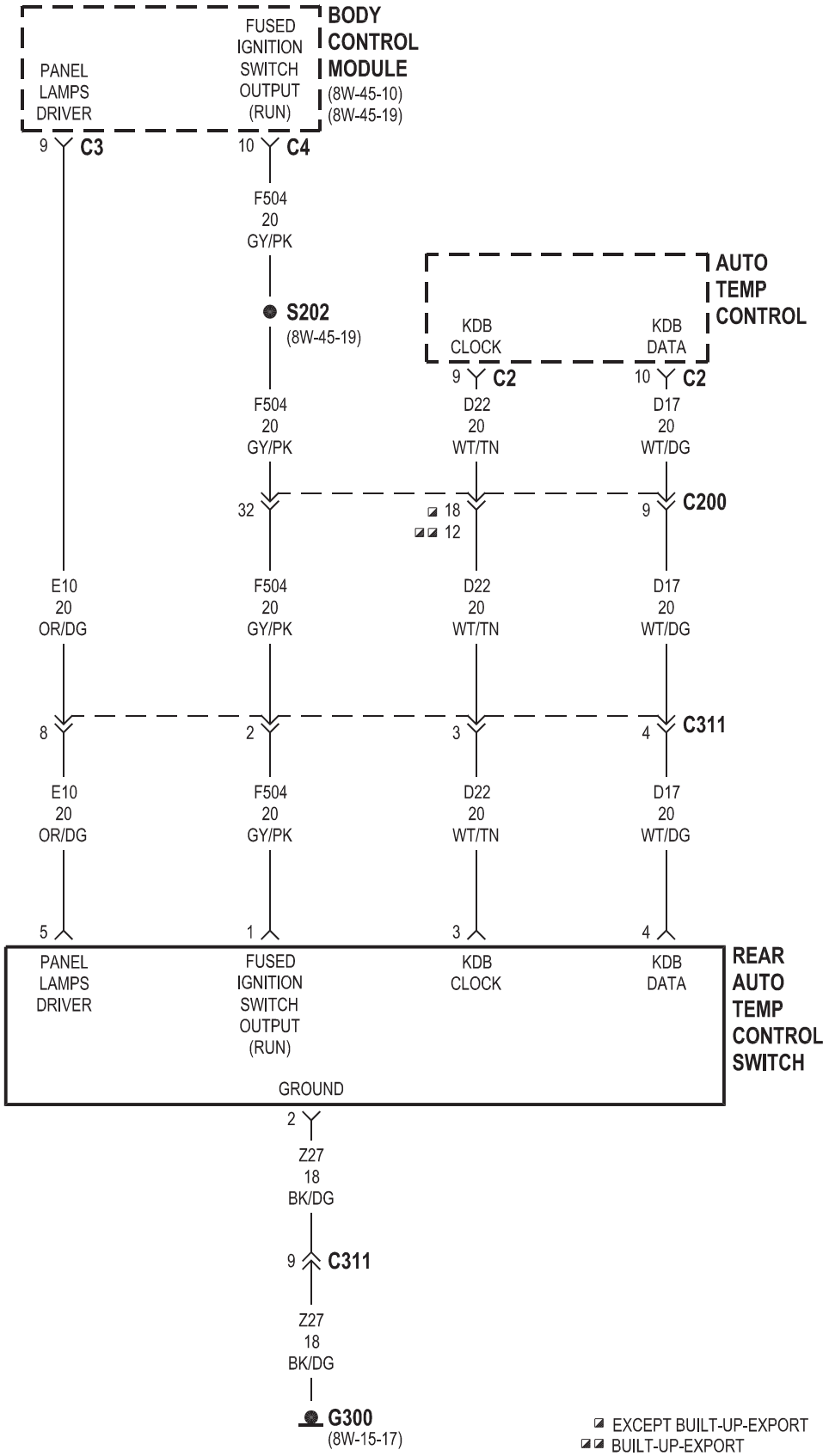
BODY CONTROL MODULE
(8W-45-10)
(8W-45-19)
PANEL LAMPS DRIVER
FUSED IGNITION SWITCH OUTPUT (RUN)
9 C3
10 C4
F504 20 GY/PK
S202
(8W-45-19)
AUTO TEMP CONTROL
KDB CLOCK
KDB DATA
9 C2
10 C2
D22 20 WT/TN
D17 20 WT/DG
F504 20 GY/PK
32
18
12
9 C200
E10 20 OR/DG
F504 20 GY/PK
D22 20 WT/TN
D17 20 WT/DG
8
2
3
4 C311
E10 20 OR/DG
F504 20 GY/PK
D22 20 WT/TN
D17 20 WT/DG
5
1
3
4
PANEL LAMPS DRIVER
FUSED IGNITION SWITCH OUTPUT (RUN)
KDB CLOCK
KDB DATA
REAR AUTO TEMP CONTROL SWITCH
GROUND
2
Z27 18 BK/DG
9 C311
Z27 18 BK/DG
G300
(8W-15-17)
EXCEPT BUILT-UP-EXPORT
BUILT-UP-EXPORT

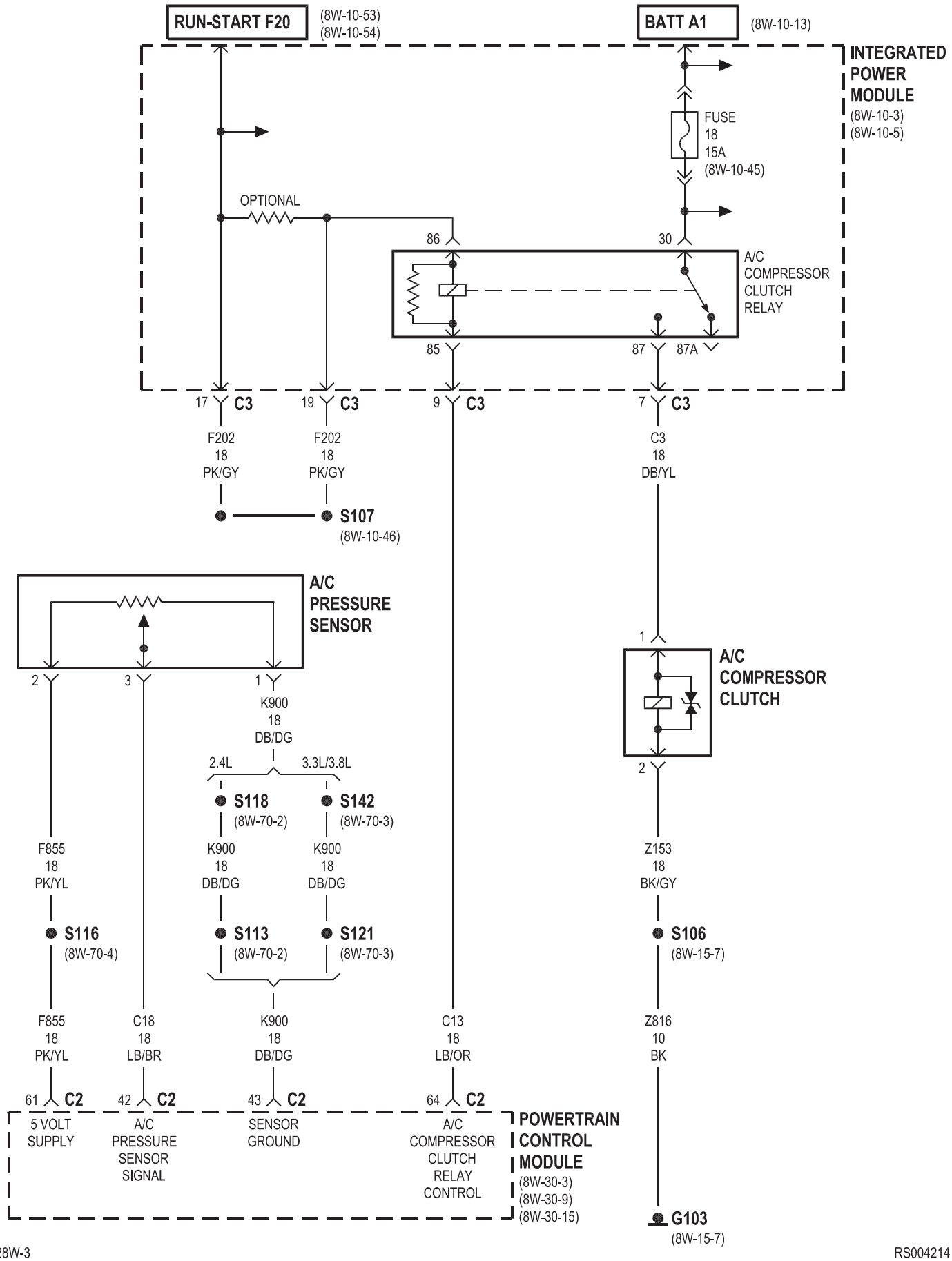
RUN-START F20
(8W-10-53)
(8W-10-54)
BATT A1
(8W-10-13)
INTEGRATED POWER MODULE
(8W-10-3)
(8W-10-5)
FUSE 18 15A
(8W-10-45)
OPTIONAL
86
30
A/C COMPRESSOR CLUTCH RELAY
85
87
87A
17 C3
19 C3
9 C3
7 C3
F202 18 PK/GY
F202 18 PK/GY
C3 18 DB/YL
S107
(8W-10-46)
A/C PRESSURE SENSOR
2
3
1
K900 18 DB/DG
2.4L
3.3L/3.8L
S118
(8W-70-2)
S142
(8W-70-3)
1
A/C COMPRESSOR CLUTCH
2
F855 18 PK/YL
K900 18 DB/DG
K900 18 DB/DG
Z153 18 BK/GY
S116
(8W-70-4)
S113
(8W-70-2)
S121
(8W-70-3)
S106
(8W-15-7)
F855 18 PK/YL
C18 18 LB/BR
K900 18 DB/DG
C13 18 LB/OR
Z816 10 BK
61 C2
42 C2
43 C2
64 C2
5 VOLT SUPPLY
A/C PRESSURE SENSOR SIGNAL
SENSOR GROUND
A/C COMPRESSOR CLUTCH RELAY CONTROL
POWERTRAIN CONTROL MODULE
(8W-30-3)
(8W-30-9)
(8W-30-15)
G103
(8W-15-7)

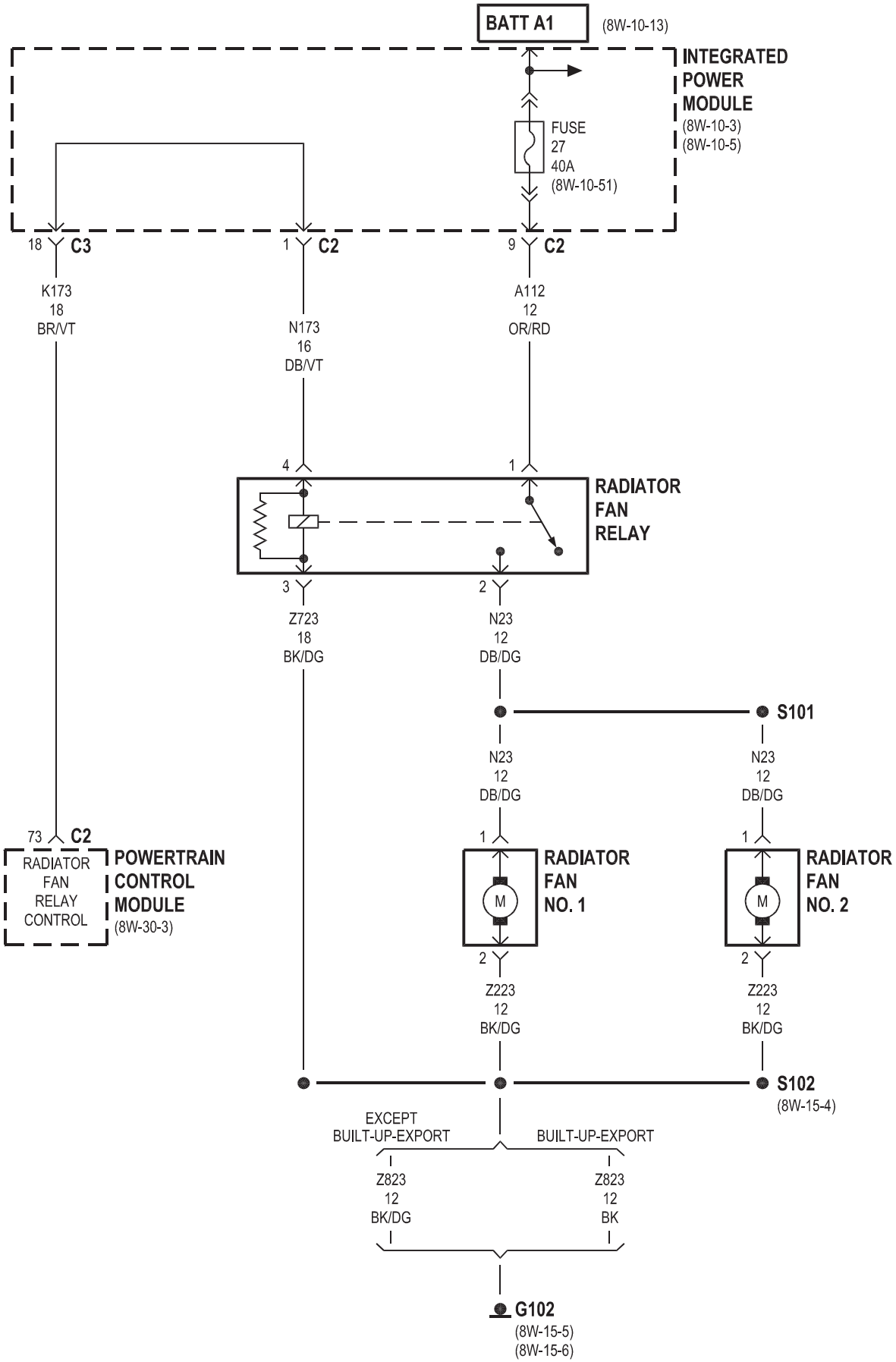
BATT A1
(8W-10-13)
INTEGRATED POWER MODULE
(8W-10-3)
(8W-10-5)
FUSE 27 40A
(8W-10-51)
18 C3
1 C2
9 C2
K173 18 BR/VT
N173 16 DB/VT
A112 12 OR/RD
4
1
RADIATOR FAN RELAY
3
2
Z723 18 BK/DG
N23 12 DB/DG
S101
N23 12 DB/DG
N23 12 DB/DG
73 C2
RADIATOR FAN RELAY CONTROL
POWERTRAIN CONTROL MODULE
(8W-30-3)
1
RADIATOR FAN NO. 1
M
1
RADIATOR FAN NO. 2
M
2
Z223 12 BK/DG
2
Z223 12 BK/DG
S102
(8W-15-4)
EXCEPT BUILT-UP-EXPORT
BUILT-UP-EXPORT
Z823 12 BK/DG
Z823 12 BK
G102
(8W-15-5)
(8W-15-6)

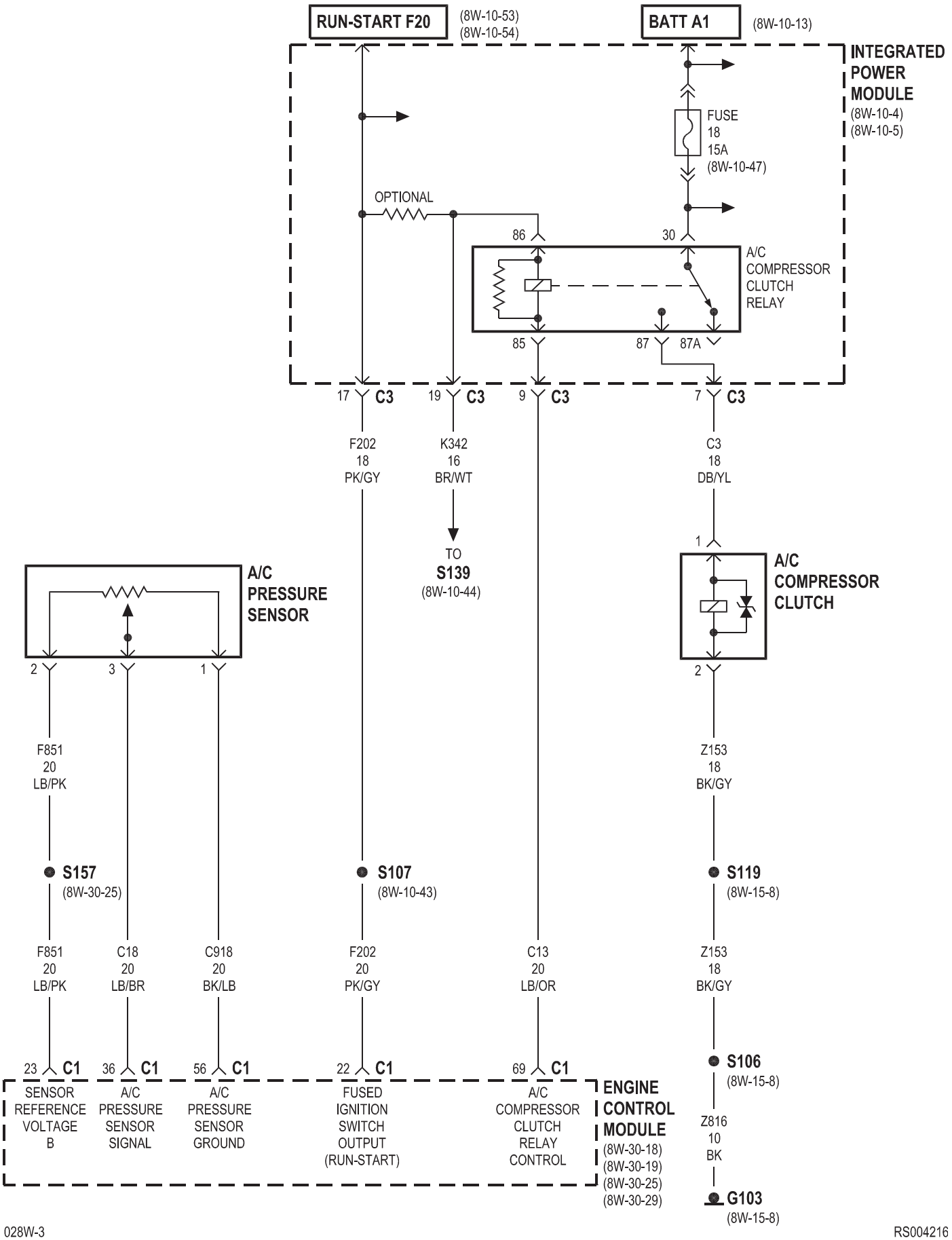
RUN-START F20
(8W-10-53)
(8W-10-54)
BATT A1
(8W-10-13)
INTEGRATED POWER MODULE
(8W-10-4)
(8W-10-5)
FUSE 18 15A
(8W-10-47)
OPTIONAL
86
30
A/C COMPRESSOR CLUTCH RELAY
85
87
87A
17 C3
19 C3
9 C3
7 C3
F202 18 PK/GY
K342 16 BR/WT
C3 18 DB/YL
TO S139
(8W-10-44)
1
A/C COMPRESSOR CLUTCH
2
A/C PRESSURE SENSOR
2
3
1
F851 20 LB/PK
Z153 18 BK/GY
S157
(8W-30-25)
S107
(8W-10-43)
S119
(8W-15-8)
F851 20 LB/PK
C18 20 LB/BR
C918 20 BK/LB
F202 20 PK/GY
C13 20 LB/OR
Z153 18 BK/GY
23 C1
36 C1
56 C1
22 C1
69 C1
S106
(8W-15-8)
SENSOR REFERENCE VOLTAGE B
A/C PRESSURE SENSOR SIGNAL
A/C PRESSURE SENSOR GROUND
FUSED IGNITION SWITCH OUTPUT (RUN-START)
A/C COMPRESSOR CLUTCH RELAY CONTROL
ENGINE CONTROL MODULE
(8W-30-18)
(8W-30-19)
(8W-30-25)
(8W-30-29)
Z816 10 BK
G103
(8W-15-8)

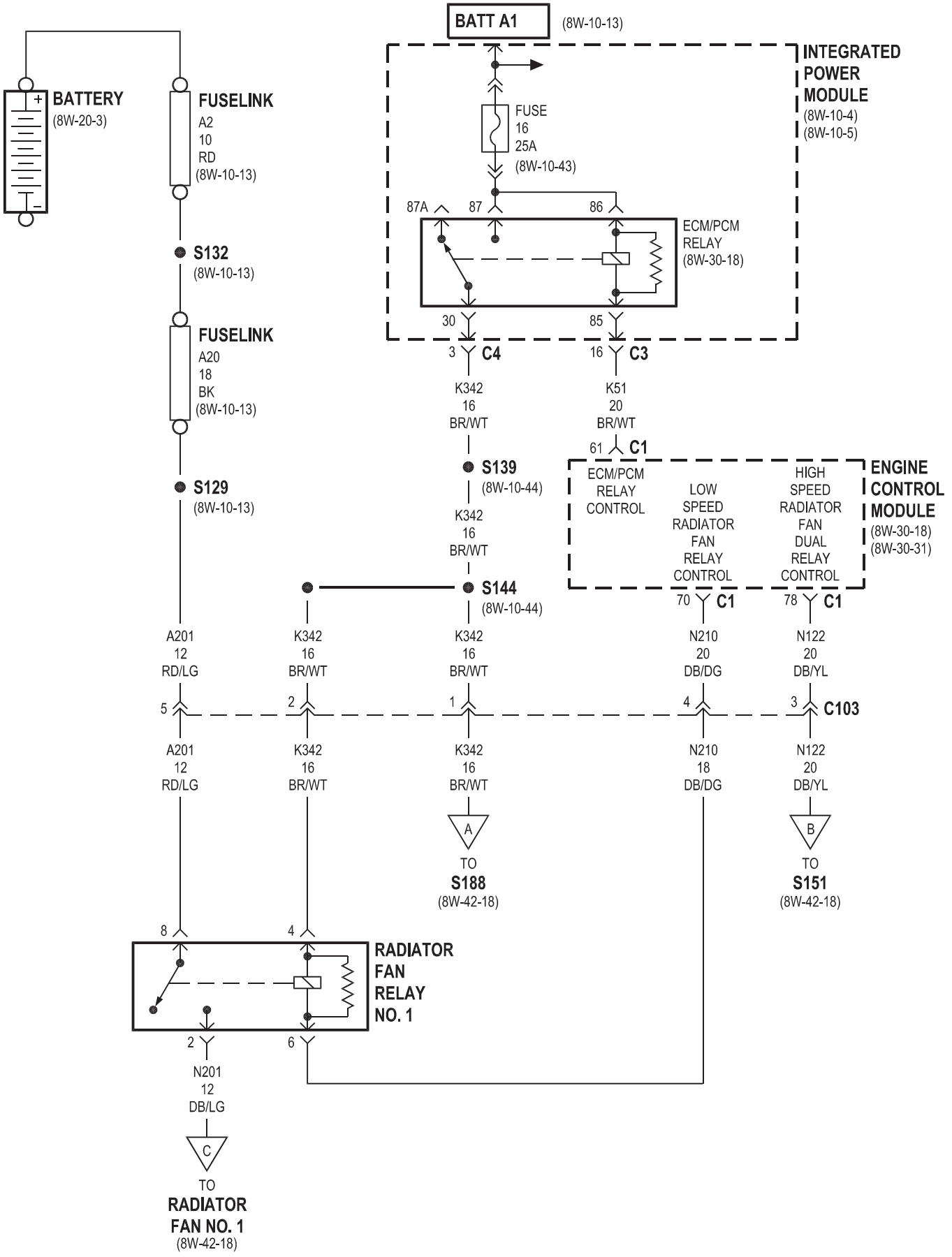
BATT A1
(8W-10-13)
INTEGRATED POWER MODULE
(8W-10-4)
(8W-10-5)
BATTERY
(8W-20-3)
FUSELINK
A2
10
RD
(8W-10-13)
FUSE
16
25A
(8W-10-43)
87A
87
86
ECM/PCM RELAY
(8W-30-18)
S132
(8W-10-13)
FUSELINK
A20
18
BK
(8W-10-13)
30
85
3
C4
16
C3
K342
16
BR/WT
K51
20
BR/WT
61
C1
S139
(8W-10-44)
ECM/PCM RELAY CONTROL
LOW SPEED RADIATOR FAN RELAY CONTROL
HIGH SPEED RADIATOR FAN DUAL RELAY CONTROL
ENGINE CONTROL MODULE
(8W-30-18)
(8W-30-31)
S129
(8W-10-13)
K342
16
BR/WT
S144
(8W-10-44)
70
C1
78
C1
A201
12
RD/LG
K342
16
BR/WT
K342
16
BR/WT
N210
20
DB/DG
N122
20
DB/YL
5
2
1
4
3
C103
A201
12
RD/LG
K342
16
BR/WT
K342
16
BR/WT
N210
18
DB/DG
N122
20
DB/YL
A
TO
S188
(8W-42-18)
B
TO
S151
(8W-42-18)
8
4
RADIATOR FAN RELAY NO. 1
2
6
N201
12
DB/LG
C
TO
RADIATOR FAN NO. 1
(8W-42-18)

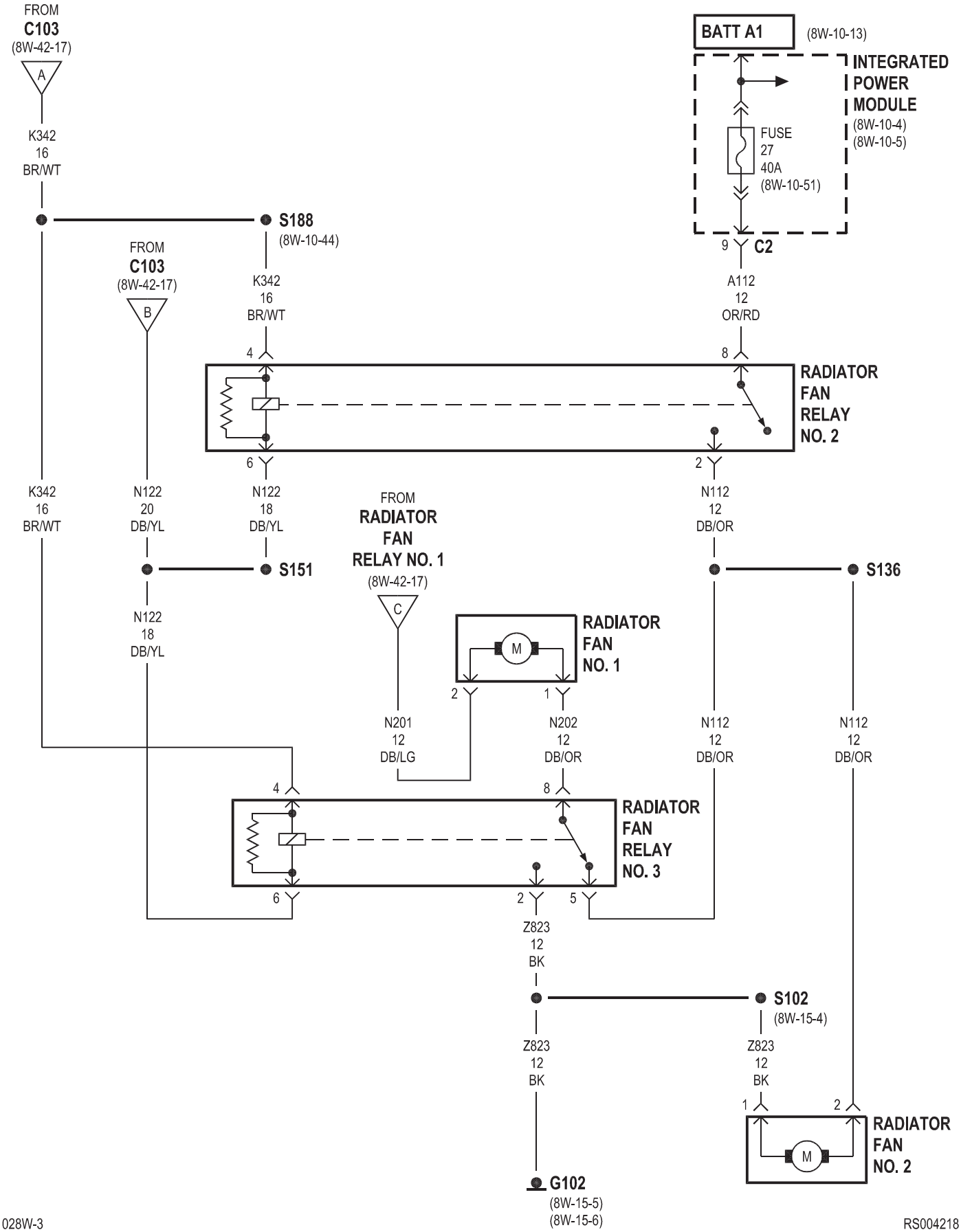
FROM
C103
(8W-42-17)
A
K342
16
BR/WT
BATT A1
(8W-10-13)
INTEGRATED
POWER
MODULE
(8W-10-4)
(8W-10-5)
FUSE
27
40A
(8W-10-51)
9
C2
S188
(8W-10-44)
FROM
C103
(8W-42-17)
B
K342
16
BR/WT
A112
12
OR/RD
4
8
RADIATOR
FAN
RELAY
NO. 2
6
2
K342
16
BR/WT
N122
20
DB/YL
N122
18
DB/YL
FROM
RADIATOR
FAN
RELAY NO. 1
(8W-42-17)
N112
12
DB/OR
S151
S136
C
M
RADIATOR
FAN
NO. 1
2
1
N122
18
DB/YL
N201
12
DB/LG
N202
12
DB/OR
N112
12
DB/OR
N112
12
DB/OR
4
8
RADIATOR
FAN
RELAY
NO. 3
6
2
5
Z823
12
BK
S102
(8W-15-4)
Z823
12
BK
Z823
12
BK
1
2
M
RADIATOR
FAN
NO. 2
G102
(8W-15-5)
(8W-15-6)

8W-43 AIRBAG SYSTEM

Component	Page
Airbag Control Module	8W-43-2, 3, 4, 5
Body Control Module	8W-43-6, 7
Clockspring	8W-43-4
Diagnostic Junction Port	8W-43-2, 6, 7
Driver Airbag	8W-43-4
Driver Seat Belt Switch	8W-43-3
Driver Seat Belt Tensioner	8W-43-3
Front Control Module	8W-43-2, 6, 7
G200	8W-43-2
G201	8W-43-2, 6, 7
Instrument Cluster	8W-43-2
Integrated Power Module	8W-43-2, 6, 7
Left Seat Airbag	8W-43-6
Left Side Impact Airbag Control Module	8W-43-6
Passenger Airbag	8W-43-5
Passenger Seat Belt Switch	8W-43-5
Passenger Seat Belt Tensioner	8W-43-5
Right Seat Airbag	8W-43-7
Right Side Impact Airbag Control Module	8W-43-7

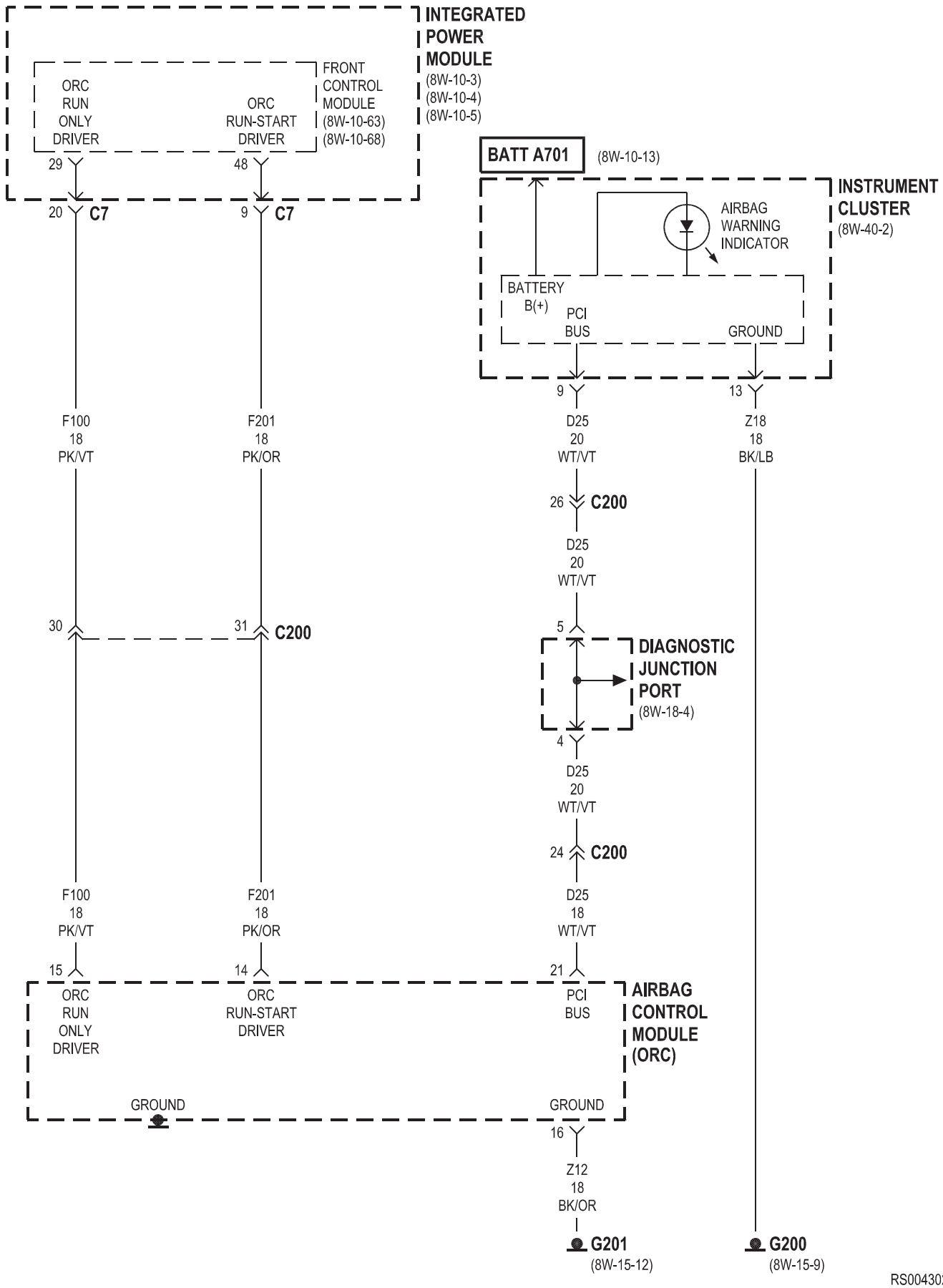
INTEGRATED POWER MODULE
(8W-10-3)
(8W-10-4)
(8W-10-5)
FRONT CONTROL MODULE
(8W-10-63)
(8W-10-68)
ORC RUN ONLY DRIVER
ORC RUN-START DRIVER
29
48
20 C7
9 C7
BATT A701
(8W-10-13)
INSTRUMENT CLUSTER
(8W-40-2)
AIRBAG WARNING INDICATOR
BATTERY B(+)
PCI BUS
GROUND
9
13
F100 18 PK/VT
F201 18 PK/OR
D25 20 WT/VT
Z18 18 BK/LB
26 C200
D25 20 WT/VT
30
31 C200
5
DIAGNOSTIC JUNCTION PORT
(8W-18-4)
4
D25 20 WT/VT
24 C200
F100 18 PK/VT
F201 18 PK/OR
D25 18 WT/VT
15
14
21
ORC RUN ONLY DRIVER
ORC RUN-START DRIVER
PCI BUS
AIRBAG CONTROL MODULE (ORC)
GROUND
GROUND
16
Z12 18 BK/OR
G201
(8W-15-12)
G200
(8W-15-9)

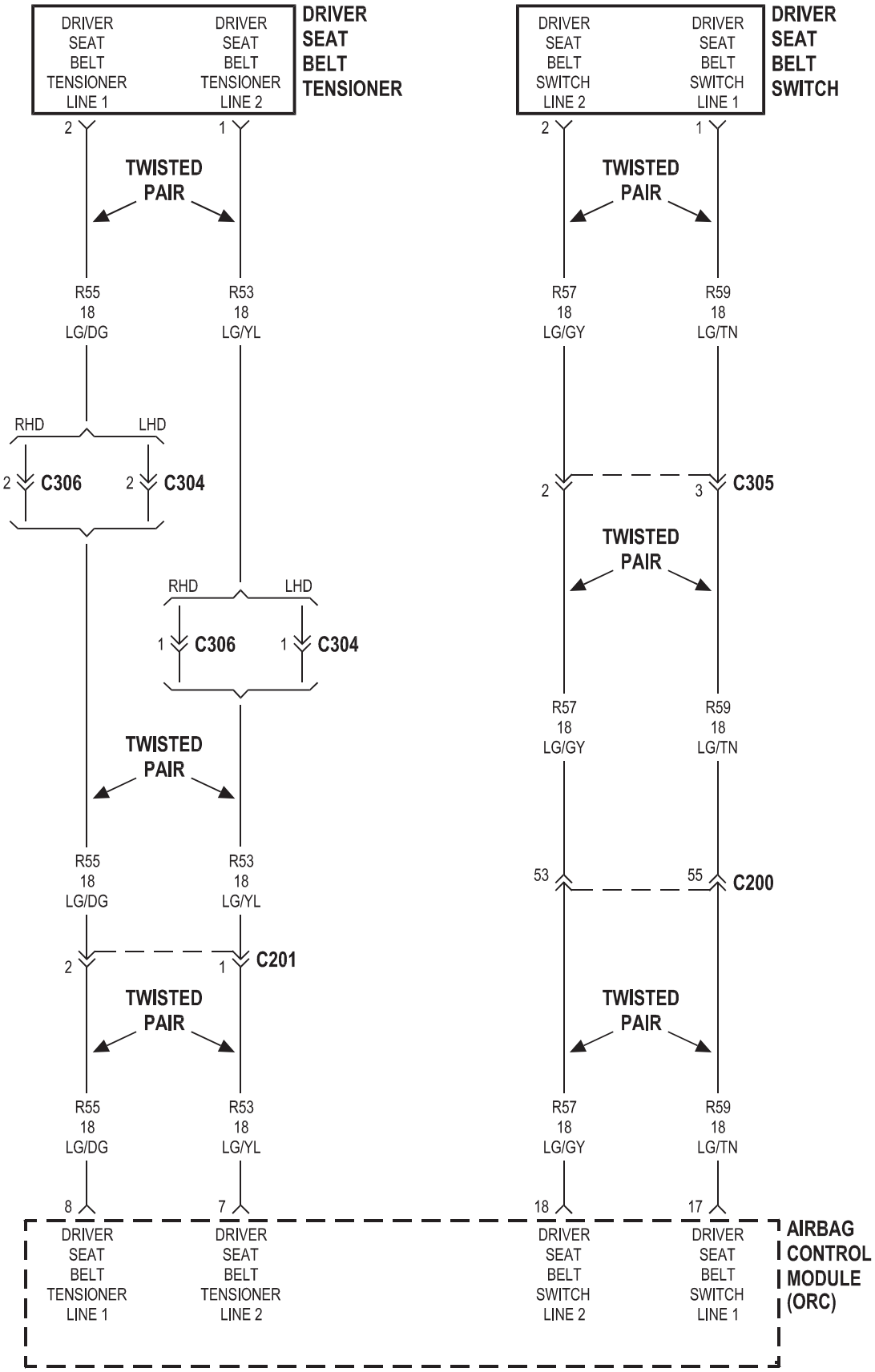
DRIVER SEAT BELT TENSIONER LINE 1
DRIVER SEAT BELT TENSIONER LINE 2
DRIVER SEAT BELT TENSIONER
DRIVER SEAT BELT SWITCH LINE 2
DRIVER SEAT BELT SWITCH LINE 1
DRIVER SEAT BELT SWITCH
TWISTED PAIR
R55 18 LG/DG
R53 18 LG/YL
R57 18 LG/GY
R59 18 LG/TN
RHD
LHD
C306
C304
C305
C201
C200
AIRBAG CONTROL MODULE (ORC)

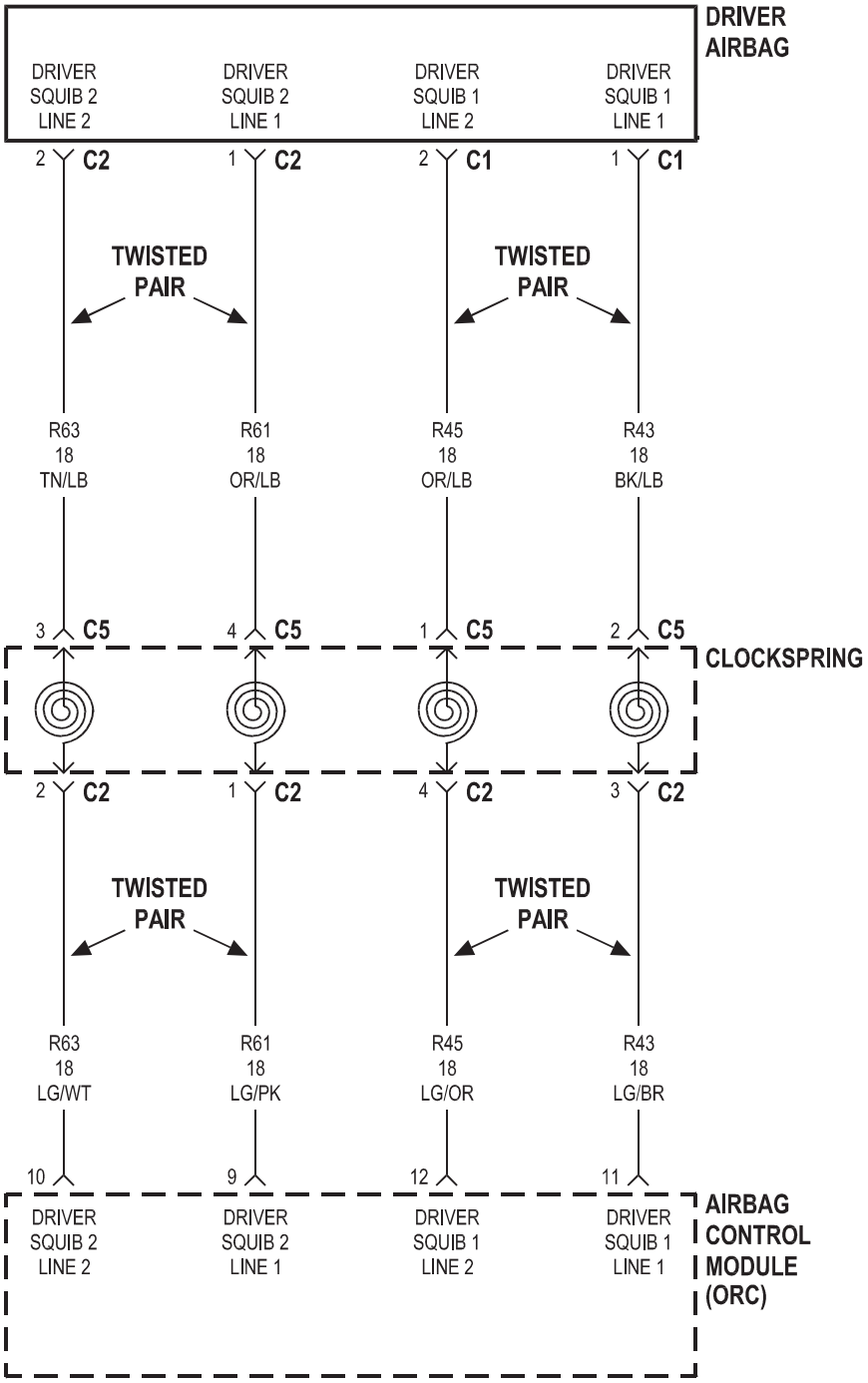
DRIVER AIRBAG
DRIVER SQUIB 2 LINE 2
DRIVER SQUIB 2 LINE 1
DRIVER SQUIB 1 LINE 2
DRIVER SQUIB 1 LINE 1
2 C2
1 C2
2 C1
1 C1
TWISTED PAIR
TWISTED PAIR
R63 18 TN/LB
R61 18 OR/LB
R45 18 OR/LB
R43 18 BK/LB
3 C5
4 C5
1 C5
2 C5
CLOCKSPRING
2 C2
1 C2
4 C2
3 C2
TWISTED PAIR
TWISTED PAIR
R63 18 LG/WT
R61 18 LG/PK
R45 18 LG/OR
R43 18 LG/BR
10
9
12
11
DRIVER SQUIB 2 LINE 2
DRIVER SQUIB 2 LINE 1
DRIVER SQUIB 1 LINE 2
DRIVER SQUIB 1 LINE 1
AIRBAG CONTROL MODULE (ORC)

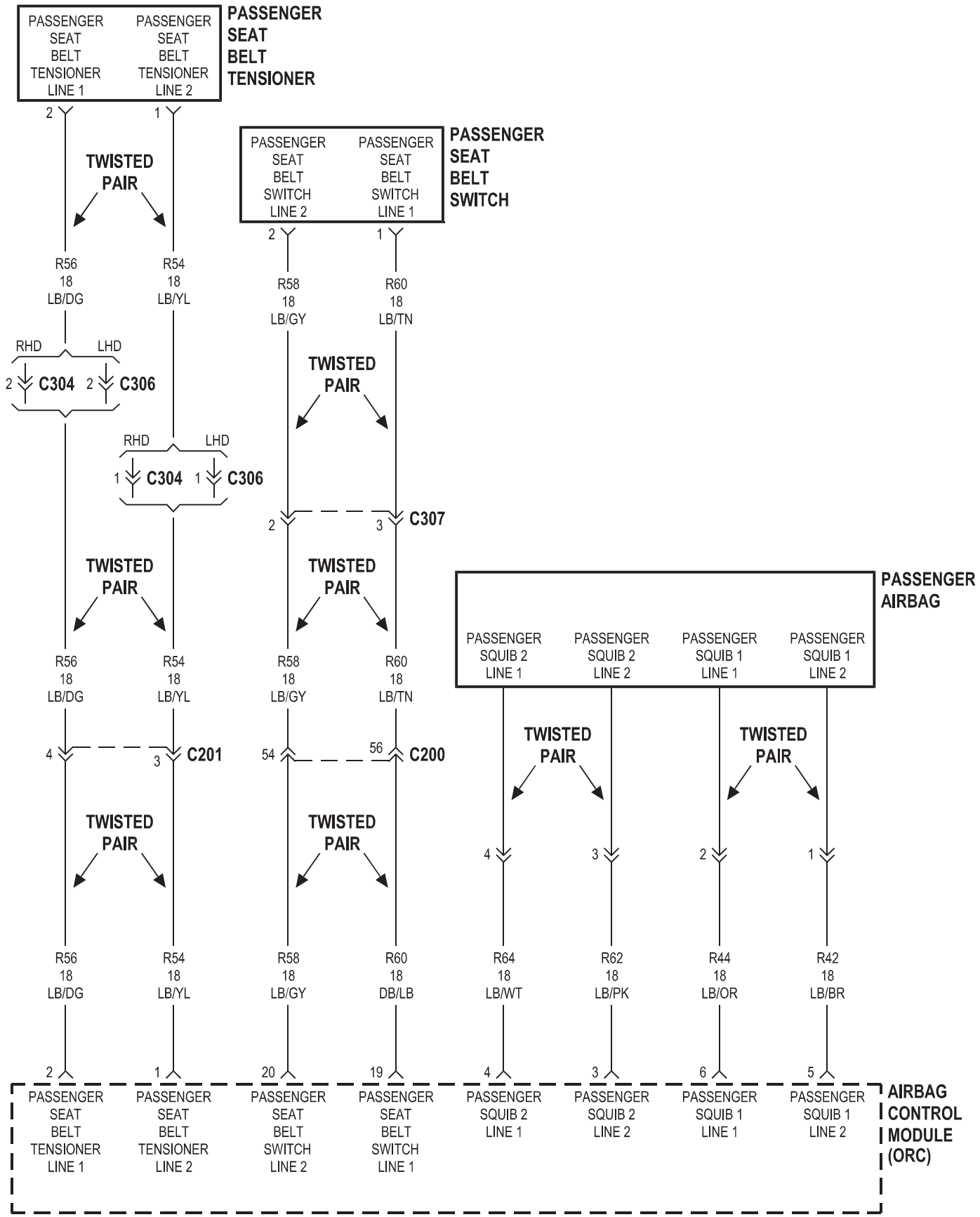
PASSENGER SEAT BELT TENSIONER LINE 1
PASSENGER SEAT BELT TENSIONER LINE 2
PASSENGER SEAT BELT TENSIONER
PASSENGER SEAT BELT SWITCH LINE 2
PASSENGER SEAT BELT SWITCH LINE 1
PASSENGER SEAT BELT SWITCH
TWISTED PAIR
R56 18 LB/DG
R54 18 LB/YL
R58 18 LB/GY
R60 18 LB/TN
RHD
LHD
C304
C306
C307
C201
C200
PASSENGER SQUIB 2 LINE 1
PASSENGER SQUIB 2 LINE 2
PASSENGER SQUIB 1 LINE 1
PASSENGER SQUIB 1 LINE 2
PASSENGER AIRBAG
R64 18 LB/WT
R62 18 LB/PK
R44 18 LB/OR
R42 18 LB/BR
R58 18 LB/GY
R60 18 DB/LB
AIRBAG CONTROL MODULE (ORC)

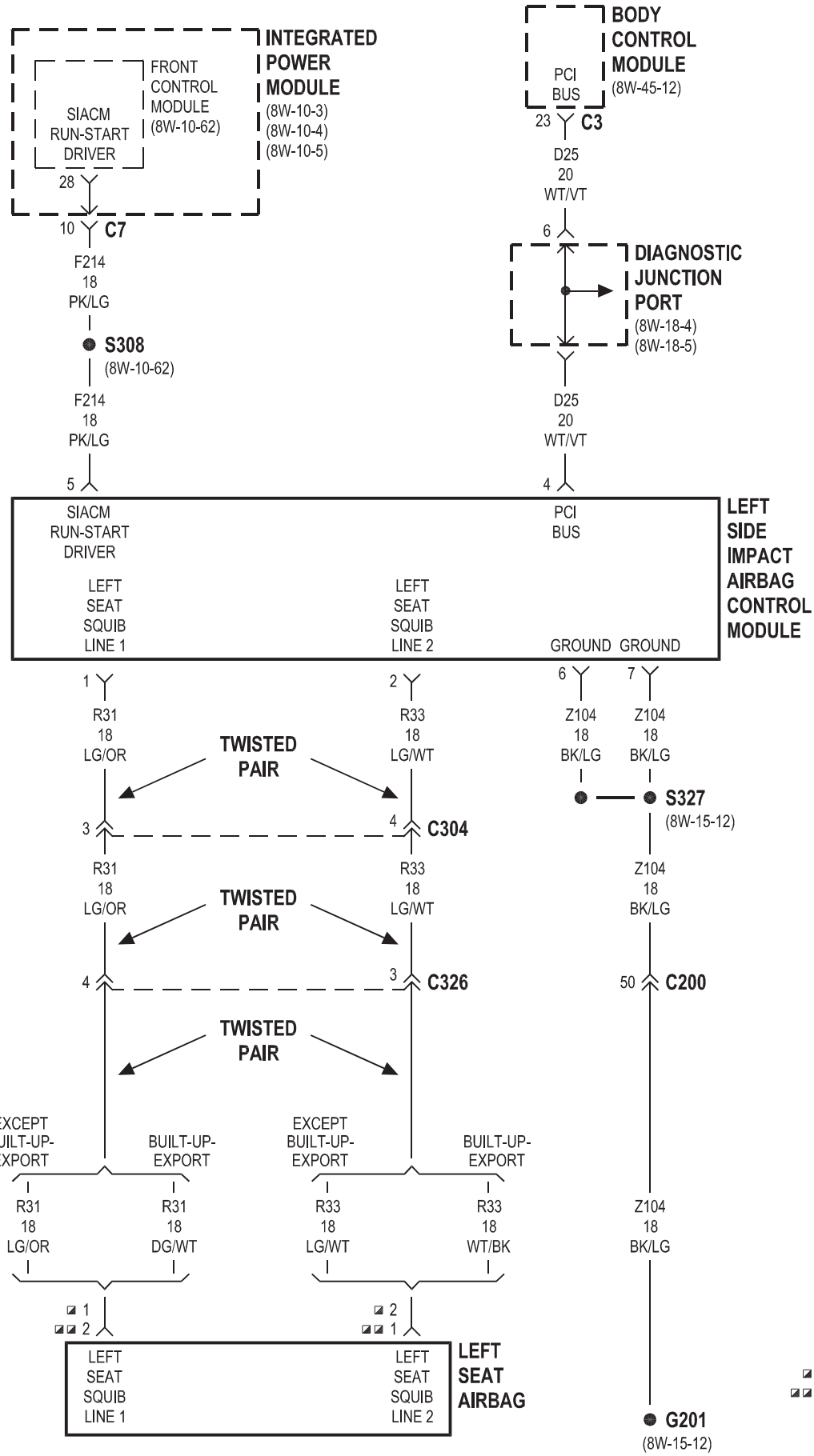
INTEGRATED POWER MODULE
(8W-10-3)
(8W-10-4)
(8W-10-5)
FRONT CONTROL MODULE
(8W-10-62)
SIACM RUN-START DRIVER
28
10 C7
F214
18
PK/LG
S308
(8W-10-62)
F214
18
PK/LG
5
BODY CONTROL MODULE
(8W-45-12)
PCI BUS
23 C3
D25
20
WT/VT
6
DIAGNOSTIC JUNCTION PORT
(8W-18-4)
(8W-18-5)
D25
20
WT/VT
4
SIACM RUN-START DRIVER
PCI BUS
LEFT SIDE IMPACT AIRBAG CONTROL MODULE
LEFT SEAT SQUIB LINE 1
LEFT SEAT SQUIB LINE 2
GROUND
GROUND
1
R31
18
LG/OR
TWISTED PAIR
2
R33
18
LG/WT
6
Z104
18
BK/LG
7
Z104
18
BK/LG
S327
(8W-15-12)
3
4 C304
R31
18
LG/OR
TWISTED PAIR
R33
18
LG/WT
Z104
18
BK/LG
4
3 C326
50 C200
TWISTED PAIR
EXCEPT BUILT-UP-EXPORT
BUILT-UP-EXPORT
EXCEPT BUILT-UP-EXPORT
BUILT-UP-EXPORT
R31
18
LG/OR
R31
18
DG/WT
R33
18
LG/WT
R33
18
WT/BK
Z104
18
BK/LG
1
2
2
1
LEFT SEAT SQUIB LINE 1
LEFT SEAT SQUIB LINE 2
LEFT SEAT AIRBAG
G201
(8W-15-12)
EXCEPT BUILT-UP-EXPORT
BUILT-UP-EXPORT

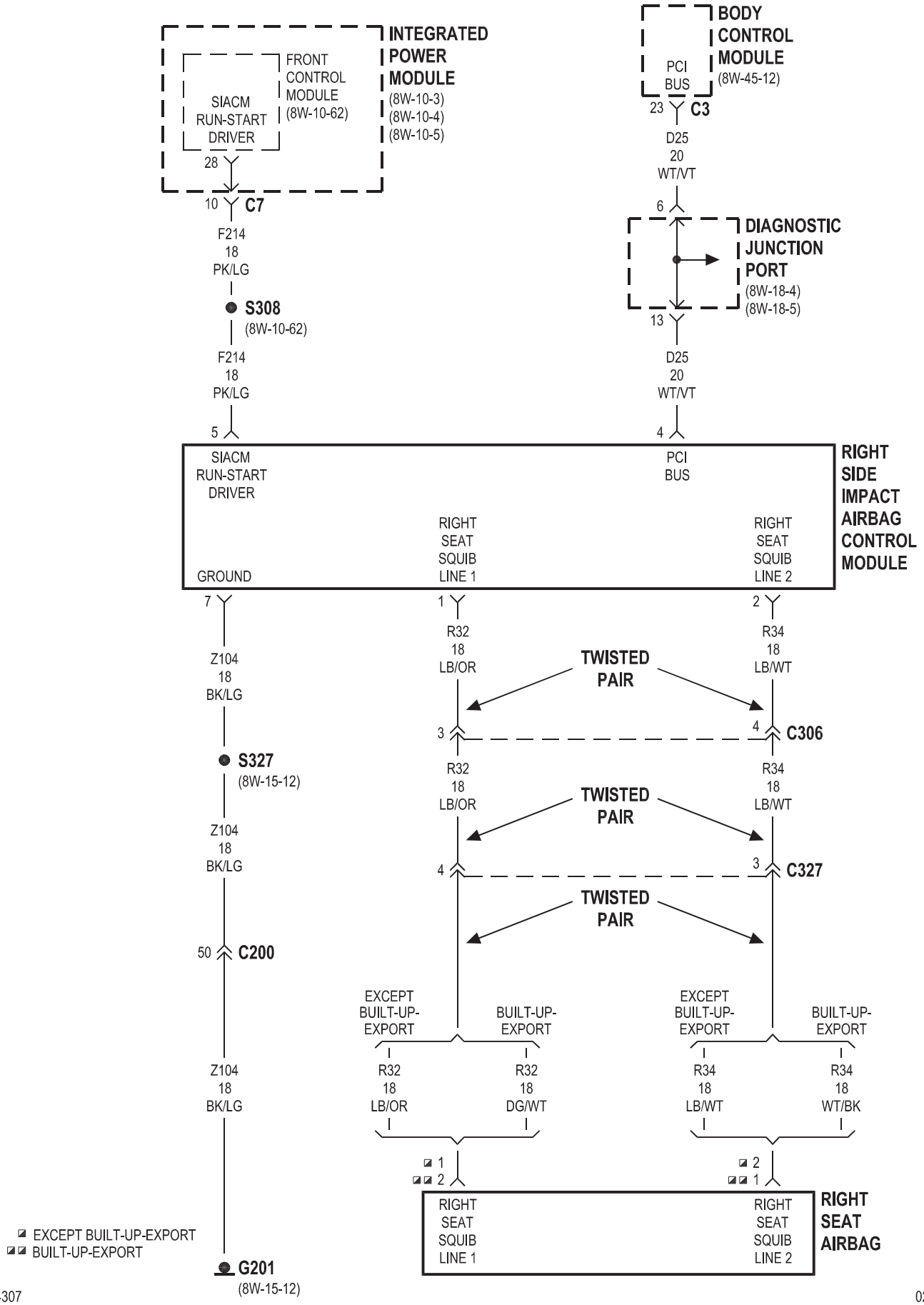
INTEGRATED POWER MODULE
(8W-10-3)
(8W-10-4)
(8W-10-5)
FRONT CONTROL MODULE
(8W-10-62)
SIACM RUN-START DRIVER
28
10
C7
F214
18
PK/LG
S308
(8W-10-62)
F214
18
PK/LG
5
SIACM RUN-START DRIVER
BODY CONTROL MODULE
(8W-45-12)
PCI BUS
23
C3
D25
20
WT/VT
6
DIAGNOSTIC JUNCTION PORT
(8W-18-4)
(8W-18-5)
13
D25
20
WT/VT
4
PCI BUS
RIGHT SIDE IMPACT AIRBAG CONTROL MODULE
GROUND
RIGHT SEAT SQUIB LINE 1
RIGHT SEAT SQUIB LINE 2
7
1
2
Z104
18
BK/LG
R32
18
LB/OR
R34
18
LB/WT
TWISTED PAIR
3
4
C306
S327
(8W-15-12)
R32
18
LB/OR
R34
18
LB/WT
TWISTED PAIR
Z104
18
BK/LG
4
3
C327
TWISTED PAIR
50
C200
EXCEPT BUILT-UP-EXPORT
BUILT-UP-EXPORT
EXCEPT BUILT-UP-EXPORT
BUILT-UP-EXPORT
Z104
18
BK/LG
R32
18
LB/OR
R32
18
DG/WT
R34
18
LB/WT
R34
18
WT/BK
1
2
2
1
RIGHT SEAT SQUIB LINE 1
RIGHT SEAT SQUIB LINE 2
RIGHT SEAT AIRBAG
EXCEPT BUILT-UP-EXPORT
BUILT-UP-EXPORT
G201
(8W-15-12)

8W-44 INTERIOR LIGHTING

Component	Page
A/C- Heater Control	8W-44-8
Accessory Relay	8W-44-4
Auto Temp Control	8W-44-8
Body Control Module	8W-44-2, 3, 4, 5, 6, 7, 8
Center Dome Lamp	8W-44-5
Driver Door Courtesy Lamp	8W-44-2
Floor Console Lamp	8W-44-4
Front Cigar Lighter	8W-44-7
Front Control Module	8W-44-4
Front Reading Lamps/Switch	8W-44-4, 5
Fuse 6	8W-44-4
G200	8W-44-2, 5, 7, 8
G300	8W-44-2, 8
G301	8W-44-2, 3, 5, 6
G302	8W-44-4
G400	8W-44-2
Glove Box Lamp	8W-44-5
Halo Lamp	8W-44-2
Headlamp Switch	8W-44-3, 5, 6, 7, 8
Instrument Cluster	8W-44-7
Instrument Panel Switch Bank	8W-44-7
Integrated Power Module	8W-44-4
Left Liftgate Flood Lamp	8W-44-2
Left Mid Reading Lamp	8W-44-3
Left Rear Reading Lamp	8W-44-3
Left Visor/Vanity Lamp	8W-44-6
Overhead Console	8W-44-5
Passenger Door Courtesy Lamp	8W-44-2
Power Mirror Switch	8W-44-8
Radio	8W-44-7
Rear Auto Temp Control Switch	8W-44-8
Rear Blower Rear Control Switch	8W-44-8
Rear Dome Lamp	8W-44-5
Right Liftgate Flood Lamp	8W-44-2
Right Mid Reading Lamp	8W-44-3
Right Rear Reading Lamp	8W-44-3
Right Visor/Vanity Lamp	8W-44-6

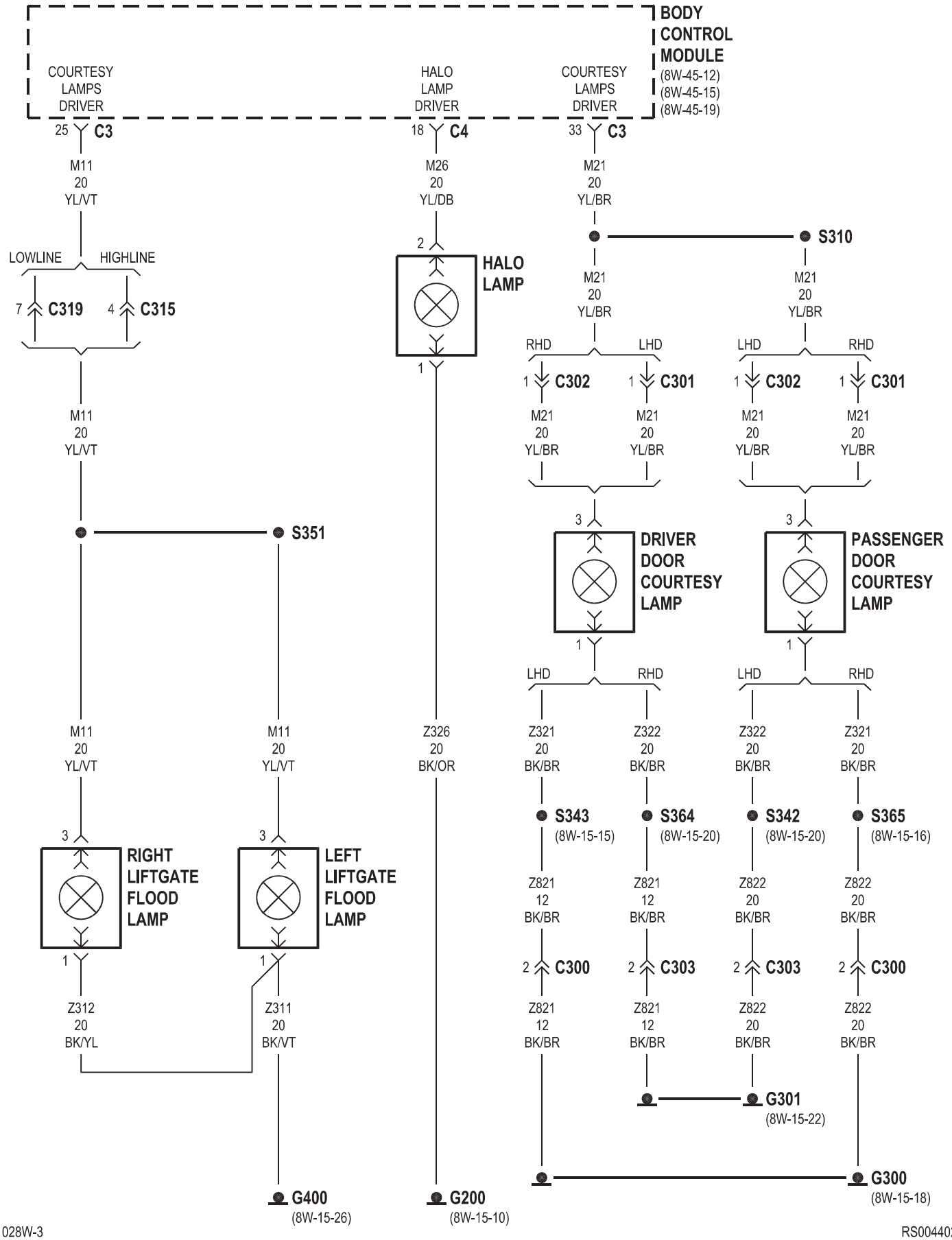
BODY CONTROL MODULE
(8W-45-12)
(8W-45-15)
(8W-45-19)
COURTESY LAMPS DRIVER
HALO LAMP DRIVER
COURTESY LAMPS DRIVER
25 C3
18 C4
33 C3
M11 20 YL/VT
M26 20 YL/DB
M21 20 YL/BR
S310
LOWLINE
HIGHLINE
7 C319
4 C315
2
HALO LAMP
1
RHD
LHD
1 C302
1 C301
M21 20 YL/BR
M11 20 YL/VT
S351
3
DRIVER DOOR COURTESY LAMP
PASSENGER DOOR COURTESY LAMP
LHD
RHD
Z321 20 BK/BR
Z322 20 BK/BR
S343
(8W-15-15)
S364
(8W-15-20)
S342
(8W-15-20)
S365
(8W-15-16)
Z821 12 BK/BR
Z822 20 BK/BR
2 C300
2 C303
RIGHT LIFTGATE FLOOD LAMP
LEFT LIFTGATE FLOOD LAMP
Z312 20 BK/YL
Z311 20 BK/VT
Z326 20 BK/OR
G301
(8W-15-22)
G300
(8W-15-18)
G400
(8W-15-26)
G200
(8W-15-10)

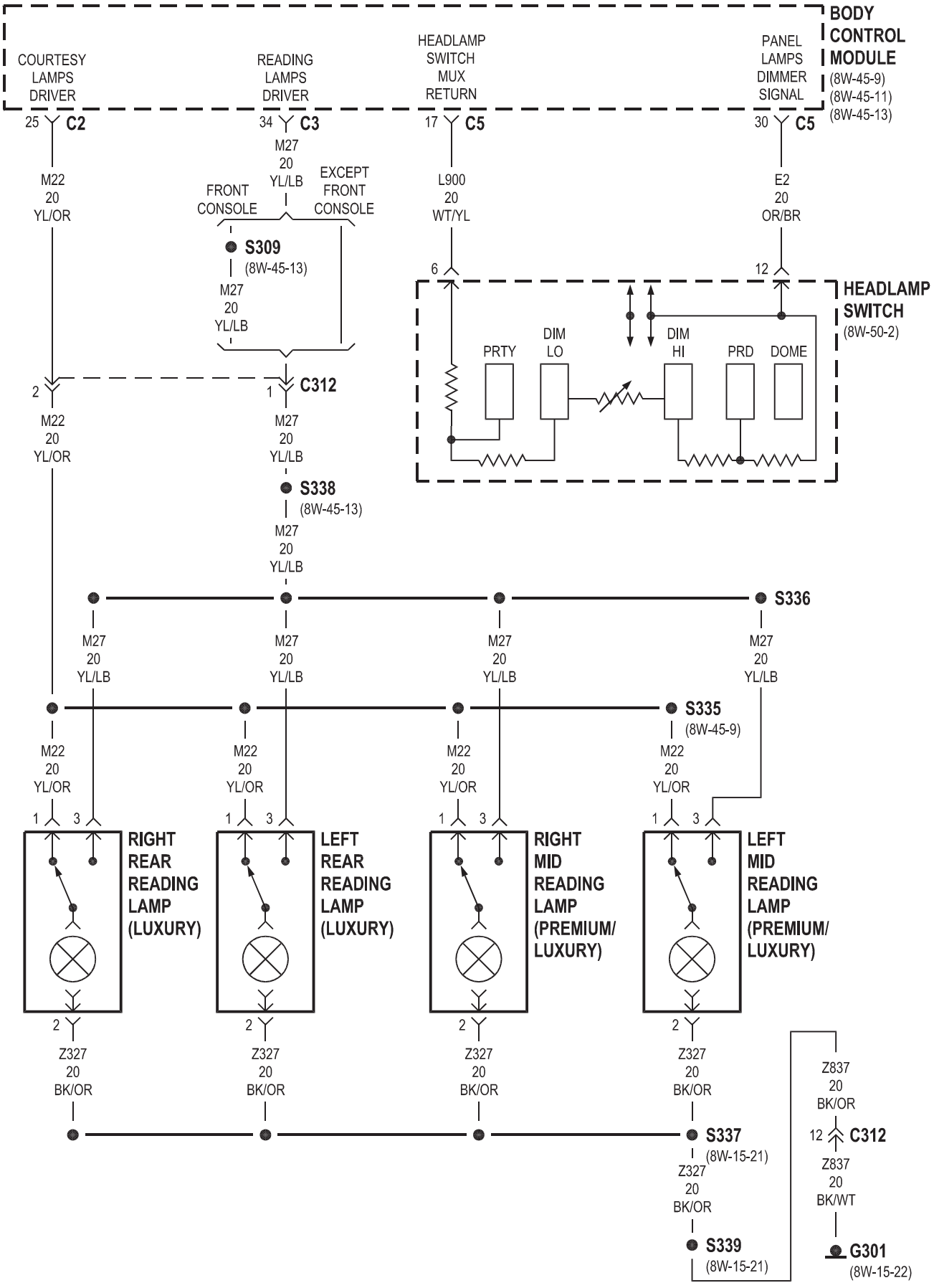
BODY CONTROL MODULE
(8W-45-9)
(8W-45-11)
(8W-45-13)
COURTESY LAMPS DRIVER
READING LAMPS DRIVER
HEADLAMP SWITCH MUX RETURN
PANEL LAMPS DIMMER SIGNAL
25 C2
34 C3
17 C5
30 C5
M22 20 YL/OR
M27 20 YL/LB
FRONT CONSOLE
EXCEPT FRONT CONSOLE
S309
(8W-45-13)
L900 20 WT/YL
E2 20 OR/BR
6
12
HEADLAMP SWITCH
(8W-50-2)
PRTY
DIM LO
DIM HI
PRD
DOME
2
1 C312
S338
(8W-45-13)
S336
S335
(8W-45-9)
1
3
RIGHT REAR READING LAMP (LUXURY)
LEFT REAR READING LAMP (LUXURY)
RIGHT MID READING LAMP (PREMIUM/ LUXURY)
LEFT MID READING LAMP (PREMIUM/ LUXURY)
Z327 20 BK/OR
S337
(8W-15-21)
S339
(8W-15-21)
Z837 20 BK/OR
12 C312
Z837 20 BK/WT
G301
(8W-15-22)

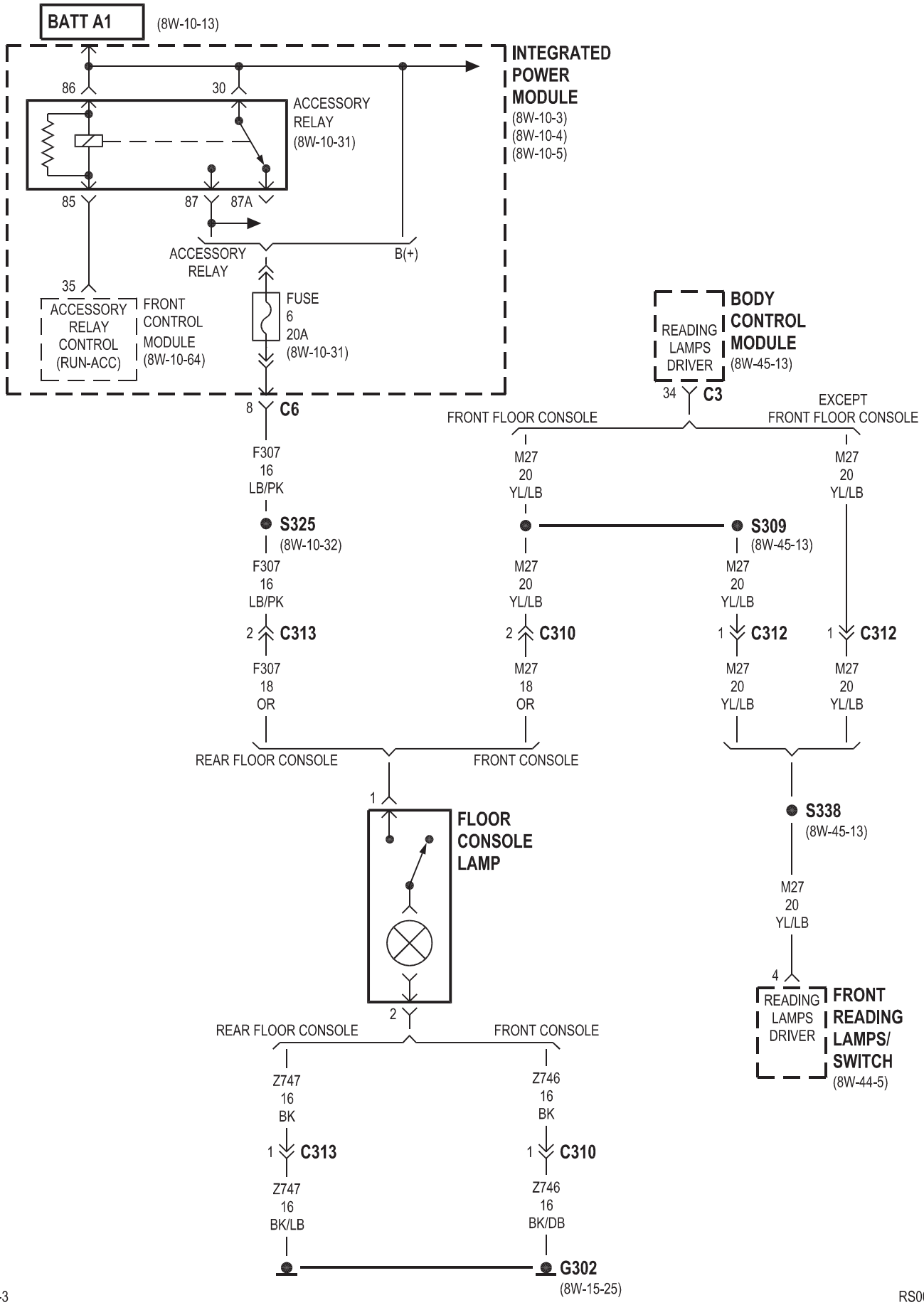
BATT A1
(8W-10-13)
INTEGRATED POWER MODULE
(8W-10-3)
(8W-10-4)
(8W-10-5)
86
30
ACCESSORY RELAY
(8W-10-31)
85
87
87A
ACCESSORY RELAY
B(+)
35
ACCESSORY RELAY CONTROL (RUN-ACC)
FRONT CONTROL MODULE
(8W-10-64)
FUSE
6
20A
(8W-10-31)
8
C6
F307
16
LB/PK
S325
(8W-10-32)
F307
16
LB/PK
2
C313
F307
18
OR
REAR FLOOR CONSOLE
FRONT CONSOLE
1
FLOOR CONSOLE LAMP
2
REAR FLOOR CONSOLE
FRONT CONSOLE
Z747
16
BK
1
C313
Z747
16
BK/LB
Z746
16
BK
1
C310
Z746
16
BK/DB
G302
(8W-15-25)
BODY CONTROL MODULE
(8W-45-13)
READING LAMPS DRIVER
34
C3
FRONT FLOOR CONSOLE
EXCEPT FRONT FLOOR CONSOLE
M27
20
YL/LB
S309
(8W-45-13)
M27
20
YL/LB
2
C310
M27
18
OR
M27
20
YL/LB
1
C312
M27
20
YL/LB
1
C312
M27
20
YL/LB
S338
(8W-45-13)
M27
20
YL/LB
4
READING LAMPS DRIVER
FRONT READING LAMPS/ SWITCH
(8W-44-5)

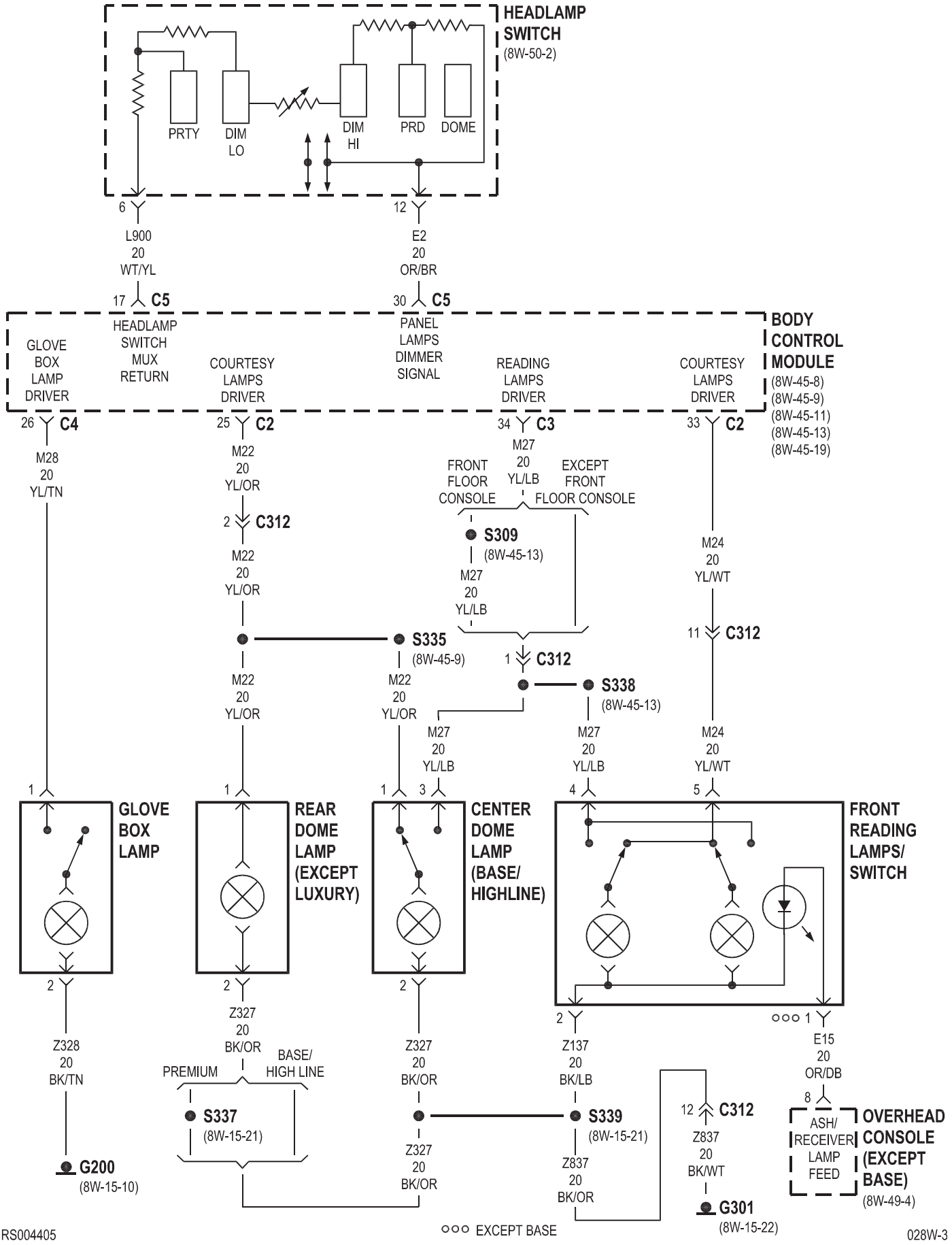
HEADLAMP SWITCH
(8W-50-2)
PRTY
DIM LO
DIM HI
PRD
DOME
6
L900
20
WT/YL
12
E2
20
OR/BR
17 C5
HEADLAMP SWITCH MUX RETURN
30 C5
PANEL LAMPS DIMMER SIGNAL
BODY CONTROL MODULE
(8W-45-8)
(8W-45-9)
(8W-45-11)
(8W-45-13)
(8W-45-19)
GLOVE BOX LAMP DRIVER
COURTESY LAMPS DRIVER
READING LAMPS DRIVER
COURTESY LAMPS DRIVER
26 C4
25 C2
34 C3
33 C2
M28
20
YL/TN
M22
20
YL/OR
2 C312
M22
20
YL/OR
M27
20
YL/LB
FRONT FLOOR CONSOLE
EXCEPT FRONT FLOOR CONSOLE
S309
(8W-45-13)
M27
20
YL/LB
M24
20
YL/WT
11 C312
S335
(8W-45-9)
1 C312
S338
(8W-45-13)
M22
20
YL/OR
M22
20
YL/OR
M27
20
YL/LB
M27
20
YL/LB
M24
20
YL/WT
1
1
1
3
4
5
GLOVE BOX LAMP
REAR DOME LAMP (EXCEPT LUXURY)
CENTER DOME LAMP (BASE/ HIGHLINE)
FRONT READING LAMPS/ SWITCH
2
2
2
2
ooo 1
Z328
20
BK/TN
Z327
20
BK/OR
Z327
20
BK/OR
Z137
20
BK/LB
E15
20
OR/DB
PREMIUM
BASE/ HIGH LINE
8
S337
(8W-15-21)
S339
(8W-15-21)
12 C312
ASH/ RECEIVER LAMP FEED
OVERHEAD CONSOLE (EXCEPT BASE)
(8W-49-4)
Z327
20
BK/OR
Z837
20
BK/OR
Z837
20
BK/WT
G200
(8W-15-10)
G301
(8W-15-22)
ooo EXCEPT BASE

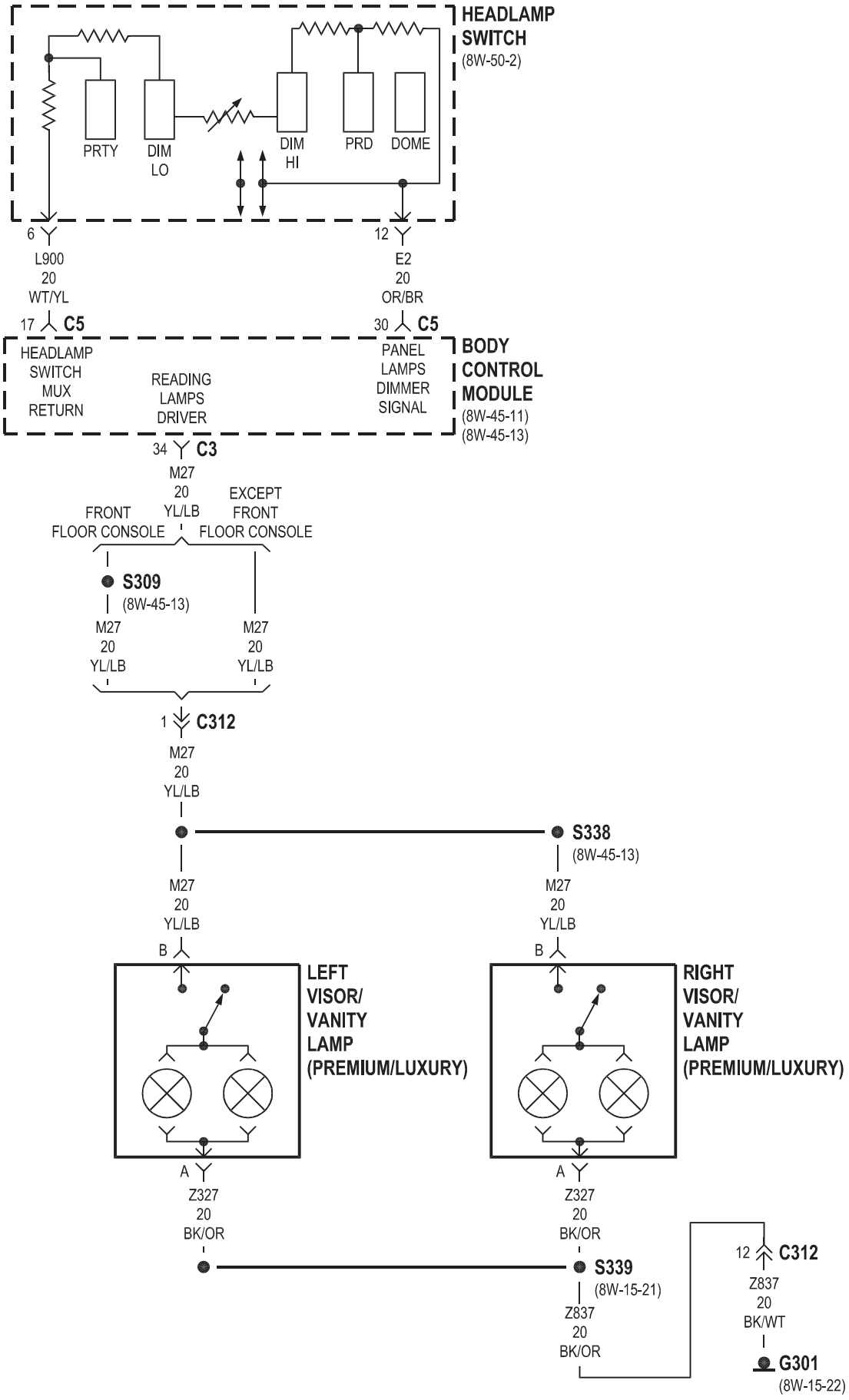
HEADLAMP SWITCH
(8W-50-2)
PRTY
DIM LO
DIM HI
PRD
DOME
6
L900
20
WT/YL
17 C5
12
E2
20
OR/BR
30 C5
HEADLAMP SWITCH MUX RETURN
READING LAMPS DRIVER
PANEL LAMPS DIMMER SIGNAL
BODY CONTROL MODULE
(8W-45-11)
(8W-45-13)
34 C3
M27
20
YL/LB
FRONT FLOOR CONSOLE
EXCEPT FRONT FLOOR CONSOLE
S309
(8W-45-13)
M27
20
YL/LB
M27
20
YL/LB
1 C312
M27
20
YL/LB
S338
(8W-45-13)
M27
20
YL/LB
B
M27
20
YL/LB
B
LEFT VISOR/ VANITY LAMP (PREMIUM/LUXURY)
RIGHT VISOR/ VANITY LAMP (PREMIUM/LUXURY)
A
Z327
20
BK/OR
A
Z327
20
BK/OR
S339
(8W-15-21)
Z837
20
BK/OR
12 C312
Z837
20
BK/WT
G301
(8W-15-22)

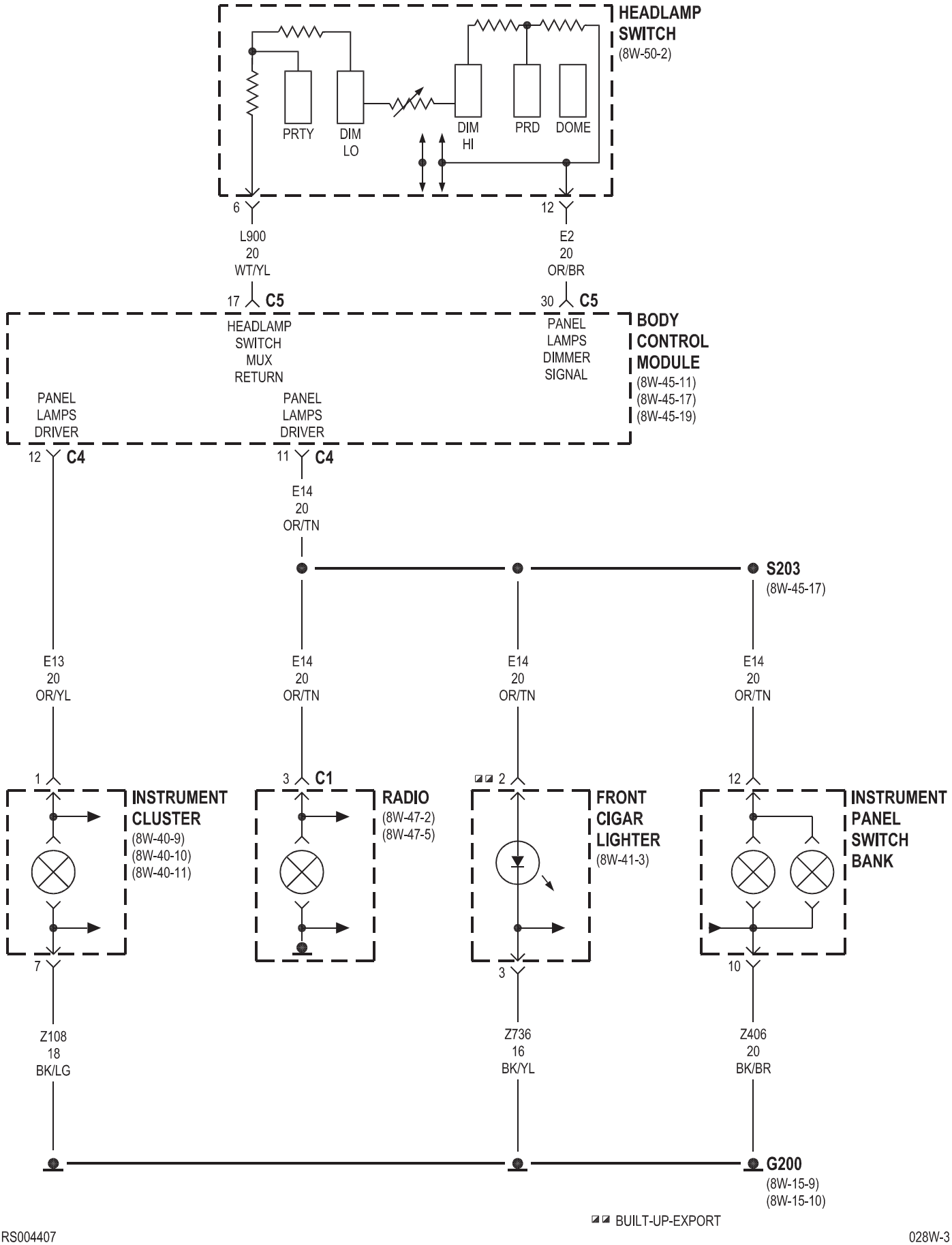
HEADLAMP SWITCH
(8W-50-2)
PRTY
DIM LO
DIM HI
PRD
DOME
6
L900
20
WT/YL
12
E2
20
OR/BR
17 C5
HEADLAMP SWITCH MUX RETURN
30 C5
PANEL LAMPS DIMMER SIGNAL
BODY CONTROL MODULE
(8W-45-11)
(8W-45-17)
(8W-45-19)
PANEL LAMPS DRIVER
12 C4
PANEL LAMPS DRIVER
11 C4
E14
20
OR/TN
S203
(8W-45-17)
E13
20
OR/YL
E14
20
OR/TN
E14
20
OR/TN
E14
20
OR/TN
1
3 C1
2
12
INSTRUMENT CLUSTER
(8W-40-9)
(8W-40-10)
(8W-40-11)
RADIO
(8W-47-2)
(8W-47-5)
FRONT CIGAR LIGHTER
(8W-41-3)
INSTRUMENT PANEL SWITCH BANK
7
3
10
Z108
18
BK/LG
Z736
16
BK/YL
Z406
20
BK/BR
G200
(8W-15-9)
(8W-15-10)
BUILT-UP-EXPORT

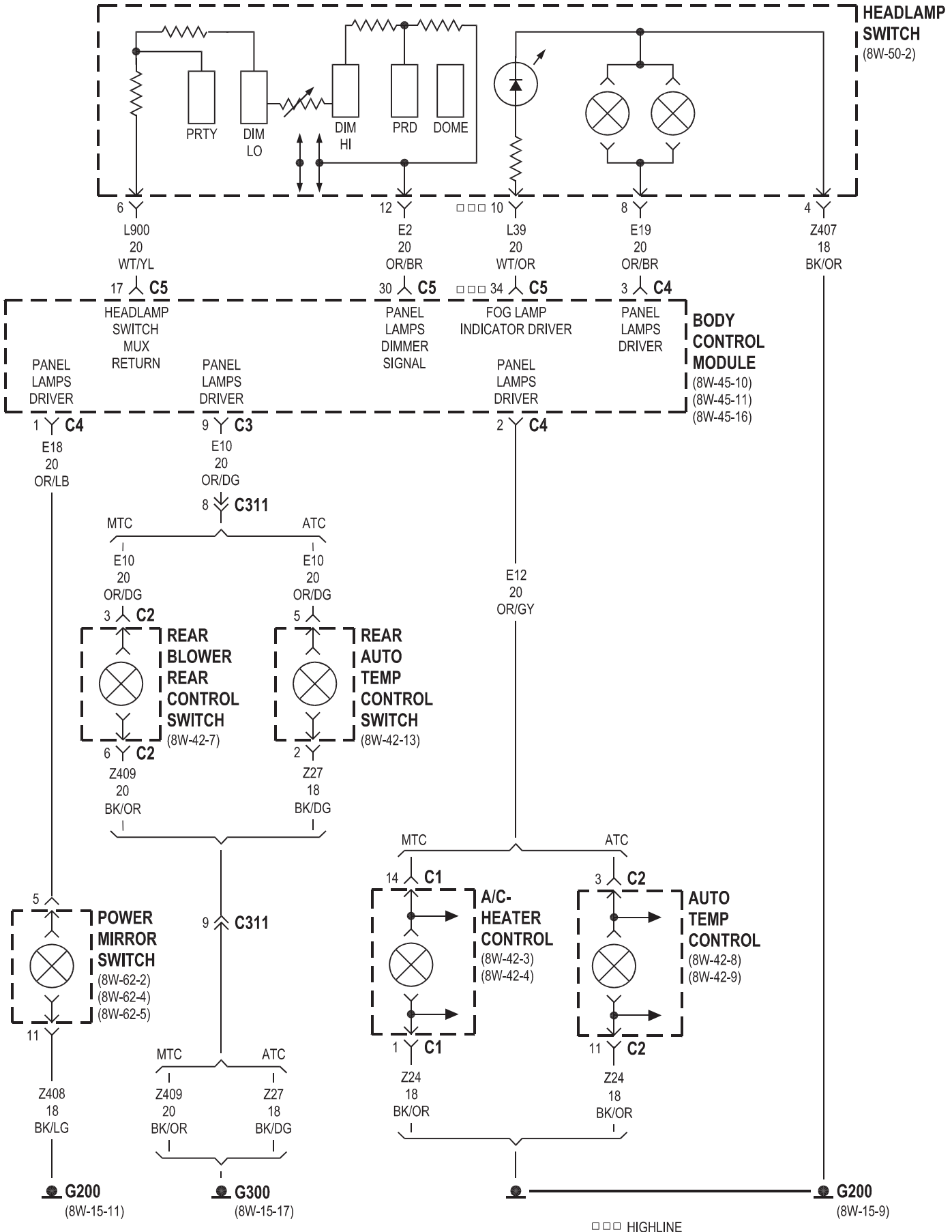
HEADLAMP SWITCH
(8W-50-2)
PRTY
DIM LO
DIM HI
PRD
DOME
6 L900 20 WT/YL
12 E2 20 OR/BR
10 L39 20 WT/OR
8 E19 20 OR/BR
4 Z407 18 BK/OR
17 C5 HEADLAMP SWITCH MUX RETURN
30 C5 PANEL LAMPS DIMMER SIGNAL
34 C5 FOG LAMP INDICATOR DRIVER
3 C4 PANEL LAMPS DRIVER
BODY CONTROL MODULE
(8W-45-10)
(8W-45-11)
(8W-45-16)
PANEL LAMPS DRIVER
1 C4 E18 20 OR/LB
9 C3 E10 20 OR/DG
2 C4
8 C311
MTC
ATC
E10 20 OR/DG
3 C2
5 C2
REAR BLOWER REAR CONTROL SWITCH
(8W-42-7)
REAR AUTO TEMP CONTROL SWITCH
(8W-42-13)
6 C2 Z409 20 BK/OR
2 Z27 18 BK/DG
E12 20 OR/GY
14 C1
3 C2
A/C-HEATER CONTROL
(8W-42-3)
(8W-42-4)
AUTO TEMP CONTROL
(8W-42-8)
(8W-42-9)
1 C1 Z24 18 BK/OR
11 C2 Z24 18 BK/OR
5
POWER MIRROR SWITCH
(8W-62-2)
(8W-62-4)
(8W-62-5)
9 C311
11
Z408 18 BK/LG
Z409 20 BK/OR
Z27 18 BK/DG
G200
(8W-15-11)
G300
(8W-15-17)
G200
(8W-15-9)
HIGHLINE

8W-45 BODY CONTROL MODULE

Component	Page
A/C- Heater Control	8W-45-16, 19
Auto Temp Control	8W-45-16, 19
Automatic Day/Night Mirror	8W-45-11
Body Control Module	8W-45-2, 3, 4, 5, 6, 7, 8, 9, 10, 11, 12, 13, 15, 16, 17, 18, 19, 20
Center Dome Lamp	8W-45-9, 13
Clockspring	8W-45-17
Controller Antilock Brake	8W-45-13
Diagnostic Junction Port	8W-45-12
Driver Door Courtesy Lamp	8W-45-15
Driver Door Lock Switch	8W-45-12, 15
Driver Heated Seat Module	8W-45-11
Floor Console Lamp	8W-45-13
Front Cigar Lighter	8W-45-17
Front Control Module	8W-45-3
Front Reading Lamps/Switch	8W-45-8, 13
Fuel Pump Module	8W-45-15
Fuse 14	8W-45-3
Fuse 19	8W-45-2
Fuse 20	8W-45-2
Fuse 24	8W-45-2
G301	8W-45-5, 6, 8
Glove Box Lamp	8W-45-19
Halo Lamp	8W-45-19
Headlamp Switch	8W-45-11, 16, 20
Hood Ajar Switch	8W-45-12
Ignition Switch	8W-45-3
Instrument Cluster	8W-45-16, 18, 19
Instrument Panel Switch Bank	8W-45-10, 11, 17, 19
Integrated Power Module	8W-45-2, 3, 5, 6, 13
Left B-Pillar Switch	8W-45-9
Left Cylinder Lock Switch	8W-45-10
Left Front Door Lock Motor/Ajar Switch	8W-45-4, 7
Left Liftgate Flood Lamp	8W-45-12
Left Mid Reading Lamp	8W-45-9, 14
Left Power Mirror	8W-45-20
Left Rear Lamp Assembly	8W-45-5, 6
Left Rear Reading Lamp	8W-45-9, 14
Left Remote Radio Switch	8W-45-17
Left Repeater Lamp	8W-45-20
Left Sliding Door Control Module	8W-45-8, 10
Left Sliding Door Lock Motor	8W-45-7
Left Sliding Door Lock Motor/Ajar Switch	8W-45-7, 8
Left Stop/Turn Signal Relay	8W-45-5
Left Visor/Vanity Lamp	8W-45-13
License Lamp	8W-45-8
Liftgate Ajar Switch	8W-45-12
Liftgate Cinch/Release Motor	8W-45-12
Liftgate Cylinder Lock Switch	8W-45-9
Memory Set Switch	8W-45-4
Message Center	8W-45-18
Multi- Function Switch	8W-45-16
Name Brand Speaker Relay	8W-45-3
Overhead Console	8W-45-4, 11
Passenger Door Courtesy Lamp	8W-45-15
Passenger Door Lock Switch	8W-45-12, 15
Passenger Folding Mirror Relay	8W-45-20
Passenger Heated Seat Module	8W-45-11
Power Folding Mirror Switch	8W-45-20
Power Liftgate Module	8W-45-8
Power Mirror Switch	8W-45-16
Radio	8W-45-17
Rear Auto Temp Control Switch	8W-45-10, 19
Rear Blower Rear Control Switch	8W-45-10
Rear Dome Lamp	8W-45-9
Rear Wiper Motor	8W-45-8
Remote Keyless Entry Module	8W-45-4, 16
Right B-Pillar Switch	8W-45-9
Right Combination Relay	8W-45-5
Right Cylinder Lock Switch	8W-45-10
Right Front Door Lock Motor/Ajar Switch	8W-45-7, 9
Right Liftgate Flood Lamp	8W-45-12
Right Mid Reading Lamp	8W-45-9, 14
Right Power Mirror	8W-45-20
Right Rear Lamp Assembly	8W-45-5, 6
Right Rear Reading Lamp	8W-45-9, 14
Right Remote Radio Switch	8W-45-17
Right Repeater Lamp	8W-45-20
Right Sliding Door Control Module	8W-45-8, 10
Right Sliding Door Lock Motor	8W-45-7
Right Sliding Door Lock Motor/Ajar Switch	8W-45-7, 8
Right Visor/Vanity Lamp	8W-45-13
Thatcham Alarm Module	8W-45-10
Traction Control Switch	8W-45-17

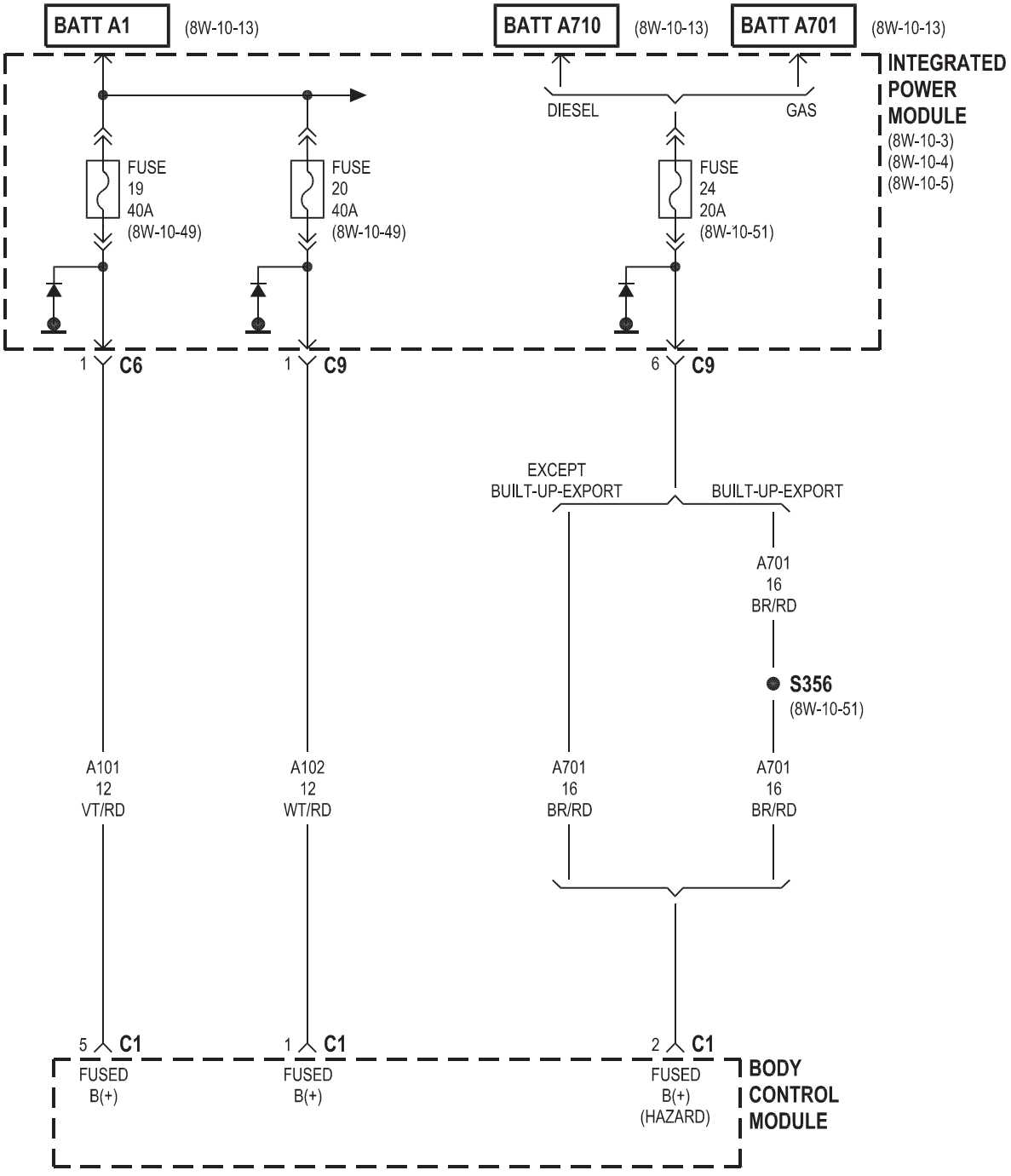
BATT A1
(8W-10-13)
BATT A710
(8W-10-13)
BATT A701
(8W-10-13)
INTEGRATED POWER MODULE
(8W-10-3)
(8W-10-4)
(8W-10-5)
DIESEL
GAS
FUSE 19 40A (8W-10-49)
FUSE 20 40A (8W-10-49)
FUSE 24 20A (8W-10-51)
1 C6
1 C9
6 C9
EXCEPT BUILT-UP-EXPORT
BUILT-UP-EXPORT
A701 16 BR/RD
S356
(8W-10-51)
A101 12 VT/RD
A102 12 WT/RD
A701 16 BR/RD
A701 16 BR/RD
5 C1
1 C1
2 C1
FUSED B(+)
FUSED B(+)
FUSED B(+) (HAZARD)
BODY CONTROL MODULE

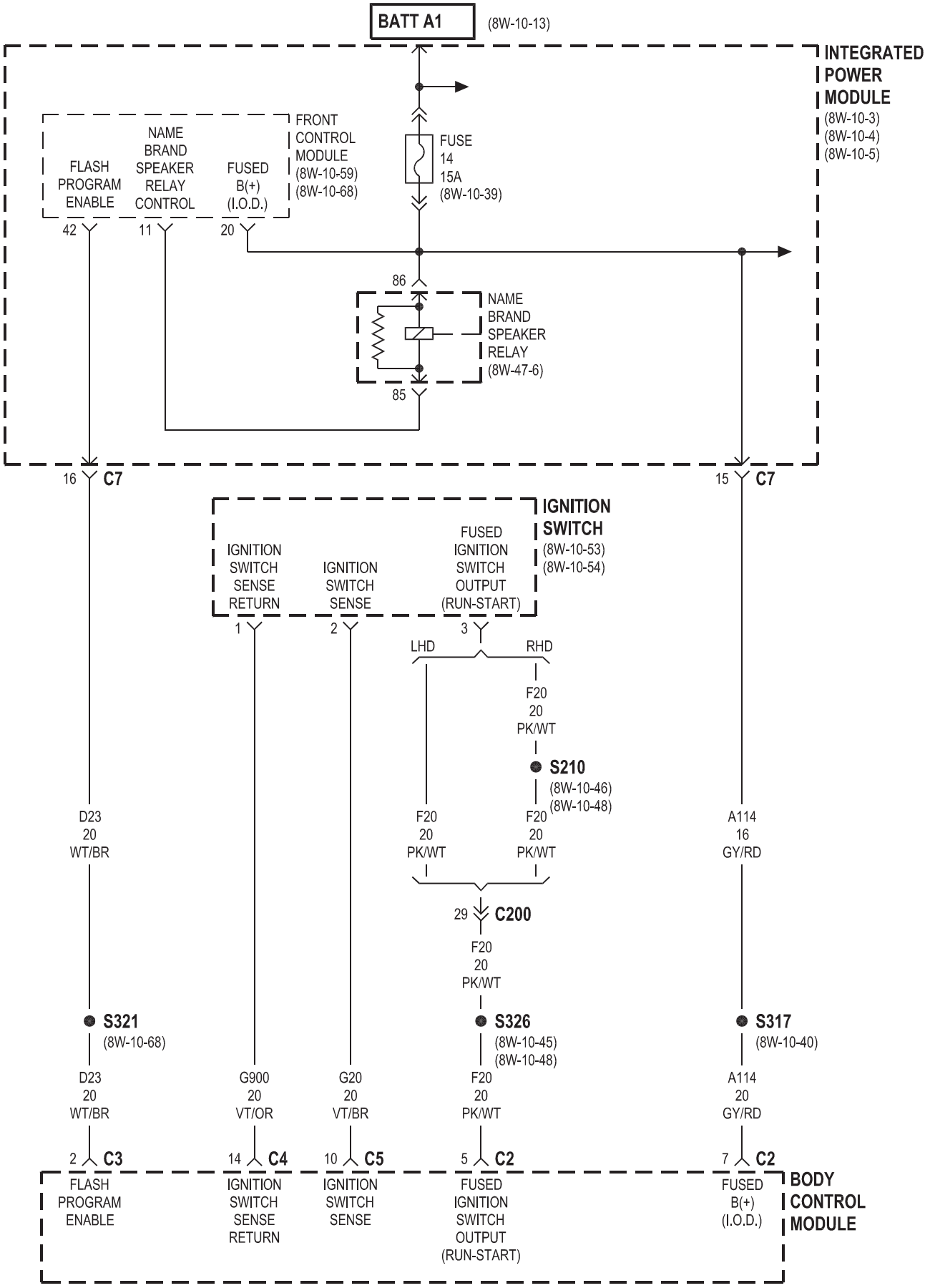
BATT A1
(8W-10-13)
INTEGRATED POWER MODULE
(8W-10-3)
(8W-10-4)
(8W-10-5)
FRONT CONTROL MODULE
(8W-10-59)
(8W-10-68)
FLASH PROGRAM ENABLE
NAME BRAND SPEAKER RELAY CONTROL
FUSED B(+) (I.O.D.)
42
11
20
FUSE 14 15A
(8W-10-39)
86
85
NAME BRAND SPEAKER RELAY
(8W-47-6)
16 C7
15 C7
IGNITION SWITCH
(8W-10-53)
(8W-10-54)
IGNITION SWITCH SENSE RETURN
IGNITION SWITCH SENSE
FUSED IGNITION SWITCH OUTPUT (RUN-START)
1
2
3
LHD
RHD
F20 20 PK/WT
S210
(8W-10-46)
(8W-10-48)
D23 20 WT/BR
F20 20 PK/WT
F20 20 PK/WT
A114 16 GY/RD
29 C200
F20 20 PK/WT
S321
(8W-10-68)
S326
(8W-10-45)
(8W-10-48)
S317
(8W-10-40)
D23 20 WT/BR
G900 20 VT/OR
G20 20 VT/BR
F20 20 PK/WT
A114 20 GY/RD
2 C3
14 C4
10 C5
5 C2
7 C2
FLASH PROGRAM ENABLE
IGNITION SWITCH SENSE RETURN
IGNITION SWITCH SENSE
FUSED IGNITION SWITCH OUTPUT (RUN-START)
FUSED B(+) (I.O.D.)
BODY CONTROL MODULE

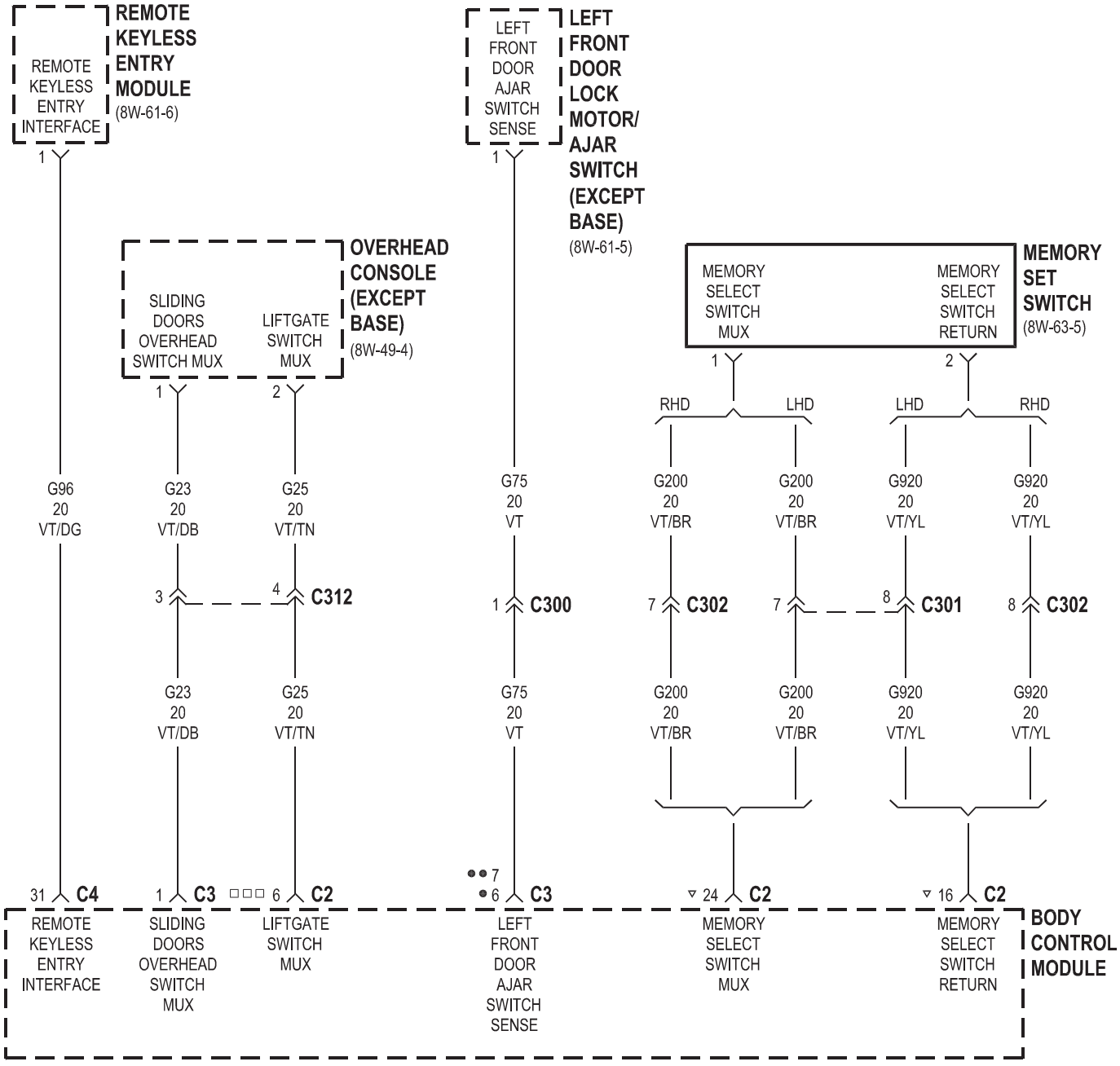
REMOTE KEYLESS ENTRY MODULE
(8W-61-6)
REMOTE KEYLESS ENTRY INTERFACE
1
G96
20
VT/DG
31 C4
REMOTE KEYLESS ENTRY INTERFACE
OVERHEAD CONSOLE (EXCEPT BASE)
(8W-49-4)
SLIDING DOORS OVERHEAD SWITCH MUX
LIFTGATE SWITCH MUX
1
2
G23
20
VT/DB
G25
20
VT/TN
3
4
C312
G23
20
VT/DB
G25
20
VT/TN
1 C3
SLIDING DOORS OVERHEAD SWITCH MUX
6 C2
LIFTGATE SWITCH MUX
LEFT FRONT DOOR AJAR SWITCH SENSE
LEFT FRONT DOOR LOCK MOTOR/ AJAR SWITCH (EXCEPT BASE)
(8W-61-5)
1
G75
20
VT
1 C300
G75
20
VT
7
6 C3
LEFT FRONT DOOR AJAR SWITCH SENSE
MEMORY SET SWITCH
(8W-63-5)
MEMORY SELECT SWITCH MUX
MEMORY SELECT SWITCH RETURN
1
2
RHD
LHD
LHD
RHD
G200
20
VT/BR
G200
20
VT/BR
G920
20
VT/YL
G920
20
VT/YL
7 C302
7
8 C301
8 C302
G200
20
VT/BR
G200
20
VT/BR
G920
20
VT/YL
G920
20
VT/YL
24 C2
MEMORY SELECT SWITCH MUX
16 C2
MEMORY SELECT SWITCH RETURN
BODY CONTROL MODULE
HIGH LINE
LHD
RHD
MEMORY

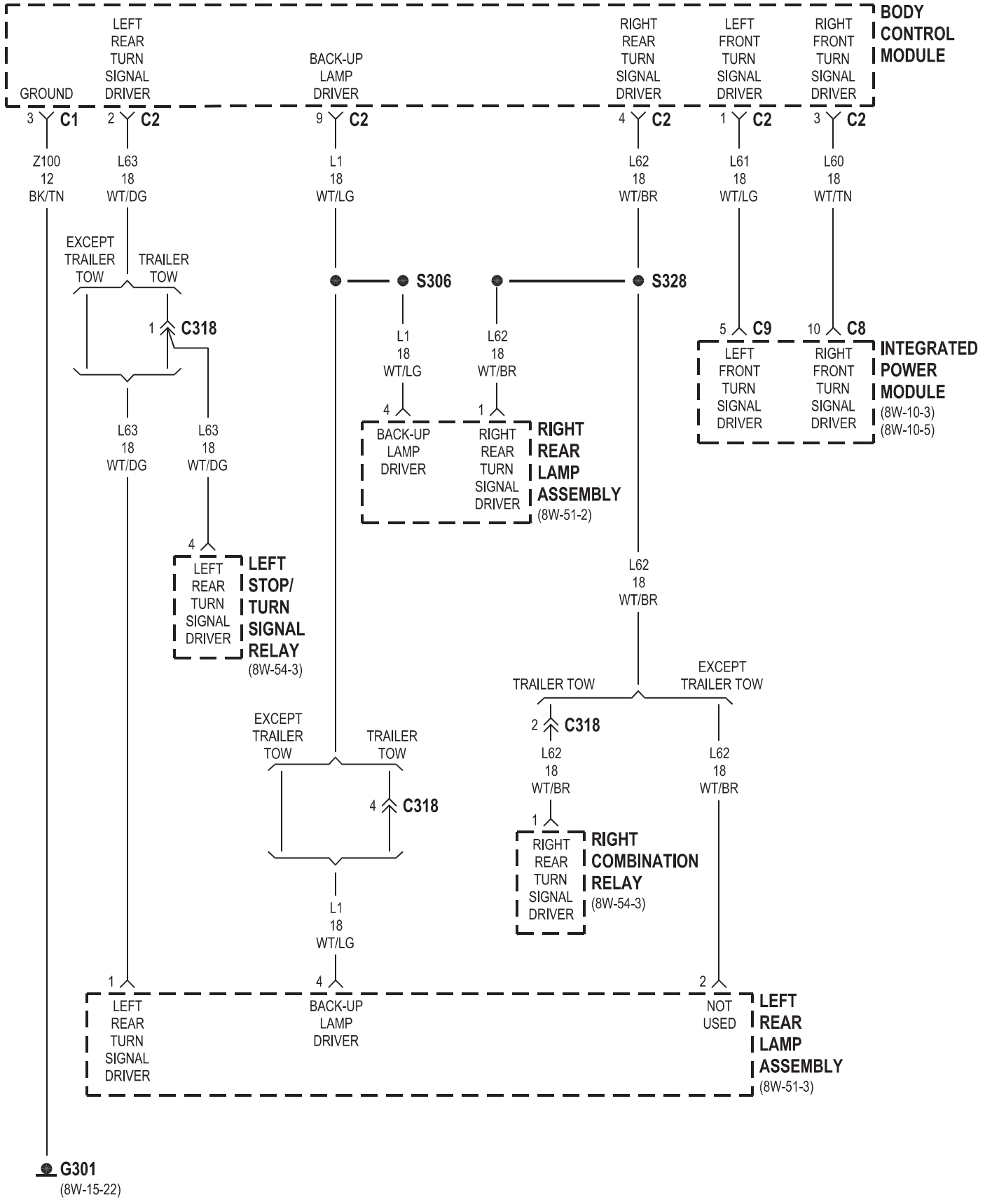
BODY CONTROL MODULE
GROUND
LEFT REAR TURN SIGNAL DRIVER
BACK-UP LAMP DRIVER
RIGHT REAR TURN SIGNAL DRIVER
LEFT FRONT TURN SIGNAL DRIVER
RIGHT FRONT TURN SIGNAL DRIVER
3 C1
2 C2
9 C2
4 C2
1 C2
3 C2
Z100 12 BK/TN
L63 18 WT/DG
L1 18 WT/LG
L62 18 WT/BR
L61 18 WT/LG
L60 18 WT/TN
EXCEPT TRAILER TOW
TRAILER TOW
1 C318
S306
S328
5 C9
10 C8
INTEGRATED POWER MODULE
(8W-10-3)
(8W-10-5)
L1 18 WT/LG
L62 18 WT/BR
4
1
BACK-UP LAMP DRIVER
RIGHT REAR TURN SIGNAL DRIVER
RIGHT REAR LAMP ASSEMBLY
(8W-51-2)
L63 18 WT/DG
L63 18 WT/DG
4
LEFT REAR TURN SIGNAL DRIVER
LEFT STOP/ TURN SIGNAL RELAY
(8W-54-3)
L62 18 WT/BR
TRAILER TOW
EXCEPT TRAILER TOW
2 C318
EXCEPT TRAILER TOW
TRAILER TOW
4 C318
L62 18 WT/BR
L62 18 WT/BR
1
RIGHT REAR TURN SIGNAL DRIVER
RIGHT COMBINATION RELAY
(8W-54-3)
L1 18 WT/LG
1
4
2
LEFT REAR TURN SIGNAL DRIVER
BACK-UP LAMP DRIVER
NOT USED
LEFT REAR LAMP ASSEMBLY
(8W-51-3)
G301
(8W-15-22)

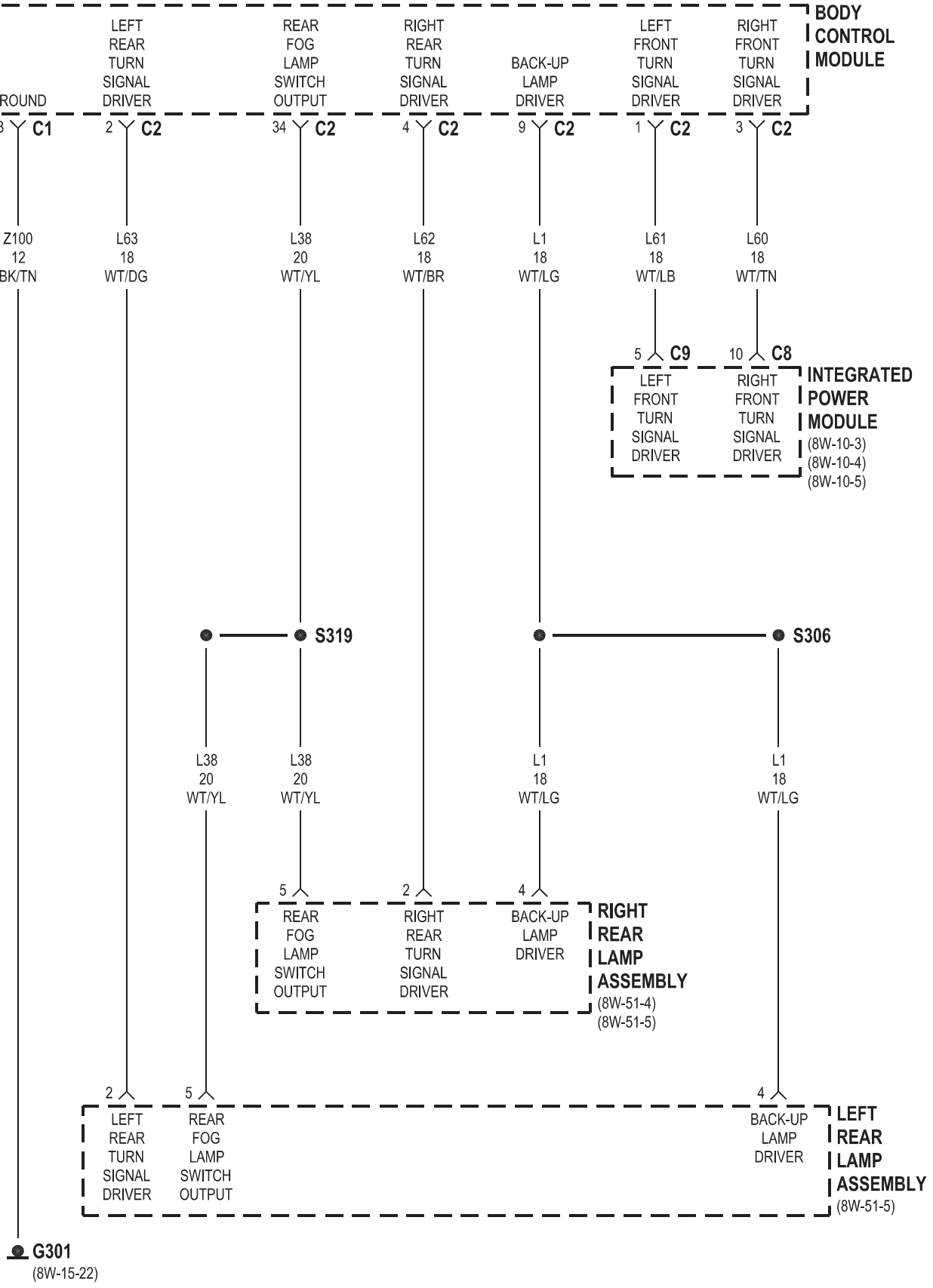
BODY CONTROL MODULE
GROUND
LEFT REAR TURN SIGNAL DRIVER
REAR FOG LAMP SWITCH OUTPUT
RIGHT REAR TURN SIGNAL DRIVER
BACK-UP LAMP DRIVER
LEFT FRONT TURN SIGNAL DRIVER
RIGHT FRONT TURN SIGNAL DRIVER
3 C1
2 C2
34 C2
4 C2
9 C2
1 C2
3 C2
Z100 12 BK/TN
L63 18 WT/DG
L38 20 WT/YL
L62 18 WT/BR
L1 18 WT/LG
L61 18 WT/LB
L60 18 WT/TN
5 C9
10 C8
LEFT FRONT TURN SIGNAL DRIVER
RIGHT FRONT TURN SIGNAL DRIVER
INTEGRATED POWER MODULE
(8W-10-3)
(8W-10-4)
(8W-10-5)
S319
S306
L38 20 WT/YL
L38 20 WT/YL
L1 18 WT/LG
L1 18 WT/LG
5
2
4
REAR FOG LAMP SWITCH OUTPUT
RIGHT REAR TURN SIGNAL DRIVER
BACK-UP LAMP DRIVER
RIGHT REAR LAMP ASSEMBLY
(8W-51-4)
(8W-51-5)
2
5
4
LEFT REAR TURN SIGNAL DRIVER
REAR FOG LAMP SWITCH OUTPUT
BACK-UP LAMP DRIVER
LEFT REAR LAMP ASSEMBLY
(8W-51-5)
G301
(8W-15-22)

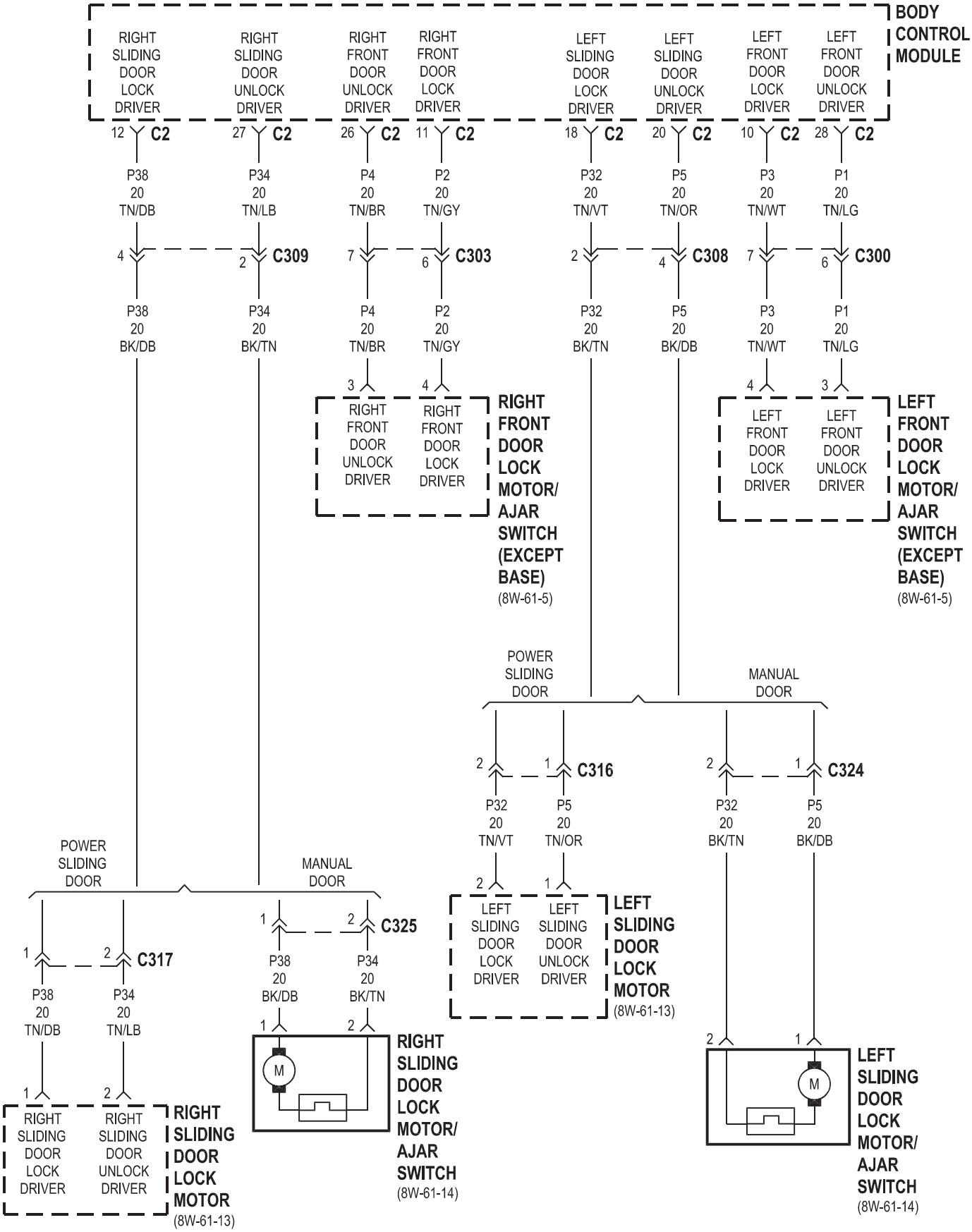
BODY CONTROL MODULE
RIGHT SLIDING DOOR LOCK DRIVER
RIGHT SLIDING DOOR UNLOCK DRIVER
RIGHT FRONT DOOR UNLOCK DRIVER
RIGHT FRONT DOOR LOCK DRIVER
LEFT SLIDING DOOR LOCK DRIVER
LEFT SLIDING DOOR UNLOCK DRIVER
LEFT FRONT DOOR LOCK DRIVER
LEFT FRONT DOOR UNLOCK DRIVER
12 C2
27 C2
26 C2
11 C2
18 C2
20 C2
10 C2
28 C2
P38 20 TN/DB
P34 20 TN/LB
P4 20 TN/BR
P2 20 TN/GY
P32 20 TN/VT
P5 20 TN/OR
P3 20 TN/WT
P1 20 TN/LG
4
2 C309
7
6 C303
2
4 C308
7
6 C300
P38 20 BK/DB
P34 20 BK/TN
P4 20 TN/BR
P2 20 TN/GY
P32 20 BK/TN
P5 20 BK/DB
P3 20 TN/WT
P1 20 TN/LG
3
4
4
3
RIGHT FRONT DOOR UNLOCK DRIVER
RIGHT FRONT DOOR LOCK DRIVER
RIGHT FRONT DOOR LOCK MOTOR/ AJAR SWITCH (EXCEPT BASE)
(8W-61-5)
LEFT FRONT DOOR LOCK DRIVER
LEFT FRONT DOOR UNLOCK DRIVER
LEFT FRONT DOOR LOCK MOTOR/ AJAR SWITCH (EXCEPT BASE)
(8W-61-5)
POWER SLIDING DOOR
MANUAL DOOR
2
1 C316
2
1 C324
P32 20 TN/VT
P5 20 TN/OR
P32 20 BK/TN
P5 20 BK/DB
2
1
LEFT SLIDING DOOR LOCK DRIVER
LEFT SLIDING DOOR UNLOCK DRIVER
LEFT SLIDING DOOR LOCK MOTOR
(8W-61-13)
POWER SLIDING DOOR
MANUAL DOOR
1
2 C317
1
2 C325
P38 20 TN/DB
P34 20 TN/LB
P38 20 BK/DB
P34 20 BK/TN
1
2
1
2
RIGHT SLIDING DOOR LOCK DRIVER
RIGHT SLIDING DOOR UNLOCK DRIVER
RIGHT SLIDING DOOR LOCK MOTOR
(8W-61-13)
M
RIGHT SLIDING DOOR LOCK MOTOR/ AJAR SWITCH
(8W-61-14)
M
LEFT SLIDING DOOR LOCK MOTOR/ AJAR SWITCH
(8W-61-14)

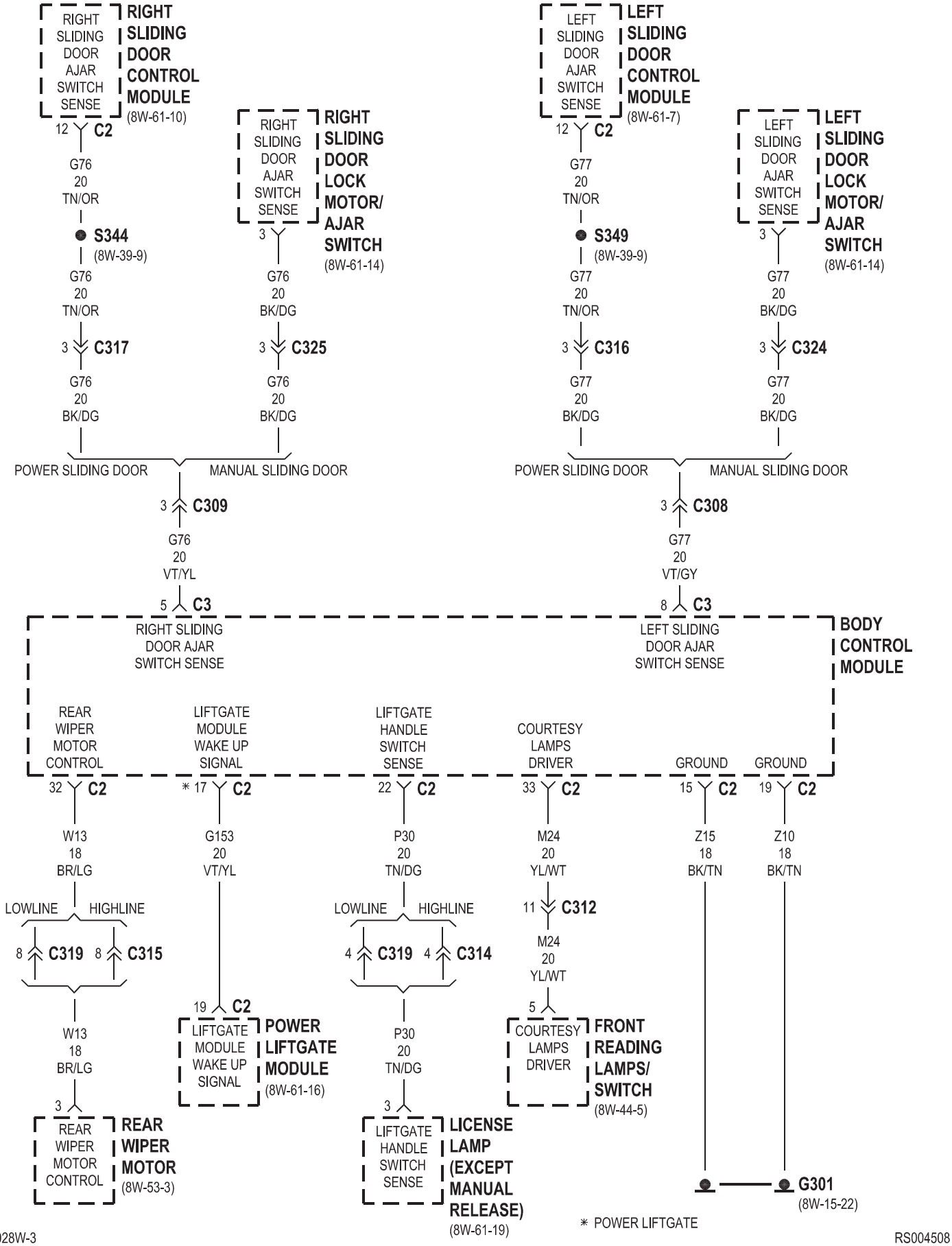
RIGHT SLIDING DOOR AJAR SWITCH SENSE
RIGHT SLIDING DOOR CONTROL MODULE
(8W-61-10)
12 C2
G76 20 TN/OR
S344
(8W-39-9)
G76 20 TN/OR
3 C317
G76 20 BK/DG
RIGHT SLIDING DOOR AJAR SWITCH SENSE
RIGHT SLIDING DOOR LOCK MOTOR/ AJAR SWITCH
(8W-61-14)
3
G76 20 BK/DG
3 C325
G76 20 BK/DG
POWER SLIDING DOOR
MANUAL SLIDING DOOR
3 C309
G76 20 VT/YL
5 C3
RIGHT SLIDING DOOR AJAR SWITCH SENSE
LEFT SLIDING DOOR AJAR SWITCH SENSE
LEFT SLIDING DOOR CONTROL MODULE
(8W-61-7)
12 C2
G77 20 TN/OR
S349
(8W-39-9)
G77 20 TN/OR
3 C316
G77 20 BK/DG
LEFT SLIDING DOOR AJAR SWITCH SENSE
LEFT SLIDING DOOR LOCK MOTOR/ AJAR SWITCH
(8W-61-14)
3
G77 20 BK/DG
3 C324
G77 20 BK/DG
POWER SLIDING DOOR
MANUAL SLIDING DOOR
3 C308
G77 20 VT/GY
8 C3
LEFT SLIDING DOOR AJAR SWITCH SENSE
BODY CONTROL MODULE
REAR WIPER MOTOR CONTROL
32 C2
W13 18 BR/LG
LOWLINE
HIGHLINE
8 C319
8 C315
W13 18 BR/LG
3
REAR WIPER MOTOR CONTROL
REAR WIPER MOTOR
(8W-53-3)
LIFTGATE MODULE WAKE UP SIGNAL
* 17 C2
G153 20 VT/YL
19 C2
LIFTGATE MODULE WAKE UP SIGNAL
POWER LIFTGATE MODULE
(8W-61-16)
LIFTGATE HANDLE SWITCH SENSE
22 C2
P30 20 TN/DG
LOWLINE
HIGHLINE
4 C319
4 C314
P30 20 TN/DG
3
LIFTGATE HANDLE SWITCH SENSE
LICENSE LAMP (EXCEPT MANUAL RELEASE)
(8W-61-19)
COURTESY LAMPS DRIVER
33 C2
M24 20 YL/WT
11 C312
M24 20 YL/WT
5
COURTESY LAMPS DRIVER
FRONT READING LAMPS/ SWITCH
(8W-44-5)
GROUND
15 C2
Z15 18 BK/TN
GROUND
19 C2
Z10 18 BK/TN
G301
(8W-15-22)
* POWER LIFTGATE

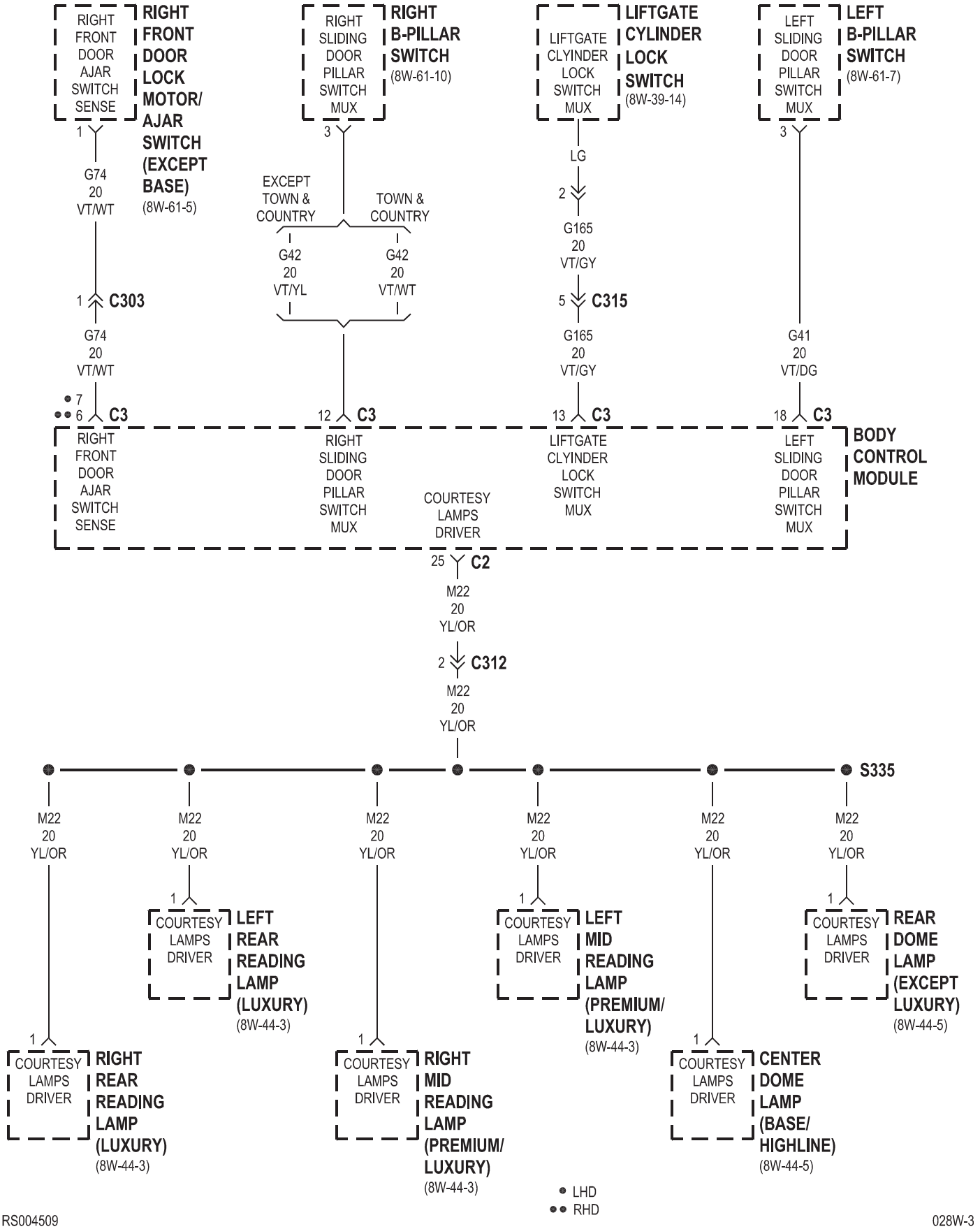
RIGHT FRONT DOOR AJAR SWITCH SENSE
RIGHT FRONT DOOR LOCK MOTOR/ AJAR SWITCH (EXCEPT BASE)
(8W-61-5)
RIGHT SLIDING DOOR PILLAR SWITCH MUX
RIGHT B-PILLAR SWITCH
(8W-61-10)
LIFTGATE CLYINDER LOCK SWITCH MUX
LIFTGATE CYLINDER LOCK SWITCH
(8W-39-14)
LEFT SLIDING DOOR PILLAR SWITCH MUX
LEFT B-PILLAR SWITCH
(8W-61-7)
1
G74
20
VT/WT
1 C303
G74
20
VT/WT
7
6 C3
3
EXCEPT TOWN & COUNTRY
TOWN & COUNTRY
G42
20
VT/YL
G42
20
VT/WT
12 C3
LG
2
G165
20
VT/GY
5 C315
G165
20
VT/GY
13 C3
3
G41
20
VT/DG
18 C3
RIGHT FRONT DOOR AJAR SWITCH SENSE
RIGHT SLIDING DOOR PILLAR SWITCH MUX
COURTESY LAMPS DRIVER
LIFTGATE CLYINDER LOCK SWITCH MUX
LEFT SLIDING DOOR PILLAR SWITCH MUX
BODY CONTROL MODULE
25 C2
M22
20
YL/OR
2 C312
M22
20
YL/OR
S335
M22
20
YL/OR
1
COURTESY LAMPS DRIVER
RIGHT REAR READING LAMP (LUXURY)
(8W-44-3)
M22
20
YL/OR
1
COURTESY LAMPS DRIVER
LEFT REAR READING LAMP (LUXURY)
(8W-44-3)
M22
20
YL/OR
1
COURTESY LAMPS DRIVER
RIGHT MID READING LAMP (PREMIUM/ LUXURY)
(8W-44-3)
M22
20
YL/OR
1
COURTESY LAMPS DRIVER
LEFT MID READING LAMP (PREMIUM/ LUXURY)
(8W-44-3)
M22
20
YL/OR
1
COURTESY LAMPS DRIVER
CENTER DOME LAMP (BASE/ HIGHLINE)
(8W-44-5)
M22
20
YL/OR
1
COURTESY LAMPS DRIVER
REAR DOME LAMP (EXCEPT LUXURY)
(8W-44-5)
LHD
RHD

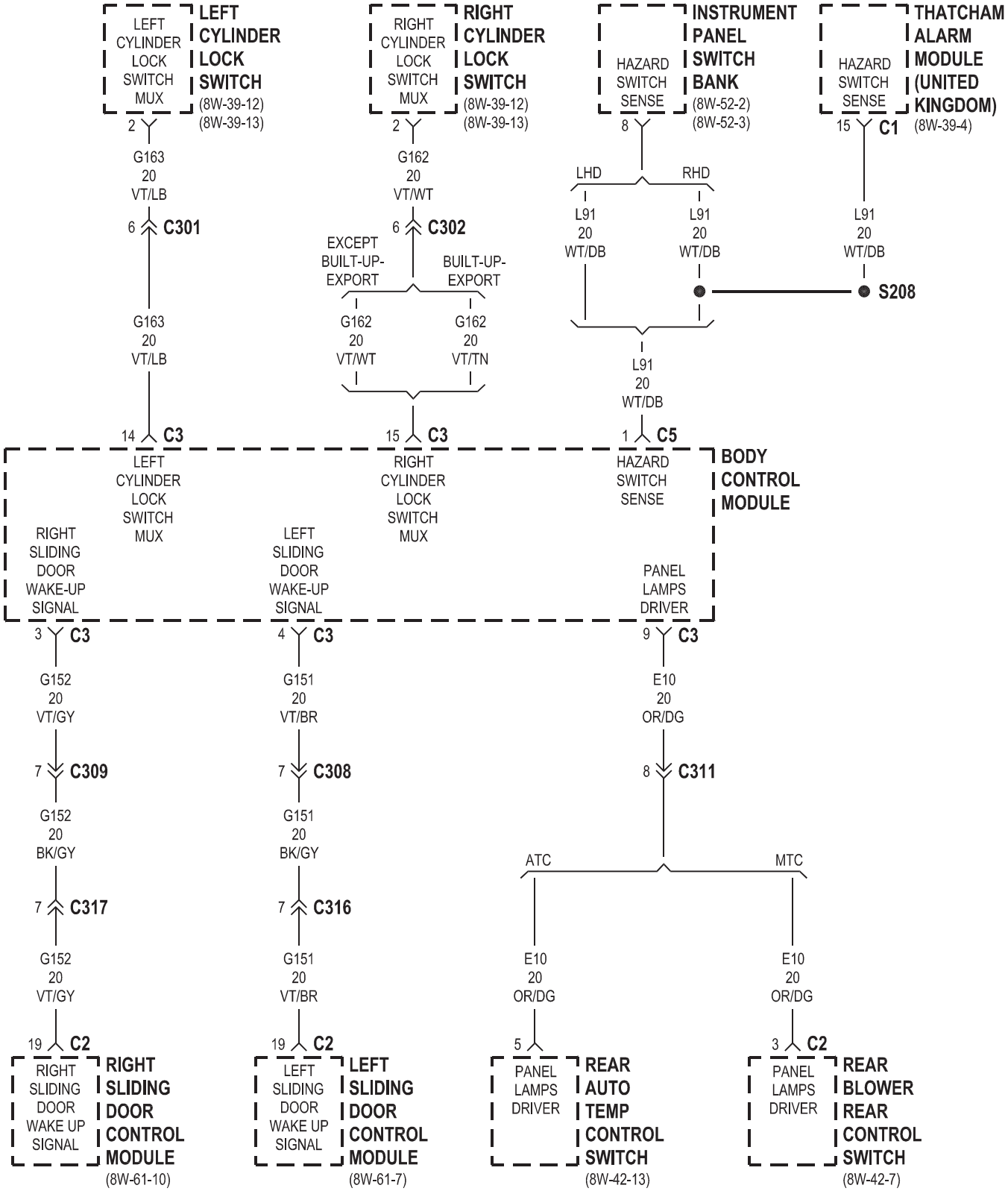
LEFT CYLINDER LOCK SWITCH MUX
LEFT CYLINDER LOCK SWITCH
(8W-39-12)
(8W-39-13)
RIGHT CYLINDER LOCK SWITCH MUX
RIGHT CYLINDER LOCK SWITCH
(8W-39-12)
(8W-39-13)
HAZARD SWITCH SENSE
INSTRUMENT PANEL SWITCH BANK
(8W-52-2)
(8W-52-3)
HAZARD SWITCH SENSE
THATCHAM ALARM MODULE (UNITED KINGDOM)
(8W-39-4)
2
G163
20
VT/LB
6 C301
G163
20
VT/LB
14 C3
2
G162
20
VT/WT
6 C302
EXCEPT BUILT-UP-EXPORT
BUILT-UP-EXPORT
G162
20
VT/WT
G162
20
VT/TN
15 C3
8
LHD
RHD
L91
20
WT/DB
L91
20
WT/DB
L91
20
WT/DB
S208
L91
20
WT/DB
1 C5
15 C1
BODY CONTROL MODULE
LEFT CYLINDER LOCK SWITCH MUX
RIGHT CYLINDER LOCK SWITCH MUX
HAZARD SWITCH SENSE
RIGHT SLIDING DOOR WAKE-UP SIGNAL
LEFT SLIDING DOOR WAKE-UP SIGNAL
PANEL LAMPS DRIVER
3 C3
4 C3
9 C3
G152
20
VT/GY
G151
20
VT/BR
E10
20
OR/DG
7 C309
7 C308
8 C311
G152
20
BK/GY
G151
20
BK/GY
ATC
MTC
7 C317
7 C316
G152
20
VT/GY
G151
20
VT/BR
E10
20
OR/DG
E10
20
OR/DG
19 C2
19 C2
5
3 C2
RIGHT SLIDING DOOR WAKE UP SIGNAL
RIGHT SLIDING DOOR CONTROL MODULE
(8W-61-10)
LEFT SLIDING DOOR WAKE UP SIGNAL
LEFT SLIDING DOOR CONTROL MODULE
(8W-61-7)
PANEL LAMPS DRIVER
REAR AUTO TEMP CONTROL SWITCH
(8W-42-13)
PANEL LAMPS DRIVER
REAR BLOWER REAR CONTROL SWITCH
(8W-42-7)

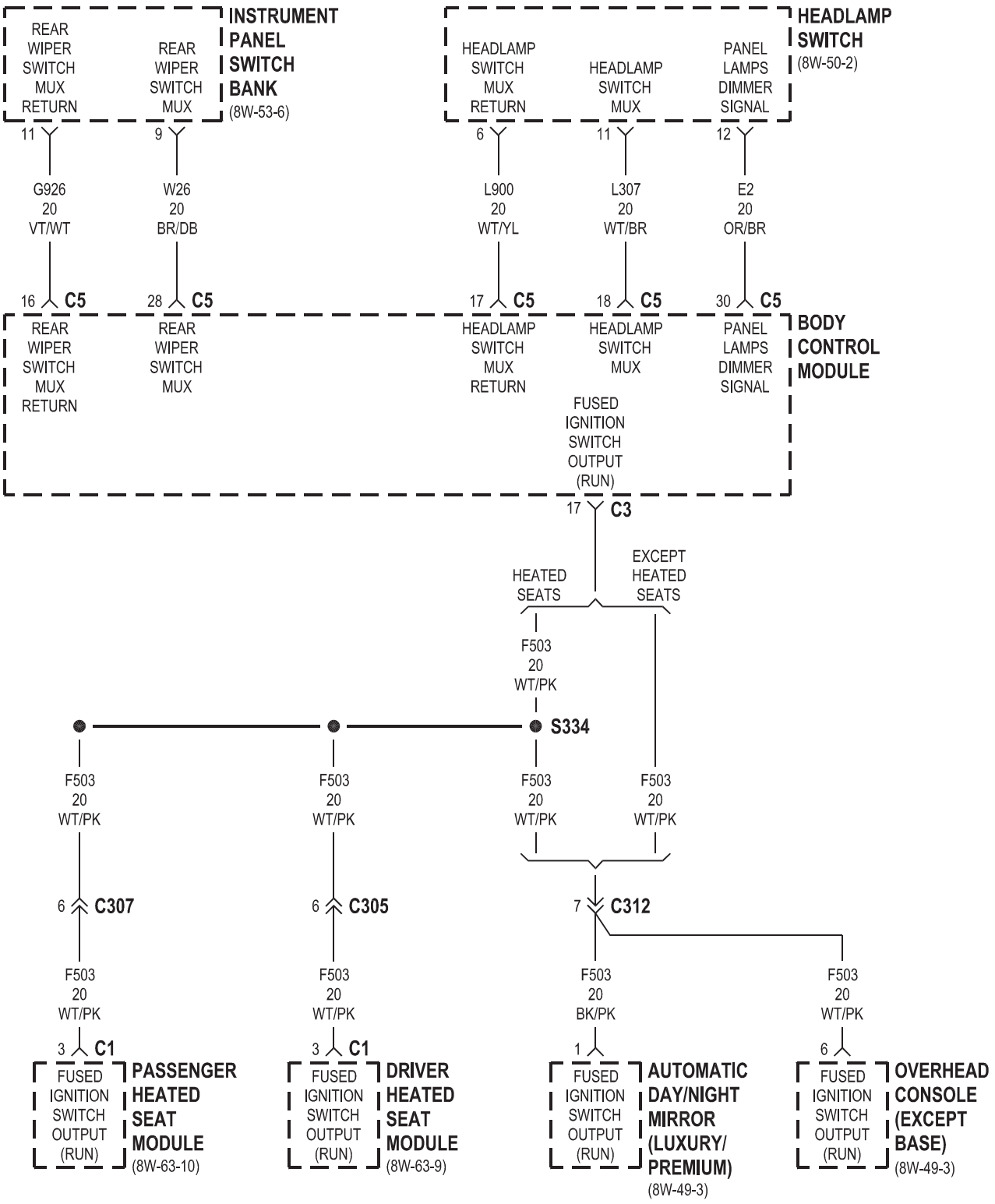
INSTRUMENT PANEL SWITCH BANK (8W-53-6)
REAR WIPER SWITCH MUX RETURN
REAR WIPER SWITCH MUX
HEADLAMP SWITCH (8W-50-2)
HEADLAMP SWITCH MUX RETURN
HEADLAMP SWITCH MUX
PANEL LAMPS DIMMER SIGNAL
11
9
6
11
12
G926 20 VT/WT
W26 20 BR/DB
L900 20 WT/YL
L307 20 WT/BR
E2 20 OR/BR
16 C5
28 C5
17 C5
18 C5
30 C5
BODY CONTROL MODULE
REAR WIPER SWITCH MUX RETURN
REAR WIPER SWITCH MUX
HEADLAMP SWITCH MUX RETURN
HEADLAMP SWITCH MUX
PANEL LAMPS DIMMER SIGNAL
FUSED IGNITION SWITCH OUTPUT (RUN)
17 C3
HEATED SEATS
EXCEPT HEATED SEATS
F503 20 WT/PK
S334
F503 20 WT/PK
6 C307
6 C305
7 C312
3 C1
3 C1
1
6
FUSED IGNITION SWITCH OUTPUT (RUN)
PASSENGER HEATED SEAT MODULE (8W-63-10)
DRIVER HEATED SEAT MODULE (8W-63-9)
F503 20 BK/PK
AUTOMATIC DAY/NIGHT MIRROR (LUXURY/ PREMIUM) (8W-49-3)
OVERHEAD CONSOLE (EXCEPT BASE) (8W-49-3)

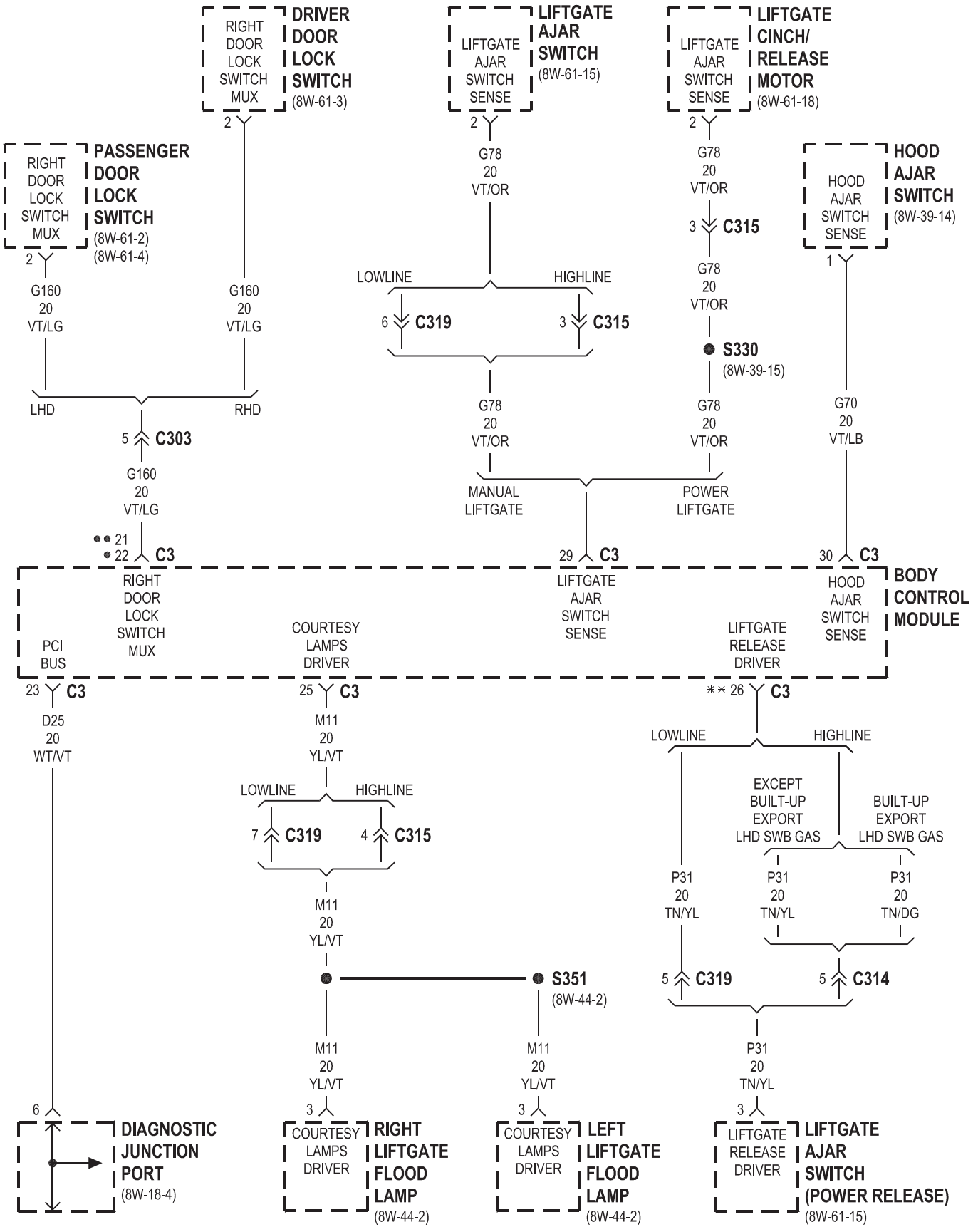
RIGHT DOOR LOCK SWITCH MUX
DRIVER DOOR LOCK SWITCH (8W-61-3)
LIFTGATE AJAR SWITCH SENSE
LIFTGATE AJAR SWITCH (8W-61-15)
LIFTGATE AJAR SWITCH SENSE
LIFTGATE CINCH/ RELEASE MOTOR (8W-61-18)
RIGHT DOOR LOCK SWITCH MUX
PASSENGER DOOR LOCK SWITCH (8W-61-2) (8W-61-4)
HOOD AJAR SWITCH SENSE
HOOD AJAR SWITCH (8W-39-14)
G160 20 VT/LG
G78 20 VT/OR
C315
C319
S330 (8W-39-15)
LOWLINE
HIGHLINE
LHD
RHD
C303
MANUAL LIFTGATE
POWER LIFTGATE
G70 20 VT/LB
BODY CONTROL MODULE
PCI BUS
COURTESY LAMPS DRIVER
LIFTGATE RELEASE DRIVER
HOOD AJAR SWITCH SENSE
D25 20 WT/VT
M11 20 YL/VT
P31 20 TN/YL
EXCEPT BUILT-UP EXPORT LHD SWB GAS
BUILT-UP EXPORT LHD SWB GAS
P31 20 TN/DG
C314
S351 (8W-44-2)
DIAGNOSTIC JUNCTION PORT (8W-18-4)
RIGHT LIFTGATE FLOOD LAMP (8W-44-2)
LEFT LIFTGATE FLOOD LAMP (8W-44-2)
LIFTGATE AJAR SWITCH (POWER RELEASE) (8W-61-15)
** POWER RELEASE
LHD
RHD

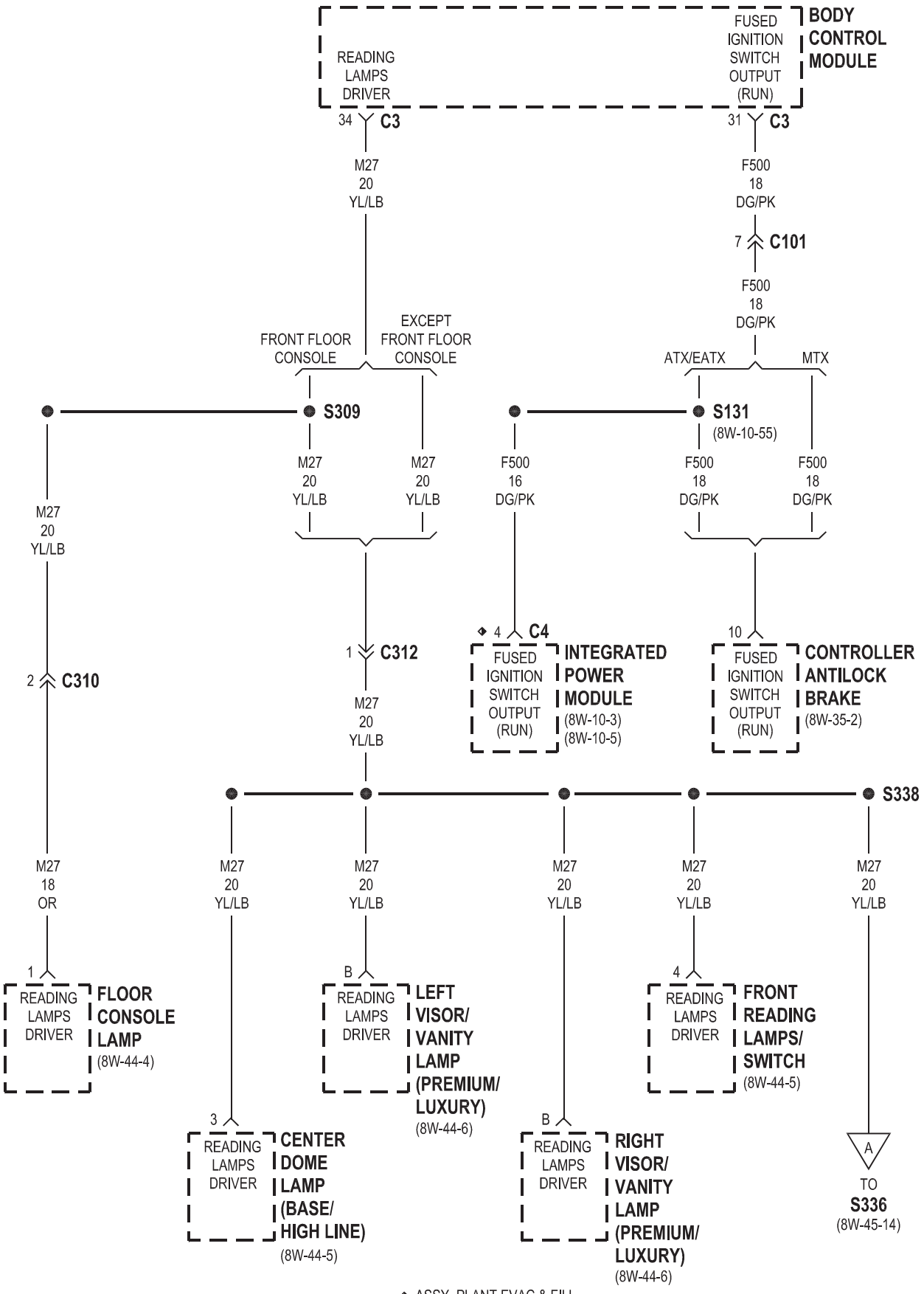

◆ ASSY. PLANT EVAC & FILL

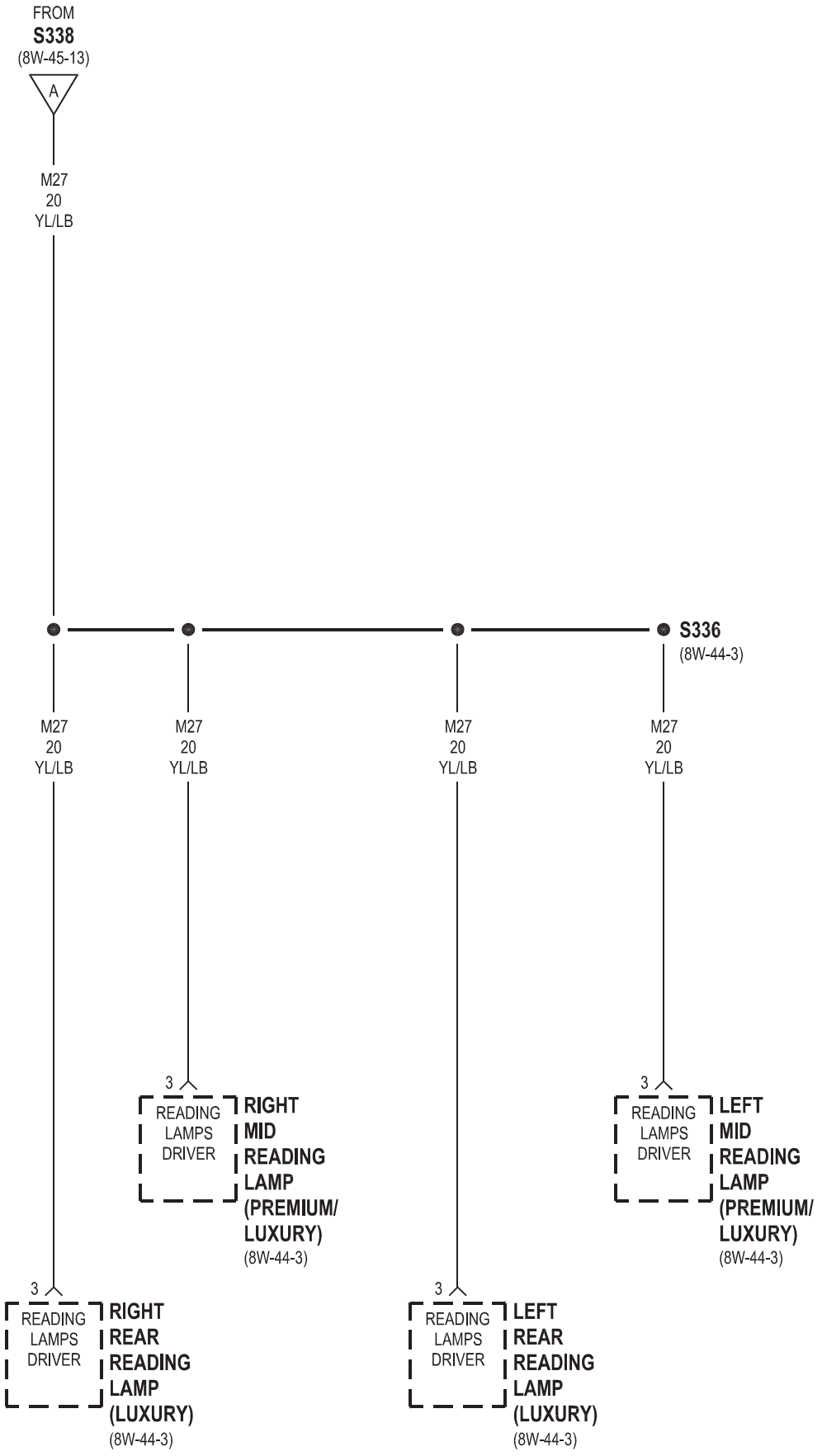
FROM
S338
(8W-45-13)
A
M27
20
YL/LB
S336
(8W-44-3)
M27
20
YL/LB
M27
20
YL/LB
M27
20
YL/LB
M27
20
YL/LB
3
READING
LAMPS
DRIVER
RIGHT
MID
READING
LAMP
(PREMIUM/
LUXURY)
(8W-44-3)
3
READING
LAMPS
DRIVER
LEFT
MID
READING
LAMP
(PREMIUM/
LUXURY)
(8W-44-3)
3
READING
LAMPS
DRIVER
RIGHT
REAR
READING
LAMP
(LUXURY)
(8W-44-3)
3
READING
LAMPS
DRIVER
LEFT
REAR
READING
LAMP
(LUXURY)
(8W-44-3)

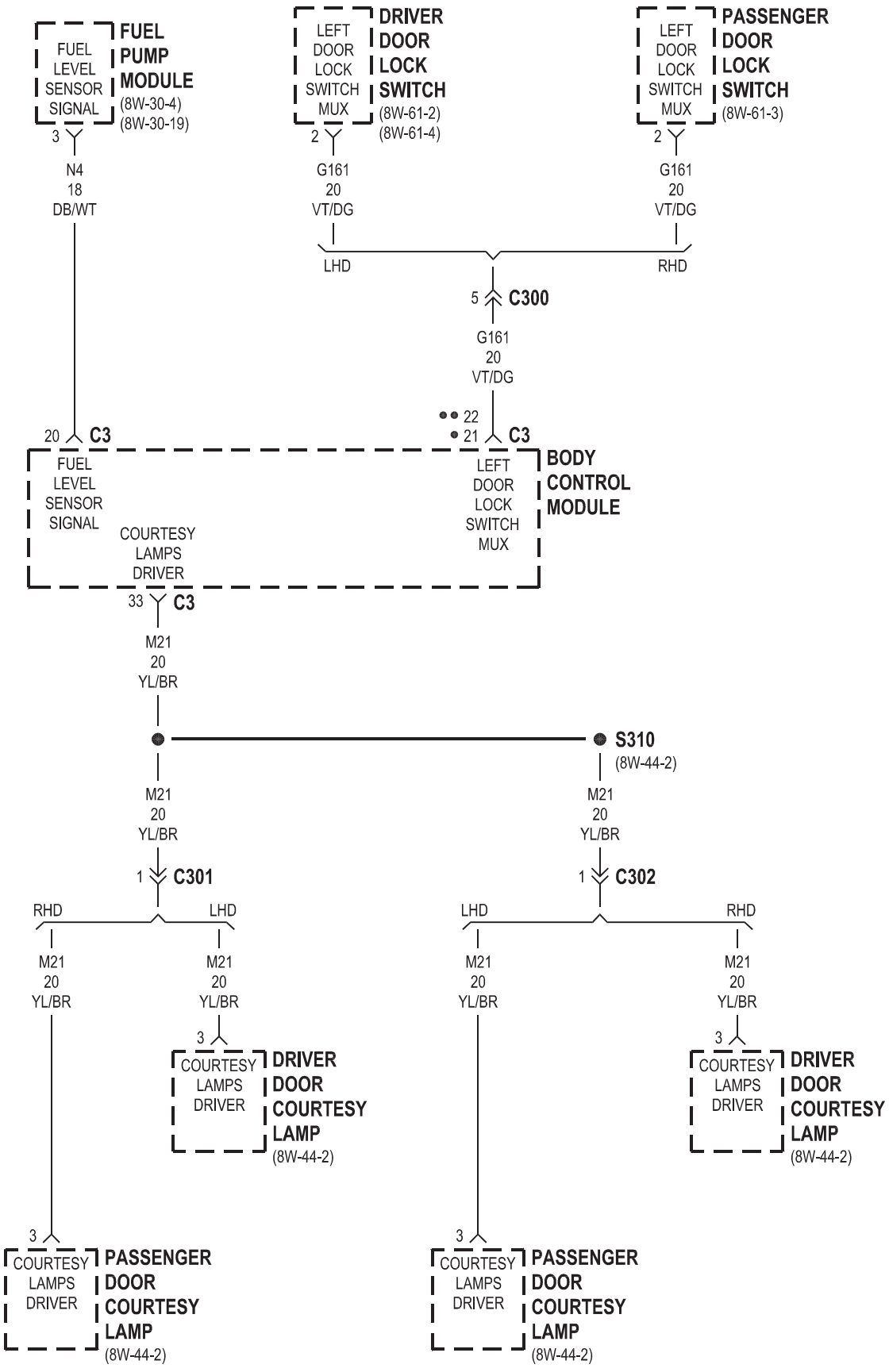
FUEL LEVEL SENSOR SIGNAL
FUEL PUMP MODULE
(8W-30-4)
(8W-30-19)
3
N4
18
DB/WT
LEFT DOOR LOCK SWITCH MUX
DRIVER DOOR LOCK SWITCH
(8W-61-2)
(8W-61-4)
2
G161
20
VT/DG
LHD
LEFT DOOR LOCK SWITCH MUX
PASSENGER DOOR LOCK SWITCH
(8W-61-3)
2
G161
20
VT/DG
RHD
5 C300
G161
20
VT/DG
22
21 C3
20 C3
FUEL LEVEL SENSOR SIGNAL
COURTESY LAMPS DRIVER
LEFT DOOR LOCK SWITCH MUX
BODY CONTROL MODULE
33 C3
M21
20
YL/BR
S310
(8W-44-2)
M21
20
YL/BR
1 C301
M21
20
YL/BR
1 C302
RHD
LHD
LHD
RHD
M21
20
YL/BR
M21
20
YL/BR
M21
20
YL/BR
M21
20
YL/BR
3
COURTESY LAMPS DRIVER
DRIVER DOOR COURTESY LAMP
(8W-44-2)
3
COURTESY LAMPS DRIVER
DRIVER DOOR COURTESY LAMP
(8W-44-2)
3
COURTESY LAMPS DRIVER
PASSENGER DOOR COURTESY LAMP
(8W-44-2)
3
COURTESY LAMPS DRIVER
PASSENGER DOOR COURTESY LAMP
(8W-44-2)
LHD
RHD

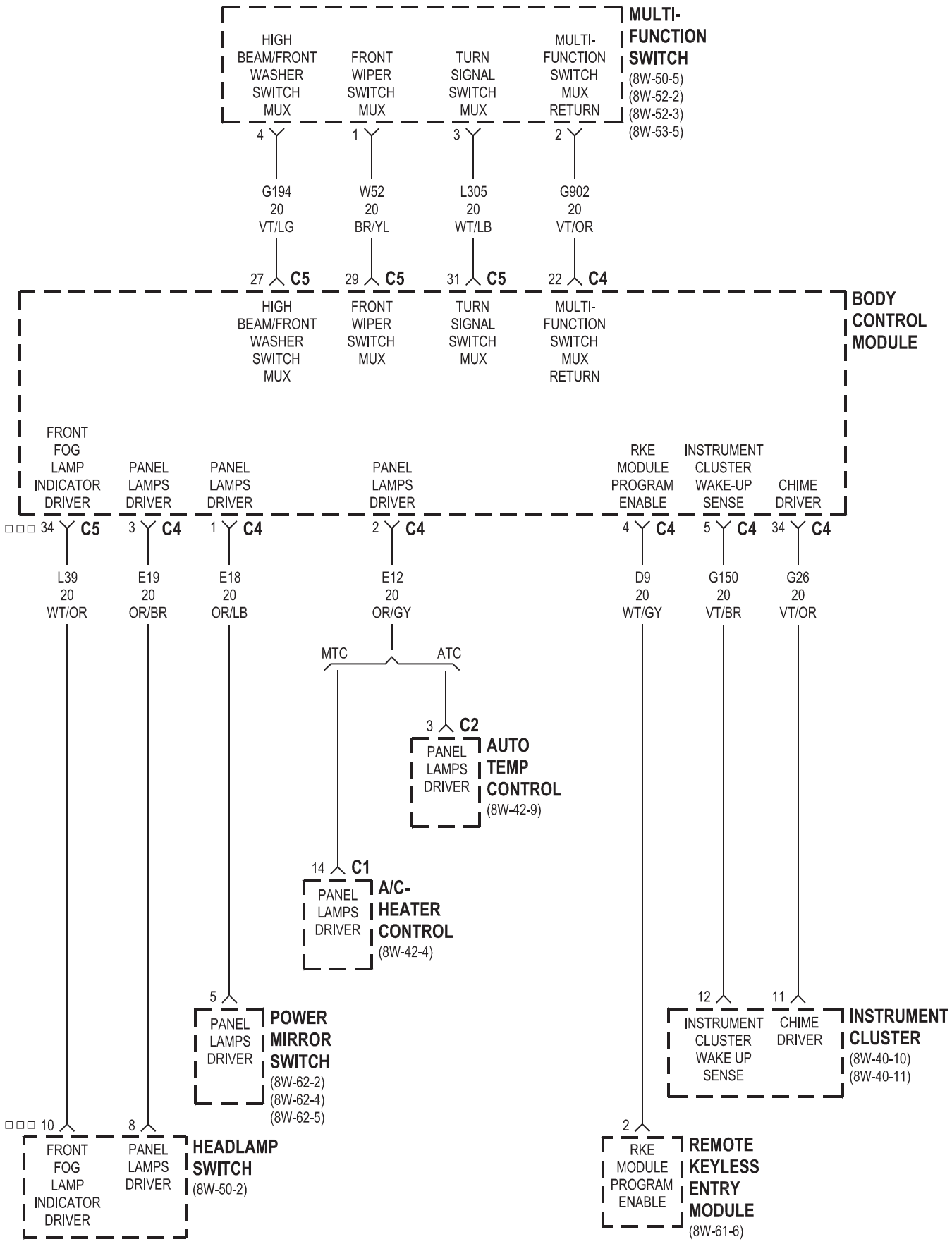
MULTI-FUNCTION SWITCH
(8W-50-5)
(8W-52-2)
(8W-52-3)
(8W-53-5)
HIGH BEAM/FRONT WASHER SWITCH MUX
FRONT WIPER SWITCH MUX
TURN SIGNAL SWITCH MUX
MULTI-FUNCTION SWITCH MUX RETURN
4
1
3
2
G194 20 VT/LG
W52 20 BR/YL
L305 20 WT/LB
G902 20 VT/OR
27 C5
29 C5
31 C5
22 C4
BODY CONTROL MODULE
FRONT FOG LAMP INDICATOR DRIVER
PANEL LAMPS DRIVER
PANEL LAMPS DRIVER
PANEL LAMPS DRIVER
RKE MODULE PROGRAM ENABLE
INSTRUMENT CLUSTER WAKE-UP SENSE
CHIME DRIVER
34 C5
3 C4
1 C4
2 C4
4 C4
5 C4
34 C4
L39 20 WT/OR
E19 20 OR/BR
E18 20 OR/LB
E12 20 OR/GY
D9 20 WT/GY
G150 20 VT/BR
G26 20 VT/OR
MTC
ATC
3 C2
PANEL LAMPS DRIVER
AUTO TEMP CONTROL
(8W-42-9)
14 C1
PANEL LAMPS DRIVER
A/C-HEATER CONTROL
(8W-42-4)
5
PANEL LAMPS DRIVER
POWER MIRROR SWITCH
(8W-62-2)
(8W-62-4)
(8W-62-5)
12
11
INSTRUMENT CLUSTER WAKE UP SENSE
CHIME DRIVER
INSTRUMENT CLUSTER
(8W-40-10)
(8W-40-11)
10
8
FRONT FOG LAMP INDICATOR DRIVER
PANEL LAMPS DRIVER
HEADLAMP SWITCH
(8W-50-2)
2
RKE MODULE PROGRAM ENABLE
REMOTE KEYLESS ENTRY MODULE
(8W-61-6)

□□□ HIGHLINE

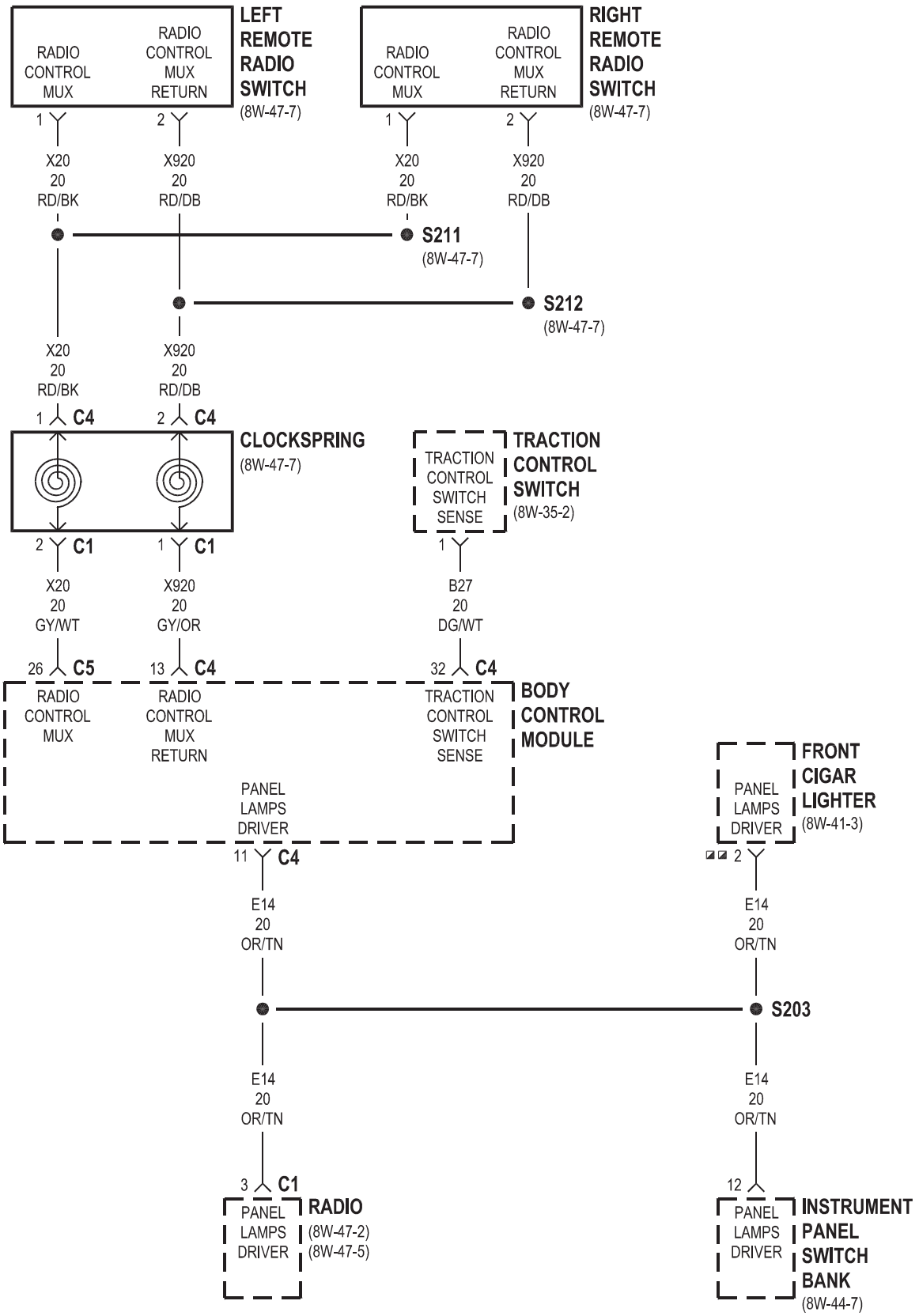

◪◪ BUILT-UP-EXPORT

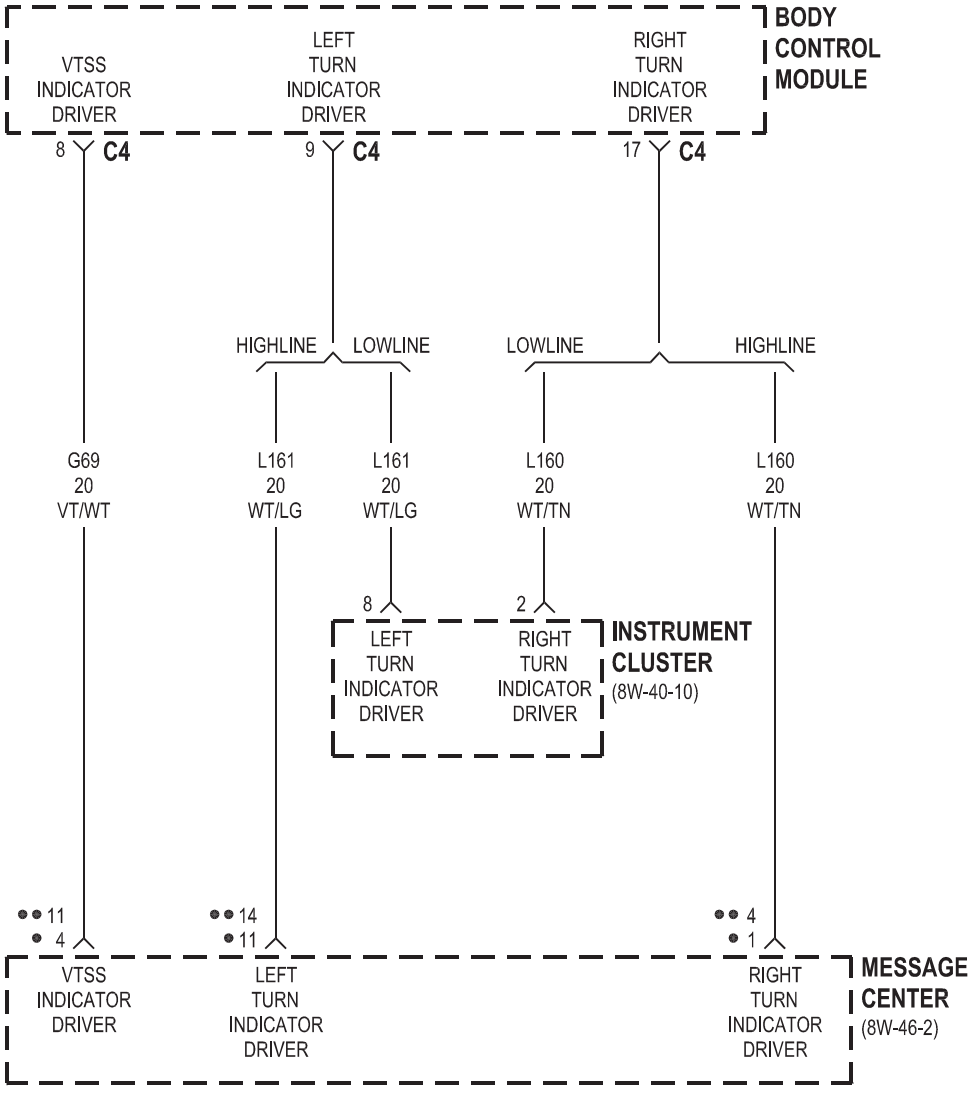
BODY CONTROL MODULE
VTSS INDICATOR DRIVER
LEFT TURN INDICATOR DRIVER
RIGHT TURN INDICATOR DRIVER
8 C4
9 C4
17 C4
HIGHLINE
LOWLINE
LOWLINE
HIGHLINE
G69 20 VT/WT
L161 20 WT/LG
L161 20 WT/LG
L160 20 WT/TN
L160 20 WT/TN
8
2
LEFT TURN INDICATOR DRIVER
RIGHT TURN INDICATOR DRIVER
INSTRUMENT CLUSTER
(8W-40-10)
●● 11
● 4
●● 14
● 11
●● 4
● 1
VTSS INDICATOR DRIVER
LEFT TURN INDICATOR DRIVER
RIGHT TURN INDICATOR DRIVER
MESSAGE CENTER
(8W-46-2)

● LHD
●● RHD

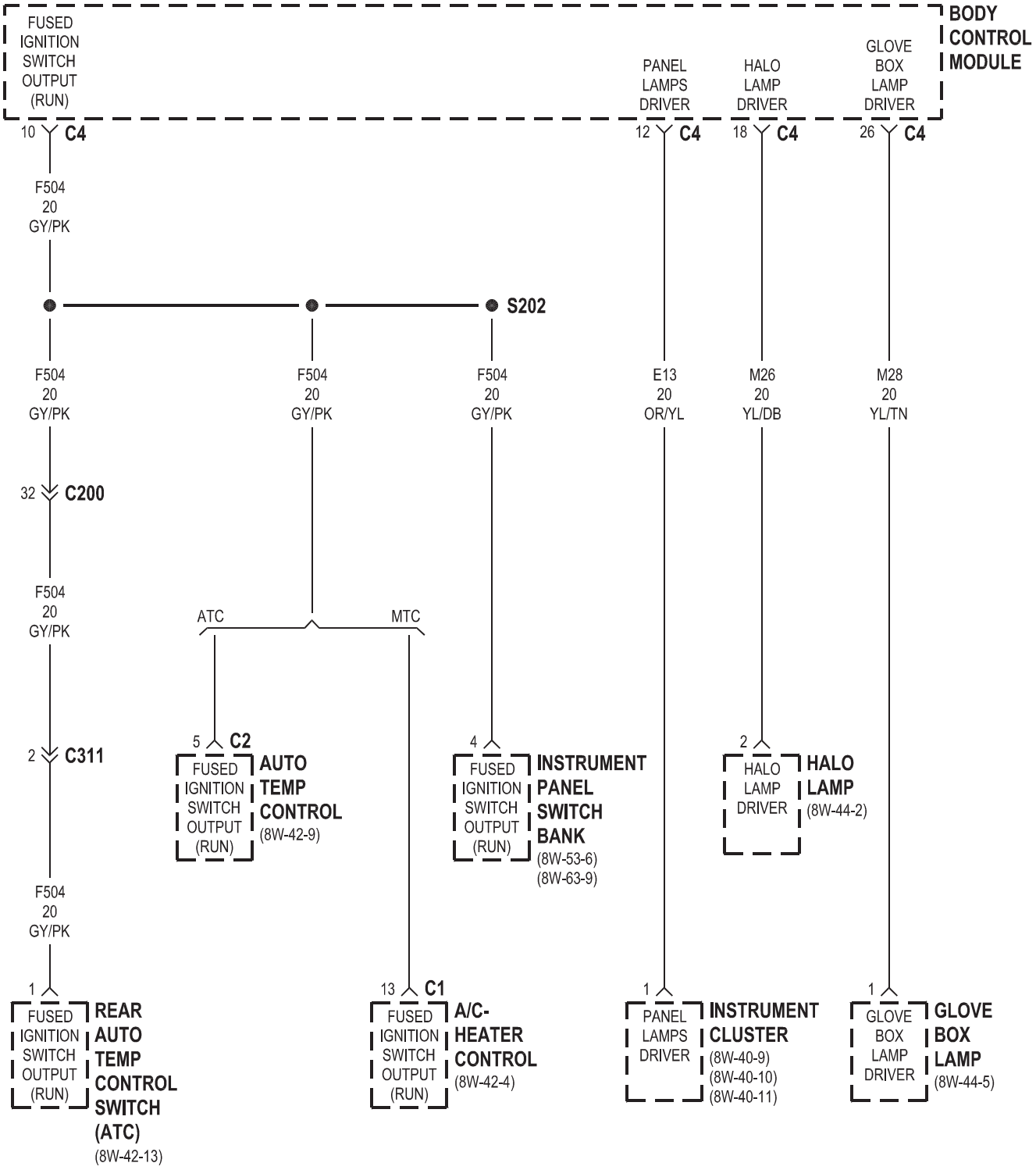
BODY CONTROL MODULE
FUSED IGNITION SWITCH OUTPUT (RUN)
PANEL LAMPS DRIVER
HALO LAMP DRIVER
GLOVE BOX LAMP DRIVER
10 C4
12 C4
18 C4
26 C4
F504 20 GY/PK
S202
F504 20 GY/PK
F504 20 GY/PK
F504 20 GY/PK
E13 20 OR/YL
M26 20 YL/DB
M28 20 YL/TN
32 C200
F504 20 GY/PK
ATC
MTC
2 C311
5 C2
4
2
F504 20 GY/PK
AUTO TEMP CONTROL (8W-42-9)
INSTRUMENT PANEL SWITCH BANK (8W-53-6) (8W-63-9)
HALO LAMP (8W-44-2)
1
13 C1
1
1
REAR AUTO TEMP CONTROL SWITCH (ATC) (8W-42-13)
A/C-HEATER CONTROL (8W-42-4)
INSTRUMENT CLUSTER (8W-40-9) (8W-40-10) (8W-40-11)
GLOVE BOX LAMP (8W-44-5)

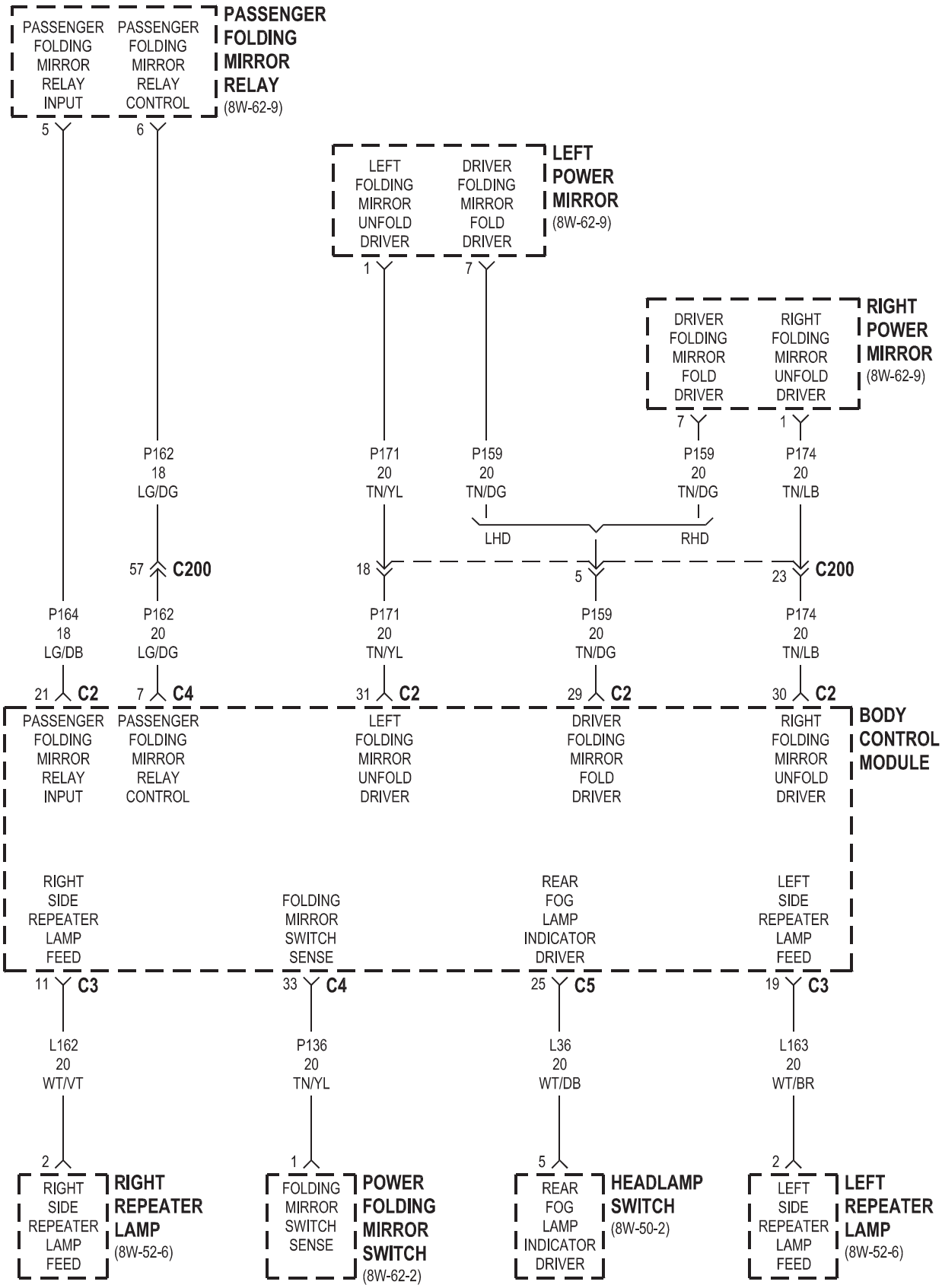
PASSENGER FOLDING MIRROR RELAY INPUT
PASSENGER FOLDING MIRROR RELAY CONTROL
PASSENGER FOLDING MIRROR RELAY
(8W-62-9)
5
6
LEFT FOLDING MIRROR UNFOLD DRIVER
DRIVER FOLDING MIRROR FOLD DRIVER
LEFT POWER MIRROR
(8W-62-9)
1
7
DRIVER FOLDING MIRROR FOLD DRIVER
RIGHT FOLDING MIRROR UNFOLD DRIVER
RIGHT POWER MIRROR
(8W-62-9)
7
1
P162 18 LG/DG
P171 20 TN/YL
P159 20 TN/DG
P159 20 TN/DG
P174 20 TN/LB
LHD
RHD
57 C200
18
5
23 C200
P164 18 LG/DB
P162 20 LG/DG
P171 20 TN/YL
P159 20 TN/DG
P174 20 TN/LB
21 C2
7 C4
31 C2
29 C2
30 C2
PASSENGER FOLDING MIRROR RELAY INPUT
PASSENGER FOLDING MIRROR RELAY CONTROL
LEFT FOLDING MIRROR UNFOLD DRIVER
DRIVER FOLDING MIRROR FOLD DRIVER
RIGHT FOLDING MIRROR UNFOLD DRIVER
BODY CONTROL MODULE
RIGHT SIDE REPEATER LAMP FEED
FOLDING MIRROR SWITCH SENSE
REAR FOG LAMP INDICATOR DRIVER
LEFT SIDE REPEATER LAMP FEED
11 C3
33 C4
25 C5
19 C3
L162 20 WT/VT
P136 20 TN/YL
L36 20 WT/DB
L163 20 WT/BR
2
1
5
2
RIGHT SIDE REPEATER LAMP FEED
RIGHT REPEATER LAMP
(8W-52-6)
FOLDING MIRROR SWITCH SENSE
POWER FOLDING MIRROR SWITCH
(8W-62-2)
REAR FOG LAMP INDICATOR DRIVER
HEADLAMP SWITCH
(8W-50-2)
LEFT SIDE REPEATER LAMP FEED
LEFT REPEATER LAMP
(8W-52-6)

8W-46 MESSAGE CENTER

Component	Page
Body Control Module	8W-46-2
Fuse 24	8W-46-2
Instrument Cluster	8W-46-2
Integrated Power Module	8W-46-2
Message Center	8W-46-2

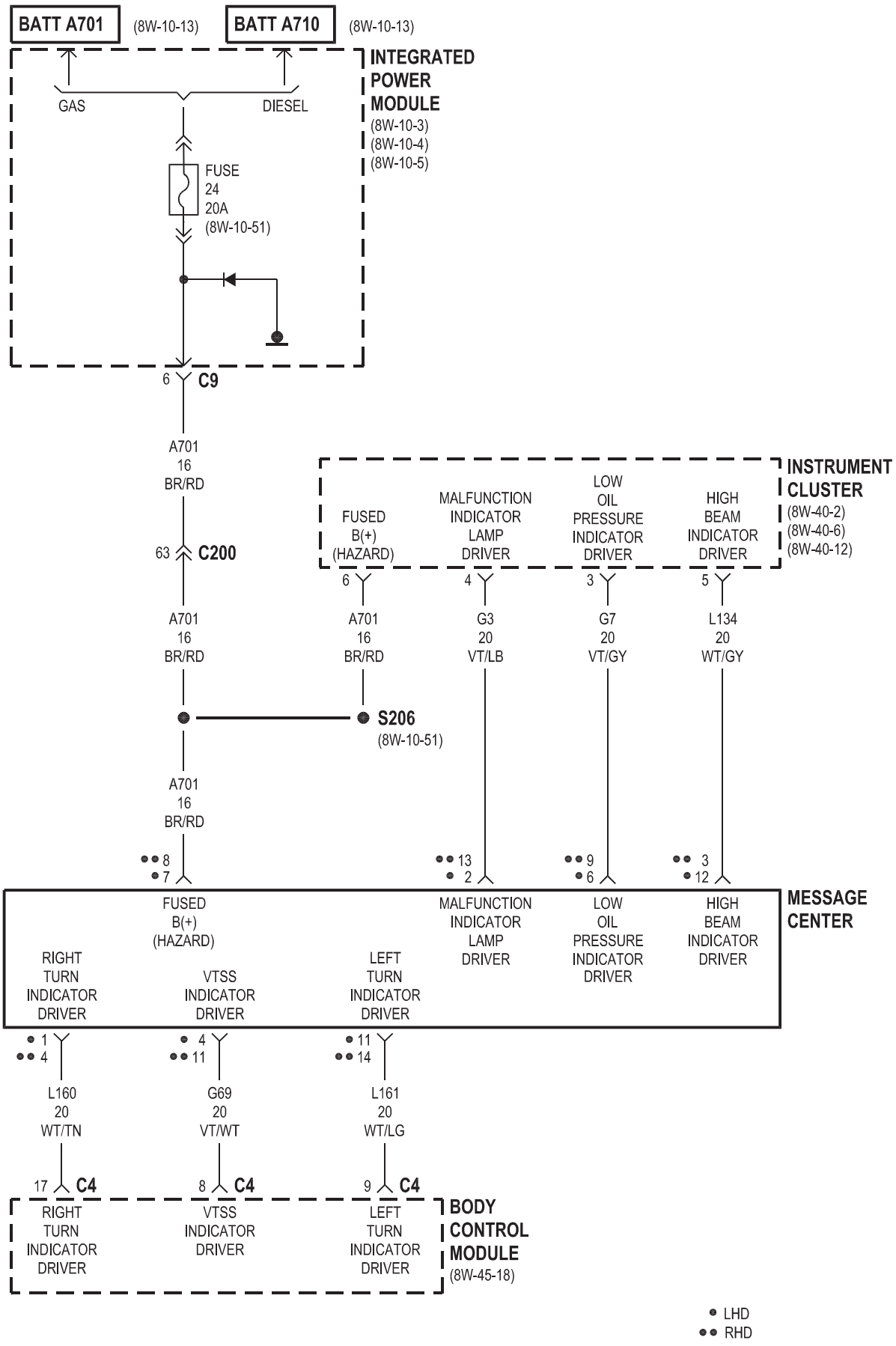
BATT A701
(8W-10-13)
BATT A710
(8W-10-13)
INTEGRATED POWER MODULE
(8W-10-3)
(8W-10-4)
(8W-10-5)
GAS
DIESEL
FUSE 24 20A
(8W-10-51)
6 C9
A701 16 BR/RD
63 C200
INSTRUMENT CLUSTER
(8W-40-2)
(8W-40-6)
(8W-40-12)
FUSED B(+) (HAZARD)
MALFUNCTION INDICATOR LAMP DRIVER
LOW OIL PRESSURE INDICATOR DRIVER
HIGH BEAM INDICATOR DRIVER
6
4
3
5
A701 16 BR/RD
A701 16 BR/RD
G3 20 VT/LB
G7 20 VT/GY
L134 20 WT/GY
S206
(8W-10-51)
A701 16 BR/RD
8
7
13
2
9
6
3
12
MESSAGE CENTER
FUSED B(+) (HAZARD)
MALFUNCTION INDICATOR LAMP DRIVER
LOW OIL PRESSURE INDICATOR DRIVER
HIGH BEAM INDICATOR DRIVER
RIGHT TURN INDICATOR DRIVER
VTSS INDICATOR DRIVER
LEFT TURN INDICATOR DRIVER
1
4
4
11
11
14
L160 20 WT/TN
G69 20 VT/WT
L161 20 WT/LG
17 C4
8 C4
9 C4
RIGHT TURN INDICATOR DRIVER
VTSS INDICATOR DRIVER
LEFT TURN INDICATOR DRIVER
BODY CONTROL MODULE
(8W-45-18)
LHD
RHD

8W-47 AUDIO SYSTEM

Component	Page
Accessory Relay	8W-47-2, 5
Antenna	8W-47-5
Body Control Module	8W-47-2, 5, 7
CD Changer	8W-47-11
Clockspring	8W-47-7
Diagnostic Junction Port	8W-47-2, 5
Front Cigar Lighter	8W-47-2, 5
Front Control Module	8W-47-2, 5, 6
Fuse 5	8W-47-2, 5
Fuse 14	8W-47-2, 6
G202	8W-47-2, 5, 9, 10
Integrated Power Module	8W-47-2, 5, 6
Left Door Speaker	8W-47-3, 8, 9
Left Instrument Panel Speaker	8W-47-3, 8
Left Rear Pillar Speaker	8W-47-10
Left Rear Speaker	8W-47-4, 6, 10
Left Remote Radio Switch	8W-47-7
Name Brand Speaker Relay	8W-47-6
Radio	8W-47-2, 3, 4, 5, 6, 9, 10, 11
Radio Choke	8W-47-6
Right Door Speaker	8W-47-3, 8, 9
Right Instrument Panel Speaker	8W-47-3, 8
Right Rear Pillar Speaker	8W-47-10
Right Rear Speaker	8W-47-4, 6, 10
Right Remote Radio Switch	8W-47-7

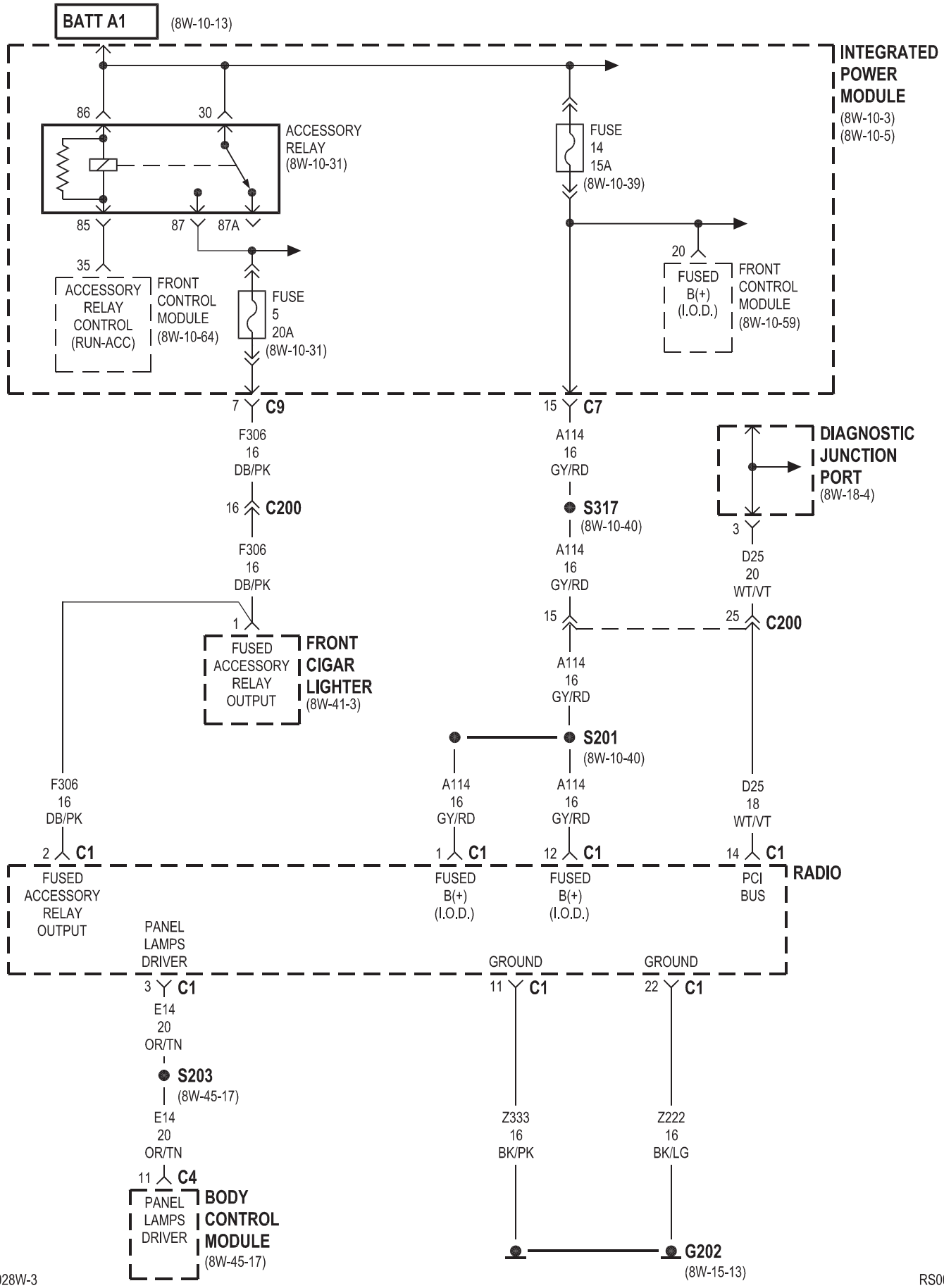
BATT A1
(8W-10-13)
INTEGRATED POWER MODULE
(8W-10-3)
(8W-10-5)
86
30
ACCESSORY RELAY
(8W-10-31)
85
87
87A
35
ACCESSORY RELAY CONTROL (RUN-ACC)
FRONT CONTROL MODULE
(8W-10-64)
FUSE
5
20A
(8W-10-31)
FUSE
14
15A
(8W-10-39)
20
FUSED B(+) (I.O.D.)
FRONT CONTROL MODULE
(8W-10-59)
7 C9
F306
16
DB/PK
16 C200
F306
16
DB/PK
1
FUSED ACCESSORY RELAY OUTPUT
FRONT CIGAR LIGHTER
(8W-41-3)
15 C7
A114
16
GY/RD
S317
(8W-10-40)
A114
16
GY/RD
15
A114
16
GY/RD
S201
(8W-10-40)
DIAGNOSTIC JUNCTION PORT
(8W-18-4)
3
D25
20
WT/VT
25 C200
D25
18
WT/VT
F306
16
DB/PK
2 C1
FUSED ACCESSORY RELAY OUTPUT
A114
16
GY/RD
1 C1
FUSED B(+) (I.O.D.)
A114
16
GY/RD
12 C1
FUSED B(+) (I.O.D.)
14 C1
PCI BUS
RADIO
PANEL LAMPS DRIVER
3 C1
E14
20
OR/TN
S203
(8W-45-17)
E14
20
OR/TN
11 C4
PANEL LAMPS DRIVER
BODY CONTROL MODULE
(8W-45-17)
GROUND
11 C1
GROUND
22 C1
Z333
16
BK/PK
Z222
16
BK/LG
G202
(8W-15-13)

RS004702

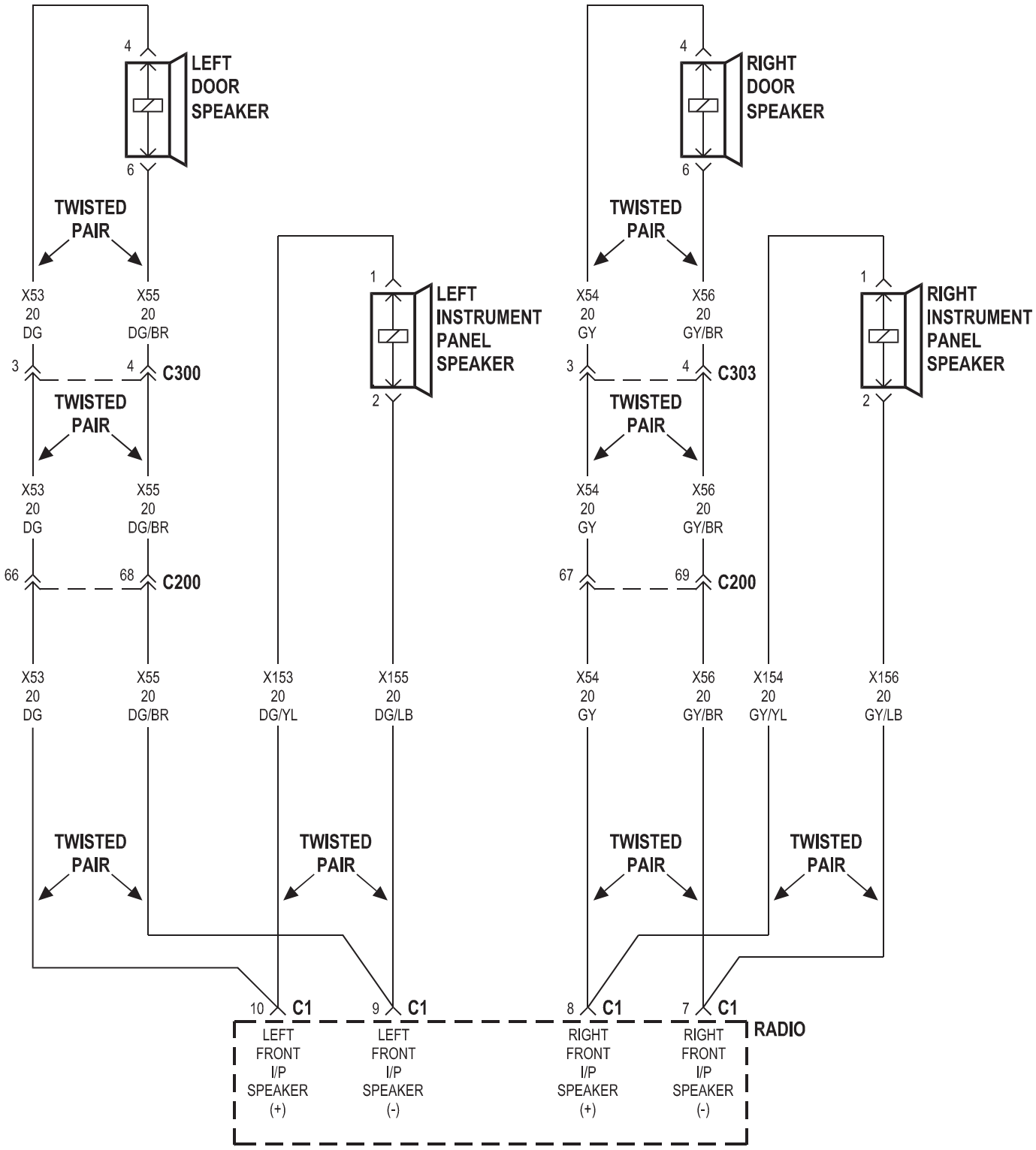
LEFT DOOR SPEAKER
RIGHT DOOR SPEAKER
LEFT INSTRUMENT PANEL SPEAKER
RIGHT INSTRUMENT PANEL SPEAKER
TWISTED PAIR
X53 20 DG
X55 20 DG/BR
X54 20 GY
X56 20 GY/BR
C300
C303
C200
X153 20 DG/YL
X155 20 DG/LB
X154 20 GY/YL
X156 20 GY/LB
C1
LEFT FRONT I/P SPEAKER (+)
LEFT FRONT I/P SPEAKER (-)
RIGHT FRONT I/P SPEAKER (+)
RIGHT FRONT I/P SPEAKER (-)
RADIO

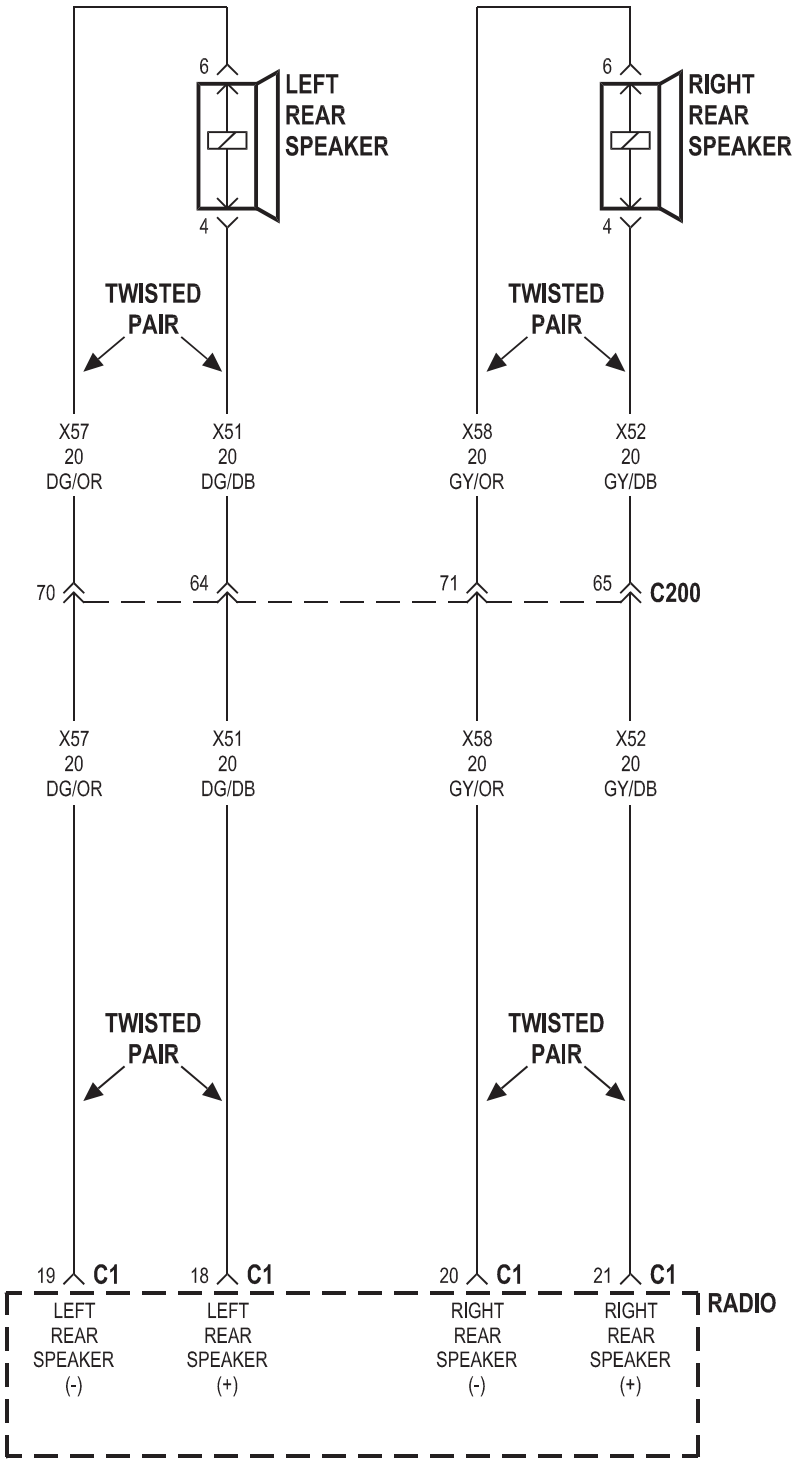
6
LEFT
REAR
SPEAKER
4
6
RIGHT
REAR
SPEAKER
4
TWISTED
PAIR
TWISTED
PAIR
X57
20
DG/OR
X51
20
DG/DB
X58
20
GY/OR
X52
20
GY/DB
70
64
71
65
C200
X57
20
DG/OR
X51
20
DG/DB
X58
20
GY/OR
X52
20
GY/DB
TWISTED
PAIR
TWISTED
PAIR
19 C1
18 C1
20 C1
21 C1
RADIO
LEFT
REAR
SPEAKER
(-)
LEFT
REAR
SPEAKER
(+)
RIGHT
REAR
SPEAKER
(-)
RIGHT
REAR
SPEAKER
(+)

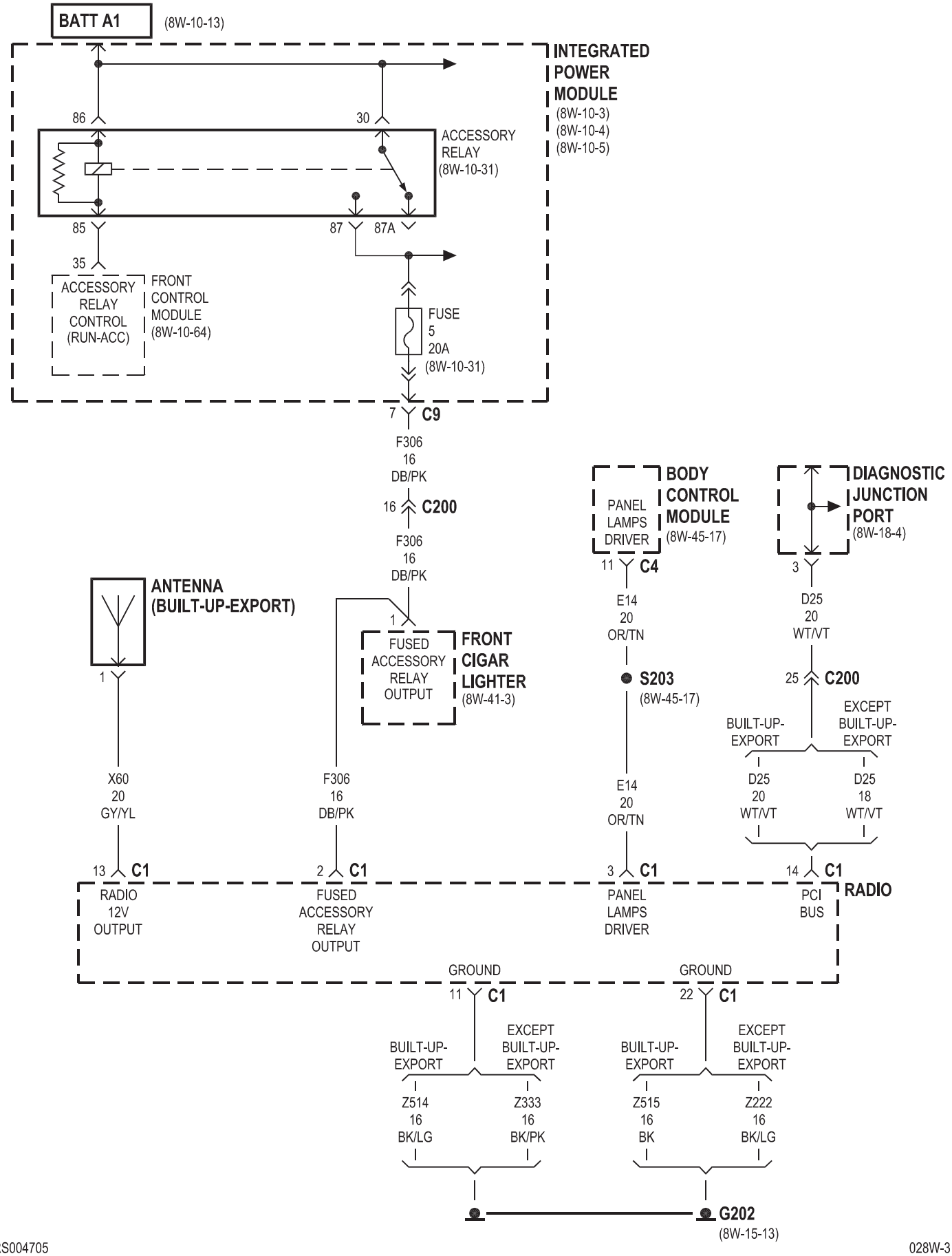
BATT A1
(8W-10-13)
INTEGRATED POWER MODULE
(8W-10-3)
(8W-10-4)
(8W-10-5)
86
30
ACCESSORY RELAY
(8W-10-31)
85
87
87A
35
ACCESSORY RELAY CONTROL (RUN-ACC)
FRONT CONTROL MODULE
(8W-10-64)
FUSE
5
20A
(8W-10-31)
7
C9
F306
16
DB/PK
16
C200
F306
16
DB/PK
1
FUSED ACCESSORY RELAY OUTPUT
FRONT CIGAR LIGHTER
(8W-41-3)
ANTENNA
(BUILT-UP-EXPORT)
1
X60
20
GY/YL
13
C1
RADIO 12V OUTPUT
F306
16
DB/PK
2
C1
FUSED ACCESSORY RELAY OUTPUT
BODY CONTROL MODULE
(8W-45-17)
PANEL LAMPS DRIVER
11
C4
E14
20
OR/TN
S203
(8W-45-17)
E14
20
OR/TN
3
C1
PANEL LAMPS DRIVER
DIAGNOSTIC JUNCTION PORT
(8W-18-4)
3
D25
20
WT/VT
25
C200
BUILT-UP-EXPORT
EXCEPT BUILT-UP-EXPORT
D25
20
WT/VT
D25
18
WT/VT
14
C1
PCI BUS
RADIO
GROUND
11
C1
BUILT-UP-EXPORT
EXCEPT BUILT-UP-EXPORT
Z514
16
BK/LG
Z333
16
BK/PK
GROUND
22
C1
BUILT-UP-EXPORT
EXCEPT BUILT-UP-EXPORT
Z515
16
BK
Z222
16
BK/LG
G202
(8W-15-13)

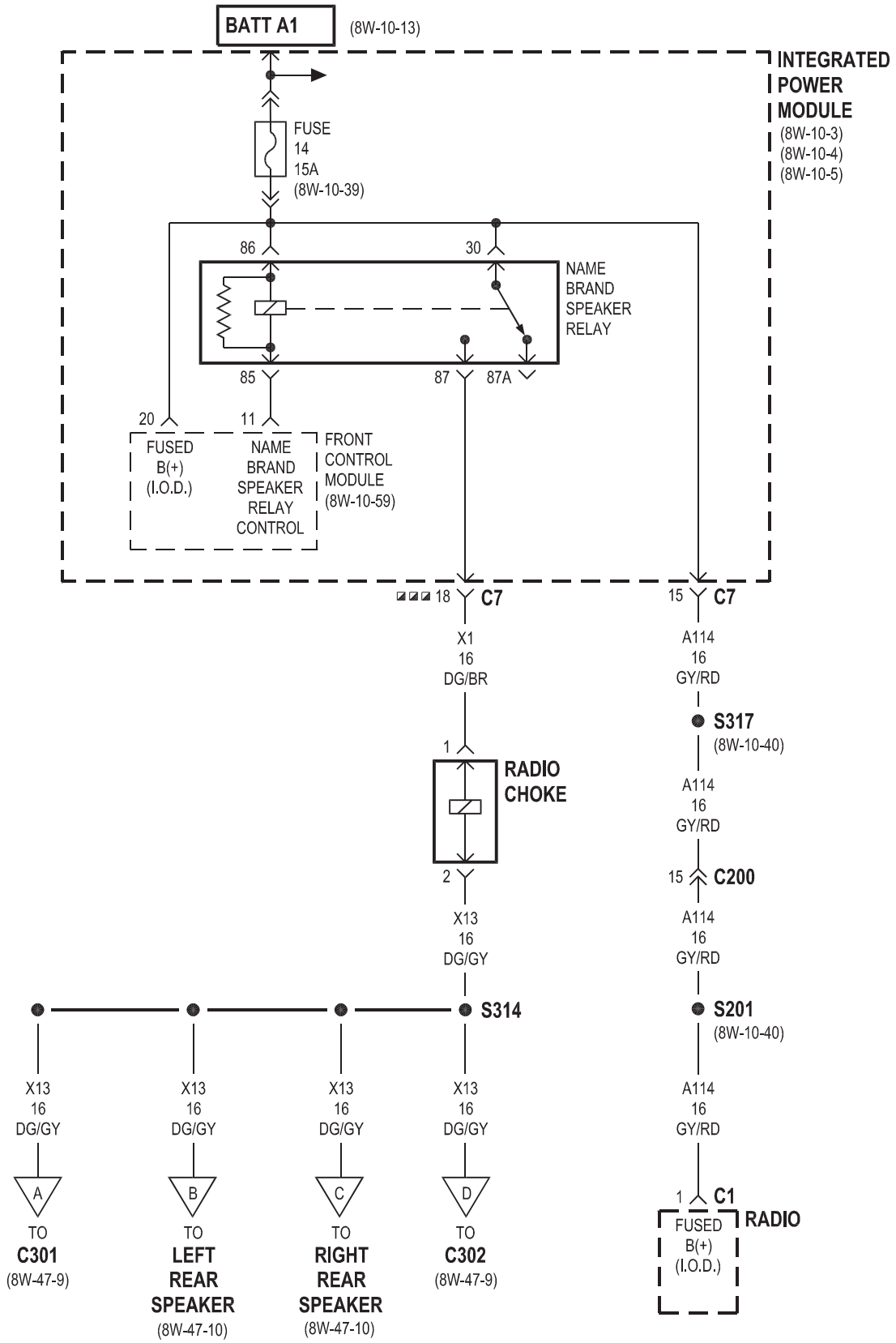

PREMIUM 8 SPEAKER

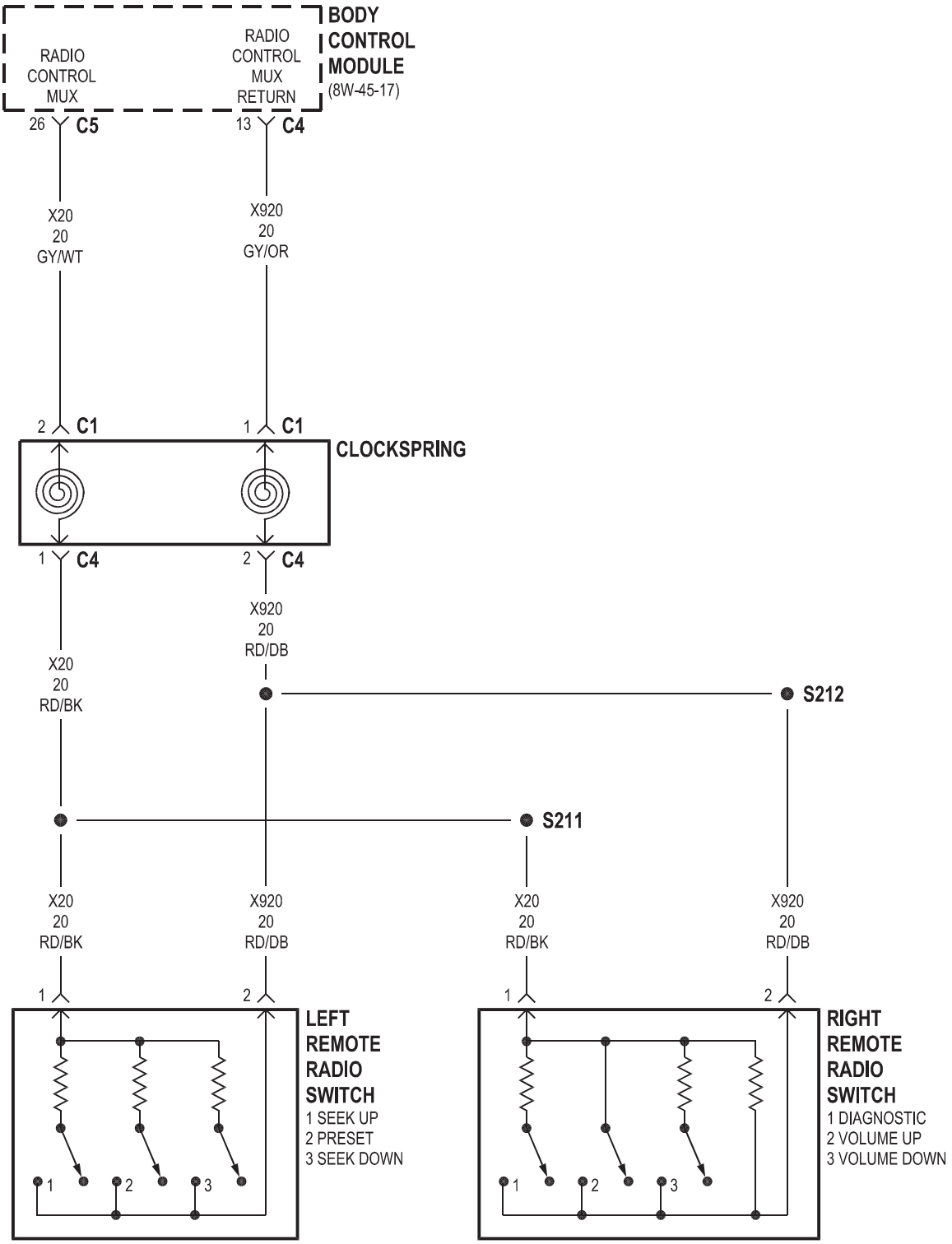
BODY CONTROL MODULE
(8W-45-17)
RADIO CONTROL MUX
RADIO CONTROL MUX RETURN
26 C5
13 C4
X20 20 GY/WT
X920 20 GY/OR
2 C1
1 C1
CLOCKSPRING
1 C4
2 C4
X920 20 RD/DB
X20 20 RD/BK
S212
S211
X20 20 RD/BK
X920 20 RD/DB
X20 20 RD/BK
X920 20 RD/DB
1
2
1
2
LEFT REMOTE RADIO SWITCH
1 SEEK UP
2 PRESET
3 SEEK DOWN
RIGHT REMOTE RADIO SWITCH
1 DIAGNOSTIC
2 VOLUME UP
3 VOLUME DOWN

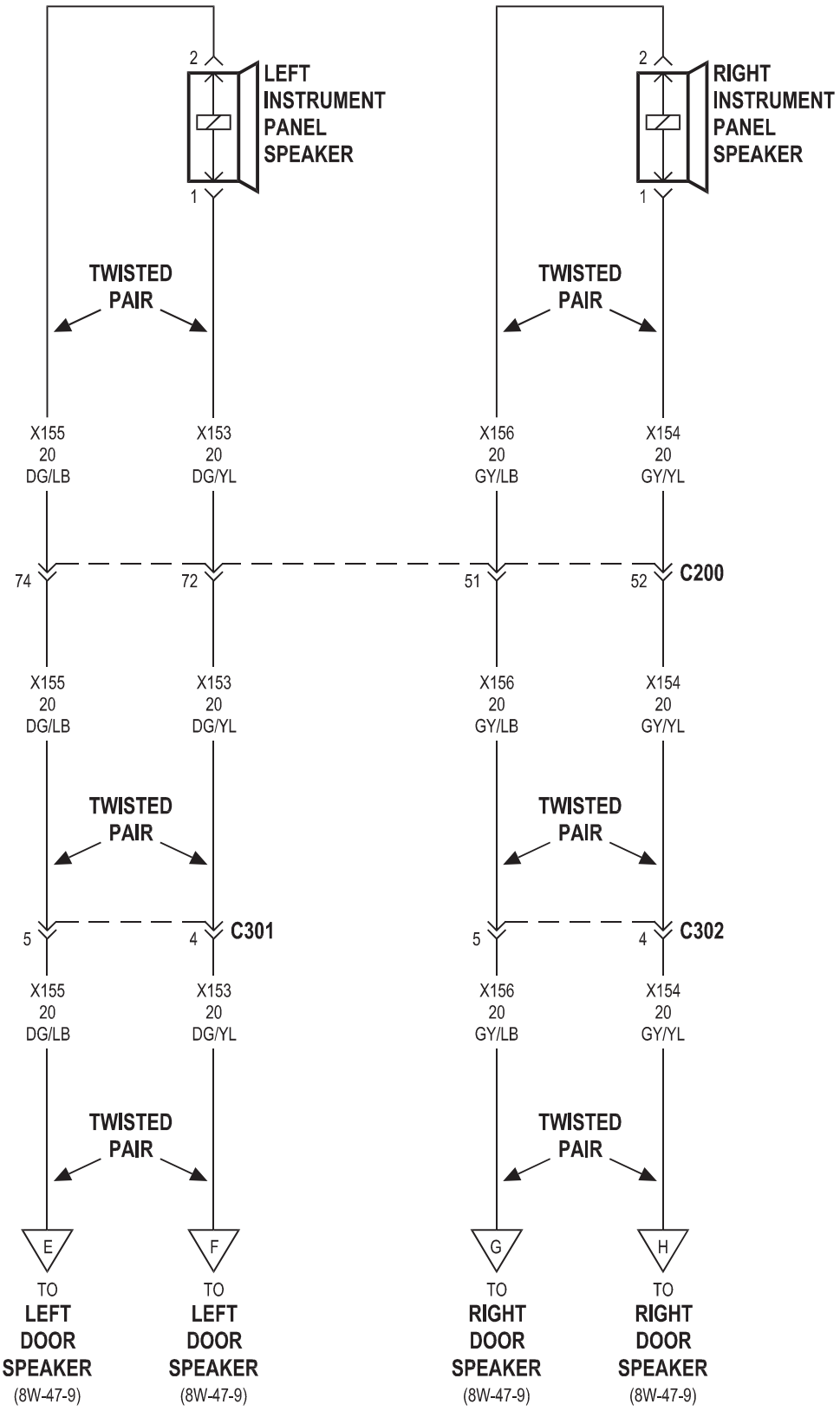
2
LEFT INSTRUMENT PANEL SPEAKER
1
2
RIGHT INSTRUMENT PANEL SPEAKER
1
TWISTED PAIR
TWISTED PAIR
X155 20 DG/LB
X153 20 DG/YL
X156 20 GY/LB
X154 20 GY/YL
74
72
51
52
C200
X155 20 DG/LB
X153 20 DG/YL
X156 20 GY/LB
X154 20 GY/YL
TWISTED PAIR
TWISTED PAIR
5
4
C301
5
4
C302
X155 20 DG/LB
X153 20 DG/YL
X156 20 GY/LB
X154 20 GY/YL
TWISTED PAIR
TWISTED PAIR
E
F
G
H
TO LEFT DOOR SPEAKER (8W-47-9)
TO LEFT DOOR SPEAKER (8W-47-9)
TO RIGHT DOOR SPEAKER (8W-47-9)
TO RIGHT DOOR SPEAKER (8W-47-9)

HIGHLINE

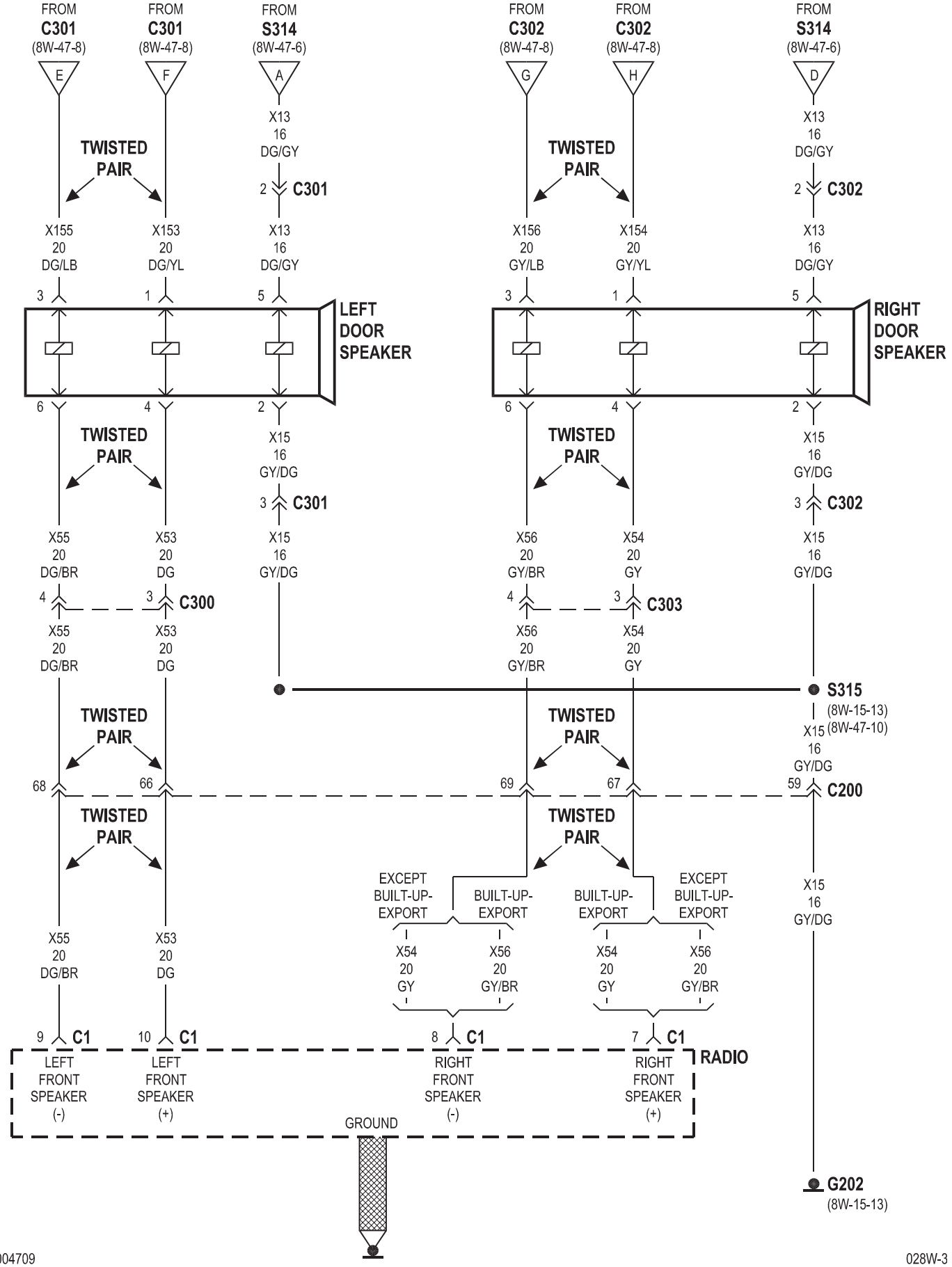
FROM C301 (8W-47-8)
FROM C301 (8W-47-8)
FROM S314 (8W-47-6)
FROM C302 (8W-47-8)
FROM C302 (8W-47-8)
FROM S314 (8W-47-6)
TWISTED PAIR
X155 20 DG/LB
X153 20 DG/YL
X13 16 DG/GY
X156 20 GY/LB
X154 20 GY/YL
LEFT DOOR SPEAKER
RIGHT DOOR SPEAKER
X15 16 GY/DG
X55 20 DG/BR
X53 20 DG
X56 20 GY/BR
X54 20 GY
C300
C303
C301
C302
S315
(8W-15-13)
(8W-47-10)
C200
EXCEPT BUILT-UP-EXPORT
BUILT-UP-EXPORT
C1
LEFT FRONT SPEAKER (-)
LEFT FRONT SPEAKER (+)
RIGHT FRONT SPEAKER (-)
RIGHT FRONT SPEAKER (+)
RADIO
GROUND
G202
(8W-15-13)

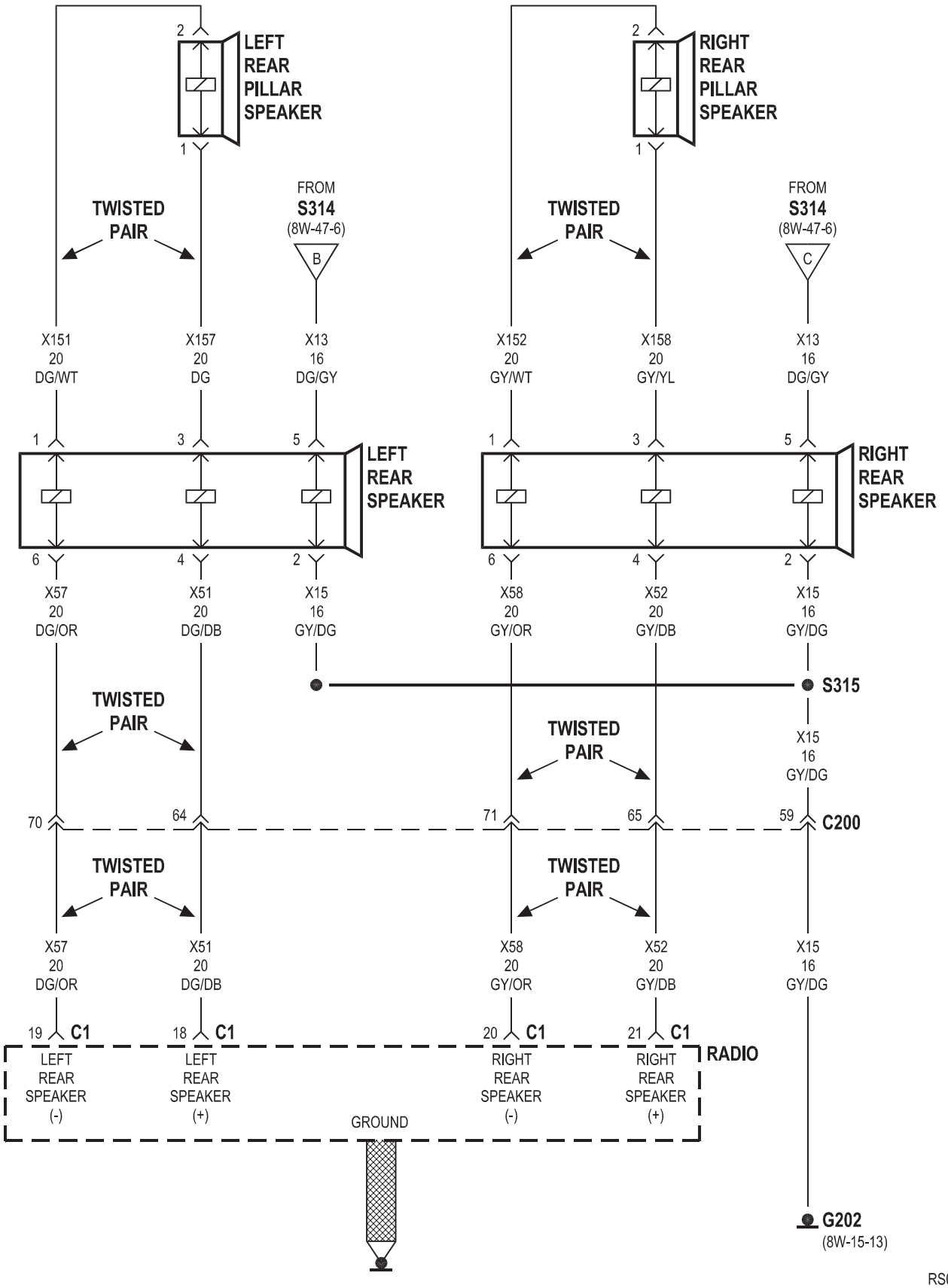
LEFT REAR PILLAR SPEAKER
RIGHT REAR PILLAR SPEAKER
TWISTED PAIR
FROM S314 (8W-47-6)
B
C
X151 20 DG/WT
X157 20 DG
X13 16 DG/GY
X152 20 GY/WT
X158 20 GY/YL
LEFT REAR SPEAKER
RIGHT REAR SPEAKER
X57 20 DG/OR
X51 20 DG/DB
X15 16 GY/DG
X58 20 GY/OR
X52 20 GY/DB
S315
70
64
71
65
59
C200
19 C1
18 C1
20 C1
21 C1
RADIO
LEFT REAR SPEAKER (-)
LEFT REAR SPEAKER (+)
RIGHT REAR SPEAKER (-)
RIGHT REAR SPEAKER (+)
GROUND
G202
(8W-15-13)

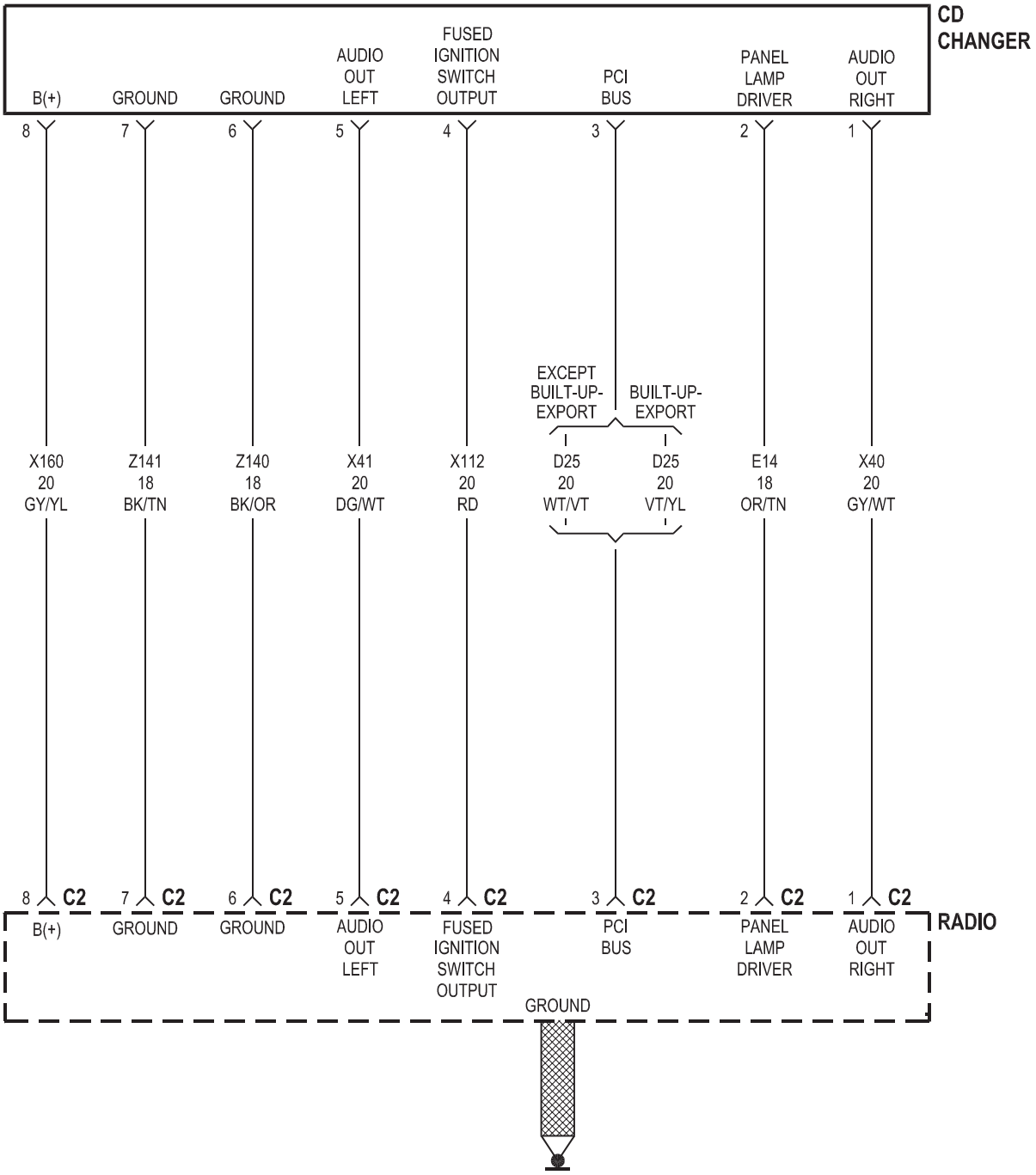
CD CHANGER
B(+)
GROUND
GROUND
AUDIO OUT LEFT
FUSED IGNITION SWITCH OUTPUT
PCI BUS
PANEL LAMP DRIVER
AUDIO OUT RIGHT
8
7
6
5
4
3
2
1
EXCEPT BUILT-UP-EXPORT
BUILT-UP-EXPORT
X160 20 GY/YL
Z141 18 BK/TN
Z140 18 BK/OR
X41 20 DG/WT
X112 20 RD
D25 20 WT/VT
D25 20 VT/YL
E14 18 OR/TN
X40 20 GY/WT
8 C2
7 C2
6 C2
5 C2
4 C2
3 C2
2 C2
1 C2
B(+)
GROUND
GROUND
AUDIO OUT LEFT
FUSED IGNITION SWITCH OUTPUT
PCI BUS
PANEL LAMP DRIVER
AUDIO OUT RIGHT
RADIO
GROUND

8W-48 REAR WINDOW DEFOGGER

Component	Page
A/C- Heater Control	8W-48-2
Accessory Relay	8W-48-2
Auto Temp Control	8W-48-2
Defogger Relay	8W-48-2
Electric Wiper De-Icer	8W-48-2
Front Control Module	8W-48-2
Fuse 11	8W-48-2
Fuse 13	8W-48-2
G200	8W-48-3
G400	8W-48-2
Integrated Power Module	8W-48-2
Left Power Mirror	8W-48-3
PTC 4	8W-48-2
Rear Window Defogger Grid	8W-48-2
Right Power Mirror	8W-48-3

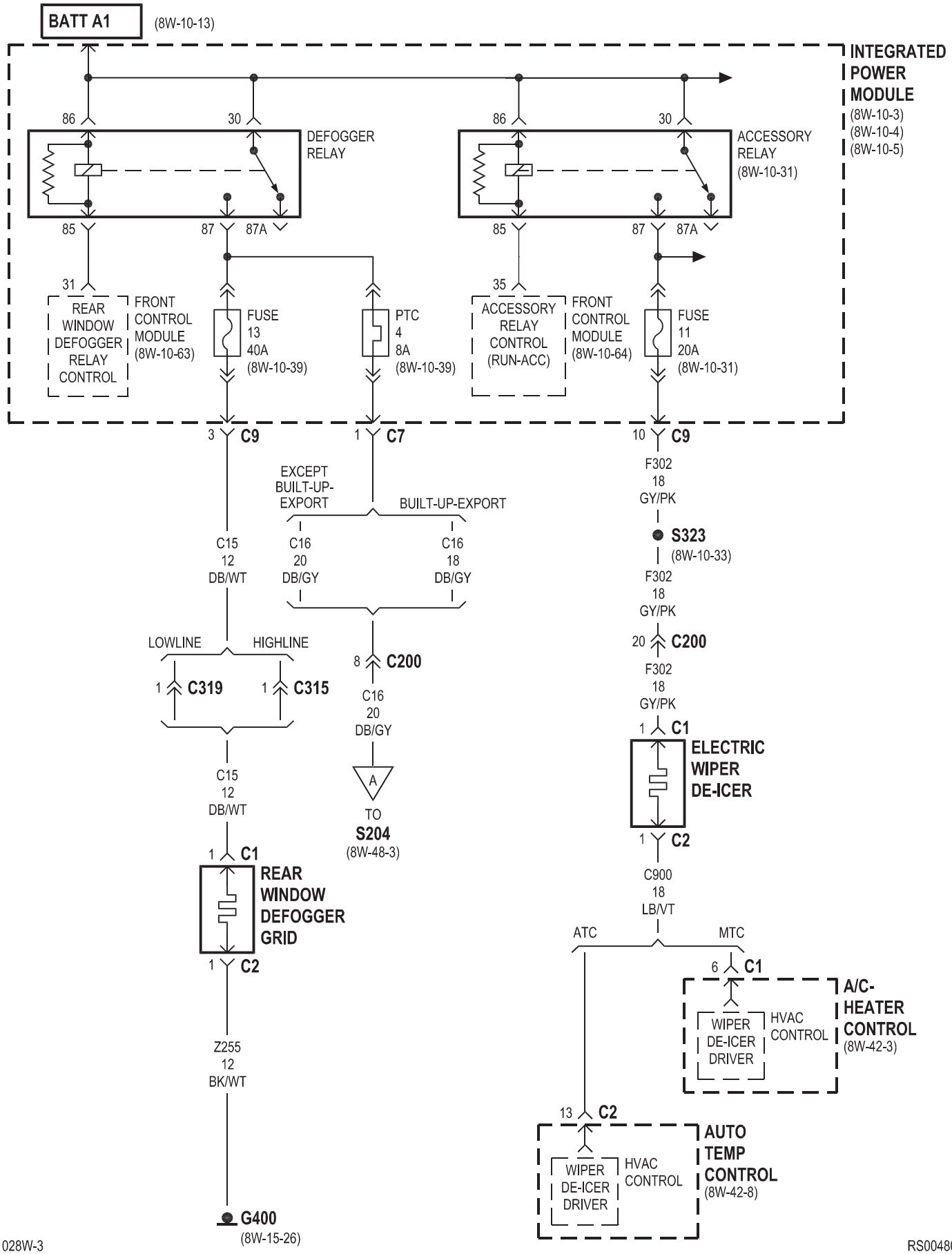
BATT A1
(8W-10-13)
INTEGRATED POWER MODULE
(8W-10-3)
(8W-10-4)
(8W-10-5)
86
30
DEFOGGER RELAY
85
87
87A
31
REAR WINDOW DEFOGGER RELAY CONTROL
FRONT CONTROL MODULE
(8W-10-63)
FUSE 13 40A
(8W-10-39)
PTC 4 8A
(8W-10-39)
3 C9
1 C7
EXCEPT BUILT-UP-EXPORT
BUILT-UP-EXPORT
C15 12 DB/WT
C16 20 DB/GY
C16 18 DB/GY
LOWLINE
HIGHLINE
1 C319
1 C315
8 C200
C16 20 DB/GY
A
TO S204
(8W-48-3)
C15 12 DB/WT
1 C1
REAR WINDOW DEFOGGER GRID
1 C2
Z255 12 BK/WT
G400
(8W-15-26)
ACCESSORY RELAY
(8W-10-31)
35
ACCESSORY RELAY CONTROL (RUN-ACC)
FRONT CONTROL MODULE
(8W-10-64)
FUSE 11 20A
(8W-10-31)
10 C9
F302 18 GY/PK
S323
(8W-10-33)
F302 18 GY/PK
20 C200
F302 18 GY/PK
1 C1
ELECTRIC WIPER DE-ICER
1 C2
C900 18 LB/VT
ATC
MTC
6 C1
WIPER DE-ICER DRIVER
HVAC CONTROL
A/C-HEATER CONTROL
(8W-42-3)
13 C2
WIPER DE-ICER DRIVER
HVAC CONTROL
AUTO TEMP CONTROL
(8W-42-8)

RS004802

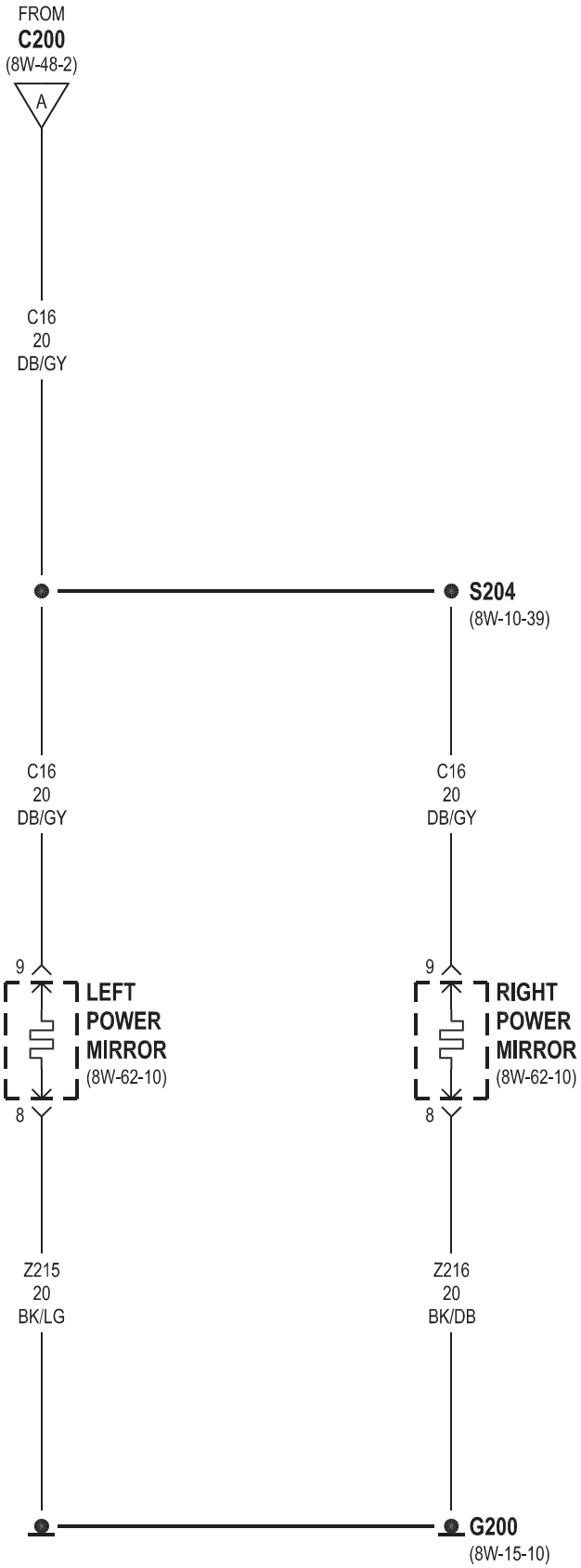
FROM
C200
(8W-48-2)
A
C16
20
DB/GY
S204
(8W-10-39)
C16
20
DB/GY
C16
20
DB/GY
9
LEFT
POWER
MIRROR
(8W-62-10)
8
9
RIGHT
POWER
MIRROR
(8W-62-10)
8
Z215
20
BK/LG
Z216
20
BK/DB
G200
(8W-15-10)

8W-49 OVERHEAD CONSOLE

Component	Page
Ambient Temp Sensor	8W-49-2
Automatic Day/Night Mirror	8W-49-3, 4
Body Control Module	8W-49-2, 3, 4
Diagnostic Junction Port	8W-49-4
Front Control Module	8W-49-2
Front Reading Lamps/Switch	8W-49-4
Fuse 14	8W-49-2
G301	8W-49-4
Integrated Power Module	8W-49-2
Left Power Mirror	8W-49-3
Name Brand Speaker Relay	8W-49-2
Overhead Console	8W-49-2, 3, 4
Radio Choke	8W-49-2

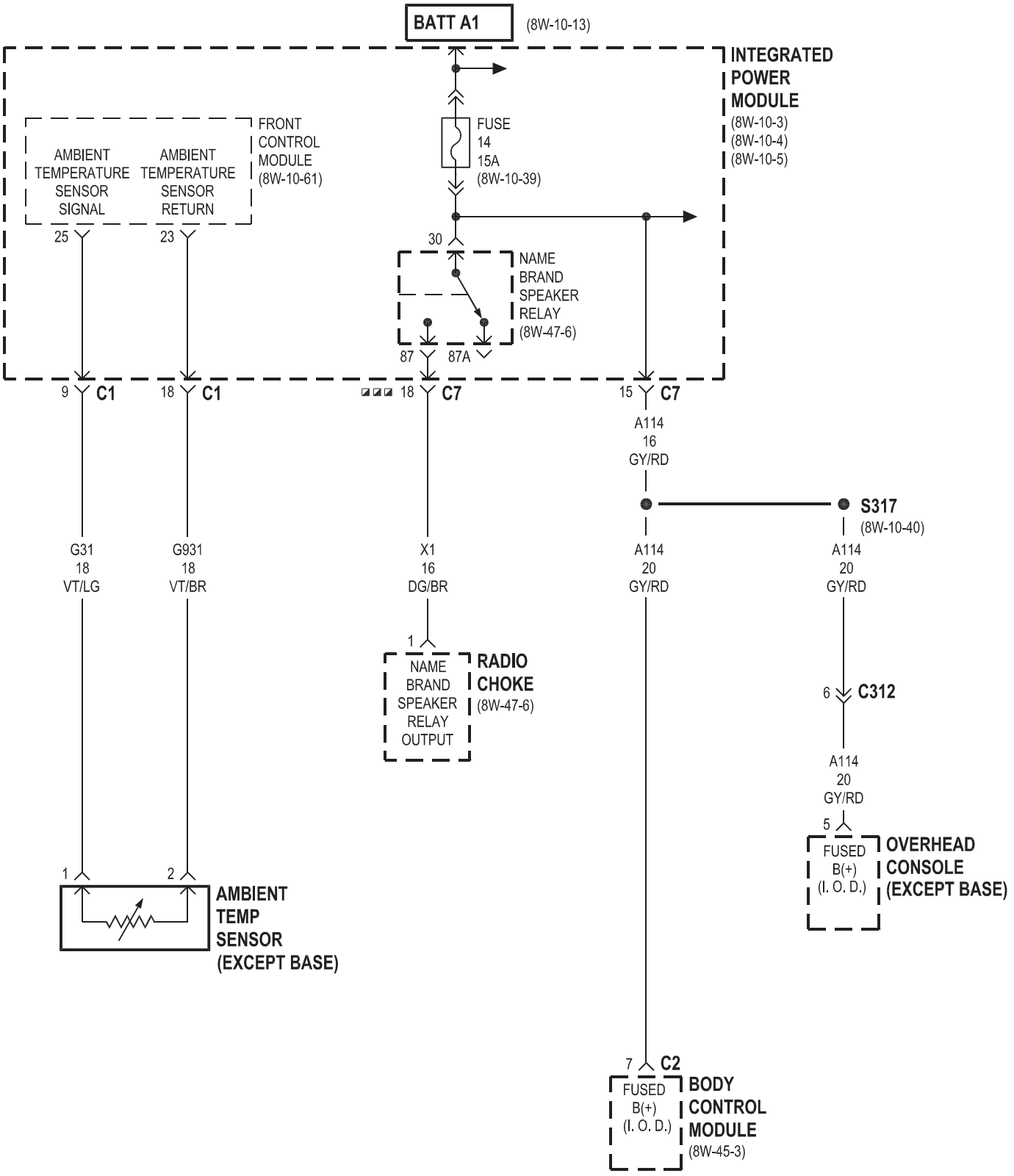

PREMIUM 8 SPEAKER

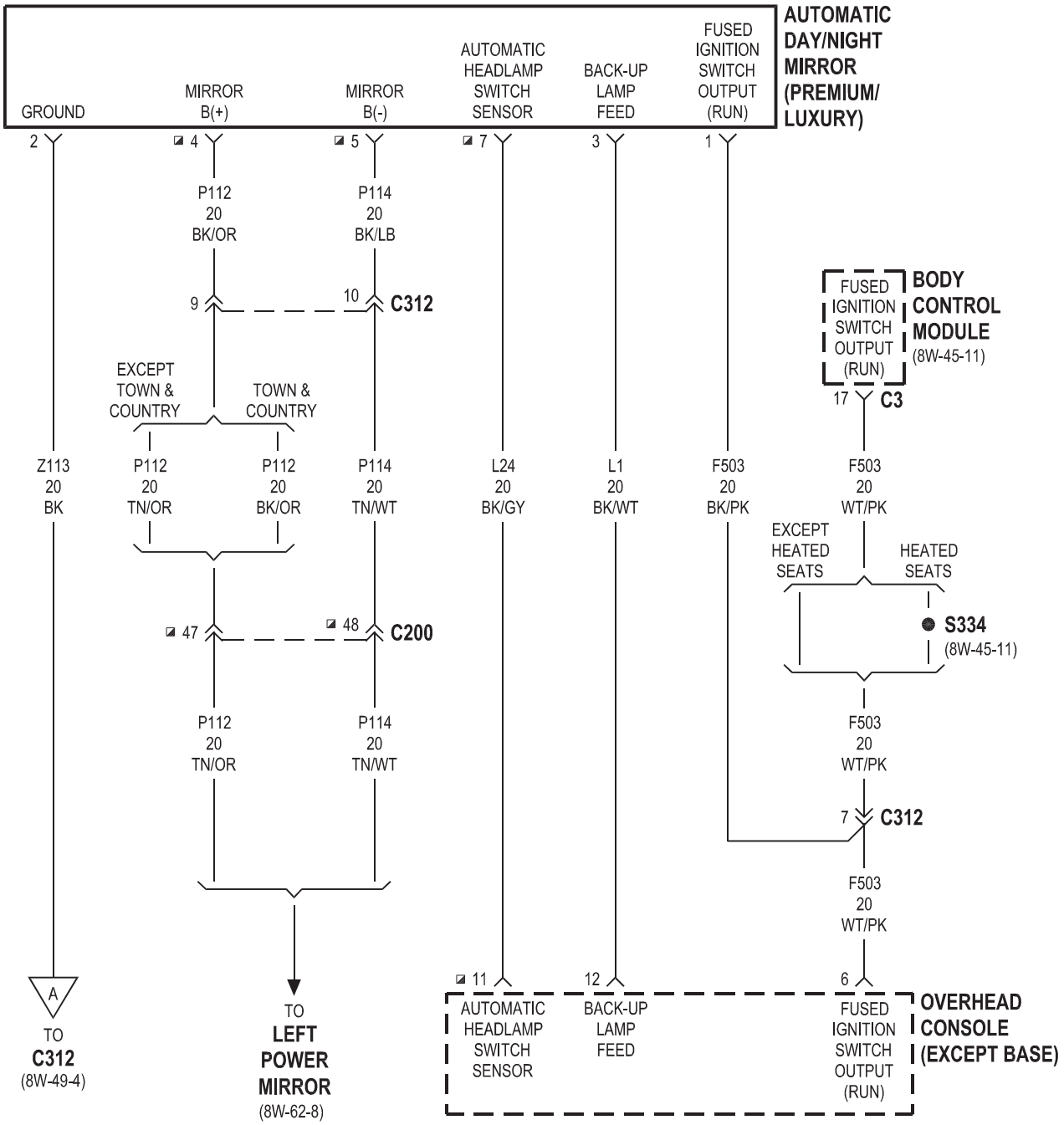

◪ EXCEPT BUILT-UP-EXPORT

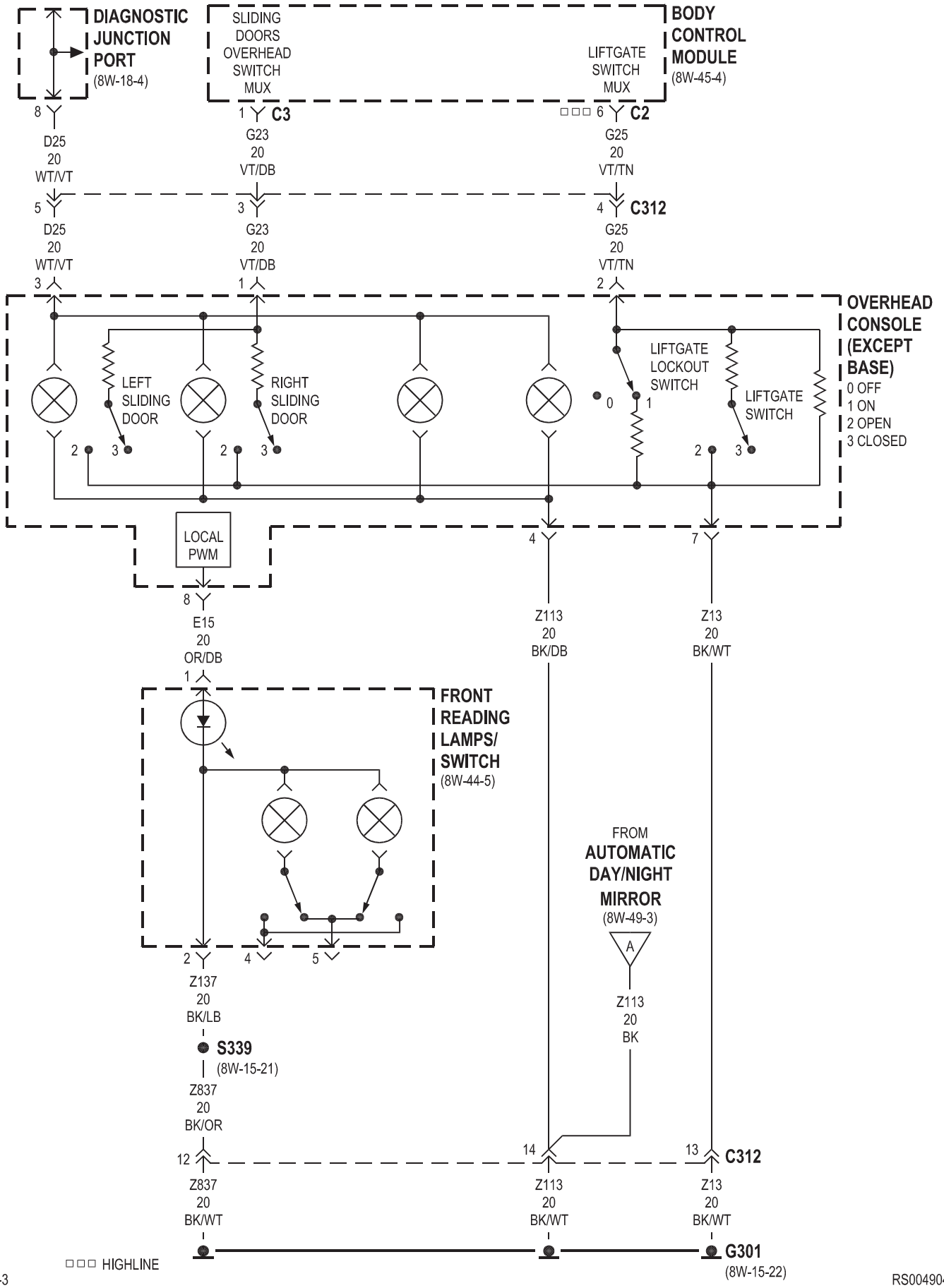
DIAGNOSTIC JUNCTION PORT
(8W-18-4)
SLIDING DOORS OVERHEAD SWITCH MUX
LIFTGATE SWITCH MUX
BODY CONTROL MODULE
(8W-45-4)
8
D25
20
WT/VT
1
C3
G23
20
VT/DB
□□□ 6
C2
G25
20
VT/TN
5
D25
20
WT/VT
3
G23
20
VT/DB
4
C312
G25
20
VT/TN
3
1
2
OVERHEAD CONSOLE (EXCEPT BASE)
0 OFF
1 ON
2 OPEN
3 CLOSED
LEFT SLIDING DOOR
RIGHT SLIDING DOOR
LIFTGATE LOCKOUT SWITCH
LIFTGATE SWITCH
LOCAL PWM
8
E15
20
OR/DB
4
Z113
20
BK/DB
7
Z13
20
BK/WT
1
FRONT READING LAMPS/ SWITCH
(8W-44-5)
FROM AUTOMATIC DAY/NIGHT MIRROR
(8W-49-3)
A
2
4
5
Z137
20
BK/LB
S339
(8W-15-21)
Z837
20
BK/OR
Z113
20
BK
12
14
13
C312
Z837
20
BK/WT
Z113
20
BK/WT
Z13
20
BK/WT
G301
(8W-15-22)
□□□ HIGHLINE

8W-50 FRONT LIGHTING

Component	Page
Body Control Module	8W-50-2, 4, 5
Diagnostic Junction Port	8W-50-5, 6, 8
Front Control Module	8W-50-3, 4, 6, 7, 8, 9, 10, 11
Front Fog Lamp Relay	8W-50-11
Fuse 1	8W-50-11
Fuse 2	8W-50-4, 6
Fuse 3	8W-50-4, 8
G102	8W-50-4, 8, 11
G200	8W-50-2, 10
G300	8W-50-3
Headlamp Switch	8W-50-2, 10
Integrated Power Module	8W-50-3, 4, 5, 6, 7, 8, 9, 10, 11
Left Fog Lamp	8W-50-11
Left Front Park/Turn Signal Lamp	8W-50-4
Left Headlamp	8W-50-3
Left Headlamp Leveling Motor	8W-50-6, 10
Left High Beam Lamp	8W-50-6, 7
Left Low Beam Lamp	8W-50-7
Left Park Lamp	8W-50-6, 7
Multi- Function Switch	8W-50-5
Park Lamp Relay	8W-50-4, 6, 8
Right Fog Lamp	8W-50-11
Right Front Park/Turn Signal Lamp	8W-50-4
Right Headlamp	8W-50-3
Right Headlamp Leveling Motor	8W-50-8, 10
Right High Beam Lamp	8W-50-8, 9
Right Low Beam Lamp	8W-50-9
Right Park Lamp	8W-50-8, 9

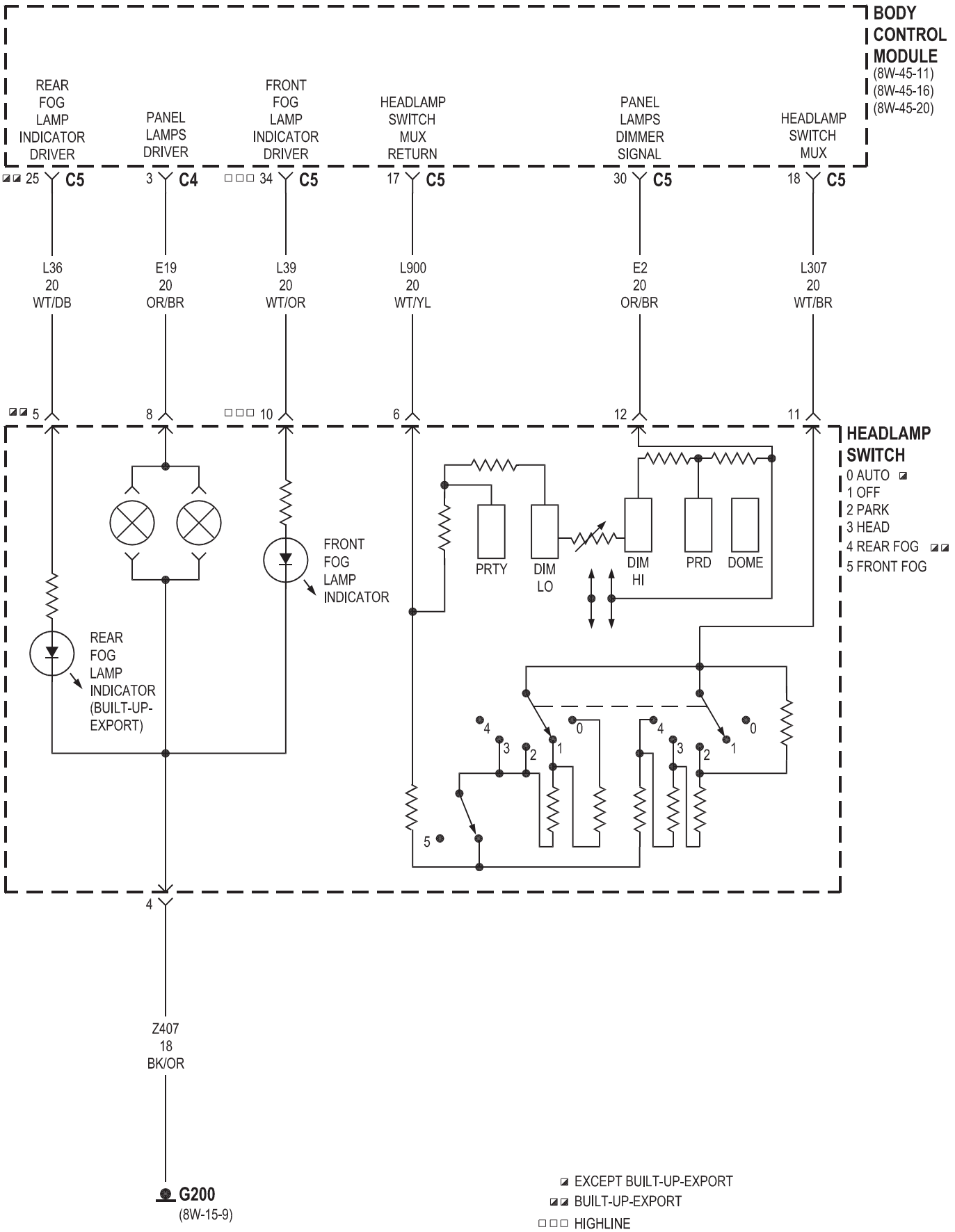
BODY CONTROL MODULE
(8W-45-11)
(8W-45-16)
(8W-45-20)
REAR FOG LAMP INDICATOR DRIVER
PANEL LAMPS DRIVER
FRONT FOG LAMP INDICATOR DRIVER
HEADLAMP SWITCH MUX RETURN
PANEL LAMPS DIMMER SIGNAL
HEADLAMP SWITCH MUX
25 C5
3 C4
34 C5
17 C5
30 C5
18 C5
L36 20 WT/DB
E19 20 OR/BR
L39 20 WT/OR
L900 20 WT/YL
E2 20 OR/BR
L307 20 WT/BR
5
8
10
6
12
11
HEADLAMP SWITCH
0 AUTO
1 OFF
2 PARK
3 HEAD
4 REAR FOG
5 FRONT FOG
PRTY
DIM LO
DIM HI
PRD
DOME
FRONT FOG LAMP INDICATOR
REAR FOG LAMP INDICATOR (BUILT-UP-EXPORT)
4
Z407 18 BK/OR
G200
(8W-15-9)
EXCEPT BUILT-UP-EXPORT
BUILT-UP-EXPORT
HIGHLINE

EXCEPT BUILT-UP-EXPORT

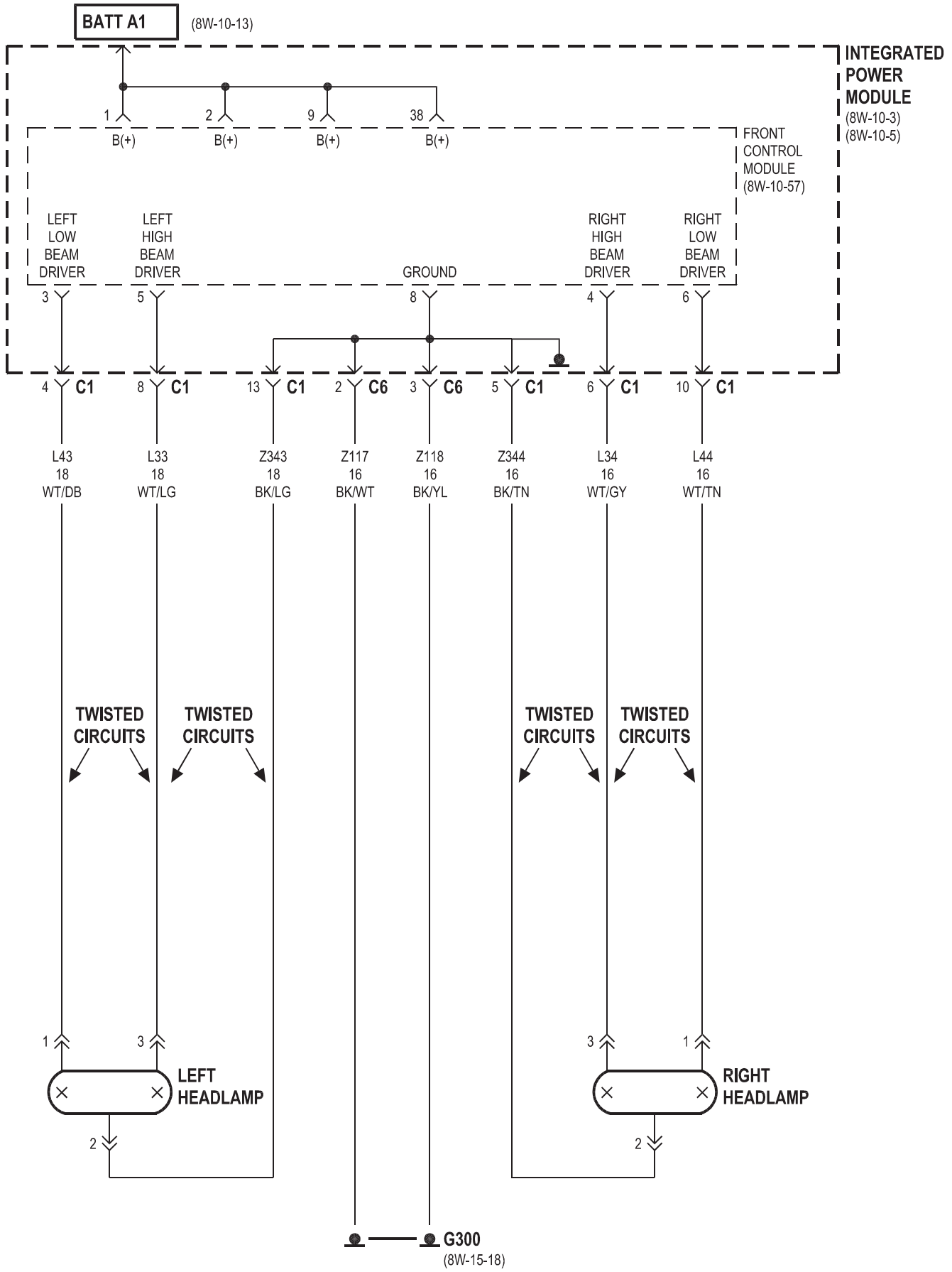

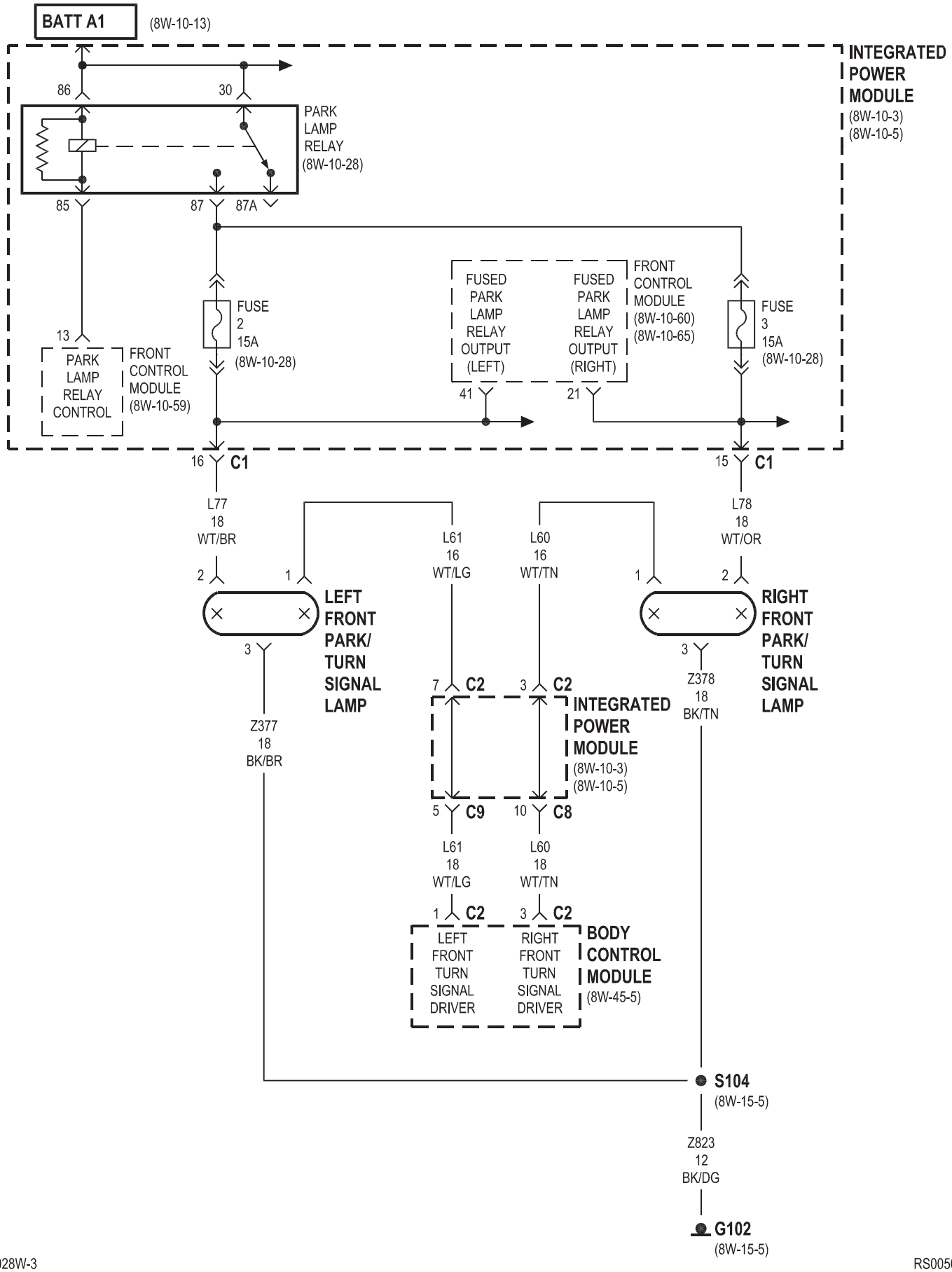
BATT A1
(8W-10-13)
INTEGRATED POWER MODULE
(8W-10-3)
(8W-10-5)
86
30
PARK LAMP RELAY
(8W-10-28)
85
87
87A
13
PARK LAMP RELAY CONTROL
FRONT CONTROL MODULE
(8W-10-59)
FUSE 2 15A
(8W-10-28)
FUSED PARK LAMP RELAY OUTPUT (LEFT)
FUSED PARK LAMP RELAY OUTPUT (RIGHT)
FRONT CONTROL MODULE
(8W-10-60)
(8W-10-65)
41
21
FUSE 3 15A
(8W-10-28)
16 C1
15 C1
L77 18 WT/BR
L61 16 WT/LG
L60 16 WT/TN
L78 18 WT/OR
2
1
1
2
LEFT FRONT PARK/ TURN SIGNAL LAMP
RIGHT FRONT PARK/ TURN SIGNAL LAMP
3
3
Z377 18 BK/BR
Z378 18 BK/TN
7 C2
3 C2
INTEGRATED POWER MODULE
(8W-10-3)
(8W-10-5)
5 C9
10 C8
L61 18 WT/LG
L60 18 WT/TN
1 C2
3 C2
LEFT FRONT TURN SIGNAL DRIVER
RIGHT FRONT TURN SIGNAL DRIVER
BODY CONTROL MODULE
(8W-45-5)
S104
(8W-15-5)
Z823 12 BK/DG
G102
(8W-15-5)

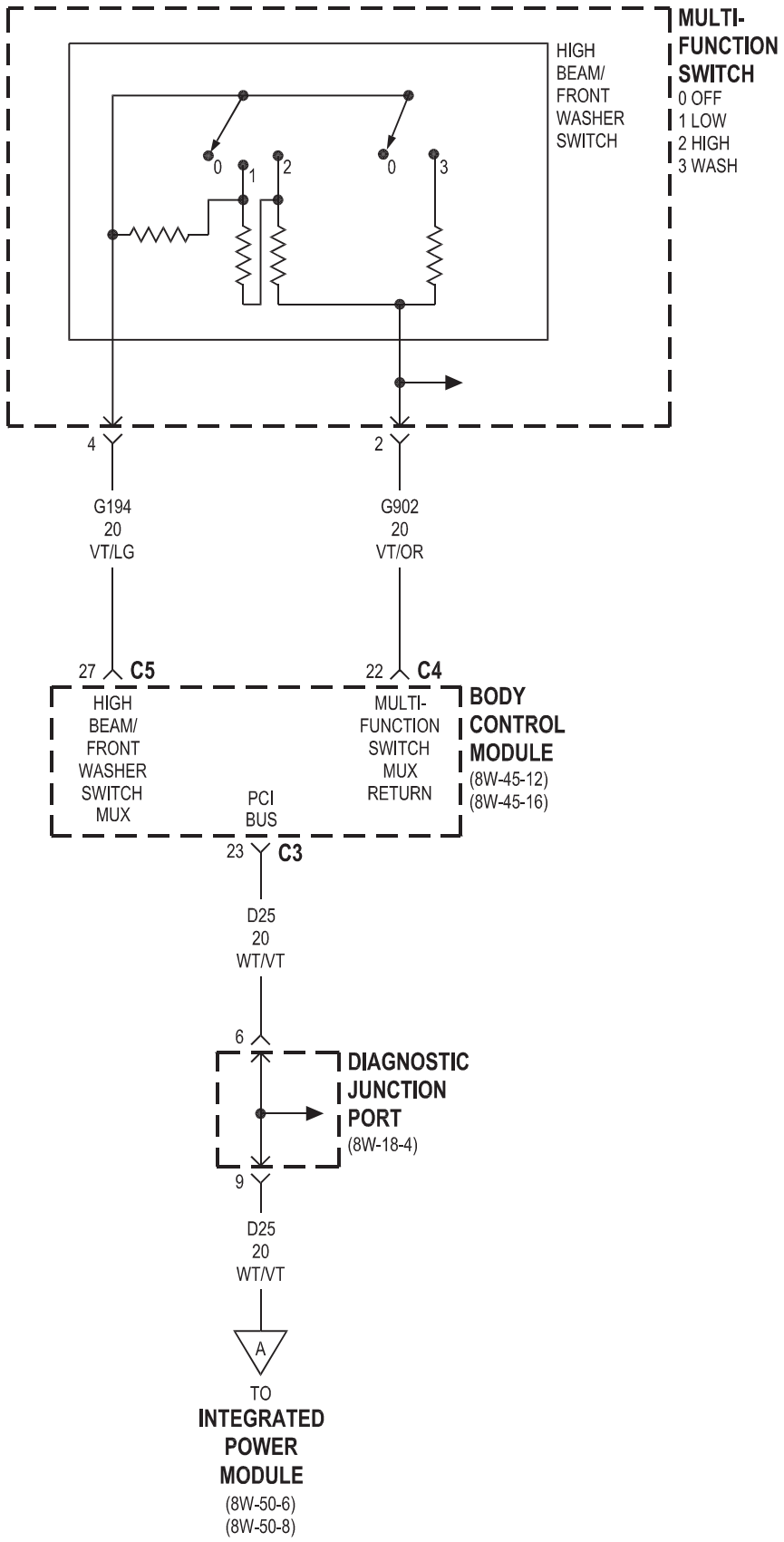
MULTI-
FUNCTION
SWITCH
0 OFF
1 LOW
2 HIGH
3 WASH
HIGH
BEAM/
FRONT
WASHER
SWITCH
0
1
2
0
3
4
2
G194
20
VT/LG
G902
20
VT/OR
27
C5
22
C4
HIGH
BEAM/
FRONT
WASHER
SWITCH
MUX
MULTI-
FUNCTION
SWITCH
MUX
RETURN
BODY
CONTROL
MODULE
(8W-45-12)
(8W-45-16)
PCI
BUS
23
C3
D25
20
WT/VT
6
DIAGNOSTIC
JUNCTION
PORT
(8W-18-4)
9
D25
20
WT/VT
A
TO
INTEGRATED
POWER
MODULE
(8W-50-6)
(8W-50-8)

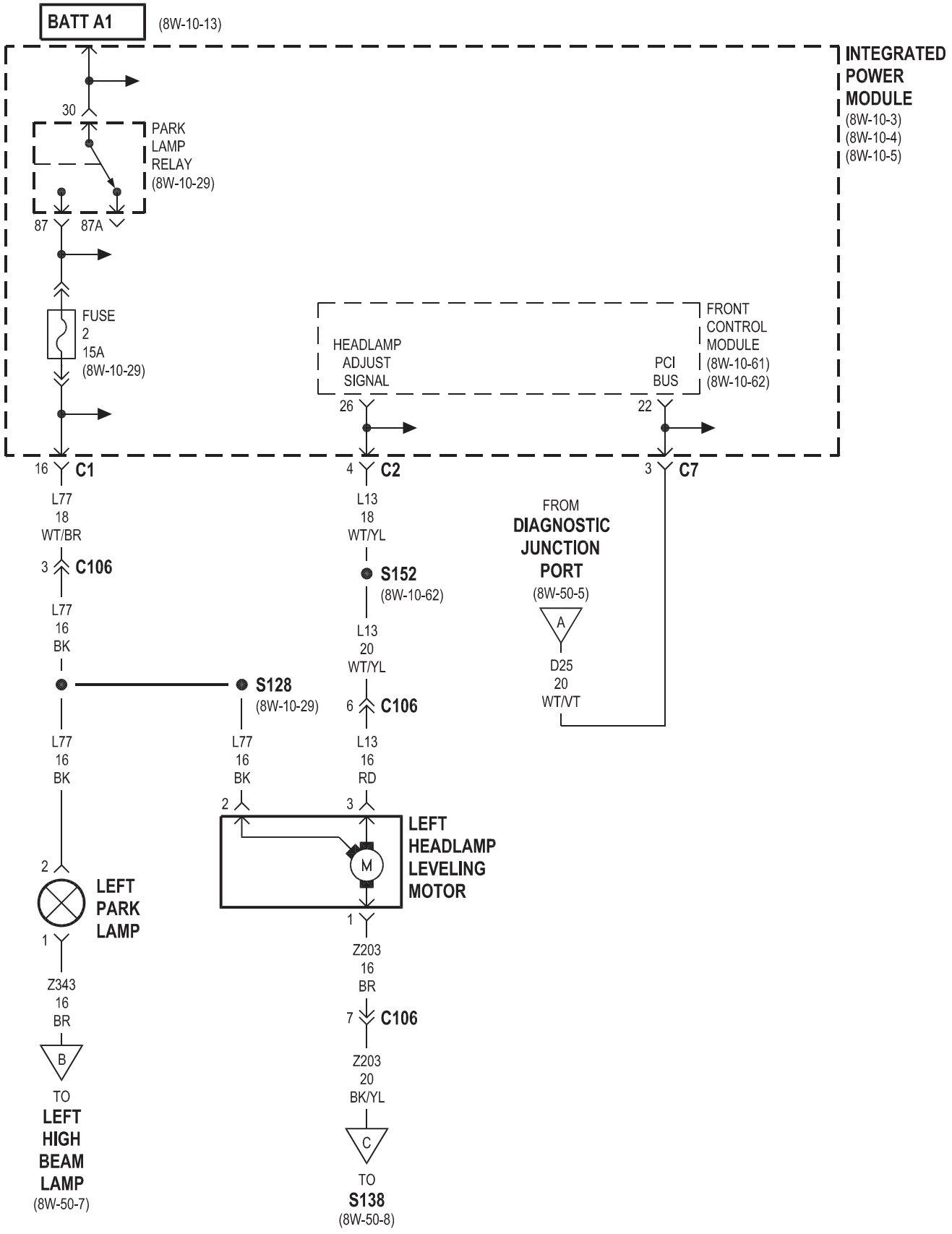
BATT A1
(8W-10-13)
INTEGRATED POWER MODULE
(8W-10-3)
(8W-10-4)
(8W-10-5)
30
PARK LAMP RELAY
(8W-10-29)
87
87A
FUSE 2 15A
(8W-10-29)
HEADLAMP ADJUST SIGNAL
FRONT CONTROL MODULE
(8W-10-61)
(8W-10-62)
PCI BUS
26
22
16 C1
4 C2
3 C7
L77 18 WT/BR
3 C106
L77 16 BK
L13 18 WT/YL
S152
(8W-10-62)
L13 20 WT/YL
6 C106
FROM DIAGNOSTIC JUNCTION PORT
(8W-50-5)
A
D25 20 WT/VT
S128
(8W-10-29)
L77 16 BK
L77 16 BK
L13 16 RD
2
3
LEFT HEADLAMP LEVELING MOTOR
M
1
Z203 16 BR
7 C106
Z203 20 BK/YL
C
TO S138
(8W-50-8)
2
LEFT PARK LAMP
1
Z343 16 BR
B
TO LEFT HIGH BEAM LAMP
(8W-50-7)

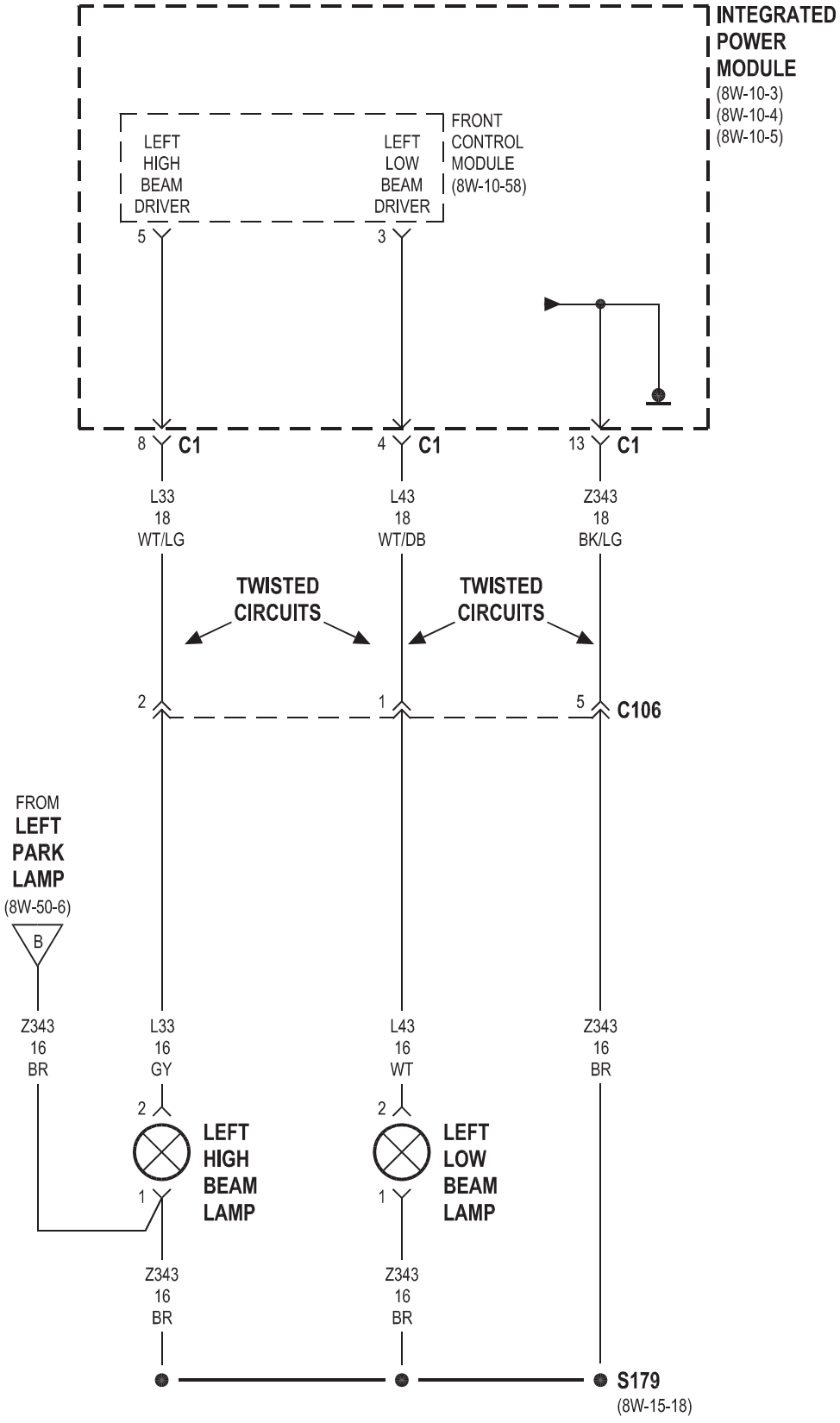
INTEGRATED POWER MODULE
(8W-10-3)
(8W-10-4)
(8W-10-5)
FRONT CONTROL MODULE (8W-10-58)
LEFT HIGH BEAM DRIVER
LEFT LOW BEAM DRIVER
5
3
8 C1
4 C1
13 C1
L33 18 WT/LG
L43 18 WT/DB
Z343 18 BK/LG
TWISTED CIRCUITS
TWISTED CIRCUITS
2
1
5 C106
FROM LEFT PARK LAMP (8W-50-6)
B
Z343 16 BR
L33 16 GY
L43 16 WT
Z343 16 BR
2
2
LEFT HIGH BEAM LAMP
LEFT LOW BEAM LAMP
1
1
Z343 16 BR
Z343 16 BR
S179
(8W-15-18)

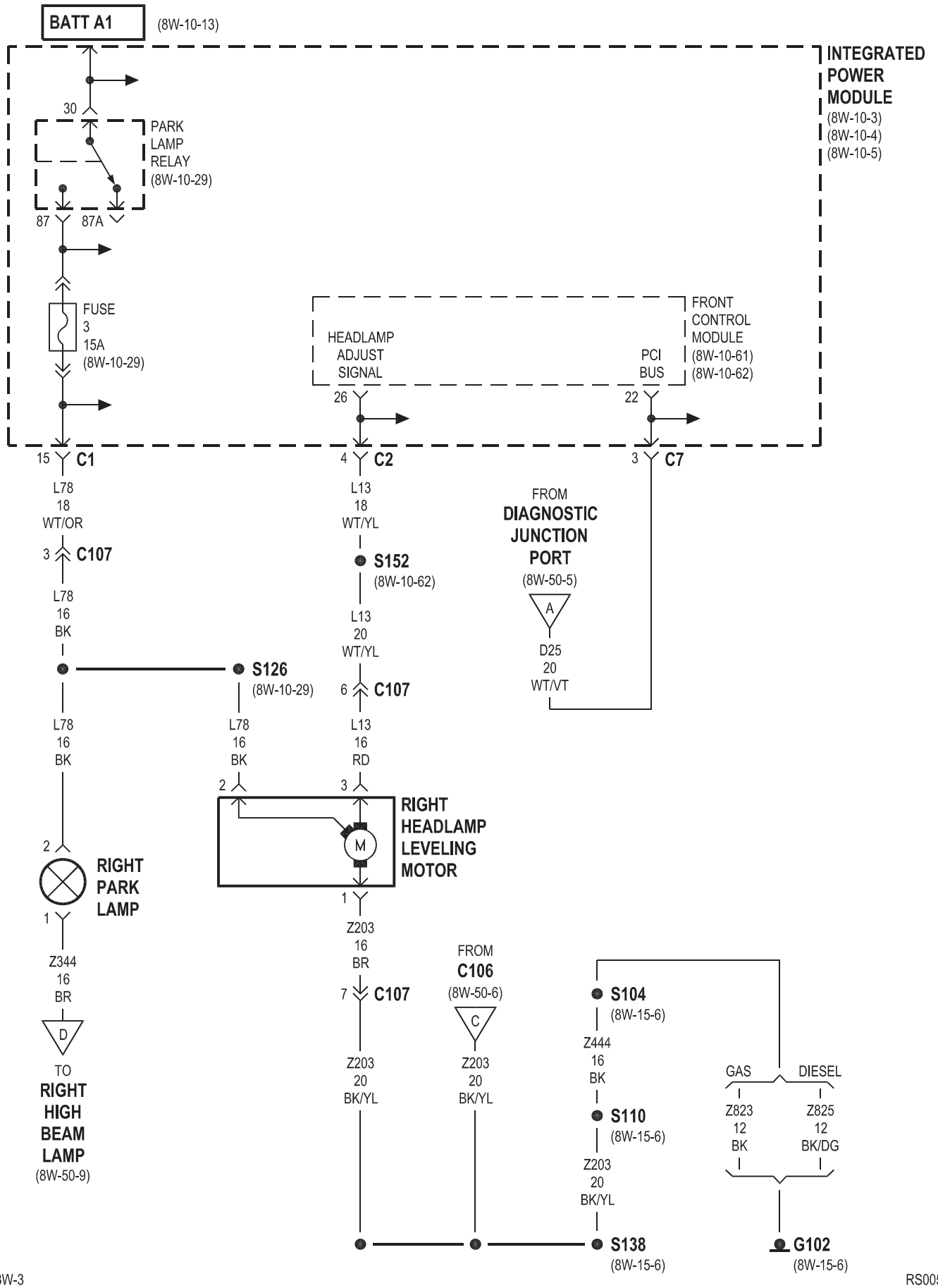
BATT A1
(8W-10-13)
INTEGRATED POWER MODULE
(8W-10-3)
(8W-10-4)
(8W-10-5)
30
PARK LAMP RELAY
(8W-10-29)
87
87A
FUSE 3 15A
(8W-10-29)
HEADLAMP ADJUST SIGNAL
FRONT CONTROL MODULE
(8W-10-61)
(8W-10-62)
PCI BUS
26
22
15 C1
4 C2
3 C7
L78 18 WT/OR
3 C107
L78 16 BK
L13 18 WT/YL
S152
(8W-10-62)
L13 20 WT/YL
6 C107
FROM DIAGNOSTIC JUNCTION PORT
(8W-50-5)
A
D25 20 WT/VT
S126
(8W-10-29)
L78 16 BK
L78 16 BK
L13 16 RD
2
3
M
RIGHT HEADLAMP LEVELING MOTOR
1
2
RIGHT PARK LAMP
1
Z344 16 BR
D
TO RIGHT HIGH BEAM LAMP
(8W-50-9)
Z203 16 BR
7 C107
Z203 20 BK/YL
FROM C106
(8W-50-6)
C
Z203 20 BK/YL
S104
(8W-15-6)
Z444 16 BK
S110
(8W-15-6)
Z203 20 BK/YL
S138
(8W-15-6)
GAS
DIESEL
Z823 12 BK
Z825 12 BK/DG
G102
(8W-15-6)

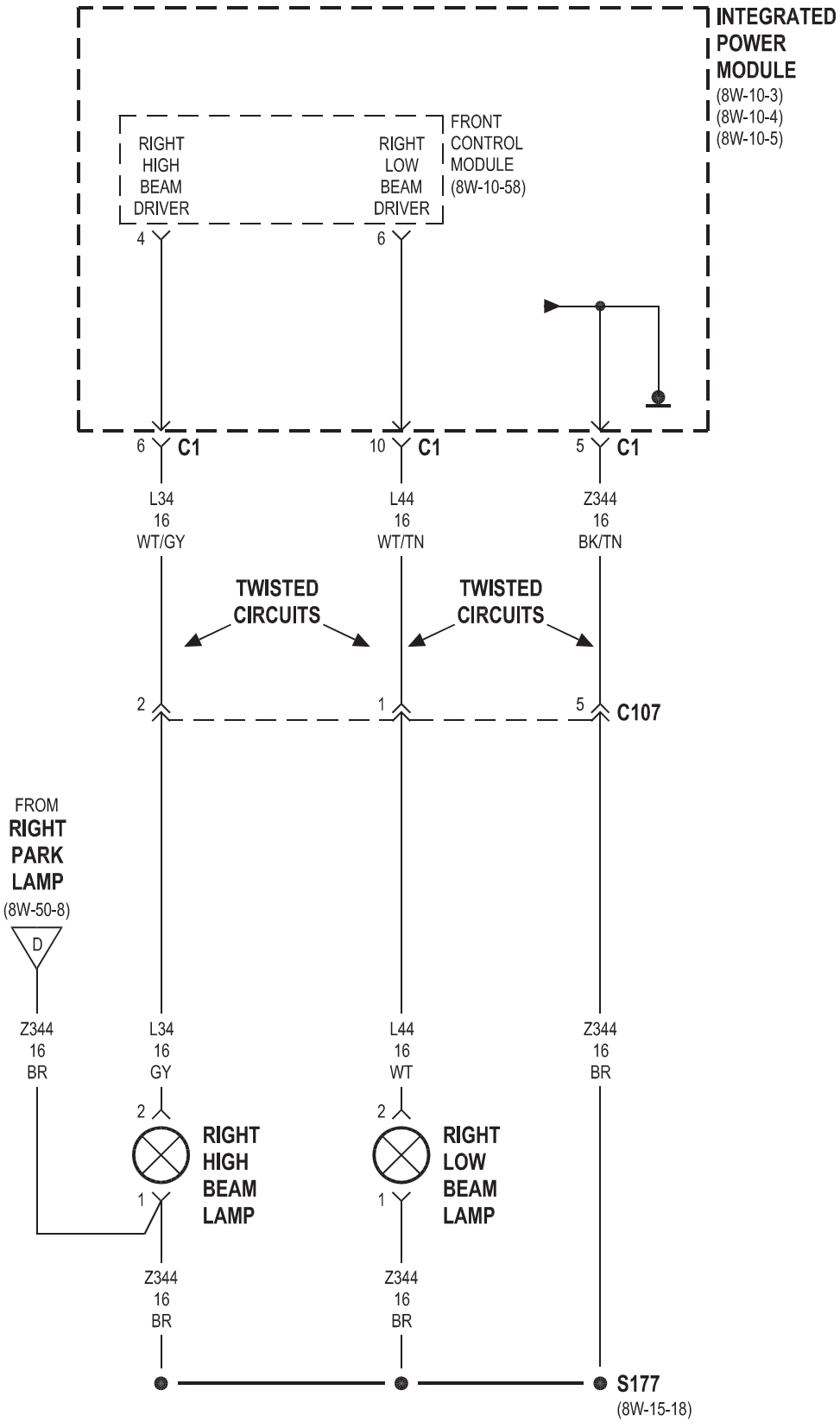
INTEGRATED POWER MODULE
(8W-10-3)
(8W-10-4)
(8W-10-5)
FRONT CONTROL MODULE (8W-10-58)
RIGHT HIGH BEAM DRIVER
RIGHT LOW BEAM DRIVER
4
6
6 C1
10 C1
5 C1
L34 16 WT/GY
L44 16 WT/TN
Z344 16 BK/TN
TWISTED CIRCUITS
TWISTED CIRCUITS
2
1
5 C107
FROM RIGHT PARK LAMP (8W-50-8)
D
Z344 16 BR
L34 16 GY
L44 16 WT
Z344 16 BR
2
1
RIGHT HIGH BEAM LAMP
RIGHT LOW BEAM LAMP
Z344 16 BR
Z344 16 BR
S177
(8W-15-18)

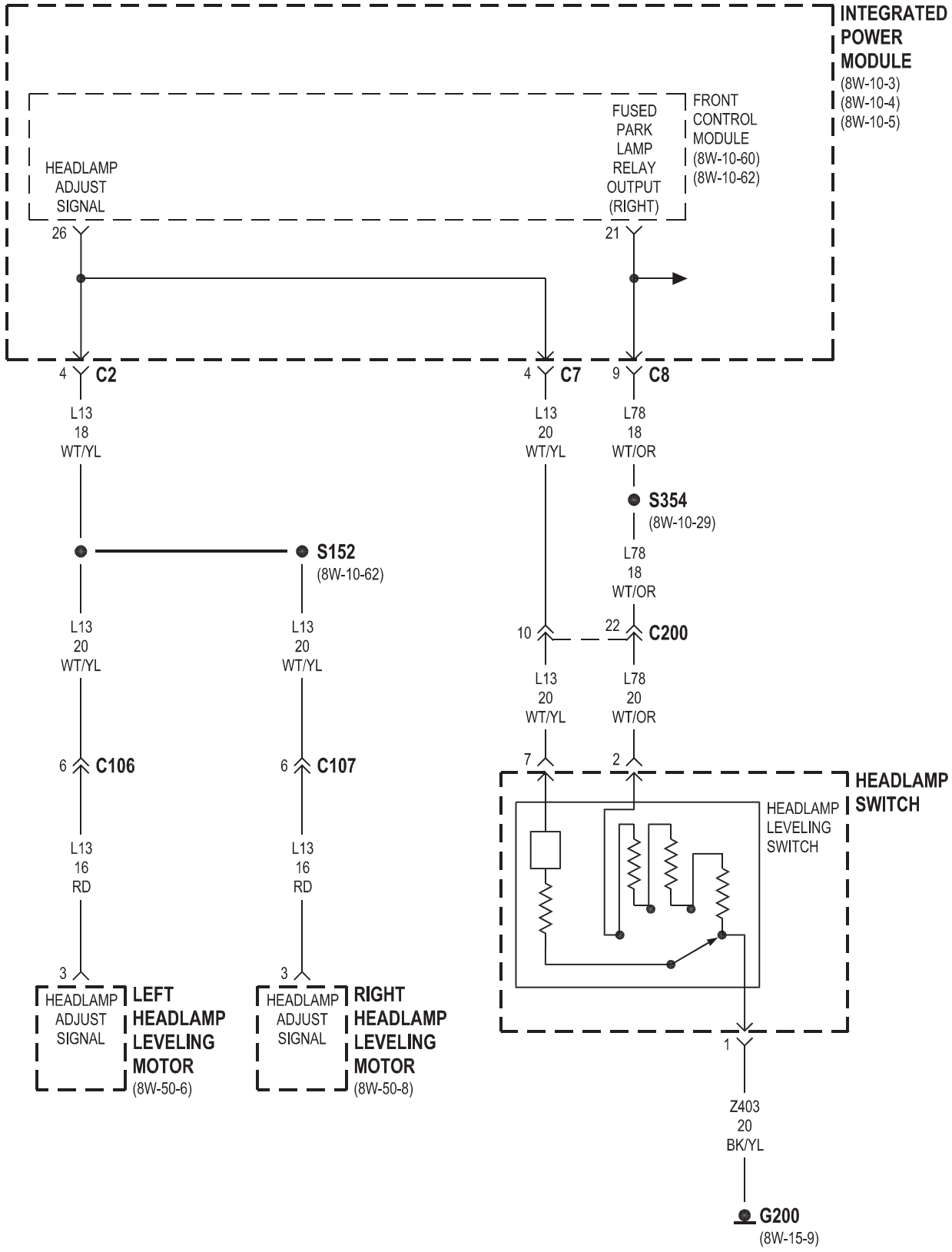
INTEGRATED POWER MODULE
(8W-10-3)
(8W-10-4)
(8W-10-5)
FRONT CONTROL MODULE
(8W-10-60)
(8W-10-62)
HEADLAMP ADJUST SIGNAL
26
FUSED PARK LAMP RELAY OUTPUT (RIGHT)
21
4 C2
4 C7
9 C8
L13 18 WT/YL
L13 20 WT/YL
L78 18 WT/OR
S354
(8W-10-29)
S152
(8W-10-62)
L78 18 WT/OR
10
22 C200
L13 20 WT/YL
L78 20 WT/OR
6 C106
6 C107
7
2
HEADLAMP SWITCH
HEADLAMP LEVELING SWITCH
L13 16 RD
3
HEADLAMP ADJUST SIGNAL
LEFT HEADLAMP LEVELING MOTOR
(8W-50-6)
RIGHT HEADLAMP LEVELING MOTOR
(8W-50-8)
1
Z403 20 BK/YL
G200
(8W-15-9)

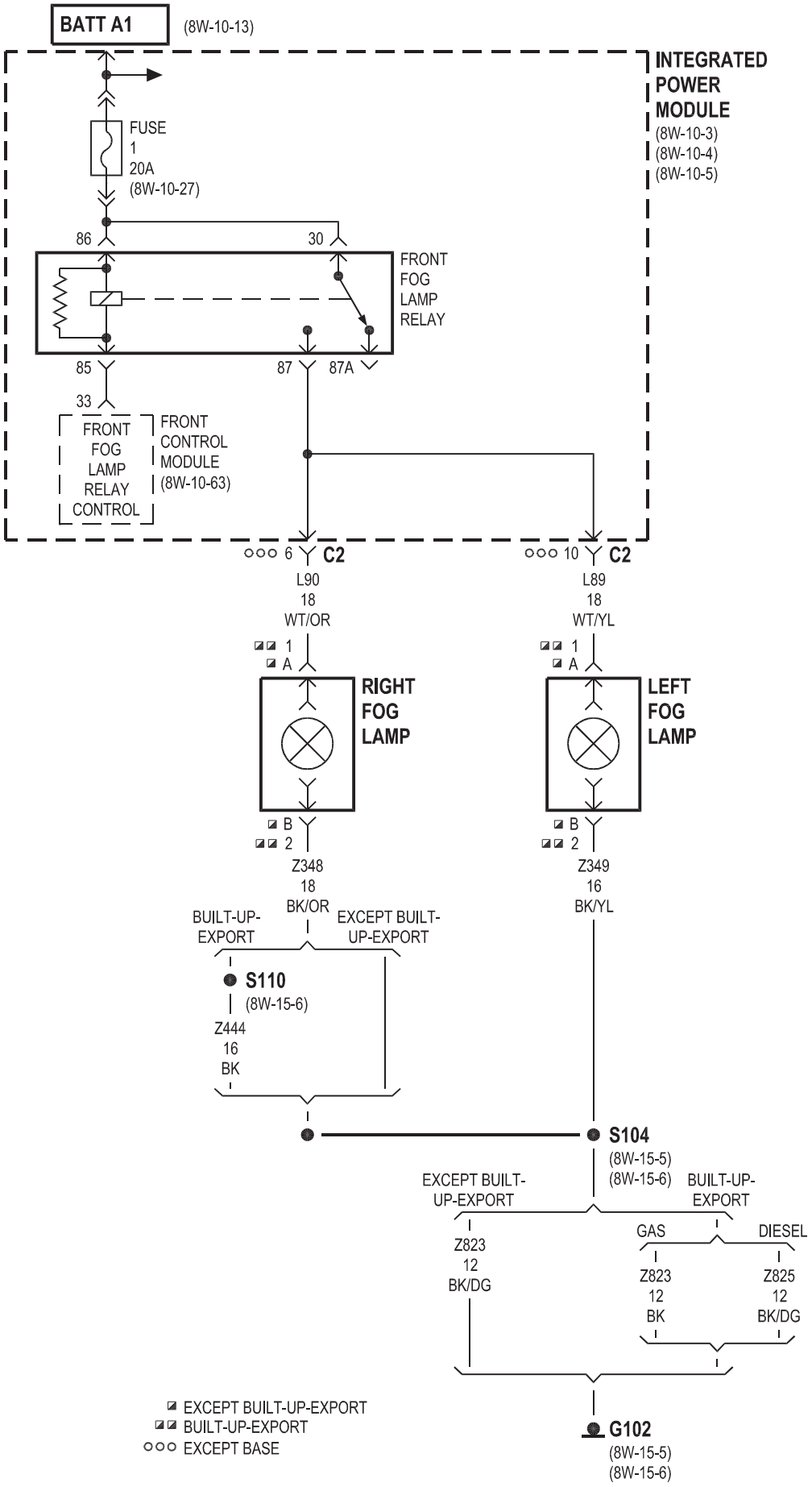
BATT A1
(8W-10-13)
INTEGRATED POWER MODULE
(8W-10-3)
(8W-10-4)
(8W-10-5)
FUSE 1 20A
(8W-10-27)
86
30
FRONT FOG LAMP RELAY
85
87
87A
33
FRONT FOG LAMP RELAY CONTROL
FRONT CONTROL MODULE
(8W-10-63)
6 C2
10 C2
L90 18 WT/OR
L89 18 WT/YL
1
A
RIGHT FOG LAMP
LEFT FOG LAMP
B
2
Z348 18 BK/OR
Z349 16 BK/YL
BUILT-UP-EXPORT
EXCEPT BUILT-UP-EXPORT
S110
(8W-15-6)
Z444 16 BK
S104
(8W-15-5)
(8W-15-6)
EXCEPT BUILT-UP-EXPORT
BUILT-UP-EXPORT
Z823 12 BK/DG
GAS
DIESEL
Z823 12 BK
Z825 12 BK/DG
G102
(8W-15-5)
(8W-15-6)
EXCEPT BUILT-UP-EXPORT
BUILT-UP-EXPORT
EXCEPT BASE

8W-51 REAR LIGHTING

Component	Page
Back-Up Lamp Switch	8W-51-5
Battery	8W-51-5
Body Control Module	8W-51-2, 3, 4, 5
Brake Lamp Switch	8W-51-2, 4
Center High Mounted Stop Lamp	8W-51-6
Front Control Module	8W-51-2, 4, 5
Fuse 2	8W-51-2, 4
Fuse 3	8W-51-2, 4, 5
Fuse 26	8W-51-2, 4
G101	8W-51-5
G103	8W-51-5
G302	8W-51-2, 3, 4, 5
G400	8W-51-6
Integrated Power Module	8W-51-2, 4, 5
Left Rear Lamp Assembly	8W-51-2, 3, 4, 5
Left Stop/Turn Signal Relay	8W-51-3
License Lamp	8W-51-6
Park Lamp Relay	8W-51-2, 4, 5
Right Combination Relay	8W-51-3
Right Rear Lamp Assembly	8W-51-2, 4, 5
Trailer Tow Connector	8W-51-3

EXCEPT BUILT-UP-EXPORT

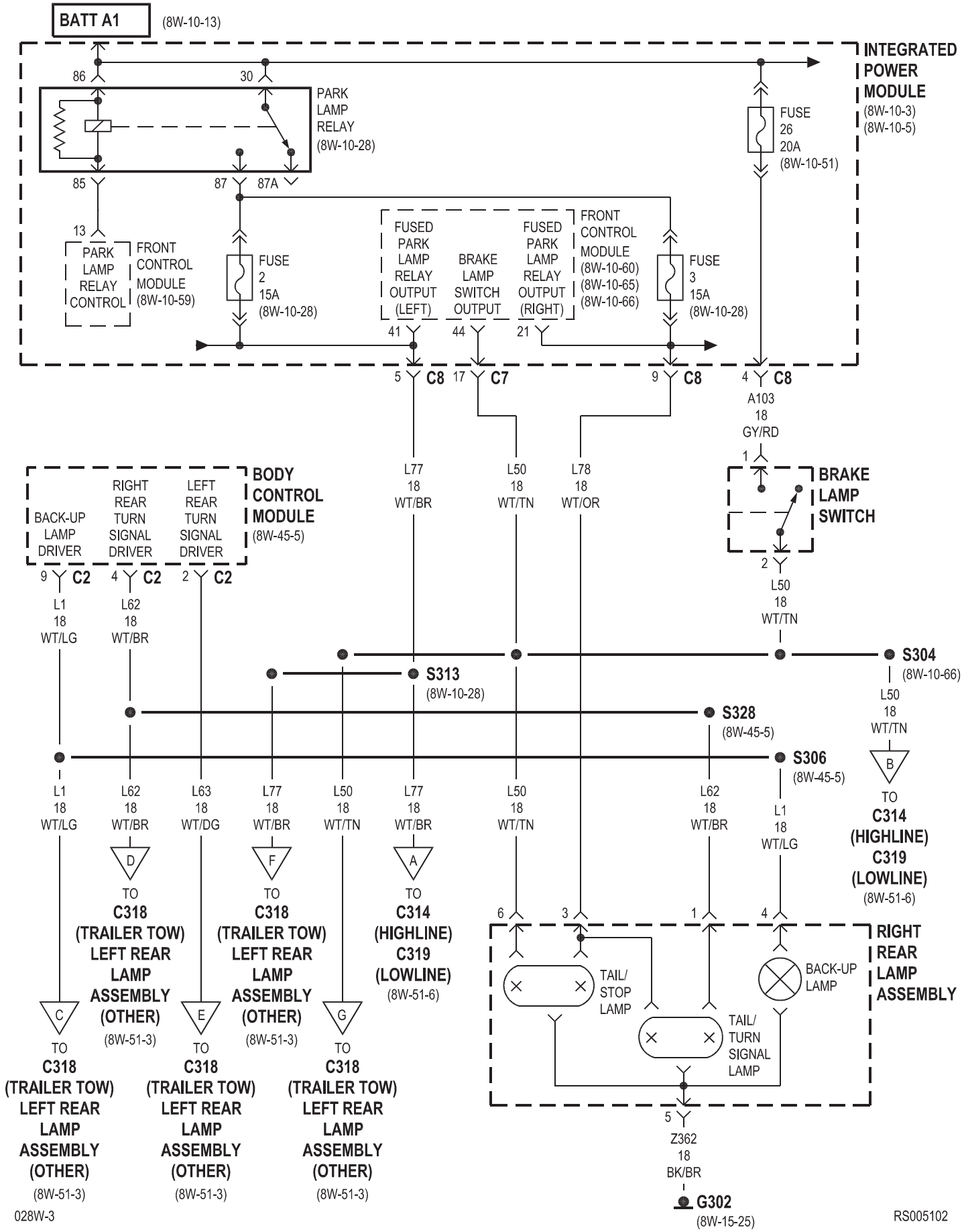

RS005102

EXCEPT BUILT-UP-EXPORT

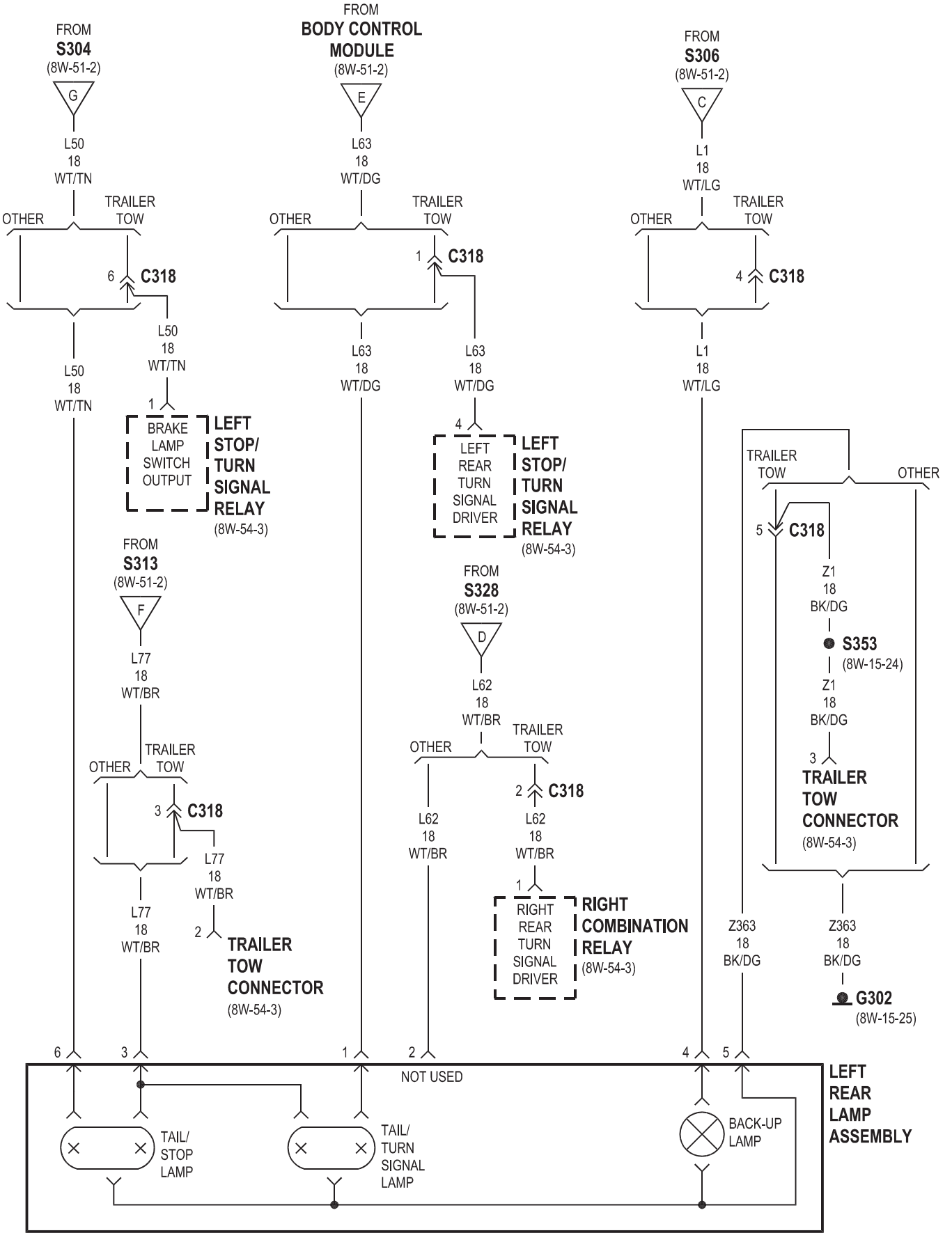

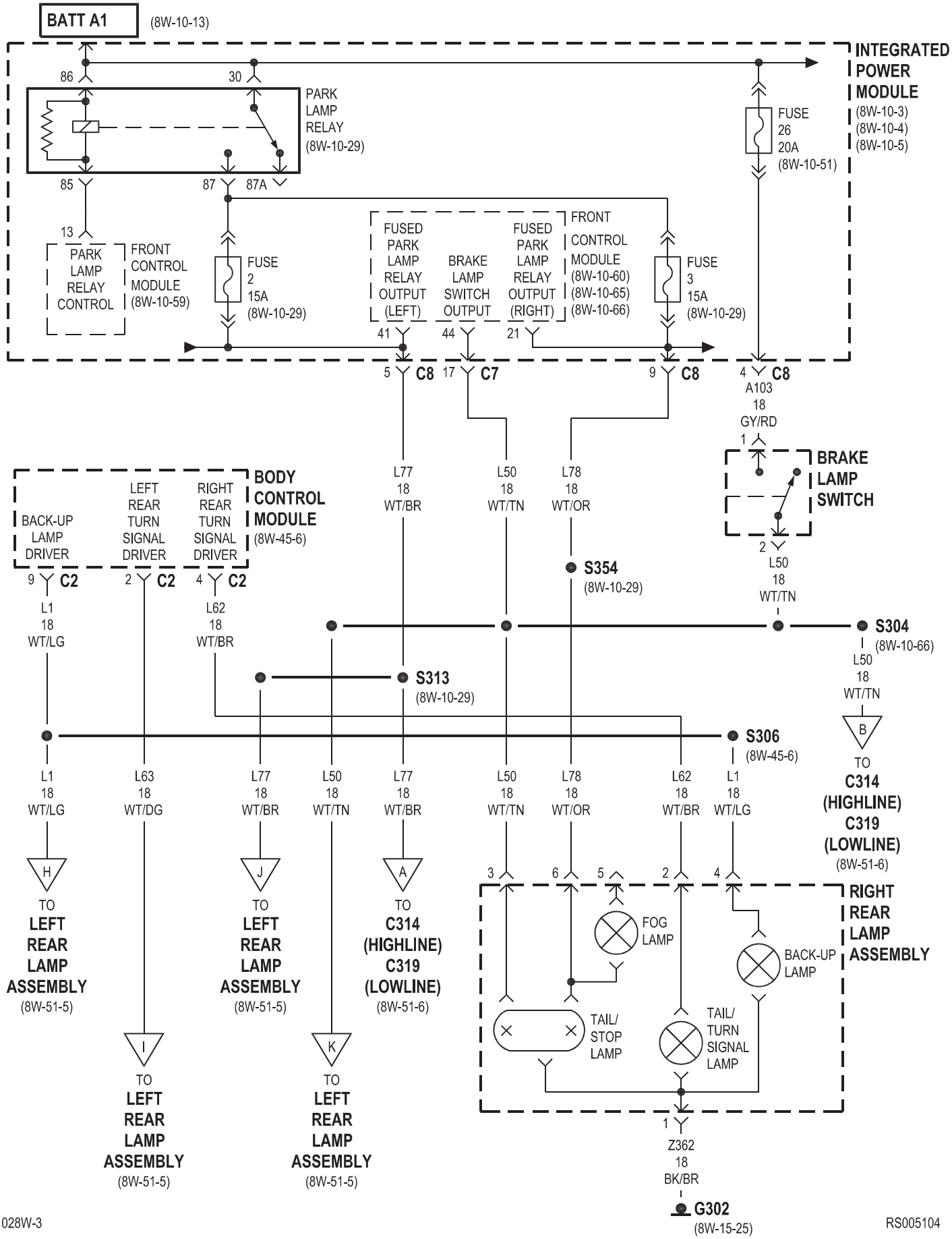
BATT A1
(8W-10-13)
INTEGRATED POWER MODULE
(8W-10-3)
(8W-10-4)
(8W-10-5)
86
30
PARK LAMP RELAY
(8W-10-29)
85
87
87A
FUSE 26 20A
(8W-10-51)
13
PARK LAMP RELAY CONTROL
FRONT CONTROL MODULE
(8W-10-59)
FUSE 2 15A
(8W-10-29)
FUSED PARK LAMP RELAY OUTPUT (LEFT)
BRAKE LAMP SWITCH OUTPUT
FUSED PARK LAMP RELAY OUTPUT (RIGHT)
FRONT CONTROL MODULE
(8W-10-60)
(8W-10-65)
(8W-10-66)
FUSE 3 15A
(8W-10-29)
41
44
21
5 C8
17 C7
9 C8
4 C8
A103
18
GY/RD
1
BRAKE LAMP SWITCH
2
L50
18
WT/TN
BODY CONTROL MODULE
(8W-45-6)
BACK-UP LAMP DRIVER
LEFT REAR TURN SIGNAL DRIVER
RIGHT REAR TURN SIGNAL DRIVER
9 C2
2 C2
4 C2
L1
18
WT/LG
L62
18
WT/BR
L77
18
WT/BR
L50
18
WT/TN
L78
18
WT/OR
S354
(8W-10-29)
S304
(8W-10-66)
S313
(8W-10-29)
S306
(8W-45-6)
L63
18
WT/DG
B
TO C314 (HIGHLINE) C319 (LOWLINE)
(8W-51-6)
H
TO LEFT REAR LAMP ASSEMBLY
(8W-51-5)
J
TO LEFT REAR LAMP ASSEMBLY
(8W-51-5)
A
TO C314 (HIGHLINE) C319 (LOWLINE)
(8W-51-6)
I
TO LEFT REAR LAMP ASSEMBLY
(8W-51-5)
K
TO LEFT REAR LAMP ASSEMBLY
(8W-51-5)
3
6
5
2
4
FOG LAMP
BACK-UP LAMP
TAIL/ STOP LAMP
TAIL/ TURN SIGNAL LAMP
RIGHT REAR LAMP ASSEMBLY
1
Z362
18
BK/BR
G302
(8W-15-25)

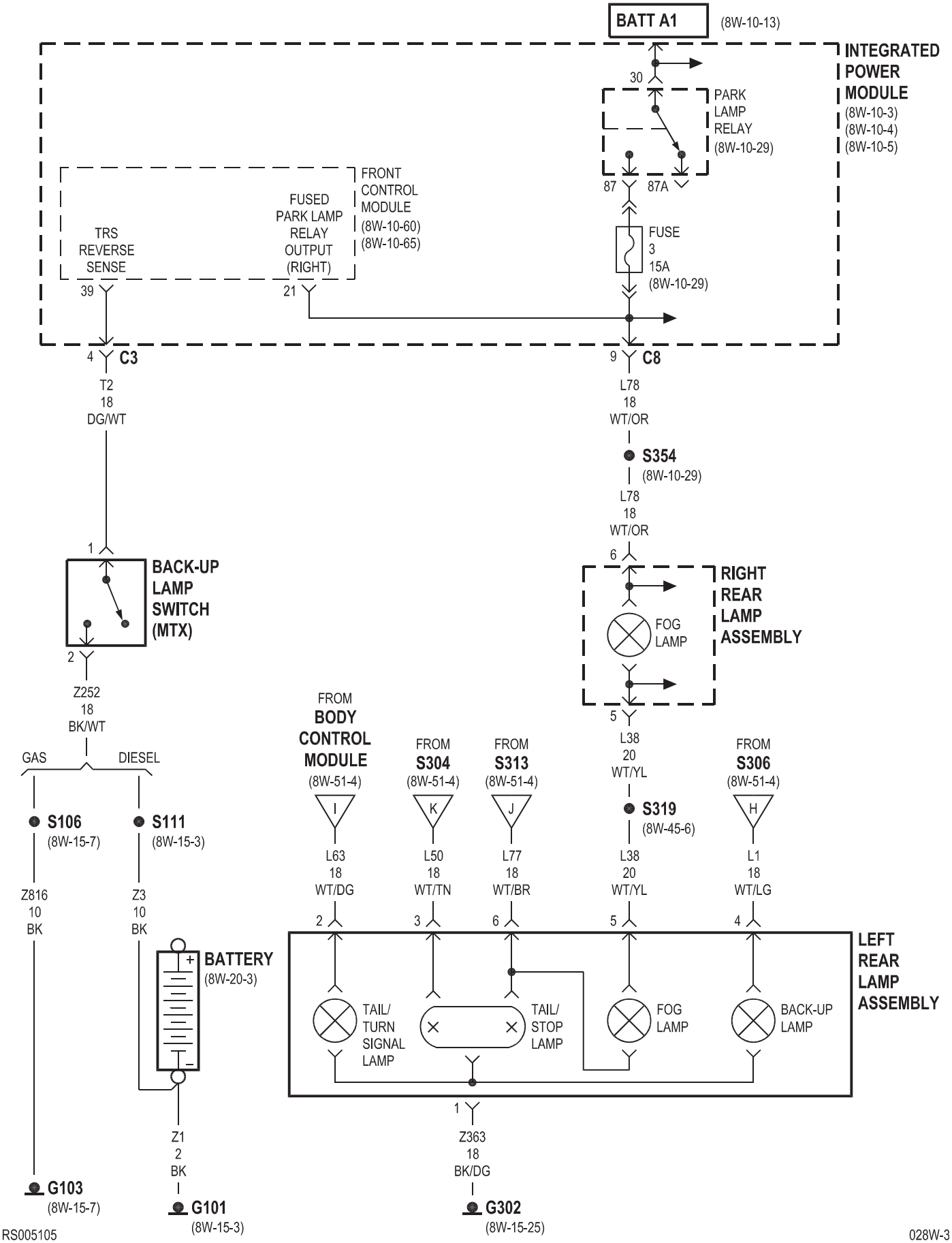
BATT A1
(8W-10-13)
INTEGRATED POWER MODULE
(8W-10-3)
(8W-10-4)
(8W-10-5)
30
PARK LAMP RELAY
(8W-10-29)
87
87A
FUSE 3 15A
(8W-10-29)
FRONT CONTROL MODULE
(8W-10-60)
(8W-10-65)
TRS REVERSE SENSE
39
FUSED PARK LAMP RELAY OUTPUT (RIGHT)
21
4
C3
9
C8
T2
18
DG/WT
L78
18
WT/OR
S354
(8W-10-29)
L78
18
WT/OR
6
1
BACK-UP LAMP SWITCH (MTX)
2
RIGHT REAR LAMP ASSEMBLY
FOG LAMP
5
Z252
18
BK/WT
GAS
DIESEL
FROM BODY CONTROL MODULE
(8W-51-4)
FROM S304
(8W-51-4)
FROM S313
(8W-51-4)
FROM S306
(8W-51-4)
I
K
J
H
L63
18
WT/DG
L50
18
WT/TN
L77
18
WT/BR
L38
20
WT/YL
L1
18
WT/LG
S319
(8W-45-6)
2
3
6
5
4
S106
(8W-15-7)
S111
(8W-15-3)
Z816
10
BK
Z3
10
BK
BATTERY
(8W-20-3)
LEFT REAR LAMP ASSEMBLY
TAIL/ TURN SIGNAL LAMP
TAIL/ STOP LAMP
FOG LAMP
BACK-UP LAMP
1
Z363
18
BK/DG
Z1
2
BK
G103
(8W-15-7)
G101
(8W-15-3)
G302
(8W-15-25)

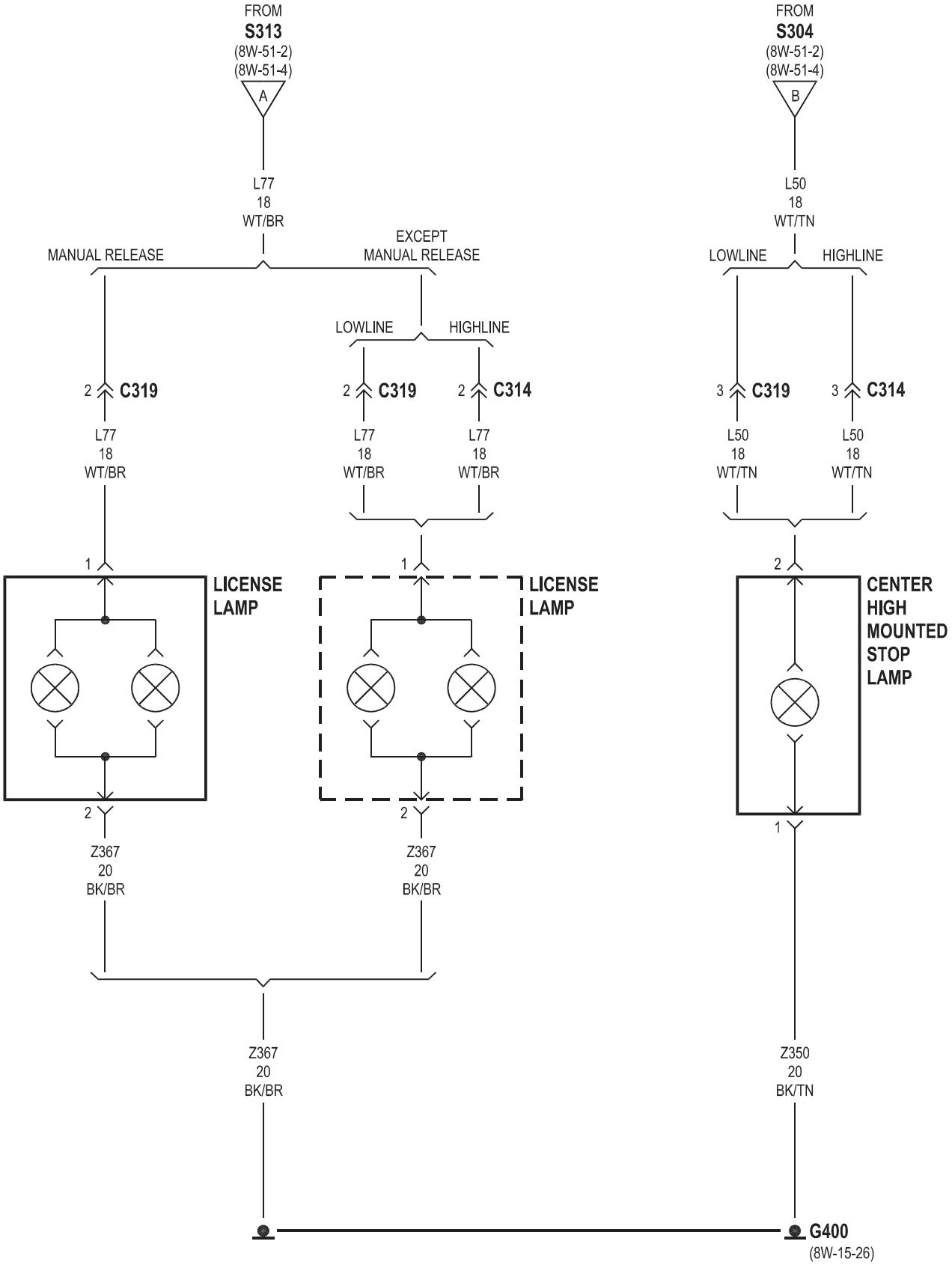
FROM
S313
(8W-51-2)
(8W-51-4)
A
L77
18
WT/BR
MANUAL RELEASE
EXCEPT
MANUAL RELEASE
LOWLINE
HIGHLINE
2 C319
2 C319
2 C314
L77
18
WT/BR
L77
18
WT/BR
L77
18
WT/BR
1
1
LICENSE
LAMP
LICENSE
LAMP
2
2
Z367
20
BK/BR
Z367
20
BK/BR
Z367
20
BK/BR
FROM
S304
(8W-51-2)
(8W-51-4)
B
L50
18
WT/TN
LOWLINE
HIGHLINE
3 C319
3 C314
L50
18
WT/TN
L50
18
WT/TN
2
CENTER
HIGH
MOUNTED
STOP
LAMP
1
Z350
20
BK/TN
G400
(8W-15-26)

8W-52 TURN SIGNALS

Component	Page
Body Control Module	8W-52-2, 3, 4, 6
Brake Lamp Switch	8W-52-5
Fuse 24	8W-52-6
G102	8W-52-2
G200	8W-52-2, 3
G302	8W-52-4
Instrument Panel Switch Bank	8W-52-2, 3
Integrated Power Module	8W-52-2, 3, 6
Left Combination Relay	8W-52-5
Left Front Park/Turn Signal Lamp	8W-52-2
Left Rear Lamp Assembly	8W-52-4
Left Repeater Lamp	8W-52-6
Left Stop/Turn Signal Relay	8W-52-4, 5
Left Turn Signal Lamp	8W-52-3
Multi- Function Switch	8W-52-2, 3
Right Combination Relay	8W-52-4, 5
Right Front Park/Turn Signal Lamp	8W-52-2
Right Rear Lamp Assembly	8W-52-4
Right Repeater Lamp	8W-52-6
Right Stop/Turn Signal Relay	8W-52-5
Right Turn Signal Lamp	8W-52-3
Trailer Tow Connector	8W-52-5

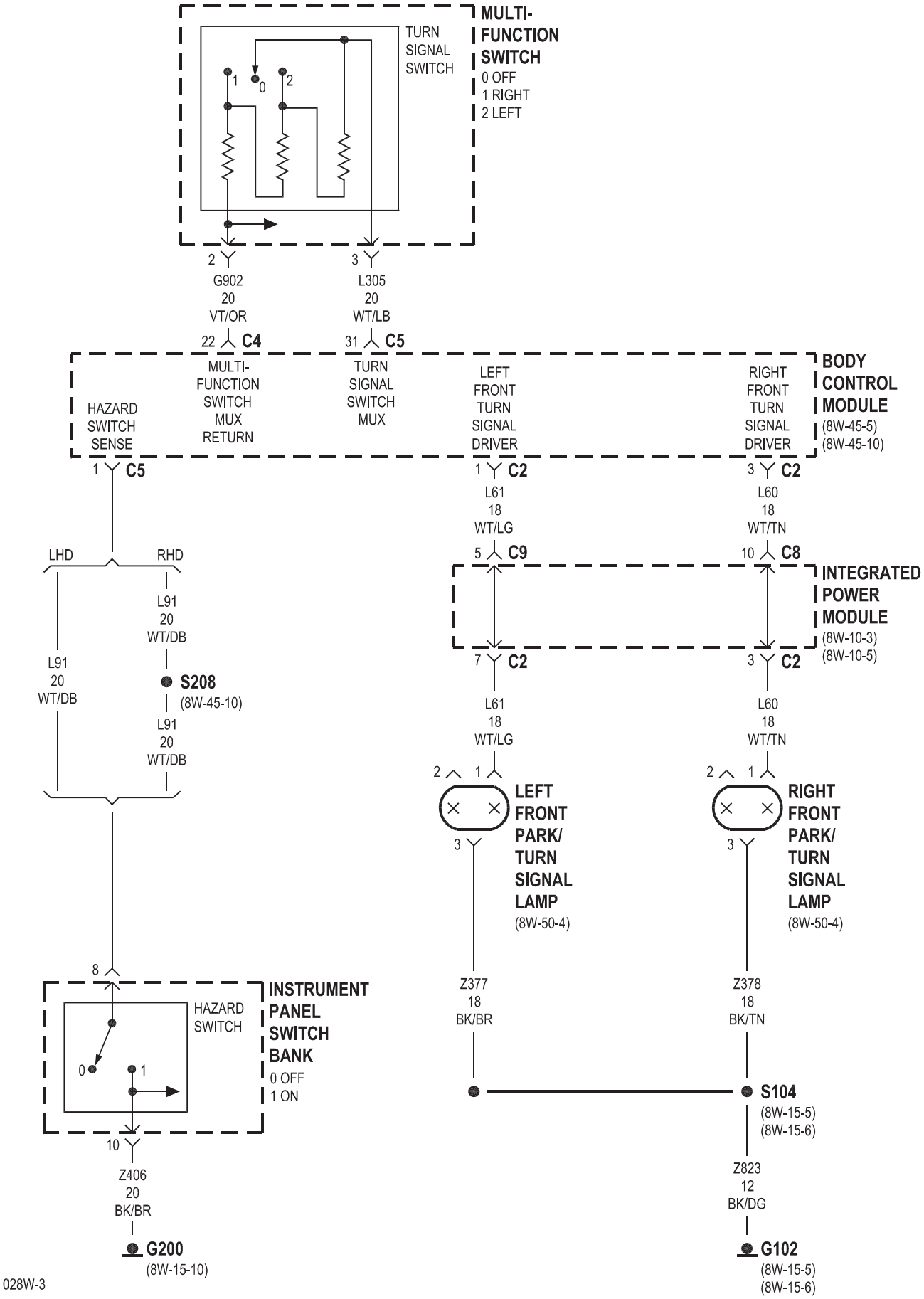
MULTI-
FUNCTION
SWITCH
0 OFF
1 RIGHT
2 LEFT
TURN
SIGNAL
SWITCH
1
0
2
2
G902
20
VT/OR
3
L305
20
WT/LB
22 C4
31 C5
MULTI-
FUNCTION
SWITCH
MUX
RETURN
TURN
SIGNAL
SWITCH
MUX
LEFT
FRONT
TURN
SIGNAL
DRIVER
RIGHT
FRONT
TURN
SIGNAL
DRIVER
BODY
CONTROL
MODULE
(8W-45-5)
(8W-45-10)
HAZARD
SWITCH
SENSE
1 C5
1 C2
3 C2
L61
18
WT/LG
L60
18
WT/TN
5 C9
10 C8
INTEGRATED
POWER
MODULE
(8W-10-3)
(8W-10-5)
LHD
RHD
L91
20
WT/DB
L91
20
WT/DB
S208
(8W-45-10)
L91
20
WT/DB
7 C2
3 C2
L61
18
WT/LG
L60
18
WT/TN
2 1
2 1
LEFT
FRONT
PARK/
TURN
SIGNAL
LAMP
(8W-50-4)
RIGHT
FRONT
PARK/
TURN
SIGNAL
LAMP
(8W-50-4)
3
3
8
Z377
18
BK/BR
Z378
18
BK/TN
INSTRUMENT
PANEL
SWITCH
BANK
0 OFF
1 ON
HAZARD
SWITCH
0
1
S104
(8W-15-5)
(8W-15-6)
10
Z823
12
BK/DG
Z406
20
BK/BR
G200
(8W-15-10)
G102
(8W-15-5)
(8W-15-6)

8W-52 TURN SIGNALS
BUILT-UP-EXPORT

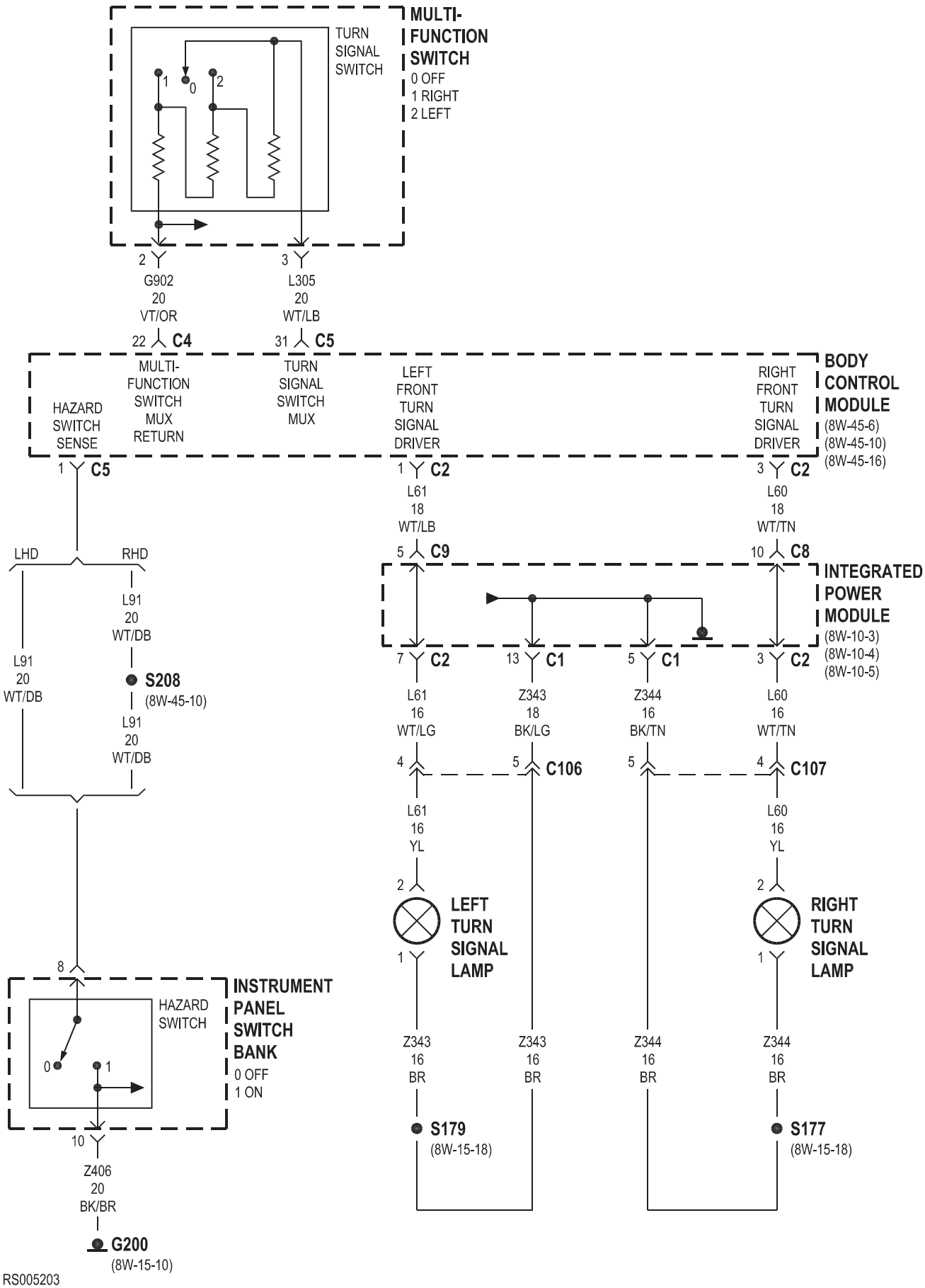

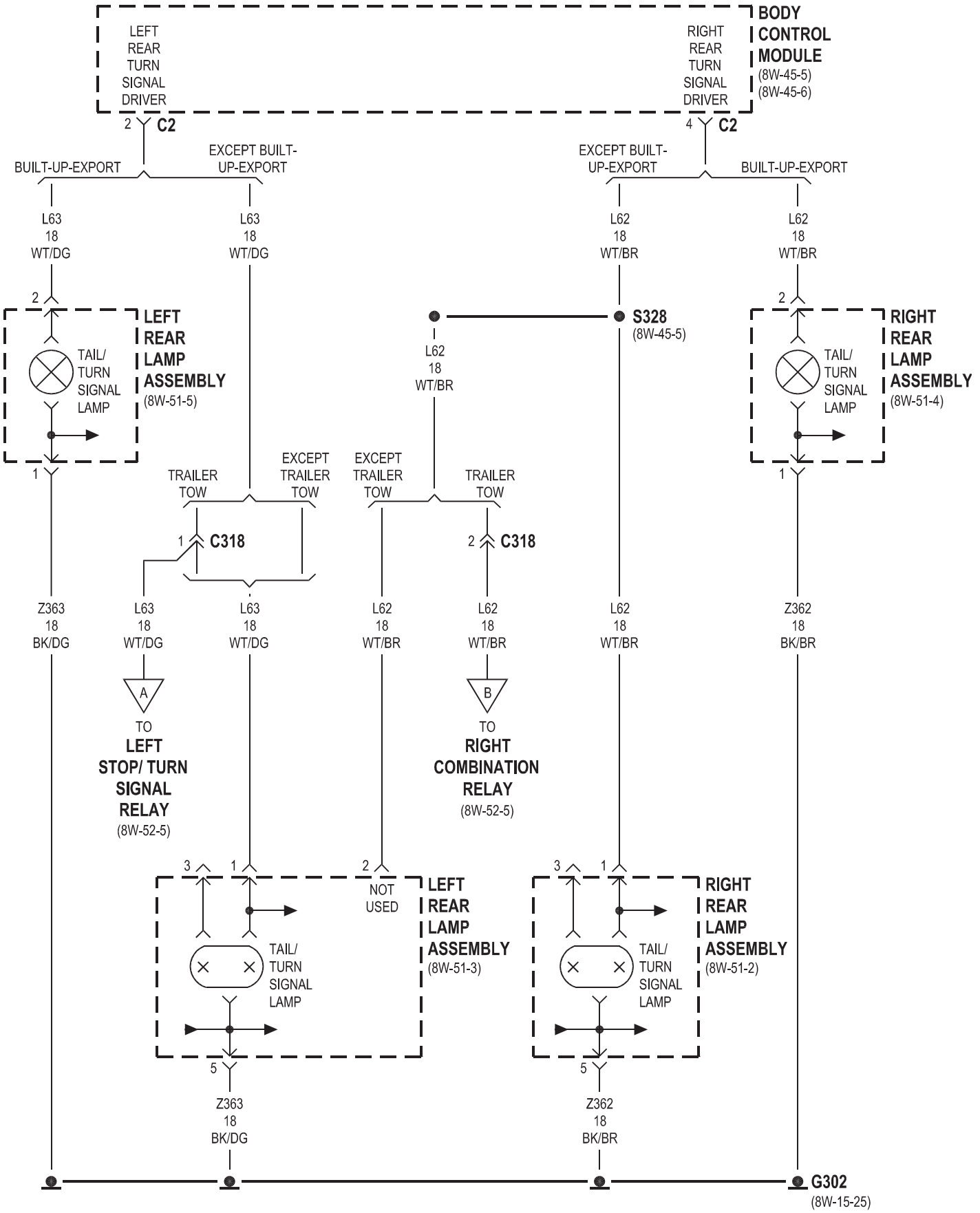
BODY CONTROL MODULE
(8W-45-5)
(8W-45-6)
LEFT REAR TURN SIGNAL DRIVER
RIGHT REAR TURN SIGNAL DRIVER
2 C2
4 C2
BUILT-UP-EXPORT
EXCEPT BUILT-UP-EXPORT
EXCEPT BUILT-UP-EXPORT
BUILT-UP-EXPORT
L63 18 WT/DG
L63 18 WT/DG
L62 18 WT/BR
L62 18 WT/BR
S328
(8W-45-5)
L62 18 WT/BR
LEFT REAR LAMP ASSEMBLY
(8W-51-5)
TAIL/ TURN SIGNAL LAMP
RIGHT REAR LAMP ASSEMBLY
(8W-51-4)
TRAILER TOW
EXCEPT TRAILER TOW
EXCEPT TRAILER TOW
TRAILER TOW
1 C318
2 C318
Z363 18 BK/DG
L63 18 WT/DG
L63 18 WT/DG
L62 18 WT/BR
L62 18 WT/BR
L62 18 WT/BR
Z362 18 BK/BR
A
B
TO LEFT STOP/ TURN SIGNAL RELAY
(8W-52-5)
TO RIGHT COMBINATION RELAY
(8W-52-5)
NOT USED
LEFT REAR LAMP ASSEMBLY
(8W-51-3)
RIGHT REAR LAMP ASSEMBLY
(8W-51-2)
Z363 18 BK/DG
Z362 18 BK/BR
G302
(8W-15-25)

EXCEPT BUILT-UP-EXPORT

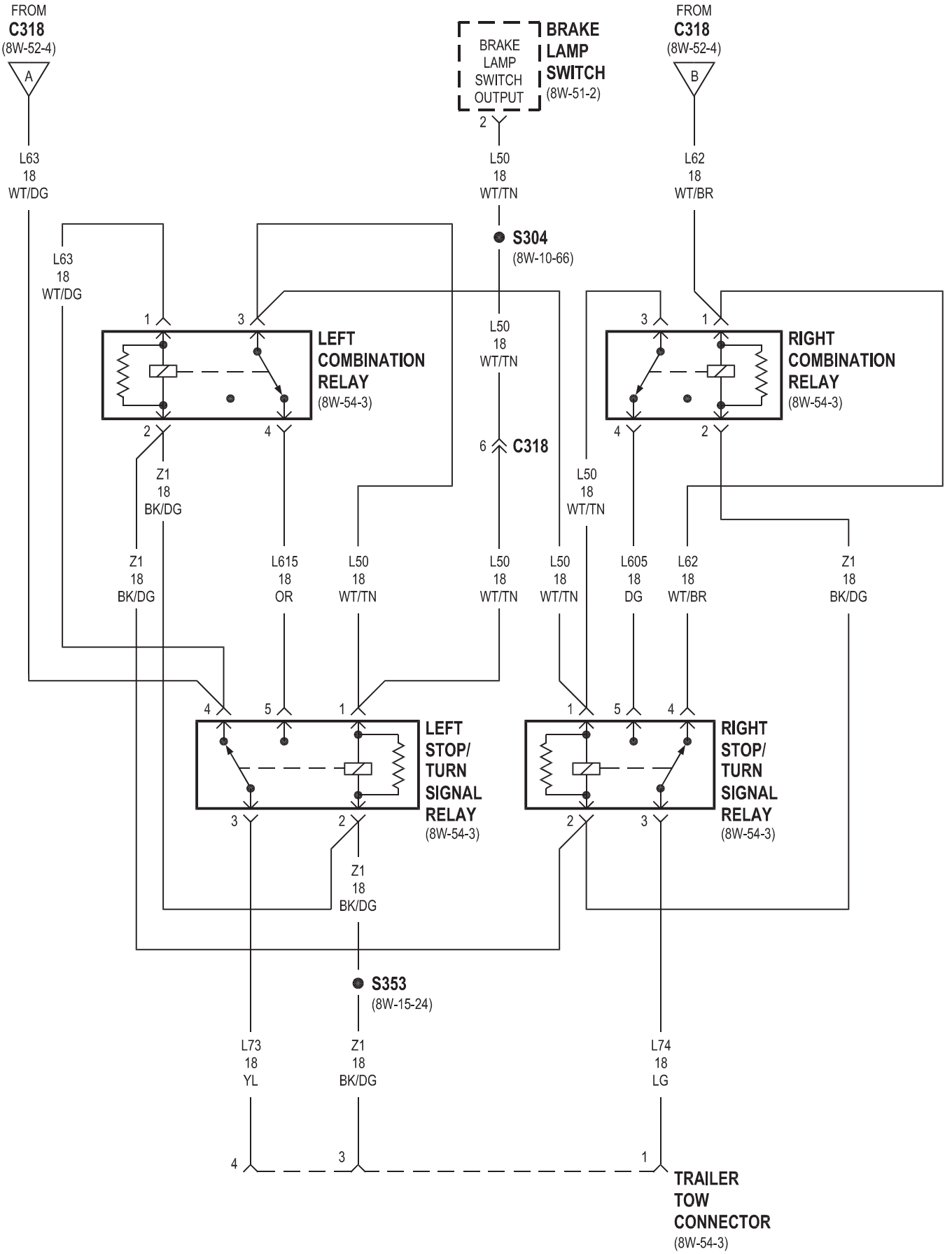

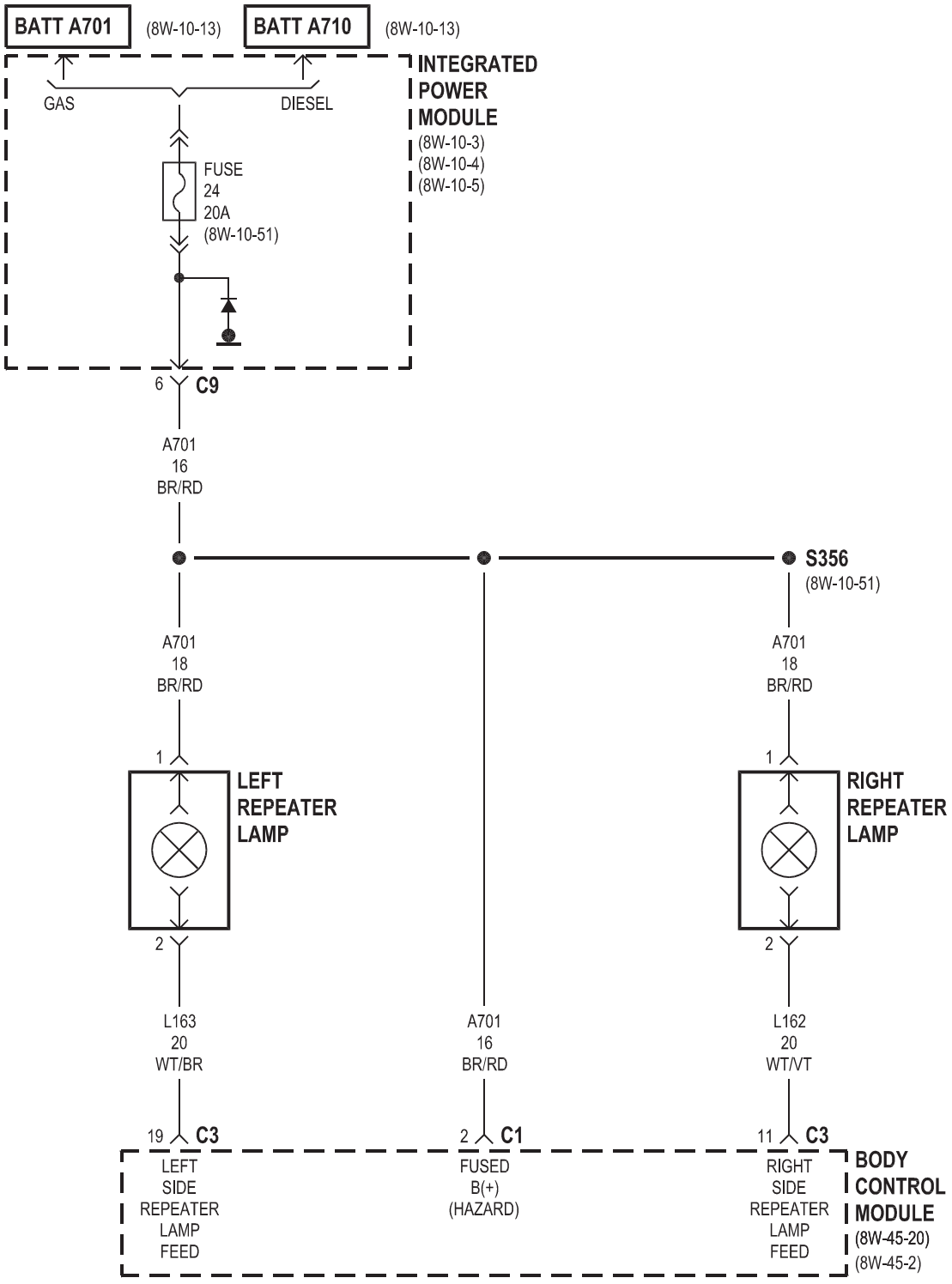
BATT A701
(8W-10-13)
BATT A710
(8W-10-13)
GAS
DIESEL
INTEGRATED POWER MODULE
(8W-10-3)
(8W-10-4)
(8W-10-5)
FUSE 24 20A
(8W-10-51)
6
C9
A701 16 BR/RD
S356
(8W-10-51)
A701 18 BR/RD
A701 18 BR/RD
1
1
LEFT REPEATER LAMP
RIGHT REPEATER LAMP
2
2
L163 20 WT/BR
A701 16 BR/RD
L162 20 WT/VT
19
C3
2
C1
11
C3
LEFT SIDE REPEATER LAMP FEED
FUSED B(+) (HAZARD)
RIGHT SIDE REPEATER LAMP FEED
BODY CONTROL MODULE
(8W-45-20)
(8W-45-2)

8W-53 WIPERS

Component	Page
Accessory Relay	8W-53-3
Body Control Module	8W-53-3, 5, 6
Diagnostic Junction Port	8W-53-5
Front Control Module	8W-53-2, 3, 4, 5
Front Washer Pump Motor	8W-53-3
Front Wiper Hi/Low Relay	8W-53-2
Front Wiper On/Off Relay	8W-53-2
Fuse 4	8W-53-2
Fuse 11	8W-53-3
Fuse 30	8W-53-4
Fuse 33	8W-53-3
G102	8W-53-4
G200	8W-53-6
G300	8W-53-2
G400	8W-53-3
Headlamp Washer Pump Motor	8W-53-4
Headlamp Washer Relay	8W-53-4
Instrument Panel Switch Bank	8W-53-6
Integrated Power Module	8W-53-2, 3, 4, 5
Multi- Function Switch	8W-53-5
Rear Washer Pump Motor	8W-53-3
Rear Wiper Motor	8W-53-3
Washer Fluid Level Switch	8W-53-4
Wiper Module	8W-53-2

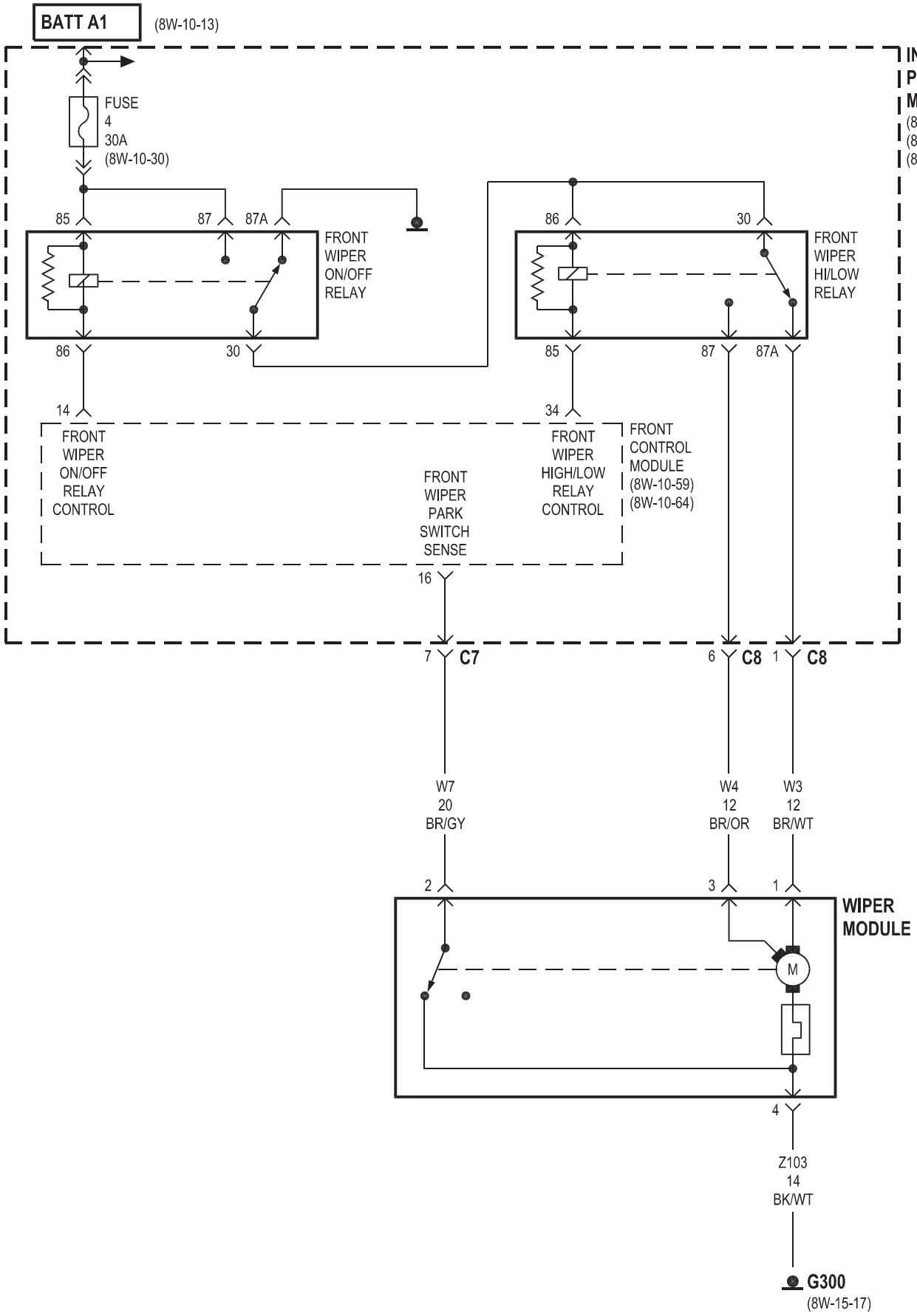
BATT A1
(8W-10-13)
INTEGRATED POWER MODULE
(8W-10-3)
(8W-10-4)
(8W-10-5)
FUSE
4
30A
(8W-10-30)
85
87
87A
FRONT WIPER ON/OFF RELAY
86
30
86
30
FRONT WIPER HI/LOW RELAY
85
87
87A
14
34
FRONT WIPER ON/OFF RELAY CONTROL
FRONT WIPER PARK SWITCH SENSE
FRONT WIPER HIGH/LOW RELAY CONTROL
FRONT CONTROL MODULE
(8W-10-59)
(8W-10-64)
16
7
C7
6
C8
1
C8
W7
20
BR/GY
W4
12
BR/OR
W3
12
BR/WT
2
3
1
WIPER MODULE
M
4
Z103
14
BK/WT
G300
(8W-15-17)

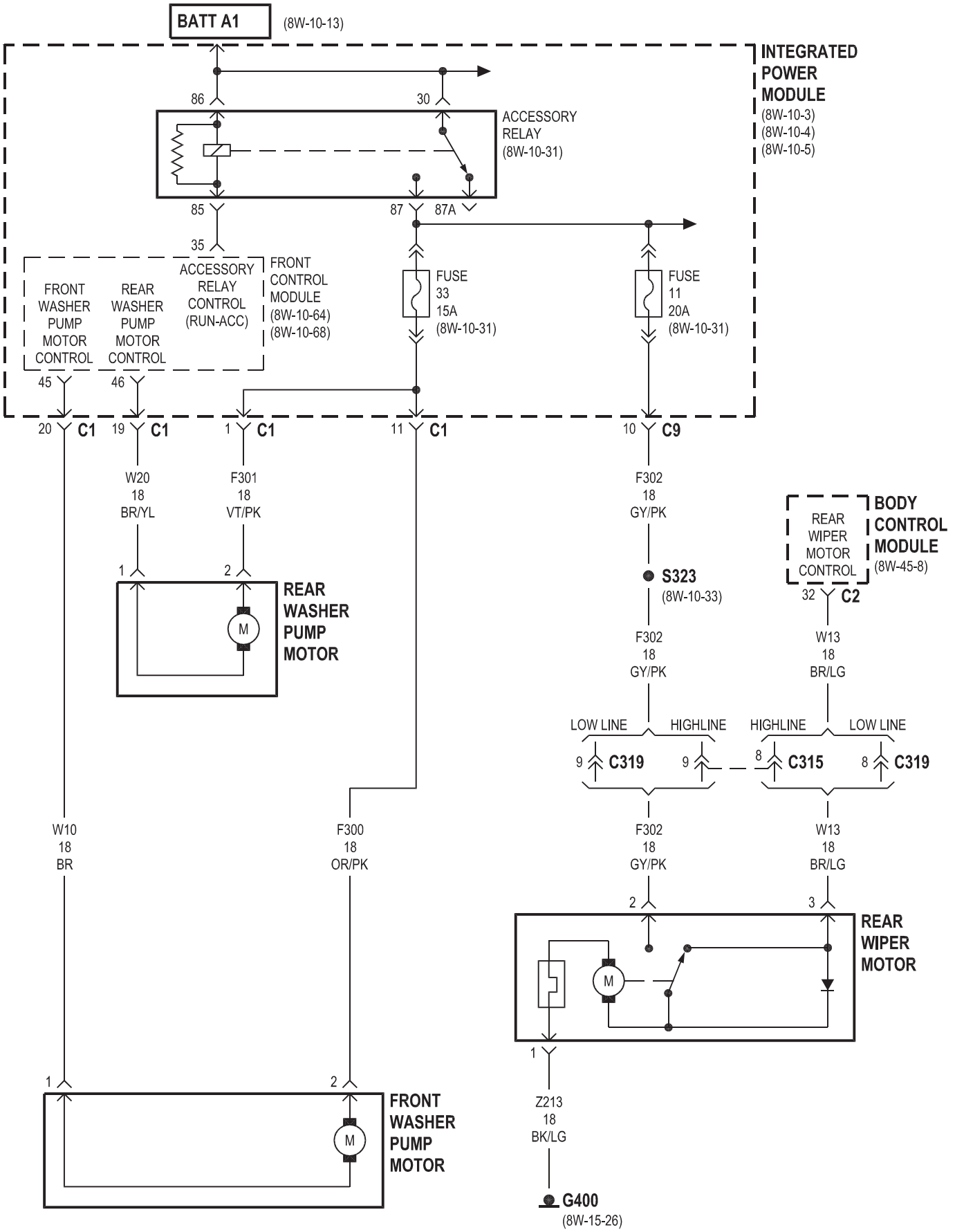
BATT A1
(8W-10-13)
INTEGRATED POWER MODULE
(8W-10-3)
(8W-10-4)
(8W-10-5)
86
30
ACCESSORY RELAY
(8W-10-31)
85
87
87A
35
FRONT WASHER PUMP MOTOR CONTROL
REAR WASHER PUMP MOTOR CONTROL
ACCESSORY RELAY CONTROL (RUN-ACC)
FRONT CONTROL MODULE
(8W-10-64)
(8W-10-68)
FUSE 33 15A
(8W-10-31)
FUSE 11 20A
(8W-10-31)
45
46
20 C1
19 C1
1 C1
11 C1
10 C9
W20 18 BR/YL
F301 18 VT/PK
F302 18 GY/PK
REAR WASHER PUMP MOTOR
M
S323
(8W-10-33)
REAR WIPER MOTOR CONTROL
BODY CONTROL MODULE
(8W-45-8)
32 C2
W13 18 BR/LG
LOW LINE
HIGHLINE
9 C319
8 C315
W10 18 BR
F300 18 OR/PK
2
3
REAR WIPER MOTOR
FRONT WASHER PUMP MOTOR
Z213 18 BK/LG
G400
(8W-15-26)

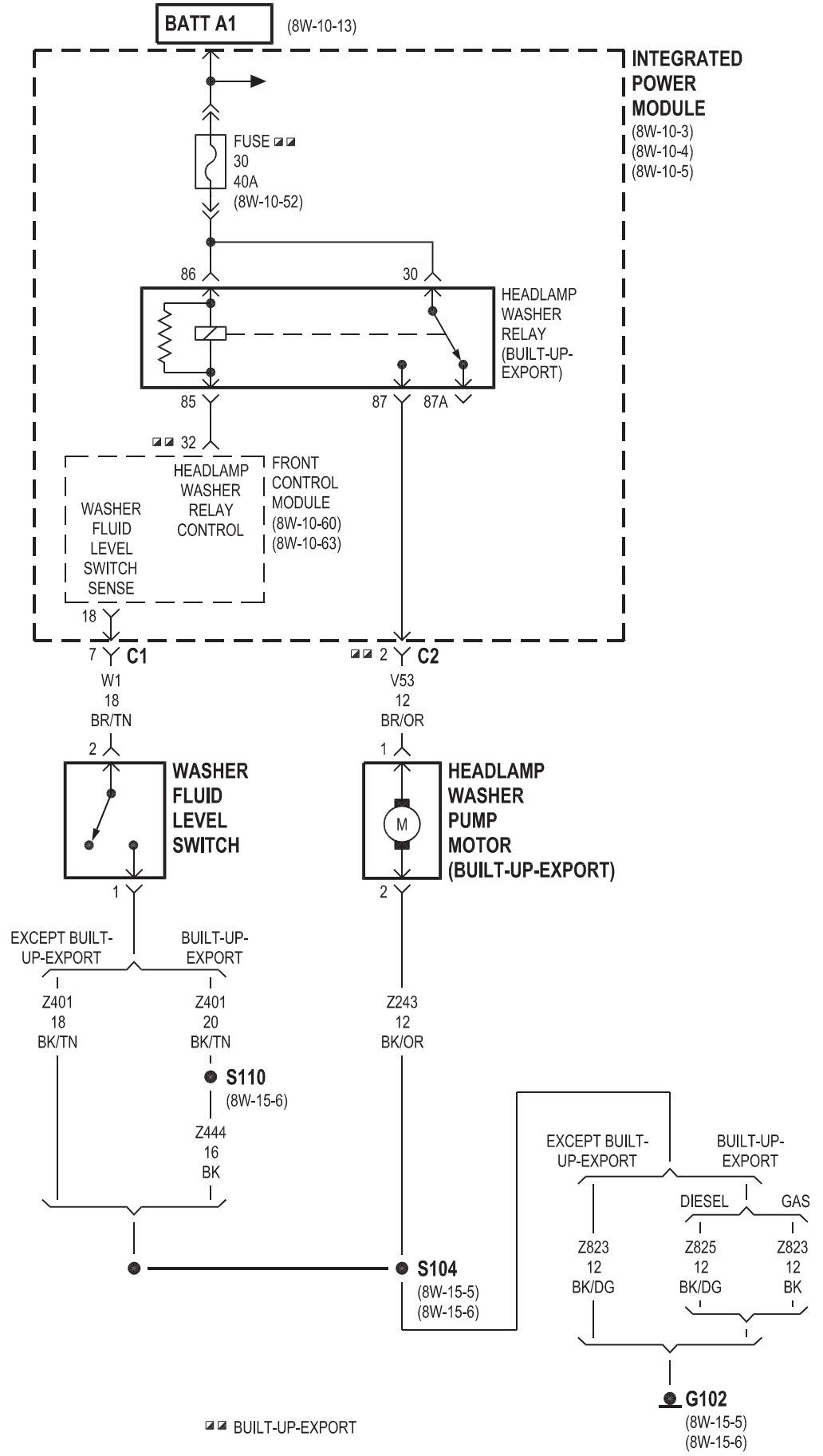

BUILT-UP-EXPORT

RS005304

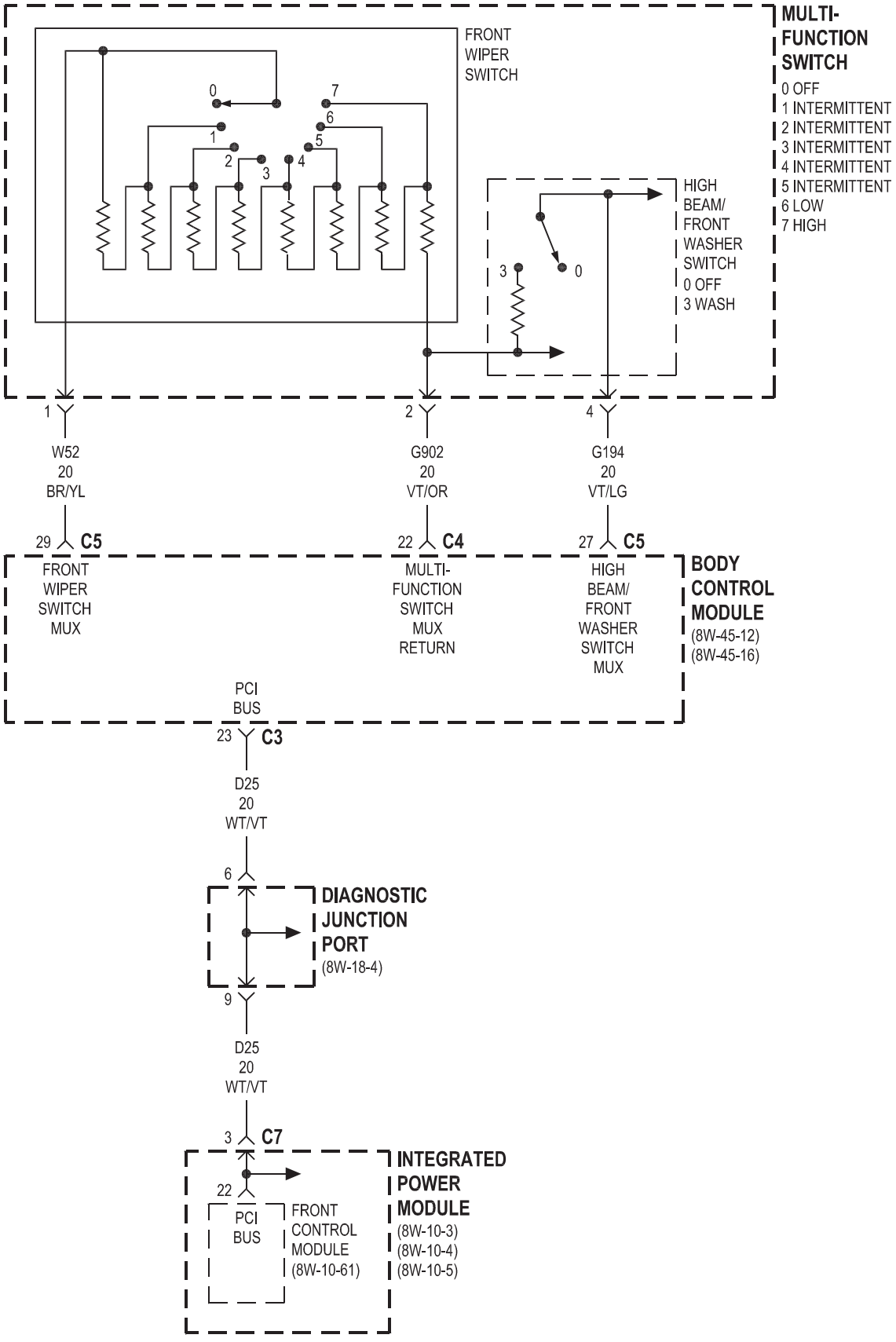
MULTI-
FUNCTION
SWITCH
0 OFF
1 INTERMITTENT
2 INTERMITTENT
3 INTERMITTENT
4 INTERMITTENT
5 INTERMITTENT
6 LOW
7 HIGH
FRONT
WIPER
SWITCH
0
1
2
3
4
5
6
7
HIGH
BEAM/
FRONT
WASHER
SWITCH
0 OFF
3 WASH
3
0
1
2
4
W52
20
BR/YL
G902
20
VT/OR
G194
20
VT/LG
29 C5
22 C4
27 C5
FRONT
WIPER
SWITCH
MUX
MULTI-
FUNCTION
SWITCH
MUX
RETURN
HIGH
BEAM/
FRONT
WASHER
SWITCH
MUX
BODY
CONTROL
MODULE
(8W-45-12)
(8W-45-16)
PCI
BUS
23 C3
D25
20
WT/VT
6
DIAGNOSTIC
JUNCTION
PORT
(8W-18-4)
9
D25
20
WT/VT
3 C7
22
PCI
BUS
FRONT
CONTROL
MODULE
(8W-10-61)
INTEGRATED
POWER
MODULE
(8W-10-3)
(8W-10-4)
(8W-10-5)

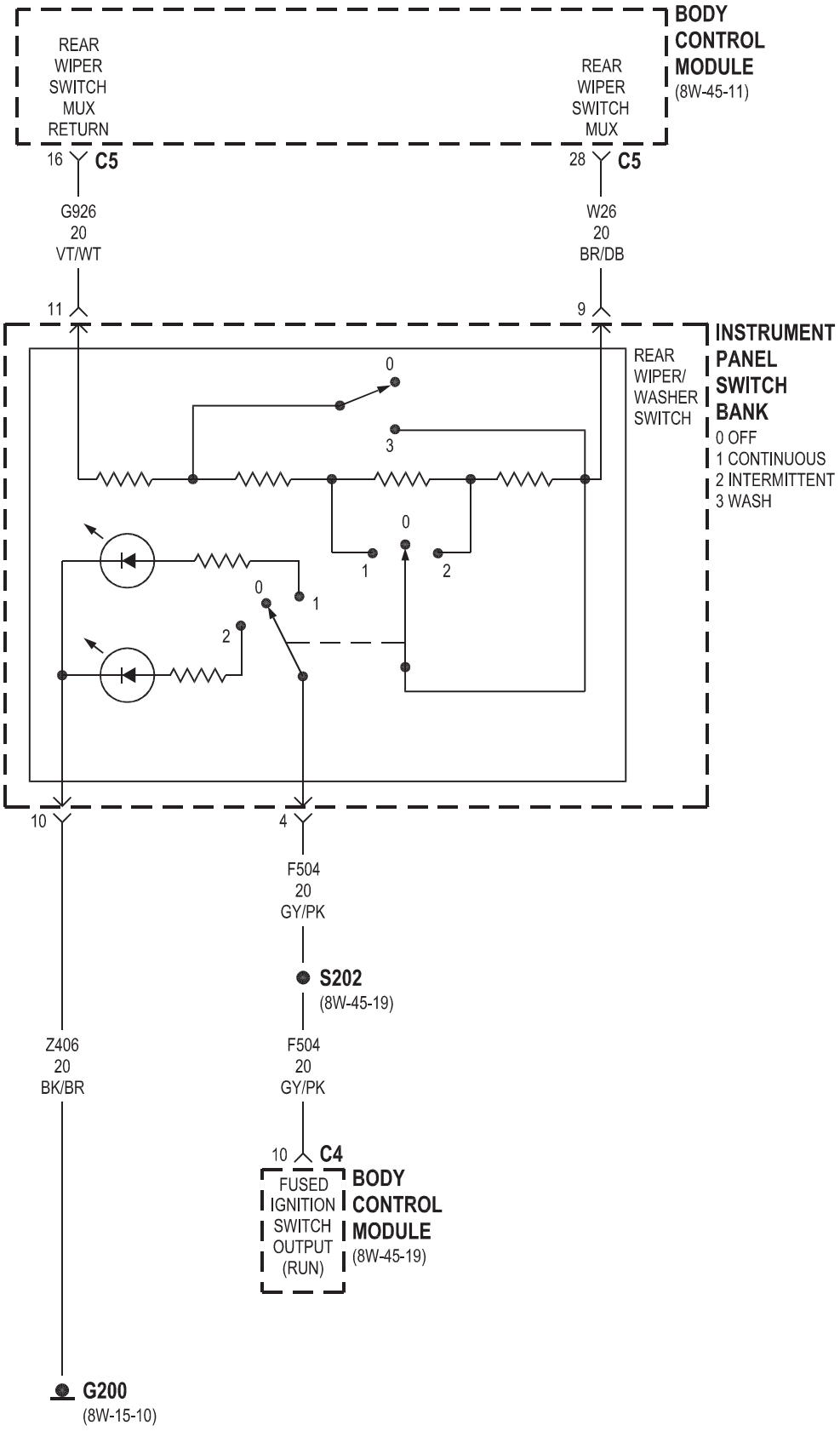
BODY CONTROL MODULE
(8W-45-11)
REAR WIPER SWITCH MUX RETURN
REAR WIPER SWITCH MUX
16 C5
28 C5
G926 20 VT/WT
W26 20 BR/DB
11
9
INSTRUMENT PANEL SWITCH BANK
REAR WIPER/ WASHER SWITCH
0 OFF
1 CONTINUOUS
2 INTERMITTENT
3 WASH
0
3
0
1
2
0
1
2
10
4
F504 20 GY/PK
S202
(8W-45-19)
Z406 20 BK/BR
F504 20 GY/PK
10 C4
FUSED IGNITION SWITCH OUTPUT (RUN)
BODY CONTROL MODULE
(8W-45-19)
G200
(8W-15-10)

8W-54 TRAILER TOW

Component	Page
Body Control Module	8W-54-2
Brake Lamp Switch	8W-54-2
Front Control Module	8W-54-2
Fuse 2	8W-54-2
G302	8W-54-2
Integrated Power Module	8W-54-2
Left Combination Relay	8W-54-3
Left Rear Lamp Assembly	8W-54-2
Left Stop/Turn Signal Relay	8W-54-2, 3
Park Lamp Relay	8W-54-2
Right Combination Relay	8W-54-2, 3
Right Stop/Turn Signal Relay	8W-54-3
Trailer Tow Connector	8W-54-2, 3

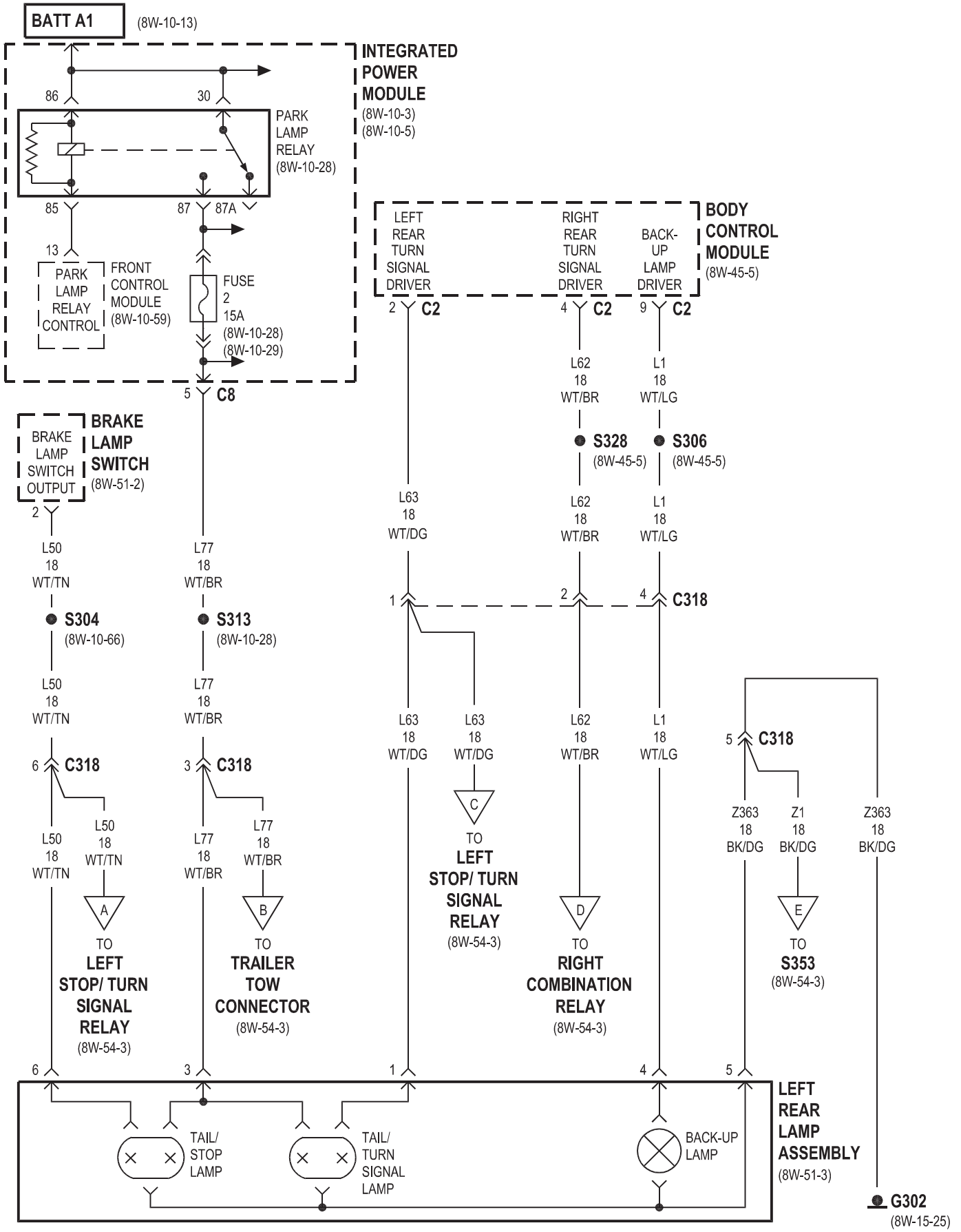
BATT A1
(8W-10-13)
INTEGRATED POWER MODULE
(8W-10-3)
(8W-10-5)
86
30
PARK LAMP RELAY
(8W-10-28)
85
87
87A
13
PARK LAMP RELAY CONTROL
FRONT CONTROL MODULE
(8W-10-59)
FUSE 2 15A
(8W-10-28)
(8W-10-29)
5
C8
BODY CONTROL MODULE
(8W-45-5)
LEFT REAR TURN SIGNAL DRIVER
RIGHT REAR TURN SIGNAL DRIVER
BACK-UP LAMP DRIVER
2 C2
4 C2
9 C2
L62 18 WT/BR
L1 18 WT/LG
S328
(8W-45-5)
S306
(8W-45-5)
BRAKE LAMP SWITCH OUTPUT
BRAKE LAMP SWITCH
(8W-51-2)
2
L50 18 WT/TN
L77 18 WT/BR
L63 18 WT/DG
L62 18 WT/BR
L1 18 WT/LG
S304
(8W-10-66)
S313
(8W-10-28)
1
2
4 C318
6 C318
3 C318
5 C318
L50 18 WT/TN
L77 18 WT/BR
L63 18 WT/DG
Z363 18 BK/DG
Z1 18 BK/DG
A
B
C
D
E
TO LEFT STOP/ TURN SIGNAL RELAY
(8W-54-3)
TO TRAILER TOW CONNECTOR
(8W-54-3)
TO LEFT STOP/ TURN SIGNAL RELAY
(8W-54-3)
TO RIGHT COMBINATION RELAY
(8W-54-3)
TO S353
(8W-54-3)
6
3
1
4
5
TAIL/ STOP LAMP
TAIL/ TURN SIGNAL LAMP
BACK-UP LAMP
LEFT REAR LAMP ASSEMBLY
(8W-51-3)
G302
(8W-15-25)

EXCEPT BUILT-UP-EXPORT

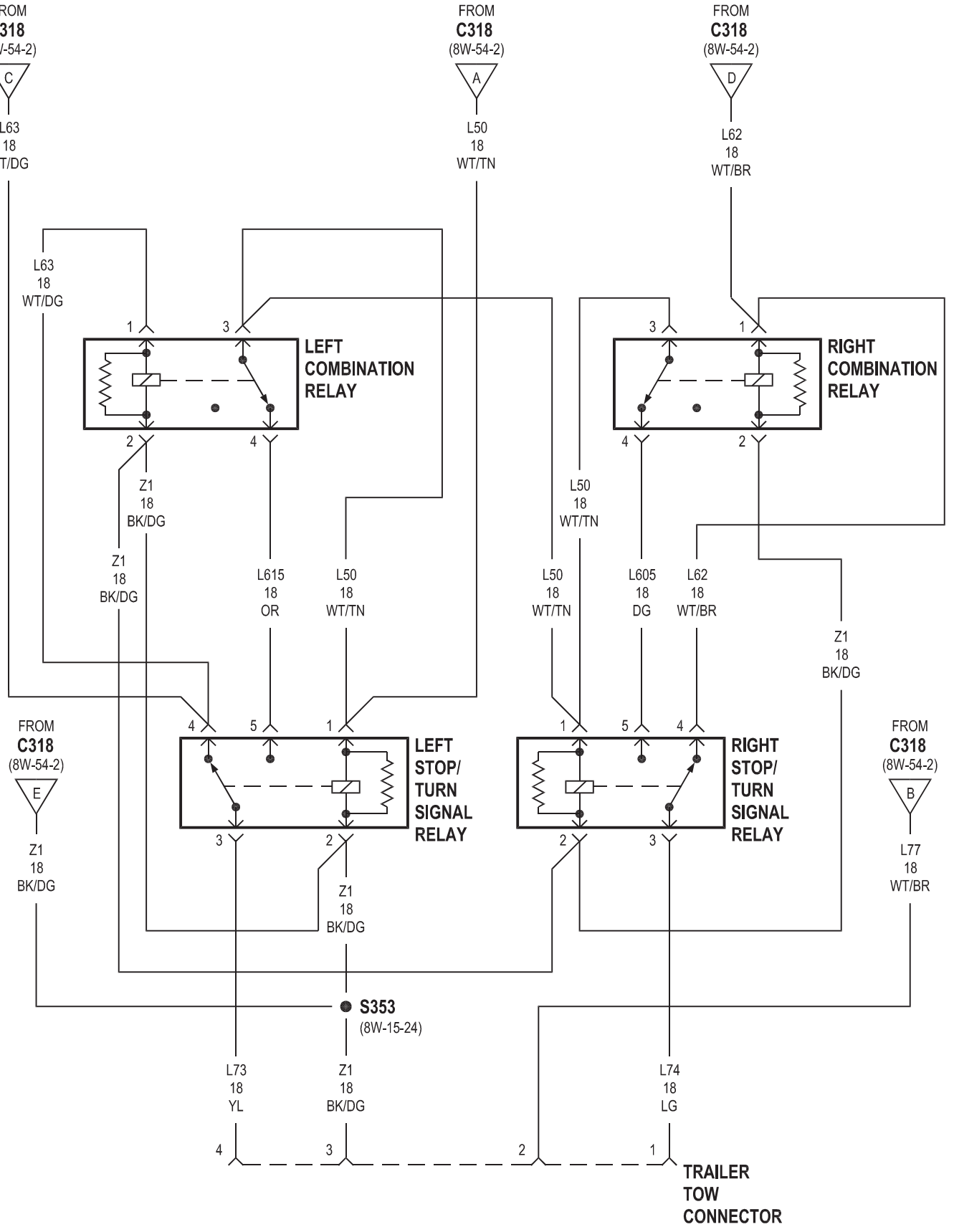

8W-60 POWER WINDOWS

Component	Page
Accessory Relay	8W-60-2
Driver Power Window Motor	8W-60-3, 4, 6
Driver Power Window Switch	8W-60-3, 4, 5, 6, 7
Front Control Module	8W-60-2
Fuse 28	8W-60-2
G300	8W-60-3, 4, 7
G301	8W-60-5, 6
Integrated Power Module	8W-60-2
Left Rear Vent Motor	8W-60-3, 6
Passenger Power Window Motor	8W-60-5, 7
Passenger Power Window Switch	8W-60-5, 7
Power Window Circuit Breaker	8W-60-2
Power Window Switch	8W-60-4, 5
Right Rear Vent Motor	8W-60-3, 6

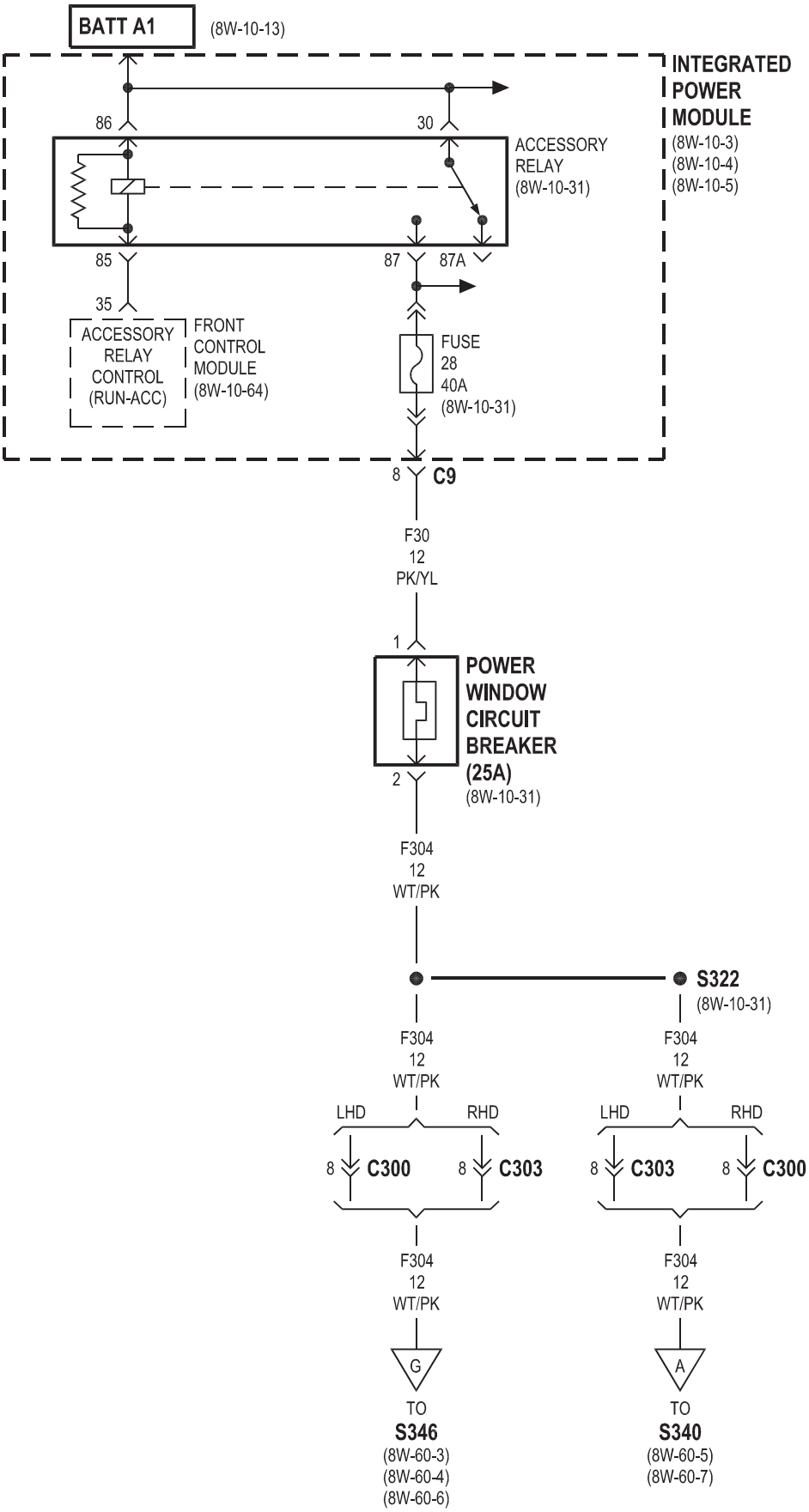
BATT A1
(8W-10-13)
INTEGRATED POWER MODULE
(8W-10-3)
(8W-10-4)
(8W-10-5)
86
30
ACCESSORY RELAY
(8W-10-31)
85
87
87A
35
ACCESSORY RELAY CONTROL (RUN-ACC)
FRONT CONTROL MODULE
(8W-10-64)
FUSE
28
40A
(8W-10-31)
8
C9
F30
12
PK/YL
1
POWER WINDOW CIRCUIT BREAKER
(25A)
(8W-10-31)
2
F304
12
WT/PK
S322
(8W-10-31)
F304
12
WT/PK
LHD
RHD
8
C300
8
C303
F304
12
WT/PK
G
TO
S346
(8W-60-3)
(8W-60-4)
(8W-60-6)
F304
12
WT/PK
LHD
RHD
8
C303
8
C300
F304
12
WT/PK
A
TO
S340
(8W-60-5)
(8W-60-7)

LHD HIGHLINE

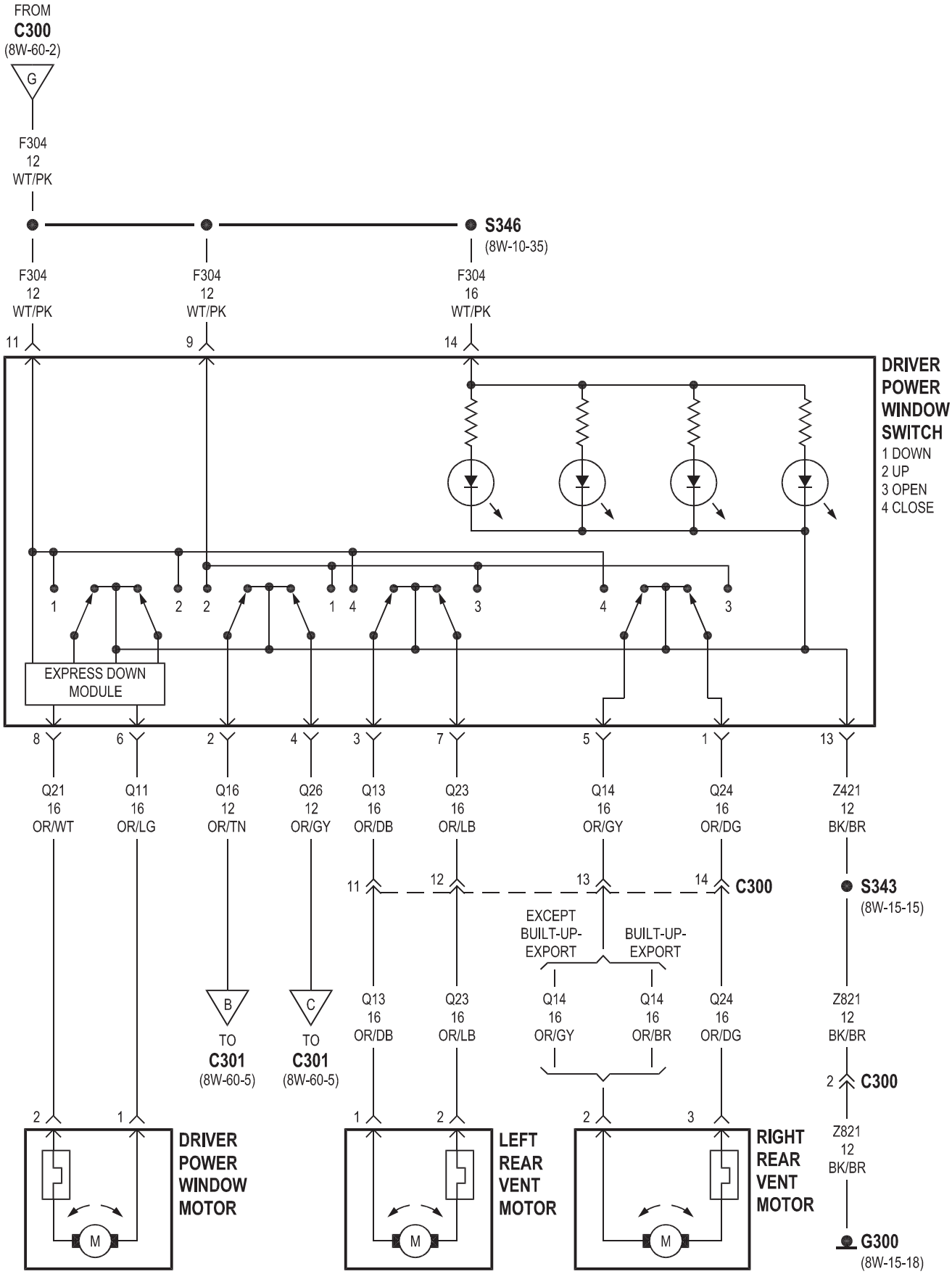

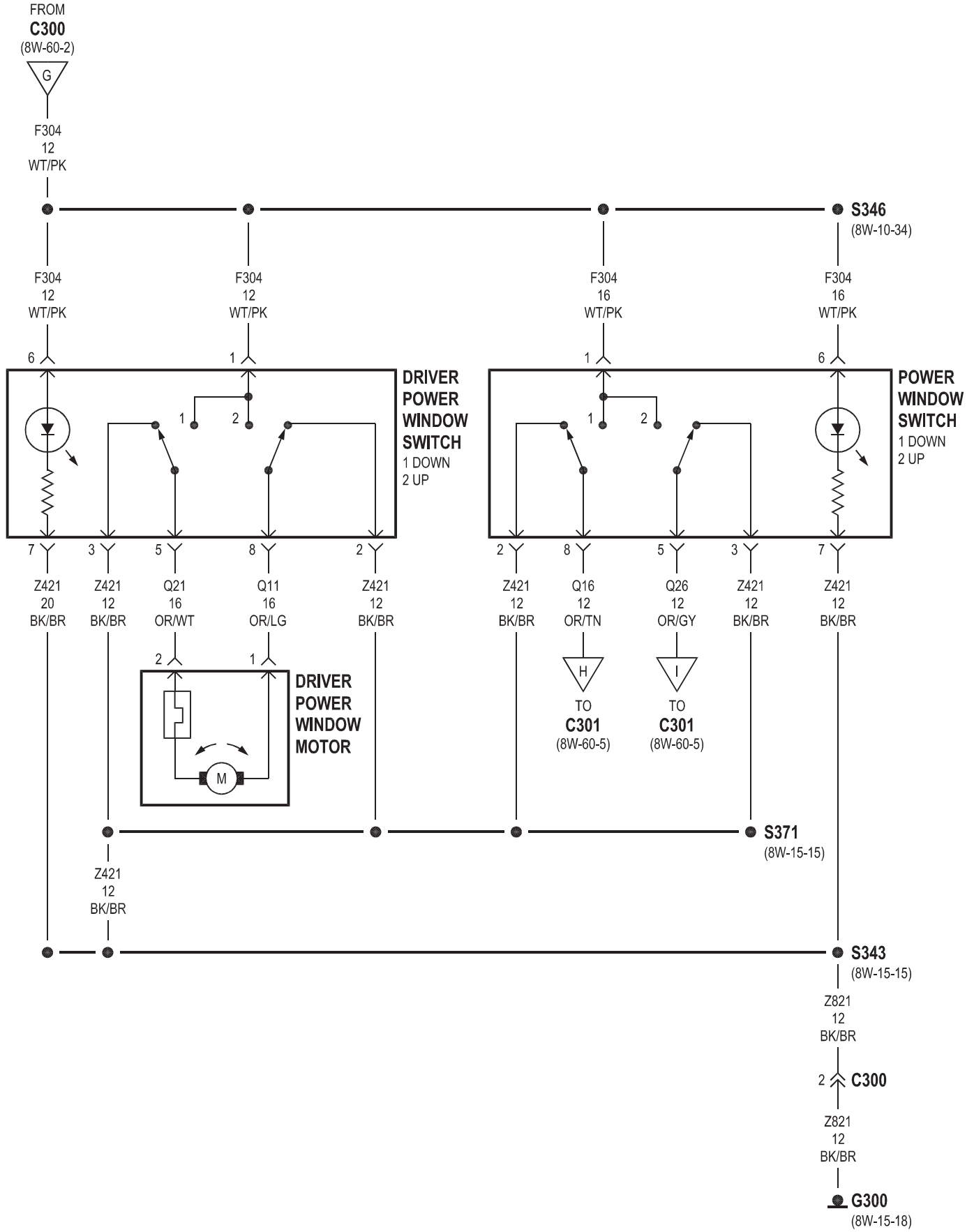
FROM
C300
(8W-60-2)
G
F304
12
WT/PK
S346
(8W-10-34)
F304
12
WT/PK
F304
12
WT/PK
F304
16
WT/PK
F304
16
WT/PK
6
1
1
6
DRIVER
POWER
WINDOW
SWITCH
1 DOWN
2 UP
POWER
WINDOW
SWITCH
1 DOWN
2 UP
7
3
5
8
2
2
8
5
3
7
Z421
20
BK/BR
Z421
12
BK/BR
Q21
16
OR/WT
Q11
16
OR/LG
Z421
12
BK/BR
Z421
12
BK/BR
Q16
12
OR/TN
Q26
12
OR/GY
Z421
12
BK/BR
Z421
12
BK/BR
2
1
DRIVER
POWER
WINDOW
MOTOR
M
H
TO
C301
(8W-60-5)
I
TO
C301
(8W-60-5)
S371
(8W-15-15)
Z421
12
BK/BR
S343
(8W-15-15)
Z821
12
BK/BR
2
C300
Z821
12
BK/BR
G300
(8W-15-18)

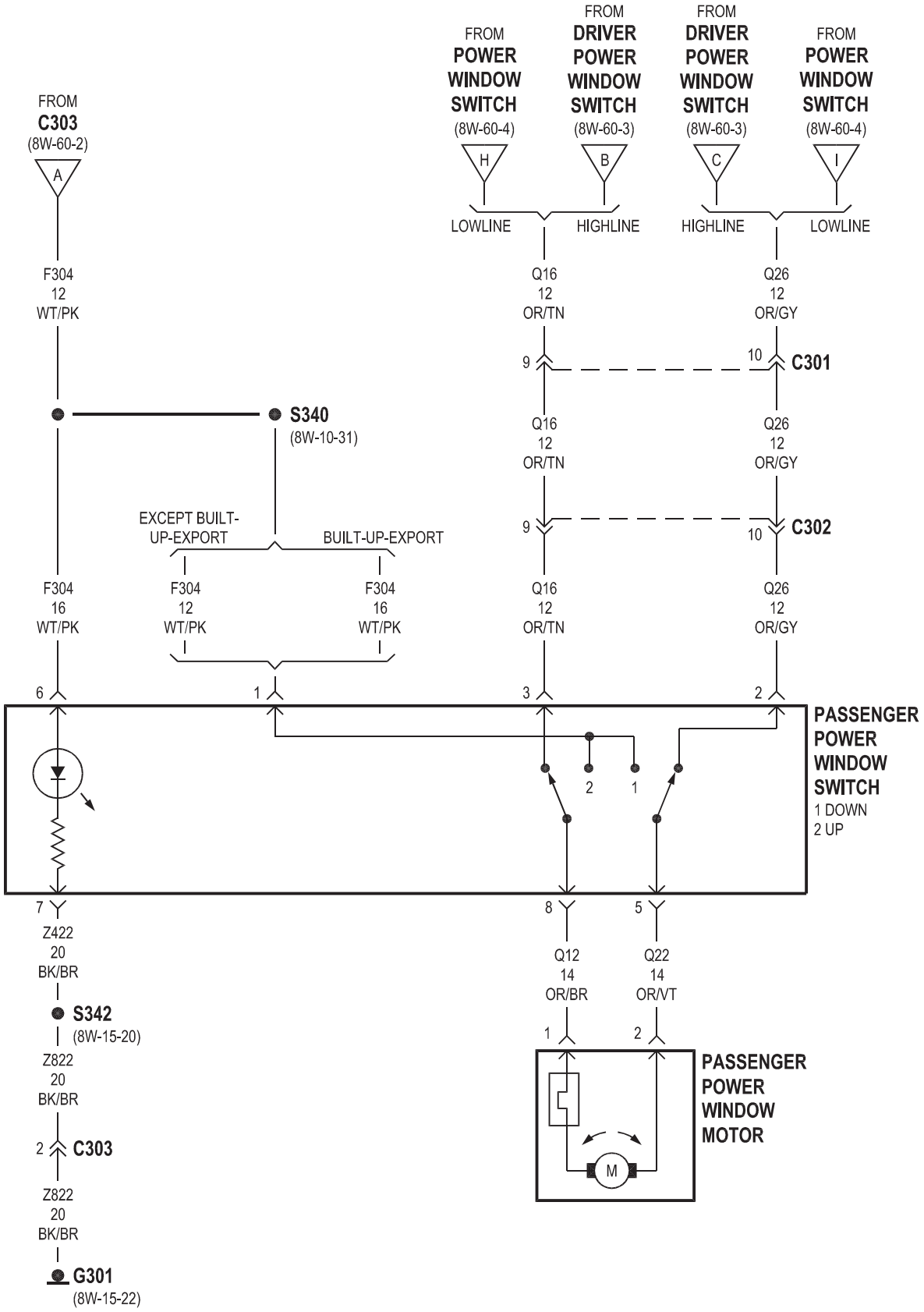
FROM
C303
(8W-60-2)
A
F304
12
WT/PK
S340
(8W-10-31)
EXCEPT BUILT-UP-EXPORT
BUILT-UP-EXPORT
F304
16
WT/PK
F304
12
WT/PK
F304
16
WT/PK
6
1
7
Z422
20
BK/BR
S342
(8W-15-20)
Z822
20
BK/BR
2
C303
Z822
20
BK/BR
G301
(8W-15-22)
FROM
POWER
WINDOW
SWITCH
(8W-60-4)
H
LOWLINE
FROM
DRIVER
POWER
WINDOW
SWITCH
(8W-60-3)
B
HIGHLINE
FROM
DRIVER
POWER
WINDOW
SWITCH
(8W-60-3)
C
HIGHLINE
FROM
POWER
WINDOW
SWITCH
(8W-60-4)
I
LOWLINE
Q16
12
OR/TN
9
10
C301
Q26
12
OR/GY
Q16
12
OR/TN
9
10
C302
Q26
12
OR/GY
Q16
12
OR/TN
3
Q26
12
OR/GY
2
PASSENGER
POWER
WINDOW
SWITCH
1 DOWN
2 UP
2
1
8
5
Q12
14
OR/BR
Q22
14
OR/VT
1
2
M
PASSENGER
POWER
WINDOW
MOTOR

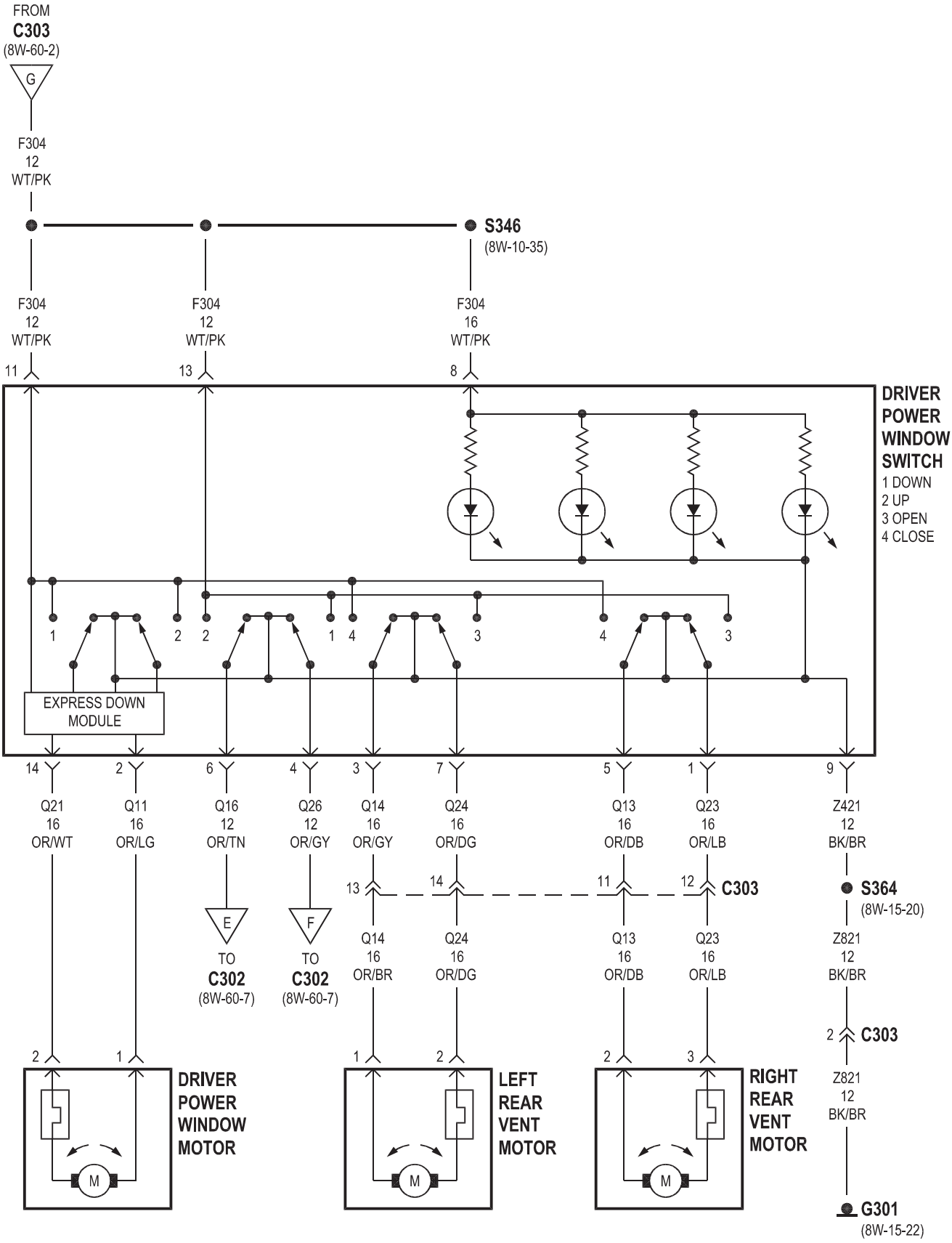
FROM
C303
(8W-60-2)
G
F304
12
WT/PK
S346
(8W-10-35)
F304
12
WT/PK
F304
12
WT/PK
F304
16
WT/PK
11
13
8
DRIVER
POWER
WINDOW
SWITCH
1 DOWN
2 UP
3 OPEN
4 CLOSE
1
2
2
1
4
3
4
3
EXPRESS DOWN
MODULE
14
2
6
4
3
7
5
1
9
Q21
16
OR/WT
Q11
16
OR/LG
Q16
12
OR/TN
Q26
12
OR/GY
Q14
16
OR/GY
Q24
16
OR/DG
Q13
16
OR/DB
Q23
16
OR/LB
Z421
12
BK/BR
13
14
11
12
C303
S364
(8W-15-20)
E
F
TO
C302
(8W-60-7)
TO
C302
(8W-60-7)
Q14
16
OR/BR
Q24
16
OR/DG
Q13
16
OR/DB
Q23
16
OR/LB
Z821
12
BK/BR
2
C303
Z821
12
BK/BR
2
1
1
2
2
3
DRIVER
POWER
WINDOW
MOTOR
LEFT
REAR
VENT
MOTOR
RIGHT
REAR
VENT
MOTOR
M
M
M
G301
(8W-15-22)

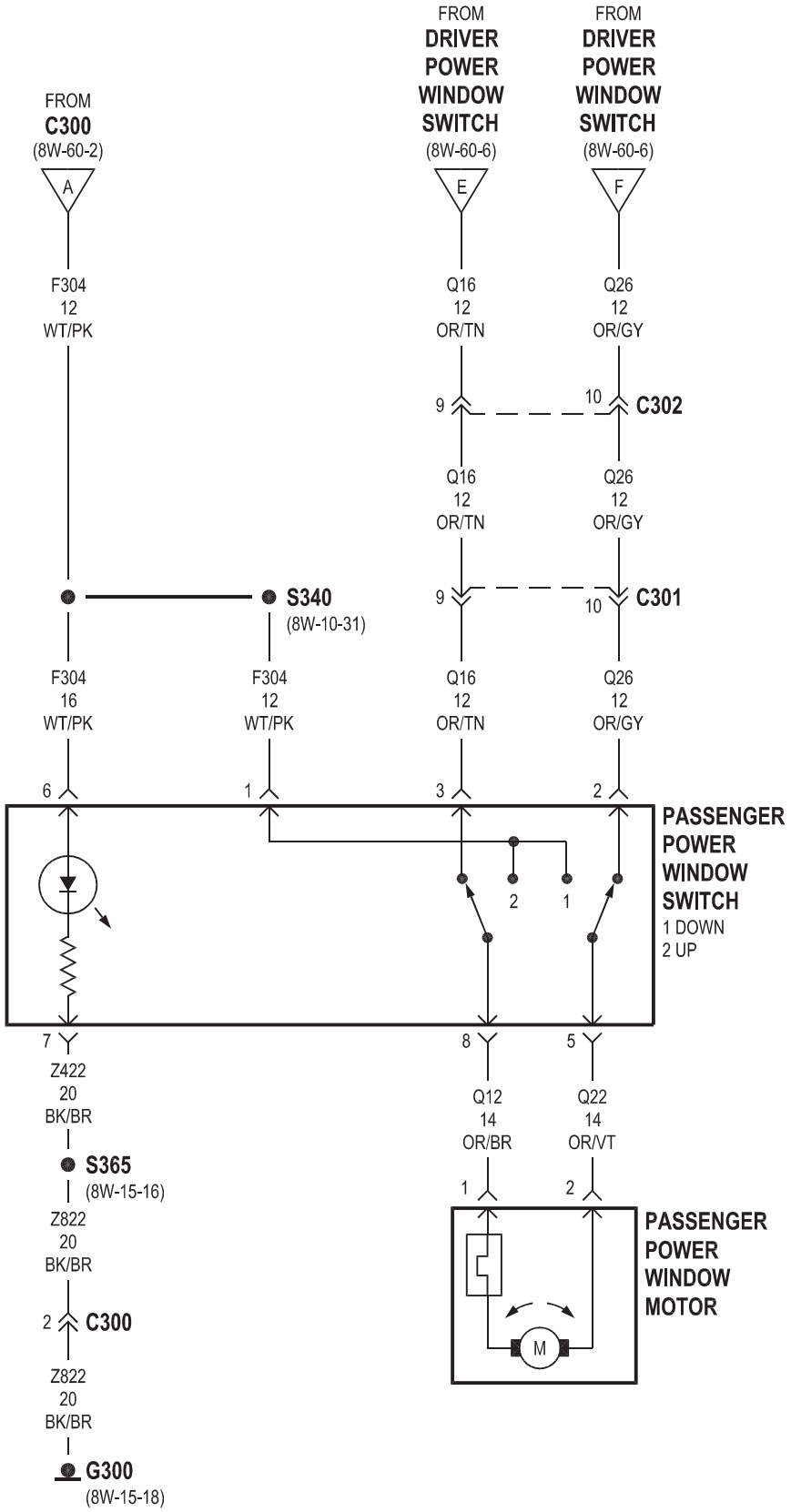
FROM
C300
(8W-60-2)
A
F304
12
WT/PK
FROM
DRIVER
POWER
WINDOW
SWITCH
(8W-60-6)
E
Q16
12
OR/TN
FROM
DRIVER
POWER
WINDOW
SWITCH
(8W-60-6)
F
Q26
12
OR/GY
9
10
C302
Q16
12
OR/TN
Q26
12
OR/GY
S340
(8W-10-31)
9
10
C301
F304
16
WT/PK
F304
12
WT/PK
Q16
12
OR/TN
Q26
12
OR/GY
6
1
3
2
PASSENGER
POWER
WINDOW
SWITCH
1 DOWN
2 UP
2
1
7
8
5
Z422
20
BK/BR
Q12
14
OR/BR
Q22
14
OR/VT
S365
(8W-15-16)
1
2
PASSENGER
POWER
WINDOW
MOTOR
Z822
20
BK/BR
M
2
C300
Z822
20
BK/BR
G300
(8W-15-18)

8W-61 POWER DOOR LOCKS

Component	Page
Accessory Relay	8W-61-2, 3, 4, 7
Body Control Module	8W-61-2, 3, 4, 5, 6, 7, 10, 13, 14, 15, 16, 19
Diagnostic Junction Port	8W-61-7, 10, 16
Driver Door Lock Switch	8W-61-2, 3, 4
Front Control Module	8W-61-7
Fuse 11	8W-61-4, 7
Fuse 14	8W-61-6
Fuse 19	8W-61-5, 13, 14
Fuse 20	8W-61-5, 13, 14
Fuse 28	8W-61-2, 3
Fuse 31	8W-61-7
Fuse 32	8W-61-16
G200	8W-61-6
G300	8W-61-2, 3, 4, 5, 7, 8, 9, 14
G301	8W-61-2, 3, 4, 5, 10, 11, 12, 14
G302	8W-61-16
G400	8W-61-15, 19
Integrated Power Module	8W-61-2, 3, 4, 5, 6, 7, 13, 14, 16
Left B-Pillar Switch	8W-61-7
Left Cinch/Release Motor	8W-61-8
Left Front Door Lock Motor/Ajar Switch	8W-61-5
Left Full Open Switch	8W-61-8
Left Sliding Door Control Module	8W-61-7, 8, 9, 13
Left Sliding Door Latch Sensing Switch	8W-61-7, 9
Left Sliding Door Lock Motor	8W-61-13
Left Sliding Door Lock Motor/Ajar Switch	8W-61-14
Left Sliding Door Motor	8W-61-8
License Lamp	8W-61-18, 19
Liftgate Ajar Switch	8W-61-15
Liftgate Cinch/Release Motor	8W-61-18
Liftgate Left Pinch Sensor	8W-61-18
Liftgate Right Pinch Sensor	8W-61-18
Passenger Door Lock Switch	8W-61-2, 3, 4
Power Liftgate Module	8W-61-16, 17, 18, 19
Power Liftgate Motor	8W-61-17
Power Window Circuit Breaker	8W-61-2, 3
Remote Keyless Entry Antenna	8W-61-6
Remote Keyless Entry Module	8W-61-6
Right B-Pillar Switch	8W-61-7, 10
Right Cinch/Release Motor	8W-61-11
Right Front Door Lock Motor/Ajar Switch	8W-61-5
Right Full Open Switch	8W-61-11
Right Sliding Door Control Module	8W-61-10, 11, 12, 13
Right Sliding Door Latch Sensing Switch	8W-61-10, 12
Right Sliding Door Lock Motor	8W-61-13
Right Sliding Door Lock Motor/Ajar Switch	8W-61-14
Right Sliding Door Motor	8W-61-11

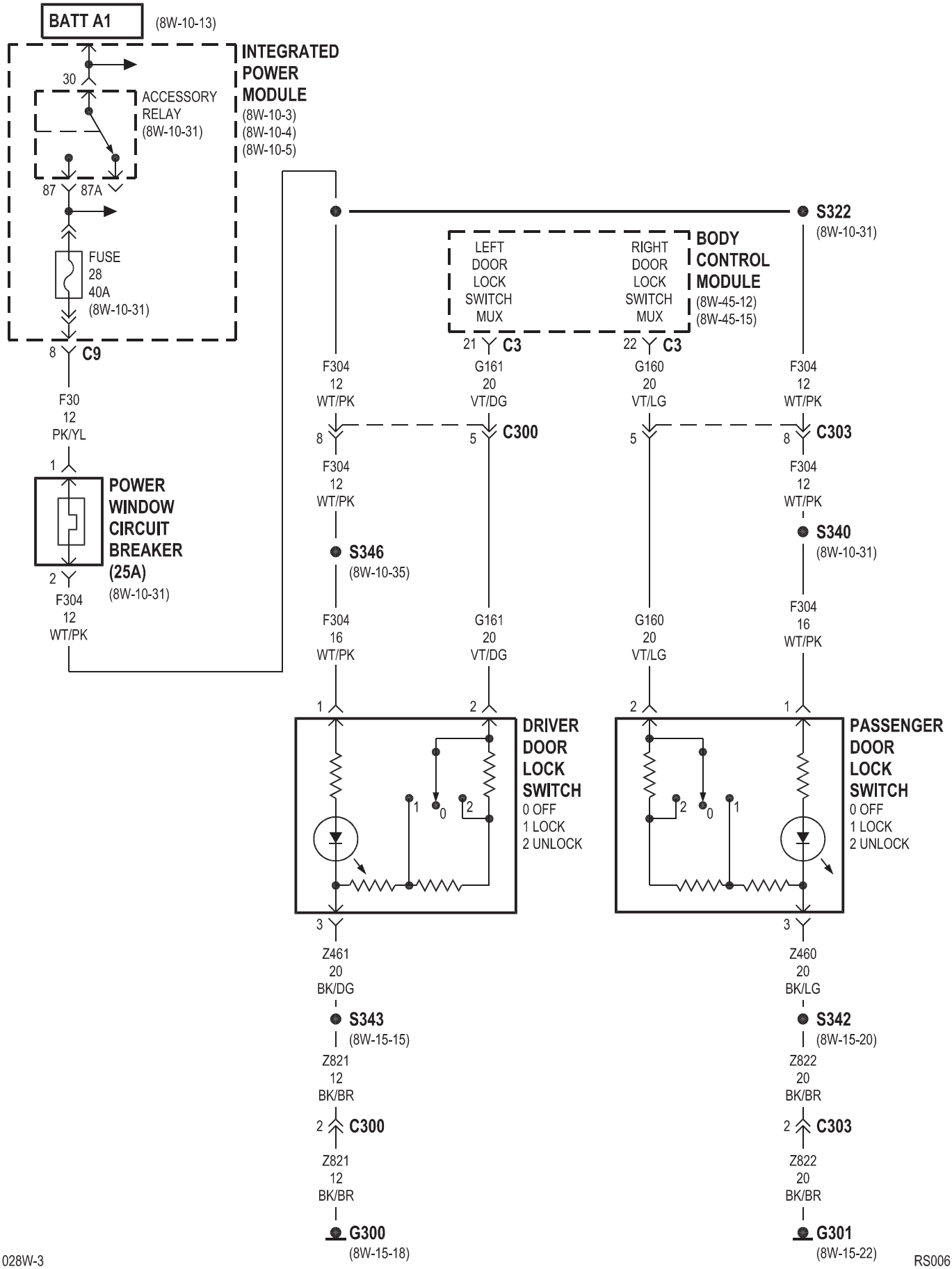
BATT A1
(8W-10-13)
INTEGRATED POWER MODULE
(8W-10-3)
(8W-10-4)
(8W-10-5)
30
ACCESSORY RELAY
(8W-10-31)
87
87A
FUSE
28
40A
(8W-10-31)
8
C9
F30
12
PK/YL
1
POWER WINDOW CIRCUIT BREAKER
(25A)
(8W-10-31)
2
F304
12
WT/PK
S322
(8W-10-31)
LEFT DOOR LOCK SWITCH MUX
RIGHT DOOR LOCK SWITCH MUX
BODY CONTROL MODULE
(8W-45-12)
(8W-45-15)
21
C3
22
C3
F304
12
WT/PK
G161
20
VT/DG
G160
20
VT/LG
F304
12
WT/PK
8
C300
5
5
8
C303
F304
12
WT/PK
S346
(8W-10-35)
S340
(8W-10-31)
F304
16
WT/PK
G161
20
VT/DG
G160
20
VT/LG
F304
16
WT/PK
1
2
2
1
DRIVER DOOR LOCK SWITCH
0 OFF
1 LOCK
2 UNLOCK
PASSENGER DOOR LOCK SWITCH
0 OFF
1 LOCK
2 UNLOCK
3
3
Z461
20
BK/DG
Z460
20
BK/LG
S343
(8W-15-15)
S342
(8W-15-20)
Z821
12
BK/BR
Z822
20
BK/BR
2
C300
2
C303
Z821
12
BK/BR
Z822
20
BK/BR
G300
(8W-15-18)
G301
(8W-15-22)

RS006102

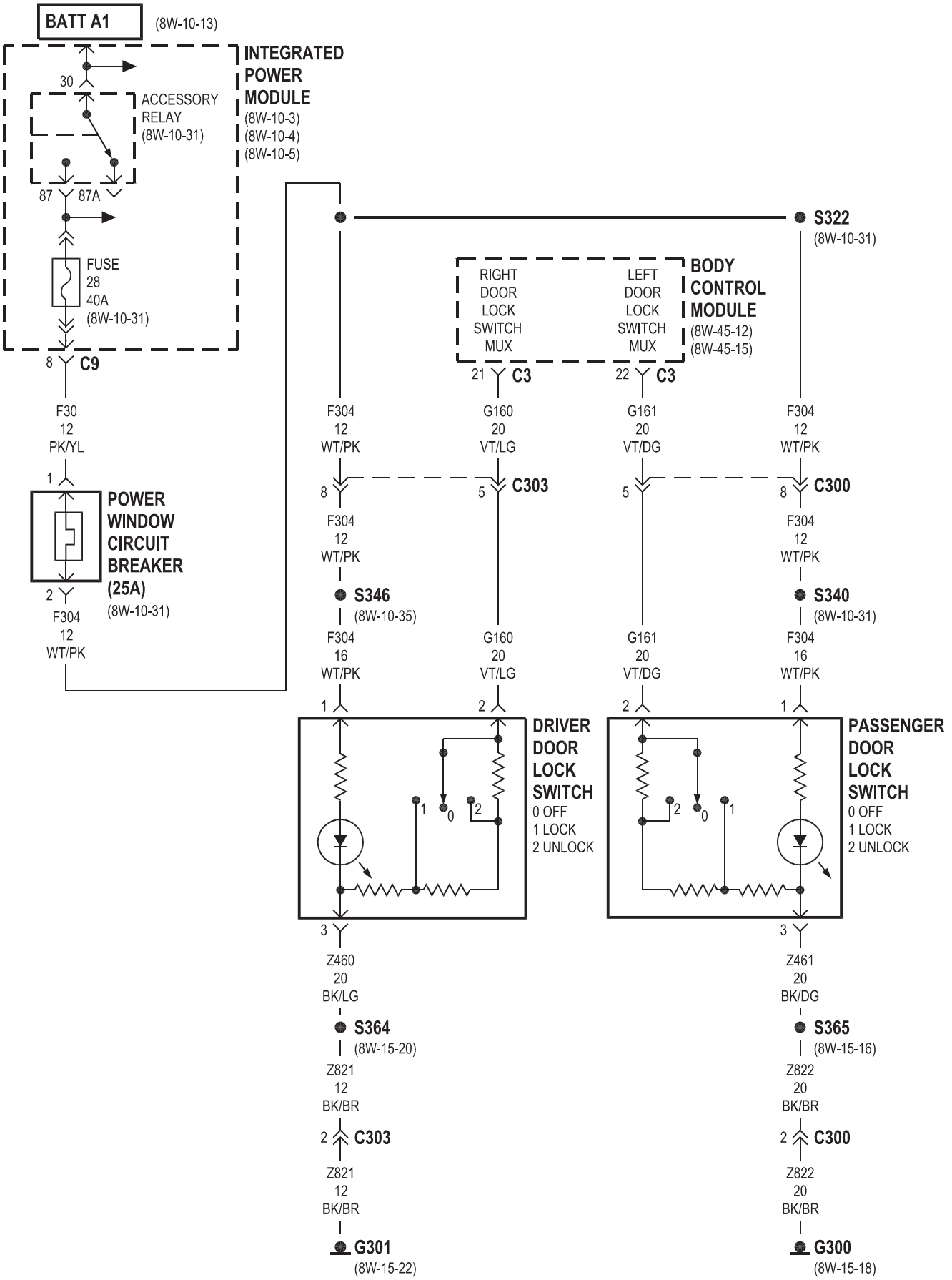
BATT A1
(8W-10-13)
INTEGRATED POWER MODULE
(8W-10-3)
(8W-10-4)
(8W-10-5)
30
ACCESSORY RELAY
(8W-10-31)
87
87A
FUSE
28
40A
(8W-10-31)
8
C9
F30
12
PK/YL
1
POWER WINDOW CIRCUIT BREAKER
(25A)
(8W-10-31)
2
F304
12
WT/PK
S322
(8W-10-31)
RIGHT DOOR LOCK SWITCH MUX
LEFT DOOR LOCK SWITCH MUX
BODY CONTROL MODULE
(8W-45-12)
(8W-45-15)
21
C3
22
C3
F304
12
WT/PK
G160
20
VT/LG
G161
20
VT/DG
F304
12
WT/PK
8
C303
5
5
C300
8
F304
12
WT/PK
S346
(8W-10-35)
S340
(8W-10-31)
F304
16
WT/PK
G160
20
VT/LG
G161
20
VT/DG
F304
16
WT/PK
1
2
2
1
DRIVER DOOR LOCK SWITCH
0 OFF
1 LOCK
2 UNLOCK
PASSENGER DOOR LOCK SWITCH
0 OFF
1 LOCK
2 UNLOCK
3
3
Z460
20
BK/LG
Z461
20
BK/DG
S364
(8W-15-20)
S365
(8W-15-16)
Z821
12
BK/BR
Z822
20
BK/BR
2
C303
2
C300
Z821
12
BK/BR
Z822
20
BK/BR
G301
(8W-15-22)
G300
(8W-15-18)

EXCEPT BUILT-UP-EXPORT EXCEPT POWER WINDOWS

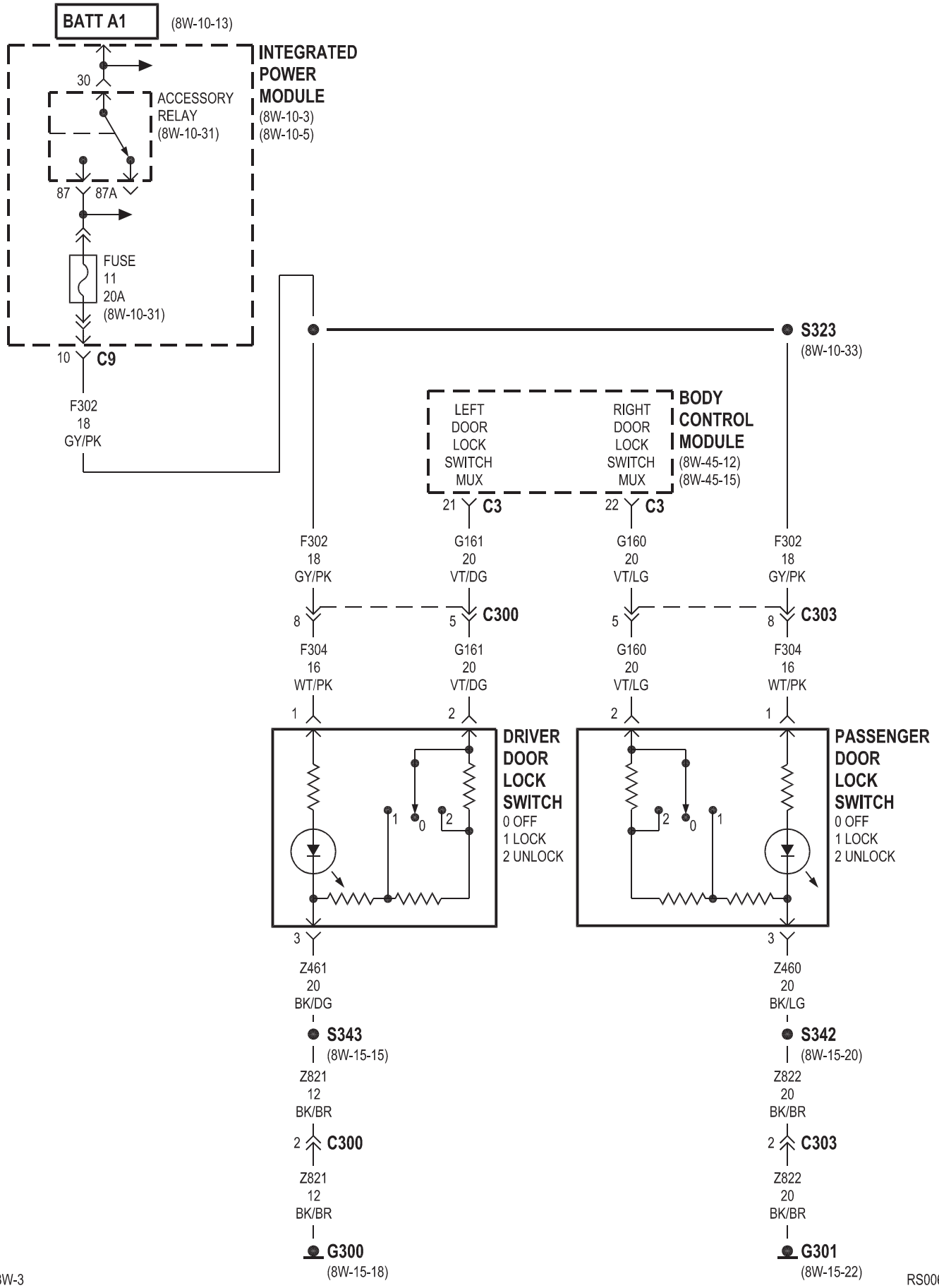

RS006104

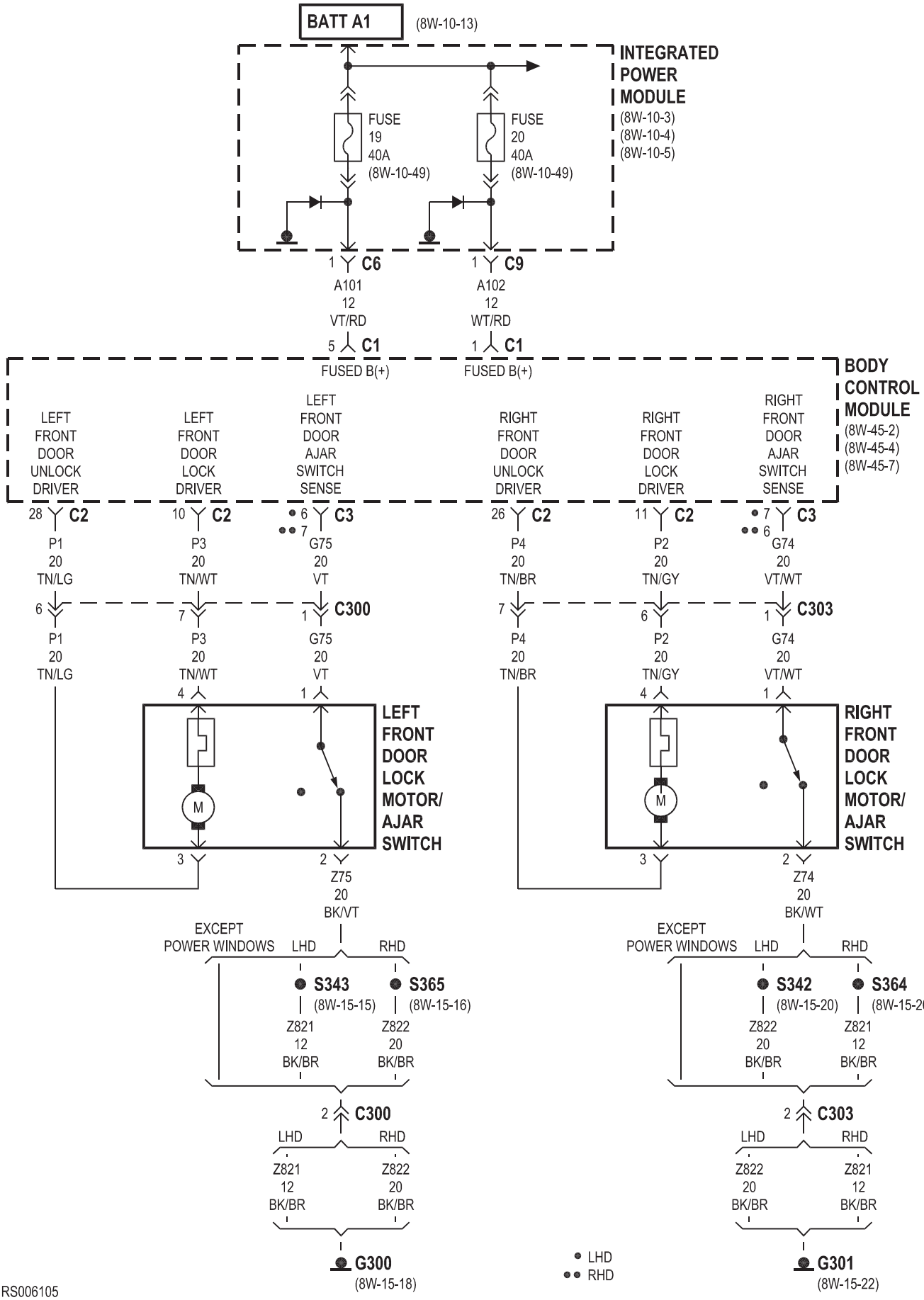
BATT A1
(8W-10-13)
INTEGRATED POWER MODULE
(8W-10-3)
(8W-10-4)
(8W-10-5)
FUSE 19 40A (8W-10-49)
FUSE 20 40A (8W-10-49)
1 C6
A101 12 VT/RD
1 C9
A102 12 WT/RD
5 C1
FUSED B(+)
1 C1
FUSED B(+)
BODY CONTROL MODULE
(8W-45-2)
(8W-45-4)
(8W-45-7)
LEFT FRONT DOOR UNLOCK DRIVER
LEFT FRONT DOOR LOCK DRIVER
LEFT FRONT DOOR AJAR SWITCH SENSE
RIGHT FRONT DOOR UNLOCK DRIVER
RIGHT FRONT DOOR LOCK DRIVER
RIGHT FRONT DOOR AJAR SWITCH SENSE
28 C2 P1 20 TN/LG
10 C2 P3 20 TN/WT
6 7 C3 G75 20 VT
26 C2 P4 20 TN/BR
11 C2 P2 20 TN/GY
7 6 C3 G74 20 VT/WT
6 P1 20 TN/LG
7 P3 20 TN/WT
1 C300 G75 20 VT
7 P4 20 TN/BR
6 P2 20 TN/GY
1 C303 G74 20 VT/WT
4 1
M
3 2
LEFT FRONT DOOR LOCK MOTOR/ AJAR SWITCH
RIGHT FRONT DOOR LOCK MOTOR/ AJAR SWITCH
Z75 20 BK/VT
Z74 20 BK/WT
EXCEPT POWER WINDOWS
LHD
RHD
S343 (8W-15-15)
S365 (8W-15-16)
S342 (8W-15-20)
S364 (8W-15-20)
Z821 12 BK/BR
Z822 20 BK/BR
2 C300
2 C303
G300 (8W-15-18)
G301 (8W-15-22)
LHD
RHD

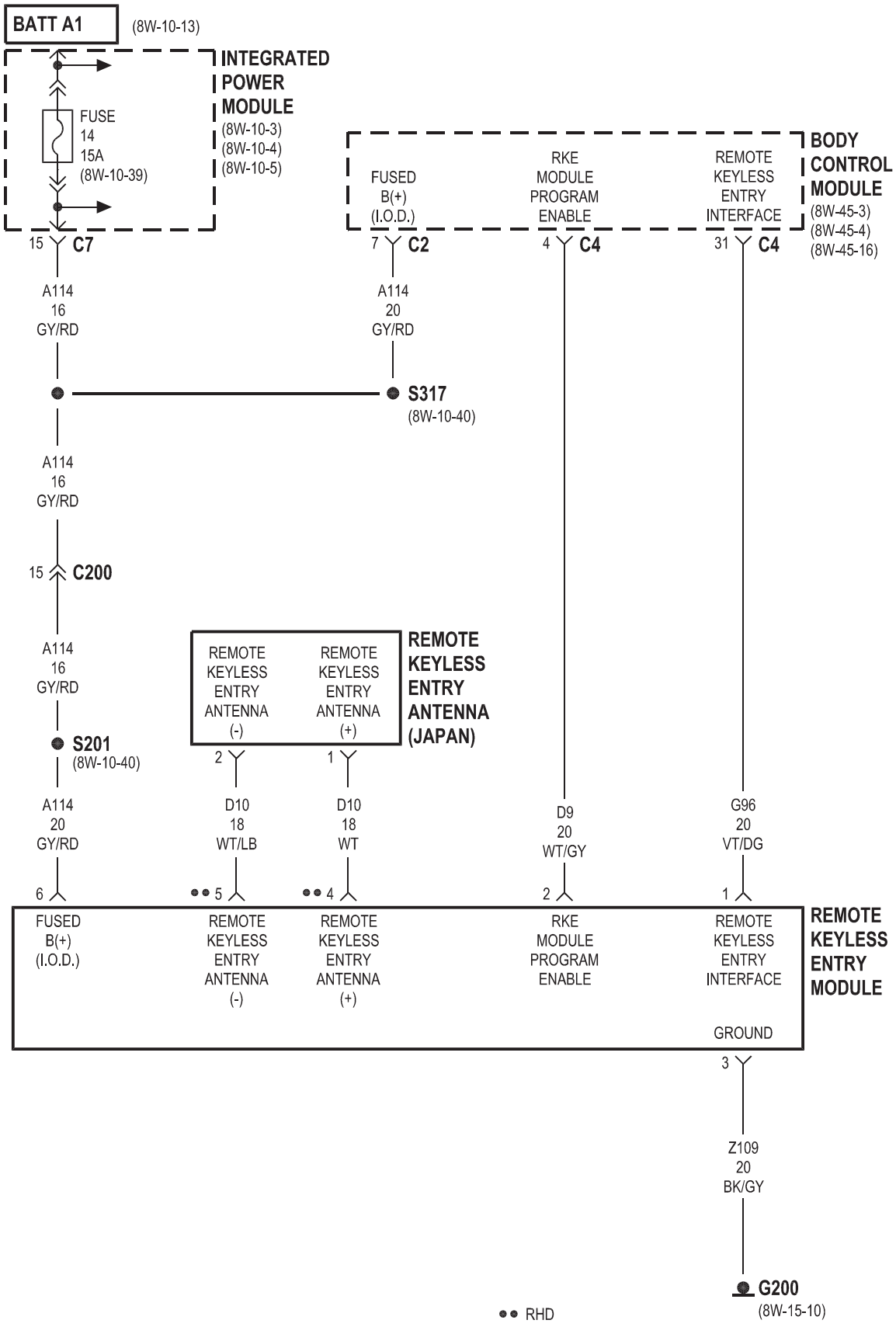
BATT A1
(8W-10-13)
INTEGRATED POWER MODULE
(8W-10-3)
(8W-10-4)
(8W-10-5)
FUSE
14
15A
(8W-10-39)
BODY CONTROL MODULE
(8W-45-3)
(8W-45-4)
(8W-45-16)
FUSED B(+) (I.O.D.)
RKE MODULE PROGRAM ENABLE
REMOTE KEYLESS ENTRY INTERFACE
15 C7
7 C2
4 C4
31 C4
A114 16 GY/RD
A114 20 GY/RD
S317
(8W-10-40)
A114 16 GY/RD
15 C200
A114 16 GY/RD
S201
(8W-10-40)
REMOTE KEYLESS ENTRY ANTENNA (-)
REMOTE KEYLESS ENTRY ANTENNA (+)
REMOTE KEYLESS ENTRY ANTENNA (JAPAN)
2
1
A114 20 GY/RD
D10 18 WT/LB
D10 18 WT
D9 20 WT/GY
G96 20 VT/DG
6
5
4
2
1
FUSED B(+) (I.O.D.)
REMOTE KEYLESS ENTRY ANTENNA (-)
REMOTE KEYLESS ENTRY ANTENNA (+)
RKE MODULE PROGRAM ENABLE
REMOTE KEYLESS ENTRY INTERFACE
REMOTE KEYLESS ENTRY MODULE
GROUND
3
Z109 20 BK/GY
G200
(8W-15-10)
•• RHD

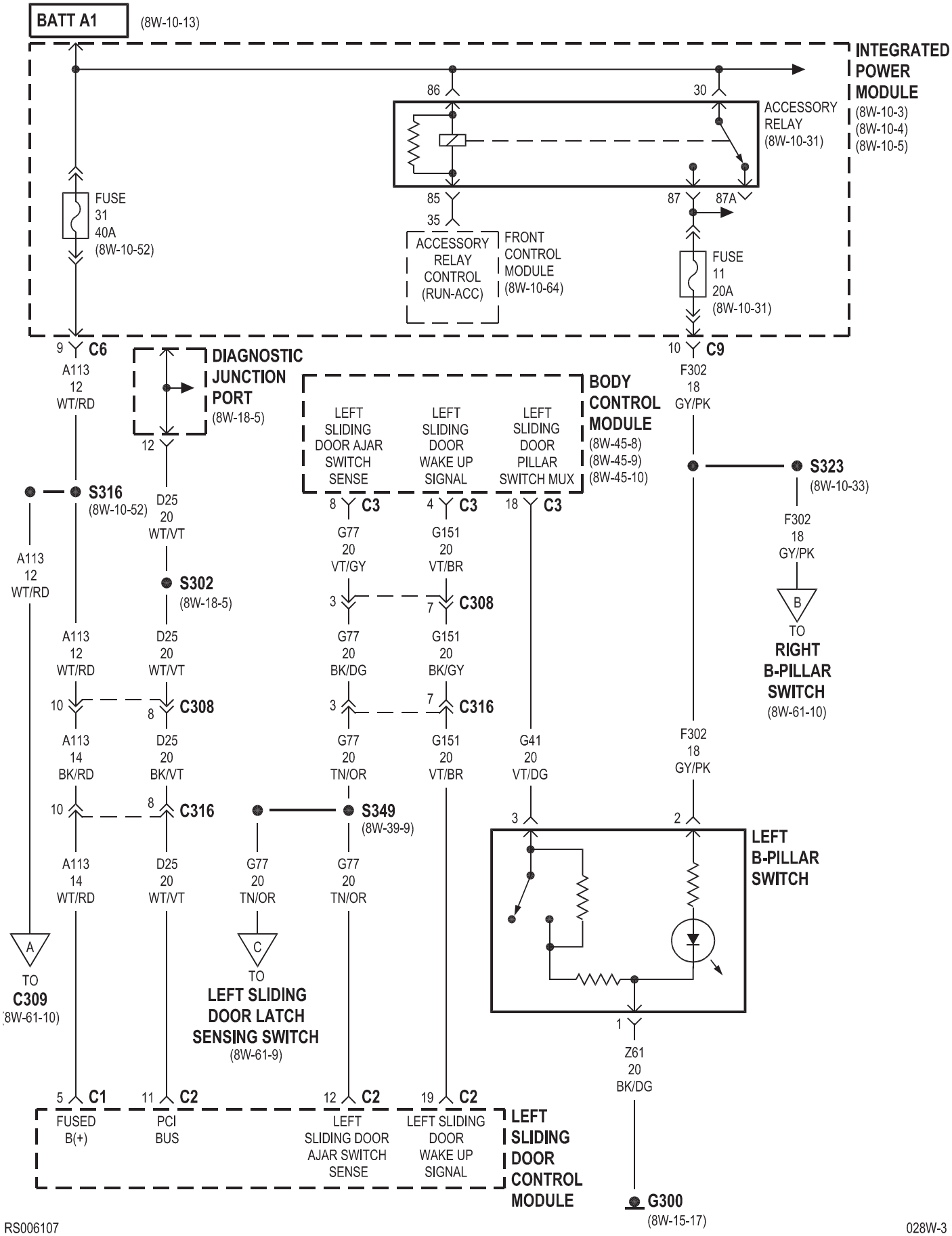
BATT A1
(8W-10-13)
INTEGRATED POWER MODULE
(8W-10-3)
(8W-10-4)
(8W-10-5)
86
30
ACCESSORY RELAY
(8W-10-31)
85
87
87A
35
ACCESSORY RELAY CONTROL (RUN-ACC)
FRONT CONTROL MODULE
(8W-10-64)
FUSE 31 40A
(8W-10-52)
FUSE 11 20A
(8W-10-31)
9 C6
A113 12 WT/RD
DIAGNOSTIC JUNCTION PORT
(8W-18-5)
12
10 C9
F302 18 GY/PK
BODY CONTROL MODULE
(8W-45-8)
(8W-45-9)
(8W-45-10)
LEFT SLIDING DOOR AJAR SWITCH SENSE
LEFT SLIDING DOOR WAKE UP SIGNAL
LEFT SLIDING DOOR PILLAR SWITCH MUX
S323
(8W-10-33)
S316
(8W-10-52)
D25 20 WT/VT
8 C3
4 C3
18 C3
G77 20 VT/GY
G151 20 VT/BR
F302 18 GY/PK
S302
(8W-18-5)
3
7 C308
B
TO RIGHT B-PILLAR SWITCH
(8W-61-10)
A113 12 WT/RD
A113 12 WT/RD
D25 20 WT/VT
G77 20 BK/DG
G151 20 BK/GY
10
8 C308
3
7 C316
A113 14 BK/RD
D25 20 BK/VT
G77 20 TN/OR
G151 20 VT/BR
G41 20 VT/DG
F302 18 GY/PK
10
8 C316
S349
(8W-39-9)
3
2
LEFT B-PILLAR SWITCH
A113 14 WT/RD
D25 20 WT/VT
G77 20 TN/OR
G77 20 TN/OR
A
TO C309
(8W-61-10)
C
TO LEFT SLIDING DOOR LATCH SENSING SWITCH
(8W-61-9)
1
Z61 20 BK/DG
5 C1
11 C2
12 C2
19 C2
FUSED B(+)
PCI BUS
LEFT SLIDING DOOR AJAR SWITCH SENSE
LEFT SLIDING DOOR WAKE UP SIGNAL
LEFT SLIDING DOOR CONTROL MODULE
G300
(8W-15-17)

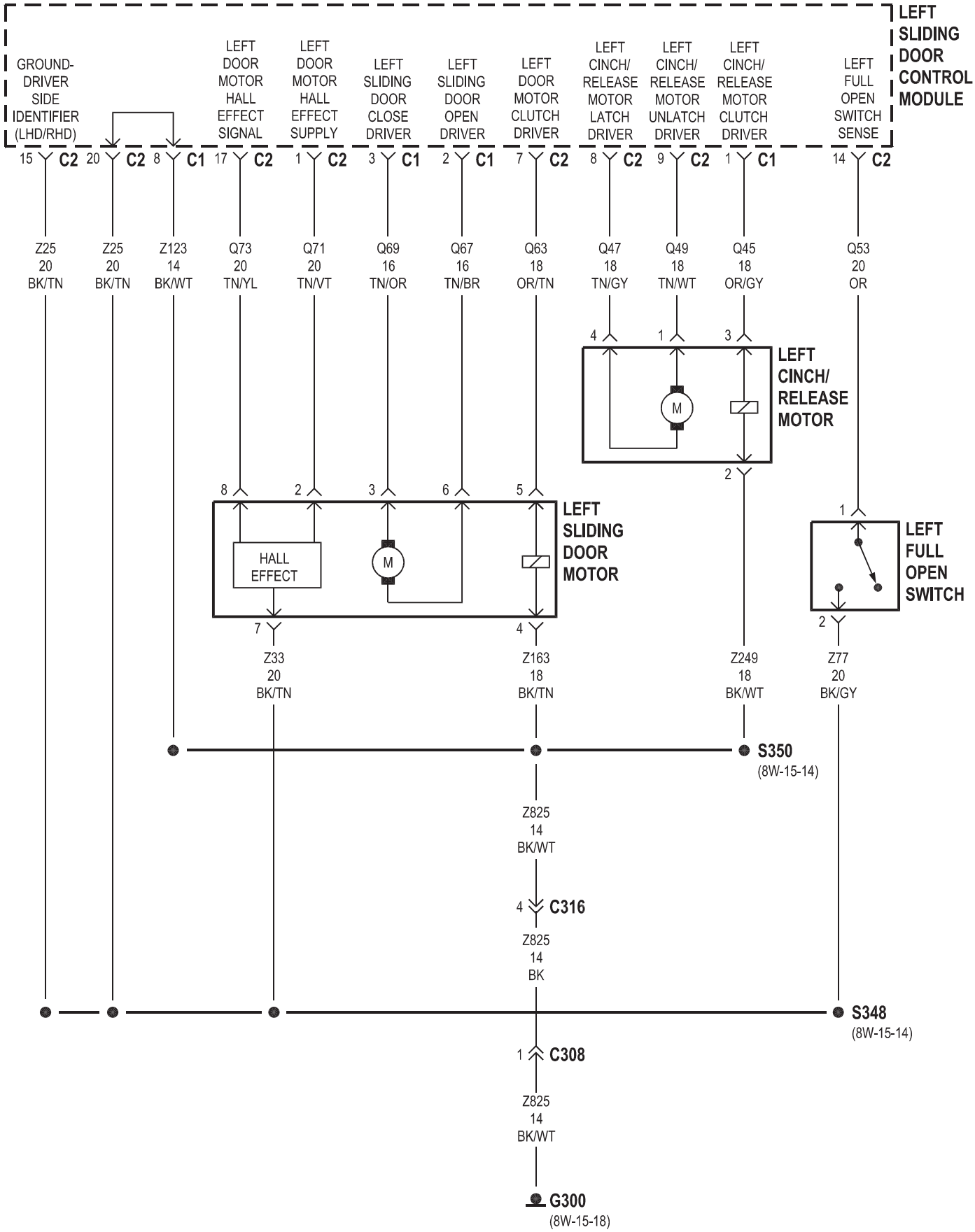
LEFT SLIDING DOOR CONTROL MODULE
GROUND- DRIVER SIDE IDENTIFIER (LHD/RHD)
LEFT DOOR MOTOR HALL EFFECT SIGNAL
LEFT DOOR MOTOR HALL EFFECT SUPPLY
LEFT SLIDING DOOR CLOSE DRIVER
LEFT SLIDING DOOR OPEN DRIVER
LEFT DOOR MOTOR CLUTCH DRIVER
LEFT CINCH/ RELEASE MOTOR LATCH DRIVER
LEFT CINCH/ RELEASE MOTOR UNLATCH DRIVER
LEFT CINCH/ RELEASE MOTOR CLUTCH DRIVER
LEFT FULL OPEN SWITCH SENSE
15 C2
20 C2
8 C1
17 C2
1 C2
3 C1
2 C1
7 C2
8 C2
9 C2
1 C1
14 C2
Z25 20 BK/TN
Z25 20 BK/TN
Z123 14 BK/WT
Q73 20 TN/YL
Q71 20 TN/VT
Q69 16 TN/OR
Q67 16 TN/BR
Q63 18 OR/TN
Q47 18 TN/GY
Q49 18 TN/WT
Q45 18 OR/GY
Q53 20 OR
LEFT CINCH/ RELEASE MOTOR
M
LEFT SLIDING DOOR MOTOR
HALL EFFECT
M
LEFT FULL OPEN SWITCH
Z33 20 BK/TN
Z163 18 BK/TN
Z249 18 BK/WT
Z77 20 BK/GY
S350
(8W-15-14)
Z825 14 BK/WT
C316
Z825 14 BK
S348
(8W-15-14)
C308
Z825 14 BK/WT
G300
(8W-15-18)

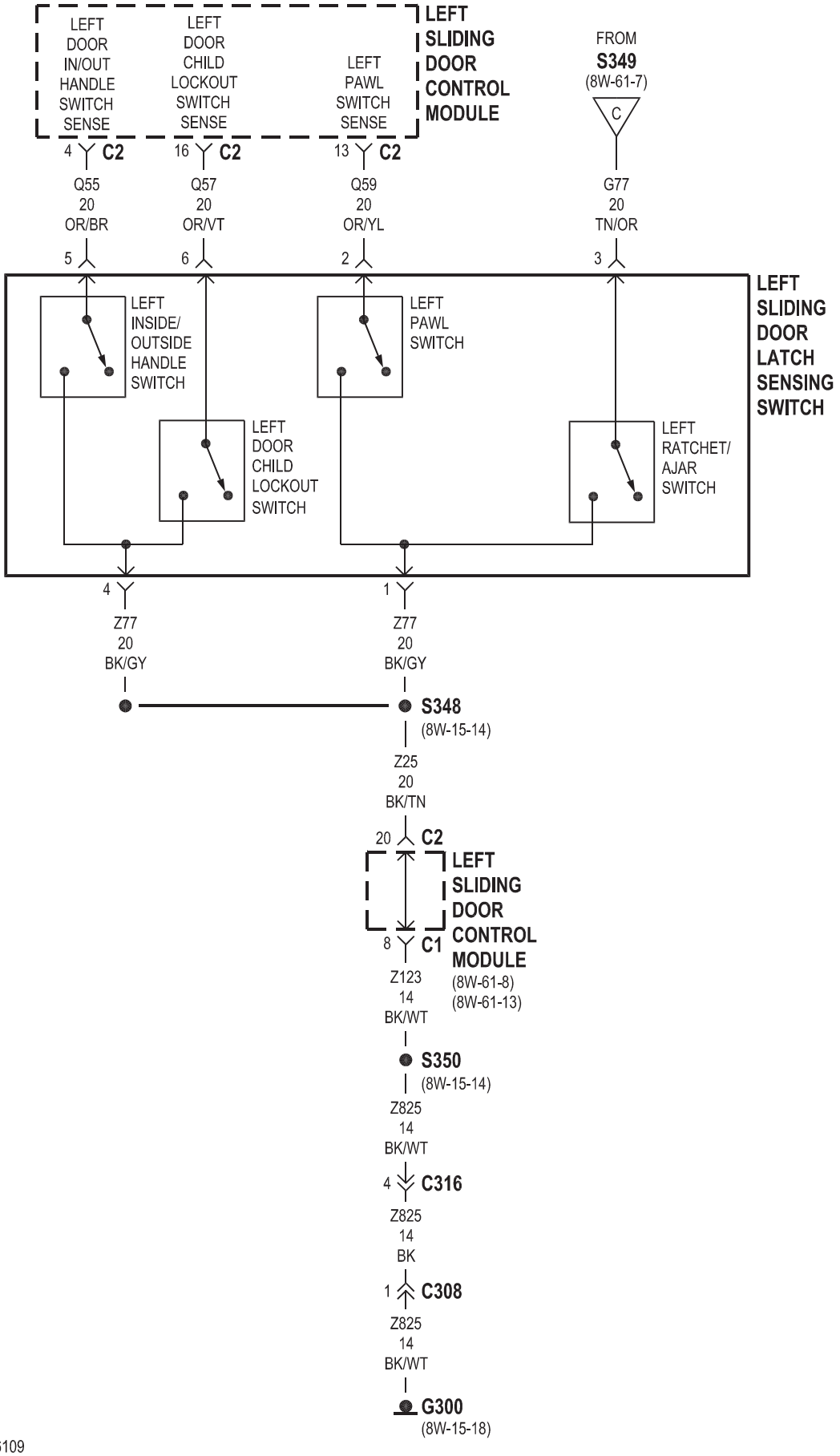
LEFT SLIDING DOOR CONTROL MODULE
LEFT DOOR IN/OUT HANDLE SWITCH SENSE
LEFT DOOR CHILD LOCKOUT SWITCH SENSE
LEFT PAWL SWITCH SENSE
4 C2
16 C2
13 C2
Q55 20 OR/BR
Q57 20 OR/VT
Q59 20 OR/YL
5
6
2
FROM S349 (8W-61-7)
C
G77 20 TN/OR
3
LEFT SLIDING DOOR LATCH SENSING SWITCH
LEFT INSIDE/ OUTSIDE HANDLE SWITCH
LEFT PAWL SWITCH
LEFT DOOR CHILD LOCKOUT SWITCH
LEFT RATCHET/ AJAR SWITCH
4
1
Z77 20 BK/GY
Z77 20 BK/GY
S348
(8W-15-14)
Z25 20 BK/TN
20 C2
LEFT SLIDING DOOR CONTROL MODULE
8 C1
Z123 14 BK/WT
(8W-61-8)
(8W-61-13)
S350
(8W-15-14)
Z825 14 BK/WT
4 C316
Z825 14 BK
1 C308
Z825 14 BK/WT
G300
(8W-15-18)

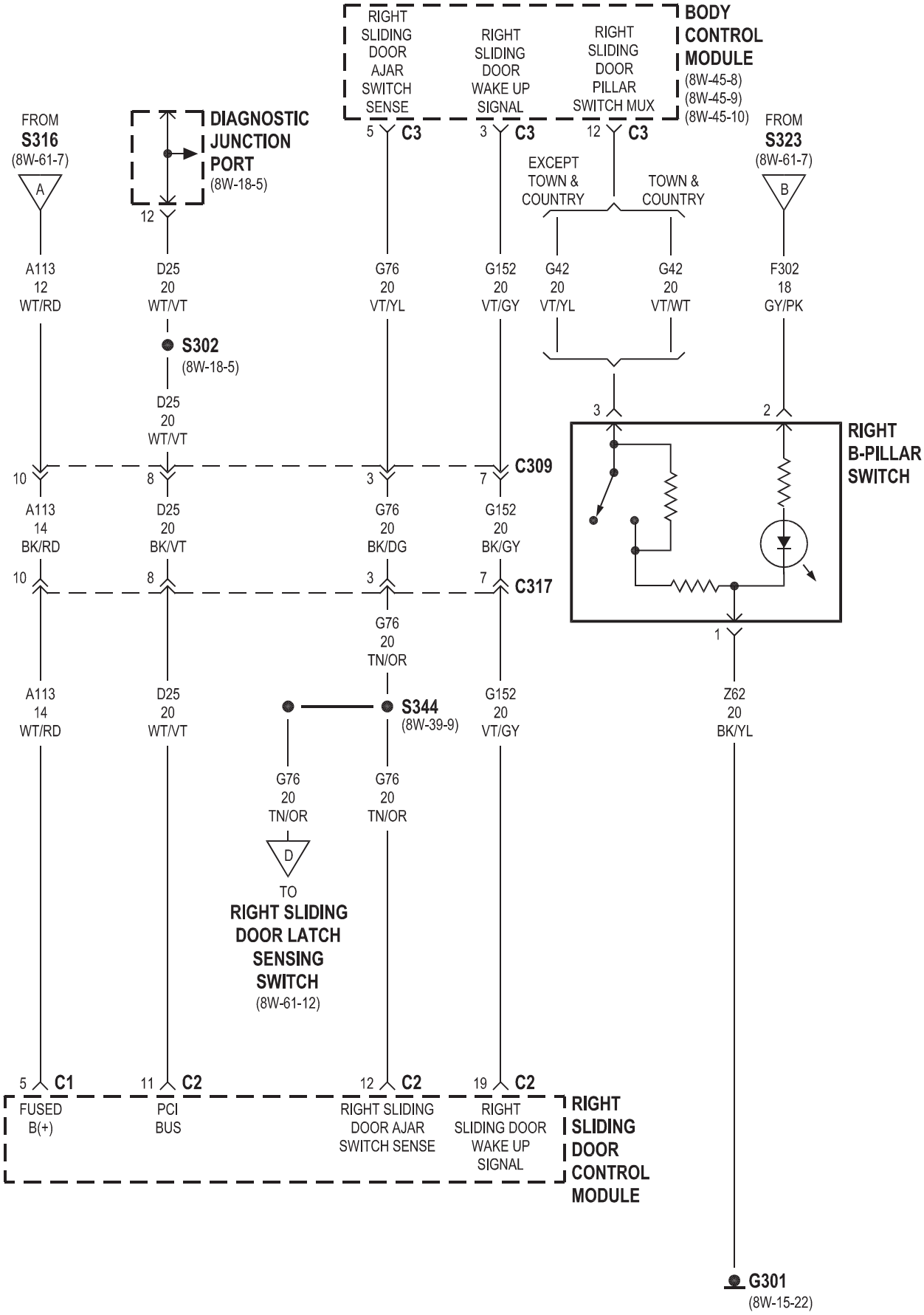
RIGHT SLIDING DOOR AJAR SWITCH SENSE
RIGHT SLIDING DOOR WAKE UP SIGNAL
RIGHT SLIDING DOOR PILLAR SWITCH MUX
BODY CONTROL MODULE
(8W-45-8)
(8W-45-9)
(8W-45-10)
FROM S316 (8W-61-7)
A
DIAGNOSTIC JUNCTION PORT
(8W-18-5)
5 C3
3 C3
12 C3
EXCEPT TOWN & COUNTRY
TOWN & COUNTRY
FROM S323 (8W-61-7)
B
12
A113 12 WT/RD
D25 20 WT/VT
G76 20 VT/YL
G152 20 VT/GY
G42 20 VT/YL
G42 20 VT/WT
F302 18 GY/PK
S302
(8W-18-5)
D25 20 WT/VT
3
2
RIGHT B-PILLAR SWITCH
10
8
3
7
C309
A113 14 BK/RD
D25 20 BK/VT
G76 20 BK/DG
G152 20 BK/GY
10
8
3
7
C317
1
G76 20 TN/OR
A113 14 WT/RD
D25 20 WT/VT
S344
(8W-39-9)
G152 20 VT/GY
Z62 20 BK/YL
G76 20 TN/OR
G76 20 TN/OR
D
TO
RIGHT SLIDING DOOR LATCH SENSING SWITCH
(8W-61-12)
5 C1
11 C2
12 C2
19 C2
FUSED B(+)
PCI BUS
RIGHT SLIDING DOOR AJAR SWITCH SENSE
RIGHT SLIDING DOOR WAKE UP SIGNAL
RIGHT SLIDING DOOR CONTROL MODULE
G301
(8W-15-22)

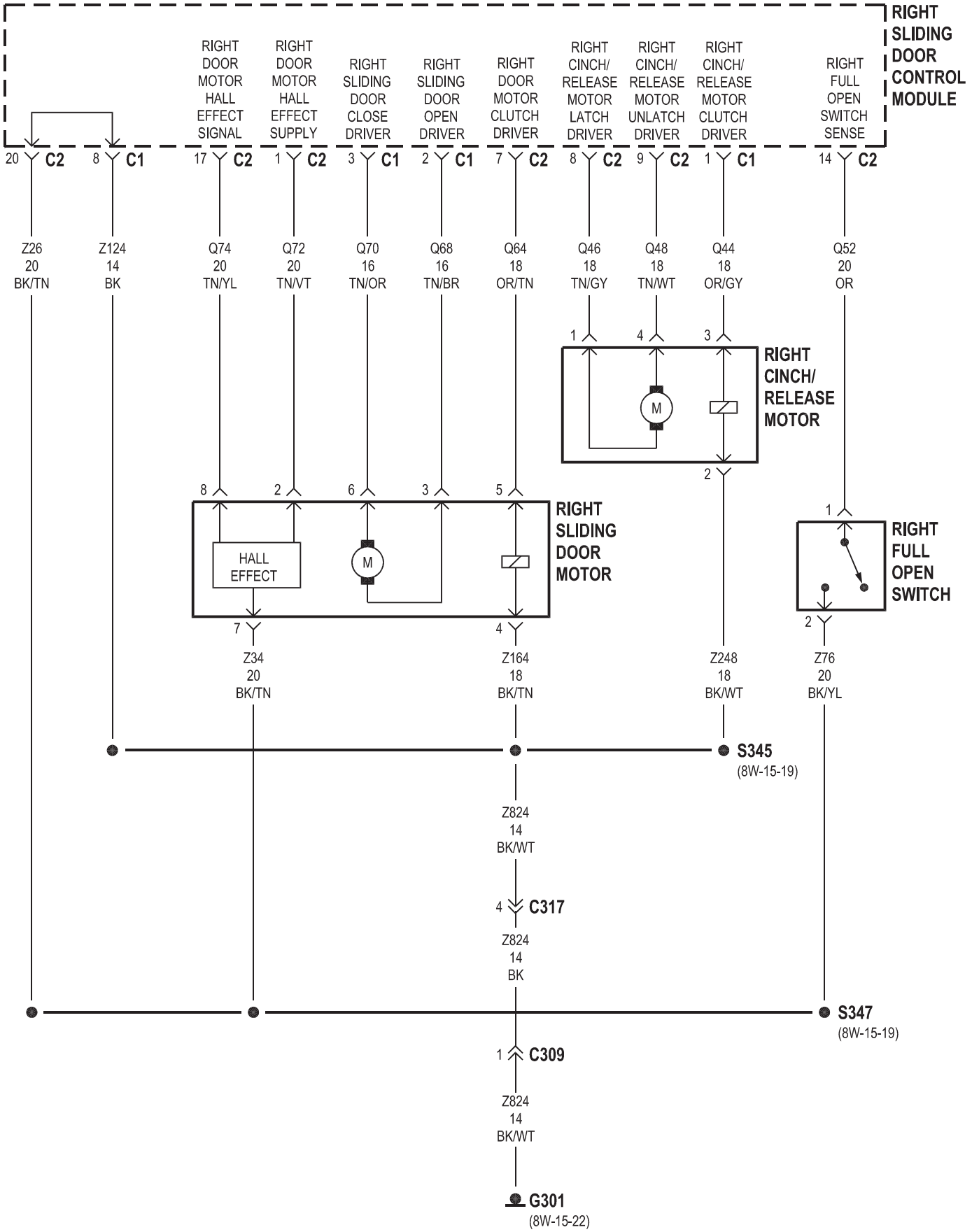
RIGHT SLIDING DOOR CONTROL MODULE
RIGHT DOOR MOTOR HALL EFFECT SIGNAL
RIGHT DOOR MOTOR HALL EFFECT SUPPLY
RIGHT SLIDING DOOR CLOSE DRIVER
RIGHT SLIDING DOOR OPEN DRIVER
RIGHT DOOR MOTOR CLUTCH DRIVER
RIGHT CINCH/ RELEASE MOTOR LATCH DRIVER
RIGHT CINCH/ RELEASE MOTOR UNLATCH DRIVER
RIGHT CINCH/ RELEASE MOTOR CLUTCH DRIVER
RIGHT FULL OPEN SWITCH SENSE
20 C2
8 C1
17 C2
1 C2
3 C1
2 C1
7 C2
8 C2
9 C2
1 C1
14 C2
Z26 20 BK/TN
Z124 14 BK
Q74 20 TN/YL
Q72 20 TN/VT
Q70 16 TN/OR
Q68 16 TN/BR
Q64 18 OR/TN
Q46 18 TN/GY
Q48 18 TN/WT
Q44 18 OR/GY
Q52 20 OR
RIGHT CINCH/ RELEASE MOTOR
M
RIGHT SLIDING DOOR MOTOR
HALL EFFECT
RIGHT FULL OPEN SWITCH
Z34 20 BK/TN
Z164 18 BK/TN
Z248 18 BK/WT
Z76 20 BK/YL
S345
(8W-15-19)
Z824 14 BK/WT
C317
Z824 14 BK
S347
(8W-15-19)
C309
Z824 14 BK/WT
G301
(8W-15-22)

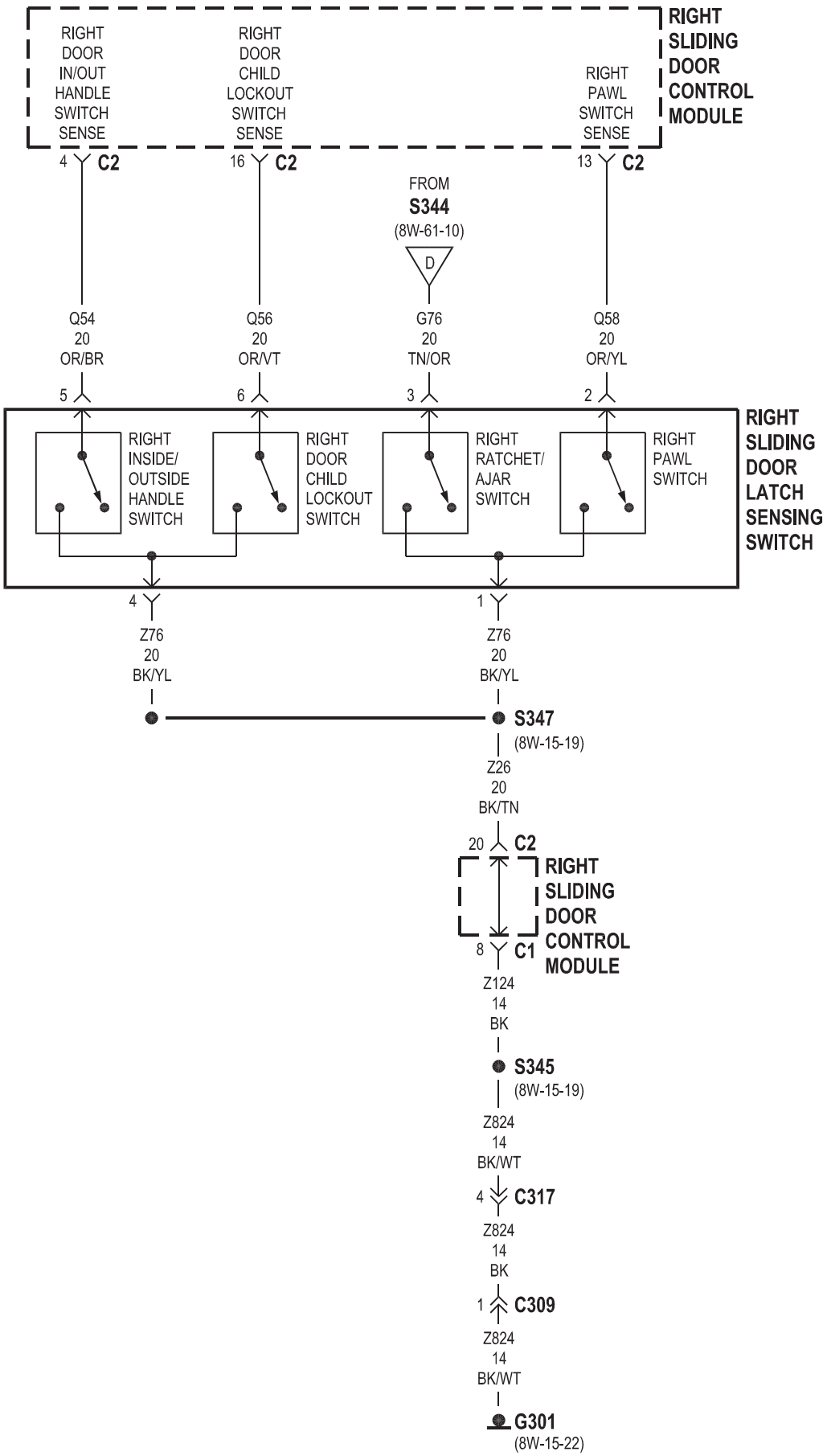
RIGHT SLIDING DOOR CONTROL MODULE
RIGHT DOOR IN/OUT HANDLE SWITCH SENSE
RIGHT DOOR CHILD LOCKOUT SWITCH SENSE
RIGHT PAWL SWITCH SENSE
4 C2
16 C2
13 C2
FROM S344 (8W-61-10)
D
Q54 20 OR/BR
Q56 20 OR/VT
G76 20 TN/OR
Q58 20 OR/YL
5
6
3
2
RIGHT INSIDE/ OUTSIDE HANDLE SWITCH
RIGHT DOOR CHILD LOCKOUT SWITCH
RIGHT RATCHET/ AJAR SWITCH
RIGHT PAWL SWITCH
RIGHT SLIDING DOOR LATCH SENSING SWITCH
4
1
Z76 20 BK/YL
Z76 20 BK/YL
S347
(8W-15-19)
Z26 20 BK/TN
20 C2
RIGHT SLIDING DOOR CONTROL MODULE
8 C1
Z124 14 BK
S345
(8W-15-19)
Z824 14 BK/WT
4 C317
Z824 14 BK
1 C309
Z824 14 BK/WT
G301
(8W-15-22)

POWER SLIDING DOOR

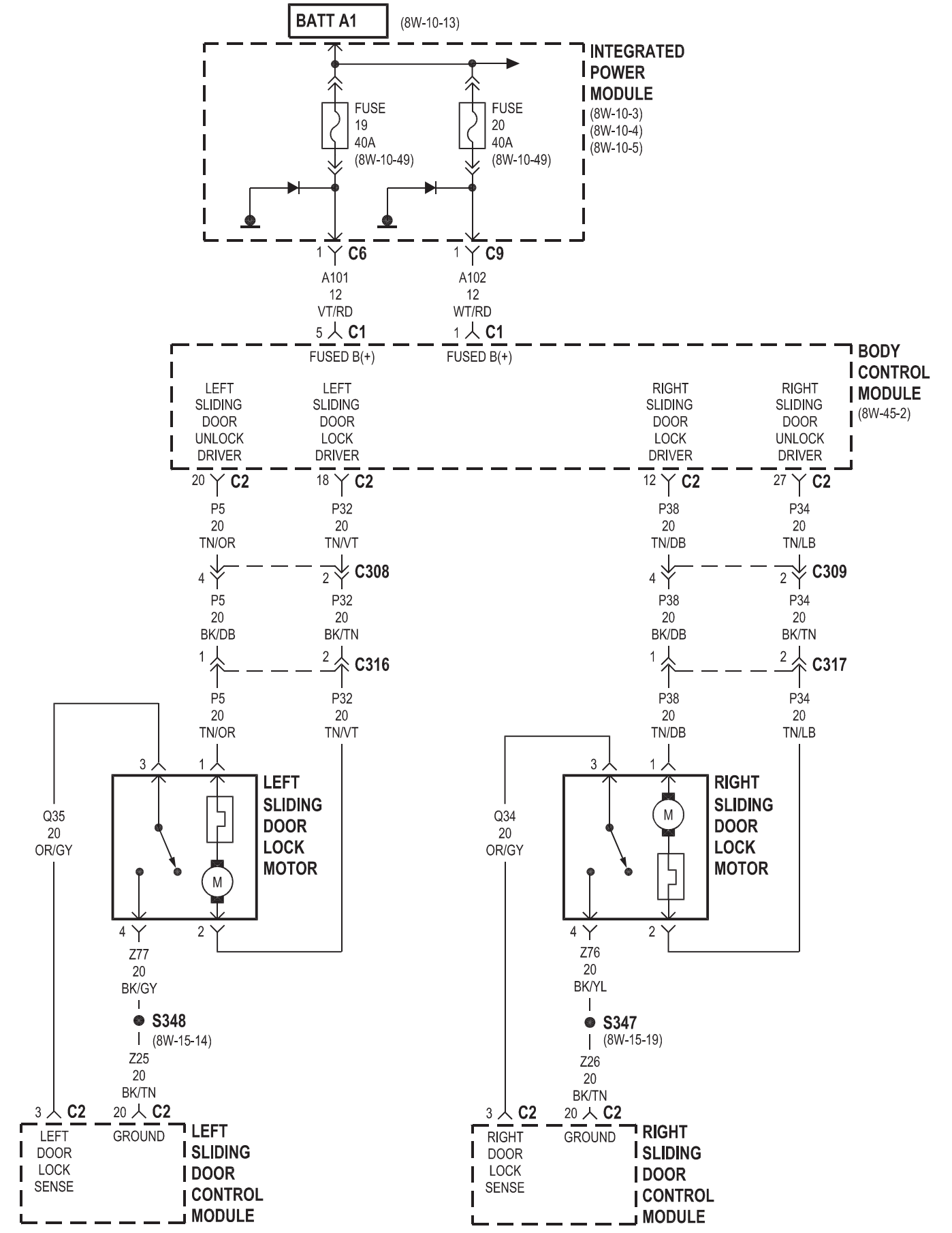

MANUAL SLIDING DOOR

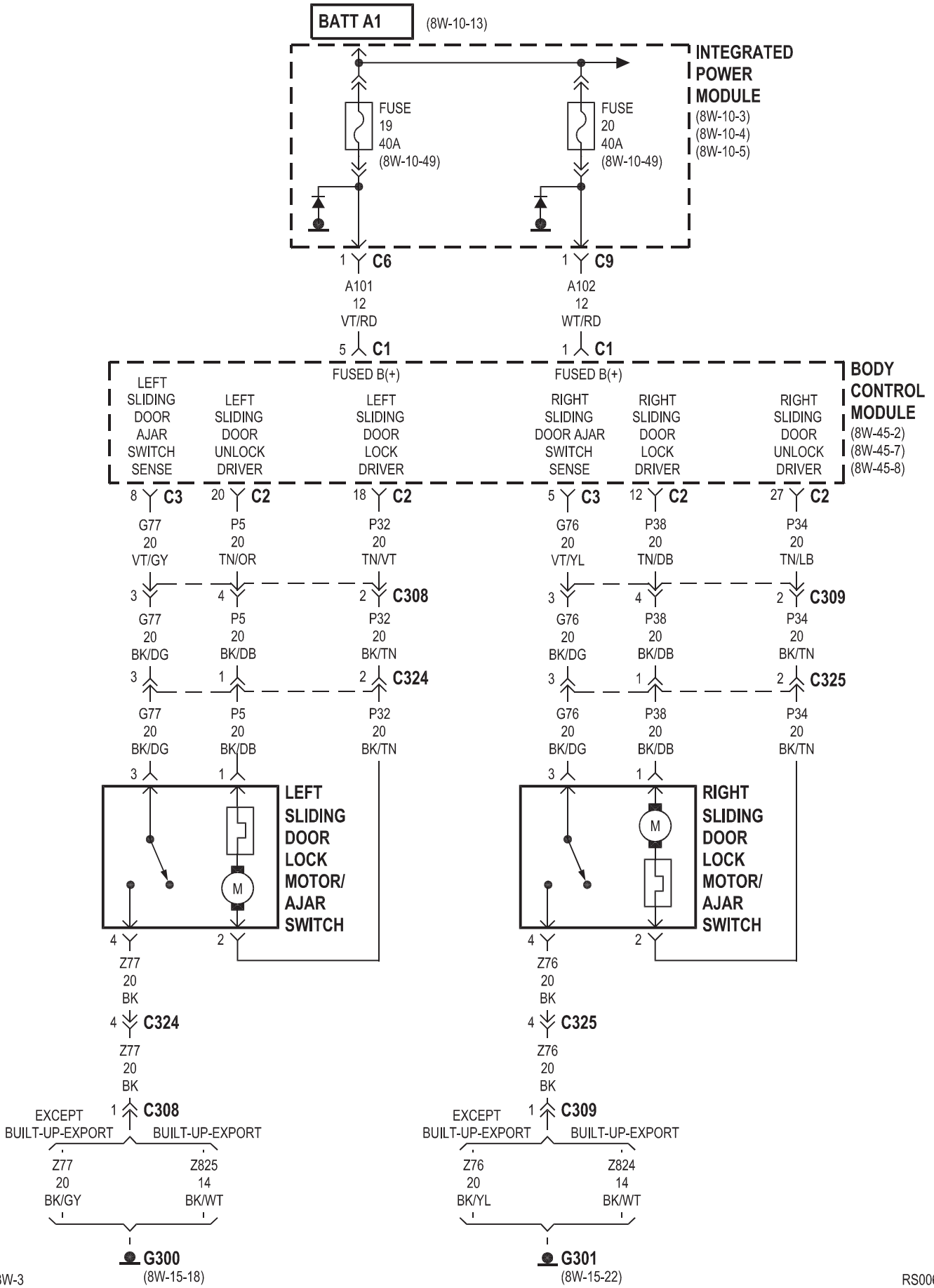

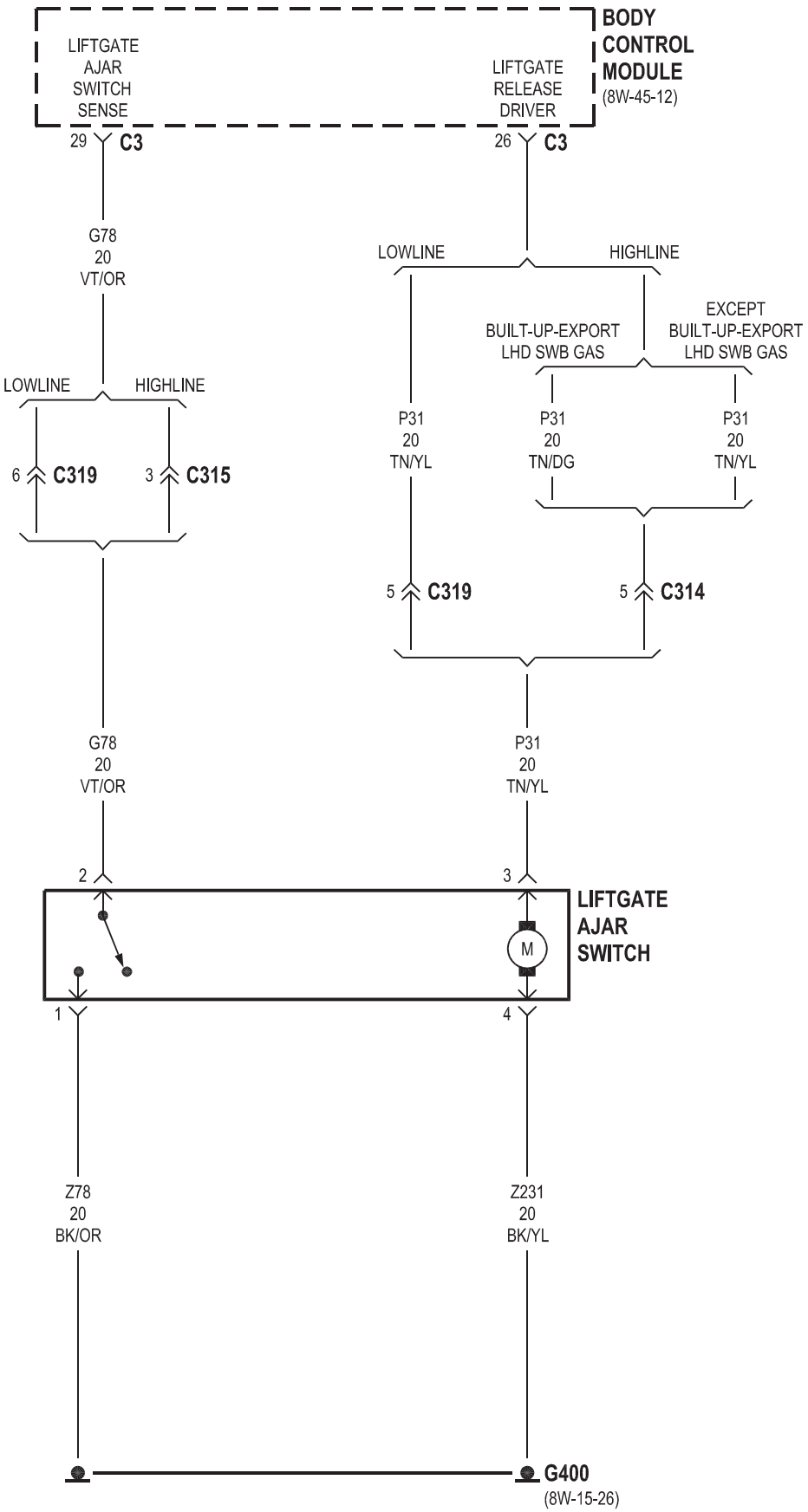
BODY CONTROL MODULE
(8W-45-12)
LIFTGATE AJAR SWITCH SENSE
LIFTGATE RELEASE DRIVER
29 C3
26 C3
G78 20 VT/OR
LOWLINE
HIGHLINE
BUILT-UP-EXPORT LHD SWB GAS
EXCEPT BUILT-UP-EXPORT LHD SWB GAS
P31 20 TN/YL
P31 20 TN/DG
P31 20 TN/YL
6 C319
3 C315
5 C319
5 C314
G78 20 VT/OR
P31 20 TN/YL
2
3
M
LIFTGATE AJAR SWITCH
1
4
Z78 20 BK/OR
Z231 20 BK/YL
G400
(8W-15-26)

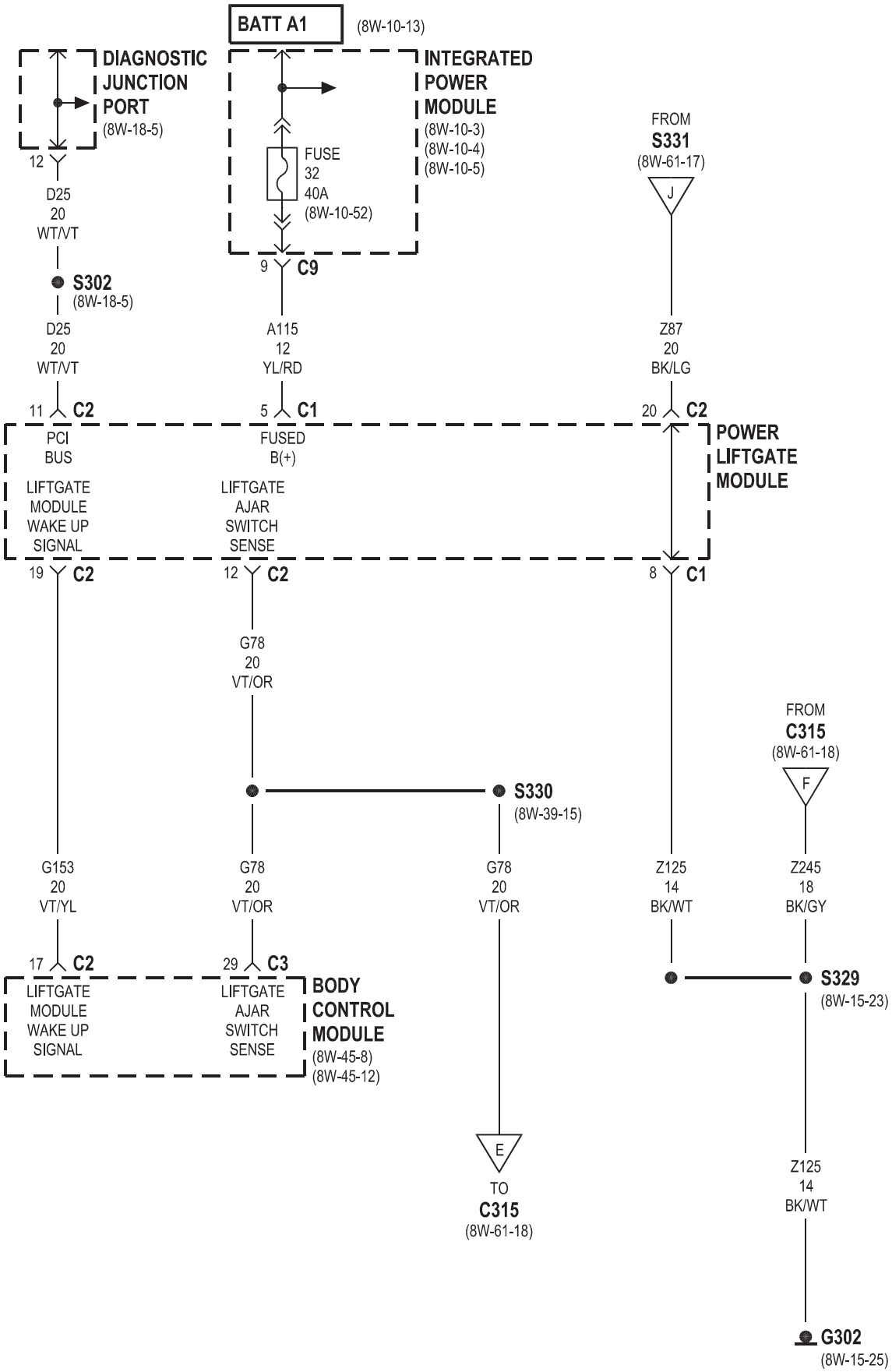
BATT A1
(8W-10-13)
DIAGNOSTIC JUNCTION PORT
(8W-18-5)
INTEGRATED POWER MODULE
(8W-10-3)
(8W-10-4)
(8W-10-5)
FUSE 32 40A
(8W-10-52)
FROM S331
(8W-61-17)
J
12
D25 20 WT/VT
S302
(8W-18-5)
9 C9
D25 20 WT/VT
A115 12 YL/RD
Z87 20 BK/LG
11 C2
5 C1
20 C2
PCI BUS
FUSED B(+)
POWER LIFTGATE MODULE
LIFTGATE MODULE WAKE UP SIGNAL
LIFTGATE AJAR SWITCH SENSE
19 C2
12 C2
8 C1
G78 20 VT/OR
FROM C315
(8W-61-18)
F
S330
(8W-39-15)
G153 20 VT/YL
G78 20 VT/OR
G78 20 VT/OR
Z125 14 BK/WT
Z245 18 BK/GY
17 C2
29 C3
LIFTGATE MODULE WAKE UP SIGNAL
LIFTGATE AJAR SWITCH SENSE
BODY CONTROL MODULE
(8W-45-8)
(8W-45-12)
S329
(8W-15-23)
E
TO C315
(8W-61-18)
Z125 14 BK/WT
G302
(8W-15-25)

POWER LIFTGATE

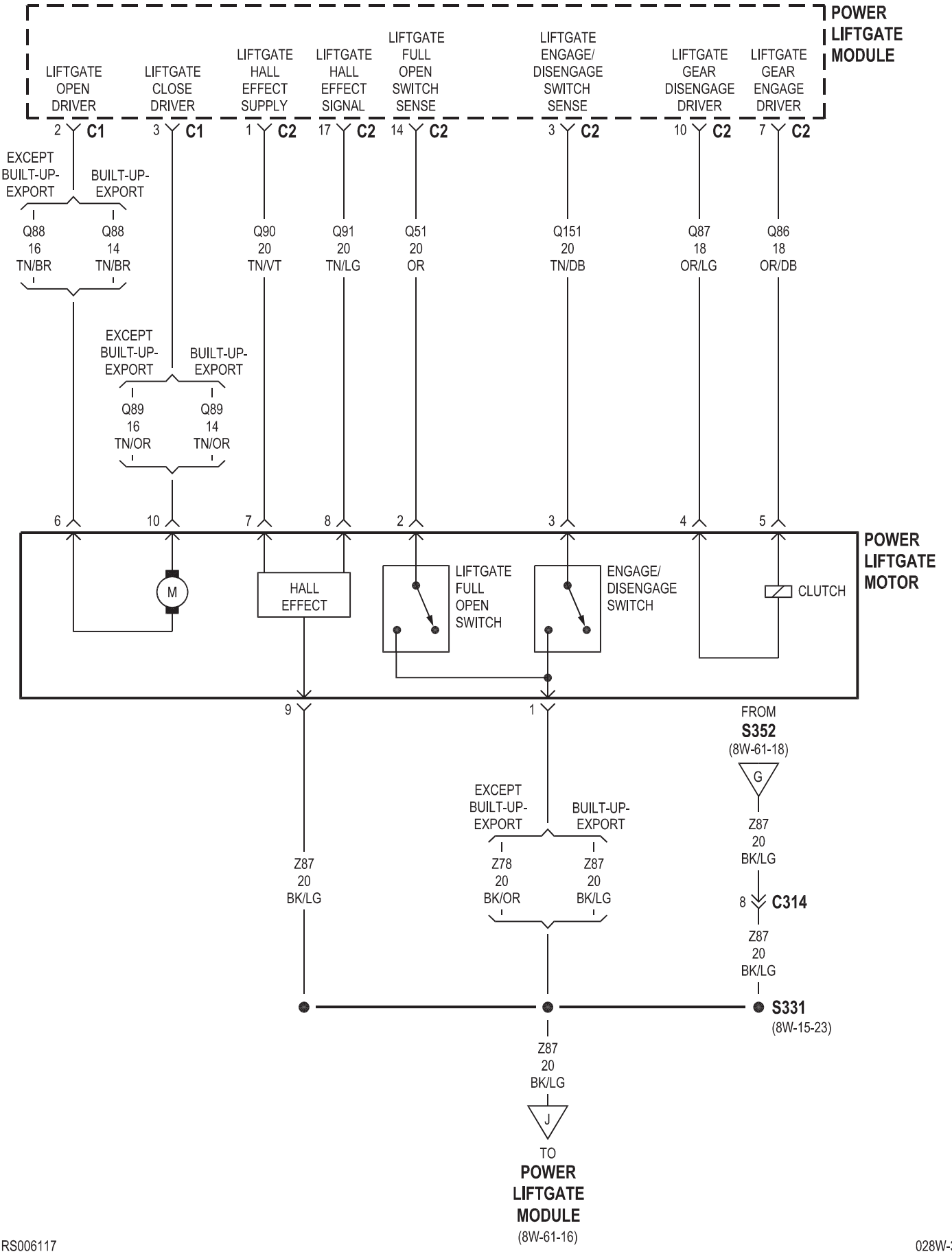

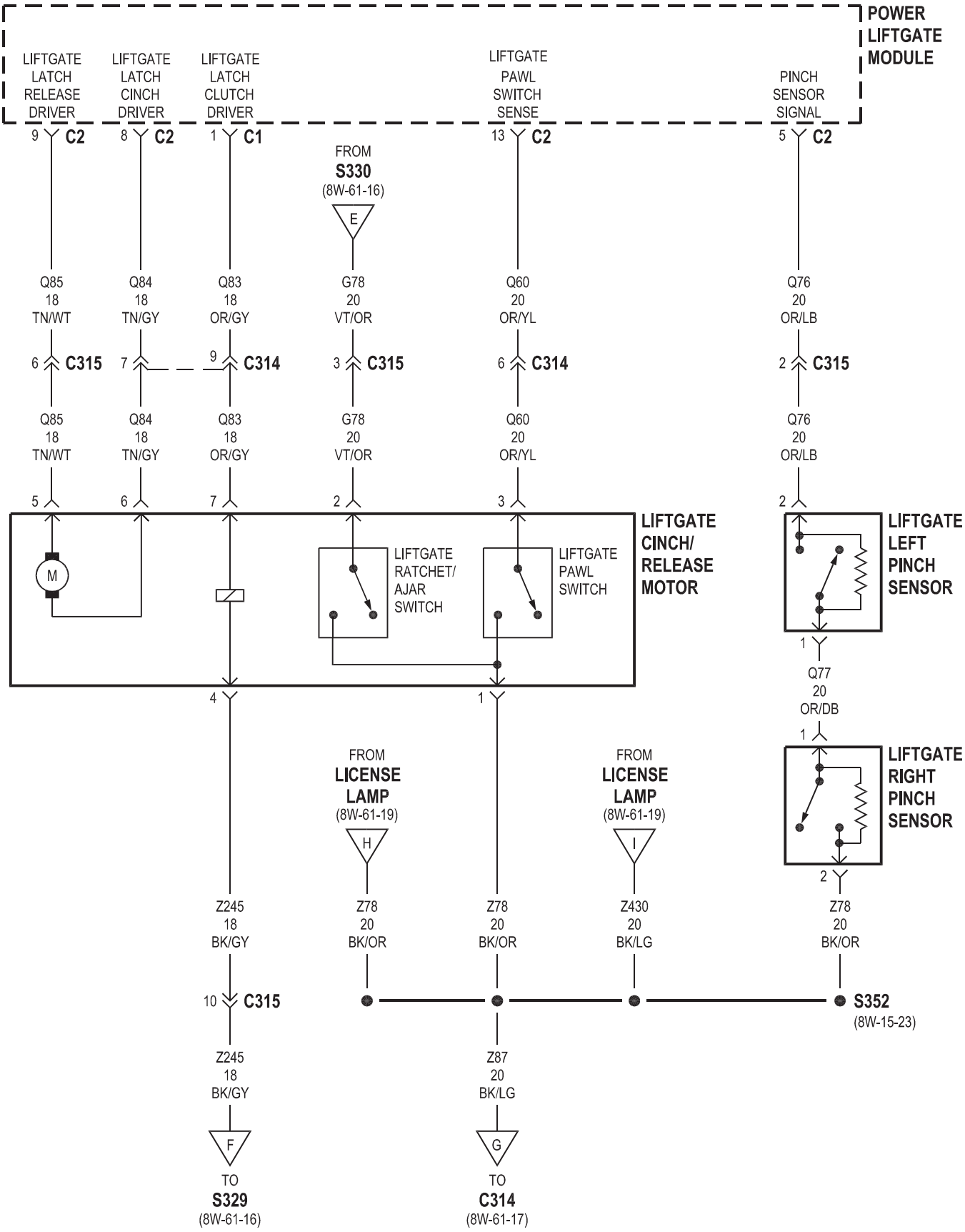
POWER LIFTGATE MODULE
LIFTGATE LATCH RELEASE DRIVER
LIFTGATE LATCH CINCH DRIVER
LIFTGATE LATCH CLUTCH DRIVER
LIFTGATE PAWL SWITCH SENSE
PINCH SENSOR SIGNAL
9 C2
8 C2
1 C1
13 C2
5 C2
FROM S330 (8W-61-16)
E
Q85 18 TN/WT
Q84 18 TN/GY
Q83 18 OR/GY
G78 20 VT/OR
Q60 20 OR/YL
Q76 20 OR/LB
6 C315
7
9 C314
3 C315
6 C314
2 C315
5
6
7
2
3
2
M
LIFTGATE RATCHET/ AJAR SWITCH
LIFTGATE PAWL SWITCH
LIFTGATE CINCH/ RELEASE MOTOR
LIFTGATE LEFT PINCH SENSOR
1
Q77 20 OR/DB
4
1
1
LIFTGATE RIGHT PINCH SENSOR
2
FROM LICENSE LAMP (8W-61-19)
H
FROM LICENSE LAMP (8W-61-19)
I
Z245 18 BK/GY
Z78 20 BK/OR
Z78 20 BK/OR
Z430 20 BK/LG
Z78 20 BK/OR
10 C315
S352 (8W-15-23)
Z245 18 BK/GY
Z87 20 BK/LG
F
G
TO S329 (8W-61-16)
TO C314 (8W-61-17)

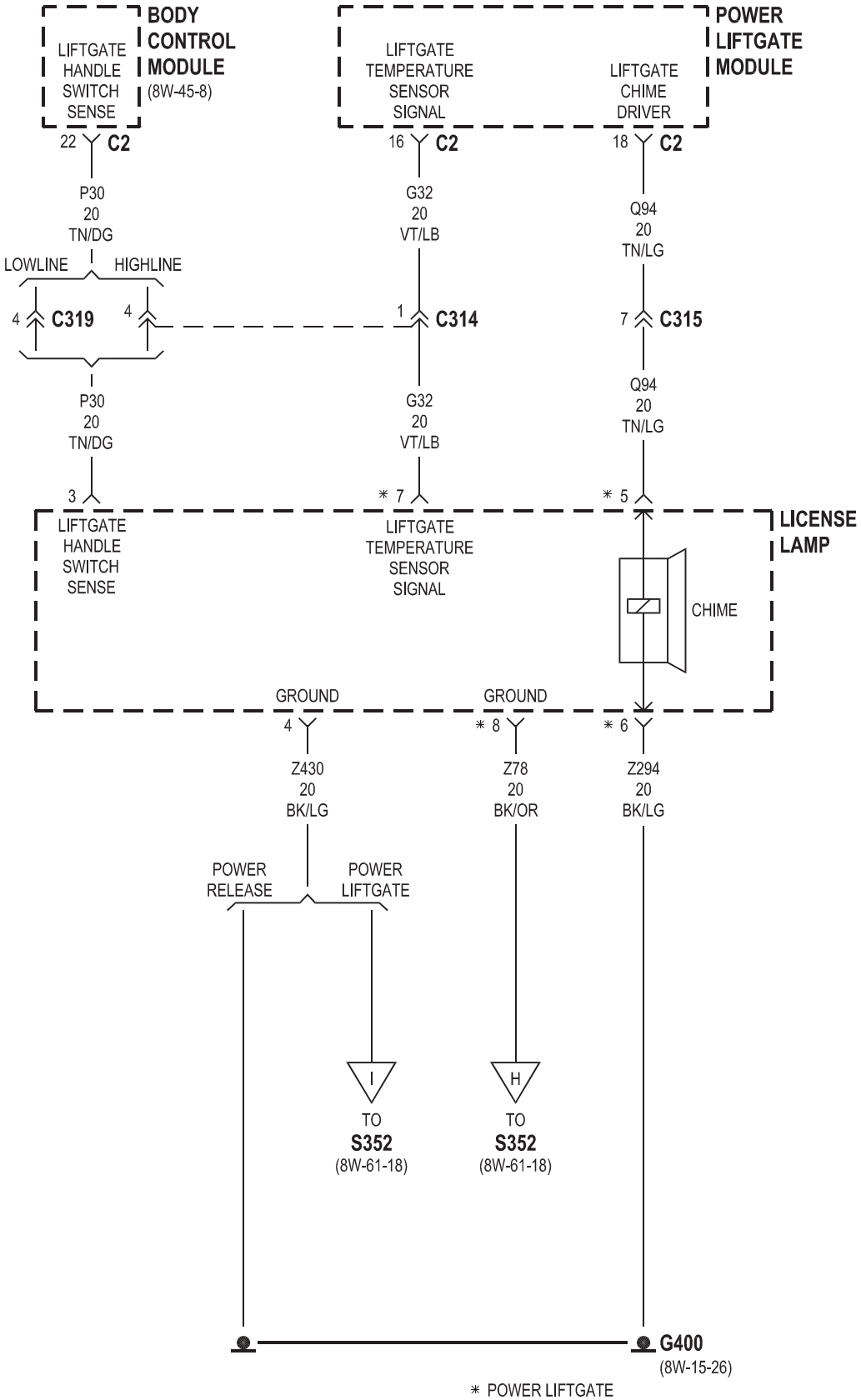
BODY CONTROL MODULE
(8W-45-8)
LIFTGATE HANDLE SWITCH SENSE
22 C2
P30
20
TN/DG
LOWLINE
HIGHLINE
4 C319
4
P30
20
TN/DG
3
LIFTGATE HANDLE SWITCH SENSE
POWER LIFTGATE MODULE
LIFTGATE TEMPERATURE SENSOR SIGNAL
16 C2
G32
20
VT/LB
1 C314
G32
20
VT/LB
* 7
LIFTGATE TEMPERATURE SENSOR SIGNAL
LIFTGATE CHIME DRIVER
18 C2
Q94
20
TN/LG
7 C315
Q94
20
TN/LG
* 5
CHIME
LICENSE LAMP
GROUND
4
Z430
20
BK/LG
GROUND
* 8
Z78
20
BK/OR
* 6
Z294
20
BK/LG
POWER RELEASE
POWER LIFTGATE
I
TO
S352
(8W-61-18)
H
TO
S352
(8W-61-18)
G400
(8W-15-26)
* POWER LIFTGATE

8W-62 POWER MIRRORS

Component	Page
Automatic Day/Night Mirror	8W-62-8
Body Control Module	8W-62-2, 3, 4, 5, 9
Defogger Relay	8W-62-10
Diagnostic Junction Port	8W-62-3
Fuse 18	8W-62-2, 4, 5
Fuse 22	8W-62-3
G200	8W-62-2, 3, 4, 5, 10
Integrated Power Module	8W-62-2, 3, 4, 5, 9, 10
Left Power Mirror	8W-62-2, 4, 7, 8, 9, 10
Memory Seat/Mirror Module	8W-62-3, 6, 7, 8
Memory Set Switch	8W-62-3
Passenger Folding Mirror Relay	8W-62-2, 9
Power Folding Mirror Switch	8W-62-2
Power Mirror Switch	8W-62-2, 4, 5, 6
Power Seat Circuit Breaker	8W-62-3
PTC 4	8W-62-10
Right Power Mirror	8W-62-2, 5, 7, 9, 10

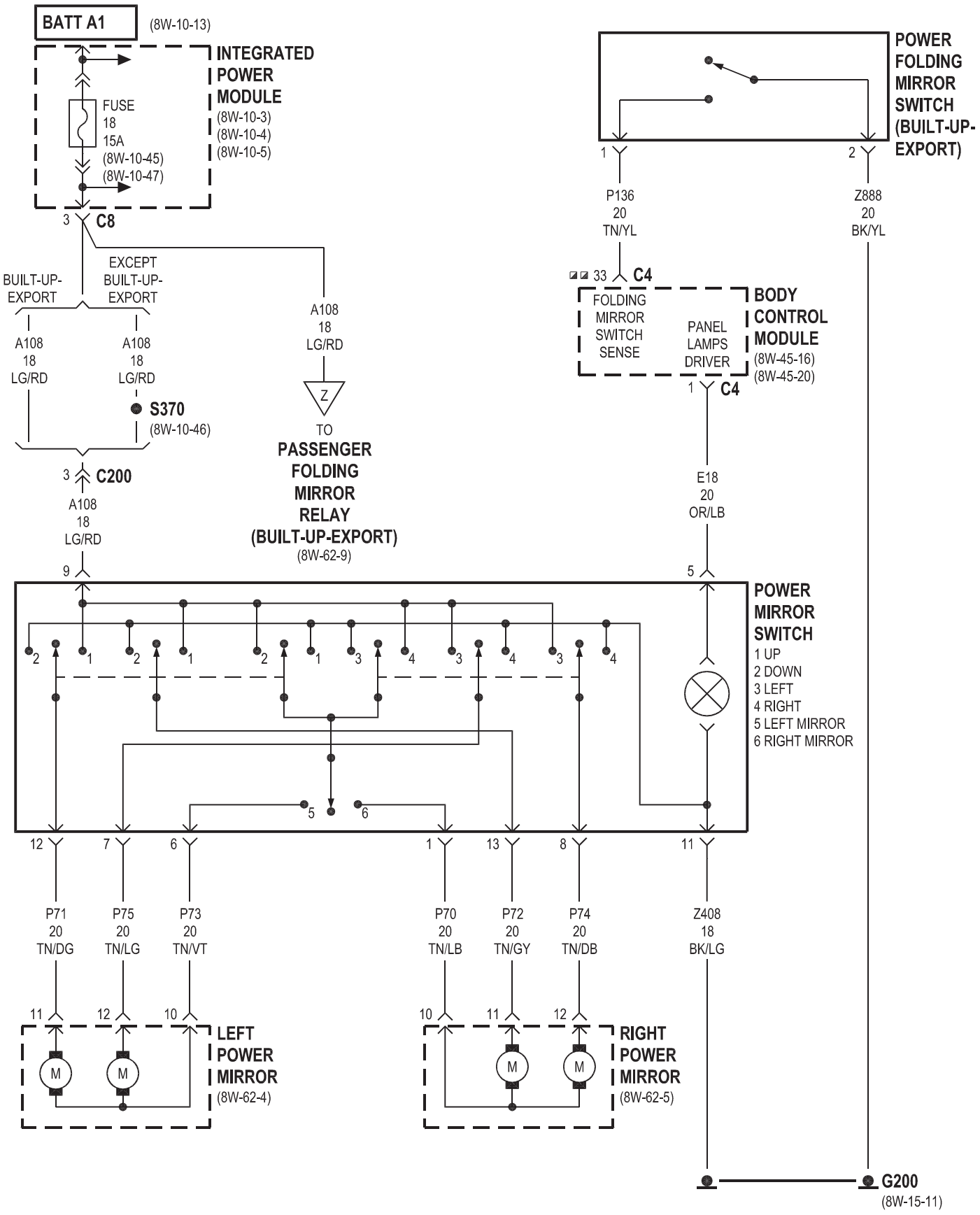

BUILT-UP-EXPORT

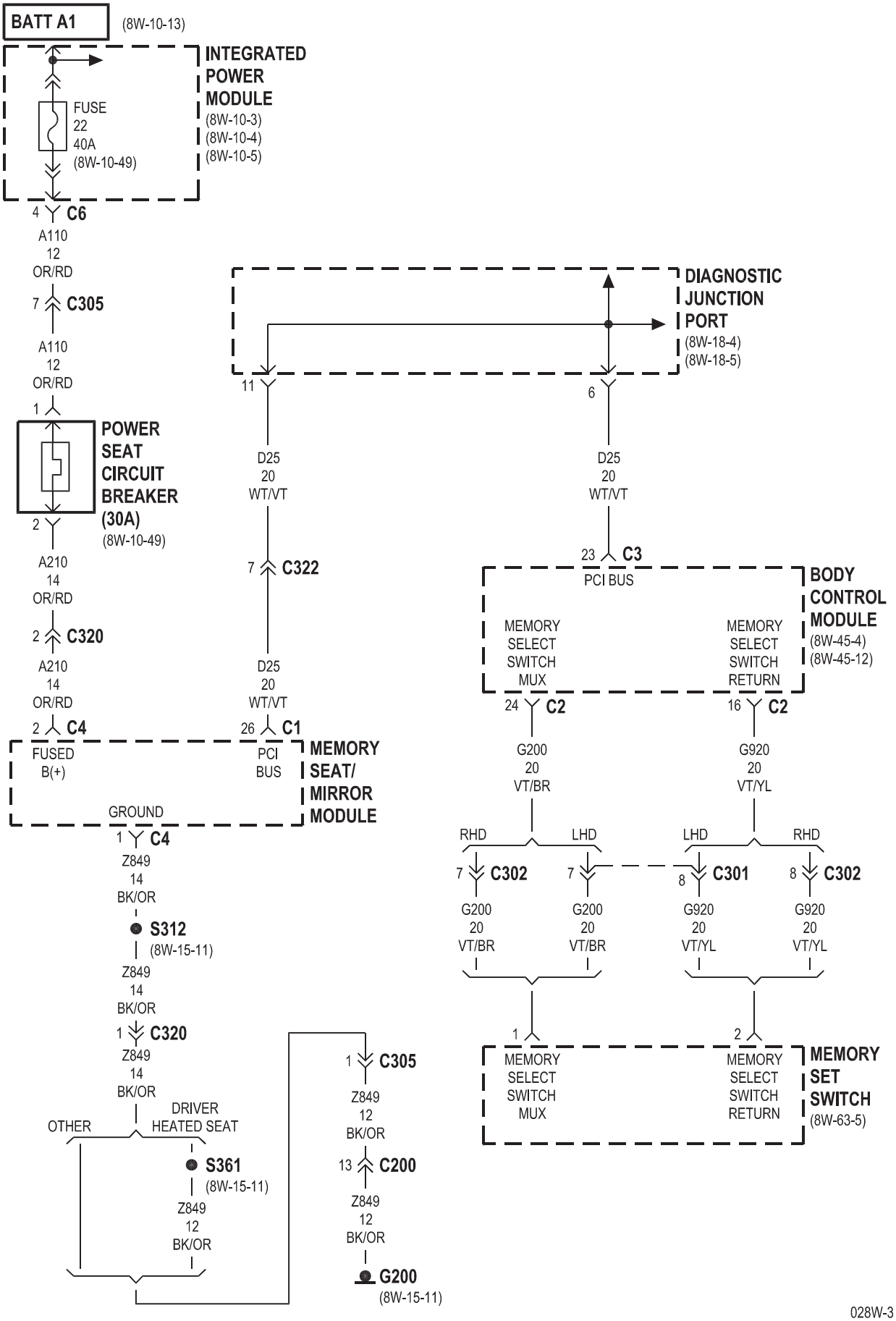
BATT A1
(8W-10-13)
INTEGRATED POWER MODULE
(8W-10-3)
(8W-10-4)
(8W-10-5)
FUSE
22
40A
(8W-10-49)
4 C6
A110
12
OR/RD
7 C305
A110
12
OR/RD
1
POWER SEAT CIRCUIT BREAKER (30A)
(8W-10-49)
2
A210
14
OR/RD
2 C320
A210
14
OR/RD
2 C4
FUSED B(+)
GROUND
1 C4
Z849
14
BK/OR
S312
(8W-15-11)
Z849
14
BK/OR
1 C320
Z849
14
BK/OR
OTHER
DRIVER HEATED SEAT
S361
(8W-15-11)
Z849
12
BK/OR
1 C305
Z849
12
BK/OR
13 C200
Z849
12
BK/OR
G200
(8W-15-11)
DIAGNOSTIC JUNCTION PORT
(8W-18-4)
(8W-18-5)
11
6
D25
20
WT/VT
7 C322
D25
20
WT/VT
26 C1
PCI BUS
MEMORY SEAT/ MIRROR MODULE
D25
20
WT/VT
23 C3
PCI BUS
BODY CONTROL MODULE
(8W-45-4)
(8W-45-12)
MEMORY SELECT SWITCH MUX
MEMORY SELECT SWITCH RETURN
24 C2
16 C2
G200
20
VT/BR
G920
20
VT/YL
RHD
LHD
LHD
RHD
7 C302
7
8 C301
8 C302
G200
20
VT/BR
G200
20
VT/BR
G920
20
VT/YL
G920
20
VT/YL
1
2
MEMORY SELECT SWITCH MUX
MEMORY SELECT SWITCH RETURN
MEMORY SET SWITCH
(8W-63-5)

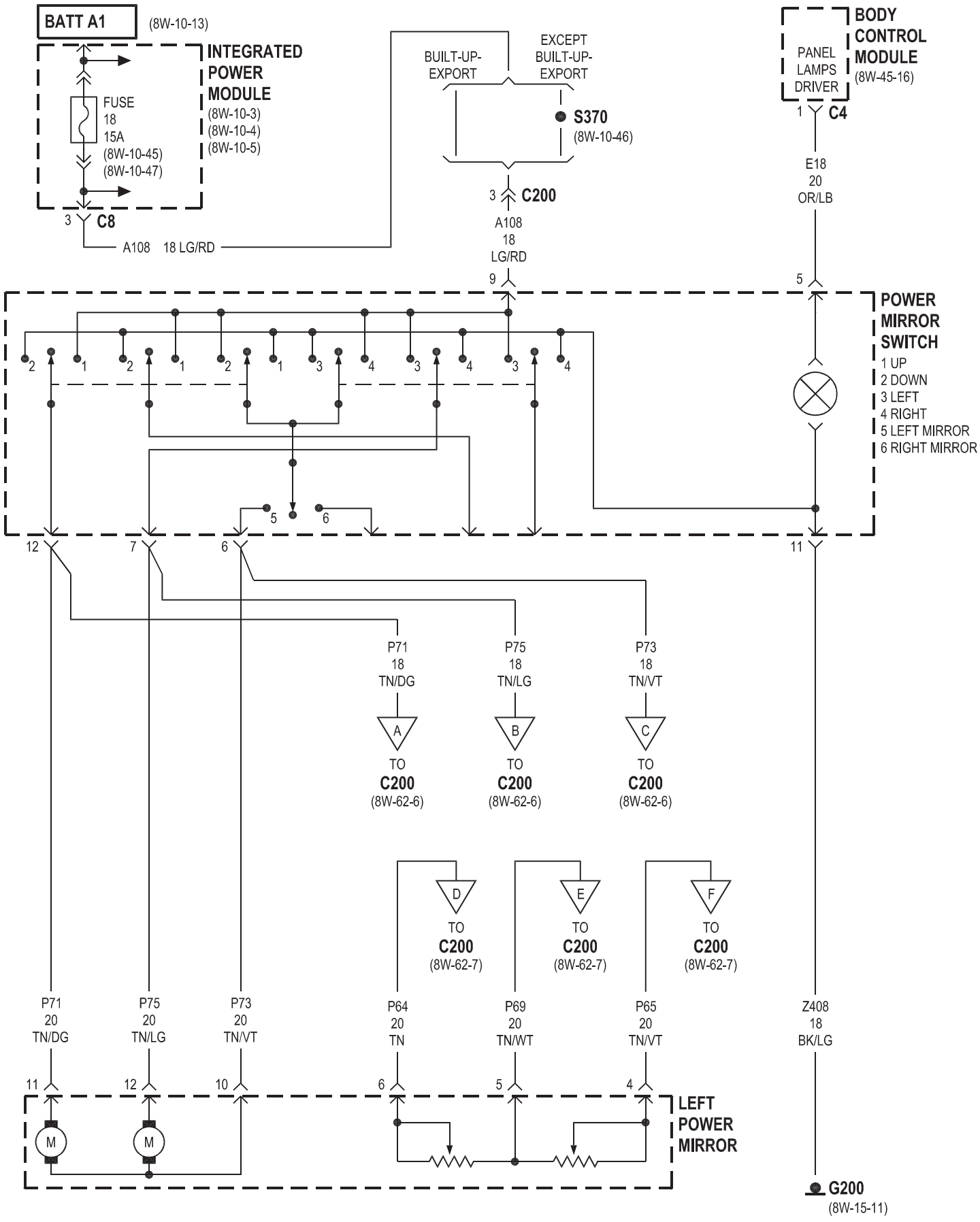
BATT A1
(8W-10-13)
INTEGRATED POWER MODULE
(8W-10-3)
(8W-10-4)
(8W-10-5)
FUSE 18 15A
(8W-10-45)
(8W-10-47)
3 C8
A108 18 LG/RD
BUILT-UP-EXPORT
EXCEPT BUILT-UP-EXPORT
S370
(8W-10-46)
3 C200
A108 18 LG/RD
9
BODY CONTROL MODULE
(8W-45-16)
PANEL LAMPS DRIVER
1 C4
E18 20 OR/LB
5
POWER MIRROR SWITCH
1 UP
2 DOWN
3 LEFT
4 RIGHT
5 LEFT MIRROR
6 RIGHT MIRROR
12
7
6
11
P71 18 TN/DG
P75 18 TN/LG
P73 18 TN/VT
A
B
C
TO C200 (8W-62-6)
D
E
F
TO C200 (8W-62-7)
P71 20 TN/DG
P75 20 TN/LG
P73 20 TN/VT
P64 20 TN
P69 20 TN/WT
P65 20 TN/VT
Z408 18 BK/LG
11
12
10
6
5
4
M
M
LEFT POWER MIRROR
G200
(8W-15-11)

MEMORY

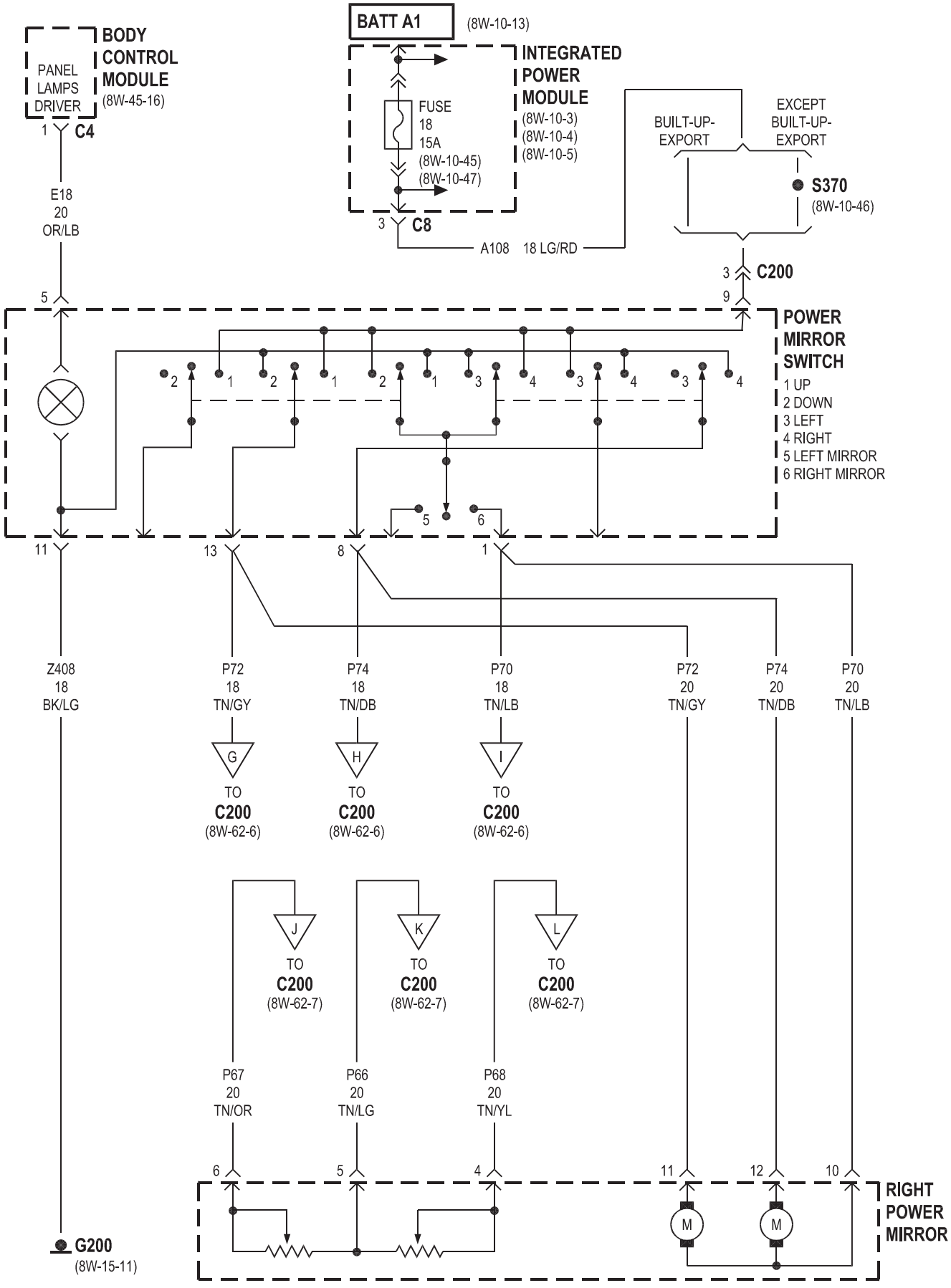
BATT A1
(8W-10-13)
BODY CONTROL MODULE
(8W-45-16)
PANEL LAMPS DRIVER
1
C4
INTEGRATED POWER MODULE
(8W-10-3)
(8W-10-4)
(8W-10-5)
FUSE 18 15A
(8W-10-45)
(8W-10-47)
3
C8
A108 18 LG/RD
BUILT-UP-EXPORT
EXCEPT BUILT-UP-EXPORT
S370
(8W-10-46)
3
C200
9
E18 20 OR/LB
5
POWER MIRROR SWITCH
1 UP
2 DOWN
3 LEFT
4 RIGHT
5 LEFT MIRROR
6 RIGHT MIRROR
11
13
8
1
Z408 18 BK/LG
P72 18 TN/GY
P74 18 TN/DB
P70 18 TN/LB
P72 20 TN/GY
P74 20 TN/DB
P70 20 TN/LB
G
H
I
TO C200 (8W-62-6)
J
K
L
TO C200 (8W-62-7)
P67 20 TN/OR
P66 20 TN/LG
P68 20 TN/YL
6
5
4
11
12
10
M
M
RIGHT POWER MIRROR
G200
(8W-15-11)

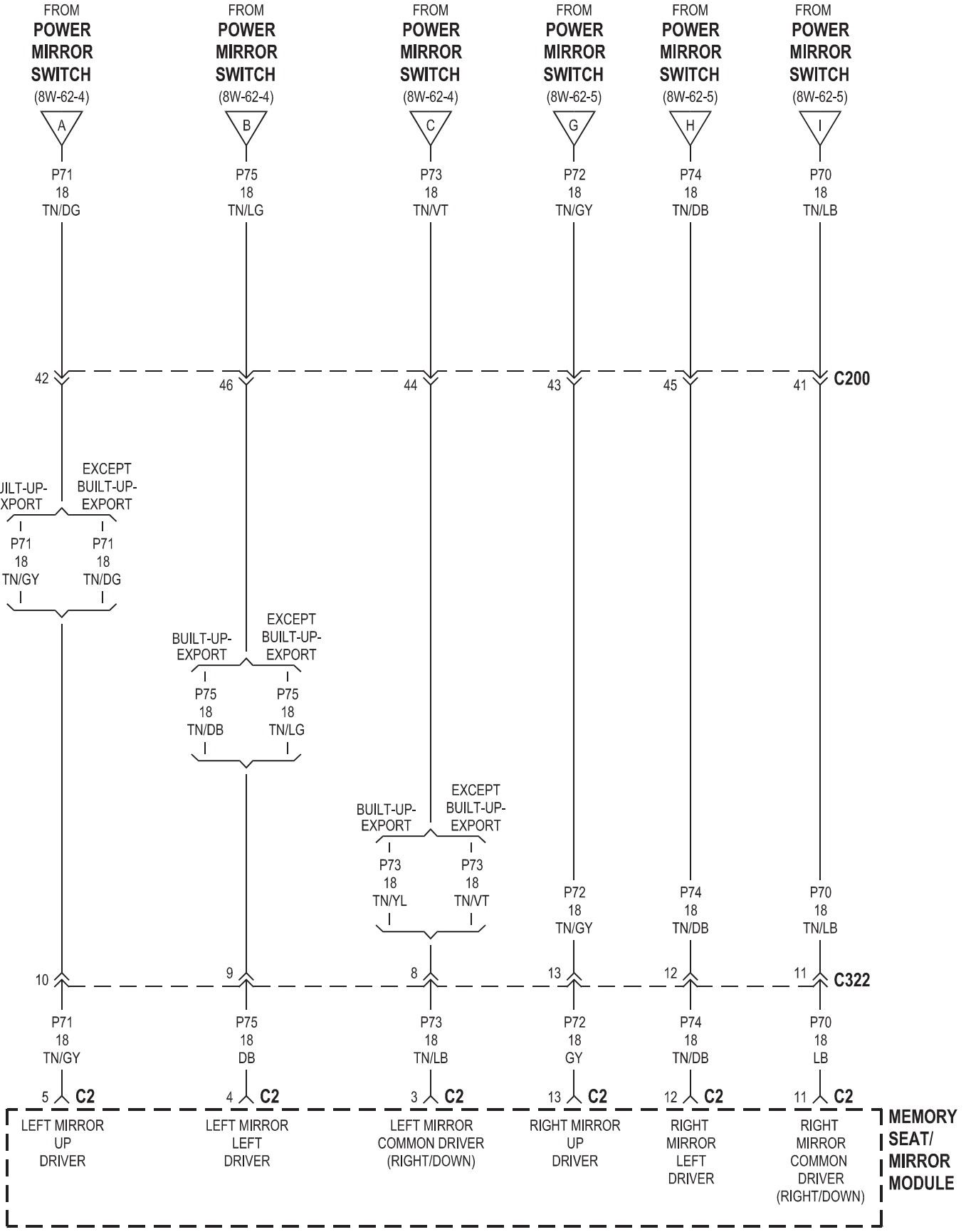
FROM POWER MIRROR SWITCH (8W-62-4) A
FROM POWER MIRROR SWITCH (8W-62-4) B
FROM POWER MIRROR SWITCH (8W-62-4) C
FROM POWER MIRROR SWITCH (8W-62-5) G
FROM POWER MIRROR SWITCH (8W-62-5) H
FROM POWER MIRROR SWITCH (8W-62-5) I
P71 18 TN/DG
P75 18 TN/LG
P73 18 TN/VT
P72 18 TN/GY
P74 18 TN/DB
P70 18 TN/LB
42
46
44
43
45
41
C200
BUILT-UP-EXPORT
EXCEPT BUILT-UP-EXPORT
P71 18 TN/GY
P71 18 TN/DG
BUILT-UP-EXPORT
EXCEPT BUILT-UP-EXPORT
P75 18 TN/DB
P75 18 TN/LG
BUILT-UP-EXPORT
EXCEPT BUILT-UP-EXPORT
P73 18 TN/YL
P73 18 TN/VT
P72 18 TN/GY
P74 18 TN/DB
P70 18 TN/LB
10
9
8
13
12
11
C322
P71 18 TN/GY
P75 18 DB
P73 18 TN/LB
P72 18 GY
P74 18 TN/DB
P70 18 LB
5 C2
4 C2
3 C2
13 C2
12 C2
11 C2
LEFT MIRROR UP DRIVER
LEFT MIRROR LEFT DRIVER
LEFT MIRROR COMMON DRIVER (RIGHT/DOWN)
RIGHT MIRROR UP DRIVER
RIGHT MIRROR LEFT DRIVER
RIGHT MIRROR COMMON DRIVER (RIGHT/DOWN)
MEMORY SEAT/ MIRROR MODULE

MEMORY

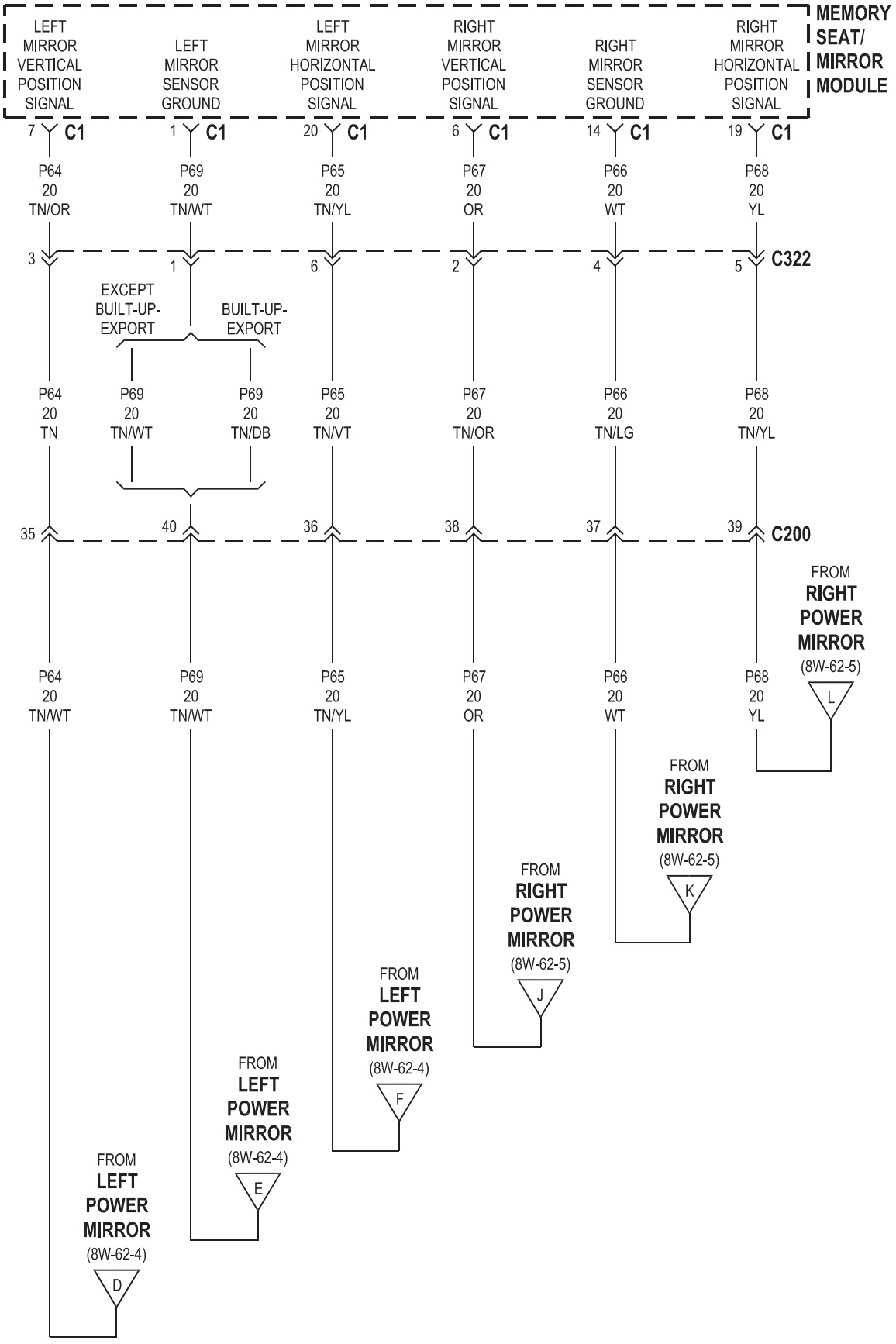
MEMORY SEAT/ MIRROR MODULE
LEFT MIRROR VERTICAL POSITION SIGNAL
LEFT MIRROR SENSOR GROUND
LEFT MIRROR HORIZONTAL POSITION SIGNAL
RIGHT MIRROR VERTICAL POSITION SIGNAL
RIGHT MIRROR SENSOR GROUND
RIGHT MIRROR HORIZONTAL POSITION SIGNAL
7 C1
1 C1
20 C1
6 C1
14 C1
19 C1
P64 20 TN/OR
P69 20 TN/WT
P65 20 TN/YL
P67 20 OR
P66 20 WT
P68 20 YL
3
1
6
2
4
5 C322
EXCEPT BUILT-UP-EXPORT
BUILT-UP-EXPORT
P64 20 TN
P69 20 TN/WT
P69 20 TN/DB
P65 20 TN/VT
P67 20 TN/OR
P66 20 TN/LG
P68 20 TN/YL
35
40
36
38
37
39 C200
P64 20 TN/WT
P69 20 TN/WT
P65 20 TN/YL
P67 20 OR
P66 20 WT
P68 20 YL
FROM RIGHT POWER MIRROR (8W-62-5) L
FROM RIGHT POWER MIRROR (8W-62-5) K
FROM RIGHT POWER MIRROR (8W-62-5) J
FROM LEFT POWER MIRROR (8W-62-4) F
FROM LEFT POWER MIRROR (8W-62-4) E
FROM LEFT POWER MIRROR (8W-62-4) D

EXCEPT BUILT-UP-EXPORT MEMORY

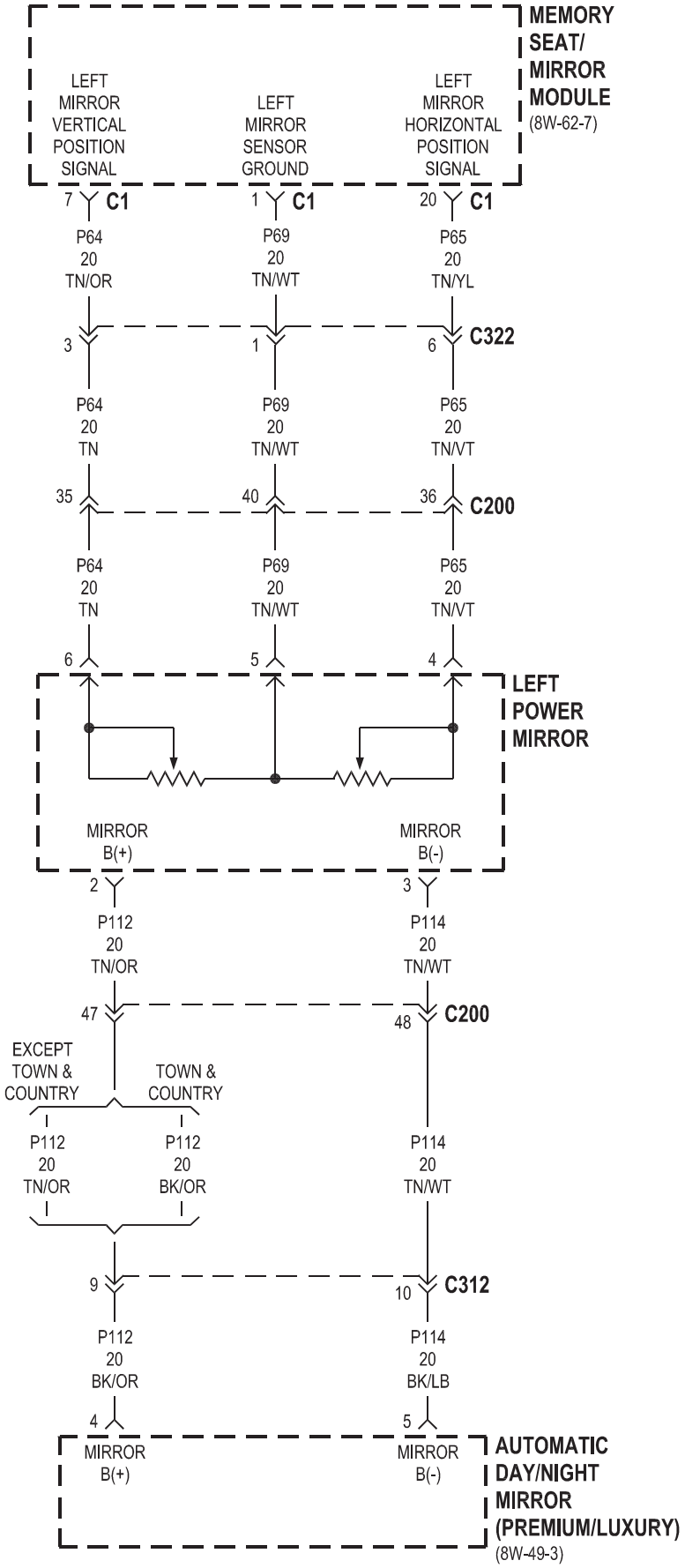

BUILT-UP-EXPORT FOLDING MIRRORS

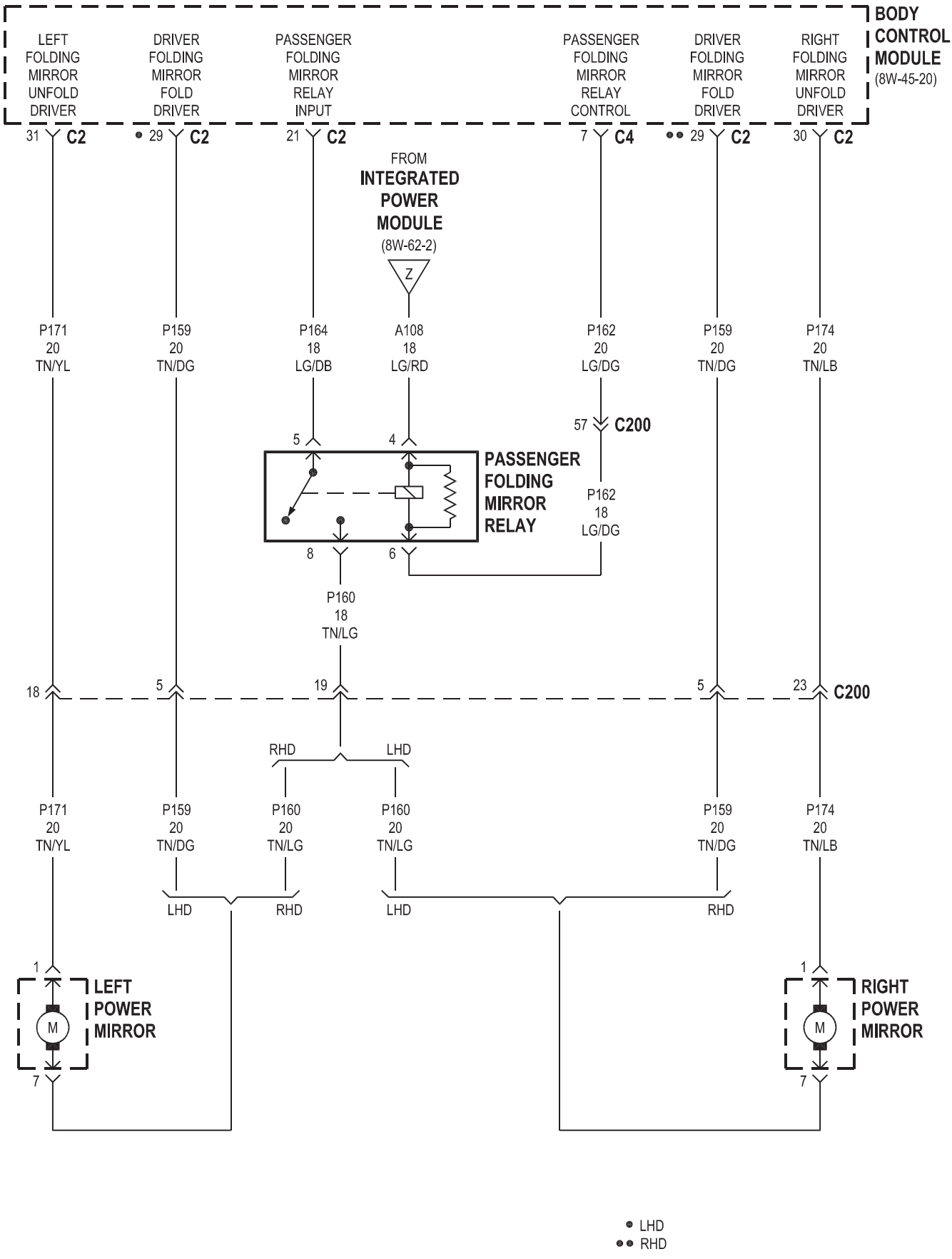

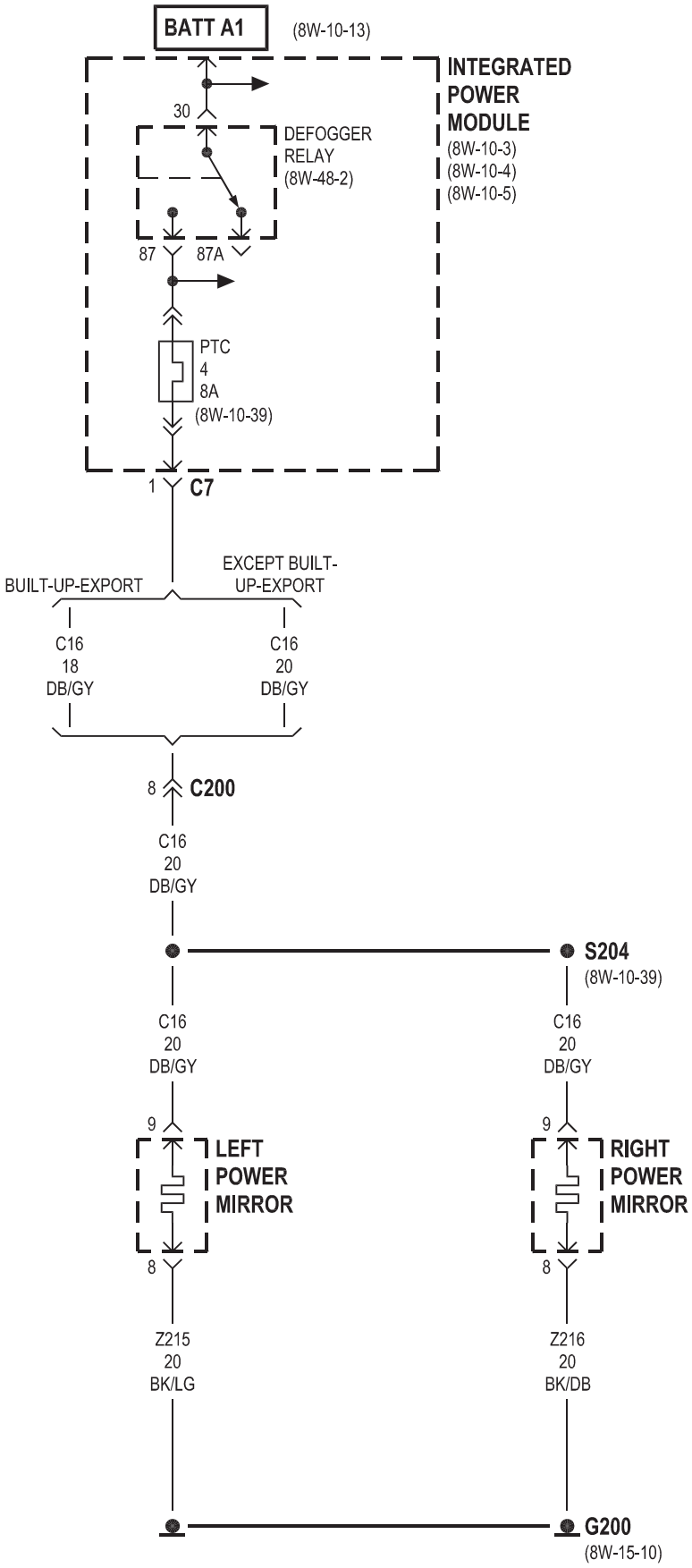
BATT A1
(8W-10-13)
INTEGRATED POWER MODULE
(8W-10-3)
(8W-10-4)
(8W-10-5)
30
DEFOGGER RELAY
(8W-48-2)
87
87A
PTC
4
8A
(8W-10-39)
1
C7
BUILT-UP-EXPORT
EXCEPT BUILT-UP-EXPORT
C16
18
DB/GY
C16
20
DB/GY
8
C200
C16
20
DB/GY
S204
(8W-10-39)
C16
20
DB/GY
C16
20
DB/GY
9
9
LEFT POWER MIRROR
RIGHT POWER MIRROR
8
8
Z215
20
BK/LG
Z216
20
BK/DB
G200
(8W-15-10)

8W-63 POWER SEATS

Component	Page
Body Control Module	8W-63-5, 9
Diagnostic Junction Port	8W-63-5
Driver Heated Seat Back	8W-63-9
Driver Heated Seat Cushion	8W-63-9
Driver Heated Seat Module	8W-63-3, 4, 9
Driver Power Seat Front Riser Motor	8W-63-2, 7
Driver Power Seat Front Riser Position Sensor	8W-63-8
Driver Power Seat Horizontal Motor	8W-63-2, 7
Driver Power Seat Horizontal Position Sensor	8W-63-8
Driver Power Seat Rear Riser Motor	8W-63-2, 7
Driver Power Seat Rear Riser Position Sensor	8W-63-8
Driver Power Seat Recliner Motor	8W-63-2, 7
Driver Power Seat Recliner Position Sensor	8W-63-8
Driver Power Seat Switch	8W-63-2, 6
Fuse 22	8W-63-2, 4
G200	8W-63-2, 4, 6, 9
G301	8W-63-3, 10
Instrument Panel Switch Bank	8W-63-9
Integrated Power Module	8W-63-2, 4
Memory Seat/Mirror Module	8W-63-4, 5, 6, 7, 8
Memory Set Switch	8W-63-5
Passenger Heated Seat Back	8W-63-10
Passenger Heated Seat Cushion	8W-63-10
Passenger Heated Seat Module	8W-63-10
Passenger Power Seat Front Riser Motor	8W-63-3
Passenger Power Seat Horizontal Motor	8W-63-3
Passenger Power Seat Rear Riser Motor	8W-63-3
Passenger Power Seat Recliner Motor	8W-63-3
Passenger Power Seat Switch	8W-63-3
Power Seat Circuit Breaker	8W-63-2, 3, 4

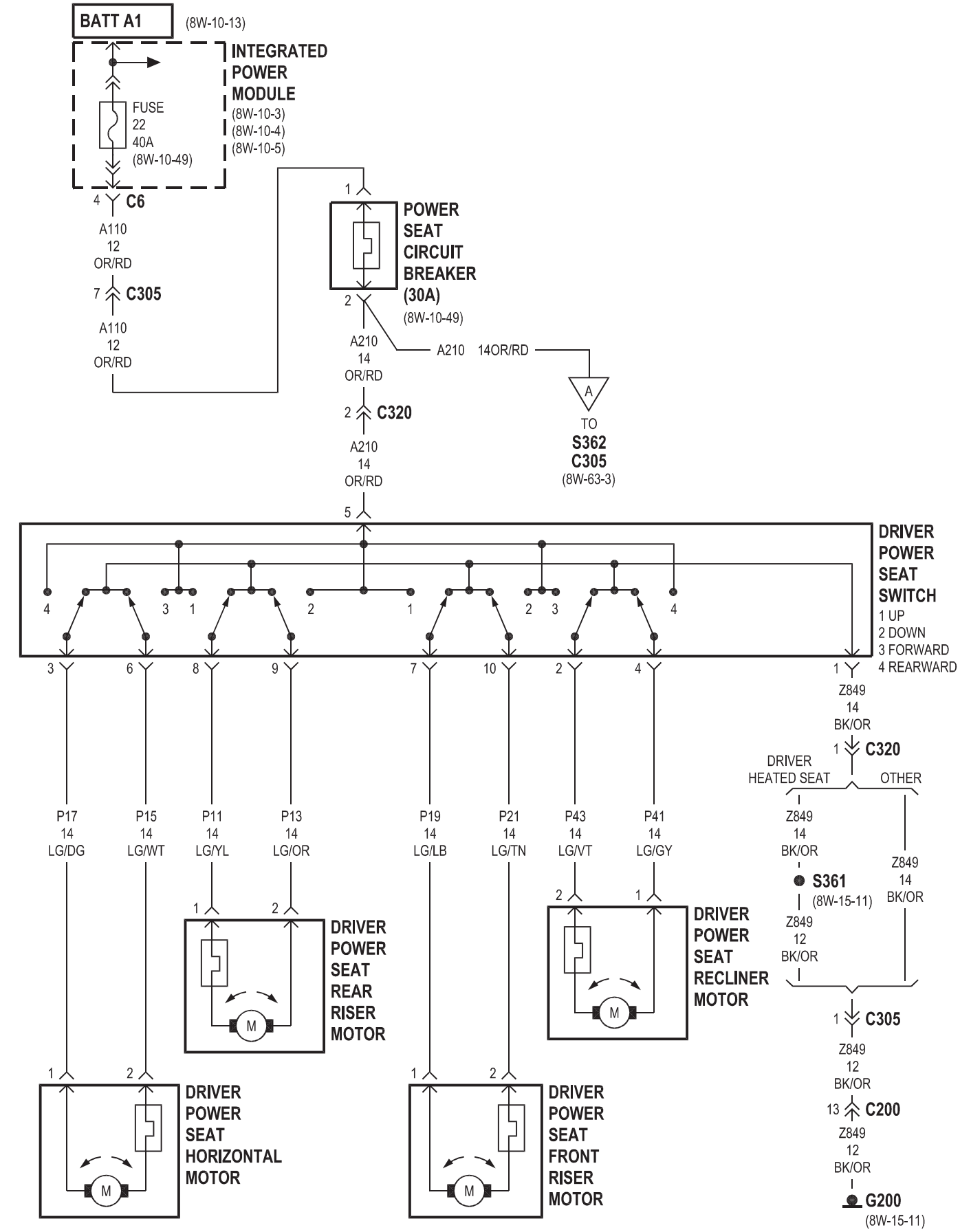
BATT A1
(8W-10-13)
INTEGRATED POWER MODULE
(8W-10-3)
(8W-10-4)
(8W-10-5)
FUSE 22 40A
(8W-10-49)
4 C6
A110 12 OR/RD
7 C305
A110 12 OR/RD
1
POWER SEAT CIRCUIT BREAKER (30A)
(8W-10-49)
2
A210 14 OR/RD
A210 14OR/RD
2 C320
A210 14 OR/RD
5
A
TO S362 C305
(8W-63-3)
DRIVER POWER SEAT SWITCH
1 UP
2 DOWN
3 FORWARD
4 REARWARD
4 3 1 2 1 2 3 4
3 6 8 9 7 10 2 4 1
Z849 14 BK/OR
1 C320
DRIVER HEATED SEAT
OTHER
Z849 14 BK/OR
S361
(8W-15-11)
Z849 12 BK/OR
Z849 14 BK/OR
1 C305
Z849 12 BK/OR
13 C200
Z849 12 BK/OR
G200
(8W-15-11)
P17 14 LG/DG
P15 14 LG/WT
P11 14 LG/YL
P13 14 LG/OR
P19 14 LG/LB
P21 14 LG/TN
P43 14 LG/VT
P41 14 LG/GY
DRIVER POWER SEAT REAR RISER MOTOR
DRIVER POWER SEAT RECLINER MOTOR
DRIVER POWER SEAT HORIZONTAL MOTOR
DRIVER POWER SEAT FRONT RISER MOTOR
M

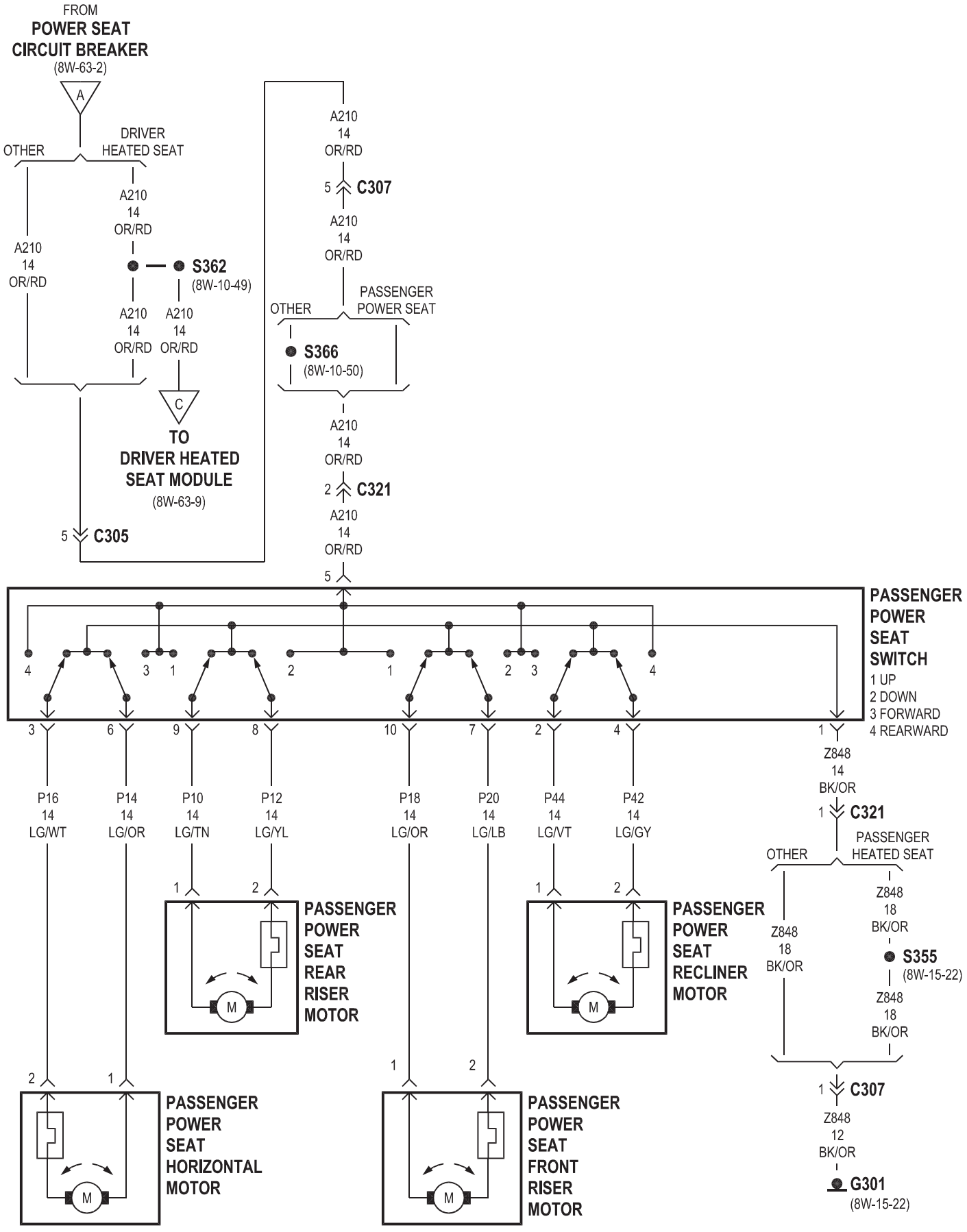
FROM
POWER SEAT
CIRCUIT BREAKER
(8W-63-2)
A
OTHER
DRIVER
HEATED SEAT
A210
14
OR/RD
S362
(8W-10-49)
C
TO
DRIVER HEATED
SEAT MODULE
(8W-63-9)
5 C305
5 C307
2 C321
OTHER
PASSENGER
POWER SEAT
S366
(8W-10-50)
PASSENGER
POWER
SEAT
SWITCH
1 UP
2 DOWN
3 FORWARD
4 REARWARD
P16
14
LG/WT
P14
14
LG/OR
P10
14
LG/TN
P12
14
LG/YL
P18
14
LG/OR
P20
14
LG/LB
P44
14
LG/VT
P42
14
LG/GY
Z848
14
BK/OR
1 C321
PASSENGER
HEATED SEAT
Z848
18
BK/OR
S355
(8W-15-22)
1 C307
Z848
12
BK/OR
G301
(8W-15-22)
PASSENGER
POWER
SEAT
REAR
RISER
MOTOR
PASSENGER
POWER
SEAT
RECLINER
MOTOR
PASSENGER
POWER
SEAT
HORIZONTAL
MOTOR
PASSENGER
POWER
SEAT
FRONT
RISER
MOTOR
M

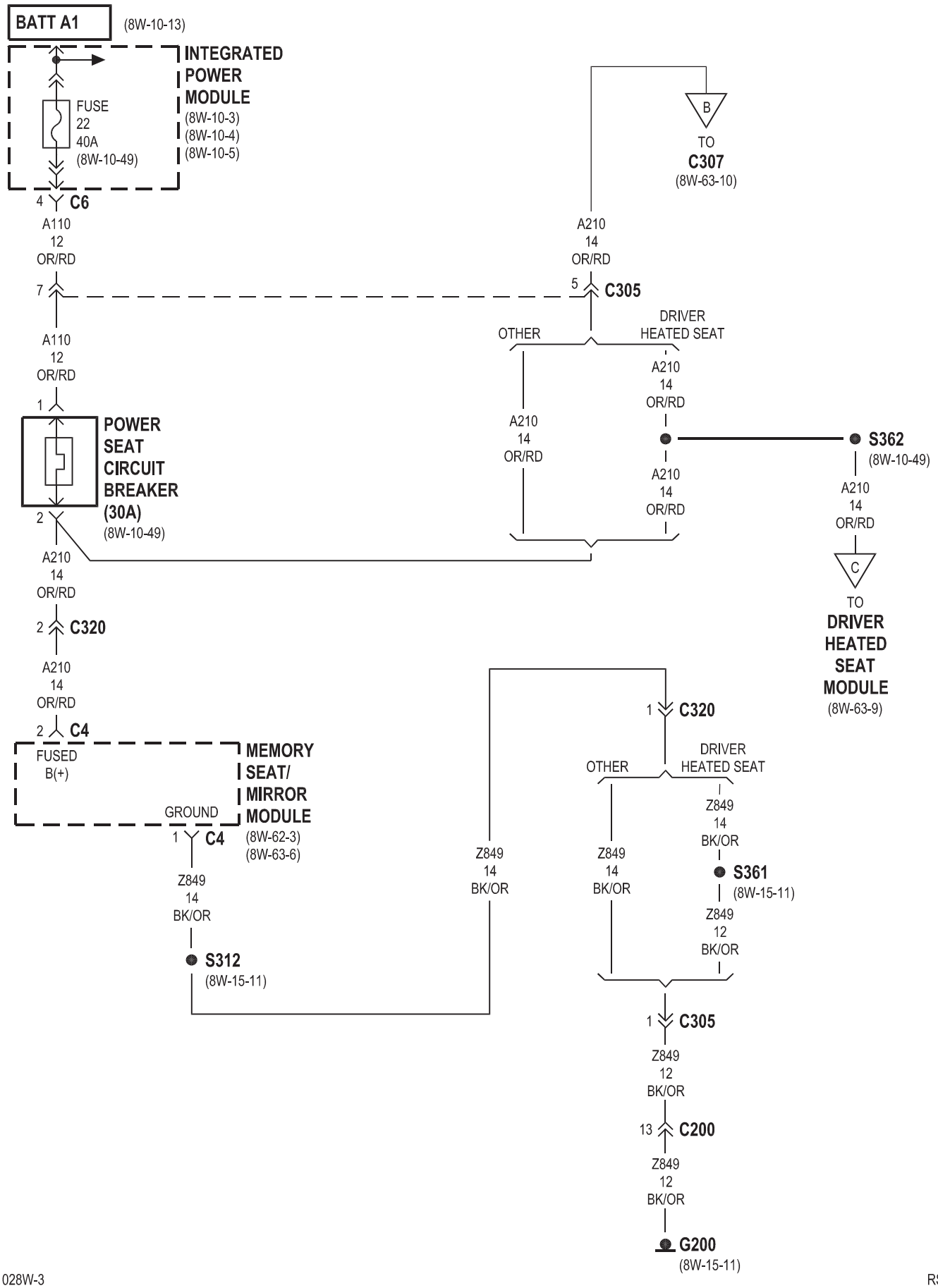
BATT A1
(8W-10-13)
INTEGRATED POWER MODULE
(8W-10-3)
(8W-10-4)
(8W-10-5)
FUSE 22 40A
(8W-10-49)
4 C6
A110 12 OR/RD
7
A110 12 OR/RD
1
POWER SEAT CIRCUIT BREAKER (30A)
(8W-10-49)
2
A210 14 OR/RD
2 C320
A210 14 OR/RD
2 C4
FUSED B(+)
MEMORY SEAT/ MIRROR MODULE
(8W-62-3)
(8W-63-6)
GROUND
1 C4
Z849 14 BK/OR
S312
(8W-15-11)
B
TO C307
(8W-63-10)
A210 14 OR/RD
5 C305
OTHER
DRIVER HEATED SEAT
A210 14 OR/RD
A210 14 OR/RD
S362
(8W-10-49)
A210 14 OR/RD
C
TO DRIVER HEATED SEAT MODULE
(8W-63-9)
1 C320
OTHER
DRIVER HEATED SEAT
Z849 14 BK/OR
Z849 14 BK/OR
Z849 14 BK/OR
S361
(8W-15-11)
Z849 12 BK/OR
1 C305
Z849 12 BK/OR
13 C200
Z849 12 BK/OR
G200
(8W-15-11)

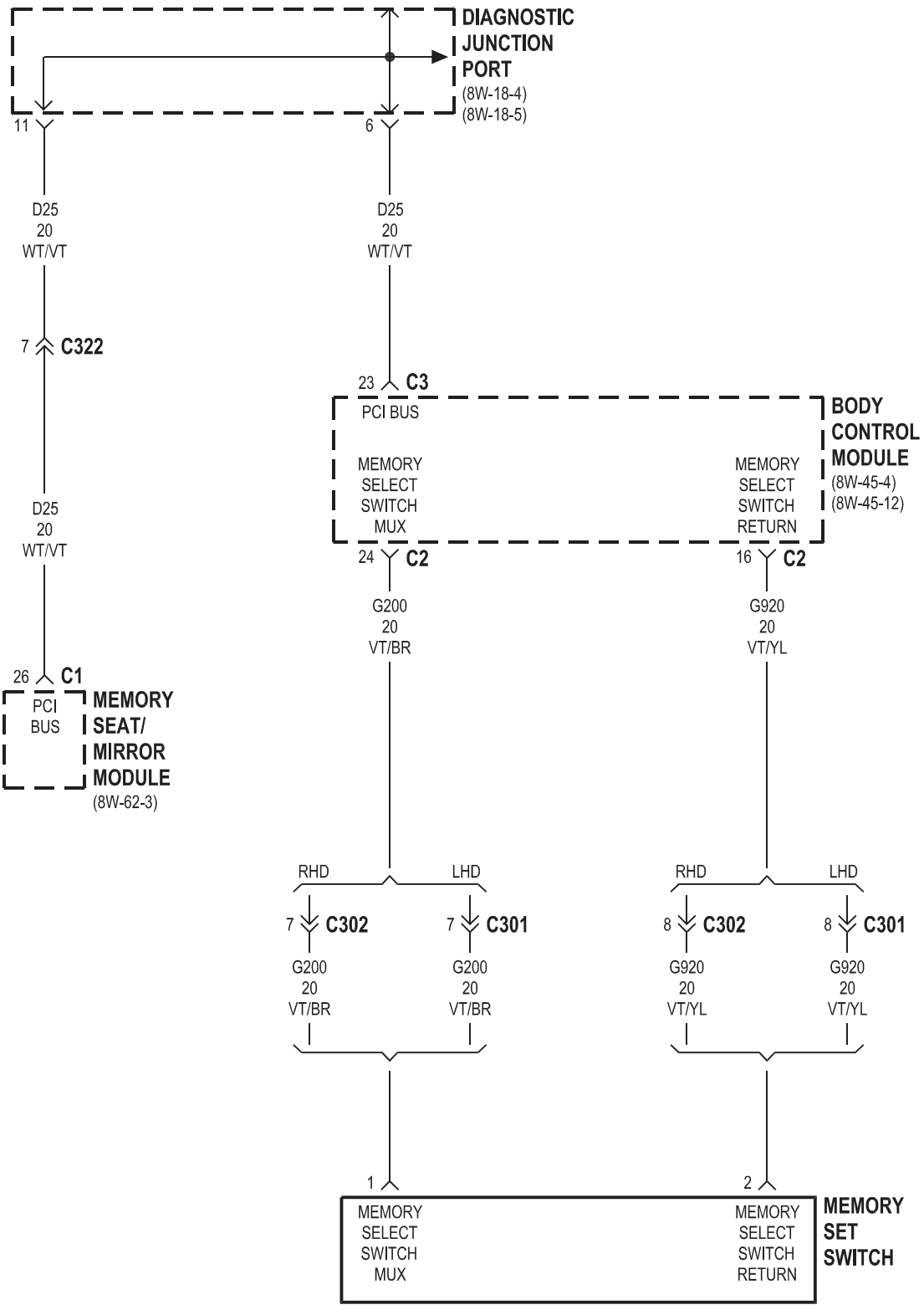
DIAGNOSTIC JUNCTION PORT
(8W-18-4)
(8W-18-5)
11
6
D25
20
WT/VT
D25
20
WT/VT
7 C322
23 C3
PCI BUS
BODY CONTROL MODULE
(8W-45-4)
(8W-45-12)
MEMORY SELECT SWITCH MUX
MEMORY SELECT SWITCH RETURN
D25
20
WT/VT
24 C2
16 C2
G200
20
VT/BR
G920
20
VT/YL
26 C1
PCI BUS
MEMORY SEAT/ MIRROR MODULE
(8W-62-3)
RHD
LHD
RHD
LHD
7 C302
7 C301
8 C302
8 C301
G200
20
VT/BR
G200
20
VT/BR
G920
20
VT/YL
G920
20
VT/YL
1
2
MEMORY SELECT SWITCH MUX
MEMORY SELECT SWITCH RETURN
MEMORY SET SWITCH

MEMORY

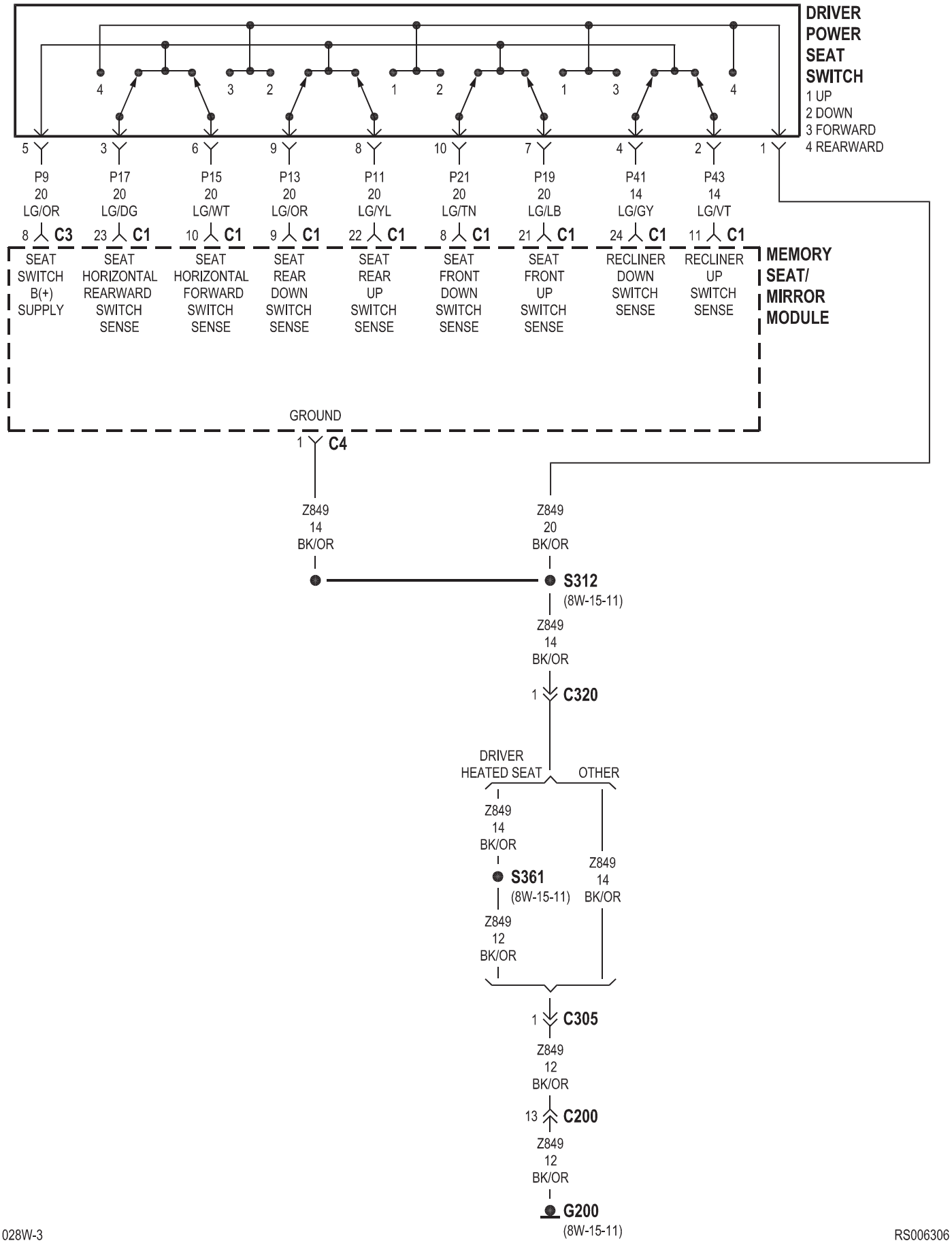

RS006306

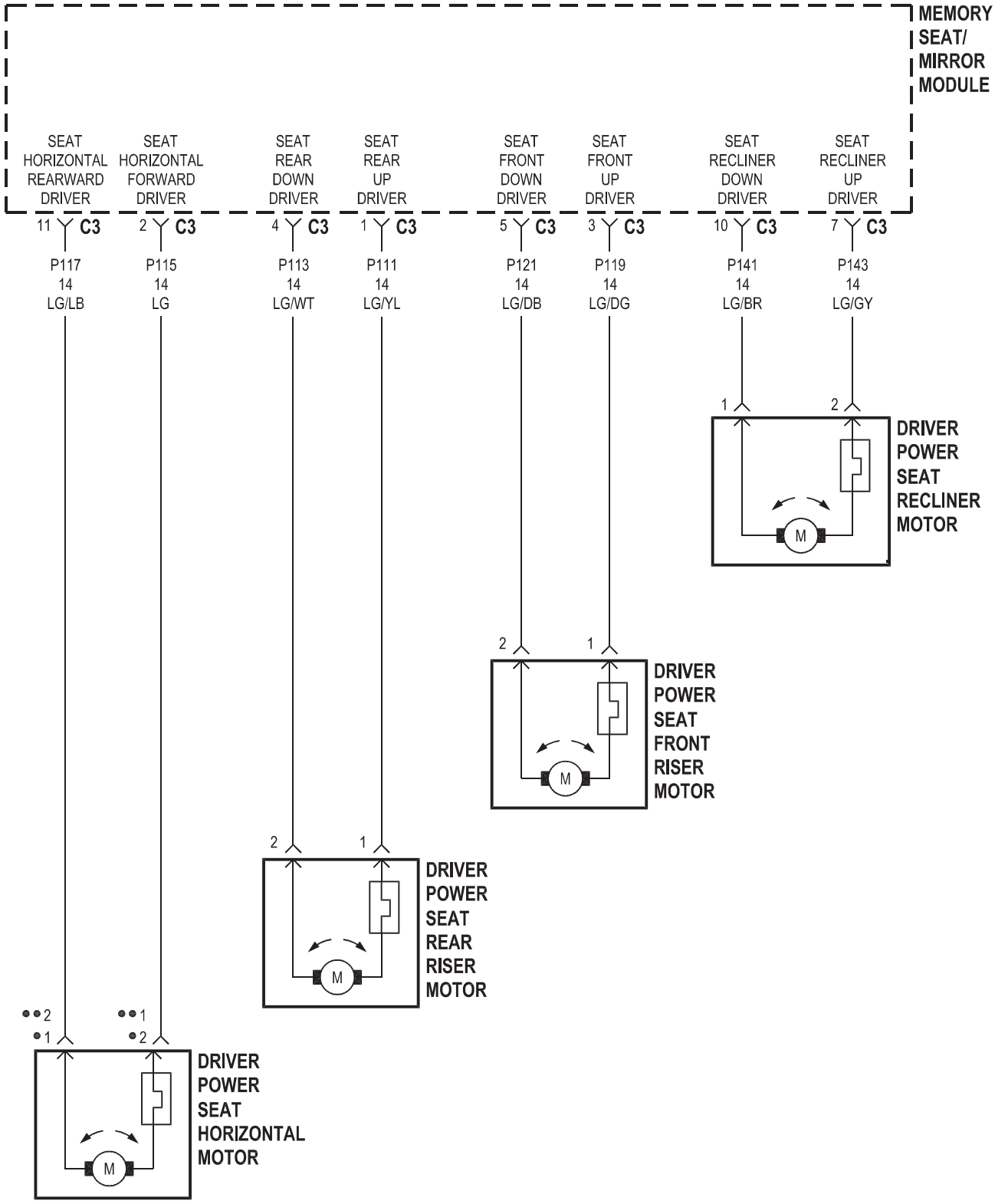
MEMORY SEAT/ MIRROR MODULE
SEAT HORIZONTAL REARWARD DRIVER
SEAT HORIZONTAL FORWARD DRIVER
SEAT REAR DOWN DRIVER
SEAT REAR UP DRIVER
SEAT FRONT DOWN DRIVER
SEAT FRONT UP DRIVER
SEAT RECLINER DOWN DRIVER
SEAT RECLINER UP DRIVER
11 C3
2 C3
4 C3
1 C3
5 C3
3 C3
10 C3
7 C3
P117 14 LG/LB
P115 14 LG
P113 14 LG/WT
P111 14 LG/YL
P121 14 LG/DB
P119 14 LG/DG
P141 14 LG/BR
P143 14 LG/GY
DRIVER POWER SEAT RECLINER MOTOR
DRIVER POWER SEAT FRONT RISER MOTOR
DRIVER POWER SEAT REAR RISER MOTOR
DRIVER POWER SEAT HORIZONTAL MOTOR
M
• LHD
•• RHD

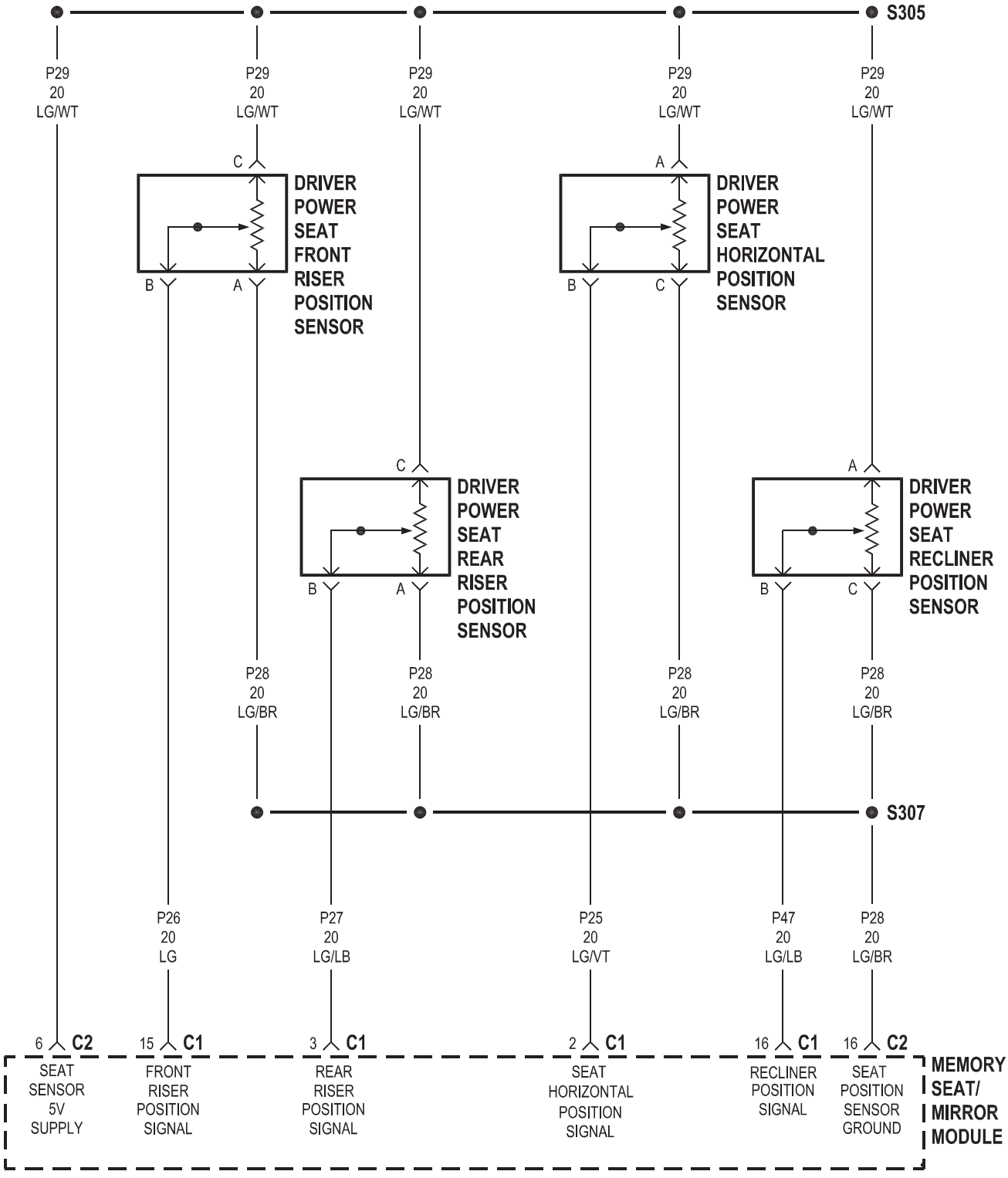
S305
P29
20
LG/WT
DRIVER
POWER
SEAT
FRONT
RISER
POSITION
SENSOR
DRIVER
POWER
SEAT
HORIZONTAL
POSITION
SENSOR
DRIVER
POWER
SEAT
REAR
RISER
POSITION
SENSOR
DRIVER
POWER
SEAT
RECLINER
POSITION
SENSOR
P28
20
LG/BR
S307
P26
20
LG
P27
20
LG/LB
P25
20
LG/VT
P47
20
LG/LB
6 C2
SEAT
SENSOR
5V
SUPPLY
15 C1
FRONT
RISER
POSITION
SIGNAL
3 C1
REAR
RISER
POSITION
SIGNAL
2 C1
SEAT
HORIZONTAL
POSITION
SIGNAL
16 C1
RECLINER
POSITION
SIGNAL
16 C2
SEAT
POSITION
SENSOR
GROUND
MEMORY
SEAT/
MIRROR
MODULE

HEATED SEATS

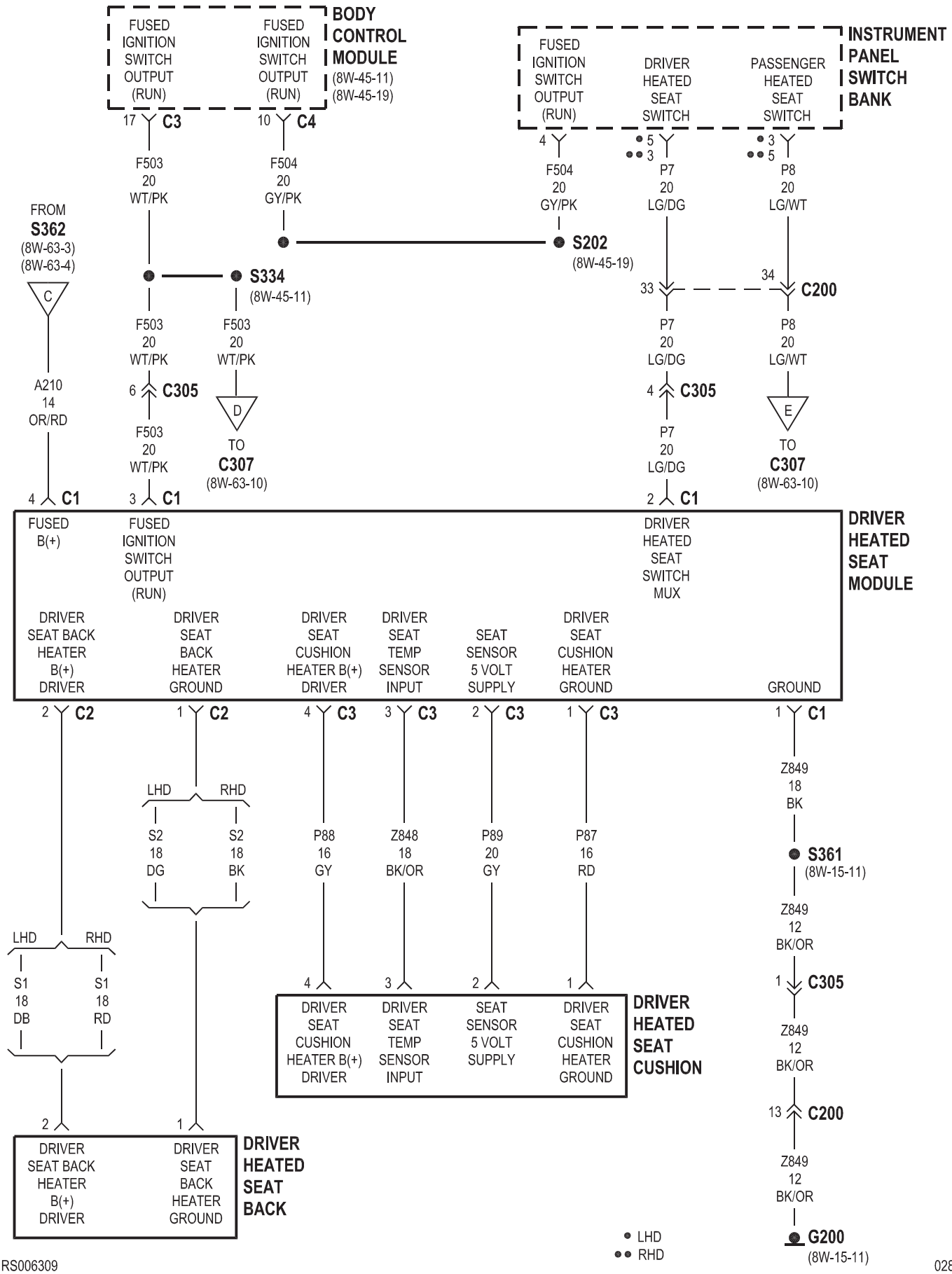

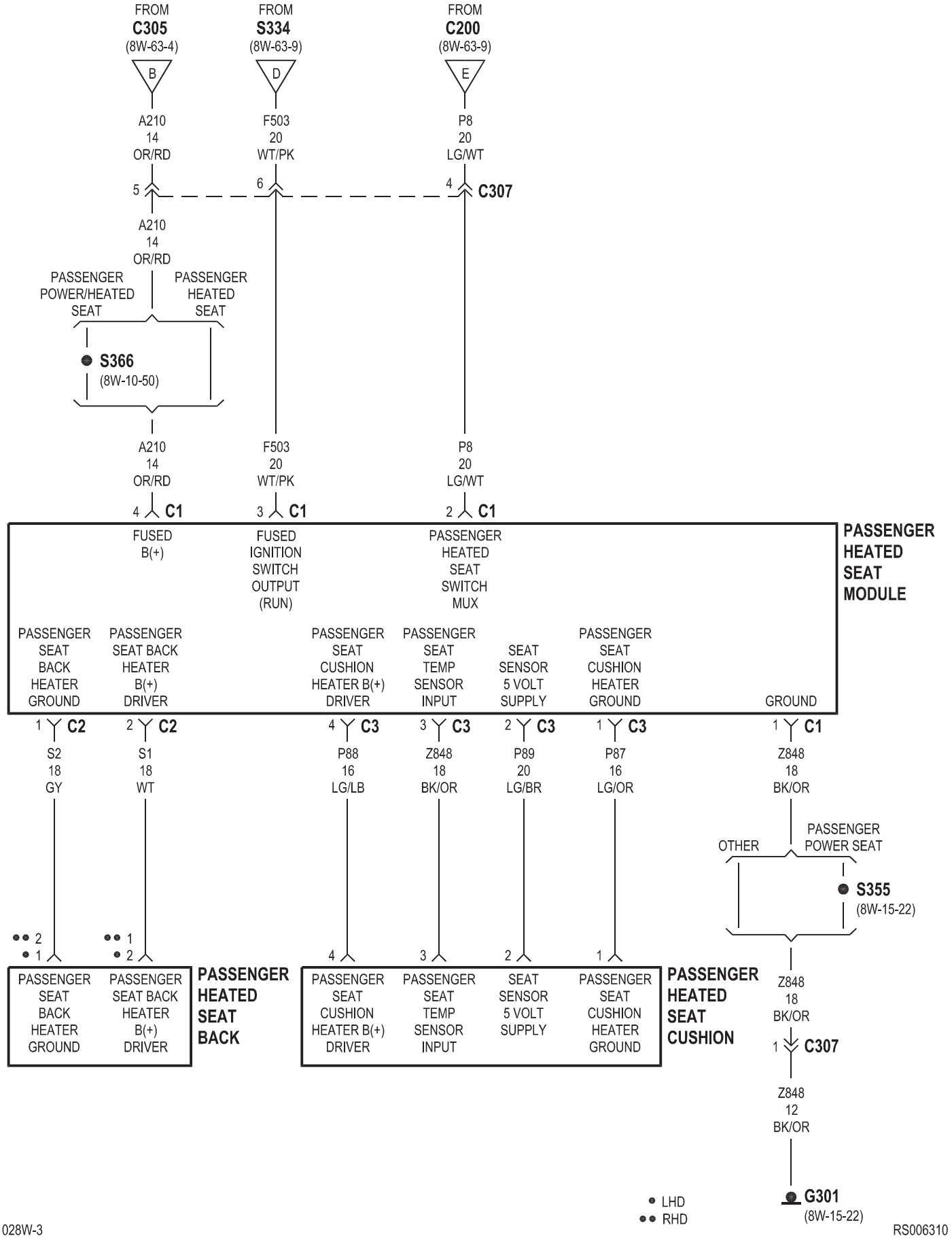
FROM C305 (8W-63-4)
FROM S334 (8W-63-9)
FROM C200 (8W-63-9)
B
D
E
A210 14 OR/RD
F503 20 WT/PK
P8 20 LG/WT
5
6
4
C307
PASSENGER POWER/HEATED SEAT
PASSENGER HEATED SEAT
S366
(8W-10-50)
4 C1
3 C1
2 C1
FUSED B(+)
FUSED IGNITION SWITCH OUTPUT (RUN)
PASSENGER HEATED SEAT SWITCH MUX
PASSENGER HEATED SEAT MODULE
PASSENGER SEAT BACK HEATER GROUND
PASSENGER SEAT BACK HEATER B(+) DRIVER
PASSENGER SEAT CUSHION HEATER B(+) DRIVER
PASSENGER SEAT TEMP SENSOR INPUT
SEAT SENSOR 5 VOLT SUPPLY
PASSENGER SEAT CUSHION HEATER GROUND
GROUND
1 C2
2 C2
4 C3
3 C3
2 C3
1 C3
1 C1
S2 18 GY
S1 18 WT
P88 16 LG/LB
Z848 18 BK/OR
P89 20 LG/BR
P87 16 LG/OR
Z848 18 BK/OR
OTHER
PASSENGER POWER SEAT
S355
(8W-15-22)
PASSENGER SEAT BACK HEATER GROUND
PASSENGER SEAT BACK HEATER B(+) DRIVER
PASSENGER HEATED SEAT BACK
PASSENGER SEAT CUSHION HEATER B(+) DRIVER
PASSENGER SEAT TEMP SENSOR INPUT
SEAT SENSOR 5 VOLT SUPPLY
PASSENGER SEAT CUSHION HEATER GROUND
PASSENGER HEATED SEAT CUSHION
Z848 18 BK/OR
C307
Z848 12 BK/OR
G301
(8W-15-22)
LHD
RHD

8W-70 SPLICE INFORMATION

Component	Page
S101	8W-42-15
S102	8W-15-4
S103	8W-18-2, 3
S104	8W-15-5, 6
S105	8W-10-12
S106	8W-15-7, 8
S107	8W-10-42, 45
S108	8W-31-3
S109	8W-31-3
S110	8W-15-6
S111	8W-15-2, 3
S112	8W-10-41
S113	8W-70-2
S114	8W-10-40
S115	8W-31-5
S116	8W-70-4, 5
S117	8W-70-4
S118	8W-70-2
S119	8W-15-8
S120	8W-30-5
S121	8W-70-3
S122	8W-10-13
S123	8W-10-35
S124	8W-10-41
S125	8W-70-2
S126	8W-10-28
S127	8W-10-12
S128	8W-10-28
S129	8W-10-12
S130	8W-10-12
S131	8W-10-54
S132	8W-10-12
S133	8W-10-60
S134	8W-30-27
S135	8W-30-28
S136	8W-42-18
S137	8W-30-26
S138	8W-15-6
S139	8W-10-43
S141	8W-15-2, 3
S142	8W-70-3
S143	8W-10-47
S144	8W-10-43
S145	8W-10-12
S148	8W-70-5
S150	8W-10-65
S151	8W-42-18
S152	8W-10-61
S157	8W-30-25
S177	8W-15-18
S179	8W-15-18
S187	8W-30-20
S188	8W-10-43
S201	8W-10-39
S202	8W-45-19
S203	8W-45-17
S204	8W-10-38
S205	8W-42-7
S206	8W-10-50
S207	8W-42-5
S208	8W-45-10
S209	8W-18-5
S210	8W-10-45, 47
S211	8W-47-7
S212	8W-47-7
S302	8W-18-5
S303	8W-10-35
S304	8W-10-65
S305	8W-63-8
S306	8W-45-5, 6
S307	8W-63-8
S308	8W-10-61
S309	8W-45-13
S310	8W-44-2
S311	8W-42-6
S312	8W-15-11
S313	8W-10-27, 28
S314	8W-47-6
S315	8W-15-13
S315	8W-47-10
S316	8W-10-51
S317	8W-10-39
S319	8W-45-6
S320	8W-18-5
S321	8W-10-67
S322	8W-10-30
S323	8W-10-32
S324	8W-15-25
S325	8W-10-31
S326	8W-10-44, 47
S327	8W-15-12
S328	8W-45-5
S329	8W-15-23
S330	8W-39-15
S331	8W-15-23
S332	8W-42-6
S333	8W-42-6
S334	8W-45-11
S335	8W-45-9
S336	8W-44-3
S337	8W-15-21
S338	8W-45-13
S339	8W-15-21
S340	8W-10-30
S342	8W-15-20
S343	8W-15-15
S344	8W-39-9
S345	8W-15-19
S346	8W-10-33, 34
S347	8W-15-19
S348	8W-15-14
S349	8W-39-9
S350	8W-15-14
S351	8W-44-2
S352	8W-15-23
S353	8W-15-24
S354	8W-10-28
S355	8W-15-22
S356	8W-10-50
S361	8W-15-11
S362	8W-10-48
S363	8W-15-8
S364	8W-15-20
S365	8W-15-16
S366	8W-10-49
S368	8W-10-47
S370	8W-10-45
S371	8W-15-15

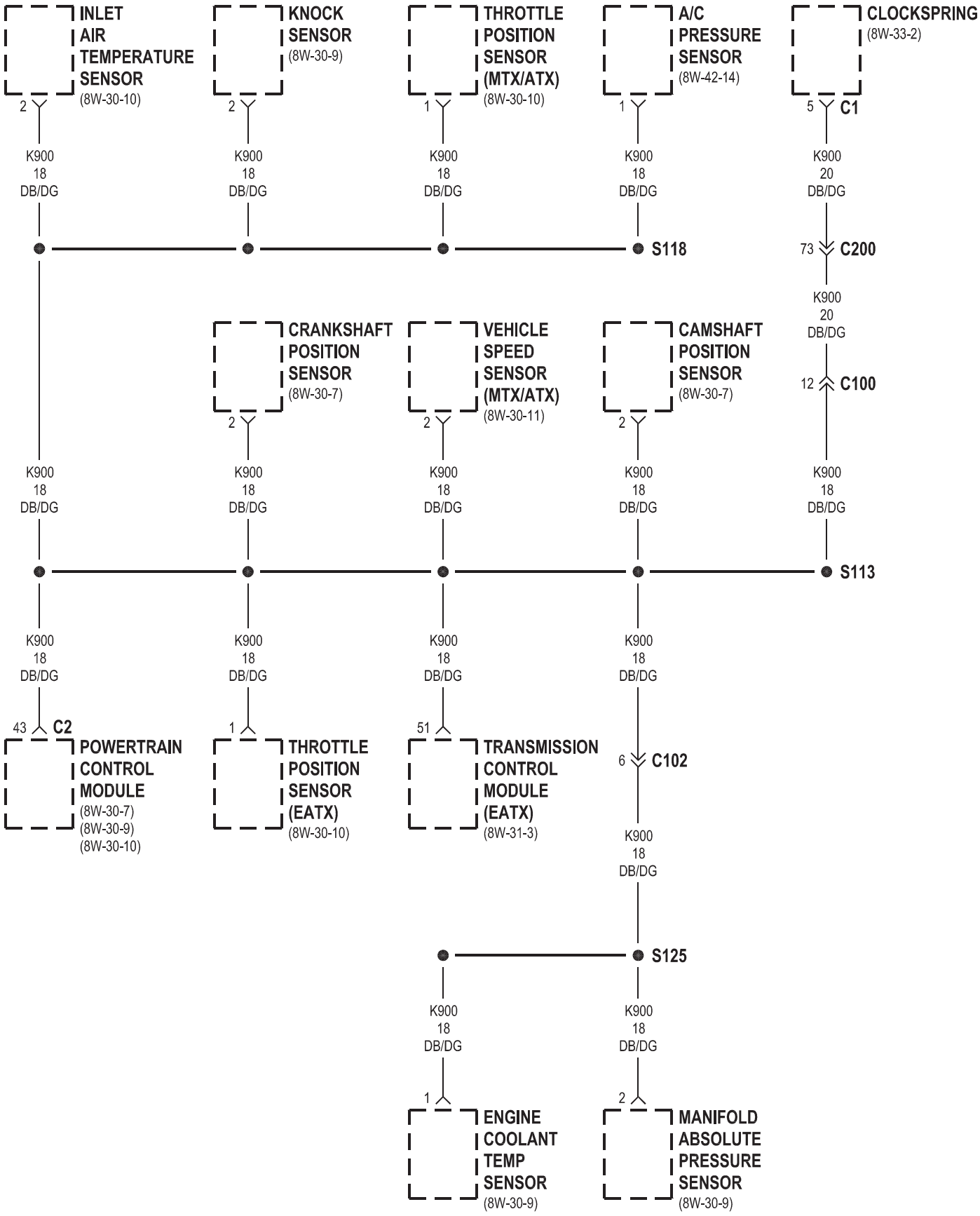
INLET AIR TEMPERATURE SENSOR (8W-30-10)
KNOCK SENSOR (8W-30-9)
THROTTLE POSITION SENSOR (MTX/ATX) (8W-30-10)
A/C PRESSURE SENSOR (8W-42-14)
CLOCKSPRING (8W-33-2)
2
2
1
1
5
C1
K900 18 DB/DG
K900 18 DB/DG
K900 18 DB/DG
K900 18 DB/DG
K900 20 DB/DG
S118
73
C200
K900 20 DB/DG
12
C100
CRANKSHAFT POSITION SENSOR (8W-30-7)
VEHICLE SPEED SENSOR (MTX/ATX) (8W-30-11)
CAMSHAFT POSITION SENSOR (8W-30-7)
2
2
2
K900 18 DB/DG
K900 18 DB/DG
K900 18 DB/DG
K900 18 DB/DG
K900 18 DB/DG
S113
K900 18 DB/DG
K900 18 DB/DG
K900 18 DB/DG
K900 18 DB/DG
43
C2
1
51
6
C102
POWERTRAIN CONTROL MODULE (8W-30-7) (8W-30-9) (8W-30-10)
THROTTLE POSITION SENSOR (EATX) (8W-30-10)
TRANSMISSION CONTROL MODULE (EATX) (8W-31-3)
K900 18 DB/DG
S125
K900 18 DB/DG
K900 18 DB/DG
1
2
ENGINE COOLANT TEMP SENSOR (8W-30-9)
MANIFOLD ABSOLUTE PRESSURE SENSOR (8W-30-9)

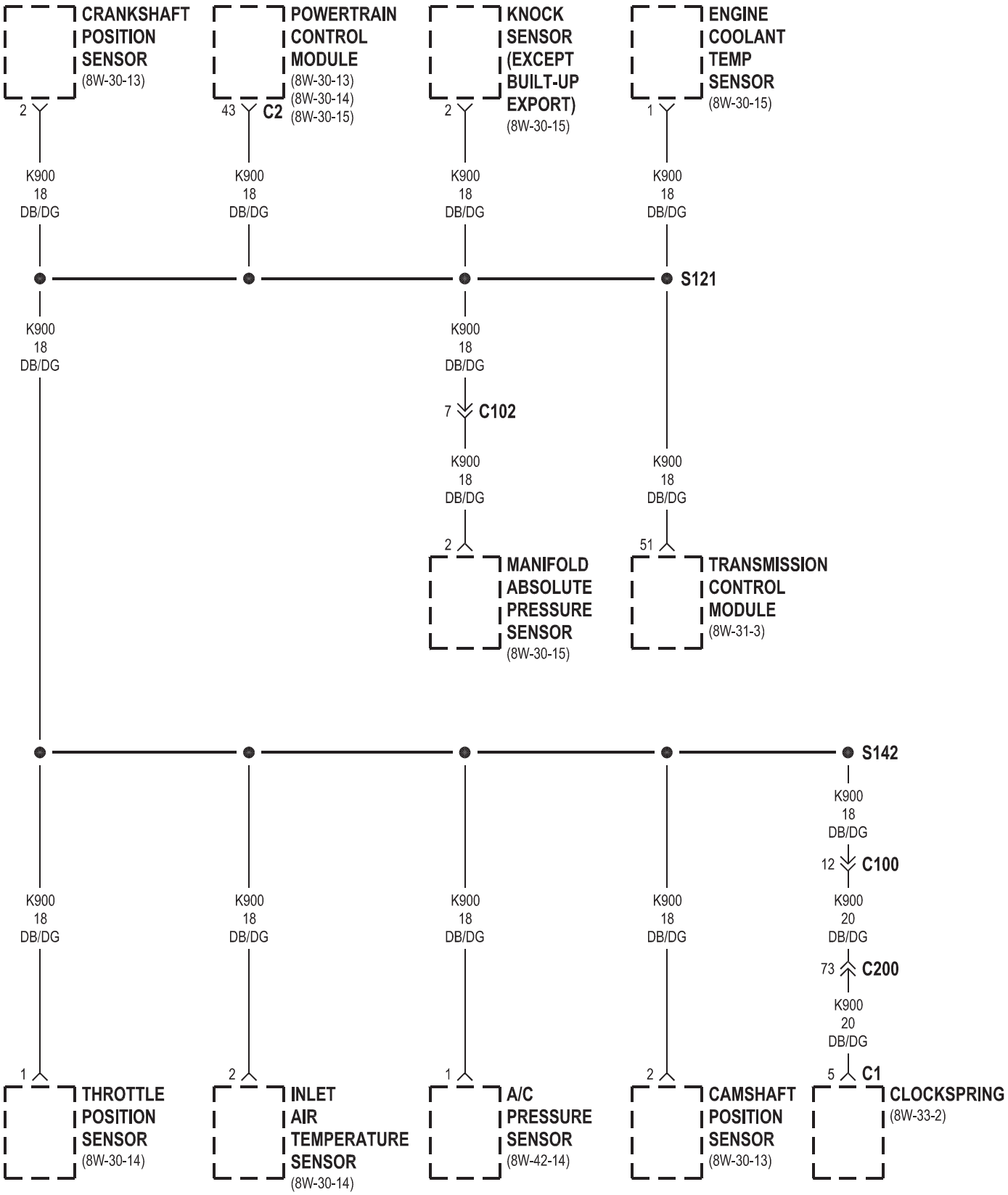
CRANKSHAFT POSITION SENSOR (8W-30-13)
2
K900 18 DB/DG
POWERTRAIN CONTROL MODULE (8W-30-13) (8W-30-14) (8W-30-15)
43 C2
K900 18 DB/DG
KNOCK SENSOR (EXCEPT BUILT-UP EXPORT) (8W-30-15)
2
K900 18 DB/DG
ENGINE COOLANT TEMP SENSOR (8W-30-15)
1
K900 18 DB/DG
S121
K900 18 DB/DG
7 C102
K900 18 DB/DG
2
MANIFOLD ABSOLUTE PRESSURE SENSOR (8W-30-15)
K900 18 DB/DG
51
TRANSMISSION CONTROL MODULE (8W-31-3)
S142
K900 18 DB/DG
12 C100
K900 20 DB/DG
73 C200
K900 20 DB/DG
5 C1
CLOCKSPRING (8W-33-2)
K900 18 DB/DG
1
THROTTLE POSITION SENSOR (8W-30-14)
K900 18 DB/DG
2
INLET AIR TEMPERATURE SENSOR (8W-30-14)
K900 18 DB/DG
1
A/C PRESSURE SENSOR (8W-42-14)
K900 18 DB/DG
2
CAMSHAFT POSITION SENSOR (8W-30-13)

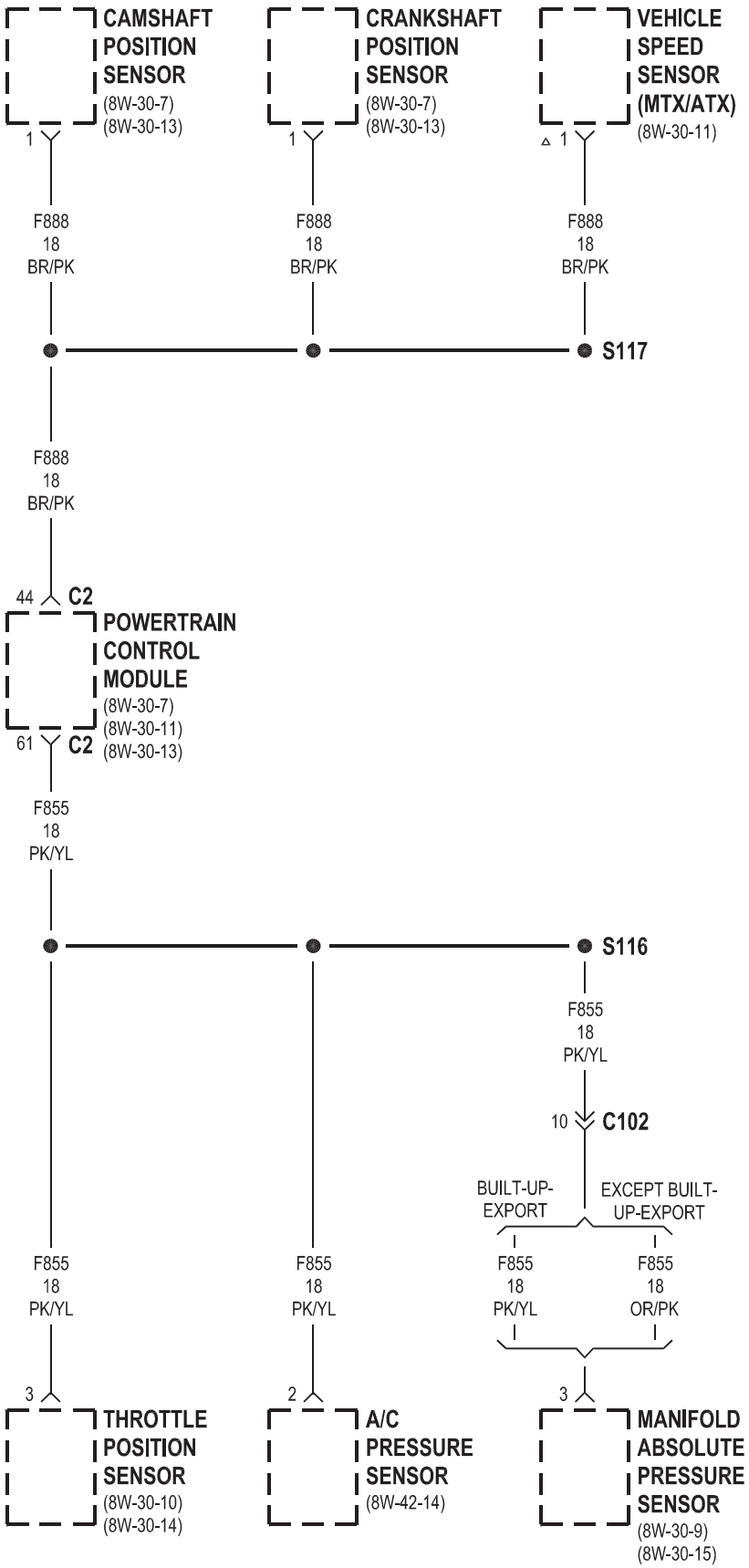
CAMSHAFT POSITION SENSOR
(8W-30-7)
(8W-30-13)
1
CRANKSHAFT POSITION SENSOR
(8W-30-7)
(8W-30-13)
1
VEHICLE SPEED SENSOR (MTX/ATX)
(8W-30-11)
△ 1
F888
18
BR/PK
F888
18
BR/PK
F888
18
BR/PK
S117
F888
18
BR/PK
44 C2
POWERTRAIN CONTROL MODULE
(8W-30-7)
(8W-30-11)
(8W-30-13)
61 C2
F855
18
PK/YL
S116
F855
18
PK/YL
10 C102
BUILT-UP-EXPORT
EXCEPT BUILT-UP-EXPORT
F855
18
PK/YL
F855
18
PK/YL
F855
18
PK/YL
F855
18
OR/PK
3
2
3
THROTTLE POSITION SENSOR
(8W-30-10)
(8W-30-14)
A/C PRESSURE SENSOR
(8W-42-14)
MANIFOLD ABSOLUTE PRESSURE SENSOR
(8W-30-9)
(8W-30-15)

△ 2.4L

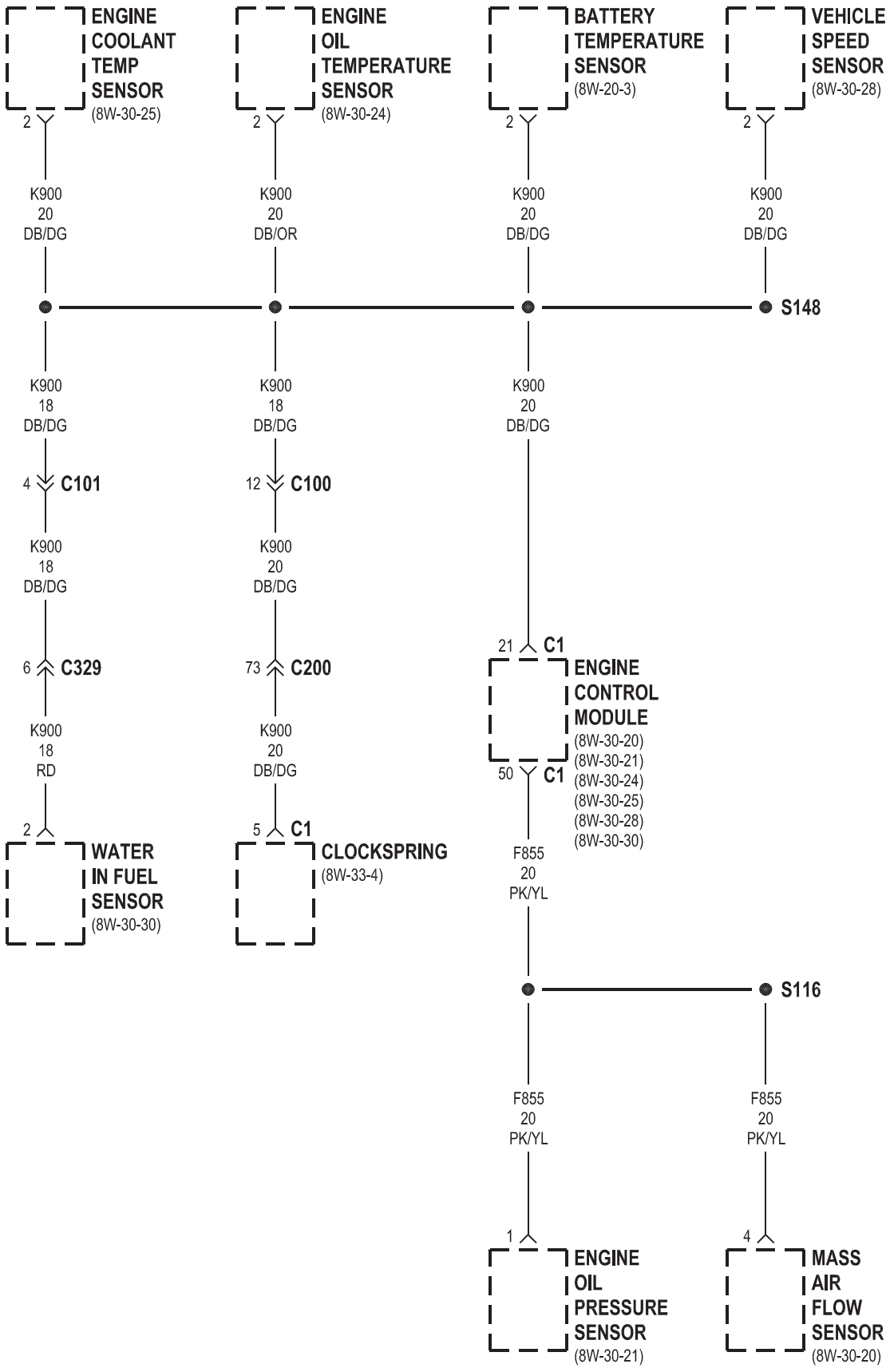
ENGINE COOLANT TEMP SENSOR (8W-30-25)
ENGINE OIL TEMPERATURE SENSOR (8W-30-24)
BATTERY TEMPERATURE SENSOR (8W-20-3)
VEHICLE SPEED SENSOR (8W-30-28)
2
K900 20 DB/DG
K900 20 DB/OR
S148
K900 18 DB/DG
4 C101
12 C100
K900 20 DB/DG
21 C1
ENGINE CONTROL MODULE (8W-30-20) (8W-30-21) (8W-30-24) (8W-30-25) (8W-30-28) (8W-30-30)
50 C1
K900 18 RD
6 C329
73 C200
F855 20 PK/YL
S116
2
WATER IN FUEL SENSOR (8W-30-30)
5 C1
CLOCKSPRING (8W-33-4)
1
ENGINE OIL PRESSURE SENSOR (8W-30-21)
4
MASS AIR FLOW SENSOR (8W-30-20)

8W-80 CONNECTOR PIN-OUTS

Component	Page
A/C Compressor Clutch	8W-80-6
A/C Pressure Sensor	8W-80-6
A/C-Heater Control C1 (MTC)	8W-80-6
A/C-Heater Control C2 (MTC)	8W-80-7
Accelerator Pedal Position Sensor (Diesel)	8W-80-7
Adjustable Pedals Module (Except Built-Up-Export)	8W-80-7
Adjustable Pedals Switch (Except Built-Up-Export)	8W-80-7
Airbag Control Module (ORC)	8W-80-8
Ambient Temp Sensor (Except Base)	8W-80-8
ATC Remote Sensor (ATC)	8W-80-8
Auto Temp Control C1	8W-80-9
Auto Temp Control C2	8W-80-9
Auto Temp Control C3	8W-80-9
Automatic Day/Night Mirror (Premium/Luxury)	8W-80-9
Autostick Switch (Except Built-Up-Export)	8W-80-10
Back-Up Lamp Switch (MTX)	8W-80-10
Battery Temperature Sensor (Diesel)	8W-80-10
Blower Motor Resistor C1 (MTC)	8W-80-10
Blower Motor Resistor C2 (MTC)	8W-80-10
Body Control Module C1	8W-80-11
Body Control Module C2	8W-80-11
Body Control Module C3	8W-80-12
Body Control Module C4	8W-80-13
Body Control Module C5	8W-80-14
Boost Pressure Sensor (Diesel)	8W-80-14
Brake Fluid Level Switch	8W-80-14
Brake Lamp Switch	8W-80-15
Brake Transmission Shift Interlock Solenoid (EATX)	8W-80-15
C100	8W-80-15
C100	8W-80-16
C101	8W-80-16
C101	8W-80-16
C102 (2.4L)	8W-80-17
C102 (2.4L)	8W-80-17
C102 (3.3L/3.8L)	8W-80-17
C102 (3.3L/3.8L)	8W-80-18
C103 (Diesel)	8W-80-18
C103 (Diesel)	8W-80-18
C106 (Built-Up-Export)	8W-80-18
C106 (Built-Up-Export)	8W-80-19
C107 (Built-Up-Export)	8W-80-19
C107 (Built-Up-Export)	8W-80-19
C200	8W-80-20
C200	8W-80-22
C201	8W-80-23
C201	8W-80-24

Component	Page
C202	8W-80-24
C202	8W-80-24
C203 (United Kingdom)	8W-80-24
C203 (United Kingdom)	8W-80-25
C300 (LHD)	8W-80-25
C300 (LHD)	8W-80-25
C300 (RHD)	8W-80-26
C300 (RHD)	8W-80-26
C301	8W-80-26
C301	8W-80-26
C302	8W-80-27
C302	8W-80-27
C303 (LHD)	8W-80-27
C303 (LHD)	8W-80-28
C303 (RHD)	8W-80-28
C303 (RHD)	8W-80-28
C304	8W-80-29
C304	8W-80-29
C305	8W-80-29
C305	8W-80-29
C306	8W-80-30
C306	8W-80-30
C307	8W-80-30
C307	8W-80-30
C308	8W-80-31
C308	8W-80-31
C309	8W-80-31
C309	8W-80-32
C310 (Front Console)	8W-80-32
C310 (Front Console)	8W-80-32
C311	8W-80-32
C311	8W-80-33
C312	8W-80-33
C312	8W-80-34
C313 (Rear Console)	8W-80-34
C313 (Rear Console)	8W-80-34
C314 (High Line)	8W-80-35
C314 (High Line)	8W-80-35
C315 (High Line)	8W-80-35
C315 (High Line)	8W-80-36
C316 (Power Sliding Door)	8W-80-36
C316 (Power Sliding Door)	8W-80-36
C317 (Power Sliding Door)	8W-80-36
C317 (Power Sliding Door)	8W-80-37
C318 (Trailer Tow)	8W-80-37
C318 (Trailer Tow)	8W-80-37
C319 (Except Built-Up-Export/Low Line)	8W-80-37
C319 (Except Built-Up-Export/Low Line)	8W-80-38
C320	8W-80-38
C320	8W-80-38
C321	8W-80-38
C321	8W-80-38

Component	Page
C322 (Memory)	8W-80-39
C322 (Memory)	8W-80-39
C324 (Manual Sliding Door)	8W-80-39
C324 (Manual Sliding Door)	8W-80-40
C325 (Manual Sliding Door)	8W-80-40
C325 (Manual Sliding Door)	8W-80-40
C326	8W-80-40
C326	8W-80-40
C327	8W-80-40
C327	8W-80-41
C329 (Diesel)	8W-80-41
C329 (Diesel)	8W-80-41
C330 (Diesel)	8W-80-41
C330 (Diesel)	8W-80-41
C331 (Diesel)	8W-80-42
C331 (Diesel)	8W-80-42
C332 (ATC)	8W-80-42
C332 (ATC)	8W-80-42
Cabin Heater Assist C1 (Diesel)	8W-80-42
Cabin Heater Assist C2 (Diesel)	8W-80-43
Camshaft Position Sensor (Diesel)	8W-80-43
Camshaft Position Sensor (Gas)	8W-80-43
CD Changer	8W-80-43
Center Dome Lamp (Base/High Line)	8W-80-43
Center High Mounted Stop Lamp	8W-80-44
Clockspring C1	8W-80-44
Clockspring C2	8W-80-44
Clockspring C3	8W-80-44
Clockspring C4	8W-80-44
Clockspring C5	8W-80-45
Clutch Pedal Interlock Switch (MTX)	8W-80-45
Clutch Pedal Interlock Switch Jumper (ATX)	8W-80-45
Clutch Pedal Upstop Switch (Diesel)	8W-80-45
Controller Antilock Brake	8W-80-46
Crank Case Ventilation Heater (Diesel)	8W-80-46
Crankshaft Position Sensor (Diesel)	8W-80-46
Crankshaft Position Sensor (Gas)	8W-80-47
Data Link Connector	8W-80-47
Diagnostic Junction Port	8W-80-47
Dosing Pump (Diesel)	8W-80-48
Driver Airbag C1	8W-80-48
Driver Airbag C2	8W-80-48
Driver Blend Door Actuator (ATC)	8W-80-48
Driver Blend Door Actuator (MTC)	8W-80-48
Driver Door Courtesy Lamp	8W-80-49
Driver Door Lock Switch	8W-80-49
Driver Heated Seat Back	8W-80-49
Driver Heated Seat Cushion	8W-80-49
Driver Heated Seat Module C1	8W-80-49
Driver Heated Seat Module C2	8W-80-50
Driver Heated Seat Module C3	8W-80-50
Driver Power Seat Front Riser Motor	8W-80-50
Driver Power Seat Front Riser Position Sensor	8W-80-50
Driver Power Seat Horizontal Motor	8W-80-50
Driver Power Seat Horizontal Position Sensor	8W-80-51
Driver Power Seat Rear Riser Motor	8W-80-51
Driver Power Seat Rear Riser Position Sensor	8W-80-51
Driver Power Seat Recliner Motor	8W-80-51
Driver Power Seat Recliner Position Sensor	8W-80-51
Driver Power Seat Switch	8W-80-52
Driver Power Window Motor	8W-80-52
Driver Power Window Switch (Except Lowline)	8W-80-52
Driver Power Window Switch (Lowline)	8W-80-53
Driver Power Window Switch (RHD)	8W-80-53
Driver Seat Belt Switch	8W-80-53
Driver Seat Belt Tensioner	8W-80-53
EGR Solenoid (Diesel)	8W-80-54
EGR Solenoid (Gas)	8W-80-54
Electric Wiper De-Icer C1	8W-80-54
Electric Wiper De-Icer C2	8W-80-54
Engine Control Module C1 (Diesel)	8W-80-55
Engine Control Module C2 (Diesel)	8W-80-57
Engine Coolant Temp Sensor (Diesel)	8W-80-57
Engine Coolant Temp Sensor (Gas)	8W-80-58
Engine Oil Pressure Sensor (Diesel)	8W-80-58
Engine Oil Pressure Switch (Gas)	8W-80-58
Engine Oil Temperature Sensor (Diesel)	8W-80-58
EVAP/Purge Solenoid (Gas)	8W-80-58
Evaporator Temperature Sensor	8W-80-59
Floor Console Lamp	8W-80-59
Floor Console Power Outlet	8W-80-59
Front Blower Module C1 (ATC)	8W-80-59
Front Blower Module C2 (ATC)	8W-80-59
Front Cigar Lighter	8W-80-60
Front Reading Lamps/Switch	8W-80-60
Front Washer Pump Motor	8W-80-60
Fuel Heater (Diesel)	8W-80-60
Fuel Injector No. 1 (2.4L/3.3L/3.8L)	8W-80-60
Fuel Injector No. 1 (Diesel)	8W-80-61
Fuel Injector No. 2 (2.4L/3.3L/3.8L)	8W-80-61
Fuel Injector No. 2 (Diesel)	8W-80-61
Fuel Injector No. 3 (2.4L/3.3L/3.8L)	8W-80-61
Fuel Injector No. 3 (Diesel)	8W-80-61
Fuel Injector No. 4 (2.4L/3.3L/3.8L)	8W-80-62
Fuel Injector No. 4 (Diesel)	8W-80-62
Fuel Injector No. 5 (3.3L/3.8L)	8W-80-62
Fuel Injector No. 6 (3.3L/3.8L)	8W-80-62
Fuel Pressure Sensor (Diesel)	8W-80-62
Fuel Pressure Solenoid (Diesel)	8W-80-63
Fuel Pump Module	8W-80-63
Generator	8W-80-63

Component	Page
Glove Box Lamp	8W-80-63
Glow Plug Relay (Diesel)	8W-80-63
Halo Lamp	8W-80-63
Headlamp Switch	8W-80-64
Headlamp Washer Pump Motor (Built-Up-Export)	8W-80-64
High Note Horn	8W-80-64
Hood Ajar Switch	8W-80-64
Idle Air Control Motor (2.4L)	8W-80-64
Idle Air Control Motor (3.3L/3.8L)	8W-80-65
Ignition Coil (2.4L)	8W-80-65
Ignition Coil (3.3L/3.8L)	8W-80-65
Ignition Switch	8W-80-65
Inlet Air Temperature Sensor	8W-80-65
Input Speed Sensor (EATX)	8W-80-66
Instrument Cluster	8W-80-66
Instrument Panel Switch Bank	8W-80-66
Integrated Power Module C1	8W-80-67
Integrated Power Module C2	8W-80-67
Integrated Power Module C3 (Diesel)	8W-80-68
Integrated Power Module C3 (Gas)	8W-80-68
Integrated Power Module C4	8W-80-69
Integrated Power Module C5	8W-80-69
Integrated Power Module C6	8W-80-69
Integrated Power Module C7	8W-80-70
Integrated Power Module C8	8W-80-70
Integrated Power Module C9	8W-80-71
Knock Sensor (2.4L)	8W-80-71
Knock Sensor (3.3L/3.8L) (Except Built-Up-Export)	8W-80-71
Leak Detection Pump (Except Built-Up-Export)	8W-80-71
Left B-Pillar Switch (Power Sliding Door)	8W-80-72
Left Cinch/Release Motor (Power Sliding Door)	8W-80-72
Left Combination Relay (Trailer Tow)	8W-80-72
Left Cylinder Lock Switch	8W-80-72
Left Door Speaker	8W-80-72
Left Fog Lamp (Built-Up-Export)	8W-80-73
Left Fog Lamp (Except Built-Up-Export)	8W-80-73
Left Front Door Ajar Switch (Base)	8W-80-73
Left Front Door Lock Motor/Ajar Switch (Except Base)	8W-80-73
Left Front Park/Turn Signal Lamp (Except Built-Up-Export)	8W-80-73
Left Front Wheel Speed Sensor	8W-80-74
Left Full Open Switch (Power Sliding Door)	8W-80-74
Left Headlamp (Except Built-Up-Export)	8W-80-74
Left Headlamp Leveling Motor (Built-Up-Export)	8W-80-74
Left High Beam Lamp (Built-Up-Export)	8W-80-74
Left Instrument Panel Speaker	8W-80-75
Left Liftgate Flood Lamp	8W-80-75
Left Low Beam Lamp (Built-Up-Export)	8W-80-75
Left Mid Reading Lamp (Premium/Luxury)	8W-80-75
Left Park Lamp (Built-Up-Export)	8W-80-75
Left Power Mirror	8W-80-76
Left Rear Lamp Assembly	8W-80-76
Left Rear Pillar Speaker	8W-80-76
Left Rear Reading Lamp (Luxury)	8W-80-76
Left Rear Speaker	8W-80-77
Left Rear Vent Motor	8W-80-77
Left Rear Wheel Speed Sensor	8W-80-77
Left Remote Radio Switch	8W-80-77
Left Repeater Lamp (Built-Up-Export)	8W-80-77
Left Seat Airbag	8W-80-78
Left Side Impact Airbag Control Module	8W-80-78
Left Sliding Door Control Module C1 (Power Sliding Door)	8W-80-78
Left Sliding Door Control Module C2 (Power Sliding Door)	8W-80-78
Left Sliding Door Latch Sensing Switch (Power Sliding Door)	8W-80-79
Left Sliding Door Lock Motor (Power Sliding Door)	8W-80-79
Left Sliding Door Lock Motor/Ajar Switch (Manual Sliding Door)	8W-80-79
Left Sliding Door Motor (Power Sliding Door)	8W-80-79
Left Speed Control Switch	8W-80-79
Left Stop/Turn Signal Relay (Trailer Tow)	8W-80-80
Left Turn Signal Lamp (Built-Up-Export)	8W-80-80
Left Visor/Vanity Lamp (Premium/Luxury)	8W-80-80
License Lamp (Manual Release)	8W-80-80
License Lamp (Power Liftgate)	8W-80-80
License Lamp (Power Release)	8W-80-81
Lift Pump Motor (Diesel)	8W-80-81
Liftgate Ajar Switch (Manual Release)	8W-80-81
Liftgate Ajar Switch (Power Release)	8W-80-81
Liftgate Cinch/Release Motor (Power Liftgate)	8W-80-81
Liftgate Cylinder Lock Switch	8W-80-82
Liftgate Left Pinch Sensor (Power Liftgate)	8W-80-82
Liftgate Right Pinch Sensor (Power Liftgate)	8W-80-82
Low Note Horn	8W-80-82
Manifold Absolute Pressure Sensor (Gas)	8W-80-82
Mass Air Flow Sensor (Diesel)	8W-80-83
Memory Seat/Mirror Module C1	8W-80-83
Memory Seat/Mirror Module C2	8W-80-84
Memory Seat/Mirror Module C3	8W-80-84
Memory Seat/Mirror Module C4	8W-80-84

Component	Page
Memory Set Switch	8W-80-84
Message Center (High Line)	8W-80-85
Mode Door Actuator (ATC)	8W-80-85
Mode Door Actuator (MTC)	8W-80-85
Multi-Function Switch	8W-80-85
Output Speed Sensor (EATX)	8W-80-86
Overhead Console (Except Base)	8W-80-86
Oxygen Sensor 1/1 Upstream (Gas)	8W-80-86
Oxygen Sensor 1/2 Downstream (Gas)	8W-80-87
Park/Neutral Position Switch (ATX)	8W-80-87
Passenger Airbag	8W-80-87
Passenger Blend Door Actuator (ATC)	8W-80-87
Passenger Blend Door Actuator (MTC)	8W-80-87
Passenger Door Courtesy Lamp	8W-80-88
Passenger Door Lock Switch	8W-80-88
Passenger Folding Mirror Relay (Built-Up-Export)	8W-80-88
Passenger Heated Seat Back	8W-80-88
Passenger Heated Seat Cushion	8W-80-88
Passenger Heated Seat Module C1	8W-80-89
Passenger Heated Seat Module C2	8W-80-89
Passenger Heated Seat Module C3	8W-80-89
Passenger Power Seat Front Riser Motor	8W-80-89
Passenger Power Seat Horizontal Motor	8W-80-90
Passenger Power Seat Rear Riser Motor	8W-80-90
Passenger Power Seat Recliner Motor	8W-80-90
Passenger Power Seat Switch	8W-80-90
Passenger Power Window Motor	8W-80-90
Passenger Power Window Switch	8W-80-91
Passenger Seat Belt Switch	8W-80-91
Passenger Seat Belt Tensioner	8W-80-91
Power Folding Mirror Switch (Built-Up-Export)	8W-80-91
Power Liftgate Module C1	8W-80-92
Power Liftgate Module C2	8W-80-92
Power Liftgate Motor	8W-80-92
Power Mirror Switch	8W-80-93
Power Outlet	8W-80-93
Power Seat Circuit Breaker (30A)	8W-80-93
Power Window Circuit Breaker (25A)	8W-80-93
Power Window Switch (Lowline)	8W-80-94
Powertrain Control Module C1 (Gas)	8W-80-94
Powertrain Control Module C2 (Gas)	8W-80-95
Radiator Fan No. 1 (Diesel)	8W-80-96
Radiator Fan No. 1 (Gas)	8W-80-96
Radiator Fan No. 2 (Diesel)	8W-80-96
Radiator Fan No. 2 (Gas)	8W-80-96
Radiator Fan Relay (Gas)	8W-80-96
Radiator Fan Relay No. 1 (Diesel)	8W-80-97
Radiator Fan Relay No. 2 (Diesel)	8W-80-97
Radiator Fan Relay No. 3 (Diesel)	8W-80-97
Radio C1	8W-80-98
Radio C2	8W-80-98
Radio Choke	8W-80-99
Rear A/C-Heater Unit (3 Zone HVAC)	8W-80-99
Rear Auto Temp Control Switch (ATC)	8W-80-99
Rear Blower Front Control Switch (3 Zone HVAC)	8W-80-99
Rear Blower Motor Power Module C1 (ATC)	8W-80-100
Rear Blower Motor Power Module C2 (ATC)	8W-80-100
Rear Blower Rear Control Switch C1 (3 Zone HVAC)	8W-80-100
Rear Blower Rear Control Switch C2 (3 Zone HVAC)	8W-80-100
Rear Dome Lamp (Except Luxury)	8W-80-100
Rear Mode Motor (ATC)	8W-80-101
Rear Power Outlet	8W-80-101
Rear Temperature Motor (ATC)	8W-80-101
Rear Washer Pump Motor	8W-80-101
Rear Wiper Motor	8W-80-101
Recirculation Door Actuator (ATC)	8W-80-102
Recirculation Door Actuator (MTC)	8W-80-102
Remote Keyless Entry Antenna (Japan)	8W-80-102
Remote Keyless Entry Module	8W-80-102
Right B-Pillar Switch (Power Sliding Door)	8W-80-102
Right Cinch/Release Motor (Power Sliding Door)	8W-80-103
Right Combination Relay (Trailer Tow)	8W-80-103
Right Cylinder Lock Switch	8W-80-103
Right Door Speaker	8W-80-103
Right Fog Lamp (Built-Up-Export)	8W-80-103
Right Fog Lamp (Except Built-Up-Export)	8W-80-104
Right Front Door Ajar Switch (Base)	8W-80-104
Right Front Door Lock Motor/Ajar Switch (Except Base)	8W-80-104
Right Front Park/Turn Signal Lamp (Except Built-Up-Export)	8W-80-104
Right Front Wheel Speed Sensor	8W-80-104
Right Full Open Switch (Power Sliding Door)	8W-80-105
Right Headlamp (Except Built-Up-Export)	8W-80-105
Right Headlamp Leveling Motor (Built-Up-Export)	8W-80-105
Right High Beam Lamp (Built-Up-Export)	8W-80-105
Right Instrument Panel Speaker	8W-80-105
Right Liftgate Flood Lamp	8W-80-106
Right Low Beam Lamp (Built-Up-Export)	8W-80-106
Right Mid Reading Lamp (Premium/Luxury)	8W-80-106
Right Park Lamp (Built-Up-Export)	8W-80-106
Right Power Mirror	8W-80-106

Component	Page
Right Rear Lamp Assembly	8W-80-107
Right Rear Pillar Speaker	8W-80-107
Right Rear Reading Lamp (Luxury)	8W-80-107
Right Rear Speaker	8W-80-107
Right Rear Vent Motor	8W-80-107
Right Rear Wheel Speed Sensor	8W-80-108
Right Remote Radio Switch	8W-80-108
Right Repeater Lamp (Built-Up-Export)	8W-80-108
Right Seat Airbag	8W-80-108
Right Side Impact Airbag Control Module	8W-80-108
Right Sliding Door Control Module C1 (Power Sliding Door)	8W-80-109
Right Sliding Door Control Module C2 (Power Sliding Door)	8W-80-109
Right Sliding Door Latch Sensing Switch (Power Sliding Door)	8W-80-109
Right Sliding Door Lock Motor (Power Sliding Door)	8W-80-110
Right Sliding Door Lock Motor/Ajar Switch (Manual Sliding Door)	8W-80-110
Right Sliding Door Motor (Power Sliding Door)	8W-80-110
Right Speed Control Switch	8W-80-110
Right Stop/Turn Signal Relay (Trailer Tow)	8W-80-110
Right Turn Signal Lamp (Built-Up-Export)	8W-80-111
Right Visor/Vanity Lamp (Premium/Luxury)	8W-80-111
Sentry Key Immobilizer Module	8W-80-111
Siren (United Kingdom)	8W-80-111
Solenoid/Pressure Switch Assy (EATX)	8W-80-111
Speed Control Servo (Gas)	8W-80-112
Thatcham Alarm Module C1 (United Kingdom)	8W-80-112
Thatcham Alarm Module C2 (United Kingdom)	8W-80-112
Throttle Position Sensor (Gas)	8W-80-112
Torque Converter Clutch Solenoid (ATX)	8W-80-113
Traction Control Switch	8W-80-113
Trailer Tow Connector (Except Built-Up-Export)	8W-80-113
Transmission Control Module (EATX)	8W-80-114
Transmission Range Sensor (EATX)	8W-80-115
TXV Solenoid (ATC)	8W-80-115
Vehicle Speed Sensor (MTX/ATX)	8W-80-115
Washer Fluid Level Switch	8W-80-115
Water In Fuel Sensor (Diesel)	8W-80-116
Wiper Module	8W-80-116

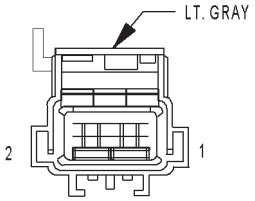

A/C COMPRESSOR CLUTCH

A/C COMPRESSOR CLUTCH - LT. GRAY 2 WAY

CAV	CIRCUIT	FUNCTION
1	C3 18DB/YL	A/C COMPRESSOR CLUTCH RELAY OUTPUT
2	Z153 18BK/GY	GROUND

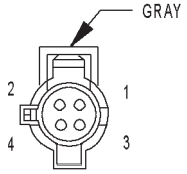

A/C PRESSURE SENSOR

A/C PRESSURE SENSOR - GRAY 4 WAY

CAV	CIRCUIT	FUNCTION
1	C918 20BK/LB (DIESEL)	A/C PRESSURE SENSOR GROUND
1	K900 18DB/DG (GAS)	SENSOR GROUND
2	F851 20LB/PK (DIESEL)	SENSOR REFERENCE VOLTAGE B
2	F855 18PK/YL (GAS)	5 VOLT SUPPLY
3	C18 20LB/BR (DIESEL)	A/C PRESSURE SENSOR SIGNAL
3	C18 18LB/BR (GAS)	A/C PRESSURE SENSOR SIGNAL
4	-	-

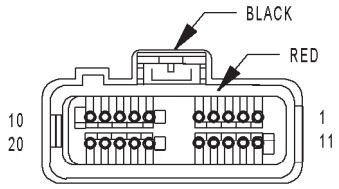

A/C-HEATER CONTROL C1 (MTC)

A/C-HEATER CONTROL C1 (MTC) - BLACK/RED 20 WAY

CAV	CIRCUIT	FUNCTION
1	Z24 18BK/OR	GROUND
2	C121 20DB/DG	SENSOR GROUND
3	C22 20LB/WT (3 ZONE HVAC)	REAR TEMPERATURE FEEDBACK SIGNAL
4	-	-
5	F850 20LB/PK (3 ZONE HVAC)	5 VOLT SUPPLY
6	C900 18LB/VT	WIPER DE-ICER DRIVER
7	C32 20DB/TN	RECIRCULATION DOOR DRIVER (A)
8	C54 20LB/YL (3 ZONE HVAC)	REAR BLEND DOOR DRIVER
9	C34 20DB/LB	COMMON DOOR DRIVER (B)
10	D25 20WT/VT	PCI BUS
11	-	-
12	C121 20DB/DG (3 ZONE HVAC)	REAR TEMPERATURE RETURN
13	F504 20GY/PK	IGNITION SWITCH OUTPUT (RUN)
14	E12 20OR/GY	PANEL LAMPS DRIVER
15	C21 20DB/LG	EVAPORATOR TEMPERATURE SENSOR SIGNAL
16	C33 20LB/BR	PASSENGER BLEND DOOR DRIVER (A)
17	C61 20DB/LG	DRIVER BLEND DOOR DRIVER (A)
18	C35 20LB/OR	MODE DOOR DRIVER (A)
19	C53 20LB (3 ZONE HVAC)	REAR MODE DOOR DRIVER
20	C154 20LB/OR (3 ZONE HVAC)	REAR COMMON DOOR DRIVER

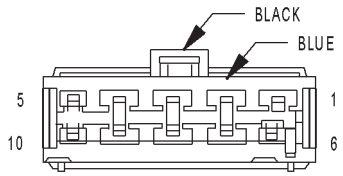

A/C-HEATER CONTROL C2 (MTC)

A/C-HEATER CONTROL C2 (MTC) - BLACK/BLUE 10 WAY

CAV	CIRCUIT	FUNCTION
1	-	-
2	C75 12DB/GY	BLOWER MOTOR HIGH DRIVER
3	C74 12DB/WT	BLOWER MOTOR M3 DRIVER
4	Z134 12BK/OR	GROUND
5	C71 16DB/BR	BLOWER MOTOR LOW DRIVER
6	-	-
7	-	-
8	-	-
9	C73 14DB/VT	BLOWER MOTOR M2 DRIVER
10	C72 16DB/OR	BLOWER MOTOR M1 DRIVER

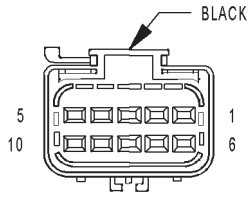

ACCELERATOR PEDAL POSITION SENSOR (DIESEL)

ACCELERATOR PEDAL POSITION SENSOR (DIESEL) - BLACK 10 WAY

CAV	CIRCUIT	FUNCTION
1	-	-
2	-	-
3	K4 20BK/LB	LOW IDLE POSITION SWITCH GROUND
4	-	-
5	K151 20WT	LOW IDLE POSITION SWITCH SENSE
6	-	-
7	K22 20OR/DB	ACCELERATOR PEDAL POSITION SENSOR SIGNAL
8	K167 20BR/YL	ACCELERATOR PEDAL POSITION SENSOR GROUND
9	-	-
10	F852 20VT/PK	ACCELERATOR PEDAL POSITION SENSOR 5 VOLT SUPPLY

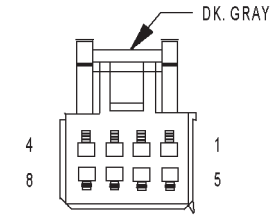

ADJUSTABLE PEDALS MODULE (EXCEPT BUILT-UP-EXPORT)

ADJUSTABLE PEDALS MODULE (EXCEPT BUILT-UP-EXPORT) - DK. GRAY 8 WAY

CAV	CIRCUIT	FUNCTION
1	A108 18LG/RD	FUSED B(+)
2	D25 20WT/VT	PCI BUS
3	-	-
4	Z140 18BK/YL	GROUND
5	A114 18GY/RD	FUSED B(+) (I.O.D.)
6	-	-
7	Q100 20OR/WT	ADJUSTABLE PEDALS SWITCH SENSE
8	Q900 20OR/BK	ADJUSTABLE PEDALS SWITCH GROUND

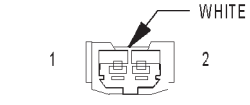

ADJUSTABLE PEDALS SWITCH (EXCEPT BUILT-UP-EXPORT)

ADJUSTABLE PEDALS SWITCH (EXCEPT BUILT-UP-EXPORT) - WHITE 2 WAY

CAV	CIRCUIT	FUNCTION
1	Q100 20OR/WT	ADJUSTABLE PEDALS SWITCH SENSE
2	Q900 20OR/BK	ADJUSTABLE PEDALS SWITCH GROUND

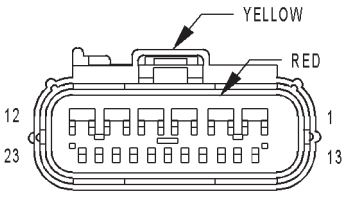

AIRBAG CONTROL MODULE (ORC)

AIRBAG CONTROL MODULE (ORC) - YELLOW/RED 23 WAY

CAV	CIRCUIT	FUNCTION
1	R54 18LB/YL	PASSENGER SEAT BELT TENSIONER LINE 2
2	R56 18LB/DG	PASSENGER SEAT BELT TENSIONER LINE 1
3	R62 18LB/PK	PASSENGER SQUIB 2 LINE 2
4	R64 18LB/WT	PASSENGER SQUIB 2 LINE 1
5	R42 18LB/BR	PASSENGER SQUIB 1 LINE 2
6	R44 18LB/OR	PASSENGER SQUIB 1 LINE 1
7	R53 18LG/YL	DRIVER SEAT BELT TENSIONER LINE 2
8	R55 18LG/DG	DRIVER SEAT BELT TENSIONER LINE 1
9	R61 18LG/PK	DRIVER SQUIB 2 LINE 1
10	R63 18LG/WT	DRIVER SQUIB 2 LINE 2
11	R43 18LG/BR	DRIVER SQUIB 1 LINE 1
12	R45 18LG/OR	DRIVER SQUIB 1 LINE 2
13	-	-
14	F201 18PK/OR	FCM OUTPUT (ORC RUN-START DRIVER)
15	F100 18PK/VT	FCM OUTPUT (ORC RUN ONLY DRIVER)
16	Z12 18BK/OR	GROUND
17	R59 18LG/TN	DRIVER SEAT BELT SWITCH LINE 1
18	R57 18LG/GY	DRIVER SEAT BELT SWITCH LINE 2
19	R60 18DB/LB	PASSENGER SEAT BELT SWITCH LINE 1
20	R58 18LB/GY	PASSENGER SEAT BELT SWITCH LINE 2
21	D25 18WT/VT	PCI BUS
22	-	-
23	-	-

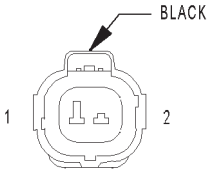

AMBIENT TEMP SENSOR (EXCEPT BASE)

AMBIENT TEMP SENSOR (EXCEPT BASE) - BLACK 2 WAY

CAV	CIRCUIT	FUNCTION
1	G31 18VT/LG	AMBIENT TEMPERATURE SENSOR SIGNAL
2	G931 18VT/BR	AMBIENT TEMPERATURE SENSOR RETURN

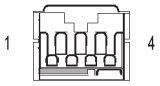

ATC REMOTE SENSOR (ATC)

ATC REMOTE SENSOR (ATC) - 4 WAY

CAV	CIRCUIT	FUNCTION
1	F600 20LB/PK	PROTECTED IGNITION
2	D40 20WT/LB	KDB NO. 2 CLOCK
3	C905 20BR/LB	SENSOR RETURN
4	D18 20WT/YL	KDB NO. 2 DATA

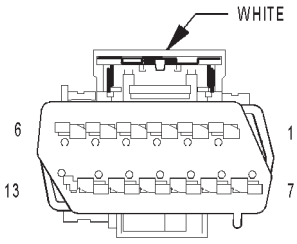

AUTO TEMP CONTROL C1

AUTO TEMP CONTROL C1 - WHITE 13 WAY

CAV	CIRCUIT	FUNCTION
1	C161 20LB/WT	DRIVER BLEND DOOR DRIVER (B)
2	C61 20DB/LG	DRIVER BLEND DOOR DRIVER (A)
3	C133 20DB/WT	PASSENGER BLEND DOOR DRIVER (B)
4	C33 20LB/BR	PASSENGER BLEND DOOR DRIVER (A)
5	C132 20DB/YL	RECIRCULATION DOOR DRIVER (B)
6	C32 20DB/TN	RECIRCULATION DOOR DRIVER (A)
7	C135 20DB/GY	MODE DOOR DRIVER (B)
8	C35 20LB/OR	MODE DOOR DRIVER (A)
9	C53 20LB	REAR MODE DOOR DRIVER (A)
10	C154 20LB/OR	REAR MODE DOOR DRIVER (B)
11	C54 20LB/YL	REAR BLEND DOOR DRIVER (A)
12	C169 20DB/OR	REAR BLEND DOOR DRIVER (B)
13	-	-

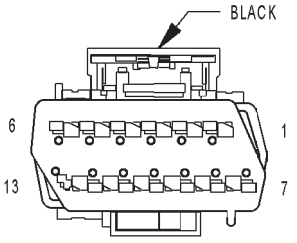

AUTO TEMP CONTROL C2

AUTO TEMP CONTROL C2 - BLACK 13 WAY

CAV	CIRCUIT	FUNCTION
1	C21 20DB/LG	EVAPORATOR TEMPERATURE SENSOR SIGNAL
2	C121 20DB/DG	SENSOR GROUND
3	E12 20OR/GY	PANEL LAMPS DRIVER
4	A114 20GY/RD	FUSED B(+) (I.O.D.)
5	F504 20GY/PK	FUSED IGNITION SWITCH OUTPUT (RUN)
6	D25 20WT/VT	PCI BUS
7	C56 20DB/LB	BLOWER MOTOR CONTROL
8	C59 20DB/LB	REAR BLOWER MOTOR CONTROL
9	D22 20WT/TN	KDB CLOCK
10	D17 20WT/DG	KDB DATA
11	Z24 18BK/OR	GROUND
12	C200 20LB/DG	TXV SOLENOID FEED
13	C900 18LB/VT	WIPER DE-ICER DRIVER

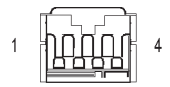

AUTO TEMP CONTROL C3

AUTO TEMP CONTROL C3 - 4 WAY

CAV	CIRCUIT	FUNCTION
1	F600 20LB/PK	PROTECTED IGNITION
2	D40 20WT/LB	KDB NO. 2 CLOCK
3	C905 20BR/LB	SENSOR RETURN
4	D18 20WT/YL	KDB NO. 2 DATA

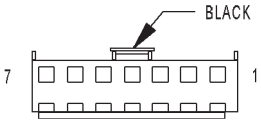

AUTOMATIC DAY/NIGHT MIRROR (PREMIUM/LUXURY)

AUTOMATIC DAY/NIGHT MIRROR (PREMIUM/LUXURY) - BLACK 7 WAY

CAV	CIRCUIT	FUNCTION
1	F503 20BK/PK	FUSED IGNITION SWITCH OUTPUT (RUN)
2	Z113 20BK	GROUND
3	L1 20BK/WT	BACK-UP LAMP FEED
4	P112 20BK/OR (EXCEPT BUILT-UP-EXPORT)	MIRROR B(+)
5	P114 20BK/LB (EXCEPT BUILT-UP-EXPORT)	MIRROR B(-)
6	-	-
7	L24 20BK/GY (EXCEPT BUILT-UP-EXPORT)	AUTOMATIC HEADLAMP SWITCH SENSOR

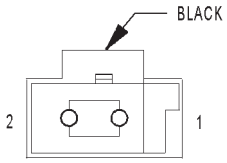

AUTOSTICK SWITCH (EXCEPT BUILT-UP-EXPORT)

AUTOSTICK SWITCH (EXCEPT BUILT-UP-EXPORT) - BLACK 2 WAY

CAV	CIRCUIT	FUNCTION
1	T55 20YL/VT	AUTOSTICK/OVERDRIVE OFF MUX INPUT
2	Z65 20BK/YL	GROUND

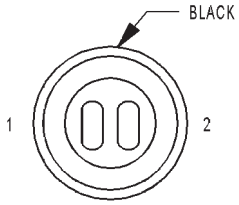

BACK-UP LAMP SWITCH (MTX)

BACK-UP LAMP SWITCH (MTX) - BLACK 2 WAY

CAV	CIRCUIT	FUNCTION
1	T2 18DG/WT	TRS REVERSE SENSE
2	Z252 18BK/WT	GROUND

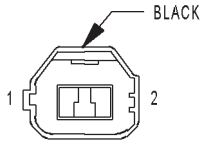

BATTERY TEMPERATURE SENSOR (DIESEL)

BATTERY TEMPERATURE SENSOR (DIESEL) - BLACK 2 WAY

CAV	CIRCUIT	FUNCTION
1	K25 20BR/TN	BATTERY TEMPERATURE SENSOR SIGNAL
2	K900 20DB/DG	SENSOR GROUND

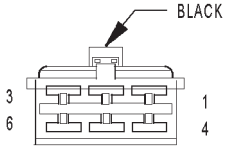

BLOWER MOTOR RESISTOR C1 (MTC)

BLOWER MOTOR RESISTOR C1 (MTC) - BLACK 6 WAY

CAV	CIRCUIT	FUNCTION
1	C75 12DB/GY	BLOWER MOTOR HIGH DRIVER
2	C74 12DB/WT	BLOWER MOTOR M3 DRIVER
3	C73 14DB/VT	BLOWER MOTOR M2 DRIVER
4	C7 12DB	FUSED FRONT BLOWER MOTOR RELAY OUTPUT
5	C72 16DB/OR	BLOWER MOTOR M1 DRIVER
6	C71 16DB/BR	BLOWER MOTOR LOW DRIVER

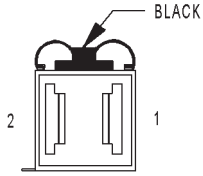

BLOWER MOTOR RESISTOR C2 (MTC)

BLOWER MOTOR RESISTOR C2 (MTC) - BLACK 2 WAY

CAV	CIRCUIT	FUNCTION
1	C70 12DG	REAR BLOWER HIGH SPEED
2	C7 12BK	HIGH SPEED BLOWER MOTOR

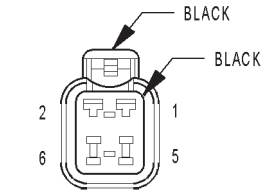

BODY CONTROL MODULE C1

BODY CONTROL MODULE C1 - BLACK/BLACK 6 WAY

CAV	CIRCUIT	FUNCTION
1	A102 12WT/RD	FUSED B(+)
2	A701 16BR/RD	FUSED B(+) (HAZARD)
3	Z100 12BK/TN	GROUND
4	-	-
5	A101 12VT/RD	FUSED B(+)
6	-	-

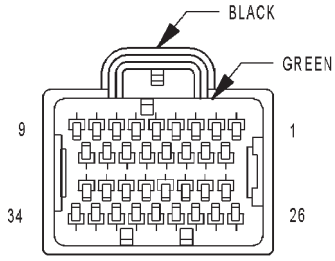

BODY CONTROL MODULE C2

BODY CONTROL MODULE C2 - BLACK/GREEN 34 WAY

CAV	CIRCUIT	FUNCTION
1	L61 18WT/LB (BUILT-UP-EXPORT)	LEFT FRONT TURN SIGNAL DRIVER
1	L61 18WT/LG (EXCEPT BUILT-UP-EXPORT)	LEFT FRONT TURN SIGNAL DRIVER
2	L63 18WT/DG	LEFT REAR TURN SIGNAL DRIVER
3	L60 18WT/TN	RIGHT FRONT TURN SIGNAL DRIVER
4	L62 18WT/BR	RIGHT REAR TURN SIGNAL DRIVER
5	F20 20PK/WT	FUSED IGNITION SWITCH OUTPUT (RUN-START)
6	G25 20VT/TN (HIGH LINE)	LIFTGATE SWITCH MUX
7	A114 20GY/RD	FUSED B(+) (I.O.D.)
8	-	-
9	L1 18WT/LG	BACK-UP LAMP DRIVER
10	P3 20TN/WT	LEFT FRONT DOOR LOCK DRIVER
11	P2 20TN/GY	RIGHT FRONT DOOR LOCK DRIVER
12	P38 20TN/DB	RIGHT SLIDING DOOR LOCK DRIVER
13	-	-
14	-	-
15	Z15 18BK/TN	GROUND
16	G920 20VT/YL (MEMORY)	MEMORY SELECT SWITCH RETURN
17	G153 20VT/YL (POWER LIFTGATE)	LIFTGATE MODULE WAKE UP SIGNAL
18	P32 20TN/VT	LEFT SLIDING DOOR LOCK DRIVER
19	Z10 18BK/TN	GROUND
20	P5 20TN/OR	LEFT SLIDING DOOR UNLOCK DRIVER
21	P164 18LG/DB (BUILT-UP-EXPORT)	PASSENGER FOLDING MIRROR RELAY INPUT
22	P30 20TN/DG	LIFTGATE HANDLE SWITCH SENSE
23	-	-
24	G200 20VT/BR (MEMORY)	MEMORY SELECT SWITCH MUX
25	M22 20YL/OR	COURTESY LAMPS DRIVER
26	P4 20TN/BR	RIGHT FRONT DOOR UNLOCK DRIVER
27	P34 20TN/LB	RIGHT SLIDING DOOR UNLOCK DRIVER
28	P1 20TN/LG	LEFT FRONT DOOR UNLOCK DRIVER
29	P159 20TN/DG (BUILT-UP-EXPORT)	DRIVER FOLDING MIRROR FOLD DRIVER
30	P174 20TN/LB (BUILT-UP-EXPORT)	RIGHT FOLDING MIRROR UNFOLD DRIVER
31	P171 20TN/YL (BUILT-UP-EXPORT)	LEFT FOLDING MIRROR UNFOLD DRIVER
32	W13 18BR/LG	REAR WIPER MOTOR CONTROL
33	M24 20YL/WT	COURTESY LAMPS DRIVER
34	L38 20WT/YL (BUILT-UP-EXPORT)	REAR FOG LAMP SWITCH OUTPUT

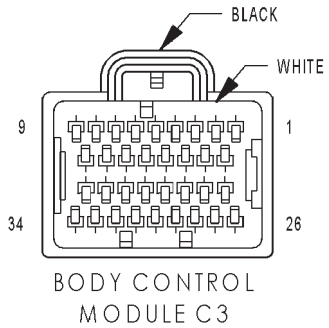

BODY CONTROL MODULE C3

BODY CONTROL MODULE C3 - BLACK/WHITE 34 WAY

CAV	CIRCUIT	FUNCTION
1	G23 20VT/DB (POWER SLIDING DOOR)	SLIDING DOORS OVERHEAD SWITCH MUX
2	D23 20WT/BR	FLASH PROGRAM ENABLE
3	G152 20VT/GY (POWER SLIDING DOOR)	RIGHT SLIDING DOOR WAKE UP SIGNAL
4	G151 20VT/BR (POWER SLIDING DOOR)	LEFT SLIDING DOOR WAKE UP SIGNAL
5	G76 20VT/YL	RIGHT SLIDING DOOR AJAR SWITCH SENSE
6	G74 20VT/WT (RHD)	RIGHT FRONT DOOR AJAR SWITCH SENSE
6	G75 20VT (LHD)	LEFT FRONT DOOR AJAR SWITCH SENSE
7	G75 20VT (RHD)	LEFT FRONT DOOR AJAR SWITCH SENSE
7	G74 20VT/WT (LHD)	RIGHT FRONT DOOR AJAR SWITCH SENSE
8	G77 20VT/GY	LEFT SLIDING DOOR AJAR SWITCH SENSE
9	E10 20OR/DG (ATC) (3 ZONE HVAC)	PANEL LAMPS DRIVER (REAR BLOWER SWITCH)
10	-	-
11	L162 20WT/VT (BUILT-UP-EXPORT)	RIGHT SIDE REPEATER LAMP FEED
12	G42 20VT/YL (POWER SLIDING DOOR) (EXCEPT TOWN & COUNTRY)	RIGHT SLIDING DOOR PILLAR SWITCH MUX
12	G42 20VT/WT (POWER SLIDING DOOR) (TOWN & COUNTRY)	RIGHT SLIDING DOOR PILLAR SWITCH MUX
13	G165 20VT/GY	LIFTGATE CYLINDER LOCK SWITCH MUX
14	G163 20VT/LB	LEFT CYLINDER LOCK SWITCH MUX
15	G162 20VT/WT (EXCEPT BUILT-UP-EXPORT)	RIGHT CYLINDER LOCK SWITCH MUX
15	G162 20VT/TN (BUILT-UP-EXPORT)	RIGHT CYLINDER LOCK SWITCH MUX
16	-	-
17	F503 20WT/PK	FUSED IGNITION SWITCH OUTPUT (RUN)
18	G41 20VT/DG (POWER SLIDING DOOR)	LEFT SLIDING DOOR PILLAR SWITCH MUX
19	L163 20WT/BR (BUILT-UP-EXPORT)	LEFT SIDE REPEATER LAMP FEED
20	N4 18DB/WT	FUEL LEVEL SENSOR SIGNAL
21	G161 20VT/DG (LHD)	LEFT DOOR LOCK SWITCH MUX
21	G160 20VT/LG (RHD)	RIGHT DOOR LOCK SWITCH MUX
22	G160 20VT/LG (LHD)	RIGHT DOOR LOCK SWITCH MUX
22	G161 20VT/DG (RHD)	LEFT DOOR LOCK SWITCH MUX
23	D25 20WT/VT	PCI BUS
24	-	-
25	M11 20YL/VT	COURTESY LAMPS DRIVER
26	P31 20TN/YL (POWER RELEASE) (EXCEPT BUILT-UP-EXPORT LHD SWB GAS)	LIFTGATE RELEASE DRIVER
26	P31 20TN/DG (POWER RELEASE) (BUILT-UP-EXPORT LHD SWB GAS)	LIFTGATE RELEASE DRIVER
27	-	-
28	-	-
29	G78 20VT/OR	LIFTGATE AJAR SWITCH SENSE
30	G70 20VT/LB	HOOD AJAR SWITCH SENSE
31	F500 18DG/PK	FUSED IGNITION SWITCH OUTPUT (RUN)
32	-	-
33	M21 20YL/BR	COURTESY LAMPS DRIVER
34	M27 20YL/LB	READING LAMPS DRIVER

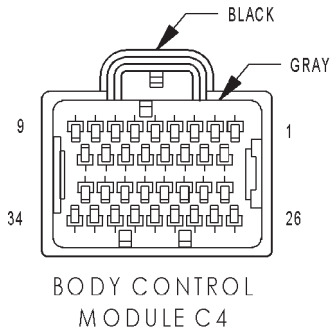

BODY CONTROL MODULE C4

BODY CONTROL MODULE C4 - BLACK/GRAY 34 WAY

CAV	CIRCUIT	FUNCTION
1	E18 20OR/LB (POWER MIRRORS)	PANEL LAMPS DRIVER (MIRROR SWITCH)
2	E12 20OR/GY	PANEL LAMPS DRIVER (HVAC)
3	E19 20OR/BR	PANEL LAMPS DRIVER (HEADLAMP SWITCH)
4	D9 20WT/GY	RKE MODULE PROGRAM ENABLE
5	G150 20VT/BR	INSTRUMENT CLUSTER WAKE UP SENSE
6	-	-
7	P162 20LG/DG (BUILT-UP-EXPORT)	PASSENGER FOLDING MIRROR RELAY CONTROL
8	G69 20VT/WT (VTSS)	VTSS INDICATOR DRIVER
9	L161 20WT/LG	LEFT TURN INDICATOR DRIVER
10	F504 20GY/PK	FUSED IGNITION SWITCH OUTPUT (RUN)
11	E14 20OR/TN	PANEL LAMPS DRIVER (RADIO)
12	E13 20OR/YL	PANEL LAMPS DRIVER (INSTRUMENT CLUSTER)
13	X920 20GY/OR	RADIO CONTROL MUX RETURN
14	G900 20VT/OR	IGNITION SWITCH SENSE RETURN
15	-	-
16	-	-
17	L160 20WT/TN	RIGHT TURN INDICATOR DRIVER
18	M26 20YL/DB	HALO LAMP DRIVER
19	-	-
20	-	-
21	-	-
22	G902 20VT/OR	MULTI-FUNCTION SWITCH MUX RETURN
23	-	-
24	-	-
25	-	-
26	M28 20YL/TN	GLOVE BOX LAMP DRIVER
27	-	-
28	-	-
29	-	-
30	-	-
31	G96 20VT/DG	REMOTE KEYLESS ENTRY INTERFACE
32	B27 20DG/WT	TRACTION CONTROL SWITCH SENSE
33	P136 20TN/YL (BUILT-UP-EXPORT)	FOLDING MIRROR SWITCH SENSE
34	G26 20VT/OR	CHIME DRIVER

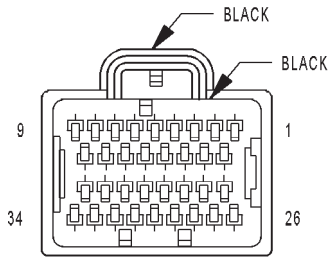

BODY CONTROL MODULE C5

BODY CONTROL MODULE C5 - BLACK/BLACK 34 WAY

CAV	CIRCUIT	FUNCTION
1	L91 20WT/DB	HAZARD SWITCH SENSE
2	-	-
3	-	-
4	-	-
5	-	-
6	-	-
7	-	-
8	-	-
9	-	-
10	G20 20VT/BR	IGNITION SWITCH SENSE
11	-	-
12	-	-
13	-	-
14	-	-
15	-	-
16	G926 20VT/WT	REAR WIPER SWITCH MUX RETURN
17	L900 20WT/YL	HEADLAMP SWITCH MUX RETURN
18	L307 20WT/BR	HEADLAMP SWITCH MUX
19	-	-
20	-	-
21	-	-
22	-	-
23	-	-
24	-	-
25	L36 20WT/DB (BUILT-UP-EXPORT)	REAR FOG LAMP INDICATOR DRIVER
26	X20 20GY/WT	RADIO CONTROL MUX
27	G194 20VT/LG	HIGH BEAM/FRONT WASHER SWITCH MUX
28	W26 20BR/DB	REAR WIPER SWITCH MUX
29	W52 20BR/YL	FRONT WIPER SWITCH MUX
30	E2 20OR/BR	PANEL LAMPS DIMMER SIGNAL
31	L305 20WT/LB	TURN SIGNAL SWITCH MUX
32	-	-
33	-	-
34	L39 20WT/OR (HIGH LINE)	FRONT FOG LAMP INDICATOR DRIVER

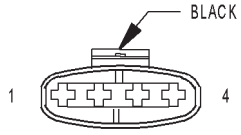

BOOST PRESSURE SENSOR (DIESEL)

BOOST PRESSURE SENSOR (DIESEL) - BLACK 4 WAY

CAV	CIRCUIT	FUNCTION
1	K121 20DB	BOOST PRESSURE SENSOR GROUND
2	K21 20DB/LG	INTAKE AIR TEMPERATURE SENSOR SIGNAL
3	F851 18LB/PK	SENSOR REFERENCE VOLTAGE B
4	K37 20DB/YL	BOOST PRESSURE SENSOR SIGNAL

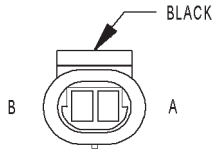

BRAKE FLUID LEVEL SWITCH

BRAKE FLUID LEVEL SWITCH - BLACK 2 WAY

CAV	CIRCUIT	FUNCTION
A	B20 20DG/OR	BRAKE FLUID LEVEL SWITCH SENSE
B	Z420 20BK/OR	GROUND

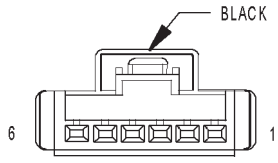

BRAKE
LAMP
SWITCH

BRAKE LAMP SWITCH - BLACK 6 WAY

CAV	CIRCUIT	FUNCTION
1	A103 18GY/RD	FUSED B(+)
2	L50 18WT/TN	BRAKE LAMP SWITCH OUTPUT
3	V30 20VT/WT (GAS)	SPEED CONTROL BRAKE SWITCH OUTPUT
4	V32 20VT/YL (GAS)	SPEED CONTROL ON/OFF SWITCH SENSE
5	Z429 20BK/OR	GROUND
6	B29 20DG/WT	SECONDARY BRAKE SWITCH SIGNAL

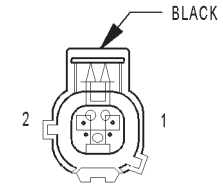

BRAKE
TRANSMISSION
SHIFT
INTERLOCK
SOLENOID
(EATX)

BRAKE TRANSMISSION SHIFT INTERLOCK SOLENOID (EATX) - BLACK 2 WAY

CAV	CIRCUIT	FUNCTION
1	K32 18DB/YL	BRAKE TRANSMISSION SHIFT INTERLOCK SOLENOID CONTROL
2	F2 18PK/YL	FCM OUTPUT (UNLOCK-RUN-START)

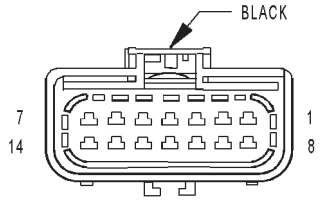

C100

C100 - BLACK (BODY SIDE)

CAV	CIRCUIT
1	D21 20WT/DG (BUILT-UP-EXPORT)
1	D21 20WT/BR (EXCEPT BUILT-UP-EXPORT)
2	D16 20WT/OR
3	K119 20DB/LG (DIESEL)
3	D20 20WT/LG (GAS)
4	D25 20WT/VT
5	Z111 18BK/WT (EXCEPT BUILT-UP-EXPORT)
5	Z111 20BK/WT (BUILT-UP-EXPORT)
6	N1 16DB/OR (DIESEL)
7	N2 18DB/YL (DIESEL)
8	K22 20OR/DB (DIESEL)
8	V32 20VT/YL (GAS)
9	B29 20DG/WT
10	V37 20VT
11	K167 20BR/YL (DIESEL)
11	V30 20VT/WT (GAS)
12	K900 20DB/DG
13	B1 18DG/OR (ANTILOCK BRAKES)
14	B2 18DG/LB (ANTILOCK BRAKES)

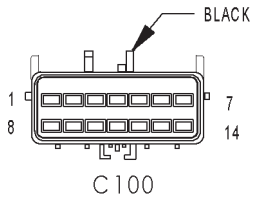

C100 - BLACK (POWERTRAIN SIDE)

CAV	CIRCUIT
1	D21 18WT/BR
2	D16 18WT/OR (EATX)
3	K119 20DB/LG (DIESEL)
3	D20 18WT/LG (GAS)
4	D25 20WT/VT (DIESEL)
4	D25 18WT/VT (GAS)
5	Z111 18BK/WT
6	N1 18DB/OR (DIESEL)
7	N2 18DB/YL (DIESEL)
8	K22 20OR/DB (DIESEL)
8	V32 18VT/YL (GAS)
9	B29 18DG/WT (GAS)
9	B29 20DG/WT (DIESEL)
10	V37 18VT (GAS)
10	V37 20VT/TN (DIESEL)
11	K167 20BR/YL (DIESEL)
11	V30 18VT/WT (GAS)
12	K900 18DB/DG
13	B1 18DG/OR (ANTILOCK BRAKES)
14	B2 18DG/LB (ANTILOCK BRAKES)

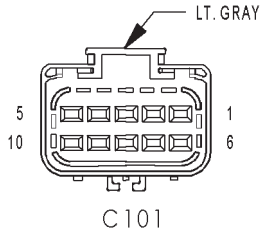

C101 - LT. GRAY (BODY SIDE)

CAV	CIRCUIT
1	L50 18WT/TN
2	-
3	F853 20LG/PK (DIESEL)
4	K900 18DB/DG (DIESEL)
5	B4 18DG/GY (ANTILOCK BRAKES)
6	B3 18DG/YL (ANTILOCK BRAKES)
7	F500 18DG/PK
8	K4 20BK/LB (DIESEL)
9	T55 18YL/VT (AUTOSTICK)
9	F852 20VT/PK (DIESEL)
10	K151 20WT (DIESEL)

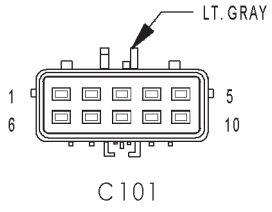

C101 - LT. GRAY (POWERTRAIN SIDE)

CAV	CIRCUIT
1	L50 20WT/TN (DIESEL)
1	L50 18WT/TN (GAS) (ANTILOCK BRAKES)
2	-
3	F853 20LG/PK (DIESEL)
4	-
5	B4 18DG/GY (ANTILOCK BRAKES)
6	B3 18DG/YL (ANTILOCK BRAKES)
7	F500 18DG/PK
8	K4 20BK/LB (DIESEL)
9	K853 20DB/BR (DIESEL)
9	T55 18YL/VT (EATX)
10	K151 20WT (DIESEL)

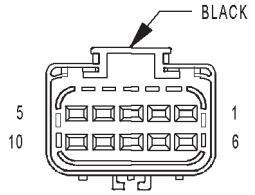

C102
(2.4L)

C102 (2.4L) - BLACK (FUEL RAIL SIDE)

CAV	CIRCUIT
1	K11 16BR/YL
2	K12 16BR/DB
3	K13 16BR/LB
4	K14 16BR/TN
5	K342 16BR/WT
6	K900 18DB/DG
7	K2 18VT/OR
8	K1 18VT/BR
9	-
10	F855 18OR/PK (EXCEPT BUILT-UP-EXPORT)
10	F855 18PK/YL (BUILT-UP-EXPORT)

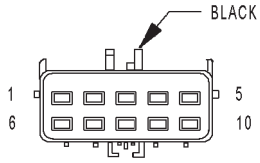

C102
(2.4L)

C102 (2.4L) - BLACK (POWERTRAIN SIDE)

CAV	CIRCUIT
1	K11 16BR/YL
2	K12 16BR/DB
3	K13 16BR/LB
4	K14 16BR/TN
5	K342 16BR/WT
6	K900 18DB/DG
7	K2 18VT/OR
8	K1 18VT/BR
9	-
10	F855 18PK/YL

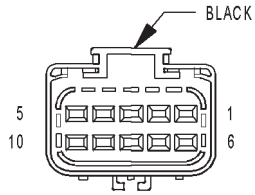

C102
(3.3L/3.8L)

C102 (3.3L/3.8L) - BLACK (FUEL RAIL SIDE)

CAV	CIRCUIT
1	K342 16BR/WT
2	K1 18VT/BR
3	K11 16BR/YL
4	K12 16BR/DB
5	K13 16BR/LB
6	K14 16BR/TN
7	K900 18DB/DG
8	K38 16BR/OR
9	K58 16BR/VT
10	F855 18OR/PK (EXCEPT BUILT-UP-EXPORT)
10	F855 18PK/YL (BUILT-UP-EXPORT)

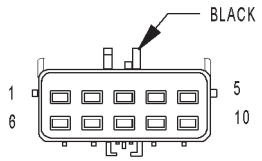

C102
(3.3L/3.8L)

C102 (3.3L/3.8L) - BLACK (POWERTRAIN SIDE)

CAV	CIRCUIT
1	K342 16BR/WT
2	K1 18VT/BR
3	K11 16BR/YL
4	K12 16BR/DB
5	K13 16BR/LB
6	K14 16BR/TN
7	K900 18DB/DG
8	K38 16BR/OR
9	K58 16BR/VT
10	F855 18PK/YL

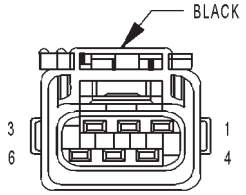

C103
(DIESEL)

C103 (DIESEL) - BLACK (POWERTRAIN SIDE)

CAV	CIRCUIT
1	K342 16BR/WT
2	K342 16BR/WT
3	N122 20DB/YL
4	N210 20DB/DG
5	A201 12RD/LG
6	-

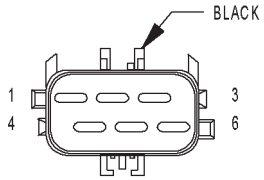

C103
(DIESEL)

C103 (DIESEL) - BLACK (FRONT END LIGHTING SIDE)

CAV	CIRCUIT
1	K342 16BR/WT
2	K342 16BR/WT
3	N122 20DB/YL
4	N210 18DB/DG
5	A201 12RD/LG
6	-

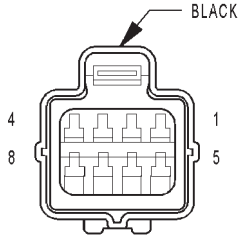

C106
(BUILT-UP-
EXPORT)

C106 (BUILT-UP-EXPORT) - BLACK (FRONT END LIGHTING SIDE)

CAV	CIRCUIT
1	L43 18WT/DB
2	L33 18WT/LG
3	L77 18WT/BR
4	L61 16WT/LG
5	Z343 18BK/LG
6	L13 20WT/YL
7	Z203 20BK/YL
8	Z377 18BK/BR

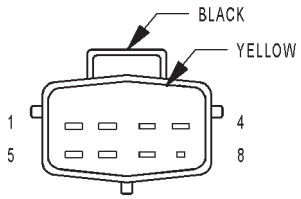

C106
(BUILT-UP-
EXPORT)

C106 (BUILT-UP-EXPORT) - BLACK/YELLOW
(COMPONENT SIDE)

CAV	CIRCUIT
1	L43 16WT
2	L33 16GY
3	L77 16BK
4	L61 16YL
5	Z343 16BR
6	L13 16RD
7	Z203 16BR
8	-

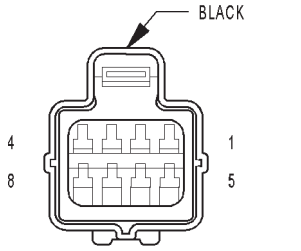

C107
(BUILT-UP-
EXPORT)

C107 (BUILT-UP-EXPORT) - BLACK (FRONT END
LIGHTING SIDE)

CAV	CIRCUIT
1	L44 16WT/TN
2	L34 16WT/GY
3	L78 18WT/OR
4	L60 16WT/TN
5	Z344 16BK/TN
6	L13 20WT/YL
7	Z203 20BK/YL
8	Z378 18BK/TN (DIESEL)
8	Z378 18BK/LB (GAS)

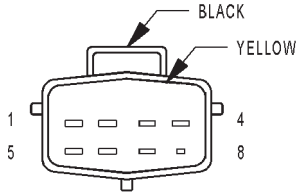

C107
(BUILT-UP-
EXPORT)

C107 (BUILT-UP-EXPORT) - BLACK/YELLOW
(COMPONENT SIDE)

CAV	CIRCUIT
1	L44 16WT
2	L34 16GY
3	L78 16BK
4	L60 16YL
5	Z344 16BR
6	L13 16RD
7	Z203 16BR
8	-

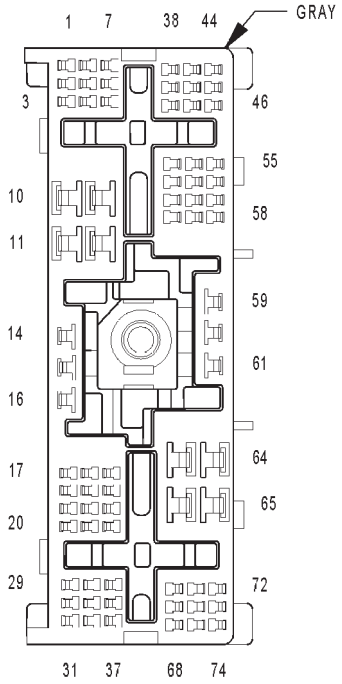

C200

C200 - GRAY (BODY SIDE)

CAV	CIRCUIT
1	C151 18LB/DG (3 ZONE HVAC)
1	C200 20LB/DG (BUILT-UP-EXPORT) (AUTOMATIC TEMPERATURE CONTROL)
2	A106 20LB/RD
3	A108 18LG/RD
4	C152 16LB/LG (3 ZONE HVAC)
4	C59 20DB/LB (AUTOMATIC TEMPERATURE CONTROL)
5	P159 20TN/DG (BUILT-UP-EXPORT)
5	C200 20LB/DG (EXCEPT BUILT-UP-EXPORT) (AUTOMATIC TEMPERATURE CONTROL)
6	K32 18DB/YL (GAS)
7	C53 20LB (AUTOMATIC TEMPERATURE CONTROL) (3 ZONE HVAC)
8	C16 18DB/GY (BUILT-UP-EXPORT)
8	C16 20DB/GY (EXCEPT BUILT-UP-EXPORT)
9	D17 20WT/DG (AUTOMATIC TEMPERATURE CONTROL)
9	C22 20LB/WT (3 ZONE HVAC)
10	L13 20WT/YL (BUILT-UP-EXPORT)
10	C50 12DB/OR (3 ZONE HVAC)
11	C7 12DB
12	Z135 12BK/LB (EXCEPT BUILT-UP-EXPORT) (AUTOMATIC TEMPERATURE CONTROL)
12	D22 20WT/TN (BUILT-UP-EXPORT) (AUTOMATIC TEMPERATURE CONTROL)
12	C153 12DB/BR (3 ZONE HVAC)
13	Z849 12BK/OR
14	A105 16DB/RD (BUILT-UP-EXPORT)
14	A105 18DB/RD (EXCEPT BUILT-UP-EXPORT)
15	A114 16GY/RD
16	F306 16DB/PK
17	C154 20LB/OR (3 ZONE HVAC)
17	C169 20DB/OR (AUTOMATIC TEMPERATURE CONTROL)
18	C121 20DB/DG (3 ZONE HVAC)
18	D22 20WT/TN (EXCEPT BUILT-UP-EXPORT) (AUTOMATIC TEMPERATURE CONTROL)
18	P171 20TN/YL (BUILT-UP-EXPORT)
19	P160 18TN/LG (BUILT-UP-EXPORT)
20	F302 18GY/PK
21	F2 18PK/WT (GAS)
22	L78 18WT/OR (BUILT-UP-EXPORT)
22	Q900 20OR/BK (EXCEPT BUILT-UP-EXPORT)
23	P174 20TN/LB (BUILT-UP-EXPORT)
23	Q100 20OR/WT (EXCEPT BUILT-UP-EXPORT)
24	D25 20WT/VT
25	D25 20WT/VT
26	D25 20WT/VT
27	D25 20WT/VT
28	D25 20WT/VT
29	F20 20PK/WT
30	F100 18PK/VT
31	F201 18PK/OR
32	F850 20LB/PK (3 ZONE HVAC)
32	F504 20GY/PK (AUTOMATIC TEMPERATURE CONTROL)
33	P7 20LG/DG
34	P8 20LG/WT
35	P64 20TN (MEMORY)
36	P65 20TN/VT (MEMORY)

C200 - GRAY (BODY SIDE)

CAV	CIRCUIT
37	P66 20TN/LG (MEMORY)
38	P67 20TN/OR (MEMORY)
39	P68 20TN/YL (MEMORY)
40	P69 20TN/WT (EXCEPT BUILT-UP-EXPORT) (MEMORY)
40	P69 20TN/DB (BUILT-UP-EXPORT) (MEMORY)
41	P70 18TN/LB (MEMORY)
42	P71 18TN/GY (BUILT-UP-EXPORT) (MEMORY)
42	P71 18TN/DG (EXCEPT BUILT-UP-EXPORT) (MEMORY)
43	P72 18TN/GY (MEMORY)
44	P73 18TN/VT (EXCEPT BUILT-UP-EXPORT) (MEMORY)
44	P73 18TN/YL (BUILT UP-EXPORT) (MEMORY)
45	P74 18TN/YL (MEMORY)
46	P75 18TN/DB (BUILT-UP-EXPORT) (MEMORY)
46	P75 18TN/LG (EXCEPT BUILT-UP-EXPORT) (MEMORY)
47	P112 20TN/OR (EXCEPT BUILT-UP-EXPORT/POWER MIRRORS/EXCEPT TOWN & COUNTRY)
47	P112 20BK/OR (EXCEPT BUILT-UP-EXPORT/POWER MIRRORS/TOWN & COUNTRY)
47	D23 20WT/BR (RHD)
48	P114 20TN/WT (EXCEPT BUILT-UP-EXPORT) (POWER MIRRORS)
48	B25 20DG/WT (BUILT-UP-EXPORT)
49	C154 20LB/OR (AUTOMATIC TEMPERATURE CONTROL) (3 ZONE HVAC)
50	Z104 18BK/LG
51	X156 20GY/LB (PREMIUM 8 SPEAKER)
52	X154 20GY/YL (PREMIUM 8 SPEAKER)
53	R57 18LG/GY
54	R58 18LB/GY
55	R59 18LG/TN
56	R60 18LB/TN
57	T55 20YL/VT (AUTOSTICK)
57	P162 18LG/DG (BUILT-UP-EXPORT)
58	T751 20YL
59	X15 16GY/DG (PREMIUM 8 SPEAKER)
60	V37 20VT
61	X3 20DG/VT
62	C54 20LB/YL (AUTOMATIC TEMPERATURE CONTROL) (3 ZONE HVAC)
63	A701 16BR/RD
64	X51 20DG/DB
65	X52 20GY/DB
66	X53 20DG
67	X54 20GY
68	X55 20DG/BR
69	X56 20GY/BR
70	X57 20DG/OR
71	X58 20GY/OR
72	X153 20DG/YL (PREMIUM 8 SPEAKER)
73	K900 20DB/DG
74	X155 20DG/LB (PREMIUM 8 SPEAKER)

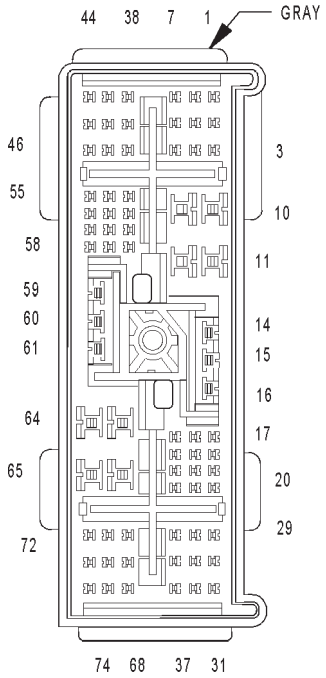

C200

C200 - GRAY (INSTRUMENT PANEL SIDE)

CAV	CIRCUIT
1	C200 20LB/DG (BUILT-UP-EXPORT) (AUTOMATIC TEMPERATURE CONTROL)
1	C151 18LB/DG (3 ZONE HVAC)
2	A106 20LB/RD
3	A108 18LG/RD
4	C59 20DB/LB (AUTOMATIC TEMPERATURE CONTROL)
4	C152 16LB/LG (3 ZONE HVAC)
5	P159 20TN/DG (BUILT-UP-EXPORT)
5	C200 20LB/DG (EXCEPT BUILT-UP-EXPORT) (AUTOMATIC TEMPERATURE CONTROL)
6	K32 18DB/YL
7	C53 20LB (AUTOMATIC TEMPERATURE CONTROL) (3 ZONE HVAC)
8	C16 20DB/GY (POWER MIRRORS)
9	C22 20LB/WT (3 ZONE HVAC)
9	D17 20WT/DG (AUTOMATIC TEMPERATURE CONTROL)
10	L13 20WT/YL (BUILT-UP-EXPORT)
10	C50 12DB/OR (3 ZONE HVAC)
11	C7 12DB
12	C153 12DB/BR (3 ZONE HVAC)
12	D22 20WT/TN (BUILT-UP-EXPORT) (AUTOMATIC TEMPERATURE CONTROL)
12	Z135 12BK/LB (EXCEPT BUILT-UP-EXPORT) (AUTOMATIC TEMPERATURE CONTROL)
13	Z849 12BK/OR
14	A105 16DB/RD
15	A114 16GY/RD
16	F306 16DB/PK
17	C169 20DB/OR (AUTOMATIC TEMPERATURE CONTROL)
17	C154 20LB/OR (3 ZONE HVAC)
18	C121 20DB/DG (3 ZONE HVAC)
18	D22 20WT/TN (EXCEPT BUILT-UP-EXPORT) (AUTOMATIC TEMPERATURE CONTROL)
18	P171 20TN/YL (BUILT-UP-EXPORT)
19	P160 18TN/LG (BUILT-UP-EXPORT)
20	F302 18GY/PK
21	F2 18PK/YL
22	Q900 20OR/BK (EXCEPT BUILT-UP-EXPORT)
22	L78 20WT/OR (BUILT-UP-EXPORT)
23	Q100 20OR/WT (EXCEPT BUILT-UP-EXPORT)
23	P174 20TN/LB (BUILT-UP-EXPORT)
24	D25 18WT/VT
25	D25 18WT/VT (EXCEPT BUILT-UP-EXPORT)
25	D25 20WT/VT (BUILT-UP-EXPORT)
26	D25 20WT/VT
27	D25 20WT/VT
28	D25 20WT/VT
29	F20 20PK/WT
30	F100 18PK/VT
31	F201 18PK/OR
32	F504 20GY/PK (AUTOMATIC TEMPERATURE CONTROL)
32	F850 20LB/PK (3 ZONE HVAC)
33	P7 20LG/DG
34	P8 20LG/WT
35	P64 20TN (MEMORY)
36	P65 20TN/VT (MEMORY)
37	P66 20TN/LG (MEMORY)
38	P67 20TN/OR (MEMORY)
39	P68 20TN/YL (MEMORY)

C200 - GRAY (INSTRUMENT PANEL SIDE)

CAV	CIRCUIT
40	P69 20TN/WT (MEMORY)
41	P70 18TN/LB (MEMORY)
42	P71 18TN/DG (MEMORY)
43	P72 18TN/GY (MEMORY)
44	P73 18TN/VT (MEMORY)
45	P74 18TN/DB (MEMORY)
46	P75 18TN/LG (MEMORY)
47	D23 20WT/BR (RHD)
47	P112 20TN/OR (EXCEPT BUILT-UP-EXPORT) (MEMORY POWER MIRRORS)
48	B25 20DG/WT (BUILT-UP-EXPORT)
48	P114 20TN/WT (EXCEPT BUILT-UP-EXPORT) (MEMORY POWER MIRRORS)
49	C154 20LB/OR (AUTOMATIC TEMPERATURE CONTROL) (3 ZONE HVAC)
50	Z104 18BK/LG
51	X156 20GY/LB (PREMIUM 8 SPEAKER)
52	X154 20GY/YL (PREMIUM 8 SPEAKER)
53	R57 18LG/GY
54	R58 18LB/GY
55	R59 18LG/TN
56	R60 18DB/LB
57	T55 20YL/VT (AUTOSTICK)
57	P162 20LG/DG (BUILT-UP-EXPORT)
58	T751 20YL
59	X15 16GY/DG (PREMIUM 8 SPEAKER)
60	V37 20VT
61	X3 20DG/VT
62	C54 20LB/YL (AUTOMATIC TEMPERATURE CONTROL) (3 ZONE HVAC)
63	A701 16BR/RD
64	X51 20DG/DB
65	X52 20GY/DB
66	X53 20DG
67	X54 20GY
68	X55 20DG/BR
69	X56 20GY/BR
70	X57 20DG/OR
71	X58 20GY/OR
72	X153 20DG/YL (PREMIUM 8 SPEAKER)
73	K900 20DB/DG
74	X155 20DG/LB (PREMIUM 8 SPEAKER)

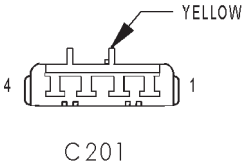

C201

C201 - YELLOW (INSTRUMENT PANEL SIDE)

CAV	CIRCUIT
1	R53 18LG/YL
2	R55 18LG/DG
3	R54 18LB/YL
4	R56 18LB/DG

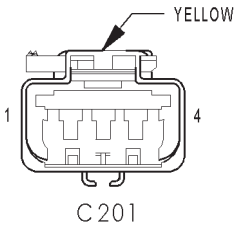

C201

C201 - YELLOW (BODY SIDE)

CAV	CIRCUIT
1	R53 18LG/YL
2	R55 18LG/DG
3	R54 18LB/YL
4	R56 18LB/DG

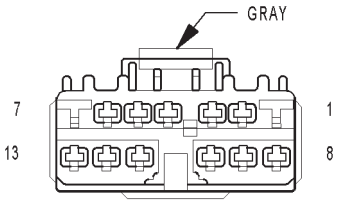

C202

C202 - GRAY (INSTRUMENT PANEL SIDE)

CAV	CIRCUIT
1	Z134 12BK/OR (AUTOMATIC TEMPERATURE CONTROL)
2	C34 20DB/LB (MANUAL TEMPERATURE CONTROL)
2	C56 20DB/LB (AUTOMATIC TEMPERATURE CONTROL)
3	C32 20DB/TN
4	C33 20LB/BR
5	C61 20DB/LG
6	C35 20LB/OR
7	C7 12DB (AUTOMATIC TEMPERATURE CONTROL)
8	C132 20DB/YL (AUTOMATIC TEMPERATURE CONTROL)
9	C133 20DB/WT (AUTOMATIC TEMPERATURE CONTROL)
10	C161 20LB/WT (AUTOMATIC TEMPERATURE CONTROL)
11	C135 20DB/GY (AUTOMATIC TEMPERATURE CONTROL)
12	C21 20DB/LG
13	C121 20DB/DG

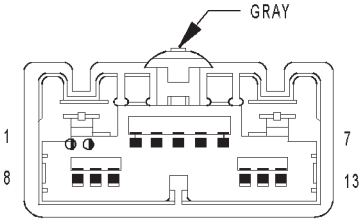

C202

C202 - GRAY (COMPONENT SIDE)

CAV	CIRCUIT
1	Z134 12BK/OR (AUTOMATIC TEMPERATURE CONTROL)
2	C34 20DB/LB (MANUAL TEMPERATURE CONTROL)
2	C56 20DB/LB (AUTOMATIC TEMPERATURE CONTROL)
3	C32 20DB/TN
4	C33 20LB/BR
5	C61 20LB/WT (MANUAL TEMPERATURE CONTROL)
5	C61 20DB/LG (AUTOMATIC TEMPERATURE CONTROL)
6	C35 20LB/OR
7	C7 12DB (AUTOMATIC TEMPERATURE CONTROL)
8	C132 20DB/YL (AUTOMATIC TEMPERATURE CONTROL)
9	C133 20DB/WT (AUTOMATIC TEMPERATURE CONTROL)
10	C161 20LB/WT (AUTOMATIC TEMPERATURE CONTROL)
11	C135 20DB/GY (AUTOMATIC TEMPERATURE CONTROL)
12	C21 20DB/LG
13	C121 20DB/DG

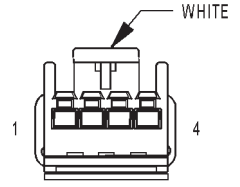

C203
(UNITED KINGDOM)

C203 (UNITED KINGDOM) - WHITE (BODY SIDE)

CAV	CIRCUIT
1	D97 18WT/OR
2	D96 18WT/LB
3	A600 18RD/LB
4	G944 18LB/BR

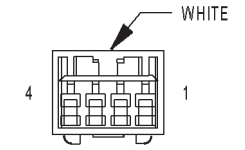

C203
(UNITED KINGDOM)

C203 (UNITED KINGDOM) - WHITE
(INSTRUMENT PANEL SIDE)

CAV	CIRCUIT
1	D97 20WT/OR
2	D96 20WT/LB
3	A600 20RD/LB
4	G944 20LB/BR

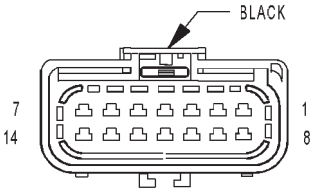

C300
(LHD)

C300 (LHD) - BLACK (LEFT DOOR SIDE)

CAV	CIRCUIT
1	G75 20VT
2	Z75 20BK/VT (EXCEPT POWER LOCKS)
2	Z821 12BK/BR (POWER LOCKS)
3	X53 20DG
4	X55 20DG/BR
5	G161 20VT/DG (POWER LOCKS)
6	P1 20TN/LG (POWER LOCKS)
7	P3 20TN/WT (POWER LOCKS)
8	F304 12WT/PK (POWER WINDOWS)
8	F304 16WT/PK (EXCEPT POWER WINDOWS)
9	-
10	-
11	Q13 16OR/DB (POWER WINDOWS)
12	Q23 16OR/LB (POWER WINDOWS)
13	Q14 16OR/GY (POWER WINDOWS)
14	Q24 16OR/DG (POWER WINDOWS)

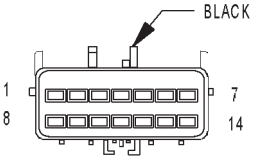

C300
(LHD)

C300 (LHD) - BLACK (BODY SIDE)

CAV	CIRCUIT
1	G75 20VT
2	Z821 12BK/BR
3	X53 20DG
4	X55 20DG/BR
5	G161 20VT/DG
6	P1 20TN/LG
7	P3 20TN/WT
8	F304 12WT/PK (POWER WINDOWS)
8	F302 18GY/PK (EXCEPT POWER WINDOWS)
9	-
10	-
11	Q13 16OR/DB (POWER WINDOWS)
12	Q23 16OR/LB (POWER WINDOWS)
13	Q14 16OR/BR (POWER WINDOWS) (BUILT-UP-EXPORT)
13	Q14 16OR/GY (POWER WINDOWS) (EXCEPT BUILT-UP-EXPORT)
14	Q24 16OR/DG (POWER WINDOWS)

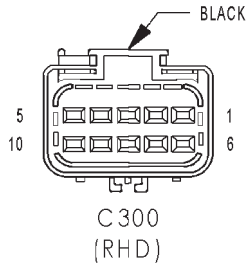

C300
(RHD)

C300 (RHD) - BLACK (LEFT DOOR SIDE)

CAV	CIRCUIT
1	G75 20VT
2	Z822 20BK/BR
3	X53 20DG
4	X55 20DG/BR
5	G161 20VT/DG
6	P1 20TN/LG
7	P3 20TN/WT
8	F304 12WT/PK
9	-
10	-

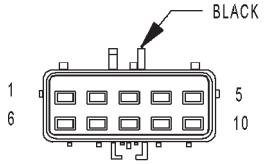

C300
(RHD)

C300 (RHD) - BLACK (BODY SIDE)

CAV	CIRCUIT
1	G75 20VT
2	Z822 20BK/BR
3	X53 20DG
4	X55 20DG/BR
5	G161 20VT/DG
6	P1 20TN/LG
7	P3 20TN/WT
8	F304 12WT/PK
9	-
10	-

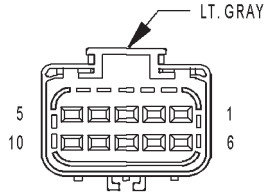

C301

C301 - LT. GRAY (LEFT DOOR SIDE)

CAV	CIRCUIT
1	M21 20YL/BR
2	X13 16DG/GY
3	X15 16GY/DG
4	X153 20DG/YL
5	X155 20DG/LB
6	G163 20VT/LB (POWER LOCKS)
7	G200 20VT/BR (MEMORY)
8	G920 20VT/YL (MEMORY)
9	Q16 12OR/TN
10	Q26 12OR/GY

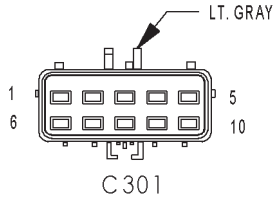

C301

C301 - LT. GRAY (BODY SIDE)

CAV	CIRCUIT
1	M21 20YL/BR
2	X13 16DG/GY
3	X15 16GY/DG
4	X153 20DG/YL
5	X155 20DG/LB
6	G163 20VT/LB (POWER LOCKS)
7	G200 20VT/BR (LHD/MEMORY)
8	G920 20VT/YL (LHD/MEMORY)
9	Q16 12OR/TN
10	Q26 12OR/GY

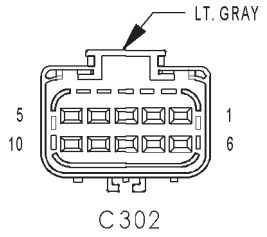

C302 - LT. GRAY (RIGHT DOOR SIDE)

CAV	CIRCUIT
1	M21 20YL/BR
2	X13 16DG/GY
3	X15 16GY/DG
4	X154 20GY/YL
5	X156 20GY/LB
6	G162 20VT/WT (POWER LOCKS)
7	G200 20VT/BR (RHD) (MEMORY)
8	G920 20VT/YL (RHD) (MEMORY)
9	Q16 12OR/TN
10	Q26 12OR/GY

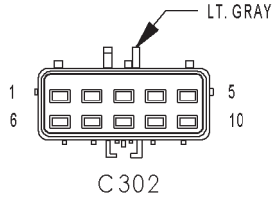

C302 - LT. GRAY (BODY SIDE)

CAV	CIRCUIT
1	M21 20YL/BR
2	X13 16DG/GY
3	X15 16GY/DG
4	X154 20GY/YL
5	X156 20GY/LB
6	G162 20VT/TN (POWER LOCKS) (BUILT-UP-EXPORT)
6	G162 20VT/WT (POWER LOCKS) (EXCEPT BUILT-UP-EXPORT)
7	G200 20VT/BR (RHD) (MEMORY)
8	G920 20VT/YL (RHD) (MEMORY)
9	Q16 12OR/TN
10	Q26 12OR/GY

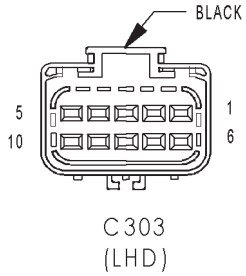

C303 (LHD) - BLACK (RIGHT DOOR SIDE)

CAV	CIRCUIT
1	G74 20VT/WT
2	Z74 20BK/WT (BASE)
2	Z822 20BK/BR (EXCEPT BASE)
3	X54 20GY
4	X56 20GY/BR
5	G160 20VT/LG (POWER LOCKS)
6	P2 20TN/GY (POWER LOCKS)
7	P4 20TN/BR (POWER LOCKS)
8	F304 16WT/PK (EXCEPT POWER WINDOWS)
8	F304 12WT/PK (POWER WINDOWS)
9	-
10	-

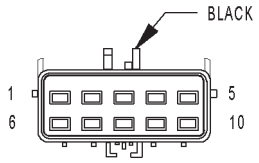

C303
(LHD)

C303 (LHD) - BLACK (BODY SIDE)

CAV	CIRCUIT
1	G74 20VT/WT
2	Z822 20BK/BR
3	X54 20GY
4	X56 20GY/BR
5	G160 20VT/LG
6	P2 20TN/GY
7	P4 20TN/BR
8	F304 18GY/PK (EXCEPT POWER WINDOWS)
8	F304 12WT/PK (POWER WINDOWS)
9	-
10	-

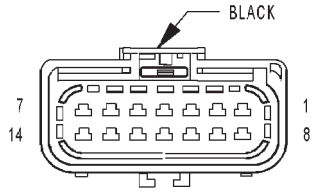

C303
(RHD)

C303 (RHD) - BLACK (RIGHT DOOR SIDE)

CAV	CIRCUIT
1	G74 20VT/WT
2	Z821 12BK/BR
3	X54 20GY
4	X56 20GY/BR
5	G160 20VT/LG
6	P2 20TN/GY
7	P4 20TN/BR
8	F304 12WT/PK
9	-
10	-
11	Q13 16OR/DB
12	Q23 16OR/LB
13	Q14 16OR/GY
14	Q24 16OR/DG

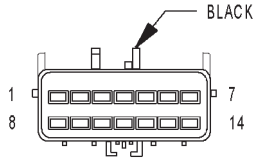

C303
(RHD)

C303 (RHD) - BLACK (BODY SIDE)

CAV	CIRCUIT
1	G74 20VT/WT
2	Z821 12BK/BR
3	X54 20GY
4	X56 20GY/BR
5	G160 20VT/LG
6	P2 20TN/GY
7	P4 20TN/BR
8	F304 12WT/PK
9	-
10	-
11	Q13 16OR/DB
12	Q23 16OR/LB
13	Q14 16OR/BR
14	Q24 16OR/DG

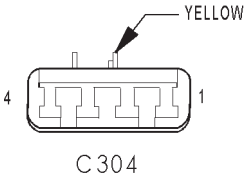

C304 - YELLOW (BODY SIDE)

CAV	CIRCUIT
1	R54 18LB/YL (RHD)
1	R53 18LG/YL (LHD)
2	R56 18LB/DG (RHD)
2	R55 18LG/DG (LHD)
3	R31 18LG/OR
4	R33 18LG/WT

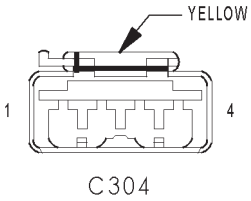

C304 - YELLOW (SEAT SIDE)

CAV	CIRCUIT
1	R54 18LB/YL (RHD)
1	R53 18LG/YL (LHD)
2	R56 18LB/DG (RHD)
2	R55 18LG/DG (LHD)
3	R31 18LG/OR
4	R33 18LG/WT

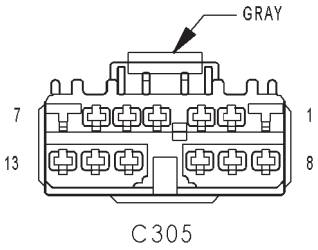

C305 - GRAY (BODY SIDE)

CAV	CIRCUIT
1	Z849 12BK/OR
2	R57 18LG/GY
3	R59 18LG/TN
4	P7 20LG/DG
5	A210 14OR/RD
6	F503 20WT/PK
7	A110 12OR/RD
8	-
9	-
10	-
11	-
12	-
13	-

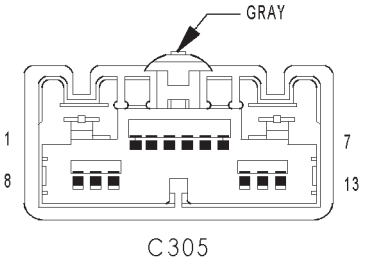

C305 - GRAY (SEAT SIDE)

CAV	CIRCUIT
1	Z849 12BK/OR (HEATED SEAT)
1	Z849 14BK/OR (EXCEPT HEATED SEAT)
2	R57 18LG/GY
3	R59 18LG/TN
4	P7 20LG/DG (HEATED SEAT)
5	A210 14OR/RD (POWER/HEATED SEAT)
6	F503 20WT/PK (HEATED SEAT)
7	A110 12OR/RD (POWER/HEATED SEAT)
8	-
9	-
10	-
11	-
12	-
13	-

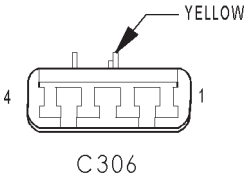

C306 - YELLOW (BODY SIDE)

CAV	CIRCUIT
1	R53 18LG/YL (RHD)
1	R54 18LB/YL (LHD)
2	R55 18LG/DG (RHD)
2	R56 18LB/DG (LHD)
3	R32 18LB/OR
4	R34 18LB/WT

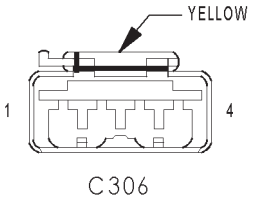

C306 - YELLOW (SEAT SIDE)

CAV	CIRCUIT
1	R53 18LG/YL (RHD)
1	R54 18LB/YL (LHD)
2	R55 18LG/DG (RHD)
2	R56 18LB/DG (LHD)
3	R32 18LB/OR
4	R34 18LB/WT

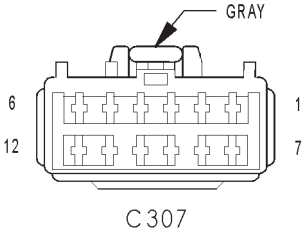

C307 - GRAY (BODY SIDE)

CAV	CIRCUIT
1	Z848 12BK/OR
2	R58 18LB/GY
3	R60 18LB/TN
4	P8 20LG/WT
5	A210 14OR/RD
6	F503 20WT/PK
7	-
8	-
9	-
10	-
11	-
12	-

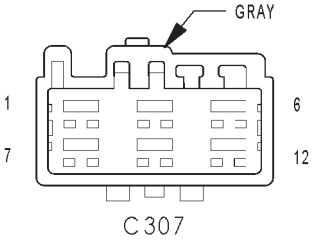

C307 - GRAY (SEAT SIDE)

CAV	CIRCUIT
1	Z848 18BK/OR (POWER/HEATED SEAT)
2	R58 18LB/GY
3	R60 18LB/TN
4	P8 20LG/WT (HEATED SEAT)
5	A210 14OR/RD (POWER/HEATED SEAT)
6	F503 20WT/PK (HEATED SEAT)
7	-
8	-
9	-
10	-
11	-
12	-

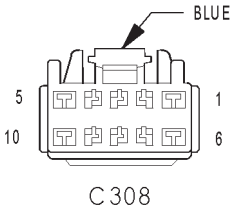

C308 - BLUE (LEFT DOOR WIRE TRACK ASSEMBLY SIDE)

CAV	CIRCUIT
1	Z77 20BK (MANUAL SLIDING DOOR)
1	Z825 14BK (POWER SLIDING DOOR)
2	P32 20BK/TN
3	G77 20BK/DG
4	P5 20BK/DB
5	-
6	-
7	G151 20BK/GY (POWER SLIDING DOOR)
8	D25 20BK/VT (POWER SLIDING DOOR)
9	-
10	A113 14BK/RD (POWER SLIDING DOOR)

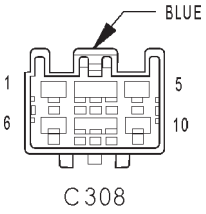

C308 - BLUE (BODY SIDE)

CAV	CIRCUIT
1	Z77 20BK/GY (EXCEPT BUILT-UP-EXPORT MANUAL SLIDING DOOR)
1	Z825 14BK/WT (BUILT-UP-EXPORT MANUAL SLIDING DOOR) (POWER SLIDING DOOR)
2	P32 20TN/VT
3	G77 20VT/GY
4	P5 20TN/OR
5	-
6	-
7	G151 20VT/BR (POWER SLIDING DOOR)
8	D25 20WT/VT (POWER SLIDING DOOR)
9	-
10	A113 12WT/RD (POWER SLIDING DOOR)

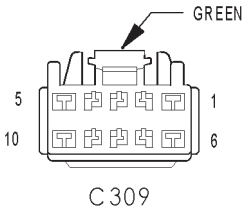

C309 - GREEN (RIGHT DOOR WIRE TRACK ASSEMBLY SIDE)

CAV	CIRCUIT
1	Z76 20BK (MANUAL SLIDING DOOR)
1	Z824 14BK (POWER SLIDING DOOR)
2	P34 20BK/TN
3	G76 20BK/DG
4	P38 20BK/DB
5	-
6	-
7	G152 20BK/GY (POWER SLIDING DOOR)
8	D25 20BK/VT (POWER SLIDING DOOR)
9	-
10	A113 14BK/RD (POWER SLIDING DOOR)

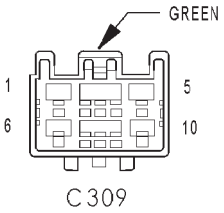

C309

C309 - GREEN (BODY SIDE)

CAV	CIRCUIT
1	Z76 20BK/YL (EXCEPT BUILT-UP-EXPORT MANUAL SLIDING DOOR)
1	Z824 14BK/WT (EXCEPT BUILT-UP-EXPORT / POWER SLIDING DOORS) (BUILT-UP-EXPORT)
2	P34 20TN/LB
3	G76 20VT/YL
4	P38 20TN/DB
5	-
6	-
7	G152 20VT/GY (POWER SLIDING DOOR)
8	D25 20WT/VT (POWER SLIDING DOOR)
9	-
10	A113 12WT/RD (POWER SLIDING DOOR)

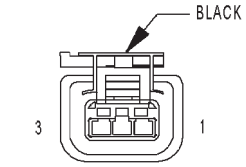

C310
(FRONT CONSOLE)

C310 (FRONT CONSOLE) - BLACK (BODY SIDE)

CAV	CIRCUIT
1	Z746 16BK/DB
2	M27 20YL/LB
3	A105 18DB/RD

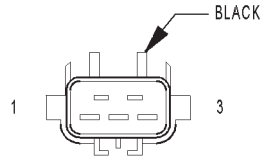

C310
(FRONT CONSOLE)

C310 (FRONT CONSOLE) - BLACK (FRONT CONSOLE SIDE)

CAV	CIRCUIT
1	Z746 16BK
1	Z746 16BK
2	M27 18OR
3	A105 16RD

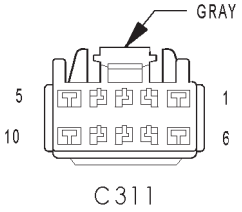

C311

C311 - GRAY (REAR A/C JUMPER SIDE)

CAV	CIRCUIT
1	C153 12 DB/BR (3 ZONE HVAC)
2	F850 20LB/PK (3 ZONE HVAC)
2	F504 20GY/PK (AUTOMATIC TEMPERATURE CONTROL)
3	C121 20DB/DG (3 ZONE HVAC)
3	D22 20WT/TN (AUTOMATIC TEMPERATURE CONTROL)
4	C22 20LB/DB (3 ZONE HVAC)
4	D17 20WT/DG (AUTOMATIC TEMPERATURE CONTROL)
5	C151 18LB/DG (3 ZONE HVAC)
6	-
7	C152 16LB/LG (3 ZONE HVAC)
8	E10 20OR/DG
9	Z409 20BK/OR (3 ZONE HVAC)
9	Z27 18BK/DG (AUTOMATIC TEMPERATURE CONTROL)
10	C50 12DB/OR (3 ZONE HVAC)

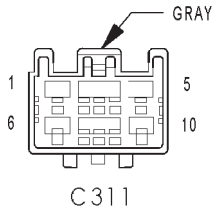

C311 - GRAY (BODY SIDE)

CAV	CIRCUIT
1	C153 12DB/BR (3 ZONE HVAC)
2	F850 20LB/PK (3 ZONE HVAC)
2	F504 20GY/PK (AUTOMATIC TEMPERATURE CONTROL)
3	C121 20DB/DG (3 ZONE HVAC)
3	D22 20WT/TN (AUTOMATIC TEMPERATURE CONTROL)
4	C22 20LB/WT (3 ZONE HVAC)
4	D17 20WT/DG (AUTOMATIC TEMPERATURE CONTROL)
5	C151 18LB/DG (3 ZONE HVAC)
6	-
7	C152 16LB/LG (3 ZONE HVAC)
8	E10 20OR/DG
9	Z409 20BK/OR (3 ZONE HVAC)
9	Z27 18BK/DG (AUTOMATIC TEMPERATURE CONTROL)
10	C50 12DB/OR (3 ZONE HVAC)

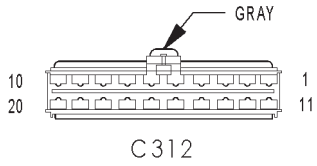

C312 - GRAY (HEADLINER SIDE)

CAV	CIRCUIT
1	M27 20YL/LB
2	M22 20YL/OR
3	G23 20VT/DB (EXCEPT BASE)
4	G25 20VT/TN (EXCEPT BASE)
5	D25 20WT/VT (EXCEPT BASE)
6	A114 20GY/RD (EXCEPT BASE)
7	F503 20BK/PK (LUXURY/PREMIUM)
7	F503 20WT/PK (EXCEPT BASE)
8	-
9	P112 20BK/OR (LUXURY/PREMIUM)
10	P114 20BK/LB (LUXURY/PREMIUM)
11	M24 20YL/WT
12	Z837 20BK/OR
13	Z13 20BK/WT (EXCEPT BASE)
14	Z113 20BK (LUXURY/PREMIUM)
14	Z113 20BK/DB (EXCEPT BASE)
15	-
16	-
17	-
18	-
19	-
20	-

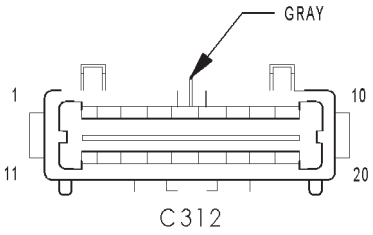

C312 - GRAY (BODY SIDE)

CAV	CIRCUIT
1	M27 20YL/LB
2	M22 20YL/OR
3	G23 20VT/DB
4	G25 20VT/TN
5	D25 20WT/VT
6	A114 20GY/RD
7	F503 20WT/PK
8	-
9	P112 20TN/OR (EXCEPT BUILT-UP-EXPORT/POWER MIRRORS) (EXCEPT TOWN & COUNTRY)
9	P112 20BK/OR (EXCEPT BUILT-UP-EXPORT/POWER MIRRORS) (TOWN & COUNTRY)
10	P114 20TN/WT (EXCPET BUILT-UP-EXPORT/POWER MIRRORS)
11	M24 20YL/WT
12	Z837 20BK/WT
13	Z13 20BK/WT
14	Z113 20BK/WT
15	-
16	-
17	-
18	-
19	-
20	-

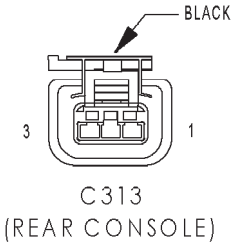

C313 (REAR CONSOLE) - BLACK (BODY SIDE)

CAV	CIRCUIT
1	Z747 16BK/LB
2	F307 16LB/PK
3	F307 16LB/PK

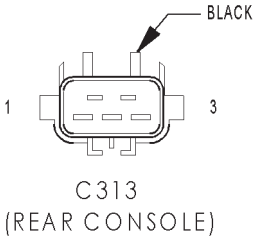

C313 (REAR CONSOLE) - BLACK (REAR CONSOLE SIDE)

CAV	CIRCUIT
1	Z747 16BK
1	Z747 16BK
2	F307 18OR
3	F307 16RD

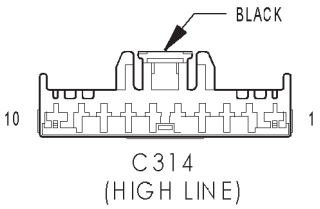

C314 (HIGH LINE) - BLACK (BODY SIDE)

CAV	CIRCUIT
1	G32 20VT/LB (POWER LIFTGATE)
2	L77 18WT/BR
3	L50 18WT/TN
4	P30 20TN/DG
5	P31 20TN/DG (POWER RELEASE/ BUILT-UP-EXPORT LHD SWB GAS)
5	P31 20TN/YL (POWER RELEASE/ EXCEPT BUILT-UP-EXPORT LHD SWB GAS)
6	Q60 20OR/YL (POWER LIFTGATE)
7	Q84 18TN/GY (POWER LIFTGATE)
8	Z87 20BK/LG (POWER LIFTGATE)
9	Q83 18OR/GY (POWER LIFTGATE)
10	Z800 12BK

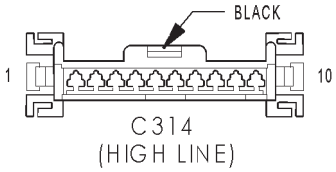

C314 (HIGH LINE) - BLACK (LIFTGATE SIDE)

CAV	CIRCUIT
1	G32 20VT/LB (POWER LIFTGATE)
2	L77 18WT/BR
3	L50 18WT/TN
4	P30 20TN/DG
5	P31 20TN/YL (POWER RELEASE)
6	Q60 20OR/YL (POWER LIFTGATE)
7	Q84 18TN/GY (POWER LIFTGATE)
8	Z87 20BK/LG (POWER LIFTGATE)
9	Q83 18OR/GY (POWER LIFTGATE)
10	Z800 12BK

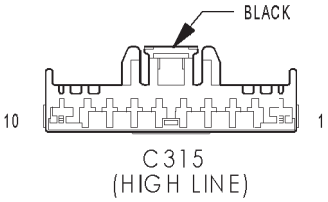

C315 (HIGH LINE) - BLACK (BODY SIDE)

CAV	CIRCUIT
1	C15 12DB/WT
2	Q76 20OR/LB (POWER LIFTGATE)
3	G78 20VT/OR
4	M11 20YL/VT
5	G165 20VT/GY
6	Q85 18TN/WT (POWER LIFTGATE)
7	Q94 20TN/LG (POWER LIFTGATE)
8	W13 18BR/LG
9	F302 18GY/PK
10	Z245 18BK/GY (POWER LIFTGATE)

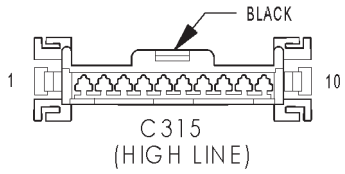

C315
(HIGH LINE)

C315 (HIGH LINE) - BLACK (LIFTGATE SIDE)

CAV	CIRCUIT
1	C15 12DB/WT
2	Q76 20OR/LB (POWER LIFTGATE)
3	G78 20VT/OR
4	M11 20YL/VT
5	G165 20VT/GY
6	Q85 18TN/WT (POWER LIFTGATE)
7	Q94 20TN/LG (POWER LIFTGATE)
8	W13 18BR/LG
9	F302 18GY/PK
10	Z245 18BK/GY (POWER LIFTGATE)

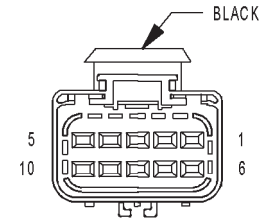

C316
(POWER SLIDING DOOR)

C316 (POWER SLIDING DOOR) - BLACK (LEFT DOOR WIRE TRACK ASSEMBLY SIDE)

CAV	CIRCUIT
1	P5 20BK/DB
2	P32 20BK/TN
3	G77 20BK/DG
4	Z825 14BK
5	-
6	-
7	G151 20BK/GY
8	D25 20BK/VT
9	-
10	A113 14BK/RD

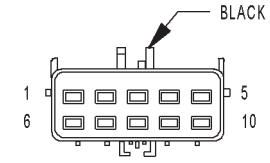

C316
(POWER SLIDING DOOR)

C316 (POWER SLIDING DOOR) - BLACK (LEFT SLIDING DOOR SIDE)

CAV	CIRCUIT
1	P5 20TN/OR
2	P32 20TN/VT
3	G77 20TN/OR
4	Z825 14BK/WT
5	-
6	-
7	G151 20VT/BR
8	D25 20WT/VT
9	-
10	A113 14WT/RD

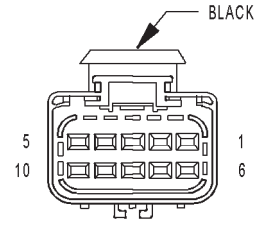

C317
(POWER SLIDING DOOR)

C317 (POWER SLIDING DOOR) - BLACK (RIGHT DOOR WIRE TRACK ASSEMBLY SIDE)

CAV	CIRCUIT
1	P38 20BK/DB
2	P34 20BK/TN
3	G76 20BK/DG
4	Z824 14BK
5	-
6	-
7	G152 20BK/GY
8	D25 20BK/VT
9	-
10	A113 14BK/RD

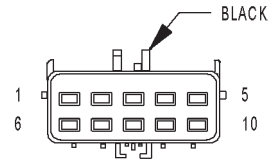

C317
(POWER SLIDING DOOR)

C317 (POWER SLIDING DOOR) - BLACK (RIGHT SLIDING DOOR SIDE)

CAV	CIRCUIT
1	P38 20TN/DB
2	P34 20TN/LB
3	G76 20TN/OR
4	Z824 14BK/WT
5	-
6	-
7	G152 20VT/GY
8	D25 20WT/VT
9	-
10	A113 14WT/RD

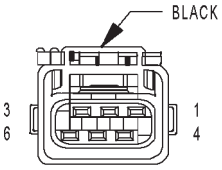

C318
(TRAILER TOW)

C318 (TRAILER TOW) - BLACK (BODY SIDE)

CAV	CIRCUIT
1	L63 18WT/DG
2	L62 18WT/BR
3	L77 18WT/BR
4	L1 18WT/LG
5	Z363 18BK/DG
6	L50 18WT/TN

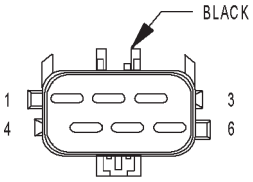

C318
(TRAILER TOW)

C318 (TRAILER TOW) - BLACK (HARNESS SIDE)

CAV	CIRCUIT
1	L63 18WT/DG
1	L63 18WT/DG
2	L62 18WT/BR
3	L77 18WT/BR
3	L77 18WT/BR
4	L1 18WT/LG
5	Z363 18BK/DG
5	Z1 18BK/DG
6	L50 18WT/TN
6	L50 18WT/TN

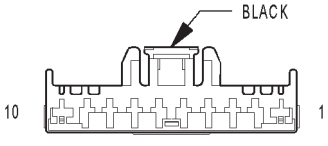

C319
(EXCEPT BUILT-UP-
EXPORT/LOW LINE)

C319 (EXCEPT BUILT-UP-EXPORT/LOW LINE) - BLACK (BODY SIDE)

CAV	CIRCUIT
1	C15 12DB/WT
2	L77 18WT/BR
3	L50 18WT/TN
4	P30 20TN/DG
5	P31 20TN/YL
6	G78 20VT/OR
7	M11 20YL/VT
8	W13 18BR/LG
9	F302 18GY/PK
10	Z800 12BK

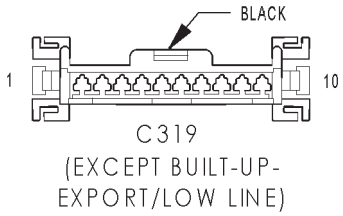

C319
(EXCEPT BUILT-UP-EXPORT/LOW LINE)

C319 (EXCEPT BUILT-UP-EXPORT/LOW LINE) - BLACK (LIFTGATE SIDE)

CAV	CIRCUIT
1	C15 12DB/WT
2	L77 18WT/BR
3	L50 18WT/TN
4	P30 20TN/DG
5	P31 20TN/YL
6	G78 20VT/OR
7	M11 20YL/VT
8	W13 18BR/LG
9	F302 18GY/PK
10	Z800 12BK

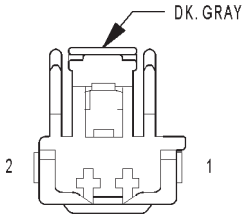

C320

C320 - DK. GRAY (SEAT SIDE)

CAV	CIRCUIT
1	Z849 14BK/OR
2	A210 14OR/RD

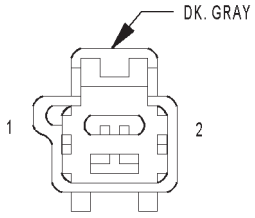

C320

C320 - DK. GRAY (POWER SEAT SIDE)

CAV	CIRCUIT
1	Z849 14BK/OR
2	A210 14OR/RD

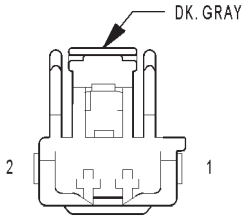

C321

C321 - DK. GRAY (SEAT SIDE)

CAV	CIRCUIT
1	Z848 18BK/OR
2	A210 14OR/RD

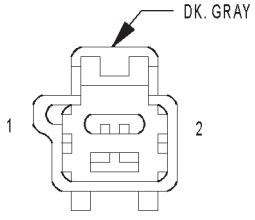

C321

C321 - DK. GRAY (POWER SEAT SIDE)

CAV	CIRCUIT
1	Z848 14BK/OR
2	A210 14OR/RD

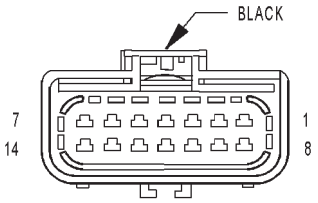

C322
(MEMORY)

C322 (MEMORY) - BLACK (BODY SIDE)

CAV	CIRCUIT
1	P69 20TN/DB (BUILT-UP-EXPORT)
1	P69 20TN/WT (EXCEPT BUILT-UP-EXPORT)
2	P67 20TN/OR
3	P64 20TN
4	P66 20TN/LG
5	P68 20TN/YL
6	P65 20TN/VT
7	D25 20WT/VT
8	P73 18TN/YL (BUILT-UP-EXPORT)
8	P73 18TN/VT (EXCEPT BUILT-UP-EXPORT)
9	P75 18TN/DB (BUILT-UP-EXPORT)
9	P75 18TN/LG (EXCEPT BUILT-UP-EXPORT)
10	P71 18TN/DG (EXCEPT BUILT-UP-EXPORT)
10	P71 18TN/GY (BUILT-UP-EXPORT)
11	P70 18TN/LB
12	P74 18TN/DB
13	P72 18TN/GY
14	-

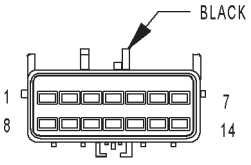

C322
(MEMORY)

C322 (MEMORY) - BLACK (POWER SEAT SIDE)

CAV	CIRCUIT
1	P69 20TN/WT
2	P67 20OR
3	P64 20TN/OR
4	P66 20WT
5	P68 20YL
6	P65 20TN/YL
7	D25 20WT/VT
8	P73 18TN/LB
9	P75 18DB
10	P71 18TN/GY
11	P70 18LB
12	P74 18TN/DB
13	P72 18GY
14	-

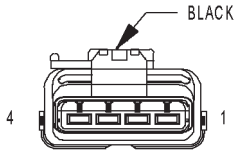

C324
(MANUAL SLIDING DOOR)

C324 (MANUAL SLIDING DOOR) - BLACK (LEFT DOOR WIRE TRACK ASSEMBLY SIDE)

CAV	CIRCUIT
1	P5 20BK/DB
2	P32 20BK/TN
3	G77 20BK/DG
4	Z77 20BK

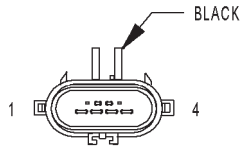

C324
(MANUAL SLIDING DOOR)

C324 (MANUAL SLIDING DOOR) - BLACK (LEFT MANUAL SLIDING DOOR SIDE)

CAV	CIRCUIT
1	P5 20BK/DB
2	P32 20BK/TN
3	G77 20BK/DG
4	Z77 20BK

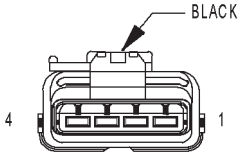

C325
(MANUAL SLIDING DOOR)

C325 (MANUAL SLIDING DOOR) - BLACK (RIGHT DOOR WIRE TRACK ASSEMBLY SIDE)

CAV	CIRCUIT
1	P38 20BK/DB
2	P34 20BK/TN
3	G76 20BK/DG
4	Z76 20BK

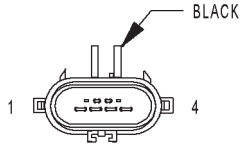

C325
(MANUAL SLIDING DOOR)

C325 (MANUAL SLIDING DOOR) - BLACK (RIGHT MANUAL SLIDING DOOR SIDE)

CAV	CIRCUIT
1	P38 20BK/DB
2	P34 20BK/TN
3	G76 20BK/DG
4	Z76 20BK

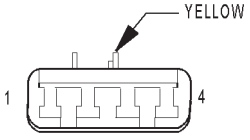

C326

C326 - YELLOW (SEAT SIDE)

CAV	CIRCUIT
1	-
2	-
3	R33 18LG/WT
4	R31 18LG/OR

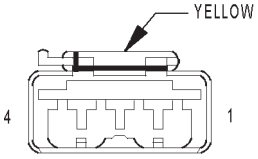

C326

C326 - YELLOW (SAFETY SEAT SIDE)

CAV	CIRCUIT
1	-
2	-
3	R33 18WT/BK (BUILT-UP-EXPORT)
3	R33 18LG/WT (EXCEPT BUILT-UP-EXPORT)
4	R31 18DG/WT (BUILT-UP-EXPORT)
4	R31 18LG/OR (EXCEPT BUILT-UP-EXPORT)

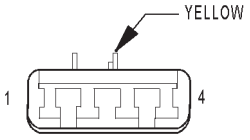

C327

C327 - YELLOW (SEAT SIDE)

CAV	CIRCUIT
1	-
2	-
3	R34 18LB/WT
4	R32 18LB/OR

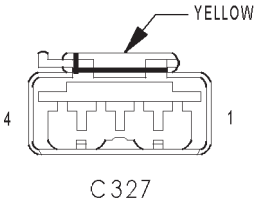

C327

C327 - YELLOW (SAFETY SEAT SIDE)

CAV	CIRCUIT
1	-
2	-
3	R34 18LB/WT (EXCEPT BUILT-UP-EXPORT)
3	R34 18WT/BK (BUILT-UP-EXPORT)
4	R32 18LB/OR (EXCEPT BUILT-UP-EXPORT)
4	R32 18DG/WT (BUILT-UP-EXPORT)

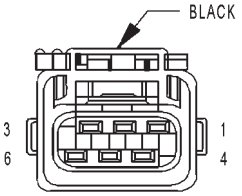

C329
(DIESEL)

C329 (DIESEL) - BLACK (BODY SIDE)

CAV	CIRCUIT
1	N2 18DB/YL
2	Z201 18BK/OR
3	N1 16DB/OR
4	Z201 18BK/OR
5	F853 20LG/PK
6	K900 18DB/DG

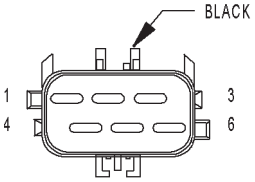

C329
(DIESEL)

C329 (DIESEL) - BLACK (LIFT PUMP SIDE)

CAV	CIRCUIT
1	N2 18OR
2	Z201 18OR
3	N1 16RD
4	Z201 18RD
5	F853 20RD
6	K900 18RD

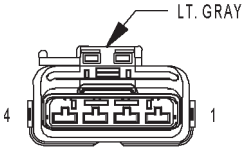

C330
(DIESEL)

C330 (DIESEL) - LT. GRAY (BODY SIDE)

CAV	CIRCUIT
1	A119 16RD/OR
2	C41 20LB/DG
3	D21 20WT/BR
4	Z149 16BK/DB

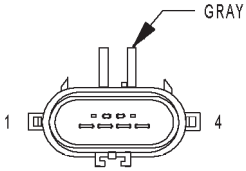

C330
(DIESEL)

C330 (DIESEL) - GRAY (CABIN HEATER JUMPER SIDE)

CAV	CIRCUIT
1	A119 16RD/OR
2	C41 20LB/DG
3	D21 20WT/BR
4	Z149 16BK/DB

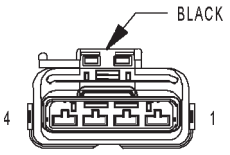

C331
(DIESEL)

C331 (DIESEL) - BLACK (CABIN HEATER JUMPER SIDE)

CAV	CIRCUIT
1	A119 16RD/OR
2	C41 20LB/DG
3	D21 20WT/BR
4	Z149 16BK/DB

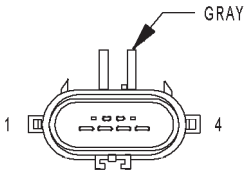

C331
(DIESEL)

C331 (DIESEL) - GRAY (CABIN HEATER COMPONENT SIDE)

CAV	CIRCUIT
1	A119 14RD/OR
2	C41 20DB/OR
3	D21 20WT/DB
4	Z149 14BK/DB

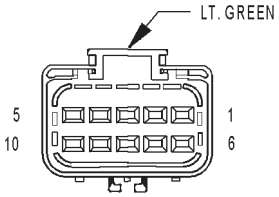

C332
(ATC)

C332 (ATC) - LT. GREEN (BODY SIDE)

CAV	CIRCUIT
1	C53 20LB
2	C169 20DB/OR
3	C51 12LB/BR
4	C59 20DB/LB
5	-
6	Z135 12BK/LB
7	C54 20LB/YL
8	C154 20LB/OR
9	-
10	C200 20LB/DG

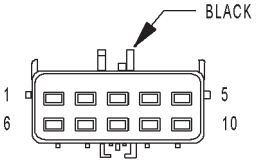

C332
(ATC)

C332 (ATC) - BLACK (COMPONENT SIDE)

CAV	CIRCUIT
1	C53 18LB
2	C169 18LB/TN
3	C51 12DB/BR
4	C59 18DB/LB
5	-
6	Z135 12BK/LB
7	C54 18LB/YL
8	C154 18LB/GY
9	-
10	C200 18LB/DG

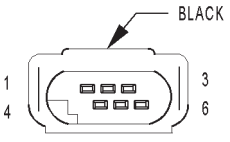

CABIN HEATER
ASSIST C1
(DIESEL)

CABIN HEATER ASSIST C1 (DIESEL) - BLACK 6 WAY

CAV	CIRCUIT	FUNCTION
1	-	-
2	D21 20WT/DB	SCI TRANSMIT
3	-	-
4	-	-
5	C41 20DB/OR	CABIN HEATER ASSIST CONTROL
6	18RD	DOSING PUMP CONTROL

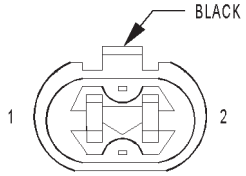

CABIN HEATER ASSIST C2 (DIESEL)

CABIN HEATER ASSIST C2 (DIESEL) - BLACK 2 WAY

CAV	CIRCUIT	FUNCTION
1	A119 14RD/OR	FUSED B(+)
2	Z149 14BK/DB	GROUND

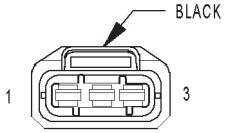

CAMSHAFT POSITION SENSOR (DIESEL)

CAMSHAFT POSITION SENSOR (DIESEL) - BLACK 3 WAY

CAV	CIRCUIT	FUNCTION
1	K944 20BK/GY	CAMSHAFT POSITION SENSOR GROUND
2	K44 20DB/GY	CAMSHAFT POSITION SENSOR SIGNAL
3	K342 16BR/WT	ECM/PCM RELAY OUTPUT

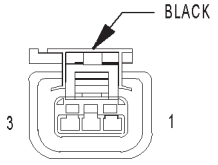

CAMSHAFT POSITION SENSOR (GAS)

CAMSHAFT POSITION SENSOR (GAS) - BLACK 3 WAY

CAV	CIRCUIT	FUNCTION
1	F888 18BR/PK	8 VOLT SUPPLY
2	K900 18DB/DG	SENSOR GROUND
3	K44 18DB/GY	CAMSHAFT POSITION SENSOR SIGNAL

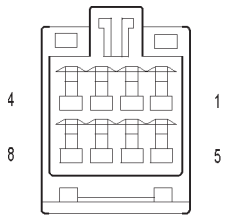

CD CHANGER

CD CHANGER - 8 WAY

CAV	CIRCUIT	FUNCTION
1	X40 24GY/WT	AUDIO OUT RIGHT
2	E14 18OR/TN	PANEL LAMPS DRIVER
3	D25 20WT/VT (EXCEPT BUILT-UP-EXPORT)	PCI BUS
3	D25 20VT/YL (BUILT-UP-EXPORT)	PCI BUS
4	X112 20RD	IGNITION SWITCH OUTPUT
5	X41 20DG/WT	AUDIO OUT LEFT
6	Z140 18BK/OR	GROUND
7	Z141 18BK/TN	GROUND
8	X160 20GY/YL	B(+)

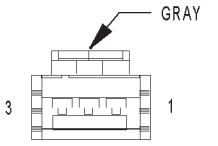

CENTER DOME LAMP (BASE/HIGH LINE)

CENTER DOME LAMP (BASE/HIGH LINE) - GRAY 3 WAY

CAV	CIRCUIT	FUNCTION
1	M22 20YL/OR	COURTESY LAMPS DRIVER
2	Z327 20BK/OR	GROUND
3	M27 20YL/LB	READING LAMPS DRIVER

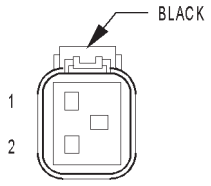

CENTER HIGH MOUNTED STOP LAMP

CENTER HIGH MOUNTED STOP LAMP - BLACK 2 WAY

CAV	CIRCUIT	FUNCTION
1	Z350 20BK/TN	GROUND
2	L50 18WT/TN	BRAKE LAMP SWITCH OUTPUT

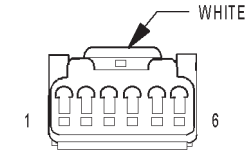

CLOCKSPRING C1

CLOCKSPRING C1 - WHITE 6 WAY

CAV	CIRCUIT	FUNCTION
1	X920 20GY/OR	RADIO CONTROL MUX RETURN
2	X20 20GY/WT	RADIO CONTROL MUX
3	X3 20DG/VT	HORN SWITCH SENSE
4	V37 20VT	SPEED CONTROL SWITCH SIGNAL
5	K900 20DB/DG	SPEED CONTROL SWITCH GROUND
6	-	-

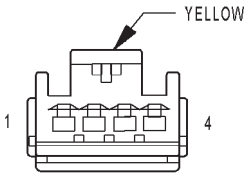

CLOCKSPRING C2

CLOCKSPRING C2 - YELLOW 4 WAY

CAV	CIRCUIT	FUNCTION
1	R61 18LG/PK	DRIVER SQUIB 2 LINE 1
2	R63 18LG/WT	DRIVER SQUIB 2 LINE 2
3	R43 18LG/BR	DRIVER SQUIB 1 LINE 1
4	R45 18LG/OR	DRIVER SQUIB 1 LINE 2

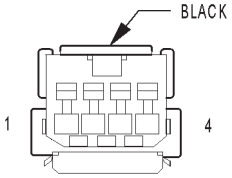

CLOCKSPRING C3

CLOCKSPRING C3 - BLACK 4 WAY

CAV	CIRCUIT	FUNCTION
1	-	-
2	Z23 20BK/VT	RIGHT SPEED CONTROL SWITCH GROUND
2	Z23 20BK/VT	LEFT SPEED CONTROL SWITCH GROUND
3	V37 20DG/VT (EXCEPT BUILT-UP-EXPORT)	SPEED CONTROL SWITCH SIGNAL
3	V37 20DG/VT (EXCEPT BUILT-UP-EXPORT)	SPEED CONTROL SWITCH SIGNAL
3	V37 20VT/TN (BUILT-UP-EXPORT)	SPEED CONTROL SWITCH SIGNAL
3	V37 20VT/TN (BUILT-UP-EXPORT)	SPEED CONTROL SWITCH SIGNAL
4	X3 20DG/VT	HORN SWITCH SENSE

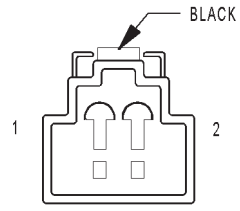

CLOCKSPRING C4

CLOCKSPRING C4 - BLACK 2 WAY

CAV	CIRCUIT	FUNCTION
1	X20 20RD/BK	RADIO CONTROL MUX
2	X920 20RD/DB	RADIO CONTROL MUX RETURN

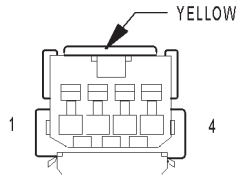

CLOCKSPRING C5

CLOCKSPRING C5 - YELLOW 4 WAY

CAV	CIRCUIT	FUNCTION
1	R45 18OR/LB	DRIVER SQUIB 1 LINE 2
2	R43 18BK/LB	DRIVER SQUIB 1 LINE 1
3	R63 18TN/LB	DRIVER SQUIB 2 LINE 2
4	R61 18OR/LB	DRIVER SQUIB 2 LINE 1

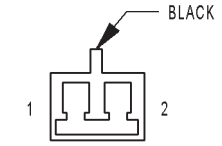

CLUTCH PEDAL INTERLOCK SWITCH (MTX)

CLUTCH PEDAL INTERLOCK SWITCH (MTX) - BLACK 2 WAY

CAV	CIRCUIT	FUNCTION
1	T141 20YL/OR	IGNITION SWITCH OUTPUT (START)
2	T751 20YL	IGNITION SWITCH OUTPUT (START)

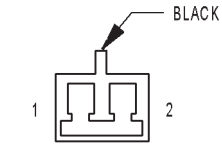

CLUTCH PEDAL INTERLOCK SWITCH JUMPER (ATX)

CLUTCH PEDAL INTERLOCK SWITCH JUMPER (ATX) - BLACK 2 WAY

CAV	CIRCUIT	FUNCTION
1	T141 20YL/OR	IGNITION SWITCH OUTPUT (START)
2	T751 20YL	IGNITION SWITCH OUTPUT (START)

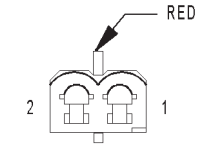

CLUTCH PEDAL UPSTOP SWITCH (DIESEL)

CLUTCH PEDAL UPSTOP SWITCH (DIESEL) - RED 2 WAY

CAV	CIRCUIT	FUNCTION
1	K119 20DB/LG	CLUTCH PEDAL UPSTOP SWITCH SENSE
2	Z150 20BK/LG	GROUND

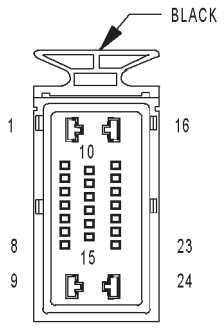

CONTROLLER ANTILOCK BRAKE

CONTROLLER ANTILOCK BRAKE - BLACK 24 WAY

CAV	CIRCUIT	FUNCTION
1	Z107 12BK/DG	GROUND
2	B1 18DG/OR	RIGHT REAR WHEEL SPEED SENSOR SIGNAL
3	B2 18DG/LB	RIGHT REAR WHEEL SPEED SENSOR 12 VOLT SUPPLY
4	-	-
5	D25 18WT/VT	PCI BUS
6	B6 18DG/WT	RIGHT FRONT WHEEL SPEED SENSOR SIGNAL
7	B7 18DG/VT	RIGHT FRONT WHEEL SPEED SENSOR 12 VOLT SUPPLY
8	-	-
9	A111 12DG/RD	FUSED B(+)
10	F500 18DG/PK	FUSED IGNITION SWITCH OUTPUT (RUN)
11	-	-
12	-	-
13	-	-
14	-	-
15	-	-
16	Z127 12BK/DG	GROUND
17	-	-
18	L50 18WT/TN	BRAKE LAMP SWITCH OUTPUT
19	B3 18DG/YL	LEFT REAR WHEEL SPEED SENSOR SIGNAL
20	B4 18DG/GY	LEFT REAR WHEEL SPEED SENSOR 12 VOLT SUPPLY
21	-	-
22	B8 18DG/TN	LEFT FRONT WHEEL SPEED SENSOR SIGNAL
23	B9 18DG/WT (3.3L/3.8L)	LEFT FRONT WHEEL SPEED SENSOR 12 VOLT SUPPLY
23	B9 18DG/LG (EXCEPT 3.3L/3.8L)	LEFT FRONT WHEEL SPEED SENSOR 12 VOLT SUPPLY
24	A107 12TN/RD	FUSED B(+)

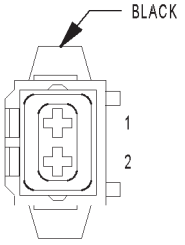

CRANK CASE VENTILATION HEATER (DIESEL)

CRANK CASE VENTILATION HEATER (DIESEL) - BLACK 2 WAY

CAV	CIRCUIT	FUNCTION
1	Z153 18BK/GY	GROUND
2	N1 18DB/OR	FUEL HEATER RELAY OUTPUT

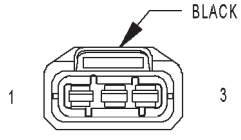

CRANKSHAFT POSITION SENSOR (DIESEL)

CRANKSHAFT POSITION SENSOR (DIESEL) - BLACK 3 WAY

CAV	CIRCUIT	FUNCTION
1	K24 20BR/LB	CRANKSHAFT POSITION SENSOR SIGNAL NO. 2
2	K3 20BR/OR	CRANKSHAFT POSITION SENSOR SIGNAL NO. 1
3	Z122 18WT	GROUND (DRAIN)

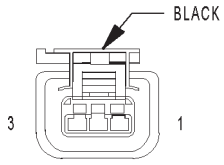

CRANKSHAFT POSITION SENSOR (GAS)

CRANKSHAFT POSITION SENSOR (GAS) - BLACK 3 WAY

CAV	CIRCUIT	FUNCTION
1	F888 18BR/PK	8 VOLT SUPPLY
2	K900 18DB/DG	SENSOR GROUND
3	K24 18BR/LB	CRANKSHAFT POSITION SENSOR SIGNAL

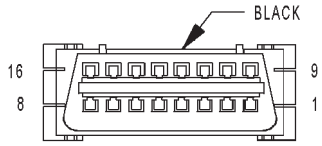

DATA LINK CONNECTOR

DATA LINK CONNECTOR - BLACK 16 WAY

CAV	CIRCUIT	FUNCTION
1	-	-
2	D25 20WT/VT	PCI BUS
3	-	-
4	Z11 18BK/LG	GROUND
5	Z111 18BK/WT (EXCEPT BUILT-UP-EXPORT)	GROUND
5	Z111 20BK/WT (BUILT-UP-EXPORT)	GROUND
6	D20 20WT/LG (GAS)	SCI RECEIVE
7	D21 20WT/BR (EXCEPT BUILT-UP-EXPORT)	SCI TRANSMIT
7	D21 20WT/DG (BUILT- UP-EXPORT)	SCI TRANSMIT
8	-	-
9	D23 20WT/BR	FLASH PROGRAM ENABLE
10	-	-
11	-	-
12	-	-
13	-	-
14	D16 20WT/OR (GAS)	SCI RECEIVE
15	-	-
16	A105 20DB/RD	FUSED B(+)

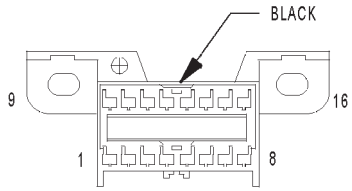

DIAGNOSTIC JUNCTION PORT

DIAGNOSTIC JUNCTION PORT - BLACK 16 WAY

CAV	CIRCUIT	FUNCTION
1	D25 20WT/VT	PCI BUS (PCM/SKIM/ECM/THATCHAM)
2	D25 20WT/VT	PCI BUS (HVAC)
3	D25 20WT/VT	PCI BUS (RADIO)
4	D25 20WT/VT	PCI BUS (ORC)
5	D25 20WT/VT	PCI BUS (CLUSTER)
6	D25 20WT/VT	PCI BUS (BCM)
7	D25 20WT/VT	PCI BUS (DLC)
8	D25 20WT/VT	PCI BUS (OVERHEAD CONSOLE)
9	D25 20WT/VT	PCI BUS (FCM/TCM/CAB)
10	D25 20WT/VT	PCI BUS (LSIACM)
11	D25 20WT/VT (MEMORY)	PCI BUS (MEMORY)
12	D25 20WT/VT	PCI BUS (PWR DOOR LT/RT/LIFTGATE)
13	D25 20WT/VT	PCI BUS (RSIACM)
14	-	-
15	-	-
16	-	-

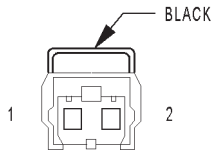

DOSING PUMP (DIESEL)

DOSING PUMP (DIESEL) - BLACK 2 WAY

CAV	CIRCUIT	FUNCTION
1	18RD	DOSING PUMP CONTROL
2	Z149 18BK/DB	GROUND

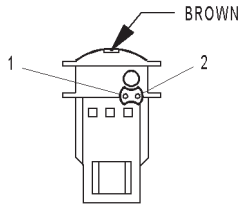

DRIVER AIRBAG C1

DRIVER AIRBAG C1 - BROWN 2 WAY

CAV	CIRCUIT	FUNCTION
1	R43 18BK/LB	DRIVER SQUIB 1 LINE 1
2	R45 18OR/LB	DRIVER SQUIB 1 LINE 2

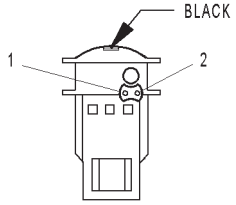

DRIVER AIRBAG C2

DRIVER AIRBAG C2 - BLACK 2 WAY

CAV	CIRCUIT	FUNCTION
1	R61 18OR/LB	DRIVER SQUIB 2 LINE 1
2	R63 18TN/LB	DRIVER SQUIB 2 LINE 2

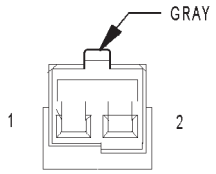

DRIVER BLEND DOOR ACTUATOR (ATC)

DRIVER BLEND DOOR ACTUATOR (ATC) - GRAY 2 WAY

CAV	CIRCUIT	FUNCTION
1	C61 20DB/LG	DRIVER BLEND DOOR DRIVER (A)
2	C161 20LB/WT	DRIVER BLEND DOOR DRIVER (B)

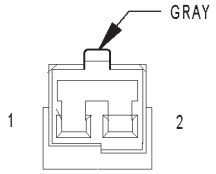

DRIVER BLEND DOOR ACTUATOR (MTC)

DRIVER BLEND DOOR ACTUATOR (MTC) - GRAY 2 WAY

CAV	CIRCUIT	FUNCTION
1	C61 20LB/WT (LHD)	DRIVER BLEND DOOR DRIVER (A)
1	C34 20DB/LB (RHD)	COMMON DOOR DRIVER (B)
2	C61 20LB/WT(RHD)	DRIVER BLEND DOOR DRIVER (A)
2	C34 20DB/LB (LHD)	COMMON DOOR DRIVER (B)

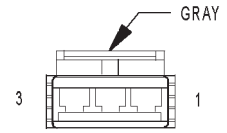

DRIVER DOOR COURTESY LAMP

DRIVER DOOR COURTESY LAMP - GRAY 3 WAY

CAV	CIRCUIT	FUNCTION
1	Z322 20BK/BR (RHD)	GROUND
1	Z321 20BK/BR (LHD)	GROUND
2	-	-
3	M21 20YL/BR	COURTESY LAMPS DRIVER

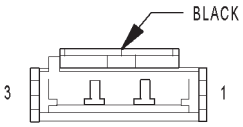

DRIVER DOOR LOCK SWITCH

DRIVER DOOR LOCK SWITCH - BLACK 3 WAY

CAV	CIRCUIT	FUNCTION
1	F304 16WT/PK (EXCEPT POWER WINDOWS)	FUSED ACCESSORY RELAY OUTPUT
1	F304 16WT/PK (POWER WINDOWS)	FUSED WINDOW CIRCUIT BREAKER OUTPUT
2	G160 20VT/LG (RHD)	RIGHT DOOR LOCK SWITCH MUX
2	G161 20VT/DG (LHD)	LEFT DOOR LOCK SWITCH MUX
3	Z460 20BK/LG (RHD)	GROUND
3	Z461 20BK/DG (LHD)	GROUND

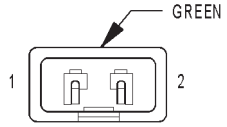

DRIVER HEATED SEAT BACK

DRIVER HEATED SEAT BACK - GREEN 2 WAY

CAV	CIRCUIT	FUNCTION
1	S2 18BK (RHD)	DRIVER SEAT BACK HEATER GROUND
1	S2 18DG (LHD)	DRIVER SEAT BACK HEATER GROUND
2	S1 18RD (RHD)	DRIVER SEAT BACK HEATER B(+) DRIVER
2	S1 18DB (LHD)	DRIVER SEAT BACK HEATER B(+) DRIVER

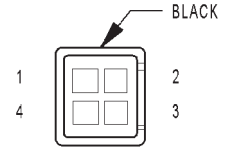

DRIVER HEATED SEAT CUSHION

DRIVER HEATED SEAT CUSHION - BLACK 4 WAY

CAV	CIRCUIT	FUNCTION
1	P87 16RD	DRIVER SEAT CUSHION HEATER GROUND
2	P89 20GR	SEAT SENSOR 5 VOLT SUPPLY
3	Z848 18BK/OR	DRIVER SEAT TEMP SENSOR INPUT
4	P88 16GR	DRIVER SEAT CUSHION HEATER B(+) DRIVER

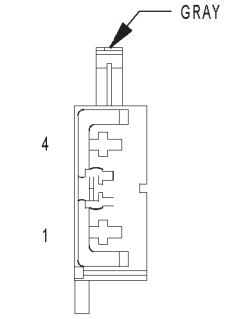

DRIVER HEATED SEAT MODULE C1

DRIVER HEATED SEAT MODULE C1 - GRAY 4 WAY

CAV	CIRCUIT	FUNCTION
1	Z849 18BK	GROUND
2	P7 20LG/DG	DRIVER HEATED SEAT SWITCH MUX
3	F503 20WT/PK	FUSED IGNITION SWITCH OUTPUT (RUN)
4	A210 14OR/RD	FUSED B(+)

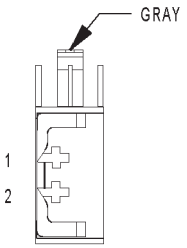

DRIVER HEATED SEAT MODULE C2

DRIVER HEATED SEAT MODULE C2 - GRAY 2 WAY

CAV	CIRCUIT	FUNCTION
1	S2 18DG (LHD)	DRIVER SEAT BACK HEATER GROUND
1	S2 18BK (RHD)	DRIVER SEAT BACK HEATER GROUND
2	S1 18DB (LHD)	DRIVER SEAT BACK HEATER B(+) DRIVER
2	S1 18RD (RHD)	DRIVER SEAT BACK HEATER B(+) DRIVER

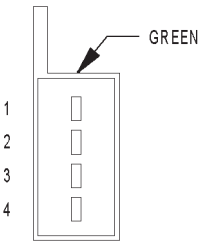

DRIVER HEATED SEAT MODULE C3

DRIVER HEATED SEAT MODULE C3 - GREEN 4 WAY

CAV	CIRCUIT	FUNCTION
1	P87 16RD	DRIVER SEAT CUSHION HEATER GROUND
2	P89 20GR	SEAT SENSOR 5 VOLT SUPPLY
3	Z848 18BK/OR	DRIVER SEAT TEMP SENSOR INPUT
4	P88 16GR	DRIVER SEAT CUSHION HEATER B(+) DRIVER

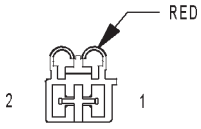

DRIVER POWER SEAT FRONT RISER MOTOR

DRIVER POWER SEAT FRONT RISER MOTOR - RED 2 WAY

CAV	CIRCUIT	FUNCTION
1	P119 14LG/DG (MEMORY)	SEAT FRONT UP DRIVER
1	P19 14LG/LB	DRIVER FRONT UP SWITCH SENSE
2	P121 14LG/DB (MEMORY)	SEAT FRONT DOWN DRIVER
2	P21 14LG/TN	DRIVER FRONT DOWN SWITCH SENSE

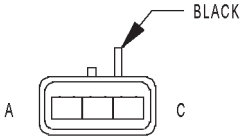

DRIVER POWER SEAT FRONT RISER POSITION SENSOR

DRIVER POWER SEAT FRONT RISER POSITION SENSOR - BLACK 3 WAY

CAV	CIRCUIT	FUNCTION
A	P28 20LG/BR	SEAT POSITION SENSOR GROUND
B	P26 20LG	FRONT RISER POSITION SIGNAL
C	P29 20LG/WT	SEAT SENSOR 5 VOLT SUPPLY

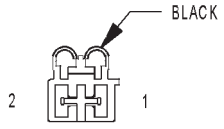

DRIVER POWER SEAT HORIZONTAL MOTOR

DRIVER POWER SEAT HORIZONTAL MOTOR - BLACK 2 WAY

CAV	CIRCUIT	FUNCTION
1	P17 14LG/DG	DRIVER SEAT HORIZONTAL REARWARD SWITCH SENSE
1	P117 14LG/LB (LHD) (MEMORY)	SEAT HORIZONTAL REARWARD DRIVER
1	P115 14LG (RHD) (MEMORY)	SEAT HORIZONTAL FORWARD DRIVER
2	P15 14LG/WT	DRIVER SEAT HORIZONTAL FORWARD SWITCH SENSE
2	P115 14LG (LHD) (MEMORY)	SEAT HORIZONTAL FORWARD DRIVER
2	P117 14LG/LB (RHD) (MEMORY)	SEAT HORIZONTAL REARWARD DRIVER

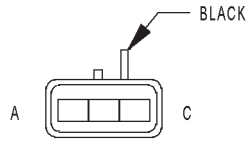

DRIVER POWER SEAT HORIZONTAL POSITION SENSOR

DRIVER POWER SEAT HORIZONTAL POSITION SENSOR - BLACK 3 WAY

CAV	CIRCUIT	FUNCTION
A	P29 20LG/WT	SEAT SENSOR 5 VOLT SUPPLY
B	P25 20LG/VT	SEAT HORIZONTAL POSITION SIGNAL
C	P28 20LG/BR	SEAT POSITION SENSOR GROUND

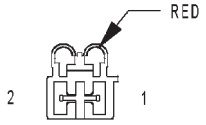

DRIVER POWER SEAT REAR RISER MOTOR

DRIVER POWER SEAT REAR RISER MOTOR - RED 2 WAY

CAV	CIRCUIT	FUNCTION
1	P11 14LG/YL	DRIVER SEAT REAR UP SWITCH SENSE
1	P111 14LG/YL (MEMORY)	SEAT REAR UP DRIVER
2	P13 14LG/OR	DRIVER SEAT REAR DOWN SWITCH SENSE
2	P113 14LG/WT (MEMORY)	SEAT REAR DOWN DRIVER

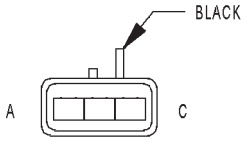

DRIVER POWER SEAT REAR RISER POSITION SENSOR

DRIVER POWER SEAT REAR RISER POSITION SENSOR - BLACK 3 WAY

CAV	CIRCUIT	FUNCTION
A	P28 20LG/BR	SEAT POSITION SENSOR GROUND
B	P27 20LG/LB	REAR RISER POSITION SIGNAL
C	P29 20LG/WT	SEAT SENSOR 5 VOLT SUPPLY

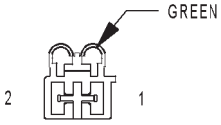

DRIVER POWER SEAT RECLINER MOTOR

DRIVER POWER SEAT RECLINER MOTOR - GREEN 2 WAY

CAV	CIRCUIT	FUNCTION
1	P41 14LG/GY	DRIVER SEAT RECLINER DOWN SWITCH SENSE
1	P141 14LG/BR (MEMORY)	SEAT RECLINER DOWN DRIVER
2	P43 14LG/VT	DRIVER SEAT RECLINER UP SWITCH SENSE
2	P143 14LG/GY (MEMORY)	SEAT RECLINER UP DRIVER

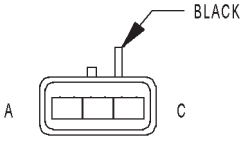

DRIVER POWER SEAT RECLINER POSITION SENSOR

DRIVER POWER SEAT RECLINER POSITION SENSOR - BLACK 3 WAY

CAV	CIRCUIT	FUNCTION
A	P29 20LG/WT	SEAT SENSOR 5 VOLT SUPPLY
B	P47 20LG/LB	RECLINER POSITION SIGNAL
C	P28 20LG/BR	SEAT POSITION SENSOR GROUND

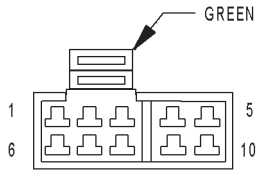

DRIVER POWER SEAT SWITCH

DRIVER POWER SEAT SWITCH - GREEN 10 WAY

CAV	CIRCUIT	FUNCTION
1	Z849 20BK/OR (MEMORY)	GROUND
1	Z849 14BK/OR	GROUND
2	P43 14LG/VT	DRIVER SEAT RECLINER UP SWITCH SENSE
2	P43 14LG/VT (MEMORY)	RECLINER UP SWITCH SENSE
3	P17 14LG/DG	DRIVER SEAT HORIZONTAL REARWARD SWITCH SENSE
3	P17 20LG/DG (MEMORY)	SEAT HORIZONTAL REARWARD SWITCH SENSE
4	P41 14LG/GY	DRIVER SEAT RECLINER DOWN SWITCH SENSE
4	P41 14LG/GY (MEMORY)	RECLINER DOWN SWITCH SENSE
5	A210 14OR/RD	FUSED SEAT SWITCH DRIVER
5	P9 20LG/OR (MEMORY)	SEAT SWITCH B(+) SUPPLY
6	P15 14LG/WT	DRIVER SEAT HORIZONTAL FORWARD SWITCH SENSE
6	P15 20LG/WT (MEMORY)	SEAT HORIZONTAL FORWARD SWITCH SENSE
7	P19 14LG/LB	DRIVER FRONT UP SWITCH SENSE
7	P19 20LG/LB (MEMORY)	SEAT FRONT UP SWITCH SENSE
8	P11 14LG/YL	DRIVER SEAT REAR UP SWITCH SENSE
8	P11 20LG/YL (MEMORY)	SEAT REAR UP SWITCH SENSE
9	P13 20LG/OR (MEMORY)	SEAT REAR DOWN SWITCH SENSE
9	P13 14LG/OR	DRIVER SEAT REAR DOWN SWITCH SENSE
10	P21 14LG/TN	DRIVER FRONT DOWN SWITCH SENSE
10	P21 20LG/TN (MEMORY)	SEAT FRONT DOWN SWITCH SENSE

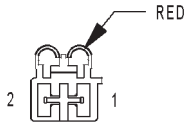

DRIVER POWER WINDOW MOTOR

DRIVER POWER WINDOW MOTOR - RED 2 WAY

CAV	CIRCUIT	FUNCTION
1	Q11 16OR/LG	MASTER WINDOW SWITCH DRIVER UP
2	Q21 16OR/WT	MASTER WINDOW SWITCH DRIVER DOWN

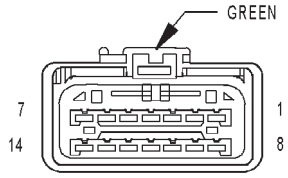

DRIVER POWER WINDOW SWITCH (EXCEPT LOWLINE)

DRIVER POWER WINDOW SWITCH (EXCEPT LOWLINE) - GREEN 14 WAY

CAV	CIRCUIT	FUNCTION
1	Q24 16OR/DG	PASSENGER SIDE REAR WINDOW OPEN
2	Q16 12OR/TN	MASTER WINDOW SWITCH PASSENGER UP
3	Q13 16OR/DB	DRIVER SIDE REAR WINDOW CLOSE
4	Q26 12OR/GY	MASTER WINDOW SWITCH PASSENGER DOWN
5	Q14 16OR/GY	PASSENGER SIDE REAR WINDOW CLOSE
6	Q11 16OR/LG	MASTER WINDOW SWITCH DRIVER UP
7	Q23 16OR/LB	DRIVER SIDE REAR WINDOW OPEN
8	Q21 16OR/WT	MASTER WINDOW SWITCH DRIVER DOWN
9	F304 12WT/PK	FUSED WINDOW CIRCUIT BREAKER OUTPUT
10	-	-
11	F304 12WT/PK	FUSED WINDOW CIRCUIT BREAKER OUTPUT
12	-	-
13	Z421 12BK/BR	GROUND
14	F304 16WT/PK	FUSED WINDOW CIRCUIT BREAKER OUTPUT

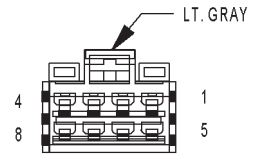

DRIVER POWER WINDOW SWITCH (LOWLINE)

DRIVER POWER WINDOW SWITCH (LOWLINE) - LT. GRAY 8 WAY

CAV	CIRCUIT	FUNCTION
1	F304 12WT/PK	FUSED WINDOW CIRCUIT BREAKER OUTPUT
2	Z421 12BK/BR	GROUND
3	Z421 12BK/BR	GROUND
4	-	-
5	Q21 16OR/WT	MASTER WINDOW SWITCH DRIVER DOWN
6	F304 12WT/PK	FUSED WINDOW CIRCUIT BREAKER OUTPUT
7	Z421 20BK/BR	GROUND
8	Q11 16OR/LG	MASTER WINDOW SWITCH DRIVER UP

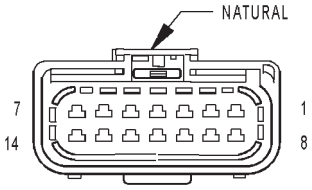

DRIVER POWER WINDOW SWITCH (RHD)

DRIVER POWER WINDOW SWITCH (RHD) - NATURAL 14 WAY

CAV	CIRCUIT	FUNCTION
1	Q23 16OR/LB	DRIVER SIDE REAR WINDOW OPEN
2	Q11 16OR/LG	MASTER WINDOW SWITCH DRIVER UP
3	Q14 16OR/GY	PASSENGER SIDE REAR WINDOW CLOSE
4	Q26 12OR/GY	MASTER WINDOW SWITCH PASSENGER DOWN
5	Q13 16OR/DB	DRIVER SIDE REAR WINDOW CLOSE
6	Q16 12OR/TN	MASTER WINDOW SWITCH PASSENGER UP
7	Q24 16OR/DG	PASSENGER SIDE REAR WINDOW OPEN
8	F304 16WT/PK	FUSED WINDOW CIRCUIT BREAKER OUTPUT
9	Z421 12BK/BR	GROUND
10	-	-
11	F304 12WT/PK	FUSED WINDOW CIRCUIT BREAKER OUTPUT
12	-	-
13	F304 12WT/PK	FUSED WINDOW CIRCUIT BREAKER OUTPUT
14	Q21 16OR/WT	MASTER WINDOW SWITCH DRIVER DOWN

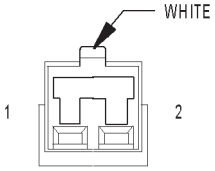

DRIVER SEAT BELT SWITCH

DRIVER SEAT BELT SWITCH - WHITE 2 WAY

CAV	CIRCUIT	FUNCTION
1	R59 18LG/TN	DRIVER SEAT BELT SWITCH LINE 1
2	R57 18LG/GY	DRIVER SEAT BELT SWITCH LINE 2

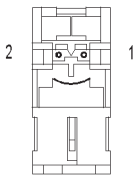

DRIVER SEAT BELT TENSIONER

DRIVER SEAT BELT TENSIONER - 2 WAY

CAV	CIRCUIT	FUNCTION
1	R53 18LG/YL	DRIVER SEAT BELT TENSIONER LINE 2
2	R55 18LG/DG	DRIVER SEAT BELT TENSIONER LINE 1

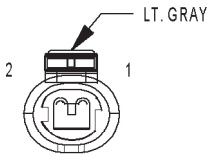

EGR SOLENOID (DIESEL)

EGR SOLENOID (DIESEL) - LT. GRAY 2 WAY

CAV	CIRCUIT	FUNCTION
1	K35 20GY/YL	EGR SOLENOID CONTROL
2	K342 16BR/WT	ECM/PCM RELAY OUTPUT

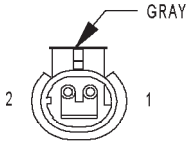

EGR SOLENOID (GAS)

EGR SOLENOID (GAS) - GRAY 2 WAY

CAV	CIRCUIT	FUNCTION
1	K35 18DB/VT	EGR SOLENOID CONTROL
2	F202 18PK/GY	FUSED IGNITION SWITCH OUTPUT (RUN-START)

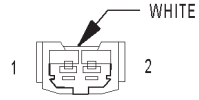

ELECTRIC WIPER DE-ICER C1

ELECTRIC WIPER DE-ICER C1 - WHITE 2 WAY

CAV	CIRCUIT	FUNCTION
1	F302 18GY/PK	FUSED ACCESSORY RELAY OUTPUT
2	-	-

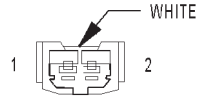

ELECTRIC WIPER DE-ICER C2

ELECTRIC WIPER DE-ICER C2 - WHITE 2 WAY

CAV	CIRCUIT	FUNCTION
1	C900 18LB/VT	WIPER DE-ICER DRIVER
2	-	-

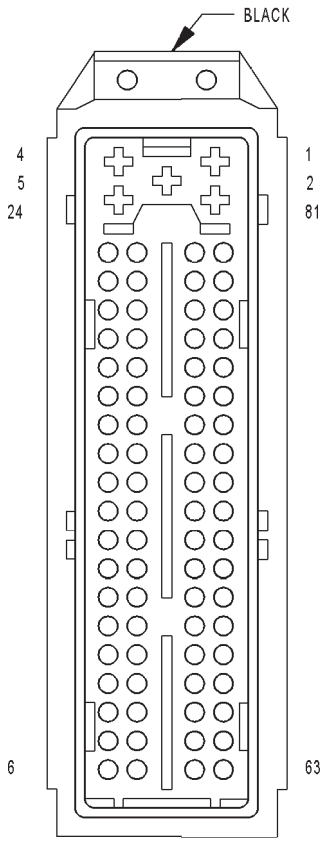

ENGINE CONTROL MODULE C1 (DIESEL)

ENGINE CONTROL MODULE C1 (DIESEL) - BLACK 81 WAY

CAV	CIRCUIT	FUNCTION
1	Z130 14BK/BR	GROUND
2	Z131 14BK/DG	GROUND
3	K20 14BR/GY	GENERATOR FIELD CONTROL
4	K342 14BR/WT	ECM/PCM RELAY OUTPUT
5	K342 14BR/WT	ECM/PCM RELAY OUTPUT
6	-	-
7	D25 20WT/VT	PCI BUS
8	K944 20BK/GY	CAMSHAFT POSITION SENSOR SHIELD GROUND
9	K44 20DB/GY	CAMSHAFT POSITION SENSOR SIGNAL
10	-	-
11	K37 20DB/YL	BOOST PRESSURE SENSOR SIGNAL
12	K55 20DB/OR	MASS AIR FLOW SENSOR SIGNAL
13	K78 20GY	FUEL PRESSURE SENSOR SIGNAL
14	-	-
15	K22 20OR/DB	ACCELERATOR PEDAL POSITION SENSOR SIGNAL
16	K80 20DB/TN	FUEL PRESSURE SENSOR GROUND
17	-	-
18	-	-
19	N1 20DB/OR	FUEL HEATER RELAY OUTPUT
20	Z138 20BK/OR	GROUND
21	K900 20DB/DG	SENSOR GROUND
22	F202 20PK/GY	FUSED IGNITION SWITCH OUTPUT (RUN-START)
23	F851 20LB/PK	SENSOR REFERENCE VOLTAGE B
24	K3 20BR/OR	CRANKSHAFT POSITION SENSOR SIGNAL NO. 1
25	-	-
26	-	-
27	-	-
28	-	-
29	-	-
30	G6 20VT/GY	ENGINE OIL PRESSURE SENSOR SIGNAL
31	F853 20LG/PK	WATER IN FUEL SENSOR SIGNAL
32	K25 20BR/TN	BATTERY TEMPERATURE SENSOR SIGNAL
33	-	-
34	K167 20BR/YL	ACCELERATOR PEDAL POSITION SENSOR GROUND
35	K853 20DB/BR	ACCELERATOR PEDAL POSITION SENSOR 5 VOLT SUPPLY
36	C18 20LB/BR	A/C PRESSURE SENSOR SIGNAL
37	K89 20DB/WT	ENGINE OIL TEMPERATURE SENSOR SIGNAL
38	V37 20VT/TN	SPEED CONTROL SWITCH SIGNAL
39	-	-
40	K2 20TN/BK	ENGINE COOLANT TEMPERATURE SENSOR SIGNAL
41	K21 20DB/LG	INTAKE AIR TEMPERATURE SENSOR SIGNAL
42	Z122 18WT	GROUND (DRAIN)
43	K24 20BR/LB	CRANKSHAFT POSITION SENSOR SIGNAL NO. 2
44	-	-
45	-	-
46	-	-
47	L50 20WT/TN	BRAKE LAMP SWITCH OUTPUT
48	B29 20DG/WT	SECONDARY BRAKE SWITCH SIGNAL
49	T751 20YL	FUSED IGNITION SWITCH OUTPUT (START)
50	F855 20PK/YL	SENSOR REFERENCE VOLTAGE A
51	-	-
52	K121 20DB	BOOST PRESSURE SENSOR GROUND
53	-	-
54	K957 20BK/OR	MASS AIR FLOW SENSOR GROUND

ENGINE CONTROL MODULE C1 (DIESEL) - BLACK 81 WAY

CAV	CIRCUIT	FUNCTION
55	N7 20DB/OR	VEHICLE SPEED SENSOR SIGNAL
56	C918 20BK/LB	A/C PRESSURE SENSOR GROUND
57	-	-
58	K4 20BK/LB	LOW IDLE POSITION SWITCH GROUND
59	-	-
60	K9 20LB	FUEL PRESSURE SENSOR 5 VOLT SUPPLY
61	K51 20BR/WT	ECM/PCM RELAY CONTROL
62	-	-
63	D21 20WT/BR	SCI TRANSMIT
64	K151 20WT	LOW IDLE POSITION SWITCH SENSE
65	-	-
66	K936 20BR/YL	ENGINE OIL PRESSURE SENSOR GROUND
67	-	-
68	-	-
69	C13 20LB/OR	A/C COMPRESSOR CLUTCH RELAY CONTROL
70	N210 20DB/DG	LOW SPEED RADIATOR FAN RELAY CONTROL
71	-	-
72	N21 20DB/TN	LIFT PUMP RELAY CONTROL
73	-	-
74	T752 20DG/OR	ENGINE STARTER MOTOR RELAY CONTROL
75	-	-
76	-	-
77	K152 20DB/WT	GLOW PLUG RELAY CONTROL
78	N122 20DB/YL	HIGH SPEED RADIATOR FAN DUAL RELAY CONTROL
79	-	-
80	K87 20BR	FUEL PRESSURE SOLENOID CONTROL
81	K87 20BR	FUEL PRESSURE SOLENOID CONTROL

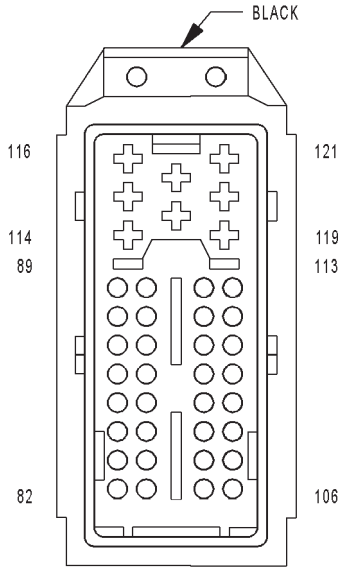

ENGINE CONTROL MODULE C2 (DIESEL)

ENGINE CONTROL MODULE C2 (DIESEL) - BLACK 40 WAY

CAV	CIRCUIT	FUNCTION
82	-	-
83	-	-
84	-	-
85	-	-
86	T753 20DG/YL	FUSED IGNITION SWITCH OUTPUT (START)
87	-	-
88	K35 20GY/YL	EGR SOLENOID CONTROL
89	K35 20GY/YL	EGR SOLENOID CONTROL
90	-	-
91	-	-
92	-	-
93	-	-
94	-	-
95	-	-
96	-	-
97	-	-
98	-	-
99	-	-
100	-	-
101	-	-
102	-	-
103	-	-
104	-	-
105	-	-
106	-	-
107	-	-
108	-	-
109	-	-
110	-	-
111	-	-
112	K119 20DB/LG	CLUTCH PEDAL UPSTOP SWITCH SENSE
113	-	-
114	-	-
115	K14 14LB/BR	FUEL INJECTOR NO. 4 CONTROL
116	K111 14DB/LB	COMMON INJECTOR DRIVER
117	-	-
118	K11 14WT/DB	FUEL INJECTOR NO. 1 CONTROL
119	K12 14TN	FUEL INJECTOR NO. 2 CONTROL
120	K13 14BR/LB	FUEL INJECTOR NO. 3 CONTROL
121	-	-

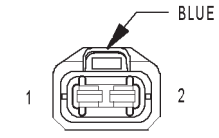

ENGINE COOLANT TEMP SENSOR (DIESEL)

ENGINE COOLANT TEMP SENSOR (DIESEL) - BLUE 2 WAY

CAV	CIRCUIT	FUNCTION
1	K2 20TN/BK	ENGINE COOLANT TEMPERATURE SENSOR SIGNAL
2	K900 20DB/DG	SENSOR GROUND

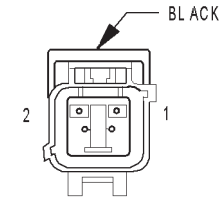

ENGINE COOLANT TEMP SENSOR (GAS)

ENGINE COOLANT TEMP SENSOR (GAS) - BLACK 2 WAY

CAV	CIRCUIT	FUNCTION
1	K900 18DB/DG	SENSOR GROUND
2	K2 18VT/OR	ENGINE COOLANT TEMPERATURE SENSOR SIGNAL

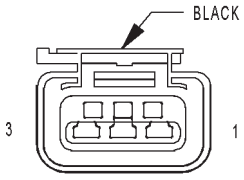

ENGINE OIL PRESSURE SENSOR (DIESEL)

ENGINE OIL PRESSURE SENSOR (DIESEL) - BLACK 3 WAY

CAV	CIRCUIT	FUNCTION
1	F855 20PK/YL	SENSOR REFERENCE VOLTAGE A
2	G6 20VT/GY	ENGINE OIL PRESSURE SENSOR SIGNAL
3	K936 20BR/YL	ENGINE OIL PRESSURE SENSOR GROUND

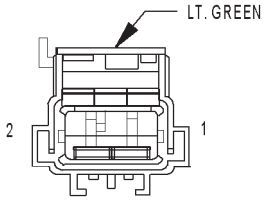

ENGINE OIL PRESSURE SWITCH (GAS)

ENGINE OIL PRESSURE SWITCH (GAS) - LT. GREEN 2 WAY

CAV	CIRCUIT	FUNCTION
1	G6 16VT/GY	ENGINE OIL PRESSURE SWITCH SENSE
2	-	-

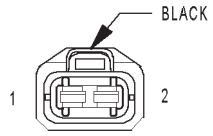

ENGINE OIL TEMPERATURE SENSOR (DIESEL)

ENGINE OIL TEMPERATURE SENSOR (DIESEL) - BLACK 2 WAY

CAV	CIRCUIT	FUNCTION
1	K89 20DB/WT	ENGINE OIL TEMPERATURE SENSOR SIGNAL
2	K900 20DB/OR	SENSOR GROUND

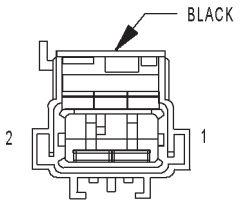

EVAP/ PURGE SOLENOID (GAS)

EVAP/PURGE SOLENOID (GAS) - BLACK 2 WAY

CAV	CIRCUIT	FUNCTION
1	K52 18DB/WT	EVAPORATIVE EMISSION SOLENOID CONTROL
2	K70 18DB/BR	EVAPORATIVE EMISSION SOLENOID SENSE

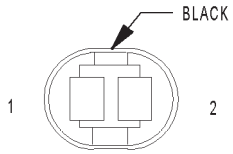

EVAPORATOR TEMPERATURE SENSOR

EVAPORATOR TEMPERATURE SENSOR - BLACK 2 WAY

CAV	CIRCUIT	FUNCTION
1	C21 20DB/LG	EVAPORATOR TEMPERATURE SENSOR SIGNAL
2	C121 20DB/DG	SENSOR GROUND

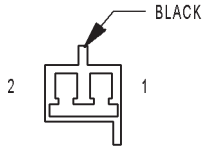

FLOOR CONSOLE LAMP

FLOOR CONSOLE LAMP - BLACK 2 WAY

CAV	CIRCUIT	FUNCTION
1	F307 18OR (REAR CONSOLE) (ACCESSORY RELAY POSITION)	FUSED ACCESSORY RELAY OUTPUT
1	F307 18OR (REAR CONSOLE) (BATTERY POSITION)	FUSED B(+)
1	M27 18OR (FRONT CONSOLE)	READING LAMPS DRIVER
2	Z747 16BK (REAR CONSOLE)	GROUND
2	Z746 16BK (FRONT CONSOLE)	GROUND

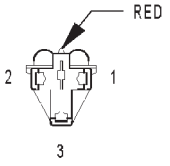

FLOOR CONSOLE POWER OUTLET

FLOOR CONSOLE POWER OUTLET- RED 3 WAY

CAV	CIRCUIT	FUNCTION
1	F307 16RD (REAR CONSOLE) (ACCESSORY RELAY POSITION)	FUSED ACCESSORY RELAY OUTPUT
1	F307 16RD (REAR CONSOLE) (BATTERY POSITION)	FUSED B(+)
1	A105 16RD (FRONT CONSOLE)	FUSED B(+)
2	-	-
3	Z747 16BK (REAR CONSOLE)	GROUND
3	Z746 16BK (FRONT CONSOLE)	GROUND

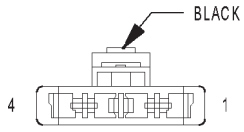

FRONT BLOWER MODULE C1 (ATC)

FRONT BLOWER MODULE C1 (ATC) - BLACK 4 WAY

CAV	CIRCUIT	FUNCTION
1	-	-
2	Z134 12BK/OR	GROUND
3	C56 20DB/LB	BLOWER MOTOR CONTROL
4	C7 12DB	FUSED FRONT BLOWER MOTOR RELAY OUTPUT

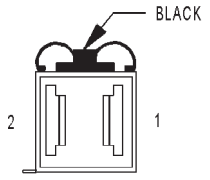

FRONT BLOWER MODULE C2 (ATC)

FRONT BLOWER MODULE C2 (ATC) - BLACK 2 WAY

CAV	CIRCUIT	FUNCTION
1	C7 12DB (EXCEPT BUILT-UP-EXPORT)	HIGH SPEED BLOWER MOTOR
1	C7 12DG (BUILT-UP-EXPORT)	HIGH SPEED BLOWER MOTOR
2	C70 12DB/YL (EXCEPT BUILT-UP-EXPORT)	REAR BLOWER HIGH SPEED
2	C70 12BK (BUILT-UP-EXPORT)	REAR BLOWER HIGH SPEED

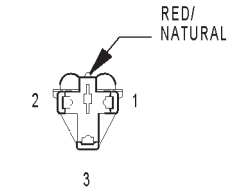

FRONT CIGAR LIGHTER

FRONT CIGAR LIGHTER - RED/NATURAL 3 WAY

CAV	CIRCUIT	FUNCTION
1	F306 16DB/PK	FUSED ACCESSORY RELAY OUTPUT
1	F306 16DB/PK	FUSED ACCESSORY RELAY OUTPUT
2	E14 20OR/TN (BUILT-UP-EXPORT)	PANEL LAMPS DRIVER
3	Z736 16BK/YL	GROUND

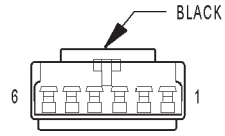

FRONT READING LAMPS/ SWITCH

FRONT READING LAMPS/SWITCH - BLACK 6 WAY

CAV	CIRCUIT	FUNCTION
1	E15 20OR/DB (EXCEPT BASE)	ASH/RECEIVER LAMP FEED
2	Z137 20BK/LB	GROUND
3	-	-
4	M27 20YL/LB	READING LAMPS DRIVER
5	M24 20YL/WT	COURTESY LAMPS DRIVER
6	-	-

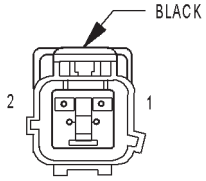

FRONT WASHER PUMP MOTOR

FRONT WASHER PUMP MOTOR - BLACK 2 WAY

CAV	CIRCUIT	FUNCTION
1	W10 18BR	FRONT WASHER PUMP MOTOR CONTROL
2	F300 18OR/PK	FUSED ACCESSORY RELAY OUTPUT

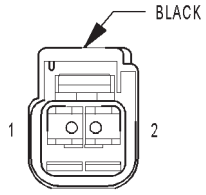

FUEL HEATER (DIESEL)

FUEL HEATER (DIESEL) - BLACK 2 WAY

CAV	CIRCUIT	FUNCTION
1	N1 16RD	FUEL HEATER RELAY OUTPUT
2	Z201 18RD	GROUND

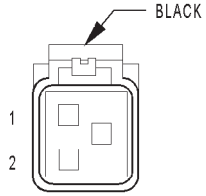

FUEL INJECTOR NO. 1 (2.4L/3.3L/3.8L)

FUEL INJECTOR NO. 1 (2.4L/3.3L/3.8L) - BLACK 2 WAY

CAV	CIRCUIT	FUNCTION
1	K342 16BR/WT	AUTOMATIC SHUT DOWN RELAY OUTPUT
2	K11 16BR/YL	FUEL INJECTOR NO. 1 DRIVER

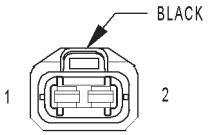

FUEL INJECTOR NO. 1 (DIESEL)

FUEL INJECTOR NO. 1 (DIESEL) - BLACK 2 WAY

CAV	CIRCUIT	FUNCTION
1	K111 14DB/LB	COMMON INJECTOR DRIVER
2	K11 14WT/DB	FUEL INJECTOR NO. 1 CONTROL

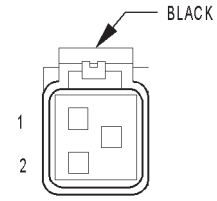

FUEL INJECTOR NO. 2 (2.4L/3.3L/3.8L)

FUEL INJECTOR NO. 2 (2.4L/3.3L/3.8L) - BLACK 2 WAY

CAV	CIRCUIT	FUNCTION
1	K342 16BR/WT	AUTOMATIC SHUT DOWN RELAY OUTPUT
2	K12 16BR/DB	FUEL INJECTOR NO. 2 DRIVER

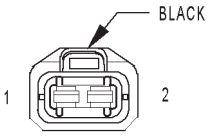

FUEL INJECTOR NO. 2 (DIESEL)

FUEL INJECTOR NO. 2 (DIESEL) - BLACK 2 WAY

CAV	CIRCUIT	FUNCTION
1	K111 14DB/LB	COMMON INJECTOR DRIVER
2	K12 14TN	FUEL INJECTOR NO. 2 CONTROL

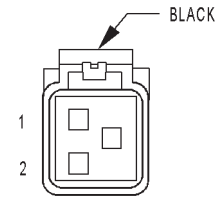

FUEL INJECTOR NO. 3 (2.4L/3.3L/3.8L)

FUEL INJECTOR NO. 3 (2.4L/3.3L/3.8L) - BLACK 2 WAY

CAV	CIRCUIT	FUNCTION
1	K342 16BR/WT	AUTOMATIC SHUT DOWN RELAY OUTPUT
2	K13 16BR/LB	FUEL INJECTOR NO. 3 DRIVER

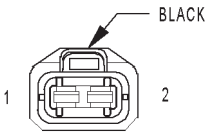

FUEL INJECTOR NO. 3 (DIESEL)

FUEL INJECTOR NO. 3 (DIESEL) - BLACK 2 WAY

CAV	CIRCUIT	FUNCTION
1	K111 14DB/LB	COMMON INJECTOR DRIVER
2	K13 14BR/LB	FUEL INJECTOR NO. 3 CONTROL

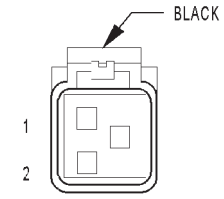

FUEL INJECTOR NO. 4 (2.4L/3.3L/3.8L)

FUEL INJECTOR NO. 4 (2.4L/3.3L/3.8L) - BLACK 2 WAY

CAV	CIRCUIT	FUNCTION
1	K342 16BR/WT	AUTOMATIC SHUT DOWN RELAY OUTPUT
2	K14 16BR/TN	FUEL INJECTOR NO. 4 DRIVER

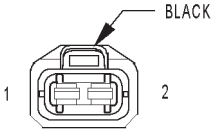

FUEL INJECTOR NO. 4 (DIESEL)

FUEL INJECTOR NO. 4 (DIESEL) - BLACK 2 WAY

CAV	CIRCUIT	FUNCTION
1	K111 14DB/LB	COMMON INJECTOR DRIVER
2	K14 14LB/BR	FUEL INJECTOR NO. 4 CONTROL

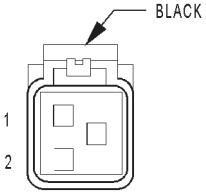

FUEL INJECTOR NO. 5 (3.3L/3.8L)

FUEL INJECTOR NO. 5 (3.3L/3.8L) - BLACK 2 WAY

CAV	CIRCUIT	FUNCTION
1	K342 16BR/WT	AUTOMATIC SHUT DOWN RELAY OUTPUT
2	K38 16BR/OR	FUEL INJECTOR NO. 5 DRIVER

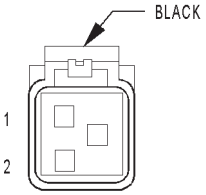

FUEL INJECTOR NO. 6 (3.3L/3.8L)

FUEL INJECTOR NO. 6 (3.3L/3.8L) - BLACK 2 WAY

CAV	CIRCUIT	FUNCTION
1	K342 16BR/WT	AUTOMATIC SHUT DOWN RELAY OUTPUT
2	K58 16BR/VT	FUEL INJECTOR NO. 6 DRIVER

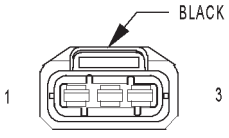

FUEL PRESSURE SENSOR (DIESEL)

FUEL PRESSURE SENSOR (DIESEL) - BLACK 3 WAY

CAV	CIRCUIT	FUNCTION
1	K80 20DB/TN	FUEL PRESSURE SENSOR GROUND
2	K78 20GY	FUEL PRESSURE SENSOR SIGNAL
3	K9 20LB	FUEL PRESSURE SENSOR 5 VOLT SUPPLY

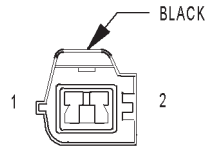

FUEL PRESSURE SOLENOID (DIESEL)

FUEL PRESSURE SOLENOID (DIESEL) - BLACK 2 WAY

CAV	CIRCUIT	FUNCTION
1	K342 16BR/WT	ECM/PCM RELAY OUTPUT
2	K87 16BR	FUEL PRESSURE SOLENOID CONTROL

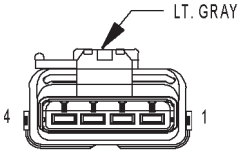

FUEL PUMP MODULE

FUEL PUMP MODULE - LT. GRAY 4 WAY

CAV	CIRCUIT	FUNCTION
1	Z201 16BK/OR (GAS)	GROUND
2	Z201 18BK/OR (RHD/DIESEL)	GROUND
2	Z201 20BK/DB (LHD/DIESEL) (GAS)	GROUND
3	N4 18DB/WT	FUEL LEVEL SENSOR SIGNAL
4	N1 16DB/OR (GAS)	FUEL PUMP RELAY OUTPUT

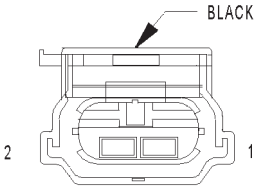

GENERATOR

GENERATOR - BLACK 2 WAY

CAV	CIRCUIT	FUNCTION
1	K342 16BR/WT (DIESEL)	ECM/PCM RELAY OUTPUT
1	K342 16BR/WT (GAS)	AUTOMATIC SHUT DOWN RELAY OUTPUT
2	K20 14BR/GY (DIESEL)	GENERATOR FIELD CONTROL
2	K20 18BR/GY (GAS)	GENERATOR FIELD CONTROL

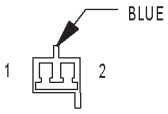

GLOVE BOX LAMP

GLOVE BOX LAMP - BLUE 2 WAY

CAV	CIRCUIT	FUNCTION
1	M28 20YL/TN	GLOVE BOX LAMP DRIVER
2	Z328 20BK/TN	GROUND

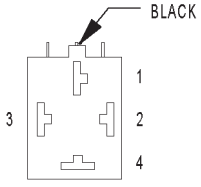

GLOW PLUG RELAY (DIESEL)

GLOW PLUG RELAY (DIESEL) - BLACK 4 WAY

CAV	CIRCUIT	FUNCTION
1	A202 10RD/WT	FUSED B(+)
2	K152 20DB/WT	GLOW PLUG RELAY CONTROL
3	K342 16BR/WT	ECM/PCM RELAY OUTPUT
4	K154 10BR/OR	GLOW PLUG RELAY OUTPUT

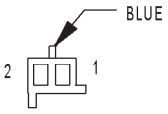

HALO LAMP

HALO LAMP - BLUE 2 WAY

CAV	CIRCUIT	FUNCTION
1	Z326 20BK/OR	GROUND
2	M26 20YL/DB	HALO LAMP DRIVER

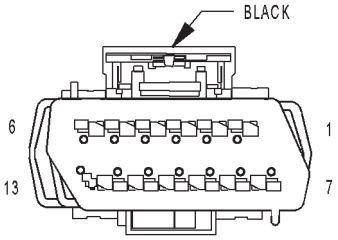

HEADLAMP SWITCH

HEADLAMP SWITCH - BLACK 13 WAY

CAV	CIRCUIT	FUNCTION
1	Z403 20BK/YL (BUILT-UP-EXPORT)	GROUND
2	L78 20WT/OR (BUILT-UP-EXPORT)	FUSED PARK LAMP RELAY OUTPUT
3	-	-
4	Z407 18BK/OR	GROUND
5	L36 20WT/DB (BUILT-UP-EXPORT)	REAR FOG LAMP INDICATOR DRIVER
6	L900 20WT/YL	HEADLAMP SWITCH MUX RETURN
7	L13 20WT/YL (BUILT-UP-EXPORT)	HEADLAMP ADJUST SIGNAL
8	E19 20OR/BR	PANEL LAMPS DRIVER (HEADLAMP SWITCH)
9	-	-
10	L39 20WT/OR (HIGH LINE)	FRONT FOG LAMP INDICATOR DRIVER
11	L307 20WT/BR	HEADLAMP SWITCH MUX
12	E2 20OR/BR	PANEL LAMPS DIMMER SIGNAL
13	-	-

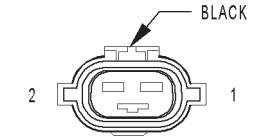

HEADLAMP WASHER PUMP MOTOR (BUILT-UP-EXPORT)

HEADLAMP WASHER PUMP MOTOR (BUILT-UP-EXPORT) - BLACK 2 WAY

CAV	CIRCUIT	FUNCTION
1	V53 12BR/OR	HEADLAMP WASHER RELAY OUTPUT
2	Z243 12BK/OR	GROUND

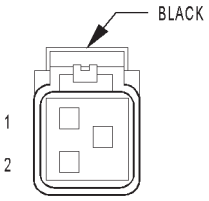

HIGH NOTE HORN

HIGH NOTE HORN - BLACK 2 WAY

CAV	CIRCUIT	FUNCTION
1	Z299 18BK/OR	GROUND
2	X2 18DG/OR	HORN RELAY OUTPUT

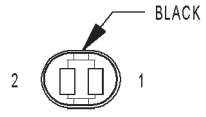

HOOD AJAR SWITCH

HOOD AJAR SWITCH - BLACK 2 WAY

CAV	CIRCUIT	FUNCTION
1	G70 20VT/LB	HOOD AJAR SWITCH SENSE
2	Z470 20BK/LB	GROUND

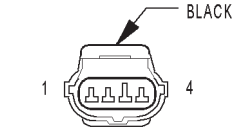

IDLE AIR CONTROL MOTOR (2.4L)

IDLE AIR CONTROL MOTOR (2.4L) - BLACK 4 WAY

CAV	CIRCUIT	FUNCTION
1	K59 18BR/DG	IDLE AIR CONTROL NO. 4 DRIVER
2	K40 18BR/LG	IDLE AIR CONTROL NO. 3 DRIVER
3	K60 18VT/LG	IDLE AIR CONTROL NO. 2 DRIVER
4	K39 18VT/DG	IDLE AIR CONTROL NO. 1 DRIVER

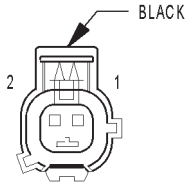

IDLE AIR CONTROL MOTOR (3.3L/3.8L)

IDLE AIR CONTROL MOTOR (3.3L/3.8L) - BLACK 2 WAY

CAV	CIRCUIT	FUNCTION
1	K39 18VT/DG	IDLE AIR CONTROL NO. 1 DRIVER
2	K60 18VT/LG	IDLE AIR CONTROL NO. 2 DRIVER

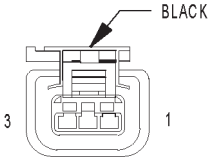

IGNITION COIL (2.4L)

IGNITION COIL (2.4L) - BLACK 3 WAY

CAV	CIRCUIT	FUNCTION
1	K17 16DB/TN	IGNITION COIL NO. 2 DRIVER
2	K342 16BR/WT	AUTOMATIC SHUT DOWN RELAY OUTPUT
3	K19 16DB/DG	IGNITION COIL NO. 1 DRIVER

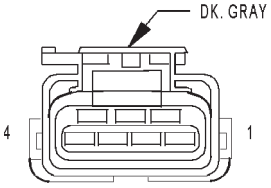

IGNITION COIL (3.3L/3.8L)

IGNITION COIL (3.3L/3.8L) - DK. GRAY 4 WAY

CAV	CIRCUIT	FUNCTION
1	K18 16DB/OR	IGNITION COIL NO. 3 DRIVER
2	K342 16BR/WT	AUTOMATIC SHUT DOWN RELAY OUTPUT
3	K19 16DB/DG	IGNITION COIL NO. 1 DRIVER
4	K17 16DB/TN	IGNITION COIL NO. 2 DRIVER

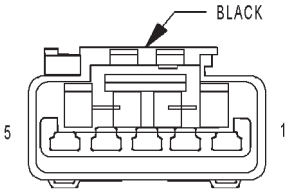

IGNITION SWITCH

IGNITION SWITCH - BLACK 5 WAY

CAV	CIRCUIT	FUNCTION
1	G900 20VT/OR	IGNITION SWITCH SENSE RETURN
2	G20 20VT/BR	IGNITION SWITCH SENSE
3	F20 20PK/WT (LHD)	FUSED IGNITION SWITCH OUTPUT (RUN-START)
3	F20 20PK/WT	FUSED IGNITION SWITCH OUTPUT (RUN-START)
4	T751 20YL	FUSED IGNITION SWITCH OUTPUT (START)
5	A106 20LB/RD	FUSED B(+)

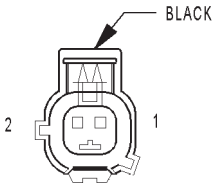

INLET AIR TEMPERATURE SENSOR

INLET AIR TEMPERATURE SENSOR - BLACK 2 WAY

CAV	CIRCUIT	FUNCTION
1	K21 18DB/LG	INTAKE AIR TEMPERATURE SENSOR SIGNAL
2	K900 18DB/DG	SENSOR GROUND

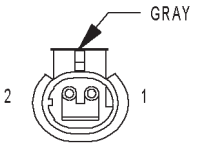

INPUT SPEED SENSOR (EATX)

INPUT SPEED SENSOR (EATX) - GRAY 2 WAY

CAV	CIRCUIT	FUNCTION
1	T13 18DG/VT	SPEED SENSOR GROUND
2	T52 18DG/WT	INPUT SPEED SENSOR SIGNAL

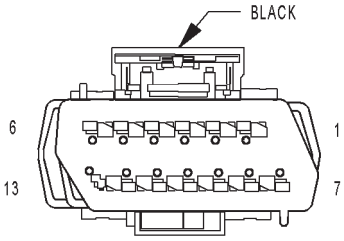

INSTRUMENT CLUSTER

INSTRUMENT CLUSTER - BLACK 13 WAY

CAV	CIRCUIT	FUNCTION
1	E13 20OR/YL	PANEL LAMPS DRIVER
2	L160 20WT/TN (LOW LINE)	RIGHT TURN INDICATOR DRIVER
3	G7 20VT/GY (HIGH LINE)	LOW OIL PRESSURE INDICATOR DRIVER
4	G3 20VT/LB (HIGH LINE)	MALFUNCTION INDICATOR LAMP DRIVER
5	L134 20WT/GY (HIGH LINE)	HIGH BEAM INDICATOR DRIVER
6	A701 16BR/RD	FUSED B(+) (HAZARD)
7	Z108 18BK/LG	GROUND
8	L161 20WT/LG (LOW LINE)	LEFT TURN INDICATOR DRIVER
9	D25 20WT/VT	PCI BUS
10	B25 18DG/WT (LHD BUILT-UP-EXPORT)	PARK BRAKE SWITCH SENSE
10	B25 20DG/WT (RHD)	PARK BRAKE SWITCH SENSE
10	B25 16DG/WT (LHD EXCEPT BUILT-UP-EXPORT)	PARK BRAKE SWITCH SENSE
11	G26 20VT/OR	CHIME DRIVER
12	G150 20VT/BR	INSTRUMENT CLUSTER WAKE UP SENSE
13	Z18 18BK/LB	GROUND

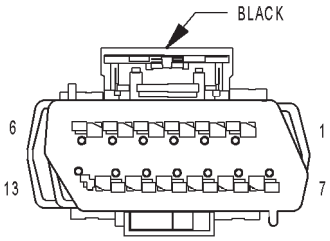

INSTRUMENT PANEL SWITCH BANK

INSTRUMENT PANEL SWITCH BANK - BLACK 13 WAY

CAV	CIRCUIT	FUNCTION
1	-	-
2	-	-
3	P7 20LG/DG (RHD)	DRIVER HEATED SEAT SWITCH
3	P8 20LG/WT (LHD)	PASSENGER HEATED SEAT SWITCH
4	F504 20GY/PK	FUSED IGNITION SWITCH OUTPUT (RUN)
5	P8 20LG/WT (RHD)	PASSENGER HEATED SEAT SWITCH
5	P7 20LG/DG (LHD)	DRIVER HEATED SEAT SWITCH
6	-	-
7	-	-
8	L91 20WT/DB	HAZARD SWITCH SENSE
9	W26 20BR/DB	REAR WIPER SWITCH MUX
10	Z406 20BK/BR	GROUND
11	G926 20VT/WT	REAR WIPER SWITCH MUX RETURN
12	E14 20OR/TN	PANEL LAMPS DRIVER
13	-	-

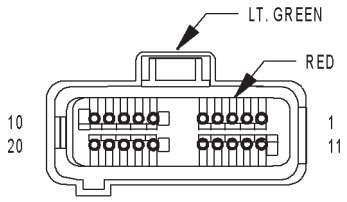

INTEGRATED POWER MODULE C1

INTEGRATED POWER MODULE C1 - LT. GREEN/RED 20 WAY

CAV	CIRCUIT	FUNCTION
1	F301 18VT/PK	FUSED ACCESSORY RELAY OUTPUT
2	-	-
3	-	-
4	L43 18WT/DB	LEFT LOW BEAM DRIVER
5	Z344 16BK/TN	GROUND
6	L34 16WT/GY	RIGHT HIGH BEAM DRIVER
7	W1 18BR/TN	WASHER FLUID LEVEL SWITCH SENSE
8	L33 18WT/LG	LEFT HIGH BEAM DRIVER
9	G31 18VT/LG (EXCEPT BASE)	AMBIENT TEMPERATURE SENSOR SIGNAL
10	L44 16WT/TN	RIGHT LOW BEAM DRIVER
11	F300 18OR/PK	FUSED ACCESSORY RELAY OUTPUT
12	-	-
13	Z343 18BK/LG	GROUND
14	-	-
15	L78 18WT/OR	FUSED PARK LAMP RELAY OUTPUT (RIGHT)
16	L77 18WT/BR	FUSED PARK LAMP RELAY OUTPUT (LEFT)
17	-	-
18	G931 18VT/BR (EXCEPT BASE)	AMBIENT TEMPERATURE SENSOR RETURN
19	W20 18BR/YL	REAR WASHER PUMP MOTOR CONTROL
20	W10 18BR	FRONT WASHER PUMP MOTOR CONTROL

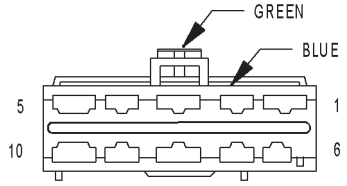

INTEGRATED POWER MODULE C2

INTEGRATED POWER MODULE C2 - GREEN/BLUE 10 WAY

CAV	CIRCUIT	FUNCTION
1	N173 16DB/VT (GAS)	RADIATOR FAN RELAY CONTROL
2	V53 12BR/OR (BUILT-UP-EXPORT)	HEADLAMP WASHER RELAY OUTPUT
3	L60 18WT/TN (EXCEPT BUILT-UP-EXPORT)	RIGHT FRONT TURN SIGNAL DRIVER
3	L60 16WT/TN (BUILT-UP-EXPORT)	RIGHT FRONT TURN SIGNAL DRIVER
4	L13 18WT/YL (BUILT-UP-EXPORT)	HEADLAMP ADJUST SIGNAL
5	X2 18DG/OR	HORN RELAY OUTPUT
6	L90 18WT/OR (FOG LAMPS)	FRONT FOG LAMP RELAY OUTPUT
7	L61 16WT/LG	LEFT FRONT TURN SIGNAL DRIVER
8	-	-
9	A112 12OR/RD	FUSED B(+)
10	L89 18WT/YL (FOG LAMPS)	FRONT FOG LAMP RELAY OUTPUT

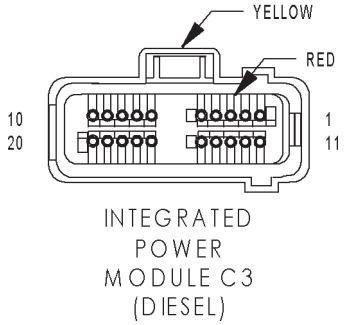

INTEGRATED POWER MODULE C3 (DIESEL)

INTEGRATED POWER MODULE C3 (DIESEL) - YELLOW/RED 20 WAY

CAV	CIRCUIT	FUNCTION
1	N21 20DB/TN	LIFT PUMP RELAY CONTROL
2	-	-
3	T751 20YL	FUSED IGNITION SWITCH OUTPUT (START)
4	T2 18DG/WT	TRS REVERSE SENSE
5	N2 18DB/YL	LIFT PUMP RELAY OUTPUT
6	F202 18PK/GY	FUSED IGNITION SWITCH OUTPUT (RUN-START)
7	C3 18DB/YL	A/C COMPRESSOR CLUTCH RELAY OUTPUT
8	Z114 18BK/LG	GROUND
9	C13 20LB/OR	A/C COMPRESSOR CLUTCH RELAY CONTROL
10	A119 16RD/OR	FUSED B(+)
11	C41 20LB/DG	CABIN HEATER ASSIST CONTROL
12	T753 20DG/YL	FUSED IGNITION SWITCH OUTPUT (START)
13	-	-
14	T752 20DG/OR	ENGINE STARTER MOTOR RELAY CONTROL
15	Z116 18BK/VT	GROUND
16	K51 20BR/WT	ECM/PCM RELAY CONTROL
17	F202 18PK/GY	FUSED IGNITION SWITCH OUTPUT (RUN-START)
18	-	-
19	K342 16BR/WT	ECM/PCM RELAY OUTPUT
20	-	-

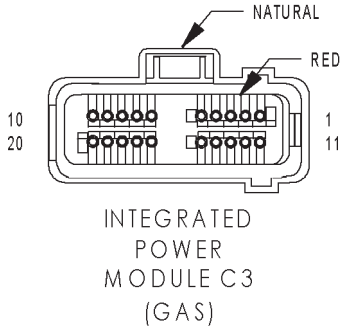

INTEGRATED POWER MODULE C3 (GAS)

INTEGRATED POWER MODULE C3 (GAS) - NATURAL/RED 20 WAY

CAV	CIRCUIT	FUNCTION
1	Z115 20BK/OR (EATX) (3.3L/3.8L)	GROUND
1	Z115 18BK/OR (EATX) (2.4L)	GROUND
2	F1 18PK/WT (EATX)	FCM OUTPUT (UNLOCK-RUN-START)
3	T751 18YL (EATX)	FUSED IGNITION SWITCH OUTPUT (START)
4	T2 18DG/WT	TRS REVERSE SENSE
5	T16 18YL/OR (EATX)	TRANSMISSION CONTROL RELAY OUTPUT
6	T15 18YL/BR (EATX)	TRANSMISSION CONTROL RELAY CONTROL
7	C3 18DB/YL	A/C COMPRESSOR CLUTCH RELAY OUTPUT
8	K31 18BR	FUEL PUMP RELAY CONTROL
9	C13 18LB/OR	A/C COMPRESSOR CLUTCH RELAY CONTROL
10	A104 18YL/RD (EATX)	FUSED B(+)
11	-	-
12	-	-
13	D25 18WT/VT (EATX)	PCI BUS (EATX)
14	T752 18DG/OR	ENGINE STARTER MOTOR RELAY CONTROL
15	Z116 18BK/VT	GROUND
16	K51 18BR/WT	AUTOMATIC SHUT DOWN RELAY CONTROL
17	F202 18PK/GY	FUSED IGNITION SWITCH OUTPUT (RUN-START)
18	K173 18BR/VT	RADIATOR FAN RELAY CONTROL
19	F202 18PK/GY	FUSED IGNITION SWITCH OUTPUT (RUN-START)
20	A109 18OR/RD	FUSED B(+)

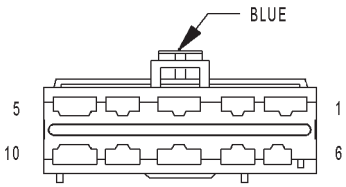

INTEGRATED
POWER
MODULE C4

INTEGRATED POWER MODULE C4 - BLUE 10 WAY

CAV	CIRCUIT	FUNCTION
1	Z127 12BK/DG (GAS)	GROUND
2	T750 12YL/GY	ENGINE STARTER MOTOR RELAY OUTPUT
3	K342 16BR/WT (DIESEL)	ECM/PCM RELAY OUTPUT
3	K342 16BR/WT (GAS)	AUTOMATIC SHUT DOWN RELAY OUTPUT
4	F500 16DG/PK (EXCEPT MTX)	FUSED IGNITION SWITCH OUTPUT (RUN)
5	-	-
6	D25 16WT/VT (ANTILOCK BRAKES)	PCI BUS
7	A107 12TN/RD (ANTILOCK BRAKES)	FUSED B(+)
8	A111 12DG/RD (ANTILOCK BRAKES)	FUSED B(+)
9	A710 14RD/BR (DIESEL)	B(+) (HAZARD FEED)
9	A701 14BR/RD (GAS)	B(+) (HAZARD FEED)
10	-	-

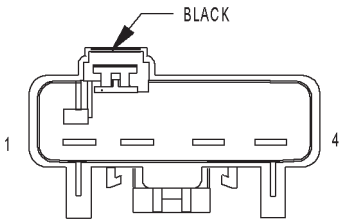

INTEGRATED
POWER
MODULE C5

INTEGRATED POWER MODULE C5 - BLACK 4 WAY

CAV	CIRCUIT	FUNCTION
1	A1 4RD	B(+)
2	-	-
3	-	-
4	-	-

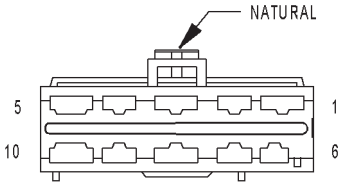

INTEGRATED
POWER
MODULE C6

INTEGRATED POWER MODULE C6 - NATURAL 10 WAY

CAV	CIRCUIT	FUNCTION
1	A101 12VT/RD	FUSED B(+)
2	Z117 16BK/WT	GROUND
3	Z118 16BK/YL	GROUND
4	A110 12OR/RD (POWER SEAT)	FUSED B(+)
5	-	-
6	-	-
7	C7 12DB	FUSED FRONT BLOWER MOTOR RELAY OUTPUT
8	F307 16LB/PK (ACCESSORY RELAY POSITION)	FUSED ACCESSORY RELAY OUTPUT
8	F307 16LB/PK (BATTERY POSITION)	FUSED B(+)
9	A113 12WT/RD (POWER SLIDING DOOR)	FUSED B(+)
10	-	-

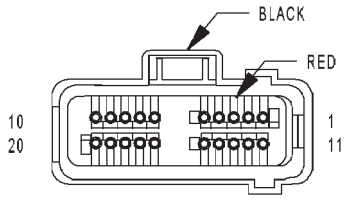

INTEGRATED POWER MODULE C7

INTEGRATED POWER MODULE C7 - BLACK/RED 20 WAY

CAV	CIRCUIT	FUNCTION
1	C16 20DB/GY (EXCEPT BUILT-UP-EXPORT)	FUSED REAR WINDOW DEFOGGER RELAY OUTPUT
1	C16 18DB/GY (BUILT-UP-EXPORT)	FUSED REAR WINDOW DEFOGGER RELAY OUTPUT
2	T141 20YL/OR (BUILT-UP-EXPORT)	FUSED IGNITION SWITCH OUTPUT (START)
2	T751 20YL (EXCEPT BUILT-UP-EXPORT)	FUSED IGNITION SWITCH OUTPUT (START)
3	D25 20WT/VT	PCI BUS
4	L13 20WT/YL (BUILT-UP-EXPORT)	HEADLAMP ADJUST SIGNAL
5	K32 18DB/YL (GAS)	BRAKE TRANSMISSION SHIFT INTERLOCK SOLENOID CONTROL
6	-	-
7	W7 20BR/GY	FRONT WIPER PARK SWITCH SENSE
8	B20 20DG/OR	BRAKE FLUID LEVEL SWITCH SENSE
9	F201 18PK/OR	FCM OUTPUT (ORC RUN-START DRIVER)
10	F214 18PK/LG	FCM OUTPUT (SIACM RUN-START DRIVER)
11	A106 20LB/RD	FUSED B(+)
12	-	-
13	F2 18PK/WT (GAS)	FCM OUTPUT (UNLOCK-RUN-START)
14	-	-
15	A114 16GY/RD	FUSED B(+) (I.O.D.)
16	D23 20WT/BR	FLASH PROGRAM ENABLE
17	L50 18WT/TN	BRAKE LAMP SWITCH OUTPUT
18	X1 16DG/BR (PREMIUM 8 SPEAKER)	NAME BRAND SPEAKER RELAY OUTPUT
19	X3 20DG/VT	HORN SWITCH SENSE
20	F100 18PK/VT	FCM OUTPUT (ORC RUN ONLY DRIVER)

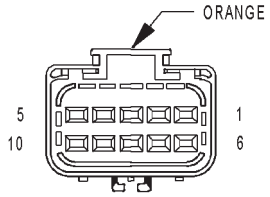

INTEGRATED POWER MODULE C8

INTEGRATED POWER MODULE C8 - ORANGE 10 WAY

CAV	CIRCUIT	FUNCTION
1	W3 12BR/WT	FRONT WIPER HIGH/LOW RELAY LOW SPEED OUTPUT
2	N1 16DB/OR (DIESEL)	FUEL HEATER RELAY OUTPUT
2	N1 16DB/OR (GAS)	FUEL PUMP RELAY OUTPUT
3	A108 18LG/RD (BUILT-UP-EXPORT)	FUSED B(+)
3	A108 18LG/RD	FUSED B(+)
4	A103 18GY/RD	FUSED B(+)
5	L77 18WT/BR	FUSED PARK LAMP RELAY OUTPUT (LEFT)
6	W4 12BR/OR	FRONT WIPER HIGH/LOW RELAY HIGH SPEED OUTPUT
7	C51 12LB/BR (AUTOMATIC TEMPERATURE CONTROL) (3 ZONE HVAC)	FUSED REAR BLOWER MOTOR RELAY OUTPUT
8	-	-
9	L78 18WT/OR	FUSED PARK LAMP RELAY OUTPUT (RIGHT)
10	L60 18WT/TN	RIGHT FRONT TURN SIGNAL DRIVER

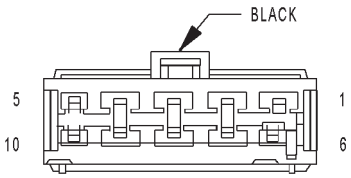

INTEGRATED POWER MODULE C9

INTEGRATED POWER MODULE C9 - BLACK 10 WAY

CAV	CIRCUIT	FUNCTION
1	A102 12WT/RD	FUSED B(+)
2	F20 18PK/WT	FUSED IGNITION SWITCH OUTPUT (RUN-START)
3	C15 12DB/WT	FUSED REAR WINDOW DEFOGGER RELAY OUTPUT
4	A105 18DB/RD	FUSED B(+)
5	L61 18WT/LB (BUILT-UP-EXPORT)	LEFT FRONT TURN SIGNAL DIVER
5	L61 18WT/LG (EXCEPT BUILT-UP-EXPORT)	LEFT FRONT TURN SIGNAL DIVER
6	A701 16BR/RD	FUSED B(+) (HAZARD)
6	A701 16BR/RD	FUSED B(+) (HAZARD)
7	F306 16DB/PK	FUSED ACCESSORY RELAY OUTPUT
8	F30 12PK/YL (POWER WINDOWS)	FUSED ACCESSORY RELAY OUTPUT
9	A115 12YL/RD (POWER LIFTGATE)	FUSED B(+)
10	F302 18GY/PK	FUSED ACCESSORY RELAY OUTPUT

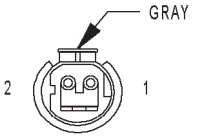

KNOCK SENSOR (2.4L)

KNOCK SENSOR (2.4L) - GRAY 2 WAY

CAV	CIRCUIT	FUNCTION
1	K42 18DB/YL	KNOCK SENSOR SIGNAL
2	K900 18DB/DG	SENSOR GROUND

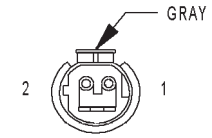

KNOCK SENSOR (3.3L/3.8L) (EXCEPT BUILT-UP-EXPORT)

KNOCK SENSOR (3.3L/3.8L) (EXCEPT BUILT-UP-EXPORT) - GRAY 2 WAY

CAV	CIRCUIT	FUNCTION
1	K42 18DB/YL	KNOCK SENSOR SIGNAL
2	K900 18DB/DG	SENSOR GROUND

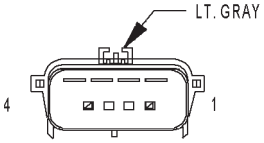

LEAK DETECTION PUMP (EXCEPT BUILT-UP-EXPORT)

LEAK DETECTION PUMP (EXCEPT BUILT-UP-EXPORT) - LT. GRAY 4 WAY

CAV	CIRCUIT	FUNCTION
1	K107 18VT/WT	LEAK DETECTION PUMP SWITCH SENSE
2	K106 18VT/WT (2.4L EATX W/ABS)	LEAK DETECTION PUMP SOLENOID CONTROL
2	K106 18VT/LB (EXCEPT 2.4L EATX W/ABS)	LEAK DETECTION PUMP SOLENOID CONTROL
3	F202 18PK/GY	FUSED IGNITION SWITCH OUTPUT (RUN-START)
4	-	-

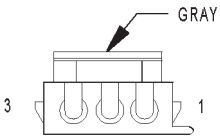

LEFT
B-PILLAR
SWITCH
(POWER
SLIDING DOOR)

LEFT B-PILLAR SWITCH (POWER SLIDING DOOR) - GRAY 3 WAY

CAV	CIRCUIT	FUNCTION
1	Z61 20BK/DG	GROUND
2	F302 18GY/PK	FUSED ACCESSORY RELAY OUTPUT
3	G41 20VT/DG	LEFT SLIDING DOOR PILLAR SWITCH MUX

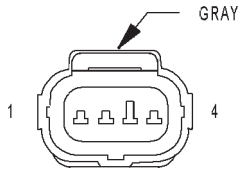

LEFT CINCH/
RELEASE MOTOR
(POWER SLIDING DOOR)

LEFT CINCH/RELEASE MOTOR (POWER SLIDING DOOR) - GRAY 4 WAY

CAV	CIRCUIT	FUNCTION
1	Q49 18TN/WT	LEFT CINCH/RELEASE MOTOR UNLATCH DRIVER
2	Z249 18BK/WT	GROUND
3	Q45 18OR/GY	LEFT CINCH/RELEASE MOTOR CLUTCH DRIVER
4	Q47 18TN/GY	LEFT CINCH/RELEASE MOTOR LATCH DRIVER

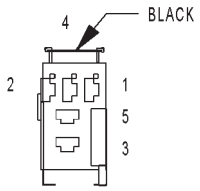

LEFT
COMBINATION
RELAY
(TRAILER TOW)

LEFT COMBINATION RELAY (TRAILER TOW) - BLACK 5 WAY

CAV	CIRCUIT	FUNCTION
1	L63 18WT/DG	LEFT REAR TURN SIGNAL DRIVER
2	Z1 18BK/DG	GROUND
2	Z1 18BK/DG	GROUND
3	L50 18WT/TN	BRAKE LAMP SWITCH OUTPUT
3	L50 18WT/TN	BRAKE LAMP SWITCH OUTPUT
4	L615 18OR	LEFT COMBINATION SIGNAL
5	-	-

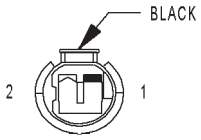

LEFT CYLINDER
LOCK SWITCH

LEFT CYLINDER LOCK SWITCH - BLACK 2 WAY

CAV	CIRCUIT	FUNCTION
1	Z463 20BK/LB	GROUND
2	G163 20VT/LB	LEFT CYLINDER LOCK SWITCH MUX

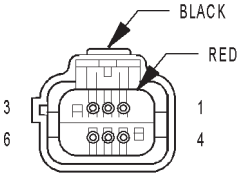

LEFT
DOOR
SPEAKER

LEFT DOOR SPEAKER - BLACK/RED 6 WAY

CAV	CIRCUIT	FUNCTION
1	X153 20DG/YL (HIGH LINE)	LEFT FRONT INSTRUMENT PANEL SPEAKER (+)
2	X15 16GY/DG (HIGH LINE)	AMPLIFIED SPEAKER GROUND
3	X155 20DG/LB (HIGH LINE)	LEFT FRONT INSTRUMENT PANEL SPEAKER (-)
4	X53 20DG	LEFT FRONT SPEAKER (+)
5	X13 16DG/GY (HIGH LINE)	RADIO CHOKE OUTPUT
6	X55 20DG/BR	LEFT FRONT SPEAKER (-)

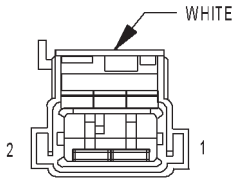

LEFT
FOG LAMP
(BUILT-UP-EXPORT)

LEFT FOG LAMP (BUILT-UP-EXPORT) - WHITE 2 WAY

CAV	CIRCUIT	FUNCTION
1	L89 18WT/YL	FRONT FOG LAMP RELAY OUTPUT
2	Z349 18BK/YL	GROUND

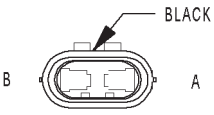

LEFT FOG LAMP
(EXCEPT BUILT-
UP-EXPORT)

LEFT FOG LAMP (EXCEPT BUILT-UP-EXPORT) - BLACK 2 WAY

CAV	CIRCUIT	FUNCTION
A	L89 18WT/YL	FRONT FOG LAMP RELAY OUTPUT
B	Z349 18BK/YL	GROUND

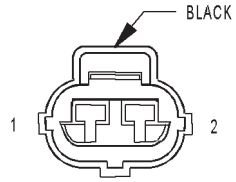

LEFT FRONT DOOR
AJAR SWITCH
(BASE)

LEFT FRONT DOOR AJAR SWITCH (BASE) - BLACK 2 WAY

CAV	CIRCUIT	FUNCTION
1	G75 20VT	LEFT FRONT DOOR AJAR SWITCH SENSE
2	Z75 20BK/VT	GROUND

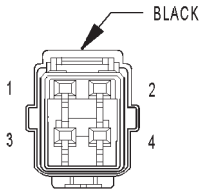

LEFT FRONT DOOR
LOCK MOTOR/
AJAR SWITCH
(EXCEPT BASE)

LEFT FRONT DOOR LOCK MOTOR/AJAR SWITCH (EXCEPT BASE) - BLACK 4 WAY

CAV	CIRCUIT	FUNCTION
1	G75 20VT	LEFT FRONT DOOR AJAR SWITCH SENSE
2	Z75 20BK/VT	GROUND
3	P1 20TN/LG	LEFT FRONT DOOR UNLOCK DRIVER
4	P3 20TN/WT	LEFT FRONT DOOR LOCK DRIVER

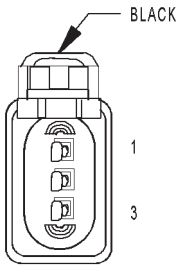

LEFT FRONT PARK/
TURN SIGNAL LAMP
(EXCEPT BUILT-UP-EXPORT)

LEFT FRONT PARK/TURN SIGNAL LAMP (EXCEPT BUILT-UP-EXPORT) - BLACK 3 WAY

CAV	CIRCUIT	FUNCTION
1	L61 16WT/LG	LEFT FRONT TURN SIGNAL DRIVER
2	L77 18WT/BR	FUSED PARK LAMP RELAY OUTPUT (LEFT)
3	Z377 18BK/BR	GROUND

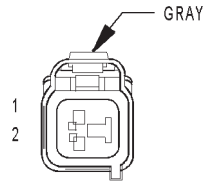

LEFT FRONT WHEEL SPEED SENSOR

LEFT FRONT WHEEL SPEED SENSOR - GRAY 2 WAY

CAV	CIRCUIT	FUNCTION
1	B9 18DG/WT (3.3L/3.8L)	LEFT FRONT WHEEL SPEED SENSOR 12 VOLT SUPPLY
1	B9 18DG/LG (EXCEPT 3.3L/3.8L)	LEFT FRONT WHEEL SPEED SENSOR 12 VOLT SUPPLY
2	B8 18DG/TN	LEFT FRONT WHEEL SPEED SENSOR SIGNAL

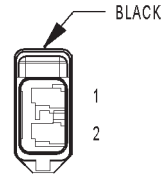

LEFT FULL OPEN SWITCH (POWER SLIDING DOOR)

LEFT FULL OPEN SWITCH (POWER SLIDING DOOR) - BLACK 2 WAY

CAV	CIRCUIT	FUNCTION
1	Q53 20OR	LEFT FULL OPEN SWITCH SENSE
2	Z77 20BK/GY	GROUND

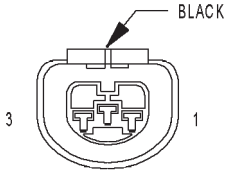

LEFT HEADLAMP (EXCEPT BUILT-UP-EXPORT)

LEFT HEADLAMP (EXCEPT BUILT-UP-EXPORT) - BLACK 3 WAY

CAV	CIRCUIT	FUNCTION
1	L43 18WT/DB	LEFT LOW BEAM DRIVER
2	Z343 18BK/LG	GROUND
3	L33 18WT/LG	LEFT HIGH BEAM DRIVER

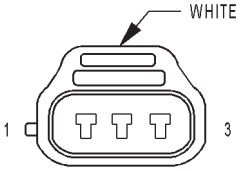

LEFT HEADLAMP LEVELING MOTOR (BUILT-UP-EXPORT)

LEFT HEADLAMP LEVELING MOTOR (BUILT-UP-EXPORT) - WHITE 3 WAY

CAV	CIRCUIT	FUNCTION
1	Z203 16BR	GROUND
2	L77 16BK	FUSED PARK LAMP RELAY OUTPUT (LEFT)
3	L13 16RD	HEADLAMP ADJUST SIGNAL

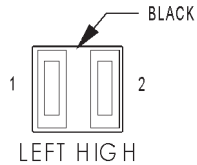

LEFT HIGH BEAM LAMP (BUILT-UP-EXPORT)

LEFT HIGH BEAM LAMP (BUILT-UP-EXPORT) - BLACK 2 WAY

CAV	CIRCUIT	FUNCTION
1	Z343 16BR	GROUND
1	Z343 16BR	GROUND
2	L33 16GY	LEFT HIGH BEAM DRIVER

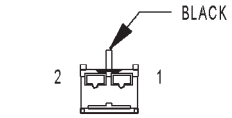

LEFT INSTRUMENT PANEL SPEAKER

LEFT INSTRUMENT PANEL SPEAKER - BLACK 2 WAY

CAV	CIRCUIT	FUNCTION
1	X153 20DG/YL	LEFT FRONT I/P SPEAKER (+)
2	X155 20DG/LB	LEFT FRONT I/P SPEAKER (-)

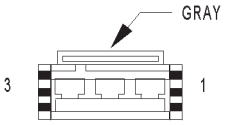

LEFT LIFTGATE FLOOD LAMP

LEFT LIFTGATE FLOOD LAMP - GRAY 3 WAY

CAV	CIRCUIT	FUNCTION
1	Z312 20BK/YL	GROUND
1	Z311 20BK/VT	GROUND
2	-	-
3	M11 20YL/VT	COURTESY LAMPS DRIVER

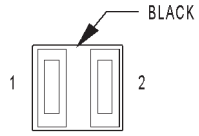

LEFT LOW BEAM LAMP (BUILT-UP-EXPORT)

LEFT LOW BEAM LAMP (BUILT-UP-EXPORT) - BLACK 2 WAY

CAV	CIRCUIT	FUNCTION
1	Z343 16BR	GROUND
2	L43 16WT	LEFT LOW BEAM DRIVER

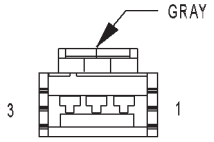

LEFT MID READING LAMP (PREMIUM/LUXURY)

LEFT MID READING LAMP (PREMIUM/LUXURY) - GRAY 3 WAY

CAV	CIRCUIT	FUNCTION
1	M22 20YL/OR	COURTESY LAMPS DRIVER
2	Z327 20BK/OR	GROUND
3	M27 20YL/LB	READING LAMPS DRIVER

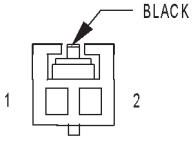

LEFT PARK LAMP (BUILT-UP-EXPORT)

LEFT PARK LAMP (BUILT-UP-EXPORT) - BLACK 2 WAY

CAV	CIRCUIT	FUNCTION
1	Z343 16BR	GROUND
2	L77 16BK	FUSED PARK LAMP RELAY OUTPUT (LEFT)

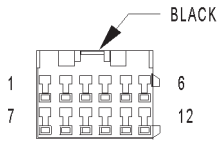

LEFT
POWER
MIRROR

LEFT POWER MIRROR - BLACK 12 WAY

CAV	CIRCUIT	FUNCTION
1	P171 20TN/YL (BUILT-UP-EXPORT)	LEFT FOLDING MIRROR UNFOLD DRIVER
2	P112 20TN/OR (EXCEPT BUILT-UP-EXPORT/MEMORY)	MIRROR B(+)
3	P114 20TN/WT (EXCEPT BUILT-UP-EXPORT/MEMORY)	MIRROR B(-)
4	P65 20TN/VT (MEMORY)	LEFT MIRROR HORIZONTAL POSITION SIGNAL
5	P69 20TN/WT (MEMORY)	LEFT MIRROR SENSOR GROUND
6	P64 20TN (MEMORY)	LEFT MIRROR VERTICAL POSITION SIGNAL
7	P159 20TN/DG (BUILT-UP-EXPORT/ LHD)	DRIVER FOLDING MIRROR FOLD DRIVER
7	P160 20TN/LG (BUILT-UP-EXPORT/ RHD)	PASSENGER FOLDING MIRROR RELAY OUTPUT
8	Z215 20BK/LG	GROUND
9	C16 20DB/GY	FUSED REAR WINDOW DEFOGGER RELAY OUTPUT
10	P73 20TN/VT	LEFT MIRROR COMMON DRIVER (RIGHT/DOWN)
11	P71 20TN/DG	LEFT MIRROR UP DRIVER
12	P75 20TN/LG	LEFT MIRROR LEFT DRIVER

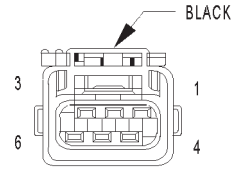

LEFT REAR
LAMP ASSEMBLY

LEFT REAR LAMP ASSEMBLY - BLACK 6 WAY

CAV	CIRCUIT	FUNCTION
1	L63 18WT/DG (EXCEPT BUILT-UP-EXPORT)	LEFT REAR TURN SIGNAL DRIVER
1	Z363 18BK/DG (BUILT-UP-EXPORT)	GROUND
2	L62 18WT/BR (EXCEPT BUILT-UP-EXPORT)	RIGHT REAR TURN SIGNAL DRIVER
2	L63 18WT/DG (BUILT-UP-EXPORT)	LEFT REAR TURN SIGNAL DRIVER
3	L77 18WT/BR (EXCEPT BUILT-UP-EXPORT)	FUSED PARK LAMP RELAY OUTPUT (LEFT)
3	L50 18WT/TN (BUILT-UP-EXPORT)	BRAKE LAMP SWITCH OUTPUT
4	L1 18WT/LG	BACK-UP LAMP DRIVER
5	Z363 18BK/DG (EXCEPT BUILT-UP-EXPORT)	GROUND
5	L38 20WT/YL (BUILT-UP-EXPORT)	REAR FOG LAMP SWITCH OUTPUT
6	L50 18WT/TN (EXCEPT BUILT-UP-EXPORT)	PRIMARY BRAKE SWITCH SIGNAL
6	L77 18WT/BR (BUILT-UP-EXPORT)	FUSED PARK RELAY OUTPUT (LEFT)

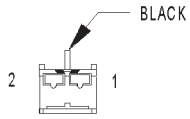

LEFT REAR
PILLAR SPEAKER

LEFT REAR PILLAR SPEAKER - BLACK 2 WAY

CAV	CIRCUIT	FUNCTION
1	X157 20DG	LEFT REAR PILLAR SPEAKER (+)
2	X151 20DG/WT	LEFT REAR PILLAR SPEAKER (-)

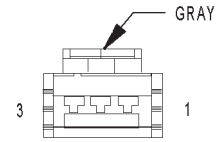

LEFT REAR
READING LAMP
(LUXURY)

LEFT REAR READING LAMP (LUXURY) - GRAY 3 WAY

CAV	CIRCUIT	FUNCTION
1	M22 20YL/OR	COURTESY LAMPS DRIVER
2	Z327 20BK/OR	GROUND
3	M27 20YL/LB	READING LAMPS DRIVER

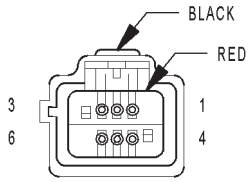

LEFT REAR SPEAKER

LEFT REAR SPEAKER - BLACK/RED 6 WAY

CAV	CIRCUIT	FUNCTION
1	X151 20DG/WT (HIGH LINE)	LEFT REAR PILLAR SPEAKER (-)
2	X15 16GY/DG (HIGH LINE)	AMPLIFIED SPEAKER GROUND
3	X157 20DG (HIGH LINE)	LEFT REAR PILLAR SPEAKER (+)
4	X51 20DG/DB	LEFT REAR SPEAKER (+)
5	X13 16DG/GY (HIGH LINE)	RADIO CHOKE OUTPUT
6	X57 20DG/OR	LEFT REAR SPEAKER (-)

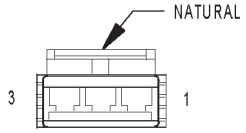

LEFT REAR VENT MOTOR

LEFT REAR VENT MOTOR - NATURAL 3 WAY

CAV	CIRCUIT	FUNCTION
1	Q14 16OR/BR (RHD)	PASSENGER SIDE REAR WINDOW CLOSE
1	Q13 16OR/DB (LHD)	DRIVER SIDE REAR WINDOW CLOSE
2	Q24 16OR/DG (RHD)	PASSENGER SIDE REAR WINDOW OPEN
2	Q23 16OR/LB (LHD)	DRIVER SIDE REAR WINDOW OPEN
3	-	-

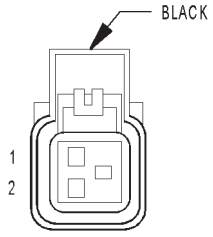

LEFT REAR WHEEL SPEED SENSOR

LEFT REAR WHEEL SPEED SENSOR - BLACK 2 WAY

CAV	CIRCUIT	FUNCTION
1	B4 18DG/GY	LEFT REAR WHEEL SPEED SENSOR 12 VOLT SUPPLY
2	B3 18DG/YL	LEFT REAR WHEEL SPEED SENSOR SIGNAL

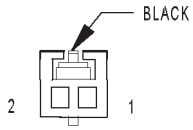

LEFT REMOTE RADIO SWITCH

LEFT REMOTE RADIO SWITCH - BLACK 2 WAY

CAV	CIRCUIT	FUNCTION
1	X20 20RD/BK	RADIO CONTROL MUX
2	X920 20RD/DB	RADIO CONTROL MUX RETURN

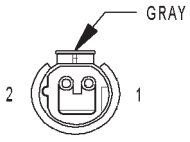

LEFT REPEATER LAMP (BUILT-UP-EXPORT)

LEFT REPEATER LAMP (BUILT-UP-EXPORT) - GRAY 2 WAY

CAV	CIRCUIT	FUNCTION
1	A701 18BR/RD	FUSED B(+)
2	L163 20WT/BR	LEFT SIDE REPEATER LAMP FEED

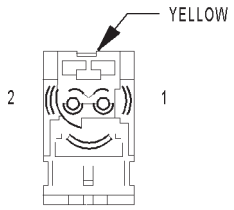

LEFT
SEAT AIRBAG

LEFT SEAT AIRBAG - YELLOW 2 WAY

CAV	CIRCUIT	FUNCTION
1	R31 18LG/OR (EXCEPT BUILT-UP-EXPORT)	LEFT SEAT SQUIB LINE 1
1	R33 18WT/BK (BUILT-UP-EXPORT)	LEFT SEAT SQUIB LINE 2
2	R33 18LG/WT (EXCEPT BUILT-UP-EXPORT)	LEFT SEAT SQUIB LINE 2
2	R31 18DG/WT (BUILT-UP-EXPORT)	LEFT SEAT SQUIB LINE 1

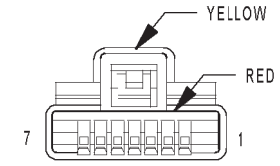

LEFT SIDE
IMPACT AIRBAG
CONTROL MODULE

LEFT SIDE IMPACT AIRBAG CONTROL MODULE - YELLOW/RED 7 WAY

CAV	CIRCUIT	FUNCTION
1	R31 18LG/OR	LEFT SEAT SQUIB LINE 1
2	R33 18LG/WT	LEFT SEAT SQUIB LINE 2
3	-	-
4	D25 20WT/VT	PCI BUS
5	F214 18PK/LG	FCM OUTPUT (SIACM RUN-START DRIVER)
6	Z104 18BK/LG	GROUND
7	Z104 18BK/LG	GROUND

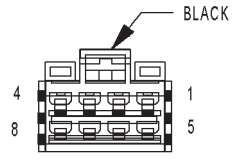

LEFT SLIDING
DOOR CONTROL
MODULE C1
(POWER SLIDING DOOR)

LEFT SLIDING DOOR CONTROL MODULE C1 (POWER SLIDING DOOR) - BLACK 8 WAY

CAV	CIRCUIT	FUNCTION
1	Q45 18OR/GY	LEFT CINCH/RELEASE MOTOR CLUTCH DRIVER
2	Q67 16TN/BR	LEFT SLIDING DOOR OPEN DRIVER
3	Q69 16TN/OR	LEFT SLIDING DOOR CLOSE DRIVER
4	-	-
5	A113 14WT/RD	FUSED B(+)
6	-	-
7	-	-
8	Z123 14BK/WT	GROUND

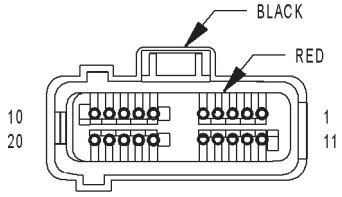

LEFT SLIDING
DOOR CONTROL
MODULE C2
(POWER SLIDING DOOR)

LEFT SLIDING DOOR CONTROL MODULE C2 (POWER SLIDING DOOR) - BLACK/RED 20 WAY

CAV	CIRCUIT	FUNCTION
1	Q71 20TN/VT	LEFT DOOR MOTOR HALL EFFECT SUPPLY
2	-	-
3	Q35 20OR/GY	LEFT DOOR LOCK SENSE
4	Q55 20OR/BR	LEFT DOOR IN/OUT HANDLE SWITCH SENSE
5	-	-
6	-	-
7	Q63 18OR/TN	LEFT DOOR MOTOR CLUTCH DRIVER
8	Q47 18TN/GY	LEFT CINCH/RELEASE MOTOR LATCH DRIVER
9	Q49 18TN/WT	LEFT CINCH/RELEASE MOTOR UNLATCH DRIVER
10	-	-
11	D25 20WT/VT	PCI BUS
12	G77 20TN/OR	LEFT SLIDING DOOR AJAR SWITCH SENSE
13	Q59 20OR/YL	LEFT PAWL SWITCH SENSE
14	Q53 20OR	LEFT FULL OPEN SWITCH SENSE
15	Z25 20BK/TN	GROUND-DRIVER SIDE IDENTIFIER (LHD/RHD)
16	Q57 20OR/VT	LEFT DOOR CHILD LOCKOUT SWITCH SENSE
17	Q73 20TN/YL	LEFT DOOR MOTOR HALL EFFECT SIGNAL
18	-	-
19	G151 20VT/BR	LEFT SLIDING DOOR WAKE UP SIGNAL
20	Z25 20BK/TN	GROUND

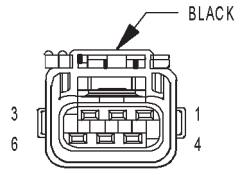

LEFT SLIDING DOOR LATCH SENSING SWITCH (POWER SLIDING DOOR)

LEFT SLIDING DOOR LATCH SENSING SWITCH (POWER SLIDING DOOR) - BLACK 6 WAY

CAV	CIRCUIT	FUNCTION
1	Z77 20BK/GY	GROUND
2	Q59 20OR/YL	LEFT PAWL SWITCH SENSE
3	G77 20TN/OR	LEFT SLIDING DOOR AJAR SWITCH SENSE
4	Z77 20BK/GY	GROUND
5	Q55 20OR/BR	LEFT DOOR IN/OUT HANDLE SWITCH SENSE
6	Q57 20OR/VT	LEFT DOOR CHILD LOCKOUT SWITCH SENSE

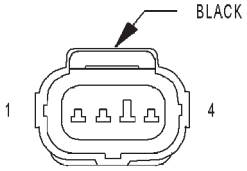

LEFT SLIDING DOOR LOCK MOTOR (POWER SLIDING DOOR)

LEFT SLIDING DOOR LOCK MOTOR (POWER SLIDING DOOR) - BLACK 4 WAY

CAV	CIRCUIT	FUNCTION
1	P5 20TN/OR	LEFT SLIDING DOOR LOCK UNLOCK DRIVER
2	P32 20TN/VT	LEFT SLIDING DOOR LOCK DRIVER
3	Q35 20OR/GY	LEFT DOOR LOCK SENSE
4	Z77 20BK/GY	GROUND

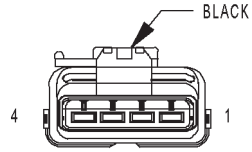

LEFT SLIDING DOOR LOCK MOTOR/ AJAR SWITCH (MANUAL SLIDING DOOR)

LEFT SLIDING DOOR LOCK MOTOR/AJAR SWITCH (MANUAL SLIDING DOOR) - BLACK 4 WAY

CAV	CIRCUIT	FUNCTION
1	P5 20BK/DB	LEFT SLIDING DOOR UNLOCK DRIVER
2	P32 20BK/TN	LEFT SLIDING DOOR LOCK DRIVER
3	G77 20BK/DG	LEFT SLIDING DOOR AJAR SWITCH SENSE
4	Z77 20BK	GROUND

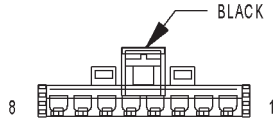

LEFT SLIDING DOOR MOTOR (POWER SLIDING DOOR)

LEFT SLIDING DOOR MOTOR (POWER SLIDING DOOR) - BLACK 8 WAY

CAV	CIRCUIT	FUNCTION
1	-	-
2	Q71 20TN/VT	LEFT DOOR MOTOR HALL EFFECT SUPPLY
3	Q69 16TN/OR	LEFT SLIDING DOOR CLOSE DRIVER
4	Z163 18BK/TN	GROUND
5	Q63 18OR/TN	LEFT DOOR MOTOR CLUTCH DRIVER
6	Q67 16TN/BR	LEFT SLIDING DOOR OPEN DRIVER
7	Z33 20BK/TN	GROUND
8	Q73 20TN/YL	LEFT DOOR MOTOR HALL EFFECT SIGNAL

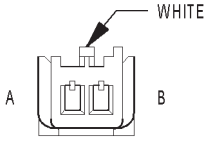

LEFT SPEED CONTROL SWITCH

LEFT SPEED CONTROL SWITCH - WHITE 2 WAY

CAV	CIRCUIT	FUNCTION
A	V37 20VT/TN (BUILT-UP-EXPORT)	SPEED CONTROL SWITCH SIGNAL
A	V37 20DG/VT (EXCEPT BUILT-UP-EXPORT)	SPEED CONTROL SWITCH SIGNAL
B	Z23 20BK/VT	LEFT SPEED CONTROL SWITCH GROUND

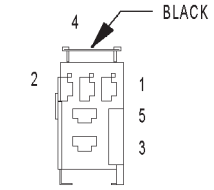

LEFT STOP/TURN SIGNAL RELAY (TRAILER TOW)

LEFT STOP/TURN SIGNAL RELAY (TRAILER TOW) - BLACK 5 WAY

CAV	CIRCUIT	FUNCTION
1	L50 18WT/TN	BRAKE LAMP SWITCH OUTPUT
1	L50 18WT/TN	BRAKE LAMP SWITCH OUTPUT
2	Z1 18BK/DG	GROUND
2	Z1 18BK/DG	GROUND
3	L73 18YL	LEFT STOP SIGNAL
4	L63 18WT/DG	LEFT REAR TURN SIGNAL DRIVER
4	L63 18WT/DG	LEFT REAR TURN SIGNAL DRIVER
5	L615 18OR	LEFT COMBINATION SIGNAL

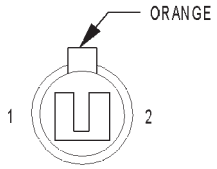

LEFT TURN SIGNAL LAMP (BUILT-UP-EXPORT)

LEFT TURN SIGNAL LAMP (BUILT-UP-EXPORT) - ORANGE 2 WAY

CAV	CIRCUIT	FUNCTION
1	Z343 16BR	GROUND
2	L61 16YL	LEFT FRONT TURN SIGNAL DRIVER

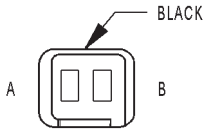

LEFT VISOR/VANITY LAMP (PREMIUM/LUXURY)

LEFT VISOR/VANITY LAMP (PREMIUM/LUXURY) - BLACK 2 WAY

CAV	CIRCUIT	FUNCTION
A	Z327 20BK/OR	GROUND
B	M27 20YL/LB	READING LAMP DRIVER

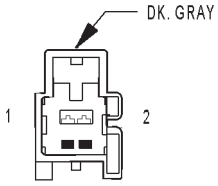

LICENSE LAMP (MANUAL RELEASE)

LICENSE LAMP (MANUAL RELEASE) - DK. GRAY 2 WAY

CAV	CIRCUIT	FUNCTION
1	L77 18WT/BR	FUSED PARK LAMP RELAY OUTPUT
2	Z367 20BK/BR	GROUND

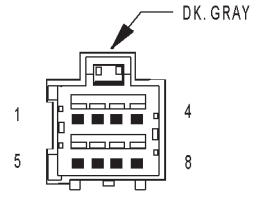

LICENSE LAMP (POWER LIFTGATE)

LICENSE LAMP (POWER LIFTGATE) - DK. GRAY 8 WAY

CAV	CIRCUIT	FUNCTION
1	L77 18WT/BR	FUSED PARK LAMP RELAY OUTPUT (LEFT)
2	Z367 20BK/BR	GROUND
3	P30 20TN/DG	LIFTGATE HANDLE SWITCH SENSE
4	Z430 20BK/LG	GROUND
5	Q94 20TN/LG	LIFTGATE CHIME DRIVER
6	Z294 20BK/LG	GROUND
7	G32 20VT/LB	LIFTGATE TEMPERATURE SENSOR SIGNAL
8	Z78 20BK/OR	GROUND

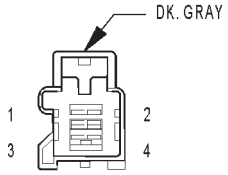

LICENSE LAMP (POWER RELEASE)

LICENSE LAMP (POWER RELEASE) - DK. GRAY 4 WAY

CAV	CIRCUIT	FUNCTION
1	L77 18WT/BR	FUSED PARK LAMP RELAY OUTPUT (LEFT)
2	Z367 20BK/BR	GROUND
3	P30 20TN/DG	LIFTGATE HANDLE SWITCH SENSE
4	Z430 20BK/LG	GROUND

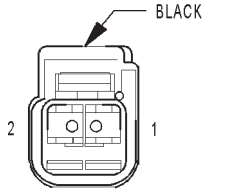

LIFT PUMP MOTOR (DIESEL)

LIFT PUMP MOTOR (DIESEL) - BLACK 2 WAY

CAV	CIRCUIT	FUNCTION
1	N2 18OR	LIFT PUMP RELAY OUTPUT
2	Z201 18OR	GROUND

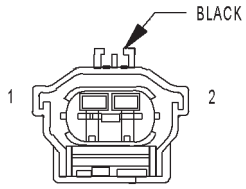

LIFTGATE AJAR SWITCH (MANUAL RELEASE)

LIFTGATE AJAR SWITCH (MANUAL RELEASE) - BLACK 2 WAY

CAV	CIRCUIT	FUNCTION
1	Z78 20BK/OR	GROUND
2	G78 20VT/OR	LIFTGATE AJAR SWITCH SENSE

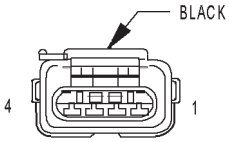

LIFTGATE AJAR SWITCH (POWER RELEASE)

LIFTGATE AJAR SWITCH (POWER RELEASE) - BLACK 4 WAY

CAV	CIRCUIT	FUNCTION
1	Z78 20BK/OR	GROUND
2	G78 20VT/OR	LIFTGATE AJAR SWITCH SENSE
3	P31 20TN/YL	LIFTGATE RELEASE DRIVER
4	Z231 20BK/YL	GROUND

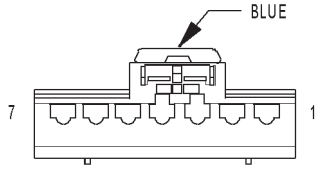

LIFTGATE CINCH/RELEASE MOTOR (POWER LIFTGATE)

LIFTGATE CINCH/RELEASE MOTOR (POWER LIFTGATE) - BLUE 7 WAY

CAV	CIRCUIT	FUNCTION
1	Z78 20BK/OR	GROUND
2	G78 20VT/OR	LIFTGATE AJAR SWITCH SENSE
3	Q60 20OR/YL	LIFTGATE PAWL SWITCH SENSE
4	Z245 18BK/GY	GROUND
5	Q85 18TN/WT	LIFTGATE LATCH RELEASE DRIVER
6	Q84 18TN/GY	LIFTGATE LATCH CINCH DRIVER
7	Q83 18OR/GY	LIFTGATE LATCH CLUTCH DRIVER

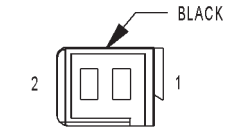

LIFTGATE CYLINDER LOCK SWITCH

LIFTGATE CYLINDER LOCK SWITCH - BLACK 2 WAY

CAV	CIRCUIT	FUNCTION
1	Z465 20BK/GY	GROUND
2	G165 20VT/GY	LIFTGATE CYLINDER LOCK SWITCH MUX

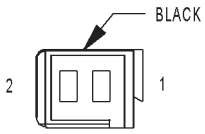

LIFTGATE LEFT PINCH SENSOR (POWER LIFTGATE)

LIFTGATE LEFT PINCH SENSOR (POWER LIFTGATE) - BLACK 2 WAY

CAV	CIRCUIT	FUNCTION
1	Q77 20OR/DB	RIGHT PINCH SENSOR SIGNAL
2	Q76 20OR/LB	PINCH SENSOR SIGNAL

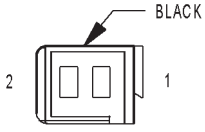

LIFTGATE RIGHT PINCH SENSOR (POWER LIFTGATE)

LIFTGATE RIGHT PINCH SENSOR (POWER LIFTGATE) - BLACK 2 WAY

CAV	CIRCUIT	FUNCTION
1	Q77 20OR/DB	RIGHT PINCH SENSOR SIGNAL
2	Z78 20BK/OR	GROUND

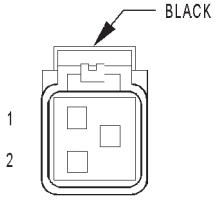

LOW NOTE HORN

LOW NOTE HORN - BLACK 2 WAY

CAV	CIRCUIT	FUNCTION
1	Z298 18BK/DB	GROUND
2	X2 18DG/OR	HORN RELAY OUTPUT

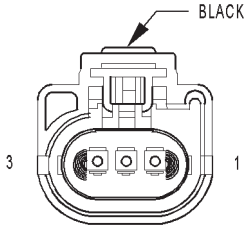

MANIFOLD ABSOLUTE PRESSURE SENSOR (GAS)

MANIFOLD ABSOLUTE PRESSURE SENSOR (GAS) - BLACK 3 WAY

CAV	CIRCUIT	FUNCTION
1	K1 18VT/BR	MANIFOLD ABSOLUTE PRESSURE SENSOR SIGNAL
2	K900 18DB/DG	SENSOR GROUND
3	F855 18PK/YL (BUILT-UP-EXPORT)	5 VOLT SUPPLY
3	F855 18OR/PK (EXCEPT BUILT-UP-EXPORT)	5 VOLT SUPPLY

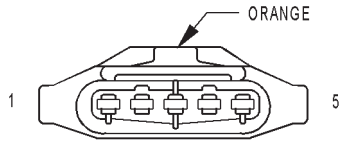

MASS
AIR FLOW
SENSOR
(DIESEL)

MASS AIR FLOW SENSOR (DIESEL) - ORANGE 5 WAY

CAV	CIRCUIT	FUNCTION
1	-	-
2	K342 16BR/WT	ECM/PCM RELAY OUTPUT
3	K957 20BK/OR	MASS AIR FLOW SENSOR GROUND
4	F855 20PK/YL	SENSOR REFERENCE VOLTAGE A
5	K55 20DB/OR	MASS AIR FLOW SENSOR SIGNAL

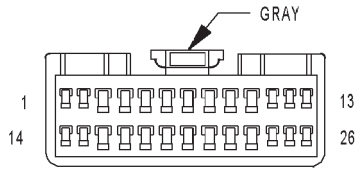

MEMORY
SEAT/MIRROR
MODULE C1

MEMORY SEAT/MIRROR MODULE C1 - GRAY 26 WAY

CAV	CIRCUIT	FUNCTION
1	P69 20TN/WT	LEFT MIRROR SENSOR GROUND
2	P25 20LG/VT	SEAT HORIZONTAL POSITION SIGNAL
3	P27 20LG/LB	REAR RISER POSITION SIGNAL
4	-	-
5	-	-
6	P67 20OR	RIGHT MIRROR VERTICAL POSITION SIGNAL
7	P64 20TN/OR	LEFT MIRROR VERTICAL POSITION SIGNAL
8	P21 20LG/TN	SEAT FRONT DOWN SWITCH SENSE
9	P13 20LG/OR	SEAT REAR DOWN SWITCH SENSE
10	P15 20LG/WT	SEAT HORIZONTAL FORWARD SWITCH SENSE
11	P43 14LG/VT	RECLINER UP SWITCH SENSE
12	-	-
13	-	-
14	P66 20WT	RIGHT MIRROR SENSOR GROUND
15	P26 20LG	FRONT RISER POSITION SIGNAL
16	P47 20LG/LB	RECLINER POSITION SIGNAL
17	-	-
18	-	-
19	P68 20YL	RIGHT MIRROR HORIZONTAL POSITION SIGNAL
20	P65 20TN/YL	LEFT MIRROR HORIZONTAL POSITION SIGNAL
21	P19 20LG/LB	SEAT FRONT UP SWITCH SENSE
22	P11 20LG/YL	SEAT REAR UP SWITCH SENSE
23	P17 20LG/DG	SEAT HORIZONTAL REARWARD SWITCH SENSE
24	P41 14LG/GY	RECLINER DOWN SWITCH SENSE
25	-	-
26	D25 20WT/VT	PCI BUS

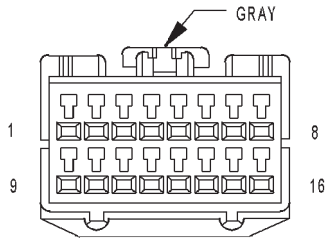

MEMORY SEAT/MIRROR MODULE C2

MEMORY SEAT/MIRROR MODULE C2 - GRAY 16 WAY

CAV	CIRCUIT	FUNCTION
1	-	-
2	-	-
3	P73 18TN/LB	LEFT MIRROR COMMON DRIVER (RIGHT/DOWN)
4	P75 18DB	LEFT MIRROR LEFT DRIVER
5	P71 18TN/GY	LEFT MIRROR UP DRIVER
6	P29 20LG/WT	SEAT SENSOR 5 VOLT SUPPLY
7	-	-
8	-	-
9	-	-
10	-	-
11	P70 18LB	RIGHT MIRROR COMMON DRIVER (RIGHT/DOWN)
12	P74 18TN/DB	RIGHT MIRROR LEFT DRIVER
13	P72 18GY	RIGHT MIRROR UP DRIVER
14	-	-
15	-	-
16	P28 20LG/BR	SEAT POSITION SENSOR GROUND

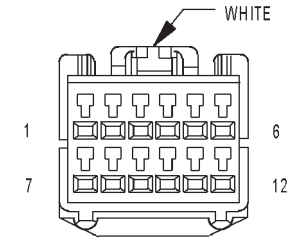

MEMORY SEAT/MIRROR MODULE C3

MEMORY SEAT/MIRROR MODULE C3 - WHITE 12 WAY

CAV	CIRCUIT	FUNCTION
1	P111 14LG/YL	SEAT REAR UP DRIVER
2	P115 14LG	SEAT HORIZONTAL FORWARD DRIVER
3	P119 14LG/DG	SEAT FRONT UP DRIVER
4	P113 14LG/WT	SEAT REAR DOWN DRIVER
5	P121 14LG/DB	SEAT FRONT DOWN DRIVER
6	-	-
7	P143 14LG/GY	SEAT RECLINER UP DRIVER
8	P9 20LG/OR	SEAT SWITCH B(+) SUPPLY
9	-	-
10	P141 14LG/BR	SEAT RECLINER DOWN DRIVER
11	P117 14LG/LB	SEAT HORIZONTAL REARWARD DRIVER
12	-	-

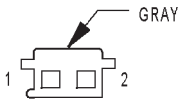

MEMORY SEAT/MIRROR MODULE C4

MEMORY SEAT/MIRROR MODULE C4 - GRAY 2 WAY

CAV	CIRCUIT	FUNCTION
1	Z849 14BK/OR	GROUND
2	A210 14OR/RD	FUSED B(+)

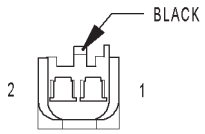

MEMORY SET SWITCH

MEMORY SET SWITCH - BLACK 2 WAY

CAV	CIRCUIT	FUNCTION
1	G200 20VT/BR	MEMORY SELECT SWITCH MUX
2	G920 20VT/YL	MEMORY SELECT SWITCH RETURN

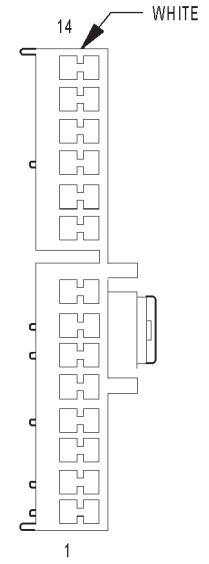

MESSAGE CENTER (HIGH LINE)

MESSAGE CENTER (HIGH LINE) - WHITE 14 WAY

CAV	CIRCUIT	FUNCTION
1	L160 20WT/TN (LHD)	RIGHT TURN INDICATOR DRIVER
2	G3 20VT/LB (LHD)	MALFUNCTION INDICATOR LAMP DRIVER
3	L134 20WT/GY (RHD)	HIGH BEAM INDICATOR DRIVER
4	G69 20VT/WT (LHD)	VTSS INDICATOR DRIVER
4	L160 20WT/TN (RHD)	RIGHT TURN INDICATOR DRIVER
5	-	-
6	G7 20VT/GY (LHD)	LOW OIL PRESSURE INDICATOR DRIVER
7	A701 16BR/RD (LHD)	FUSED B(+) (HAZARD)
8	A701 16BR/RD (RHD)	FUSED B(+) (HAZARD)
9	G7 20VT/GY (RHD)	LOW OIL PRESSURE INDICATOR DRIVER
10	-	-
11	L161 20WT/LG (LHD)	LEFT TURN INDICATOR DRIVER
11	G69 20VT/WT (RHD)	VTSS INDICATOR DRIVER
12	L134 20WT/GY (LHD)	HIGH BEAM INDICATOR DRIVER
13	G3 20VT/LB (RHD)	MALFUNCTION INDICATOR LAMP DRIVER
14	L161 20WT/LG (RHD)	LEFT TURN INDICATOR DRIVER

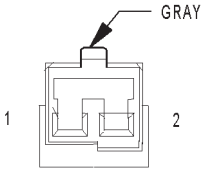

MODE DOOR ACTUATOR (ATC)

MODE DOOR ACTUATOR (ATC) - GRAY 2 WAY

CAV	CIRCUIT	FUNCTION
1	C135 20DB/GY	MODE DOOR DRIVER (B)
2	C35 20LB/OR	MODE DOOR DRIVER (A)

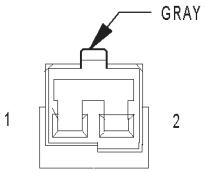

MODE DOOR ACTUATOR (MTC)

MODE DOOR ACTUATOR (MTC) - GRAY 2 WAY

CAV	CIRCUIT	FUNCTION
1	C34 20DB/LB	COMMON DOOR DRIVER (B)
2	C35 20LB/OR	MODE DOOR DRIVER (A)

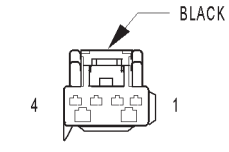

MULTI-FUNCTION SWITCH

MULTI-FUNCTION SWITCH - BLACK 4 WAY

CAV	CIRCUIT	FUNCTION
1	W52 20BR/YL	FRONT WIPER SWITCH MUX
2	G902 20VT/OR	MULTI-FUNCTION SWITCH MUX RETURN
3	L305 20WT/LB	TURN SIGNAL SWITCH MUX
4	G194 20VT/LG	HIGH BEAM/FRONT WASHER SWITCH MUX

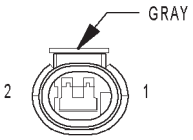

OUTPUT SPEED SENSOR (EATX)

OUTPUT SPEED SENSOR (EATX) - GRAY 2 WAY

CAV	CIRCUIT	FUNCTION
1	T13 18DG/VT	SPEED SENSOR GROUND
2	T14 18DG/BR	OUTPUT SPEED SENSOR SIGNAL

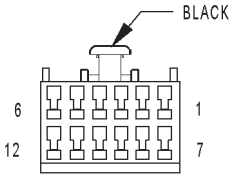

OVERHEAD CONSOLE (EXCEPT BASE)

OVERHEAD CONSOLE (EXCEPT BASE) - BLACK 12 WAY

CAV	CIRCUIT	FUNCTION
1	G23 20VT/DB	SLIDING DOORS OVERHEAD SWITCH MUX
2	G25 20VT/TN	LIFTGATE SWITCH MUX
3	D25 20WT/VT	PCI BUS
4	Z113 20BK/DB	GROUND
5	A114 20GY/RD	FUSED B(+) (I.O.D.)
6	F503 20WT/PK	FUSED IGNITION SWITCH OUTPUT (RUN)
7	Z13 20BK/WT	GROUND
8	E15 20OR/DB	ASH/RECEIVER LAMP FEED
9	-	-
10	-	-
11	L24 20BK/GY (EXCEPT BUILT-UP-EXPORT) (PREMIUM/ LUXURY)	AUTOMATIC HEADLAMP SWITCH SENSOR
12	L1 20BK/WT (PREMIUM/LUXURY)	BACK-UP LAMP FEED

RADIATOR FAN RELAY NO. 1 (DIESEL) - BLUE 9 WAY

CAV	CIRCUIT	FUNCTION
1	-	-
2	N201 12DB/LG	RADIATOR FAN RELAY NO. 1 OUTPUT
3	-	-
4	K342 16BR/WT	ECM/PCM RELAY OUTPUT
5	-	-
6	N210 18DB/DG	LOW SPEED RADIATOR FAN RELAY CONTROL
7	-	-
8	A201 12RD/LG	FUSED B(+)
9	-	-

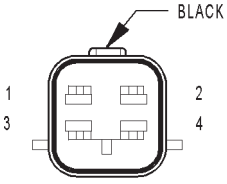

OXYGEN SENSOR 1/1 UPSTREAM (GAS)

OXYGEN SENSOR 1/1 UPSTREAM (GAS) - BLACK 4 WAY

CAV	CIRCUIT	FUNCTION
1	K99 18BR/LG	OXYGEN SENSOR 1/1 HEATER CONTROL
2	K342 16BR/WT	AUTOMATIC SHUT DOWN RELAY OUTPUT
3	K902 18BR/DG	OXYGEN SENSOR 1/1 GROUND
4	K41 18DB/LB	OXYGEN SENSOR 1/1 SIGNAL

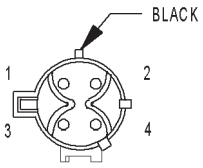

OXYGEN SENSOR 1/2 DOWNSTREAM (GAS)

OXYGEN SENSOR 1/2 DOWNSTREAM (GAS) - BLACK 4 WAY

CAV	CIRCUIT	FUNCTION
1	Z43 18BK/DB	GROUND
2	K342 16BR/WT	AUTOMATIC SHUT DOWN RELAY OUTPUT
3	K902 18BR/DG	OXYGEN SENSOR 1/2 GROUND
4	K141 18DB/YL	OXYGEN SENSOR 1/2 SIGNAL

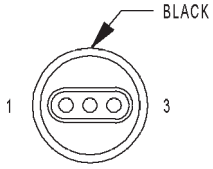

PARK/NEUTRAL POSITION SWITCH (ATX)

PARK/NEUTRAL POSITION SWITCH (ATX) - BLACK 3 WAY

CAV	CIRCUIT	FUNCTION
1	Z252 18BK/WT	GROUND
2	T41 18YL/DB	PARK/NEUTRAL POSITION SWITCH SENSE (TRS T41)
3	T2 18DG/WT	TRS REVERSE SENSE

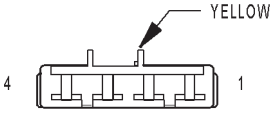

PASSENGER AIRBAG

PASSENGER AIRBAG - YELLOW 4 WAY

CAV	CIRCUIT	FUNCTION
1	R42 18LB/BR	PASSENGER SQUIB 1 LINE 2
2	R44 18LB/OR	PASSENGER SQUIB 1 LINE 1
3	R62 18LB/PK	PASSENGER SQUIB 2 LINE 2
4	R64 18LB/WT	PASSENGER SQUIB 2 LINE 1

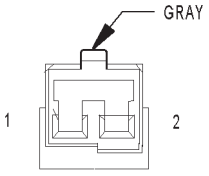

PASSENGER BLEND DOOR ACTUATOR (ATC)

PASSENGER BLEND DOOR ACTUATOR (ATC) - GRAY 2 WAY

CAV	CIRCUIT	FUNCTION
1	C133 20DB/WT	PASSENGER BLEND DOOR DRIVER (B)
2	C33 20LB/BR	PASSENGER BLEND DOOR DRIVER (A)

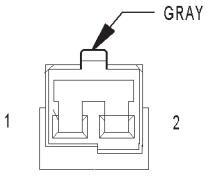

PASSENGER BLEND DOOR ACTUATOR (MTC)

PASSENGER BLEND DOOR ACTUATOR (MTC) - GRAY 2 WAY

CAV	CIRCUIT	FUNCTION
1	C33 20LB/BR (RHD)	PASSENGER BLEND DOOR DRIVER (A)
1	C34 20DB/LB (LHD)	COMMON DOOR DRIVER (B)
2	C34 20DB/LB (RHD)	COMMON DOOR DRIVER (B)
2	C33 20LB/BR (LHD)	PASSENGER BLEND DOOR DRIVER (A)

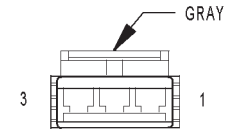

PASSENGER DOOR COURTESY LAMP

PASSENGER DOOR COURTESY LAMP - GRAY 3 WAY

CAV	CIRCUIT	FUNCTION
1	Z321 20BK/BR (RHD)	GROUND
1	Z322 20BK/BR (LHD)	GROUND
2	-	-
3	M21 20YL/BR	COURTESY LAMPS DRIVER

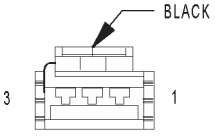

PASSENGER DOOR LOCK SWITCH

PASSENGER DOOR LOCK SWITCH - BLACK 3 WAY

CAV	CIRCUIT	FUNCTION
1	F304 16WT/PK (EXCEPT POWER WINDOWS)	FUSED ACCESSORY RELAY OUTPUT
1	F304 16WT/PK (POWER WINDOWS)	FUSED WINDOW CIRCUIT BREAKER OUTPUT
2	G161 20VT/DG (RHD)	LEFT DOOR LOCK SWITCH MUX
2	G160 20VT/LG (LHD)	RIGHT DOOR LOCK SWITCH MUX
3	Z461 20BK/DG (RHD)	GROUND
3	Z460 20BK/LG (LHD)	GROUND

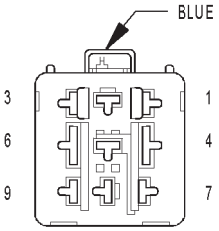

PASSENGER FOLDING MIRROR RELAY (BUILT-UP-EXPORT)

PASSENGER FOLDING MIRROR RELAY (BUILT-UP-EXPORT) - BLUE 9 WAY

CAV	CIRCUIT	FUNCTION
1	-	-
2	-	-
3	-	-
4	A108 18LG/RD	FUSED B(+)
5	P164 18LG/DB	PASSENGER FOLDING MIRROR RELAY INPUT
6	P162 18LG/DG	PASSENGER FOLDING MIRROR RELAY CONTROL
7	-	-
8	P160 18TN/LG	PASSENGER FOLDING MIRROR RELAY OUTPUT
9	-	-

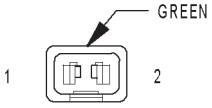

PASSENGER HEATED SEAT BACK

PASSENGER HEATED SEAT BACK - GREEN 2 WAY

CAV	CIRCUIT	FUNCTION
1	S1 18WT (RHD)	PASSENGER SEAT BACK HEATER B(+) DRIVER
1	S2 18GY (LHD)	PASSENGER SEAT BACK HEATER GROUND
2	S2 18GY (RHD)	PASSENGER SEAT BACK HEATER GROUND
2	S1 18WT (LHD)	PASSENGER SEAT BACK HEATER B(+) DRIVER

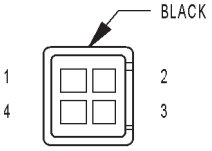

PASSENGER HEATED SEAT CUSHION

PASSENGER HEATED SEAT CUSHION - BLACK 4 WAY

CAV	CIRCUIT	FUNCTION
1	P87 16LG/OR	PASSENGER SEAT CUSHION HEATER GROUND
2	P89 20LG/BR	SEAT SENSOR 5 VOLT SUPPLY
3	Z848 18BK/OR	PASSENGER SEAT TEMP SENSOR INPUT
4	P88 16LG/LB	PASSENGER SEAT CUSHION HEATER B(+) DRIVER

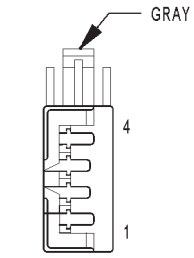

PASSENGER HEATED SEAT MODULE C1

PASSENGER HEATED SEAT MODULE C1 - GRAY 4 WAY

CAV	CIRCUIT	FUNCTION
1	Z848 18BK/OR	GROUND
2	P8 20LG/WT	PASSENGER HEATED SEAT SWITCH MUX
3	F503 20WT/PK	FUSED IGNITION SWITCH OUTPUT (RUN)
4	A210 14OR/RD	FUSED B(+)

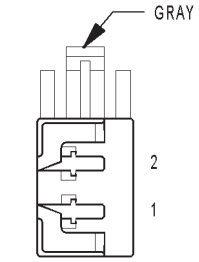

PASSENGER HEATED SEAT MODULE C2

PASSENGER HEATED SEAT MODULE C2 - GRAY 2 WAY

CAV	CIRCUIT	FUNCTION
1	S2 18GY	PASSENGER SEAT BACK HEATER GROUND
2	S1 18WT	PASSENGER SEAT BACK HEATER B(+) DRIVER

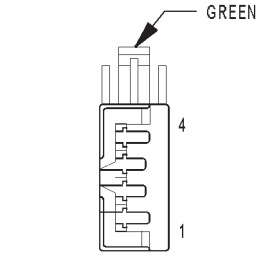

PASSENGER HEATED SEAT MODULE C3

PASSENGER HEATED SEAT MODULE C3 - GREEN 4 WAY

CAV	CIRCUIT	FUNCTION
1	P87 16LG/OR	PASSENGER SEAT CUSHION HEATER GROUND
2	P89 20LG/BR	SEAT SENSOR 5 VOLT SUPPLY
3	Z848 18BK/OR	PASSENGER SEAT TEMP SENSOR INPUT
4	P88 16LG/LB	PASSENGER SEAT CUSHION HEATER B(+) DRIVER

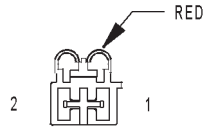

PASSENGER POWER SEAT FRONT RISER MOTOR

PASSENGER POWER SEAT FRONT RISER MOTOR - RED 2 WAY

CAV	CIRCUIT	FUNCTION
1	P18 14LG/OR	PASSENGER FRONT UP SWITCH SENSE
2	P20 14LG/LB	PASSENGER FRONT DOWN SWITCH SENSE

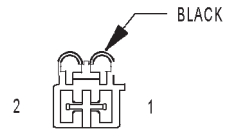

PASSENGER POWER SEAT HORIZONTAL MOTOR

PASSENGER POWER SEAT HORIZONTAL MOTOR - BLACK 2 WAY

CAV	CIRCUIT	FUNCTION
1	P14 14LG/OR	PASSENGER HORIZONTAL FORWARD SWITCH SENSE
2	P16 14LG/WT	PASSENGER HORIZONTAL REARWARD SWITCH SENSE

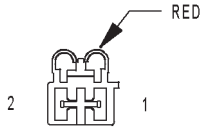

PASSENGER POWER SEAT REAR RISER MOTOR

PASSENGER POWER SEAT REAR RISER MOTOR - RED 2 WAY

CAV	CIRCUIT	FUNCTION
1	P10 14LG/TN	PASSENGER REAR UP SWITCH SENSE
2	P12 14LG/YL	PASSENGER REAR DOWN SWITCH SENSE

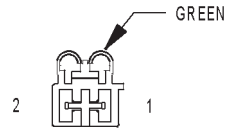

PASSENGER POWER SEAT RECLINER MOTOR

PASSENGER POWER SEAT RECLINER MOTOR - GREEN 2 WAY

CAV	CIRCUIT	FUNCTION
1	P44 14LG/VT	PASSENGER RECLINER UP SWITCH SENSE
2	P42 14LG/GY	PASSENGER RECLINER DOWN SWITCH SENSE

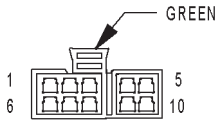

PASSENGER POWER SEAT SWITCH

PASSENGER POWER SEAT SWITCH - GREEN 10 WAY

CAV	CIRCUIT	FUNCTION
1	Z848 14BK/OR	GROUND
2	P44 14LG/VT	PASSENGER RECLINER UP SWITCH SENSE
3	P16 14LG/WT	PASSENGER HORIZONTAL REARWARD SWITCH SENSE
4	P42 14LG/GY	PASSENGER RECLINER DOWN SWITCH SENSE
5	A210 14OR/RD	FUSED B(+)
6	P14 14LG/OR	PASSENGER HORIZONTAL FORWARD SWITCH SENSE
7	P20 14LG/LB	PASSENGER FRONT DOWN SWITCH SENSE
8	P12 14LG/YL	PASSENGER REAR DOWN SWITCH SENSE
9	P10 14LG/TN	PASSENGER REAR UP SWITCH SENSE
10	P18 14LG/OR	PASSENGER FRONT UP SWITCH SENSE

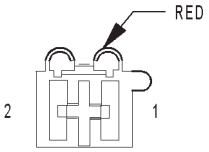

PASSENGER POWER WINDOW MOTOR

PASSENGER POWER WINDOW MOTOR - RED 2 WAY

CAV	CIRCUIT	FUNCTION
1	Q12 14OR/BR	PASSENGER WINDOW DRIVER UP
2	Q22 14OR/VT	PASSENGER WINDOW DRIVER DOWN

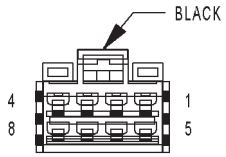

PASSENGER POWER WINDOW SWITCH

PASSENGER POWER WINDOW SWITCH - BLACK 8 WAY

CAV	CIRCUIT	FUNCTION
1	F304 12WT/PK (EXCEPT BUILT-UP-EXPORT RHD)	FUSED WINDOW CIRCUIT BREAKER OUTPUT
1	F304 16WT/PK (BUILT-UP-EXPORT LHD)	FUSED WINDOW CIRCUIT BREAKER OUTPUT
2	Q26 12OR/GY	MASTER WINDOW SWITCH PASSENGER DOWN
3	Q16 12OR/TN	MASTER WINDOW SWITCH PASSENGER UP
4	-	-
5	Q22 14OR/VT	PASSENGER WINDOW DRIVER DOWN
6	F304 16WT/PK	FUSED WINDOW CIRCUIT BREAKER OUTPUT
7	Z422 20BK/BR	GROUND
8	Q12 14OR/BR	PASSENGER WINDOW DRIVER UP

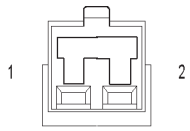

PASSENGER SEAT BELT SWITCH

PASSENGER SEAT BELT SWITCH - 2 WAY

CAV	CIRCUIT	FUNCTION
1	R60 18LB/TN	PASSENGER SEAT BELT SWITCH LINE 1
2	R58 18LB/GY	PASSENGER SEAT BELT SWITCH LINE 2

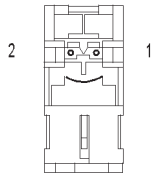

PASSENGER SEAT BELT TENSIONER

PASSENGER SEAT BELT TENSIONER - 2 WAY

CAV	CIRCUIT	FUNCTION
1	R54 18LB/YL	PASSENGER SEAT BELT TENSIONER LINE 2
2	R56 18LB/DG	PASSENGER SEAT BELT TENSIONER LINE 1

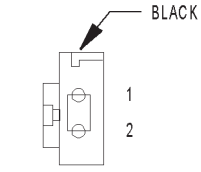

POWER FOLDING MIRROR SWITCH (BUILT-UP-EXPORT)

POWER FOLDING MIRROR SWITCH (BUILT-UP-EXPORT) - BLACK 2 WAY

CAV	CIRCUIT	FUNCTION
1	P136 20TN/YL	FOLDING MIRROR SWITCH SENSE
2	Z888 20BK/YL	GROUND

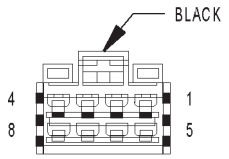

POWER
LIFTGATE
MODULE C1

POWER LIFTGATE MODULE C1 - BLACK 8 WAY

CAV	CIRCUIT	FUNCTION
1	Q83 18OR/GY	LIFTGATE LATCH CLUTCH DRIVER
2	Q88 16TN/BR (EXCEPT BUILT-UP-EXPORT)	LIFTGATE OPEN DRIVER
2	Q88 14TN/BR (BUILT-UP-EXPORT)	LIFTGATE OPEN DRIVER
3	Q89 16TN/OR (EXCEPT BUILT-UP-EXPORT)	LIFTGATE CLOSE DRIVER
3	Q89 14TN/OR (BUILT-UP-EXPORT)	LIFTGATE CLOSE DRIVER
4	-	-
5	A115 12YL/RD	FUSED B(+)
6	-	-
7	-	-
8	Z125 14BK/WT	GROUND

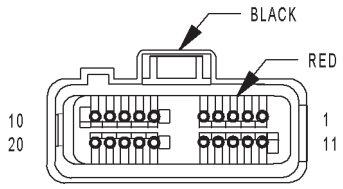

POWER
LIFTGATE
MODULE C2

POWER LIFTGATE MODULE C2 - BLACK/RED 20 WAY

CAV	CIRCUIT	FUNCTION
1	Q90 20TN/VT	LIFTGATE HALL EFFECT SIGNAL
2	-	-
3	Q151 20TN/DB	LIFTGATE ENGAGE/DISENGAGE SWITCH SENSE
4	-	-
5	Q76 20OR/LB	PINCH SENSOR SIGNAL
6	-	-
7	Q86 18OR/DB	LIFTGATE GEAR ENGAGE DRIVER
8	Q84 18TN/GY	LIFTGATE LATCH CINCH DRIVER
9	Q85 18TN/WT	LIFTGATE LATCH RELEASE DRIVER
10	Q87 18OR/LG	LIFTGATE GEAR DISENGAGE DRIVER
11	D25 20WT/VT	PCI BUS
12	G78 20VT/OR	LIFTGATE AJAR SWITCH SENSE
13	Q60 20OR/YL	LIFTGATE PAWL SWITCH SENSE
14	Q51 20OR	LIFTGATE FULL OPEN SWITCH SENSE
15	-	-
16	G32 20VT/LB	LIFTGATE TEMPERATURE SENSOR SIGNAL
17	Q91 20TN/LG	LIFTGATE HALL EFFECT SIGNAL
18	Q94 20TN/LG	LIFTGATE CHIME DRIVER
19	G153 20VT/YL	LIFTGATE MODULE WAKE UP SIGNAL
20	Z87 20BK/LG	GROUND

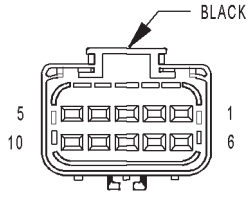

POWER
LIFTGATE
MOTOR

POWER LIFTGATE MOTOR - BLACK 10 WAY

CAV	CIRCUIT	FUNCTION
1	Z78 20BK/OR (EXCEPT BUILT-UP-EXPORT)	GROUND
1	Z87 20BK/LG (BUILT-UP-EXPORT)	GROUND
2	Q51 20OR	LIFTGATE FULL OPEN SWITCH SENSE
3	Q151 20TN/DB	LIFTGATE ENGAGE/DISENGAGE SWITCH SENSE
4	Q87 18OR/LG	LIFTGATE GEAR DISENGAGE DRIVER
5	Q86 18OR/DB	LIFTGATE GEAR ENGAGE DRIVER
6	Q88 16TN/BR (EXCEPT BUILT-UP-EXPORT)	LIFTGATE OPEN DRIVER
6	Q88 14TN/BR (BUILT-UP-EXPORT)	LIFTGATE OPEN DRIVER
7	Q90 20TN/VT	LIFTGATE HALL EFFECT SUPPLY
8	Q91 20TN/LG	LIFTGATE HALL EFFECT SIGNAL
9	Z87 20BK/LG	GROUND
10	Q89 16TN/OR (EXCEPT BUILT-UP-EXPORT)	LIFTGATE CLOSE DRIVER
10	Q89 14TN/OR (BUILT-UP-EXPORT)	LIFTGATE CLOSE DRIVER

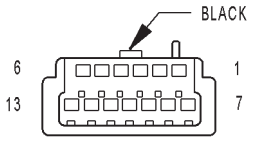

POWER MIRROR SWITCH

POWER MIRROR SWITCH - BLACK 13 WAY

CAV	CIRCUIT	FUNCTION
1	P70 18TN/LB (MEMORY)	RIGHT MIRROR COMMON DRIVER (RIGHT/DOWN)
1	P70 20TN/LB	RIGHT MIRROR COMMON DRIVER (RIGHT/DOWN)
2	-	-
3	-	-
4	-	-
5	E18 20OR/LB	PANEL LAMPS DRIVER
6	P73 20TN/VT	LEFT MIRROR COMMON DRIVER (RIGHT/DOWN)
6	P73 18TN/VT (MEMORY)	LEFT MIRROR COMMON DRIVER (RIGHT/DOWN)
7	P75 18TN/LG (MEMORY)	LEFT MIRROR LEFT DRIVER
7	P75 20TN/LG	LEFT MIRROR LEFT DRIVER
8	P74 18TN/DB (MEMORY)	RIGHT MIRROR LEFT DRIVER
8	P74 20TN/DB	RIGHT MIRROR LEFT DRIVER
9	A108 18LG/RD	FUSED B(+)
10	-	-
11	Z408 18BK/LG	GROUND
12	P71 20TN/DG	LEFT MIRROR UP DRIVER
12	P71 18TN/DG (MEMORY)	LEFT MIRROR UP DRIVER
13	P72 18TN/GY (MEMORY)	RIGHT MIRROR UP DRIVER
13	P72 20TN/GY	RIGHT MIRROR UP DRIVER

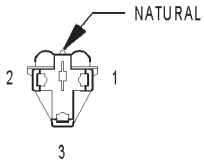

POWER OUTLET

POWER OUTLET - NATURAL 3 WAY

CAV	CIRCUIT	FUNCTION
1	A105 16DB/RD	FUSED B(+)
2	-	-
3	Z738 16BK/WT	GROUND

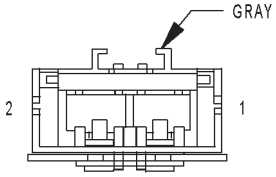

POWER SEAT CIRCUIT BREAKER (30A)

POWER SEAT CIRCUIT BREAKER (30A) - GRAY 2 WAY

CAV	CIRCUIT	FUNCTION
1	A110 12OR/RD	FUSED B(+)
2	A210 14OR/RD	FUSED SEAT SWITCH DRIVER
2	A210 14OR/RD	FUSED SEAT SWITCH DRIVER

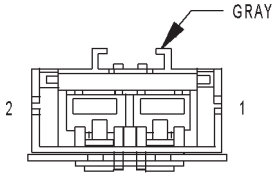

POWER WINDOW CIRCUIT BREAKER (25A)

POWER WINDOW CIRCUIT BREAKER (25A) - GRAY 2 WAY

CAV	CIRCUIT	FUNCTION
1	F30 12PK/YL	FUSED ACCESSORY RELAY OUTPUT
2	F304 12WT/PK	FUSED WINDOW CIRCUIT BREAKER OUTPUT

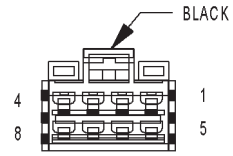

POWER WINDOW SWITCH (LOWLINE)

POWER WINDOW SWITCH (LOWLINE) - BLACK 8 WAY

CAV	CIRCUIT	FUNCTION
1	F304 16WT/PK	FUSED WINDOW CIRCUIT BREAKER OUTPUT
2	Z421 12BK/BR	GROUND
3	Z421 12BK/BR	GROUND
4	-	-
5	Q26 12OR/GY	MASTER WINDOW SWITCH PASSENGER DOWN
6	F304 16WT/PK	FUSED WINDOW CIRCUIT BREAKER OUTPUT
7	Z421 20BK/BR	GROUND
8	Q16 12OR/TN	MASTER WINDOW SWITCH PASSENGER UP

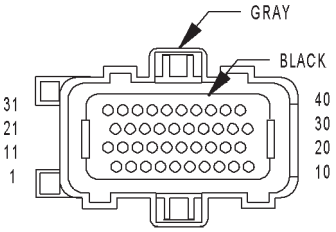

POWERTRAIN CONTROL MODULE C1 (GAS)

POWERTRAIN CONTROL MODULE C1 (GAS) - GRAY/BLACK 40-WAY

CAV	CIRCUIT	FUNCTION
1	-	-
2	K18 16DB/OR (3.3L/3.8L)	IGNITION COIL NO. 3 DRIVER
3	K17 16DB/TN	IGNITION COIL NO. 2 DRIVER
4	-	-
5	V32 18VT/YL	SPEED CONTROL ON/OFF SWITCH SENSE
6	K342 16BR/WT	AUTOMATIC SHUT DOWN RELAY OUTPUT
7	K13 16BR/LB	FUEL INJECTOR NO. 3 DRIVER
8	K20 18BR/GY	GENERATOR FIELD CONTROL
9	-	-
10	Z130 18BK/BR	GROUND
11	K19 16DB/DG	IGNITION COIL NO. 1 DRIVER
12	G6 16VT/GY	ENGINE OIL PRESSURE SWITCH SENSE
13	K11 16BR/YL	FUEL INJECTOR NO. 1 DRIVER
14	K58 16BR/VT (3.3L/3.8L)	FUEL INJECTOR NO. 6 DRIVER
15	K38 16BR/OR (3.3L/3.8L)	FUEL INJECTOR NO. 5 DRIVER
16	K14 16BR/TN	FUEL INJECTOR NO. 4 DRIVER
17	K12 16BR/DB	FUEL INJECTOR NO. 2 DRIVER
18	K99 18BR/LG	OXYGEN SENSOR 1/1 HEATER CONTROL
19	-	-
20	F202 18PK/GY	FUSED IGNITION SWITCH OUTPUT (RUN-START)
21	-	-
22	-	-
23	-	-
24	-	-
25	K42 18DB/YL (EXCEPT 3.3L/3.8L BUILT-UP-EXPORT)	KNOCK SENSOR SIGNAL
26	K2 18VT/OR	ENGINE COOLANT TEMPERATURE SENSOR SIGNAL
27	K902 18BR/DG	OXYGEN SENSOR GROUND
28	-	-
29	-	-
30	K41 18DB/LB	OXYGEN SENSOR 1/1 SIGNAL
31	T752 18DG/OR	ENGINE STARTER MOTOR RELAY CONTROL
32	K24 18BR/LB	CRANKSHAFT POSITION SENSOR SIGNAL
33	K44 18DB/GY	CAMSHAFT POSITION SENSOR SIGNAL
34	-	-
35	K22 18BR/OR	THROTTLE POSITION SENSOR SIGNAL
36	K1 18VT/BR	MANIFOLD ABSOLUTE PRESSURE SENSOR SIGNAL
37	K21 18DB/LG	INTAKE AIR TEMPERATURE SENSOR SIGNAL
38	-	-
39	-	-
40	K35 18DB/VT	EGR SOLENOID CONTROL

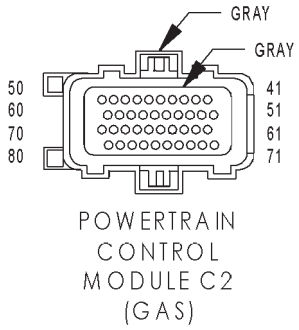

POWERTRAIN CONTROL MODULE C2 (GAS) - GRAY/GRAY 40 WAY

CAV	CIRCUIT	FUNCTION
41	V37 18VT	SPEED CONTROL SWITCH SIGNAL
42	C18 18LB/BR	A/C PRESSURE SENSOR SIGNAL
43	K900 18DB/DG	SENSOR GROUND
44	F888 18BR/PK	8 VOLT SUPPLY
45	-	-
46	A109 18OR/RD	FUSED B(+)
47	-	-
48	K40 18BR/LG (2.4L)	IDLE AIR CONTROL NO. 3 DRIVER
49	K60 18VT/LG (2.4L)	IDLE AIR CONTROL NO. 2 DRIVER
49	K39 18VT/DG (3.3L/3.8L)	IDLE AIR CONTROL NO. 1 DRIVER
50	Z131 18BK/DG	GROUND
51	K141 18DB/YL	OXYGEN SENSOR 1/2 SIGNAL
52	-	-
53	-	-
54	-	-
55	-	-
56	V36 18VT/YL	SPEED CONTROL VACUUM SOLENOID CONTROL
57	K39 18VT/DG (2.4L)	IDLE AIR CONTROL NO. 1 DRIVER
57	K60 18VT/LG (3.3L/3.8L)	IDLE AIR CONTROL NO. 2 DRIVER
58	K59 18BR/DG (2.4L)	IDLE AIR CONTROL NO. 4 DRIVER
59	D25 18WT/VT	PCI BUS
60	-	-
61	F855 18PK/YL	5 VOLT SUPPLY
62	B29 18DG/WT	SECONDARY BRAKE SWITCH SIGNAL
63	T10 18DG/LG (EATX)	TORQUE MANAGEMENT REQUEST SENSE
64	C13 18LB/OR	A/C COMPRESSOR CLUTCH RELAY CONTROL
65	D21 18WT/BR	SCI TRANSMIT
66	N7 18DB/OR	VEHICLE SPEED SENSOR SIGNAL
67	K51 18BR/WT	AUTOMATIC SHUT DOWN RELAY CONTROL
68	K52 18DB/WT	EVAPORATIVE EMISSION SOLENOID CONTROL
69	-	-
70	K70 18DB/BR	EVAPORATIVE EMISSION SOLENOID SENSE
71	-	-
72	K107 18VT/WT (EXCEPT BUILT-UP-EXPORT)	LEAK DETECTION PUMP SWITCH SENSE
73	K173 18BR/VT	RADIATOR FAN RELAY CONTROL
74	K31 18BR	FUEL PUMP RELAY CONTROL
75	D20 18WT/LG	SCI RECEIVE
76	T41 18YL/DB	PARK/NEUTRAL POSITION SWITCH SENSE (TRS T41)
77	K106 18VT/WT (EXCEPT BUILT-UP-EXPORT) (2.4L EATX W/ABS)	LEAK DETECTION PUMP SOLENOID CONTROL
77	K106 18VT/LB (EXCEPT BUILT-UP-EXPORT) (EXCEPT 2.4L EATX W/ABS)	LEAK DETECTION PUMP SOLENOID CONTROL
78	K54 18DB/WT (ATX)	TORQUE CONVERTER CLUTCH SOLENOID CONTROL
79	-	-
80	V35 18VT/OR	SPEED CONTROL VENT SOLENOID CONTROL

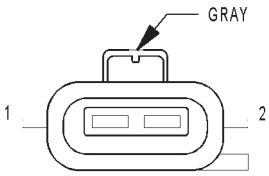

RADIATOR FAN NO. 1 (DIESEL)

RADIATOR FAN NO. 1 (DIESEL) - GRAY 2 WAY

CAV	CIRCUIT	FUNCTION
1	N202 12DB/OR	RADIATOR FAN NO. 1 CONTROL
2	N201 12DB/LG	RADIATOR FAN RELAY NO. 1 OUTPUT

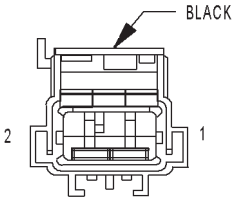

RADIATOR FAN NO. 1 (GAS)

RADIATOR FAN NO. 1 (GAS) - BLACK 2 WAY

CAV	CIRCUIT	FUNCTION
1	N23 12DB/DG	RADIATOR FAN RELAY OUTPUT
2	Z223 12BK/DG	GROUND

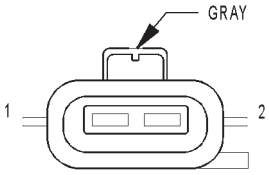

RADIATOR FAN NO. 2 (DIESEL)

RADIATOR FAN NO. 2 (DIESEL) - GRAY 2 WAY

CAV	CIRCUIT	FUNCTION
1	Z823 12BK	GROUND
2	N112 12DB/OR	RADIATOR FAN RELAY NO. 2 AND NO. 3 COMMON OUTPUT

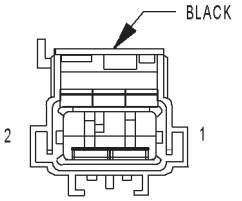

RADIATOR FAN NO. 2 (GAS)

RADIATOR FAN NO. 2 (GAS) - BLACK 2 WAY

CAV	CIRCUIT	FUNCTION
1	N23 12DB/DG	RADIATOR FAN RELAY OUTPUT
2	Z223 12BK/DG	GROUND

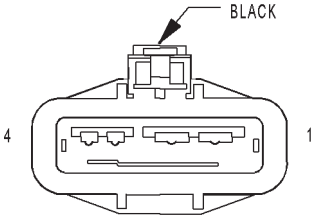

RADIATOR FAN RELAY (GAS)

RADIATOR FAN RELAY (GAS) - BLACK 4 WAY

CAV	CIRCUIT	FUNCTION
1	A112 12OR/RD	FUSED B(+)
2	N23 12DB/DG	RADIATOR FAN RELAY OUTPUT
3	Z723 18BK/DG	GROUND
4	N173 16DB/VT	RADIATOR FAN RELAY CONTROL

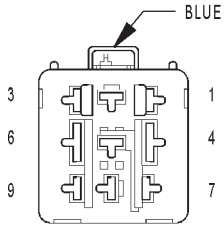

RADIATOR FAN RELAY NO. 1 (DIESEL)

RADIATOR FAN RELAY NO. 1 (DIESEL) - BLUE 9 WAY

CAV	CIRCUIT	FUNCTION
1	-	-
2	N201 12DB/LG	RADIATOR FAN RELAY NO. 1 OUTPUT
3	-	-
4	K342 16BR/WT	ECM/PCM RELAY OUTPUT
5	-	-
6	N210 18DB/DG	LOW SPEED RADIATOR FAN RELAY CONTROL
7	-	-
8	A201 12RD/LG	FUSED B(+)
9	-	-

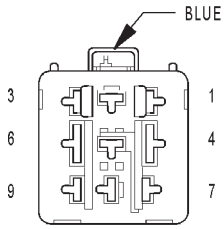

RADIATOR FAN RELAY NO. 2 (DIESEL)

RADIATOR FAN RELAY NO. 2 (DIESEL) - BLUE 9 WAY

CAV	CIRCUIT	FUNCTION
1	-	-
2	N112 12DB/OR	RADIATOR FAN RELAY NO. 2 AND NO. 3 COMMON OUTPUT
3	-	-
4	K342 16BR/WT	ECM/PCM RELAY OUTPUT
5	-	-
6	N122 18DB/YL	HIGH SPEED RADIATOR FAN DUAL RELAY CONTROL
7	-	-
8	A112 12OR/RD	FUSED B(+)
9	-	-

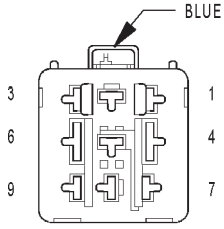

RADIATOR FAN RELAY NO. 3 (DIESEL)

RADIATOR FAN RELAY NO. 3 (DIESEL) - BLUE 9 WAY

CAV	CIRCUIT	FUNCTION
1	-	-
2	Z823 12BK	GROUND
3	-	-
4	K342 16BR/WT	ECM/PCM RELAY OUTPUT
5	N112 12DB/OR	RADIATOR FAN RELAY NO. 2 AND NO. 3 COMMON OUTPUT
6	N122 18DB/YL	HIGH SPEED RADIATOR FAN DUAL RELAY CONTROL
7	-	-
8	N202 12DB/OR	RADIATOR FAN NO. 1 CONTROL
9	-	-

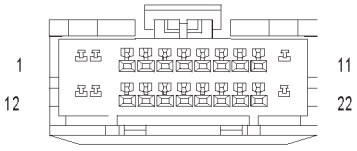

RADIO C1

RADIO C1 - 22 WAY

CAV	CIRCUIT	FUNCTION
1	A114 16GY/RD	FUSED B(+) (I.O.D.)
2	F306 16DB/PK	FUSED ACCESSORY RELAY OUTPUT
3	E14 20OR/TN	PANEL LAMPS DRIVER
4	-	-
5	-	-
6	-	-
7	X56 20GY/BR (EXCEPT BUILT-UP-EXPORT)	RIGHT FRONT SPEAKER (-)
7	X54 20GY (BUILT-UP-EXPORT)	RIGHT FRONT SPEAKER (-)
7	X156 20GY/LB (LOW LINE)	RIGHT FRONT I/P SPEAKER (-)
8	X154 20GY/YL (LOW LINE)	RIGHT FRONT I/P SPEAKER (+)
8	X56 20GY/BR (BUILT-UP-EXPORT)	RIGHT FRONT SPEAKER (+)
8	X54 20GY (EXCEPT BUILT-UP-EXPORT)	RIGHT FRONT SPEAKER (+)
9	X55 20DG/BR	LEFT FRONT SPEAKER (-)
9	X155 20DG/LB (LOW LINE)	LEFT FRONT I/P SPEAKER (-)
10	X53 20DG	LEFT FRONT SPEAKER (+)
10	X153 20DG/YL (LOW LINE)	LEFT FRONT I/P SPEAKER (+)
11	Z514 16BK/LG (BUILT-UP-EXPORT)	GROUND
11	Z333 16BK/PK (EXCEPT BUILT-UP-EXPORT)	GROUND
12	A114 16GY/RD (EXCEPT BUILT-UP-EXPORT)	FUSED B(+) (I.O.D.)
13	X60 20GY/YL (BUILT-UP-EXPORT)	RADIO 12 VOLT OUTPUT
14	D25 18WT/VT (EXCEPT BUILT-UP-EXPORT)	PCI BUS
14	D25 20WT/VT (BUILT-UP-EXPORT)	PCI BUS
15	-	-
16	-	-
17	-	-
18	X51 20DG/DB	LEFT REAR SPEAKER (+)
19	X57 20DG/OR	LEFT REAR SPEAKER (-)
20	X58 20GY/OR	RIGHT REAR SPEAKER (-)
21	X52 20GY/DB	RIGHT REAR SPEAKER (+)
22	Z515 16BK (BUILT-UP-EXPORT)	GROUND
22	Z222 16BK/LG (EXCEPT BUILT-UP-EXPORT)	GROUND

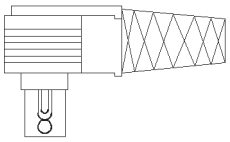

RADIO C2

RADIO C2 - 8 WAY

CAV	CIRCUIT	FUNCTION
1	X40 20GY/WT	AUDIO OUT RIGHT
2	E14 18OR/TN	PANEL LAMPS DRIVER
3	D25 20WT/VT (EXCEPT BUILT-UP-EXPORT)	PCI BUS
3	D25 20VT/YL (BUILT-UP-EXPORT)	PCI BUS
4	X112 20RD	IGNITION SWITCH OUTPUT
5	X41 20DG/WT	AUDIO OUT LEFT
6	Z140 18BK/OR	GROUND
7	Z141 18BK/TN	GROUND
8	X160 20GY/YL	B(+)

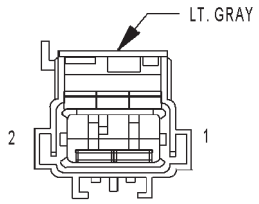

RADIO
CHOKE

RADIO CHOKE - LT. GRAY 2 WAY

CAV	CIRCUIT	FUNCTION
1	X1 16DG/BR	NAME BRAND SPEAKER RELAY OUTPUT
2	X13 16DG/GY	RADIO CHOKE OUTPUT

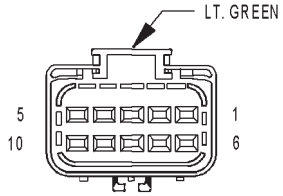

REAR
A/C-HEATER
UNIT
(3 ZONE HVAC)

REAR A/C-HEATER UNIT (3 ZONE HVAC) - LT. GREEN 10 WAY

CAV	CIRCUIT	FUNCTION
1	C53 20LB	REAR MODE DOOR DRIVER
2	C154 20LB/OR	REAR COMMON DOOR DRIVER
3	C51 12LB/BR	FUSED REAR BLOWER MOTOR RELAY OUTPUT
4	C152 16LB/LG	REAR BLOWER MOTOR MED
5	C151 18LB/DG	REAR BLOWER MOTOR LOW
6	C153 12DB/BR	REAR BLOWER MOTOR HIGH
7	C54 20LB/YL	REAR BLEND DOOR DRIVER
8	C154 20LB/OR	REAR COMMON DOOR DRIVER
9	-	-
10	C200 20LB/DG	TXV SOLENOID FEED

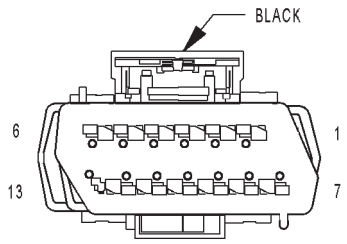

REAR
AUTO TEMP
CONTROL
SWITCH
(ATC)

REAR AUTO TEMP CONTROL SWITCH (ATC) - BLACK 13 WAY

CAV	CIRCUIT	FUNCTION
1	F504 20GY/PK	FUSED IGNITION SWITCH OUTPUT (RUN)
2	Z27 18BK/DG	GROUND
3	D22 20WT/TN	KDB CLOCK
4	D17 20WT/DG	KDB DATA
5	E10 20OR/DG	PANEL LAMPS DRIVER
6	-	-
7	-	-
8	-	-
9	-	-
10	-	-
11	-	-
12	-	-
13	-	-

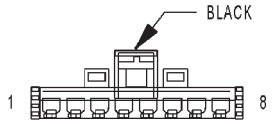

REAR
BLOWER FRONT
CONTROL SWITCH
(3 ZONE HVAC)

REAR BLOWER FRONT CONTROL SWITCH (3 ZONE HVAC) - BLACK 8 WAY

CAV	CIRCUIT	FUNCTION
1	-	-
2	Z440 12BK/DG	GROUND
3	-	-
4	C153 12DB/BR	REAR BLOWER MOTOR HIGH
5	-	-
6	C152 16LB/LG	REAR BLOWER MOTOR MED
7	C151 18LB/DG	REAR BLOWER MOTOR LOW
8	C50 12DB/OR	REAR BLOWER FRONT CONTROL FEED

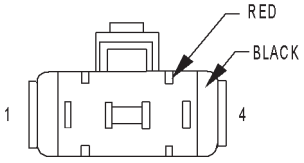

REAR BLOWER MOTOR POWER MODULE C1 (ATC)
(ATC) - RED/BLACK 4 WAY

CAV	CIRCUIT	FUNCTION
1	C51 18DB/BR	FUSED REAR BLOWER MOTOR RELAY OUTPUT
1	C51 12DB/BR	FUSED REAR BLOWER MOTOR RELAY OUTPUT
2	C59 18DB/LB	BLOWER MOTOR CONTROL
3	Z135 12BK/LB	GROUND
4	-	-

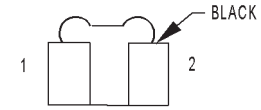

REAR BLOWER MOTOR POWER MODULE C2 (ATC) - BLACK 2 WAY

CAV	CIRCUIT	FUNCTION
1	12BK	GROUND
2	12DG	POWER FEED

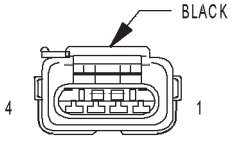

REAR BLOWER REAR CONTROL SWITCH C1 (3 ZONE HVAC)

REAR BLOWER REAR CONTROL SWITCH C1 (3 ZONE HVAC) - BLACK 4 WAY

CAV	CIRCUIT	FUNCTION
1	C153 12DB/BR	REAR BLOWER MOTOR HIGH
2	C152 16LB/LG	REAR BLOWER MOTOR MED
3	C151 18LB/DG	REAR BLOWER MOTOR LOW
4	C50 12DB/OR	REAR BLOWER FRONT CONTROL FEED

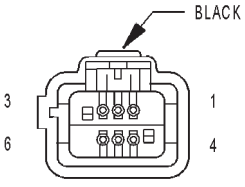

REAR BLOWER REAR CONTROL SWITCH C2 (3 ZONE HVAC)

REAR BLOWER REAR CONTROL SWITCH C2 (3 ZONE HVAC) - BLACK 6 WAY

CAV	CIRCUIT	FUNCTION
1	-	-
2	C22 20LB/DB	REAR TEMPERATURE FEEDBACK SIGNAL
3	E10 20OR/DG	PANEL LAMPS DRIVER
4	F850 20LB/PK	5 VOLT SUPPLY
5	C121 20DB/DG	REAR TEMPERATURE RETURN
6	Z409 20BK/OR	GROUND

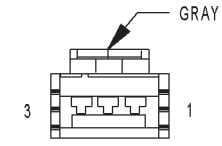

REAR DOME LAMP (EXCEPT LUXURY)

REAR DOME LAMP (EXCEPT LUXURY) - GRAY 3 WAY

CAV	CIRCUIT	FUNCTION
1	M22 20YL/OR	COURTESY LAMPS DRIVER
2	Z327 20BK/OR	GROUND
3	-	-

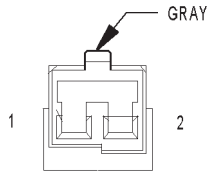

REAR MODE MOTOR (ATC)

REAR MODE MOTOR (ATC) - GRAY 2 WAY

CAV	CIRCUIT	FUNCTION
1	C154 18LB/GY	REAR MODE DOOR DRIVER (B)
2	C53 18LB	REAR MODE DOOR DRIVER (A)

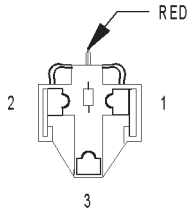

REAR POWER OUTLET

REAR POWER OUTLET - RED 3 WAY

CAV	CIRCUIT	FUNCTION
1	F307 16LB/PK (ACCESSORY RELAY POSITION)	FUSED ACCESSORY RELAY OUTPUT
1	F307 16LB/PK (BATTERY POSITION)	FUSED B(+)
2	-	-
3	Z737 16BK/LB	GROUND

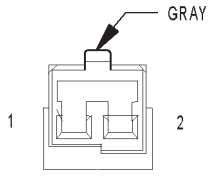

REAR TEMPERATURE MOTOR (ATC)

REAR TEMPERATURE MOTOR (ATC) - GRAY 2 WAY

CAV	CIRCUIT	FUNCTION
1	C54 18LB/YL	REAR BLEND DOOR DRIVER (A)
2	C169 18LB/TN	REAR BLEND DOOR DRIVER (B)

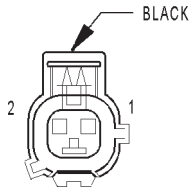

REAR WASHER PUMP MOTOR

REAR WASHER PUMP MOTOR - BLACK 2 WAY

CAV	CIRCUIT	FUNCTION
1	W20 18BR/YL	REAR WASHER PUMP MOTOR CONTROL
2	F301 18VT/PK	FUSED ACCESSORY RELAY OUTPUT

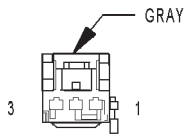

REAR WIPER MOTOR

REAR WIPER MOTOR - GRAY 3 WAY

CAV	CIRCUIT	FUNCTION
1	Z213 18BK/LG	GROUND
2	F302 18GY/PK	FUSED ACCESSORY RELAY OUTPUT
3	W13 18BR/LG	REAR WIPER MOTOR CONTROL

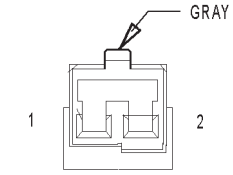

RECIRCULATION DOOR ACTUATOR (ATC)

RECIRCULATION DOOR ACTUATOR (ATC) - GRAY 2 WAY

CAV	CIRCUIT	FUNCTION
1	C132 20DB/YL	RECIRCULATION DOOR DRIVER (B)
2	C32 20DB/TN	RECIRCULATION DOOR DRIVER (A)

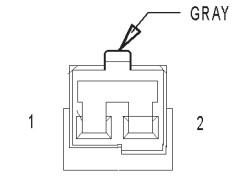

RECIRCULATION DOOR ACTUATOR (MTC)

RECIRCULATION DOOR ACTUATOR (MTC) - GRAY 2 WAY

CAV	CIRCUIT	FUNCTION
1	C32 20DB/TN (RHD)	RECIRCULATION DOOR DRIVER (A)
1	C34 20DB/LB (LHD)	COMMON DOOR DRIVER (B)
2	C34 20DB/LB (RHD)	COMMON DOOR DRIVER (B)
2	C32 20DB/TN (LHD)	RECIRCULATION DOOR DRIVER (A)

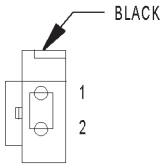

REMOTE KEYLESS ENTRY ANTENNA (JAPAN)

REMOTE KEYLESS ENTRY ANTENNA (JAPAN) - BLACK 2 WAY

CAV	CIRCUIT	FUNCTION
1	D10 18WT	REMOTE KEYLESS ENTRY ANTENNA (+)
2	D10 18WT/LB	REMOTE KEYLESS ENTRY ANTENNA (-)

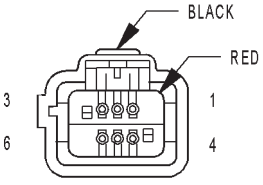

REMOTE KEYLESS ENTRY MODULE

REMOTE KEYLESS ENTRY MODULE - BLACK/RED 6 WAY

CAV	CIRCUIT	FUNCTION
1	G96 20VT/DG	REMOTE KEYLESS ENTRY INTERFACE
2	D9 20WT/GY	RKE MODULE PROGRAM ENABLE
3	Z109 20BK/GY	GROUND
4	D10 18WT (RHD) (JAPAN ONLY)	REMOTE KEYLESS ENTRY ANTENNA (+)
5	D10 18WT/LB (RHD) (JAPAN ONLY)	REMOTE KEYLESS ENTRY ANTENNA (-)
6	A114 20GY/RD	FUSED B(+) (I.O.D.)

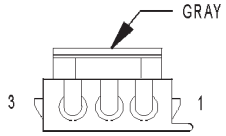

RIGHT B-PILLAR SWITCH (POWER SLIDING DOOR)

RIGHT B-PILLAR SWITCH (POWER SLIDING DOOR) - GRAY 3 WAY

CAV	CIRCUIT	FUNCTION
1	Z62 20BK/YL	GROUND
2	F302 18GY/PK	FUSED ACCESSORY RELAY OUTPUT
3	G42 20VT/YL (EXCEPT TOWN & COUNTRY)	RIGHT SLIDING DOOR PILLAR SWITCH MUX
3	G42 20VT/WT (TOWN & COUNTRY)	RIGHT SLIDING DOOR PILLAR SWITCH MUX

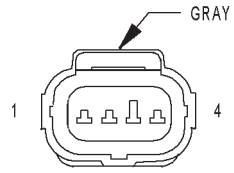

RIGHT CINCH/RELEASE MOTOR (POWER SLIDING DOOR)

RIGHT CINCH/RELEASE MOTOR (POWER SLIDING DOOR) - GRAY 4 WAY

CAV	CIRCUIT	FUNCTION
1	Q46 18TN/GY	RIGHT CINCH/RELEASE MOTOR LATCH DRIVER
2	Z248 18BK/WT	GROUND
3	Q44 18OR/GY	RIGHT CINCH/RELEASE MOTOR CLUTCH DRIVER
4	Q48 18TN/WT	RIGHT CINCH/RELEASE MOTOR UNLATCH DRIVER

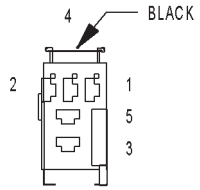

RIGHT COMBINATION RELAY (TRAILER TOW)

RIGHT COMBINATION RELAY (TRAILER TOW) - BLACK 5 WAY

CAV	CIRCUIT	FUNCTION
1	L62 18WT/BR	RIGHT REAR TURN SIGNAL DRIVER
1	L62 18WT/BR	RIGHT REAR TURN SIGNAL DRIVER
2	Z1 18BK/DG	GROUND
3	L50 18WT/TN	BRAKE LAMP SWITCH OUTPUT
4	L605 18DG	RIGHT COMBINATION SIGNAL
5	-	-

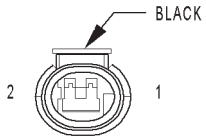

RIGHT CYLINDER LOCK SWITCH

RIGHT CYLINDER LOCK SWITCH - BLACK 2 WAY

CAV	CIRCUIT	FUNCTION
1	Z462 20BK/WT	GROUND
2	G162 20VT/WT	RIGHT CYLINDER LOCK SWITCH MUX

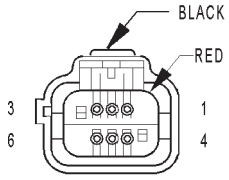

RIGHT DOOR SPEAKER

RIGHT DOOR SPEAKER - BLACK/RED 6 WAY

CAV	CIRCUIT	FUNCTION
1	X154 20GY/YL (HIGH LINE)	RIGHT FRONT INSTRUMENT PANEL SPEAKER (+)
2	X15 16GY/DG (HIGH LINE)	AMPLIFIED SPEAKER GROUND
3	X156 20GY/LB (HIGH LINE)	RIGHT FRONT INSTRUMENT PANEL SPEAKER (-)
4	X54 20GY	RIGHT FRONT SPEAKER (+)
5	X13 16DG/GY (HIGH LINE)	RADIO CHOKE OUTPUT
6	X56 20GY/BR	RIGHT FRONT SPEAKER (-)

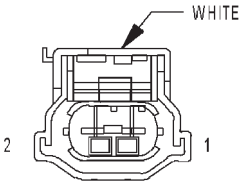

RIGHT FOG LAMP (BUILT-UP-EXPORT)

RIGHT FOG LAMP (BUILT-UP-EXPORT) - WHITE 2 WAY

CAV	CIRCUIT	FUNCTION
1	L90 18WT/OR	FRONT FOG LAMP RELAY OUTPUT
2	Z348 18BK/OR	GROUND

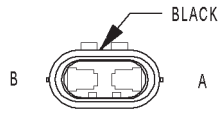

RIGHT FOG LAMP (EXCEPT BUILT-UP-EXPORT)

RIGHT FOG LAMP (EXCEPT BUILT-UP-EXPORT) - BLACK 2 WAY

CAV	CIRCUIT	FUNCTION
A	L90 18WT/OR	FRONT FOG LAMP RELAY OUTPUT
B	Z348 18BK/OR	GROUND

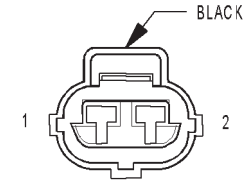

RIGHT FRONT DOOR AJAR SWITCH (BASE)

RIGHT FRONT DOOR AJAR SWITCH (BASE) - BLACK 2 WAY

CAV	CIRCUIT	FUNCTION
1	G74 20VT/WT	RIGHT FRONT DOOR AJAR SWITCH SENSE
2	Z74 20BK/WT	GROUND

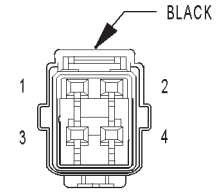

RIGHT FRONT DOOR LOCK MOTOR/AJAR SWITCH (EXCEPT BASE)

RIGHT FRONT DOOR LOCK MOTOR/AJAR SWITCH (EXCEPT BASE) - BLACK 4 WAY

CAV	CIRCUIT	FUNCTION
1	G74 20VT/WT	RIGHT FRONT DOOR AJAR SWITCH SENSE
2	Z74 20BK/WT	GROUND
3	P4 20TN/BR	RIGHT FRONT DOOR UNLOCK DRIVER
4	P2 20TN/GY	RIGHT FRONT DOOR LOCK DRIVER

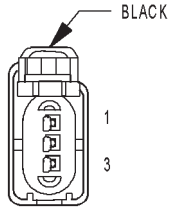

RIGHT FRONT PARK/TURN SIGNAL LAMP (EXCEPT BUILT-UP-EXPORT)

RIGHT FRONT PARK/TURN SIGNAL LAMP (EXCEPT BUILT-UP-EXPORT) - BLACK 3 WAY

CAV	CIRCUIT	FUNCTION
1	L60 16WT/TN	RIGHT FRONT TURN SIGNAL DRIVER
2	L78 18WT/OR	FUSED PARK LAMP RELAY OUTPUT (RIGHT)
3	Z378 18BK/TN	GROUND

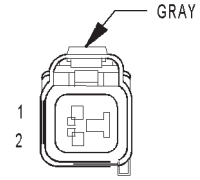

RIGHT FRONT WHEEL SPEED SENSOR

RIGHT FRONT WHEEL SPEED SENSOR - GRAY 2 WAY

CAV	CIRCUIT	FUNCTION
1	B7 18DG/VT	RIGHT FRONT WHEEL SPEED SENSOR 12 VOLT SUPPLY
2	B6 18DG/WT	RIGHT FRONT WHEEL SPEED SENSOR SIGNAL

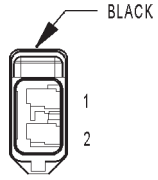

RIGHT FULL OPEN SWITCH (POWER SLIDING DOOR)

RIGHT FULL OPEN SWITCH (POWER SLIDING DOOR) - BLACK 2 WAY

CAV	CIRCUIT	FUNCTION
1	Q52 20OR	RIGHT FULL OPEN SWITCH SENSE
2	Z76 20BK/YL	GROUND

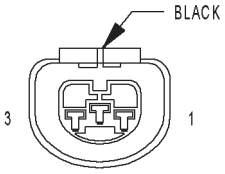

RIGHT HEADLAMP (EXCEPT BUILT-UP-EXPORT)

RIGHT HEADLAMP (EXCEPT BUILT-UP-EXPORT) - BLACK 3 WAY

CAV	CIRCUIT	FUNCTION
1	L44 16WT/TN	RIGHT LOW BEAM DRIVER
2	Z344 16BK/TN	GROUND
3	L34 16WT/GY	RIGHT HIGH BEAM DRIVER

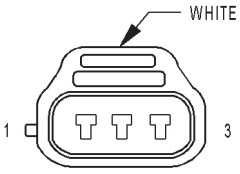

RIGHT HEADLAMP LEVELING MOTOR (BUILT-UP-EXPORT)

RIGHT HEADLAMP LEVELING MOTOR (BUILT-UP-EXPORT) - WHITE 3 WAY

CAV	CIRCUIT	FUNCTION
1	Z203 16BR	GROUND
2	L78 16BK	FUSED PARK LAMP RELAY OUTPUT (RIGHT)
3	L13 16RD	HEADLAMP ADJUST SIGNAL

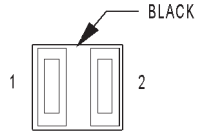

RIGHT HIGH BEAM LAMP (BUILT-UP-EXPORT)

RIGHT HIGH BEAM LAMP (BUILT-UP-EXPORT) - BLACK 2 WAY

CAV	CIRCUIT	FUNCTION
1	Z344 16BR	GROUND
1	Z344 16BR	GROUND
2	L34 16GY	RIGHT HIGH BEAM DRIVER

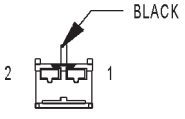

RIGHT INSTRUMENT PANEL SPEAKER

RIGHT INSTRUMENT PANEL SPEAKER - BLACK 2 WAY

CAV	CIRCUIT	FUNCTION
1	X154 20GY/YL	RIGHT FRONT I/P SPEAKER (+)
2	X156 20GY/LB	RIGHT FRONT I/P SPEAKER (-)

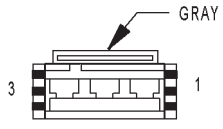

RIGHT LIFTGATE FLOOD LAMP

RIGHT LIFTGATE FLOOD LAMP - GRAY 3 WAY

CAV	CIRCUIT	FUNCTION
1	Z312 20BK/YL	GROUND
2	-	-
3	M11 20YL/VT	COURTESY LAMPS DRIVER

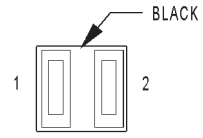

RIGHT LOW BEAM LAMP (BUILT-UP-EXPORT)

RIGHT LOW BEAM LAMP (BUILT-UP-EXPORT) - BLACK 2 WAY

CAV	CIRCUIT	FUNCTION
1	Z344 16BR	GROUND
2	L44 16WT	RIGHT LOW BEAM DRIVER

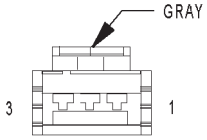

RIGHT MID READING LAMP (PREMIUM/LUXURY)

RIGHT MID READING LAMP (PREMIUM/LUXURY) - GRAY 3 WAY

CAV	CIRCUIT	FUNCTION
1	M22 20YL/OR	COURTESY LAMPS DRIVER
2	Z327 20BK/OR	GROUND
3	M27 20YL/LB	READING LAMPS DRIVER

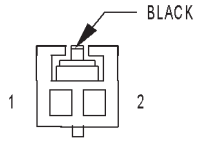

RIGHT PARK LAMP (BUILT-UP-EXPORT)

RIGHT PARK LAMP (BUILT-UP-EXPORT) - BLACK 2 WAY

CAV	CIRCUIT	FUNCTION
1	Z344 16BR	GROUND
2	L78 16BK	FUSED PARK LAMP RELAY OUTPUT (RIGHT)

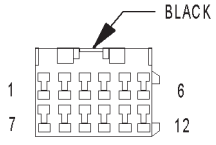

RIGHT POWER MIRROR

RIGHT POWER MIRROR - BLACK 12 WAY

CAV	CIRCUIT	FUNCTION
1	P174 20TN/LB (BUILT-UP-EXPORT)	RIGHT FOLDING MIRROR UNFOLD DRIVER
2	-	-
3	-	-
4	P68 20TN/YL (MEMORY)	RIGHT MIRROR HORIZONTAL POSITION SIGNAL
5	P66 20TN/LG (MEMORY)	RIGHT MIRROR SENSOR GROUND
6	P67 20TN/OR (MEMORY)	RIGHT MIRROR VERTICAL POSITION SIGNAL
7	P159 20TN/DG (BUILT-UP-EXPORT/ RHD)	DRIVER FOLDING MIRROR FOLD DRIVER
7	P160 20TN/LG (BUILT-UP-EXPORT/ LHD)	PASSENGER FOLDING MIRROR RELAY OUTPUT
8	Z216 20BK/DB	GROUND
9	C16 20DB/GY	FUSED REAR WINDOW DEFOGGER RELAY OUTPUT
10	P70 20TN/LB	RIGHT MIRROR COMMON DRIVER (RIGHT/DOWN)
11	P72 20TN/GY	RIGHT MIRROR UP DRIVER
12	P74 20TN/DB	RIGHT MIRROR LEFT DRIVER

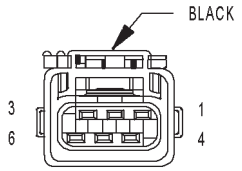

RIGHT REAR
LAMP ASSEMBLY

RIGHT REAR LAMP ASSEMBLY - BLACK 6 WAY

CAV	CIRCUIT	FUNCTION
1	L62 18WT/BR (EXCEPT BUILT-UP-EXPORT)	RIGHT REAR TURN SIGNAL DRIVER
1	Z362 18BK/BR (BUILT-UP-EXPORT)	GROUND
2	L62 18WT/BR (BUILT-UP-EXPORT)	RIGHT REAR TURN SIGNAL DRIVER
3	L78 18WT/OR (EXCEPT BUILT-UP-EXPORT)	FUSED PARK LAMP RELAY OUTPUT (RIGHT)
3	L50 18WT/TN (BUILT-UP-EXPORT)	BRAKE LAMP SWITCH OUTPUT
4	L1 18WT/LG	BACK-UP LAMP DRIVER
5	Z362 18BK/BR (EXCEPT BUILT-UP-EXPORT)	GROUND
5	L38 20WT/YL (BUILT-UP-EXPORT)	REAR FOG LAMP SWITCH OUTPUT
6	L50 18WT/TN (EXCEPT BUILT-UP-EXPORT)	PRIMARY BRAKE SWITCH SIGNAL
6	L78 18WT/OR (BUILT-UP-EXPORT)	FUSED PARK LAMP RELAY OUTPUT (RIGHT)

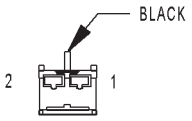

RIGHT REAR
PILLAR SPEAKER

RIGHT REAR PILLAR SPEAKER - BLACK 2 WAY

CAV	CIRCUIT	FUNCTION
1	X158 20GY/YL	RIGHT REAR PILLAR SPEAKER (+)
2	X152 20GY/WT	RIGHT REAR PILLAR SPEAKER (-)

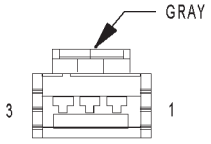

RIGHT REAR
READING LAMP
(LUXURY)

RIGHT REAR READING LAMP (LUXURY) - GRAY 3 WAY

CAV	CIRCUIT	FUNCTION
1	M22 20YL/OR	COURTESY LAMPS DRIVER
2	Z327 20BK/OR	GROUND
3	M27 20YL/LB	READING LAMPS DRIVER

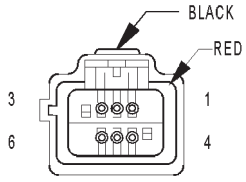

RIGHT
REAR
SPEAKER

RIGHT REAR SPEAKER - BLACK/RED 6 WAY

CAV	CIRCUIT	FUNCTION
1	X152 20GY/WT (HIGH LINE)	RIGHT REAR PILLAR SPEAKER (-)
2	X15 16GY/DG (HIGH LINE)	AMPLIFIED SPEAKER GROUND
3	X158 20GY/YL (HIGH LINE)	RIGHT REAR PILLAR SPEAKER (+)
4	X52 20GY/DB	RIGHT REAR SPEAKER (+)
5	X13 16DG/GY (HIGH LINE)	RADIO CHOKE OUTPUT
6	X58 20GY/OR	RIGHT REAR SPEAKER (-)

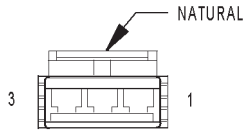

RIGHT REAR
VENT MOTOR

RIGHT REAR VENT MOTOR - NATURAL 3 WAY

CAV	CIRCUIT	FUNCTION
1	-	-
2	Q14 16OR/BR (LHD BUILT-UP-EXPORT)	PASSENGER SIDE REAR WINDOW CLOSE
2	Q13 16OR/DB (RHD)	DRIVER SIDE REAR WINDOW CLOSE
2	Q14 16OR/GY (LHD EXCEPT BUILT-UP-EXPORT)	PASSENGER SIDE REAR WINDOW CLOSE
3	Q23 16OR/LB (RHD)	DRIVER SIDE REAR WINDOW OPEN
3	Q24 16OR/DG (LHD)	PASSENGER SIDE REAR WINDOW OPEN

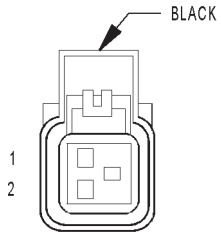

RIGHT REAR WHEEL SPEED SENSOR

RIGHT REAR WHEEL SPEED SENSOR - BLACK 2 WAY

CAV	CIRCUIT	FUNCTION
1	B2 18DG/LB	RIGHT REAR WHEEL SPEED SENSOR 12 VOLT SUPPLY
2	B1 18DG/OR	RIGHT REAR WHEEL SPEED SENSOR SIGNAL

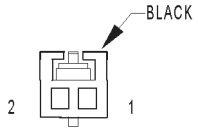

RIGHT REMOTE RADIO SWITCH

RIGHT REMOTE RADIO SWITCH - BLACK 2 WAY

CAV	CIRCUIT	FUNCTION
1	X20 20RD/BK	RADIO CONTROL MUX
2	X920 20RD/DB	RADIO CONTROL MUX RETURN

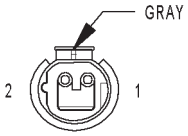

RIGHT REPEATER LAMP (BUILT-UP-EXPORT)

RIGHT REPEATER LAMP (BUILT-UP-EXPORT) - GRAY 2 WAY

CAV	CIRCUIT	FUNCTION
1	A701 18BR/RD	FUSED B(+) (HAZARD)
2	L162 20WT/VT	RIGHT SIDE REPEATER LAMP FEED

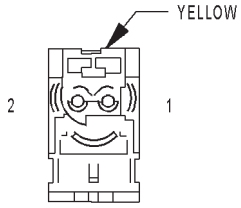

RIGHT SEAT AIRBAG

RIGHT SEAT AIRBAG - YELLOW 2 WAY

CAV	CIRCUIT	FUNCTION
1	R32 18LB/OR (EXCEPT BUILT-UP-EXPORT)	RIGHT SEAT SQUIB LINE 1
1	R34 18WT/BK (BUILT UP EXPORT)	RIGHT SEAT SQUIB LINE 2
2	R34 18LB/WT (EXCEPT BUILT-UP-EXPORT)	RIGHT SEAT SQUIB LINE 2
2	R32 18DG/WT (BUILT UP EXPORT)	RIGHT SEAT SQUIB LINE 1

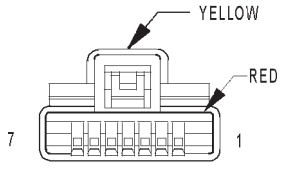

RIGHT SIDE IMPACT AIRBAG CONTROL MODULE

RIGHT SIDE IMPACT AIRBAG CONTROL MODULE - YELLOW/RED 7 WAY

CAV	CIRCUIT	FUNCTION
1	R32 18LB/OR	RIGHT SEAT SQUIB LINE 1
2	R34 18LB/WT	RIGHT SEAT SQUIB LINE 2
3	-	-
4	D25 20WT/VT	PCI BUS
5	F214 18PK/LG	FCM OUTPUT (SIACM RUN-START DRIVER)
6	-	-
7	Z104 18BK/LG	GROUND

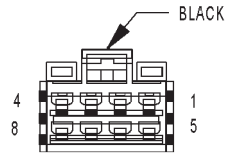

RIGHT SLIDING DOOR CONTROL MODULE C1 (POWER SLIDING DOOR)

RIGHT SLIDING DOOR CONTROL MODULE C1 (POWER SLIDING DOOR) - BLACK 8 WAY

CAV	CIRCUIT	FUNCTION
1	Q44 18OR/GY	RIGHT CINCH/RELEASE MOTOR CLUTCH DRIVER
2	Q68 16TN/BR	RIGHT SLIDING DOOR OPEN DRIVER
3	Q70 16TN/OR	RIGHT SLIDING DOOR CLOSE DRIVER
4	-	-
5	A113 14WT/RD	FUSED B(+)
6	-	-
7	-	-
8	Z124 14BK	GROUND

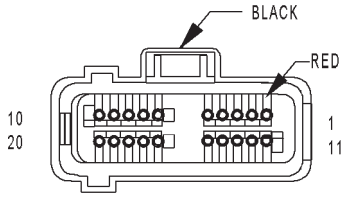

RIGHT SLIDING DOOR CONTROL MODULE C2 (POWER SLIDING DOOR)

RIGHT SLIDING DOOR CONTROL MODULE C2 (POWER SLIDING DOOR) - BLACK/RED 20 WAY

CAV	CIRCUIT	FUNCTION
1	Q72 20TN/VT	RIGHT DOOR MOTOR HALL EFFECT SUPPLY
2	-	-
3	Q34 20OR/GY	RIGHT DOOR LOCK SENSE
4	Q54 20OR/BR	RIGHT DOOR IN/OUT HANDLE SWITCH SENSE
5	-	-
6	-	-
7	Q64 18OR/TN	RIGHT DOOR MOTOR CLUTCH DRIVER
8	Q46 18TN/GY	RIGHT CINCH/RELEASE MOTOR LATCH DRIVER
9	Q48 18TN/WT	RIGHT CINCH/RELEASE MOTOR UNLATCH DRIVER
10	-	-
11	D25 20WT/VT	PCI BUS
12	G76 20TN/OR	RIGHT SLIDING DOOR AJAR SWITCH SENSE
13	Q58 20OR/YL	RIGHT PAWL SWITCH SENSE
14	Q52 20OR	RIGHT FULL OPEN SWITCH SENSE
15	-	GROUND-DRIVER SIDE IDENTIFIER (LHD/RHD)
16	Q56 20OR/VT	RIGHT DOOR CHILD LOCKOUT SWITCH SENSE
17	Q74 20TN/YL	RIGHT DOOR MOTOR HALL EFFECT SIGNAL
18	-	-
19	G152 20VT/GY	RIGHT SLIDING DOOR WAKE UP SIGNAL
20	Z26 20BK/TN	GROUND

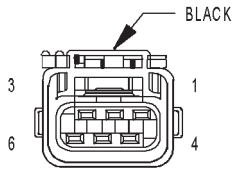

RIGHT SLIDING DOOR LATCH SENSING SWITCH (POWER SLIDING DOOR)

RIGHT SLIDING DOOR LATCH SENSING SWITCH (POWER SLIDING DOOR) - BLACK 6 WAY

CAV	CIRCUIT	FUNCTION
1	Z76 20BK/YL	GROUND
2	Q58 20OR/YL	RIGHT PAWL SWITCH SENSE
3	G76 20TN/OR	RIGHT SLIDING DOOR AJAR SWITCH SENSE
4	Z76 20BK/YL	GROUND
5	Q54 20OR/BR	RIGHT DOOR IN/OUT HANDLE SWITCH SENSE
6	Q56 20OR/VT	RIGHT DOOR CHILD LOCKOUT SWITCH SENSE

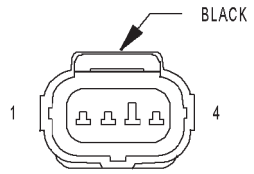

RIGHT SLIDING DOOR LOCK MOTOR (POWER SLIDING DOOR)

RIGHT SLIDING DOOR LOCK MOTOR (POWER SLIDING DOOR) - BLACK 4 WAY

CAV	CIRCUIT	FUNCTION
1	P38 20TN/DB	RIGHT SLIDING DOOR LOCK DRIVER
2	P34 20TN/LB	RIGHT SLIDING DOOR UNLOCK DRIVER
3	Q34 20OR/GY	RIGHT DOOR LOCK SENSE
4	Z76 20BK/YL	GROUND

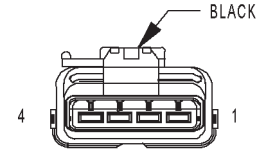

RIGHT SLIDING DOOR LOCK MOTOR/ AJAR SWITCH (MANUAL SLIDING DOOR)

RIGHT SLIDING DOOR LOCK MOTOR/AJAR SWITCH (MANUAL SLIDING DOOR) - BLACK 4 WAY

CAV	CIRCUIT	FUNCTION
1	P38 20BK/DB	RIGHT SLIDING DOOR LOCK DRIVER
2	P34 20BK/TN	RIGHT SLIDING DOOR UNLOCK DRIVER
3	G76 20BK/DG	RIGHT SLIDING DOOR AJAR SWITCH SENSE
4	Z76 20BK	GROUND

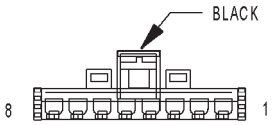

RIGHT SLIDING DOOR MOTOR (POWER SLIDING DOOR)

RIGHT SLIDING DOOR MOTOR (POWER SLIDING DOOR) - BLACK 8 WAY

CAV	CIRCUIT	FUNCTION
1	-	-
2	Q72 20TN/VT	RIGHT DOOR MOTOR HALL EFFECT SUPPLY
3	Q68 16TN/BR	RIGHT SLIDING DOOR OPEN DRIVER
4	Z164 18BK/TN	GROUND
5	Q64 18OR/TN	RIGHT DOOR MOTOR CLUTCH DRIVER
6	Q70 16TN/OR	RIGHT SLIDING DOOR CLOSE DRIVER
7	Z34 20BK/TN	GROUND
8	Q74 20TN/YL	RIGHT DOOR MOTOR HALL EFFECT SIGNAL

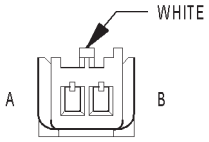

RIGHT SPEED CONTROL SWITCH

RIGHT SPEED CONTROL SWITCH - WHITE 2 WAY

CAV	CIRCUIT	FUNCTION
A	V37 20VT/TN (BUILT UP EXPORT)	SPEED CONTROL SWITCH SIGNAL
A	V37 20DG/VT (EXCEPT BUILT-UP-EXPORT)	SPEED CONTROL SWITCH SIGNAL
B	Z23 20BK/VT	RIGHT SPEED CONTROL SWITCH GROUND

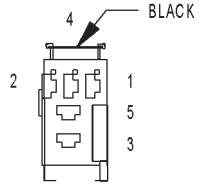

RIGHT STOP/TURN SIGNAL RELAY (TRAILER TOW)

RIGHT STOP/TURN SIGNAL RELAY (TRAILER TOW) - BLACK 5 WAY

CAV	CIRCUIT	FUNCTION
1	L50 18WT/TN	BRAKE LAMP SWITCH OUTPUT
1	L50 18WT/TN	BRAKE LAMP SWITCH OUTPUT
2	Z1 18BK/DG	GROUND
2	Z1 18BK/DG	GROUND
3	L74 18LG	RIGHT STOP SIGNAL
4	L62 18WT/BR	RIGHT REAR TURN SIGNAL DRIVER
5	L605 18DG	RIGHT COMBINATION SIGNAL

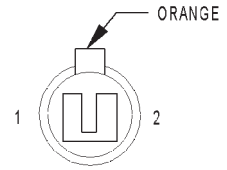

RIGHT TURN SIGNAL LAMP (BUILT-UP-EXPORT)

RIGHT TURN SIGNAL LAMP (BUILT-UP-EXPORT) - ORANGE 2 WAY

CAV	CIRCUIT	FUNCTION
1	Z344 16BR	GROUND
2	L60 16YL	RIGHT FRONT TURN SIGNAL DRIVER

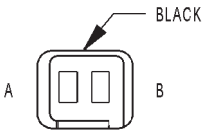

RIGHT VISOR/VANITY LAMP (PREMIUM/LUXURY)

RIGHT VISOR/VANITY LAMP (PREMIUM/LUXURY) - BLACK 2 WAY

CAV	CIRCUIT	FUNCTION
A	Z327 20BK/OR	GROUND
B	M27 20YL/LB	READING LAMPS DRIVER

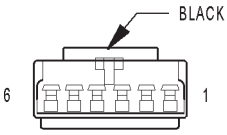

SENTRY KEY IMMOBILIZER MODULE

SENTRY KEY IMMOBILIZER MODULE - BLACK 6 WAY

CAV	CIRCUIT	FUNCTION
1	-	-
2	D25 20WT/VT	PCI BUS
3	-	-
4	F20 20PK/WT	FUSED IGNITION SWITCH OUTPUT (RUN-START)
5	Z120 20BK/WT	GROUND
6	A114 20GY/RD	FUSED B(+) (I.O.D.)

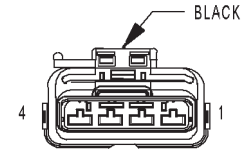

SIREN (UNITED KINGDOM)

SIREN (UNITED KINGDOM) - BLACK 4 WAY

CAV	CIRCUIT	FUNCTION
1	D97 18WT/OR	SIREN SIGNAL OUTPUT
2	D96 18WT/LB	SIREN SIGNAL CONTROL
3	A600 18RD/LB	SIREN SUPPLY
4	G944 18LB/BR	SIREN SIGNAL RETURN

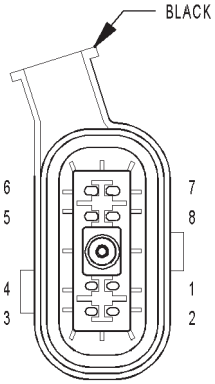

SOLENOID/PRESSURE SWITCH ASSY (EATX)

SOLENOID/PRESSURE SWITCH ASSY (EATX) - BLACK 8 WAY

CAV	CIRCUIT	FUNCTION
1	T47 18YL/DG	2-4 PRESSURE SWITCH SENSE
2	T50 18YL/TN	LOW/REVERSE PRESSURE SWITCH SENSE
3	T9 18DG/TN	OVERDRIVE PRESSURE SWITCH SENSE
4	T16 18YL/OR	TRANSMISSION CONTROL RELAY OUTPUT
5	T59 18YL/LB	UNDERDRIVE SOLENOID CONTROL
6	T60 18YL/GY	OVERDRIVE SOLENOID CONTROL
7	T20 18DG/WT	LOW/REVERSE SOLENOID CONTROL
8	T19 18YL/DB	2-4 SOLENOID CONTROL

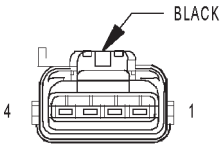

SPEED CONTROL SERVO (GAS)

SPEED CONTROL SERVO (GAS) - BLACK 4 WAY

CAV	CIRCUIT	FUNCTION
1	V36 18VT/YL	SPEED CONTROL VACUUM SOLENOID CONTROL
2	V35 18VT/OR	SPEED CONTROL VENT SOLENOID CONTROL
3	V30 18VT/WT	SPEED CONTROL BRAKE SWITCH OUTPUT
4	Z155 18BK/LG	GROUND

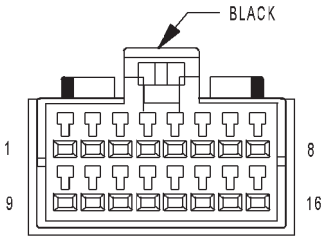

THATCHAM ALARM MODULE C1 (UNITED KINGDOM)

THATCHAM ALARM MODULE C1 (UNITED KINGDOM) - BLACK 16 WAY

CAV	CIRCUIT	FUNCTION
1	-	-
2	-	-
3	G22 20YL	VTSS INDICATOR SUPPLY
4	D23 20WT/BR	FLASH PROGRAM ENABLE
5	D97 20WT/OR	SIREN SIGNAL OUTPUT
6	D96 20WT/LB	SIREN SIGNAL CONTROL
7	F20 20PK/WT	FUSED IGNITION SWITCH OUTPUT (RUN-START)
8	G944 20LB/BR	SIREN SIGNAL RETURN
9	-	-
10	-	-
11	G922 20GY	VTSS INDICATOR DRIVER
12	-	-
13	D25 20WT/VT	PCI BUS
14	-	-
15	L91 20WT/DB	HAZARD SWITCH SENSE
16	A600 20RD/LB	SIREN SUPPLY

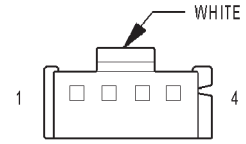

THATCHAM ALARM MODULE C2 (UNITED KINGDOM)

THATCHAM ALARM MODULE C2 (UNITED KINGDOM) - WHITE 4 WAY

CAV	CIRCUIT	FUNCTION
1	18BK/LB	REAR INTRUSION SENSOR SIGNAL
2	18BK/LB	FRONT INTRUSION SENSOR SIGNAL
3	18BK/WT	SENSOR GROUND
4	18BK/WT	SENSOR GROUND

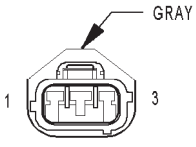

THROTTLE POSITION SENSOR (GAS)

THROTTLE POSITION SENSOR (GAS) - GRAY 3 WAY

CAV	CIRCUIT	FUNCTION
1	K900 18DB/DG	SENSOR GROUND
2	K22 18BR/OR	THROTTLE POSITION SENSOR SIGNAL
3	F855 18PK/YL	5 VOLT SUPPLY

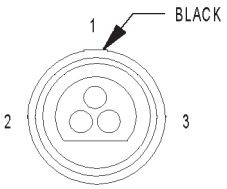

TORQUE CONVERTER CLUTCH SOLENOID (ATX)

TORQUE CONVERTER CLUTCH SOLENOID (ATX) - BLACK 3 WAY

CAV	CIRCUIT	FUNCTION
1	-	-
2	F202 18PK/GY	FUSED IGNITION SWITCH OUTPUT (RUN-START)
3	K54 18DB/WT	TORQUE CONVERTER CLUTCH SOLENOID CONTROL

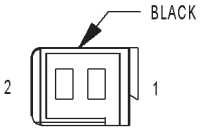

TRACTION CONTROL SWITCH

TRACTION CONTROL SWITCH - BLACK 2 WAY

CAV	CIRCUIT	FUNCTION
1	B27 20DG/WT	TRACTION CONTROL SWITCH SENSE
2	Z427 20BK/WT	GROUND

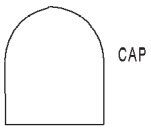

TRAILER TOW CONNECTOR (EXCEPT BUILT-UP-EXPORT)

TRAILER TOW CONNECTOR (EXCEPT BUILT-UP-EXPORT) - 4 WAY

CAV	CIRCUIT	FUNCTION
1	L74 18LG	RIGHT STOP SIGNAL
2	L77 18WT/BR	FUSED PARK LAMP RELAY OUTPUT (LEFT)
3	Z1 18BK/DG	GROUND
4	L73 18YL	LEFT STOP SIGNAL

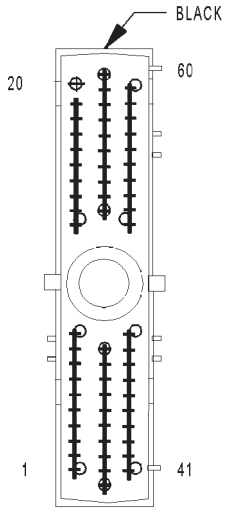

TRANSMISSION CONTROL MODULE (EATX)

TRANSMISSION CONTROL MODULE (EATX) - BLACK 60 WAY

CAV	CIRCUIT	FUNCTION
1	T1 18DG/LB	TRS T1 SENSE
2	-	-
3	T3 18DG/DB	TRS T3 SENSE
4	-	-
5	-	-
6	K24 18BR/LB	CRANKSHAFT POSITION SENSOR SIGNAL
7	D21 18WT/BR	SCI TRANSMIT
8	T751 18YL	FUSED IGNITION SWITCH OUTPUT (START)
9	T9 18DG/TN	OVERDRIVE PRESSURE SWITCH SENSE
10	T10 18DG/LG	TORQUE MANAGEMENT REQUEST SENSE
11	F1 18PK/WT	FCM OUTPUT (UNLOCK-RUN-START)
12	K22 18BR/OR	THROTTLE POSITION SENSOR SIGNAL
13	T13 18DG/VT	SPEED SENSOR GROUND
14	T14 18DG/BR	OUTPUT SPEED SENSOR SIGNAL
15	T15 18YL/BR	TRANSMISSION CONTROL RELAY CONTROL
16	T16 18YL/OR	TRANSMISSION CONTROL RELAY OUTPUT
17	T16 18YL/OR	TRANSMISSION CONTROL RELAY OUTPUT
18	-	-
19	T19 18YL/DB	2-4 SOLENOID CONTROL
20	T20 18DG/WT	LOW/REVERSE SOLENOID CONTROL
21	-	-
22	-	-
23	-	-
24	-	-
25	-	-
26	-	-
27	-	-
28	-	-
29	-	-
30	-	-
31	-	-
32	-	-
33	-	-
34	-	-
35	-	-
36	-	-
37	-	-
38	-	-
39	-	-
40	-	-
41	T41 18DG/GY (3.3L/3.8L)	TRS T41 SENSE
41	T41 18YL/DB (2.4L)	TRS T41 SENSE
42	T42 18DG/YL	TRS T42 SENSE
43	D25 18WT/VT	PCI BUS
44	-	-
45	-	-
46	D16 18WT/OR	SCI RECEIVE
47	T47 18YL/DG	2-4 PRESSURE SWITCH SENSE
48	-	-
49	-	-
50	T50 18YL/TN	LOW/REVERSE PRESSURE SWITCH SENSE
51	K900 18DB/DG	SENSOR GROUND
52	T52 18DG/WT	INPUT SPEED SENSOR SIGNAL
53	Z132 16BK/YL	GROUND
54	T54 18DG/OR	TRANSMISSION TEMPERATURE SENSOR SIGNAL

TRANSMISSION CONTROL MODULE (EATX) - BLACK 60 WAY

CAV	CIRCUIT	FUNCTION
55	T55 18YL/VT (AUTOSTICK)	AUTOSTICK/OVERDRIVE OFF MUX INPUT
56	A104 18YL/RD	FUSED B(+)
57	Z133 16BK/LG	GROUND
58	N7 18DB/OR	VEHICLE SPEED SENSOR SIGNAL
59	T59 18YL/LB	UNDERDRIVE SOLENOID CONTROL
60	T60 18YL/GY	OVERDRIVE SOLENOID CONTROL

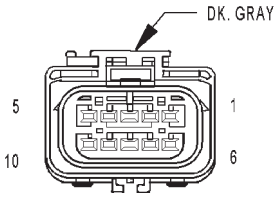

TRANSMISSION RANGE SENSOR (EATX)

TRANSMISSION RANGE SENSOR (EATX) - DK. GRAY 10 WAY

CAV	CIRCUIT	FUNCTION
1	T2 18DG/WT	TRS REVERSE SENSE
2	-	-
3	T13 18DG/VT	SPEED SENSOR GROUND
4	T54 18DG/OR	TRANSMISSION TEMPERATURE SENSOR SIGNAL
5	T41 18YL/DB (2.4L)	TRS T41 SENSE
5	T41 18DG/GY (3.3L/3.8L)	TRS T41 SENSE
6	Z252 18BK/WT	GROUND
7	T1 18DG/LB	TRS T1 SENSE
8	T3 18DG/DB	TRS T3 SENSE
9	T42 18DG/YL	TRS T42 SENSE
10	T41 18YL/DB	PARK/NEUTRAL POSITION SWITCH SENSE (TRS T41)

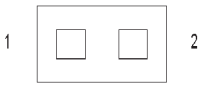

TXV SOLENOID (ATC)

TXV SOLENOID (ATC) - 2 WAY

CAV	CIRCUIT	FUNCTION
1	C200 18LB/DG	TXV SOLENOID FEED
2	C51 18DB/BR	FUSED REAR BLOWER MOTOR RELAY OUTPUT

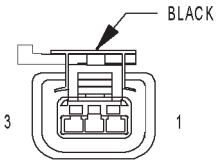

VEHICLE SPEED SENSOR (MTX/ATX)

VEHICLE SPEED SENSOR (MTX/ATX) - BLACK 3 WAY

CAV	CIRCUIT	FUNCTION
1	F202 18PK/GY (DIESEL)	FUSED IGNITION SWITCH OUTPUT (RUN-START)
1	F888 18BR/PK (2.4L)	8 VOLT SUPPLY
2	K900 20DB/DG (DIESEL)	SENSOR GROUND
2	K900 18DB/DG (2.4L)	SENSOR GROUND
3	N7 20DB/OR (DIESEL)	VEHICLE SPEED SENSOR SIGNAL
3	N7 18DB/OR (2.4L)	VEHICLE SPEED SENSOR SIGNAL

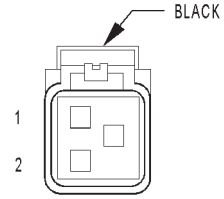

WASHER FLUID LEVEL SWITCH

WASHER FLUID LEVEL SWITCH - BLACK 2 WAY

CAV	CIRCUIT	FUNCTION
1	Z401 18BK/TN (EXCEPT BUILT-UP-EXPORT)	GROUND
1	Z401 20BK/TN (BUILT UP EXPORT)	GROUND
2	W1 18BR/TN	WASHER FLUID LEVEL SWITCH SENSE

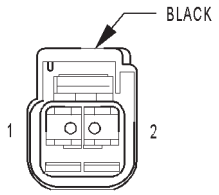

WATER IN
FUEL SENSOR
(DIESEL)

WATER IN FUEL SENSOR (DIESEL) - BLACK 2 WAY

CAV	CIRCUIT	FUNCTION
1	F853 20RD	WATER IN FUEL SENSOR SIGNAL
2	K900 18RD	SENSOR GROUND

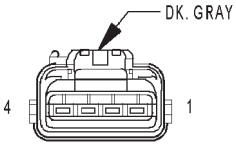

WIPER
MODULE

WIPER MODULE - DK. GRAY 4 WAY

CAV	CIRCUIT	FUNCTION
1	W3 12BR/WT	FRONT WIPER HIGH/LOW RELAY LOW SPEED OUTPUT
2	W7 20BR/GY	FRONT WIPER PARK SWITCH SENSE
3	W4 12BR/OR	FRONT WIPER HIGH/LOW RELAY HIGH SPEED OUTPUT
4	Z103 14BK/WT	GROUND

8W-91 CONNECTOR/GROUND/SPLICE LOCATION

TABLE OF CONTENTS

page

CONNECTOR/GROUND/SPLICE LOCATION
DESCRIPTION 1

CONNECTOR/GROUND/SPLICE LOCATION

DESCRIPTION

This section provides illustrations identifying connector, ground, and splice locations in the vehicle. Connector, ground, and splice indexes are provided. Use the wiring diagrams in each section for connector, ground, and splice identification. Refer to the appropriate index for the proper figure number. For items that are not shown in this section N/S is placed in the Fig. column.

CONNECTORS

CONNECTOR NAME/NUMBER	COLOR	LOCATION	FIG.
A/C Compressor Clutch	LTGY	Top of A/C Compressor	9, 10, 11, 13, 14
A/C-Heater Control C1 (MTC)	BK/RD	Rear of Control	15, 18, 20
A/C-Heater Control C2 (MTC)	BK/BL	Rear of Control	15, 18, 20
A/C Pressure Transducer	GY	At Throttle Body	9, 11, 12, 13
Accelerator Pedal Position Sensor (Diesel)	BK	At Accelerator Pedal	36
Airbag Control Module	YL/RD	Right Side of Instrument Panel	15, 19, 20
Ambient Temperature Sensor	BK	On Radiator Closure Panel	1
ATC Remote Sensor		Above ATC Control	N/S
Automatic Day/Night Mirror	BK	At Mirror	N/S
Autostick Switch	BK	Rear of Switch	16, 17, 18
Auto Temperature Control C1 (ATC)	WT	Rear of Control	N/S
Auto Temperature Control C2 (ATC)	BK	Rear of Control	N/S
Auto Temperature Control C3 (ATC)		Rear of Control	N/S
Back-Up Lamp Switch	BK	On Transmission	12
Battery Temperature Sensor (Diesel)	BK	At Battery	N/S
Blower Motor Resistor C1 (MTC)	BK	Right Side of HVAC	N/S
Blower Motor Resistor C2 (MTC)		Right Side of HVAC	N/S
Body Control Module C1	BK	Under Left Instrument Panel	35, 36
Body Control Module C2	BK/GN	Under Left Instrument Panel	35, 36
Body Control Module C3	BK/WT	Under Left Instrument Panel	35, 36
Body Control Module C4	BK/GY	Under Left Instrument Panel	15, 16, 25
Body Control Module C5	BK	Under Left Instrument Panel	15, 16, 25

CONNECTOR/GROUND/SPLICE LOCATION (Continued)

CONNECTOR NAME/NUMBER	COLOR	LOCATION	FIG.
Boost Pressure Sensor (Diesel)	BK	Top Left of Engine	N/S
Brake Fuid Level Switch	BK	On Master Cylinder	6
Brake Lamp Switch	BK	At Top Of Brake Pedal	35, 36
Brake Transmission Shift Interlock Solenoid (EATX)	BK	Near Steering Column	15, 16, 17, 26
C100	BK	Left Fender Shield	5
C101	LTGY	Left Fender Shield	5
C102 (2.4L)	BK	Top Front of Engine	10
C102 (3.3/3.8L)	BK	At Fuel Rail	13
C103 (Diesel)	BK	Left Side Engine Compartment	N/S
C106 (BUX)	BK	Near Left Headlamp Leveling Motor	N/S
C107 (BUX)	BK	Near Right Headlamp Leveling Motor	N/S
C200	GY	Left Side Instrument Panel	15, 16, 25, 35, 36
C201	YL	Left Side Instrument Panel	15, 16, 25, 35, 36
C202	GY	Right Side Instrument Panel A/C Heatrer Unit	15, 19, 24
C203 (United Kingdom)	WT	Right Side of Instrument Panel	N/S
C300 (LHD)	BK	Left Front Door Lower	N/S
C300 (RHD)	BK	Right Front Door Lower	
C301	LTGY	Left Front Door Upper	N/S
C302	LTGY	Right Front Door Upper	8, 33, 37
C303 (LHD)	BK	Right Front Door Lower	8, 37
C303 (RHD)	BK	Left Front Door Lower	33, 37
C304	YL	Left Wire Track Seat to Body	27
C305	GY	Left Wire Track Seat to Body	27
C306	YL	Right Wire Track Seat to Body	28
C307	GY	Right Wire Track Seat to Body	28
C308	BL	Left Rear Sliding Door	34
C309	GN	Right Rear Sliding Door	27, 28, 33
C310	BK	At Front Console	N/S
C311	GY	Rear A/C Switch	N/S
C312	GY	At Dome Lamp	28, 33
C313	BK	At Rear Console	N/S
C314	BK	Left Side Liftgate	42
C315	BK	Right Side Liftgate	42
C316	BK	Wire Track to Sliding Door	N/S
C317	BK	Right Sliding Door	27
C318 (Trailer Tow)	BK	Left Quarter	N/S
C319 (Except Built-up Export)		Left Side Liftgate	N/S
C320	DKGY	Driver Power Seat on Seat Harness	N/S
C321	DKGY	Under Passenger Seat	N/S
C322	BK	On Seat Harness to Body	27
C324	BK	Left Sliding Door	N/S

CONNECTOR/GROUND/SPLICE LOCATION (Continued)

CONNECTOR NAME/NUMBER	COLOR	LOCATION	FIG.
C325	BK	Right Sliding Door	27
C326	YL	At Driver Side Airbag	N/S
C327	YL	At Passenger Side Airbag	N/S
C329 (Diesel)	BK	Left Rear Engine Compartment	N/S
C330 (Diesel)	LTGY	Left Rear Engine Compartment	N/S
C331 (Diesel)	BK	Left Rear Engine Compartment	N/S
Cabin Heater Assist C1 (Diesel)	BK	Top of Engine	11, 12
Cabin Heater Assist C2 (Diesel)	BK	Top of Engine	11, 12
Camshaft Position Sensor (Gas)	BK	Rear of Cylinder Head Right Side of Engine	N/S
Camshaft Position Sensor (Diesel)	BK	Rear of Cylinder Head	11, 12
CD Changer		Behind CD Changer	N/S
Center Dome Lamp	GY	At Lamp	N/S
Center High Mounted Stop Lamp	BK	At Lamp	42
Clockspring - C1	WT	Steering Column	15, 16, 17, 18, 26
Clockspring - C2	YL	Steering Column	15, 16, 17, 18, 26
Clockspring - C3	BK	Steering Column	N/S
Clockspring - C4	BK	Steering Column	N/S
Clockspring - C5	YL	Steering Column	N/S
Clutch Pedal Interlock Switch (Diesel)	RD	At Switch/Driver Side	36
Clutch Pedal Upstop Switch (Diesel)	BK	At Switch/Driver Side	36
Controller Anti-Lock Brake	BK	Right Side of Engine Compartment	9, 10, 12, 13, 14
Crank Case Ventilation Heater (Diesel)	BK	Top of Cylinder Head	11
Crankshaft Position Sensor (Diesel)	BK	Rear of Engine	12
Crankshaft Position Sensor (Gas)	BK	Rear of Engine	9, 13
Data Link Connector	WT	Lower Instrument Panel Near Steering Column	35, 36
Diagnostic Junction Port	BK	Lower Instrument Panel Near Steering Column	35, 36
Dosing Pump	BK	Top of Engine	N/S
Driver Airbag C1	BN	Steering Column	N/S
Driver Airbag C2	BK	Steering Column	N/S
Driver Blend Actuator (ATC)	GY	On HVAC	N/S
Driver Blend Actuator (MTC)	GY	On HVAC	N/S
Driver Door Courtesy Lamp	GY	At Lamp	N/S
Driver Door Lock Switch	BK	At Switch	N/S
Driver Heated Seat Back	GN	At Seat	N/S
Driver Heated Seat Cushion	BK	At Seat	N/S
Driver Heated Seat Module C1	GY	Driver Heated Seat	N/S
Driver Heated Seat Module C2	GY	Driver Heated Seat Back	N/S
Driver Heated Seat Module C3	GN	At Seat	N/S

CONNECTOR/GROUND/SPLICE LOCATION (Continued)

CONNECTOR NAME/NUMBER	COLOR	LOCATION	FIG.
Driver Power Seat Front Riser Motor	RD	At Seat	N/S
Driver Power Seat Horizontal Motor	BK	At Seat	N/S
Driver Power Seat Rear Riser Motor	RD	At Seat	N/S
Driver Power Seat Recliner Motor	GN	At Seat	N/S
Driver Power Seat Switch	GN	At Switch	N/S
Driver Power Window Motor	RD	At Motor	N/S
Driver Power Window Switch	GN	At Switch	N/S
Driver Power Window Switch (RHD)	NAT	At Switch	N/S
Driver Seatbelt Switch	WT	At Switch on Seat Harness	N/S
Driver Seatbelt Tensioner		On Seat Harness	N/S
EGR Solenoid (Diesel)	BK	Above Transmission Right Side of Engine	N/S
EGR Solenoid	GY	Above Transmission Right Side of Engine	9, 10, 11, 13
Electric Wiper De-Icer-C1	WT	Right Side Instrument Panel	15, 1923
Electric Wiper De-Icer-C2	WT	Left Side Instrument Panel	15, 16, 22
Engine Control Module C1 (Diesel)	BK	Right Side of Engine	11
Engine Control Module C2 (Diesel)	BK	Right Side of Engine	11
Engine Coolant Temperature Sensor (Gas)	BK	On Cylinder Block	N/S
Engine Coolant Temperature Sensor (Diesel)	BL	On Cylinder Block	11
Engine Oil Pressure Sensor (Diesel)	BK	Rear of Engine	12
Engine Oil Pressure Switch (Gas)	LTGN	On Cylinder Block	9
Engine Oil Temperature Sensor (Diesel)	BK	Rear of Engine	12
EVAP/Purge Solenoid	BK	Right Motor Mount	9, 13
Evaporator Temperature Sensor	BK	Right Side of HVAC	N/S
Floor Console Lamp	BK	At Lamp	N/S
Floor Console Power Outlet	RD	At Front Console	N/S
Front Blower Module C1 (ATC)	BK	On HVAC	N/S
Front Blower Module C2 (ATC)	BK	On HVAC	N/S
Front Cigar Lighter	RD/NAT	Rear of Lighter	15, 18, 20
Front Reading Lamps/Switch	BK	At Switch	N/S
Front Washer Pump Motor	BK	Right Fender Well	3
Fuel Heater (Diesel)	BK	Left Rear Engine Compartment	N/S
Fuel Injector No.1	BK	At Fuel Injector	N/S
Fuel Injector No.1 (Diesel)	BK	At Fuel Injector	11
Fuel Injector No.2	BK	At Fuel Injector	N/S
Fuel Injector No.2 (Diesel)	BK	At Fuel Injector	11

CONNECTOR/GROUND/SPLICE LOCATION (Continued)

CONNECTOR NAME/NUMBER	COLOR	LOCATION	FIG.
Fuel Injector No.3	BK	At Fuel Injector	N/S
Fuel Injector No.3 (Diesel)	BK	At Fuel Injector	11
Fuel Injector No.4	BK	At Fuel Injector	N/S
Fuel Injector No.4 (Diesel)	BK	At Fuel Injector	11
Fuel Injector No.5	BK	At Fuel Injector	N/S
Fuel Injector No.6	BK	At Fuel Injector	N/S
Fuel Pump Module	LTGY	Side of Fuel Tank	N/S
Fuel Pressure Sensor (Diesel)	BK	Top Left of Engine	11
Generator	BK	Rear of Generator	10, 11, 13, 14
Glove Box Lamp	BL	Rear of Glove Box	18, 24
Glow Plug Relay (Diesel)	BK	Near Battery	N/S
Halo Lamp	WT	Steering Column	15, 16, 17, 18, 26
Headlamp Switch	BK	Rear of Switch	15, 16, 25
Headlamp Washer Pump Motor		At Motor	N/S
High Note Horn	BK	Left Frame Rail	5
High Pressure Fuel Pump (Diesel)		Rear of Pump	11
Hood Ajar Switch	BK	Left Fender	6
Idle Air Control Motor (2.4L)	BK	On Throttle Body	9
Idle Air Control Motor (3.3/3.8L)	BK	On Throttle Body	13
Ignition Coil Pack 2.4L	BK	Top of Valve Cover	9, 10
Ignition Coil Pack 3.3L, 3.8L	DKGY	Top of Engine	14
Ignition Switch	BK	Rear of Switch at Steering Column	15, 16, 17, 18, 26
Inlet Air Temperature Sensor	BK	Top Left of Engine	N/S
Instrument Cluster	BK	Rear of Cluster	15, 16, 23
Instrument Panel Switch Bank	BK	Right Center of Instrument Panel	15, 18, 20
Instrument Panel Power Outlet	NAT	Center of Instrument Panel	N/S
Integrated Power Module C1	LTGN	Left Fender Shield	7
Integrated Power Module C2	GN/BL	Left Fender Shield	7
Integrated Power Module C3 (Diesel)	YL/RD	Left Fender Shield	7
Integrated Power Module C3 (Gas)	NAT/RD	Left Fender Shield	7
Integrated Power Module C4	BL	Left Fender Shield	7
Integrated Power Module C5	BK	Left Fender Shield	7
Integrated Power Module C6	NAT	Left Fender Shield	7
Integrated Power Module C7	BK/RD	Left Fender Shield	7
Integrated Power Module C8	OR	Left Fender Shield	7
Integrated Power Module C9	BK	Left Fender Shield	7
Knock Sensor	GY	Front of Cylinder Block	N/S
Leak Detection Pump	LTGY	At Pump	9, 10 14
Left B Pillar Switch	GY	Left B Pillar	34
Left Cinch/Release Motor	GY	Left Sliding Door	N/S
Left Combination Relay	BK	Left Rear Quarter Panel	N/S

CONNECTOR/GROUND/SPLICE LOCATION (Continued)

CONNECTOR NAME/NUMBER	COLOR	LOCATION	FIG.
Left Cylinder Lock Switch	BK	At Switch	N/S
Left Door Speaker	BK	At Speaker	N/S
Left Fog Lamp	WT	At Lamp	N/S
Left Front Door Ajar Switch	BK	At Switch	N/S
Left Front Door Lock Motor/Ajar Switch	BK	Left Door	N/S
Left Front Park/Turn Signal Lamp	BK	At Lamp	1, 5
Left Front Wheel Speed Sensor	BK	Left Fender Side Shield	N/S
Left Full Open Switch	BK	Left Sliding Door	N/S
Left Headlamp	BK	At Lamp	1, 5
Left Headlamp Leveling Motor	WT	At Motor	N/S
Left High Beam Lamp	BK	At Lamp	N/S
Left Instrument Panel Speaker	BK	At Speaker	15, 16, 22
Left Liftgate Flood Lamp	GY	At Lamp	42
Left Low Beam Lamp	BK	At Lamp	N/S
Left Mid Reading Lamp	GY	At Lamp	N/S
Left Park Lamp	BK	At Lamp	N/S
Left Power Mirror	BK	At Mirror	22
Left Rear Lamp Assembly	BK	At Lamp	40
Left Rear Reading Lamp	GY	At Lamp	N/S
Left Rear Speaker	BK	At Speaker	40
Left Rear Vent Motor	NAT	At Motor	39, 40
Left Rear Wheel Speed Sensor	BK	Center Rear of Floor Pan	40
Left Remote Radio Switch		Steering Wheel	N/S
Left Repeater Lamp	GY	Left Front Fender	4
Left Seat Airbag	YL	Left Seat	N/S
Left Side Impact Airbag Control Module	YL/RD	Left B Pillar	34
Left Sliding Door Control Module C1	BK	Left Sliding Door	N/S
Left Sliding Door Control Module C2	BK/RD	Left Sliding Door	N/S
Left Sliding Door Latch Sensing Switch	BK	Left Sliding Door	N/S
Left Sliding Door Lock Motor	BK	Left Sliding Door	N/S
Left Sliding Door Lock Motor/Ajar Switch	BK	Left Sliding Door	N/S
Left Sliding Door Motor	BK	Left Sliding Door	N/S
Left Speed Control Switch	WT	Steering Wheel	N/S
Left Stop/Turn Signal Relay	BK	Left Quarter Panel	N/S
Left Turn Signal Lamp	OR	AT Lamp	N/S
Left Visor/Vanity Lamp	BK	At Lamp	N/S
License Lamp	DKGY	At Lamp	42
Lift Pump Motor	BK	Left Rear Engine Compartment	N/S

CONNECTOR/GROUND/SPLICE LOCATION (Continued)

CONNECTOR NAME/NUMBER	COLOR	LOCATION	FIG.
Liftgate Ajar Switch (Manual Release)	BK	At Latch	42
Liftgate Ajar Switch (Power Release)	BK	Lower Liftgate	42
Liftgate Cinch/Release Motor	BL	Liftgate	N/S
Liftgate Cylinder Lock Switch	BK	At Switch	42
Liftgate Left Pinch Sensor	BK	Left Side of Liftgate	N/S
Liftgate Right Pinch Sensor	BK	Right Side of Liftgate	N/S
Low Note Horn	BK	Left Frame Rail	5
Manifold Absolute Pressure Sensor	BK	On Intake	10
Mass Air Flow Sensor (Diesel)	OR	Top of Engine	11, 12
Memory Seat/Mirror Module C1	GY	Under Driver Seat	N/S
Memory Seat/Mirror Module C2	GY	Under Driver Seat	N/S
Memory Seat/Mirror Module C3	WT	Under Driver Seat	N/S
Memory Seat/Mirror Module C4	GY	Under Driver Seat	N/S
Memory Seat Front Vertical Motor	RD	Under Seat	N/S
Memory Seat Front Vertical Position Sensor	BK	Under Seat	N/S
Memory Seat Horizontal Motor	BK	Under Seat	N/S
Memory Seat Horizontal Position Sensor	BK	Under Seat	N/S
Memory Seat Rear Vertical Motor	RD	Under Seat	N/S
Memory Seat Rear Vertical Position Sensor	BK	Under Seat	N/S
Memory Seat Recliner Motor	GN	Under Seat	N/S
Memory Seat Recliner Position Sensor	BK	Under Seat	N/S
Memory Seat Switch	BK	At Switch Driver Door	N/S
Message Center	WT	Rear of Message Center	15, 16, 23
Mode Door Actuator	GY	Left Side of HVAC	N/S
Multi Function Switch	BK	At Steering Column	15, 16, 17, 18, 26
Output Speed Sensor	GY	Front of Transmission	14
Overhead Console	BK	Front of Console	N/S
Oxygen Sensor 1/1 Upstream	BK	Rear of Engine	9, 10, 14
Oxygen Sensor 1/2 Downstream	BK	Rear of Engine	9, 10, 14
Park/Neutral Positon Switch	BK	Front of Transmission	10
Passenger Airbag	YL	Passenger Side of Instrument Panel	15, 18, 19 24
Passenger Blend Door Actuator		On HVAC	N/S
Passenger Door Courtesy Lamp	BK	At Lamp	37
Passenger Door Lock Switch	BK	At Switch	37
Passenger Folding Mirror Relay	BL	Right Kick Panel	N/S
Passenger Heated Seat Back	GN	At Seat	N/S
Passenger Heated Seat Cushion	BK	At Seat	N/S
Passenger Heated Seat Module C1	GY	At Heated Seat	N/S

CONNECTOR/GROUND/SPLICE LOCATION (Continued)

CONNECTOR NAME/NUMBER	COLOR	LOCATION	FIG.
Passenger Heated Seat Module C2	GY	At Heated Seat Back	N/S
Passenger Heated Seat Module C3	GN	At Heated Seat	N/S
Passenger Power Seat Front Riser Motor	RD	Under Seat	N/S
Passenger Power Seat Horizontal Motor	BK	Under Seat	N/S
Passenger Power Seat Rear Riser Motor	RD	Under Seat	N/S
Passenger Power Seat Recliner Motor	GN	Under Seat	N/S
Passenger Power Seat Switch	GN	At Switch	N/S
Passenger Power Window Motor	RD	At Motor	37
Passenger Power Window Switch	BK	At Switch	37
Passenger Seatbelt Switch		On Seat Harness	N/S
Passenger Seatbelt Tensioner		On Seat Harness	N/S
Pedal Adjust Module		At Module	N/S
Pedal Adjust Switch		At Switch	N/S
Power Folding Mirror Switch	BK	Near Steering Column	26
Power Liftgate Module C1	BK	Left Quarter	39, 40
Power Liftgate Module C2	BK/RD	Left Quarter	39, 40
Power Liftgate Motor	BK	Left Quarter	40
Power Mirror Switch	BK	Rear of Switch	25
Power Outlet	NAT	Instrument Panel	15, 18, 20
Power Seat Circuit Breaker	GY	Under Seat	N/S
Powertrain Control Module C1	GY/BK	LT Fender Side Shield	N/S
Powertrain Control Module C2	GY	LT Fender Side Shield	N/S
Power Window Circuit Breaker	GY	Left Side Kick Panel	35 36
Radiator Fan No.1	BK	Left Side At Motor	1
Radiator Fan No.1 (Diesel)	GY	Left Side At Motor	2
Radiator Fan No.2	BK	Right Side At Motor	1
Radiator Fan No.2 (Diesel)	GY	Right Side At Motor	N/S
Radiator Fan Relay	BK	Top of Left Front Frame Rail	1
Radiator Fan Relay No. 1 (Diesel)	BL	Left Front Engine Compartment	2
Radiator Fan Relay No. 2 (Diesel)	BL	Left Front Engine Compartment	2
Radiator Fan Relay No. 3 (Diesel)	BL	Left Front Engine Compartment	2
Radio C1	GY	Rear of Radio	15
Radio C2	BK	Rear of Radio	15
Rear A/C-Heater Unit	LT/GN	Right Quarter Panel	N/S
Rear Automatic Temperature Control Switch (ATC)	BK	Rear of Switch	34
Rear Blower Front Control Switch	BK	Rear of Switch	N/S
Rear Blower Motor Power Module C1		Right Quarter	N/S

CONNECTOR/GROUND/SPLICE LOCATION (Continued)

CONNECTOR NAME/NUMBER	COLOR	LOCATION	FIG.
Rear Blower Motor Power Module C2		Right Quarter	N/S
Rear Blower Rear Control Switch C1		Overhead	N/S
Rear Blower Rear Control Switch C2		Overhead	N/S
Rear Power Outlet	RD	Left Quarter Panel	40
Rear Temperature Motor		Right Quarter	N/S
Rear Washer Pump Motor	BK	Right Fender Well	3
Rear Wiper Motor	GY	At Motor	42
Recirculation Door Actuator	GY	Right Side of HVAC	N/S
Remote Keyless Entry Antenna (JAPAN)	BK	Right Upper Instrument Panel	23
Remote Keyless Entry Module	BK/RD	Top Left of I.P.	15, 16
Right B-Pillar Switch	GY	Right B Pillar	33
Right Cinch/Release Motor	GY	Rear of Sliding Door	38
Right Combination Relay	BK	Left Quarter Panel	N/S
Right Cylinder Lock Switch	BK	Right Front Door	37
Right Door Speaker	BK/RD	At Speaker	N/S
Right Fog Lamp	WT	At Lamp	3
Right Front Door Ajar Switch	BK	At B Pillar	N/S
Right Front Door Lock Motor/Ajar Switch	BK	Right Front Door	37
Right Front Park/Turn Signal Lamp	BK	At Lamp	1, 3
Right Front Wheel Speed Sensor	GY	Right Fender Side Shield	9, 12, 13
Right Full Open Switch	BK	Right Sliding Door	38
Right Headlamp	BK	At Lamp	1, 3
Right Headlamp Leveling Motor	WT	At Right Headlamp	N/S
Right High Beam Lamp	BK	At Right Headlamp	N/S
Right Instrument Panel Speaker	BK	At Speaker	15, 18, 19
Right Liftgate Flood Lamp	BK	At Lamp	42
Right Low Beam Lamp	BK	At Right Headlamp	N/S
Right Mid Reading Lamp	GY	At Lamp	N/S
Right Park Lamp	BK	AT Lamp	N/S
Right Power Mirror	BK	At Mirror	15, 19, 23
Right Rear Lamp Assembly	BK	At Lamp	41
Right Rear Pillar Speaker	BK	At Speaker	41
Right Rear Reading Lamp	GY	At Lamp	N/S
Right Rear Speaker	BK/RD	At Speaker	41
Right Rear Vent Motor	NAT	At Motor	41
Right Rear Wheel Speed Sensor	BK	Center Rear of Floor Pan	41
Right Remote Radio Switch	BK	At Steering Wheel	N/S
Right Repeater Lamp	GY	Right Front Fender	33

CONNECTOR/GROUND/SPLICE LOCATION (Continued)

CONNECTOR NAME/NUMBER	COLOR	LOCATION	FIG.
Right Seat Airbag	YL	At Passenger Seat	N/S
Right Side Impact Airbag Control Module	YL/RD	Right B Pillar	33
Right Sliding Door Control Module C1	BK	Rear of Door	38, 39
Right Sliding Door Control Module C2	BK/RD	Rear of Door	38, 39
Right Sliding Door Latch Sensing Switch	BK	At Sliding Door	38
Right Sliding Door Lock Motor	BK	Rear of Door	38
Right Sliding Door Lock Motor/Ajar Switch	BK	At Latch	N/S
Right Sliding Door Motor	BK	At Sliding Door	38
Right Speed Control Switch	BK	At Steering Wheel	N/S
Right Stop/Turn Signal Relay	BK	LT Quarter Panel	N/S
Right Turn Signal Lamp	OR	At Lamp	N/S
Right Visor/Vanity Lamp	BK	At Lamp	N/S
Sentry Key Immobilizer Module	BK	At Steering Column	15, 16, 17, 18, 26
Siren (United Kingdom)	BK	Left Front Body	N/S
Solenoid/Pressure Switch Assembly (EATX)	BK	Side of Transmission	N/S
Speed Control Servo	BK	Near Controller Antilock Brake	14
Thatcham Alarm Module C1	BK	Top Right Side of Instrument Panel Near Speaker	N/S
Thatcham Alarm Module C1	WT	Top Right Side of Instrument Panel Near Speaker	N/S
Throttle Position Sensor	GY	On Throttle Body	9, 13
Torque Converter Clutch Solenoid	BK	Front of Transmission	10
Traction Control Switch	BK	Rear of Swtich	16, 17, 26
Trailer Tow Connector	BK	Left Quarter Panel	N/S
Transmission Control Module	BK	Top of Transmission	14
Transmission Range Sensor	GY	Top of Transmission	14
Vehicle Speed Sensor	BK	Rear of Transmission	9, 12
Washer Fluid Level Switch	BK	Bottom of Reservoir	3
Water in Fuel Sensor (Diesel)		Left Rear Engine Compartment	N/S
Wiper Module	BK	Left Side Cowl	6

CONNECTOR/GROUND/SPLICE LOCATION (Continued)

GROUNDS

GROUND NUMBER	LOCATION	FIG.
G100	Body Ground Near Powertrain Control Module	N/S
G101	Above Starter	10
G102	Left Headlamp Area	1
G103	Above Starter	10
G200	Right Side of Instrument Panel	15, 19, 24
G201	Right Side of Instrument Panel	15, 19, 24
G202	Near Radio	N/S
G300	Left B Pillar	27
G301	Right B Pillar	28, 33
G302	Left Rear Quarter	N/S
G400	Liftgate Ground	N/S

SPLICES

SPLICE NUMBER	LOCATION	FIG.
S101	800mm from T/O for G102	1
S102	500mm from T/O for G102	1
S103 (2.5L)	Between T/O for Battery Temperature Sensor and T/O for C102	11
S103 (3.3L/3.8L)	Near T/O for C100	N/S
S104	Near T/O for G102	1
S105 (3.3L/3.8L)	Near T/O for Battery (+)	N/S
S106 (2.4L)	40mm from T/O for Torque Converter Clutch Solenoid	10
S106 (2.5L)	Near T/O for Battery Temperature Sensor	11
S106 (3.3L/3.8L)	Near T/O for G103	14
S107 (2.4L)	In T/O for EGR Solenoid	10
S107 (2.5L)	Between T/O for Engine Starter Motor and T/O for Engine Control Module C1	12
S107 (3.3L/3.8L)	In T/O for EGR Solenoid	14
S108 (3.3L/3.8L)	Near T/O for Powertrain Control Module	N/S
S109 (3.3L/3.8L)	Near T/O for Camshaft Position Sensor	N/S
S110	Near T/O to G102	N/S
S111 (2.4L)	Near T/O for C101	N/S
S111 (2.5L)	Near T/O for Battery (-)	N/S
S111 (3.3L/3.8L)	Near T/O for Powertrain Control Module	N/S
S112	Near T/O for Intelligent Power Module - C3	N/S
S113 (2.4L)	Near T/O for Park/Neutral Position Switch	N/S
S114 (3.3L/3.8L)	In T/O to Transmission Control Module	N/S
S115 (3.3L/3.8L)	In T/O to Transmission Control Module	N/S
S116 (2.4L)	180mm from T/O for Torque Converter Clutch Solenoid	10
S116 (2.5L)	Near T/O for Mass Air Flow Sensor	12
S116 (3.3L/3.8L)	Near T/O for Ignition Coil Pack	14

CONNECTOR/GROUND/SPLICE LOCATION (Continued)

SPLICE NUMBER	LOCATION	FIG.
S117 (2.4L)	Neat T/O for G101 and G103	10
S117 (3.3L/3.8L)	Near T/O for Output Speed Sensor	14
S118 (2.4L)	Near T/O for Knock Sensor	10
S119 (2.5L)	Near T/O for Engine Starter Motor	11
S120 (2.4L)	Near T/O for Oxygen Sensors	9
S120 (3.3L/3.8L)	Near T/O for Oxygen Sensors	14
S121 (3.3L/3.8L)	Near T/O for Output Speed Sensor	14
S122 (2.4L)	In T/O to Engine Starter Motor	10
S122 (3.3L/3.8L)	In T/O to Engine Starter Motor	14
S123	In T/O to Low Note Horn	5
S124 (2.4L)	Near T/O for Fuel Injector No.2	N/S
S124 (3.3L/3.8L)	Near T/O for Fuel Injector No.5 and No.6	N/S
S125 (2.4L)	In T/O for Manifold Absolute Pressure Sensor	N/S
S126	In Right Headlamp Leveling Assembly	N/S
S127 (2.5L)	Near T/O for Engine Starter Motor	N/S
S128 (2.5L)	Near T/O for Engine Starter Motor	11
S129 (2.5L)	Near T/O for Battery (+)	N/S
S130 (2.5L)	Near T/O for Battery (+)	N/S
S131 (3.3L/3.8L)	Near T/O for Transmission Control Module	N/S
S132 (2.5L)	Near T/O for Battery (+)	N/S
S133 (2.5L)	Near T/O for Intelligent Power Module C3	N/S
S134	Near T/O for Controller Antilock Brake	N/S
S135 (2.5L)	Near T/O for Glow Plug No.2	11
S136 (2.5L)	Between T/O for Radiator Fan No.2 and T/O for G102	N/S
S137 (2.5L)	Near T/O for A/C Compressor Clutch	11
S138 (2.5L)	Between T/O for Radiator Fan No.2 and T/O for G102	N/S
S139 (2.5L)	Between T/O for Engine Starter Motor and T/O for Engine Control Module C1	12
S141 (2.4L)	Near T/O for Powertrain Control Module	N/S
S141 (2.5L)	Near /t/O for G100	N/S
S141 (3.3L/3.8L)	Near T/O for Powertrain Control Module	N/S
S142 (3.3L/3.8L)	Near T/O for A/C Compressor Clutch	14
S143 (2.5L)	Near T/O for Engine Control Module C1	11
S143 (3.3L/3.8L)	Near T/O for Intelligent Power Module - C3	N/S
S144 (2.5L)	Between T/O for Battery Temperature Sensor and T/O for C103	11
S145 (2.5L)	Near T/O for Battery (+)	N/S
S148 (2.5L)	Near T/O for Engine Starter Motor	11
S150 (2.5L)	Between T/O for Battery Temperature Sensor and T/O for C103	N/S
S151 (2.5L)	Near T/O for Radiator Fan Relay No.1	2
S152 (2.5L)	Near T/O for Left Fog Lamp	N/S
S157 (2.5L)	Near T/O for Glow Plug No.1	11

CONNECTOR/GROUND/SPLICE LOCATION (Continued)

SPLICE NUMBER	LOCATION	FIG.
S177	In Right Headlamp Wiring Assembly	N/S
S179	In Left Headlamp Wiring Assembly	N/S
S187 (2.5L)	Near T/O for Engine Control Module C1	11
S188 (2.5L)	Near T/O for Radiator Fan Relay No.1	2
S201	In T/O to Instrument Panel Speaker	15, 21
S202	Near T/O for Instrument Panel Switch Bank	15, 21
S203	Near T/O for Instrument Panel Switch Bank	15, 21
S204	Near T/O to Instrument Panel Speaker	15, 21
S205	Near T/O for C201	15
S206	Near T/O for Instrument Cluster	15
S207	In A/C Unit Assembly	N/S
S208 (RHD)	Between T/O for Antenna Connector and T/O for Front Cigar Lighter	21
S209 (RHD)	Between T/O for Front Cigar Lighter and T/O for Brake Transmission Shift Interlock Solenoid	21
S210 (RHD)	Near T/O for C203	21
S211	In Steering Column Wiring Assembly	N/S
S212	In Steering Column Wiring Assembly	N/S
S302	In Floor Pan Track Wiring	31
S303	In T/O to Data Link Connector	31
S304	Near T/O for C307	32
S305	Near T/O for Memory Seat/Mirror Module - C2	N/S
S306	In Floor Pan Track Wiring	32
S307	Near T/O for Memory Power Seat Switch	N/S
S308	In Floor Pan Track Wiring	31
S309	In Floor Pan Track Wiring	31
S310	Near T/O for C301	30
S311	In Floor Pan Track Wiring	29
S312	Near T/O for C320	N/S
S313	Near T/O for Power Liftgate Module	40
S314	In Floor Pan Track Wiring	29
S315	In Floor Pan Track Wiring	29
S316	In Floor Pan Track Wiring	29
S317	Near T/O for C101	30
S318	Near T/O for Power Seat Circuit Breaker	N/S
S319	In Floor Pan Track Wiring	32
S320	Near T/O for C200	31
S321	In T/O to Data Link Connector	31
S322	Near T/O for C301	30
S323	In Floor Pan Track Wiring	31
S324	In Floor Pan Track Wiring	29
S325	In Floor Pan Track Wiring	29
S326	Near T/O for C101	30

CONNECTOR/GROUND/SPLICE LOCATION (Continued)

SPLICE NUMBER	LOCATION	FIG.
S327	Near Left Side Impact Airbag Module	31
S328 (RS)	In Floor Pan Track Wiring	32
S329	Near T/O to Left Rear Pillar Speaker	40
S330	Near T/O for Power Liftgate Module	40
S331	Near T/O for Power Liftgate Motor	40
S332	In Floor Pan Track Wiring	29
S333 (RS)	In Floor Pan Track Wiring	32
S334	Near T/O to G301	29
S335	Near T/O for Left Rear Reading Lamp	N/S
S336	Near T/O for Left Rear Reading Lamp	29
S337	Near T/O for Right Mid Reading Lamp	N/S
S338	Near T/O for Right Visor/Vanity Lamp	N/S
S339	Near T/O for C312	N/S
S340	Near T/O for Passenger Power Window Switch	37
S342 (LHD)	Near T/O for Passenger Power Window Motor	37
S343 (LHD)	Near T/O for Driver Power Window Motor	37
S344	In T/O to Right Sliding Door Control Module C2	39
S345	Near T/O for Right Sliding Door Motor	39
S346	Near T/O for Driver Power Window Switch	37
S347	Near T/O for Right Sliding Door Lock Motor	39
S348	Near T/O for Left Sliding Door Lock Motor	39
S349	In T/O to Left Sliding Door Control Module - C2	39
S350	Near T/O for Left Sliding Door Motor	39
S351	Near T/O for Liftgate Cylinder Lock Switch	42
S352	Near T/O for Liftgate Cinch/Release Motor	42
S353	Near T/O for C318	40
S354 (RG)	Near T/O for C301	31
S354 (RS)	Near T/O for Driver Heated Seat Module	N/S
S355	Near T/O for Passenger Heated Seat Module	N/S
S356 (RG)	In Floor Pan Track Wiring	31
S356 (RS)	Near T/O for Passenger Heated Seat Back	N/S
S358 (RG)	In T/O for Data Link Connector	N/S
S364 (RHD)	Near T/O for Passenger Power Window Window	37
S365 (LHD)	Near T/O for Driver Power Window Window	37
S366	In Passenger Power Heated Seat Wiring Assembly	N/S
S368	Near T/O for C101	30
S370	In T/O to Pedal Adjust Module	N/S
S371	In T/O to Power Window Switch	N/S

CONNECTOR/GROUND/SPLICE LOCATION (Continued)

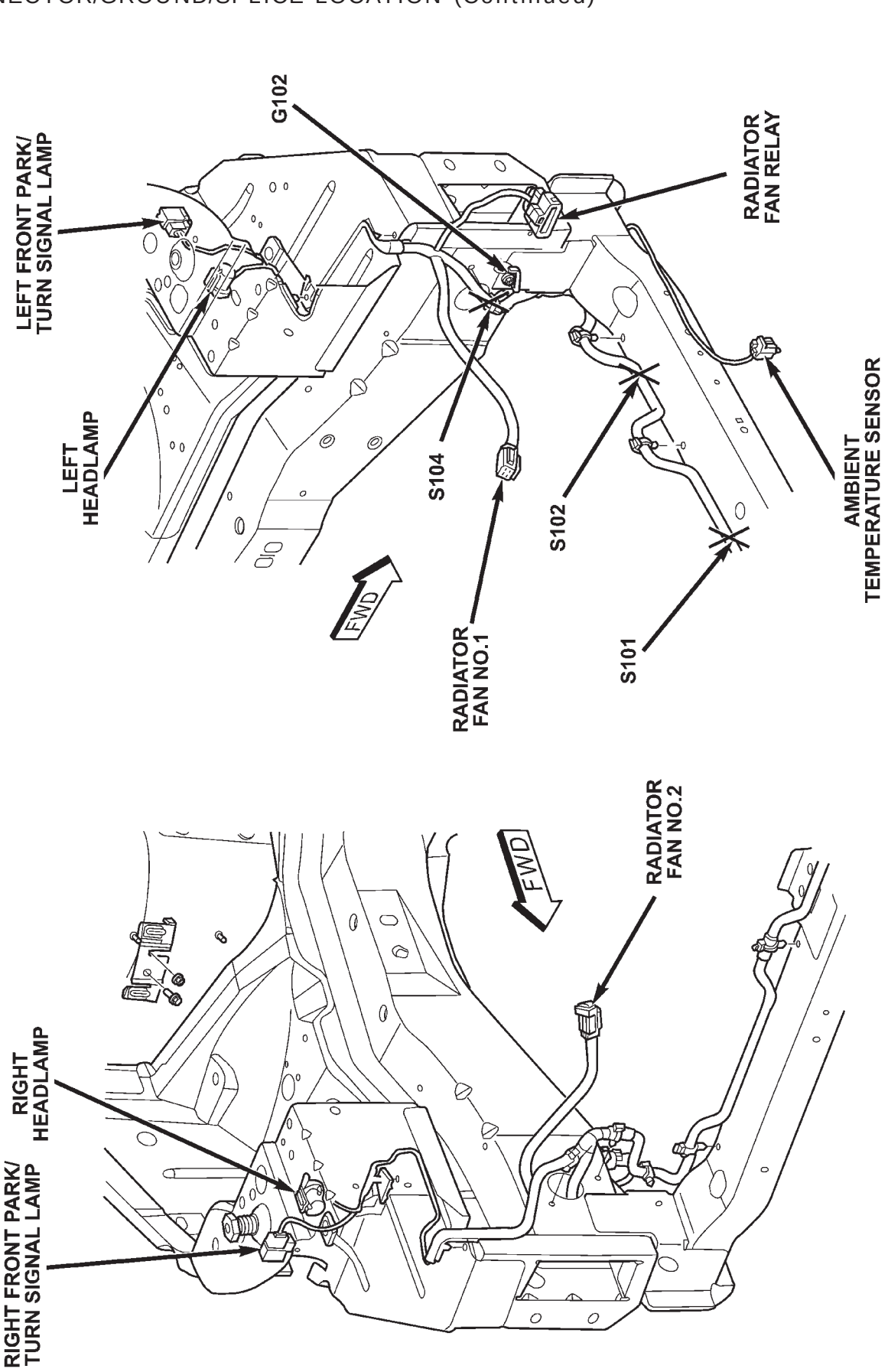

Fig. 1 HEADLAMP CONNECTORS

CONNECTOR/GROUND/SPLICE LOCATION (Continued)

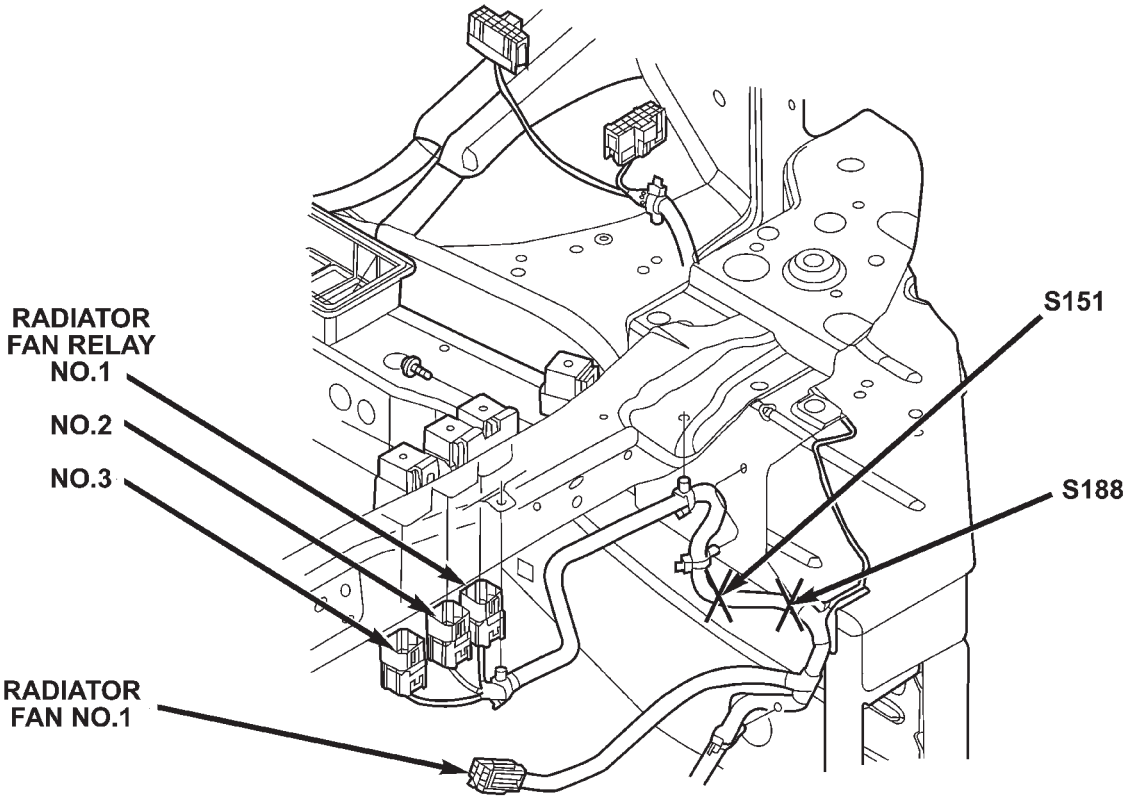

Fig. 2 LEFT FRONT ENGINE COMPARTMENT

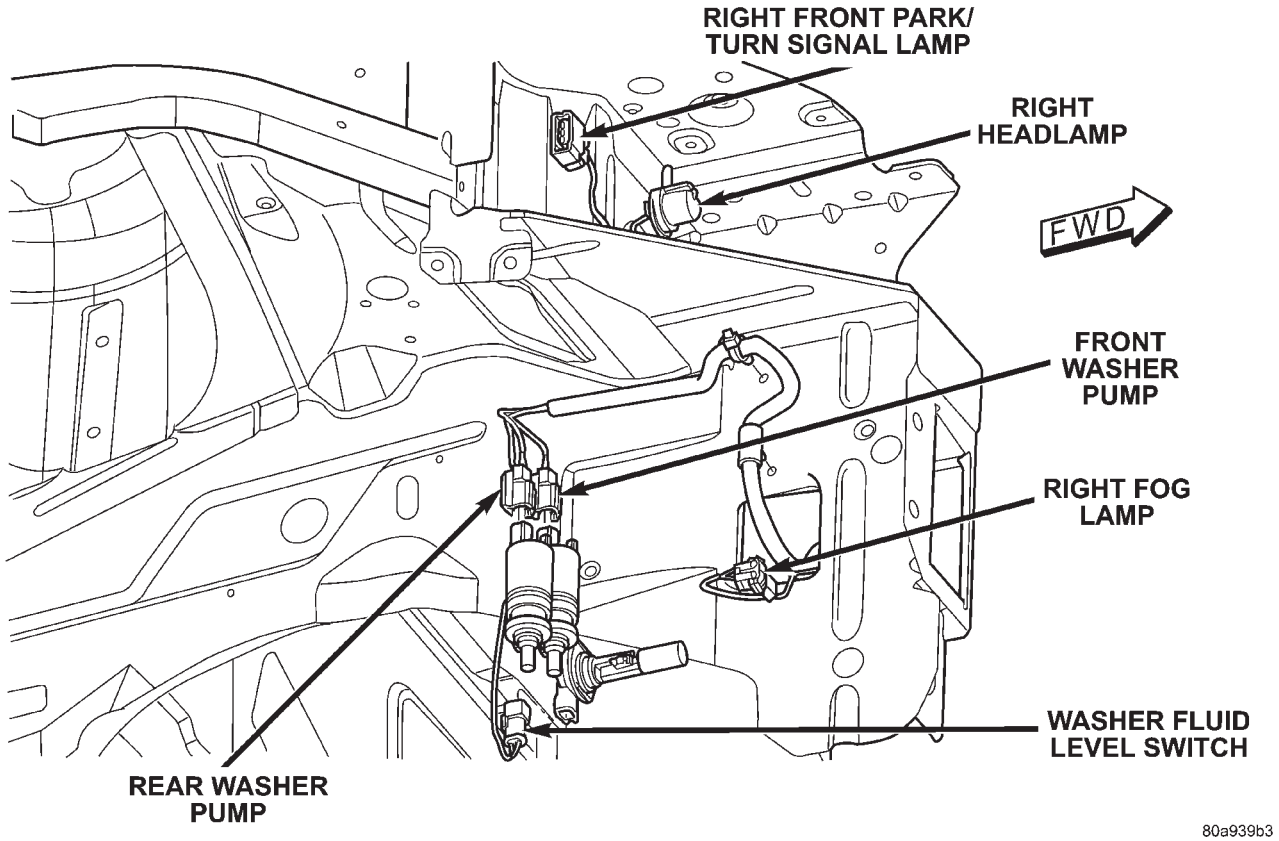

Fig. 3 WASHER PUMP CONNECTORS

CONNECTOR/GROUND/SPLICE LOCATION (Continued)

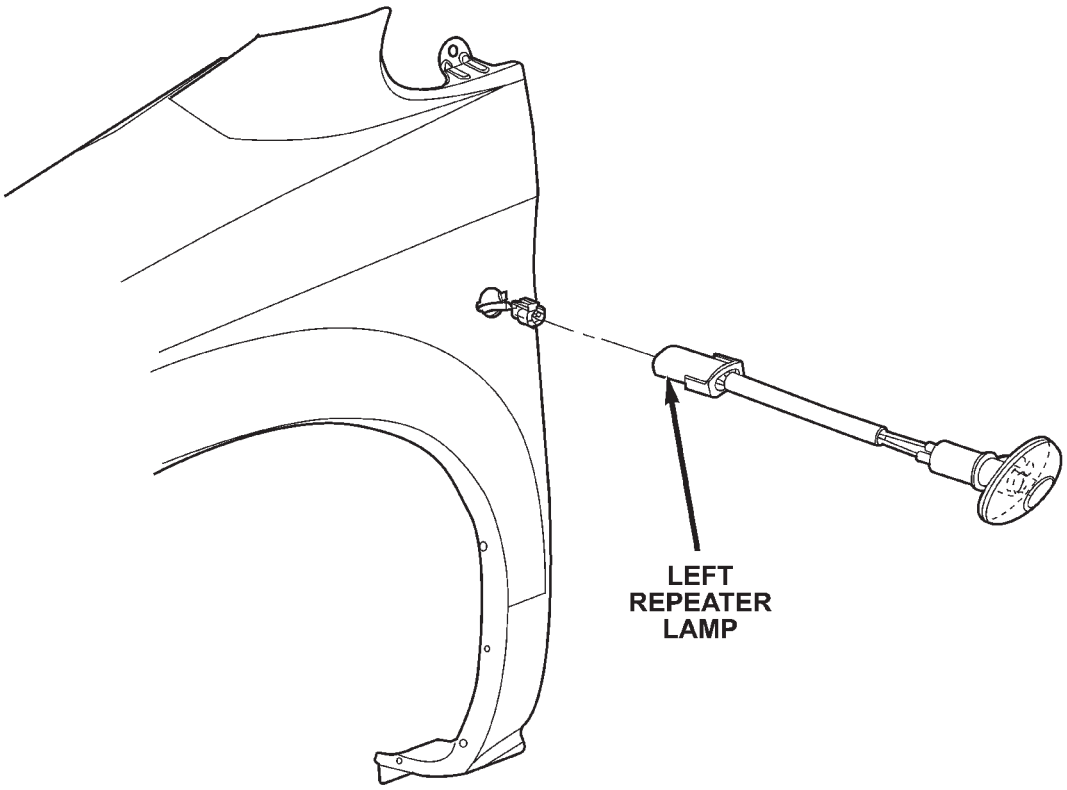

80bd2cab

Fig. 4 LEFT REPEATER LAMP

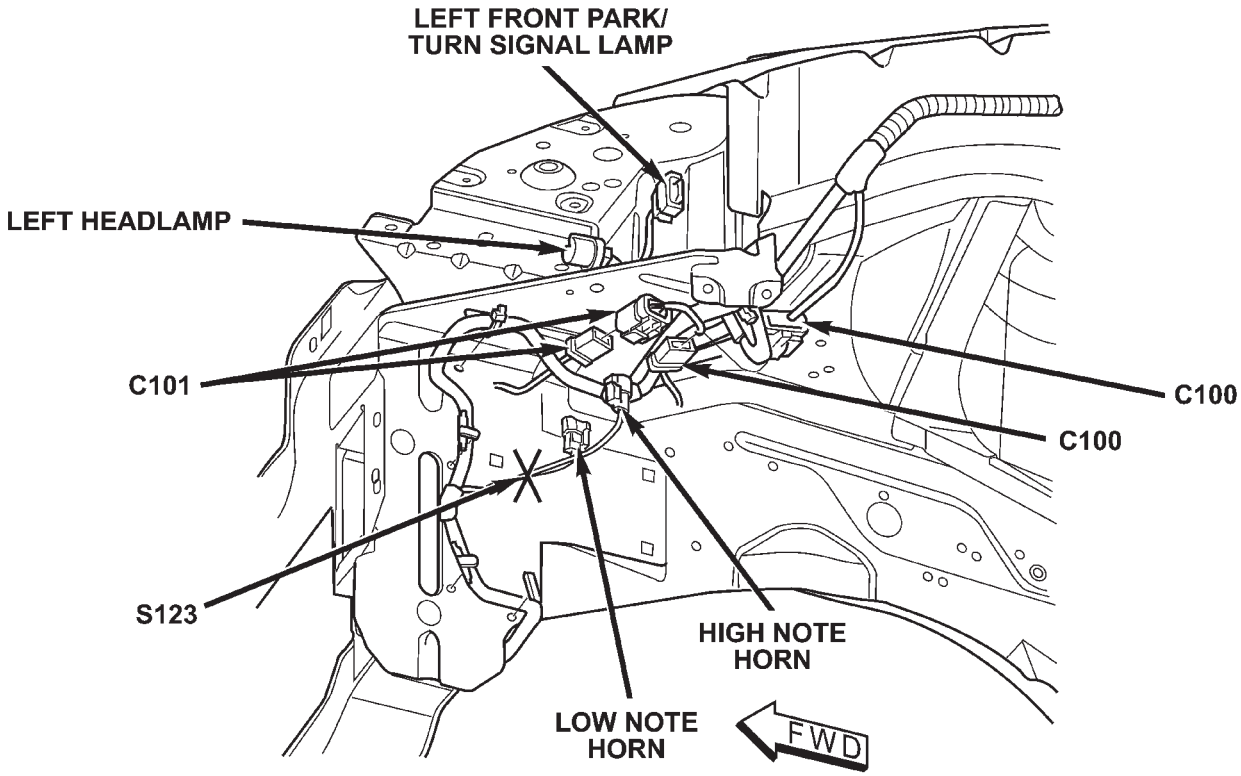

80d54187

Fig. 5 LEFT FENDER SHIELD

CONNECTOR/GROUND/SPLICE LOCATION (Continued)

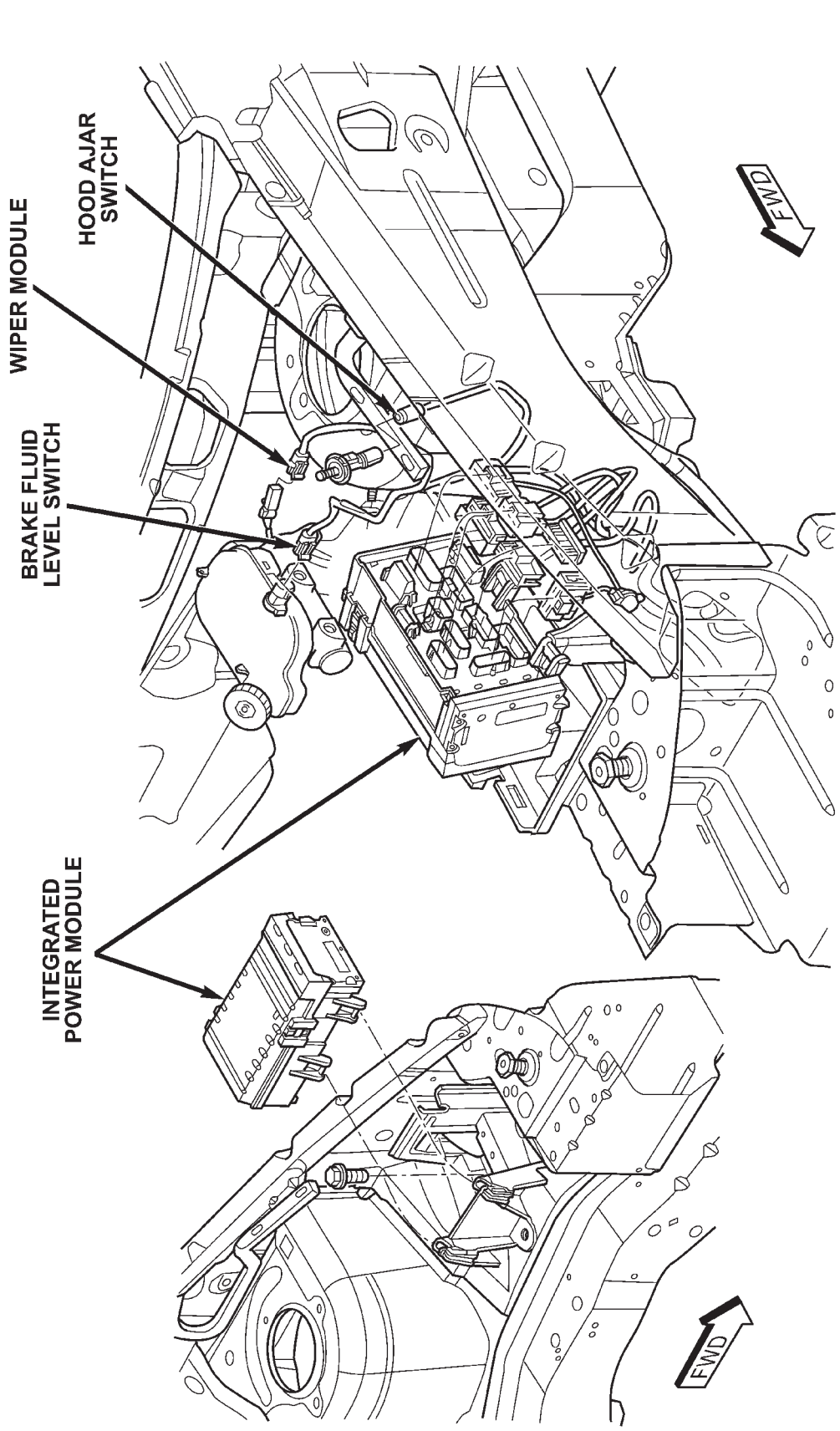

Fig. 6 LEFT SIDE ENGINE COMPARTMENT

CONNECTOR/GROUND/SPLICE LOCATION (Continued)

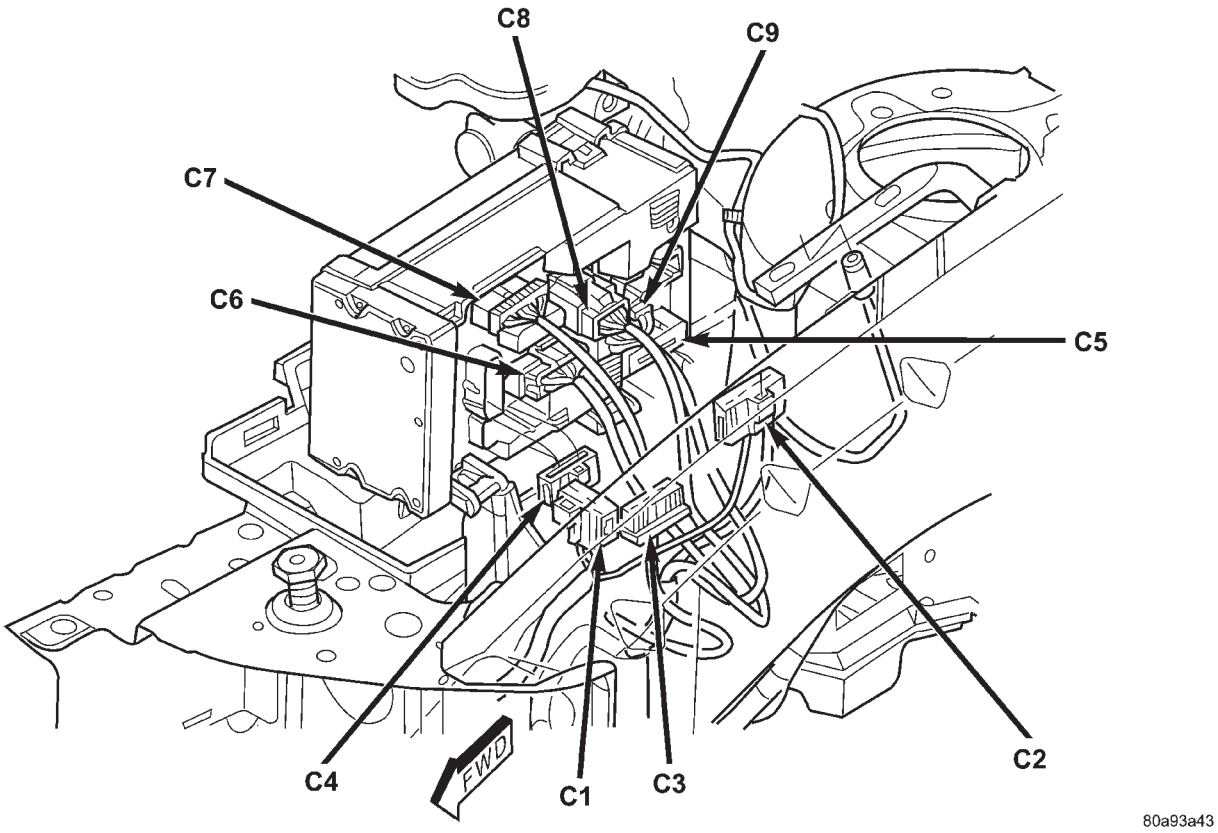

Fig. 7 INTEGRATED POWER MODULE

CONNECTOR/GROUND/SPLICE LOCATION (Continued)

80bd2f82

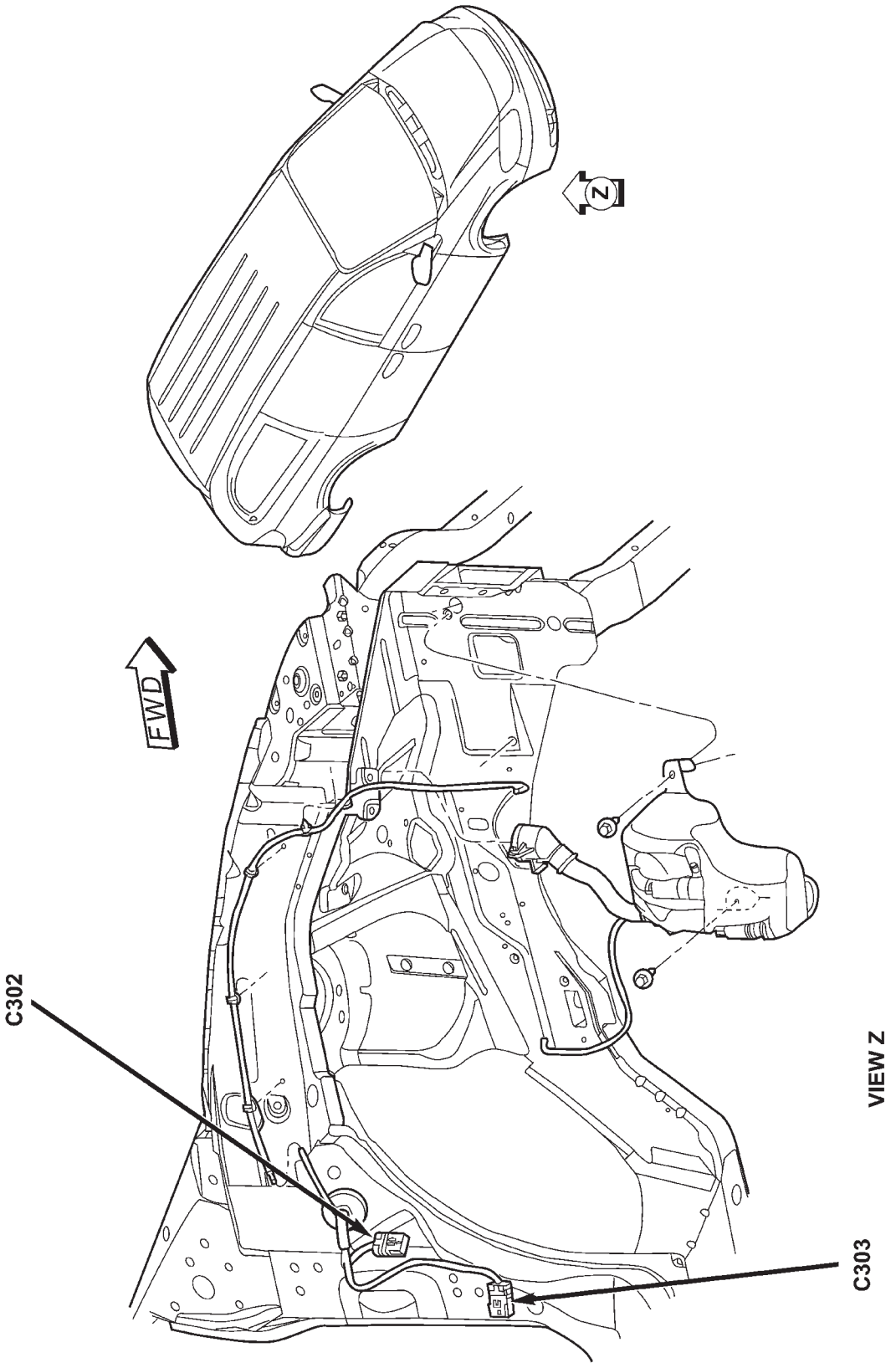

Fig. 8 RIGHT FRONT WHEEL HOUSING

CONNECTOR/GROUND/SPLICE LOCATION (Continued)

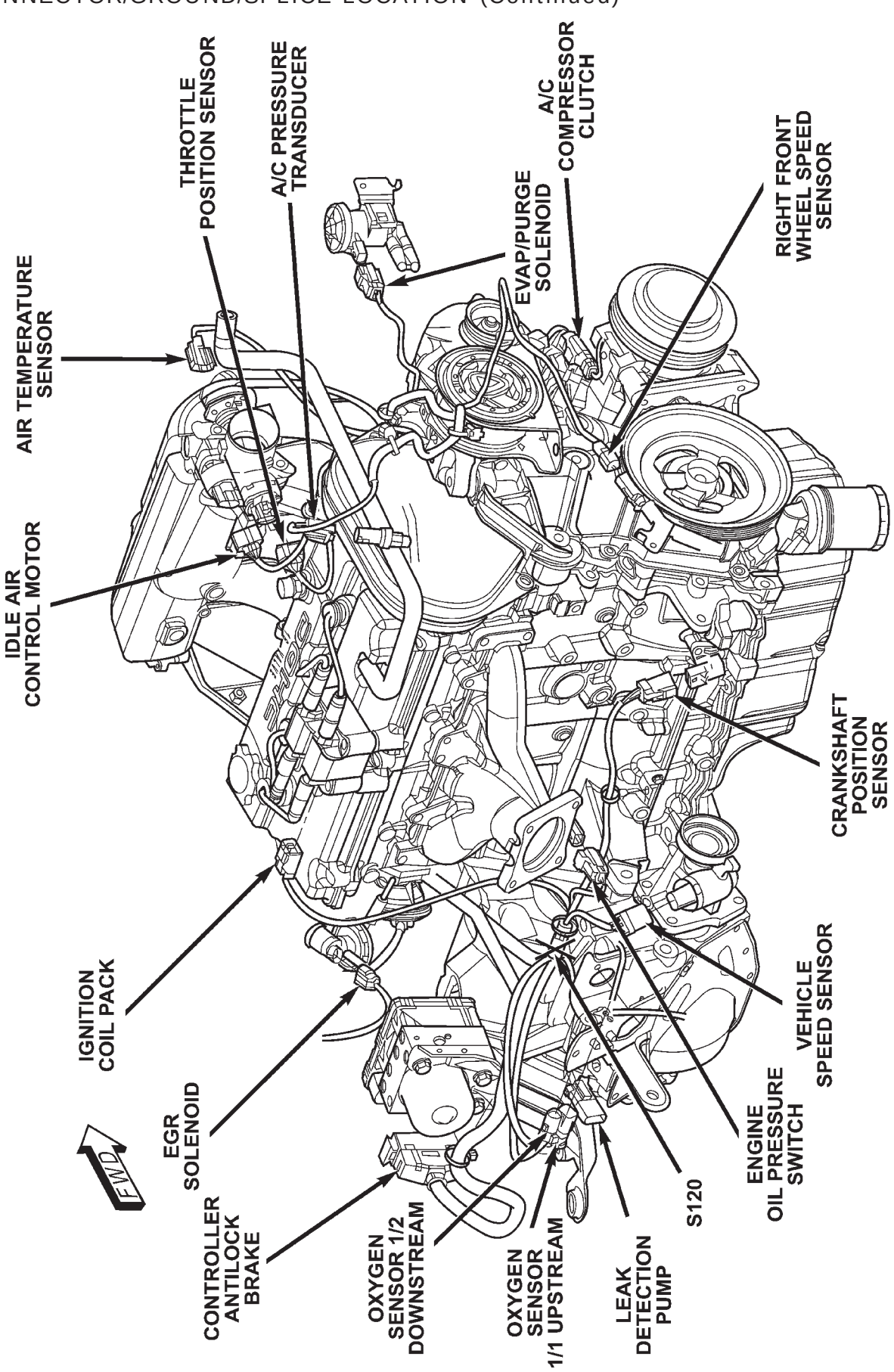

Fig. 9 2.4 LITER ENGINE CONNECTORS REAR

CONNECTOR/GROUND/SPLICE LOCATION (Continued)

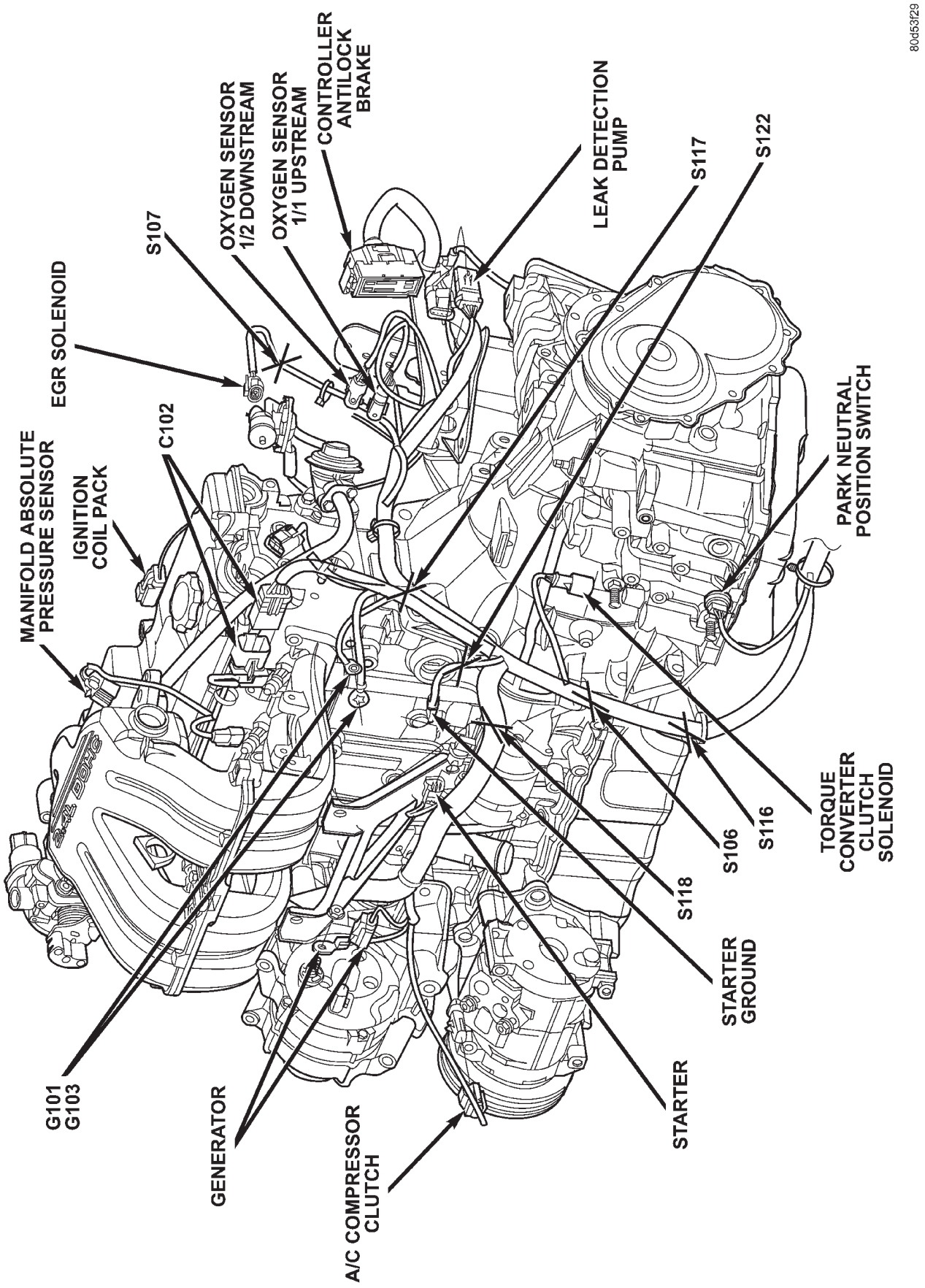

Fig. 10 2.4 LITER ENGINE FRONT

CONNECTOR/GROUND/SPLICE LOCATION (Continued)

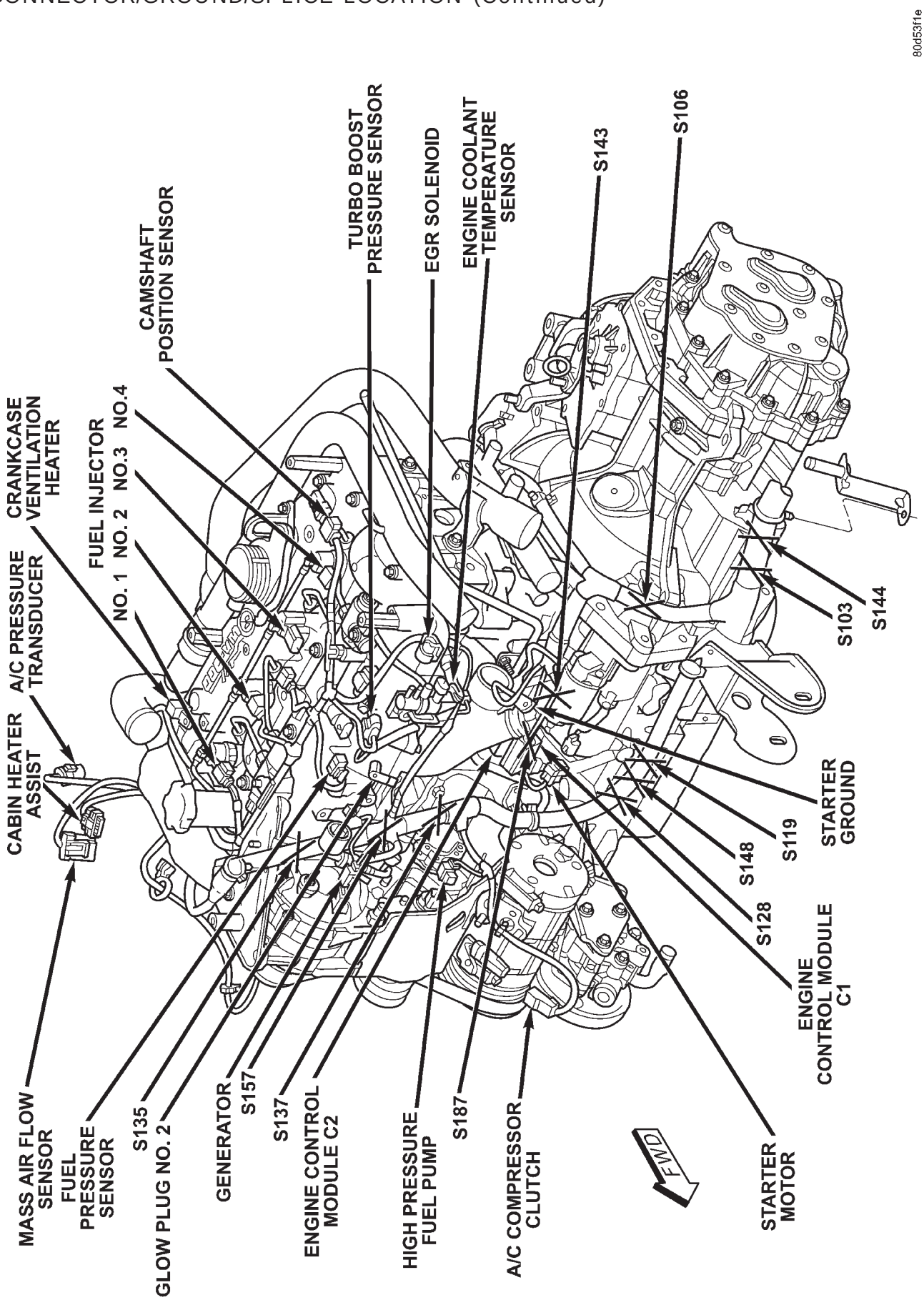

Fig. 11 2.5 LITER DIESEL ENGINE FRONT

CONNECTOR/GROUND/SPLICE LOCATION (Continued)

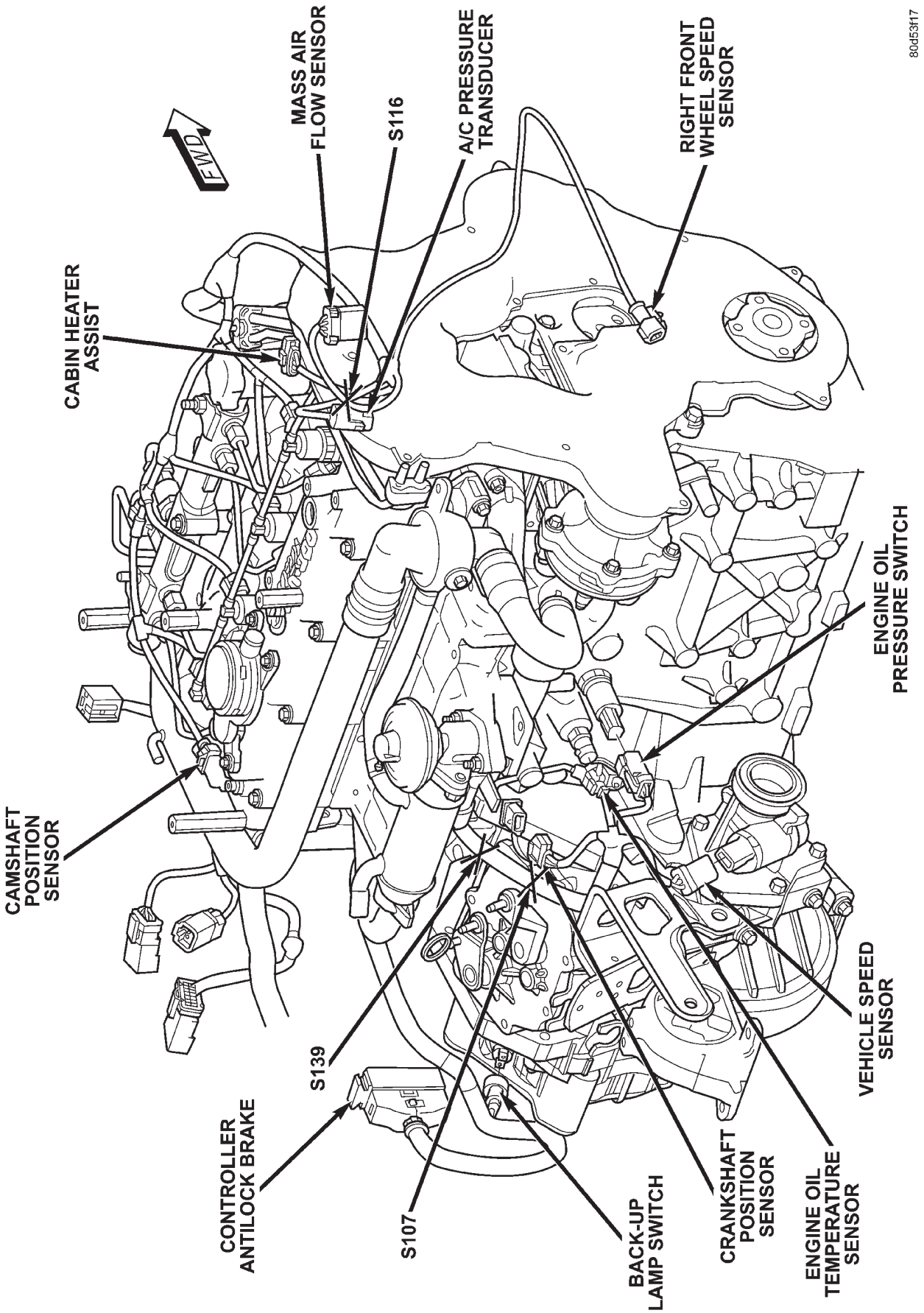

Fig. 12 2.5 LITER DIESEL ENGINE REAR

CONNECTOR/GROUND/SPLICE LOCATION (Continued)

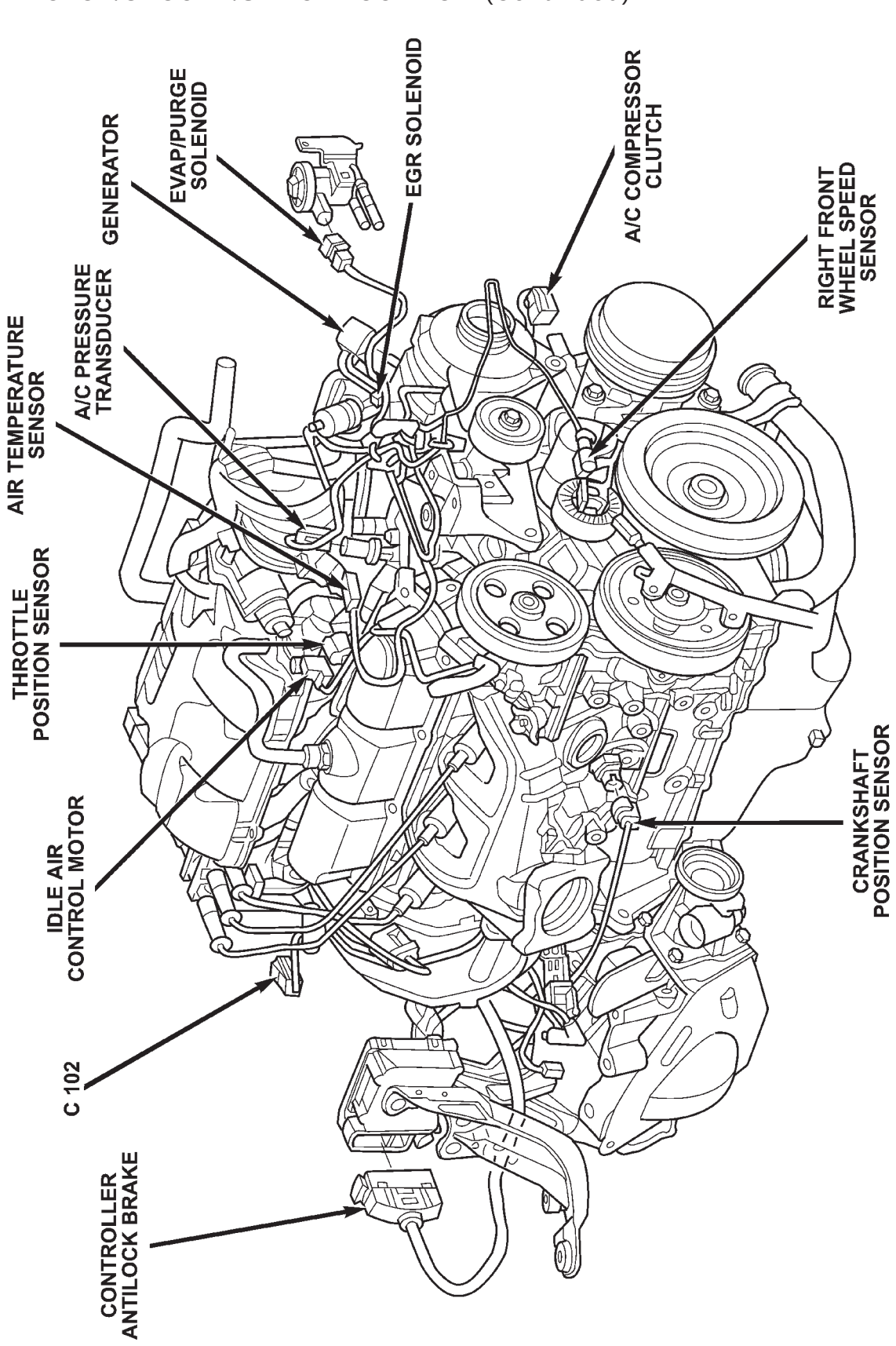

Fig. 13 3.3-3.8 LITER ENGINE REAR

CONNECTOR/GROUND/SPLICE LOCATION (Continued)

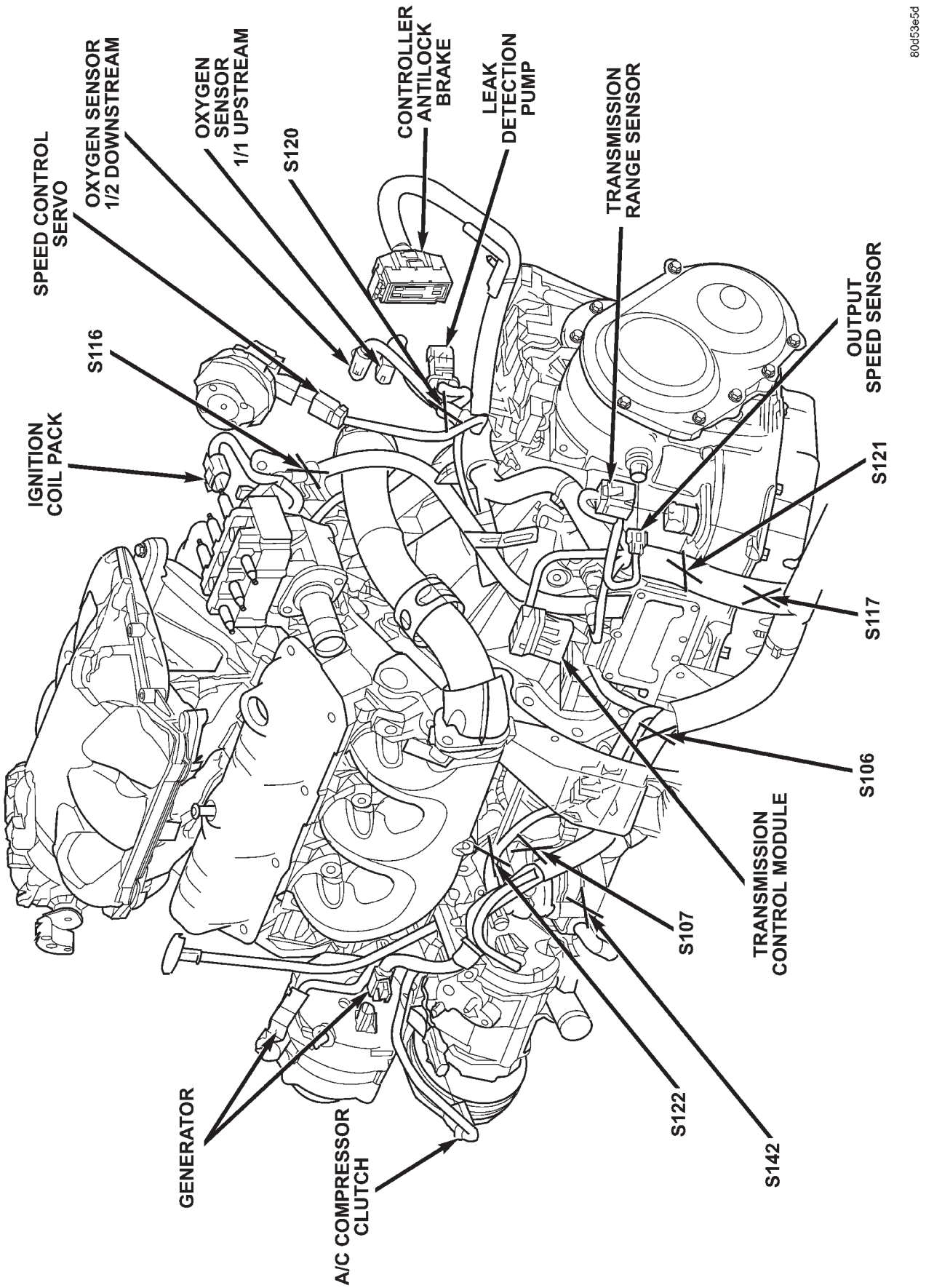

Fig. 14 3.3-3.8 LITER ENGINE FRONT

CONNECTOR/GROUND/SPLICE LOCATION (Continued)

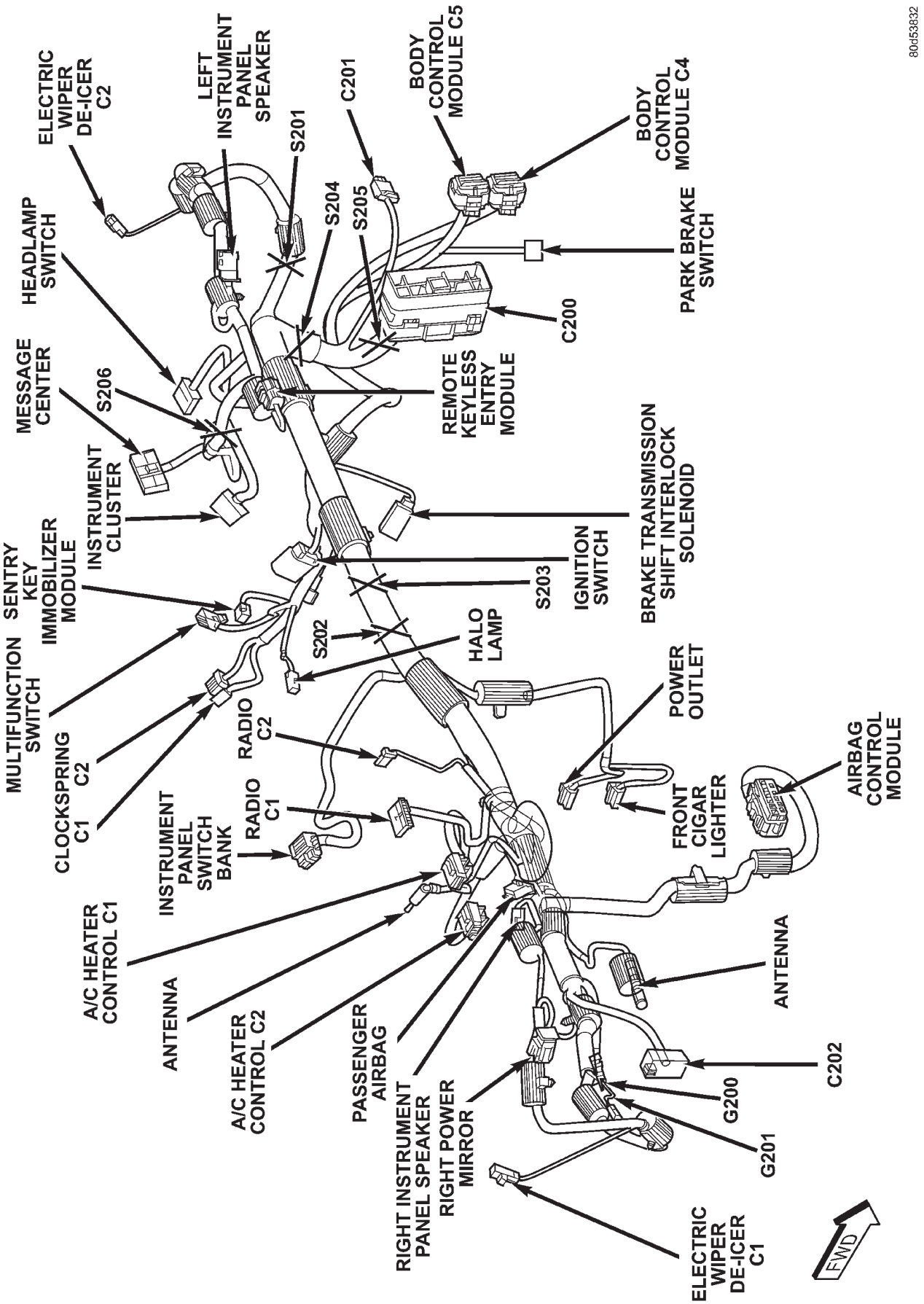

Fig. 15 INSTRUMENT PANEL HARNESS LHD

CONNECTOR/GROUND/SPLICE LOCATION (Continued)

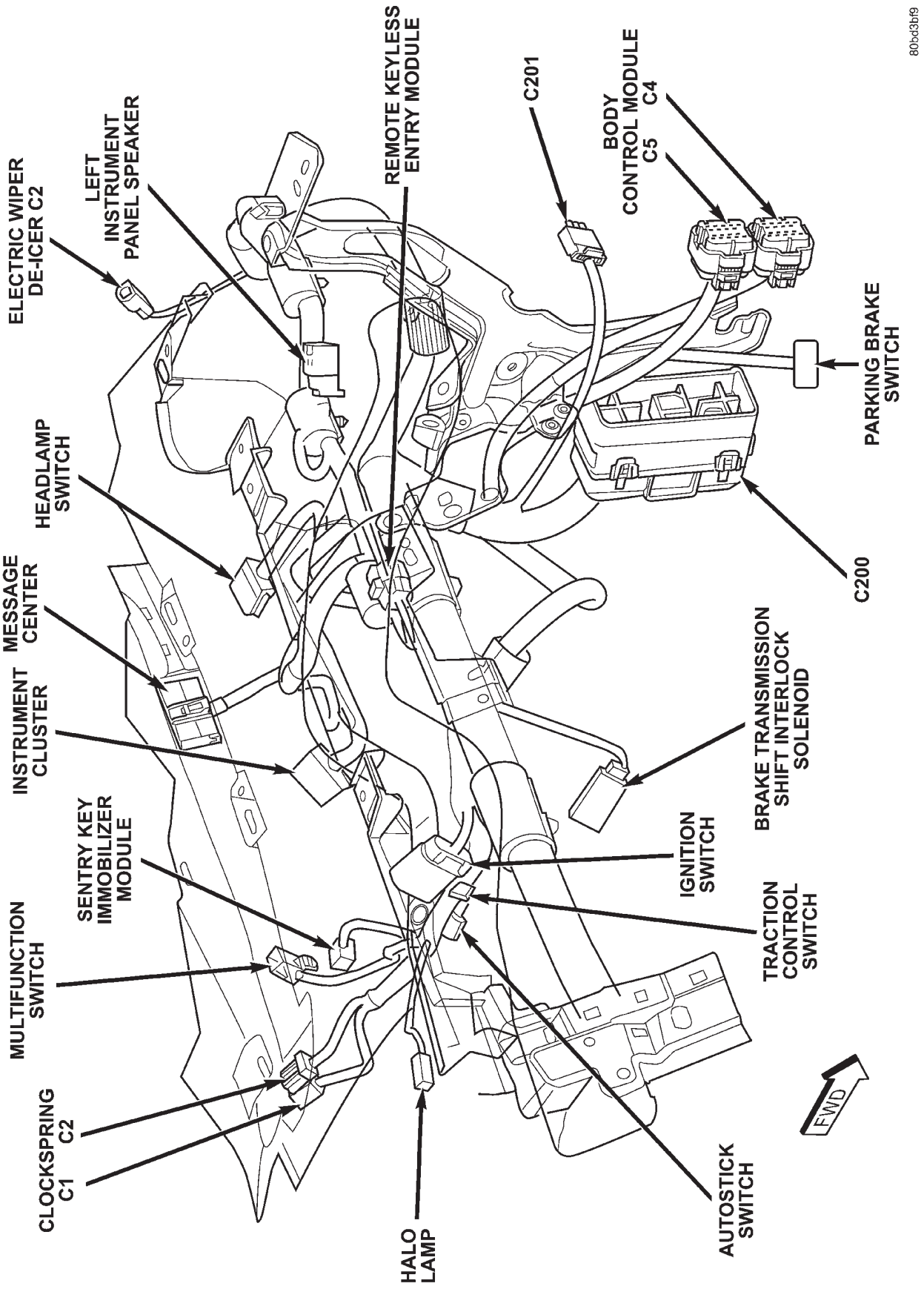

Fig. 16 LEFT SIDE INSTRUMENT PANEL LHD

CONNECTOR/GROUND/SPLICE LOCATION (Continued)

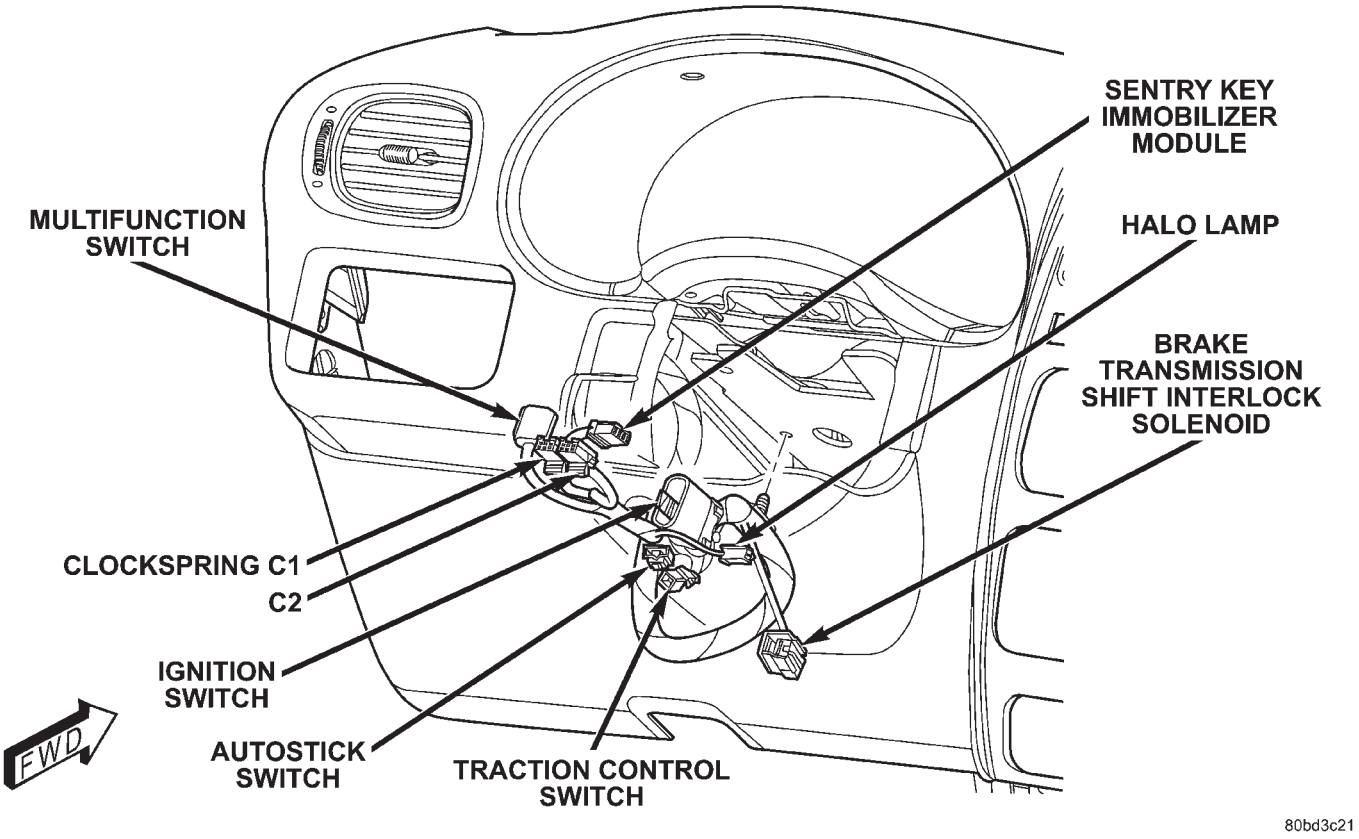

Fig. 17 STEERING COLUMN

CONNECTOR/GROUND/SPLICE LOCATION (Continued)

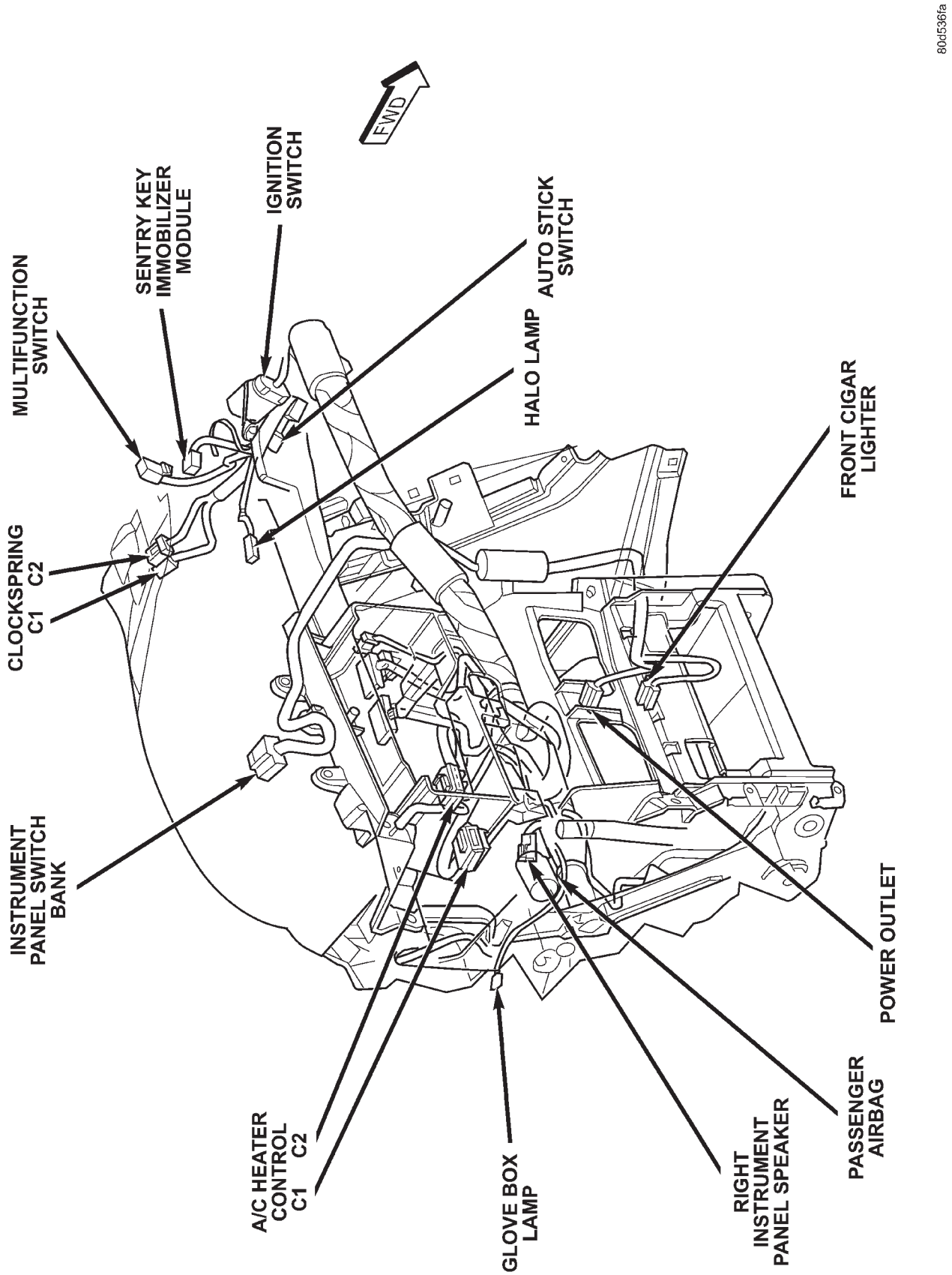

Fig. 18 CENTER INSTRUMENT PANEL

CONNECTOR/GROUND/SPLICE LOCATION (Continued)

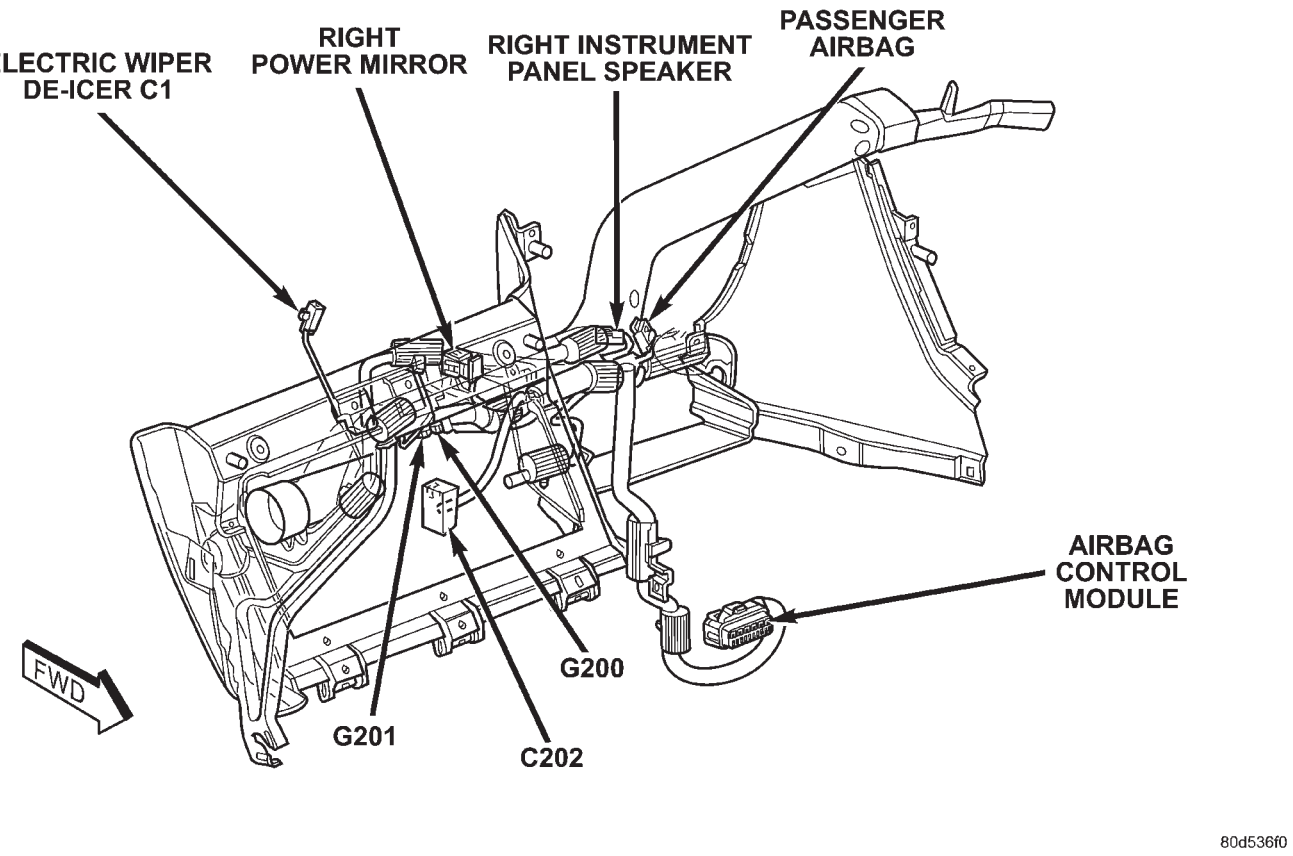

Fig. 19 RIGHT SIDE INSTRUMENT PANEL

CONNECTOR/GROUND/SPLICE LOCATION (Continued)

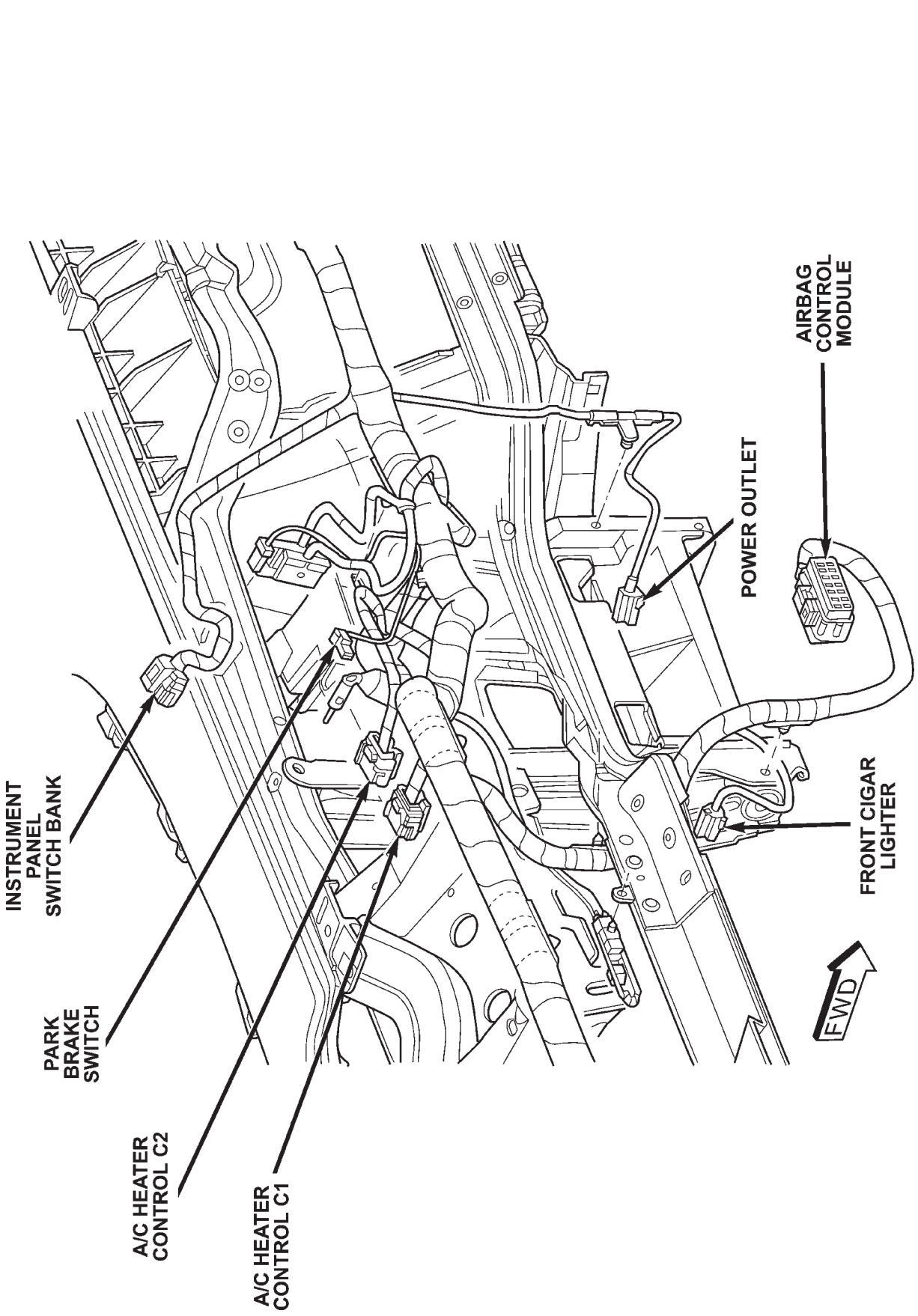

Fig. 20 CENTER INSTRUMENT PANEL RHD

CONNECTOR/GROUND/SPLICE LOCATION (Continued)

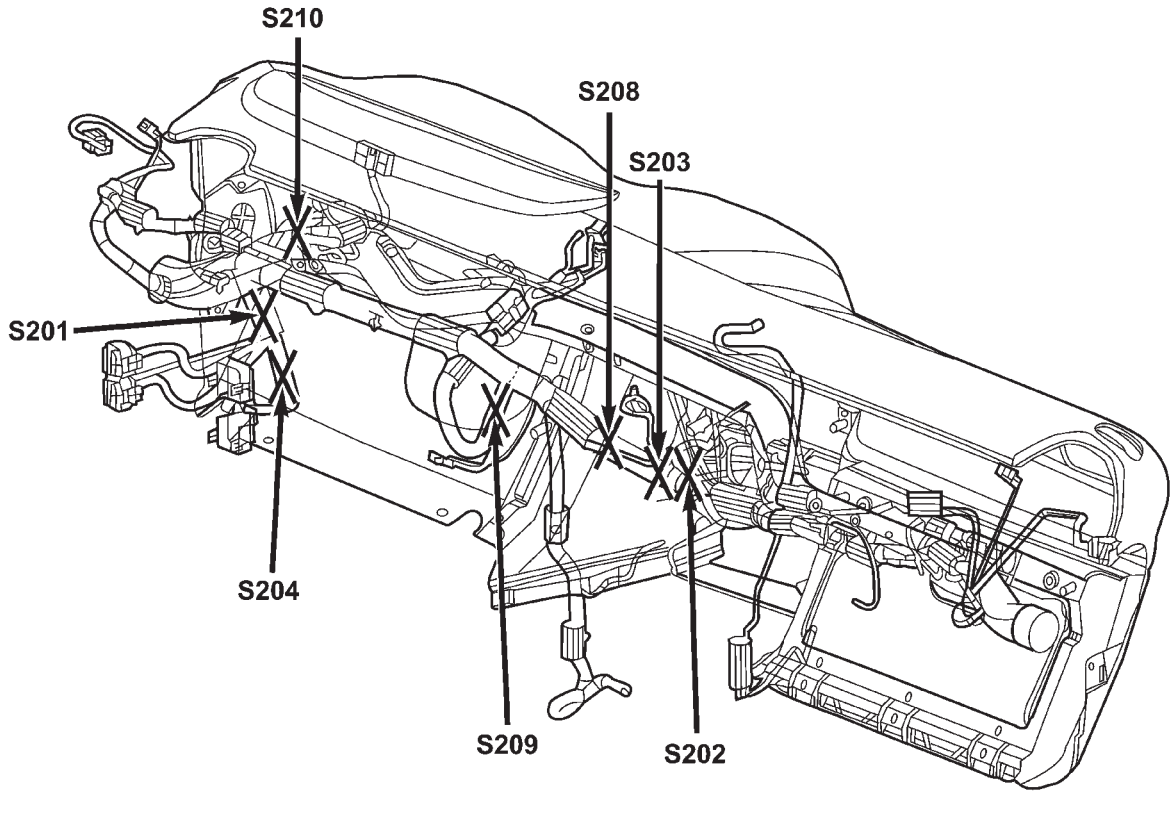

Fig. 21 INSTRUMENT PANEL RHD

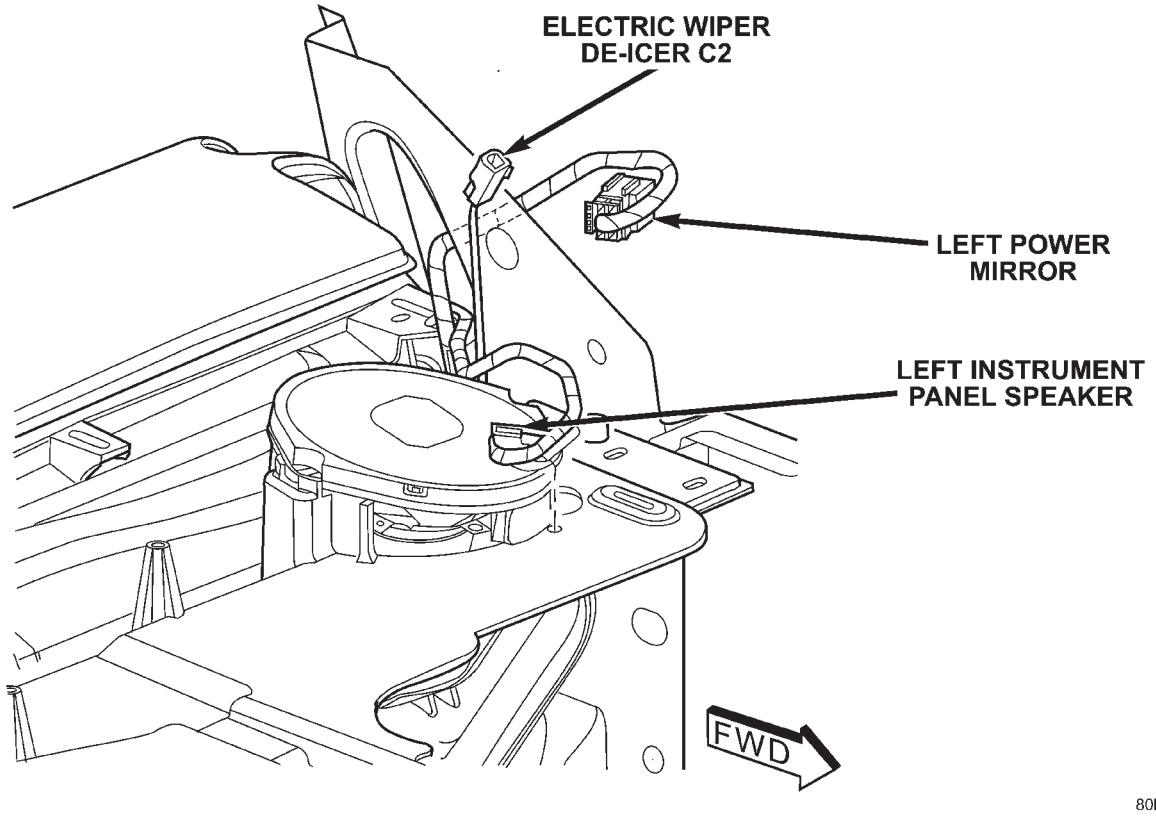

Fig. 22 LEFT SIDE INSTRUMENT PANEL UPPER RHD

CONNECTOR/GROUND/SPLICE LOCATION (Continued)

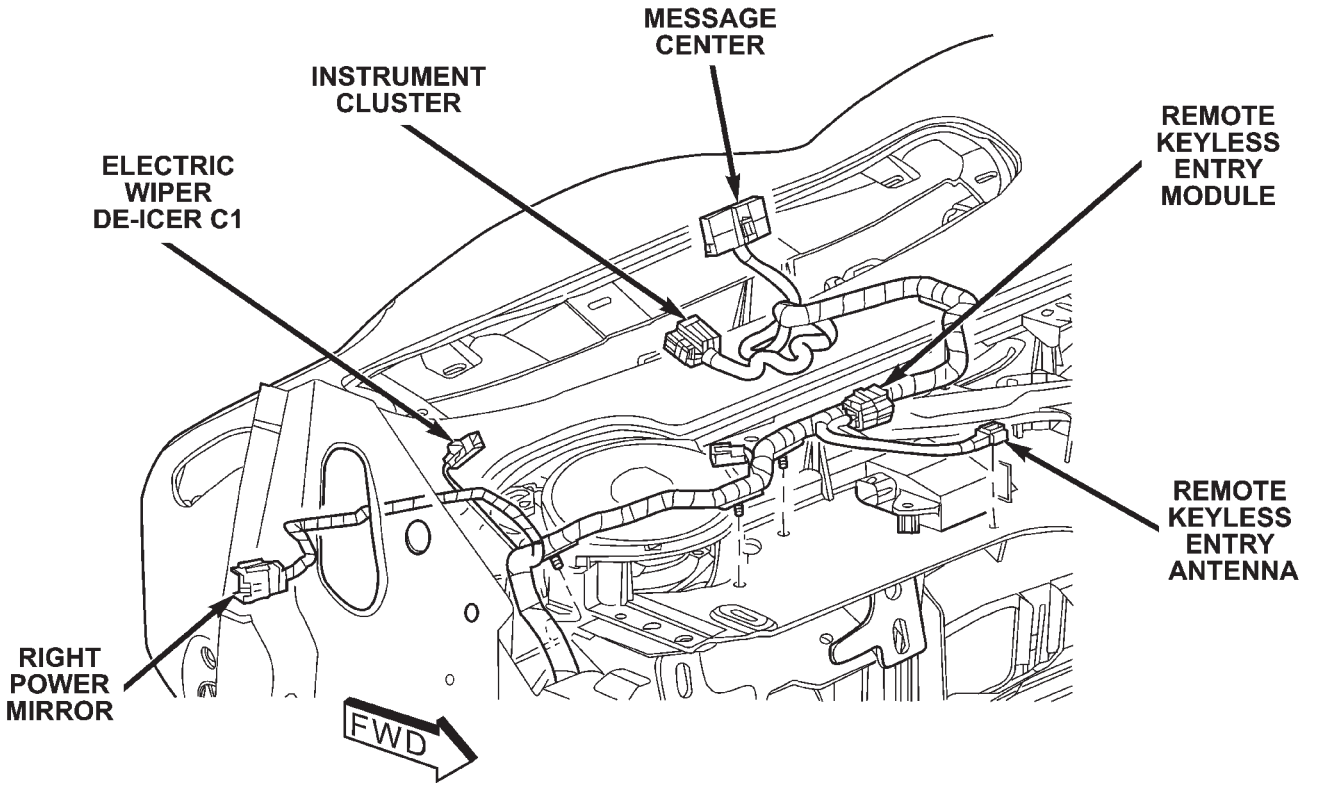

Fig. 23 RIGHT SIDE INSTRUMENT PANEL UPPER RHD

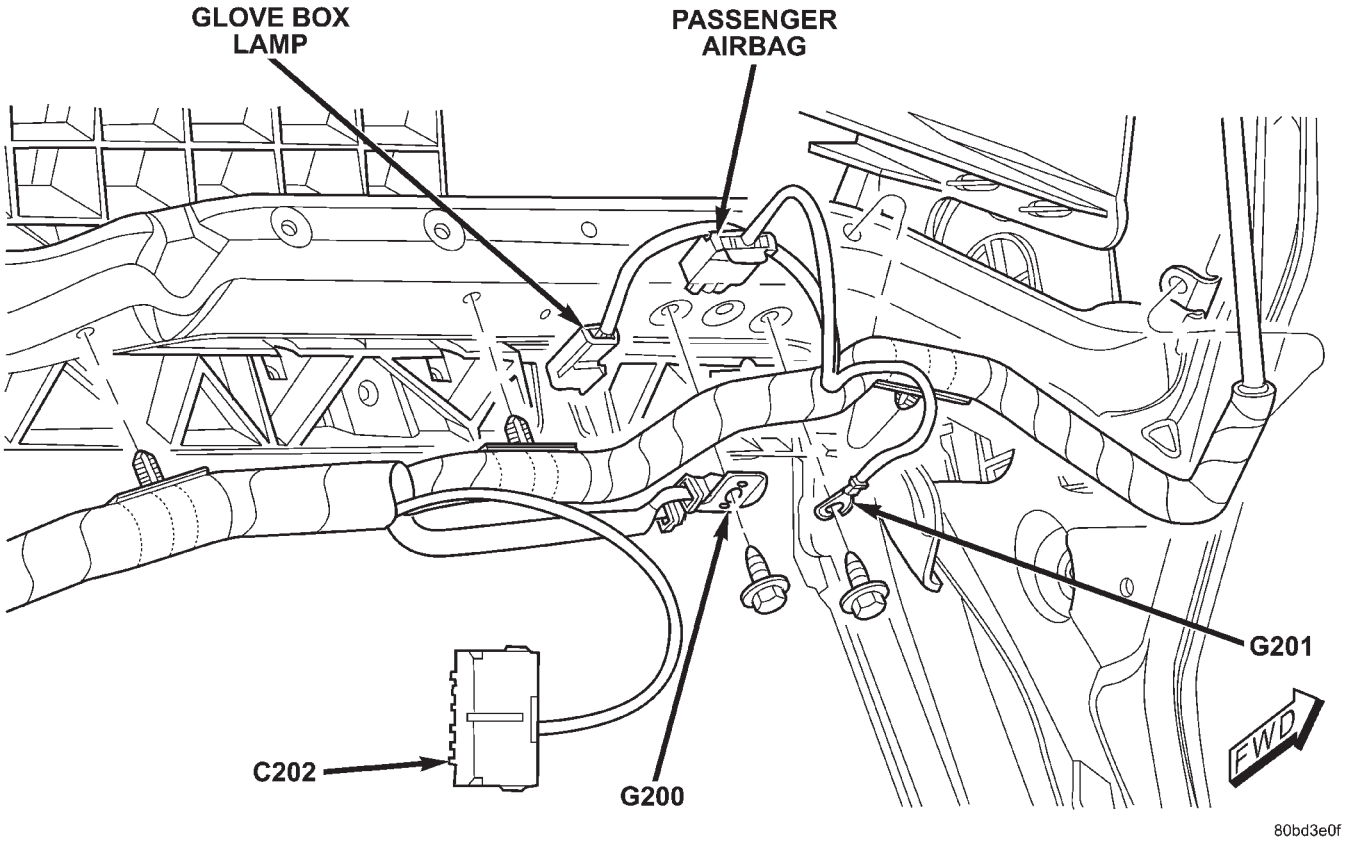

Fig. 24 LEFT SIDE INSTRUMENT PANEL LOWER RHD

CONNECTOR/GROUND/SPLICE LOCATION (Continued)

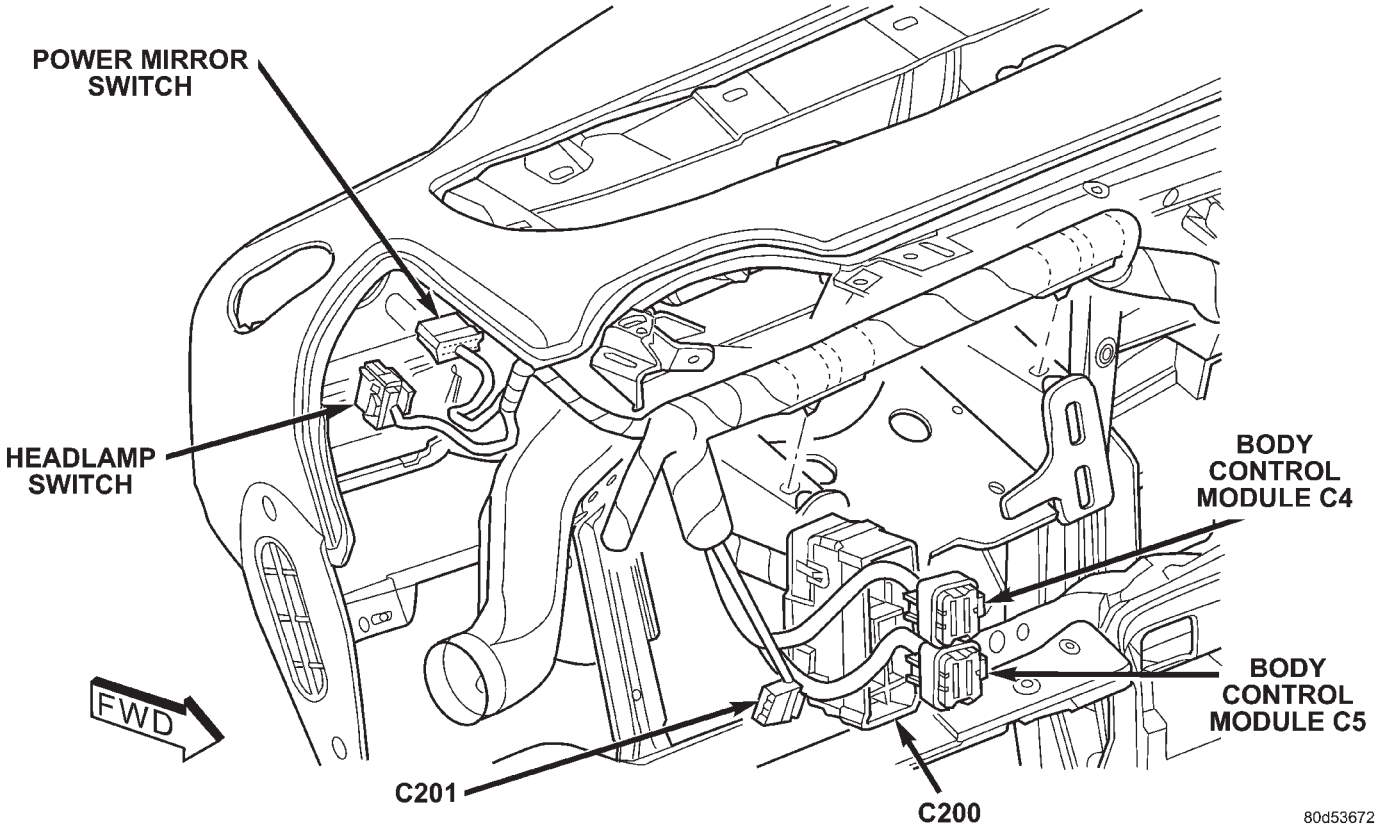

Fig. 25 RIGHT SIDE INSTRUMENT PANEL LOWER RHD

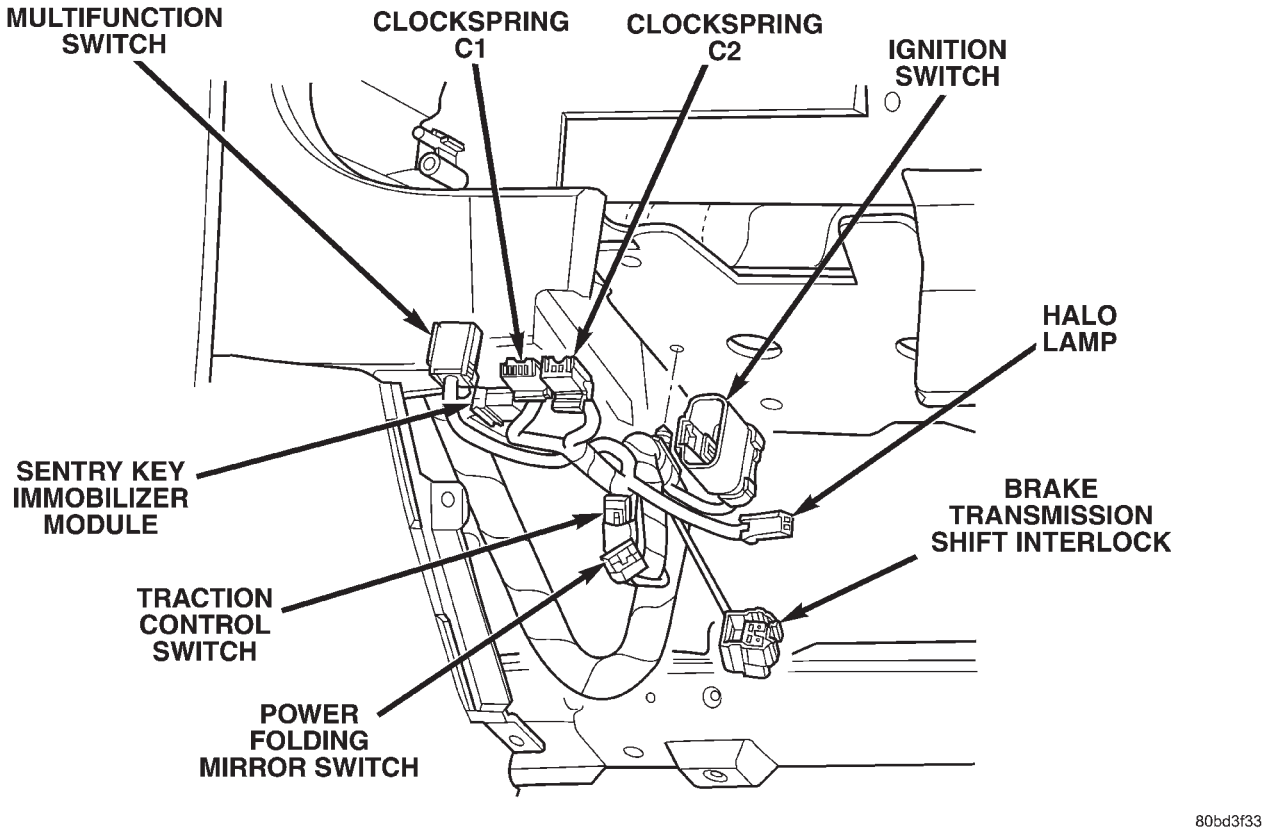

Fig. 26 STEERING COLUMN CONNECTORS RHD

CONNECTOR/GROUND/SPLICE LOCATION (Continued)

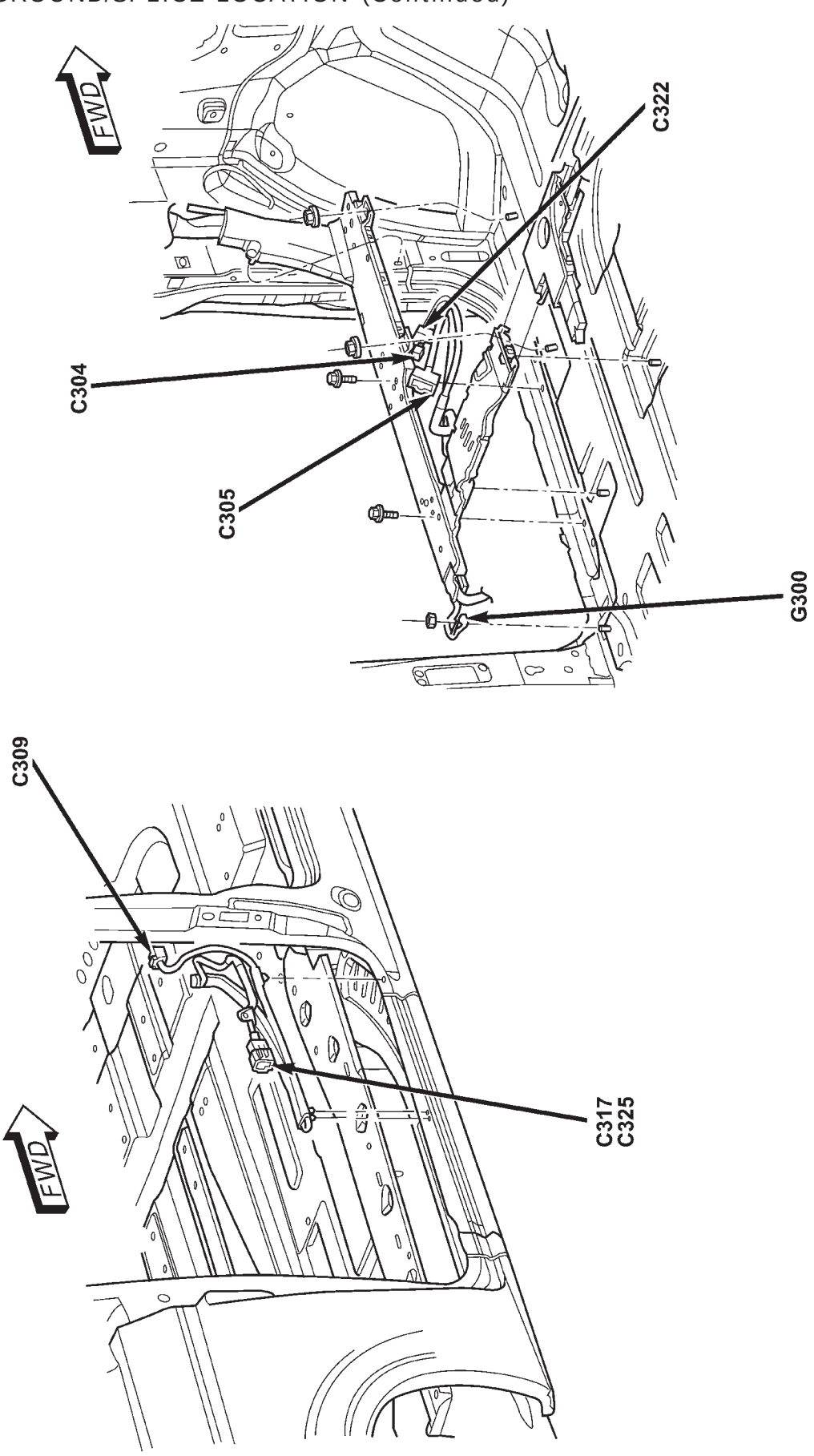

Fig. 27 LEFT SIDE BODY LHD

CONNECTOR/GROUND/SPLICE LOCATION (Continued)

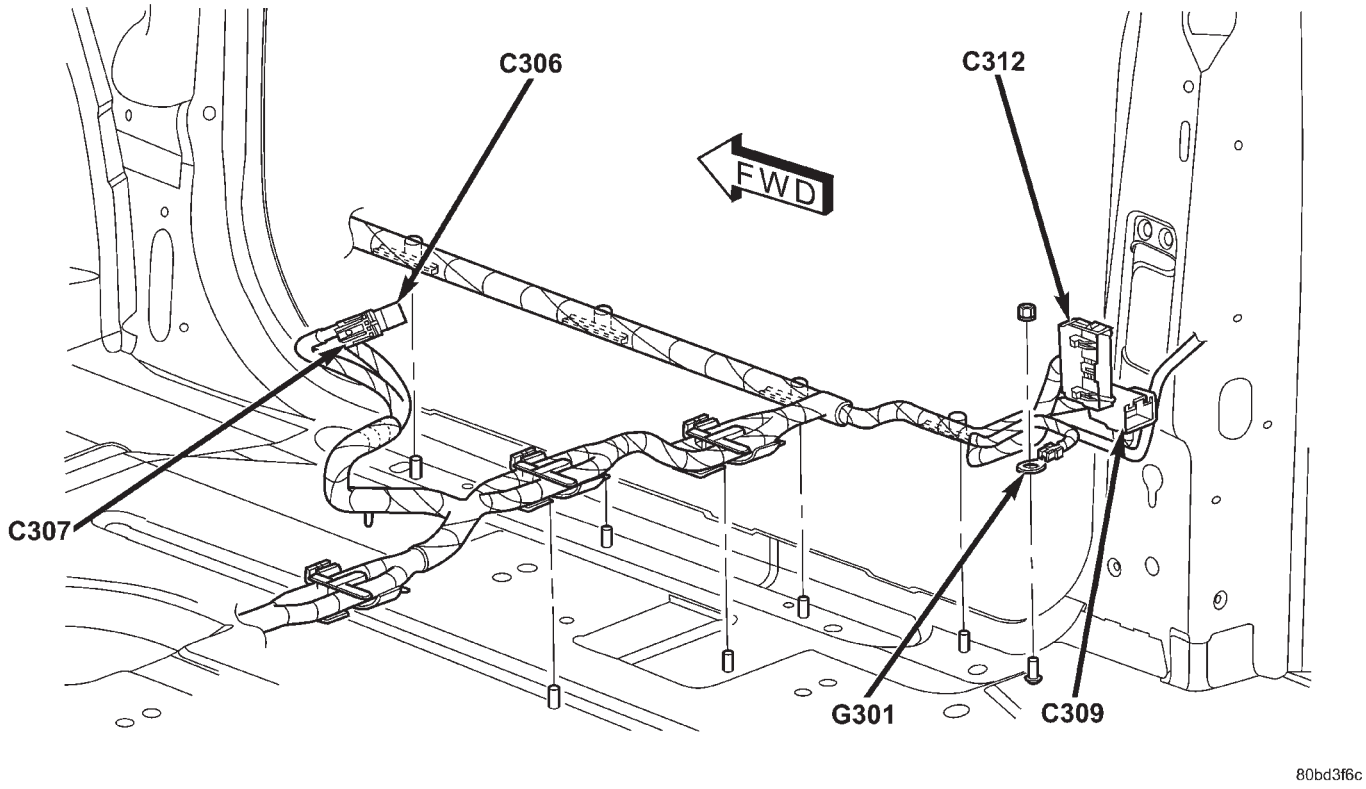

Fig. 28 RIGHT SIDE BODY RHD

CONNECTOR/GROUND/SPLICE LOCATION (Continued)

80be0efa

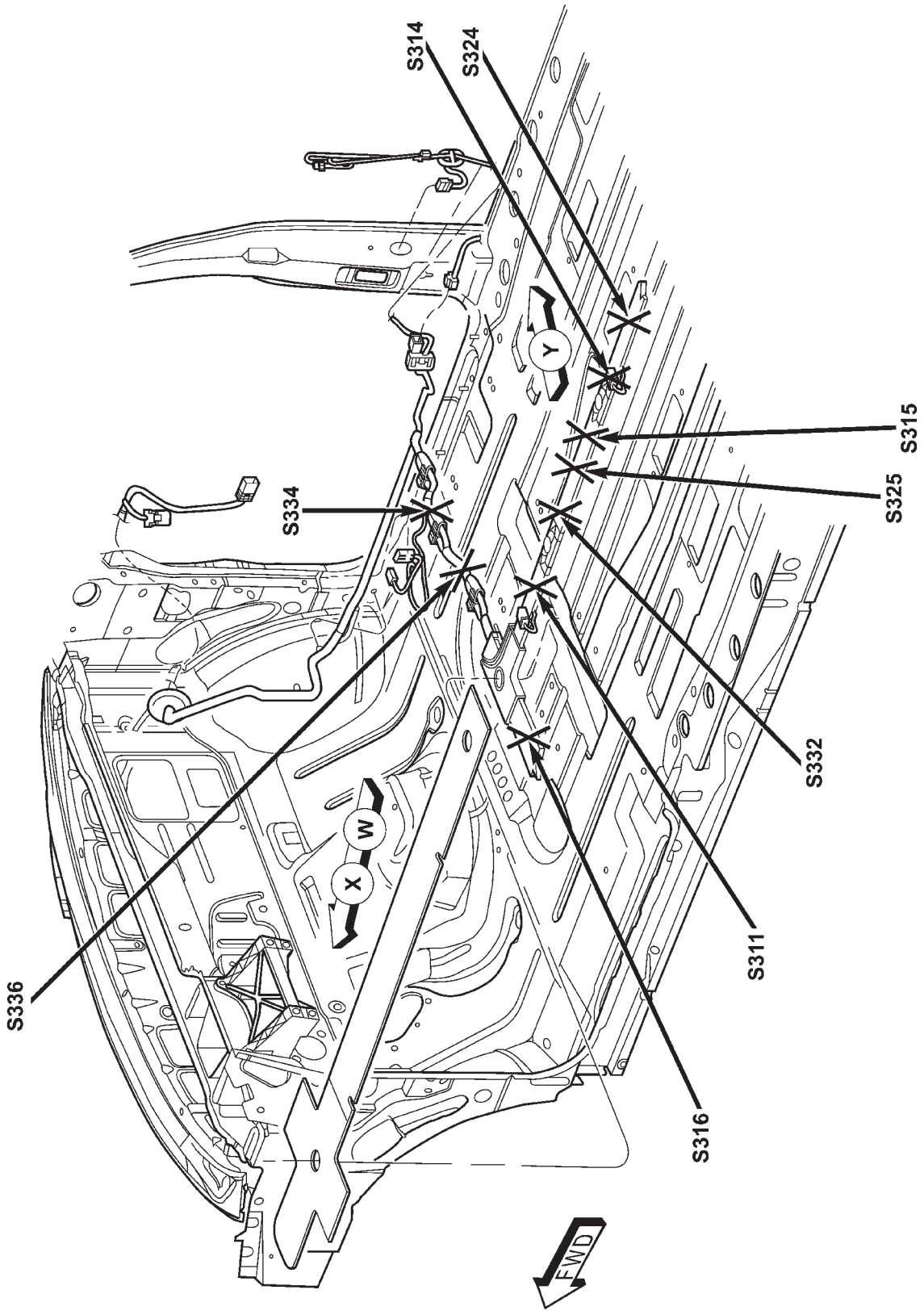

Fig. 29 BODY HARNESS SPLICES

CONNECTOR/GROUND/SPLICE LOCATION (Continued)

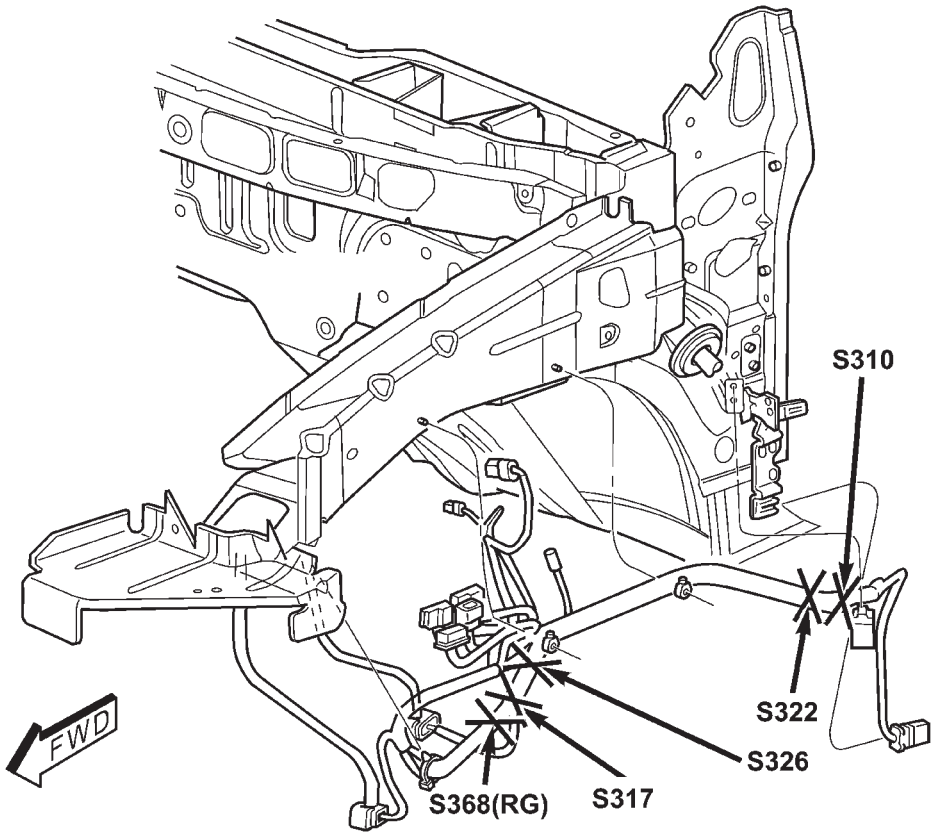

Fig. 30 BODY HARNESS SPLICES

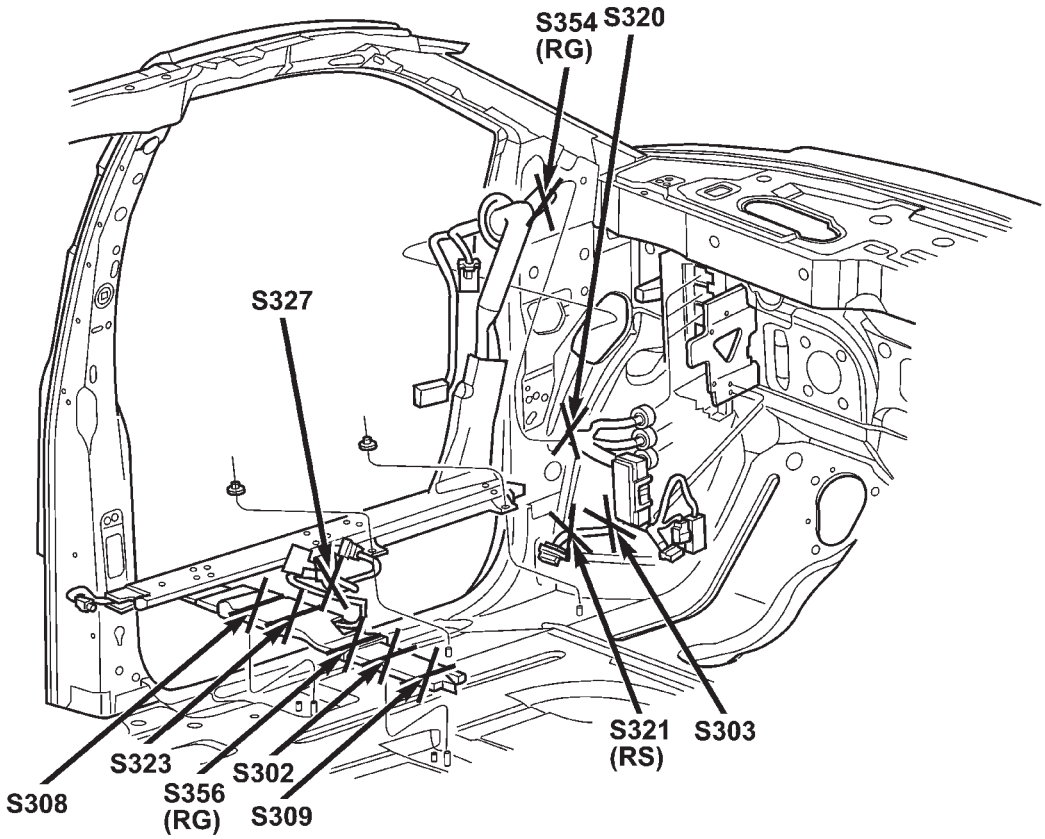

Fig. 31 LEFT FRONT BODY SPLICES

CONNECTOR/GROUND/SPLICE LOCATION (Continued)

80be0da7

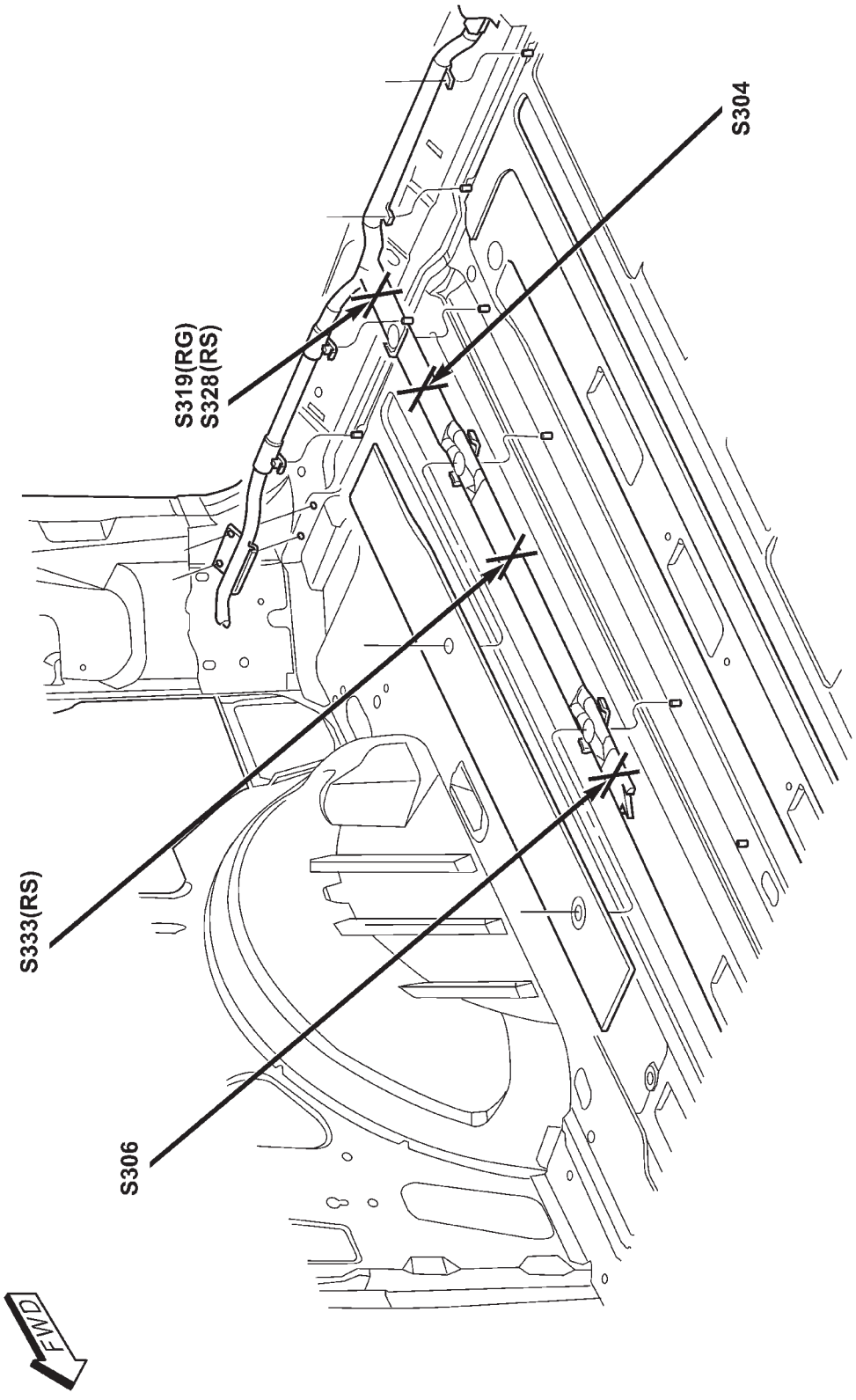

Fig. 32 REAR BODY SPLICES

CONNECTOR/GROUND/SPLICE LOCATION (Continued)

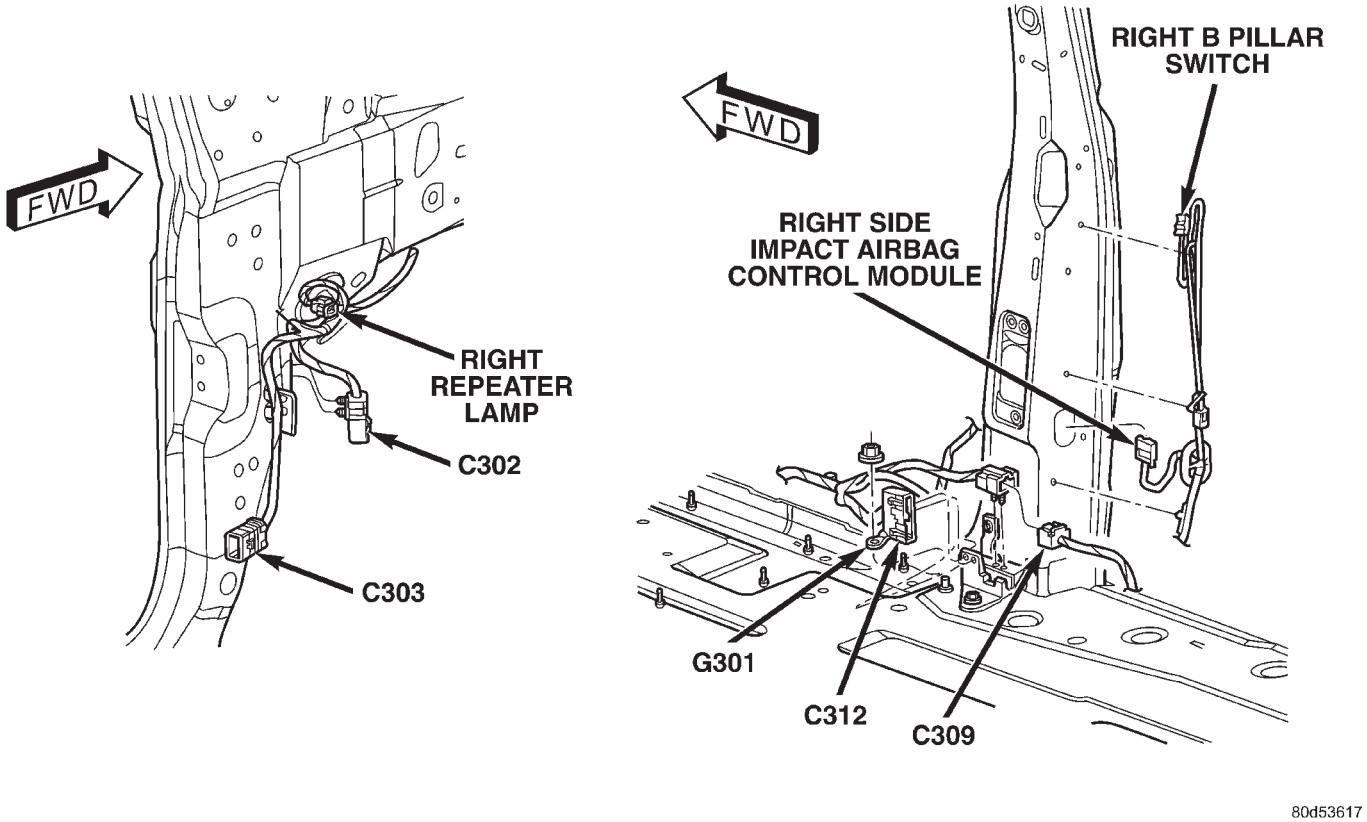

Fig. 33 RIGHT B PILLAR

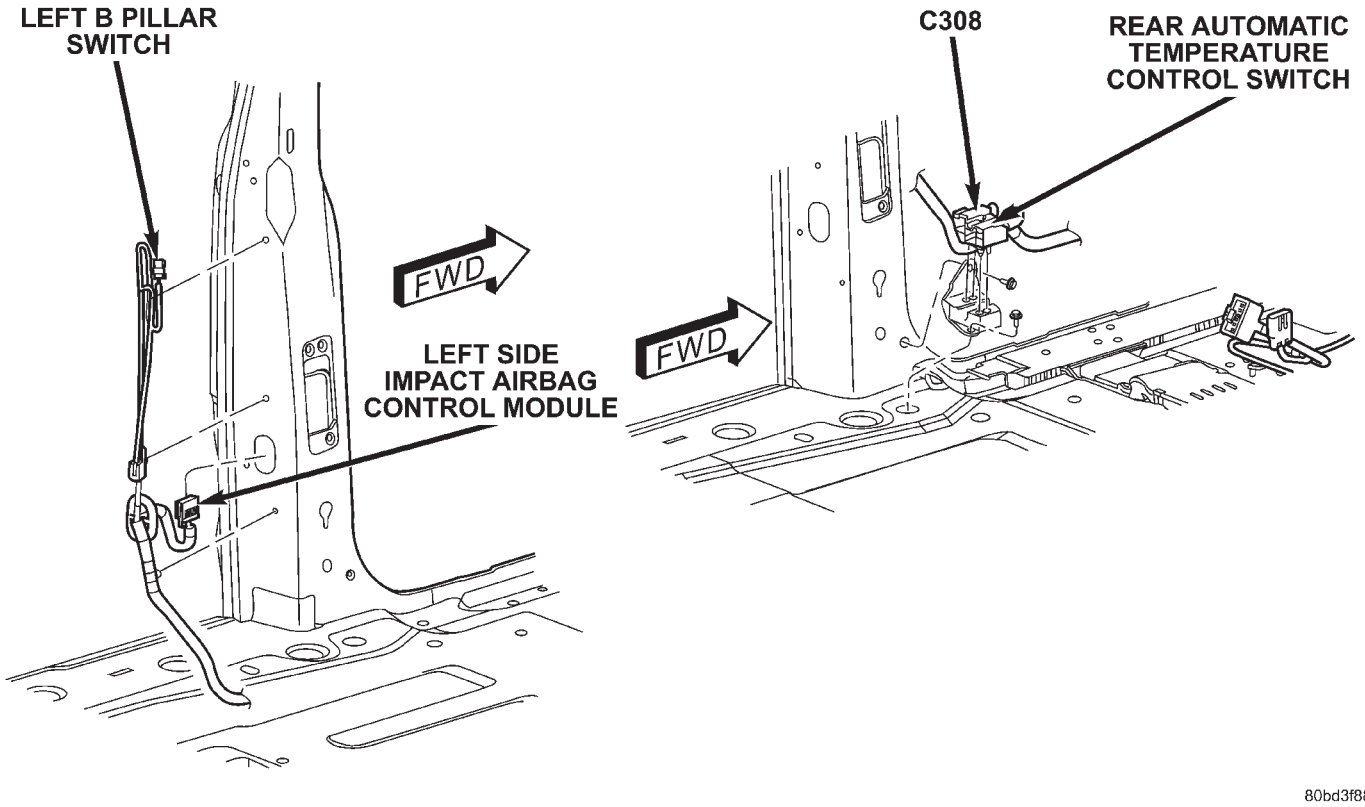

Fig. 34 LEFT B PILLAR

CONNECTOR/GROUND/SPLICE LOCATION (Continued)

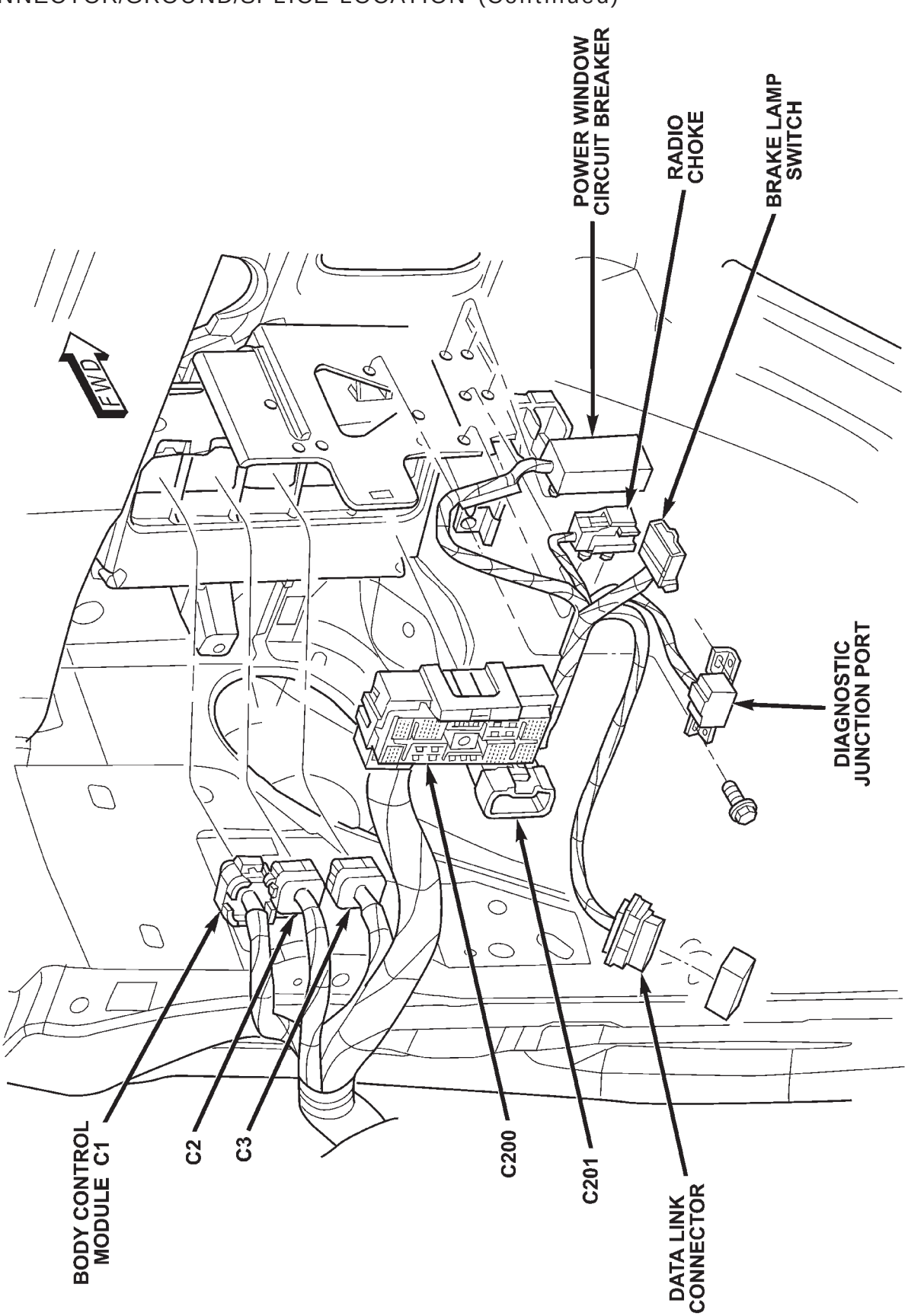

Fig. 35 LEFT SIDE KICK PANEL LHD

CONNECTOR/GROUND/SPLICE LOCATION (Continued)

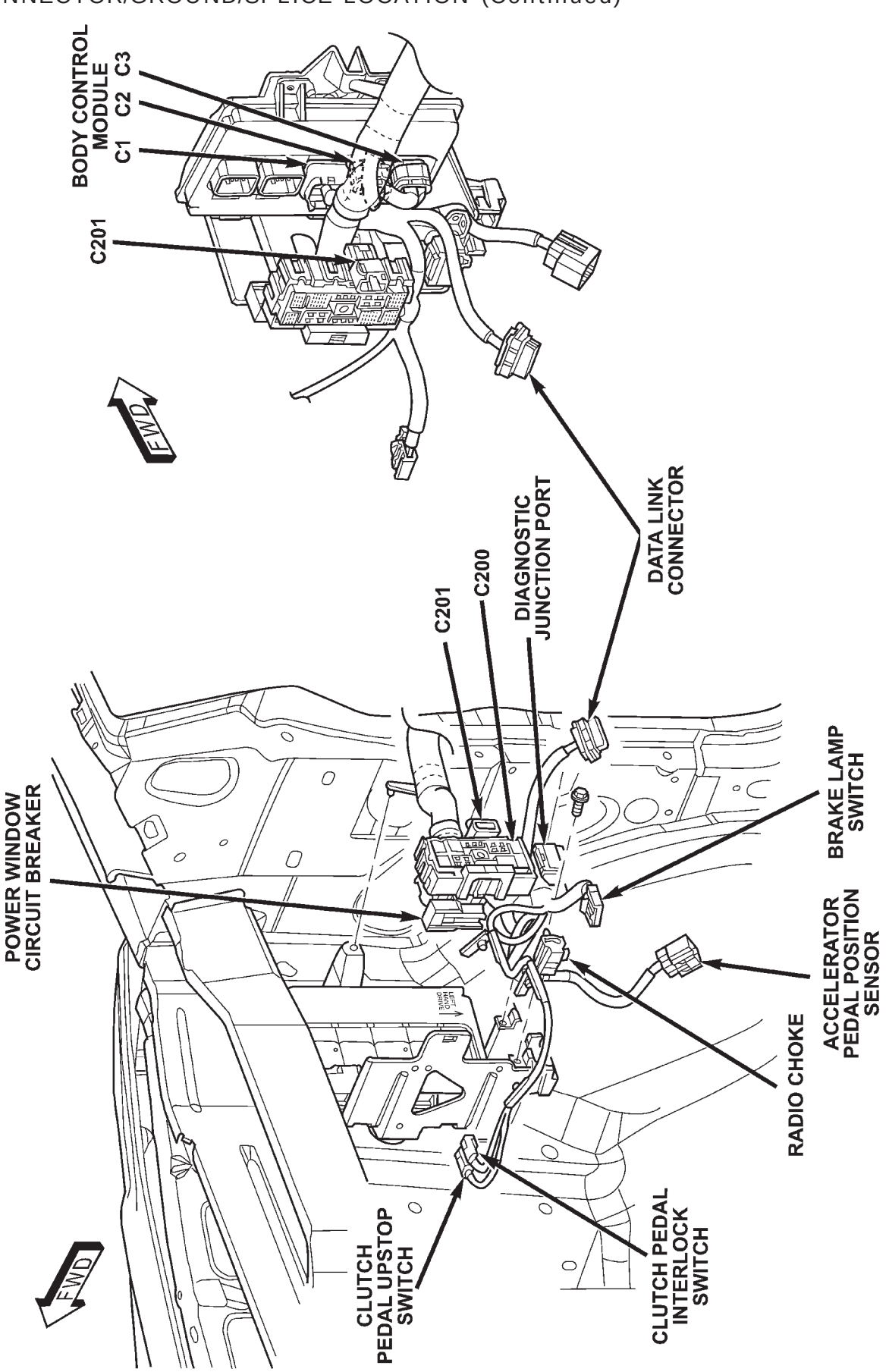

Fig. 36 RIGHT SIDE KICK PANEL RHD

CONNECTOR/GROUND/SPLICE LOCATION (Continued)

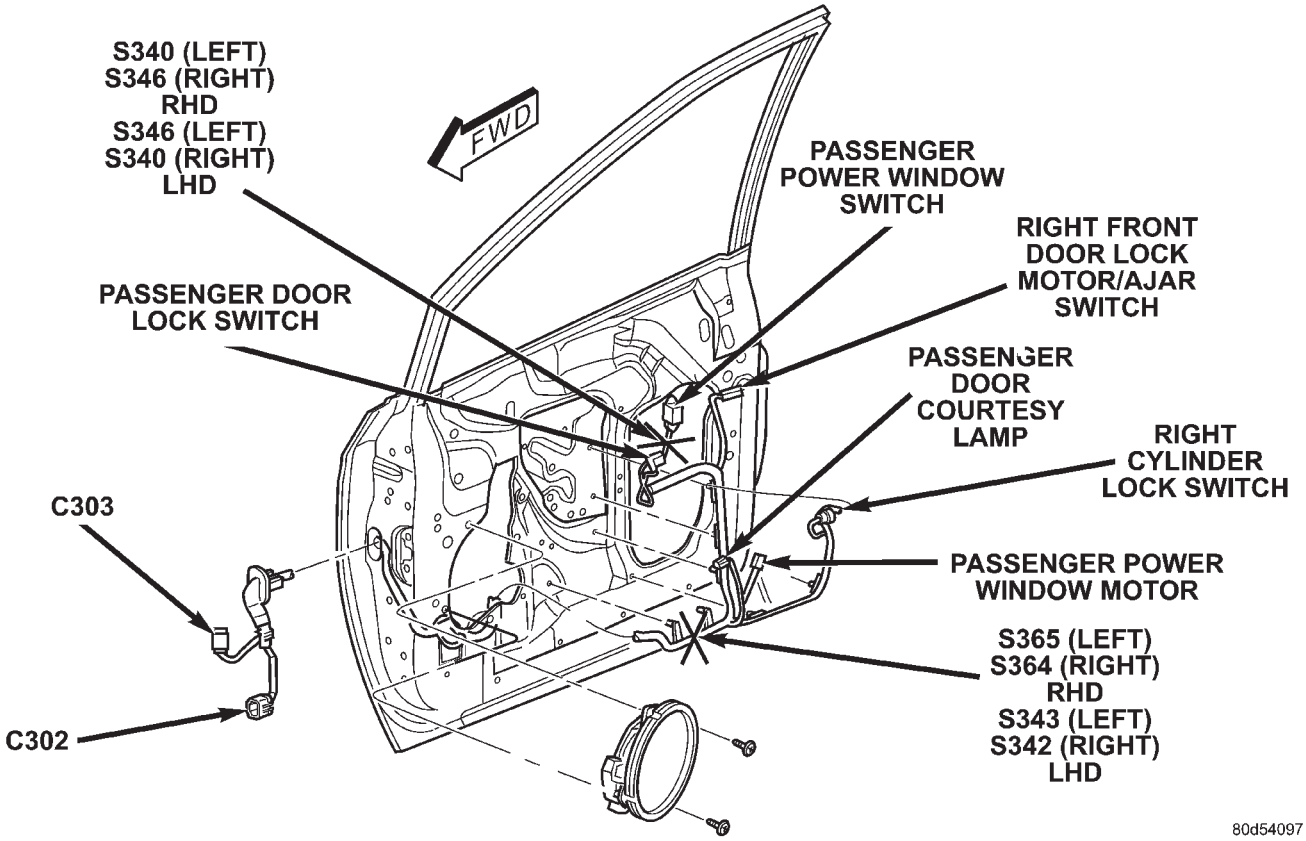

Fig. 37 PASSENGER DOOR

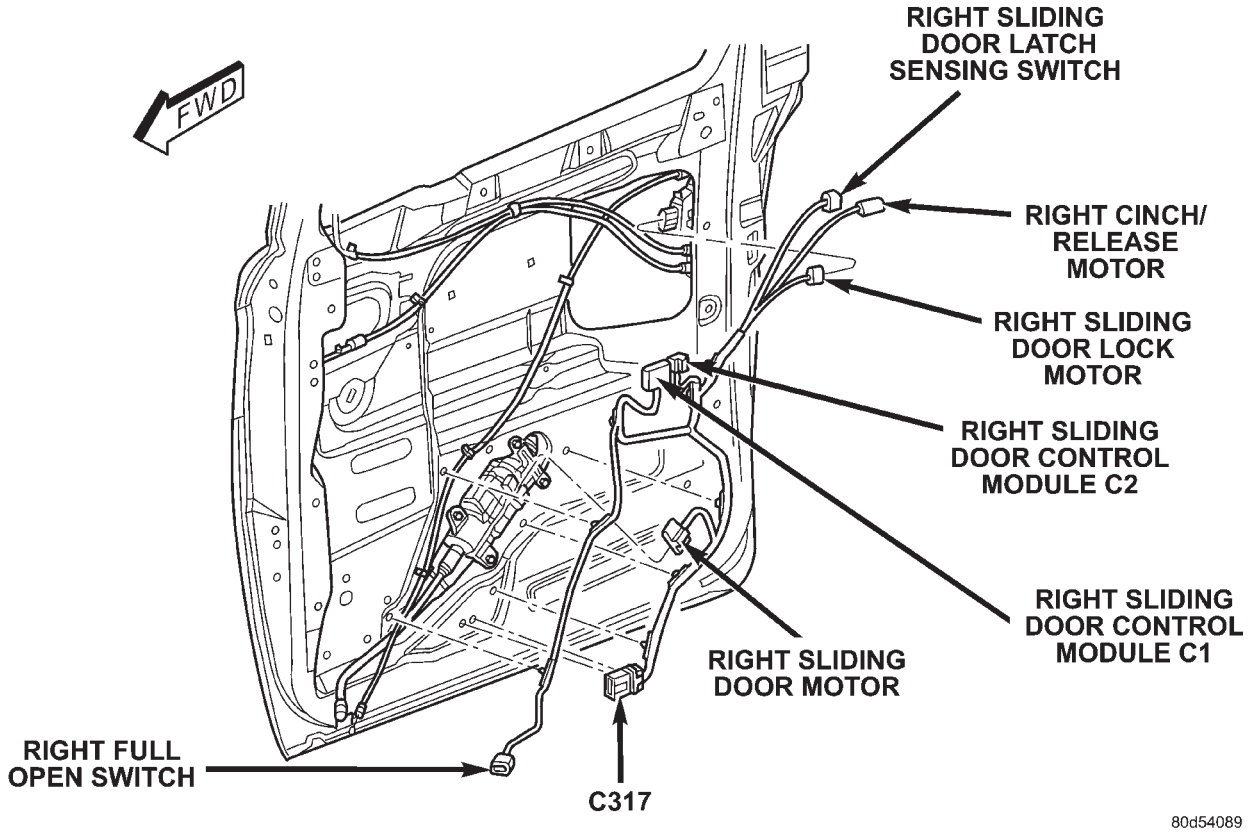

Fig. 38 RIGHT SLIDING DOOR

CONNECTOR/GROUND/SPLICE LOCATION (Continued)

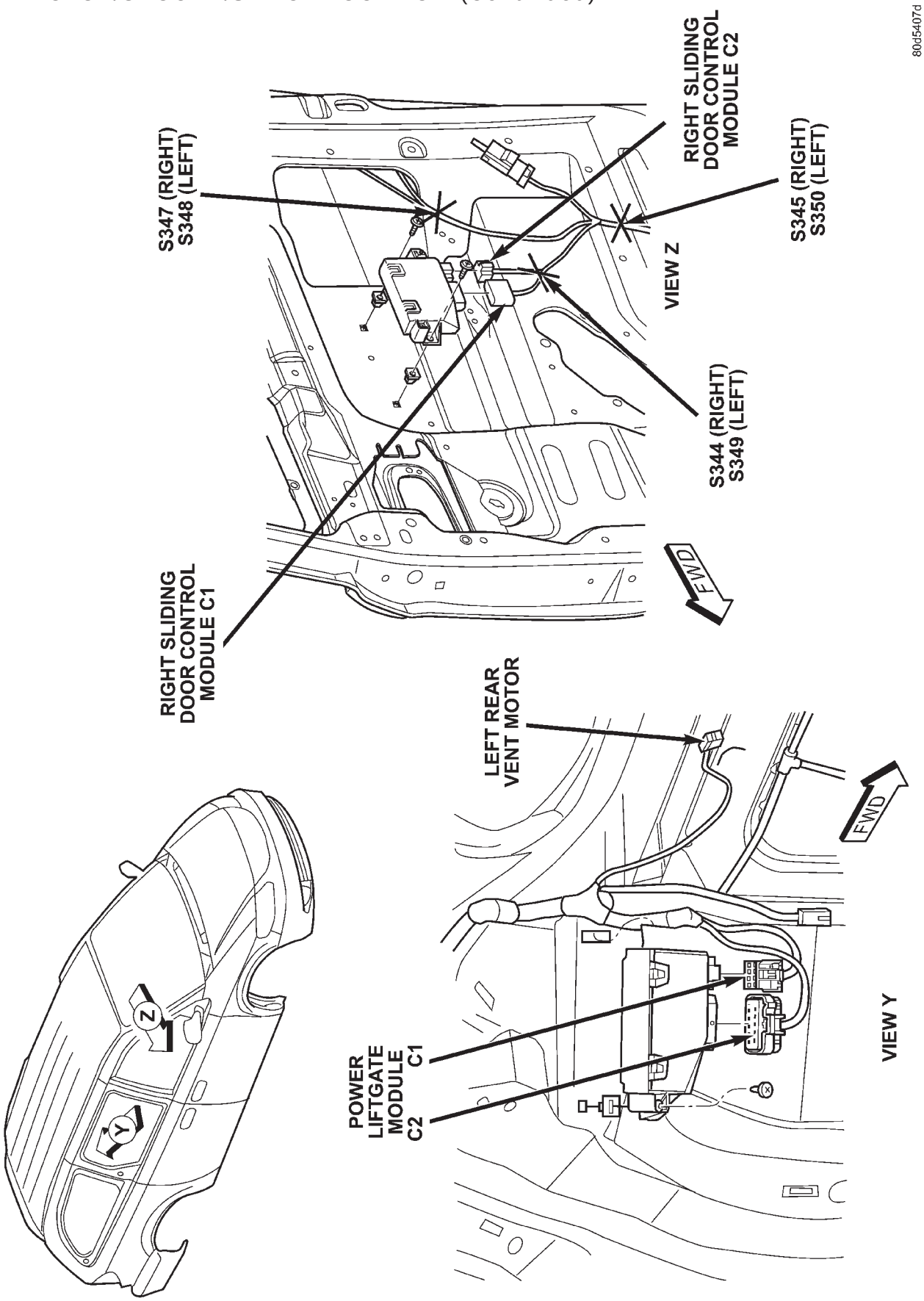

Fig. 39 LIFTGATE AND SLIDING DOOR MODULES

CONNECTOR/GROUND/SPLICE LOCATION (Continued)

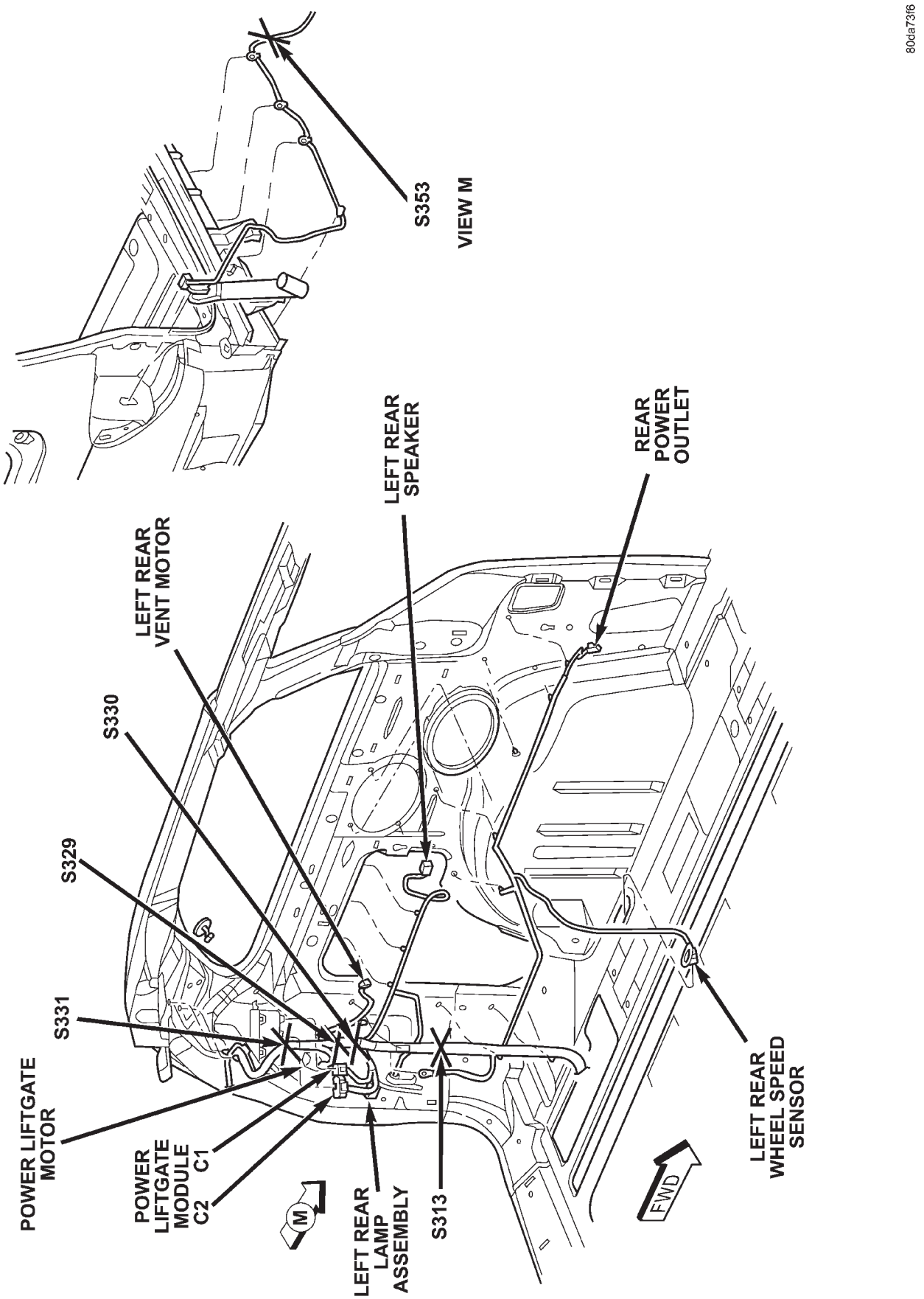

Fig. 40 LEFT REAR BODY

CONNECTOR/GROUND/SPLICE LOCATION (Continued)

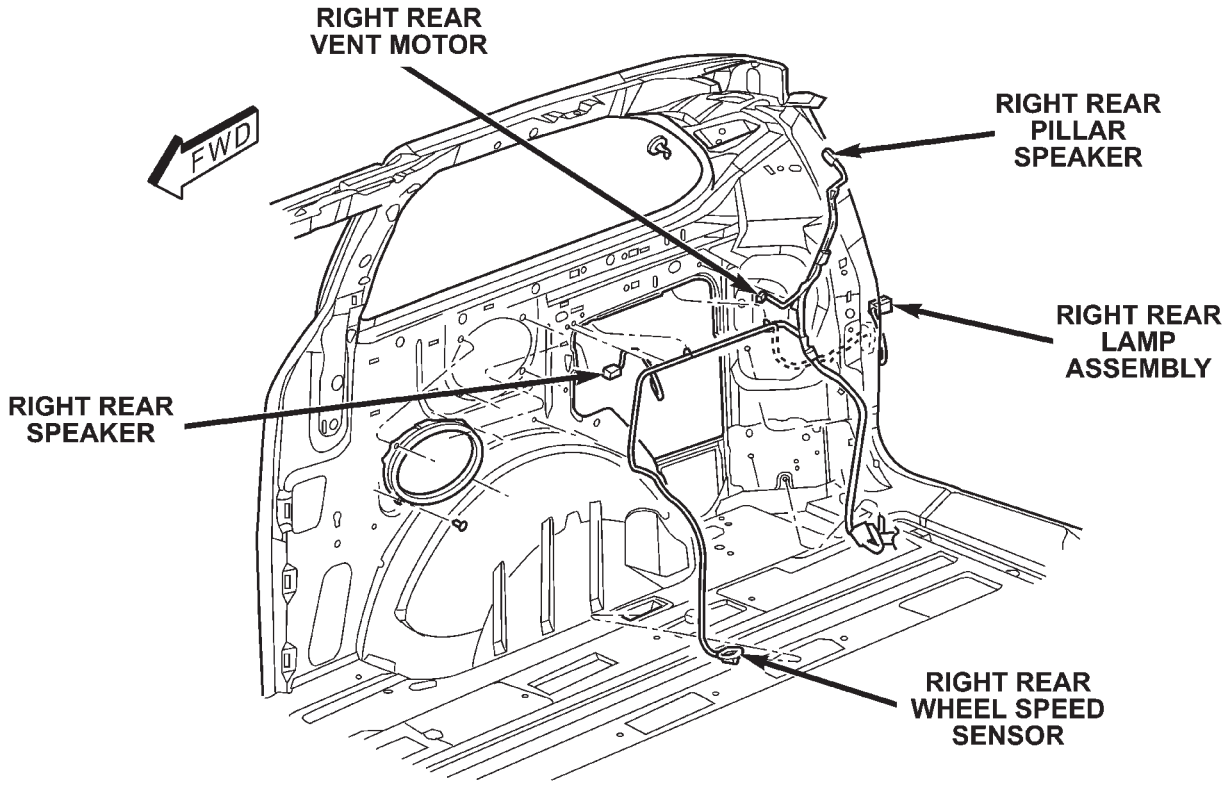

Fig. 41 RIGHT QUARTER

CONNECTOR/GROUND/SPLICE LOCATION (Continued)

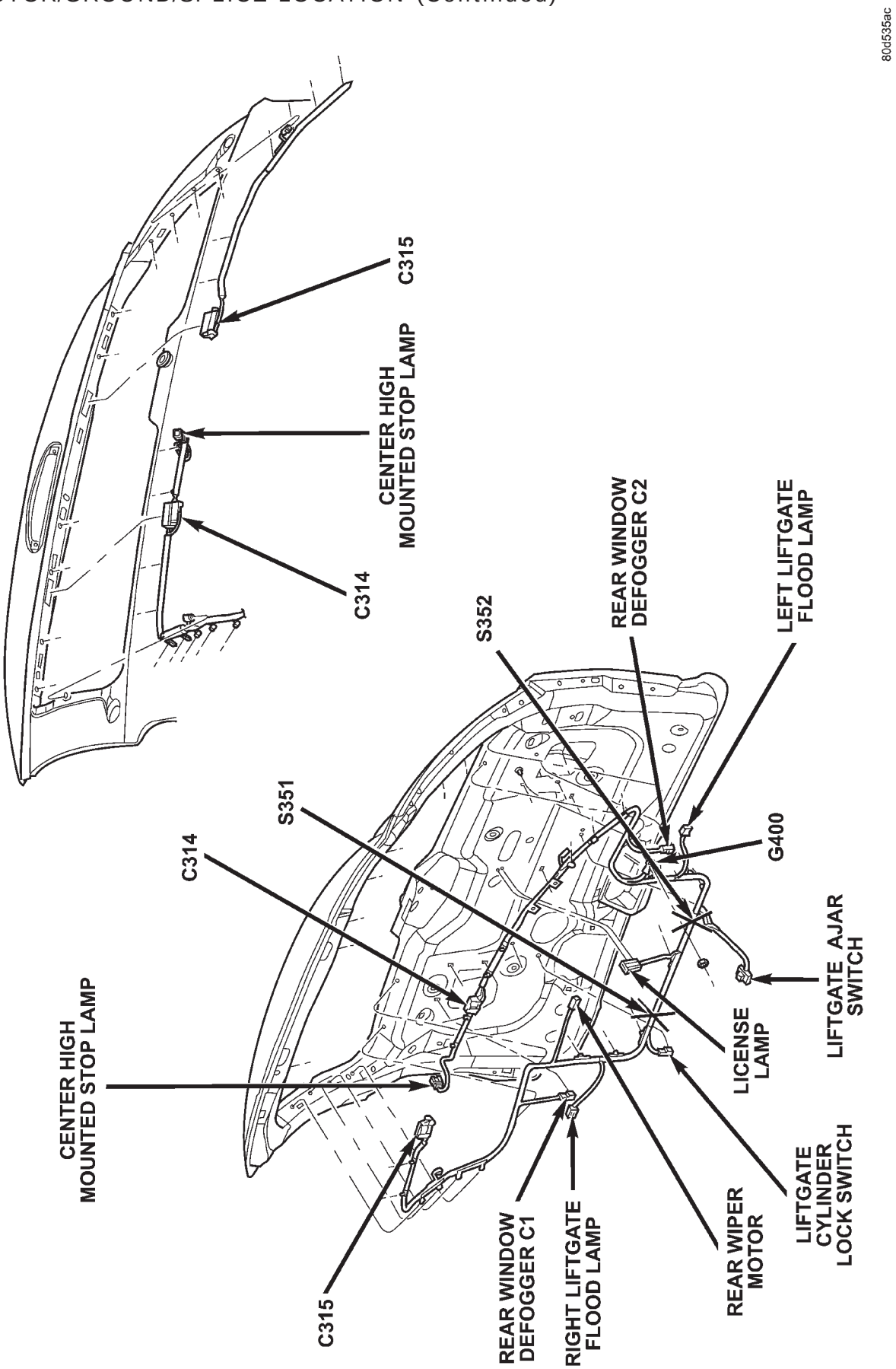

Fig. 42 LIFTGATE

8W-97 POWER DISTRIBUTION SYSTEM

TABLE OF CONTENTS

page

POWER DISTRIBUTION SYSTEM
DESCRIPTION 1
OPERATION 1
SPECIAL TOOLS
POWER DISTRIBUTION SYSTEMS 2
ACCESSORY RELAY
DESCRIPTION 2
OPERATION 2
DIAGNOSIS AND TESTING
DIAGNOSIS & TESTING - ACCESSORY RELAY 2
REMOVAL 3
INSTALLATION 3
INTEGRATED POWER MODULE
DESCRIPTION 3
OPERATION 3
REMOVAL 4
INSTALLATION 4
IOD FUSE
DESCRIPTION 4
OPERATION 5
REMOVAL 5
INSTALLATION 5
POWER OUTLET
DESCRIPTION 5
OPERATION 5
DIAGNOSIS AND TESTING
DIAGNOSIS & TESTING - POWER OUTLET . . 5
REMOVAL 6
INSTALLATION 6

POWER DISTRIBUTION SYSTEM

DESCRIPTION

This group covers the various standard and optional power distribution components used on this model. The power distribution system for this vehicle consists of the following components:

- Integrated Power Module (IPM)
- Front Control Module (FCM)
- Power Outlets

Refer to Wiring Diagrams for complete circuit schematics.

The power distribution system also incorporates various types of circuit control and protection features, including:

- Automatic resetting circuit breakers
- Blade-type fuses
- Bus bars
- Cartridge fuses
- Circuit splice blocks
- Flashers
- Fusible links
- Relays

Following are general descriptions of the major components in the power distribution system. See the owner's manual in the vehicle glove box for more information on the features and use of all of the power distribution system components.

OPERATION

The power distribution system for this vehicle is designed to provide safe, reliable, and centralized distribution points for the electrical current required to operate all of the many standard and optional factory-installed electrical and electronic powertrain, chassis, safety, security, comfort and convenience systems. At the same time, the power distribution system was designed to provide ready access to these electrical distribution points for the vehicle technician to use when conducting diagnosis and repair of faulty circuits. The power distribution system can also prove useful for the sourcing of additional electrical circuits that may be required to provide the electrical current needed to operate many accessories that the vehicle owner may choose to have installed in the aftermarket.

POWER DISTRIBUTION SYSTEM (Continued)

SPECIAL TOOLS

POWER DISTRIBUTION SYSTEMS

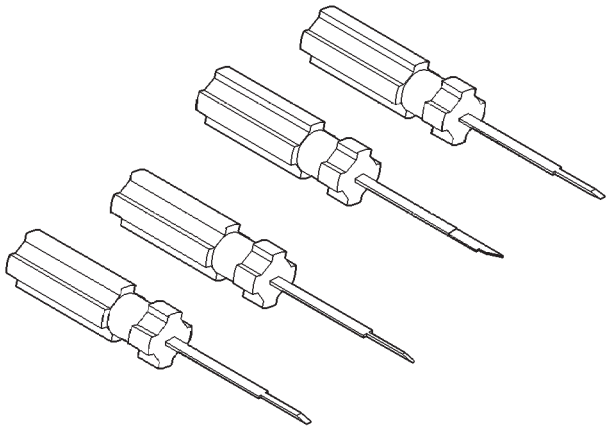

Terminal Pick Kit 6680

ACCESSORY RELAY

DESCRIPTION

The accessory relay is an electromechanical device that switches fused battery current to the accessory powered vehicle circuits when the ignition switch is turned to the Accessory or On positions. The delay feature will maintain power to the accessories for 45 seconds after the ignition is shut off or until a door is opened. This allows sufficient time to close windows and park the windshield wipers. The accessory relay is located in the Integrated Power Module (IPM) in the engine compartment.

The accessory relay is a International Standards Organization (ISO) relay. Relays conforming to the ISO specifications have common physical dimensions, current capacities, terminal patterns, and terminal functions.

The accessory relay cannot be repaired or adjusted and, if faulty or damaged, it must be replaced.

OPERATION

The ISO relay consists of an electromagnetic coil, a resistor or diode, and three (two fixed and one movable) electrical contacts. The movable (common feed) relay contact is held against one of the fixed contacts (normally closed) by spring pressure. When the electromagnetic coil is energized, it draws the movable contact away from the normally closed fixed contact, and holds it against the other (normally open) fixed contact.

When the electromagnetic coil is de-energized, spring pressure returns the movable contact to the normally closed position. The resistor or diode is connected in parallel with the electromagnetic coil in the relay, and helps to dissipate voltage spikes that are produced when the coil is de-energized.

DIAGNOSIS AND TESTING

DIAGNOSIS & TESTING - ACCESSORY RELAY

The accessory relay (Fig. 1) is located in the Integrated Power Module (IPM), in the engine compartment. For complete circuit diagrams, refer to **Wiring Diagrams**.

(1) Remove the accessory relay from the IPM. Refer to **Accessory Relay** in the Removal and Installation section of this group for the procedure.

(2) A relay in the de-energized position should have continuity between terminals 87A and 30, and no continuity between terminals 87 and 30. If OK, go to Step 3. If not OK, replace the faulty relay.

(3) Resistance between terminals 85 and 86 (electromagnet) should be 75 ± 5 ohms. If OK, go to Step 4. If not OK, replace the faulty relay.

(4) Connect a battery to terminals 85 and 86. There should now be continuity between terminals 30 and 87, and no continuity between terminals 87A and 30. If OK, perform the Relay Circuit Test that follows. If not OK, replace the faulty relay.

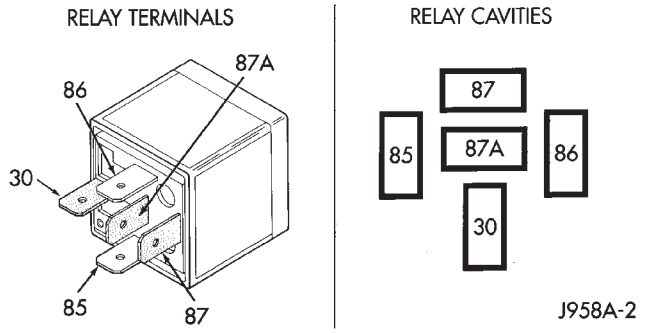

Fig. 1 Accessory Relay

DIAGNOSIS & TESTING - RELAY CIRCUIT TEST

(1) The relay common feed terminal cavity (30) of the IPM is connected to battery voltage and should be hot at all times. Check for battery voltage at the fused B(+) circuit cavity in the IPM receptacle for the accessory relay. If OK, go to Step 2. If not OK, repair the fused B(+) circuit to the IPM fuse as required.

(2) The relay normally closed terminal (87A) is connected to terminal 30 in the de-energized position, but is not used for this application. Go to Step 3.

(3) The relay normally open terminal (87) is connected to the common feed terminal (30) in the energized position. This terminal supplies battery voltage to the fused B(+) fuse in the IPM that feeds the accessories when the relay is energized by the ignition switch. There should be continuity between the IPM cavity for relay terminal 87 and the fused B(+) fuse in the IPM at all times. If OK, go to Step 4. If not OK, repair the open fused B(+) circuit to the IPM fuse as required.

ACCESSORY RELAY (Continued)

(4) The coil ground terminal (85) is connected to the electromagnet in the relay. It receives battery feed to energize the accessory relay when the ignition switch is in the Accessory or On positions. Turn the ignition switch to the On position. Check for battery voltage at the fused ignition switch output (acc/run) circuit cavity for relay terminal 85 in the IPM receptacle for the accessory relay. If OK, go to Step 5. If not OK, repair the open fused ignition switch output (acc/run) circuit to the ignition switch as required.

(5) The coil battery terminal (86) is connected to the electromagnet in the relay. The IPM cavity for this terminal should have continuity to ground at all times. If not OK, repair the open ground circuit to ground as required.

REMOVAL

(1) Disconnect and isolate the battery negative cable.

(2) Remove the Integrated Power Module (IPM) cover from the IPM.

(3) Remove the accessory relay from the IPM. Refer to the IPM cover for relay location.

INSTALLATION

(1) Position the accessory relay in the proper receptacle in the Integrated Power Module (IPM).

(2) Push in firmly on the accessory relay until the terminals are fully seated in the terminal cavities in the IPM receptacle.

(3) Install the IPM cover.

(4) Reconnect the battery negative cable.

INTEGRATED POWER MODULE

DESCRIPTION

The Integrated Power Module (IPM) is a combination of the Power Distribution Center (PDC) and the Front Control Module (FCM). The IPM is located in the engine compartment, next to the battery on this model (Fig. 2). The power distribution center mates directly with the Front Control Module (FCM) to form the IPM Fuse and Relay Center. The power distribution center (PDC) is a printed circuit board based module that contains fuses and relays, while the front control module contains the electronics controlling the IPM and other functions. This IPM connects directly to the battery positive via a four pin connector. The ground connection is via two other connectors. The IPM provides the primary means of voltage distribution and protection for the entire vehicle.

The molded plastic IPM housing includes a base and cover. The IPM cover is easily opened or removed for service access by squeezing the two marked cover latches and has a fuse and relay layout map integral to the inside surface of the cover. This IPM housing base and cover are secured in place by an IPM mounting bracket. This mounting bracket is designed to allow the IPM to rotate counter-clockwise once the locking tab is disengaged. The IPM mounting bracket is secured in place by bolts threaded into the left front wheel house.

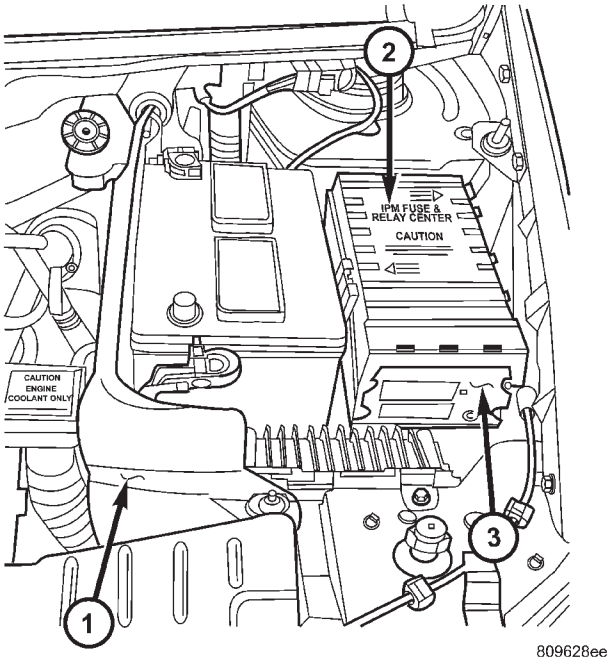

Fig. 2 BATTERY THERMAL GUARD

1 - BATTERY THERMAL GUARD
2 - INTEGRATED POWER MODULE
3 - FRONT CONTROL MODULE

Replaceable components of the IPM assembly are broken down into the following components: the Power Distribution Center (PDC) (without fuses or relays), the IPM cover, the Front Control Module (FCM), the IPM mounting bracket, IPM bracket retaining clips and the IPM assembly which includes the power distribution center, the cover and FCM. **Refer to the Front Control Module in the Electronic Control Module section** of this service manual for information on the FCM.

OPERATION

All of the current from the battery and the generator output enters the Integrated Power Module (IPM) via a four- pin connector on the bottom of the module. The IPM cover is unlatched and opened or removed to access the fuses or relays. Internal connections of all of the power distribution center circuits is accomplished by a combination of bus bars and a printed circuit board. Refer to the Wiring sec-

INTEGRATED POWER MODULE (Continued)

tion of the service manual for complete IPM circuit schematics.

REMOVAL

(1) Disconnect the negative and positive battery cables.

(2) Remove the battery thermal guard from the vehicle. Refer to the Battery section for the procedure.

(3) Remove the battery from the vehicle. Refer to the Battery section for the procedure.

(4) Using a flat-bladed screwdriver, twist the Integrated Power Module (IPM) bracket retaining latch outward to free the intelligent power module from its mounting bracket (Fig. 3).

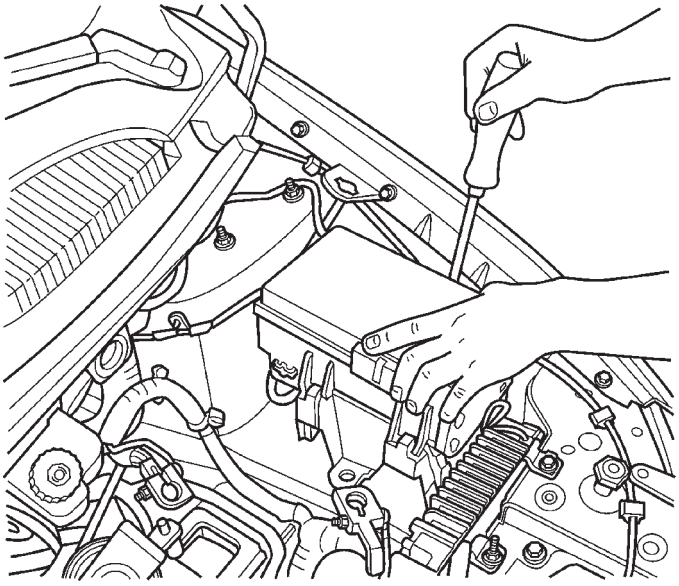

Fig. 3 RELEASING INTEGRATED POWER MODULE FROM ITS MOUNTING BRACKET

(5) Rotate the IPM counter-clockwise to access and disconnect the various electrical connectors (Fig. 4).

(6) Free the IPM from its mounting bracket by removing the IPM bracket clips from the hinge. A screwdriver slipped up from under the hinge will free the clips.

INSTALLATION

(1) Snap the left side of the Integrated Power Module (IPM) housing in its mounting bracket and connect the various electrical connectors. Care must be taken that the Connector Positive Assurance (CPA) on the five-pin B+ connector is positively engaged to prevent generating a Diagnostic Trouble Code (DTC).

NOTE: IPM electrical connectors are color coded to ease location reference.

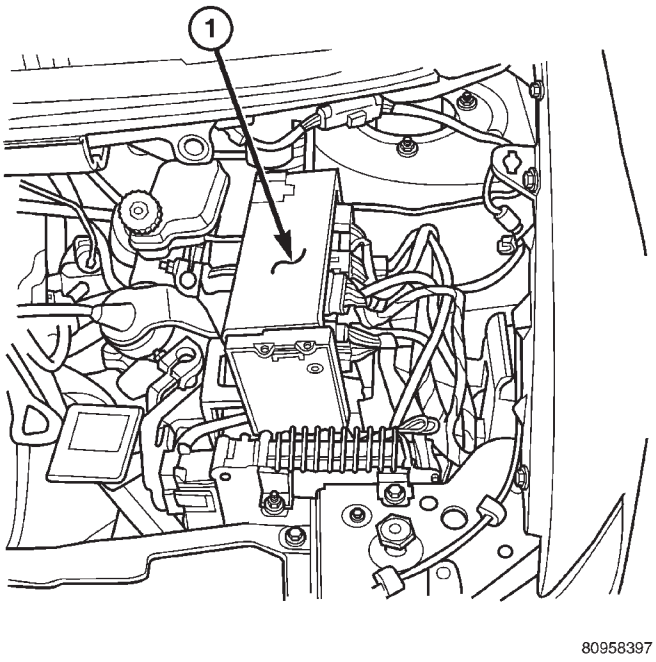

Fig. 4 DISCONNECTING IPM

1 - INTEGRATED POWER MODULE FUSE & RELAY CENTER

(2) Being certain no wires are stressed or pinched, rotate the IPM clock-wise until secured in mounting bracket. An audible click may be heard.

(3) Install the battery in the vehicle. Refer to the Battery section for the procedure.

(4) Install the battery thermal guard in the vehicle. Refer to the Battery section for the procedure.

(5) Connect the negative and positive battery cables.

(6) Using a diagnostic scan tool, check for any stored diagnostic trouble codes and correct, check that all vehicle options are operational before returning the vehicle to service.

IOD FUSE

DESCRIPTION

All vehicles are equipped with an Ignition-Off Draw (IOD) fuse that is removed from its normal cavity in the Integrated Power Module (IPM) when the vehicle is shipped from the factory. Dealer personnel are to remove the IOD fuse from the storage location and install it into the IPM fuse cavity marked IOD as part of the preparation procedures performed just prior to new vehicle delivery.

The IPM has a molded plastic cover that can be removed to provide service access to all of the fuses and relays in the IPM. An integral latch and hinges are molded into the IPM cover for easy removal. A fuse layout map is integral to the underside of the IPM cover to ensure proper fuse and relay identifica-

IOD FUSE (Continued)

tion. The IOD fuse is a 15 ampere blade-type cartridge fuse and, when removed, it is stored in a fuse cavity adjacent to the washer fuse within the IPM.

OPERATION

The term ignition-off draw identifies a normal condition where power is being drained from the battery with the ignition switch in the Off position. The IOD fuse feeds the memory and sleep mode functions for some of the electronic modules in the vehicle as well as various other accessories that require battery current when the ignition switch is in the Off position, including the clock. The only reason the IOD fuse is removed is to reduce the normal IOD of the vehicle electrical system during new vehicle transportation and pre-delivery storage to reduce battery depletion, while still allowing vehicle operation so that the vehicle can be loaded, unloaded and moved as needed by both vehicle transportation company and dealer personnel.

The IOD fuse is removed from the IPM fuse cavity when the vehicle is shipped from the assembly plant. Dealer personnel must install the IOD fuse when the vehicle is being prepared for delivery in order to restore full electrical system operation. Once the vehicle is prepared for delivery, the IOD function of this fuse becomes transparent and the fuse that has been assigned the IOD designation becomes only another Fused B(+) circuit fuse. The IOD fuse serves no useful purpose to the dealer technician in the service or diagnosis of any vehicle system or condition, other than the same purpose as that of any other standard circuit protection device.

The IOD fuse can be used by the vehicle owner as a convenient means of reducing battery depletion when a vehicle is to be stored for periods not to exceed about thirty days. However, it must be remembered that removing the IOD fuse will not eliminate IOD, but only reduce this normal condition. If a vehicle will be stored for more than about thirty days, the battery negative cable should be disconnected to eliminate normal IOD; and, the battery should be tested and recharged at regular intervals during the vehicle storage period to prevent the battery from becoming discharged or damaged. Refer to **Battery System** for additional service information.

REMOVAL

(1) Turn the ignition switch to the Off position.

(2) Unlatch and open the cover of the intelligent power module.

(3) Remove the IOD fuse from fuse location marked **IOD** of the Integrated Power Module (IPM).

(4) Store the removed IOD fuse by installing it in the unused fuse storage marked **SPARE** of the IPM.

(5) Close and latch the IPM.

INSTALLATION

(1) Be certain the ignition switch is in the Off position.

(2) Unlatch and open the cover of the Integrated Power Module (IPM).

(3) Remove the stored 15 amp IOD fuse from fuse storage marked **SPARE** of the IPM.

(4) Use a thumb to press the IOD fuse firmly down into IPM fuse cavity marked **IOD**.

(5) Close and latch the IPM cover.

POWER OUTLET

DESCRIPTION

Accessory power outlets are standard equipment on this model. Two power outlets are installed in the instrument panel center lower bezel, which is located near the bottom of the instrument panel center stack area. Two additional power outlets are also incorporated into the vehicle, one on the left rear C-pillar trim and the other in the center console, if equipped. The power outlets bases are secured by a snap fit in the appropriate bezels. A hinged plug flips closed to conceal and protect the power outlet base when the power outlet is not being used.

The power outlet receptacle unit and the power outlet plugs are each available for service replacement.

OPERATION

The power outlet base or receptacle shell is connected to ground, and an insulated contact in the bottom of the shell is connected to battery current. The power outlet on the instrument panel marked with a battery receives battery voltage from a fuse in the Integrated Power Module (IPM) at all times. The other power outlet on the instrument panel marked with a key receives battery voltage only when the key is in the on position.

The power outlet located in the center console receives battery voltage all the time when positioned between the **front seats** and key-on voltage when positioned between the **rear seats**. The power outlet located on the C-pillar receives battery voltage only when the key is in the on position.

DIAGNOSIS AND TESTING

DIAGNOSIS & TESTING - POWER OUTLET

For complete circuit diagrams, refer to **Cigar Lighter/Power Outlet** in Wiring Diagrams.

POWER OUTLET (Continued)

WARNING: ON VEHICLES EQUIPPED WITH AIRBAGS, REFER TO RESTRAINTS BEFORE ATTEMPTING ANY STEERING WHEEL, STEERING COLUMN, SEAT OR INSTRUMENT PANEL COMPONENT DIAGNOSIS OR SERVICE. FAILURE TO TAKE THE PROPER PRECAUTIONS COULD RESULT IN ACCIDENTAL AIRBAG DEPLOYMENT AND POSSIBLE PERSONAL INJURY.

(1) Check the fused B(+) fuse in the Integrated Power Module (IPM). If OK, go to Step 2. If not OK, repair the shorted circuit or component as required and replace the faulty fuse.

(2) Check for battery voltage at the fused B(+) fuse in the IPM. If OK, go to Step 3. If not OK, repair the open fused B(+) circuit to the IPM fuse as required.

(3) Open the power outlet door. Check for continuity between the inside circumference of the power outlet receptacle and a good ground. There should be continuity. If OK, go to Step 4. If not OK, go to Step 5.

(4) Check for battery voltage at the insulated contact located at the back of the power outlet receptacle. If not OK, go to Step 5.

(5) Disconnect and isolate the battery negative cable. Remove the appropriate bezel. Check for continuity between the ground circuit cavity of the power outlet wire harness connector and a good ground. There should be continuity. If OK, go to Step 6. If not OK, repair the open ground circuit to ground as required.

(6) Connect the battery negative cable. Check for battery voltage at the fused B(+) circuit cavity of the power outlet wire harness connector. If OK, replace the faulty power outlet receptacle. If not OK, repair the open fused B(+) circuit to the IPM fuse as required.

REMOVAL

(1) Disconnect and isolate the battery negative cable.

(2) Look inside and note position of the retaining bosses (Fig. 5).

(3) Using external snap ring pliers with 90 degree tips. Insert pliers with tips against bosses and squeeze forcing bosses out of base.

(4) Pull out the base through mounting ring by gently rocking pliers. A tool can be made to do the same. Refer to (Fig. 6).

(5) Disconnect the base wires.

(6) Set base aside. Remove light ring and disconnect wire.

INSTALLATION

(1) Position the mounting ring on the instrument panel and feed the wires through the ring. Index the cap and the mounting ring with the index tab at the 9 o'clock position to the key in the instrument panel. Install the ring.

(2) Connect the wires to the base. Orientate the base alignment rib at the 11 o'clock position to mate the groove in the mounting ring to the base.

(3) Push the base into the bezel until it locks in place.

(4) Check operation of outlet or element and install the 12 volt outlet cap.

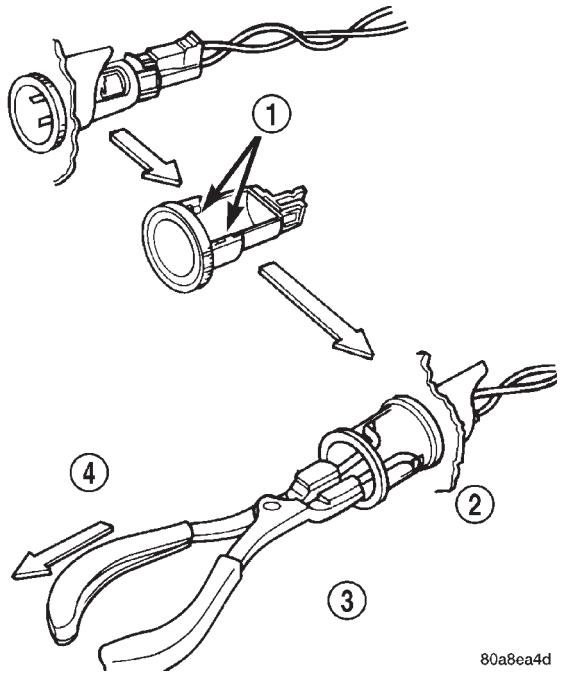

Fig. 5 Outlet Base Removal

1 - RETAINING BOSSES-ENGAGE PLIERS HERE
2 - PARTIALLY REMOVED
3 - EXTERNAL SNAP-RING PLIERS
4 - PULL BASE OUT-THROUGH MOUNTING RING

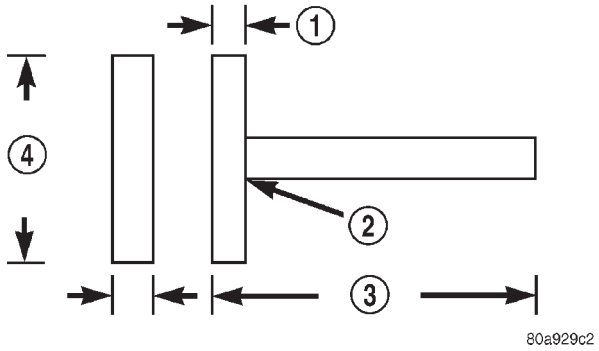

Fig. 6 Tool For Outlet Removal

1 - 2.5MM (3/32 INS.)
2 - WELD
3 - 100MM (4 INS.)
4 - 22.25 TO 22.45MM (7/8 TO 57/64 INS.)

ENGINE

TABLE OF CONTENTS

page

ENGINE 2.4L 1

page

ENGINE 3.3/3.8L 74

ENGINE 2.4L

TABLE OF CONTENTS

page

ENGINE 2.4L
- DESCRIPTION 3
- DIAGNOSIS AND TESTING
  - DIAGNOSIS AND TESTING - ENGINE DIAGNOSIS - INTRODUCTION 3
  - DIAGNOSIS AND TESTING - ENGINE DIAGNOSIS - PERFORMANCE 4
  - DIAGNOSIS AND TESTING - ENGINE DIAGNOSIS - MECHANICAL 6
  - DIAGNOSIS AND TESTING - ENGINE OIL LEAK INSPECTION 8
  - DIAGNOSIS AND TESTING - CYLINDER COMPRESSION PRESSURE TEST 9
  - DIAGNOSIS AND TESTING - CYLINDER COMBUSTION PRESSURE LEAKAGE TEST 9
- STANDARD PROCEDURE
  - STANDARD PROCEDURE - ENGINE CORE AND OIL GALLERY PLUGS 10
  - STANDARD PROCEDURE - REPAIR OF DAMAGED OR WORN THREADS 10
  - STANDARD PROCEDURE - HYDROSTATIC LOCKED ENGINE 10
  - STANDARD PROCEDURE - FORM-IN-PLACE GASKETS AND SEALERS 11
  - STANDARD PROCEDURE - ENGINE GASKET SURFACE PREPARATION 11
  - STANDARD PROCEDURE - MEASURING BEARING CLEARANCE USING PLASTIGAGE 12
- REMOVAL - ENGINE ASSEMBLY 12
- INSTALLATION - ENGINE ASSEMBLY 16
- SPECIFICATIONS
  - SPECIFICATIONS - 2.4L ENGINE 17
  - SPECIFICATIONS - TORQUE 20
- SPECIAL TOOLS
  - 2.4L ENGINE 21

page

AIR CLEANER ELEMENT
- REMOVAL 24
- INSTALLATION 24

AIR CLEANER HOUSING
- REMOVAL 24
- INSTALLATION 24

CYLINDER HEAD
- DESCRIPTION 24
- OPERATION 24
- DIAGNOSIS AND TESTING—CYLINDER HEAD GASKET 24
- REMOVAL - CYLINDER HEAD 25
- CLEANING 26
- INSPECTION 26
- INSTALLATION - CYLINDER HEAD 26

CAMSHAFT OIL SEAL(S)
- REMOVAL 28
- INSTALLATION 28

CAMSHAFT(S)
- DESCRIPTION 29
- OPERATION 29
- STANDARD PROCEDURE - MEASURING CAMSHAFT END PLAY 29
- REMOVAL 29
- CLEANING 29
- INSPECTION 30
- INSTALLATION 30

CYLINDER HEAD COVER
- REMOVAL 31
- CLEANING 31
- INSPECTION 31
- INSTALLATION 31

INTAKE/EXHAUST VALVES & SEATS
- DESCRIPTION 32
- CLEANING 32

VALVE SPRINGS & SEALS
REMOVAL
REMOVAL - CYLINDER HEAD ON 32
REMOVAL - CYLINDER HEAD OFF 33
INSPECTION 33
INSTALLATION
INSTALLATION - CYLINDER HEAD ON 33
INSTALLATION - CYLINDER HEAD OFF 33
HYDRAULIC LASH ADJUSTERS
DIAGNOSIS AND TESTING - HYDRAULIC LASH ADJUSTER NOISE DIAGNOSIS 34
REMOVAL 34
INSTALLATION 34
ROCKER ARMS
REMOVAL 35
INSPECTION 35
INSTALLATION 35
ENGINE BLOCK
DESCRIPTION 35
STANDARD PROCEDURE
STANDARD PROCEDURE - PISTON TO CYLINDER BORE FITTING 36
STANDARD PROCEDURE - CYLINDER BORE HONING 36
CLEANING 37
INSPECTION 37
CONNECTING ROD BEARINGS
STANDARD PROCEDURE
CONNECTING ROD - FITTING 37
CRANKSHAFT
DESCRIPTION 38
OPERATION 38
STANDARD PROCEDURE - CRANKSHAFT END PLAY 38
REMOVAL 38
INSPECTION 39
INSTALLATION 39
CRANKSHAFT MAIN BEARINGS
STANDARD PROCEDURE - MAIN BEARING - FITTING 41
CRANKSHAFT OIL SEAL - FRONT
REMOVAL 42
INSTALLATION 43
CRANKSHAFT OIL SEAL - REAR
REMOVAL 43
INSTALLATION 44
PISTON & CONNECTING ROD
DESCRIPTION 45
OPERATION 45
REMOVAL 45
INSTALLATION 46
PISTON RINGS
STANDARD PROCEDURE
PISTON RING - FITTING 47
VIBRATION DAMPER
REMOVAL 48
INSTALLATION 48
STRUCTURAL COLLAR
REMOVAL 49
INSTALLATION 49
ENGINE MOUNTING
DESCRIPTION 49
FRONT MOUNT
REMOVAL 49
INSTALLATION 50
LEFT MOUNT
REMOVAL 50
INSTALLATION 50
REAR MOUNT
REMOVAL 51
INSTALLATION 51
RIGHT MOUNT
REMOVAL 52
INSTALLATION 52
LUBRICATION
DESCRIPTION 53
OPERATION 53
DIAGNOSIS AND TESTING - CHECKING ENGINE OIL PRESSURE 53
OIL
STANDARD PROCEDURE
ENGINE OIL LEVEL CHECK 53
STANDARD PROCEDURE - ENGINE OIL AND FILTER CHANGE 54
OIL FILTER
DESCRIPTION 54
REMOVAL 54
INSTALLATION 55
OIL PAN
REMOVAL 55
INSTALLATION 55
OIL PRESSURE SWITCH
REMOVAL 55
INSTALLATION 55
OIL PUMP
REMOVAL 55
DISASSEMBLY 56
CLEANING 57
INSPECTION 57
ASSEMBLY 58
INSTALLATION 58
INTAKE MANIFOLD
DESCRIPTION 59
OPERATION 59
DIAGNOSIS AND TESTING - INTAKE MANIFOLD LEAKS 59
INTAKE MANIFOLD - UPPER
REMOVAL 60
INSPECTION 61
INSTALLATION 61
INTAKE MANIFOLD - LOWER
REMOVAL 61
INSPECTION 61
INSTALLATION 61

EXHAUST MANIFOLD
DESCRIPTION 62
OPERATION 62
REMOVAL 62
CLEANING 62
INSPECTION 62
INSTALLATION 62
TIMING BELT COVER(S)
REMOVAL 63
INSTALLATION 63
TIMING BELT AND SPROCKET(S)
REMOVAL
REMOVAL - TIMING BELT 64
REMOVAL - CRANKSHAFT SPROCKET 66
CLEANING 66
INSTALLATION
INSTALLATION - CRANKSHAFT SPROCKET . 66
INSTALLATION - TIMING BELT 67
TIMING BELT TENSIONER & PULLEY
REMOVAL 68
INSTALLATION 69
BALANCE SHAFTS AND CARRIER ASSEMBLY
DESCRIPTION 69
OPERATION 70
REMOVAL 70
INSTALLATION 71

ENGINE 2.4L

DESCRIPTION

The 2.4 Liter (148 cu. in.) in-line four cylinder engine is a double over head camshaft with hydraulic lash adjusters and four valve per cylinder design. The engine is free-wheeling; meaning it has provisions for piston-to-valve clearance. However valve-to-valve interference can occur, if camshafts are rotated independently.

The cylinders are numbered from front of the engine to the rear. The firing order is 1–3–4–2.

The engine identification number is located on the rear of the cylinder block (Fig. 1).

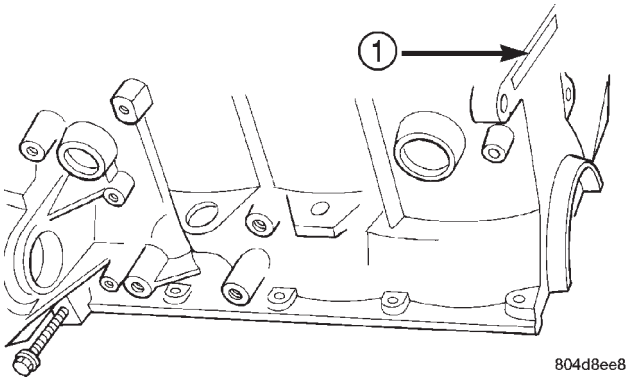

Fig. 1 Engine Identification

1 - ENGINE IDENTIFICATION LOCATION

DIAGNOSIS AND TESTING

DIAGNOSIS AND TESTING - ENGINE DIAGNOSIS - INTRODUCTION

Engine diagnosis is helpful in determining the causes of malfunctions not detected and remedied by routine maintenance.

These malfunctions may be classified as either mechanical (e.g., a strange noise), or performance (e.g., engine idles rough and stalls).

Refer to the Engine Mechanical and the Engine Performance diagnostic charts, for possible causes and corrections of malfunctions (Refer to 9 - ENGINE - DIAGNOSIS AND TESTING - MECHANICAL) (Refer to 9 - ENGINE - DIAGNOSIS AND TESTING - PERFORMANCE).

For fuel system diagnosis, (Refer to 14 - FUEL SYSTEM/FUEL DELIVERY - DIAGNOSIS AND TESTING).

Additional tests and diagnostic procedures may be necessary for specific engine malfunctions that cannot be isolated with the Service Diagnosis charts. Information concerning additional tests and diagnosis is provided within the following:

- Cylinder Compression Pressure Test
- Cylinder Combustion Pressure Leakage Test
- Engine Cylinder Head Gasket Failure Diagnosis
- Intake Manifold Leakage Diagnosis
- Hydraulic Lash Adjuster Noise Diagnosis
- Engine Oil Leak Inspection

ENGINE 2.4L (Continued)

DIAGNOSIS AND TESTING - ENGINE
DIAGNOSIS - PERFORMANCE

CONDITION	POSSIBLE CAUSE	CORRECTION
ENGINE WILL NOT START	1. Weak battery.	1. Test battery. Charge or replace as necessary. (Refer to 8 - ELECTRICAL/BATTERY SYSTEM - DIAGNOSIS AND TESTING)
	2. Corroded or loose battery connections.	2. Clean and tighten battery connections. Apply a coat of light mineral grease to terminals.
	3. Faulty starter.	3. Test starting system. (Refer to 8 - ELECTRICAL/STARTING - DIAGNOSIS AND TESTING)
	4. Faulty coil(s) or control unit.	4. Test and replace as needed. (Refer to Appropriate Diagnostic Information)
	5. Incorrect spark plug gap.	5. Set gap. (Refer to 8 - ELECTRICAL/IGNITION CONTROL - SPECIFICATIONS)
	6. Contamination in fuel system.	6. Clean system and replace fuel filter.
	7. Faulty fuel pump.	7. Test fuel pump and replace as needed. (Refer to Appropriate Diagnostic Information)
	8. Incorrect engine timing.	8. Check for a skipped timing belt/chain.
ENGINE STALLS OR IDLES ROUGH	1. Idle speed too low.	1. Test minimum air flow. (Refer to Appropriate Diagnostic Information)
	2. Incorrect fuel mixture.	2. (Refer to Appropriate Diagnostic Information)
	3. Intake manifold leakage.	3. Inspect intake manifold, manifold gasket, and vacuum hoses.
	4. Faulty ignition coil(s).	4. Test and replace as necessary. (Refer to Appropriate Diagnostic Information)

ENGINE 2.4L (Continued)

CONDITION	POSSIBLE CAUSE	CORRECTION
ENGINE LOSS OF POWER	1. Dirty or incorrectly gapped plugs.	1. Clean plugs and set gap.
	2. Contamination in fuel system.	2. Clean system and replace fuel filter.
	3. Faulty fuel pump.	3. Test and replace as necessary. (Refer to Appropriate Diagnostic Information)
	4. Incorrect valve timing.	4. Correct valve timing.
	5. Leaking cylinder head gasket.	5. Replace cylinder head gasket.
	6. Low compression.	6. Test compression of each cylinder.
	7. Burned, warped, or pitted valves.	7. Replace valves.
	8. Plugged or restricted exhaust system.	8. Perform exhaust restriction test. (Refer to 11 - EXHAUST SYSTEM - DIAGNOSIS AND TESTING) Install new parts, as necessary.
	9. Faulty ignition coil(s).	9. Test and replace as necessary. (Refer to Appropriate Diagnostic Information)
ENGINE MISSES ON ACCELERATION	1. Dirty or incorrectly gapped spark plugs.	1. Clean spark plugs and set gap.
	2. Contamination in Fuel System.	2. Clean fuel system and replace fuel filter.
	3. Burned, warped, or pitted valves.	3. Replace valves.
	4. Faulty ignition coil(s).	4. Test and replace as necessary. (Refer to Appropriate Diagnostic Information)
ENGINE MISSES AT HIGH SPEED	1. Dirty or incorrect spark plug gap.	1. Clean spark plugs and set gap.
	2. Faulty ignition coil(s).	2. Test and replace as necessary. (Refer to Appropriate Diagnostic Information)
	3. Dirty fuel injector(s).	3. Test and replace as necessary. (Refer to Appropriate Diagnostic Information)
	4. Contamination in fuel system.	4. Clean system and replace fuel filter.

ENGINE 2.4L (Continued)

DIAGNOSIS AND TESTING - ENGINE
DIAGNOSIS - MECHANICAL

CONDITION	POSSIBLE CAUSES	CORRECTION
NOISY VALVES	1. High or low oil level in crankcase.	1. Check and correct engine oil level.
	2. Thin or diluted oil.	2. Change oil to correct viscosity.
	3. Thick oil	3. (a) Change engine oil and filter. (b) Run engine to operating temperature. (c) Change engine oil and filter again.
	4. Low oil pressure.	4. Check and correct engine oil pressure problem.
	5. Dirt in hydraulic lifters/lash adjusters.	5. Replace hydraulic lifters/lash adjusters.
	6. Worn rocker arms.	6. Inspect oil supply to rocker arms.
	7. Worn hydraulic lifters/lash adjusters.	7. Replace hydraulic lifters/lash adjusters.
	8. Worn valve guides.	8. Replace cylinder head assembly.
	9. Excessive runout of valve seats on valve faces.	9. Grind valve seats and valves.
CONNECTING ROD NOISE	1. Insufficient oil supply.	1. Check engine oil level.
	2. Low oil pressure.	2. Check engine oil level. Inspect oil pump relief valve and spring.
	3. Thin or diluted oil.	3. Change oil to correct viscosity.
	4. Thick oil	4. (a) Change engine oil and filter. (b) Run engine to operating temperature. (c) Change engine oil and filter again.
	5. Excessive bearing clearance.	5. Measure bearings for correct clearance. Repair as necessary.
	6. Connecting rod journal out-of-round.	6. Replace crankshaft or grind surface.
	7. Misaligned connecting rods.	7. Replace bent connecting rods.

ENGINE 2.4L (Continued)

CONDITION	POSSIBLE CAUSES	CORRECTION
MAIN BEARING NOISE	1. Insufficient oil supply.	1. Check engine oil level.
	2. Low oil pressure.	2. Check engine oil level. Inspect oil pump relief valve and spring.
	3. Thin or diluted oil.	3. Change oil to correct viscosity.
	4. Thick oil	4. (a) Change engine oil and filter. (b) Run engine to operating temperature. (c) Change engine oil and filter again.
	5. Excessive bearing clearance.	5. Measure bearings for correct clearance. Repair as necessary.
	6. Excessive end play.	6. Check thrust bearing for wear on flanges.
	7. Crankshaft journal out-of-round or worn.	7. Replace crankshaft or grind journals.
	8. Loose flywheel or torque converter.	8. Tighten to correct torque.
OIL PRESSURE DROP	1. Low oil level.	1. Check engine oil level.
	2. Faulty oil pressure sensor/switch.	2. Replace oil pressure sensor/ switch.
	3. Low oil pressure.	3. Check oil pressure sensor/switch and main bearing oil clearance.
	4. Clogged oil filter.	4. Install new oil filter.
	5. Worn parts in oil pump.	5. Replace worn parts or pump.
	6. Thin or diluted oil.	6. Change oil to correct viscosity.
	7. Oil pump relief valve stuck.	7. Remove valve and inspect, clean, or replace.
	8. Oil pump suction tube loose.	8. Remove oil pan and install new tube or clean, if necessary.
	9. Oil pump cover warped or cracked.	9. Install new oil pump.
	10. Excessive bearing clearance.	10. Measure bearings for correct clearance.
OIL LEAKS	1. Misaligned or deteriorated gaskets.	1. Replace gasket(s).
	2. Loose fastener, broken or porous metal part.	2. Tighten, repair or replace the part.
	3. Misaligned or deteriorated cup or threaded plug.	3. Replace as necessary.

ENGINE 2.4L (Continued)

CONDITION	POSSIBLE CAUSES	CORRECTION
OIL CONSUMPTION OR SPARK PLUGS FOULED	1. PCV system malfunction.	1. Check system and repair as necessary. (Refer to 25 - EMISSIONS CONTROL/ EVAPORATIVE EMISSIONS/PCV VALVE - DIAGNOSIS AND TESTING)
	2. Worn, scuffed or broken rings.	2. Hone cylinder bores. Install new rings.
	3. Carbon in oil ring slots.	3. Install new rings.
	4. Rings fitted too tightly in grooves.	4. Remove rings and check grooves. If groove is not proper width, replace piston.
	5. Worn valve guide(s).	5. Replace cylinder head assembly.
	6. Valve stem seal(s) worn or damaged.	6. Replace seal(s).

DIAGNOSIS AND TESTING - ENGINE OIL LEAK INSPECTION

Begin with a thorough visual inspection of the engine, particularly at the area of the suspected leak. If an oil leak source is not readily identifiable, the following steps should be followed:

(1) Do not clean or degrease the engine at this time because some solvents may cause rubber to swell, temporarily stopping the leak.

(2) Add an oil soluble dye (use as recommended by manufacturer). Start the engine and let idle for approximately 15 minutes. Check the oil dipstick to make sure the dye is thoroughly mixed as indicated with a bright yellow color under a black light.

(3) Using a black light, inspect the entire engine for fluorescent dye, particularly at the suspected area of oil leak. If the oil leak is found and identified, repair as necessary.

(4) If dye is not observed, drive the vehicle at various speeds for approximately 24 km (15 miles), and repeat inspection.

(5) **If the oil leak source is not positively identified at this time**, proceed with the air leak detection test method as follows:

- Disconnect the fresh air hose (make-up air) at the cylinder head cover and plug or cap the nipple on the cover.
- Remove the PCV valve hose from the cylinder head cover. Cap or plug the PCV valve nipple on the cover.
- Attach an air hose with pressure gauge and regulator to the dipstick tube.

CAUTION: Do not subject the engine assembly to more than 20.6 kpa (3 PSI) of test pressure.

- Gradually apply air pressure from 1 psi to 2.5 psi maximum while applying soapy water at the suspected source. Adjust the regulator to the suitable test pressure that provides the best bubbles which will pinpoint the leak source. If the oil leak is detected and identified, repair per service manual procedures.
- If the leakage occurs at the crankshaft rear oil seal area, refer to the section, Inspection for Rear Seal Area Leak.

(6) If no leaks are detected, turn off the air supply. Remove the air hose, all plugs, and caps. Install the PCV valve and fresh air hose (make-up air). Proceed to next step.

(7) Clean the oil off the suspect oil leak area using a suitable solvent. Drive the vehicle at various speeds approximately 24 km (15 miles). Inspect the engine for signs of an oil leak by using a black light.

NOTE: If oil leakage is observed at the dipstick tube to block location; remove the tube, clean and reseal using Mopar® Stud & Bearing Mount (press fit tube applications only), and for O-ring style tubes, remove tube and replace the O-ring seal.

INSPECTION FOR REAR SEAL AREA LEAKS

Since it is sometimes difficult to determine the source of an oil leak in the rear seal area of the engine, a more involved inspection is necessary. The following steps should be followed to help pinpoint the source of the leak.

If the leakage occurs at the crankshaft rear oil seal area:

(1) Disconnect the battery.

(2) Raise the vehicle.

(3) Remove torque converter or clutch housing cover and inspect rear of block for evidence of oil. Use a black light to check for the oil leak. If a leak is present in this area, remove transmission for further inspection.

(a) Circular spray pattern generally indicates seal leakage or crankshaft damage.

(b) Where leakage tends to run straight down, possible causes are a porous block, oil gallery cup plug, bedplate to cylinder block mating surfaces and seal bore. See proper repair procedures for these items.

(4) If no leaks are detected, pressurize the crankcase as previously described.

CAUTION: Do not exceed 20.6 kPa (3 psi).

(5) If the leak is not detected, very slowly turn the crankshaft and watch for leakage. If a leak is detected between the crankshaft and seal while slowly turning the crankshaft, it is possible the crankshaft seal surface is damaged. The seal area on the crankshaft could have minor nicks or scratches that can be polished out with emery cloth.

CAUTION: Use extreme caution when crankshaft polishing is necessary to remove minor nicks and scratches. The crankshaft seal flange is especially machined to complement the function of the rear oil seal.

(6) For bubbles that remain steady with shaft rotation, no further inspection can be done until disassembled.

(7) After the oil leak root cause and appropriate corrective action have been identified, replace component(s) as necessary.

DIAGNOSIS AND TESTING - CYLINDER COMPRESSION PRESSURE TEST

The results of a cylinder compression pressure test can be utilized to diagnose several engine malfunctions.

Ensure the battery is completely charged and the engine starter motor is in good operating condition. Otherwise the indicated compression pressures may not be valid for diagnosis purposes.

(1) Check engine oil level and add oil if necessary.

(2) Drive the vehicle until engine reaches normal operating temperature. Select a route free from traffic and other forms of congestion, observe all traffic laws, and accelerate through the gears several times briskly.

(3) Remove all spark plugs from engine. As spark plugs are being removed, check electrodes for abnormal firing indicators fouled, hot, oily, etc. Record cylinder number of spark plug for future reference.

(4) Remove the Auto Shutdown (ASD) relay from the PDC.

(5) Be sure throttle blade is fully open during the compression check.

(6) Insert compression gauge adaptor Special Tool 8116 or the equivalent, into the #1 spark plug hole in cylinder head. Connect the 0–500 psi (Blue) pressure transducer (Special Tool CH7059) with cable adaptors to the DRBIII®. For Special Tool identification, (Refer to 9 - ENGINE - SPECIAL TOOLS).

(7) Crank engine until maximum pressure is reached on gauge. Record this pressure as #1 cylinder pressure.

(8) Repeat the previous step for all remaining cylinders.

(9) Compression should not be less than 689 kPa (100 psi) and not vary more than 25 percent from cylinder to cylinder.

(10) If one or more cylinders have abnormally low compression pressures, repeat the compression test.

(11) If the same cylinder or cylinders repeat an abnormally low reading on the second compression test, it could indicate the existence of a problem in the cylinder in question. **The recommended compression pressures are to be used only as a guide to diagnosing engine problems. An engine should not be disassembled to determine the cause of low compression unless some malfunction is present.**

DIAGNOSIS AND TESTING - CYLINDER COMBUSTION PRESSURE LEAKAGE TEST

The combustion pressure leakage test provides an accurate means for determining engine condition.

Combustion pressure leakage testing will detect:

- Exhaust and intake valve leaks (improper seating).
- Leaks between adjacent cylinders or into water jacket.
- Any causes for combustion/compression pressure loss.

WARNING: DO NOT REMOVE THE PRESSURE CAP WITH THE SYSTEM HOT AND UNDER PRESSURE BECAUSE SERIOUS BURNS FROM COOLANT CAN OCCUR.

Check the coolant level and fill as required. DO NOT install the pressure cap.

Start and operate the engine until it attains normal operating temperature, then turn the engine OFF.

Clean spark plug recesses with compressed air.

Remove the spark plugs.

Remove the oil filler cap.

Remove the air cleaner.

ENGINE 2.4L (Continued)

Calibrate the tester according to the manufacturer's instructions. The shop air source for testing should maintain 483 kPa (70 psi) minimum, 1,379 kPa (200 psi) maximum, with 552 kPa (80 psi) recommended.

Perform the test procedures on each cylinder according to the tester manufacturer's instructions. While testing, listen for pressurized air escaping through the throttle body, tailpipe and oil filler cap opening. Check for bubbles in the coolant.

All gauge pressure indications should be equal, with no more than 25% leakage per cylinder.

FOR EXAMPLE: At 552 kPa (80 psi) input pressure, a minimum of 414 kPa (60 psi) should be maintained in the cylinder.

STANDARD PROCEDURE

STANDARD PROCEDURE - ENGINE CORE AND OIL GALLERY PLUGS

Using a blunt tool such as a drift and a hammer, strike the bottom edge of the cup plug. With the cup plug rotated, grasp firmly with pliers or other suitable tool and remove plug (Fig. 2).

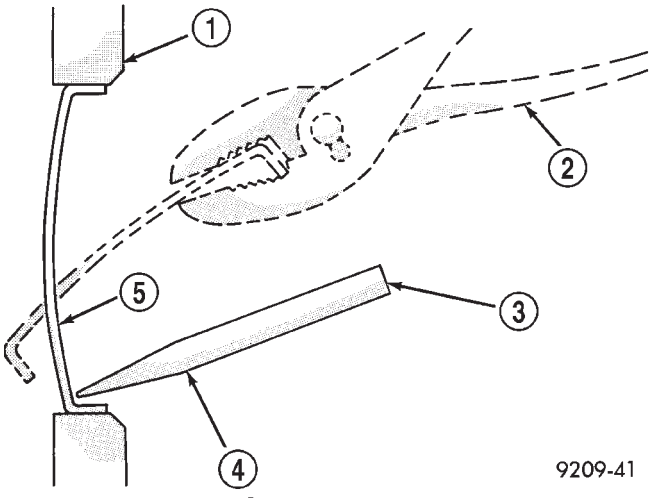

Fig. 2 Core Hole Plug Removal

1 - CYLINDER BLOCK
2 - REMOVE PLUG WITH PLIERS
3 - STRIKE HERE WITH HAMMER
4 - DRIFT PUNCH
5 - CUP PLUG

CAUTION: Do not drive cup plug into the casting as restricted cooling can result and cause serious engine problems.

Thoroughly clean inside of cup plug hole in cylinder block or head. Be sure to remove old sealer. Lightly coat inside of cup plug hole with Mopar® Stud and Bearing Mount. Make certain the new plug is cleaned of all oil or grease. Using proper drive plug, drive plug into hole so that the sharp edge of the plug is at least 0.5 mm (0.020 in.) inside the lead-in chamfer.

It is not necessary to wait for curing of the sealant. The cooling system can be refilled and the vehicle placed in service immediately.

STANDARD PROCEDURE - REPAIR OF DAMAGED OR WORN THREADS

Damaged or worn threads (excluding spark plug and camshaft bearing cap attaching threads) can be repaired. Essentially, this repair consists of drilling out worn or damaged threads, tapping the hole with a special Heli-Coil Tap, (or equivalent) and installing an insert into the tapped hole. This brings the hole back to its original thread size.

CAUTION: Be sure that the tapped holes maintain the original center line.

Heli-Coil tools and inserts are readily available from automotive parts jobbers.

STANDARD PROCEDURE - HYDROSTATIC LOCKED ENGINE

When an engine is suspected to be hydrostatically locked, regardless of what caused the problem, the following steps should be used.

CAUTION: DO NOT use starter motor to rotate the engine, severe damage may occur.

(1) Inspect air cleaner, induction system and intake manifold to insure system is dry and clear of foreign material.

(2) Remove negative battery cable.

(3) Place a shop towel around the spark plugs when removing them from the engine. This will catch any fluid that may possibly be in the cylinder under pressure.

(4) With all spark plugs removed, rotate engine crankshaft using a breaker bar and socket.

(5) Identify the fluid in the cylinder(s) (i.e., coolant, fuel, oil or other).

(6) Make sure all fluid has been removed from the cylinders. Inspect engine for damage (i.e., connecting rods, pistons, valves, etc.)

(7) Repair engine or components as necessary to prevent this problem from re-occurring.

ENGINE 2.4L (Continued)

CAUTION: Squirt approximately one teaspoon of oil into the cylinders, rotate engine to lubricate the cylinder walls to prevent damage on restart.

(8) Install new spark plugs.
(9) Drain engine oil and remove oil filter.
(10) Install a new oil filter.
(11) Fill engine with specified amount of approved oil.
(12) Connect negative battery cable.
(13) Start engine and check for any leaks.

STANDARD PROCEDURE - FORM-IN-PLACE GASKETS AND SEALERS

There are numerous places where form-in-place gaskets are used on the engine. Care must be taken when applying form-in-place gaskets to assure obtaining the desired results. **Do not use form-in-place gasket material unless specified.** Bead size, continuity, and location are of great importance. Too thin a bead can result in leakage while too much can result in spill-over which can break off and obstruct fluid feed lines. A continuous bead of the proper width is essential to obtain a leak-free gasket.

There are numerous types of form-in-place gasket materials that are used in the engine area. Mopar® Engine RTV GEN II, Mopar® ATF-RTV, and Mopar® Gasket Maker gasket materials, each have different properties and can not be used in place of the other.

MOPAR® ENGINE RTV GEN II is used to seal components exposed to engine oil. This material is a specially designed black silicone rubber RTV that retains adhesion and sealing properties when exposed to engine oil. Moisture in the air causes the material to cure. This material is available in three ounce tubes and has a shelf life of one year. After one year this material will not properly cure. Always inspect the package for the expiration date before use.

MOPAR® ATF RTV is a specifically designed black silicone rubber RTV that retains adhesion and sealing properties to seal components exposed to automatic transmission fluid, engine coolants, and moisture. This material is available in three ounce tubes and has a shelf life of one year. After one year this material will not properly cure. Always inspect the package for the expiration date before use.

MOPAR® GASKET MAKER is an anaerobic type gasket material. The material cures in the absence of air when squeezed between two metallic surfaces. It will not cure if left in the uncovered tube. The anaerobic material is for use between two machined surfaces. Do not use on flexible metal flanges.

MOPAR® BED PLATE SEALANT is a unique (green-in-color) anaerobic type gasket material that is specially made to seal the area between the bedplate and cylinder block without disturbing the bearing clearance or alignment of these components. The material cures slowly in the absence of air when torqued between two metallic surfaces, and will rapidly cure when heat is applied.

MOPAR® GASKET SEALANT is a slow drying, permanently soft sealer. This material is recommended for sealing threaded fittings and gaskets against leakage of oil and coolant. Can be used on threaded and machined parts under all temperatures. This material is used on engines with multi-layer steel (MLS) cylinder head gaskets. This material also will prevent corrosion. Mopar® Gasket Sealant is available in a 13 oz. aerosol can or 4oz./16 oz. can w/applicator.

SEALER APPLICATION

Mopar® Gasket Maker material should be applied sparingly 1 mm (0.040 in.) diameter or less of sealant to one gasket surface. Be certain the material surrounds each mounting hole. Excess material can easily be wiped off. Components should be torqued in place within 15 minutes. The use of a locating dowel is recommended during assembly to prevent smearing material off the location.

Mopar® Engine RTV GEN II or ATF RTV gasket material should be applied in a continuous bead approximately 3 mm (0.120 in.) in diameter. All mounting holes must be circled. For corner sealing, a 3.17 or 6.35 mm (1/8 or 1/4 in.) drop is placed in the center of the gasket contact area. Uncured sealant may be removed with a shop towel. Components should be torqued in place while the sealant is still wet to the touch (within 10 minutes). The usage of a locating dowel is recommended during assembly to prevent smearing material off the location.

Mopar® Gasket Sealant in an aerosol can should be applied using a thin, even coat sprayed completely over both surfaces to be joined, and both sides of a gasket. Then proceed with assembly. Material in a can w/applicator can be brushed on evenly over the sealing surfaces. Material in an aerosol can should be used on engines with multi-layer steel gaskets.

STANDARD PROCEDURE - ENGINE GASKET SURFACE PREPARATION

To ensure engine gasket sealing, proper surface preparation must be performed, especially with the use of aluminum engine components and multi-layer steel cylinder head gaskets.

Never use the following to clean gasket surfaces:

- Metal scraper
- Abrasive pad or paper to clean cylinder block and head
- High speed power tool with an abrasive pad or a wire brush (Fig. 3)

ENGINE 2.4L (Continued)

NOTE: Multi-Layer Steel (MLS) head gaskets require a scratch free sealing surface.

Only use the following for cleaning gasket surfaces:
- Solvent or a commercially available gasket remover
- Plastic or wood scraper (Fig. 3)
- Drill motor with 3M Roloc™ Bristle Disc (white or yellow) (Fig. 3)

CAUTION: Excessive pressure or high RPM (beyond the recommended speed), can damage the sealing surfaces. The mild (white, 120 grit) bristle disc is recommended. If necessary, the medium (yellow, 80 grit) bristle disc may be used on cast iron surfaces with care.

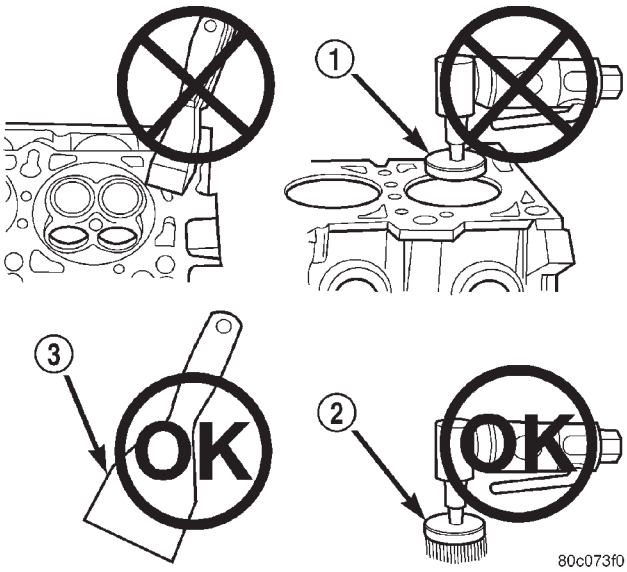

Fig. 3 Proper Tool Usage For Surface Preparation

1 - ABRASIVE PAD
2 - 3M ROLOC™ BRISTLE DISC
3 - PLASTIC/WOOD SCRAPER

STANDARD PROCEDURE - MEASURING BEARING CLEARANCE USING PLASTIGAGE

Engine crankshaft bearing clearances can be determined by use of Plastigage or equivalent. The following is the recommended procedure for the use of Plastigage:

(1) Remove oil film from surface to be checked. Plastigage is soluble in oil.

(2) Place a piece of Plastigage across the entire width of the bearing shell in the cap approximately 6.35 mm (1/4 in.) off center and away from the oil holes (Fig. 4). (In addition, suspected areas can be checked by placing the Plastigage in the suspected area). Torque the bearing cap bolts of the bearing being checked to the proper specifications.

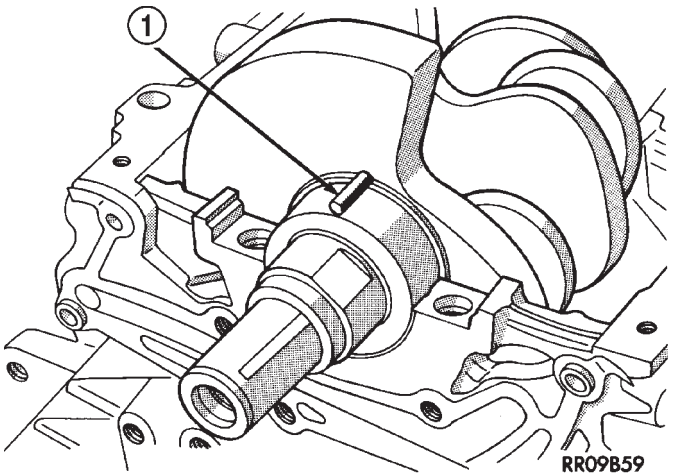

Fig. 4 Plastigage Placed in Lower Shell—Typical

1 - PLASTIGAGE

(3) Remove the bearing cap and compare the width of the flattened Plastigage with the metric scale provided on the package. Locate the band closest to the same width. This band shows the amount of clearance in thousandths of a millimeter. Differences in readings between the ends indicate the amount of taper present. Record all readings taken. Compare clearance measurements to specs found in engine specifications (Refer to 9 - ENGINE - SPECIFICATIONS). **Plastigage generally is accompanied by two scales. One scale is in inches, the other is a metric scale.**

NOTE: Plastigage is available in a variety of clearance ranges. Use the most appropriate range for the specifications you are checking.

(4) Install the proper crankshaft bearings to achieve the specified bearing clearances.

REMOVAL - ENGINE ASSEMBLY

(1) Perform fuel pressure release procedure (Refer to 14 - FUEL SYSTEM/FUEL DELIVERY - STANDARD PROCEDURE)

(2) Disconnect battery negative cable.

(3) Remove air cleaner housing and inlet tube.

(4) Disconnect the fuel line from fuel rail. (Refer to 14 - FUEL SYSTEM/FUEL DELIVERY/FUEL LINES - STANDARD PROCEDURE)

(5) Disconnect all vacuum hoses.

(6) Drain cooling system. (Refer to 7 - COOLING - STANDARD PROCEDURE)

(7) Remove radiator fans. (Refer to 7 - COOLING/ENGINE/RADIATOR FAN - REMOVAL)

(8) Remove radiator upper and lower hoses.

ENGINE 2.4L (Continued)

NOTE: When the transaxle cooler lines are removed from the rolled-groove type fittings at the transaxle, damage to the inner wall of the hose will occur. To prevent prevent potential leakage, the cooler hoses must be cut off flush at the transaxle fitting, and a service cooler hose splice kit must be installed upon reassembly.

(9) Using a blade or suitable hose cutter, cut transaxle oil cooler lines off flush with fittings. Plug cooler lines and fittings to prevent debris from entering transaxle or cooler circuit. A service splice kit will be installed upon reassembly.

(10) Disconnect transmission shift linkage and electrical connectors.

(11) Disconnect throttle body linkage.

(12) Disconnect engine wiring harness.

(13) Disconnect heater hoses from heater (Fig. 5).

(14) Discharge air conditioning system. (Refer to 24 - HEATING & AIR CONDITIONING/PLUMBING - STANDARD PROCEDURE)

(15) Hoist vehicle and remove front wheels and tires.

(16) Remove accessory drive belt splash shield.

(17) Remove accessory drive belts. (Refer to 7 - COOLING/ACCESSORY DRIVE/DRIVE BELTS - REMOVAL)

(18) Remove axle shafts. (Refer to 3 - DIFFERENTIAL & DRIVELINE/HALF SHAFT - REMOVAL)

(19) Drain engine oil and remove oil filter. (Refer to 9 - ENGINE/LUBRICATION/OIL - STANDARD PROCEDURE)

(20) Remove crossmember cradle plate (Fig. 6).

(21) Disconnect exhaust pipe from manifold (Fig. 7).

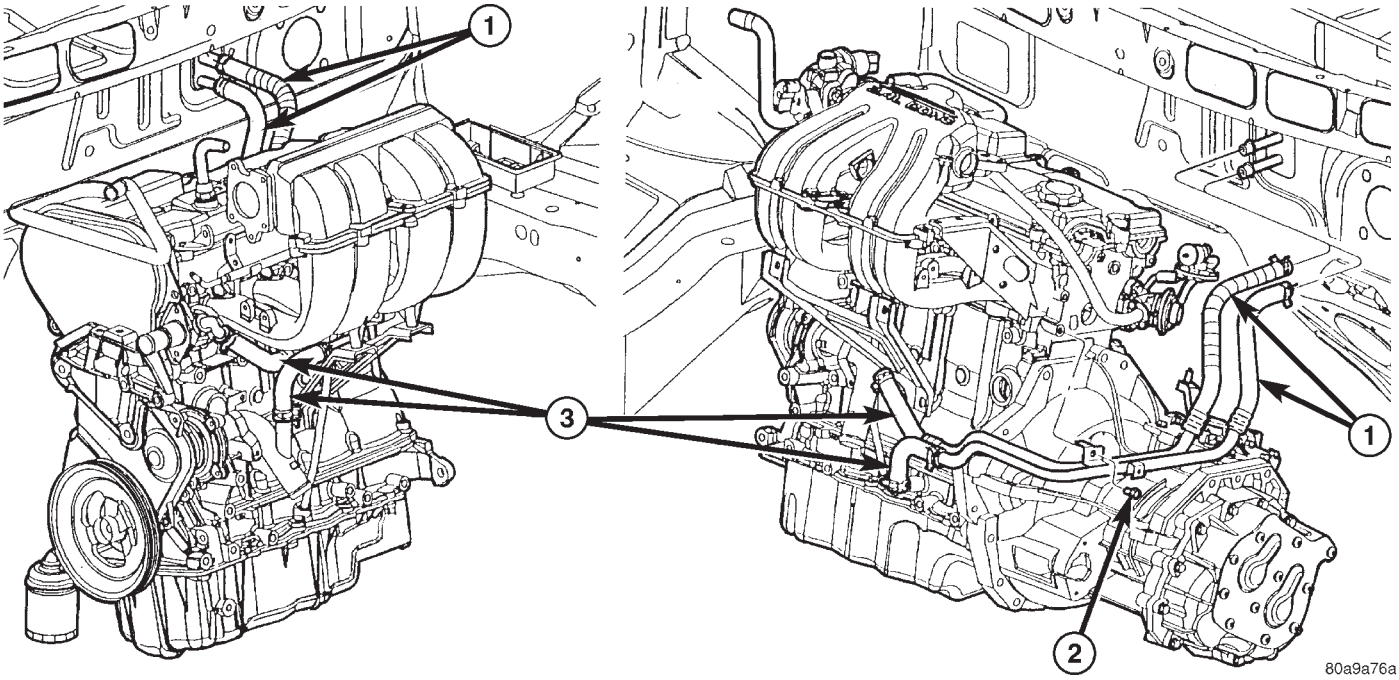

Fig. 5 HEATER HOSES - 2.4L

1 - HEATER HOSES TO HEATER
2 - BOLT - HEATER TUBE SUPPORT
3 - HEATER HOSE TO ENGINE - SUPPLY AND RETURN

ENGINE 2.4L (Continued)

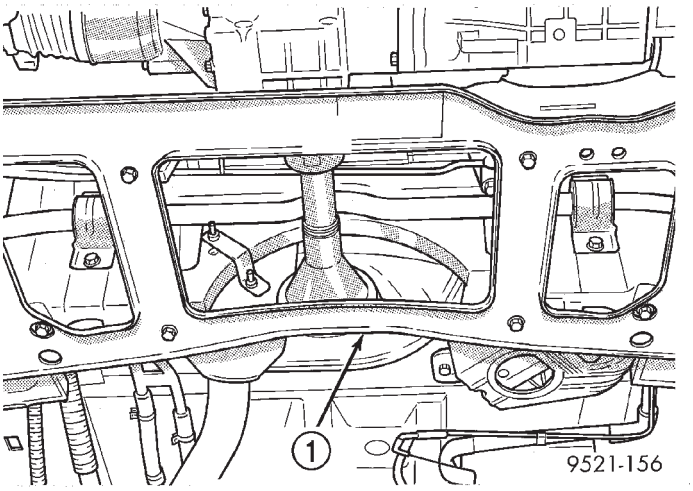

Fig. 6 Crossmember Cradle Plate

1 - CRADLE PLATE

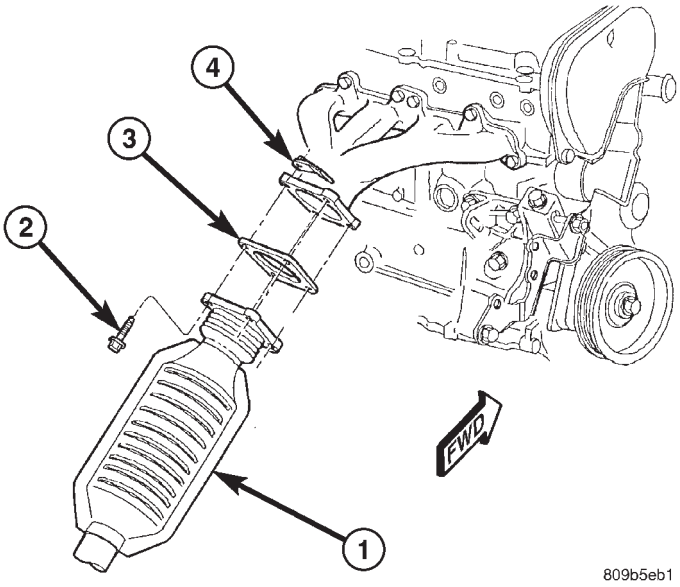

Fig. 7 Catalytic Converter to Exhaust Manifold

1 - CATALYTIC CONVERTER
2 - BOLT
3 - GASKET
4 - FLAG NUT

(22) Remove engine front mount and bracket from engine. (Refer to 9 - ENGINE/ENGINE MOUNTING/ FRONT MOUNT - REMOVAL)

(23) Remove structural collar. (Refer to 9 - ENGINE/ENGINE BLOCK/STRUCTURAL COVER - REMOVAL)

(24) Remove rear engine mount bracket. (Refer to 9 - ENGINE/ENGINE MOUNTING/REAR MOUNT - REMOVAL)

(25) Mark flex plate to torque converter and remove torque converter bolts.

(26) Pinch-off power steering supply hose at pump. Remove hose from pump.

(27) Remove and set aside the power steering pump and bracket. Do not disconnect pressure line.

(28) Lower vehicle.

(29) Remove A/C lines at compressor and cap openings.

(30) Remove engine ground straps (strap at engine right mount and at starter).

(31) Raise vehicle enough to allow engine dolly Special Tool 6135, cradle Special Tool 6710 with Posts Special Tool 6848 to be installed under vehicle (Fig. 8).

(32) Loosen cradle posts to allow movement for proper positioning. Locate two rear posts (right side of engine) into the holes on the engine bedplate. Locate the two front posts (left side of engine) on the oil pan rails (Fig. 8). Lower vehicle and position cradle mounts until the engine is resting on mounts. Tighten mounts to cradle frame. This will keep mounts from moving when removing or installing engine and transmission.

(33) Install safety straps around the engine to cradle. Tighten straps and lock.

(34) Lower vehicle so the weight of **ONLY THE ENGINE AND TRANSMISSION** are on the cradle.

(35) Remove engine and transmission mount bolts.

(36) Raise vehicle slowly. It may be necessary to move the engine/transmission assembly with the dolly to allow for removal around the body.

ENGINE 2.4L (Continued)

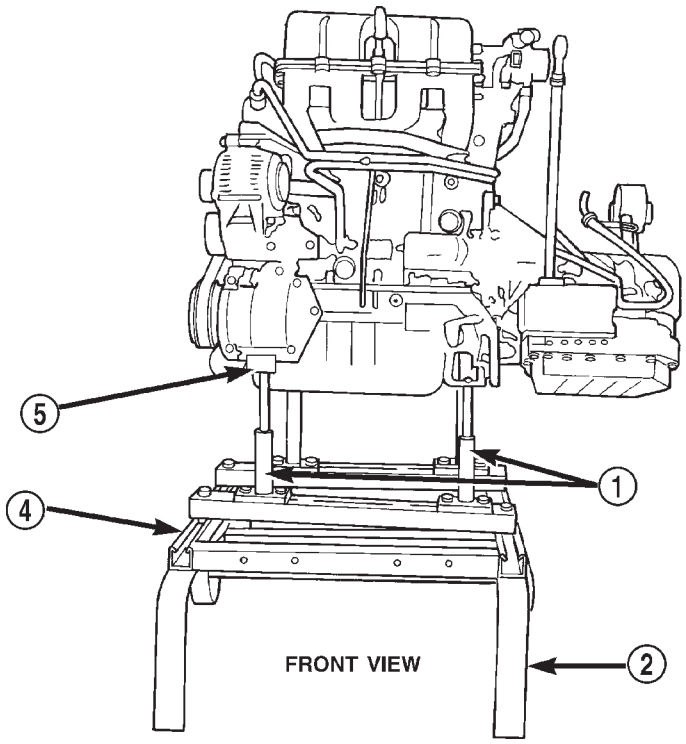

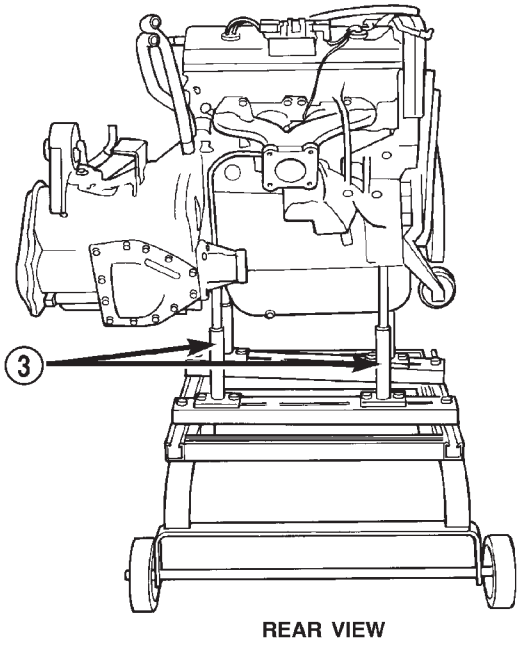

80a624d9

Fig. 8 Positioning Engine Cradle Support Post Mounts

1 - SPECIAL TOOL POSTS 6848
2 - SPECIAL TOOL 6135 DOLLY
3 - SPECIAL TOOL POSTS 6848
4 - SPECIAL TOOL 6710 CRADLE
5 - SPECIAL TOOL 6848 - POST CONTACT ON PAN RAIL

ENGINE 2.4L (Continued)

INSTALLATION - ENGINE ASSEMBLY

(1) Position engine and transmission assembly under vehicle and slowly lower the vehicle over the engine and transmission.

(2) Align engine and transmission mounts to attaching points. Install mounting bolts at the right (Fig. 9) and left mounts (Fig. 10).

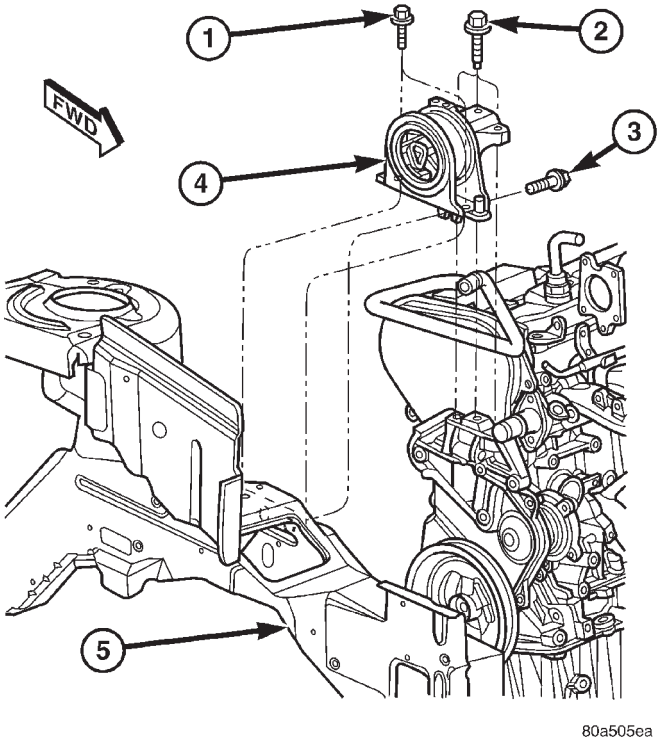

Fig. 9 RIGHT MOUNT TO RAIL AND ENGINE

1 - BOLT - MOUNT TO RAIL 68 N·m (50 ft. lbs.)
2 - BOLT - MOUNT TO ENGINE 54 N·m (40 ft. lbs.)
3 - BOLT - MOUNT TO RAIL (HORIZONTAL) 68 N·m (50 ft. lbs.)
4 - RIGHT ENGINE MOUNT
5 - RIGHT FRAME RAIL

(3) Remove safety straps.

(4) Slowly raise vehicle enough to remove the engine dolly and cradle Special Tools 6135 and 6710.

(5) Install rear mount bracket and rear mount through bolt. (Refer to 9 - ENGINE/ENGINE MOUNTING/REAR MOUNT - INSTALLATION)

(6) Install the flex plate to torque converter bolts.

(7) Install structural collar. (Refer to 9 - ENGINE/ENGINE BLOCK/STRUCTURAL COVER - INSTALLATION)

(8) Install front mount bracket and front mount through bolt. (Refer to 9 - ENGINE/ENGINE MOUNTING/FRONT MOUNT - INSTALLATION)

(9) Connect exhaust system to manifold (Fig. 7).

(10) Install crossmember cradle plate (Fig. 6).

(11) Install new oil filter.

(12) Install power steering pump and bracket.

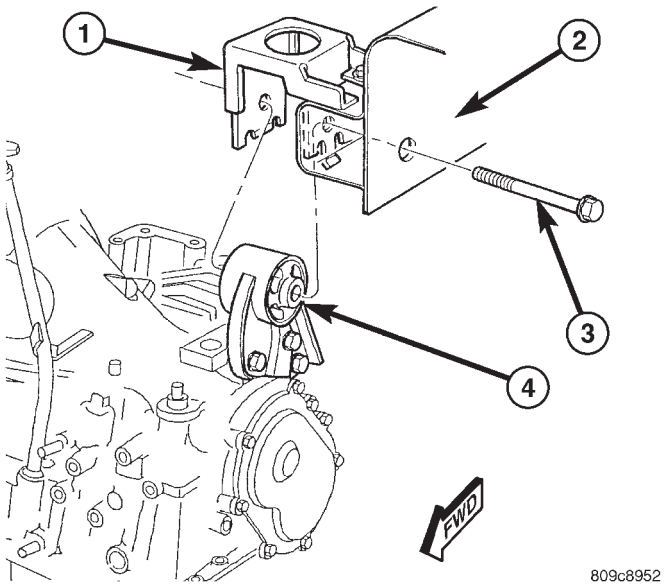

Fig. 10 LEFT MOUNT TO FRAME BRACKET

1 - FRAME BRACKET
2 - FRAME RAIL - LEFT
3 - BOLT
4 - TRANSAXLE MOUNT

(13) Connect power steering supply line to pump and remove pinch-off pliers.

(14) Connect A/C compressor hoses to compressor.

(15) Install accessory drive belts. (Refer to 7 - COOLING/ACCESSORY DRIVE/DRIVE BELTS - INSTALLATION)

(16) Install axle shafts. (Refer to 3 - DIFFERENTIAL & DRIVELINE/HALF SHAFT - INSTALLATION)

(17) Install accessory drive belt splash shield.

(18) Install front wheels and tires.

(19) Remove plugs from transmission cooler hoses and install transaxle oil cooler line service splice kit. Refer to instructions included with kit.

(20) Connect the transaxle shift linkage and electrical connectors.

(21) Connect heater hoses (Fig. 5).

(22) Install ground straps.

(23) Connect all engine and throttle body electrical connections.

(24) Connect all vacuum lines.

(25) Connect the throttle cables.

(26) Connect the fuel line. (Refer to 14 - FUEL SYSTEM/FUEL DELIVERY/QUICK CONNECT FITTING - STANDARD PROCEDURE)

(27) Connect radiator lower and upper hoses.

(28) Install radiator fans. (Refer to 7 - COOLING/ENGINE/RADIATOR FAN - INSTALLATION)

(29) Fill cooling system. (Refer to 7 - COOLING - STANDARD PROCEDURE)

(30) Connect battery cables.

(31) Install air cleaner and inlet hose.

ENGINE 2.4L (Continued)

(32) Fill engine crankcase with proper oil to correct level.

(33) Start engine and run until operating temperature is reached.

(34) Adjust transmission linkage, if necessary.

SPECIFICATIONS

SPECIFICATIONS - 2.4L ENGINE

DESCRIPTION	SPECIFICATION
General Specification	
Type	In-Line OHV, DOHC
Number of Cylinders	4
Displacement	2.4 Liters (148 cu. in.)
Bore	87.5 mm (3.445 in.)
Stroke	101.0 mm (3.976 in.)
Compression Ratio	9.4:1
Firing Order	1-3-4-2
Compression Pressure	690 kPa (Minimum) (100 psi Minimum)
Max. Variation Between Cylinders	25%
Cylinder Block	
Cylinder Bore Diameter	87.4924–87.5076 mm (3.4446–3.4452 in.)
Out-of-Round (Max.)	0.051 mm (0.002 in.)
Taper (Max.)	0.051 mm (0.002 in.)
Pistons	
Piston Diameter	87.463–87.481 mm (3.4434–3.4441 in.)
Clearance @ 14 mm (9/16 in.) from bottom of skirt	0.024–0.057 mm (0.0009–0.0022 in.)
Weight	346–356 grams (12.20–12.56 oz.)
Land Clearance (Diametrical)	0.614–0.664 mm (0.024–0.026 in.)
Piston Length	66.25 mm (2.608 in.)
Piston Ring Groove Depth No. 1	4.640–4.784 mm (0.182–0.188 in.)
Piston Ring Groove Depth No. 2	4.575–4.719 mm (0.180–0.185 in.)
Piston Ring Groove Depth No. 3	4.097–4.236 mm (0.161–0.166 in.)
Piston Pins	
Clearance in Piston	0.005–0.018 mm (0.0002–0.0008 in.)
Clearance in Connecting Rod	Interference
Diameter	21.998–22.003 mm (0.8660–0.8662 in.)
End Play	None
Length	72.75–73.25 mm (2.864–2.883 in.)
Piston Rings	
Ring Gap—Top Compression Ring	0.25–0.51 mm (0.0098–0.020 in.)
Wear Limit	0.8 mm (0.031 in.)
Ring Gap—2nd Compression Ring	0.23–0.48 mm (0.009–0.018 in.)
Wear Limit	0.8 mm (0.031 in.)
Ring Gap—Oil Control Steel Rails	0.25–0.64 mm (0.0098–0.025 in.)
Wear Limit	1.0 mm (0.039 in.)
Ring Side Clearance—Compression Rings	0.030–0.080 mm (0.0011–0.0031 in.)
Wear Limit	0.10 mm (0.004 in.)
Ring Side Clearance—Oil Ring Pack	0.012–0.178 mm (0.0004–0.0070 in.)
Ring Width—Compression Rings	1.47–1.50 mm (0.057–0.059 in.)
Ring Width—Oil Ring Pack	2.72–2.88 mm (0.107–0.1133 in.)
Connecting Rod	
Bearing Clearance	0.025–0.071 mm (0.0009–0.0027 in.)

ENGINE 2.4L (Continued)

DESCRIPTION	SPECIFICATION
Wear Limit	0.075 mm (0.003 in.)
Bore Diameter—Piston Pin	20.96–20.98 mm (0.8252–0.8260 in.)
Bore Diameter—Crankshaft End	53.007–52.993 mm (2.0868–2.0863 in.)
Side Clearance	0.13–0.38 mm (0.005–0.015 in.)
Wear Limit	0.40 mm (0.016 in.)
Weight—Total (Less Bearing)	565.8 grams (19.96 oz.)
Crankshaft	
Connecting Rod Journal Diameter	49.984–50.000 mm (1.968–1.9685 in.)
Main Bearing Journal Diameter	59.992–60.008 mm (2.362–2.3625 in.)
Journal Out-of-Round (Max.)	0.0035 mm (0.0003 in.)
Journal Taper (Max.)	0.007 mm (0.0001 in.)
End Play	0.09–0.24 mm (0.0035–0.0094 in.)
Wear Limit	0.38 mm (0.015 in.)
Main Bearing Diametrical Clearance	0.018–0.062 mm (0.0007–0.0024 in.)
Hydraulic Lash Adjuster	
Body Diameter	15.901–15.913 mm (0.626–0.6264 in.)
Plunger Travel Minimum (Dry)	3.0 mm (0.118 in.)
Cylinder Head Camshaft Bearing Bore Diameter	
Journals No.1–6	26.020–26.041 mm (1.024–1.025 in.)
Camshaft	
Journal Diameter No. 1–6	25.951–25.970 mm (1.021–1.022 in.)
Bearing Clearance—Diametrical	0.069–0.071 mm (0.0027–0.003 in.)
End Play	0.05–0.17 mm (0.0019–0.0066 in.)

DESCRIPTION	SPECIFICATION
Lift (Zero Lash)	
Intake	8.25 mm (0.324 in.)
Exhaust	6.60 mm (0.259 in.)
Intake Valve Timing*	
Closes (ABDC)	51°
Opens (BTDC)	1°
Duration	232°
Exhaust Valve Timing*	
Closes (ATDC)	7°
Opens (BBDC)	47°
Duration	234°
Valve Overlap	8°
*All readings in crankshaft degrees. Timing points @ 4° from top of Ramps.	
Cylinder Head	
Material	Cast Aluminum
Gasket Thickness (Compressed)	0.71 mm (0.028 in.)
Valve Seat	
Angle	44.5–45°
Seat Diameter—Intake	34.37–34.63 mm (1.353–1.363 in.)
Seat Diameter—Exhaust	27.06–27.32 mm (1.065–1.075 in.)
Runout (Max.)	0.05 mm (0.002 in.)
Valve Seat Width—Intake and Exhaust	0.9–1.3 mm (0.035–0.051 in.)
Service Limit—Intake	2.0 mm (0.079 in.)
Service Limit—Exhaust	2.5 mm (0.098 in.)
Valve Guide	
Diameter I.D.	5.975–6.000 mm (0.235–0.236 in.)
Guide Bore Diameter	11.0–11.02 mm (0.4330–0.4338 in.)
Guide Height (spring seat to guide tip)	13.25–13.75 mm (0.521–0.541 in.)

ENGINE 2.4L (Continued)

DESCRIPTION	SPECIFICATION
Valves	
Face Angle—Intake and Exhaust	44.5—45°
Head Diameter—Intake	34.67–34.93 mm (1.364–1.375 in.)
Head Diameter—Exhaust	28.32–28.52 mm (1.114–1.122 in.)
Valve Length (Overall)	
—Intake	112.76–113.32 mm (4.439–4.461 in.)
—Exhaust	110.89–111.69 mm (4.365–4.397 in.)
Valve Stem Diameter	
—Intake	5.934–5.952 mm (0.2337–0.2344 in.)
—Exhaust	5.906–5.924 mm (0.2326–0.2333 in.)
Valve Margin	
Intake	1.2–1.7 mm (0.047–0.066 in.)
Service Limit	0.95 mm (1/32 in.)
Exhaust	0.985–1.315 mm (0.038–0.051 in.)
Service Limit	1.05 mm (3/64 in.)
Valve Stem Tip Height	
Intake	48.04 mm (1.891 in.)
Exhaust	47.99 mm (1.889 in.)
Valve Stem to Guide Clearance	
Intake	0.048–0.066 mm (0.0018–0.0025 in.)
Max. Allowable	0.076 mm (0.003 in.)
Service Limit	0.25 mm (0.010 in.)
Exhaust	0.0736–0.094 mm (0.0029–0.0037 in.)
Max. Allowable	0.101 mm (0.004 in.)
Service Limit	0.25 mm (0.010 in.)
Valve Springs	
Free Length (Approx.)	48.4 mm (1.905 in.)
Nominal Force (Valve Closed)	338 N @ 38.0 mm (75.98 lbs. @ 1.496 in.)
Nominal Force (Valve Open)	607 N @ 29.75 mm (136 lbs. @ 1.172 in.)
Installed Height	38.00 mm (1.496 in.)
Number of Coils	7.82
Wire Diameter	3.86 mm (1.496 in.)
Oil Pump	
Clearance Over Rotors (Max.)	0.10 mm (0.004 in.)
Cover Out-of-Flat (Max.)	0.025 mm (0.001 in.)
Inner Rotor Thickness (Min.)	9.40 mm (0.370 in.)
Outer Rotor Thickness (Min.)	9.40 mm (0.370 in.)
Outer Rotor Clearance (Max.)	0.039 mm (0.015 in.)
Outer Rotor Diameter (Min.)	79.95 mm (3.148 in.)
Tip Clearance Between Rotors (Max.)	0.20 mm (0.008 in.)
Oil Pressure	
At Curb Idle Speed*	25 kPa (4 psi)
At 3000 rpm	170–550 kPa (25–80 psi)
CAUTION: *If pressure is ZERO at curb idle, DO NOT run engine at 3000 rpm.	

ENGINE 2.4L (Continued)

SPECIFICATIONS - TORQUE

DESCRIPTION	N·m	Ft. Lbs.	In. Lbs.
Balance Shaft Carrier to Block—Bolts	54	40	—
Balance Shaft Gear Cover—Double Ended Fastener	12	—	105
Balance Shaft Sprocket—Bolt	28	—	250
Balance Shaft Chain Tensioner—Bolts	12	—	105
Balance Shaft Carrier Cover—Bolts	12	—	105
Camshaft Sprocket—Bolt	101	75	—
Connecting Rod Cap—Bolts	27 +¼ turn	20 +¼ turn	—
Crankshaft Main Bearing Cap/Bedplate			
—M8 Bolts	28		250
—M11 Bolts	41 +¼ Turn	30 +¼ Turn	—
Crankshaft Damper	136	100	—
Cylinder Head—Bolts	(Refer to 9 - ENGINE/ CYLINDER HEAD - INSTALLATION)		
Cylinder Head Cover—Bolts	12	—	105
Flex Plate to Crankshaft	95	70	—
Engine Mount Bracket Right—Bolts	61	45	—
Engine Mounting—Bolts	(Refer to 9 ENGINE/ ENGINE MOUNTING)		

DESCRIPTION	N·m	Ft. Lbs.	In. Lbs.
Exhaust Manifold to Cylinder Head—Bolts	19	—	170
Exhaust Manifold Heat Shield—Bolts	12	—	105
Intake Manifold - Lower —Bolts	28	—	250
Intake Manifold - Upper—Bolts	28	—	250
Oil Filter	12	—	105
Oil Pan—Bolts	12	—	105
Oil Pan Drain—Plug	27	20	—
Oil Pressure Switch	21	—	190
Oil Pump to Block—Bolts	28	—	250
Oil Pump Cover Plate—Bolts	12	—	105
Oil Pump Pick-up Tube—Bolt	28	20	—
Oil Pump Relief Valve—Cap	41	30	—
Spark Plugs	18	13	—
Structural Collar	(Refer to 9 - ENGINE/ ENGINE BLOCK/ STRUCTURAL COVER - INSTALLATION)		
Timing Belt Covers			
- Front Covers to Rear Cover—Bolts	7	—	60
- Rear Cover—M6 Bolts	12	—	105
—M8 Bolts	28	—	250
Timing Belt Tensioner Assembly—Bolts	61	45	—

ENGINE 2.4L (Continued)

SPECIAL TOOLS

2.4L ENGINE

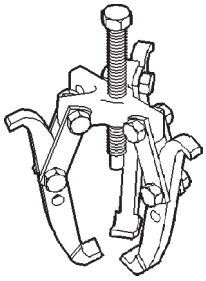

Puller 1026

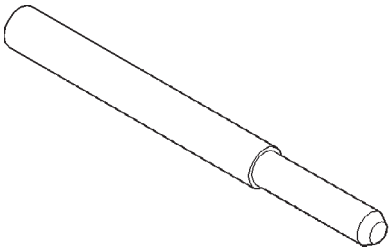

Crankshaft Damper Removal Insert 6827A

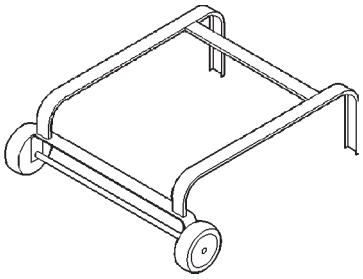

Dolly 6135

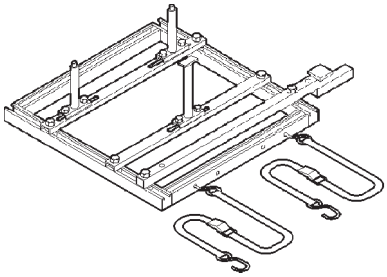

Cradle 6710A

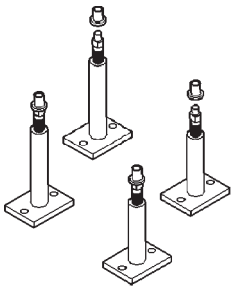

Post Kit Engine Cradle 6848

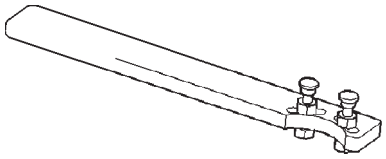

Camshaft Sprocket Holder 6847

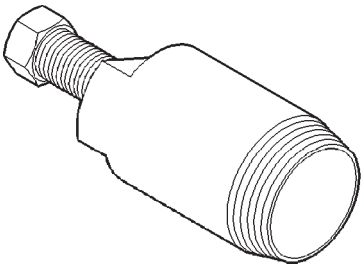

Camshaft Seal Remover C-4679A

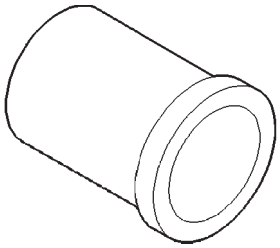

Camshaft Seal Installer MD-998306

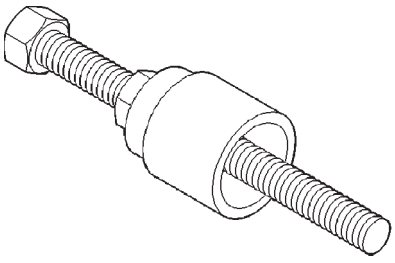

Crankshaft Damper/Sprocket Installer 6792

ENGINE 2.4L (Continued)

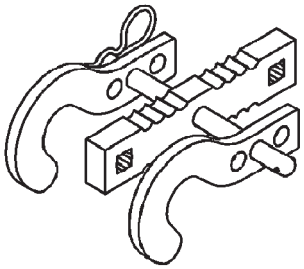

Valve Spring Compressor 8215-A

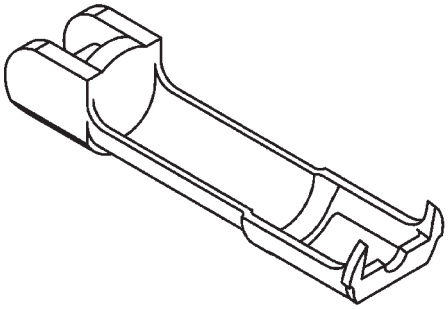

Adaptor 8436

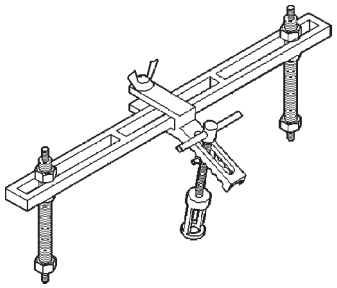

Valve Spring Compressor MD998772A

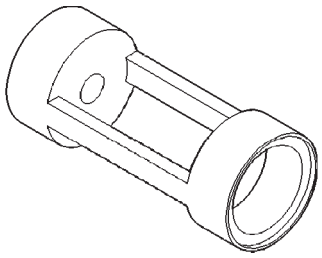

Valve Spring Compressor Adapter 6779

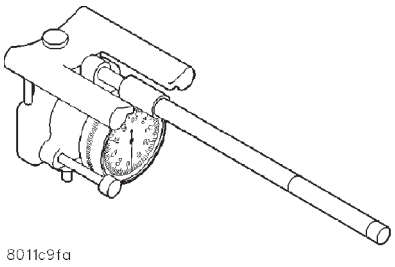

Indicator, Cylinder Bore C-119

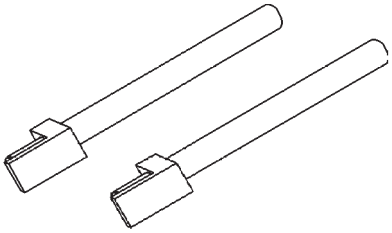

Connecting Rod Guides 8189

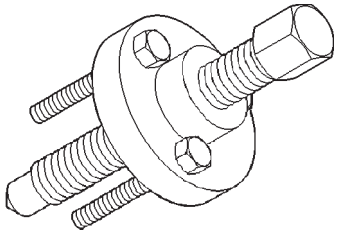

Crankshaft Sprocket Remover 6793

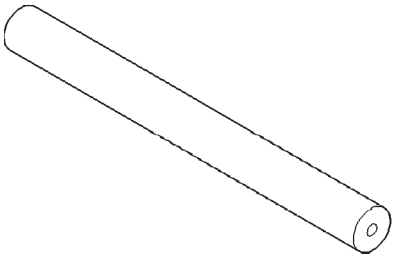

Crankshaft Sprocket Remover Insert C-4685-C2

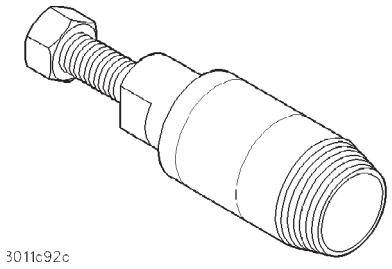

Front Crankshaft Oil Seal Remover 6771

ENGINE 2.4L (Continued)

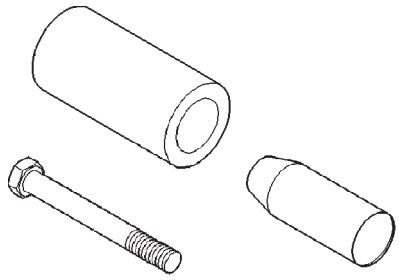

Front Crankshaft Oil Seal Installer 6780

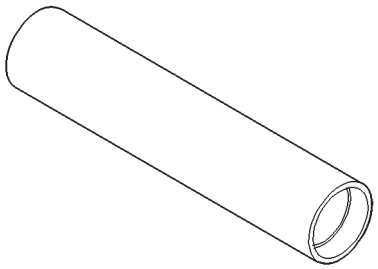

Balance Shaft Sprocket Installer 6052

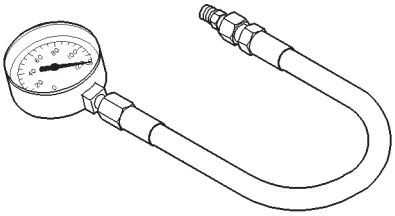

Oil Pressure Gauge C-3292

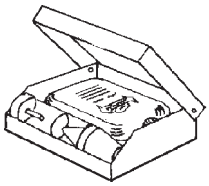

Combustion Leak Tester C-3685-A

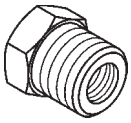

Adapter 8406

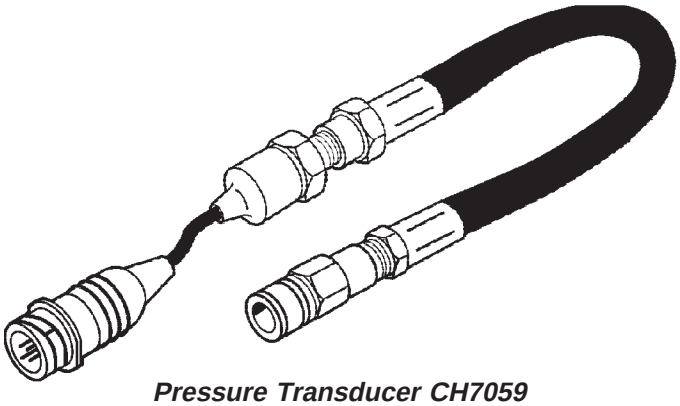

Pressure Transducer CH7059

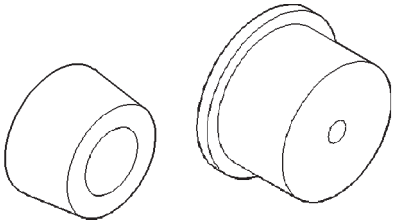

Rear Crankshaft Oil Seal Installer 6926

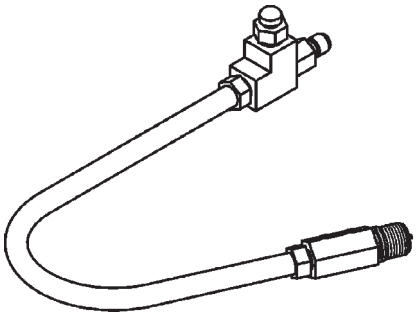

Cylinder Compression Pressure Adaptor 8116

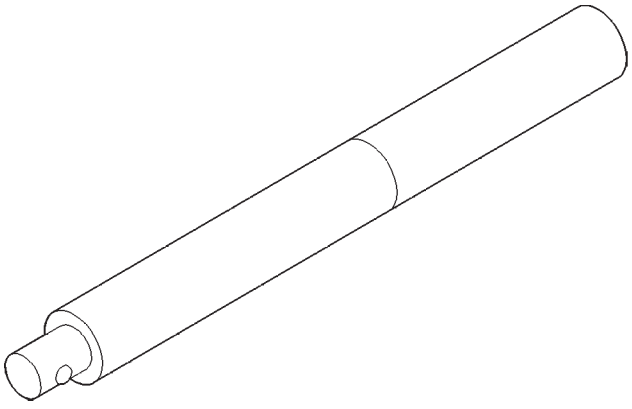

Driver Handle C-4171

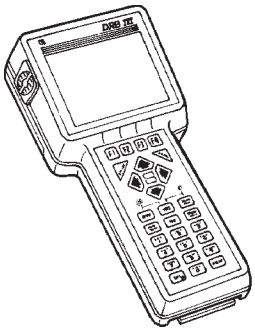

DRB III® with PEP Module OT-CH6010A

AIR CLEANER ELEMENT

REMOVAL

(1) Unsnap 2 clips.
(2) Lift cover and pull toward the engine and remove cover tabs from air box.
(3) Lift cover and remove the element (Fig. 11).

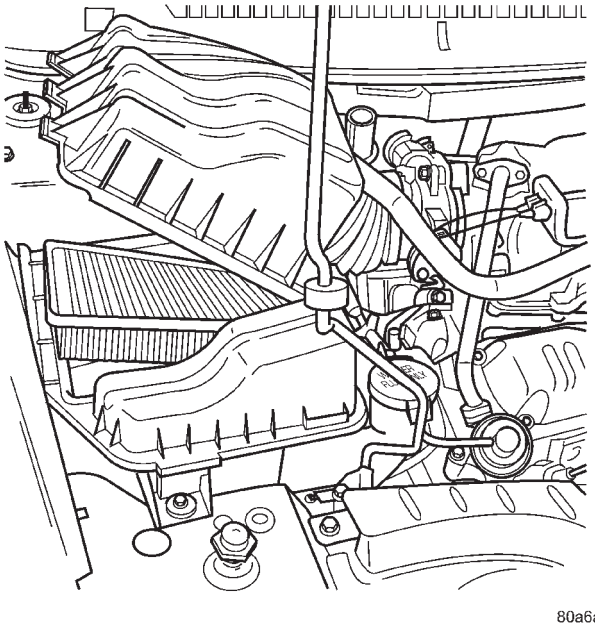

Fig. 11 AIR BOX COVER

INSTALLATION

(1) Install the air filter element into air box (Fig. 11).
(2) Move cover so that the tabs insert into the air box.
(3) Push cover down and snap the 2 clips.

AIR CLEANER HOUSING

REMOVAL

(1) Disconnect the negative battery cable.
(2) Disconnect the inlet air temperature sensor (Fig. 12).
(3) Remove the inlet hose to throttle body (Fig. 11).
(4) Remove the bolt for air box at upper radiator cross member.
(5) Pull air box up and off over the single locating pin.
(6) Remove air box from vehicle

INSTALLATION

(1) Install air box into vehicle and onto the locating pin.

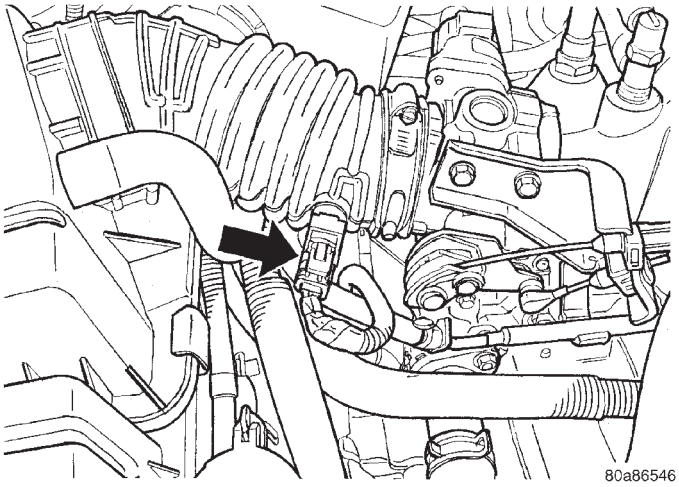

Fig. 12 IAT SENSOR 2.4L

(2) Install bolt to hold air box to the upper radiator cross member.
(3) Install the inlet hose to the throttle body.
(4) Connect the inlet air temperature sensor (Fig. 12).
(5) Connect the negative battery cable.

CYLINDER HEAD

DESCRIPTION

The cross flow designed, aluminum cylinder head contains dual over-head camshafts with four valves per cylinder (Fig. 13). The valves are arranged in two in-line banks. The intake valves face toward the front of the vehicle. The exhaust valves face the dash panel. The cylinder head incorporates powdered metal valve guides and seats. The cylinder head is sealed to the block using a multi-layer steel head gasket and retaining bolts.

Integral oil galleries provide lubrication passages to the hydraulic lash adjusters, camshafts, and valve mechanisms.

OPERATION

The cylinder head closes the combustion chamber, allowing the pistons to compress the fuel/air mixture for ignition. The valves are actuated by the lobe profiles on the camshaft to open and close at specified duration to either allow clean air in the combustion chamber or the exhaust gases out; depending on the stroke of the engine.

DIAGNOSIS AND TESTING—CYLINDER HEAD GASKET

A cylinder head gasket leak can be located between adjacent cylinders or between a cylinder and the adjacent water jacket.

CYLINDER HEAD (Continued)

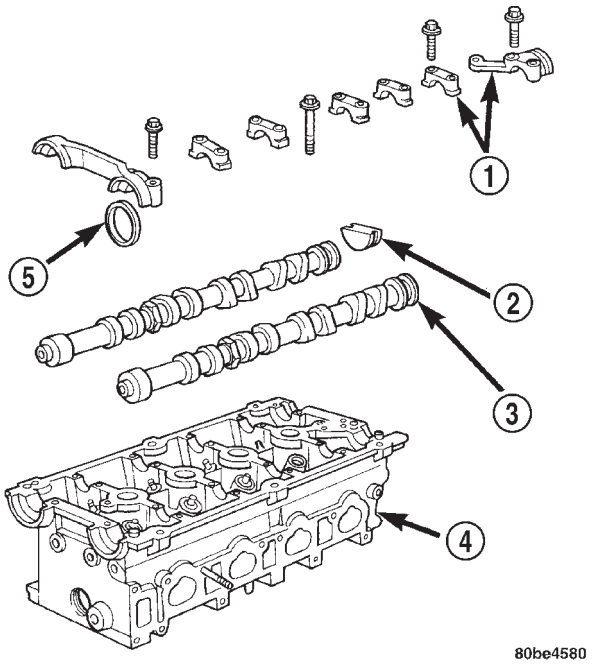

Fig. 13 Cylinder Head and Camshafts

1 - CAMSHAFT BEARING CAPS
2 - PLUG
3 - CAMSHAFT
4 - CYLINDER HEAD
5 - CAMSHAFT OIL SEAL

Possible indications of the cylinder head gasket leaking between adjacent cylinders are:

- Loss of engine power
- Engine misfiring
- Poor fuel economy

Possible indications of the cylinder head gasket leaking between a cylinder and an adjacent water jacket are:

- Engine overheating
- Loss of coolant
- Excessive steam (white smoke) emitting from exhaust
- Coolant foaming

CYLINDER-TO-CYLINDER LEAKAGE TEST

To determine if an engine cylinder head gasket is leaking between adjacent cylinders, follow the procedures in Cylinder Compression Pressure Test (Refer to 9 - ENGINE - DIAGNOSIS AND TESTING). An engine cylinder head gasket leaking between adjacent cylinders will result in approximately a 50–70% reduction in compression pressure.

CYLINDER-TO-WATER JACKET LEAKAGE TEST

WARNING: USE EXTREME CAUTION WHEN THE ENGINE IS OPERATING WITH COOLANT PRESSURE CAP REMOVED.

VISUAL TEST METHOD

With the engine cool, remove the coolant pressure cap. Start the engine and allow it to warm up until thermostat opens.

If a large combustion/compression pressure leak exists, bubbles will be visible in the coolant.

COOLING SYSTEM TESTER METHOD

WARNING: WITH COOLING SYSTEM TESTER IN PLACE, PRESSURE WILL BUILD UP FAST. EXCESSIVE PRESSURE BUILT UP, BY CONTINUOUS ENGINE OPERATION, MUST BE RELEASED TO A SAFE PRESSURE POINT. NEVER PERMIT PRESSURE TO EXCEED 138 kPa (20 psi).

Install Cooling System Tester 7700 or equivalent to pressure cap neck. Start the engine and observe the tester's pressure gauge. If gauge pulsates with every power stroke of a cylinder a combustion pressure leak is evident.

CHEMICAL TEST METHOD

Combustion leaks into the cooling system can also be checked by using Bloc-Chek Kit C-3685-A or equivalent. Perform test following the procedures supplied with the tool kit.

REMOVAL - CYLINDER HEAD

(1) Perform fuel system pressure release procedure **before attempting any repairs.** (Refer to 14 - FUEL SYSTEM/FUEL DELIVERY - SPECIFICATIONS)

(2) Disconnect battery negative cable.

(3) Drain cooling system. (Refer to 7 - COOLING - STANDARD PROCEDURE)

(4) Remove air filter housing and inlet tube.

(5) Remove upper intake manifold. (Refer to 9 - ENGINE/MANIFOLDS/INTAKE MANIFOLD - REMOVAL)

(6) Remove heater tube support bracket from cylinder head.

(7) Disconnect radiator upper and heater supply hoses from intake manifold water outlet connections.

(8) Remove accessory drive belts. (Refer to 7 - COOLING/ACCESSORY DRIVE/DRIVE BELTS - REMOVAL)

(9) Raise vehicle and remove exhaust pipe from manifold.

(10) Remove power steering pump reservoir and line support bracket from lower intake manifold and set aside. Do not disconnect lines.

(11) Remove ignition coil and wires from engine.

(12) Disconnect cam sensor and fuel injector wiring connectors.

CYLINDER HEAD (Continued)

(13) Remove timing belt and camshaft sprockets. (Refer to 9 - ENGINE/VALVE TIMING/TIMING BELT/CHAIN AND SPROCKETS - REMOVAL)

(14) Remove timing belt idler pulley and rear timing belt cover. (Refer to 9 - ENGINE/VALVE TIMING/TIMING BELT / CHAIN COVER(S) - REMOVAL)

(15) Remove cylinder head cover. (Refer to 9 - ENGINE/CYLINDER HEAD/CYLINDER HEAD COVER(S) - REMOVAL)

(16) Remove camshafts (Refer to 9 - ENGINE/CYLINDER HEAD/CAMSHAFT(S) - REMOVAL).

NOTE: Identify rocker arm position to ensure correct re-installation in original position, if reused.

(17) Remove rocker arms. (Refer to 9 - ENGINE/CYLINDER HEAD/ROCKER ARMS - REMOVAL)

(18) Remove cylinder head bolts in REVERSE sequence of tightening (Fig. 19).

(19) Remove cylinder head from engine block.

(20) Inspect and clean cylinder head. (Refer to 9 - ENGINE/CYLINDER HEAD - INSPECTION) (Refer to 9 - ENGINE/CYLINDER HEAD - CLEANING)

CLEANING

To ensure engine gasket sealing, proper surface preparation must be performed, especially with the use of aluminum engine components and multi-layer steel cylinder head gaskets.

NOTE: Multi-Layer Steel (MLS) head gaskets require a scratch free sealing surface.

Remove all gasket material from cylinder head and block (Refer to 9 - ENGINE - STANDARD PROCEDURE). Be careful not to gouge or scratch the aluminum head sealing surface.

Clean all engine oil passages.

INSPECTION

(1) Cylinder head must be flat within 0.1 mm (0.004 in.) (Fig. 14).

(2) Inspect camshaft bearing journals for scoring.

(3) Remove carbon and varnish deposits from inside of valve guides with a reliable guide cleaner.

(4) Using a small hole gauge and a micrometer, measure valve guides in 3 places top, middle and bottom (Fig. 15). (Refer to 9 - ENGINE - SPECIFICATIONS) Replace guides if they are not within specification.

(5) Check valve guide height (Fig. 16).

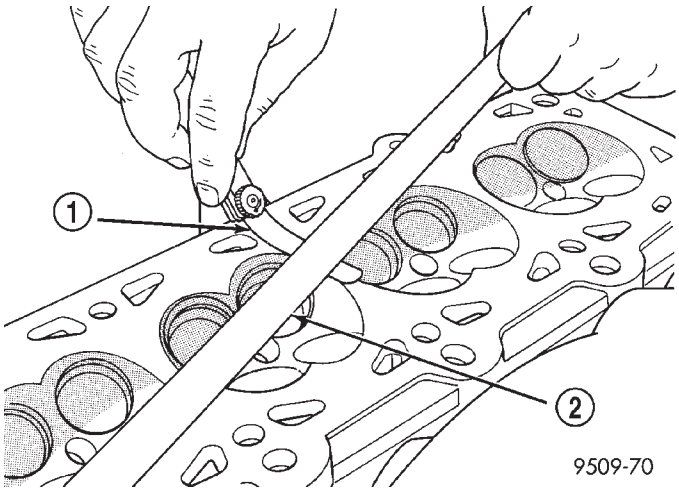

Fig. 14 Checking Cylinder Head Flatness

1 - FEELER GAUGE
2 - STRAIGHT EDGE

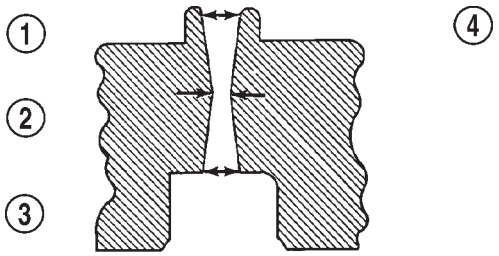

Fig. 15 Checking Wear on Valve Guide—Typical

1 - TOP
2 - MIDDLE
3 - BOTTOM
4 - CUT AWAY VIEW OF VALVE GUIDE MEASUREMENT LOCATIONS

INSTALLATION - CYLINDER HEAD

NOTE: The Cylinder head bolts should be examined BEFORE reuse. If the threads are necked down, the bolts must be replaced (Fig. 17).

Necking can be checked by holding a scale or straight edge against the threads. If all the threads do not contact the scale, the bolt should be replaced.

(1) Before installing the bolts, the threads should be coated with engine oil.

(2) Position cylinder head gasket on engine block (Fig. 18).

(3) Install cylinder head on engine block.

(4) Tighten the cylinder head bolts in the sequence shown in (Fig. 19). Using the 4 step torque turn method, tighten according to the following values:

- First All to 34 N·m (25 ft. lbs.)

CYLINDER HEAD (Continued)

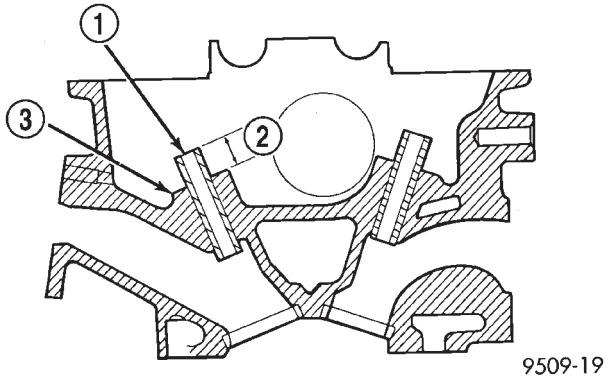

Fig. 16 Valve Guide Height

1 - VALVE GUIDE
2 - 13.25 - 13.75 MM (.521 - .541 IN.)
3 - SPRING SEAT

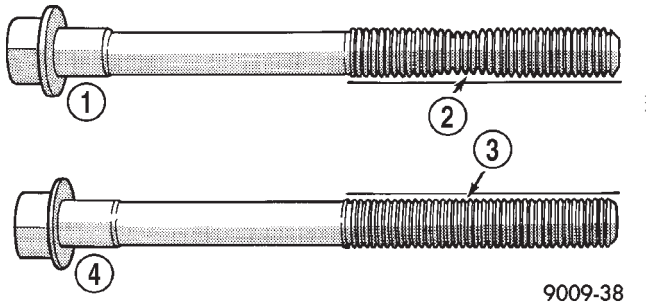

Fig. 17 Checking Bolts for Stretching (Necking)

1 - STRETCHED BOLT
2 - THREADS ARE NOT STRAIGHT ON LINE
3 - THREADS ARE STRAIGHT ON LINE
4 - UNSTRETCHED BOLT

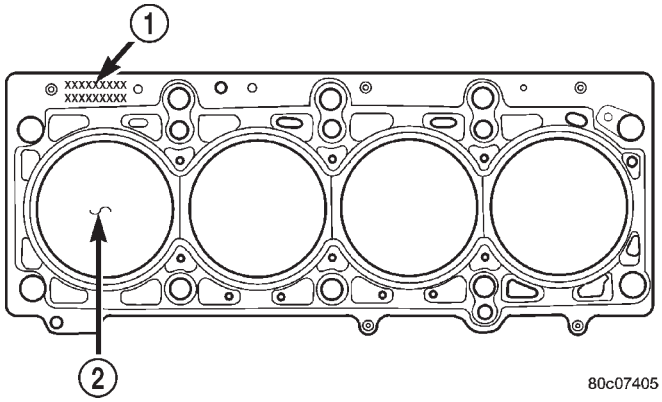

Fig. 18 Cylinder Head Gasket Positioning

1 - PART NUMBER FACES UP
2 - NO. 1 CYLINDER

- Second All to 68 N·m (50 ft. lbs.)
- Third All to 68 N·m (50 ft. lbs.)

CAUTION: Do not use a torque wrench for the following step.

- Fourth Turn an additional 1/4 Turn,

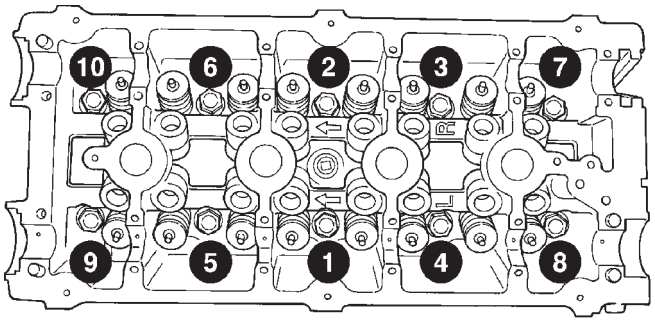

Fig. 19 Cylinder Head Tightening Sequence

(5) Install rocker arms. (Refer to 9 - ENGINE/CYLINDER HEAD/ROCKER ARMS - INSTALLATION)

(6) Install camshafts. (Refer to 9 - ENGINE/CYLINDER HEAD/CAMSHAFT(S) - INSTALLATION).

(7) Install cylinder head cover. (Refer to 9 - ENGINE/CYLINDER HEAD/CYLINDER HEAD COVER(S) - INSTALLATION)

(8) Install timing belt rear cover and timing belt idler pulley. (Refer to 9 - ENGINE/VALVE TIMING/TIMING BELT / CHAIN COVER(S) - INSTALLATION)

(9) Install timing belt and camshaft sprockets. (Refer to 9 - ENGINE/VALVE TIMING/TIMING BELT/CHAIN AND SPROCKETS - INSTALLATION)

(10) Connect cam sensor and fuel injectors wiring connectors.

(11) Install ignition coil and wires. Connect ignition coil wiring connector.

(12) Install power steering pump reservoir and line support bracket to cylinder head.

(13) Raise vehicle and install the exhaust pipe to the manifold.

(14) Install accessory drive belts. (Refer to 7 - COOLING/ACCESSORY DRIVE/DRIVE BELTS - INSTALLATION)

(15) Install heater tube support bracket to cylinder head.

(16) Connect radiator upper and heater hoses to intake manifold water outlet connections.

(17) Install upper intake manifold. (Refer to 9 - ENGINE/MANIFOLDS/INTAKE MANIFOLD - INSTALLATION)

(18) Using new gaskets, install EGR tube and tighten fasteners to 11 N·m (95 in. lbs.).

CYLINDER HEAD (Continued)

(19) Install air inlet tube and housing.

(20) Connect all vacuum lines, electrical wiring, ground straps and fuel line.

(21) Fill cooling system. (Refer to 7 - COOLING - STANDARD PROCEDURE)

(22) Connect battery negative cable.

CAMSHAFT OIL SEAL(S)

REMOVAL

(1) Remove timing belt (Refer to 9 - ENGINE/ VALVE TIMING/TIMING BELT AND SPROCKETS - REMOVAL).

(2) Hold each camshaft sprocket with Special Tool 6847 while removing center bolt (Fig. 20).

(3) Remove camshaft sprockets.

(4) Remove rear timing belt cover (Refer to 9 - ENGINE/VALVE TIMING/TIMING BELT COVER(S) - REMOVAL).

(5) Remove camshaft seal using Special Tool C-4679A (Fig. 21).

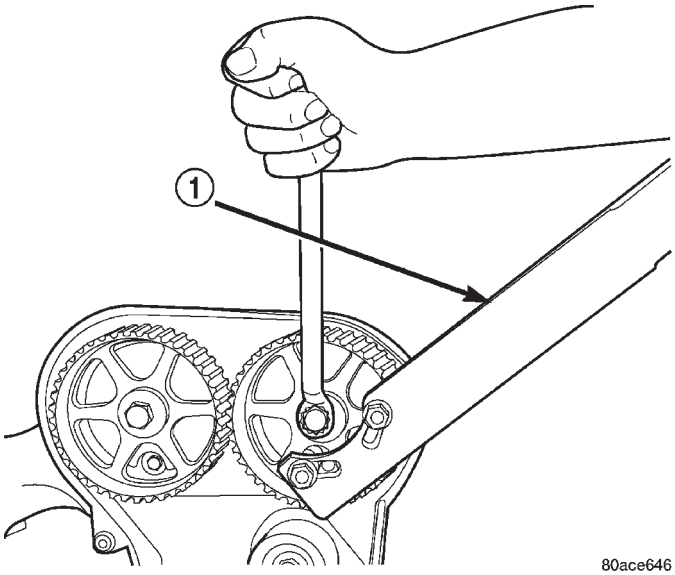

Fig. 20 Camshaft Sprocket - Removal/Installation

1 - SPECIAL TOOL 6847

CAUTION: Do not nick shaft seal surface or seal bore.

INSTALLATION

(1) Shaft seal surface must be free of varnish, dirt or nicks. Polish with 400 grit paper if necessary.

(2) Install camshaft seals into cylinder head using Special Tool MD-998306 until flush with head (Fig. 22).

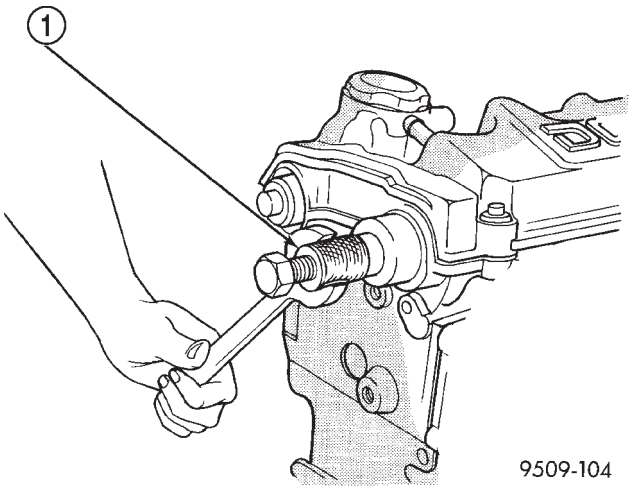

Fig. 21 Camshaft Oil Seal - Removal With C-4679A

1 - SPECIAL TOOL C-4679

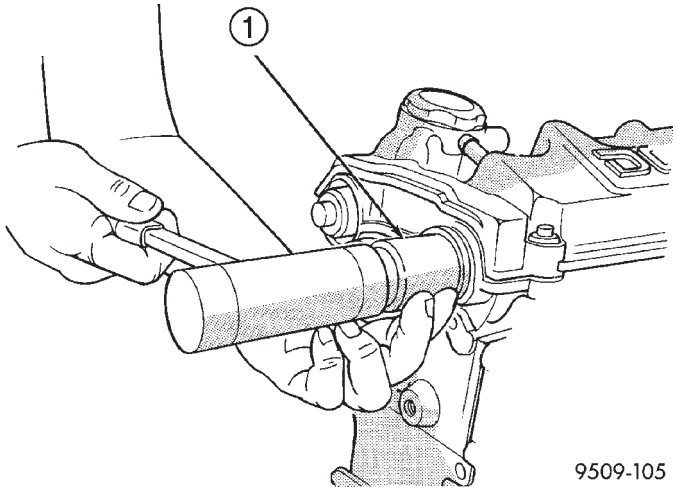

Fig. 22 Camshaft Seal - Installation

1 - SPECIAL TOOL MD-998306

(3) Install timing belt rear cover (Refer to 9 - ENGINE/VALVE TIMING/TIMING BELT COVER(S) - INSTALLATION).

(4) Install camshaft sprockets. Hold each sprocket with Special Tool 6847 and tighten center bolt to 101 N·m (75 ft. lbs.) (Fig. 20).

(5) Install timing belt and front covers (Refer to 9 - ENGINE/VALVE TIMING/TIMING BELT AND SPROCKETS - INSTALLATION) (Refer to 9 - ENGINE/VALVE TIMING/TIMING BELT COVER(S) - INSTALLATION).

CAMSHAFT(S)

DESCRIPTION

Both camshafts have six bearing journal surfaces and two cam lobes per cylinder (Fig. 23). Flanges at the rear journals control camshaft end play. Provision for a cam position sensor is located on the intake camshaft on the rear of the cylinder head. A hydrodynamic oil seal is used for oil control at the front of the camshaft.

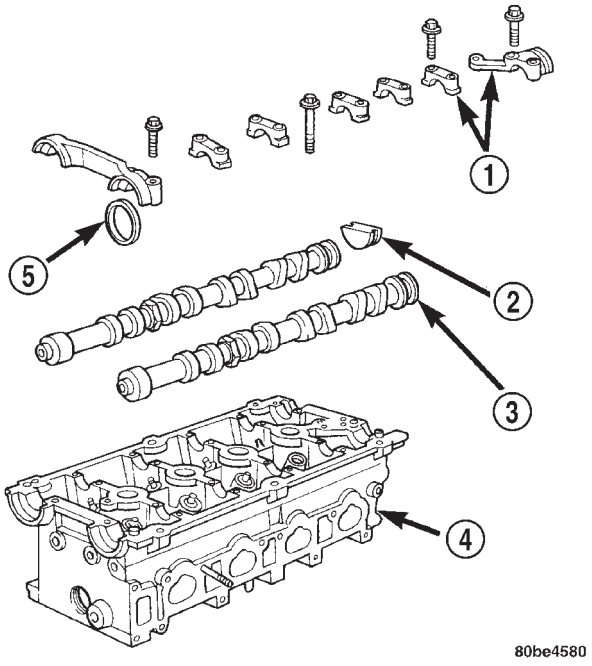

Fig. 23 Camshafts

1 - CAMSHAFT BEARING CAPS
2 - PLUG
3 - CAMSHAFT
4 - CYLINDER HEAD
5 - CAMSHAFT OIL SEAL

OPERATION

The camshaft is driven by the crankshaft via drive sprockets and belt. The camshaft has precisely machined lobes to provide accurate valve timing and duration.

STANDARD PROCEDURE - MEASURING CAMSHAFT END PLAY

(1) Oil camshaft journals and install camshaft **WITHOUT** rocker arms. Install rear cam caps and tighten screws to specified torque.

(2) Using a suitable tool, move camshaft as far rearward as it will go.

(3) Zero dial indicator (Fig. 24).

(4) Move camshaft as far forward as it will go.

(5) Record reading on dial indicator. For end play specification, (Refer to 9 - ENGINE - SPECIFICATIONS).

(6) If end play is excessive, check cylinder head and camshaft for wear; replace as necessary.

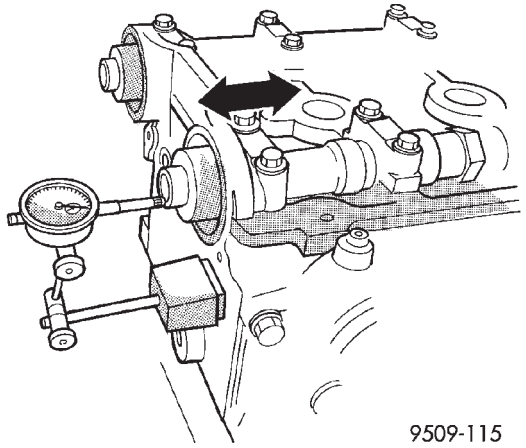

Fig. 24 Camshaft End Play - Typical

REMOVAL

(1) Remove cylinder head cover (Refer to 9 - ENGINE/CYLINDER HEAD/CYLINDER HEAD COVER - REMOVAL).

(2) Remove camshaft position sensor and camshaft target magnet (Refer to 8 - ELECTRICAL/IGNITION CONTROL/CAMSHAFT POSITION SENSOR - REMOVAL).

(3) Remove timing belt (Refer to 9 - ENGINE/VALVE TIMING/TIMING BELT AND SPROCKETS - REMOVAL).

(4) Remove camshaft sprockets and timing belt rear cover (Refer to 9 - ENGINE/VALVE TIMING/TIMING BELT COVER(S) - REMOVAL).

(5) Bearing caps are identified for location. Remove the outside bearing caps first (Fig. 25).

(6) Loosen the camshaft bearing cap attaching fasteners in sequence shown (Fig. 26) one camshaft at a time.

CAUTION: Camshafts are not interchangeable. The intake cam number 6 thrust bearing face spacing is wider.

(7) Identify the camshafts before removing from the head. The camshafts are not interchangeable.

(8) Remove camshafts from cylinder head.

NOTE: If removing rocker arms, identify for reinstallation in the original position.

CLEANING

Clean camshaft with a suitable solvent.

CAMSHAFT(S) (Continued)

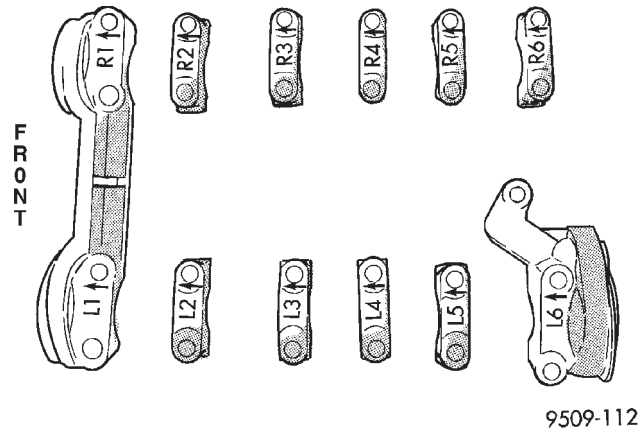

Fig. 25 Camshaft Bearing Cap Identification

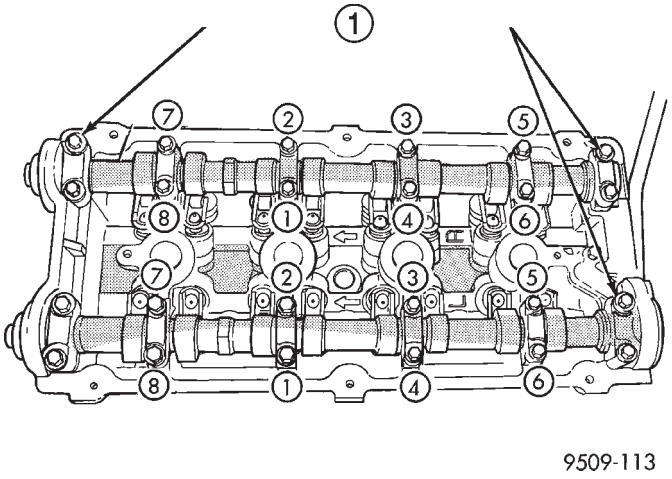

Fig. 26 Camshaft Bearing Cap - Removal

1 - REMOVE OUTSIDE BEARING CAPS FIRST

INSPECTION

(1) Inspect camshaft bearing journals for damage and binding (Fig. 27). If journals are binding, check the cylinder head for damage. Also check cylinder head oil holes for clogging.

(2) Check the cam lobe and bearing surfaces for abnormal wear and damage. Replace camshaft if defective.

NOTE: If camshaft is replaced due to lobe wear or damage, always replace the rocker arms.

(3) Measure the lobe actual wear (unworn area - wear zone = actual wear) (Fig. 27) and replace camshaft if out of limit. Standard value is 0.0254 mm (0.001 in.), wear **limit** is 0.254 mm (0.010 in.).

INSTALLATION

CAUTION: Ensure that NONE of the pistons are at top dead center when installing the camshafts.

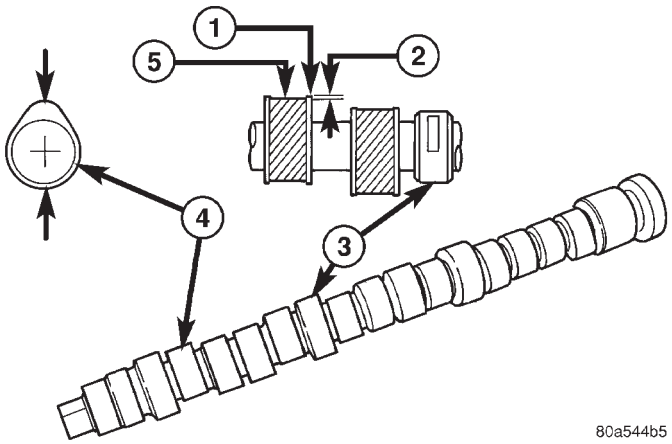

Fig. 27 Checking Camshaft(s) for Wear

1 - UNWORN AREA
2 - ACTUAL WEAR
3 - BEARING JOURNAL
4 - LOBE
5 - WEAR ZONE

(1) Lubricate all camshaft bearing journals, rocker arms and camshaft lobes.

(2) Install all rocker arms in original positions, if reused.

(3) Position camshafts on cylinder head bearing journals. Install right and left camshaft bearing caps No. 2 – 5 and right No. 6. Tighten M6 fasteners to 12 N·m (105 in. lbs.) in sequence shown in (Fig. 28).

(4) Apply Mopar® Gasket Maker to No. 1 and No. 6 bearing caps (Fig. 29). Install bearing caps and tighten M8 fasteners to 28 N·m (250 in. lbs.).

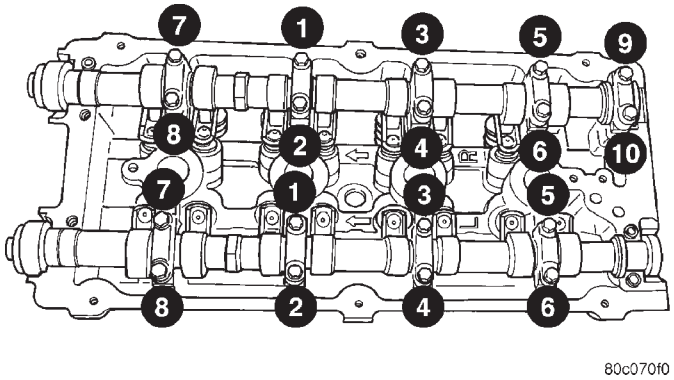

Fig. 28 Camshaft Bearing Cap Tightening Sequence

NOTE: Bearing end caps must be installed before seals can be installed.

(5) Install camshaft oil seals (Refer to 9 - ENGINE/CYLINDER HEAD/CAMSHAFT OIL SEAL(S) - INSTALLATION).

(6) Install camshaft target magnet and camshaft position sensor.

CAMSHAFT(S) (Continued)

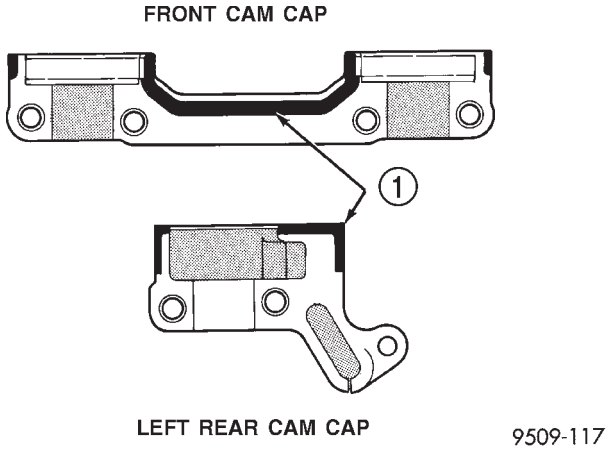

Fig. 29 Camshaft Bearing Cap Sealing

1 - 1.5 mm (.060 in.) DIAMETER BEAD OF MOPAR GASKET MAKER

(7) Install cylinder head cover (Refer to 9 - ENGINE/CYLINDER HEAD/CYLINDER HEAD COVER - INSTALLATION).

(8) Install timing belt rear cover and camshaft sprockets (Refer to 9 - ENGINE/VALVE TIMING/ TIMING BELT COVER(S) - INSTALLATION).

(9) Install timing belt (Refer to 9 - ENGINE/ VALVE TIMING/TIMING BELT AND SPROCKETS - INSTALLATION).

CYLINDER HEAD COVER

REMOVAL

(1) Remove upper intake manifold. (Refer to 9 - ENGINE/MANIFOLDS/INTAKE MANIFOLD - REMOVAL)

(2) Remove upper manifold support bracket.

(3) Remove ignition coil and spark plug wires.

(4) Disconnect PCV and make-up air hoses from cylinder head cover.

(5) Remove cylinder head cover bolts.

(6) Remove cylinder head cover from cylinder head.

CLEANING

Clean cylinder head and cover mating surfaces using a suitable solvent.

INSPECTION

Inspect cover rails for flatness.

INSTALLATION

NOTE: Replace spark plug well seals and bolt assemblies when installing a new cylinder head cover gasket.

(1) Install new cylinder head cover gaskets and spark plug well seals (Fig. 30).

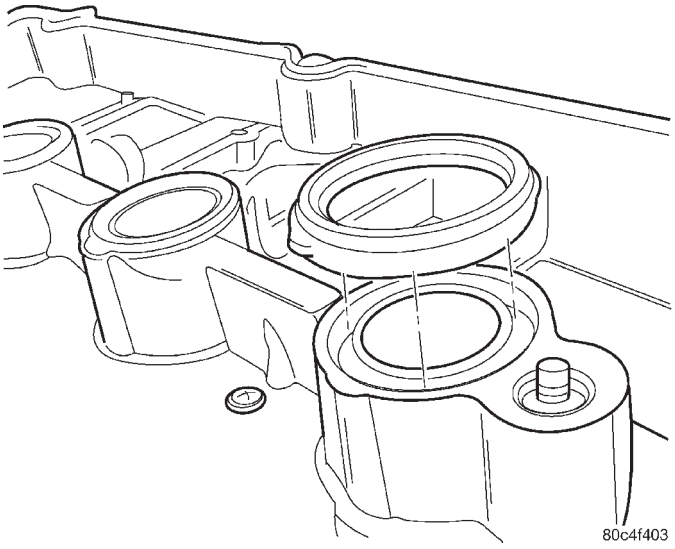

Fig. 30 Spark Plug Well Seals

(2) Replace cylinder head cover bolt assemblies.

CAUTION: Do not allow oil or solvents to contact the timing belt as they can deteriorate the rubber and cause tooth skipping.

(3) Apply Mopar® Engine RTV GEN II at the camshaft cap corners and at the top edges of the 1/2 round seal (Fig. 31).

(4) Install cylinder head cover assembly to cylinder head. Install all bolts, ensuring the single (1) stud used to attach the upper intake manifold support bracket is located in the #8 location as shown in torque sequence diagram (Fig. 32). Tighten bolts in sequence shown in (Fig. 32). Using a 3 step torque method as follows:

(a) Tighten all bolts to 4.5 N·m (40 in. lbs.).

(b) Tighten all bolts to 9.0 N·m (80 in. lbs.).

(c) Tighten all bolts to 12 N·m (105 in. lbs.).

(5) Install ignition coil and spark plug wires. Tighten fasteners to 12 N·m (105 in. lbs.).

(6) If the PCV valve was removed, apply Mopar® Thread Sealant with Teflon to threads and install valve to cylinder head cover. Tighten PCV valve to 8 N·m (70 in. lbs.).

(7) Connect PCV and make-up air hoses to cylinder head cover.

(8) Install upper intake manifold. (Refer to 9 - ENGINE/MANIFOLDS/INTAKE MANIFOLD - INSTALLATION)

CYLINDER HEAD COVER (Continued)

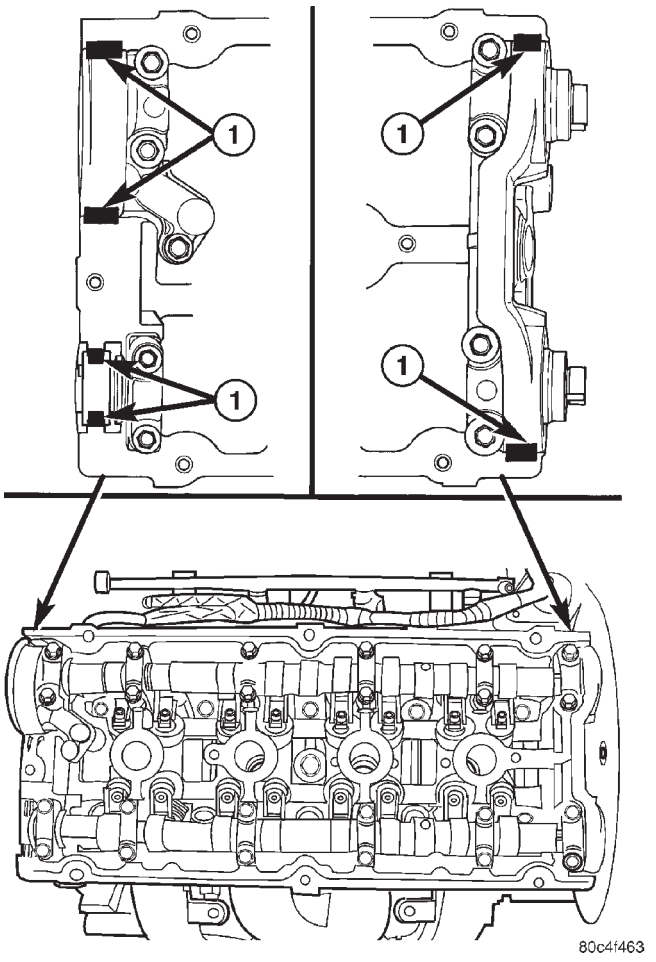

Fig. 31 Sealer Locations

1 – SEALER LOCATION

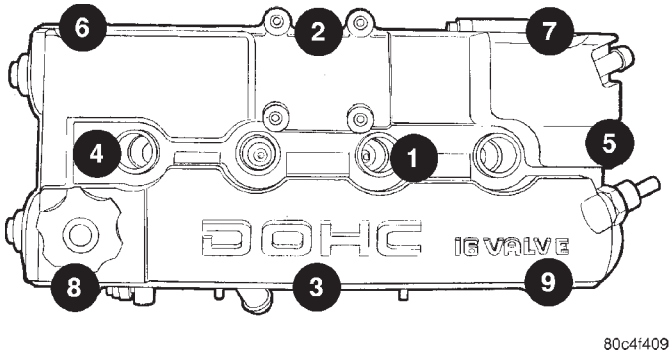

Fig. 32 Cylinder Head Cover Tightening Sequence (Typical Cover Shown)

INTAKE/EXHAUST VALVES & SEATS

DESCRIPTION

The valves are made of heat resistant steel. They have chrome plated stems to prevent scuffing. Viton rubber valve stem seals are integral with the spring seats. The valves have three-bead lock keepers to retain springs and to promote valve rotation.

CLEANING

(1) Clean all valves thoroughly and discard burned, warped and cracked valves.

VALVE SPRINGS & SEALS

REMOVAL

REMOVAL - CYLINDER HEAD ON

(1) Remove cylinder head cover (Refer to 9 - ENGINE/CYLINDER HEAD/CYLINDER HEAD COVER(S) - REMOVAL).

(2) Remove camshafts (Refer to 9 - ENGINE/CYLINDER HEAD/CAMSHAFT(S) - REMOVAL).

(3) Rotate crankshaft until piston is at TDC on compression.

(4) With air hose attached to adapter tool installed in spark plug hole, apply 90-120 psi air pressure.

(5) Using Special Tool MD-998772-A with adapter 6779 (Fig. 33), compress valve springs and remove valve locks.

(6) Remove valve spring(s).

(7) Remove valve stem seal(s) by a using valve stem seal tool (Fig. 35).

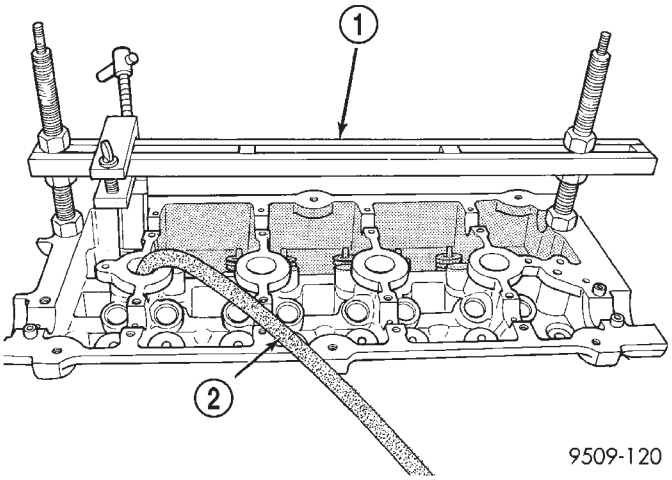

Fig. 33 Valve Spring - Removal/Installation

1 - VALVE SPRING COMPRESSOR MD 998772A
2 - AIR HOSE

VALVE SPRINGS & SEALS (Continued)

REMOVAL - CYLINDER HEAD OFF

(1) With cylinder head removed from cylinder block, compress valve springs using a universal valve spring compressor.

(2) Remove valve retaining locks, valve spring retainers, valve stem seals and valve springs.

(3) Before removing valves, **remove any burrs from valve stem lock grooves to prevent damage to the valve guides.** Identify valves, locks and retainers to insure installation in original location.

(4) Inspect the valves. (Refer to 9 - ENGINE/CYLINDER HEAD/VALVE SPRINGS - INSPECTION)

INSPECTION

(1) Whenever valves have been removed for inspection, reconditioning or replacement, valve springs should be tested for correct tension. Discard the springs that do not meet specifications. The following specifications apply to both intake and exhaust valves springs:

- Valve Closed Nominal Tension—76 lbs. @ 38.0 mm (1.50 in.)
- Valve Open Nominal Tension—136 lbs. @ 29.75 mm (1.17 in.)

(2) Inspect each valve spring for squareness with a steel square and surface plate, test springs from both ends. If the spring is more than 1.5 mm (1/16 inch) out of square, install a new spring.

INSTALLATION

INSTALLATION - CYLINDER HEAD ON

(1) Install valve seal/valve spring seat assembly (Fig. 34). Push the assembly down to seat it onto the valve guide.

(2) Install valve spring and retainer, use Special Tool MD-998772-A with adapter 6779 to compress valve springs only enough to install locks (Fig. 33). Correct alignment of tool is necessary to avoid nicking valve stems.

(3) Remove air hose and install spark plugs.

(4) Install camshafts (Refer to 9 - ENGINE/CYLINDER HEAD/CAMSHAFT(S) - INSTALLATION).

(5) Install cylinder head cover (Refer to 9 - ENGINE/CYLINDER HEAD/CYLINDER HEAD COVER - INSTALLATION).

INSTALLATION - CYLINDER HEAD OFF

(1) Coat valve stems with clean engine oil and insert in cylinder head.

(2) Install new valve stem seals on all valves using a valve stem seal tool (Fig. 35). The valve stem seals should be pushed firmly and squarely over valve guide.

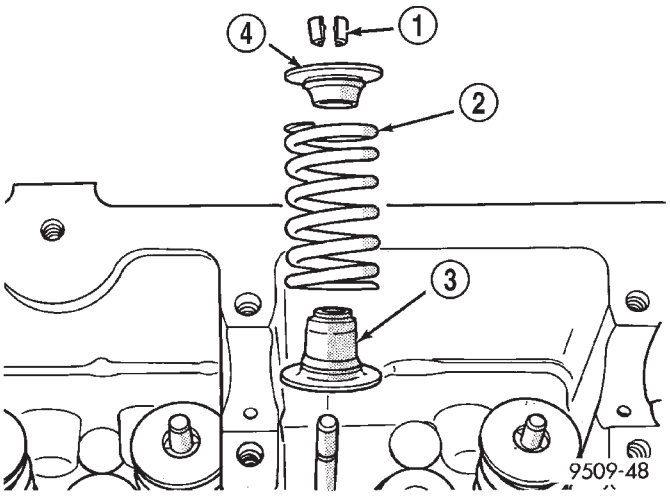

Fig. 34 Valve Stem Seal/Valve Spring Seat

1 - VALVE RETAINING LOCKS
2 - VALVE SPRING
3 - VALVE SEAL AND VALVE SPRING SEAT ASSEMBLY
4 - VALVE SPRING RETAINER

CAUTION: When oversize valves are used, the corresponding oversize valve seal must also be used. Excessive guide wear may result if oversize seals are not used with oversize valves.

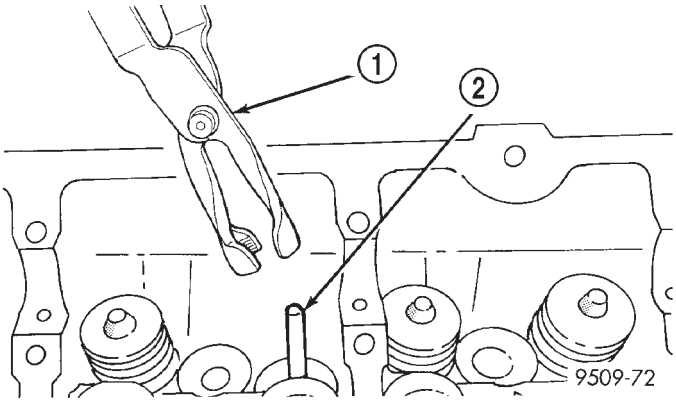

Fig. 35 Valve Stem Oil Seal Tool

1 - VALVE SEAL TOOL
2 - VALVE STEM

(3) Install valve springs and retainers. Compress valve springs only enough to install locks, taking care not to misalign the direction of compression. Nicked valve stems may result from misalignment of the valve spring compressor.

CAUTION: When depressing the valve spring retainers with valve spring compressor the locks can become dislocated. Ensure both locks are in the correct location after removing tool.

VALVE SPRINGS & SEALS (Continued)

(4) Check the valve spring installed height B after refacing the valve and seat (Fig. 36). Make sure measurements are taken from top of spring seat to the bottom surface of spring retainer. If height is greater than 38.75 mm (1.525 in.), install a 0.762 mm (0.030 in.) spacer under the valve spring seat to bring spring height back within specification.

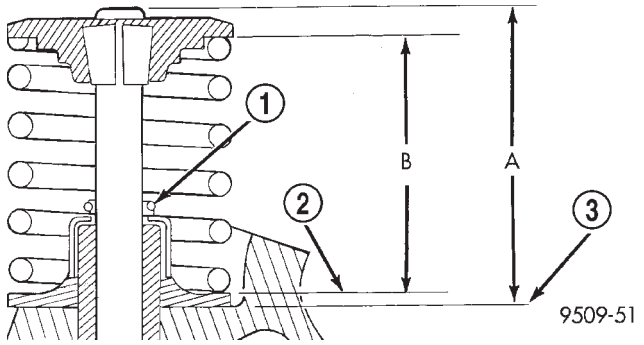

Fig. 36 Checking Spring Installed Height and Valve Tip Height Dimensions

1 - GARTER SPRING
2 - VALVE SPRING SEAT
3 - CYLINDER HEAD SURFACE

HYDRAULIC LASH ADJUSTERS

DIAGNOSIS AND TESTING - HYDRAULIC LASH ADJUSTER NOISE DIAGNOSIS

A tappet-like noise may be produced from several items. Check the following items.

(1) Engine oil level too high or too low. This may cause aerated oil to enter the adjusters and cause them to be spongy.

(2) Insufficient running time after rebuilding cylinder head. Low speed running up to 1 hour may be required.

(3) During this time, turn engine off and let set for a few minutes before restarting. Repeat this several times after engine has reached normal operating temperature.

(4) Low oil pressure.

(5) The oil restrictor (integral to the head gasket) in the vertical oil passage to the cylinder head is plugged with debris.

(6) Air ingested into oil due to broken or cracked oil pump pick up.

(7) Worn valve guides.

(8) Rocker arm ears contacting valve spring retainer.

(9) Rocker arm loose, adjuster stuck or at maximum extension and still leaves lash in the system.

(10) Faulty lash adjuster.

a. Check lash adjusters for sponginess while installed in cylinder head. Depress part of rocker arm over adjuster. Normal adjusters should feel very firm. Spongy adjusters can be bottomed out easily.

b. Remove suspected lash adjusters, and replace as necessary.

REMOVAL

NOTE: This procedure is for in-vehicle service with camshafts installed.

(1) Remove cylinder head cover. (Refer to 9 - ENGINE/CYLINDER HEAD/CYLINDER HEAD COVER(S) - REMOVAL)

(2) Remove rocker arm. (Refer to 9 - ENGINE/CYLINDER HEAD/ROCKER ARMS - REMOVAL)

(3) Remove hydraulic lash adjuster (Fig. 37).

(4) Repeat removal procedure for each hydraulic lash adjuster.

(5) If reusing, mark each hydraulic lash adjuster for reassembly in original position. Lash adjusters are serviced as an assembly.

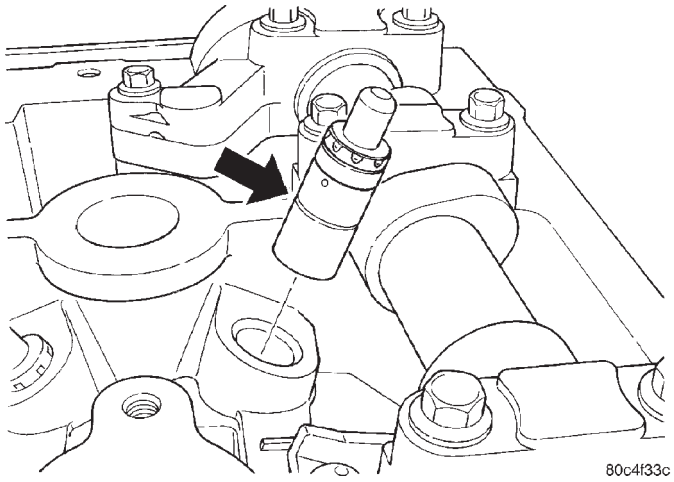

Fig. 37 Hydraulic Lash Adjuster

INSTALLATION

(1) Install hydraulic lash adjuster (Fig. 37). Ensure the lash adjusters are at least partially full of engine oil. This is indicated by little or no plunger travel when the lifter is depressed.

(2) Install rocker arm. (Refer to 9 - ENGINE/CYLINDER HEAD/ROCKER ARMS - INSTALLATION)

(3) Repeat installation procedure for each hydraulic lash adjuster.

(4) Install cylinder head cover. (Refer to 9 - ENGINE/CYLINDER HEAD/CYLINDER HEAD COVER(S) - INSTALLATION)

ROCKER ARMS

REMOVAL

NOTE: This procedure is for in-vehicle service with camshafts installed.

(1) Remove cylinder head cover. (Refer to 9 - ENGINE/CYLINDER HEAD/CYLINDER HEAD COVER(S) - REMOVAL)
(2) Remove spark plugs.
(3) Rotate engine until the camshaft lobe, on the follower being removed, is positioned on its base circle (heel). Also, the piston should be a minimum of 6.3 mm (0.25 in) below TDC position.

CAUTION: If cam follower assemblies are to be reused, always mark position for reassembly in their original positions.

(4) Using Special Tools 8215A and 8436 slowly depress valve assembly until rocker arm can be removed (Fig. 38).
(5) Repeat removal procedure for each rocker arm.

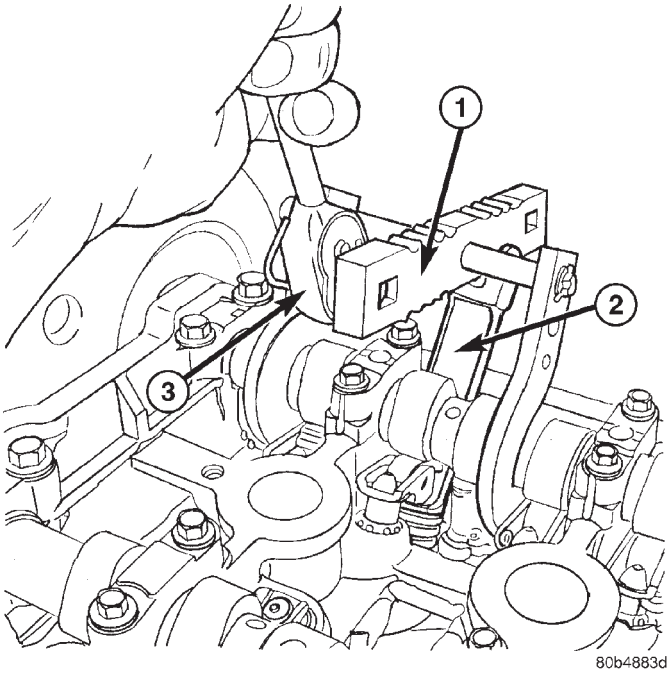

Fig. 38 Rocker Arm - Removal/Installation

1 - SPECIAL TOOL 8215A
2 - SPECIAL TOOL 8436
3 - 3/8″ DRIVE RACHET

INSPECTION

Inspect the rocker arm for wear or damage (Fig. 39). Replace as necessary.

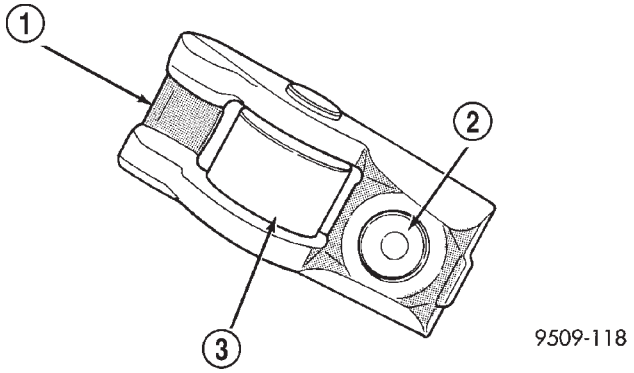

Fig. 39 Rocker Arm

1 - TIP
2 - LASH ADJUSTER POCKET
3 - ROLLER

INSTALLATION

(1) Lubricate rocker arm with clean engine oil.
(2) Using Special Tools 8215A and 8436 slowly depress valve assembly until rocker arm can be installed on the hydraulic lifter and valve stem (Fig. 38).
(3) Repeat installation procedure for each rocker arm.
(4) Install spark plugs.
(5) Install cylinder head cover. (Refer to 9 - ENGINE/CYLINDER HEAD/CYLINDER HEAD COVER(S) - INSTALLATION)

ENGINE BLOCK

DESCRIPTION

The cast iron cylinder block is a two-piece assembly, consisting of the cylinder block and bedplate (Fig. 40). The bedplate incorporates the main bearing caps and bolts to the cylinder block. This design offers a much stronger lower end and increased cylinder block rigidity. The rear oil seal retainer is integral with the block. The bedplate and block are serviced as an assembly.

ENGINE BLOCK (Continued)

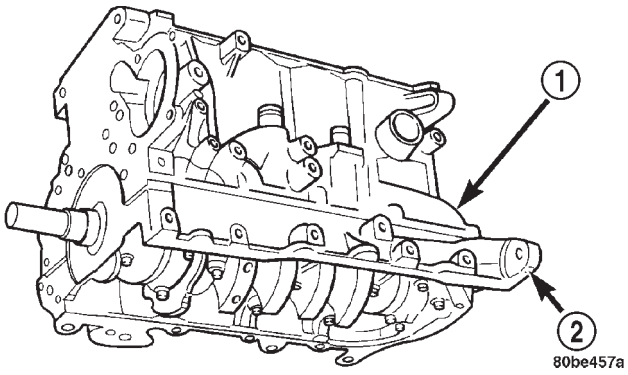

Fig. 40 Cylinder Block and Bedplate

1 - CYLINDER BLOCK
2 - BEDPLATE

STANDARD PROCEDURE

STANDARD PROCEDURE - PISTON TO CYLINDER BORE FITTING

Piston and cylinder wall must be clean and dry. Piston diameter should be measured 90 degrees to piston pin about 14 mm (9/16 inch.) from the bottom of the skirt as shown in (Fig. 42). Cylinder bores should be measured halfway down the cylinder bore and transverse to the engine crankshaft center line shown in (Fig. 41). Refer to for Engine Specifications (Refer to 9 - ENGINE - SPECIFICATIONS). Correct piston to bore clearance must be established in order to assure quiet and economical operation.

NOTE: Pistons and cylinder bores should be measured at normal room temperature, 21°C (70°F).

STANDARD PROCEDURE - CYLINDER BORE HONING

(1) Used carefully, the cylinder bore resizing hone, recommended tool C-823 or equivalent, equipped with 220 grit stones, is the best tool for this honing procedure. In addition to deglazing, it will reduce taper and out-of-round as well as removing light scuffing, scoring or scratches. Usually a few strokes will clean up a bore and maintain the required limits.

(2) Deglazing of the cylinder walls may be done using a cylinder surfacing hone, recommended tool C-3501 or equivalent, equipped with 280 grit stones, if the cylinder bore is straight and round. 20–60 strokes depending on the bore condition, will be sufficient to provide a satisfactory surface. Use a light honing oil. **Do not use engine or transmission oil, mineral spirits or kerosene.** Inspect cylinder walls after each 20 strokes.

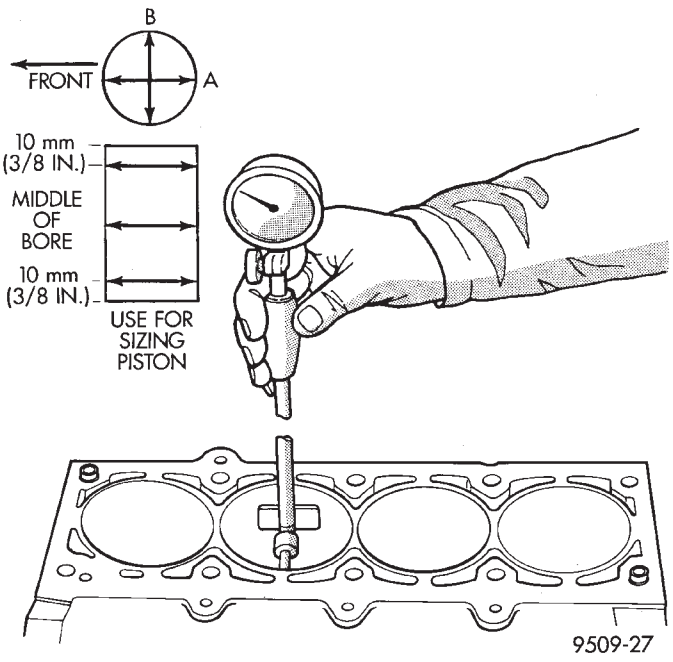

Fig. 41 Checking Cylinder Bore

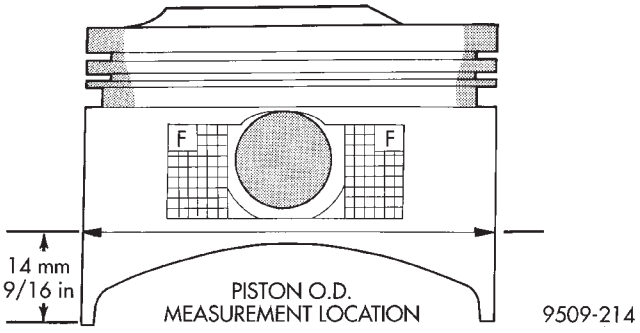

Fig. 42 Piston Measurement

(3) Honing should be done by moving the hone up and down fast enough to get a cross-hatch pattern. When hone marks **intersect** at 40-60 degrees, the cross hatch angle is most satisfactory for proper seating of rings (Fig. 43).

(4) A controlled hone motor speed between 200–300 RPM is necessary to obtain the proper cross-hatch angle. The number of up and down strokes per minute can be regulated to get the desired 40–60 degree angle. Faster up and down strokes increase the cross-hatch angle.

(5) After honing, it is necessary that the block be cleaned again to remove all traces of abrasive.

ENGINE BLOCK (Continued)

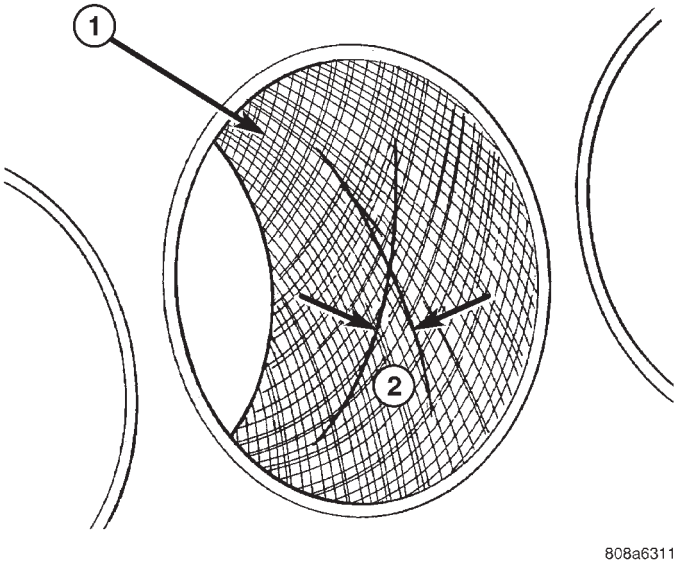

Fig. 43 Cylinder Bore Cross-Hatch Pattern

1 - CROSS-HATCH PATTERN
2 - 40°–60°

CAUTION: Ensure all abrasives are removed from engine parts after honing. It is recommended that a solution of soap and hot water be used with a brush and the parts then thoroughly dried. The bore can be considered clean when it can be wiped clean with a white cloth and cloth remains clean. Oil the bores after cleaning to prevent rusting.

CLEANING

Clean cylinder block thoroughly using a suitable cleaning solvent.

INSPECTION

ENGINE BLOCK

(1) Clean cylinder block thoroughly and check all core hole plugs for evidence of leaking.

(2) If new core plugs are to be installed, (Refer to 9 - ENGINE - STANDARD PROCEDURE - ENGINE CORE AND OIL GALLERY PLUGS).

(3) Examine block and cylinder bores for cracks or fractures.

(4) Check block deck surfaces for flatness. Deck surface must be within service limit of 0.1 mm (0.004 in.).

CYLINDER BORE

NOTE: The cylinder bores should be measured at normal room temperature, 21°C (70°F).

The cylinder walls should be checked for out-of-round and taper with Tool C119 or equivalent (Fig. 44) (Refer to 9 - ENGINE - SPECIFICATIONS). If the cylinder walls are badly scuffed or scored, the cylinder block should be replaced, and new pistons and rings fitted.

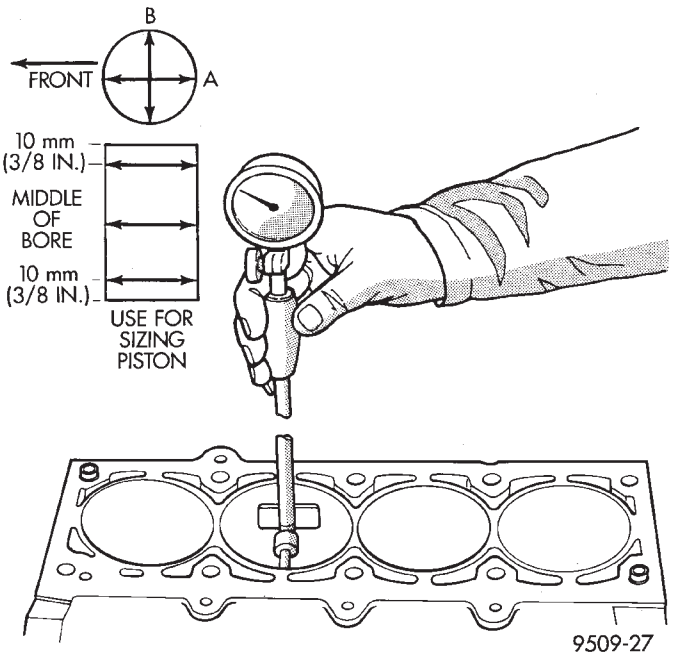

Fig. 44 Checking Cylinder Bore Size

Measure the cylinder bore at three levels in directions A and B (Fig. 44). Top measurement should be 10 mm (3/8 in.) down and bottom measurement should be 10 mm (3/8 in.) up from bottom of bore. (Refer to 9 - ENGINE - SPECIFICATIONS).

CONNECTING ROD BEARINGS

STANDARD PROCEDURE

CONNECTING ROD - FITTING

(1) For measuring connecting rod bearing clearance procedure and use of Plastigage(Refer to 9 - ENGINE - STANDARD PROCEDURE). For bearing clearance refer to Engine Specifications. (Refer to 9 - ENGINE - SPECIFICATIONS)

NOTE: The rod bearing bolts should not be reused.

(2) Before installing the **NEW** bolts the threads should be oiled with clean engine oil.

(3) Install each bolt finger tight then alternately torque each bolt to assemble the cap properly.

CONNECTING ROD BEARINGS (Continued)

(4) Tighten the bolts to 27 N·m PLUS 1/4 turn (20 ft. lbs. PLUS 1/4 turn) **Do not use a torque wrench for last step.**

(5) Using a feeler gauge, check connecting rod side clearance (Fig. 45). Refer to clearance specifications (Refer to 9 - ENGINE - SPECIFICATIONS).

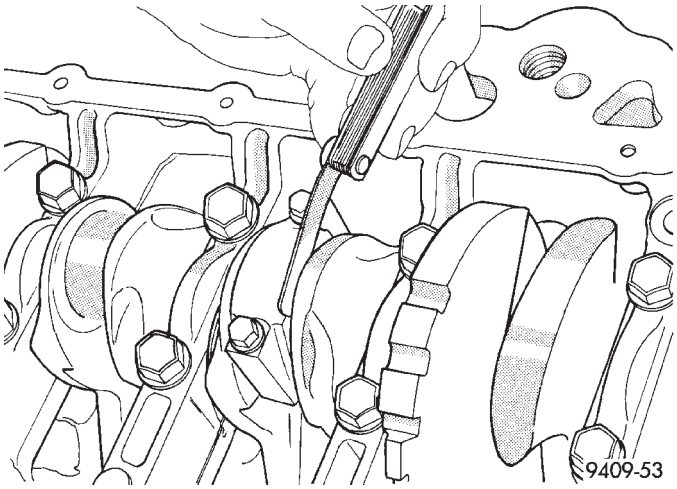

Fig. 45 Connecting Rod Side Clearance

CRANKSHAFT

DESCRIPTION

The crankshaft is made of nodular cast iron and includes five main bearing journals and four connecting rod journals (Fig. 46). The number three journal is the location for the thrust bearing. The mains and connecting rod journals have undercut fillet radiuses that are rolled for added strength. To optimize bearing loading, eight counterweights are used.

OPERATION

The crankshaft transfers force generated by combustion within the cylinder to the flywheel or flexplate.

STANDARD PROCEDURE - CRANKSHAFT END PLAY

(1) Using Dial Indicator C-3339 and Mounting Post L-4438, attach to front of engine, locating probe perpendicular on nose of crankshaft (Fig. 47).

(2) Move crankshaft all the way to the rear of its travel.

(3) Zero the dial indicator.

(4) Move crankshaft all the way to the front and read the dial indicator. Refer to Engine Specifications.

REMOVAL

NOTE: Crankshaft can not be removed when engine is in vehicle.

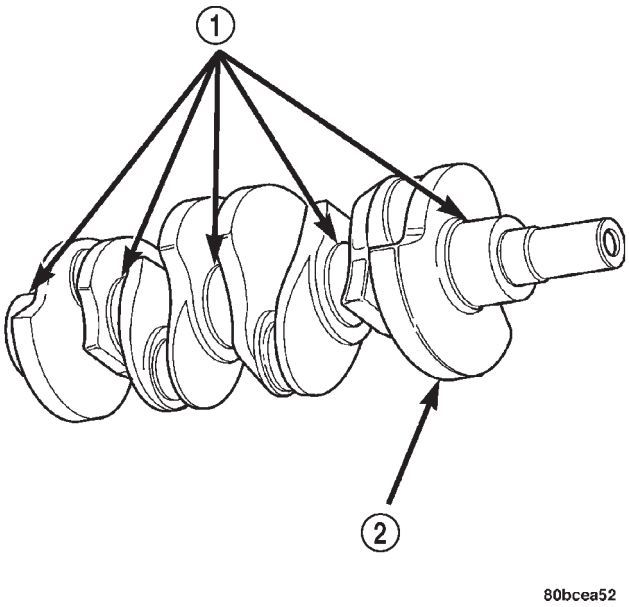

Fig. 46 Crankshaft - Typical

1 - MAIN BEARING JOURNALS
2 - COUNTER BALANCE WEIGHTS

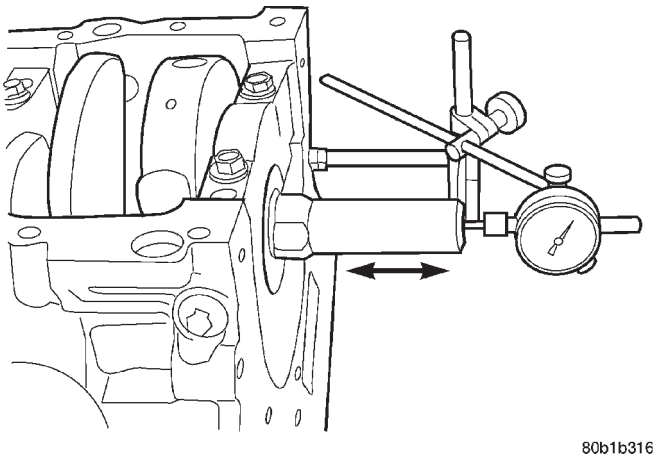

Fig. 47 CHECKING CRANKSHAFT END PLAY

(1) Remove engine assembly from vehicle. (Refer to 9 - ENGINE - REMOVAL)

(2) Separate engine from transaxle.

(3) Remove flex plate and crankshaft rear oil seal.

(4) Mount engine on a repair stand.

(5) Drain engine oil and remove oil filter.

(6) Remove the oil pan. (Refer to 9 - ENGINE/LUBRICATION/OIL PAN - REMOVAL)

(7) Remove engine mount support bracket.

(8) Remove the crankshaft damper and timing belt covers. (Refer to 9 - ENGINE/VALVE TIMING/TIMING BELT / CHAIN COVER(S) - REMOVAL)

(9) Remove the timing belt. (Refer to 9 - ENGINE/VALVE TIMING/TIMING BELT/CHAIN AND SPROCKETS - REMOVAL)

CRANKSHAFT (Continued)

(10) Remove the crankshaft sprocket and oil pump. (Refer to 9 - ENGINE/LUBRICATION/OIL PUMP - REMOVAL)

(11) Remove balance shafts and housing assembly. (Refer to 9 - ENGINE/VALVE TIMING/BALANCE SHAFT - REMOVAL)

NOTE: If piston/connecting rod replacement is necessary, remove cylinder head.

(12) Using a permanent ink or paint marker, identify cylinder number on each connecting rod cap.

CAUTION: DO NOT use a number stamp or a punch to mark connecting rods. Damage to connecting rod could occur.

(13) Remove all connecting rod bolts and caps. Care should be taken not to damage the fracture rod and cap surfaces.

NOTE: Do not reuse connecting rod bolts.

(14) Remove all bedplate bolts from the engine block (Fig. 48).

(15) Using a mallet gently tap the bedplate loose from the engine block dowel pins.

CAUTION: Do not pry up on one side of the bedplate. Damage may occur to cylinder block to bedplate alignment and thrust bearing.

(16) Bedplate should be removed evenly from the cylinder block dowel pins to prevent damage to the dowel pins and thrust bearing.

(17) Lift out crankshaft from cylinder block. Do not damage the main bearings or journals when removing the crankshaft.

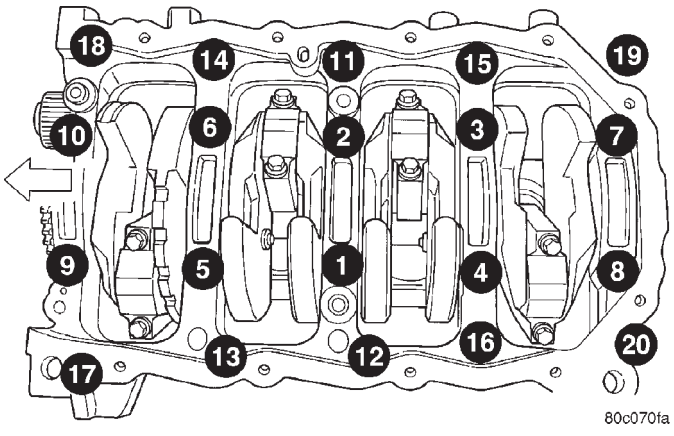

Fig. 48 Bedplate Bolt Tightenening Sequence

INSPECTION

The crankshaft journals should be checked for excessive wear, taper and scoring (Fig. 49). Limits of taper or out of round on any crankshaft journals should within specitifications. (Refer to 9 - ENGINE - SPECIFICATIONS) Journal grinding should not exceed 0.305 mm (0.012 in.) under the standard journal diameter. DO NOT grind thrust faces of No. 3 main bearing. DO NOT nick crank pin or bearing fillets. After grinding, remove rough edges from crankshaft oil holes and clean out all passages.

CAUTION: With the nodular cast iron crankshafts, it is important that the final paper or cloth polish be in the same direction as normal rotation in the engine.

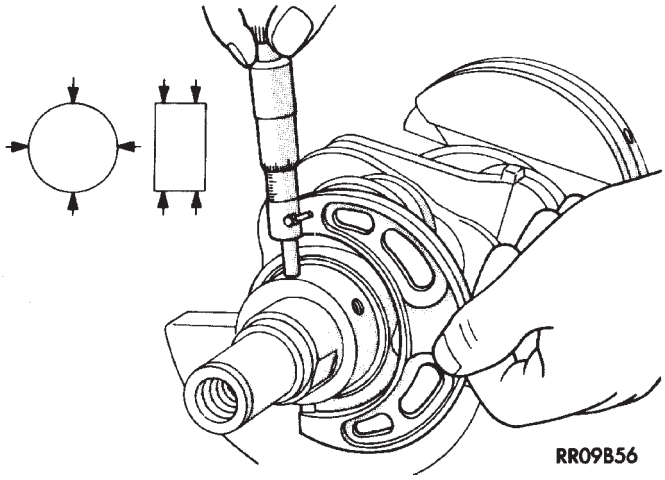

Fig. 49 Crankshaft Journal Measurements

INSTALLATION

(1) Install the main bearing upper shells with the lubrication groove in the cylinder block (Fig. 50).

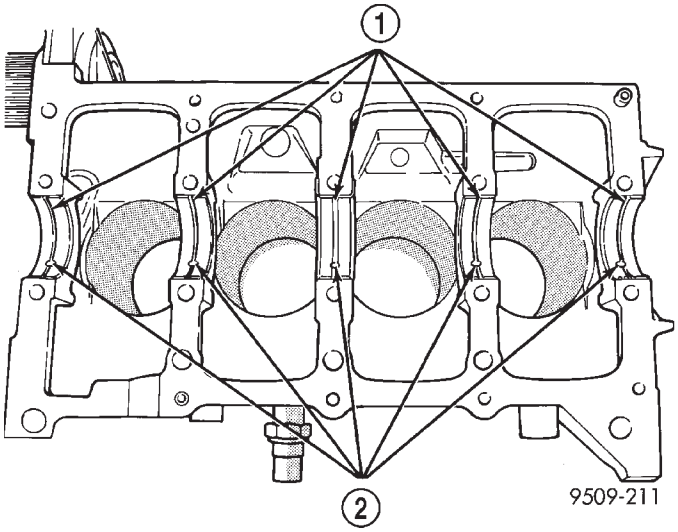

Fig. 50 Installing Main Bearing Upper Shell

1 - LUBRICATION GROOVES
2 - OIL HOLES

CRANKSHAFT (Continued)

(2) Make certain oil holes in block line up with oil hole in bearings and bearing tabs seat in the block tab slots.

CAUTION: Do not get oil on the bedplate mating surface. It will affect the sealer ability to seal the bedplate to cylinder block.

(3) Oil the bearings and journals. Install crankshaft.

CAUTION: Use only the specified anaerobic sealer on the bedplate or damage may occur to the engine.

(4) Apply 1.5 to 2.0 mm (0.059 to 0.078 in.) bead of Mopar® Bed Plate Sealant to cylinder block as shown in (Fig. 51).

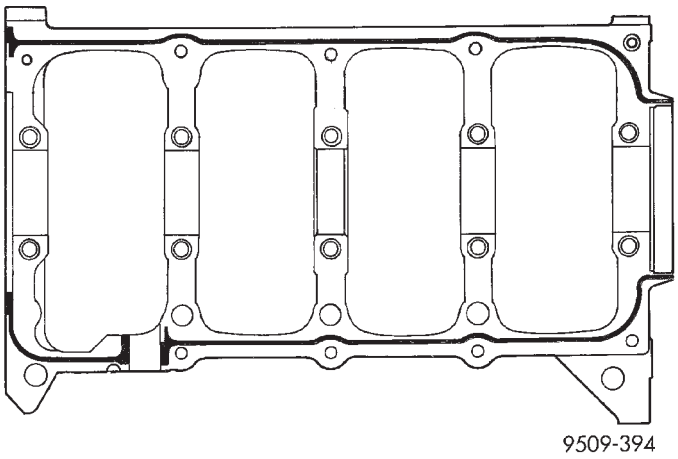

Fig. 51 Bedplate Sealing

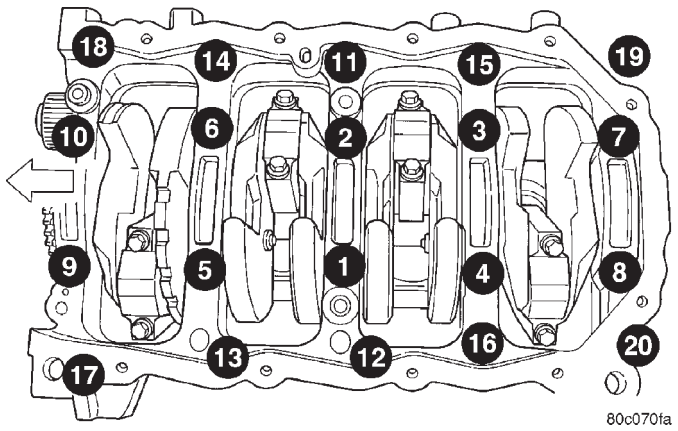

Fig. 52 Bedplate Bolt Torque Sequence

(5) Install lower main bearings into main bearing cap/bedplate. Make certain the bearing tabs are seated into the bedplate slots. Install the main bearing/bedplate into engine block.

(6) Before installing the bolts the threads should be oiled with clean engine oil, wipe off any excess oil.

(7) Install main bearing bedplate to engine block bolts 11, 17, and 20 finger tight. Tighten these bolts down together until the bedplate contacts the cylinder block.

(8) To ensure correct thrust bearing alignment, perform the following steps:

- Step 1: Rotate crankshaft until number 4 piston is at TDC.
- Step 2: Move crankshaft rearward to limits of travel.
- Step 3: Then, move crankshaft forward to limits of travel.
- Step 4: Wedge an appropriate tool between the rear of the cylinder block **(NOT BED PLATE)** and the rear crankshaft counterweight. This will hold the crankshaft in it's furthest forward position.
- Step 5: Install and tighten bolts (1–10) in sequence shown in (Fig. 52) to 41 N·m (30 ft. lbs.).
- Step 6: Remove wedge tool used to hold crankshaft.

(9) Tighten bolts (1–10) again to 41 N·m (30 ft. lbs.) in sequence shown in (Fig. 52).

CAUTION: Do Not use a torque wrench for the following step.

(10) Turn bolts (1–10) an additional 1/4 turn in sequence shown in (Fig. 52).

(11) Install main bearing bedplate to engine block bolts (11–20), and torque each bolt to 28 N·m (250 in. lbs.) in sequence shown in (Fig. 52).

(12) Tighten bolts (11–20) again to 28 N·m (250 in. lbs.) in sequence shown in (Fig. 52).

(13) After the main bearing bedplate is installed, check the crankshaft turning torque. The turning torque should not exceed 5.6 N·m (50 in. lbs.).

(14) Install connecting rod bearings and caps. **Do Not Reuse Connecting Rod Bolts.** Torque connecting rod bolts to 27 N·m (20 ft. lbs.) plus 1/4 turn.

(15) Install balance shafts and housing assembly. (Refer to 9 - ENGINE/VALVE TIMING/BALANCE SHAFT - INSTALLATION)

(16) Install the oil pump. (Refer to 9 - ENGINE/LUBRICATION/OIL PUMP - INSTALLATION)

(17) Install cylinder head if it was removed (Refer to 9 - ENGINE/CYLINDER HEAD - INSTALLATION).

(18) Install the timing belt rear cover. (Refer to 9 - ENGINE/VALVE TIMING/TIMING BELT / CHAIN COVER(S) - INSTALLATION)

(19) Install crankshaft sprocket (Refer to 9 - ENGINE/VALVE TIMING/TIMING BELT/CHAIN AND SPROCKETS - INSTALLATION).

(20) Install the timing belt. (Refer to 9 - ENGINE/VALVE TIMING/TIMING BELT/CHAIN AND SPROCKETS - INSTALLATION)

CRANKSHAFT (Continued)

(21) Install the timing belt front covers. (Refer to 9 - ENGINE/VALVE TIMING/TIMING BELT / CHAIN COVER(S) - INSTALLATION)

(22) Install engine mount support bracket.

(23) Install the oil pan. (Refer to 9 - ENGINE/LUBRICATION/OIL PAN - INSTALLATION)

(24) Install the oil filter.

(25) Install crankshaft rear oil seal. (Refer to 9 - ENGINE/ENGINE BLOCK/CRANKSHAFT OIL SEAL - REAR - INSTALLATION)

(26) Install flex plate. Apply Mopar® Lock & Seal Adhesive to bolt threads and tighten to 95 N·m (70 ft. lbs.).

(27) Attach transaxle to engine. Tighten attaching bolts to 101 N·m (75 ft. lbs.).

(28) Install the engine assembly. (Refer to 9 - ENGINE - INSTALLATION)

CRANKSHAFT MAIN BEARINGS

STANDARD PROCEDURE - MAIN BEARING - FITTING

For crankshaft specifications (Refer to 9 - ENGINE - SPECIFICATIONS).

CRANKSHAFT MAIN BEARINGS

The crankshaft is supported in five main bearings. All upper and lower bearing shells in the crankcase have oil grooves. Crankshaft end play is controlled by a flanged bearing on the number three main bearing journal (Fig. 53).

Upper and lower Number 3 bearing halves are flanged to carry the crankshaft thrust loads and are NOT interchangeable with any other bearing halves in the engine (Fig. 53). All bearing cap bolts removed during service procedures are to be cleaned and oiled before installation. Bearing shells are available in standard and the following undersized: 0.025 mm (0.001 in.) and 0.250 mm (0.010 in.). Never install an undersize bearing that will reduce clearance below specifications. Replace or machine the crankshaft as necessary to obtain proper bearing clearances.

MAIN BEARING INSTALLATION

(1) Install the main bearing shells with the lubrication groove in the cylinder block (Fig. 54).

(2) Make certain oil holes in block line up with oil holes in bearings. Bearing tabs must seat in the block tab slots.

CAUTION: Do not get oil on the bedplate mating surface. It will may effect the sealer ability to seal the bedplate to cylinder block.

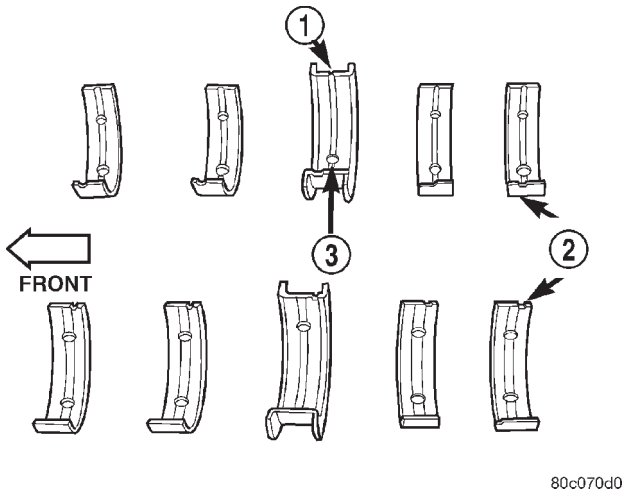

Fig. 53 Main Bearing Identification

1 - OIL GROOVE
2 - MAIN BEARINGS
3 - OIL HOLE

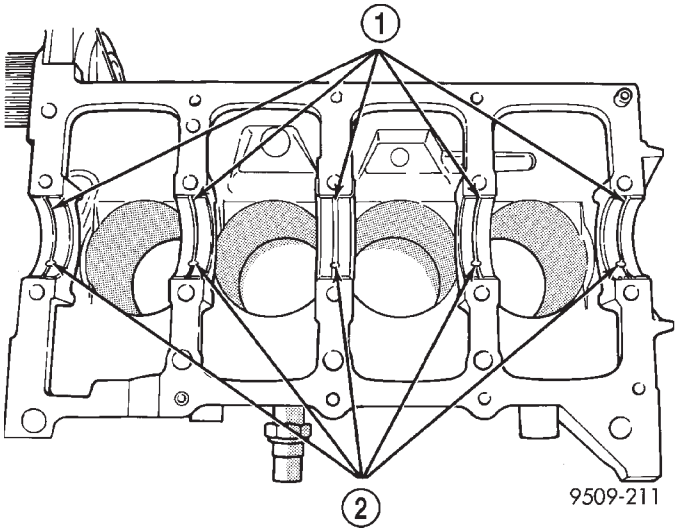

Fig. 54 Installing Main Bearing Upper Shell

1 - LUBRICATION GROOVES
2 - OIL HOLES

(3) Oil the bearings and journals and install crankshaft.

CAUTION: Use only the specified anaerobic sealer on the bedplate or damage may occur to the engine. Ensure that both cylinder block and bedplate surfaces are clean.

(4) Apply 1.5 to 2.0 mm (0.059 to 0.078 in.) bead of anaerobic sealer Mopar® Bed Plate Sealant to cylinder block as shown in (Fig. 55).

(5) Install lower main bearings into main bearing cap/bedplate. Make certain the bearing tabs are seated into the bedplate slots.

CRANKSHAFT MAIN BEARINGS (Continued)

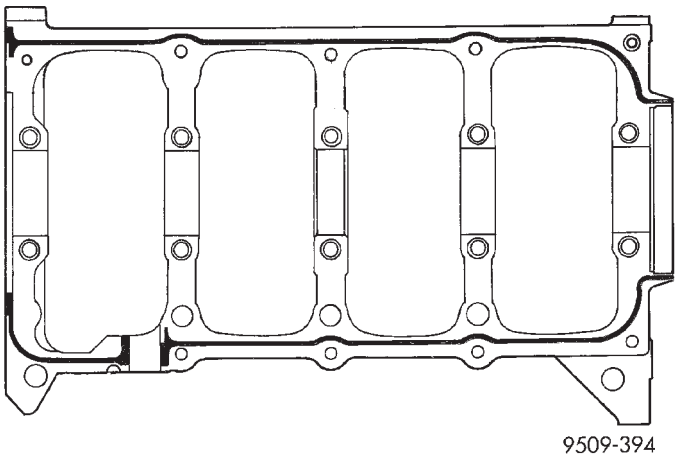

Fig. 55 Main Bearing Caps/Bedplate Sealing

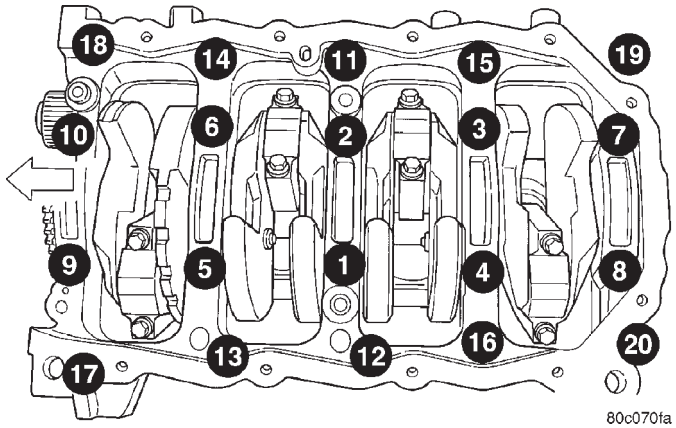

Fig. 56 Main Bearing Caps/Bedplate Tightening Sequence

(6) Position the main bearing/bedplate onto the engine block.

(7) Before installing bolts, lubricate the threads with clean engine oil, wipe off any excess oil.

(8) Install main bearing bedplate to engine block bolts 11, 17 and 20 finger tight. Tighten these bolts down together until the bedplate contacts the cylinder block.

(9) To ensure correct thrust bearing alignment, perform the following steps:

- Step 1: Rotate crankshaft until number 4 piston is at TDC.
- Step 2: Move crankshaft rearward to limits of travel.
- Step 3: Then, move crankshaft forward to limits of travel.
- Step 4: Wedge an appropriate tool between the rear of the cylinder block **(NOT BED PLATE)** and the rear crankshaft counterweight. This will hold the crankshaft in it's furthest forward position.
- Step 5: Install and tighten bolts (1–10) in sequence shown in (Fig. 56) to 41 N·m (30 ft. lbs.).
- Step 6: Remove wedge tool used to hold crankshaft.

(10) Tighten bolts (1–10) again to 41 N·m (30 ft. lbs.) in sequence shown in (Fig. 56).

CAUTION: Do Not use a torque wrench for the following step.

(11) Turn bolts (1–10) an additional 1/4 turn in sequence shown in (Fig. 56).

(12) Install main bearing bedplate to engine block bolts (11–20), and torque each bolt to 28 N·m (250 in. lbs.) in sequence shown in (Fig. 56).

(13) Tighten bolts (11–20) again to 28 N·m (250 in. lbs.) in sequence shown in (Fig. 56).

(14) After the main bearing bedplate is installed, check the crankshaft turning torque. The turning torque should not exceed 5.6 N·m (50 in. lbs.).

CRANKSHAFT OIL SEAL - FRONT

REMOVAL

(1) Remove the crankshaft vibration damper. (Refer to 9 - ENGINE/ENGINE BLOCK/VIBRATION DAMPER - REMOVAL)

(2) Remove timing belt. (Refer to 9 - ENGINE/VALVE TIMING/TIMING BELT/CHAIN AND SPROCKETS - REMOVAL)

(3) Remove crankshaft sprocket using Special Tool 6793 and insert C-4685-C2 (Fig. 57).

CAUTION: Do not nick shaft seal surface or seal bore.

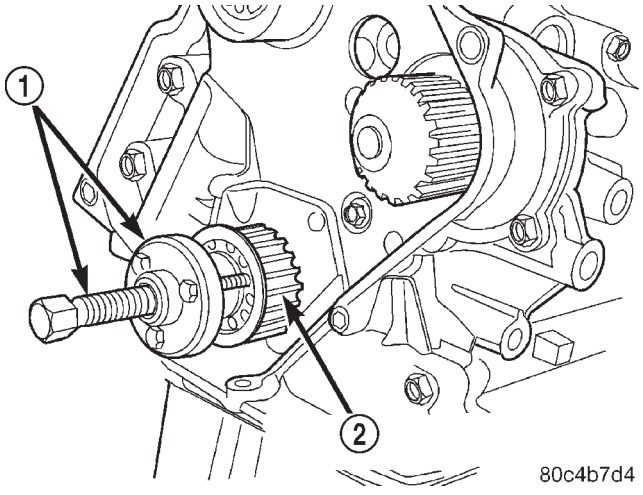

Fig. 57 Crankshaft Sprocket - Removal

1 - SPECIAL TOOL 6793
2 - CRANKSHAFT SPROCKET

CRANKSHAFT OIL SEAL - FRONT (Continued)

(4) Using Tool 6771 to remove front crankshaft oil seal (Fig. 58). Be careful not to damage the seal surface of cover.

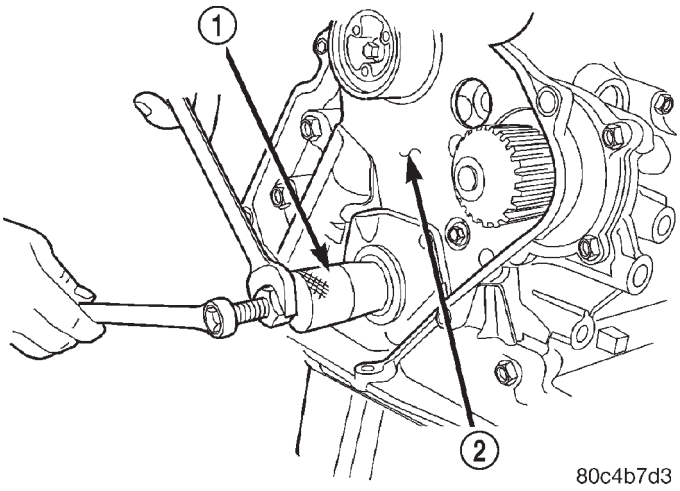

Fig. 58 Front Crankshaft Oil Seal - Removal

1 - SPECIAL TOOL 6771
2 - REAR TIMING BELT COVER

INSTALLATION

(1) Install new seal by using Special Tool 6780 (Fig. 59).

(2) Place seal into opening with seal spring towards the inside of engine. Install seal until flush with cover.

(3) Install crankshaft sprocket using Special Tool 6792 (Fig. 60).

(4) Install timing belt. (Refer to 9 - ENGINE/ VALVE TIMING/TIMING BELT/CHAIN AND SPROCKETS - INSTALLATION)

(5) Install crankshaft vibration damper. (Refer to 9 - ENGINE/ENGINE BLOCK/VIBRATION DAMPER - INSTALLATION)

CRANKSHAFT OIL SEAL - REAR

REMOVAL

(1) Remove transaxle. Refer to TRANSMISSION/ TRANSAXLE - REMOVAL for procedure.

(2) Remove flex plate.

(3) Insert a 3/16 flat bladed screwdriver between the dust lip and the metal case of the crankshaft seal. Angle the screwdriver (Fig. 61)through the dust lip against metal case of the seal. Pry out seal.

CAUTION: Do not permit the screwdriver blade to contact crankshaft seal surface. Contact of the screwdriver blade against crankshaft edge (chamfer) is permitted.

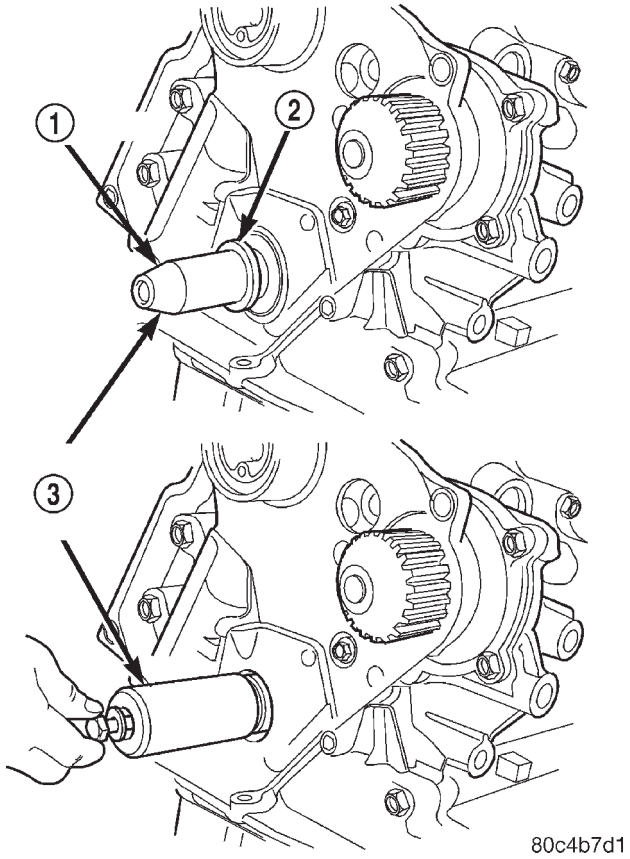

Fig. 59 Crankshaft Front Oil Seal - Installation

1 - PROTECTOR
2 - SEAL
3 - SPECIAL TOOL 6780

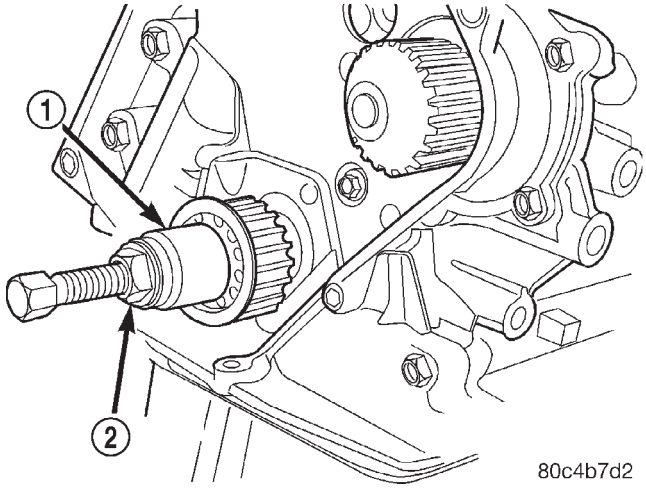

Fig. 60 Crankshaft Sprocket - Installation

1 - SPECIAL TOOL 6792
2 - TIGHTEN NUT TO INSTALL

CRANKSHAFT OIL SEAL - REAR (Continued)

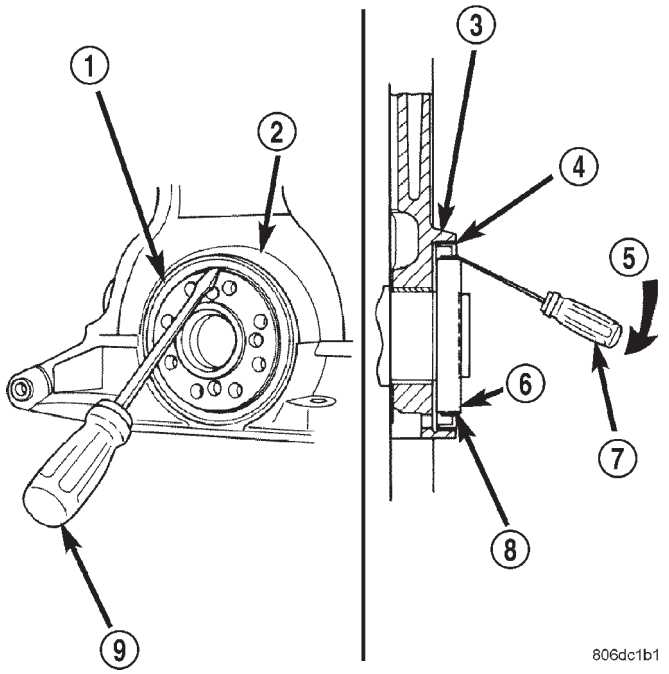

Fig. 61 Rear Crankshaft Oil Seal—Removal

1 - REAR CRANKSHAFT SEAL
2 - ENGINE BLOCK
3 - ENGINE BLOCK
4 - REAR CRANKSHAFT SEAL METAL CASE
5 - PRY IN THIS DIRECTION
6 - CRANKSHAFT
7 - SCREWDRIVER
8 - REAR CRANKSHAFT SEAL DUST LIP
9 - SCREWDRIVER

INSTALLATION

CAUTION: If burr or scratch is present on the crankshaft edge (chamfer), cleanup with 400 grit sand paper to prevent seal damage during installation of new seal.

NOTE: When installing seal, no lube on seal is needed.

(1) Place Special Tool 6926-1 Seal Guide on crankshaft (Fig. 62).

(2) Position seal over guide tool (Fig. 62). Guide tool should remain on crankshaft during installation of seal. Ensure that the lip of the seal is facing towards the crankcase during installation.

CAUTION: If the seal is driven into the block past flush, this may cause an oil leak.

(3) Drive the seal into the block using Special Tool 6926-2 and handle C-4171 (Fig. 63) until the tool bottoms out against the block (Fig. 64).

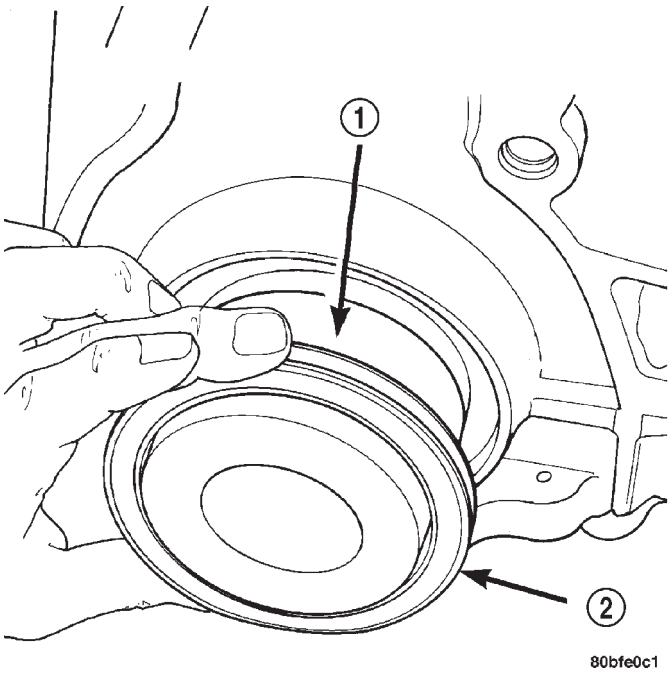

Fig. 62 Rear Crankshaft Seal and Special Tool 6926-1

1 - SPECIAL TOOL 6926–1 PILOT
2 - SEAL

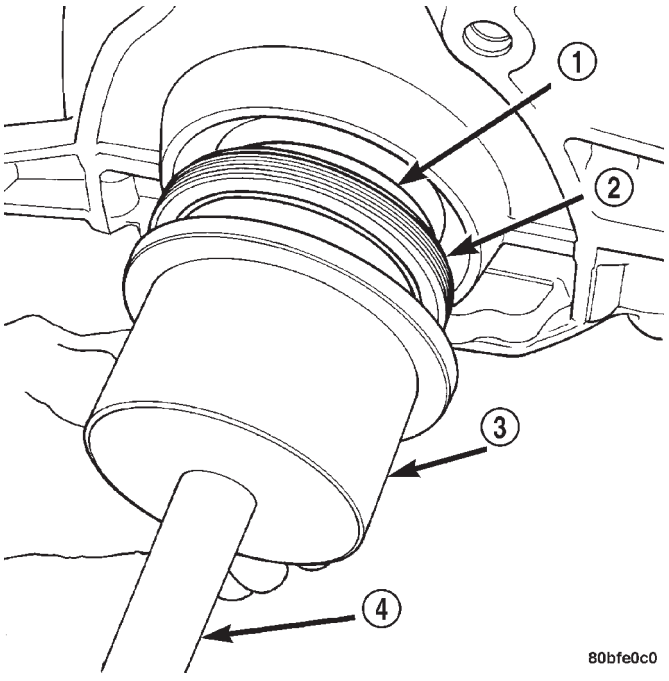

Fig. 63 Crankshaft Seal and Special Tools 6926-2 & C-4171

1 - SPECIAL TOOL 6926–1 PILOT
2 - SEAL
3 - SPECIAL TOOL 6926–2 INSTALLER
4 - SPECIAL TOOL C-4171

CRANKSHAFT OIL SEAL - REAR (Continued)

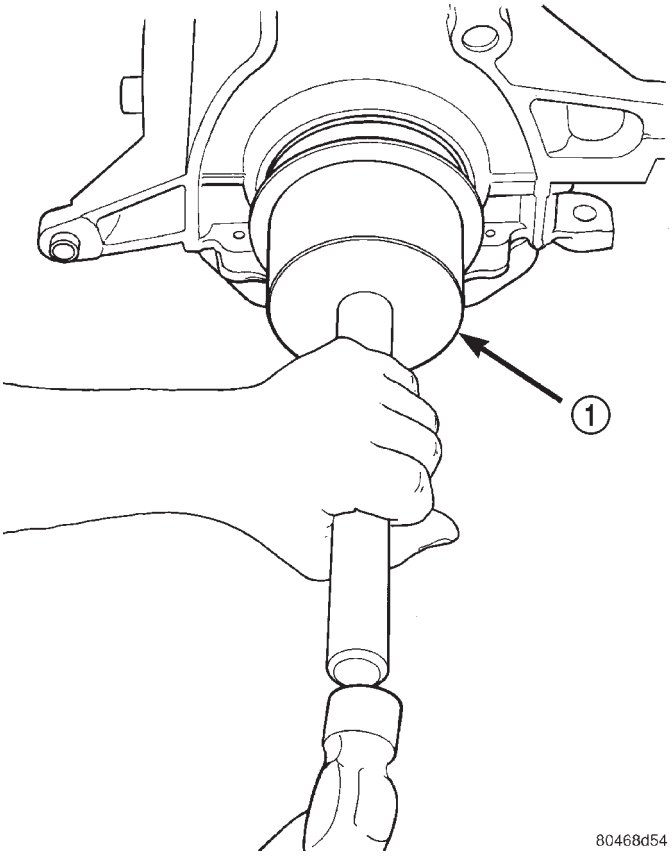

Fig. 64 Rear Crankshaft Seal—Installation

1 - SPECIAL TOOL 6926–2 INSTALLER

(4) Install flex plate. Apply Mopar® Lock & Seal Adhesive to bolt threads and tighten bolts to 95 N·m (70 ft. lbs.).

(5) Install transaxle. Refer to TRANSMISSION/ TRANSAXLE - INSTALLATION for procedure.

PISTON & CONNECTING ROD

DESCRIPTION

The pistons are made of a cast aluminum alloy. The pistons have pressed-in pins attached to forged powdered metal connecting rods. The pistons pin is offset 1 mm (0.0394 in.) towards the thrust side of the piston. The connecting rods are a cracked cap design and are not repairable. Hex head cap screws are used to provide alignment and durability in the assembly. The pistons and connecting rods are serviced as an assembly.

OPERATION

The piston and connecting rod is the link between the combustion force to the crankshaft.

REMOVAL

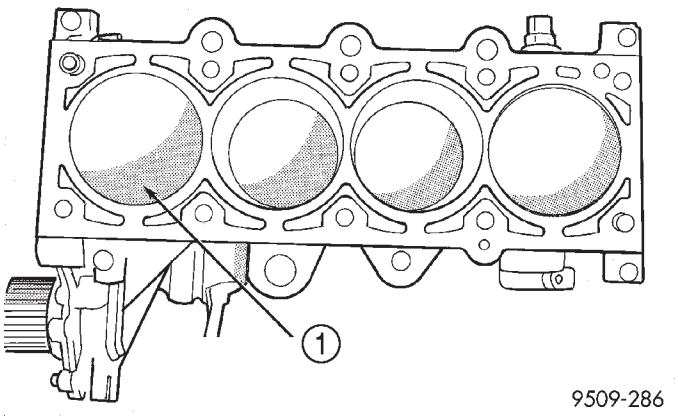

Fig. 65 Piston Markings

1 - DIRECTIONAL ARROW WILL BE IMPRINTED IN THIS AREA

NOTE: Cylinder Head must be removed before Pistons and Rods (Refer to 9 - ENGINE/CYLINDER HEAD - REMOVAL).

(1) Remove top ridge of cylinder bores with a reliable ridge reamer before removing pistons from cylinder block. **Be sure to keep tops of pistons covered during this operation**.

(2) Pistons have a directional stamping in the front half of the piston facing towards the **front** of engine (Fig. 65).

(3) Remove oil pan (Refer to 9 - ENGINE/LUBRICATION/OIL PAN - REMOVAL).

(4) Remove Balance Shaft Carrier Assembly (Refer to 9 - ENGINE/VALVE TIMING/BALANCE SHAFT CARRIER - REMOVAL).

(5) Using a permanent ink or paint marker, identify cylinder number on each connecting rod cap (Fig. 66).

CAUTION: DO NOT use a number stamp or a punch to mark connecting rods. Damage to connecting rod could occur.

(6) Remove connecting rod bolts and cap. Care should be taken not to damage the fracture rod and cap surfaces.

NOTE: Do not reuse connecting rod bolts.

(7) Pistons and connecting rods must be removed from top of cylinder block. Rotate crankshaft so that each connecting rod is centered in cylinder bore.

(8) Push piston and rod assembly out of cylinder bore.

NOTE: Be careful not to nick crankshaft journals.

PISTON & CONNECTING ROD (Continued)

(9) After removal, install bearing cap on the mating rod.

(10) Repeat procedure for each piston and connecting rod assembly.

(11) Piston and connecting rods are serviced as an assembly.

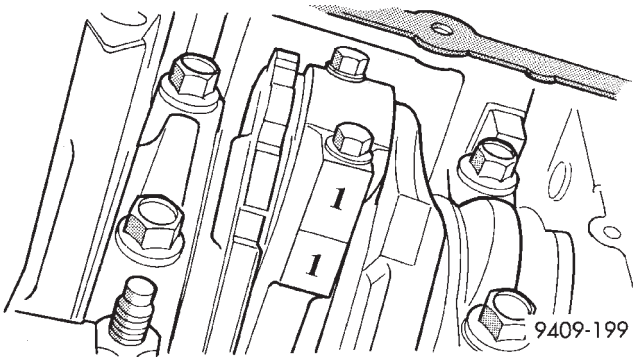

Fig. 66 Identify Connecting Rod to Cylinder

INSTALLATION

(1) Before installing pistons and connecting rod assemblies into the bore, be sure that compression ring gaps are staggered so that neither is in line with oil ring rail gap (Fig. 67).

(2) Before installing the ring compressor, make sure the oil ring expander ends are butted and the rail gaps located as shown in (Fig. 67). As viewed from top.

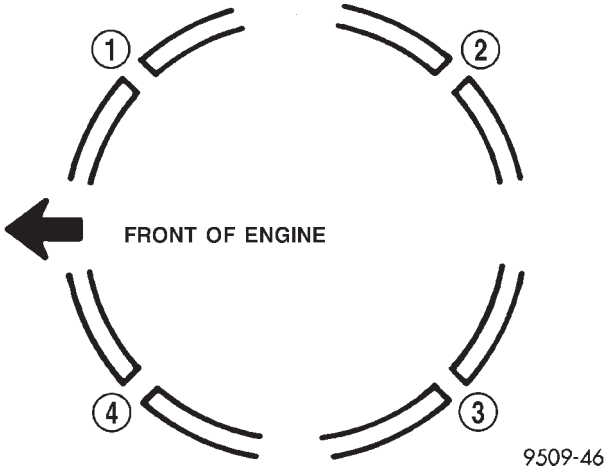

Fig. 67 Piston Ring End Gap Position

1 - GAP OF LOWER SIDE RAIL
2 - NO. 1 RING GAP
3 - GAP OF UPPER SIDE RAIL
4 - NO. 2 RING GAP AND SPACER EXPANDER GAP

(3) Immerse the piston head and rings in clean engine oil, slide the ring compressor, over the piston (Fig. 68). **Be sure position of rings does not change during this operation** .

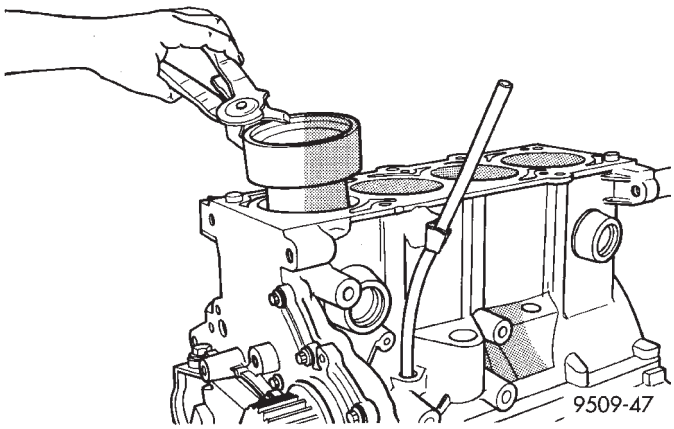

Fig. 68 Piston—Installation

(4) The directional stamp on the piston should face toward the front of the engine (Fig. 65).

(5) Rotate crankshaft so that the connecting rod journal is on the center of the cylinder bore. Insert rod and piston assembly into cylinder bore and guide rod over the crankshaft journal.

(6) Tap the piston down in cylinder bore, using a hammer handle. At the same time, guide connecting rod into position on connecting rod journal.

NOTE: The connecting rod cap bolts should not be reused.

(7) Before installing the **NEW** bolts the threads should be coated with clean engine oil.

(8) Install each bolt finger tight then alternately torque each bolt to assemble the cap properly.

CAUTION: Do not use a torque wrench for second part of last step.

(9) Tighten the bolts to 27 N·m PLUS 1/4 turn (20 ft. lbs. PLUS 1/4 turn).

(10) Using a feeler gauge, check connecting rod side clearance (Fig. 69).

(11) Install Balance Shaft Carrier Assembly (Refer to 9 - ENGINE/VALVE TIMING/BALANCE SHAFT CARRIER - INSTALLATION).

(12) Install oil pan (Refer to 9 - ENGINE/LUBRICATION/OIL PAN - INSTALLATION).

(13) Install cylinder head (Refer to 9 - ENGINE/CYLINDER HEAD - INSTALLATION).

PISTON & CONNECTING ROD (Continued)

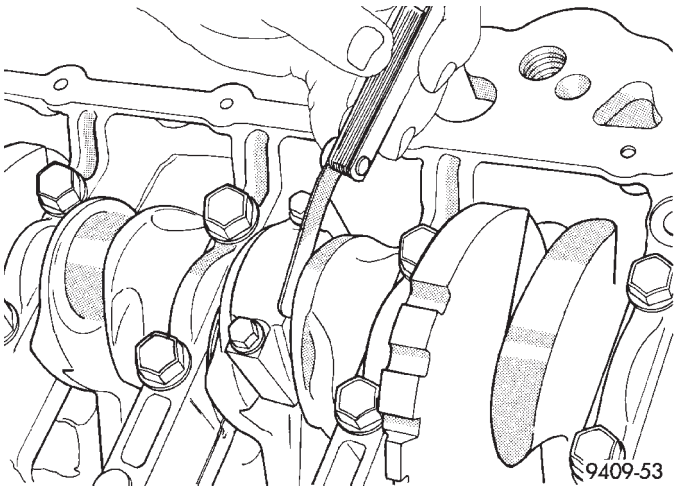

Fig. 69 Checking Connecting Rod Side Clearance

PISTON RINGS

STANDARD PROCEDURE

PISTON RING - FITTING

(1) Wipe cylinder bore clean. Insert ring and push down with piston to ensure it is square in bore. The ring gap measurement must be made with the ring positioning at least 12 mm (0.50 inch) from bottom of cylinder bore. Check gap with feeler gauge (Fig. 70). Refer to Engine Specifications.

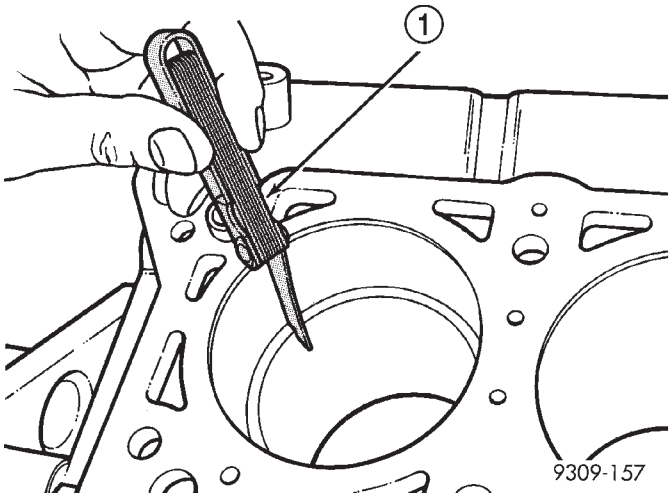

Fig. 70 Piston Ring Gap

1 - FEELER GAUGE

(2) Check piston ring to groove side clearance (Fig. 71). Refer to Engine Specifications.

PISTON RINGS - INSTALLATION

(1) Install rings with manufacturers I.D. mark facing up, to the top of the piston (Fig. 72).

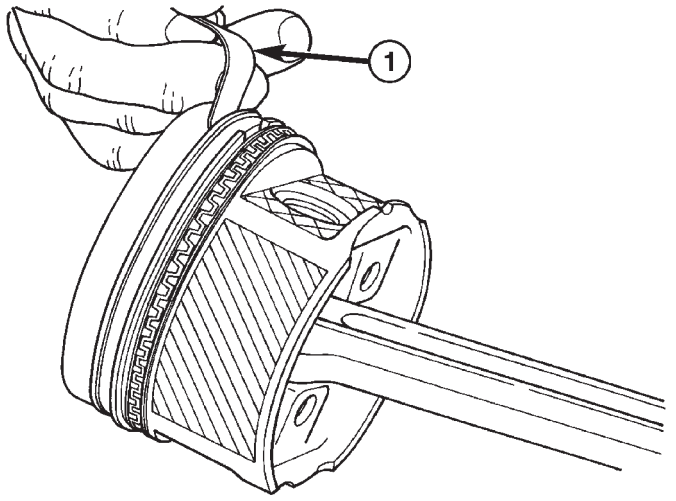

Fig. 71 Piston Ring Side Clearance

1 - FEELER GAUGE

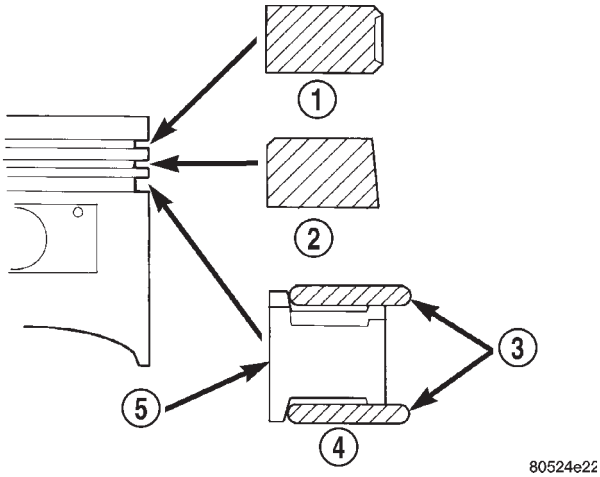

Fig. 72 Piston Ring Installation

1 - NO. 1 PISTON RING
2 - NO. 2 PISTON RING
3 - SIDE RAIL
4 - OIL RING
5 - SPACER EXPANDER

CAUTION: Install piston rings in the following order:

- Oil ring expander.
- Upper oil ring side rail.
- Lower oil ring side rail.
- No. 2 Intermediate piston ring.
- No. 1 Upper piston ring.

(2) Install the side rail by placing one end between the piston ring groove and the expander. Hold end firmly and press down the portion to be installed until side rail is in position. **Do not use a piston ring expander** (Fig. 73).

PISTON RINGS (Continued)

(3) Install upper side rail first and then the lower side rail.

(4) Install No. 2 piston ring and then No. 1 piston ring.

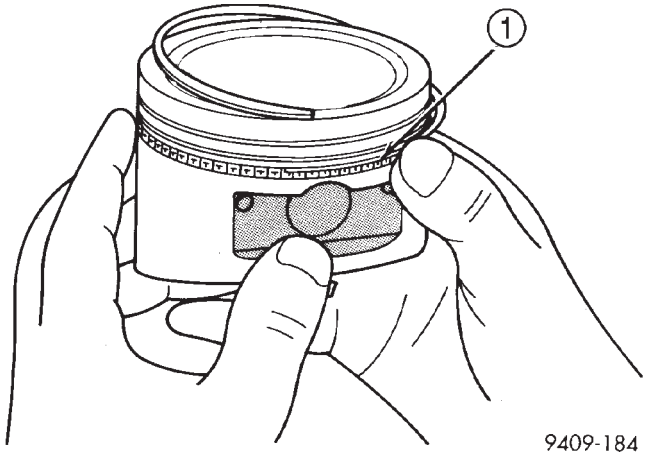

Fig. 73 Installing Side Rail

1 - SIDE RAIL END

(5) Position piston ring end gaps as shown in (Fig. 74).

(6) Position oil ring expander gap at least 45° from the side rail gaps but **not** on the piston pin center or on the thrust direction. Staggering ring gap is important for oil control.

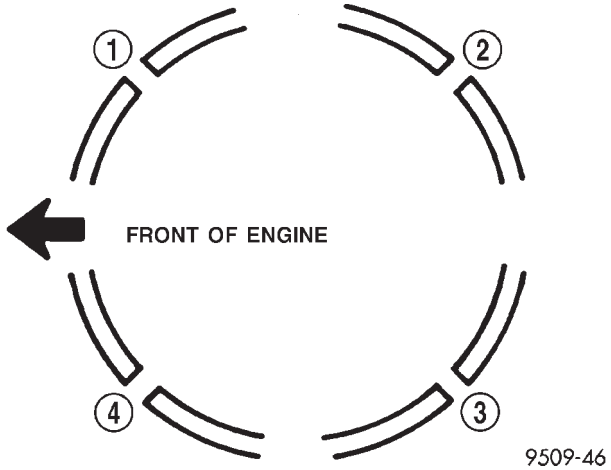

Fig. 74 Piston

1 - GAP OF LOWER SIDE RAIL
2 - NO. 1 RING GAP
3 - GAP OF UPPER SIDE RAIL
4 - NO. 2 RING GAP AND SPACER EXPANDER GAP

VIBRATION DAMPER

REMOVAL

(1) Remove accesory drive belts. (Refer to 7 - COOLING/ACCESSORY DRIVE/DRIVE BELTS - REMOVAL)

(2) Remove crankshaft damper bolt.

(3) Remove damper using Special Tool 3-Jaw Puller 1026 and Insert 6827–A (Fig. 75).

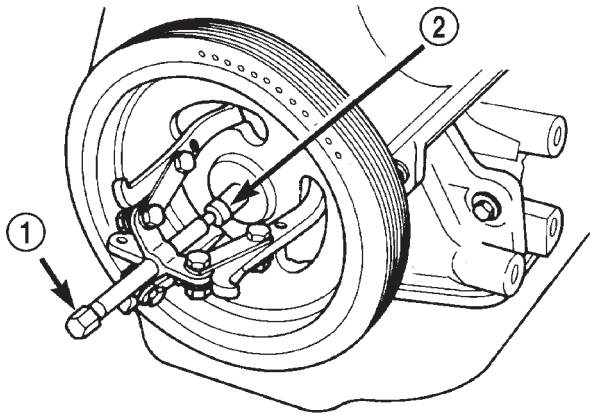

Fig. 75 Crankshaft Vibration Damper - Removal

1 - SPECIAL TOOL 1026 3-JAW PULLER
2 - SPECIAL TOOL 6827–A INSERT

INSTALLATION

(1) Install crankshaft vibration damper using M12 1.75 x 150 mm bolt, washer, thrust bearing and nut from Special Tool 6792 (Fig. 76).

(2) Install crankshaft vibration damper bolt and tighten to 142 N·m (105 ft. lbs.).

(3) Install accessory drive belts. (Refer to 7 - COOLING/ACCESSORY DRIVE/DRIVE BELTS - INSTALLATION)

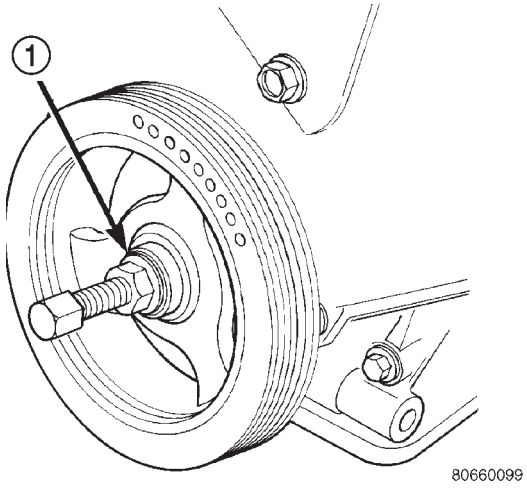

Fig. 76 Crankshaft Vibration Damper - Installation

1 - M12–1.75 × 150 MM BOLT, WASHER AND THRUST BEARING FROM SPECIAL TOOL 6792

STRUCTURAL COLLAR

REMOVAL

(1) Raise vehicle on hoist.
(2) Remove engine front mount bracket and front insulator mount. (Refer to 9 - ENGINE/ENGINE MOUNTING/FRONT MOUNT - REMOVAL)
(3) Remove structural collar attaching bolts (Fig. 77).
(4) Remove collar.

INSTALLATION

CAUTION: Torque procedure for the structural collar must be followed or damage could occur to oil pan and collar.

(1) Perform the following steps for installing structural collar. Refer to (Fig. 77):

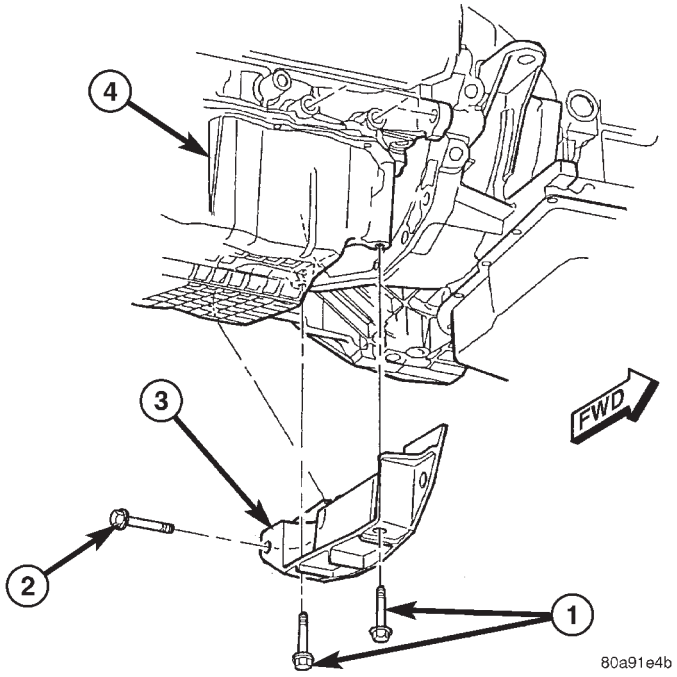

Fig. 77 Structural Collar

1 - BOLT - COLLAR TO OIL PAN
2 - BOLT - COLLAR TO TRANSAXLE
3 - STRUCTURAL COLLAR
4 - OIL PAN

- Step 1: Position collar between transaxle and oil pan. Install collar to transaxle bolt, **hand start only**.
- Step 2: Install collar to oil pan bolts, **hand snug only.**
- Step 3: Final torque collar to transaxle bolts to 101 N·m (75 ft. lbs.)
- Step 4: Final torque collar to oil pan bolts to 54 N·m (40 ft. lbs.).

(2) Install engine front mount bracket and insulator. (Refer to 9 - ENGINE/ENGINE MOUNTING/FRONT MOUNT - INSTALLATION)
(3) Lower vehicle.

ENGINE MOUNTING

DESCRIPTION

The engine mounting system consist of four mounts; right and a left side support the powertrain, and a front and a rear mount control powertrain torque. The right side mount is a hydro-type (Fig. 78), all others are of molded rubber material.

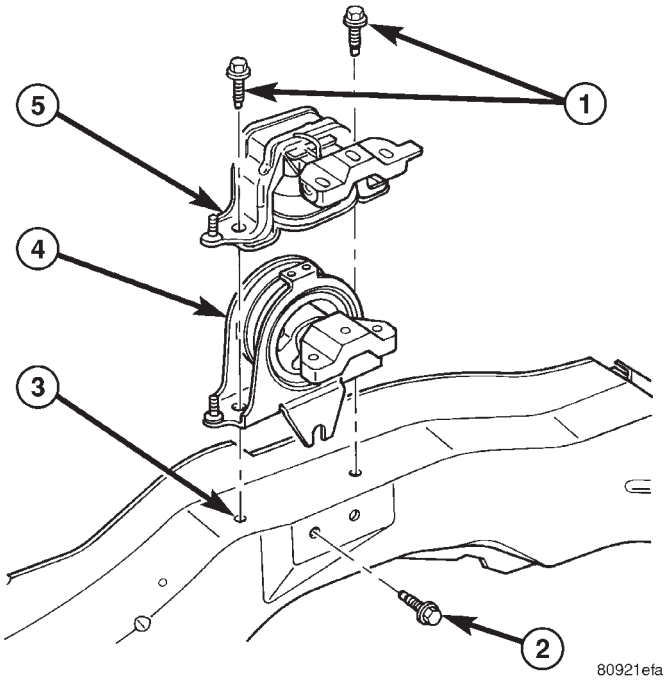

Fig. 78 Engine Hydro-type Mount - Right Side

1 - BOLT
2 - BOLT
3 - FRAME RAIL
4 - RIGHT MOUNT - 2.4L ENGINE
5 - RIGHT MOUNT - 3.3/3.8L ENGINE

FRONT MOUNT

REMOVAL

(1) Raise vehicle on hoist.
(2) Remove the front engine mount through bolt from the insulator (Fig. 79).
(3) Remove the engine front mount bolts and remove the insulator assembly (Fig. 79).
(4) Remove the front mounting bracket from engine, if necessary (Fig. 79).

FRONT MOUNT (Continued)

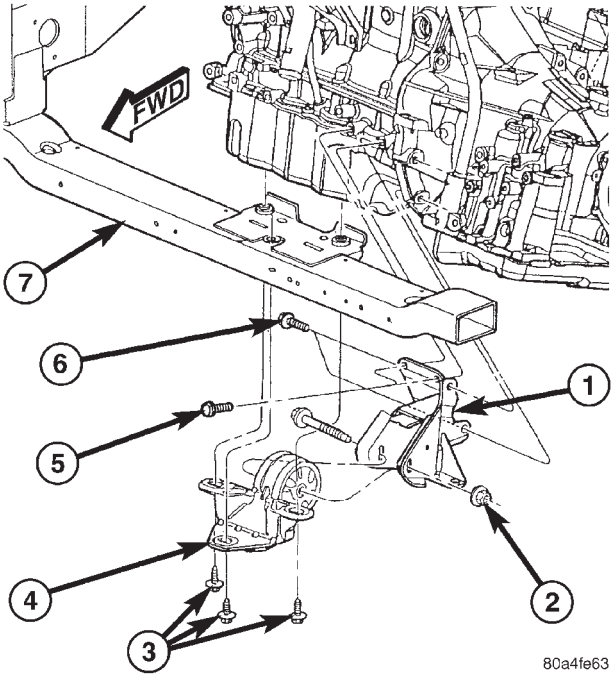

Fig. 79 Front Mount and Bracket

1 - BRACKET - FRONT MOUNT
2 - NUT - 68 N·m (50 ft. lbs.)
3 - BOLT - 54 N·m (40 ft. lbs.)
4 - MOUNT - FRONT INSULATOR
5 - BOLT - 68 N·m (50 ft. lbs.)
6 - BOLT - 68 N·m (50 ft. lbs.)
7 - FRONT CROSSMEMBER

INSTALLATION

(1) Install the front mount bracket to engine, if removed (Fig. 79).
(2) Install the insulator mount assembly (Fig. 79).
(3) Install the front engine mount through bolt to the insulator (Fig. 79).
(4) Lower the vehicle.

LEFT MOUNT

REMOVAL

(1) Raise the vehicle on hoist.
(2) Remove the left front wheel.
(3) Remove the left mount through bolt access cover.
(4) Support the transaxle with a suitable jack.
(5) Remove the engine front mount through bolt to allow left mount removal clearance (Fig. 79).
(6) Remove the left mount through frame rail bolt (Fig. 80).
(7) Lower transaxle for access to horizontal bolts.
(8) Remove the horizontal bolts from the mount to the transaxle (Fig. 81) or (Fig. 82).

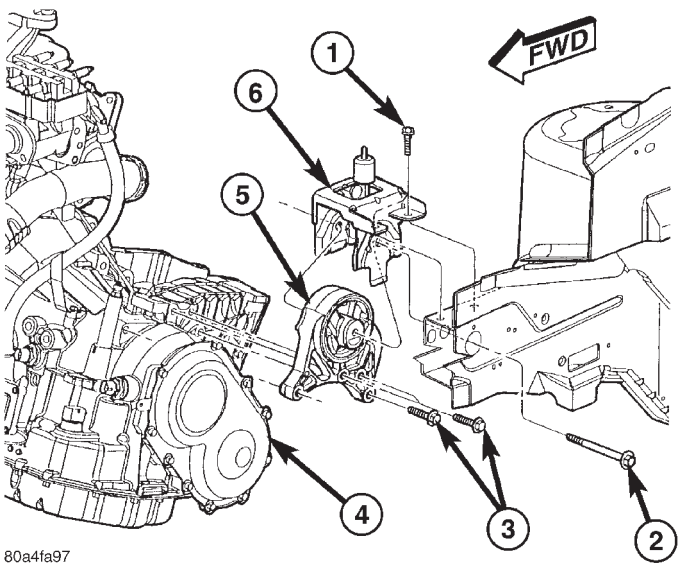

Fig. 80 LEFT MOUNT TO BRACKET

1 - BOLT - BRACKET TO FRAME RAIL 68 N·m (50 ft. lbs.)
2 - BOLT - MOUNT TO RAIL THRU 75 N·m (55 ft. lbs.)
3 - BOLT - LEFT MOUNT TO TRANSAXLE 54 N·m (40 ft. lbs.)
4 - TRANSAXLE
5 - MOUNT - LEFT
6 - BRACKET - LEFT MOUNT

NOTE: To remove mount, additional lowering of transaxle may be required.

(9) Remove left mount.

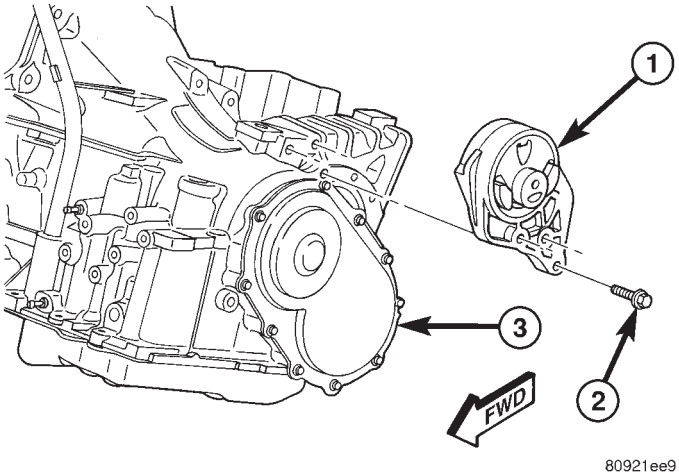

Fig. 81 LEFT MOUNT - 31TH

1 - LEFT MOUNT ASEMBLY
2 - BOLT - 54 N·m (40 ft. lbs.)
3 - TRANSAXLE - 31TH

INSTALLATION

(1) Install left mount on transaxle (Fig. 81) or (Fig. 82).

LEFT MOUNT (Continued)

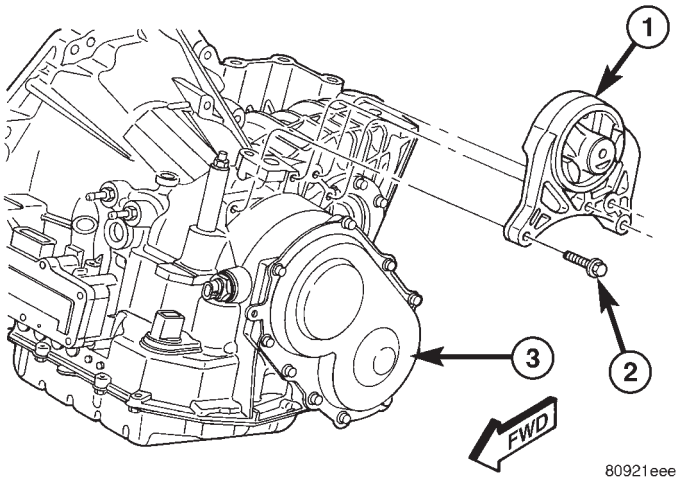

Fig. 82 UNDER CONSTRUCTION

1 - LEFT MOUNT ASSEMBLY
2 - BOLT - 54 N·m (40 ft. lbs.)
3 - TRANSAXLE - 41TE

(2) Raise transaxle with jack until left mount is in position.
(3) Install left mount through bolt (Fig. 80).
(4) Install left mount through bolt access cover.
(5) Install front mount through bolt (Fig. 79).
(6) Install left front wheel.
(7) Lower vehicle.

REAR MOUNT

REMOVAL

(1) Raise vehicle on hoist.
(2) Remove the rear mount heat shield (Fig. 83).
(3) Remove the through bolt from the mount and rear mount bracket (Fig. 84).
(4) Remove the mount bolts (Fig. 84).
(5) Remove the rear mount (Fig. 84).
(6) For rear mount bracket removal, remove the bolts attaching bracket to transaxle (Fig. 85).
(7) Remove rear mount bracket.

INSTALLATION

(1) Install rear mount bracket, if removed (Fig. 85).
(2) Install the rear mount and bolts (Fig. 84). Tighten bolts to 54 N·m (40 ft. lbs.).
(3) Install the mount through bolt to the mount and bracket (Fig. 84). Tighten through bolt to 54 N·m (40 ft. lbs.).
(4) Install the rear mount heat shield (Fig. 83).
(5) Lower vehicle on hoist.

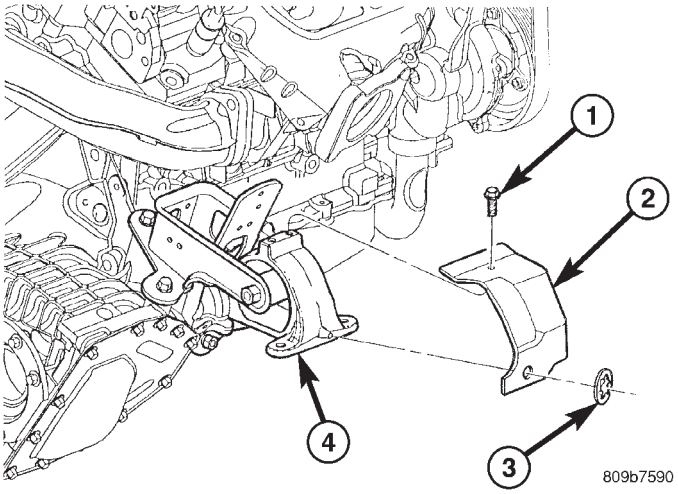

Fig. 83 REAR MOUNT HEAT SHIELD

1 - BOLT - HEAT SHIELD 11 N·m (100 in. lbs.)
2 - HEAT SHIELD
3 - CLIP
4 - REAR MOUNT

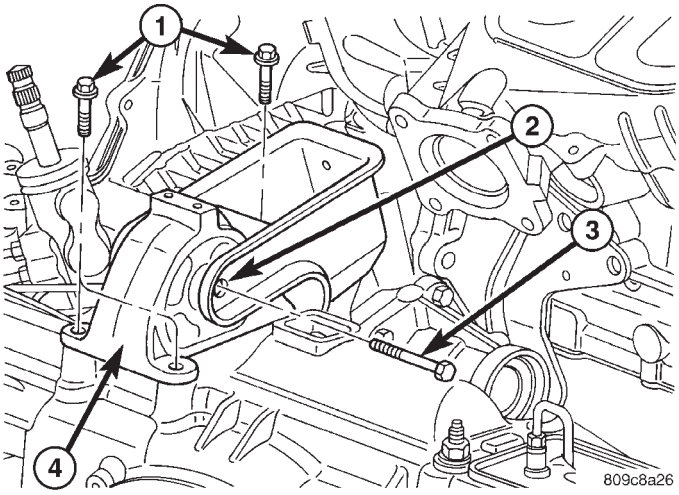

Fig. 84 REAR MOUNT

1 - BOLT 54 N·m (40 ft. lbs.)
2 - REAR MOUNT BRACKET
3 - THRU-BOLT 54 N·m (40 ft. lbs.)
4 - REAR MOUNT

REAR MOUNT (Continued)

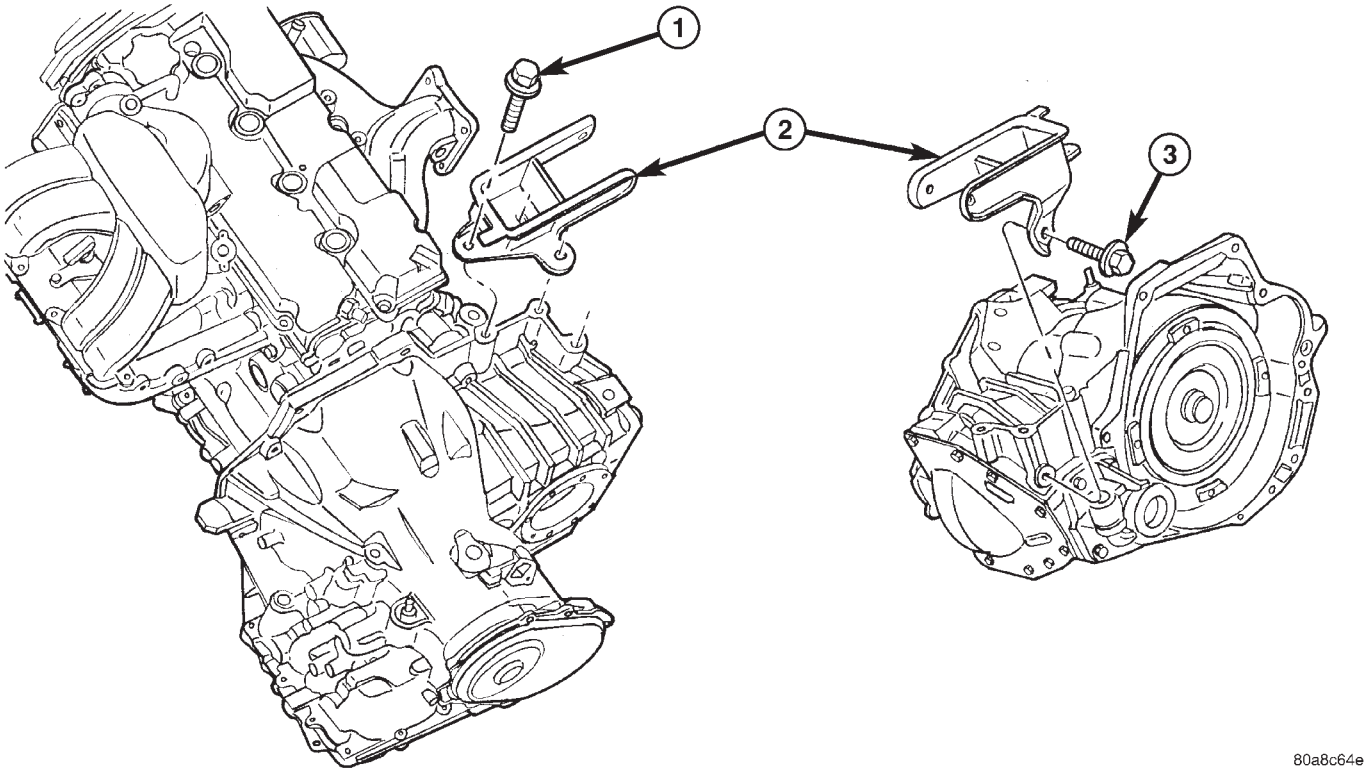

Fig. 85 REAR MOUNT BRACKET - (all engines)

1 - BOLT - VERTICAL 102 N·m (75 ft. lbs.)
2 - BRACKET - REAR MOUNT
3 - BOLT - HORIZONTAL 102 N·m (75 ft. lbs.)

RIGHT MOUNT

REMOVAL

(1) Remove air cleaner housing lid and clean air hose from throttle body.
(2) Remove air cleaner element and housing.
(3) Disconnect make-up air hose from cylinder head cover.
(4) Remove the load on the right engine mount by carefully supporting the engine assembly with a floor jack.
(5) Disconnect electrical harness support clips from engine mount bracket.
(6) Remove the vertical bolts attaching the engine mount to the frame rail (Fig. 86).
(7) Loosen the horizontal bolt attaching the engine mount to the frame rail (Fig. 86).
(8) Remove the bolts attaching the engine mount to the engine bracket (Fig. 86).
(9) Remove the right engine mount (Fig. 86).

INSTALLATION

(1) Position right engine mount and install frame rail to mount vertical bolts (Fig. 86).
(2) Tighten engine right mount to rail horizontal bolt (Fig. 86).
(3) Install mount to engine bracket bolts (Fig. 86).
(4) Connect electrical harness support clips to engine mount bracket.
(5) Remove jack from under engine.
(6) Connect make-up air hose to cylinder head cover.
(7) Install air cleaner housing and element.
(8) Install air cleaner housing lid and clean air tube to throttle body.

RIGHT MOUNT (Continued)

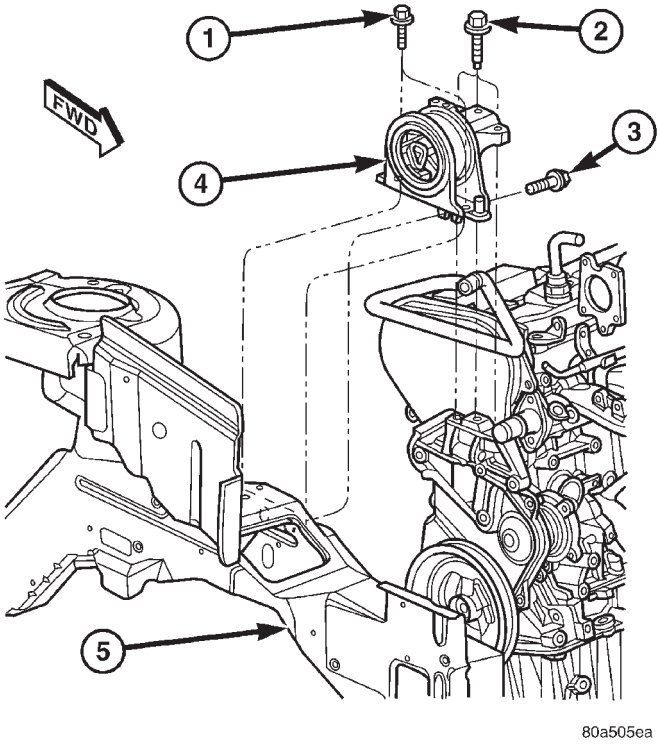

Fig. 86 RIGHT MOUNT TO RAIL AND ENGINE

1 - BOLT - MOUNT TO RAIL 68 N·m (50 ft. lbs.)
2 - BOLT - MOUNT TO ENGINE 54 N·m (40 ft. lbs.)
3 - BOLT - MOUNT TO RAIL (HORIZONTAL) 68 N·m (50 ft. lbs.)
4 - RIGHT ENGINE MOUNT
5 - RIGHT FRAME RAIL

LUBRICATION

DESCRIPTION

The lubrication system is a full-flow filtration, pressure feed type. The oil pump is mounted in the front engine cover and driven by the crankshaft.

OPERATION

Engine oil drawn up through the pickup tube and is pressurized by the oil pump and routed through the full-flow filter to the main oil gallery running the length of the cylinder block. A diagonal hole in each bulkhead feeds oil to each main bearing. Drilled passages within the crankshaft route oil from main bearing journals to connecting rod journals. Balance shaft lubrication is provided through an oil passage from the number one main bearing cap through the balance shaft carrier support leg. This passage directly supplies oil to the front bearings and internal machined passages in the shafts that routes oil from front to the rear shaft bearing journals. A vertical hole at the number five bulkhead routes pressurized oil through a restrictor (integral to the cylinder head gasket) up past a cylinder head bolt to an oil gallery running the length of the cylinder head. The camshaft journals are partially slotted to allow a predetermined amount of pressurized oil to pass into the bearing cap cavities. Lubrication of the camshaft lobes are provided by small holes in the camshaft bearing caps that are directed towards each lobe. Oil returning to the pan from pressurized components supplies lubrication to the valve stems. Cylinder bores and wrist pins are splash lubricated from directed slots on the connecting rod thrust collars.

DIAGNOSIS AND TESTING - CHECKING ENGINE OIL PRESSURE

(1) Disconnect and remove oil pressure switch. (Refer to 9 - ENGINE/LUBRICATION/OIL PRESSURE SENSOR/SWITCH - REMOVAL)

(2) Install Special Tools C-3292 Gauge with 8406 Adaptor fitting.

(3) Start engine and record oil pressure. Refer to Specifications for correct oil pressure requirements. (Refer to 9 - ENGINE - SPECIFICATIONS)

CAUTION: If oil pressure is 0 at idle, do not perform the 3000 RPM test

(4) If oil pressure is 0 at idle. Shut off engine, check for pressure relief valve stuck open, a clogged oil pick-up screen or a damaged oil pick-up tube O-ring.

(5) After test is complete, remove test gauge and fitting.

(6) Install oil pressure switch and connector. (Refer to 9 - ENGINE/LUBRICATION/OIL PRESSURE SENSOR/SWITCH - INSTALLATION)

OIL

STANDARD PROCEDURE

ENGINE OIL LEVEL CHECK

The best time to check engine oil level is after it has sat overnight, or if the engine has been running, allow the engine to be shut off for at least 5 minutes before checking oil level.

Checking the oil while the vehicle is on level ground will improve the accuracy of the oil level reading. Remove dipstick and observe oil level. Add oil only when the level is at or below the ADD mark (Fig. 87).

OIL (Continued)

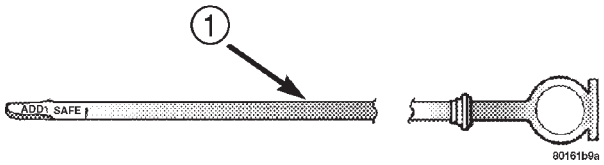

Fig. 87 Oil Level

1 - ENGINE OIL LEVEL DIPSTICK

STANDARD PROCEDURE - ENGINE OIL AND FILTER CHANGE

Change engine oil at mileage and time intervals described in the Maintenance Schedule. (Refer to LUBRICATION & MAINTENANCE/MAINTENANCE SCHEDULES - DESCRIPTION)

WARNING: NEW OR USED ENGINE OIL CAN BE IRRITATING TO THE SKIN. AVOID PROLONGED OR REPEATED SKIN CONTACT WITH ENGINE OIL. CONTAMINANTS IN USED ENGINE OIL, CAUSED BY INTERNAL COMBUSTION, CAN BE HAZARDOUS TO YOUR HEALTH. THOROUGHLY WASH EXPOSED SKIN WITH SOAP AND WATER. DO NOT WASH SKIN WITH GASOLINE, DIESEL FUEL, THINNER, OR SOLVENTS, HEALTH PROBLEMS CAN RESULT. DO NOT POLLUTE, DISPOSE OF USED ENGINE OIL PROPERLY. CONTACT YOUR DEALER OR GOVERNMENT AGENCY FOR LOCATION OF COLLECTION CENTER IN YOUR AREA.

Run engine until achieving normal operating temperature.

(1) Position the vehicle on a level surface and turn engine off.

(2) Remove oil fill cap.

(3) Hoist and support vehicle on safety stands. Refer to Hoisting and Jacking Recommendations. (Refer to LUBRICATION & MAINTENANCE/HOISTING - STANDARD PROCEDURE)

(4) Place a suitable drain pan under crankcase drain.

(5) Remove drain plug from crankcase and allow oil to drain into pan. Inspect drain plug threads for stretching or other damage. Replace drain plug and gasket if damaged.

(6) Remove oil filter. (Refer to 9 - ENGINE/LUBRICATION/OIL FILTER - REMOVAL)

(7) Install and tighten drain plug in crankcase.

(8) Install new oil filter. (Refer to 9 - ENGINE/LUBRICATION/OIL FILTER - INSTALLATION)

(9) Lower vehicle and fill crankcase with specified type and amount of engine oil. (Refer to LUBRICATION & MAINTENANCE/FLUID TYPES - DESCRIPTION)

(10) Install oil fill cap.

(11) Start engine and inspect for leaks.

(12) Stop engine and inspect oil level.

NOTE: Care should be exercised when disposing used engine oil after it has been drained from a vehicle engine. Refer to the WARNING listed above.

OIL FILTER

DESCRIPTION

The engine oil filter (Fig. 88) is a high quality full-flow, disposable type. Replace the oil filter with a Mopar® or the equivalent.

REMOVAL

(1) Raise vehicle on hoist.

(2) Position an oil collecting container under oil filter location.

CAUTION: When servicing the oil filter avoid deforming the filter can by installing the remove/install tool band strap against the can to base lock seam. The lock seam joining the can to the base is reinforced by the base plate.

(3) Using a suitable filter wrench, turn oil filter (Fig. 88) counterclockwise to remove.

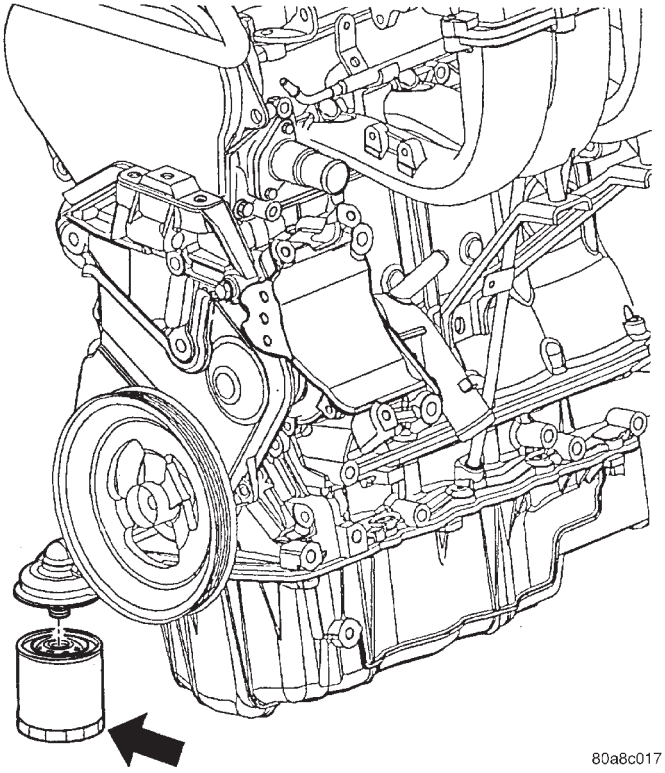

Fig. 88 Oil Filter

OIL FILTER (Continued)

INSTALLATION

(1) Clean and check filter mounting surface. The surface must be smooth, flat and free of debris or pieces of gasket.

(2) Lubricate new oil filter gasket with clean engine oil.

(3) Screw oil filter (Fig. 88) on until the gasket contacts base. Tighten to 12 N·m (105 in. lbs.).

OIL PAN

REMOVAL

(1) Raise vehicle on hoist and drain engine oil.

(2) Remove structural collar. (Refer to 9 - ENGINE/ENGINE BLOCK/STRUCTURAL COVER - REMOVAL)

(3) Remove air conditioning compressor bracket to oil pan bolt.

(4) Remove bolts attaching oil pan.

(5) Remove oil pan.

(6) Clean oil pan and all gasket surfaces.

INSTALLATION

(1) Apply Mopar® Engine RTV GEN II at the oil pump to engine block parting line (Fig. 89).

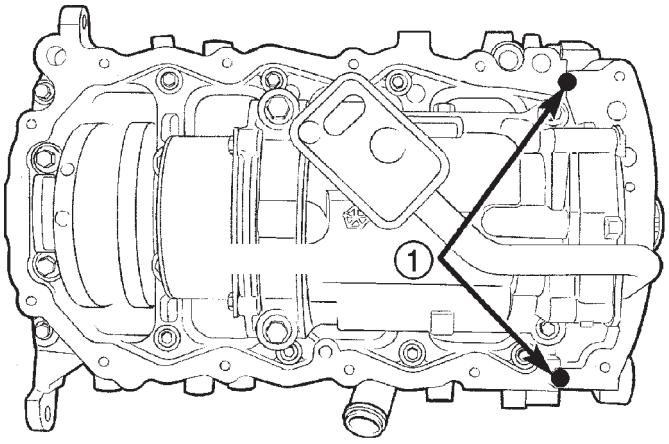

Fig. 89 Oil Pan Sealing - Typical

1 - SEALER LOCATIONS

(2) Install the oil pan gasket to the block.

(3) Install pan and tighten the screws to 12 N·m (105 in. lbs.).

(4) Install air conditioning compressor bracket to oil pan bolt.

(5) Install structural collar. (Refer to 9 - ENGINE/ENGINE BLOCK/STRUCTURAL COVER - INSTALLATION)

(6) Lower vehicle and fill engine crankcase with proper oil to correct level.

OIL PRESSURE SWITCH

REMOVAL

(1) Raise vehicle.

(2) Position oil collecting container under pressure switch location.

(3) Disconnect oil pressure switch electrical connector and remove switch (Fig. 90).

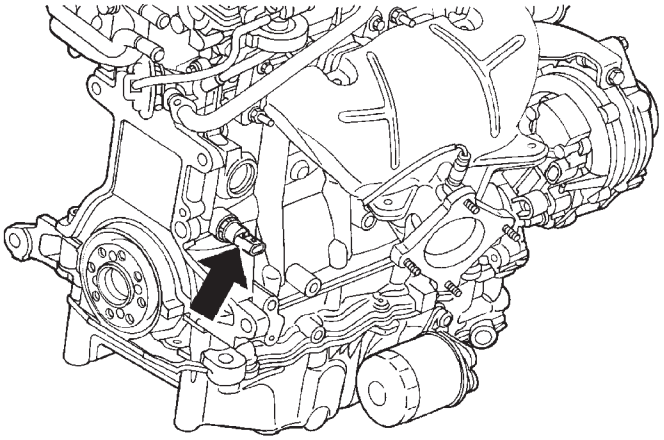

Fig. 90 Engine Oil Pressure Switch

INSTALLATION

(1) Install oil pressure switch. Torque switch to 21 N·m (190 in. lbs.) (Fig. 90).

(2) Connect electrical connector

(3) Lower vehicle.

(4) Start engine and allow to run a minimum of 2 minutes.

(5) Shut engine off and check engine oil level. Adjust level as necessary.

OIL PUMP

REMOVAL

(1) Disconnect negative cable from battery.

(2) Remove timing belt (Refer to 9 - ENGINE/VALVE TIMING/TIMING BELT AND SPROCKETS - REMOVAL).

(3) Remove timing belt rear cover (Refer to 9 - ENGINE/VALVE TIMING/TIMING BELT COVER(S) - REMOVAL).

(4) Remove oil pan (Refer to 9 - ENGINE/LUBRICATION/OIL PAN - REMOVAL).

(5) Remove crankshaft sprocket using Special Tools 6793 and C-4685-C2 (Fig. 91).

(6) Remove crankshaft key (Fig. 92).

(7) Remove oil pick-up tube.

(8) Remove oil pump (Fig. 93) and front crankshaft seal.

OIL PUMP (Continued)

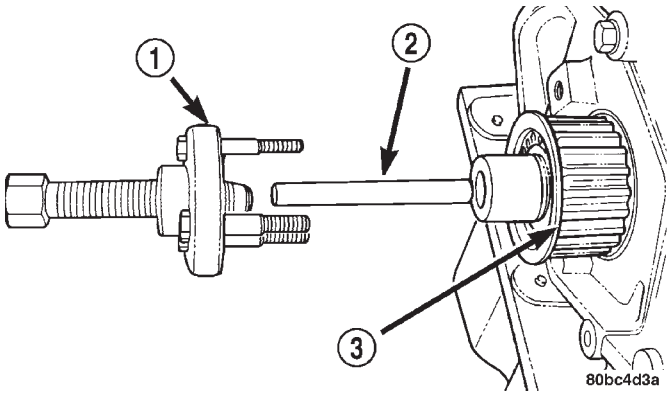

Fig. 91 Crankshaft Sprocket - Removal

1 - SPECIAL TOOL 6793
2 - SPECIAL TOOL C-4685–C2
3 - CRANKSHAFT SPROCKET

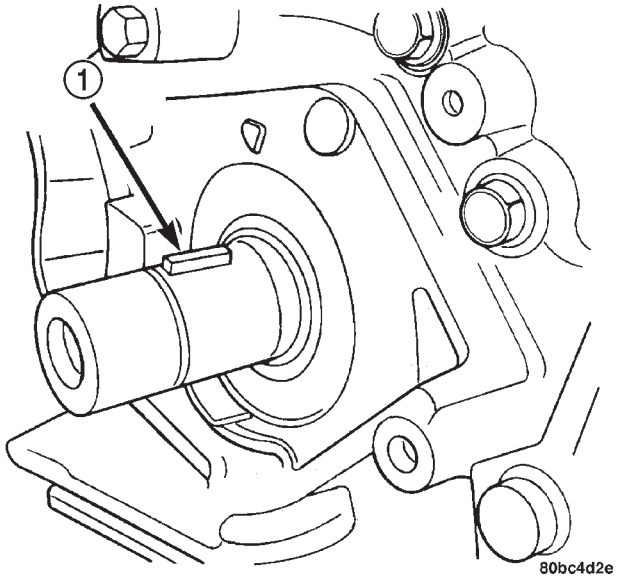

Fig. 92 Crankshaft Key

1 - CRANKSHAFT KEY

DISASSEMBLY

(1) To remove the relief valve, proceed as follows:
(a) Remove the threaded plug and gasket from the oil pump (Fig. 94) .
(b) Remove spring and relief valve (Fig. 94) .
(2) Remove oil pump cover fasteners, and lift off cover (Fig. 95) .
(3) Remove pump rotors (Fig. 95) .
(4) Wash all parts in a suitable solvent and inspect carefully for damage or wear.

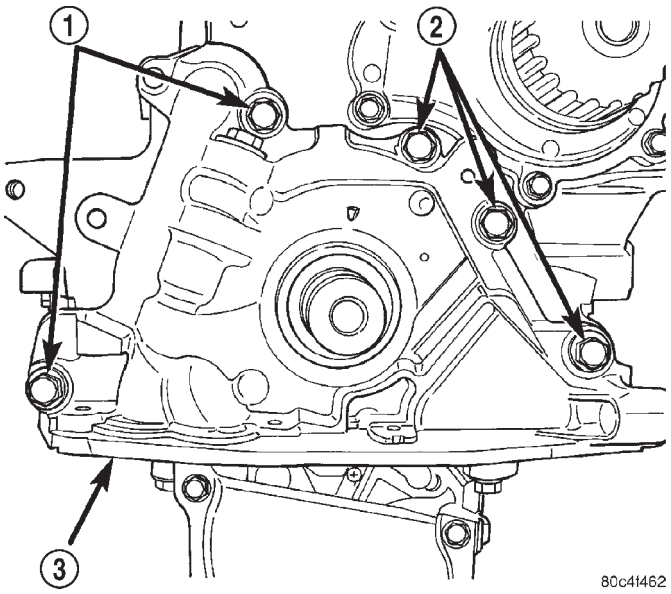

Fig. 93 Oil Pump

1 - BOLTS
2 - BOLTS
3 - OIL PUMP

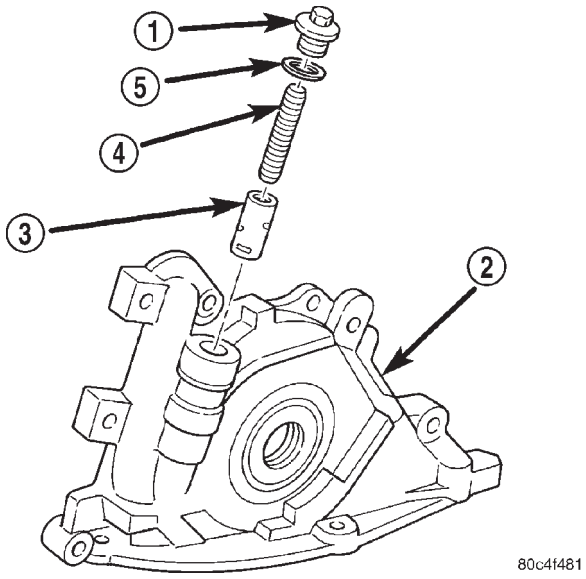

Fig. 94 Oil Pressure Relief Valve

1 - PLUG
2 - OIL PUMP BODY
3 - RELIEF VALVE
4 - SPRING
5 - SEAL

OIL PUMP (Continued)

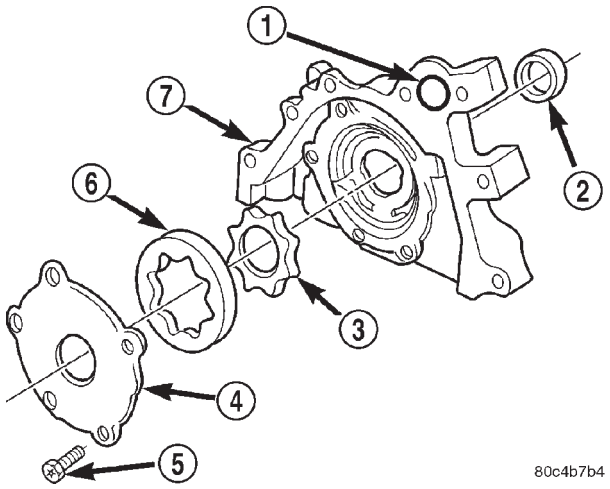

Fig. 95 Oil Pump

1 - O-RING
2 - SEAL
3 - INNER ROTOR
4 - OIL PUMP COVER
5 - FASTENER
6 - OUTER ROTOR
7 - OIL PUMP BODY

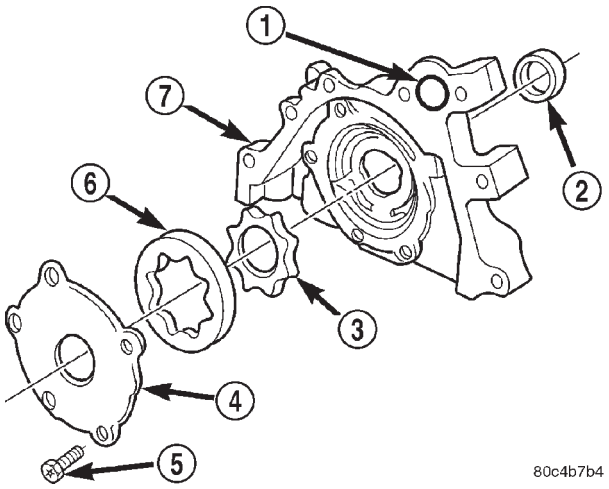

Fig. 96 Oil Pump

1 - O-RING
2 - SEAL
3 - INNER ROTOR
4 - OIL PUMP COVER
5 - FASTENER
6 - OUTER ROTOR
7 - OIL PUMP BODY

CLEANING

(1) Clean all parts thoroughly in a suitable solvent.

INSPECTION

(1) Inspect the mating surface of the oil pump. Surface should be smooth (Fig. 96) . Replace pump cover if scratched or grooved.

(2) Lay a straightedge across the pump cover surface (Fig. 97) . If a 0.025 mm (0.001 in.) feeler gauge can be inserted between cover and straight edge, cover should be replaced.

(3) Measure thickness and diameter of outer rotor. If outer rotor thickness measures 9.40 mm (0.370 in.) or less (Fig. 98) , or if the diameter is 79.95 mm (3.148 in.) or less, replace outer rotor.

(4) If inner rotor measures 9.40 mm (0.370 in.) or less replace inner rotor (Fig. 99) .

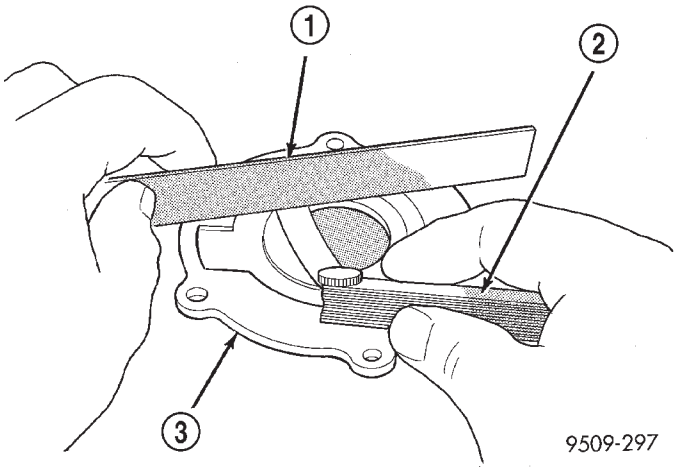

Fig. 97 Checking Oil Pump Cover Flatness

1 - STRAIGHT EDGE
2 - FEELER GAUGE
3 - OIL PUMP COVER

OIL PUMP (Continued)

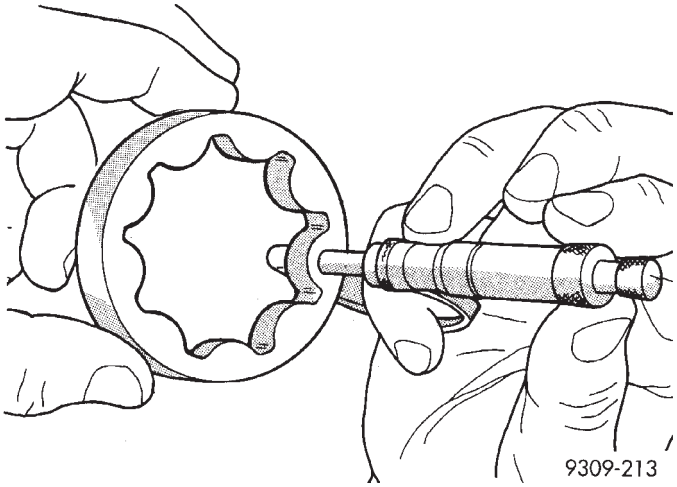

Fig. 98 Measuring Outer Rotor Thickness

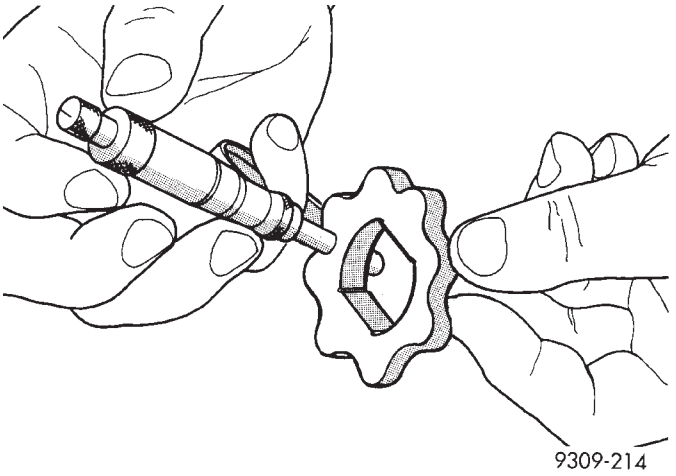

Fig. 99 Measuring Inner Rotor Thickness

ASSEMBLY

(1) Assemble pump, using new parts as required. **Install the inner rotor with chamfer facing the cast iron oil pump cover.**

(2) Prime oil pump before installation by filling rotor cavity with engine oil.

(3) Install cover and tighten fasteners to 12 N·m (105 in. lbs.) (Fig. 95).

CAUTION: Oil pump pressure relief valve must be installed as shown in (Fig. 94) or serious engine damage may occur.

(4) Install relief valve, spring, gasket and cap as shown in (Fig. 94). Tighten cap to 41 N·m (30 ft. lbs.).

INSTALLATION

(1) Make sure all surfaces are clean and free of oil and dirt.

(2) Apply Mopar® Gasket Maker to oil pump as shown in (Fig. 100). Install O-ring into oil pump body discharge passage.

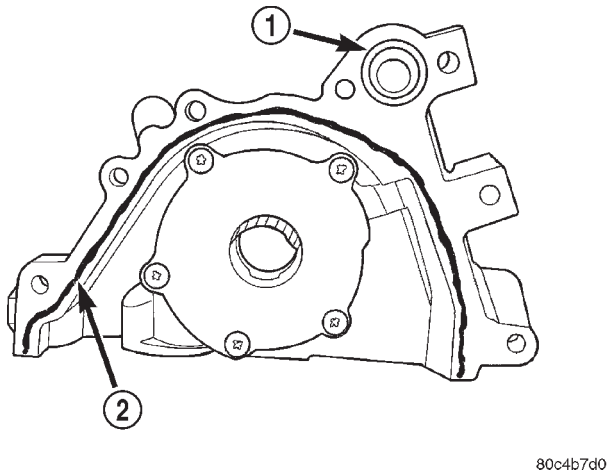

Fig. 100 Oil Pump Sealing

1 - O-RING
2 - SEALER LOCATION

(3) Prime oil pump with engine oil before installation.

(4) Align oil pump rotor flats with flats on crankshaft. Install the oil pump to the block (Fig. 93).

CAUTION: To align, the front crankshaft seal MUST be out of pump, or damage may result.

(5) Install new front crankshaft seal using Special Tool 6780 (Fig. 101).

(6) Install crankshaft key (Fig. 92).

CAUTION: The crankshaft sprocket is set to a predetermined depth from the factory for correct timing belt tracking. If removed, use of Special Tool 6792 is required to set the sprocket to original installation depth. An incorrectly installed sprocket will result in timing belt and engine damage.

(7) Install crankshaft sprocket using Special Tool 6792 (Fig. 102).

(8) Install oil pump pick-up tube.

(9) Install oil pan (Refer to 9 - ENGINE/LUBRICATION/OIL PAN - INSTALLATION).

(10) Install timing belt rear cover (Refer to 9 - ENGINE/VALVE TIMING/TIMING BELT COVER(S) - INSTALLATION).

(11) Install timing belt (Refer to 9 - ENGINE/VALVE TIMING/TIMING BELT AND SPROCKETS - INSTALLATION).

OIL PUMP (Continued)

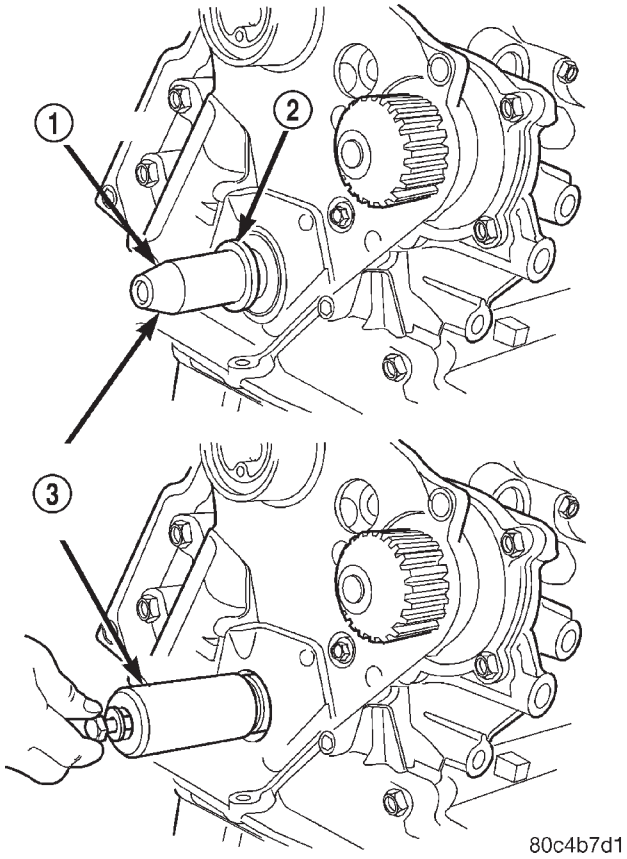

Fig. 101 Front Crankshaft Seal - Installation

1 - PROTECTOR
2 - SEAL
3 - SPECIAL TOOL 6780

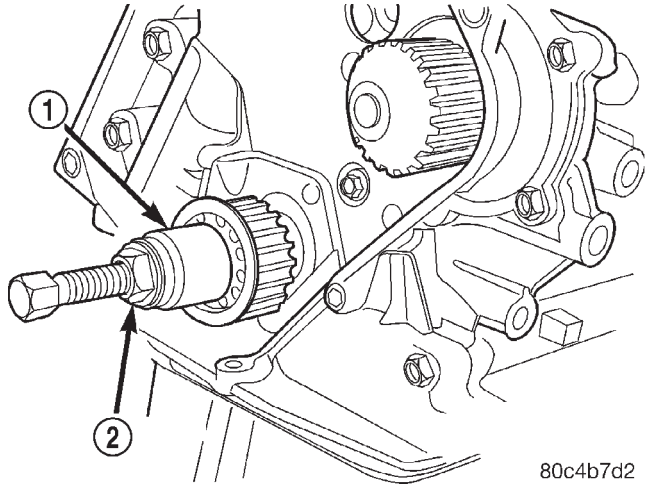

Fig. 102 Crankshaft Sprocket - Installation

1 - SPECIAL TOOL 6792
2 - TIGHTEN NUT TO INSTALL

INTAKE MANIFOLD

DESCRIPTION

The intake manifold is a two piece aluminum casting (Fig. 103) that attaches to the cylinder head with fasteners. The manifold is a long branch design to enhance low and mid-range torque

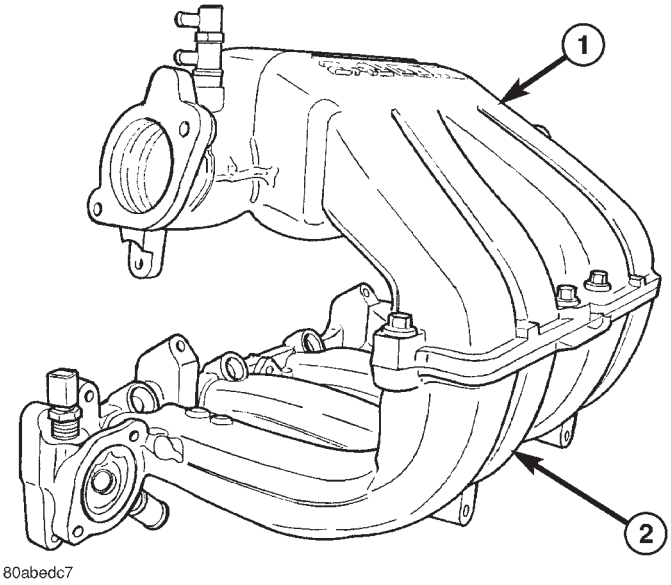

Fig. 103 Intake Manifold - Upper and Lower

1 - UPPER INTAKE MANIFOLD
2 - LOWER INTAKE MANIFOLD

OPERATION

The intake manifold delivers air to the combustion chambers. This air allows the fuel delivered by the fuel injectors to ignite when the spark plugs fire.

DIAGNOSIS AND TESTING - INTAKE MANIFOLD LEAKS

An intake manifold air leak is characterized by lower than normal manifold vacuum. Also, one or more cylinders may not be functioning.

WARNING: USE EXTREME CAUTION WHEN THE ENGINE IS OPERATING. DO NOT STAND IN A DIRECT LINE WITH THE FAN. DO NOT PUT YOUR HANDS NEAR THE PULLEYS, BELTS OR THE FAN. DO NOT WEAR LOOSE CLOTHING.

(1) Start the engine.
(2) Spray a small stream of water (Spray Bottle) at the suspected leak area.
(3) If engine RPM'S change, the area of the suspected leak has been found.
(4) Repair as required.

INTAKE MANIFOLD - UPPER

REMOVAL

(1) Disconnect negative cable from battery.
(2) Disconnect connector from inlet air temperature sensor (Fig. 104).

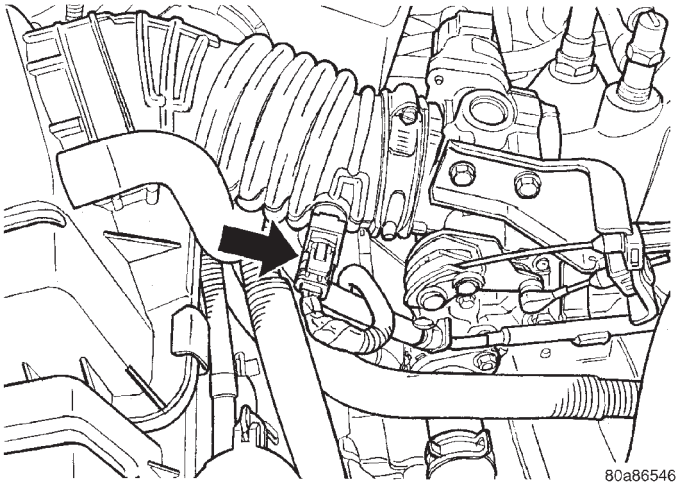

Fig. 104 INLET AIR TEMPERATURE SENSOR - 2.4L

(3) Disconnect air intake tube at throttle body and remove upper air cleaner housing.
(4) Disconnect connector from throttle position sensor (TPS) (Fig. 106).
(5) Disconnect connector from idle air control (IAC) motor (Fig. 106).
(6) Disconnect connector from MAP sensor (Fig. 105).

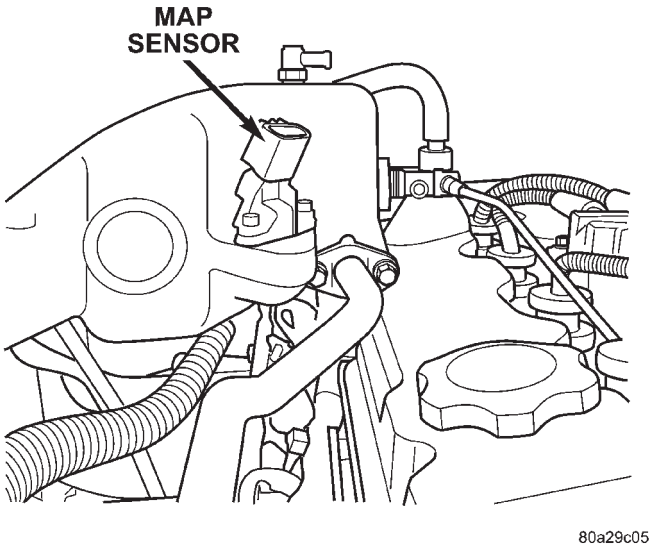

Fig. 105 MAP SENSOR - 2.4L

(7) Remove vacuum lines for purge solenoid and PCV valve at intake manifold.

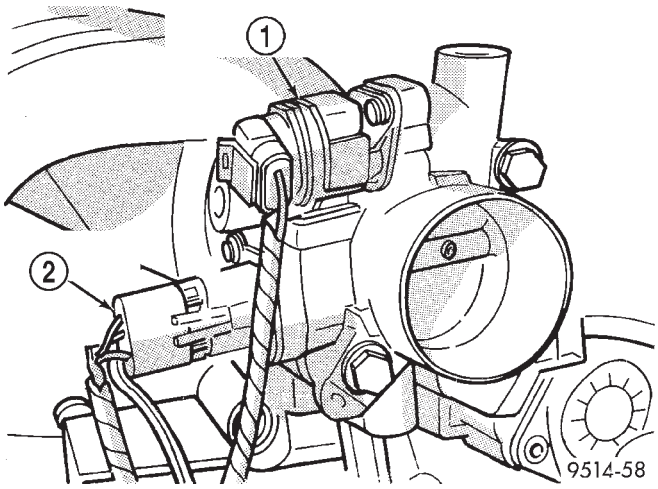

Fig. 106 Throttle Body Electrical Connectors - Typical

1 - IDLE AIR CONTROL MOTOR CONNECTOR
2 - TPS CONNECTOR

(8) Remove vacuum lines for power brake booster, LDP, EGR transducer, and speed control vacuum reservoir (if equipped) at upper intake manifold fittings.
(9) Disconnect throttle, speed control (if equipped), and transaxle control (31TH equipped only) cables from throttle lever and bracket. (Refer to 14 - FUEL SYSTEM/FUEL INJECTION/THROTTLE CONTROL CABLE - REMOVAL)
(10) Remove the EGR tube. (Refer to 25 - EMISSIONS CONTROL/EXHAUST GAS RECIRCULATION/TUBE - REMOVAL)
(11) Remove the upper manifold support bracket bolt to manifold (Fig. 107).

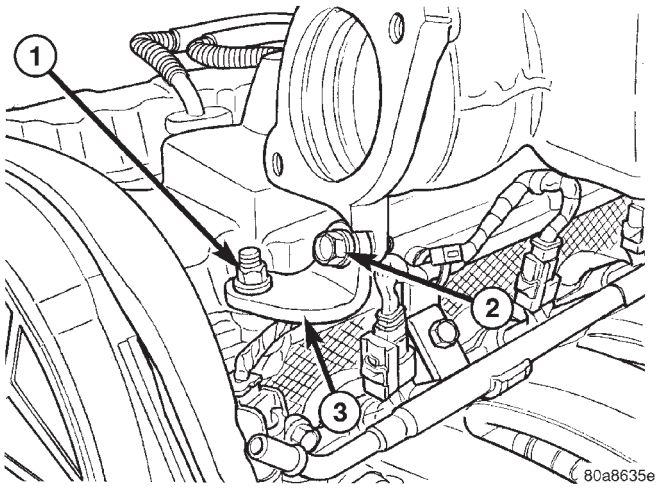

Fig. 107 Upper Intake Manifold Support Bracket

1 - NUT - BRACKET TO CYLINDER HEAD COVER
2 - BOLT - BRACKET TO UPPER INTAKE MANIFOLD
3 - UPPER INTAKE MANIFOLD SUPPORT BRACKET

INTAKE MANIFOLD - UPPER (Continued)

(12) Remove engine oil dipstick from tube.
(13) Remove upper intake manifold bolts (Fig. 108). Remove upper intake manifold.

CAUTION: Cover intake manifold to prevent foreign material from entering engine.

INSPECTION

(1) Check manifold surfaces for flatness with straight edge. Surface must be flat within 0.15 mm per 300 mm (0.006 in. per foot) of manifold length.
(2) Inspect manifold for cracks or distortion. Replace manifold if necessary.

INSTALLATION

(1) Clean manifold sealing surfaces.
(2) Apply a 1.5 mm (0.060 in.) bead Mopar® Gasket Maker to the perimeter of the lower intake manifold runner openings.
(3) Install upper intake manifold and tighten fasteners to 28 N·m (250 in. lbs.) in sequence shown in (Fig. 108). Repeat this procedures until all fasteners are at specified torque.

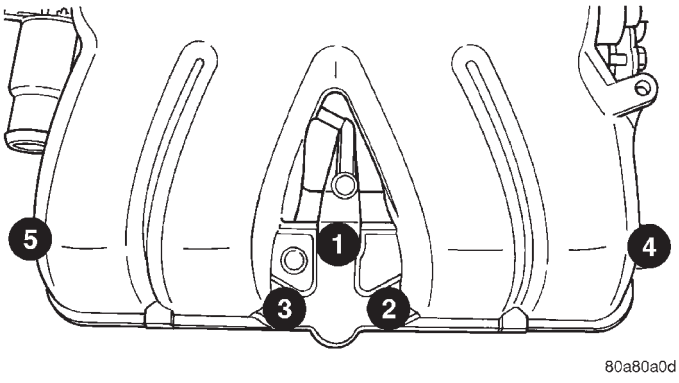

Fig. 108 Upper Intake Manifold Tightening Sequence - 2.4L

(4) Install engine oil dipstick.
(5) Install upper bolt in intake manifold to front support bracket (Fig. 107). Torque to 28 N·m (250 in. lbs.).
(6) Install EGR tube. (Refer to 25 - EMISSIONS CONTROL/EXHAUST GAS RECIRCULATION/ TUBE - INSTALLATION)
(7) Install throttle cables in bracket.
(8) Connect throttle, speed control, (if equipped), transaxle control (31TH equipped only) cables to throttle lever.
(9) Connect vacuum lines for power brake booster, LDP, EGR transducer, and speed control vacuum reservoir (if equipped) at upper intake manifold fittings.
(10) Connect vacuum lines for purge solenoid and PCV valve.
(11) Connect electrical connectors for MAP sensor, throttle position sensor (TPS), and idle air control (IAC) motor.
(12) Install air cleaner upper housing and air intake tube to throttle body.
(13) Connect inlet air temperature sensor connector (Fig. 104).
(14) Connect negative cable to battery.

INTAKE MANIFOLD - LOWER

REMOVAL

(1) Perform fuel system pressure release procedure **before attempting any repairs.** (Refer to 14 - FUEL SYSTEM/FUEL DELIVERY - STANDARD PROCEDURE)
(2) Remove upper intake manifold. (Refer to 9 - ENGINE/MANIFOLDS/INTAKE MANIFOLD - REMOVAL)

CAUTION: Cover intake manifold openings to prevent foreign material from entering engine.

(3) Disconnect fuel line. (Refer to 14 - FUEL SYSTEM/FUEL DELIVERY/QUICK CONNECT FITTING - STANDARD PROCEDURE)
(4) Drain the cooling system. (Refer to 7 - COOLING - STANDARD PROCEDURE)
(5) Remove heater supply and radiator upper hoses at intake manifold.
(6) Disconnect coolant temperature sensor/fuel injector wire harness connector.
(7) Remove lower intake manifold support bracket upper bolts (Fig. 109).
(8) Loosen the lower intake manfold support bracket lower bolt (Fig. 109).
(9) Disconnect fuel injector harness.
(10) Remove the bolts attaching the power steering reservoir to manifold. Set reservoir aside. **Do not** disconnect line from reservoir.
(11) Remove lower intake manifold fasteners (Fig. 110). Remove the manifold from engine.
(12) Inspect the manifold. (Refer to 9 - ENGINE/ MANIFOLDS/INTAKE MANIFOLD - INSPECTION)

INSPECTION

(1) Check manifold surfaces for flatness with straight edge. Surface must be flat within 0.15 mm per 300 mm (0.006 in. per foot) of manifold length.
(2) Inspect manifold for cracks or distortion. Replace manifold if necessary.

INSTALLATION

If the following items were removed, install and torque to specifications:

- Fuel rail bolts - 22 N·m (200 in. lbs.)

INTAKE MANIFOLD - LOWER (Continued)

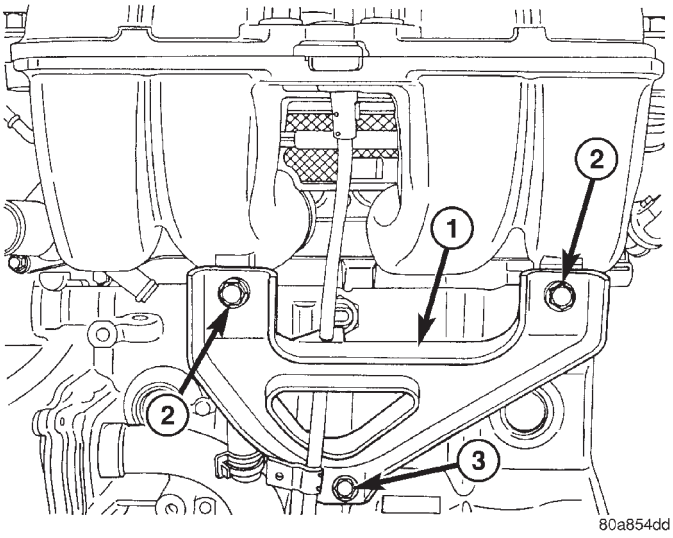

Fig. 109 Lower Intake Manifold Support Bracket

1 - SUPPORT BRACKET
2 - BOLTS - UPPER TO MANIFOLD
3 - BOLT - LOWER TO ENGINE BLOCK

- Coolant outlet connector bolts - 28 N·m (250 in. lbs.)
- Coolant temperature sensor - 7 N·m (60 in. lbs.)

(1) Position a new gasket on cylinder head and install lower manifold.

(2) Install and tighten intake manifold fasteners to 28 N·m (250 in. lbs.) in the sequence shown in (Fig. 110). Repeat procedure until all bolts are at specified torque.

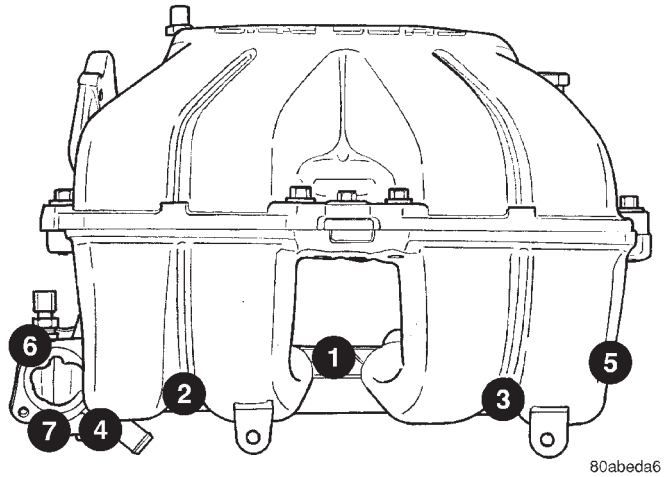

Fig. 110 Lower Intake Manifold Tightening Sequence

(3) Install lower intake manifold support bracket bolts (Fig. 109) and tighten to:

- Bolts to intake 28 N·m (250 in. lbs.)
- Bolt to engine block 54 N·m (40 ft. lbs.)

(4) Position power steering reservoir on manifold and install bolts.

(5) Connect the fuel line. (Refer to 14 - FUEL SYSTEM/FUEL DELIVERY/QUICK CONNECT FITTING - STANDARD PROCEDURE)

(6) Connect coolant temperature sensor/fuel injector wiring harness electrical connector.

(7) Install the radiator upper and heater supply hoses.

(8) Install the upper intake manifold. (Refer to 9 - ENGINE/MANIFOLDS/INTAKE MANIFOLD - INSTALLATION)

(9) Fill the cooling system. (Refer to 7 - COOLING - STANDARD PROCEDURE)

EXHAUST MANIFOLD

DESCRIPTION

The exhaust manifold is made of Hi-Silicone Moly nodular cast iron for strength and high temperatures. The manifold attaches to the cylinder head.

OPERATION

The exhaust manifold collects the exhaust gasses exiting the combustion chambers. Then it channels the exhaust gasses to the exhaust pipe attached to the manifold.

REMOVAL

(1) Raise vehicle and disconnect exhaust pipe from the exhaust manifold.

(2) Disconnect upstream oxygen sensor connector at the rear of exhaust manifold.

(3) Remove the bolts attaching the manifold to the cylinder head.

(4) Remove exhaust manifold.

(5) Inspect the manifold. (Refer to 9 - ENGINE/MANIFOLDS/EXHAUST MANIFOLD - INSPECTION)

CLEANING

(1) Discard gasket (if equipped) and clean all surfaces of manifold and cylinder head.

INSPECTION

(1) Inspect manifold gasket surfaces for flatness with straight edge. Surface must be flat within 0.15 mm per 300 mm (0.006 in. per foot) of manifold length.

(2) Inspect manifolds for cracks or distortion. Replace manifold as necessary.

INSTALLATION

(1) Install exhaust manifold with a new gasket. Tighten attaching nuts in the sequence shown in (Fig. 111) to 19 N·m (170 in. lbs.).

EXHAUST MANIFOLD (Continued)

(2) Attach exhaust pipe to exhaust manifold and tighten fasteners to 37 N·m (27 ft. lbs.).

(3) Install and connect the oxygen sensor. (Refer to 14 - FUEL SYSTEM/FUEL INJECTION/O2 SENSOR - COMPONENT LOCATION)

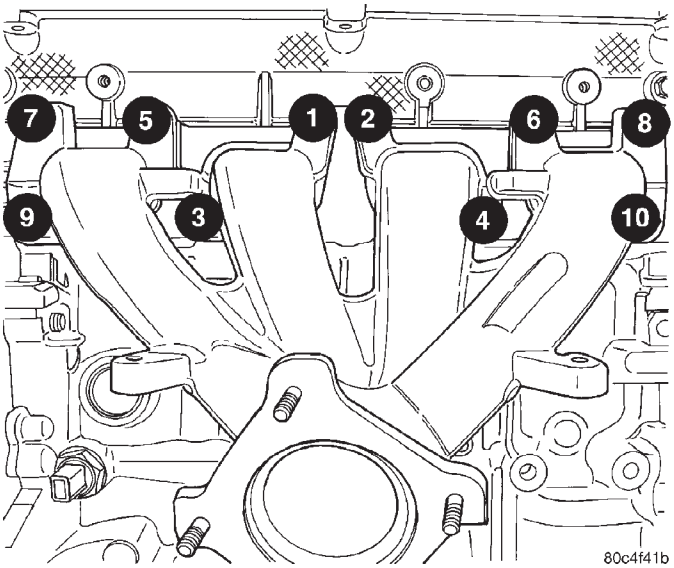

Fig. 111 Exhaust Manifold Tightening Sequence

TIMING BELT COVER(S)

REMOVAL

FRONT COVER

(1) Remove crankshaft vibration damper. (Refer to 9 - ENGINE/ENGINE BLOCK/VIBRATION DAMPER - REMOVAL)

(2) Remove generator drive belt tensioner assembly. (Refer to 7 - COOLING/ACCESSORY DRIVE/BELT TENSIONERS - REMOVAL)

(3) Remove timing belt front cover bolts (Fig. 112) and remove covers.

REAR COVER

(1) Remove front covers.

(2) Remove engine mount bracket (Fig. 113).

(3) Remove timing belt. (Refer to 9 - ENGINE/VALVE TIMING/TIMING BELT/CHAIN AND SPROCKETS - REMOVAL)

(4) Hold camshaft sprocket with Special Tool 6847 while removing center bolt (Fig. 114).

(5) Remove timing belt idler pulley.

(6) Remove rear cover fasteners and remove cover from engine (Fig. 115).

INSTALLATION

REAR COVER

(1) Install timing belt rear cover and bolts (Fig. 115).

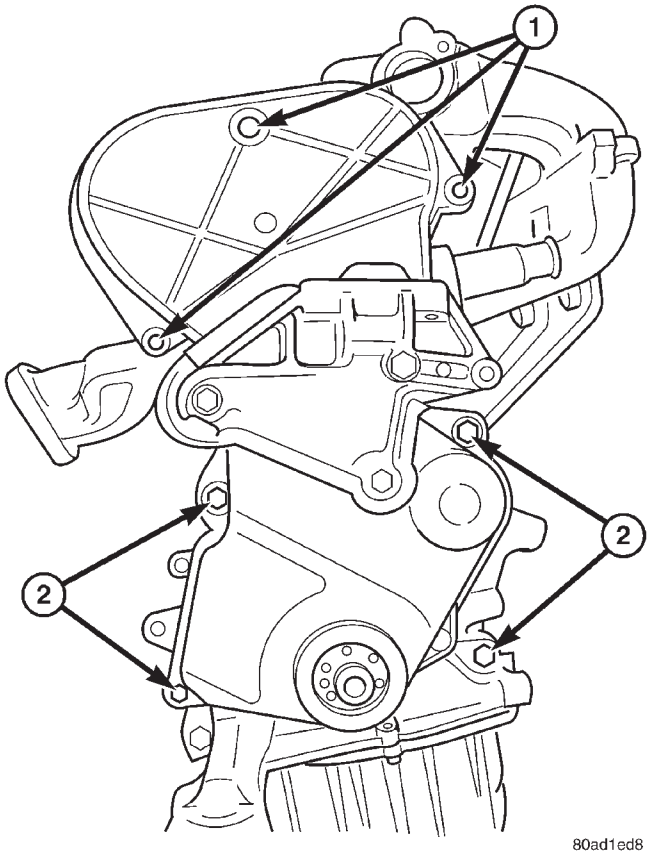

Fig. 112 Timing Belt Front Covers

1 - BOLTS - UPPER FRONT COVER 7 N·m (60 in. lbs.)
2 - BOLTS - LOWER FRONT COVER 7 N·m (60 in. lbs.)

CAUTION: Do not use an impact wrench for tightening camshaft sprocket bolt. Damage to the timing locating pin can occur. Hand tighten using a wrench ONLY.

(2) Install camshaft sprockets. Hold sprockets with Special Tool 6848 and tighten center bolt to 101 N·m (75 ft. lbs.).

(3) Install timing belt idler pulley and tighten mounting bolt to 61 N·m (45 ft. lbs.).

(4) Install timing belt. (Refer to 9 - ENGINE/VALVE TIMING/TIMING BELT/CHAIN AND SPROCKETS - INSTALLATION)

(5) Install engine mount bracket and tighten bolts to 61 N·m (45 ft. lbs.) (Fig. 113).

(6) Install front covers.

FRONT COVER

(1) Install timing belt front covers (Fig. 112). Tighten fasteners to 7 N·m (60 in. lbs.).

(2) Install generator drive belt tensioner. (Refer to 7 - COOLING/ACCESSORY DRIVE/BELT TENSIONERS - INSTALLATION)

TIMING BELT COVER(S) (Continued)

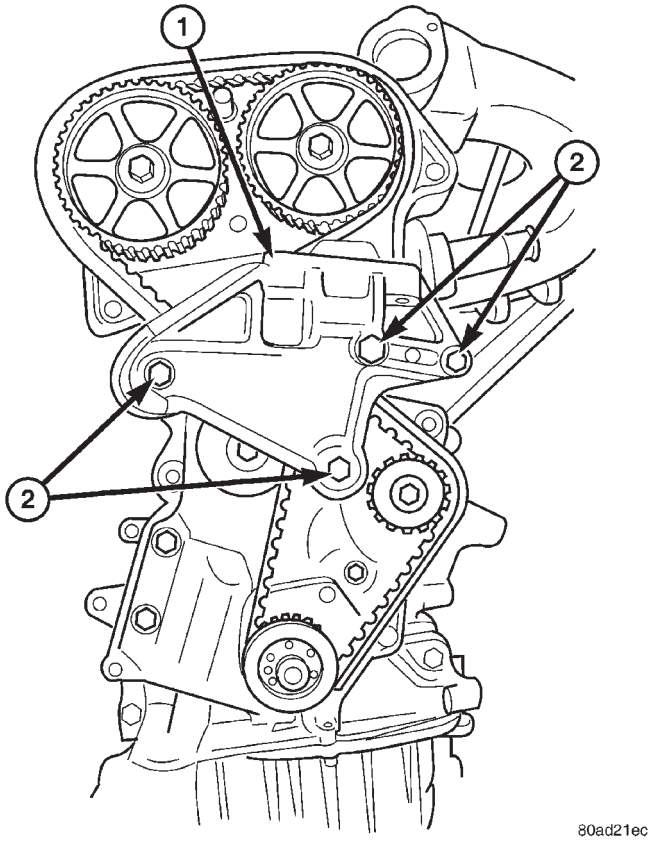

Fig. 113 ENGINE FRONT MOUNT BRACKET

1 - ENGINE MOUNT BRACKET
2 - BOLTS - 61 N·m (45 ft. lbs.)

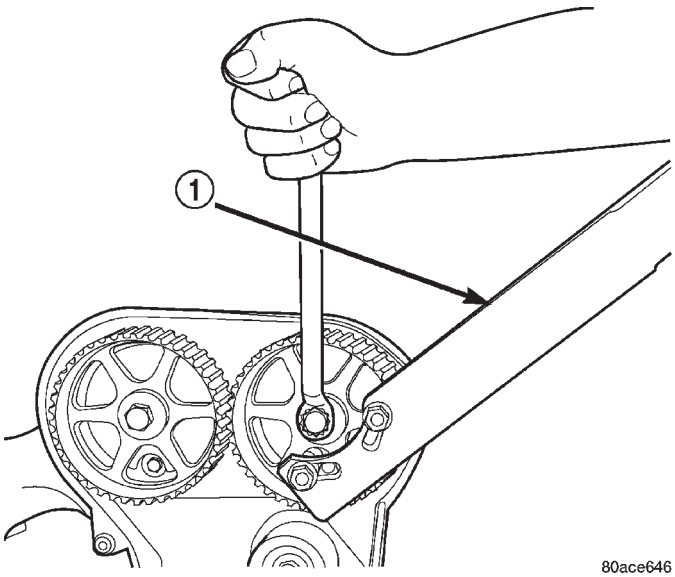

Fig. 114 Camshaft Sprocket - Removal/Installation

1 - SPECIAL TOOL 6847

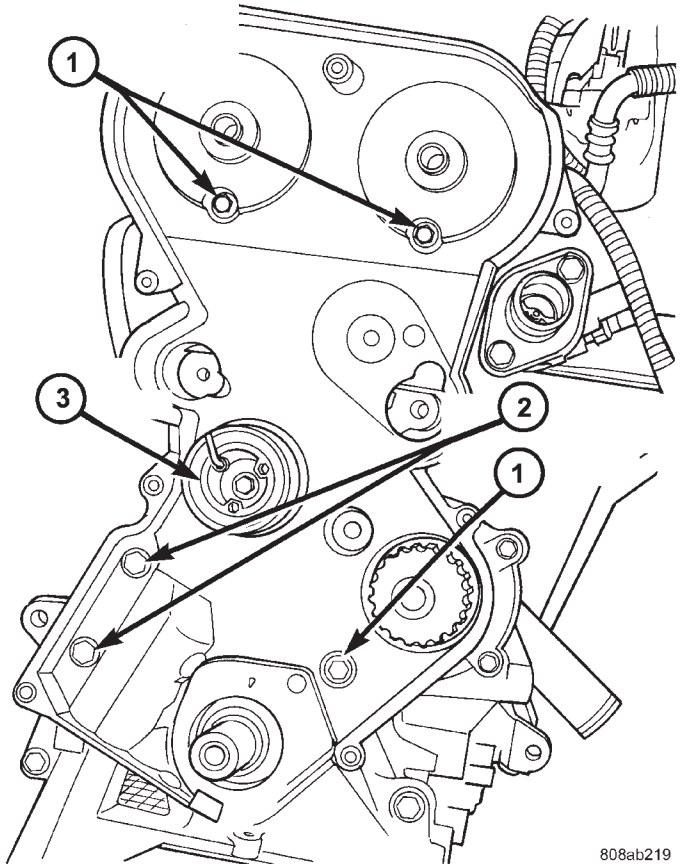

Fig. 115 Timing Belt Rear Cover

1 - BOLTS - REAR COVER 12 N·m (105 in. lbs.)
2 - BOLTS - REAR COVER 28 N·m (250 in. lbs.)
3 - TIMING BELT TENSIONER

(3) Install crankshaft vibration damper. (Refer to 9 - ENGINE/ENGINE BLOCK/VIBRATION DAMPER - INSTALLATION)

TIMING BELT AND SPROCKET(S)

REMOVAL

REMOVAL - TIMING BELT

(1) Remove air cleaner upper cover, housing, and clean air tube.
(2) Remove make-up air hose from cylinder head cover.
(3) Raise vehicle on hoist.
(4) Remove right front wheel.
(5) Remove right inner splash shield.
(6) Remove accessory drive belts. (Refer to 7 - COOLING/ACCESSORY DRIVE/BELT TENSIONERS - REMOVAL)

TIMING BELT AND SPROCKET(S) (Continued)

(7) Remove crankshaft vibration damper. (Refer to 9 - ENGINE/ENGINE BLOCK/VIBRATION DAMPER - REMOVAL)

(8) Remove air conditioner/generator belt tensioner and pulley assembly. (Refer to 7 - COOLING/ACCESSORY DRIVE/BELT TENSIONERS - REMOVAL)

(9) Remove timing belt lower front cover bolts and remove cover. (Refer to 9 - ENGINE/VALVE TIMING/TIMING BELT / CHAIN COVER(S) - REMOVAL)

(10) Lower vehicle.

(11) Remove bolts attaching timing belt upper front cover and remove cover. (Refer to 9 - ENGINE/VALVE TIMING/TIMING BELT / CHAIN COVER(S) - REMOVAL)

(12) Remove right engine mount. (Refer to 9 - ENGINE/ENGINE MOUNTING/RIGHT MOUNT - REMOVAL)

(13) Remove engine mount bracket (Fig. 116).

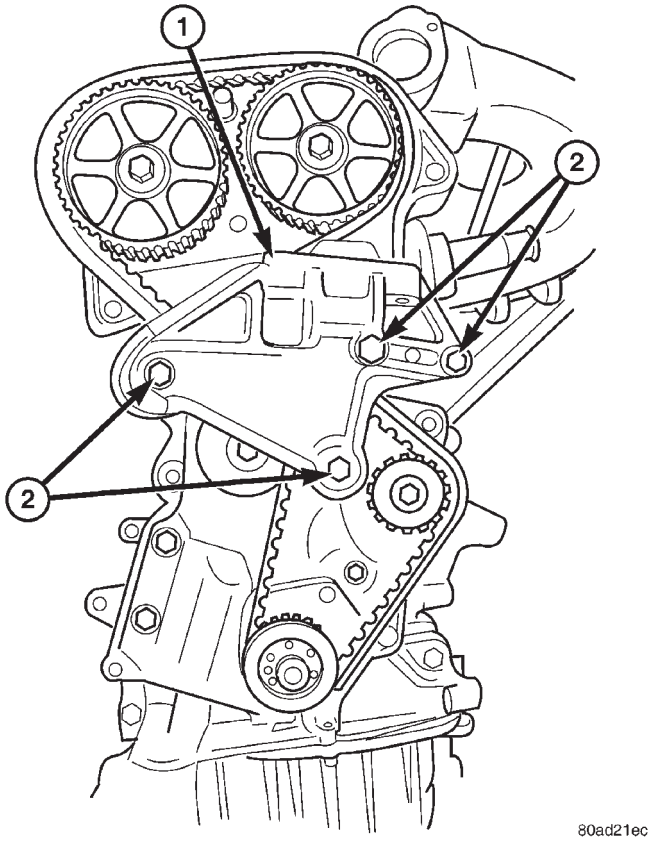

Fig. 116 Engine Mount Bracket

1 - ENGINE MOUNT BRACKET
2 - BOLTS - 61 N·m (45 ft. lbs.)

CAUTION: When aligning crankshaft and camshaft timing marks always rotate engine from crankshaft. Camshaft should not be rotated after timing belt is removed. Damage to valve components may occur. Always align timing marks before removing timing belt.

(14) Before the removal of the timing belt, rotate crankshaft until the TDC mark on oil pump housing aligns with the TDC mark on crankshaft sprocket (trailing edge of sprocket tooth) (Fig. 117).

NOTE: The crankshaft sprocket TDC mark is located on the trailing edge of the sprocket tooth. Failure to align trailing edge of sprocket tooth to TDC mark on oil pump housing will cause the camshaft timing marks to be misaligned.

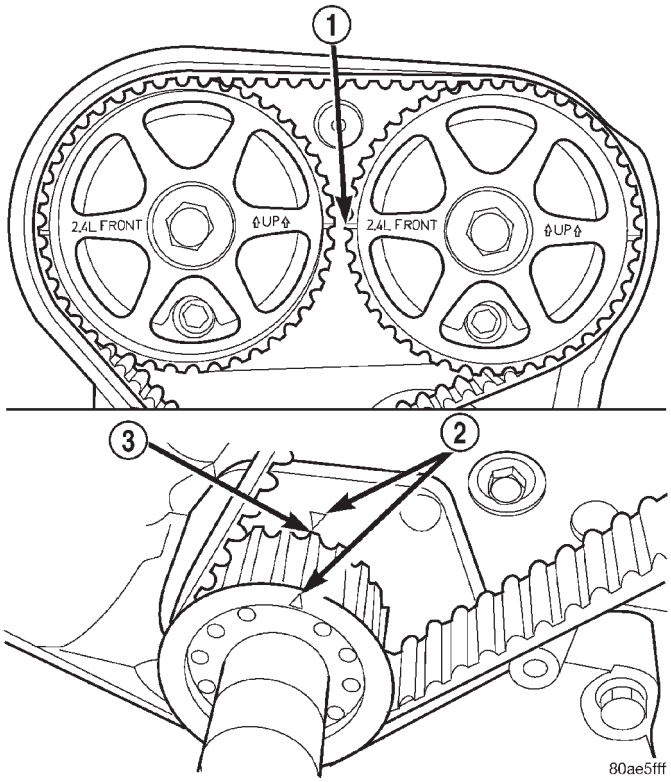

Fig. 117 Crankshaft and Camshaft Timing

1 - CAMSHAFT TIMING MARKS
2 - CRANKSHAFT TDC MARKS
3 - TRAILING EDGE OF SPROCKET TOOTH

(15) Install 6 mm Allen wrench into belt tensioner. Before rotating the tensioner, insert the long end of a 1/8” or 3 mm Allen wrench into the pin hole on the front of the tensioner (Fig. 118). While rotating the tensioner counterclockwise, push in lightly on the 1/8” or 3 mm Allen wrench, until it slides into the locking hole.

(16) Remove timing belt.

TIMING BELT AND SPROCKET(S) (Continued)

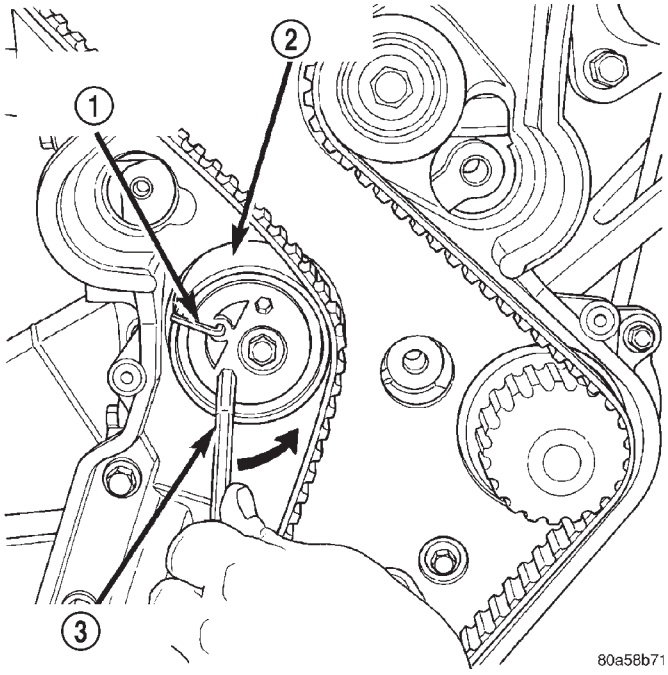

Fig. 118 Locking Timing Tensioner

1 - 1/8 OR 3mm ALLEN WRENCH
2 - BELT TENSIONER
3 - 6mm ALLEN WRENCH

REMOVAL - CRANKSHAFT SPROCKET

(1) Disconnect negative battery cable.

(2) Remove timing belt (Refer to 9 - ENGINE/ VALVE TIMING/TIMING BELT/CHAIN AND SPROCKETS - REMOVAL).

(3) Remove crankshaft sprocket using Special Tools 6793 and insert C-4685-C2 (Fig. 119).

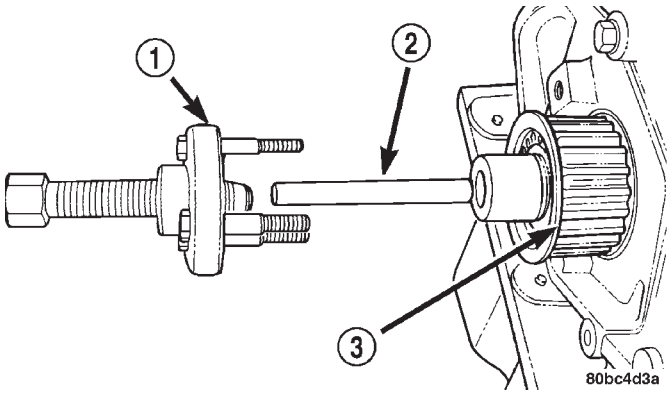

Fig. 119 Crankshaft Sprocket - Removal

1 - SPECIAL TOOL 6793
2 - SPECIAL TOOL C-4685–C2
3 - CRANKSHAFT SPROCKET

CLEANING

Do Not attempt to clean a timing belt. If contamination from oil, grease, or coolants have occurred, the timing belt should be replaced.

Clean all sprockets using a suitable solvent. Clean all sprocket grooves of any debris.

INSTALLATION

INSTALLATION - CRANKSHAFT SPROCKET

CAUTION: The crankshaft sprocket is set to a predetermined depth from the factory for correct timing belt tracking. If removed, use of Special Tool 6792 is required to set the sprocket to original installation depth. An incorrectly installed sprocket will result in timing belt and engine damage.

(1) Install crankshaft sprocket using Special Tool 6792 (Fig. 120).

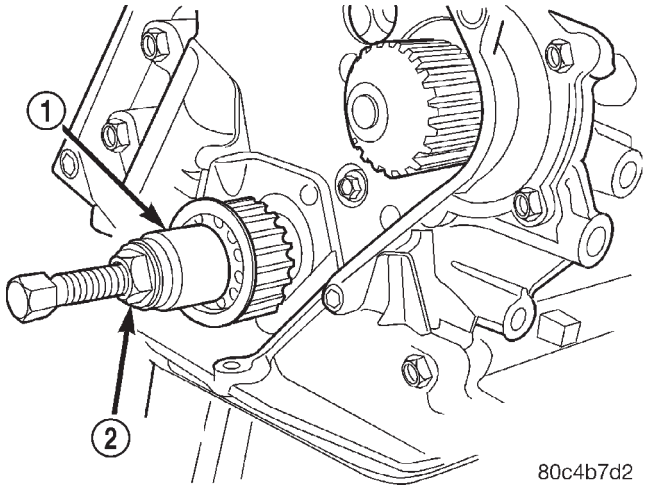

Fig. 120 Crankshaft Sprocket - Installation

1 - SPECIAL TOOL 6792
2 - TIGHTEN NUT TO INSTALL

(2) Install timing belt. (Refer to 9 - ENGINE/ VALVE TIMING/TIMING BELT/CHAIN AND SPROCKETS - INSTALLATION)

TIMING BELT AND SPROCKET(S) (Continued)

INSTALLATION - TIMING BELT

CAUTION: The crankshaft sprocket is set to a predetermined depth from the factory for correct timing belt tracking. If removed, use of Special Tool 6792 is required to set the sprocket to original installation depth. An incorrectly installed sprocket will result in timing belt and engine damage.

(1) Set crankshaft sprocket to TDC by aligning the sprocket with the arrow on the oil pump housing.

(2) Set camshafts timing marks so that the exhaust camshaft sprocket is a 1/2 notch below the intake camshaft sprocket (Fig. 121).

CAUTION: Ensure that the arrows on both camshaft sprockets are facing up.

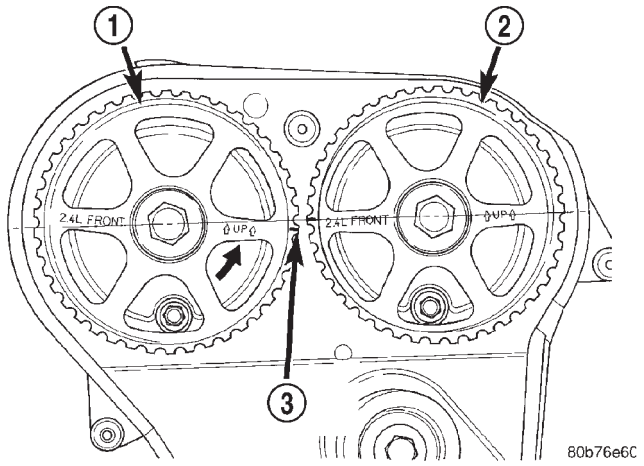

Fig. 121 Camshaft Sprocket Alignment

1 - CAMSHAFT SPROCKET-EXHAUST
2 - CAMSHAFT SPROCKET-INTAKE
3 - 1/2 NOTCH LOCATION

(3) Install timing belt. Starting at the crankshaft, go around the water pump sprocket, idler pulley, camshaft sprockets and then around the tensioner (Fig. 122).

(4) Move the exhaust camshaft sprocket counterclockwise (Fig. 122) to align marks and take up belt slack.

NOTE: A new tensioner is held in the wound position by a pull pin.

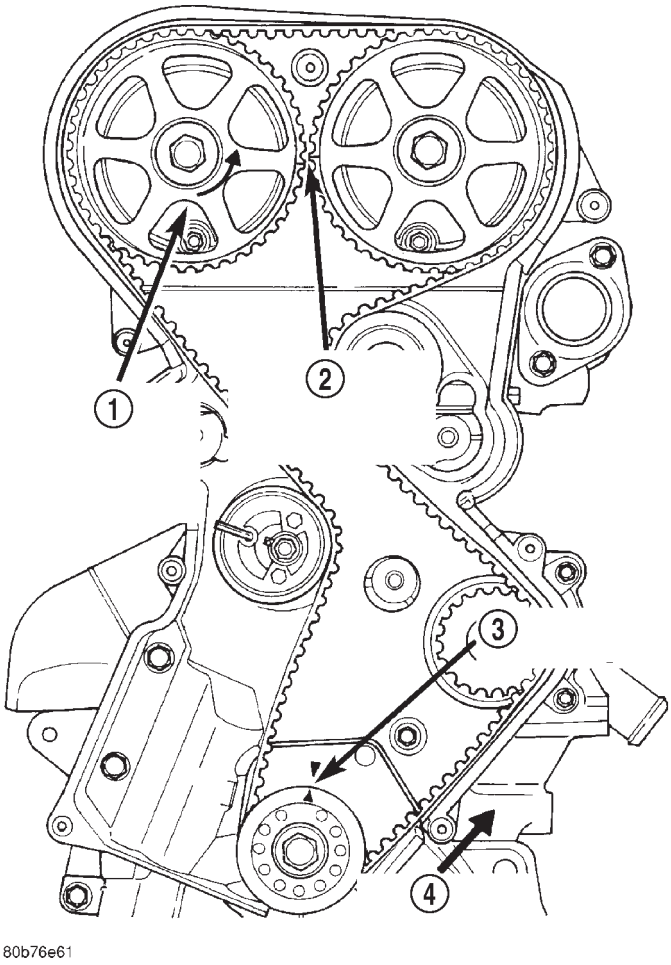

Fig. 122 Timing Belt - Installation

1 - ROTATE CAMSHAFT SPROCKET TO TAKE UP BELT SLACK
2 - CAMSHAFT TIMING MARKS 1/2 NOTCH LOCATION
3 - CRANKSHAFT AT TDC
4 - INSTALL BELT IN THIS DIRECTION

TIMING BELT AND SPROCKET(S) (Continued)

(5) Remove the pull pin or Allen wrench from the belt tensioner.

(6) Once the timing belt has been installed and tensioner released, rotate the crankshaft two (2) complete revolutions. Verify that the TDC marks on crankshaft and timing marks on the camshafts are aligned as shown in (Fig. 123).

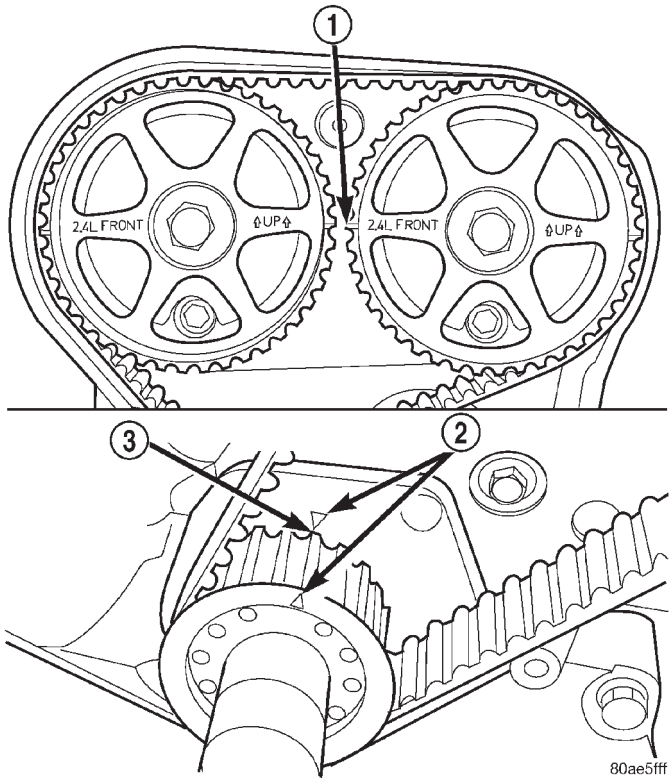

Fig. 123 Crankshaft and Camshaft Timing

1 - CAMSHAFT TIMING MARKS
2 - CRANKSHAFT TDC MARKS
3 - TRAILING EDGE OF SPROCKET TOOTH

(7) Install engine mount bracket to engine (Fig. 116).

(8) Install timing belt front covers and bolts. (Refer to 9 - ENGINE/VALVE TIMING/TIMING BELT / CHAIN COVER(S) - INSTALLATION)

(9) Install air conditioning/generator belt tensioner and pulley. (Refer to 7 - COOLING/ACCESSORY DRIVE/BELT TENSIONERS - INSTALLATION)

(10) Install right engine mount. (Refer to 9 - ENGINE/ENGINE MOUNTING/RIGHT MOUNT - INSTALLATION)

(11) Install crankshaft vibration damper. (Refer to 9 - ENGINE/ENGINE BLOCK/VIBRATION DAMPER - INSTALLATION)

(12) Install accessory drive belts. (Refer to 7 - COOLING/ACCESSORY DRIVE/DRIVE BELTS - INSTALLATION)

(13) Install drive belt splash shield.

(14) Install right front wheel.

(15) Connect make-up air hose to cylinder head cover.

(16) Install air cleaner housing, upper cover, and clean air tube.

TIMING BELT TENSIONER & PULLEY

REMOVAL

(1) Remove the timing belt (Refer to 9 - ENGINE/VALVE TIMING/TIMING BELT AND SPROCKETS - REMOVAL).

(2) Remove timing belt idler pulley.

(3) Hold camshaft sprocket with Special Tool 6847 while removing bolt (Fig. 124). Remove both cam sprockets.

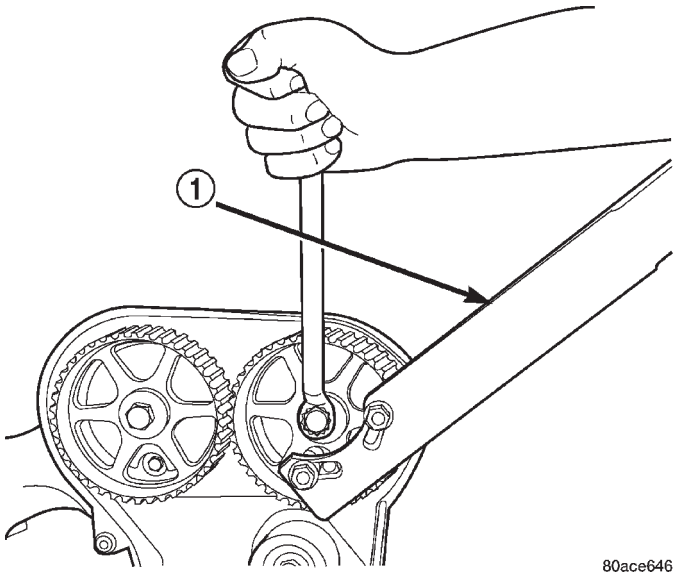

Fig. 124 Camshaft Sprocket - Removal/Installation

1 - SPECIAL TOOL 6847

TIMING BELT TENSIONER & PULLEY (Continued)

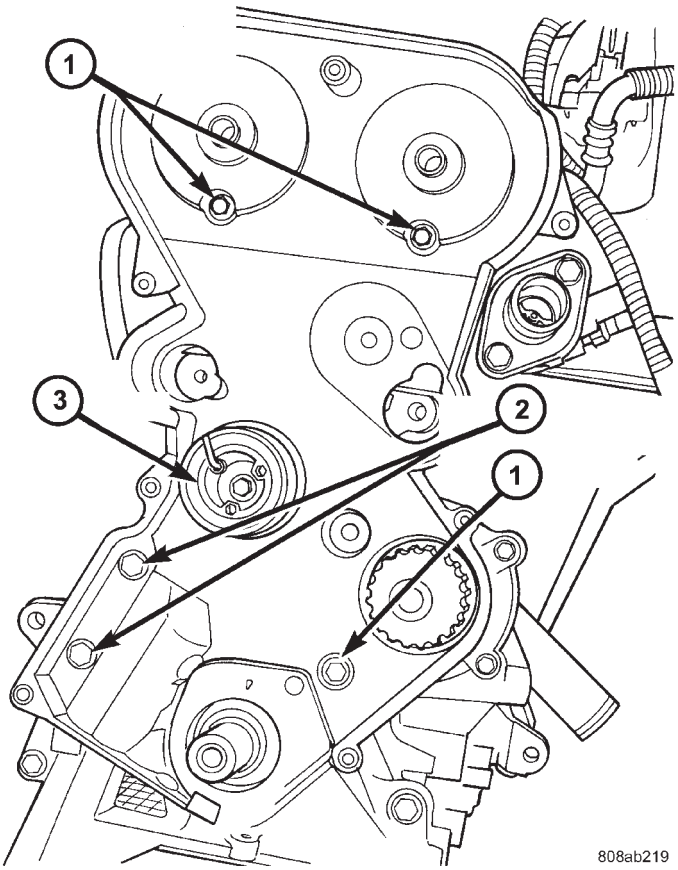

Fig. 125 Rear Timing Belt Cover Fasteners

1 - BOLTS - REAR COVER 12 N·m (105 in. lbs.)
2 - BOLTS - REAR COVER 28 N·m (250 in. lbs.)
3 - TIMING BELT TENSIONER

(4) Remove rear timing belt cover fasteners and remove cover from engine (Fig. 125).

(5) Remove lower bolt attaching timing belt tensioner assembly to engine and remove tensioner **as an assembly** (Fig. 126).

INSTALLATION

(1) Align timing belt tensioner assembly to engine and install lower mounting bolt **but do not tighten** (Fig. 126). To properly align tensioner assembly—install one of the engine bracket mounting bolts (M10) 5 to 7 turns into the tensioner's upper mounting location (Fig. 126).

(2) Torque the tensioner's lower mounting bolt to 61 N·m (45 ft. lbs.). Remove the upper bolt used for tensioner alignment.

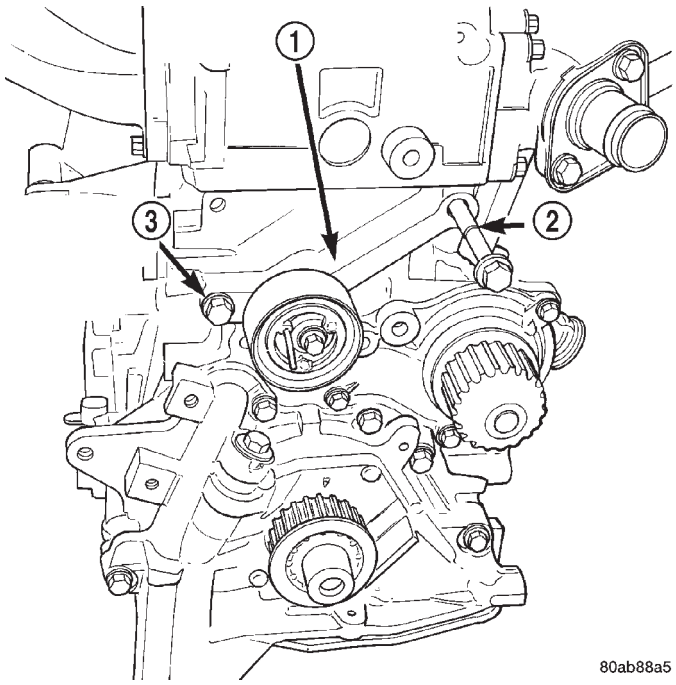

Fig. 126 Timing Belt Tensioner Assembly—Removal/ Installation

1 - TIMING BELT TENSIONER ASSEMBLY
2 - TENSIONER ASSEMBLY UPPER BOLT
3 - TENSIONER ASSEMBLY LOWER BOLT

(3) Install rear timing belt cover and fasteners (Fig. 125).

(4) Install timing belt idler pulley and torque mounting bolt to 61 N·m (45 ft. lbs.).

(5) Install camshaft sprockets. Use Special Tool 6847 to hold sprockets (Fig. 124), torque bolts to 101 N·m (75 ft. lbs.).

(6) Install the timing belt (Refer to 9 - ENGINE/ VALVE TIMING/TIMING BELT AND SPROCKETS - INSTALLATION).

BALANCE SHAFTS AND CARRIER ASSEMBLY

DESCRIPTION

The 2.4L engine is equipped with two nodular cast iron balance shafts installed in a cast aluminum carrier attached to the lower cylinder block (Fig. 127).

BALANCE SHAFTS AND CARRIER ASSEMBLY (Continued)

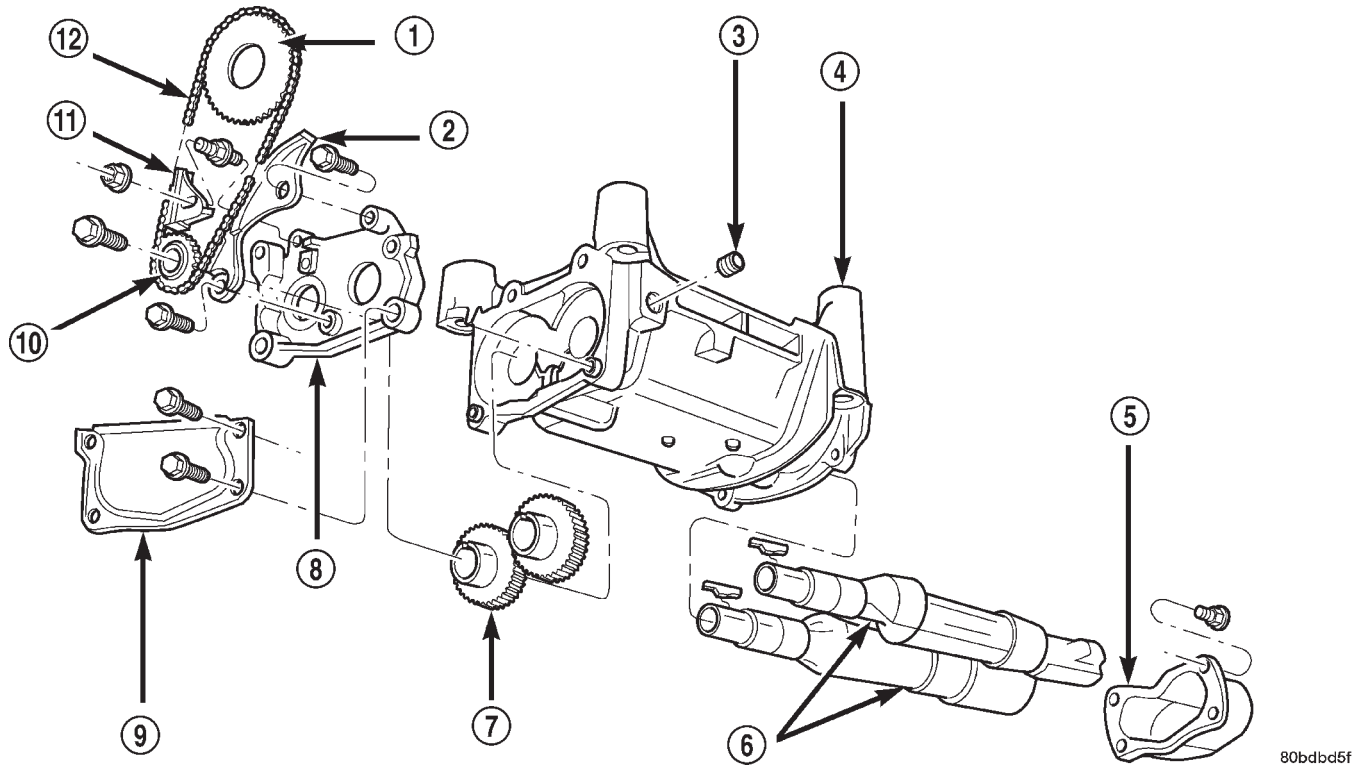

Fig. 127 Balance Shafts and Carrier Assembly

1 - SPROCKET
2 - TENSIONER
3 - PLUG
4 - CARRIER
5 - REAR COVER
6 - BALANCE SHAFTS
7 - GEARS
8 - GEAR COVER
9 - CHAIN COVER
10 - SPROCKET
11 - GUIDE
12 - CHAIN

OPERATION

The balance shafts are driven by the crankshaft via a roller chain and sprockets. The balance shafts are connected by helical gears. The dual counter rotating shafts decrease second order vertical shaking forces caused by component movement.

REMOVAL

BALANCE SHAFTS/CHAIN/SPROCKETS

NOTE: For service procedures requiring only temporary relocation of carrier assembly refer to BALANCE SHAFT CARRIER procedure below.

(1) Drain engine oil.
(2) Remove the oil pan and pick-up tube (Refer to 9 - ENGINE/LUBRICATION/OIL PAN - REMOVAL).
(3) If replacing crankshaft sprocket, remove oil pump (Refer to 9 - ENGINE/LUBRICATION/OIL PUMP - REMOVAL).
(4) Remove chain cover, guide and tensioner (Fig. 128).
(5) Remove screw retaining balance shaft drive sprocket (Fig. 129). Remove chain and sprocket.
(6) Using two wide pry bars, work the crankshaft sprocket back and forth until it is off the crankshaft-shaft.
(7) Remove gear cover retaining stud (double ended to also retain chain guide). Remove cover and balance shaft gears (Fig. 130).
(8) Remove rear cover and balance shafts (Fig. 131).
(9) Remove four carrier to crankcase attaching bolts to separate carrier from engine bedplate.

BALANCE SHAFT CARRIER

The following components will remain intact during carrier removal: Gear cover, gears, balance shafts and the rear cover (Fig. 127).
(1) Drain engine oil.
(2) Remove the oil pan and pick-up tube (Refer to 9 - ENGINE/LUBRICATION/OIL PAN - REMOVAL).
(3) Remove chain cover, guide and tensioner (Fig. 128).

BALANCE SHAFTS AND CARRIER ASSEMBLY (Continued)

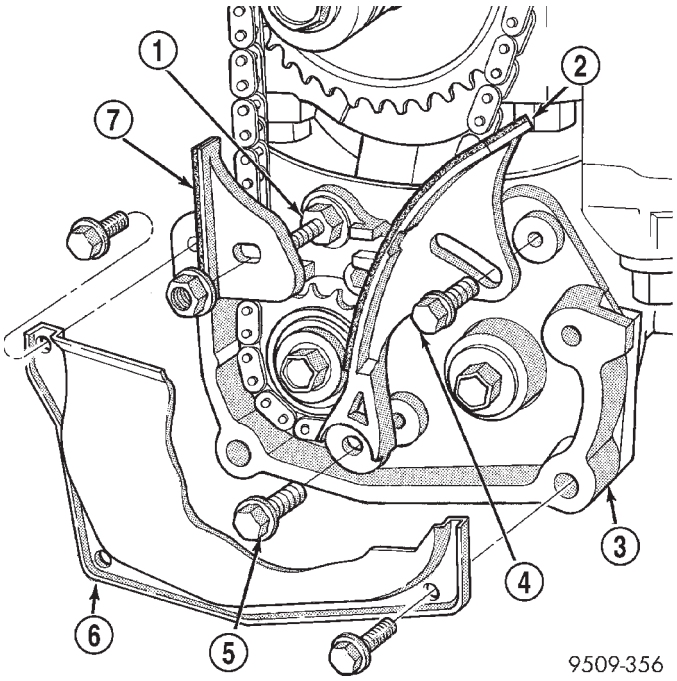

Fig. 128 Chain Cover, Guide and Tensioner

1 - STUD
2 - TENSIONER (ADJUSTER)
3 - GEAR COVER
4 - ADJUST SCREW
5 - PIVOT SCREW
6 - CHAIN COVER (CUTAWAY)
7 - GUIDE

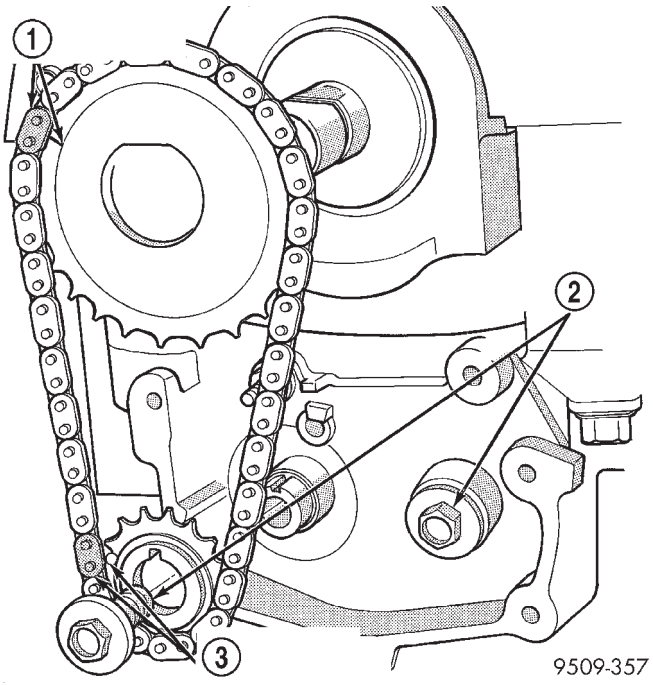

Fig. 129 Drive Chain and Sprockets

1 - NICKEL PLATED LINK AND MARK
2 - GEAR/SPROCKET SCREWS
3 - NICKEL PLATED LINK AND DOT

(4) Remove screw retaining balance shaft drive sprocket (Fig. 129).

(5) Move balance shaft inboard through drive chain sprocket. Sprocket will hang in lower chain loop.

(6) Remove carrier to crankcase attaching bolts to remove carrier.

INSTALLATION

BALANCE SHAFT INSTALLATION/TIMING

Balance shaft and carrier assembly installation is the reverse of the removal procedure. **During installation crankshaft-to-balance shaft timing must be established. Refer to Timing procedure in this section.**

(1) With balance shafts installed in carrier (Fig. 127) position carrier on crankcase and install four attaching bolts and tighten to 54 N·m (40 ft. lbs.).

(2) Turn balance shafts until both shaft key ways are up, parallel to vertical centerline of engine. Install short hub drive gear on sprocket driven shaft and long hub gear on gear driven shaft. After installation gear and balance shaft keyways must be up with gear timing marks meshed as shown in (Fig. 132).

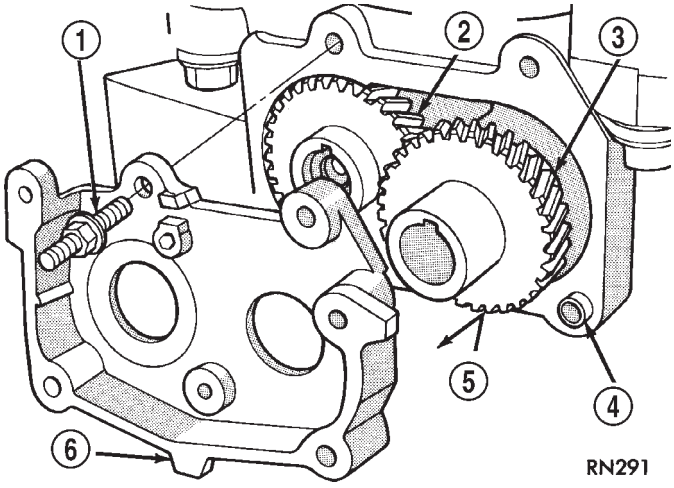

Fig. 130 Gear Cover and Gears

1 - STUD (DOUBLE ENDED)
2 - DRIVE GEAR
3 - DRIVEN GEAR
4 - CARRIER DOWEL
5 - GEAR(S)
6 - GEAR COVER

(3) Install gear cover and tighten double ended stud/washer fastener to 12 N·m (105 in. lbs.).

BALANCE SHAFTS AND CARRIER ASSEMBLY (Continued)

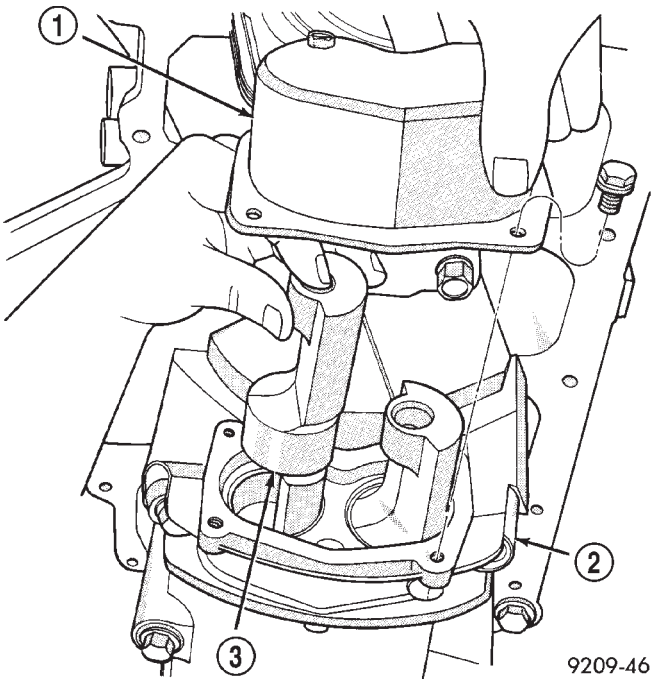

Fig. 131 Balance Shaft - Removal/Installation

1 - REAR COVER
2 - CARRIER
3 - BALANCE SHAFT

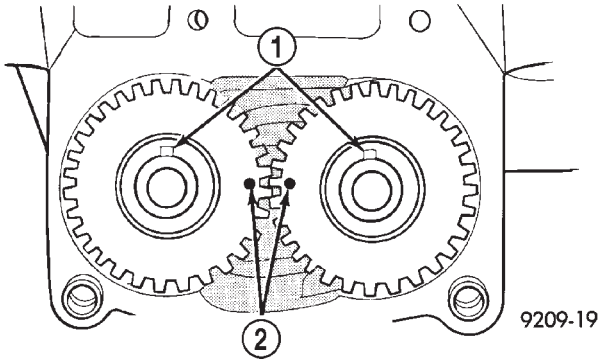

Fig. 132 Gear Timing

1 - KEY WAYS UP
2 - GEAR ALIGNMENT DOTS

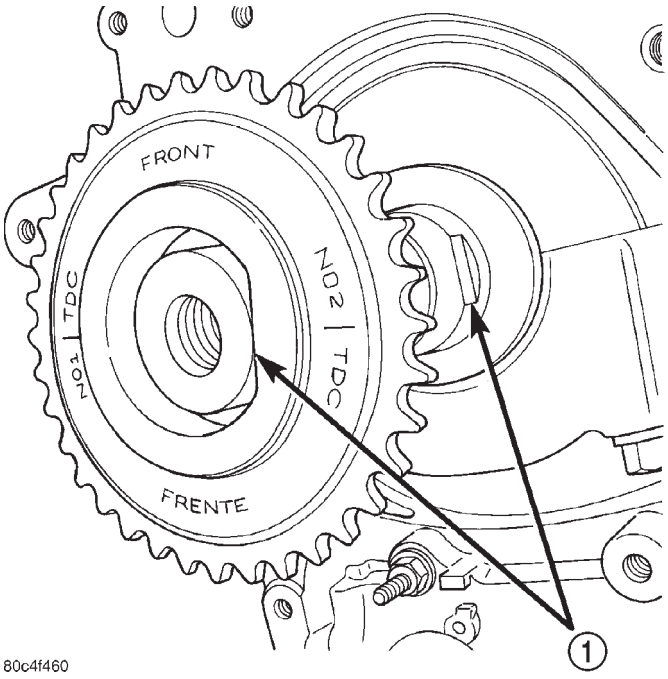

Fig. 133 Balance Shaft Sprocket Alignment to Crankshaft

1 - ALIGN FLATS

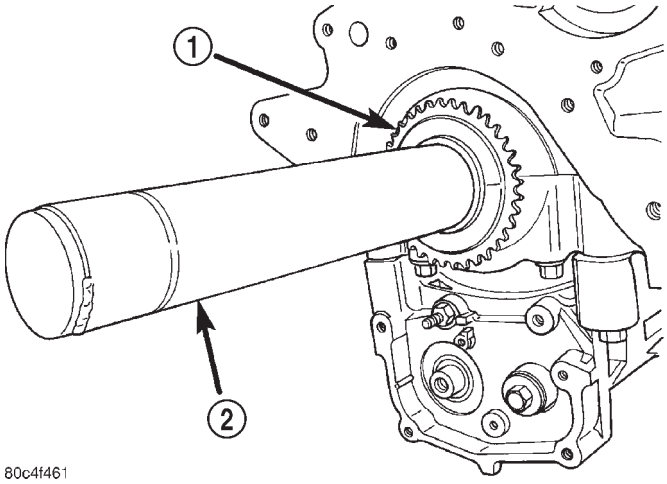

Fig. 134 Balance Shaft Drive

1 - SPROCKET
2 - SPECIAL TOOL 6052

(4) Align flat on balance shaft drive sprocket to the flat on crankshaft (Fig. 133).

(5) Install balance shaft drive sprocket on crankshaft using Special Tool 6052 (Fig. 134).

(6) Turn crankshaft until number 1 cylinder is at top dead center (TDC). The timing marks on the chain sprocket should line up with the parting line on the left side of number one main bearing cap. (Fig. 135).

(7) Place chain over crankshaft sprocket so that the plated link of the chain is over the number 1 cylinder timing mark on the balance shaft crankshaft sprocket (Fig. 135).

(8) Place balance shaft sprocket into the timing chain (Fig. 135) and align the timing mark on the sprocket (dot) with the (lower) plated link on the chain.

NOTE: The lower plated link is 8 links from the upper link.

BALANCE SHAFTS AND CARRIER ASSEMBLY (Continued)

(9) With balance shaft keyways pointing up (12 o'clock) slide the balance shaft sprocket onto the nose of the balance shaft. The balance shaft may have to be pushed in slightly to allow for clearance.

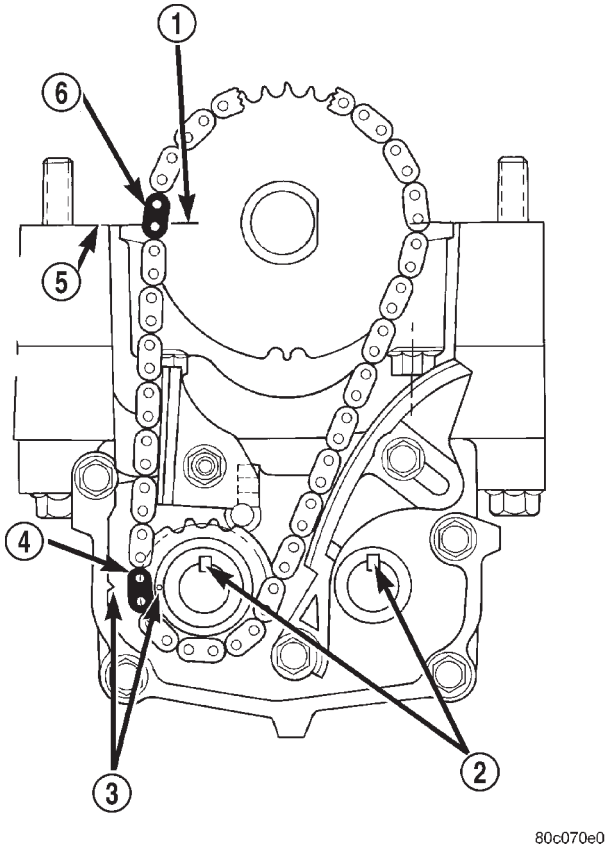

Fig. 135 Balance Shaft Timing

1 - MARK ON SPROCKET
2 - KEYWAYS UP
3 - ALIGN MARKS
4 - PLATED LINK
5 - PARTING LINE (BEDPLATE TO BLOCK)
6 - PLATED LINK

NOTE: THE TIMING MARK ON THE SPROCKET, THE (LOWER) NICKEL PLATED LINK, AND THE ARROW ON THE SIDE OF THE GEAR COVER SHOULD LINE UP WHEN THE BALANCE SHAFTS ARE TIMED CORRECTLY.

(10) If the sprockets are timed correctly, install the balance shaft bolts and tighten to 28 N·m (250 in. lbs.). A wood block placed between crankcase and crankshaft counterbalance will prevent crankshaft and gear rotation.

(11) **CHAIN TENSIONING:**

(a) Install chain tensioner loosely assembled.

(b) Position guide on double ended stud making sure tab on the guide fits into slot on the gear cover. Install and tighten nut/washer assembly to 12 N·m (105 in. lbs.).

(c) Place a shim 1 mm (0.039 in.) thick x 70 mm (2.75 in.) long or between tensioner and chain. Push tensioner and shim up against the chain. **Apply firm pressure 2.5–3 Kg (5.5–6.6 lbs.) directly behind the adjustment slot to take up all slack.** Chain must have shoe radius contact as shown in (Fig. 136).

(d) With the load applied, tighten top tensioner bolt first, then bottom pivot bolt. Tighten bolts to 12 N·m (105 in. lbs.). Remove shim.

(e) Install carrier covers and tighten screws to 12 N·m (105 in. lbs.).

(12) If removed, install oil pump (Refer to 9 - ENGINE/LUBRICATION/OIL PUMP - INSTALLATION).

(13) Install pick-up tube and oil pan (Refer to 9 - ENGINE/LUBRICATION/OIL PAN - INSTALLATION).

(14) Fill engine crankcase with proper oil to correct level.

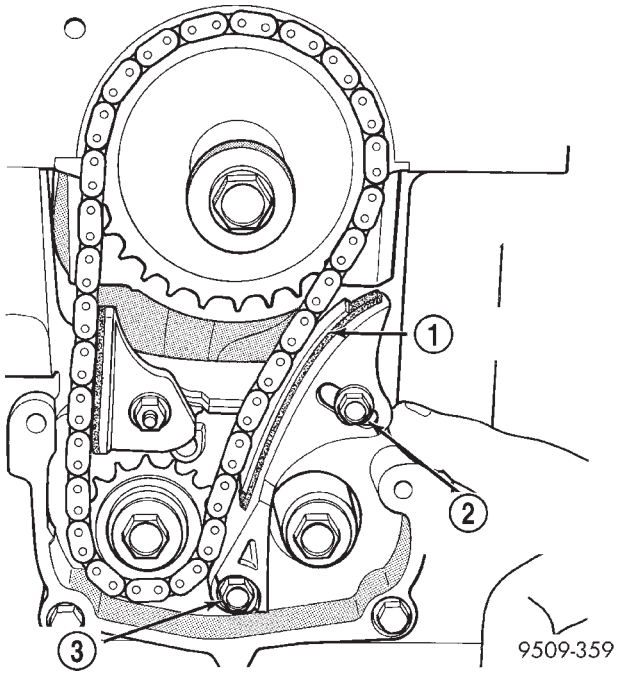

Fig. 136 Chain Tension Adjustment

1 - 1MM (0.039 IN.) SHIM
2 - TENSIONER (ADJUSTER) BOLT
3 - PIVOT BOLT

ENGINE 3.3/3.8L

TABLE OF CONTENTS

page

ENGINE 3.3/3.8L
DESCRIPTION 76
DIAGNOSIS AND TESTING
DIAGNOSIS AND TESTING - ENGINE DIAGNOSIS - INTRODUCTION 77
DIAGNOSIS AND TESTING - ENGINE DIAGNOSIS - PERFORMANCE 78
DIAGNOSIS AND TESTING - ENGINE DIAGNOSIS - MECHANICAL 80
DIAGNOSIS AND TESTING - ENGINE OIL LEAK INSPECTION 82
DIAGNOSIS AND TESTING - CYLINDER COMPRESSION PRESSURE TEST 83
DIAGNOSIS AND TESTING - CYLINDER COMBUSTION PRESSURE LEAKAGE TEST 83
STANDARD PROCEDURE
STANDARD PROCEDURE - MEASURING BEARING CLEARANCE USING PLASTIGAGE 84
STANDARD PROCEDURE - FORM-IN-PLACE GASKETS AND SEALERS 84
STANDARD PROCEDURE - ENGINE GASKET SURFACE PREPARATION 85
STANDARD PROCEDURE - HYDROSTATIC LOCKED ENGINE 86
STANDARD PROCEDURE - REPAIR OF DAMAGED OR WORN THREADS 86
STANDARD PROCEDURE - ENGINE CORE AND OIL GALLERY PLUGS 86
REMOVAL - ENGINE ASSEMBLY 87
INSTALLATION - ENGINE ASSEMBLY 90
SPECIFICATIONS
3.3/3.8L ENGINE 92
SPECIFICATIONS - TORQUE 95
SPECIAL TOOLS
3.3/3.8L ENGINE 96
AIR CLEANER ELEMENT
REMOVAL 99
INSTALLATION 99
AIR CLEANER HOUSING
REMOVAL 99
INSTALLATION 100
CYLINDER HEAD
DESCRIPTION 100
OPERATION 100
DIAGNOSIS AND TESTING—CYLINDER HEAD GASKET 100
REMOVAL - CYLINDER HEAD 100
CLEANING 101
INSPECTION 101
INSTALLATION - CYLINDER HEAD 102
CYLINDER HEAD COVER(S)
DESCRIPTION 103
CYLINDER HEAD COVER - RIGHT
REMOVAL 103
INSTALLATION 103
CYLINDER HEAD COVER - LEFT
REMOVAL 105
INSTALLATION 105
INTAKE/EXHAUST VALVES & SEATS
DESCRIPTION 105
OPERATION 105
STANDARD PROCEDURE - REFACING VALVES AND VALVE SEATS 105
REMOVAL 106
CLEANING 106
INSPECTION 106
INSTALLATION 107
VALVE SPRINGS
DESCRIPTION 107
OPERATION 107
REMOVAL
REMOVAL - CYLINDER HEAD OFF 108
REMOVAL - CYLINDER HEAD ON 108
INSPECTION 109
INSTALLATION
INSTALLATION - CYLINDER HEAD OFF . . . 109
INSTALLATION - CYLINDER HEAD ON 109
ROCKER ARMS
DESCRIPTION
DESCRIPTION - ROCKER ARMS 110
DESCRIPTION - PUSHRODS 110
OPERATION
OPERATION - ROCKER ARMS 110
OPERATION - PUSHRODS 110
REMOVAL - ROCKER ARMS AND SHAFT 110
DISASSEMBLY - ROCKER ARMS AND SHAFT 110
ASSEMBLY - ROCKER ARMS AND SHAFT . . . 111
INSTALLATION - ROCKER ARMS AND SHAFT 111
VALVE STEM SEALS
DESCRIPTION 112
REMOVAL 113
INSTALLATION 113
ENGINE BLOCK
DESCRIPTION 113
STANDARD PROCEDURE - CYLINDER BORE HONING 113

CLEANING 113
INSPECTION 113
CAMSHAFT & BEARINGS (IN BLOCK)
DESCRIPTION 114
OPERATION 114
REMOVAL 114
INSPECTION 115
INSTALLATION 115
CONNECTING ROD BEARINGS
STANDARD PROCEDURE - MEASURING CONNECTING ROD BEARING CLEARANCE 115
CRANKSHAFT
DESCRIPTION
DESCRIPTION - 3.3L 116
DESCRIPTION - 3.8L 117
OPERATION 117
STANDARD PROCEDURE - MEASURING CRANKSHAFT END PLAY 117
REMOVAL 117
INSPECTION 118
INSTALLATION 118
CRANKSHAFT MAIN BEARINGS
STANDARD PROCEDURE - MAIN BEARING FITTING 119
REMOVAL - CRANKSHAFT MAIN BEARINGS 121
INSTALLATION - CRANKSHAFT MAIN BEARINGS 121
CRANKSHAFT OIL SEAL - FRONT
REMOVAL 122
INSTALLATION 123
CRANKSHAFT OIL SEAL - REAR
REMOVAL 123
INSTALLATION 123
CRANKSHAFT REAR OIL SEAL RETAINER
REMOVAL 124
INSTALLATION 124
FLEX PLATE
REMOVAL 124
INSTALLATION 124
HYDRAULIC LIFTERS (CAM IN BLOCK)
DESCRIPTION 125
DIAGNOSIS AND TESTING - HYDRAULIC LIFTERS 125
REMOVAL 126
INSTALLATION 126
PISTON & CONNECTING ROD
DESCRIPTION 126
OPERATION 126
STANDARD PROCEDURE
STANDARD PROCEDURE - FITTING CONNECTING RODS 127
STANDARD PROCEDURE - FITTING PISTONS 127
REMOVAL 127
INSTALLATION 128
PISTON RINGS
STANDARD PROCEDURE - PISTON RING FITTING 130
REMOVAL 131
INSTALLATION 131
VIBRATION DAMPER
REMOVAL 132
INSTALLATION 132
ENGINE MOUNTING
DESCRIPTION 133
FRONT MOUNT
REMOVAL 133
INSTALLATION 133
LEFT MOUNT
REMOVAL 134
INSTALLATION 134
REAR MOUNT
REMOVAL 135
INSTALLATION 136
RIGHT MOUNT
REMOVAL 137
INSTALLATION 137
LUBRICATION
DESCRIPTION 137
OPERATION 137
DIAGNOSIS AND TESTING - ENGINE OIL PRESSURE 137
OIL
STANDARD PROCEDURE
STANDARD PROCEDURE - ENGINE OIL AND FILTER CHANGE 138
STANDARD PROCEDURE - ENGINE OIL LEVEL CHECK 139
OIL COOLER & LINES
DESCRIPTION 140
OPERATION 140
REMOVAL 140
INSTALLATION 140
OIL FILTER
REMOVAL 140
INSTALLATION 140
OIL FILTER ADAPTER
REMOVAL 141
INSTALLATION 141
OIL PAN
REMOVAL 141
CLEANING 141
INSPECTION 142
INSTALLATION 142
OIL PRESSURE RELIEF VALVE
REMOVAL 142
INSTALLATION 143
OIL PRESSURE SWITCH
DESCRIPTION 143
OPERATION 143
REMOVAL 143
INSTALLATION 143

OIL PUMP
DESCRIPTION 143
REMOVAL 143
DISASSEMBLY 144
CLEANING 144
INSPECTION 144
ASSEMBLY 146
INSTALLATION 146
INTAKE MANIFOLD
DESCRIPTION 146
OPERATION 146
DIAGNOSIS AND TESTING - INTAKE MANIFOLD LEAKS 146
INTAKE MANIFOLD - UPPER
STANDARD PROCEDURE
STANDARD PROCEDURE - MANIFOLD STRIPPED THREAD REPAIR 146
STANDARD PROCEDURE - INTAKE MANIFOLD VACUUM PORT REPAIR 147
REMOVAL - UPPER INTAKE MANIFOLD 147
CLEANING 148
INSPECTION 149
INSTALLATION - UPPER INTAKE MANIFOLD 149
INTAKE MANIFOLD - LOWER
REMOVAL - LOWER INTAKE MANIFOLD 150
CLEANING 150
INSPECTION 150
INSTALLATION - LOWER INTAKE MANIFOLD . 150
EXHAUST MANIFOLD
DESCRIPTION 152
OPERATION 152
EXHAUST MANIFOLD - RIGHT
REMOVAL 152
CLEANING 152
INSPECTION 153
INSTALLATION 153
EXHAUST MANIFOLD - LEFT
REMOVAL 154
CLEANING 154
INSPECTION 154
INSTALLATION 154
VALVE TIMING
STANDARD PROCEDURE
STANDARD PROCEDURE - VALVE TIMING VERIFICATION 155
STANDARD PROCEDURE - MEASURING TIMING CHAIN WEAR 155
TIMING CHAIN COVER
REMOVAL 155
INSTALLATION 156
TIMING CHAIN AND SPROCKETS
REMOVAL
REMOVAL - TIMING CHAIN AND CAMSHAFT SPROCKET 159
REMOVAL - CRANKSHAFT SPROCKET . . . 159
INSTALLATION
INSTALLATION - CRANKSHAFT SPROCKET 159
INSTALLATION - TIMING CHAIN AND CAMSHAFT SPROCKET 159

ENGINE 3.3/3.8L

DESCRIPTION

The 3.3 Liter (201 cu. in.) and 3.8 Liter (231 cu. in.) engines are 60° V-6 engines with cast iron cylinder blocks and aluminum cylinder heads (Fig. 1). The engine uses a single, block mounted camshaft with pushrods to actuate the valves. These engines do not have provisions for a free wheeling valve train.

The firing order is 1–2–3–4–5–6. The cylinders are numbered from the front of the engine to the rear. The front cylinder bank is numbered 2, 4, and 6. The rear cylinder bank is numbered 1, 3, and 5.

The engine identification number is located on the rear of the cylinder block just below the cylinder head (Fig. 2).

ENGINE 3.3/3.8L (Continued)

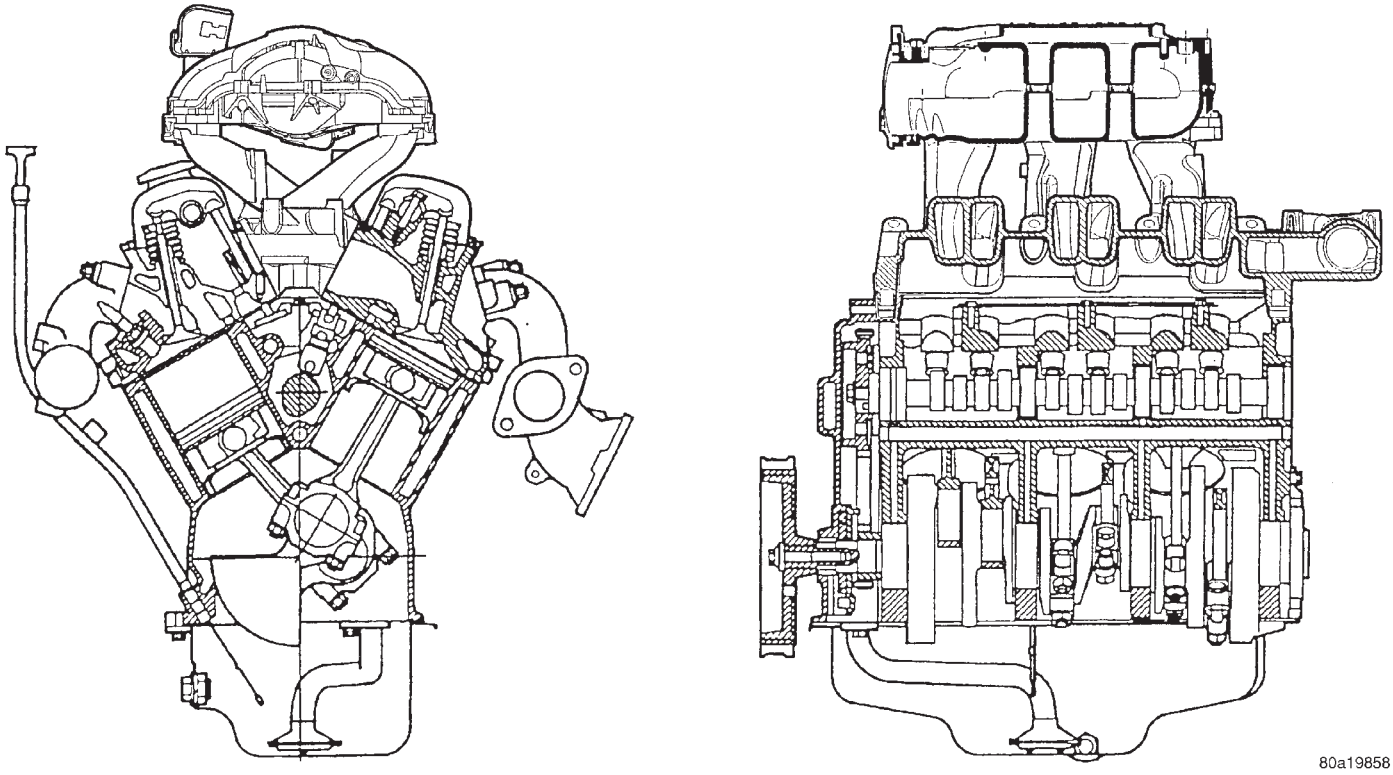

Fig. 1 3.3/3.8L V-6 Engines

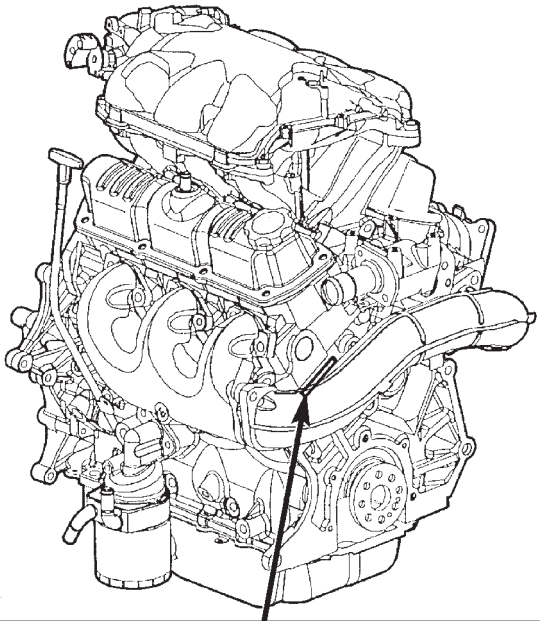

X Model Year	X Manufacturing Plant	XXXXX Component Code/Usage	XXXX Month/Day	XXXXXXXX Serial Code
Last digit of model year	Saltillo S Trenton T	Engine 2.4L 3.3/3.8L Usage Pass Car PC Truck T		Last 8 Digits of VIN

80ac274f

Fig. 2 Engine Identification

DIAGNOSIS AND TESTING

DIAGNOSIS AND TESTING - ENGINE

DIAGNOSIS - INTRODUCTION

Engine diagnosis is helpful in determining the causes of malfunctions not detected and remedied by routine maintenance.

These malfunctions may be classified as either mechanical (e.g., a strange noise), or performance (e.g., engine idles rough and stalls).

Refer to the Engine Mechanical and the Engine Performance diagnostic charts, for possible causes and corrections of malfunctions (Refer to 9 - ENGINE - DIAGNOSIS AND TESTING - MECHANICAL) (Refer to 9 - ENGINE - DIAGNOSIS AND TESTING - PERFORMANCE).

For fuel system diagnosis, (Refer to 14 - FUEL SYSTEM/FUEL DELIVERY - DIAGNOSIS AND TESTING).

Additional tests and diagnostic procedures may be necessary for specific engine malfunctions that cannot be isolated with the Service Diagnosis charts. Information concerning additional tests and diagnosis is provided within the following:

- Cylinder Compression Pressure Test
- Cylinder Combustion Pressure Leakage Test
- Engine Cylinder Head Gasket Failure Diagnosis
- Intake Manifold Leakage Diagnosis
- Hydraulic Lash Adjuster Noise Diagnosis
- Engine Oil Leak Inspection

ENGINE 3.3/3.8L (Continued)

DIAGNOSIS AND TESTING - ENGINE DIAGNOSIS - PERFORMANCE

CONDITION	POSSIBLE CAUSE	CORRECTION
ENGINE WILL NOT START	1. Weak battery.	1. Test battery. Charge or replace as necessary. (Refer to 8 - ELECTRICAL/BATTERY SYSTEM - DIAGNOSIS AND TESTING)
	2. Corroded or loose battery connections.	2. Clean and tighten battery connections. Apply a coat of light mineral grease to terminals.
	3. Faulty starter.	3. Test starting system. (Refer to 8 - ELECTRICAL/STARTING - DIAGNOSIS AND TESTING)
	4. Faulty coil(s) or control unit.	4. Test and replace as needed. (Refer to Appropriate Diagnostic Information)
	5. Incorrect spark plug gap.	5. Set gap. (Refer to 8 - ELECTRICAL/IGNITION CONTROL - SPECIFICATIONS)
	6. Contamination in fuel system.	6. Clean system and replace fuel filter.
	7. Faulty fuel pump.	7. Test fuel pump and replace as needed. (Refer to Appropriate Diagnostic Information)
	8. Incorrect engine timing.	8. Check for a skipped timing belt/chain.
ENGINE STALLS OR IDLES ROUGH	1. Idle speed too low.	1. Test minimum air flow. (Refer to Appropriate Diagnostic Information)
	2. Incorrect fuel mixture.	2. (Refer to Appropriate Diagnostic Information)
	3. Intake manifold leakage.	3. Inspect intake manifold, manifold gasket, and vacuum hoses.
	4. Faulty ignition coil(s).	4. Test and replace as necessary. (Refer to Appropriate Diagnostic Information)

ENGINE 3.3/3.8L (Continued)

CONDITION	POSSIBLE CAUSE	CORRECTION
ENGINE LOSS OF POWER	1. Dirty or incorrectly gapped plugs.	1. Clean plugs and set gap.
	2. Contamination in fuel system.	2. Clean system and replace fuel filter.
	3. Faulty fuel pump.	3. Test and replace as necessary. (Refer to Appropriate Diagnostic Information)
	4. Incorrect valve timing.	4. Correct valve timing.
	5. Leaking cylinder head gasket.	5. Replace cylinder head gasket.
	6. Low compression.	6. Test compression of each cylinder.
	7. Burned, warped, or pitted valves.	7. Replace valves.
	8. Plugged or restricted exhaust system.	8. Perform exhaust restriction test. (Refer to 11 - EXHAUST SYSTEM - DIAGNOSIS AND TESTING) Install new parts, as necessary.
	9. Faulty ignition coil(s).	9. Test and replace as necessary. (Refer to Appropriate Diagnostic Information)
ENGINE MISSES ON ACCELERATION	1. Dirty or incorrectly gapped spark plugs.	1. Clean spark plugs and set gap.
	2. Contamination in Fuel System.	2. Clean fuel system and replace fuel filter.
	3. Burned, warped, or pitted valves.	3. Replace valves.
	4. Faulty ignition coil(s).	4. Test and replace as necessary. (Refer to Appropriate Diagnostic Information)
ENGINE MISSES AT HIGH SPEED	1. Dirty or incorrect spark plug gap.	1. Clean spark plugs and set gap.
	2. Faulty ignition coil(s).	2. Test and replace as necessary. (Refer to Appropriate Diagnostic Information)
	3. Dirty fuel injector(s).	3. Test and replace as necessary. (Refer to Appropriate Diagnostic Information)
	4. Contamination in fuel system.	4. Clean system and replace fuel filter.

ENGINE 3.3/3.8L (Continued)

DIAGNOSIS AND TESTING - ENGINE DIAGNOSIS - MECHANICAL

CONDITION	POSSIBLE CAUSES	CORRECTION
NOISY VALVES	1. High or low oil level in crankcase.	1. Check and correct engine oil level.
	2. Thin or diluted oil.	2. Change oil to correct viscosity.
	3. Thick oil	3. (a) Change engine oil and filter. (b) Run engine to operating temperature. (c) Change engine oil and filter again.
	4. Low oil pressure.	4. Check and correct engine oil pressure problem.
	5. Dirt in hydraulic lifters/lash adjusters.	5. Replace hydraulic lifters/lash adjusters.
	6. Worn rocker arms.	6. Inspect oil supply to rocker arms.
	7. Worn hydraulic lifters/lash adjusters.	7. Replace hydraulic lifters/lash adjusters.
	8. Worn valve guides.	8. Replace cylinder head assembly.
	9. Excessive runout of valve seats on valve faces.	9. Grind valve seats and valves.
CONNECTING ROD NOISE	1. Insufficient oil supply.	1. Check engine oil level.
	2. Low oil pressure.	2. Check engine oil level. Inspect oil pump relief valve and spring.
	3. Thin or diluted oil.	3. Change oil to correct viscosity.
	4. Thick oil	4. (a) Change engine oil and filter. (b) Run engine to operating temperature. (c) Change engine oil and filter again.
	5. Excessive bearing clearance.	5. Measure bearings for correct clearance. Repair as necessary.
	6. Connecting rod journal out-of-round.	6. Replace crankshaft or grind surface.
	7. Misaligned connecting rods.	7. Replace bent connecting rods.

ENGINE 3.3/3.8L (Continued)

CONDITION	POSSIBLE CAUSES	CORRECTION
MAIN BEARING NOISE	1. Insufficient oil supply.	1. Check engine oil level.
	2. Low oil pressure.	2. Check engine oil level. Inspect oil pump relief valve and spring.
	3. Thin or diluted oil.	3. Change oil to correct viscosity.
	4. Thick oil	4. (a) Change engine oil and filter. (b) Run engine to operating temperature. (c) Change engine oil and filter again.
	5. Excessive bearing clearance.	5. Measure bearings for correct clearance. Repair as necessary.
	6. Excessive end play.	6. Check thrust bearing for wear on flanges.
	7. Crankshaft journal out-of-round or worn.	7. Replace crankshaft or grind journals.
	8. Loose flywheel or torque converter.	8. Tighten to correct torque.
OIL PRESSURE DROP	1. Low oil level.	1. Check engine oil level.
	2. Faulty oil pressure sensor/switch.	2. Replace oil pressure sensor/ switch.
	3. Low oil pressure.	3. Check oil pressure sensor/switch and main bearing oil clearance.
	4. Clogged oil filter.	4. Install new oil filter.
	5. Worn parts in oil pump.	5. Replace worn parts or pump.
	6. Thin or diluted oil.	6. Change oil to correct viscosity.
	7. Oil pump relief valve stuck.	7. Remove valve and inspect, clean, or replace.
	8. Oil pump suction tube loose.	8. Remove oil pan and install new tube or clean, if necessary.
	9. Oil pump cover warped or cracked.	9. Install new oil pump.
	10. Excessive bearing clearance.	10. Measure bearings for correct clearance.
OIL LEAKS	1. Misaligned or deteriorated gaskets.	1. Replace gasket(s).
	2. Loose fastener, broken or porous metal part.	2. Tighten, repair or replace the part.
	3. Misaligned or deteriorated cup or threaded plug.	3. Replace as necessary.

ENGINE 3.3/3.8L (Continued)

CONDITION	POSSIBLE CAUSES	CORRECTION
OIL CONSUMPTION OR SPARK PLUGS FOULED	1. PCV system malfunction.	1. Check system and repair as necessary. (Refer to 25 - EMISSIONS CONTROL/ EVAPORATIVE EMISSIONS/PCV VALVE - DIAGNOSIS AND TESTING)
	2. Worn, scuffed or broken rings.	2. Hone cylinder bores. Install new rings.
	3. Carbon in oil ring slots.	3. Install new rings.
	4. Rings fitted too tightly in grooves.	4. Remove rings and check grooves. If groove is not proper width, replace piston.
	5. Worn valve guide(s).	5. Replace cylinder head assembly.
	6. Valve stem seal(s) worn or damaged.	6. Replace seal(s).

DIAGNOSIS AND TESTING - ENGINE OIL LEAK INSPECTION

Begin with a thorough visual inspection of the engine, particularly at the area of the suspected leak. If an oil leak source is not readily identifiable, the following steps should be followed:

(1) Do not clean or degrease the engine at this time because some solvents may cause rubber to swell, temporarily stopping the leak.

(2) Add an oil soluble dye (use as recommended by manufacturer). Start the engine and let idle for approximately 15 minutes. Check the oil dipstick to make sure the dye is thoroughly mixed as indicated with a bright yellow color under a black light.

(3) Using a black light, inspect the entire engine for fluorescent dye, particularly at the suspected area of oil leak. If the oil leak is found and identified, repair as necessary.

(4) If dye is not observed, drive the vehicle at various speeds for approximately 24 km (15 miles), and repeat inspection.

(5) **If the oil leak source is not positively identified at this time**, proceed with the air leak detection test method as follows:

- Disconnect the fresh air hose (make-up air) at the cylinder head cover and plug or cap the nipple on the cover.
- Remove the PCV valve hose from the cylinder head cover. Cap or plug the PCV valve nipple on the cover.
- Attach an air hose with pressure gauge and regulator to the dipstick tube.

CAUTION: Do not subject the engine assembly to more than 20.6 kpa (3 PSI) of test pressure.

- Gradually apply air pressure from 1 psi to 2.5 psi maximum while applying soapy water at the suspected source. Adjust the regulator to the suitable test pressure that provides the best bubbles which will pinpoint the leak source. If the oil leak is detected and identified, repair per service manual procedures.
- If the leakage occurs at the crankshaft rear oil seal area, refer to the section, Inspection for Rear Seal Area Leak.

(6) If no leaks are detected, turn off the air supply. Remove the air hose, all plugs, and caps. Install the PCV valve and fresh air hose (make-up air). Proceed to next step.

(7) Clean the oil off the suspect oil leak area using a suitable solvent. Drive the vehicle at various speeds approximately 24 km (15 miles). Inspect the engine for signs of an oil leak by using a black light.

NOTE: If oil leakage is observed at the dipstick tube to block location; remove the tube, clean and reseal using Mopar® Stud & Bearing Mount (press fit tube applications only), and for O-ring style tubes, remove tube and replace the O-ring seal.

INSPECTION FOR REAR SEAL AREA LEAKS

Since it is sometimes difficult to determine the source of an oil leak in the rear seal area of the engine, a more involved inspection is necessary. The following steps should be followed to help pinpoint the source of the leak.

If the leakage occurs at the crankshaft rear oil seal area:

(1) Disconnect the battery.

(2) Raise the vehicle.

ENGINE 3.3/3.8L (Continued)

(3) Remove torque converter or clutch housing cover and inspect rear of block for evidence of oil. Use a black light to check for the oil leak. If a leak is present in this area, remove transmission for further inspection.

(a) Circular spray pattern generally indicates seal leakage or crankshaft damage.

(b) Where leakage tends to run straight down, possible causes are a porous block, oil gallery cup plug, bedplate to cylinder block mating surfaces and seal bore. See proper repair procedures for these items.

(4) If no leaks are detected, pressurize the crankcase as previously described.

CAUTION: Do not exceed 20.6 kPa (3 psi).

(5) If the leak is not detected, very slowly turn the crankshaft and watch for leakage. If a leak is detected between the crankshaft and seal while slowly turning the crankshaft, it is possible the crankshaft seal surface is damaged. The seal area on the crankshaft could have minor nicks or scratches that can be polished out with emery cloth.

CAUTION: Use extreme caution when crankshaft polishing is necessary to remove minor nicks and scratches. The crankshaft seal flange is especially machined to complement the function of the rear oil seal.

(6) For bubbles that remain steady with shaft rotation, no further inspection can be done until disassembled.

(7) After the oil leak root cause and appropriate corrective action have been identified, replace component(s) as necessary.

DIAGNOSIS AND TESTING - CYLINDER COMPRESSION PRESSURE TEST

The results of a cylinder compression pressure test can be utilized to diagnose several engine malfunctions.

Ensure the battery is completely charged and the engine starter motor is in good operating condition. Otherwise the indicated compression pressures may not be valid for diagnosis purposes.

(1) Check engine oil level and add oil if necessary.

(2) Drive the vehicle until engine reaches normal operating temperature. Select a route free from traffic and other forms of congestion, observe all traffic laws, and accelerate through the gears several times briskly.

(3) Remove all spark plugs from engine. As spark plugs are being removed, check electrodes for abnormal firing indicators fouled, hot, oily, etc. Record cylinder number of spark plug for future reference.

(4) Remove the Auto Shutdown (ASD) relay from the PDC.

(5) Be sure throttle blade is fully open during the compression check.

(6) Insert compression gauge adaptor Special Tool 8116 or the equivalent, into the #1 spark plug hole in cylinder head. Connect the 0–500 psi (Blue) pressure transducer (Special Tool CH7059) with cable adaptors to the DRBIII®. For Special Tool identification, (Refer to 9 - ENGINE - SPECIAL TOOLS).

(7) Crank engine until maximum pressure is reached on gauge. Record this pressure as #1 cylinder pressure.

(8) Repeat the previous step for all remaining cylinders.

(9) Compression should not be less than 689 kPa (100 psi) and not vary more than 25 percent from cylinder to cylinder.

(10) If one or more cylinders have abnormally low compression pressures, repeat the compression test.

(11) If the same cylinder or cylinders repeat an abnormally low reading on the second compression test, it could indicate the existence of a problem in the cylinder in question. **The recommended compression pressures are to be used only as a guide to diagnosing engine problems. An engine should not be disassembled to determine the cause of low compression unless some malfunction is present.**

DIAGNOSIS AND TESTING - CYLINDER COMBUSTION PRESSURE LEAKAGE TEST

The combustion pressure leakage test provides an accurate means for determining engine condition.

Combustion pressure leakage testing will detect:

- Exhaust and intake valve leaks (improper seating).
- Leaks between adjacent cylinders or into water jacket.
- Any causes for combustion/compression pressure loss.

WARNING: DO NOT REMOVE THE PRESSURE CAP WITH THE SYSTEM HOT AND UNDER PRESSURE BECAUSE SERIOUS BURNS FROM COOLANT CAN OCCUR.

Check the coolant level and fill as required. DO NOT install the pressure cap.

Start and operate the engine until it attains normal operating temperature, then turn the engine OFF.

Clean spark plug recesses with compressed air.

Remove the spark plugs.

Remove the oil filler cap.

Remove the air cleaner.

ENGINE 3.3/3.8L (Continued)

Calibrate the tester according to the manufacturer's instructions. The shop air source for testing should maintain 483 kPa (70 psi) minimum, 1,379 kPa (200 psi) maximum, with 552 kPa (80 psi) recommended.

Perform the test procedures on each cylinder according to the tester manufacturer's instructions. While testing, listen for pressurized air escaping through the throttle body, tailpipe and oil filler cap opening. Check for bubbles in the coolant.

All gauge pressure indications should be equal, with no more than 25% leakage per cylinder.

FOR EXAMPLE: At 552 kPa (80 psi) input pressure, a minimum of 414 kPa (60 psi) should be maintained in the cylinder.

STANDARD PROCEDURE

STANDARD PROCEDURE - MEASURING BEARING CLEARANCE USING PLASTIGAGE

Engine crankshaft bearing clearances can be determined by use of Plastigage or equivalent. The following is the recommended procedure for the use of Plastigage:

(1) Remove oil film from surface to be checked. Plastigage is soluble in oil.

(2) Place a piece of Plastigage across the entire width of the bearing shell in the cap approximately 6.35 mm (1/4 in.) off center and away from the oil holes (Fig. 3). (In addition, suspected areas can be checked by placing the Plastigage in the suspected area). Torque the bearing cap bolts of the bearing being checked to the proper specifications.

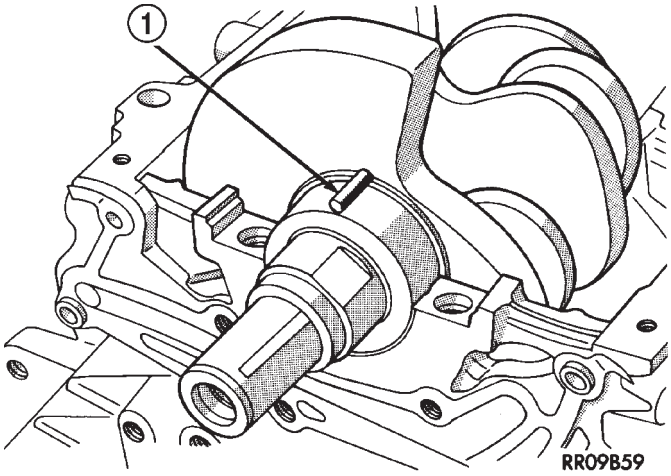

Fig. 3 Plastigage Placed in Lower Shell—Typical

1 - PLASTIGAGE

(3) Remove the bearing cap and compare the width of the flattened Plastigage with the metric scale provided on the package. Locate the band closest to the same width. This band shows the amount of clearance in thousandths of a millimeter. Differences in readings between the ends indicate the amount of taper present. Record all readings taken. Compare clearance measurements to specs found in engine specifications (Refer to 9 - ENGINE - SPECIFICATIONS). **Plastigage generally is accompanied by two scales. One scale is in inches, the other is a metric scale.**

NOTE: Plastigage is available in a variety of clearance ranges. Use the most appropriate range for the specifications you are checking.

(4) Install the proper crankshaft bearings to achieve the specified bearing clearances.

STANDARD PROCEDURE - FORM-IN-PLACE GASKETS AND SEALERS

There are numerous places where form-in-place gaskets are used on the engine. Care must be taken when applying form-in-place gaskets to assure obtaining the desired results. **Do not use form-in-place gasket material unless specified.** Bead size, continuity, and location are of great importance. Too thin a bead can result in leakage while too much can result in spill-over which can break off and obstruct fluid feed lines. A continuous bead of the proper width is essential to obtain a leak-free gasket.

There are numerous types of form-in-place gasket materials that are used in the engine area. Mopar® Engine RTV GEN II, Mopar® ATF-RTV, and Mopar® Gasket Maker gasket materials, each have different properties and can not be used in place of the other.

MOPAR® ENGINE RTV GEN II is used to seal components exposed to engine oil. This material is a specially designed black silicone rubber RTV that retains adhesion and sealing properties when exposed to engine oil. Moisture in the air causes the material to cure. This material is available in three ounce tubes and has a shelf life of one year. After one year this material will not properly cure. Always inspect the package for the expiration date before use.

MOPAR® ATF RTV is a specifically designed black silicone rubber RTV that retains adhesion and sealing properties to seal components exposed to automatic transmission fluid, engine coolants, and moisture. This material is available in three ounce tubes and has a shelf life of one year. After one year this material will not properly cure. Always inspect the package for the expiration date before use.

ENGINE 3.3/3.8L (Continued)

MOPAR® GASKET MAKER is an anaerobic type gasket material. The material cures in the absence of air when squeezed between two metallic surfaces. It will not cure if left in the uncovered tube. The anaerobic material is for use between two machined surfaces. Do not use on flexible metal flanges.

MOPAR® BED PLATE SEALANT is a unique (green-in-color) anaerobic type gasket material that is specially made to seal the area between the bedplate and cylinder block without disturbing the bearing clearance or alignment of these components. The material cures slowly in the absence of air when torqued between two metallic surfaces, and will rapidly cure when heat is applied.

MOPAR® GASKET SEALANT is a slow drying, permanently soft sealer. This material is recommended for sealing threaded fittings and gaskets against leakage of oil and coolant. Can be used on threaded and machined parts under all temperatures. This material is used on engines with multi-layer steel (MLS) cylinder head gaskets. This material also will prevent corrosion. Mopar® Gasket Sealant is available in a 13 oz. aerosol can or 4oz./16 oz. can w/applicator.

SEALER APPLICATION

Mopar® Gasket Maker material should be applied sparingly 1 mm (0.040 in.) diameter or less of sealant to one gasket surface. Be certain the material surrounds each mounting hole. Excess material can easily be wiped off. Components should be torqued in place within 15 minutes. The use of a locating dowel is recommended during assembly to prevent smearing material off the location.

Mopar® Engine RTV GEN II or ATF RTV gasket material should be applied in a continuous bead approximately 3 mm (0.120 in.) in diameter. All mounting holes must be circled. For corner sealing, a 3.17 or 6.35 mm (1/8 or 1/4 in.) drop is placed in the center of the gasket contact area. Uncured sealant may be removed with a shop towel. Components should be torqued in place while the sealant is still wet to the touch (within 10 minutes). The usage of a locating dowel is recommended during assembly to prevent smearing material off the location.

Mopar® Gasket Sealant in an aerosol can should be applied using a thin, even coat sprayed completely over both surfaces to be joined, and both sides of a gasket. Then proceed with assembly. Material in a can w/applicator can be brushed on evenly over the sealing surfaces. Material in an aerosol can should be used on engines with multi-layer steel gaskets.

STANDARD PROCEDURE - ENGINE GASKET SURFACE PREPARATION

To ensure engine gasket sealing, proper surface preparation must be performed, especially with the use of aluminum engine components and multi-layer steel cylinder head gaskets.

Never use the following to clean gasket surfaces:

- Metal scraper
- Abrasive pad or paper to clean cylinder block and head
- High speed power tool with an abrasive pad or a wire brush (Fig. 4)

NOTE: Multi-Layer Steel (MLS) head gaskets require a scratch free sealing surface.

Only use the following for cleaning gasket surfaces:

- Solvent or a commercially available gasket remover
- Plastic or wood scraper (Fig. 4)
- Drill motor with 3M Roloc™ Bristle Disc (white or yellow) (Fig. 4)

CAUTION: Excessive pressure or high RPM (beyond the recommended speed), can damage the sealing surfaces. The mild (white, 120 grit) bristle disc is recommended. If necessary, the medium (yellow, 80 grit) bristle disc may be used on cast iron surfaces with care.

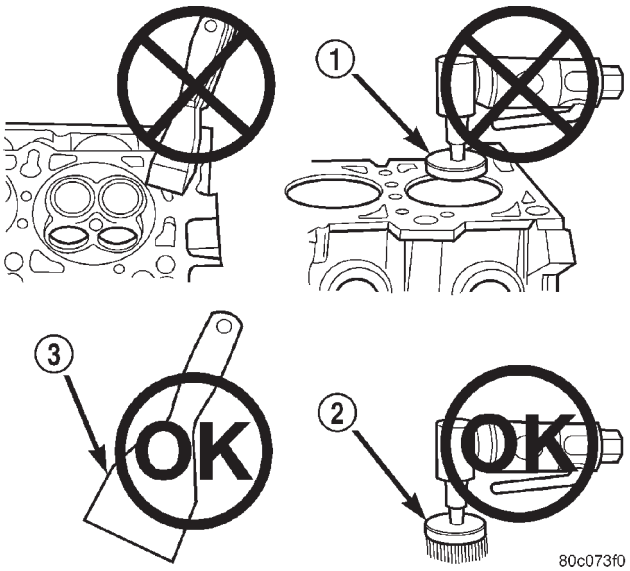

Fig. 4 Proper Tool Usage For Surface Preparation

1 - ABRASIVE PAD
2 - 3M ROLOC™ BRISTLE DISC
3 - PLASTIC/WOOD SCRAPER

ENGINE 3.3/3.8L (Continued)

STANDARD PROCEDURE - HYDROSTATIC LOCKED ENGINE

When an engine is suspected to be hydrostatically locked, regardless of what caused the problem, the following steps should be used.

CAUTION: DO NOT use starter motor to rotate the engine, severe damage may occur.

(1) Inspect air cleaner, induction system and intake manifold to insure system is dry and clear of foreign material.
(2) Remove negative battery cable.
(3) Place a shop towel around the spark plugs when removing them from the engine. This will catch any fluid that may possibly be in the cylinder under pressure.
(4) With all spark plugs removed, rotate engine crankshaft using a breaker bar and socket.
(5) Identify the fluid in the cylinder(s) (i.e., coolant, fuel, oil or other).
(6) Make sure all fluid has been removed from the cylinders. Inspect engine for damage (i.e., connecting rods, pistons, valves, etc.)
(7) Repair engine or components as necessary to prevent this problem from re-occurring.

CAUTION: Squirt approximately one teaspoon of oil into the cylinders, rotate engine to lubricate the cylinder walls to prevent damage on restart.

(8) Install new spark plugs.
(9) Drain engine oil and remove oil filter.
(10) Install a new oil filter.
(11) Fill engine with specified amount of approved oil.
(12) Connect negative battery cable.
(13) Start engine and check for any leaks.

STANDARD PROCEDURE - REPAIR OF DAMAGED OR WORN THREADS

Damaged or worn threads (excluding spark plug and camshaft bearing cap attaching threads) can be repaired. Essentially, this repair consists of drilling out worn or damaged threads, tapping the hole with a special Heli-Coil Tap, (or equivalent) and installing an insert into the tapped hole. This brings the hole back to its original thread size.

CAUTION: Be sure that the tapped holes maintain the original center line.

Heli-Coil tools and inserts are readily available from automotive parts jobbers.

STANDARD PROCEDURE - ENGINE CORE AND OIL GALLERY PLUGS

Using a blunt tool such as a drift and a hammer, strike the bottom edge of the cup plug. With the cup plug rotated, grasp firmly with pliers or other suitable tool and remove plug (Fig. 5).

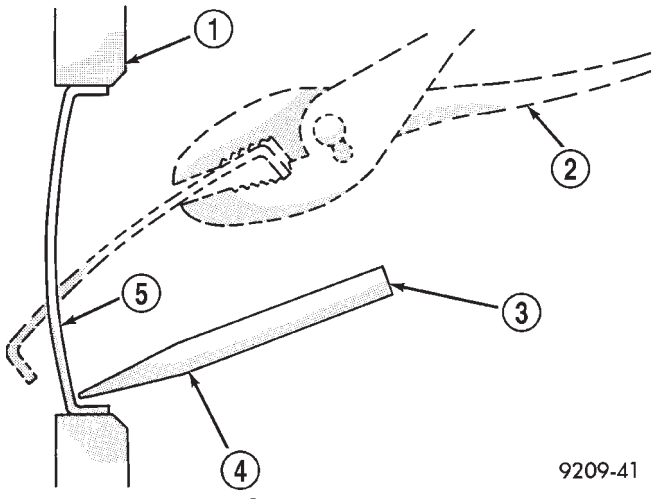

Fig. 5 Core Hole Plug Removal

1 - CYLINDER BLOCK
2 - REMOVE PLUG WITH PLIERS
3 - STRIKE HERE WITH HAMMER
4 - DRIFT PUNCH
5 - CUP PLUG

CAUTION: Do not drive cup plug into the casting as restricted cooling can result and cause serious engine problems.

Thoroughly clean inside of cup plug hole in cylinder block or head. Be sure to remove old sealer. Lightly coat inside of cup plug hole with Mopar® Stud and Bearing Mount. Make certain the new plug is cleaned of all oil or grease. Using proper drive plug, drive plug into hole so that the sharp edge of the plug is at least 0.5 mm (0.020 in.) inside the lead-in chamfer.

It is not necessary to wait for curing of the sealant. The cooling system can be refilled and the vehicle placed in service immediately.

ENGINE 3.3/3.8L (Continued)

REMOVAL - ENGINE ASSEMBLY

(1) Perform fuel pressure release procedure (Refer to 14 - FUEL SYSTEM/FUEL DELIVERY - STANDARD PROCEDURE).
(2) Disconnect negative battery cable.
(3) Remove air cleaner and hoses.
(4) Disconnect the fuel line from fuel rail (Refer to 14 - FUEL SYSTEM/FUEL DELIVERY/QUICK CONNECT FITTING - STANDARD PROCEDURE).
(5) Remove the wiper module (Refer to 8 - ELECTRICAL/WIPERS/WASHERS/WIPER MODULE - REMOVAL).
(6) Block off heater hoses to the rear heater system using pinch-off pliers (if equipped).
(7) Drain the cooling system (Refer to 7 - COOLING - STANDARD PROCEDURE).
(8) Disconnect the heater hoses.
(9) Remove the radiator upper support crossmember (Refer to 23 - BODY/EXTERIOR/GRILLE OPENING REINFORCEMENT - REMOVAL).
(10) Remove the radiator fans (Refer to 7 - COOLING/ENGINE/RADIATOR FAN - REMOVAL).
(11) Disconnect the throttle cables from the throttle body.
(12) Disconnect the MAP, IAC, and TPS electrical connectors.
(13) Disconnect the EGR transducer electrical connector (if equipped).
(14) Disconnect the vacuum hoses from throttle body.
(15) Disconnect the brake booster and speed control vacuum hoses.
(16) Disengage wire harness clip from the right side engine mount.
(17) Remove the power steering reservoir from mounting position and set aside. **Do not** disconnect hose.
(18) Disconnect ground strap from rear of cylinder head.
(19) Disconnect engine coolant temperature (ECT) sensor and ignition coil electrical connectors.
(20) Disconnect the fuel injector electrical harness connector and disengage clip from support bracket.
(21) Disconnect camshaft and crankshaft position sensor electrical connectors.
(22) Evacuate air conditioning system. Refer to 24 - HEATING & AIR CONDITIONING.
(23) Disconnect A/C compressor electrical connector.
(24) Disconnect the A/C lines from compressor. Cover and seal all openings of hoses and compressor.
(25) Remove the radiator upper hose.
(26) Disengage electrical harness clip at transaxle dipstick tube.
(27) Remove transaxle dipstick tube. Seal opening using a suitable plug.

NOTE: When the transaxle cooler lines are removed from the rolled-groove type fittings at the transaxle, damage to the inner wall of the hose will occur. To prevent prevent potential leakage, the cooler hoses must be cut off flush at the transaxle fitting, and a service cooler hose splice kit must be installed upon reassembly.

(28) Using a blade or suitable hose cutter, cut transaxle oil cooler lines off flush with fittings. Plug cooler lines and fittings to prevent debris from entering transaxle or cooler circuit. A service splice kit will be installed upon reassembly.
(29) Disconnect transaxle shift linkage and electrical connectors.
(30) Raise vehicle on hoist and drain the engine oil.
(31) Remove the axle shafts. (Refer to 3 - DIFFERENTIAL & DRIVELINE/HALF SHAFT - REMOVAL)
(32) Remove crossmember cradle plate (Fig. 6).

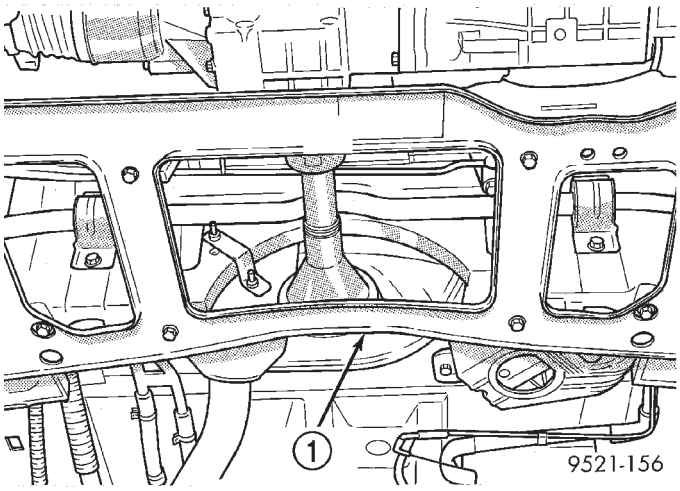

Fig. 6 Crossmember Cradle Plate

1 - CRADLE PLATE

ENGINE 3.3/3.8L (Continued)

(33) **AWD equipped:** Remove the power transfer unit (PTU) (Refer to 21 - TRANSMISSION/TRANSAXLE/POWER TRANSFER UNIT - REMOVAL).

(34) Disconnect exhaust pipe from the manifold (Fig. 7).

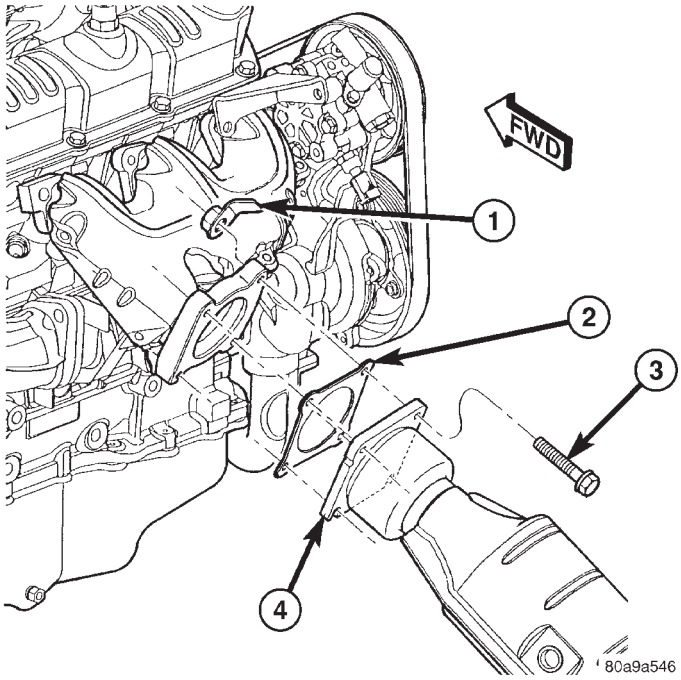

Fig. 7 Catalytic Converter to Exhaust Manifold

1 - FLAG NUT
2 - GASKET
3 - BOLT
4 - CATALYTIC CONVERTER

(35) Remove front engine mount and bracket as an assembly.

(36) Remove the engine rear mount bracket.

(37) Remove the engine to transaxle struts (Fig. 8).

(38) Remove transaxle case cover (Fig. 8).

(39) Remove flex plate to torque converter bolts. Mark torque converter to flex plate for orientation for reassembly.

(40) Remove the power steering pressure hose support clip attaching bolt.

(41) Disconnect the knock sensor electrical connector (3.8L only).

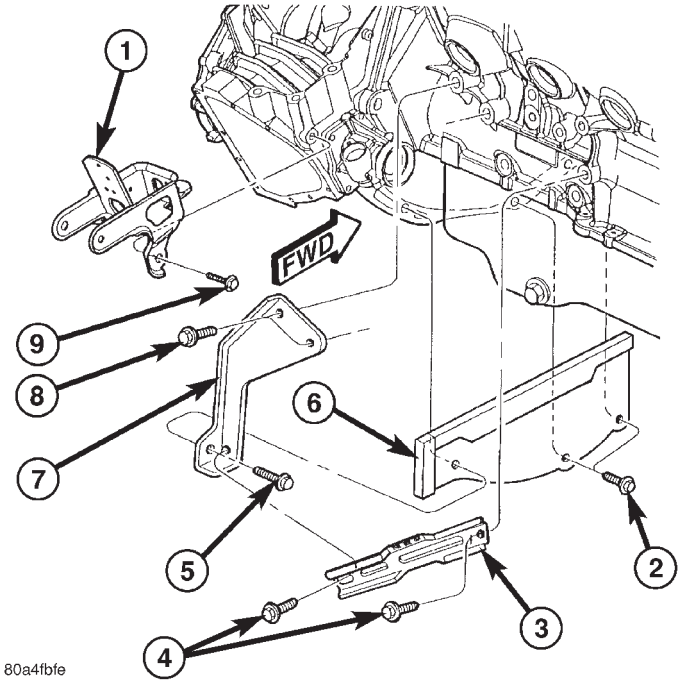

Fig. 8 POWERTRAIN SUPPORTS AND DUST COVER

1 - BRACKET - ENGINE REAR MOUNT
2 - BOLT - TRANSAXLE CASE COVER
3 - STRUT - TRANSAXLE TO ENGINE HORIZONTAL
4 - BOLT - HORIZONTAL STRUT
5 - BOLT - STRUT TO TRANSAXLE
6 - COVER - TRANSAXLE CASE LOWER
7 - STRUT - TRANSAXLE TO ENGINE
8 - BOLT - STRUT TO ENGINE
9 - BOLT - ENGINE REAR MOUNT BRACKET

(42) Disconnect the engine block heater electrical connector (if equipped).

(43) Remove the accessory belt splash shield.

(44) Remove accessory drive belt (Refer to 7 - COOLING/ACCESSORY DRIVE/DRIVE BELTS - REMOVAL).

(45) Disconnect the radiator lower hose.

(46) Remove air conditioning compressor from engine.

(47) Remove the generator (Refer to 8 - ELECTRICAL/CHARGING/GENERATOR - REMOVAL).

ENGINE 3.3/3.8L (Continued)

(48) Remove the water pump pulley attaching bolts and position pulley between pump hub and housing.

(49) Disconnect the oil pressure switch electrical connector.

(50) Disconnect wiring harness support clip from engine oil dipstick tube.

(51) Install Special Tools 6912 and 8444 Adapters on the right side (rear) of engine block (Fig. 9).

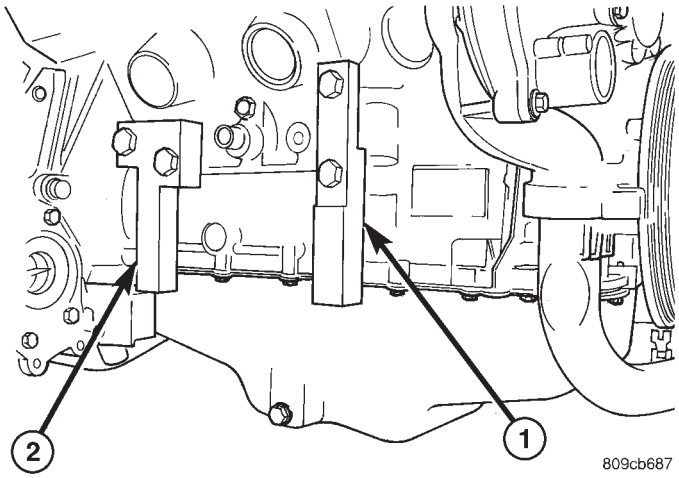

Fig. 9 ADAPTER TOOLS MOUNTED ON BLOCK

1 - SPECIAL TOOL 6912
2 - SPECIAL TOOL 8444

(52) Lower the vehicle.

(53) Remove the power steering pump and set aside.

(54) Raise vehicle enough to allow engine dolly Special Tool 6135 and cradle Special Tool 6710 with post Special Tool 6848 and adaptor Special Tool 6909 to be installed under vehicle (Fig. 12).

(55) Loosen cradle/post mounts to allow movement for positioning posts into locating holes on the engine (Fig. 10) and (Fig. 11). Slowly lower vehicle and position cradle/post mounts until the engine is resting on posts. Tighten all cradle/post mounts to cradle frame. This will keep mounts from moving when removing or installing engine and transmission.

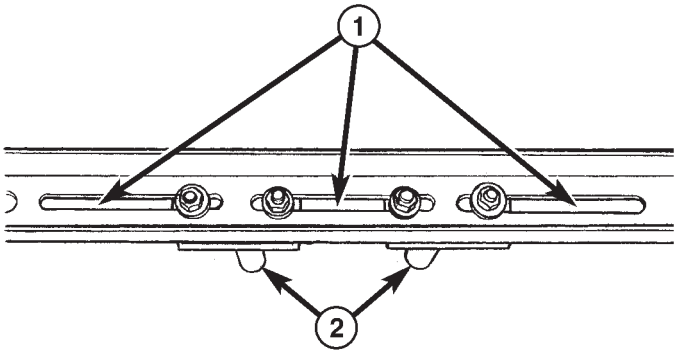

Fig. 10 Positioning Special Tool 6848 for use with Adapters 8444 & 6912

1 - SLOTS
2 - SPECIAL TOOLS 6848

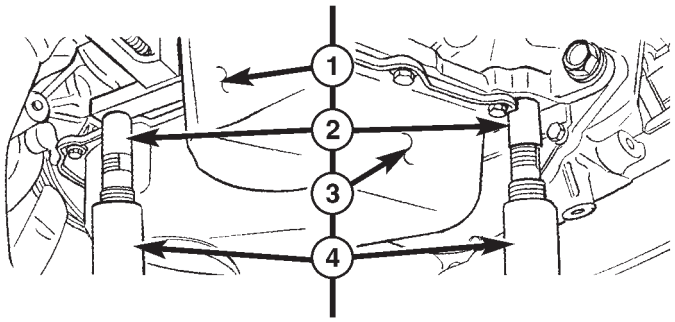

Fig. 11 Special Tools 6848 with Adapters 6909

1 - OIL FILTER
2 - SPECIAL TOOLS 6909
3 - OIL PAN
4 - SPECIAL TOOLS 6848

(56) Lower vehicle so the weight of **ONLY THE ENGINE AND TRANSMISSION** is on the cradle.

(57) Install and secure the safety straps to the cradle fixture and around the engine (Fig. 12).

(58) Remove the engine right side mount to engine attaching bolts (Fig. 13).

(59) Remove the left mount through bolt (Fig. 14).

(60) Raise vehicle slowly. It is necessary to move the engine/transmission assembly with the dolly to allow for removal around body flanges.

ENGINE 3.3/3.8L (Continued)

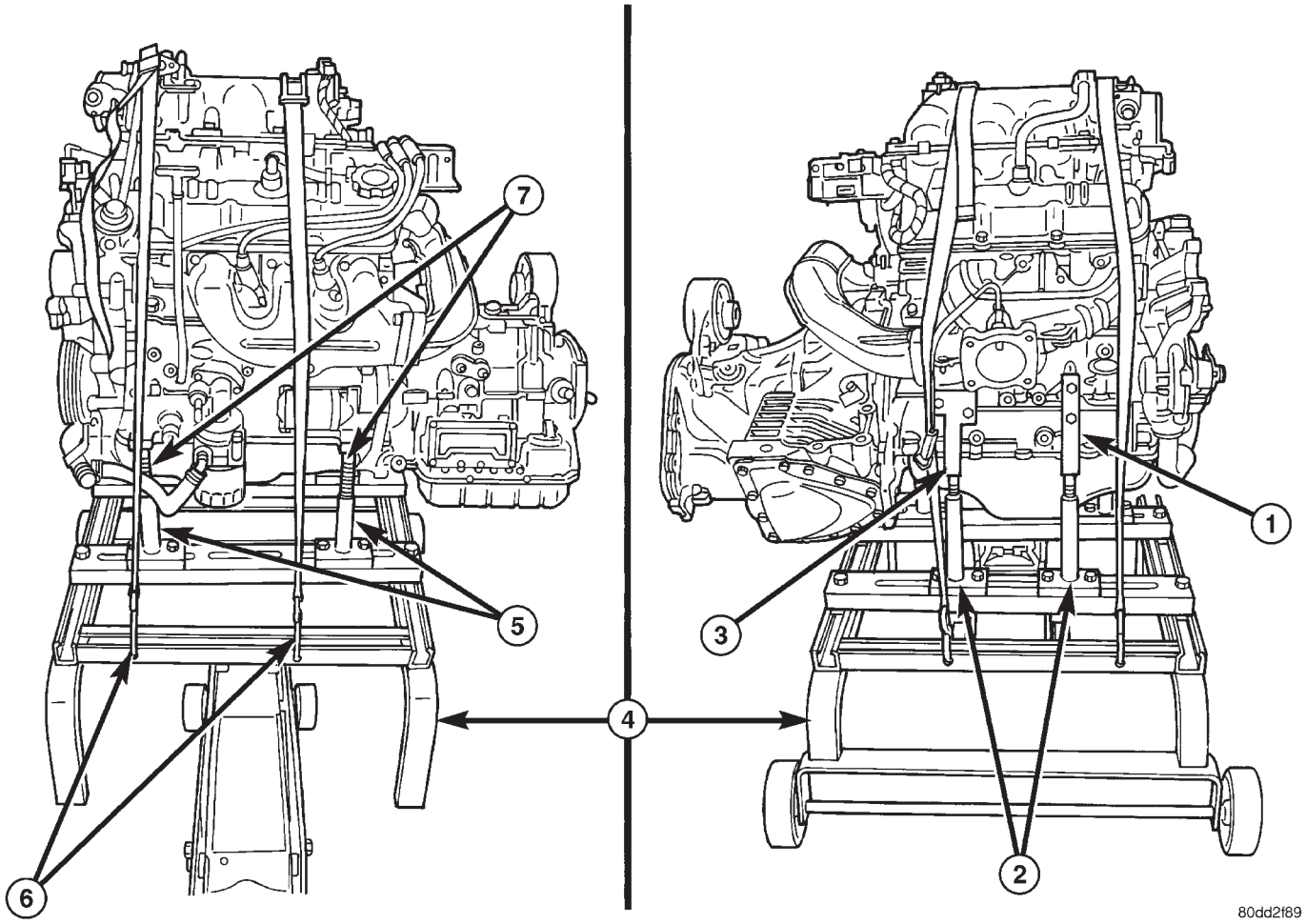

Fig. 12 Positioning Engine Cradle Support Post Mounts

1 - SPECIAL TOOL 8444
2 - SPECIAL TOOLS 6848
3 - SPECIAL TOOL 6912
4 - SPECIAL TOOLS 6135 & 6710
5 - SPECIAL TOOLS 6848
6 - SAFETY STRAPS
7 - SPECIAL TOOLS 6909

INSTALLATION - ENGINE ASSEMBLY

(1) Position engine and transmission assembly under vehicle. Slowly lower the vehicle down over the engine and transmission. It is necessary to move the engine/transmission assembly with the dolly for clearance around body flanges.

(2) Align engine and transmission mounts to attaching points. Install mounting bolts at the right engine mount (Fig. 13) and left transmission mount (Fig. 14).

(3) Remove the safety straps from around engine.

(4) Slowly raise vehicle enough to remove the engine dolly and cradle Special Tools 6135, 6710, 6848 and 6909 (Fig. 12).

(5) Remove Special Tools 6912 and 8444 (Fig. 9).

(6) Lower the vehicle.

(7) Install power steering pump and pressure line support.

(8) Install the generator and wiring harness (Refer to 8 - ELECTRICAL/CHARGING/GENERATOR - INSTALLATION).

(9) Raise vehicle.

(10) Attach wiring harness support clip to the engine oil dipstick tube.

(11) Connect oil pressure switch electrical connector.

(12) Install the A/C compressor.

(13) Install the water pump pulley.

(14) Connect the radiator lower hose.

(15) Install the accessory drive belt and splash shield (Refer to 7 - COOLING/ACCESSORY DRIVE/ DRIVE BELTS - INSTALLATION).

(16) Connect the engine block heater electrical connector (if equipped).

(17) Connect the knock sensor electrical connector (3.8L only).

(18) Install the torque converter to flex plate bolts.

(19) Install the transaxle case cover (Fig. 8).

ENGINE 3.3/3.8L (Continued)

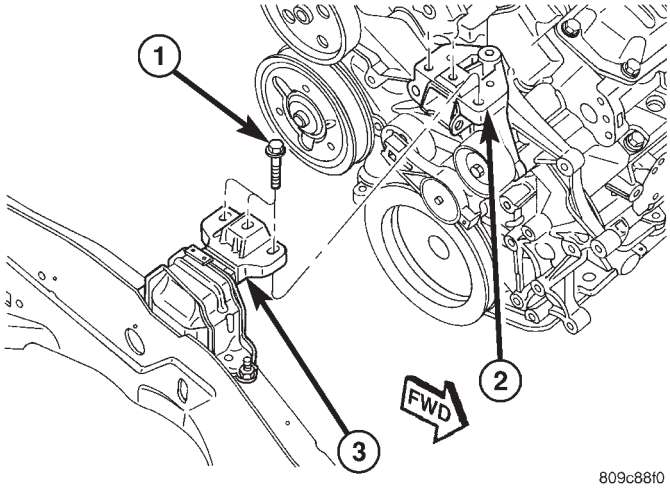

Fig. 13 Right Mount to Engine

1 - BOLT
2 - MOUNT BRACKET
3 - ENGINE RIGHT MOUNT ASSEMBLY

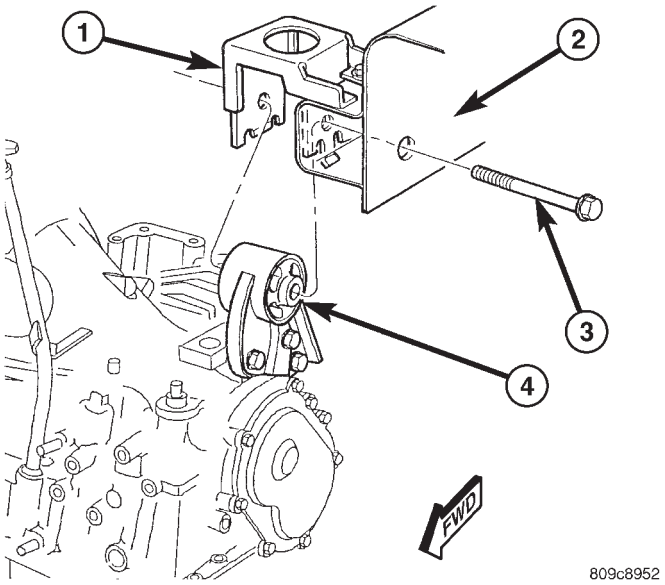

Fig. 14 LEFT MOUNT TO FRAME BRACKET

1 - FRAME BRACKET
2 - FRAME RAIL - LEFT
3 - BOLT
4 - TRANSAXLE MOUNT

(20) Install the powertrain struts (Fig. 8).
(21) Install the engine rear mount bracket.
(22) Install the engine front mount and bracket assembly.
(23) **AWD equipped;** Install the power transfer unit (PTU) (Refer to 21 - TRANSMISSION/TRANSAXLE/POWER TRANSFER UNIT - INSTALLATION).
(24) Install the axle shafts (Refer to 3 - DIFFERENTIAL & DRIVELINE/HALF SHAFT - INSTALLATION).
(25) Connect exhaust pipe to manifold (Fig. 7).
(26) Install crossmember cradle plate (Fig. 6).
(27) Lower vehicle.
(28) Connect transaxle shift linkage.
(29) Connect transaxle electrical connectors.
(30) Remove plugs from transmission cooler hoses and install transaxle oil cooler line service splice kit. Refer to instructions included with kit.
(31) Install transaxle dipstick tube and attach electrical harness clip.
(32) Connect the A/C lines to compressor.
(33) Connect the A/C compressor electrical connector.
(34) Evacuate and recharge A/C system.
(35) Connect crankshaft and camshaft position sensors.
(36) Connect the fuel injector electrical harness connector and engage clip to support bracket.
(37) Connect engine coolant temperature (ECT) sensor and ignition coil electrical connectors.
(38) Connect the ground strap to rear of cylinder head.
(39) Install power steering reservoir.
(40) Engage wire harness clip to engine right side mount.
(41) Connect the brake booster and speed control vacuum hoses.
(42) Connect the vacuum hoses to the throttle body.
(43) Connect the EGR transducer electrical connector (if equipped).
(44) Connect the TPS, IAC, and MAP sensor electrical connectors.
(45) Connect throttle cables to throttle body.
(46) Install the radiator fans (Refer to 7 - COOLING/ENGINE/RADIATOR FAN - INSTALLATION).
(47) Connect the radiator upper hose.
(48) Connect the heater hoses. Remove pinch-off pliers from the rear heater hoses (if equipped).
(49) Install the radiator upper support crossmember (Refer to 23 - BODY/EXTERIOR/GRILLE OPENING REINFORCEMENT - INSTALLATION).
(50) Install the wiper module (Refer to 8 - ELECTRICAL/WIPERS/WASHERS/WIPER MODULE - INSTALLATION).
(51) Connect the fuel line to fuel rail (Refer to 14 - FUEL SYSTEM/FUEL DELIVERY/FUEL LINES - STANDARD PROCEDURE).
(52) Install the air cleaner and hoses.
(53) Install new oil filter. Fill engine crankcase with proper oil to correct level.
(54) Connect negative cable to battery.
(55) Fill the cooling system (Refer to 7 - COOLING - STANDARD PROCEDURE).
(56) Start engine and run until operating temperature is reached.
(57) Adjust transmission linkage, if necessary.

ENGINE 3.3/3.8L (Continued)

SPECIFICATIONS

3.3/3.8L ENGINE

DESCRIPTION	SPECIFICATION
General Specification	
Type	60° V-6 Engine
Number of Cylinders	6
Displacement	
—3.3L	3.3 Liters (201 cu. in.)
—3.8L	3.8 Liters (231 cu. in.)
Bore	
—3.3L	93.0 mm (3.66 in.)
—3.8L	96.0 mm (3.779 in.)
Stroke	
—3.3L	81.0 mm (3.188 in.)
—3.8L	87.0 mm (3.425 in.)
Compression Ratio	
—3.3L	9.35:1
—3.8L	9.6:1
Firing Order	1-2-3-4-5-6
Cylinder Number (Front to Rear)	
—Front Bank	2,4,6
—Rear Bank	1,3,5
Compression Pressure—Minimum	689.5 kPa (100 psi)
Max. Variation Between Cylinders	25%
Cylinder Block	
Cylinder Bore Diameter (Standard)	
—3.3L	92.993–93.007 mm (3.661–3.6617 in.)
—3.8L	95.993–96.007 mm (3.7792–3.780 in.)
Out-of-Round (Service Limits)	0.076 mm (0.003 in.)
Taper (Service Limits)	0.051 mm (0.002 in.)
Lifter Bore Diameter	22.980–23.010 mm (0.905–0.906 in.)
Deck Surface Flatness (Max.)	0.1 mm (0.004 in.)
Pistons	
Piston Diameter	
—3.3L —Measured 39.8 mm (1.567 in.) from piston top	92.968–92.998 mm (3.660–3.661 in.)
—3.8L —Measured 33.01 mm (1.30 in.) from piston top	95.968–95.998 mm (3.778–3.779 in.)
Clearance in Bore @ Size Location (New)	-0.005–0.039 mm (-0.0002–0.0015 in.)
Weight	
—3.3L	362 ±5 grams (12.77 ±0.1764 oz.)
—3.8L	426 ±5 grams (15.03 ±0.1764 oz.)
Piston Pins	
Type	Press Fit in Rod (Serviced as an Assembly)
Clearance in Piston @ 21° C (70° F)	0.006–0.019 mm (0.0002–0.0007 in.)
Clearance in Connecting Rod	(Interference Fit)
Diameter	22.87–22.88 mm (0.9007–0.9009 in.)
Length	
—3.3L	67.25–67.75 mm (2.648–2.667 in.)
—3.8L	71.25–71.75 (2.805–2.824 in.)
Piston Rings	
Ring End Gap—Top Compression Ring	0.18–0.38 mm (0.007–0.015 in.)
Wear Limit	1.0 mm (0.039 in.)

ENGINE 3.3/3.8L (Continued)

DESCRIPTION	SPECIFICATION
Ring End Gap—2nd Compression Ring	0.28–0.57 mm (0.011–0.022 in.)
Wear Limit	1.0 mm (0.039 in.)
Ring End Gap—Oil Control Steel Rails	0.23–0.78 mm (0.009–0.030 in.)
Wear Limit	1.88 mm (0.074 in.)
Ring Side Clearance—Top Compression Ring	
—3.3L	0.030–0.080 mm (0.0012–0.0031 in.)
—3.8L	0.030–0.069 mm (0.0012–0.0027 in.)
Wear Limit	0.10 mm (0.004 in.)
Ring Side Clearance—2nd Compression Ring	
—3.3L	0.030–0.095 mm (0.0012–0.0037 in.)
—3.8L	0.041–0.085 mm (0.0016–0.0033 in.)
Wear Limit	0.13 mm (0.005 in.)
Ring Side Clearance—Oil Ring Pack	0.039–0.200 mm (0.0015–0.0078 in.)
Wear Limit	0.266 mm (0.009 in.)
Ring Width—Top Compression Ring	
—3.3L	1.46–1.49 mm (0.0575–0.058 in.)
—3.8L	1.175–1.190 mm (0.0462–0.0468 in.)
Ring Width—2nd Compression Ring —3.3/3.8L	1.46–1.49 mm (0.0575–0.058 in.)
Ring Width—Oil Ring (Steel Rails)	
—3.3L	0.435–0.490 mm (0.017–0.019 in.)
—3.8L	0.435–0.510 mm (0.017–0.020 in.)
Connecting Rod	
Bearing Clearance	0.019–0.065 mm (0.0008–0.0026 in.)
Wear Limit	0.074 mm (0.003 in.)
Side Clearance	0.13–0.32 mm (0.005–0.013 in.)
Wear Limit	0.38 mm (0.015 in.)
Crankshaft	
Material	Nodular Iron
Connecting Rod Journal Diameter	57.979–58.005 mm (2.2827–2.2837 in.)
Main Bearing Journal Diameter	63.993–64.013 mm (2.5194–2.5202 in.)
Journal Out-of-Round (Max.)	0.025 mm (0.001 in.)
Journal Taper (Max.)	0.025 mm (0.001 in.)
End Play	0.09–0.24 mm (0.0036–0.0095 in.)
Wear Limit	0.381 mm (0.015 in.)
Main Bearing Diametrical Clearance	
—No. 1, 2, 3, 4	0.011–0.055 mm (0.0005–0.0022 in.)
Wear Limit	0.076 mm (0.003 in.)
Camshaft	
Journal Diameter	
No.1	50.724–50.775 mm (1.997–1.999 in.)
No.2	50.317–50.368 mm (1.9809–1.9829 in.)
No.3	49.936–49.987 mm (1.9659–1.9679 in.)
No.4	49.530–49.581 mm (1.9499–1.9520 in.)
Bearing Clearance—Diametrical	0.025–0.101 mm (0.001–0.004 in.)

ENGINE 3.3/3.8L (Continued)

DESCRIPTION	SPECIFICATION
Bearing Clearance (Max. allowable)	0.127 mm (0.005 in.)
End Play	0.254–0.508 mm (0.010–0.020 in.)
(Max. allowable)	0.304 mm (0.012 in.)
Camshaft Bearing Diameter	
No. 1	50.800–50.825 mm (1.9999–2.0009 in.)
No. 2	50.393–50.419 mm (1.9839–1.9849 in.)
No. 3	50.013–50.038 mm (1.9690–1.9699 in.)
No. 4	49.606–49.632 mm (1.9529–1.954 in.)
Exhaust Valve Timing	
Closes—3.3L (ATDC)	13°
Closes—3.8L (ATDC)	18°
Opens—3.3L (BBDC)	43°
Opens—3.8L (BBDC)	46°
Duration—3.3L	236°
Duration—3.8L	244°
Intake Valve Timing	
Closes—3.3L (ABDC	52°
Closes—3.8L (ABDC	63°
Opens—3.3L (ATDC)	6°
Opens—3.8L (ATDC)	1°
Duration—3.3L	226°
Duration—3.8L	242°
Valve Overlap—3.3L	7°
Valve Overlap—3.8L	17°
Lifters	
Type	Hydraulic Roller
Diameter O.D.	22.949–22.962 mm (0.903–0.904 in.)
Clearance In Block	0.020–0.061 mm 0.0007–0.0024 in.)
Cylinder Head	
Gasket Thickness (Compressed)	0.65–0.75 mm (0.025–0.029 in.)

DESCRIPTION	SPECIFICATION
Valve Seat	
Angle	44.5–45°
Valve Seat Runout (Service Limits)	0.0762 mm (0.003 in.)
Valve Seat Width—Intake & Exhaust	1.50–2.00 mm (0.057–0.078 in.)
Valve Guide	
Guide Bore Diameter (Std.)	6.975–7.00 mm (0.274–0.275 in.)
Valves	
Valve Lift (Zero Lash)—Intake & Exhaust	
—3.3L	9.80 mm (0.385 in.)
—3.8L	11.0 mm (0.433 in.)
Face Angle—Intake	45–45.5°
Face Angle—Exhaust	45–45.5°
Head Diameter—Intake	47.87–48.13 mm (1.88–1.89 in.)
Head Diameter—Exhaust	35.37–35.63 mm (1.39–1.40 in.)
Valve Margin	
Intake	0.825–0.973 mm (0.032–0.038 in.)
Exhaust	1.565–1.713 mm (0.061–0.067 in.)
Valve Length (Overall)	
Intake	125.84–126.6 mm (4.95–4.98 in.)
Exhaust	127.2–127.96 mm (5.00–5.04 in.)
Valve Stem Tip Height	
Intake (valve tip to spring seat washer)	48.1–49.7 mm (1.89–1.95 in.)
Exhaust (valve tip to spring seat washer)	48.53–50.09 mm (1.91–1.97 in.)
Valve Stem Diameter	
Intake (Standard)	6.935–6.953 mm (0.2730–0.2737 in.)

ENGINE 3.3/3.8L (Continued)

DESCRIPTION	SPECIFICATION
Exhaust (Standard)	6.906–6.924 mm (0.2718–0.2725 in.)
Valve Stem to Guide Clearance	
Intake	0.025–0.065 mm (0.001–0.0025 in.)
Max. Allowable (Rocking Method)	0.247 mm (0.010 in.)
Exhaust	0.059–0.094 mm (0.002–0.0037 in.)
Max. Allowable (Rocking Method)	0.414 mm (0.016 in.)
Push Rods	
Length	135.438 mm (5.33 in.)
Valve Springs	
Free Length (Approx.)	51.4 mm (2.02 in.)
Wire Diameter	3.95–4.77 mm (0.15–0.19 in.)
Number of Coils	7.52
Spring Tension (Valve Closed)	376.4–424.4 N @ 41.9 mm (84.6–95.6 lbs. @ 1.65 in.)
Installed Height	41.1–42.7 mm (1.61–1.68 in.)
Oil Pump	
Clearance Over Rotors—Inner and Outer (Max.)	0.10 mm (0.004 in.)
Cover Out-of-Flat (Max.)	0.025 mm (0.001 in.)
Inner Rotor Thickness (Min.)	7.64 mm (0.301 in.)
Outer Rotor Thickness (Min.)	7.64 mm (0.301 in.)
Outer Rotor Clearance (Max.)	0.039 mm (0.015 in.)
Outer Rotor Diameter (Min.)	79.95 mm (3.148 in.)
Tip Clearance Between Rotors (Max.)	0.20 mm (0.008 in.)
Oil Pressure	
At Curb Idle Speed* (Minimum with engine at operating temerature)	34.47 kPa (5 psi)
At 3000 rpm	205–551 kPa (30–80 psi)
Oil Filter By-pas Valve Setting	62–103 kPa (9–15 psi)
Oil Pressure Switch Actuating Pressure	14–28 kPa (2–4 psi)
caution: *If pressure is ZERO at curb idle, DO NOT run engine at 3000 rpm.	

SPECIFICATIONS - TORQUE

DESCRIPTION	N·m	Ft. Lbs.	In. Lbs.
Camshaft Sprocket—Bolt	54	40	—
Camshaft Thrust Plate—Bolts	12	—	105
Connecting Rod Cap—Bolts	54 +¼ turn	40 +¼ turn	—
Crankshaft Main Bearing Cap—Bolts	41 +¼ turn	30 +¼ turn	—
Crankshaft Main Bearing Cap Cross Bolts (3.8L)	61	45	—
Crankshaft Oil Seal Retainer Rear—Bolts	12	—	105
Crankshaft Damper—Bolt	54	40	—
Cylinder Block Drain Plugs	20	15	—
Cylinder Head—Bolts	(Refer to 9 - ENGINE/ CYLINDER HEAD - INSTALLATION)		
Cylinder Head Cover—Bolts	12	—	105
Flex Plate to Crankshaft	95	70	—
Engine Mounting	(Refer to 9 - ENGINE/ ENGINE MOUNTING)		
Exhaust Manifold—Bolts	23	—	200

ENGINE 3.3/3.8L (Continued)

DESCRIPTION	N·m	Ft. Lbs.	In. Lbs.
Exhaust Crossover Pipe—Bolts	54	40	—
Intake Manifold - Lower—Bolts	23	—	200
Intake Manifold - Lower Gasket Retainer—Bolts	12	—	105
Intake Manifold Upper—Bolts	12	—	105
Lifter Yoke Retainer—Bolts	12	—	105
Oil Filter Attaching Fitting	54	40	—
Oil Cooler Attaching Fitting	27	20	—
Oil Filter	20	15	—
Oil Filter Adapter—Bolts	28	—	250
Oil Gallery Plug	27	20	—
Oil Pan—Bolts	12	—	105
Oil Pan Drain—Plug	27	20	—
Oil Pressure Switch	23	—	200
Oil Pump Cover Plate—Screws	12	—	105
Oil Pump Pick-up Tube—Bolt	28	—	250
Oil Dipstick Housing—Bolts	48	35	—
Rocker Arm Shaft—Bolts	23	—	200
Spark Plug	16	12	—
Timing Chain Case Cover			
—M8 Bolt	27	20	—
—M10 Bolt	54	40	—
Water Pump—Bolts	12	—	105
Water Pump Pulley—Bolts	28	—	250

SPECIAL TOOLS

3.3/3.8L ENGINE

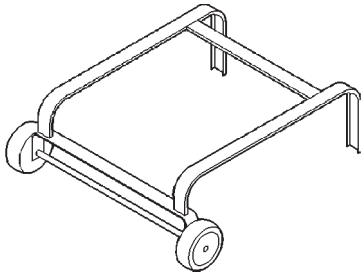

Dolly 6135

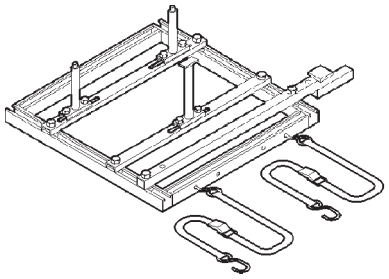

Cradle 6710A

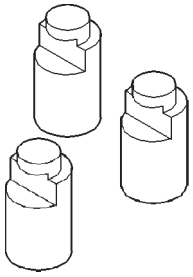

Adapter 6909A

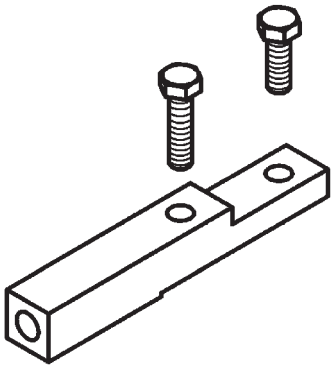

Adapter 8444

ENGINE 3.3/3.8L (Continued)

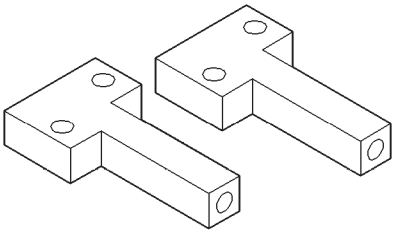

Adapter 6912

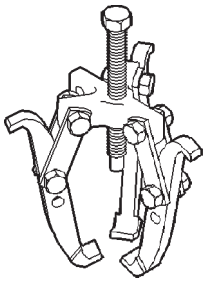

Puller 1026

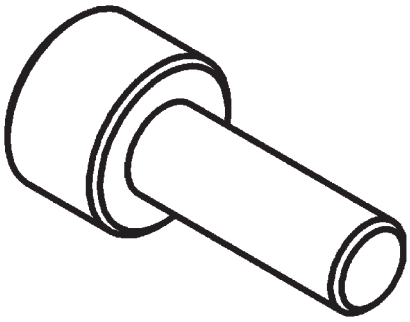

Insert, Crankshaft 8450

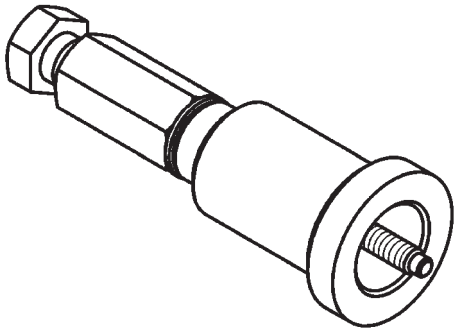

Crankshaft Damper/Sprocket Installer 8452

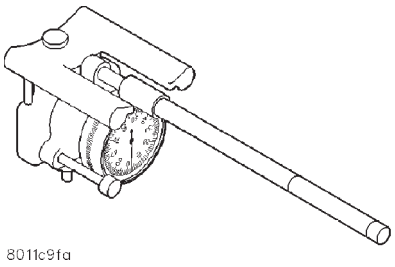

Indicator, Cylinder Bore C-119

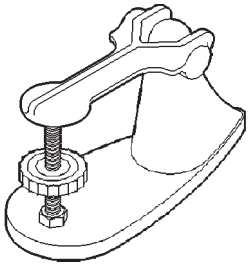

Tester - Valve Spring C-647

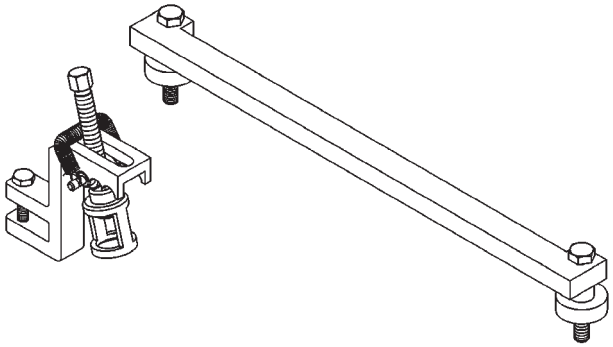

Compressor, Valve Spring In-vehicle 8453

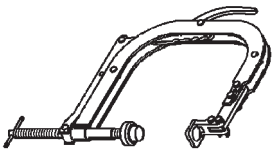

Valve Spring Compressor Off-vehicle C-3422-D

ENGINE 3.3/3.8L (Continued)

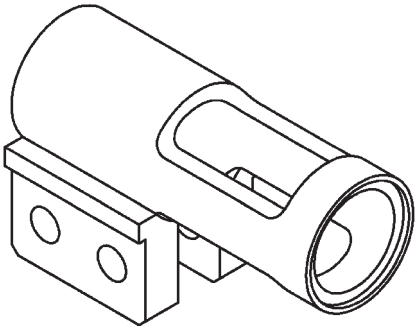

Adapter, Valve Spring Compressor Off-vehicle 8464

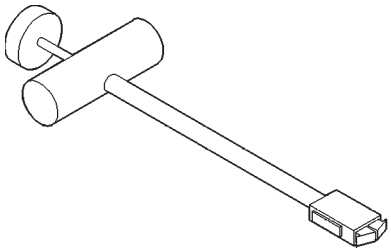

Remover, Valve Tappet C-4129-A

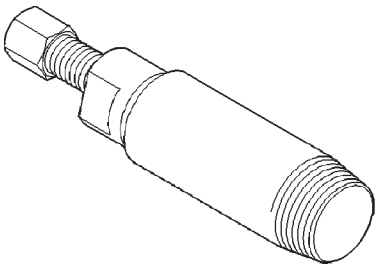

Remover, Crankshaft Front Seal 6341A

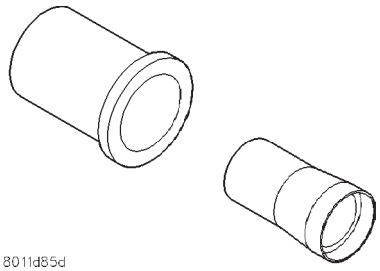

Installer, Crankshaft Front Seal C-4992

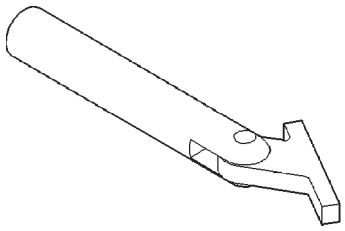

Remover and Installer, Crankshaft Main Bearing C-3059

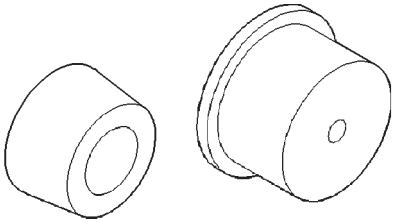

Rear Crankshaft Oil Seal Installer 6926

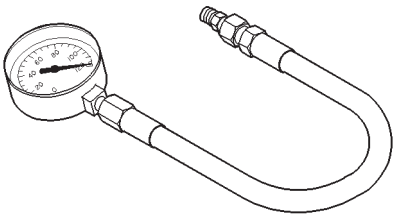

Oil Pressure Gauge C-3292

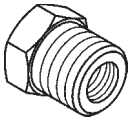

Adapter 8406

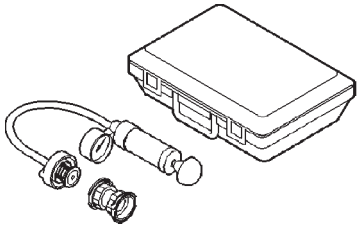

Cooling System Tester 7700

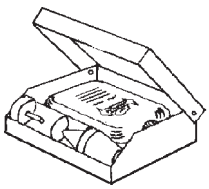

Combustion Leak Tester C-3685-A

ENGINE 3.3/3.8L (Continued)

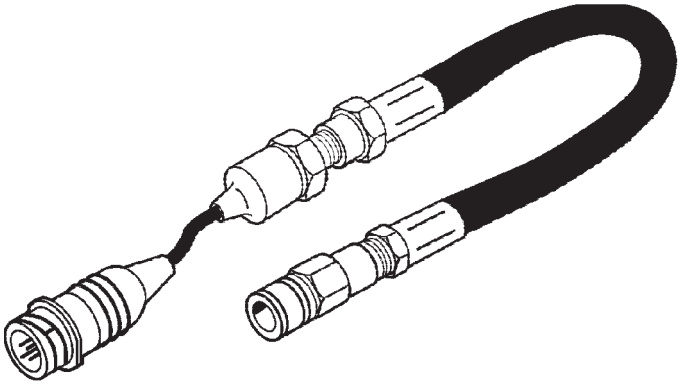

Pressure Transducer CH7059

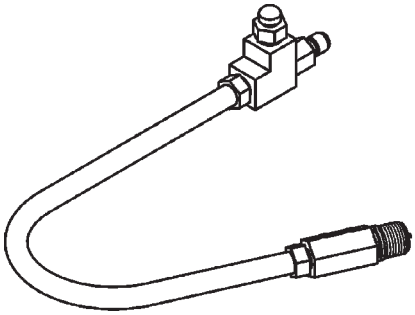

Compression Test Adapter 8116

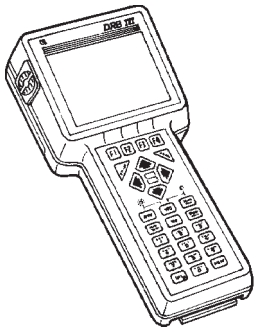

DRB III® with PEP Module OT-CH6010A

AIR CLEANER ELEMENT

REMOVAL

(1) Unsnap 2 clips.

(2) Lift cover and pull toward the engine and remove cover tabs from air box.

(3) Lift cover and remove the element (Fig. 15).

INSTALLATION

(1) Install the air filter element into air box (Fig. 15).

(2) Move cover so that the tabs insert into the air box.

(3) Push cover down and snap the 2 clips.

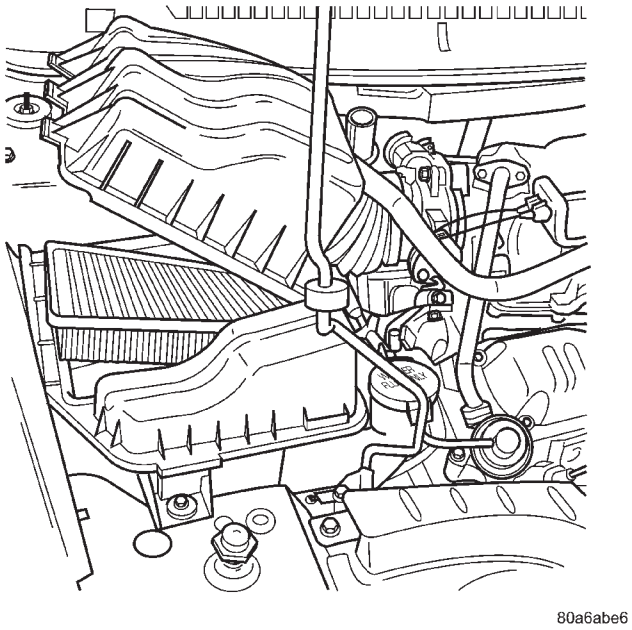

80a6abe6

Fig. 15 AIR BOX COVER

AIR CLEANER HOUSING

REMOVAL

(1) Disconnect the negative battery cable.

(2) Disconnect the inlet air temperature sensor (Fig. 16).

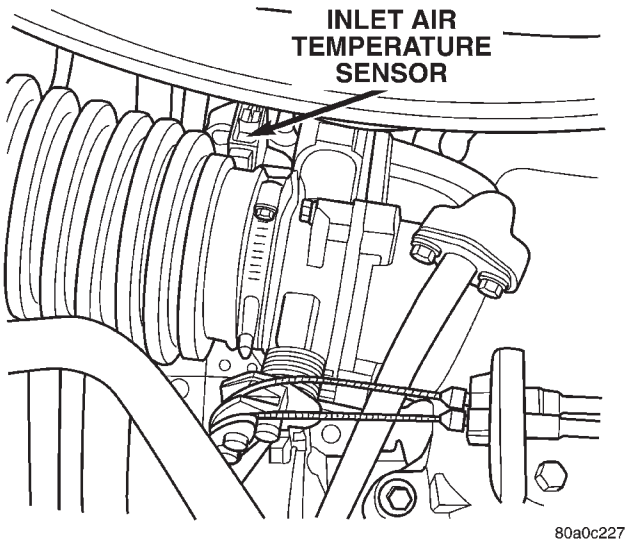

80a0c227

Fig. 16 Inlet Air Temperature Sensor

(3) Remove the inlet hose to throttle body.

(4) Remove the bolt for air box at upper radiator cross member.

(5) Pull air box up and off over the single locating pin.

(6) Remove air box from vehicle

AIR CLEANER HOUSING (Continued)

INSTALLATION

(1) Install air box into vehicle and onto the locating pin.
(2) Install bolt to hold air box to the upper radiator cross member.
(3) Install the inlet hose to the throttle body.
(4) Connect the inlet air temperature sensor (Fig. 16).
(5) Connect the negative battery cable.

CYLINDER HEAD

DESCRIPTION

The aluminum cylinder heads (Fig. 17) are designed to create high flow combustion chambers to improve performance, while minimizing the change to the burn rate in the chamber. The cylinder head incorporates the combustion chamber. Two valves per-cylinder are used with inserted valve seats and guides. A multi-layer steel (MLS) type gasket is used between the cylinder head and engine block.

OPERATION

The cylinder head closes the combustion chamber, allowing the pistons to compress the fuel/air mixture for ignition. The valves are actuated by the lobe profiles on the camshaft to open and close at specified duration to either allow clean air in the combustion chamber or the exhaust gases out; depending on the stroke of the engine.

DIAGNOSIS AND TESTING—CYLINDER HEAD GASKET

A cylinder head gasket leak can be located between adjacent cylinders or between a cylinder and the adjacent water jacket.

Possible indications of the cylinder head gasket leaking between adjacent cylinders are:

- Loss of engine power
- Engine misfiring
- Poor fuel economy

Possible indications of the cylinder head gasket leaking between a cylinder and an adjacent water jacket are:

- Engine overheating
- Loss of coolant
- Excessive steam (white smoke) emitting from exhaust
- Coolant foaming

CYLINDER-TO-CYLINDER LEAKAGE TEST

To determine if an engine cylinder head gasket is leaking between adjacent cylinders, follow the procedures in Cylinder Compression Pressure Test (Refer to 9 - ENGINE - DIAGNOSIS AND TESTING). An engine cylinder head gasket leaking between adjacent cylinders will result in approximately a 50–70% reduction in compression pressure.

CYLINDER-TO-WATER JACKET LEAKAGE TEST

WARNING: USE EXTREME CAUTION WHEN THE ENGINE IS OPERATING WITH COOLANT PRESSURE CAP REMOVED.

VISUAL TEST METHOD

With the engine cool, remove the coolant pressure cap. Start the engine and allow it to warm up until thermostat opens.

If a large combustion/compression pressure leak exists, bubbles will be visible in the coolant.

COOLING SYSTEM TESTER METHOD

WARNING: WITH COOLING SYSTEM TESTER IN PLACE, PRESSURE WILL BUILD UP FAST. EXCESSIVE PRESSURE BUILT UP, BY CONTINUOUS ENGINE OPERATION, MUST BE RELEASED TO A SAFE PRESSURE POINT. NEVER PERMIT PRESSURE TO EXCEED 138 kPa (20 psi).

Install Cooling System Tester 7700 or equivalent to pressure cap neck. Start the engine and observe the tester's pressure gauge. If gauge pulsates with every power stroke of a cylinder a combustion pressure leak is evident.

CHEMICAL TEST METHOD

Combustion leaks into the cooling system can also be checked by using Bloc-Chek Kit C-3685-A or equivalent. Perform test following the procedures supplied with the tool kit.

REMOVAL - CYLINDER HEAD

(1) Drain the cooling system. (Refer to 7 - COOLING - STANDARD PROCEDURE)
(2) Disconnect negative cable from battery.
(3) Remove upper and lower intake manifolds. (Refer to 9 - ENGINE/MANIFOLDS/INTAKE MANIFOLD - REMOVAL)

WARNING: INTAKE MANIFOLD GASKET IS MADE OF VERY THIN METAL AND MAY CAUSE PERSONAL INJURY, HANDLE WITH CARE.

CYLINDER HEAD (Continued)

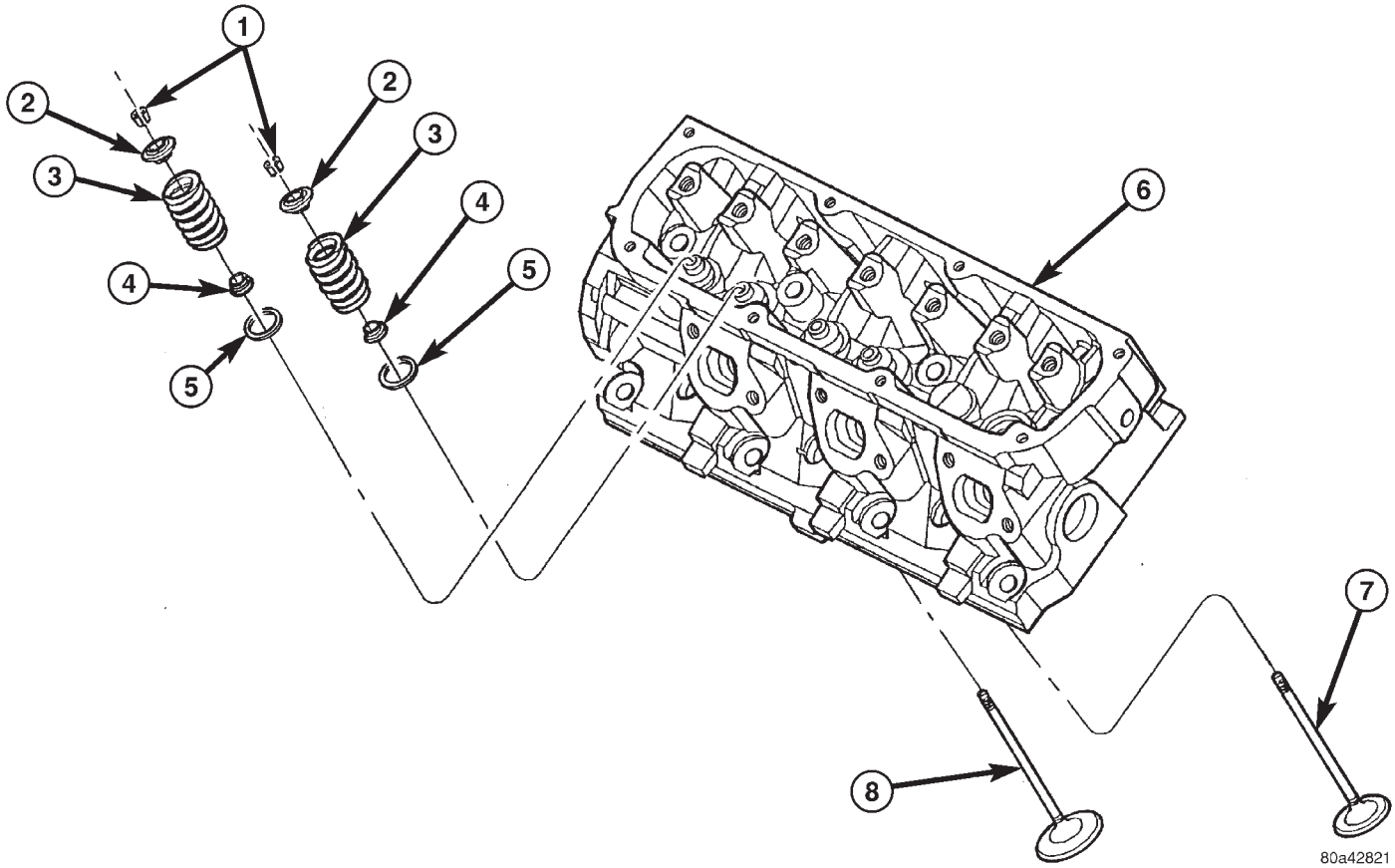

Fig. 17 Cylinder Head and Components

1 - VALVE LOCKS
2 - RETAINERS
3 - VALVE SPRINGS
4 - VALVE STEM SEALS
5 - SPRING SEATS
6 - CYLINDER HEAD
7 - VALVE - EXHAUST
8 - VALVE - INTAKE

(4) Remove the cylinder head covers. (Refer to 9 - ENGINE/CYLINDER HEAD/CYLINDER HEAD COVER(S) - REMOVAL)

(5) Remove the spark plugs from cylinder head.

(6) Remove the dipstick and tube (Fig. 18).

(7) Remove exhaust manifold(s). (Refer to 9 - ENGINE/MANIFOLDS/EXHAUST MANIFOLD - REMOVAL)

(8) Remove rocker arm and shaft assemblies.(Refer to 9 - ENGINE/CYLINDER HEAD/ROCKER ARMS - REMOVAL) Remove push rods and **mark positions to ensure installation in original locations.**

(9) Remove the eight head bolts from each cylinder head and remove cylinder heads (Fig. 22).

CLEANING

To ensure engine gasket sealing, proper surface preparation must be performed, especially with the use of aluminum engine components and multi-layer steel cylinder head gaskets.

NOTE: Multi-Layer Steel (MLS) head gaskets require a scratch free sealing surface.

Remove all gasket material from cylinder head and block (Refer to 9 - ENGINE - STANDARD PROCEDURE). Be careful not to gouge or scratch the aluminum head sealing surface.

Clean all engine oil passages.

INSPECTION

(1) Before cleaning, check for leaks, damage and cracks.

(2) Clean cylinder head and oil passages.

(3) Check cylinder head for flatness (Fig. 19).

(4) Cylinder head must be flat within:

- Standard dimension = less than 0.05 mm (0.002 inch.)
- Service Limit = 0.2 mm (0.008 inch.)
- Grinding Limit = Maximum of 0.2 mm (0.008 inch.) is permitted.

CYLINDER HEAD (Continued)

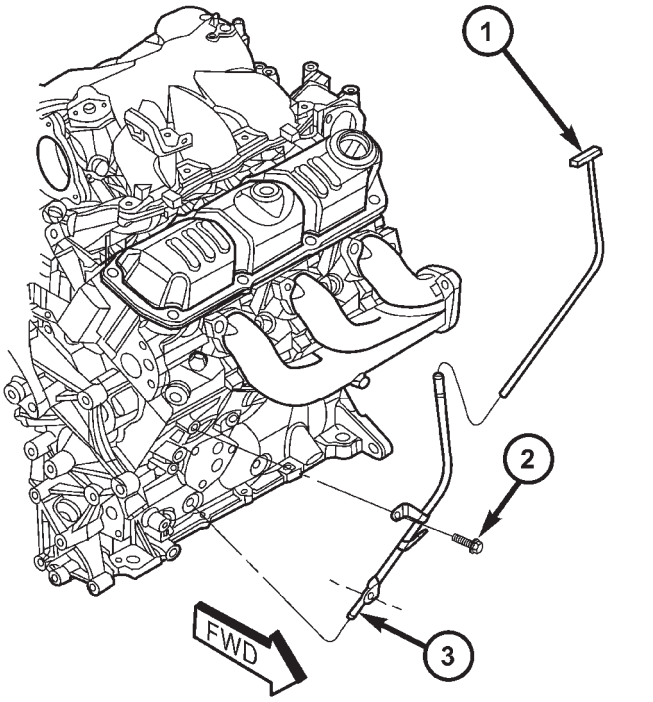

Fig. 18 DIPSTICK & TUBE

1 - DIPSTICK
2 - BOLT
3 - TUBE

CAUTION: 0.20 mm (0.008 in.) MAX is a combined total dimension of the stock removal limit from cylinder head and block top surface (Deck) together.

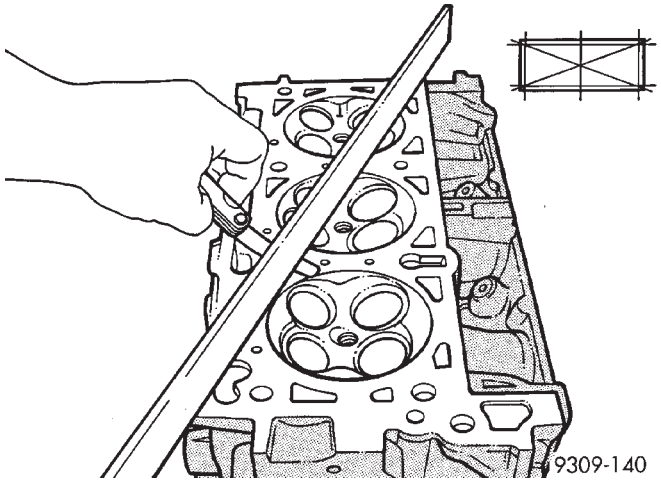

Fig. 19 Checking Cylinder Head Flatness—Typical

INSTALLATION - CYLINDER HEAD

(1) Clean all sealing surfaces of engine block and cylinder heads. (Refer to 9 - ENGINE - STANDARD PROCEDURE)

(2) Position new gasket(s) on engine block (Fig. 20). The left bank gasket is identified with the "L" stamped in the exposed area of the gasket located at front of engine (shown in (Fig. 20)). The right bank gasket is identified with a "R" stamped in the exposed area of the gasket also, but is located at the rear of the engine.

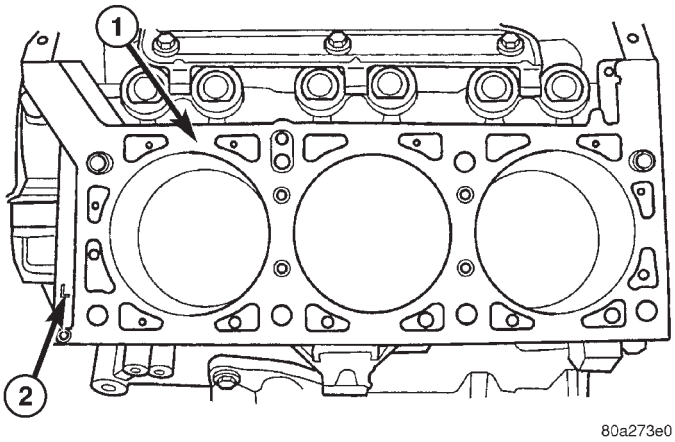

Fig. 20 Head Gasket Installation

1 - CYLINDER HEAD GASKET
2 - LOCATION IDENTIFICATION (L = LEFT BANK, R = RIGHT BANK)

(3) **The cylinder head bolts are torqued using the torque yield method, they should be examined BEFORE reuse. If the threads are necked down, the bolts must be replaced** (Fig. 21).

(4) Necking can be checked by holding a scale or straight edge against the threads. If all the threads do not contact the scale the bolt should be replaced.

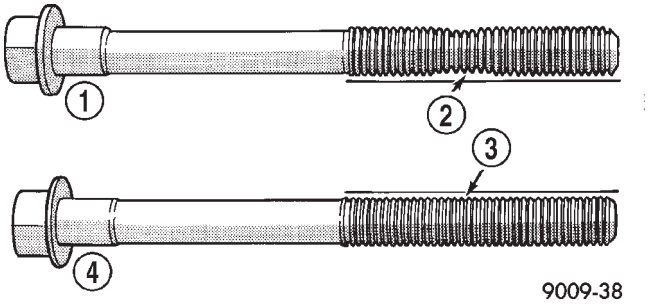

Fig. 21 Checking Bolts for Stretching (Necking)

1 - STRETCHED BOLT
2 - THREADS ARE NOT STRAIGHT ON LINE
3 - THREADS ARE STRAIGHT ON LINE
4 - UNSTRETCHED BOLT

(5) Tighten the cylinder head bolts 1–8 in the sequence shown in (Fig. 22). Using the 4 step torque turn method, tighten according to the following values:

- Step 1: Bolts 1 – 8 to 61 N·m (45 ft. lbs.)

CYLINDER HEAD (Continued)

- Step 2: Bolts 1 – 8 to 88 N·m (65 ft. lbs.)
- Step 3: Bolts 1 – 8 (again) to 88 N·m (65 ft. lbs.)
- Step 4: Bolts 1 – 8 turn an additional 1/4 Turn. **(Do not use a torque wrench for this step.)**

NOTE: Bolt torque after 1/4 turn should be over 122 N·m (90 ft. lbs.). If not, replace the bolt.

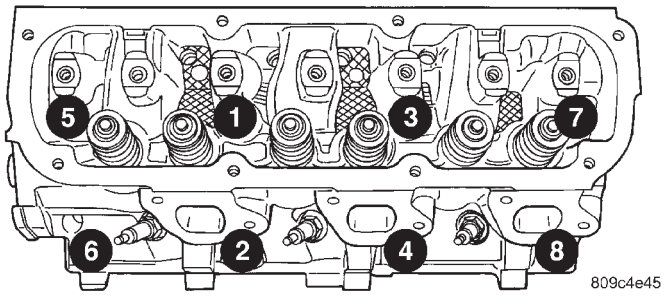

Fig. 22 CYLINDER HEAD TIGHTENING SEQUENCE

(6) Inspect push rods and replace worn or bent rods.

(7) Install the push rods.

(8) Install the rocker arm and shaft assemblies. (Refer to 9 - ENGINE/CYLINDER HEAD/ROCKER ARMS - INSTALLATION)

(9) Install the cylinder head covers. (Refer to 9 - ENGINE/CYLINDER HEAD/CYLINDER HEAD COVER(S) - INSTALLATION)

(10) Install the exhaust manifolds. (Refer to 9 - ENGINE/MANIFOLDS/EXHAUST MANIFOLD - INSTALLATION)

(11) Install new O-ring on dipstick tube. Install dipstick tube assembly (Fig. 18).

(12) Install the spark plugs.

(13) Install upper and lower intake manifolds. (Refer to 9 - ENGINE/MANIFOLDS/INTAKE MANIFOLD - INSTALLATION)

(14) Fill the cooling system. (Refer to 7 - COOLING - STANDARD PROCEDURE)

(15) Connect negative cable to battery.

CYLINDER HEAD COVER(S)

DESCRIPTION

The cylinder head covers are made of stamped steel. The covers are sealed with steel reinforced silicon rubber gaskets. The cylinder head cover uses rubber isolators at each fastener location (Fig. 23).

NOTE: Due to the tight packaging near the cylinder head covers, which makes spill clean-up difficult, a spill during an engine oil change may be misinterpreted as an oil leak. When investigating an oil leak in the location of the cylinder head covers and intake manifold, follow the procedure found in Oil Leak Diagnosis (Refer to 9 - ENGINE - DIAGNOSIS AND TESTING) for determining the source of a leak.

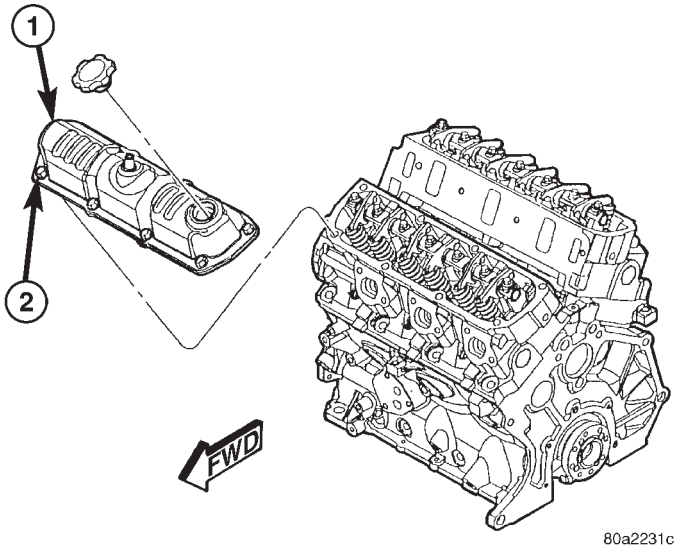

Fig. 23 Cylinder Head Cover

1 - CYLINDER HEAD COVER
2 - BOLT

CYLINDER HEAD COVER - RIGHT

REMOVAL

(1) Disconnect negative cable from battery.

(2) Remove the wiper module. (Refer to 8 - ELECTRICAL/WIPERS/WASHERS/WIPER MODULE - REMOVAL)

(3) Disconnect spark plug wires from plugs.

(4) Disconnect power steering pump supply hose support clip from cylinder head cover (Fig. 24).

(5) Disconnect PCV hose from cylinder head cover (Fig. 25).

(6) Remove cylinder head cover bolts.

(7) Remove cylinder head cover and gasket (Fig. 23).

INSTALLATION

(1) Clean cylinder head and cover mating surfaces. Inspect cylinder head cover surface for flatness. Replace gasket as necessary.

(2) Inspect seal on the cover bolt for wear or damage (Fig. 26). Replace bolt assembly as necessary.

NOTE: The cylinder head cover bolts contain a torque limiter sleeve and a seal (Fig. 26). The seal and torque sleeve is replaced with the bolt.

CYLINDER HEAD COVER - RIGHT (Continued)

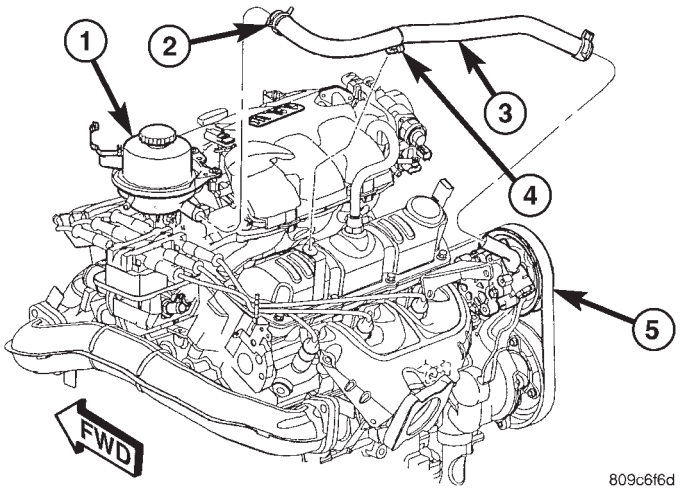

Fig. 24 P/S Supply Hose

1 - POWER STEERING RESERVOIR
2 - CLAMP
3 - SUPPLY HOSE
4 - CLIP
5 - POWER STEERING PUMP

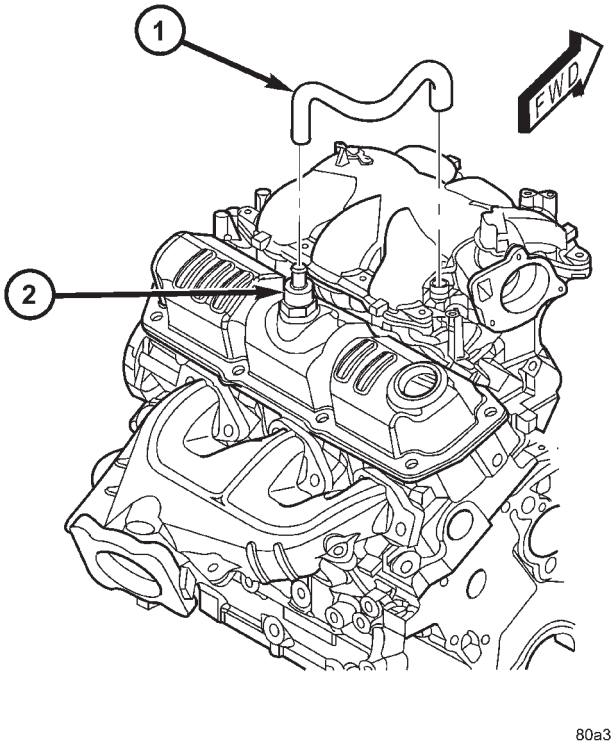

Fig. 25 PCV Hose

1 - HOSE - PCV
2 - PCV VALVE

(3) Assemble gasket to cylinder cover by inserting the bolt assemblies through each bolt hole on the cover and gasket (Fig. 26).

(4) Install cylinder head cover and bolts (Fig. 27).

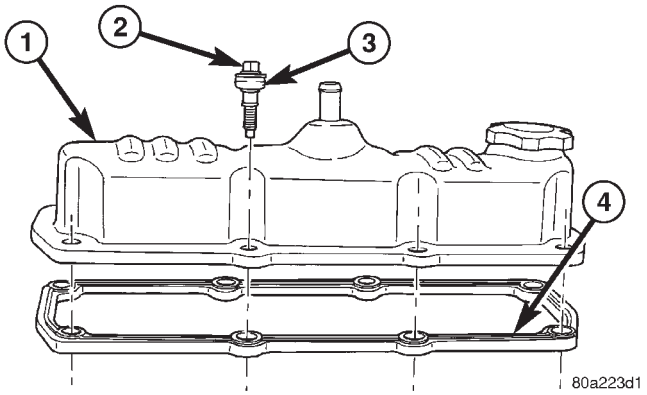

Fig. 26 CYLINDER HEAD COVER GASKET

1 - CYLINDER HEAD COVER
2 - BOLT
3 - SEAL (SERVICED WITH BOLT)
4 - GASKET

(5) Tighten cylinder head cover bolts to 12 N·m (105 in. lbs.) (Fig. 27).

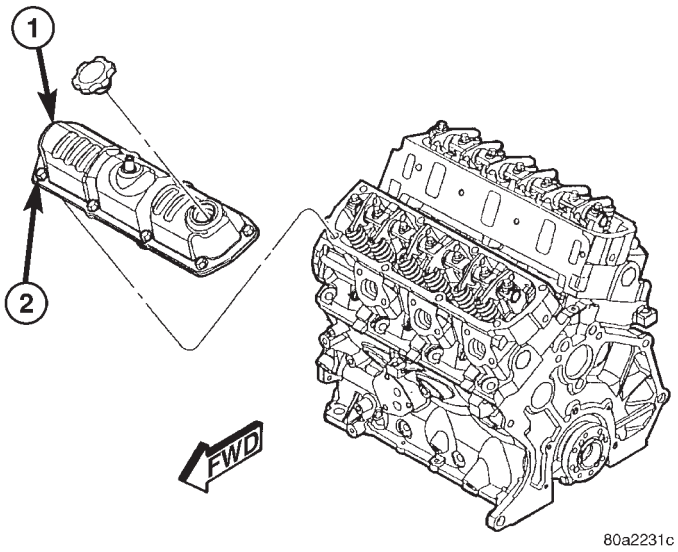

Fig. 27 Cylinder Head Cover

1 - CYLINDER HEAD COVER
2 - BOLT

(6) Connect PCV hose to cylinder head cover.

(7) Connect power steering pump supply hose support clip to cylinder head cover (Fig. 24).

(8) Connect spark plug wires to spark plugs.

(9) Install wiper module. (Refer to 8 - ELECTRICAL/WIPERS/WASHERS/WIPER MODULE - INSTALLATION)

(10) Connect negative cable to battery.

CYLINDER HEAD COVER - LEFT

REMOVAL

(1) Disconnect spark plug wires from spark plugs.
(2) Disconnect crankcase vent hose from cylinder head cover.
(3) Remove cylinder head cover bolts.
(4) Remove cylinder head cover and gasket.

INSTALLATION

(1) Clean cylinder head and cover mating surfaces. Inspect cylinder head cover surface for flatness. Replace gasket as necessary.
(2) Assemble gasket to cylinder cover by inserting the fasteners through each bolt hole on cover and gasket (Fig. 26).
(3) Install the cylinder head cover and bolts (Fig. 27).
(4) Tighten cylinder head cover bolts to 12 N·m (105 in. lbs.) (Fig. 27).
(5) Connect crankcase vent hose.
(6) Connect spark plug wires to spark plugs.

INTAKE/EXHAUST VALVES & SEATS

DESCRIPTION

The valves have chrome plated valve stems with four-bead lock grooves. The valve stem seals are made of Viton rubber.

OPERATION

The two valves per cylinder are opened using hydraulic lifters, push rods, and rocker arms.

STANDARD PROCEDURE - REFACING VALVES AND VALVE SEATS

The intake and exhaust valves and seats are machined to specific angles (Fig. 28).

VALVES

(1) Inspect the remaining margin after the valves are refaced (Fig. 29). (Refer to 9 - ENGINE - SPECIFICATIONS)

VALVE SEATS

CAUTION: Remove metal from valve seat only. Do not remove material from cylinder head (Fig. 30).

(1) When refacing valve seats, it is important that the correct size valve guide pilot be used for reseating stones. A true and complete surface must be obtained.

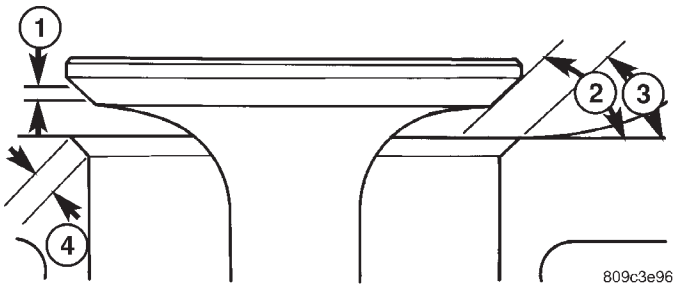

Fig. 28 Valve Face and Seat

1 - SEAT WIDTH
2 - FACE ANGLE
3 - SEAT ANGLE
4 - SEAT CONTACT AREA

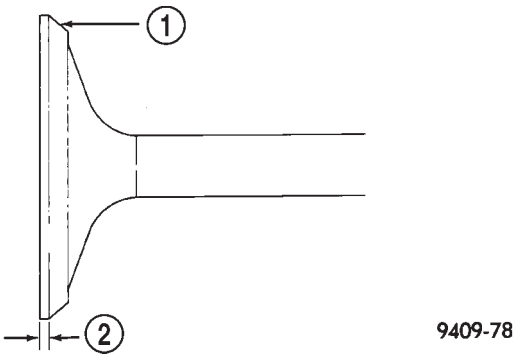

Fig. 29 Valve Margin

1 - VALVE FACE
2 - VALVE MARGIN

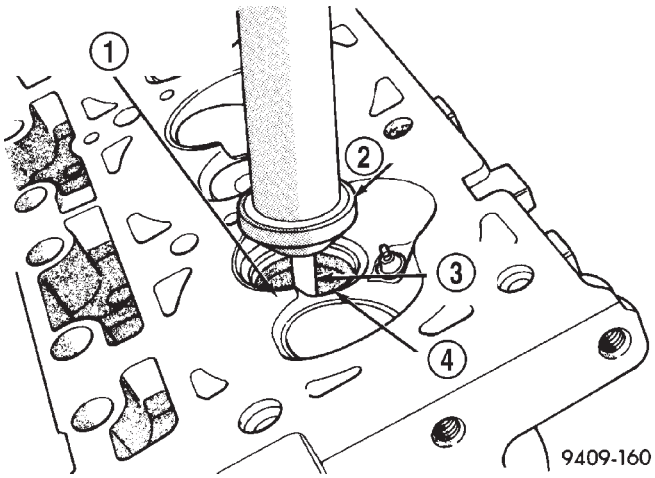

Fig. 30 Refacing Valve Seats

1 - REFACING STONE MUST NOT CUT INTO CYLINDER HEAD
2 - STONE
3 - PILOT
4 - SEAT

INTAKE/EXHAUST VALVES & SEATS (Continued)

(2) Measure the concentricity of valve seat using dial indicator (Fig. 31). Total runout should not exceed 0.051 mm (0.002 in.) total indicator reading.

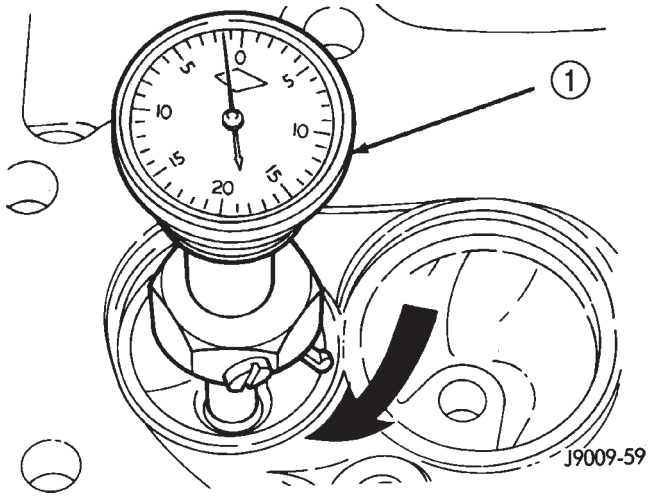

Fig. 31 Measurement of Valve Seat Runout

1 - DIAL INDICATOR

(3) Inspect the valve seat using Prussian blue to determine where the valve contacts the seat. To do this, coat valve seat **LIGHTLY**with Prussian blue then set valve in place. Rotate the valve with light pressure. If the blue is transferred to the center of valve face, contact is satisfactory. If the blue is transferred to top edge of valve face, lower valve seat with a 15 degree stone. If the blue is transferred to the bottom edge of valve face raise valve seat with a 65 degrees stone.

NOTE: Valve seats which are worn or burned can be reworked, provided that correct angle and seat width are maintained. Otherwise cylinder head must be replaced.

(4) When seat is properly positioned the width of intake and exhaust seats should be 1.50–2.00 mm (0.059–0.078 in.) (Fig. 28).

(5) After grinding the valve seats or faces, install the valve in cylinder head and check valve installed height by measuring from valve tip to spring seat (Fig. 32). Remove valve from cylinder head and grind valve tip until within specifications. Check valve tip for scoring. The tip chamfer should be reground (if necessary) to prevent seal damage when the valve is installed.

(6) Check the valve spring installed height after refacing the valve and seat (Fig. 32).**If valves and/or seats are reground, measure the installed height of springs (Fig. 32), make sure measurements are taken from top of spring seat to the bottom surface of spring retainer. If height is greater than specifications, install a 0.794 mm (0.0312 in.) spacer in head counterbore to bring spring height back within specifications.**

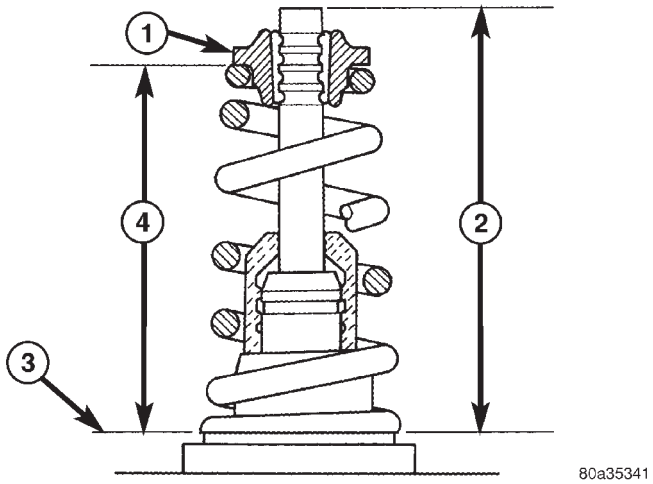

Fig. 32 Checking Valve and Spring Installed Height

1 - SPRING RETAINER
2 - VALVE INSTALLED HEIGHT* - 48.1–49.7 mm (1.89–1.95 in.)
3 - CYINDER HEAD SURFACE
4 - SPRING INSTALLED HEIGHT* - 41.1–42.7 mm (1.61–1.68 in.)
*(MEASURED FROM TOP OF SPRING SEAT)

REMOVAL

(1) With cylinder head removed, compress valve springs using Valve Spring Compressor Tool C-3422-D with adapter 8464 (Refer to 9 - ENGINE - SPECIAL TOOLS).

(2) Remove valve retaining locks.

(3) Slowly release valve spring compressor. Remove valve spring retainer, valve spring, and valve stem seal.

(4) Before removing valves, **remove any burrs from valve stem lock grooves to prevent damage to the valve guides.** Identify valves to insure installation in original location.

CLEANING

(1) Clean all valves thoroughly and discard burned, warped and cracked valves.

INSPECTION

VALVES

(1) Clean and inspect valves thoroughly. Replace burned, warped and cracked valves.

(2) Measure valve stems for wear (Fig. 33). For valve specifications, (Refer to 9 - ENGINE - SPECIFICATIONS).

NOTE: Valve stems are chrome plated and should not be polished (Fig. 33).

INTAKE/EXHAUST VALVES & SEATS (Continued)

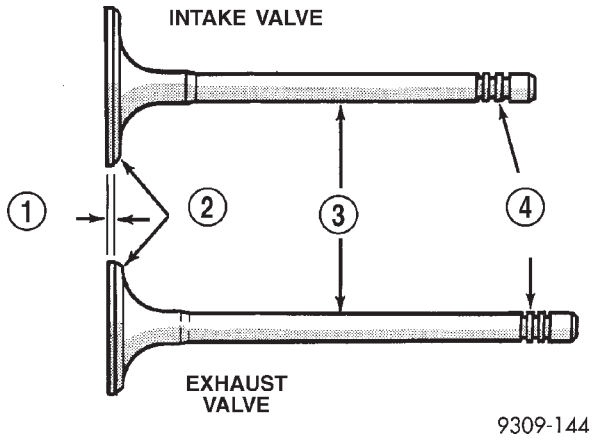

Fig. 33 Intake and Exhaust Valves

1 - MARGIN
2 - FACE
3 - STEM
4 - VALVE SPRING RETAINER LOCK GROOVES

VALVE GUIDES

(1) Remove carbon and varnish deposits from inside of valve guides with a reliable guide cleaner.

(2) Measure valve stem-to-guide clearance as follows:

(3) Install valve into cylinder head so it is 15 mm (0.590 inch.) off the valve seat. A small piece of hose may be used to hold valve in place.

(4) Attach dial indicator Tool C-3339 to cylinder head and set it at right angle of valve stem being measured (Fig. 34).

(5) Move valve to and from the indicator. For clearance specifications, (Refer to 9 - ENGINE - SPECIFICATIONS).

NOTE: Replace cylinder head if stem-to-guide clearance exceeds specifications, or if guide is loose in cylinder head.

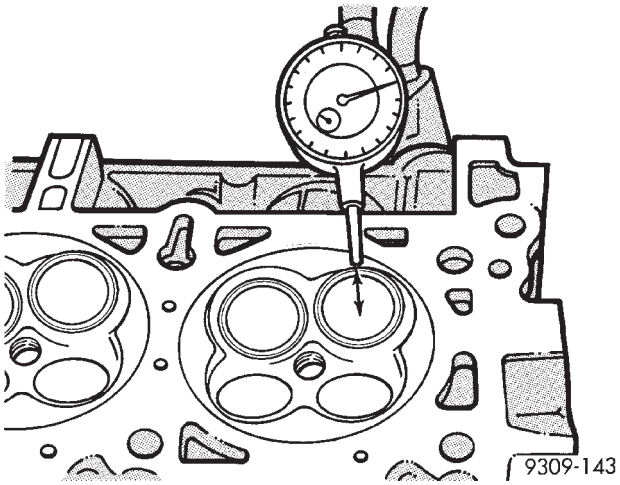

Fig. 34 Measuring Valve Guide Wear - Typical

INSTALLATION

(1) Coat valve stems with clean engine oil and insert them in cylinder head.

(2) Install valve spring seat on head (Fig. 36).

(3) Install new seals on all valve stems and over valve guides (Fig. 36). Install valve springs and valve retainers (Fig. 36).

(4) Install the valve springs. (Refer to 9 - ENGINE/CYLINDER HEAD/VALVE SPRINGS - INSTALLATION)

VALVE SPRINGS

DESCRIPTION

The valve springs are a bee-hive shaped design (Fig. 35). The springs are seated on a steel washer on the cylinder head with retainers and locks retaining the springs (Fig. 36). The springs are installed with the smaller diameter against spring retainer (Fig. 35).

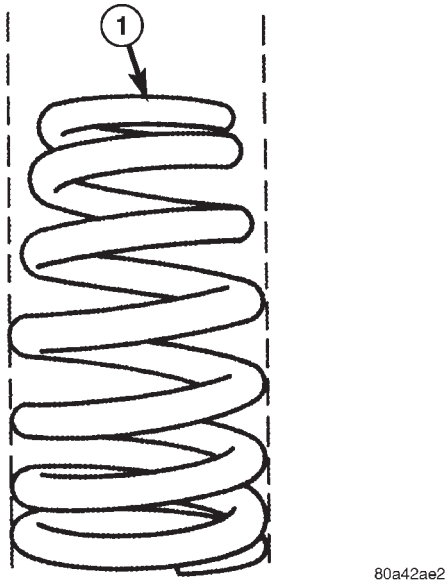

Fig. 35 Valve Spring

1 - VALVE SPRING (TOP - SMALLER DIAMETER)

OPERATION

The valve spring returns the valve against its seat for a positive seal of the combustion chamber.

VALVE SPRINGS (Continued)

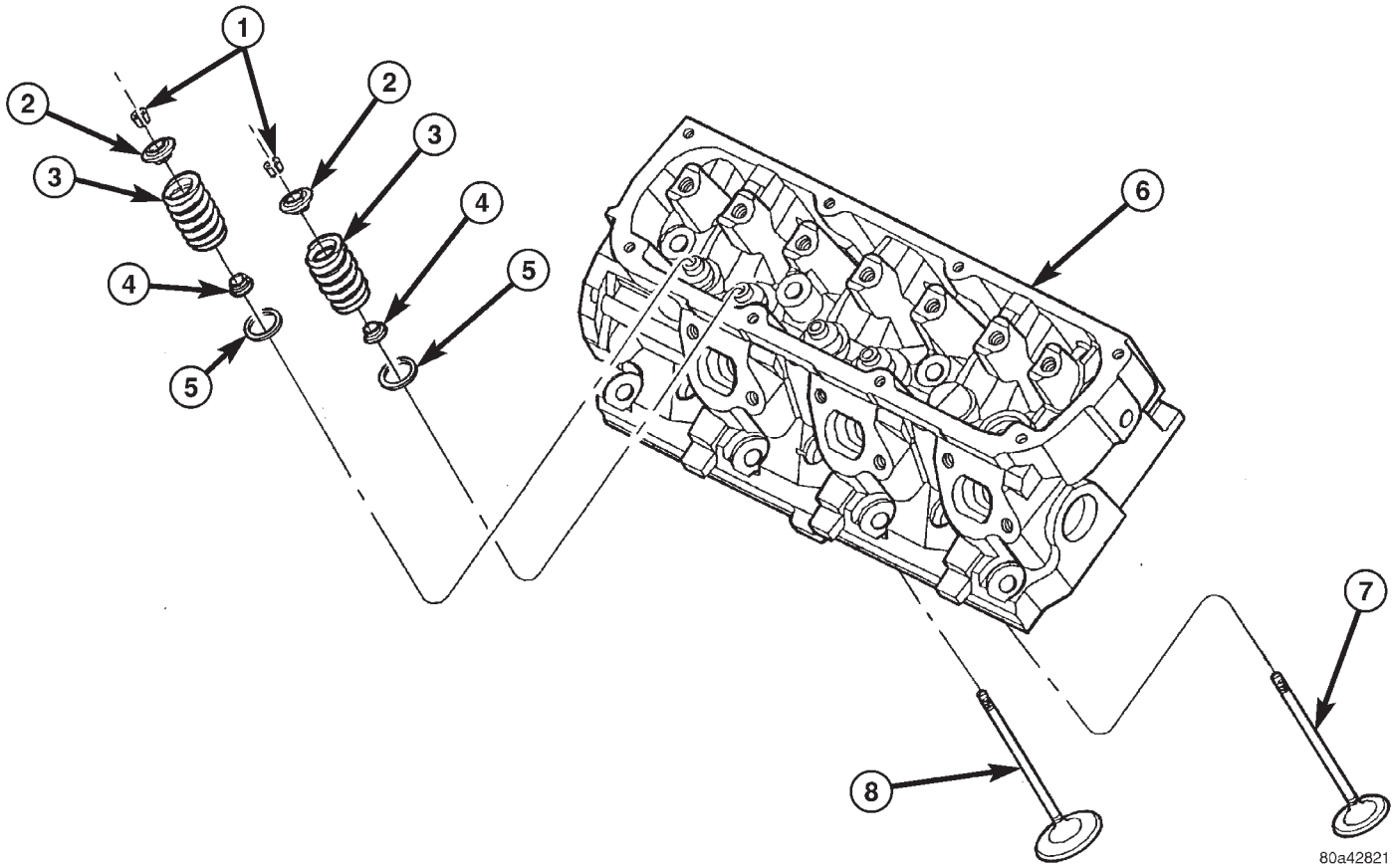

Fig. 36 VALVE COMPONENTS

1 - VALVE LOCKS
2 - RETAINERS
3 - VALVE SPRINGS
4 - VALVE STEM SEALS
5 - SPRING SEATS
6 - CYLINDER HEAD
7 - VALVE - EXHAUST
8 - VALVE - INTAKE

REMOVAL

REMOVAL - CYLINDER HEAD OFF

(1) With the cylinder head on a bench, position Special Tool C-3422-D with 8464 Adapter on the valve and spring retainer (Fig. 37).

(2) Compress the spring only enough to remove the valve retainer locks.

(3) Slowly release the spring tension and remove the valve spring and retainer.

(4) For removal of the valve stem seal (Refer to 9 - ENGINE/CYLINDER HEAD/VALVE STEM SEALS - REMOVAL).

REMOVAL - CYLINDER HEAD ON

(1) Disconnect negative cable from battery.

(2) Remove spark plug wires and all spark plugs.

(3) Remove cylinder head cover(s). (Refer to 9 - ENGINE/CYLINDER HEAD/CYLINDER HEAD COVER(S) - REMOVAL)

(4) Remove rocker arms and shaft. (Refer to 9 - ENGINE/CYLINDER HEAD/ROCKER ARMS - REMOVAL)

(5) Rotate engine until the piston in the cylinder bore requiring spring removal is at TDC.

(6) Install Special Tool 8453 to the cylinder head (Fig. 38). Tighten the attaching bolts to 23 N·m (200 in. lbs.).

(7) Install a spark plug adapter in the spark plug hole. Connect air hose that can supply 620.5–689 kPa (90–100 psi) of air pressure to adapter. This is to hold valves in place while servicing components.

(8) Locate the forcing screw and spring retainer adapter assembly over the spring requiring removal (Fig. 38).

(9) Slowly turn the forcing screw clockwise (compressing the valve spring) until the valve keepers can be removed.

(10) Turn forcing screw counterclockwise to relieve spring tension. Remove retainer and valve spring.

VALVE SPRINGS (Continued)

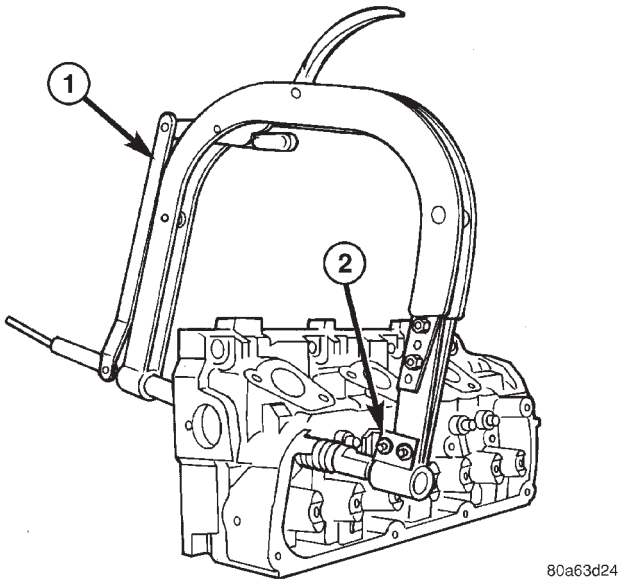

Fig. 37 VALVE SPRING - REMOVE/INSTALL

1 - SPECIAL TOOL C-3422-D SPRING COMPRESSOR
2 - SPECIAL TOOL 8464 ADAPTER

(11) Repeat procedure for each cylinder requiring valve spring removal.

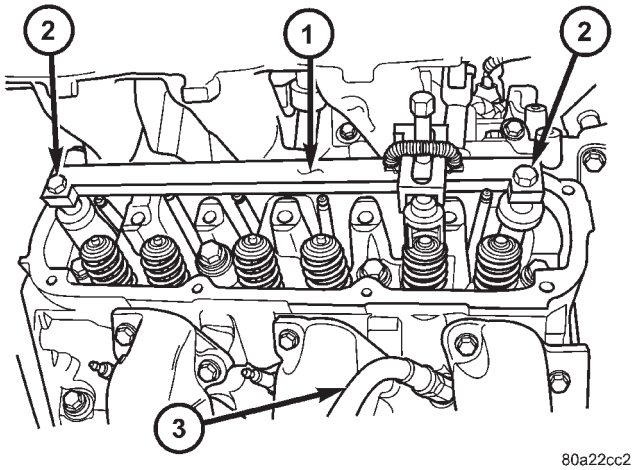

Fig. 38 VALVE SPRING - REMOVE/INSTALL (HEAD ON)

1 - SPECIAL TOOL 8453
2 - BOLTS - SPECIAL TOOL ATTACHING
3 - AIR SUPPLY HOSE ADAPTER

INSPECTION

Whenever valves have been removed for inspection, reconditioning or replacement, valve springs should be tested (Fig. 39). **As an example;** the compression length of a spring to be tested is 38.00 mm (1.496 in.). Turn the table of Tool C-647 until surface is in line with the 38.00 mm (1.496 in.) mark on the threaded stud and the zero mark on the front. Place spring over stud on the table and lift compressing lever to set tone device. Pull on torque wrench until ping is heard. Take reading on torque wrench at this instant. Multiply this reading by two. This will give the spring load at test length. Fractional measurements are indicated on the table for finer adjustments. Refer to Engine Specifications to obtain specified height and allowable tensions (Refer to 9 - ENGINE - SPECIFICATIONS). Replace any springs that do not meet specifications.

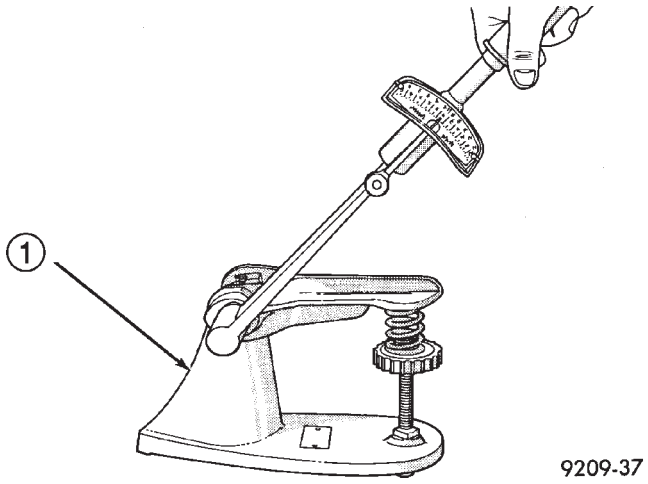

Fig. 39 TESTING VALVE SPRING

1 - SPECIAL TOOL C-647

INSTALLATION

INSTALLATION - CYLINDER HEAD OFF

(1) If removed, install a new valve stem seal (Refer to 9 - ENGINE/CYLINDER HEAD/VALVE STEM SEALS - INSTALLATION).

(2) Position valve spring and retainer on spring seat.

(3) Using Special Tool C-3422-D with 8464 Adapter (Fig. 37), compress the spring only enough to install the valve retainer locks. Install valve retainer locks.

(4) Slowly release the spring tension. Ensure the retainer locks are seated properly.

INSTALLATION - CYLINDER HEAD ON

(1) The intake valve stem seals should be pushed firmly and squarely over the valve guide using the valve stem as guide. **Do Not Force** seal against top of guide. When installing the valve retainer locks, compress the spring **only enough** to install the locks.

CAUTION: Do not pinch seal between retainer and top of valve guide.

VALVE SPRINGS (Continued)

(2) Follow the same procedure on the remaining 5 cylinders using the firing sequence 1-2-3-4-5-6. **Make sure piston in cylinder is at TDC on the valve spring that is being covered.**

(3) Remove spark plug adapter tool.

(4) Install rocker arms and shaft assembly. (Refer to 9 - ENGINE/CYLINDER HEAD/ROCKER ARMS - INSTALLATION)

(5) Install cylinder head covers. (Refer to 9 - ENGINE/CYLINDER HEAD/CYLINDER HEAD COVER(S) - INSTALLATION)

(6) Install spark plugs and connect wires.

(7) Connect negative cable to battery.

ROCKER ARMS

DESCRIPTION

DESCRIPTION - ROCKER ARMS

The rocker arms are installed on the rocker arm shaft. The rocker arms and shaft assembly is attached to the cylinder head with seven bolts and retainers. The rocker arms are made of stamped steel.

DESCRIPTION - PUSHRODS

The pushrods are made of steel and are a hollow design. The pushrods are positioned between the hydraulic lifter and the rocker arm.

OPERATION

OPERATION - ROCKER ARMS

The rocker arm pivots on the rocker shaft. Rocker arms are used to translate up and down motions provided by the camshaft, hydraulic lifter, and pushrod on one end, into a down and up motions on the valve stem on the opposing end.

OPERATION - PUSHRODS

The pushrod is a solid link between the hydraulic lifter and the rocker arm. Also, the pushrod supplies engine oil from the hydraulic lifter to the rocker arm.

REMOVAL - ROCKER ARMS AND SHAFT

(1) Remove the cylinder head cover(s). (Refer to 9 - ENGINE/CYLINDER HEAD/CYLINDER HEAD COVER(S) - REMOVAL)

NOTE: Rocker arm shaft bolts are captured to the shaft.

(2) Loosen the rocker shaft bolts (Fig. 40), rotating one turn each, until all valve spring pressure is relieved.

(3) Remove the rocker arms and shaft assembly (Fig. 40).

(4) For rocker arm disassembly procedures, (Refer to 9 - ENGINE/CYLINDER HEAD/ROCKER ARMS - DISASSEMBLY).

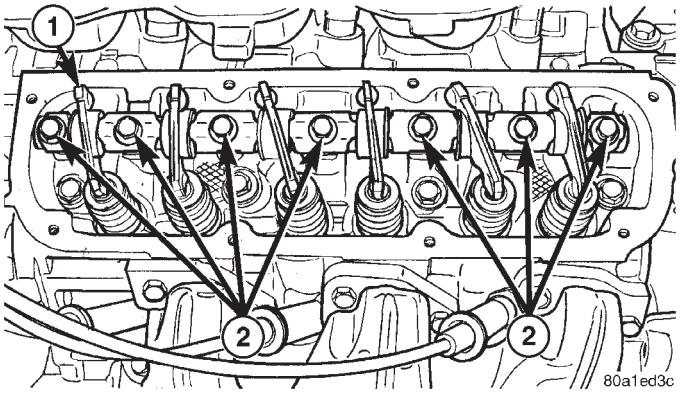

Fig. 40 ROCKER ARMS AND SHAFT

1 - ROCKER ARMS AND SHAFT ASSEMBLY
2 - ROCKER SHAFT BOLTS

DISASSEMBLY - ROCKER ARMS AND SHAFT

CAUTION: Do not attempt to drive the bolt from the rocker shaft. This can damage the retainer and bolt assembly.

(1) Remove the rocker arm retainer and bolt by performing the following procedure:

(a) Using adjustable pliers, grip the edges of the retainer (Fig. 41).

(b) Apply an upward force with a slight rocking motion until the retainer disengages from shaft (Fig. 41).

(2) Remove rocker arms (Fig. 42). Identify the component locations for reassembly in original locations.

ROCKER ARMS (Continued)

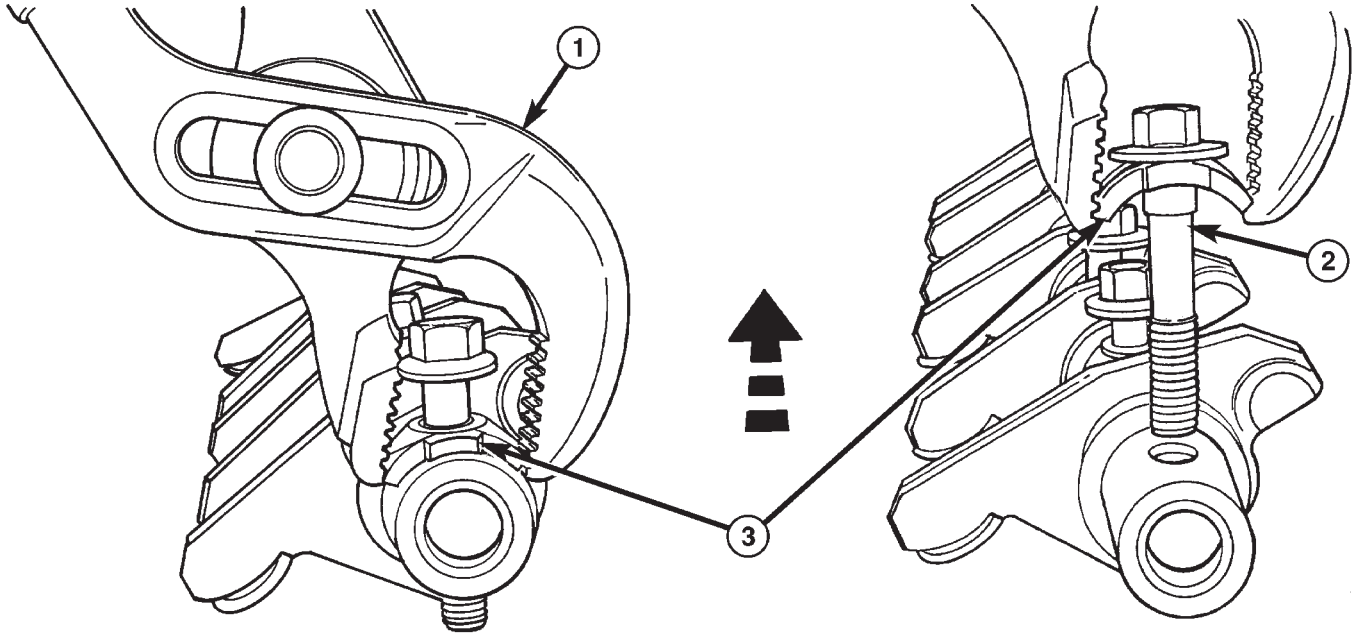

80a1ec81

Fig. 41 ROCKER ARM RETAINER - REMOVAL

1 - ADJUSTABLE PLIERS
2 - ROCKER SHAFT BOLT
3 - ROCKER ARM RETAINER

ASSEMBLY - ROCKER ARMS AND SHAFT

(1) Install rocker arms on the shaft (Fig. 42). Install in the orginal positions if re-used. **Ensure** the rocker shaft, all the retainers and washers are properly positioned and installed in the correct locations (Fig. 42).

(2) Install rocker arms and shaft to the cylinder head. (Refer to 9 - ENGINE/CYLINDER HEAD/ ROCKER ARMS - INSTALLATION)

INSTALLATION - ROCKER ARMS AND SHAFT

CAUTION: Ensure the longer shaft retaining bolt is installed in the proper location on the rocker shaft. (Refer to 9 - ENGINE/CYLINDER HEAD/ROCKER ARMS - ASSEMBLY)

(1) Position the rocker arm and shaft assemblies on the pedestal mounts.

CAUTION: Ensure all pushrods are properly located on the lifter and the rocker arm socket.

(2) Align each rocker arm socket with each push-rod end.

CAUTION: The rocker arm shaft should be tightened down slowly, starting with the center bolts. Allow 20 minutes lifter bleed down time after installation of the rocker shafts before engine operation.

(3) Slowly tighten rocker shaft bolts evenly until shaft is seated. Tighten bolts to 23 N·m (200 in. lbs.) (Fig. 43).

(4) Install the cylinder head cover(s). (Refer to 9 - ENGINE/CYLINDER HEAD/CYLINDER HEAD COVER(S) - INSTALLATION)

ROCKER ARMS (Continued)

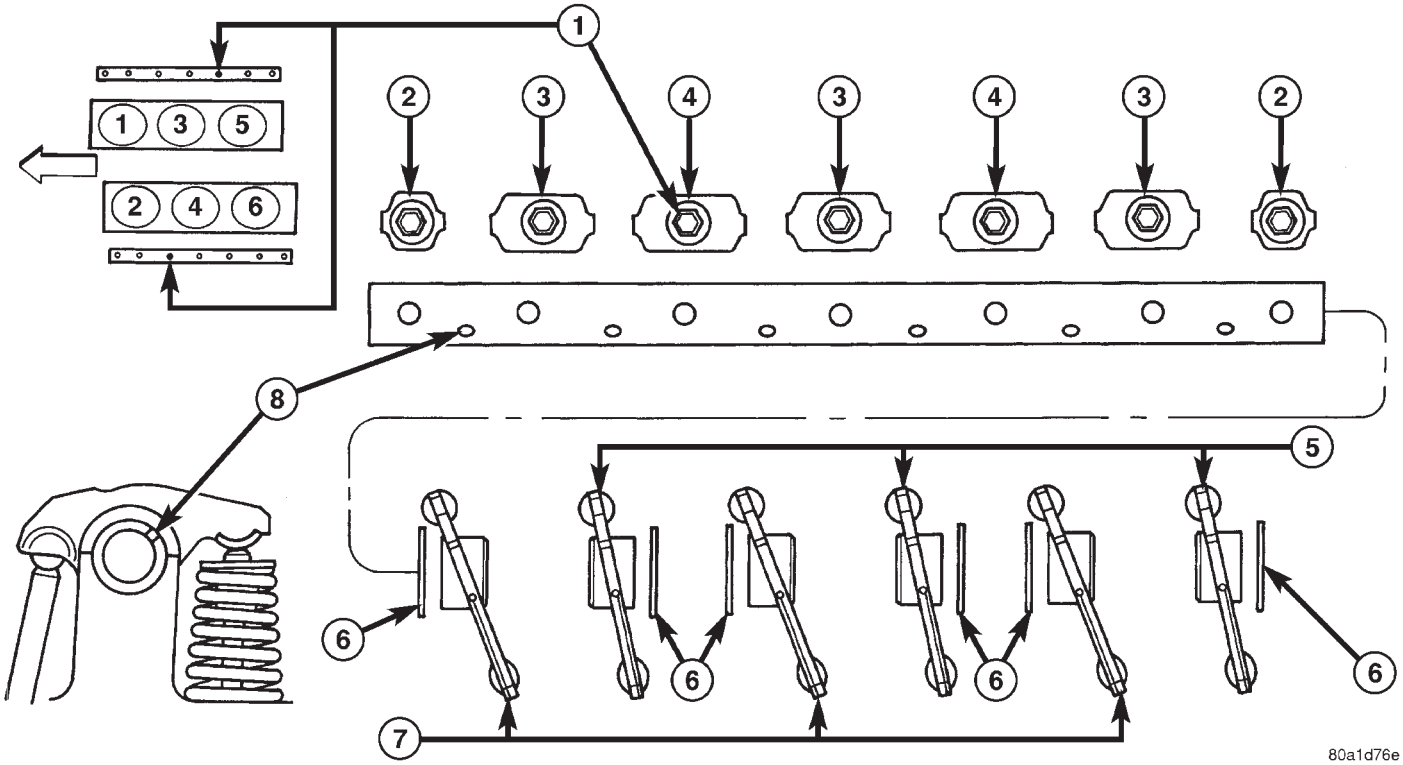

Fig. 42 ROCKER ARMS AND SHAFT

1 - BOLT (ROCKER SHAFT OIL FEED - LONGER LENGTH)
2 - SHAFT RETAINER/SPACER - 21.5 mm (0.84 in.)
3 -SHAFT RETAINER/SPACER - 37.5 mm (1.47 in.)
4 - SHAFT RETAINER/SPACER - 40.9 mm (1.61 in.)
5 - ROCKER ARM - EXHAUST
6 - WASHER
7 - ROCKER ARM - INTAKE (LARGER OFFSET)
8 - ROCKER ARMS LUBRICATION FEED HOLE (POSITION UPWARD & TOWARD VALVE SPRING)

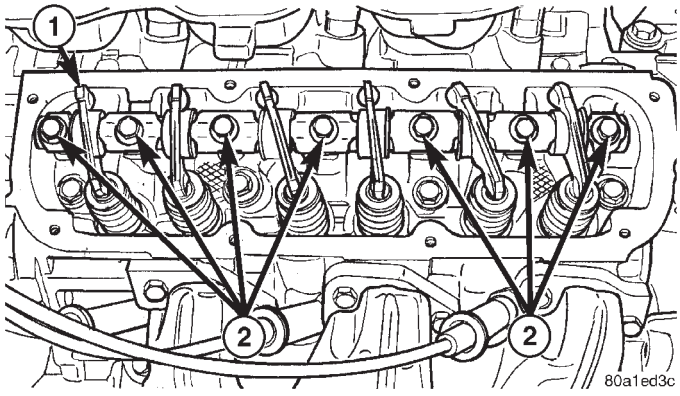

Fig. 43 ROCKER ARMS AND SHAFT

1 - ROCKER ARMS AND SHAFT ASSEMBLY
2 - ROCKER SHAFT BOLTS

VALVE STEM SEALS

DESCRIPTION

The valve stem seals are made of Viton rubber. The seals are positioned over the valve stem and seated on the valve guide (Fig. 44).

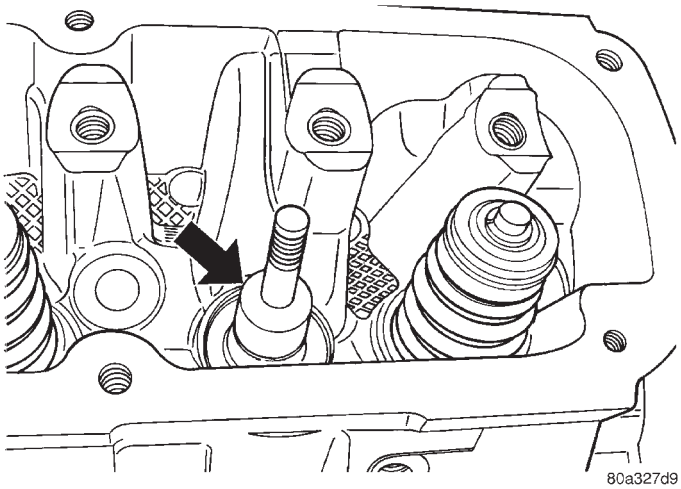

Fig. 44 Valve Stem Seal

VALVE STEM SEALS (Continued)

REMOVAL

(1) Remove the valve springs. (Refer to 9 - ENGINE/CYLINDER HEAD/VALVE SPRINGS - REMOVAL)

(2) Remove the valve stem seal (Fig. 44).

INSTALLATION

(1) Install the valve stem seal squarely over the valve guide, using the valve stem as a guide (Fig. 44). Do not force the seal against top of the valve guide.

(2) Install the valve spring. (Refer to 9 - ENGINE/CYLINDER HEAD/VALVE SPRINGS - INSTALLATION)

ENGINE BLOCK

DESCRIPTION

The cylinder block is made of cast iron and is a deep skirt design.

STANDARD PROCEDURE - CYLINDER BORE HONING

(1) Used carefully, the cylinder bore resizing hone, recommended tool C-823 or equivalent, equipped with 220 grit stones, is the best tool for this honing procedure. In addition to deglazing, it will reduce taper and out-of-round as well as removing light scuffing, scoring or scratches. Usually a few strokes will clean up a bore and maintain the required limits.

(2) Deglazing of the cylinder walls may be done using a cylinder surfacing hone, recommended tool C-3501 or equivalent, equipped with 280 grit stones, if the cylinder bore is straight and round. 20–60 strokes depending on the bore condition, will be sufficient to provide a satisfactory surface. Use a light honing oil. **Do not use engine or transmission oil, mineral spirits or kerosene.** Inspect cylinder walls after each 20 strokes.

(3) Honing should be done by moving the hone up and down fast enough to get a cross-hatch pattern. When hone marks **intersect** at 40-60 degrees, the cross hatch angle is most satisfactory for proper seating of rings (Fig. 45).

(4) A controlled hone motor speed between 200–300 RPM is necessary to obtain the proper cross-hatch angle. The number of up and down strokes per minute can be regulated to get the desired 40–60 degree angle. Faster up and down strokes increase the cross-hatch angle.

(5) After honing, it is necessary that the block be cleaned again to remove all traces of abrasive.

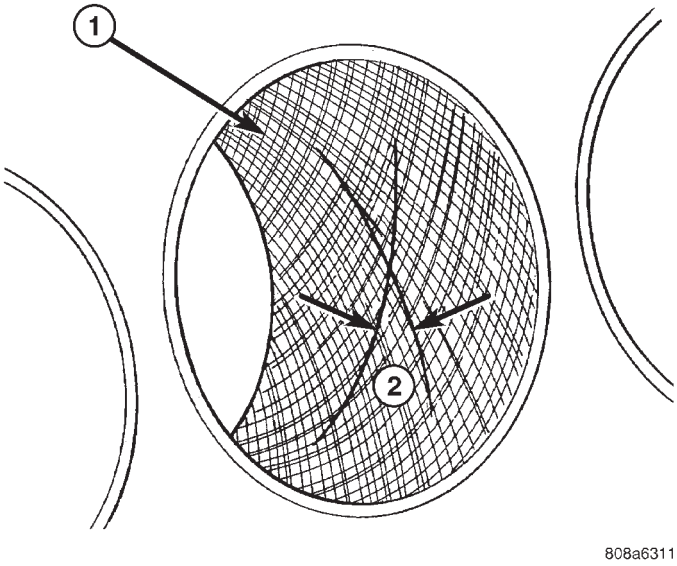

Fig. 45 Cylinder Bore Cross-Hatch Pattern

1 - CROSS-HATCH PATTERN
2 - 40°–60°

CAUTION: Ensure all abrasives are removed from engine parts after honing. It is recommended that a solution of soap and hot water be used with a brush and the parts then thoroughly dried. The bore can be considered clean when it can be wiped clean with a white cloth and cloth remains clean. Oil the bores after cleaning to prevent rusting.

CLEANING

Clean cylinder block thoroughly using a suitable cleaning solvent.

INSPECTION

ENGINE BLOCK

(1) Clean cylinder block thoroughly and check all core hole plugs for evidence of leaking.

(2) If new core plugs are to be installed, (Refer to 9 - ENGINE - STANDARD PROCEDURE - ENGINE CORE AND OIL GALLERY PLUGS).

(3) Examine block and cylinder bores for cracks or fractures.

(4) Check block deck surfaces for flatness. Deck surface must be within service limit of 0.1 mm (0.004 in.).

CYLINDER BORE

NOTE: The cylinder bores should be measured at normal room temperature, 21°C (70°F).

ENGINE BLOCK (Continued)

The cylinder walls should be checked for out-of-round and taper with Tool C119 or equivalent (Fig. 46) (Refer to 9 - ENGINE - SPECIFICATIONS). If the cylinder walls are badly scuffed or scored, the cylinder block should be replaced, and new pistons and rings fitted.

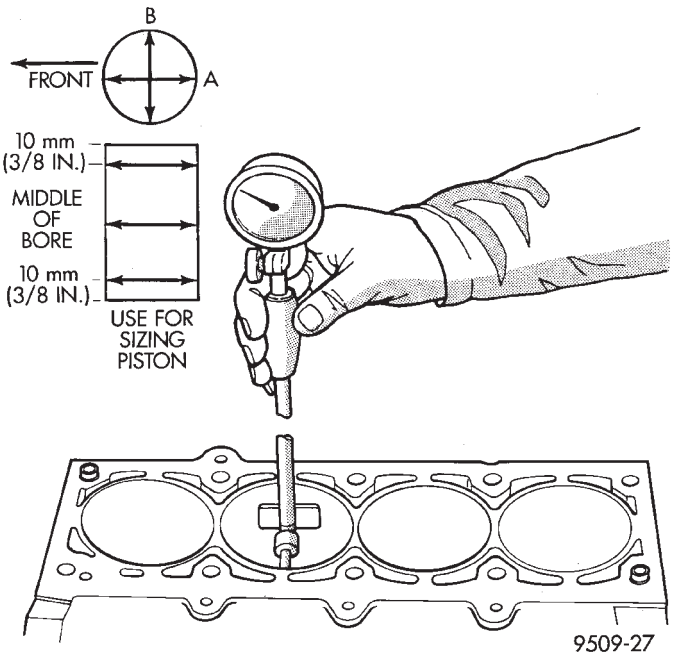

Fig. 46 Checking Cylinder Bore Size

Measure the cylinder bore at three levels in directions A and B (Fig. 46). Top measurement should be 10 mm (3/8 in.) down and bottom measurement should be 10 mm (3/8 in.) up from bottom of bore. (Refer to 9 - ENGINE - SPECIFICATIONS).

CAMSHAFT & BEARINGS (IN BLOCK)

DESCRIPTION

The nodular iron camshaft is mounted in the engine block and supported with four steel backed aluminum bearings (Fig. 47). A thrust plate, located in front of the first bearing, is bolted to the block and controls the camshaft end play (Fig. 47). To distinguish camshafts between the 3.3L and 3.8L engines, a cast-in ring is located between the rear bearing journal and rear lobe (Fig. 48). The 3.3L engine application is as-cast only. The 3.8L engine application the cast ring is machined off.

OPERATION

The camshaft is driven by the crankshaft through a timing chain and sprockets. The camshaft has precisely machined (egg-shaped) lobes to provide accurate valve timing and duration.

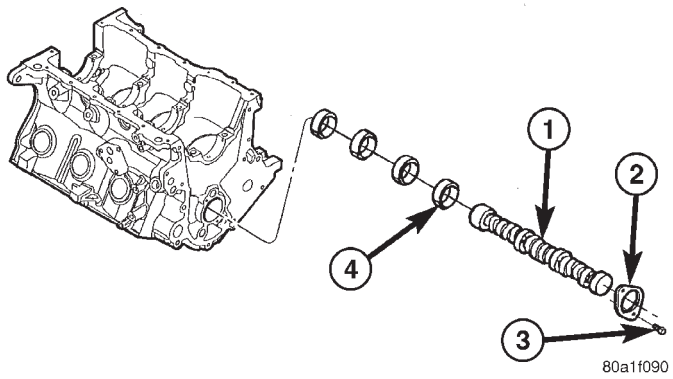

Fig. 47 CAMSHAFT AND BEARINGS

1 - CAMSHAFT
2 - THRUST PLATE
3 - BOLT
4 - CAMSHAFT BEARINGS (SERVICED WITH BLOCK)

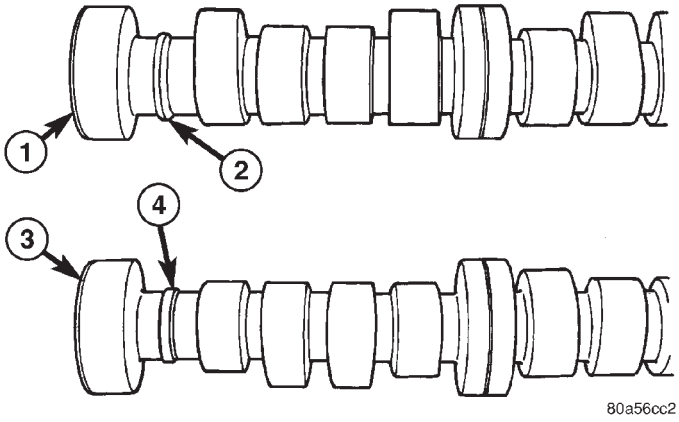

Fig. 48 CAMSHAFT IDENTIFICATION

1 - CAMSHAFT - 3.3L ENGINE
2 - CAST-IN RING
3 - CAMSHAFT - 3.8L ENGINE
4 - MACHINED CAST-IN RING

REMOVAL

(1) Remove the engine assembly from vehicle. (Refer to 9 - ENGINE - REMOVAL)

Remove the cylinder heads. (Refer to 9 - ENGINE/CYLINDER HEAD - REMOVAL)

(2) Remove the timing chain and camshaft sprocket. (Refer to 9 - ENGINE/VALVE TIMING/TIMING BELT/CHAIN AND SPROCKETS - REMOVAL)

(3) Remove the hydraulic lifters. (Refer to 9 - ENGINE/ENGINE BLOCK/HYDRAULIC LIFTERS (CAM IN BLOCK) - REMOVAL). Identify each tappet for reinstallation in original location.

CAMSHAFT & BEARINGS (IN BLOCK) (Continued)

(4) Remove camshaft thrust plate (Fig. 47).

(5) Install a long bolt into front of camshaft to facilitate removal of the camshaft.

(6) Remove the camshaft (Fig. 47), being careful not to damage cam bearings with the cam lobes.

NOTE: The camshaft bearings are serviced with the engine block.

INSPECTION

(1) Check the cam lobes and bearing surfaces for abnormal wear and damage (Fig. 49). Replace camshaft as required.

NOTE: If camshaft is replaced due to lobe wear or damage, always replace the lifters.

(2) Measure the lobe actual wear (unworn area - wear zone = actual wear) (Fig. 49) and replace camshaft if out of limit. Standard value is 0.0254 mm (0.001 in.), wear **limit** is 0.254 mm (0.010 in.).

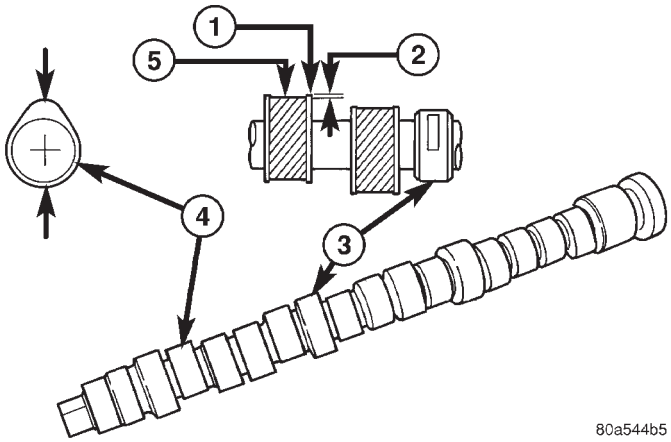

Fig. 49 Checking Camshaft for Wear (Typical)

1 - UNWORN AREA
2 - ACTUAL WEAR
3 - BEARING JOURNAL
4 - LOBE
5 - WEAR ZONE

INSTALLATION

(1) Lubricate camshaft lobes and camshaft bearing journals with engine oil.

(2) Install a long bolt into the camshaft to assist in the installation of the camshaft.

(3) Carefully install the camshaft in engine block.

(4) Install camshaft thrust plate and bolts (Fig. 47). Tighten to 12 N·m (105 in. lbs.) torque.

(5) Measure camshaft end play. (Refer to 9 - ENGINE - SPECIFICATIONS) If not within specifications, replace thrust plate.

(6) Install the timing chain and sprockets. (Refer to 9 - ENGINE/VALVE TIMING/TIMING BELT/ CHAIN AND SPROCKETS - INSTALLATION)

NOTE: When camshaft is replaced, all of the hydraulic lifters must be replaced also.

(7) Install the hydraulic lifters (Refer to 9 - ENGINE/ENGINE BLOCK/HYDRAULIC LIFTERS (CAM IN BLOCK) - INSTALLATION). Each lifter reused must be installed in the same position from which it was removed.

(8) Install the timing chain cover. (Refer to 9 - ENGINE/VALVE TIMING/TIMING BELT / CHAIN COVER(S) - INSTALLATION)

(9) Install the cylinder heads. (Refer to 9 - ENGINE/CYLINDER HEAD - INSTALLATION)

(10) Install the cylinder head covers. (Refer to 9 - ENGINE/CYLINDER HEAD/CYLINDER HEAD COVER(S) - INSTALLATION)

(11) Install the lower and upper intake manifolds. (Refer to 9 - ENGINE/MANIFOLDS/INTAKE MANIFOLD - INSTALLATION)

(12) Install the engine assembly. (Refer to 9 - ENGINE - INSTALLATION)

CONNECTING ROD BEARINGS

STANDARD PROCEDURE - MEASURING CONNECTING ROD BEARING CLEARANCE

The bearing caps are not interchangeable and should be marked at removal to ensure correct assembly. The bearing shells must be installed with the tangs inserted into the machined grooves in the rods and caps. Install cap with the tangs on the same side as the rod. Fit all rods on one bank until complete. Connecting rod bearings are available in the standard size and the following undersizes: 0.025 mm (0.001 in.) and 0.250 mm (0.010 in.).

CAUTION: Install the bearings in pairs. Do not use a new bearing half with an old bearing half. Do not file the rods or bearing caps.

Measure connecting rod journal for taper and out-of-round. (Refer to 9 - ENGINE/ENGINE BLOCK/ CRANKSHAFT - INSPECTION)

The connecting rod bearing clearances can be determined by use of Plastigage or the equivalent. The following is the recommended procedure for the use of Plastigage:

(1) Rotate the crankshaft until the connecting rod to be checked is at the bottom of its stroke.

(2) Remove oil film from surface to be checked. Plastigage is soluble in oil.

CONNECTING ROD BEARINGS (Continued)

(3) Place a piece of Plastigage across the entire width of the bearing shell in the bearing cap approximately 6.35 mm (1/4 in.) off center and away from the oil hole. In addition, suspect areas can be checked by placing Plastigage in that area.

(4) Assemble the rod cap with Plastigage in place. Tighten the rod cap to the specified torque. **Do not rotate the crankshaft while assembling the cap or the Plastigage may be smeared, giving inaccurate results.**

(5) Remove the bearing cap and compare the width of the flattened Plastigage with the scale provided on the package (Fig. 50). Locate the band closest to the same width. This band indicates the amount of oil clearance. Differences in readings between the ends indicate the amount of taper present. Record all readings taken. Refer to Engine Specifications (Refer to 9 - ENGINE - SPECIFICATIONS). **Plastigage generally is accompanied by two scales. One scale is in inches, the other is a metric scale. If the bearing clearance exceeds wear limit specification, replace the bearing.**

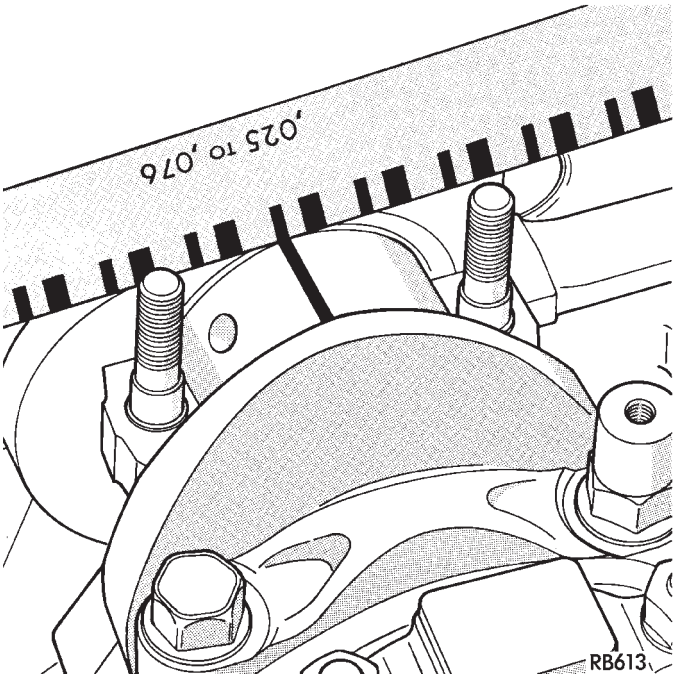

Fig. 50 Measuring Connecting Rod Bearing Clearance

CRANKSHAFT

DESCRIPTION

DESCRIPTION - 3.3L

The nodular iron crankshaft is supported by four main bearings, with number two position the thrust bearing (Fig. 51). Crankshaft end sealing is provided by front and rear rubber seals.

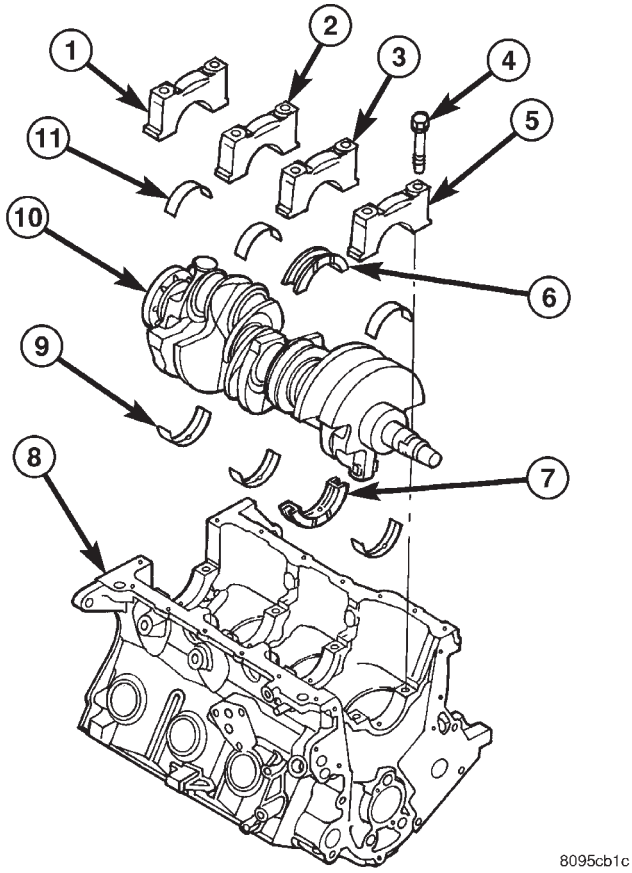

Fig. 51 CRANKSHAFT AND ENGINE BLOCK - 3.3L

1 - MAIN BEARING CAP No. 4
2 - MAIN BEARING CAP No. 3
3 - MAIN BEARING CAP No. 2
4 - MAIN BEARING CAP BOLT (QTY. 2 PER CAP)
5 - MAIN BEARING CAP No. 1
6 - LOWER MAIN BEARING - THRUST
7 - UPPER MAIN BEARING - THRUST
8 - ENGINE BLOCK
9 - UPPER MAIN BEARINGS
10 - CRANKSHAFT
11 - LOWER MAIN BEARINGS

CRANKSHAFT (Continued)

DESCRIPTION - 3.8L

The nodular iron crankshaft is supported by four main bearings, with number two position providing thrust bearing location (Fig. 52). Each main bearing cap has two vertical retaining bolts. The two center main caps have horizontal bolts to add increased rigidity to the lower engine block (Fig. 52). Crankshaft end sealing is provided by front and rear rubber seals.

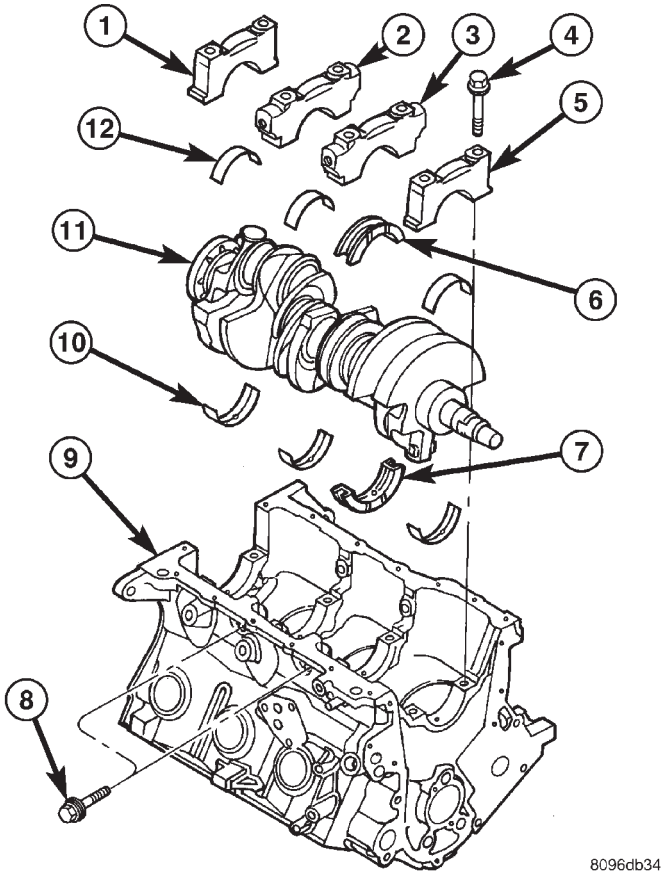

Fig. 52 CRANKSHAFT AND BLOCK - 3.8L

1 - MAIN BEARING CAP No. 4
2 - MAIN BEARING CAP No. 3
3 - MAIN BEARING CAP No. 2
4 - MAIN BEARING CAP BOLT
5 - MAIN BEARING CAP No. 1
6 - THRUST MAIN BEARING - LOWER
7 - THRUST MAIN BEARING - UPPER
8 - MAIN BEARING CAP CROSS BOLT
9 - ENGINE BLOCK
10 - MAIN BEARING - UPPER
11 - CRANKSHAFT
12 - MAIN BEARING - LOWER

OPERATION

The crankshaft transfers force generated by combustion within the cylinder to the flywheel or flexplate.

STANDARD PROCEDURE - MEASURING CRANKSHAFT END PLAY

(1) Mount a dial indicator to front of engine with the locating probe on nose of crankshaft (Fig. 53).
(2) Move crankshaft all the way to the rear of its travel.
(3) Zero the dial indicator.
(4) Move crankshaft all the way to the front and read the dial indicator. (Refer to 9 - ENGINE - SPECIFICATIONS) for end play specification.

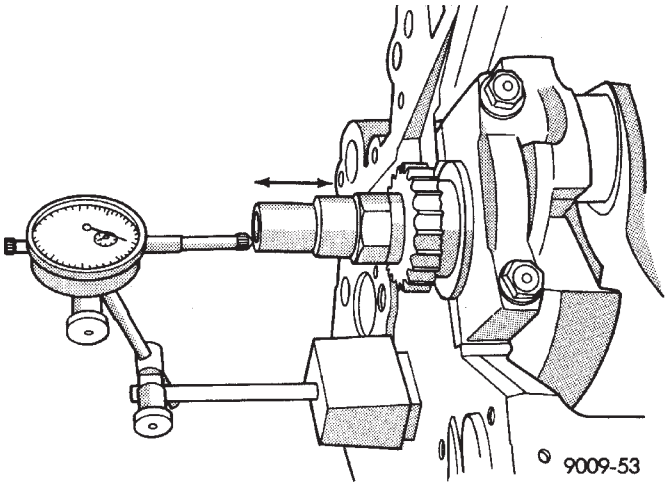

Fig. 53 Checking Crankshaft End Play—Typical

REMOVAL

(1) Remove the engine assembly. (Refer to 9 - ENGINE - REMOVAL)
(2) Separate transaxle from engine.
(3) Mount engine on an engine stand.
(4) Remove the oil filter.
(5) Remove the oil pan and oil pick-up tube. (Refer to 9 - ENGINE/LUBRICATION/OIL PAN - REMOVAL)
(6) Remove the timing chain cover. (Refer to 9 - ENGINE/VALVE TIMING/TIMING BELT / CHAIN COVER(S) - REMOVAL)
(7) Remove timing chain and sprockets. (Refer to 9 - ENGINE/VALVE TIMING/TIMING BELT/CHAIN AND SPROCKETS - REMOVAL)
(8) Remove crankshaft rear oil seal and retainer. (Refer to 9 - ENGINE/ENGINE BLOCK/CRANKSHAFT OIL SEAL - REAR - REMOVAL)
(9) Rotate the crankshaft until connecting rod cap is accessible.
(10) Mark connecting rod cap position using a suitable marker/scribe tool.
(11) Remove connecting rod bearing cap. Use care to prevent damage to the crankshaft bearing surfaces.
(12) Repeat removal procedure for each connecting rod cap.

CRANKSHAFT (Continued)

(13) Remove and discard the main bearing cross bolts and washers (3.8L engine only).

NOTE: Install new cross bolt and washer assembly (3.8L engine only) upon reassembly.

(14) Remove the main bearing cap bolts
(15) Remove the main bearing caps.
(16) Remove the crankshaft from engine block.

INSPECTION

The crankshaft journals should be checked for excessive wear, taper and scoring (Fig. 54). Limits of taper or out of round on any crankshaft journals should within specitifications. (Refer to 9 - ENGINE - SPECIFICATIONS) Journal grinding should not exceed 0.305 mm (0.012 in.) under the standard journal diameter. DO NOT grind thrust faces of No. 3 main bearing. DO NOT nick crank pin or bearing fillets. After grinding, remove rough edges from crankshaft oil holes and clean out all passages.

CAUTION: With the nodular cast iron crankshafts, it is important that the final paper or cloth polish be in the same direction as normal rotation in the engine.

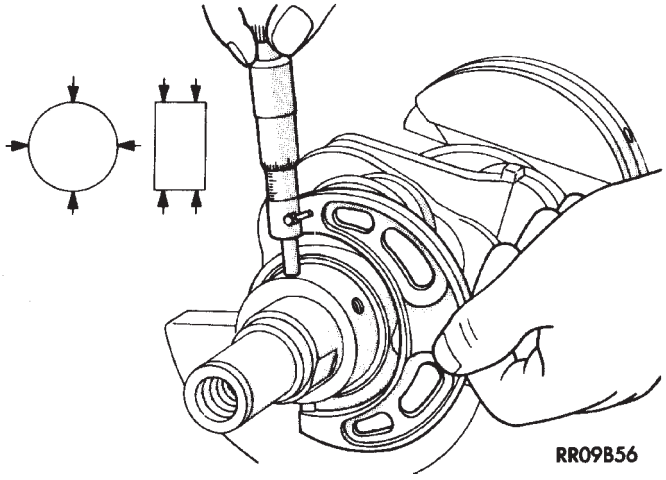

Fig. 54 Crankshaft Journal Measurements

INSTALLATION

(1) Lubricate with engine oil and install the crankshaft main bearing halves in the engine block.
(2) Position the crankshaft in engine block (Fig. 56).
(3) Perform main bearing fitting procedure. (Refer to 9 - ENGINE/ENGINE BLOCK/CRANKSHAFT MAIN BEARINGS - STANDARD PROCEDURE)
(4) Inspect main cap bolts for stretching (Fig. 55). Replace bolts that are stretched.

NOTE: The main cap bolts should be examined before reuse. Bolt stretch can be checked by holding a scale or straight edge against the threads. If all the threads do not contact the scale the bolt must be replaced (Fig. 55).

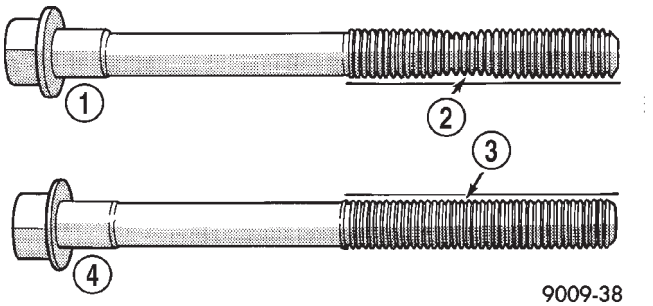

Fig. 55 Check for Stretched (Necked) Bolts

1 - STRETCHED BOLT
2 - THREADS ARE NOT STRAIGHT ON LINE
3 - THREADS ARE STRAIGHT ON LINE
4 - UNSTRETCHED BOLT

(5) Install the main bearing caps and bolts. Tighten bolts to 41 N·m (30 ft. lbs.) plus ¼ turn.

NOTE: Install new cross bolt and washer assembly (3.8L engine only) upon reassembly.

(6) Install and tighten the NEW cross bolts and washer assemblies (3.8L engine only) to 61 N·m (45 ft. lbs.) (Fig. 57).
(7) Position and install the connecting rod and bearing caps on the crankshaft. (Refer to 9 - ENGINE/ENGINE BLOCK/CONNECTING ROD BEARINGS - STANDARD PROCEDURE)
(8) Install the crankshaft rear oil seal. (Refer to 9 - ENGINE/ENGINE BLOCK/CRANKSHAFT OIL SEAL - REAR - INSTALLATION)
(9) Install the crankshaft sprocket. (Refer to 9 - ENGINE/VALVE TIMING/TIMING BELT/CHAIN AND SPROCKETS - INSTALLATION)
(10) Install the timing chain and camshaft sprocket. (Refer to 9 - ENGINE/VALVE TIMING/ TIMING BELT/CHAIN AND SPROCKETS - INSTALLATION)

CRANKSHAFT (Continued)

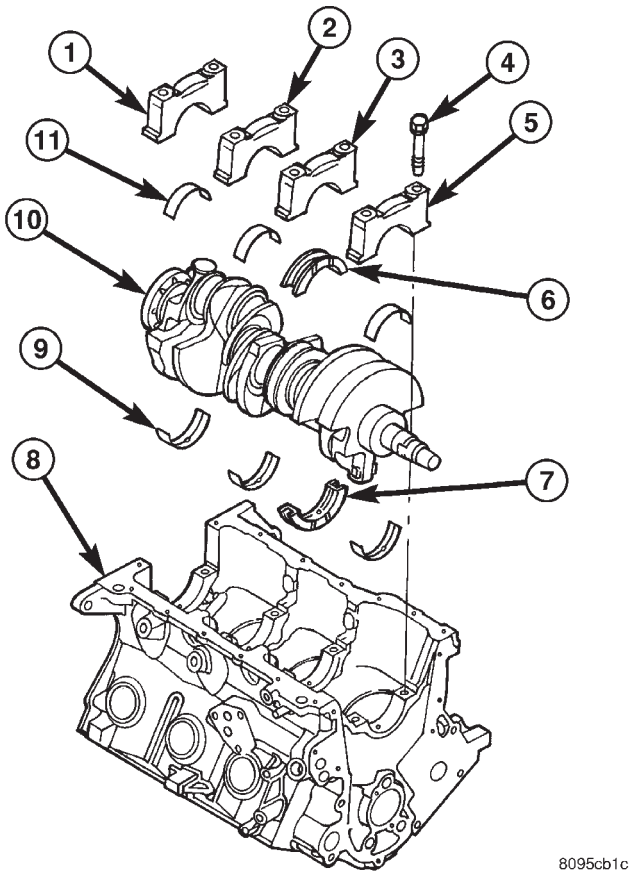

Fig. 56 CRANKSHAFT AND BLOCK - 3.3L

1 - MAIN BEARING CAP No. 4
2 - MAIN BEARING CAP No. 3
3 - MAIN BEARING CAP No. 2
4 - MAIN BEARING CAP BOLT (QTY. 2 PER CAP)
5 - MAIN BEARING CAP No. 1
6 - LOWER MAIN BEARING - THRUST
7 - UPPER MAIN BEARING - THRUST
8 - ENGINE BLOCK
9 - UPPER MAIN BEARINGS
10 - CRANKSHAFT
11 - LOWER MAIN BEARINGS

(11) Install the timing chain cover.

(12) Install the oil pick-up tube and oil pan. (Refer to 9 - ENGINE/LUBRICATION/OIL PAN - INSTALLATION)

(13) Install the transaxle to the engine.

(14) Install the engine assembly. (Refer to 9 - ENGINE - INSTALLATION)

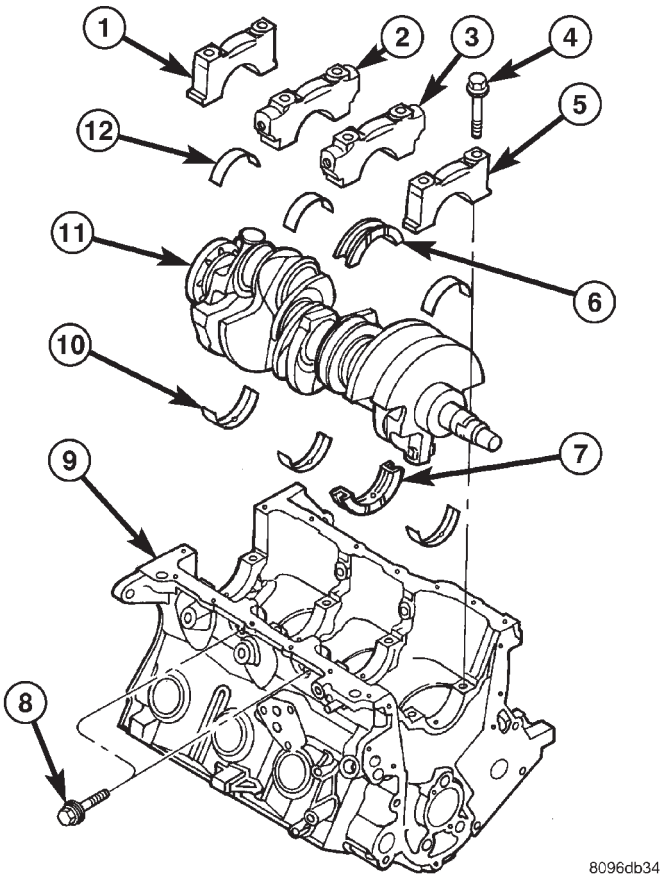

Fig. 57 CRANKSHAFT AND BLOCK - 3.8L

1 - MAIN BEARING CAP No. 4
2 - MAIN BEARING CAP No. 3
3 - MAIN BEARING CAP No. 2
4 - MAIN BEARING CAP BOLT
5 - MAIN BEARING CAP No. 1
6 - THRUST MAIN BEARING - LOWER
7 - THRUST MAIN BEARING - UPPER
8 - MAIN BEARING CAP CROSS BOLT
9 - ENGINE BLOCK
10 - MAIN BEARING - UPPER
11 - CRANKSHAFT
12 - MAIN BEARING - LOWER

CRANKSHAFT MAIN BEARINGS

STANDARD PROCEDURE - MAIN BEARING FITTING

Bearing caps are not interchangeable and should be marked at removal to insure correct assembly (Fig. 58). Upper and lower bearing halves are NOT interchangeable. Lower main bearing halves of 1, 3 and 4 are interchangeable. Upper main bearing halves of 1, 3 and 4 are interchangeable.

CRANKSHAFT MAIN BEARINGS (Continued)

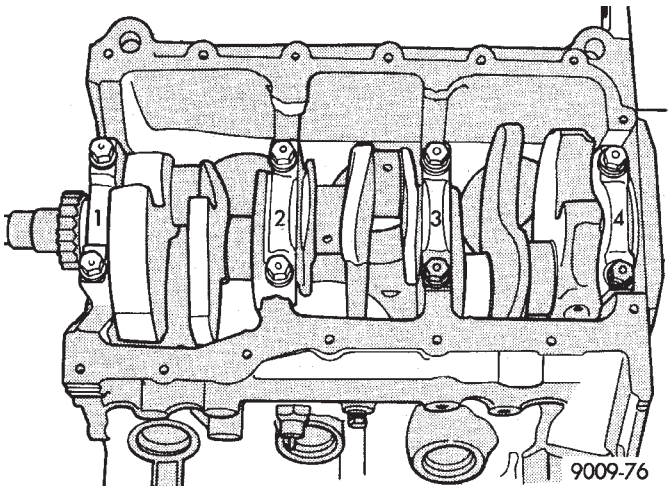

Fig. 58 Main Bearing Cap Identification

Upper and lower number 2 bearing halves are flanged to carry the crankshaft thrust loads and are NOT interchangeable with any other bearing halves in the engine (Fig. 59). All bearing cap bolts removed during service procedures are to be cleaned and lubricated with engine oil before installation. Bearing shells are available in standard and the following undersizes: 0.025 mm (0.001 in.) and 0.254 mm (0.010 in). Never install an undersize bearing that will reduce clearance below specifications.

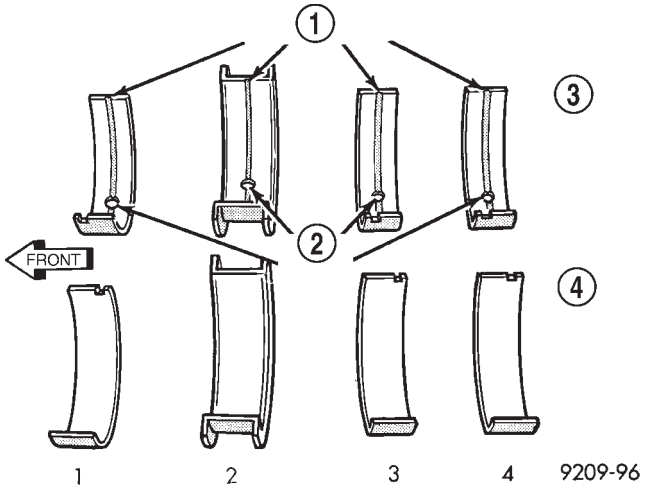

Fig. 59 Main Bearing Identification

1 - OIL GROOVES
2 - OIL HOLES
3 - UPPER BEARINGS
4 - LOWER BEARINGS

CRANKSHAFT BEARING OIL CLEARANCE

Inspect the crankshaft bearing journals. (Refer to 9 - ENGINE/ENGINE BLOCK/CRANKSHAFT - INSPECTION)

Engine crankshaft bearing clearances can be determined by use of Plastigage or the equivalent. The following is the recommended procedures for the use of Plastigage with the engine in the vehicle or engine on a repair stand.

PLASTIGAGE METHOD—ENGINE IN-VEHICLE

NOTE: The total clearance of the main bearings can only be determined with the engine in the vehicle by removing the weight of the crankshaft. This can be accomplished by either of two following methods:

(1) Preferred method:

a. Shim the bearings adjacent to the bearing to be checked in order to remove the clearance between upper bearing shell and the crankshaft. This can be accomplished by placing a minimum of 0.254 mm (0.010 in.) shim (e. g. cardboard, matchbook cover, etc.) between the bearing shell and the bearing cap on the adjacent bearings and tightening bolts to 14–20 N·m (10–15 ft. lbs.).

- When checking #1 main bearing shim #2 main bearing.
- When checking #2 main bearing shim #1 & #3 main bearing.
- When checking #3 main bearing shim #2 & #4 main bearing.
- When checking #4 main bearing shim #3 main bearing.

NOTE: Remove all shims before reassembling engine.

(2) Alternative Method:

a. Support the weight of the crankshaft with a jack under the counterweight adjacent to the bearing being checked.

(3) Remove oil film from surface to be checked. Plastigage is soluble in oil.

(4) Place a piece of Plastigage across the entire width of the bearing shell in the cap approximately 6.35 mm (1/4 in.) off center and away from the oil holes (Fig. 60). (In addition, suspected areas can be checked by placing the Plastigage in the suspected area). Torque the bearing cap bolts of the bearing being checked to the proper specifications.

(5) Remove the bearing cap and compare the width of the flattened Plastigage (Fig. 61) with the scale provided on the package. Locate the band closest to the same width. This band shows the amount of clearance in thousandths. Differences in readings between the ends indicate the amount of taper present. Record all readings taken. (Refer to 9 - ENGINE - SPECIFICATIONS) **Plastigage generally is accompanied by two scales. One scale is in inches, the other is a metric scale.**

CRANKSHAFT MAIN BEARINGS (Continued)

NOTE: Plastigage is available in a variety of clearance ranges. Use the most appropriate range for the specifications you are checking.

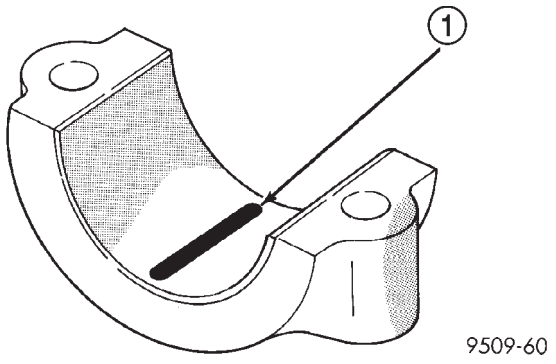

Fig. 60 Plastigage Placed in Lower

1 - PLASTIGAGE

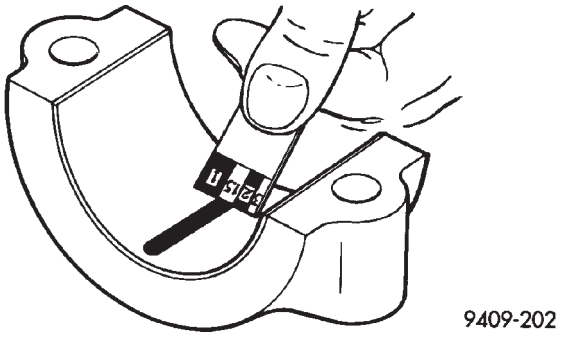

Fig. 61 Clearance Measurement

PLASTIGAGE METHOD—ENGINE OUT-OF-VEHICLE

(1) With engine in the inverted position (crankshaft up) and mounted on a repair stand, remove main journal cap.

(2) Remove oil from journal and bearing shell.

(3) Cut Plastigage to same length as width of the bearing and place it in parallel with the journal axis (Fig. 60).

(4) Carefully install the main bearing cap and tighten the bolts to specified torque.

CAUTION: Do not rotate crankshaft or the Plastigage will be smeared.

(5) Carefully remove the bearing cap and measure the width of the Plastigage at the widest part using the scale on the Plastigage package (Fig. 61). Refer to Engine Specifications for proper clearances (Refer to 9 - ENGINE - SPECIFICATIONS). If the clearance exceeds the specified limits, replace the main bearing(s) with the appropriate size, and if necessary, have the crankshaft machined to next undersize.

REMOVAL - CRANKSHAFT MAIN BEARINGS

(1) Remove the oil pan. (Refer to 9 - ENGINE/LUBRICATION/OIL PAN - REMOVAL)

(2) Identify main bearing caps before removal.

(3) Remove bearing caps one at a time. Remove upper half of bearing by inserting Special Main Bearing Tool C-3059 (Fig. 62) into the oil hole of crankshaft.

(4) Slowly rotate crankshaft clockwise, forcing out upper half of bearing shell.

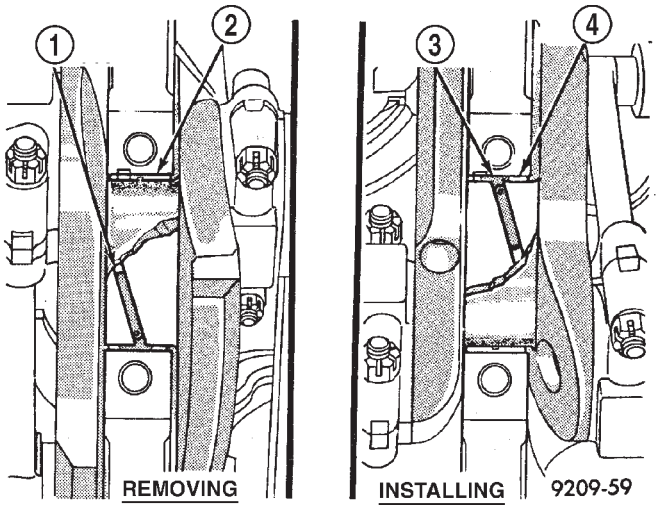

Fig. 62 Upper Main Bearing Removing/Installing With Special Tool C-3059

1 - SPECIAL TOOL C-3059
2 - BEARING
3 - SPECIAL TOOL C-3059
4 - BEARING

INSTALLATION - CRANKSHAFT MAIN BEARINGS

NOTE: One main bearing should be selectively fitted while all other main bearing caps are properly tightened.

(1) For main bearing fitting procedure, (Refer to 9 - ENGINE/ENGINE BLOCK/CRANKSHAFT MAIN BEARINGS - STANDARD PROCEDURE)

(2) Start bearing in place, and insert Main Bearing Tool C-3059 into oil hole of crankshaft (Fig. 62).

(3) Slowly rotate crankshaft counterclockwise sliding the bearing into position. Remove Special Main Bearing Tool C-3059.

(4) Inspect main cap bolts for stretching (Fig. 63). Replace bolts that are stretched.

CRANKSHAFT MAIN BEARINGS (Continued)

NOTE: The main cap bolts should be examined before reuse. Bolt stretch can be checked by holding a scale or straight edge against the threads. If all the threads do not contact the scale the bolt must be replaced (Fig. 63).

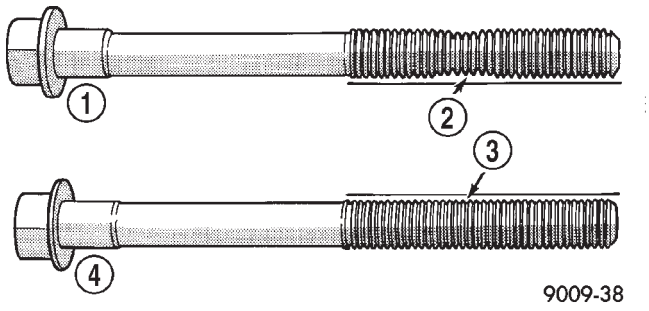

Fig. 63 Check for Stretched (Necked) Bolts

1 - STRETCHED BOLT
2 - THREADS ARE NOT STRAIGHT ON LINE
3 - THREADS ARE STRAIGHT ON LINE
4 - UNSTRETCHED BOLT

(5) Install each main cap and tighten bolts finger tight.

(6) Tighten number 1, 3 and 4 main cap bolts to 41 N·m + 1/4 Turn (30 ft. lbs.+ 1/4 Turn).

(7) Rotate the crankshaft until the number 6 piston is at TDC.

(8) To ensure correct thrust bearing alignment the following procedure must be done:

a. Move crankshaft all the way to the rear of its travel.

b. Then, move crankshaft all the way to the front of its travel.

c. Wedge an appropriate tool between the rear of the cylinder block and rear crankshaft counterweight. This will hold the crankshaft in it's most forward position.

d. Tighten the #2 Thrust Bearing cap bolts to 41 N·m + 1/4 Turn (30 ft. lbs.+ 1/4 Turn). Remove the holding tool.

(9) Install oil pan. (Refer to 9 - ENGINE/LUBRICATION/OIL PAN - INSTALLATION)

(10) Fill engine crankcase with proper oil to correct level.

CRANKSHAFT OIL SEAL - FRONT

REMOVAL

(1) Disconnect negative cable from battery.

(2) Raise vehicle on hoist. Remove right wheel and inner splash shield.

(3) Remove accessory drive belt. (Refer to 7 - COOLING/ACCESSORY DRIVE/DRIVE BELTS - REMOVAL)

(4) Remove crankshaft damper. (Refer to 9 - ENGINE/ENGINE BLOCK/VIBRATION DAMPER - REMOVAL)

(5) Position Special Tool 6341A on crankshaft nose. Carefully screw the tool into the seal until it engages firmly (Fig. 64). Be careful not to damage that crankshaft seal surface of cover

(6) Remove oil seal by turning the forcing screw until the seal disengages from the cover (Fig. 65).

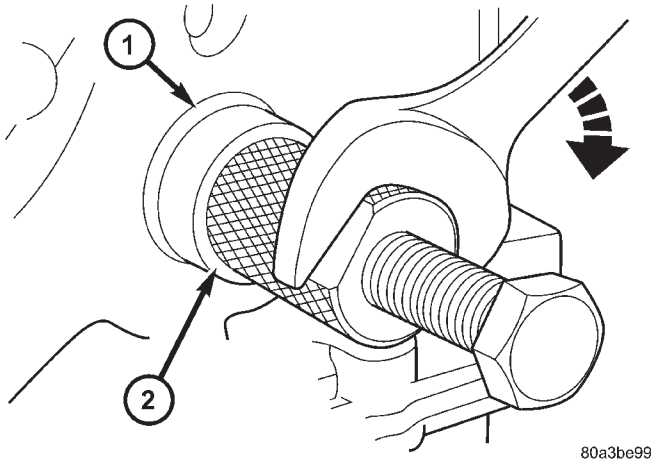

Fig. 64 Engaging Tool into Seal

1 - SEAL
2 - SPECIAL TOOL 6341A

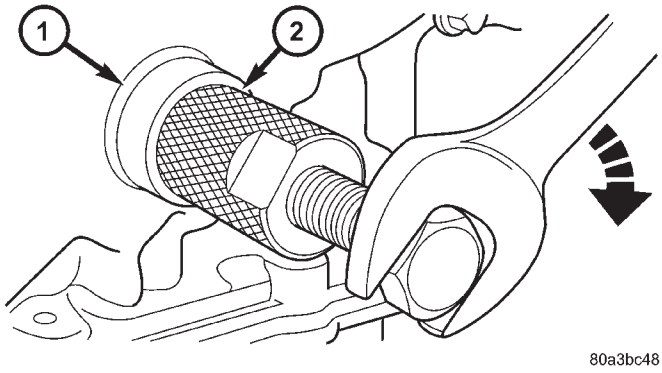

Fig. 65 Crankshaft Front Seal Removal

1 - SEAL
2 - SPECIAL TOOL 6341A

CRANKSHAFT OIL SEAL - FRONT (Continued)

INSTALLATION

(1) Position Special Tool C-4992-2 Guide, on the crankshaft nose (Fig. 66).

(2) Position new seal over the guide with the seal spring in the direction of the engine front cover (Fig. 66).

(3) Install seal using Special Tool C-4992-1 until seal is flush with cover. (Fig. 66).

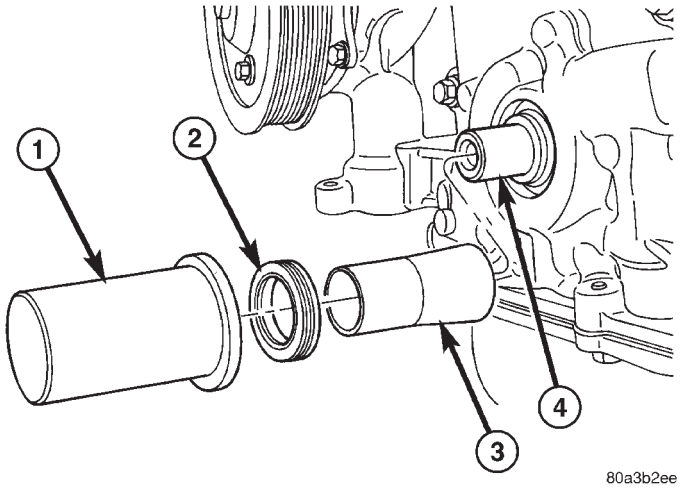

Fig. 66 CRANKSHAFT FRONT SEAL INSTALLATION

1 - SPECIAL TOOL C-4992-1
2 - SEAL
3 - SPECIAL TOOL C-4992-2
4 - CRANKSHAFT

(4) Install crankshaft damper. (Refer to 9 - ENGINE/ENGINE BLOCK/VIBRATION DAMPER - INSTALLATION)

(5) Install accessory drive belt. (Refer to 7 - COOLING/ACCESSORY DRIVE/DRIVE BELTS - INSTALLATION)

(6) Install inner splash shield and right front wheel.

(7) Lower vehicle and connect negative cable to battery.

CRANKSHAFT OIL SEAL - REAR

REMOVAL

(1) Remove the transaxle. Refer to TRANSAXLE AND POWER TRANSFER UNIT for procedure.

(2) Remove the flex plate. (Refer to 9 - ENGINE/ENGINE BLOCK/FLEX PLATE - REMOVAL)

(3) Insert a 3/16 flat bladed pry tool between the dust lip and the metal case of the crankshaft seal. Angle the pry tool (Fig. 67) through the dust lip against metal case of the seal. Pry out seal.

CAUTION: Do not permit the pry tool blade to contact crankshaft seal surface. Contact of the pry tool blade against crankshaft edge (chamfer) is permitted.

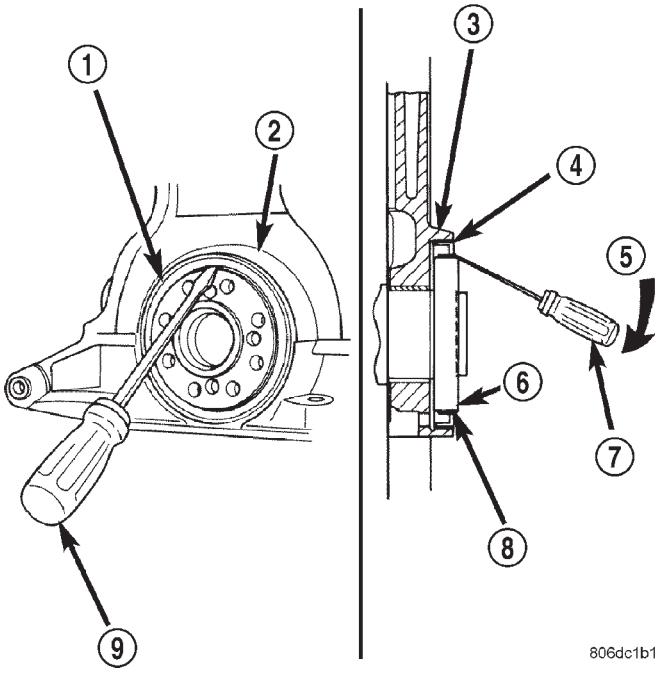

Fig. 67 Crankshaft Rear Oil Seal - Removal

1 - REAR CRANKSHAFT SEAL
2 - ENGINE BLOCK
3 - ENGINE BLOCK
4 - REAR CRANKSHAFT SEAL METAL CASE
5 - PRY IN THIS DIRECTION
6 - CRANKSHAFT
7 - SCREWDRIVER
8 - REAR CRANKSHAFT SEAL DUST LIP
9 - SCREWDRIVER

INSTALLATION

CAUTION: If burr or scratch is present on the crankshaft edge (chamfer), cleanup with 400 grit sand paper to prevent seal damage during installation of new seal.

(1) Place Special Tool 6926-1 magnetic pilot tool on crankshaft (Fig. 68).

(2) Place seal over Special Tool 6926-1 Pilot. Using Special Tool 6926-2 Installer with C-4171 Handle, drive seal into the retainer housing (Fig. 68).

(3) Install the flex plate. (Refer to 9 - ENGINE/ENGINE BLOCK/FLEX PLATE - INSTALLATION)

(4) Install transaxle. Refer to TRANSAXLE AND POWER TRANSFER UNIT for procedure.

CRANKSHAFT OIL SEAL - REAR (Continued)

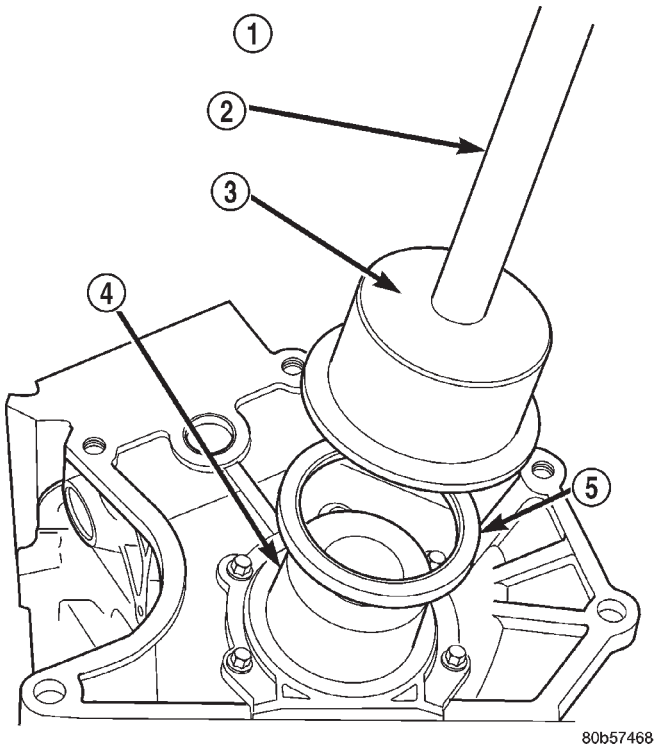

Fig. 68 Rear Crankshaft Oil Seal—Installation

1 - SPECIAL TOOLS:
2 - C-4171 HANDLE
3 - 6926–2 INSTALLER
4 - 6926–1 GUIDE
5 - SEAL

CRANKSHAFT REAR OIL SEAL RETAINER

REMOVAL

(1) Remove crankshaft rear oil seal (Refer to 9 - ENGINE/ENGINE BLOCK/CRANKSHAFT OIL SEAL - REAR - REMOVAL).

(2) Remove oil pan (Refer to 9 - ENGINE/LUBRICATION/OIL PAN - REMOVAL).

(3) Remove oil seal retainer screws (Fig. 69).

(4) Remove oil seal retainer (Fig. 69).

(5) Clean engine block and retainer of oil and gasket material. Make sure surfaces are clean and free of oil.

INSTALLATION

(1) Position new gasket and install retainer on block (Fig. 69). Tighten attaching screws to 12 N·m (105 in. lbs.).

(2) Install oil pan (Refer to 9 - ENGINE/LUBRICATION/OIL PAN - INSTALLATION).

(3) Install oil seal (Refer to 9 - ENGINE/ENGINE BLOCK/CRANKSHAFT OIL SEAL - REAR - INSTALLATION).

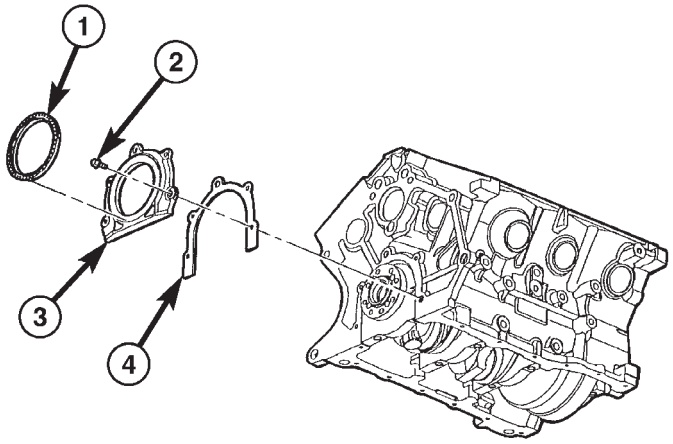

Fig. 69 CRANKSHAFT REAR OIL SEAL

1 - OIL SEAL
2 - BOLT
3 - RETAINER - OIL SEAL
4 - GASKET

FLEX PLATE

REMOVAL

(1) Remove the transaxle (Refer to 21 - TRANSMISSION/TRANSAXLE/AUTOMATIC - 41TE - REMOVAL).

(2) Remove flex plate attaching bolts.

(3) Remove the flex plate (Fig. 70).

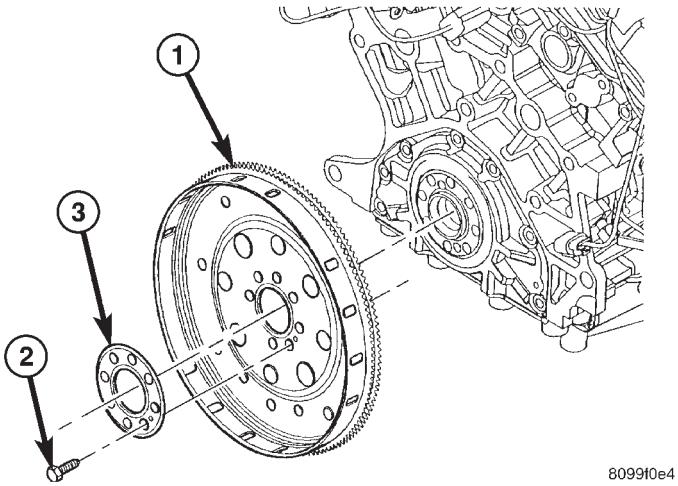

Fig. 70 FLEX PLATE

1 - FLEX PLATE
2 - BOLT (QTY. 8)
3 - BACKING PLATE

INSTALLATION

(1) Position flex plate with backing plate on the crankshaft (Fig. 70).

(2) Apply Mopar® Lock & Seal Adhesive to the flex plate bolts.

FLEX PLATE (Continued)

(3) Install flex plate bolts (Fig. 70). Tighten bolts to 95 N·m (70 ft. lbs.).

(4) Install the transaxle (Refer to 21 - TRANSMISSION/TRANSAXLE/AUTOMATIC - 41TE - INSTALLATION).

HYDRAULIC LIFTERS (CAM IN BLOCK)

DESCRIPTION

The hydraulic lifters are a roller type design and are positioned in the cylinder block. The lifters are aligned and retained by a yoke and a retainer (Fig. 71).

Lifter alignment is maintained by machined flats on lifter body. Lifters are fitted in pairs into six aligning yokes. The aligning yokes are secured by a yoke retainer (Fig. 71).

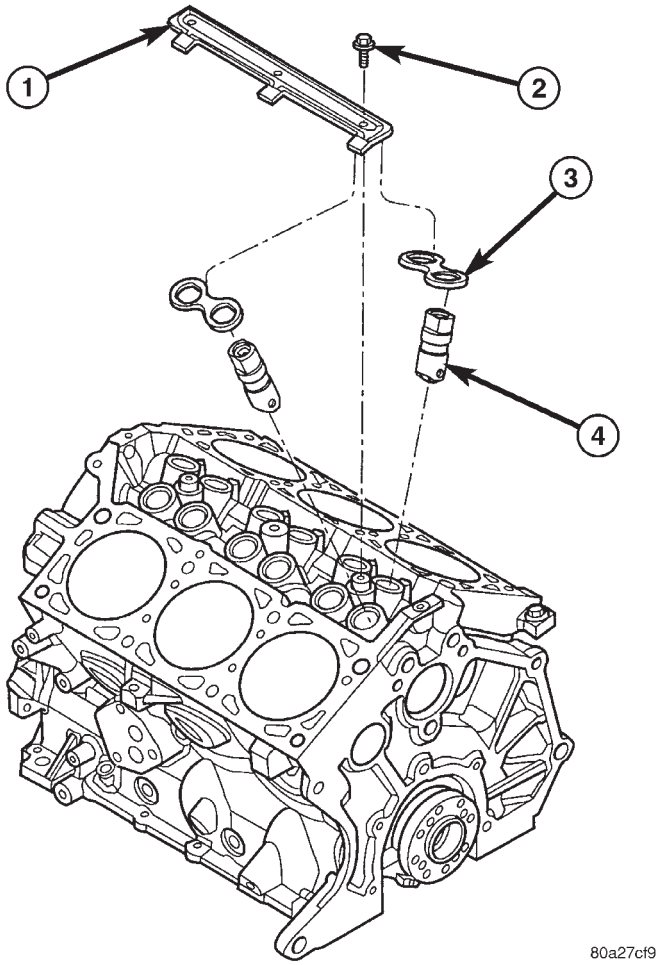

Fig. 71 Hydraulic Lifters

1 - YOKE RETAINER
2 - BOLT - YOKE RETAINER
3 - ALIGNING YOKE
4 - HYDRAULIC LIFTER

DIAGNOSIS AND TESTING - HYDRAULIC LIFTERS

HYDRAULIC LIFTERS DIAGNOSIS - PRELIMINARY STEP

Before disassembling any part of the engine to correct lifter noise, check the engine oil pressure. (Refer to 9 - ENGINE/LUBRICATION - DIAGNOSIS AND TESTING)

Check engine oil level. The oil level in the pan should never be above the MAX mark on dipstick, or below the MIN mark. Either of these two conditions could cause noisy lifters.

OIL LEVEL TOO HIGH

If oil level is above the MAX mark on dipstick, it is possible for the connecting rods to dip into the oil while engine is running and create foaming. Foam in oil pan would be fed to the hydraulic lifters by the oil pump causing them to become soft and allow valves to seat noisily.

OIL LEVEL TOO LOW

Low oil level may allow pump to take in air which when fed to the lifters it causes them to become soft and allows valves to seat noisily. Any leaks on intake side of pump, through which air can be drawn, will create the same lifter noise. Check the lubrication system from the intake strainer to the oil pump cover, including the relief valve retainer cap. When lifter noise is due to aeration, it may be intermittent or constant, and usually more than one lifter will be noisy. When oil level and leaks have been corrected, the engine should be operated at fast idle to allow all of the air inside of the lifters to be bled out.

VALVE TRAIN NOISE

To determine source of valve train noise, operate engine at idle with cylinder head covers removed and listen for source of the noise.

NOTE: Worn valve guides or cocked springs are sometimes mistaken for noisy lifters. If such is the case, noise may be dampened by applying side thrust on the valve spring. If noise is not appreciably reduced, it can be assumed the noise is in the tappet. Inspect the rocker arm push rod sockets and push rod ends for wear.

Valve lifter noise ranges from light noise to a heavy click. A light noise is usually caused by excessive leak-down around the unit plunger which will necessitate replacing the lifter, or by the plunger partially sticking in the lifter body cylinder. A heavy click is caused either by a lifter check valve not seating, or by foreign particles becoming wedged between

HYDRAULIC LIFTERS (CAM IN BLOCK) (Continued)

the plunger and the lifter body causing the plunger to stick in the down position. This heavy click will be accompanied by excessive clearance between the valve stem and rocker arm as valve closes. In either case, lifter assembly should be removed for inspection.

REMOVAL

(1) Remove the cylinder head(s). (Refer to 9 - ENGINE/CYLINDER HEAD - REMOVAL)

(2) Remove the yoke retainer and aligning yokes (Fig. 73).

(3) Remove the hydraulic lifters. If necessary use Special Tool C-4129, or equivalent to remove lifters from bores. If lifters are to be reused, identify each lifter to ensure installation in original location.

INSTALLATION

(1) Lubricate the lifters with engine oil.

NOTE: Position the lifter in bore with the lubrication hole facing upward (Fig. 72).

(2) Install the hydraulic lifters with the lubrication hole facing upward towards middle of block (Fig. 72). Install lifters in original positions, if reused.

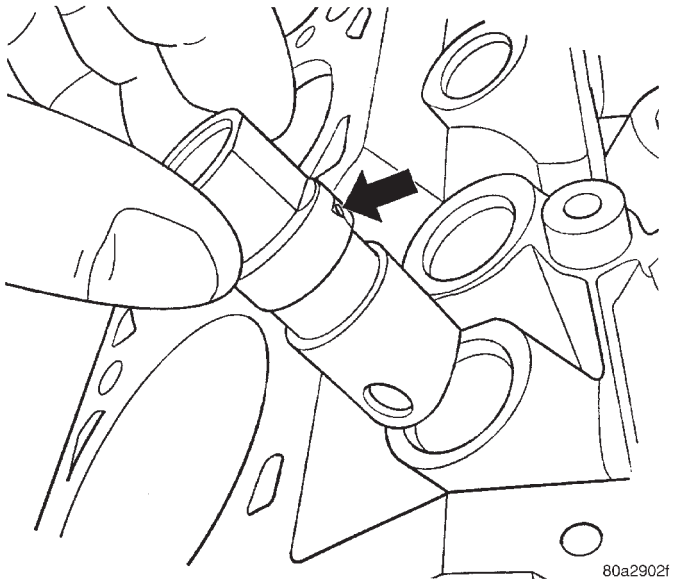

Fig. 72 LIFTER LUBRICATION HOLE

(3) Install lifter aligning yokes (Fig. 73).

(4) Install yoke retainer and torque screws to 12 N·m (105 in. lbs.) (Fig. 73).

(5) Install the cylinder heads. (Refer to 9 - ENGINE/CYLINDER HEAD - INSTALLATION)

(6) Start and operate engine. Warm up to normal operating temperature.

CAUTION: To prevent damage to valve mechanism, engine must not be run above fast idle until all hydraulic lifters have filled with oil and have become quiet.

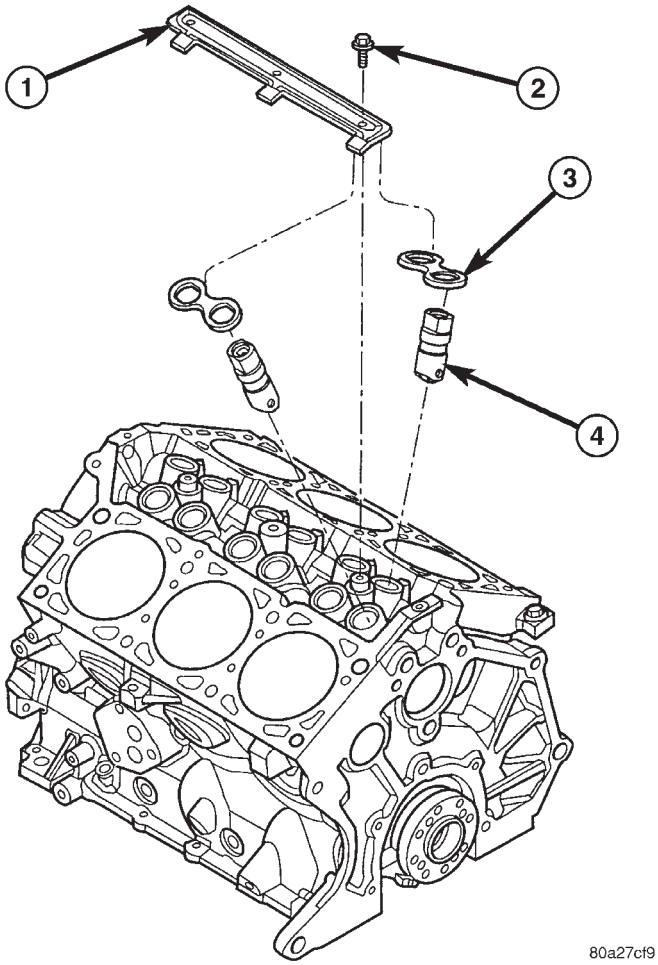

Fig. 73 Lifter Aligning Yoke and Retainer

1 - YOKE RETAINER
2 - BOLT - YOKE RETAINER
3 - ALIGNING YOKE
4 - HYDRAULIC LIFTER

PISTON & CONNECTING ROD

DESCRIPTION

The pistons are made of cast aluminum alloy and are a strutless, short skirt design. The piston rings consist of two compression rings and a three piece oil ring. Piston pins connect the piston to the forged steel connecting rods. The piston pins are a press fit into the connecting rod.

OPERATION

The piston and connecting rod is the link between the combustion force to the crankshaft.

PISTON & CONNECTING ROD (Continued)

STANDARD PROCEDURE

STANDARD PROCEDURE - FITTING CONNECTING RODS

The bearing caps are not interchangeable or reversible, and should be marked at removal to ensure correct reassembly. The bearing shells must be installed with the tangs inserted into the machined grooves in the rods and caps. Install cap with the tangs on the same side as the rod. For connecting rod bearing fitting (Refer to 9 - ENGINE/ENGINE BLOCK/CONNECTING ROD BEARINGS - STANDARD PROCEDURE). Fit all connecting rods on one bank until complete.

NOTE: The connecting rod cap bolts should be examined before reuse. Bolt stretch can be checked by holding a scale or straight edge against the threads. If all the threads do not contact the scale the bolt must be replaced (Fig. 74).

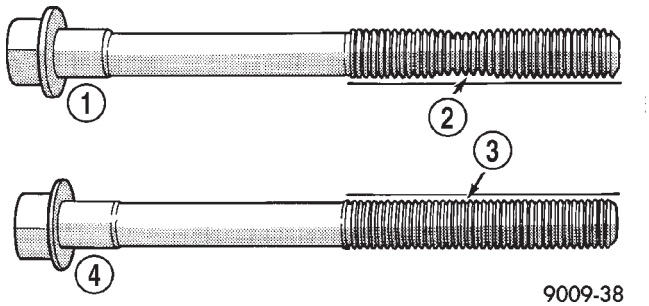

Fig. 74 Check for Stretched (Necked) Bolts

1 - STRETCHED BOLT
2 - THREADS ARE NOT STRAIGHT ON LINE
3 - THREADS ARE STRAIGHT ON LINE
4 - UNSTRETCHED BOLT

(1) Before installing the nuts the threads should be oiled with engine oil.

(2) Install nuts finger tight on each bolt then alternately torque each nut to assemble the cap properly.

(3) Tighten the nuts to 54 N·m PLUS 1/4 turn (40 ft. lbs. PLUS 1/4 turn).

(4) Using a feeler gauge, check connecting rod side clearance (Fig. 75). Refer to Engine Specifications (Refer to 9 - ENGINE - SPECIFICATIONS).

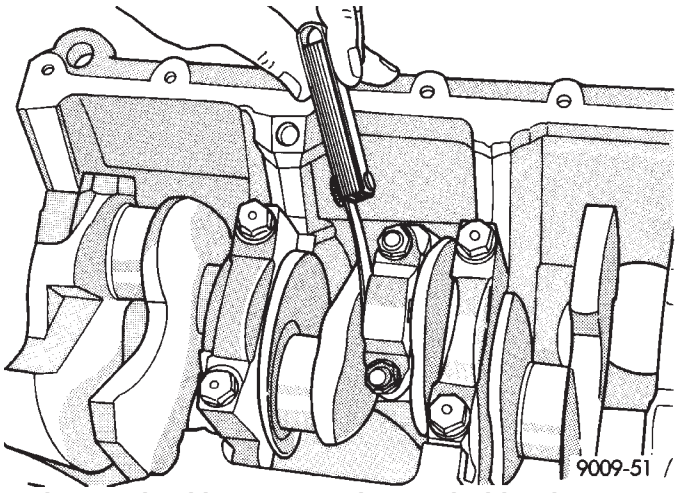

Fig. 75 Checking Connecting Rod Side Clearance

STANDARD PROCEDURE - FITTING PISTONS

The piston and cylinder wall must be clean and dry. Piston diameter should be measured 90 degrees to piston pin at size location shown in (Fig. 76). Cylinder bores should be measured halfway down the cylinder bore and transverse to the engine crankshaft center line shown in (Fig. 77). Refer to Engine Specifications (Refer to 9 - ENGINE - SPECIFICATIONS). **Pistons and cylinder bores should be measured at normal room temperature, 21°C (70°F).**

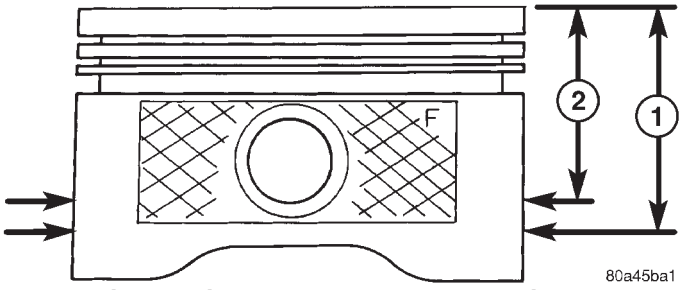

Fig. 76 Piston Measurement Locations

1 - 39.8 mm (1.56 in.) 3.3L ENGINE
2 - 33.0 mm (1.29 in.) 3.8L ENGINE

REMOVAL

(1) Disconnect negative cable from battery.

(2) Remove the cylinder heads. (Refer to 9 - ENGINE/CYLINDER HEAD - REMOVAL)

(3) Remove the oil pan. (Refer to 9 - ENGINE/LUBRICATION/OIL PAN - REMOVAL)

(4) Remove the top ridge of cylinder bores with a reliable ridge reamer, if necessary, before removing pistons from cylinder block. **Be sure to keep tops of pistons covered during this operation. Pistons and connecting rods must be removed from top of cylinder block. When removing piston and connecting rod assemblies from the engine, rotate crankshaft so that each connecting rod is centered in cylinder bore.**

PISTON & CONNECTING ROD (Continued)

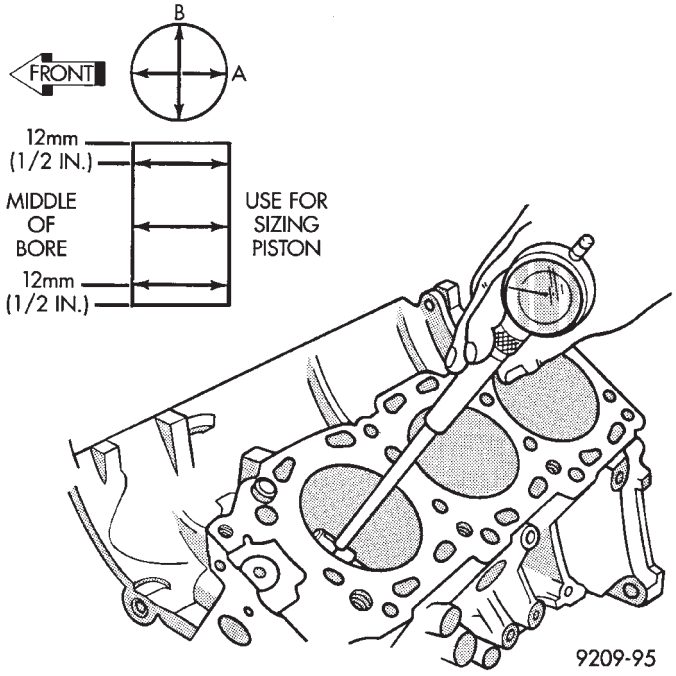

Fig. 77 Checking Cylinder Bore Size

(5) Inspect connecting rods and connecting rod caps for cylinder identification. Identify them, if necessary (Fig. 78).

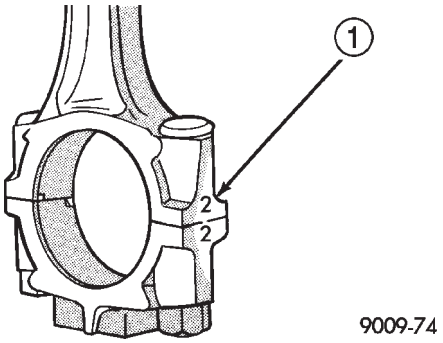

Fig. 78 Identify Connecting Rod to Cylinder

1 - CYLINDER NUMBER

(6) Remove connecting rod cap. Install connecting rod bolt protectors on connecting rod bolts (Fig. 79).

(7) Remove each piston and connecting rod assembly out of the cylinder bore.

NOTE: Be careful not to nick crankshaft journals.

(8) After removal, install bearing cap on the mating rod.

INSTALLATION

(1) Before installing pistons and connecting rod assemblies into the bore, ensure that compression ring gaps are staggered so that neither is in line with oil ring rail gap (Fig. 80).

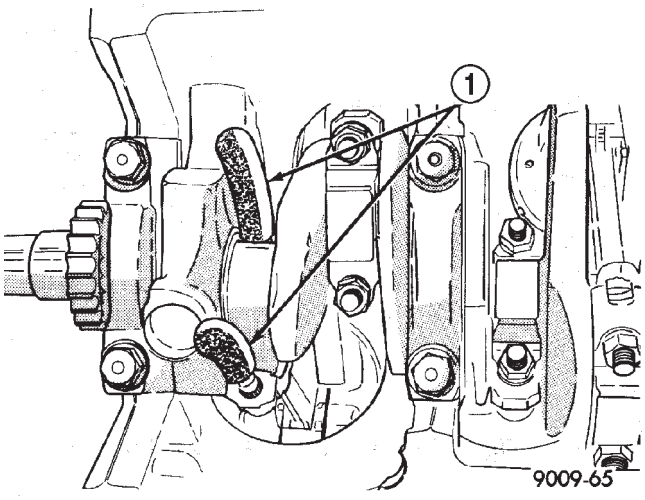

Fig. 79 Connecting Rod Protectors

1 - COVER ROD BOLTS WITH A SUITABLE COVERING WHEN REMOVING OR INSTALLING PISTON ASSEMBLY

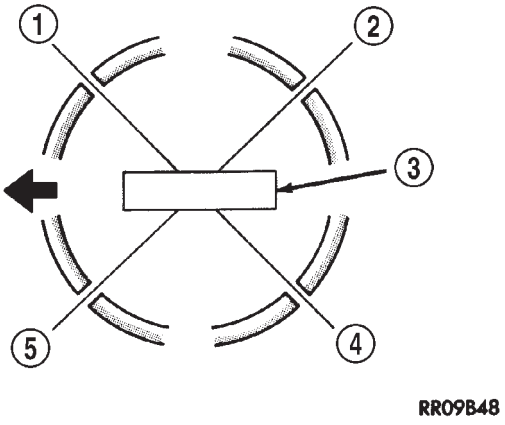

Fig. 80 Piston Ring End Gap Position

1 - SIDE RAIL UPPER
2 - NO. 1 RING GAP
3 - PISTON PIN
4 - SIDE RAIL LOWER
5 - NO. 2 RING GAP AND SPACER EXPANDER GAP

(2) Before installing the ring compressor, ensure the oil ring expander ends are butted and the rail gaps located as shown in (Fig. 80).

(3) Lubricate the piston and rings with clean engine oil. Position a ring compressor over the piston and rings, and tighten the compressor (Fig. 81). **Be sure position of rings does not change during this operation.**

(4) Position upper bearing onto connecting rod. Lubricate bearing with oil.

(5) Install connecting rod bolt protectors (rubber hose or equivalent) on the connecting rod bolts (Fig. 81).

PISTON & CONNECTING ROD (Continued)

(6) The pistons are marked with a “F” located near the piston pin. Install piston with this mark positioned to front of engine on both cylinder banks. The connecting rod oil squirt hole faces the major thrust (right) side of the engine block (Fig. 82).

(7) Rotate crankshaft until the connecting rod journal is located in the center of the cylinder bore. Insert connecting rod and piston into cylinder bore. Carefully guide connecting rod over the crankshaft journal (Fig. 81).

(8) Tap the piston down in cylinder bore, using a hammer handle. At the same time, guide connecting rod into position on connecting rod journal.

(9) Install lower bearing shell and connecting rod cap (Fig. 81). Install nuts on cleaned and oiled rod bolts and tighten to 54 N·m (40 ft. lbs.) PLUS ¼ turn.

(10) Repeat procedure for each piston and connecting rod installation.

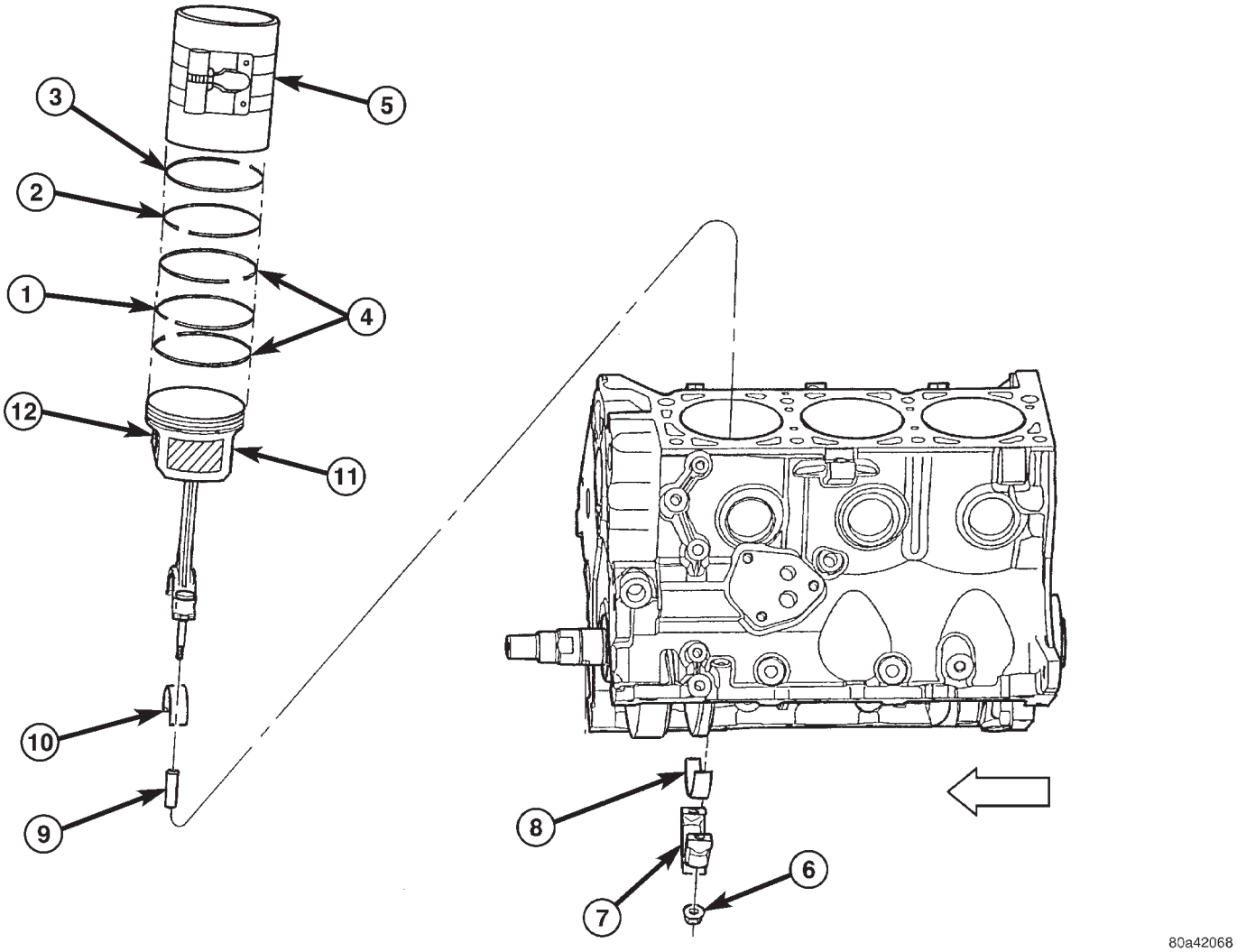

Fig. 81 PISTON AND CONNECTING ROD INSTALLATION

1 - RING - OIL CONTROL
2 - RING - NO. 2 COMPRESSION
3 - RING - NO. 1 COMPRESSION
4 - RING - SIDE RAIL UPPER & LOWER
5 - PISTON RING COMPRESSOR
6 - NUT - CONNECTING ROD
7 - CAP - CONNECTING ROD
8 - BEARING - CONNECTING ROD LOWER
9 - CRANKSHAFT JOURNAL PROTECTOR (RUBBER HOSE)
10 - BEARING - CONNECTING ROD UPPER
11 - PISTON AND CONNECTING ROD ASSEMBLY
12 - PISTON LOCATION MARK (F = FRONT)

PISTON & CONNECTING ROD (Continued)

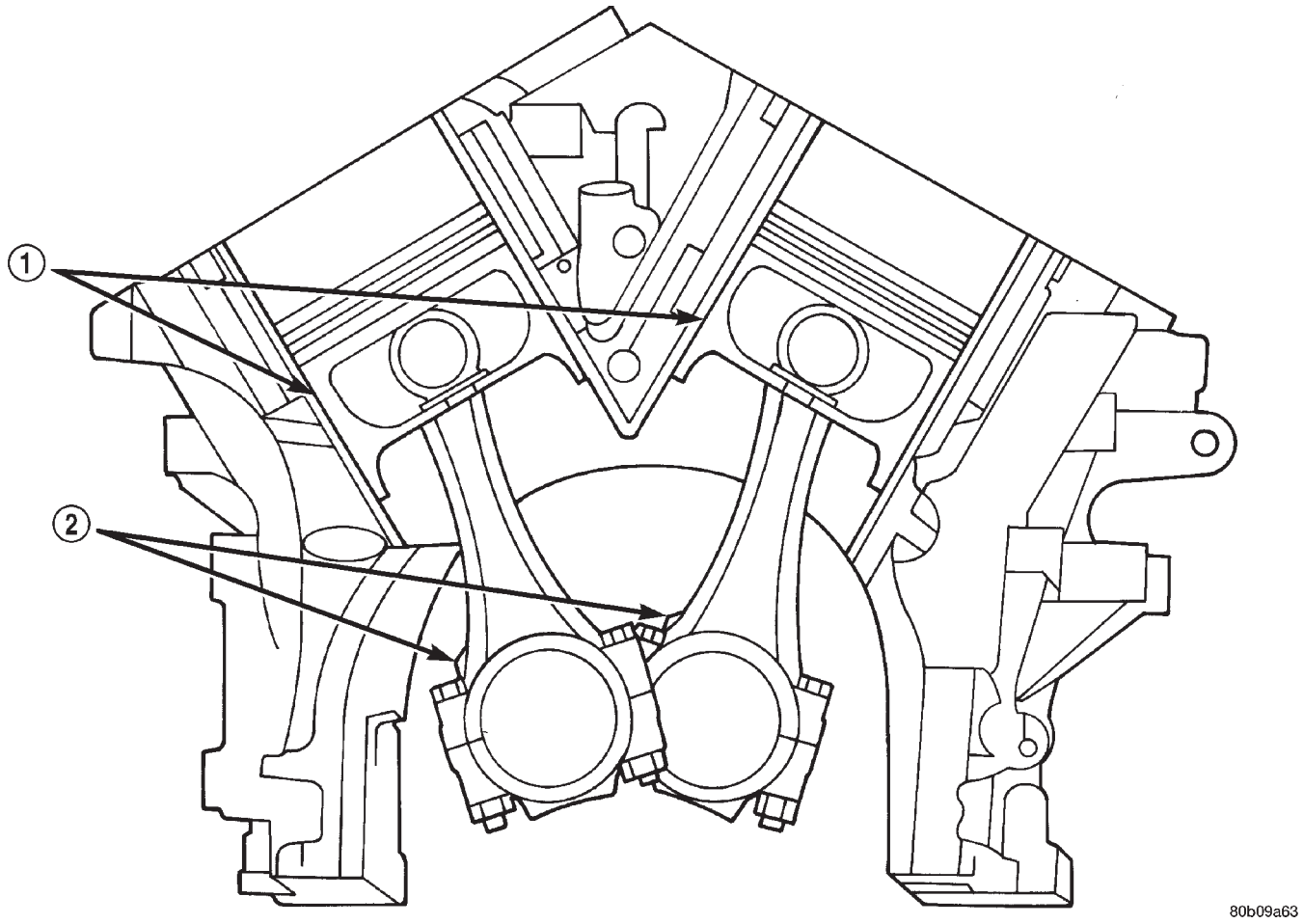

Fig. 82 Piston and Connecting Rod Positioning (Front View of Engine)

1 - MAJOR THRUST SIDE OF PISTON
2 - OIL SQUIRT HOLE

(11) Install the cylinder heads. (Refer to 9 - ENGINE/CYLINDER HEAD - INSTALLATION)

(12) Install the oil pan. (Refer to 9 - ENGINE/LUBRICATION/OIL PAN - INSTALLATION)

(13) Fill engine crankcase with proper oil to correct level.

(14) Connect negative cable to battery.

PISTON RINGS

STANDARD PROCEDURE - PISTON RING FITTING

(1) Wipe cylinder bore clean. Insert the ring and push down with piston to ensure squareness in bore to approximately 12 mm (0.50 in.) from top of cylinder bore. Check ring gap with a feeler gauge (Fig. 83). For clearance specification (Refer to 9 - ENGINE - SPECIFICATIONS).

(2) Check piston ring to groove side clearance (Fig. 84). For clearance specification (Refer to 9 - ENGINE - SPECIFICATIONS)

PISTON RINGS (Continued)

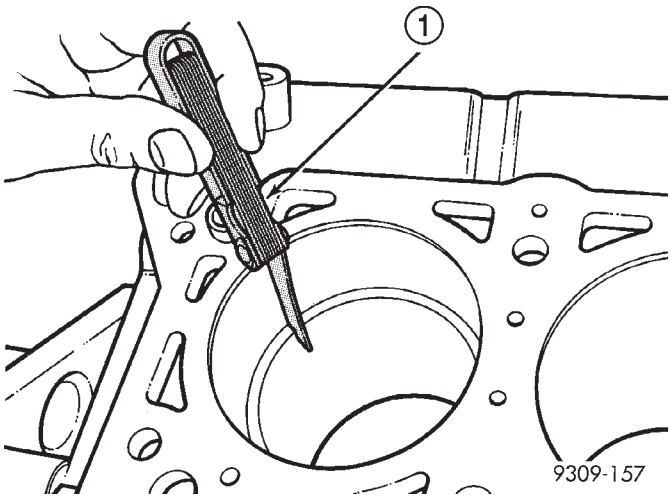

Fig. 83 Piston Ring Gap

1 - FEELER GAUGE

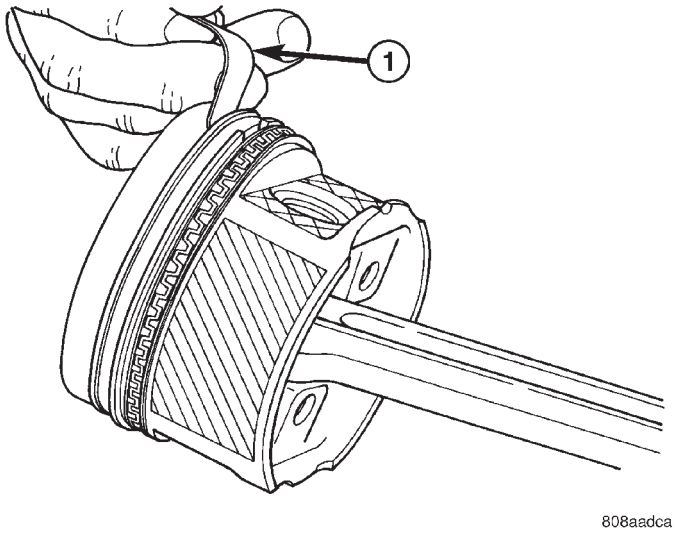

Fig. 84 Piston Ring Side Clearance

1 - FEELER GAUGE

REMOVAL

(1) Remove piston and connecting rod. (Refer to 9 - ENGINE/ENGINE BLOCK/PISTON & CONNECTING ROD - REMOVAL)

(2) Remove No. 1 and No.2 piston rings from piston using a ring expander tool (Fig. 87).

(3) Remove upper oil ring side rail (Fig. 86).

(4) Remove lower oil ring side rail (Fig. 86).

(5) Remove oil ring expander (Fig. 86).

INSTALLATION

(1) Install rings with manufacturers I.D. mark (if present) facing up, to the top of the piston (Fig. 85).

CAUTION: Install piston rings in the following order:

a. Oil ring expander.
b. Upper oil ring side rail.
c. Lower oil ring side rail.
d. No. 2 Intermediate piston ring.
e. No. 1 Upper piston ring.

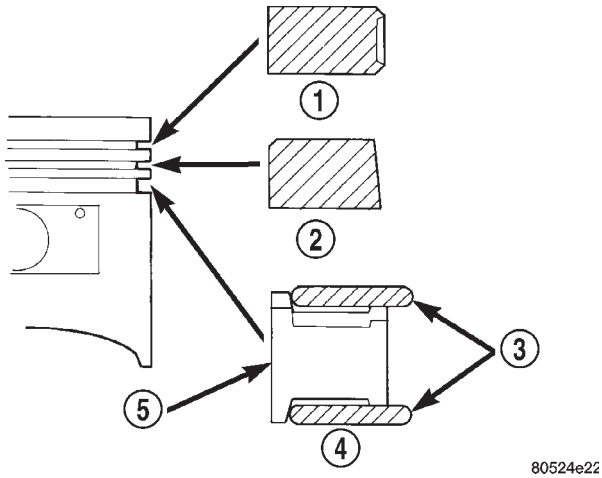

Fig. 85 Piston Ring Installation

1 - NO. 1 PISTON RING
2 - NO. 2 PISTON RING
3 - SIDE RAIL
4 - OIL RING
5 - SPACER EXPANDER

(2) Install the side rail by placing one end between the piston ring groove and the expander. Hold end firmly and press down the portion to be installed until side rail is in position. **Do not use a piston ring expander** (Fig. 86).

(3) Install upper side rail first and then the lower side rail.

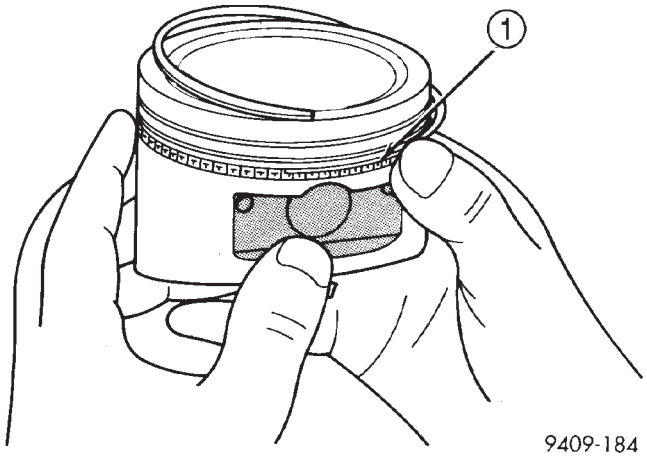

Fig. 86 Oil Ring Side Rail

1 - SIDE RAIL END

PISTON RINGS (Continued)

(4) Install No. 2 piston ring and then No. 1 piston ring (Fig. 87).

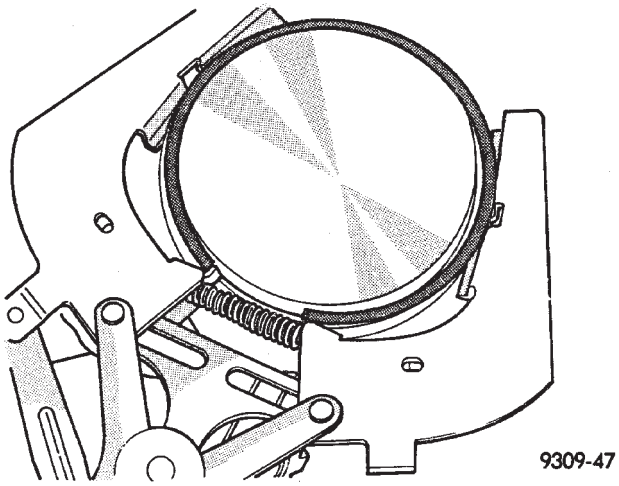

Fig. 87 Piston Ring Installation

(5) Position piston ring end gaps as shown in (Fig. 88).

(6) Position oil ring expander gap at least 45° from the side rail gaps but **not** on the piston pin center or on the thrust direction. Staggering ring gap is important for oil control.

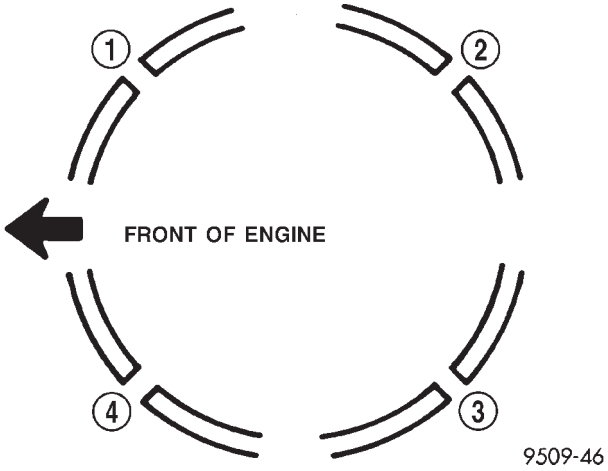

Fig. 88 Piston Ring End Gap Position

1 - GAP OF LOWER SIDE RAIL
2 - NO. 1 RING GAP
3 - GAP OF UPPER SIDE RAIL
4 - NO. 2 RING GAP AND SPACER EXPANDER GAP

VIBRATION DAMPER

REMOVAL

(1) Disconnect negative cable from battery.

(2) Raise vehicle on hoist.

(3) Remove the right front wheel and inner splash shield.

(4) Remove the accessory drive belt. (Refer to 7 - COOLING/ACCESSORY DRIVE/DRIVE BELTS - REMOVAL)

(5) Remove vibration damper bolt.

(6) Insert Special Tool 8450 into crankshaft nose (Fig. 89).

(7) Position 3-jaw puller Special Tool 1026 on damper as shown in (Fig. 89). Turn puller forcing screw until damper releases from crankshaft.

(8) Remove the crankshaft vibration damper.

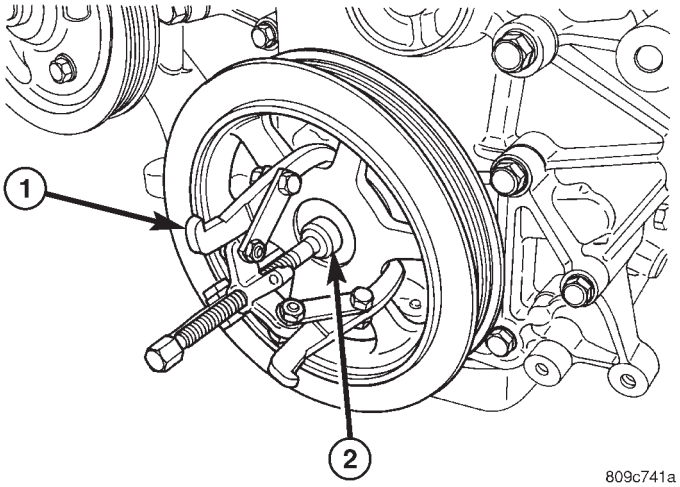

Fig. 89 Vibration Damper - Removal

1 - SPECIAL TOOL 8450 - INSERT
2 - SPECIAL TOOL 1026 - 3 JAW PULLER

INSTALLATION

(1) Install crankshaft vibration damper using the forcing screw, nut, and thrust bearing/washer from Special Tool 8452 (Fig. 90).

NOTE: To minimize friction and prolong tool life, lubricate the threads on the forcing screw of Special Tool 8452.

(2) Position vibration damper on crankshaft.

(3) Screw Special Tool 8452 into crankshaft until the bolt seats. Turn the nut to install damper until it seats fully.

(4) Remove Special Tool 8452.

(5) Install vibration damper bolt. Torque bolt to 54 N·m (40 ft. lbs.).

VIBRATION DAMPER (Continued)

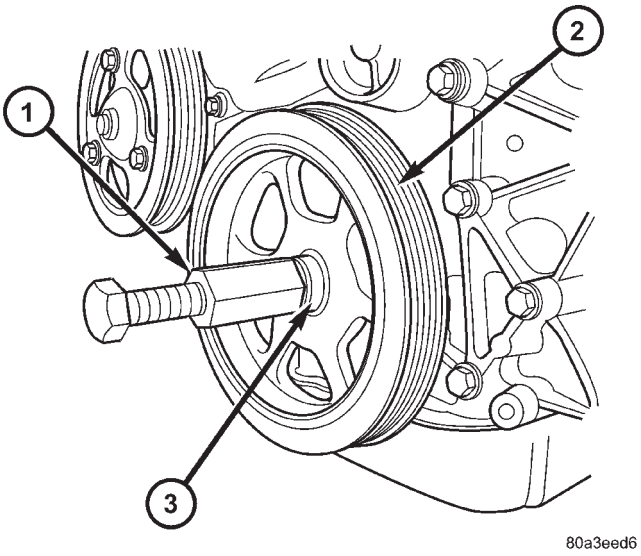

Fig. 90 Vibration Damper - Installation

1 - FORCING SCREW / NUT FROM SPECIAL TOOL 8452
2 - VIBRATION DAMPER
3 - THRUST BEARING / WASHER

(6) Install the accessory drive belt. (Refer to 7 - COOLING/ACCESSORY DRIVE/DRIVE BELTS - INSTALLATION)

(7) Install inner splash shield and right front wheel.

(8) Connect negative cable to battery.

ENGINE MOUNTING

DESCRIPTION

The engine mounting system consist of four mounts; right and a left side support the powertrain, and a front and a rear mount control powertrain torque. The right side mount is a hydro-type (Fig. 91), all others are of molded rubber material.

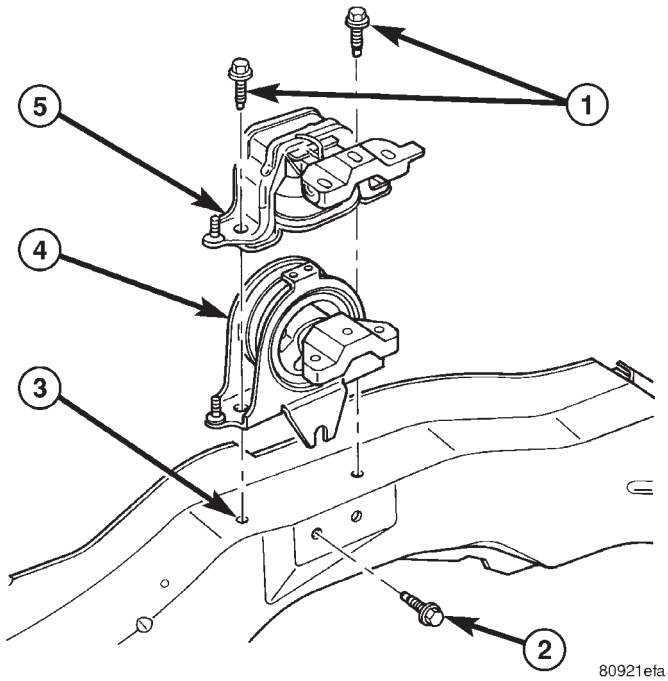

Fig. 91 Engine Hydro-type Mount - Right Side

1 - BOLT
2 - BOLT
3 - FRAME RAIL
4 - RIGHT MOUNT - 2.4L ENGINE
5 - RIGHT MOUNT - 3.3/3.8L ENGINE

FRONT MOUNT

REMOVAL

(1) Support the engine and transmission assembly with a floor jack so it will not rotate.

(2) Remove the front engine mount through bolt from the insulator and front crossmember mounting bracket (Fig. 92).

(3) Remove six screws from air dam to allow access to the front mount screws.

(4) Remove the front engine mount screws and remove the insulator assembly (Fig. 92).

(5) Remove the front mounting bracket, if necessary (Fig. 92).

INSTALLATION

(1) Install the front mounting bracket, if removed (Fig. 92).

(2) Install the front engine mount through bolt from the insulator and front crossmember mounting bracket (Fig. 92).

(3) Install the insulator assembly and mounting screws (Fig. 92).

FRONT MOUNT (Continued)

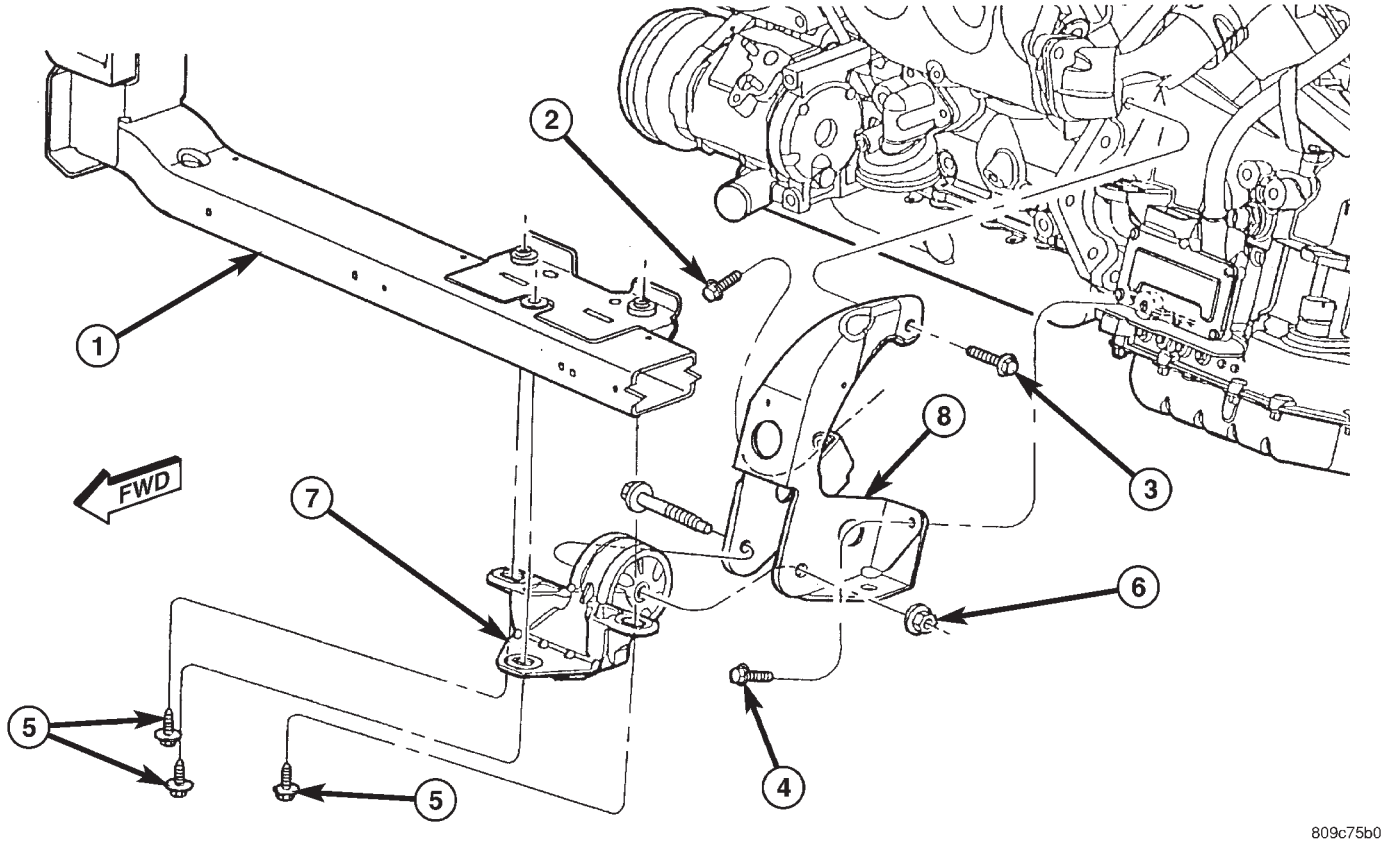

Fig. 92 Engine Mounting - Front

1 - CROSSMEMBER	5 - BOLT 54 N·m (40 ft. lbs.)
2 - BOLT - 68 N·m (50 ft. lbs.)	6 - NUT - 68 N·m (50 ft. lbs.)
3 - BOLT - 102 N·m (75 ft. lbs.)	7 - MOUNT - ENGINE FRONT
4 - BOLT - 68 N·m (50 ft. lbs.)	8 - BRACKET - ENGINE FRONT MOUNT

LEFT MOUNT

REMOVAL

(1) Raise the vehicle on hoist.
(2) Remove the left front wheel.
(3) Remove the left mount through bolt access cover.
(4) Support the transaxle with a suitable jack.
(5) Remove the engine front mount through bolt to allow left mount removal clearance (Fig. 92).
(6) Remove the left mount through frame rail bolt (Fig. 93).
(7) Lower transaxle for access to horizontal bolts.
(8) Remove the horizontal bolts from the mount to the transaxle (Fig. 94) or (Fig. 95).

NOTE: To remove mount, additional lowering of transaxle may be required.

(9) Remove left mount.

INSTALLATION

(1) Install left mount on transaxle (Fig. 94) or (Fig. 95).
(2) Raise transaxle with jack until left mount is in position.
(3) Install left mount through bolt (Fig. 93).
(4) Install left mount through bolt access cover.
(5) Install front mount through bolt (Fig. 92).
(6) Install left front wheel.
(7) Lower vehicle.

LEFT MOUNT (Continued)

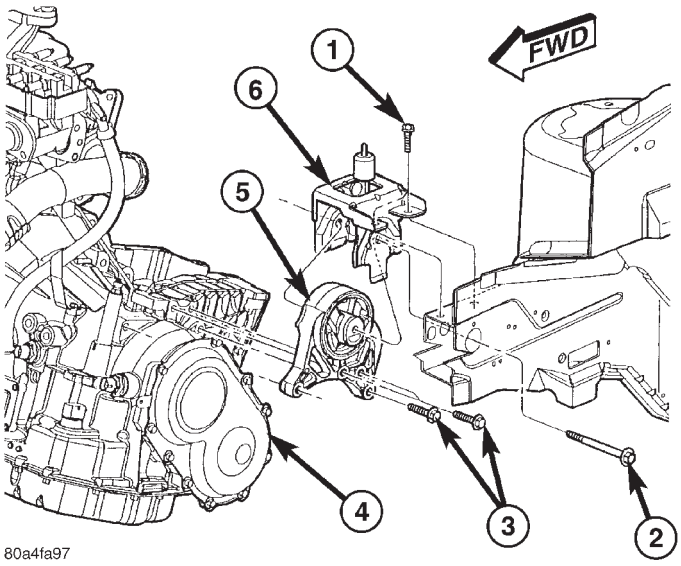

Fig. 93 LEFT MOUNT TO BRACKET

1 - BOLT - BRACKET TO FRAME RAIL 68 N·m (50 ft. lbs.)
2 - BOLT - MOUNT TO RAIL THRU 75 N·m (55 ft. lbs.)
3 - BOLT - LEFT MOUNT TO TRANSAXLE 54 N·m (40 ft. lbs.)
4 - TRANSAXLE
5 - MOUNT - LEFT
6 - BRACKET - LEFT MOUNT

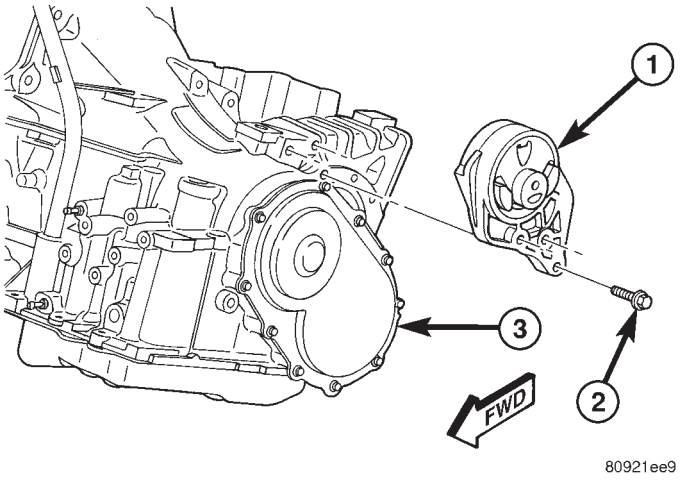

Fig. 94 LEFT MOUNT - 31TH TRANSAXLE

1 - LEFT MOUNT ASEMBLY
2 - BOLT - 54 N·m (40 ft. lbs.)
3 - TRANSAXLE - 31TH

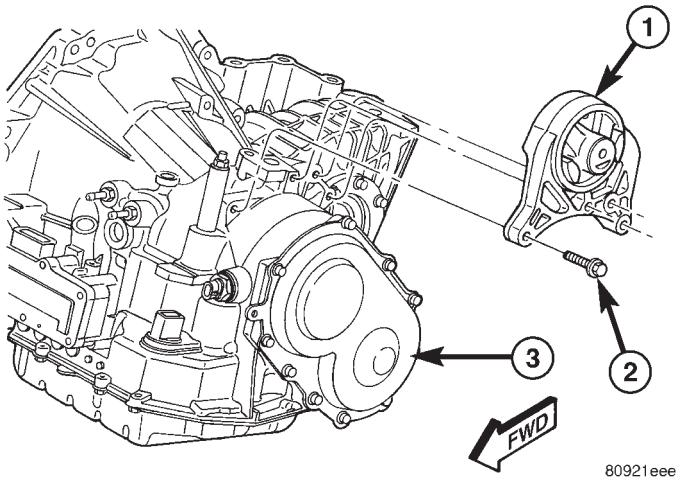

Fig. 95 LEFT MOUNT - 41TE TRANSAXLE

1 - LEFT MOUNT ASSEMBLY
2 - BOLT - 54 N·m (40 ft. lbs.)
3 - TRANSAXLE - 41TE

REAR MOUNT

REMOVAL

(1) Raise vehicle on hoist.
(2) Remove the rear mount heat shield (Fig. 96).

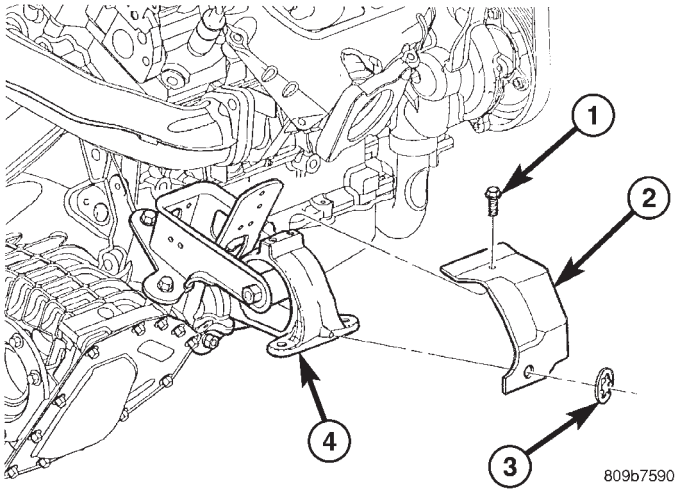

Fig. 96 REAR MOUNT HEAT SHIELD

1 - BOLT - HEAT SHIELD 11 N·m (100 in. lbs.)
2 - HEAT SHIELD
3 - CLIP
4 - REAR MOUNT

(3) Remove the through bolt from the mount and rear mount bracket (Fig. 97).
(4) Remove the mount bolts (Fig. 97).
(5) Remove the rear mount (Fig. 97).
(6) For rear mount bracket removal, remove the bolts attaching bracket to transaxle (Fig. 98).
(7) Remove rear mount bracket.

REAR MOUNT (Continued)

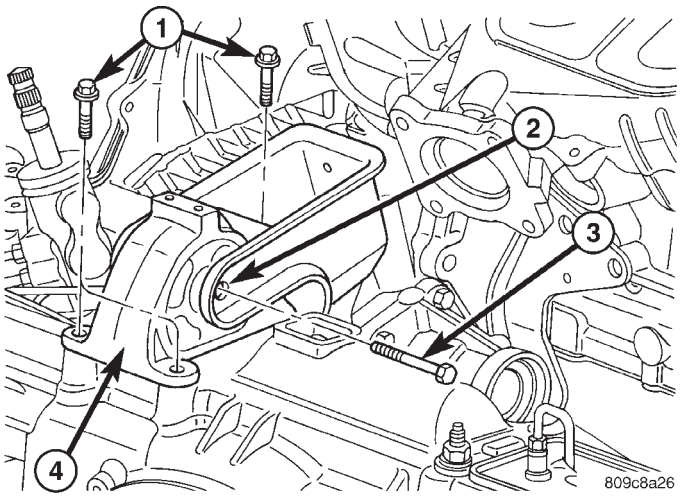

Fig. 97 REAR MOUNT

1 - BOLT 54 N·m (40 ft. lbs.)
2 - REAR MOUNT BRACKET
3 - THRU-BOLT 54 N·m (40 ft. lbs.)
4 - REAR MOUNT

INSTALLATION

(1) Install rear mount bracket, if removed (Fig. 98).

(2) Install the rear mount and bolts (Fig. 97). Tighten bolts to 54 N·m (40 ft. lbs.).

(3) Install the mount through bolt to the mount and bracket (Fig. 97). Tighten through bolt to 54 N·m (40 ft. lbs.).

(4) Install the rear mount heat shield (Fig. 96).

(5) Lower vehicle on hoist.

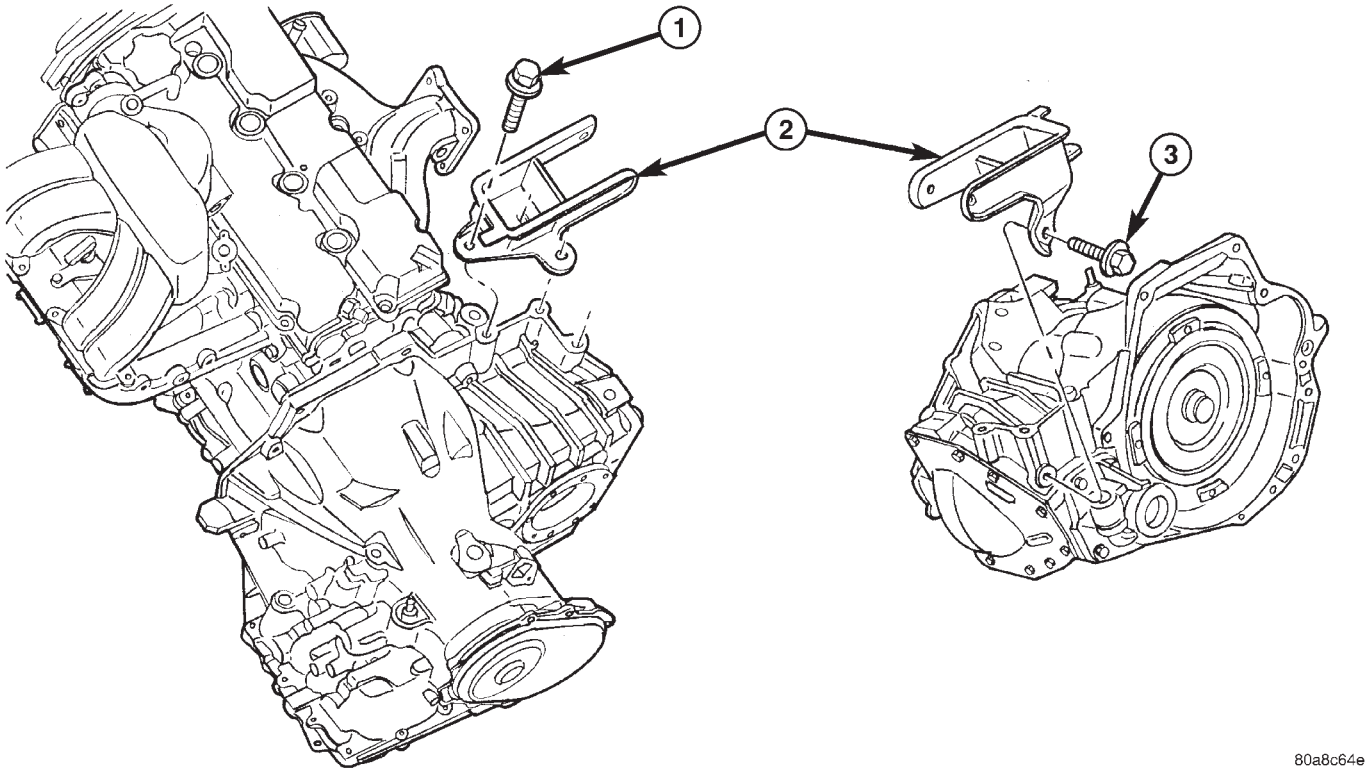

Fig. 98 REAR MOUNT BRACKET - (all engines)

1 - BOLT - VERTICAL 102 N·m (75 ft. lbs.)
2 - BRACKET - REAR MOUNT
3 - BOLT - HORIZONTAL 102 N·m (75 ft. lbs.)

RIGHT MOUNT

REMOVAL

(1) Remove air cleaner housing lid and clean air hose from throttle body.
(2) Remove air cleaner element and housing.
(3) Disconnect make-up air hose from cylinder head cover.
(4) Remove the load on the right engine mount by carefully supporting the engine assembly with a floor jack.
(5) Disconnect electrical harness support clips from engine mount bracket.
(6) Remove the bolts attaching the engine mount to the frame rail (Fig. 99).
(7) Remove the three bolts attaching the engine mount to the engine bracket (Fig. 99).
(8) Remove the right engine mount (Fig. 99).

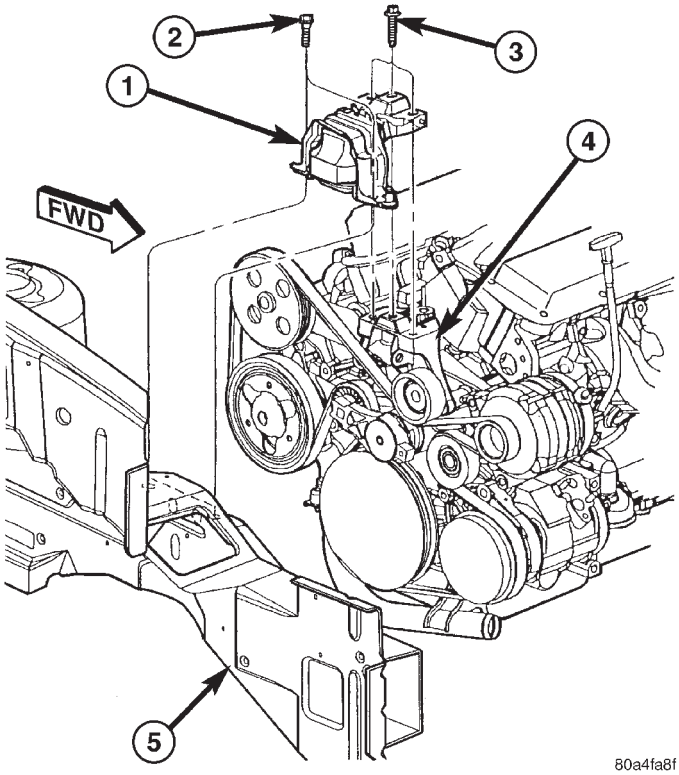

Fig. 99 Right Engine Mount

1 - RIGHT ENGINE MOUNT
2 - BOLT - MOUNT TO FRAME RAIL
3 - BOLT - MOUNT TO ENGINE
4 - ENGINE MOUNT BRACKET
5 - RIGHT FRAME RAIL

INSTALLATION

(1) Install engine bracket (if removed). Tighten bolts to 33 N·m (24 ft. lbs.).
(2) Position right engine mount and install frame rail to mount bolts (Fig. 99). Tighten bolts to 68 N·m (50 ft. lbs.).
(3) Install the mount to engine bracket bolts and tighten to 54 N·m (40 ft. lbs.). (Fig. 99)
(4) Connect electrical harness support clips to engine mount bracket.
(5) Remove jack from under engine.
(6) Connect make-up air hose to cylinder head cover.
(7) Install air cleaner housing and element.
(8) Install air cleaner housing lid and clean air tube to throttle body.

LUBRICATION

DESCRIPTION

The lubrication system is a full flow filtration pressure feed type. The oil pump is mounted in the timing chain cover and is driven by the crankshaft

OPERATION

Oil from the oil pan is pumped by a internal gear type oil pump directly coupled to the crankshaft. The pressure is regulated by a relief valve located in the timing chain cover. The oil is pumped through an oil filter and feeds a main oil gallery. This oil gallery feeds oil under pressure to the main and rod bearings, camshaft bearings. Passages in the cylinder block feed oil to the hydraulic lifters and rocker shaft brackets which feeds the rocker arm pivots (Fig. 100).

DIAGNOSIS AND TESTING - ENGINE OIL PRESSURE

(1) Disconnect and remove oil pressure switch (Refer to 9 - ENGINE/LUBRICATION/OIL PRESSURE SENSOR/SWITCH - REMOVAL).
(2) Install Special Tools C-3292 Gauge with 8406 Adaptor. For Special Tool identification, (Refer to 9 - ENGINE - SPECIAL TOOLS).
(3) Start engine and record oil pressure. Refer to Oil Pressure in Engine Specifications for the correct pressure (Refer to 9 - ENGINE - SPECIFICATIONS).

LUBRICATION (Continued)

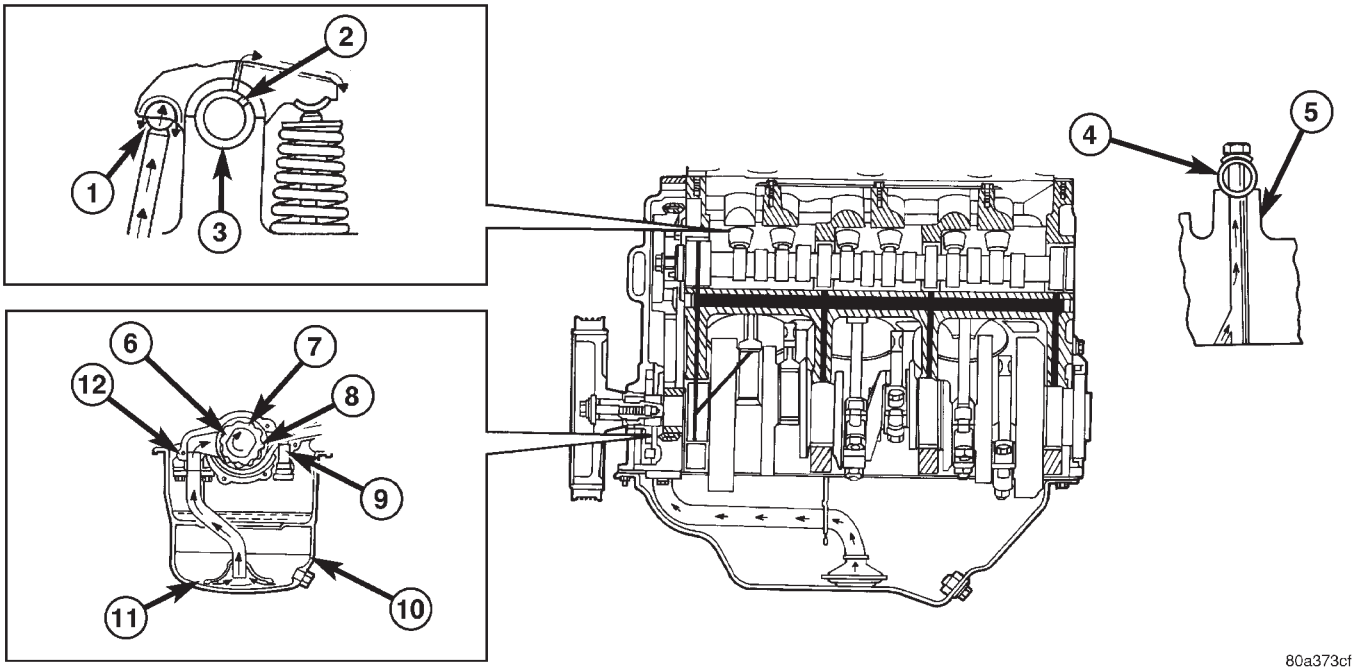

Fig. 100 Engine Oiling System

1 - OIL SUPPLY FOR BALL SOCKET THROUGH PUSH ROD
2 - OIL SUPPLY PASSAGE FROM SHAFT TO ROCKER ARM
3 - ROCKER SHAFT
4 - OIL FLOWS TO ONLY ONE PEDASTAL ON EACH HEAD; THIRD FROM REAR ON RIGHT HEAD, THIRD FROM FRONT ON LEFT HEAD
5 - ROCKER SHAFT TOWER
6 - CRANKSHAFT
7 - OUTER ROTOR
8 - INNER ROTOR
9 - RELIEF VALVE
10 - OIL PAN
11 - OIL SCREEN
12 - OIL PUMP CASE

OIL

STANDARD PROCEDURE

STANDARD PROCEDURE - ENGINE OIL AND FILTER CHANGE

Change engine oil at mileage and time intervals described in the Maintenance Schedule. (Refer to LUBRICATION & MAINTENANCE/MAINTENANCE SCHEDULES - DESCRIPTION)

WARNING: NEW OR USED ENGINE OIL CAN BE IRRITATING TO THE SKIN. AVOID PROLONGED OR REPEATED SKIN CONTACT WITH ENGINE OIL. CONTAMINANTS IN USED ENGINE OIL, CAUSED BY INTERNAL COMBUSTION, CAN BE HAZARDOUS TO YOUR HEALTH. THOROUGHLY WASH EXPOSED SKIN WITH SOAP AND WATER. DO NOT WASH SKIN WITH GASOLINE, DIESEL FUEL, THINNER, OR SOLVENTS, HEALTH PROBLEMS CAN RESULT. DO NOT POLLUTE, DISPOSE OF USED ENGINE OIL PROPERLY. CONTACT YOUR DEALER OR GOVERNMENT AGENCY FOR LOCATION OF COLLECTION CENTER IN YOUR AREA.

Run engine until achieving normal operating temperature.

(1) Position the vehicle on a level surface and turn engine off.

(2) Open hood, remove oil fill cap.

(3) Hoist and support vehicle on safety stands. Refer to Hoisting and Jacking Recommendations. (Refer to LUBRICATION & MAINTENANCE/HOISTING - STANDARD PROCEDURE)

(4) Place a suitable drain pan under crankcase drain (Fig. 101).

(5) Remove drain plug from crankcase (Fig. 101) and allow oil to drain into pan. Inspect drain plug threads for stretching or other damage. Replace drain plug and gasket if damaged.

(6) Remove oil filter. (Refer to 9 - ENGINE/LUBRICATION/OIL FILTER - REMOVAL)

(7) Install and tighten drain plug in crankcase.

(8) Install new oil filter. (Refer to 9 - ENGINE/LUBRICATION/OIL FILTER - INSTALLATION)

OIL (Continued)

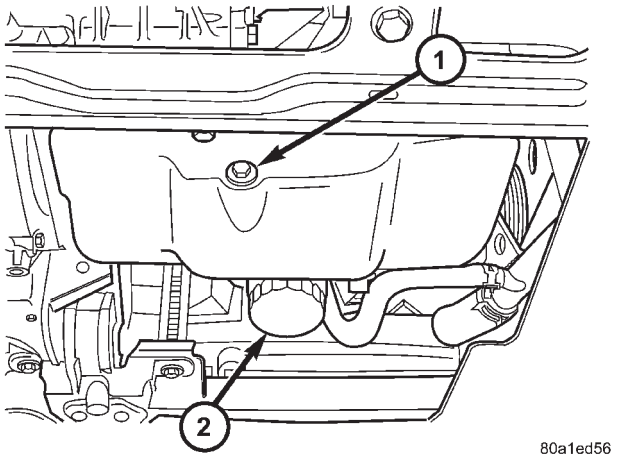

Fig. 101 Engine Oil Drain Plug and Oil Filter

1 - DRAIN PLUG
2 - OIL FILTER

(9) Lower vehicle and fill crankcase with specified type and amount of engine oil. (Refer to LUBRICATION & MAINTENANCE/FLUID TYPES - DESCRIPTION)
(10) Install oil fill cap.
(11) Start engine and inspect for leaks.
(12) Stop engine and inspect oil level.

NOTE: Care should be exercised when disposing used engine oil after it has been drained from a vehicle engine. Refer to the WARNING listed above.

STANDARD PROCEDURE - ENGINE OIL LEVEL CHECK

The best time to check engine oil level is after it has sat overnight, or if the engine has been running, allow the engine to be shut off for at least 5 minutes before checking oil level.

Checking the oil while the vehicle is on level ground will improve the accuracy of the oil level reading (Fig. 102). Add only when the level is at or below the ADD mark.

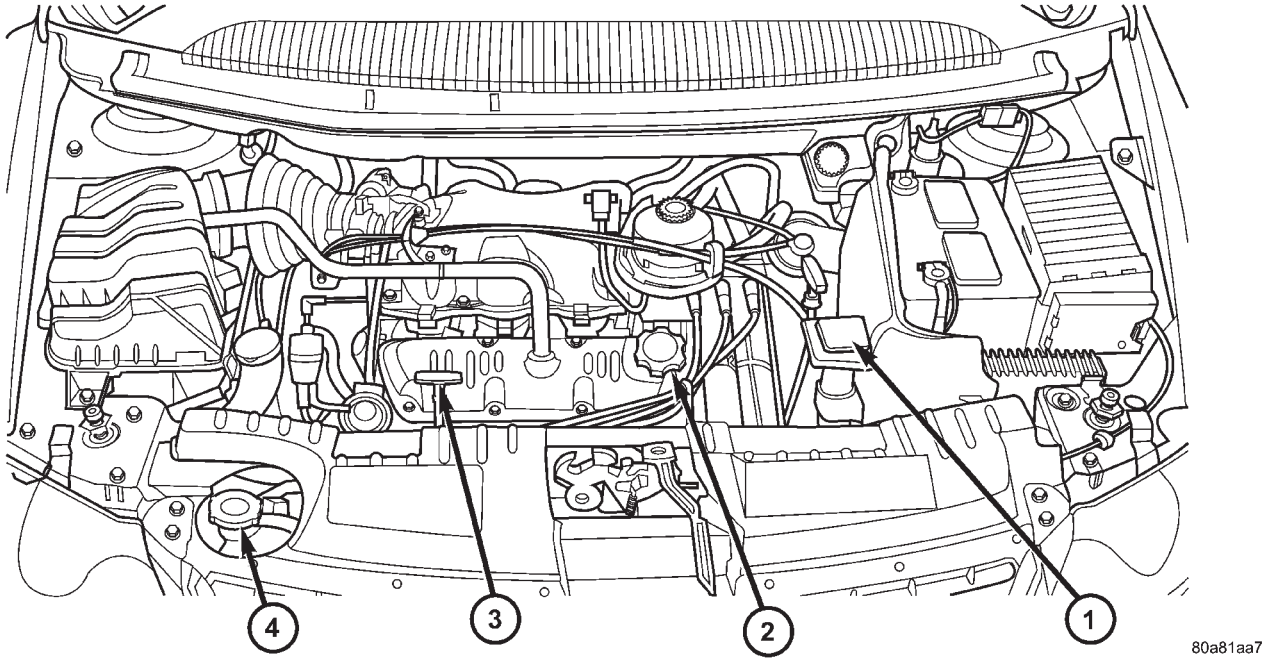

Fig. 102 Engine Oil Level Dipstick and Fill Locations

1 - COOLANT RECOVERY CONTAINER
2 - ENGINE OIL FILL CAP
3 - ENGINE OIL LEVEL DIPSTICK
4 - RADIATOR PRESSURE CAP

OIL COOLER & LINES

DESCRIPTION

An engine oil cooler is used on 3.3/3.8L engines (Heavy Duty Cooling Only) (Fig. 104). The cooler is a coolant-to-oil type and mounted between the oil filter and engine block.

OPERATION

Engine oil travels from the oil filter and into the oil cooler. Engine oil then exits the cooler into the main gallery. Engine coolant flows into the cooler from the heater return tube and exits into the water pump inlet.

REMOVAL

(1) Drain cooling system (Refer to 7 - COOLING - STANDARD PROCEDURE - COOLING SYSTEM DRAINING).

(2) Disconnect oil cooler inlet and outlet hoses (Fig. 103).

(3) Remove oil filter.

(4) Remove oil cooler attachment fitting (Fig. 104).

(5) Remove oil cooler.

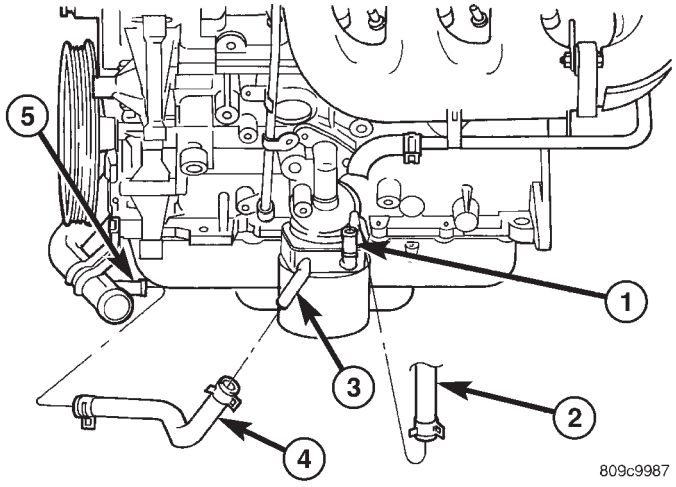

Fig. 103 Engine Oil Cooler Hoses

1 - OIL COOLER INLET TUBE
2 - INLET HOSE
3 - OIL COOLER OUTLET TUBE
4 - OUTLET HOSE
5 - WATER PUMP INLET TUBE

INSTALLATION

(1) Lubricate seal and position oil cooler to connector fitting on oil filter adapter (Fig. 104).

NOTE: Position the flat side of oil cooler parallel to oil pan rail.

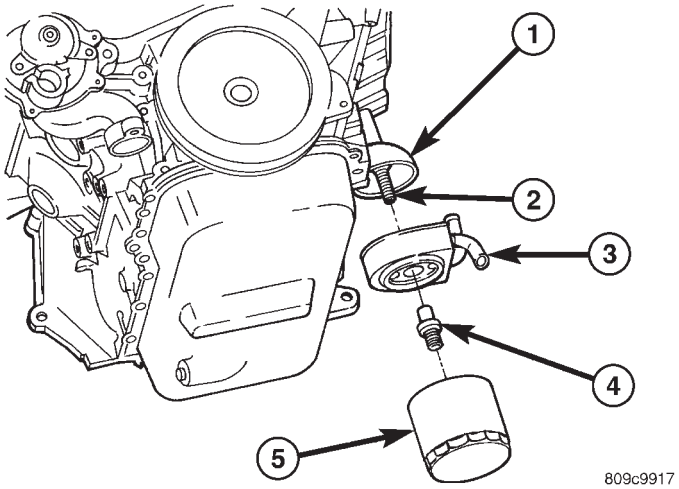

Fig. 104 Engine Oil Cooler - 3.3/3.8L (Heavy Duty Cooling)

1 - OIL FILTER ADAPTER
2 - CONNECTOR
3 - ENGINE OIL COOLER
4 - OIL COOLER ATTACHMENT FITTING
5 - OIL FILTER

(2) Install oil cooler attachment fitting and tighten to 27 N·m (20 ft. lbs.) (Fig. 104).

(3) Install oil filter.

(4) Connect oil cooler inlet and outlet hoses (Fig. 103).

(5) Fill cooling system (Refer to 7 - COOLING - STANDARD PROCEDURE - COOLING SYSTEM FILLING).

OIL FILTER

REMOVAL

CAUTION: When servicing the oil filter avoid deforming the filter can by installing the remove/install tool band strap against the can-to-base lock seam. The lock seam joining the can to the base is reinforced by the base plate.

(1) Using suitable oil filter wrench, turn filter counterclockwise to remove from oil filter adapter (Fig. 105). Properly discard used oil filter.

INSTALLATION

(1) Wipe oil filter adapter base clean and inspect gasket contact surface.

(2) Lubricate gasket of new filter with clean engine oil.

(3) Install new filter until gasket contacts base (Fig. 105). Tighten filter 1 turn or 20 N·m (15 ft. lbs.). Use filter wrench if necessary.

(4) Start engine and check for leaks.

OIL FILTER ADAPTER

REMOVAL

(1) Raise vehicle on hoist.
(2) Remove the oil filter.
(3) Disconnect oil pressure switch electrical connector.
(4) Remove oil filter adapter attaching bolts (Fig. 105).
(5) Remove oil filter adapter and seal (Fig. 105).

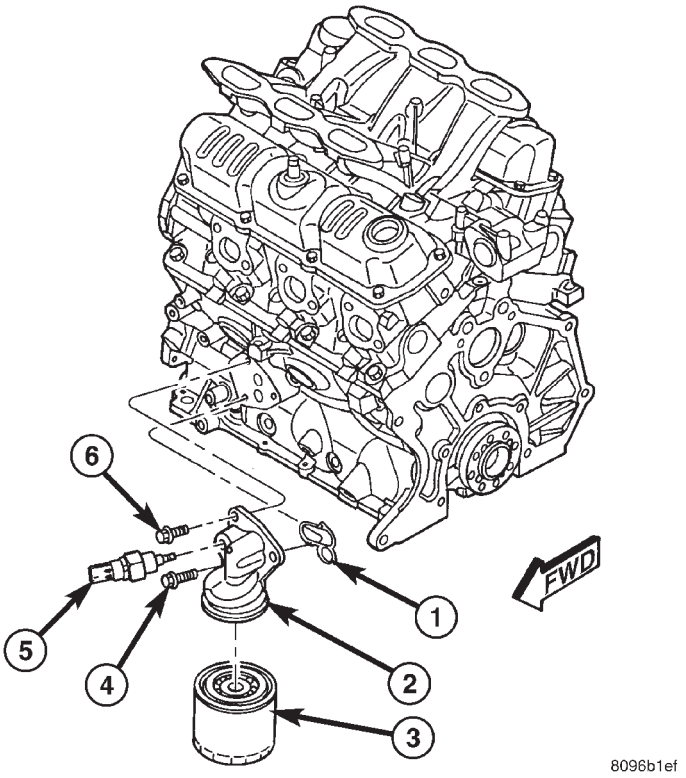

Fig. 105 OIL FILTER ADAPTER

1 - SEAL
2 - OIL FILTER ADAPTER
3 - OIL FILTER
4 - BOLT
5 - OIL PRESSURE SWITCH
6 - BOLT

INSTALLATION

(1) Clean oil filter adapter and install new seal.
(2) Position adapter on engine block and install bolts (Fig. 105).
(3) Tighten adapter bolts to 28 N·m (250 in. lbs.).
(4) Connect oil pressure switch electrical connector (Fig. 105).
(5) Install the oil filter.
(6) Lower vehicle on hoist.
(7) Start engine and allow to run approximately 2 minutes.
(8) Turn off engine and check oil level. Adjust oil level as necessary.

OIL PAN

REMOVAL

(1) Disconnect negative cable from battery and remove engine oil dipstick.
(2) Raise vehicle on hoist and drain engine oil.
(3) Remove drive belt splash shield.
(4) Remove strut to transaxle attaching bolt (Fig. 106). Loosen strut to engine block attaching bolts.
(5) Remove transaxle case cover (Fig. 106).

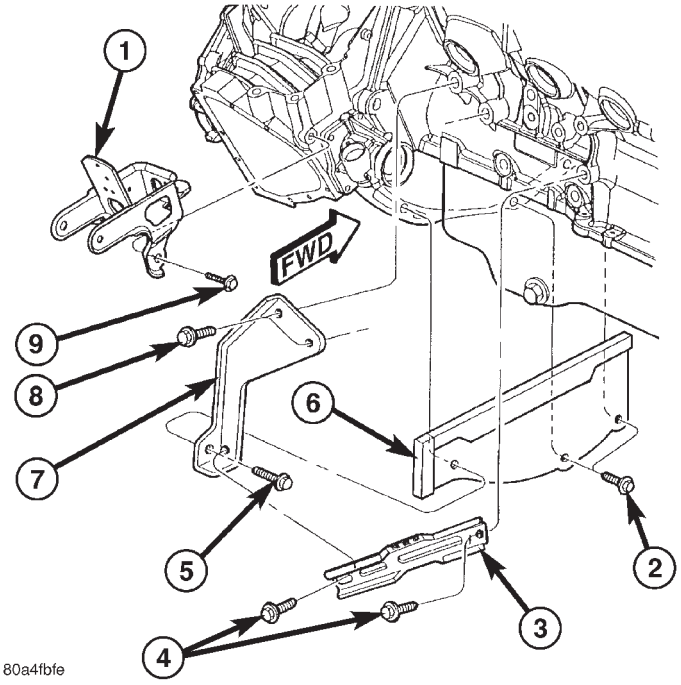

Fig. 106 Powertrain Struts and Transaxle Case Cover

1 - BRACKET - ENGINE REAR MOUNT
2 - BOLT - TRANSAXLE CASE COVER
3 - STRUT - TRANSAXLE TO ENGINE HORIZONTAL
4 - BOLT - HORIZONTAL STRUT
5 - BOLT - STRUT TO TRANSAXLE
6 - COVER - TRANSAXLE CASE LOWER
7 - STRUT - TRANSAXLE TO ENGINE
8 - BOLT - STRUT TO ENGINE
9 - BOLT - ENGINE REAR MOUNT BRACKET

(6) Remove oil pan fasteners (Fig. 107).
(7) Remove the oil pan and gasket (Fig. 107).

CLEANING

(1) Clean oil pan with solvent and wipe dry with a clean cloth.
(2) Clean all gasket material from mounting surfaces of pan and block.

OIL PAN (Continued)

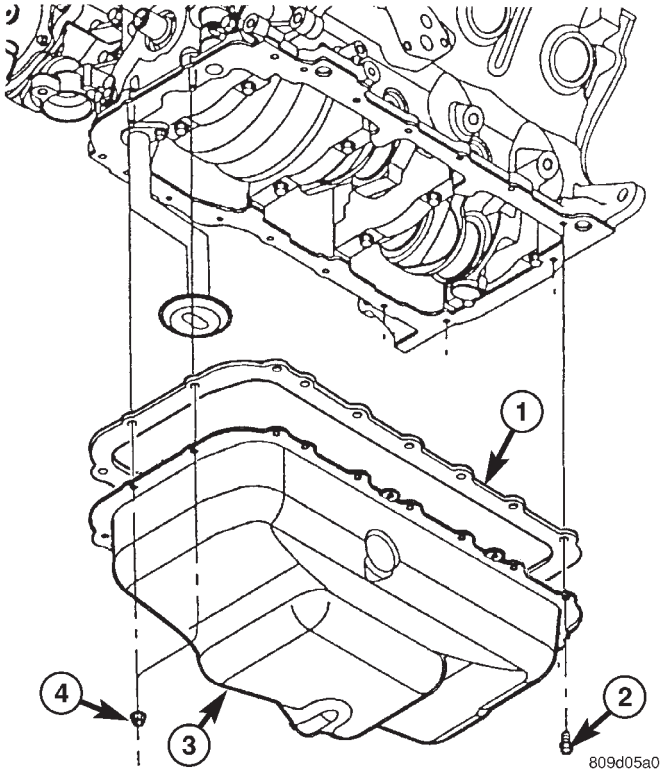

Fig. 107 OIL PAN

1 - GASKET
2 - BOLT
3 - OIL PAN
4 - NUT

(3) Clean oil screen and pick-up tube in clean solvent.

INSPECTION

(1) Inspect oil drain plug and plug hole for stripped or damaged threads and repair as necessary. Install a new drain plug gasket. Tighten to 27 N·m (20 ft. lbs.).

(2) Inspect oil pan mounting flange for bends or distortion. Straighten flange if necessary.

(3) Inspect condition of oil screen and pick-up tube.

INSTALLATION

(1) Clean sealing surfaces and apply a 1/8 inch bead of Mopar® Engine RTV GEN II at the parting line of the chain case cover and the rear seal retainer (Fig. 108).

(2) Position a new pan gasket on oil pan (Fig. 107).

(3) Install oil pan and tighten fasteners to 12 N·m (105 in. lbs.) (Fig. 107).

(4) Install cover to transaxle case (Fig. 106).

(5) Install the strut bolt to transaxle housing (Fig. 106). Tighten all bending brace bolts.

(6) Install the drive belt splash shield.

(7) Lower vehicle and install oil dipstick.

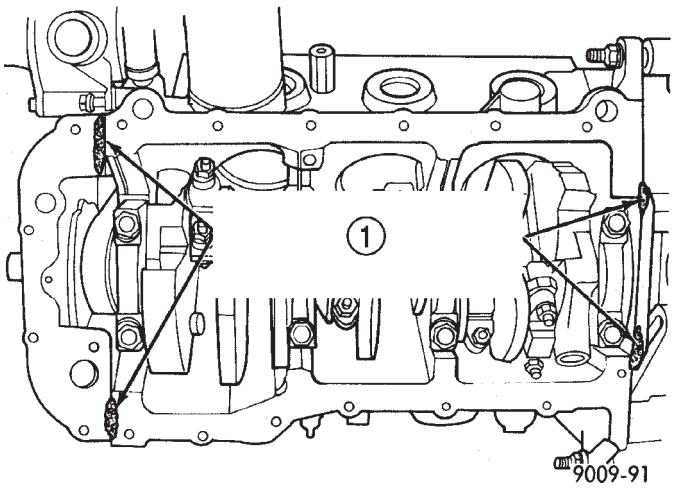

Fig. 108 Oil Pan Sealing

1 - SEALER LOCATIONS

(8) Connect negative cable to battery.

(9) Fill crankcase with oil to proper level.

OIL PRESSURE RELIEF VALVE

REMOVAL

(1) Remove oil pan (Refer to 9 - ENGINE/LUBRICATION/OIL PAN - REMOVAL).

(2) Drill a 3.175 mm (1/8 in.) hole in the center of the retainer cap (Fig. 109). Insert a self-threading sheet metal screw into the cap.

(3) Using suitable pliers, remove cap and discard.

(4) Remove spring and relief valve (Fig. 109).

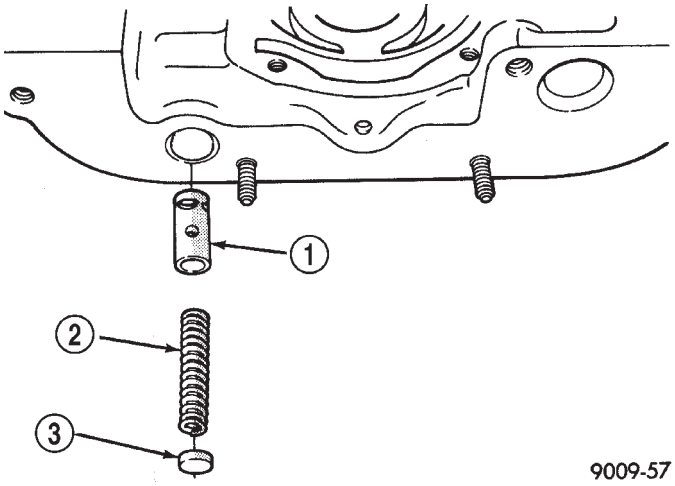

Fig. 109 Oil Pressure Relief Valve

1 - RELIEF VALVE
2 - SPRING
3 - RETAINER CAP

OIL PRESSURE RELIEF VALVE (Continued)

INSTALLATION

(1) Clean relief valve, spring and bore.

NOTE: Lubricate relief valve with clean engine oil before installing.

(2) Install relief valve and spring into housing.
(3) Install new retainer cap until flush with sealing surface.
(4) Install oil pan (Refer to 9 - ENGINE/LUBRICATION/OIL PAN - INSTALLATION).
(5) Fill crankcase with proper oil to correct level.

OIL PRESSURE SWITCH

DESCRIPTION

The engine oil pressure switch is located on the lower left front side of the engine. It screws into the oil filter adapter. The normally closed switch provides an input through a single wire to the low pressure indicator light on the instrument cluster.

OPERATION

The oil pressure switch provides a ground for the instrument cluster low oil pressure indicator light. The switch receives oil pressure input from the engine main oil gallery. When engine oil pressure is greater than 27.5 Kpa (4 psi), the switch contacts open, providing a open circuit to the low pressure indicator light. For wiring circuits and diagnostic information, (Refer to Appropriate Wiring/Diagnostic Information).

REMOVAL

(1) Raise vehicle on hoist.
(2) Disconnect electrical connector from switch.
(3) Remove oil pressure switch (Fig. 110).

INSTALLATION

(1) Install oil pressure switch. Torque oil pressure switch to 23 N·m (200 in. lbs.) (Fig. 110).
(2) Connect electrical connector to switch.
(3) Lower the vehicle.
(4) Start engine and check for leaks.
(5) Check engine oil level. Adjust as necessary.

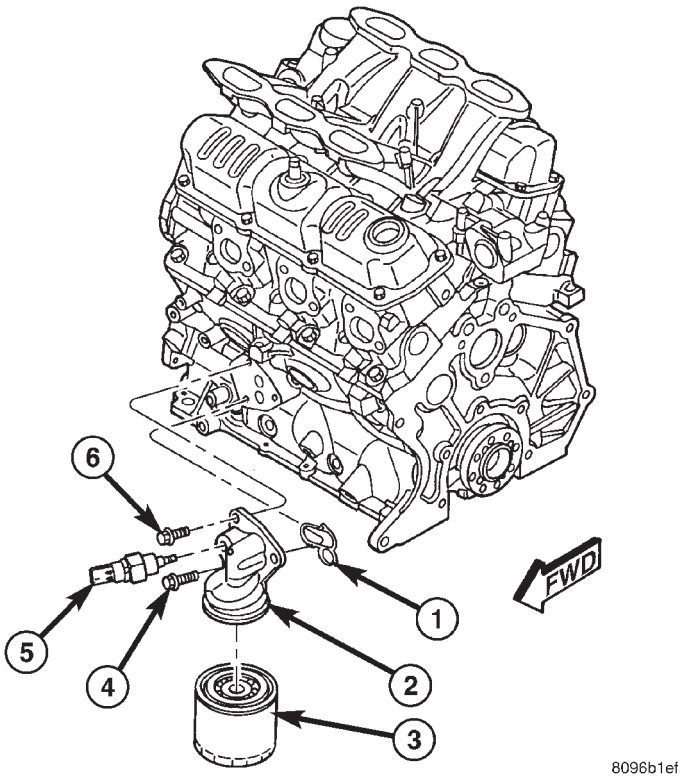

Fig. 110 OIL FILTER ADAPTER

1 - SEAL
2 - OIL FILTER ADAPTER
3 - OIL FILTER
4 - BOLT
5 - OIL PRESSURE SWITCH
6 - BOLT

OIL PUMP

DESCRIPTION

The oil pump is located in the timing chain cover. It is driven by the crankshaft.

REMOVAL

The oil pump is contained within the timing chain cover housing (Fig. 111).

(1) Remove oil pan. (Refer to 9 - ENGINE/LUBRICATION/OIL PAN - REMOVAL)

(2) Remove the timing chain cover. (Refer to 9 - ENGINE/VALVE TIMING/TIMING BELT / CHAIN COVER(S) - REMOVAL)

(3) Disassemble oil pump from timing chain cover. (Refer to 9 - ENGINE/LUBRICATION/OIL PUMP - DISASSEMBLY)

(4) Clean and Inspect oil pump components. (Refer to 9 - ENGINE/LUBRICATION/OIL PUMP - CLEANING) (Refer to 9 - ENGINE/LUBRICATION/OIL PUMP - INSPECTION)

OIL PUMP (Continued)

DISASSEMBLY

(1) Remove oil pump cover screws, and lift off cover (Fig. 111).

(2) Remove oil pump rotors (Fig. 111).

(3) Clean and inspect oil pump components. (Refer to 9 - ENGINE/LUBRICATION/OIL PUMP - CLEANING) (Refer to 9 - ENGINE/LUBRICATION/OIL PUMP - INSPECTION)

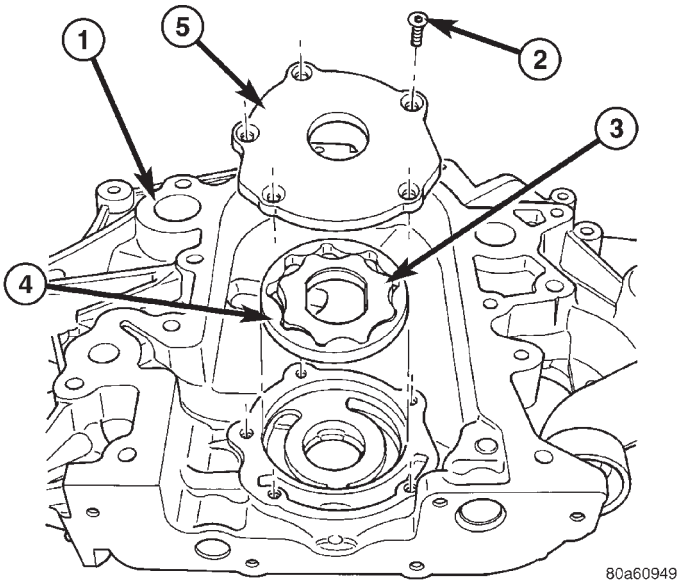

Fig. 111 OIL PUMP

1 - TIMING CHAIN COVER
2 - SCREWS
3 - INNER ROTOR
4 - OUTER ROTOR
5 - COVER

CLEANING

(1) Clean all parts thoroughly in a suitable solvent.

INSPECTION

(1) Inspect mating surface of the chain case cover. Surface should be smooth. Replace cover if scratched or grooved.

(2) Lay a straightedge across the pump cover surface (Fig. 112). If a 0.025 mm (0.001 in.) feeler gauge can be inserted between cover and straight edge, cover should be replaced.

(3) Measure thickness and diameter of outer rotor. If outer rotor thickness measures 7.64 mm (0.301 in.) or less (Fig. 113), or if the diameter is 79.95 mm (3.148 in.) or less, replace outer rotor.

(4) If inner rotor thickness measures 7.64 mm (0.301 in.) or less, replace inner rotor (Fig. 114).

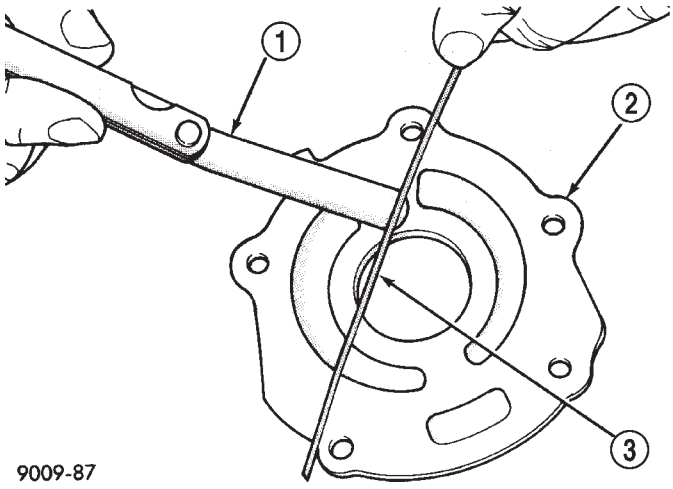

Fig. 112 Checking Oil Pump Cover Flatness

1 - FEELER GAUGE
2 - OIL PUMP COVER
3 - STRAIGHT EDGE

(5) Install outer rotor into chain case cover. Press rotor to one side with fingers and measure clearance between rotor and chain case cover (Fig. 115). If measurement is 0.39 mm (0.015 in.) or more, replace chain case cover, only if outer rotor is in specification.

(6) Install inner rotor into chain case cover. If clearance between inner and outer rotors (Fig. 116) is 0.203 mm (0.008 in.) or more, replace both rotors.

(7) Place a straightedge across the face of the chain case cover, between bolt holes. If a feeler gauge of 0.10 mm (0.004 in.) or more can be inserted between rotors and the straightedge, replace pump assembly (Fig. 117). **ONLY** if rotors are in specs.

OIL PUMP (Continued)

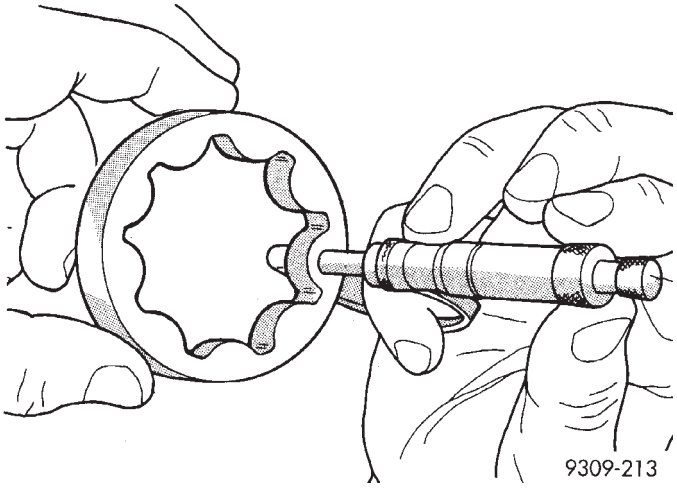

Fig. 113 Measuring Outer Rotor Thickness

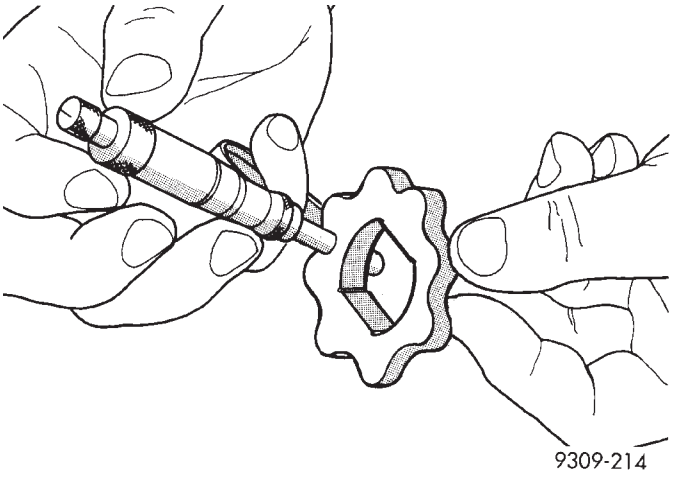

Fig. 114 Measuring Inner Rotor Thickness

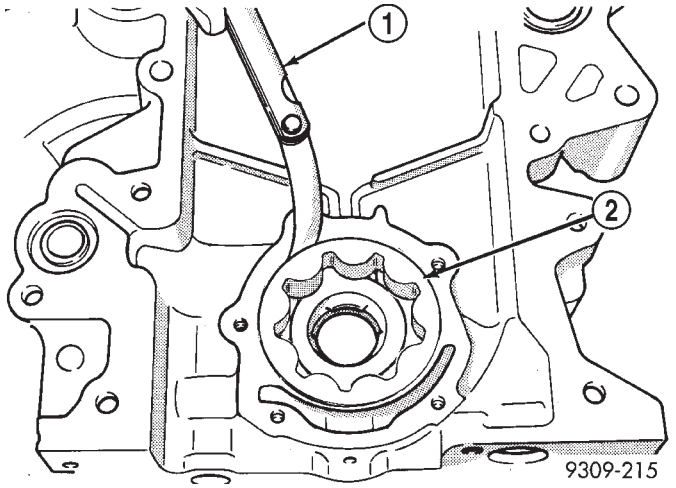

Fig. 115 Measuring Outer Rotor Clearance in Housing

1 - FEELER GAUGE
2 - OUTER ROTOR

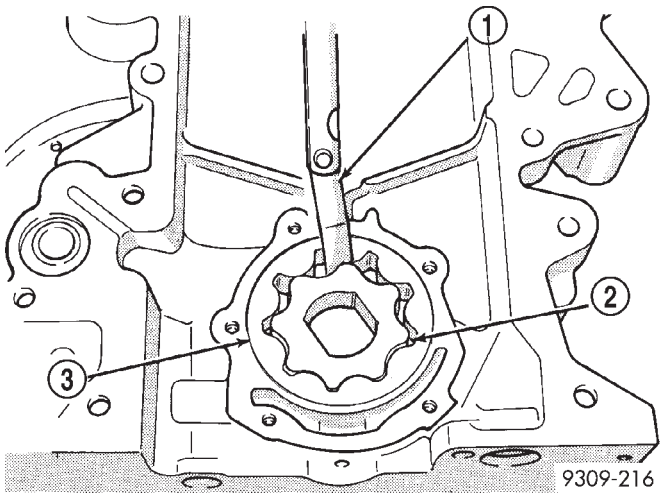

Fig. 116 Measuring Clearance Between Rotors

1 - FEELER GAUGE
2 - INNER ROTOR
3 - OUTER ROTOR

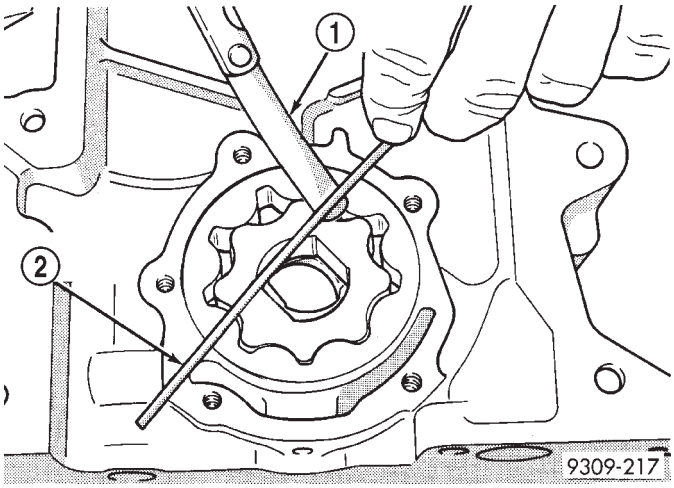

Fig. 117 Measuring Clearance Over Rotors

1 - FEELER GAUGE
2 - STRAIGHT EDGE

(8) Remove oil pressure relief valve. (Refer to 9 - ENGINE/LUBRICATION/OIL PRESSURE RELIEF VALVE - REMOVAL)

(9) Inspect oil pressure relief valve and bore. Inspect for scoring, pitting and free valve operation in bore (Fig. 118). Small marks may be removed with 400-grit wet or dry sandpaper.

(10) The relief valve spring has a free length of approximately 49.5 mm (1.95 inches) it should test between 19.5 and 20.5 pounds when compressed to 34 mm (1-11/32 inches). Replace spring that fails to meet specifications.

OIL PUMP (Continued)

(11) If oil pressure is low and pump is within specifications, inspect for worn engine bearings or other reasons for oil pressure loss.

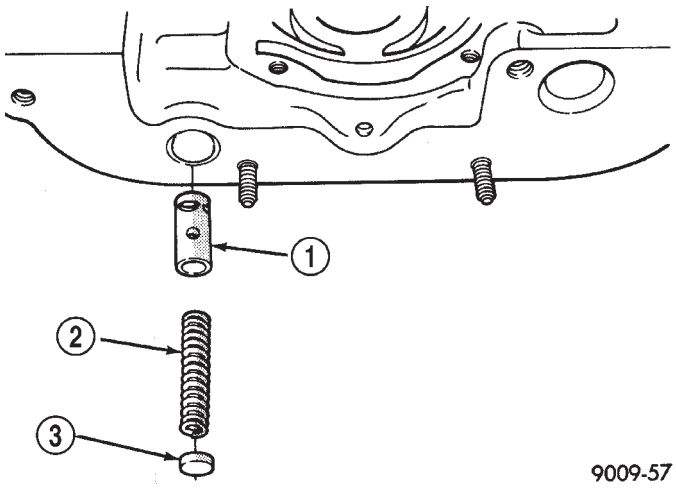

Fig. 118 Oil Pressure Relief Valve

1 - RELIEF VALVE
2 - SPRING
3 - RETAINER CAP

ASSEMBLY

(1) Assemble pump, using new parts as required. **Install the inner rotor with chamfer facing the cast iron oil pump cover.**

(2) Prime oil pump before installation by filling rotor cavity with engine oil.

(3) Install cover and tighten screws to 12 N·m (105 in. lbs.).

(4) If removed, install the oil pressure relief valve. (Refer to 9 - ENGINE/LUBRICATION/OIL PRESSURE RELIEF VALVE - INSTALLATION)

INSTALLATION

(1) Install oil pump. (Refer to 9 - ENGINE/LUBRICATION/OIL PUMP - ASSEMBLY)

(2) Install timing chain cover (Refer to 9 - ENGINE/VALVE TIMING/TIMING BELT / CHAIN COVER(S) - INSTALLATION) and oil pan (Refer to 9 - ENGINE/VALVE TIMING/TIMING BELT / CHAIN COVER(S) - INSTALLATION).

INTAKE MANIFOLD

DESCRIPTION

The intake system is made up of an upper and lower intake manifold. The upper intake manifold is made of a composite for both the 3.3L engine and for the 3.8L engine (Fig. 123). The lower intake manifold is common between the two engines (Fig. 127). It also provides coolant crossover between cylinder heads and houses the coolant thermostat (Fig. 127).

The intake manifold utilizes a compact design with very low restriction and outstanding flow balance. This design allows the engine to perform with a wide torque curve while increasing higher rpm horsepower.

If, for some reason, the molded-in vacuum ports break, the composite manifold can be salvaged. The vacuum ports are designed to break at the shoulder, if overloaded. Additional material in the shoulder area provides sufficient stock to repair. For more information and procedure, (Refer to 9 - ENGINE/MANIFOLDS/INTAKE MANIFOLD - STANDARD PROCEDURE). Also, if the special screws that attach the MAP sensor, power steering reservoir, throttle cable bracket, and the EGR tube become stripped, an oversized screw is available to repair the stripped-out condition. For more information and procedure, (Refer to 9 - ENGINE/MANIFOLDS/INTAKE MANIFOLD - STANDARD PROCEDURE)

OPERATION

The intake manifold delivers air to the combustion chambers. This air allows the fuel delivered by the fuel injectors to ignite when the spark plugs fire.

DIAGNOSIS AND TESTING - INTAKE MANIFOLD LEAKS

An intake manifold air leak is characterized by lower than normal manifold vacuum. Also, one or more cylinders may not be functioning.

WARNING: USE EXTREME CAUTION WHEN THE ENGINE IS OPERATING. DO NOT STAND IN A DIRECT LINE WITH THE FAN. DO NOT PUT YOUR HANDS NEAR THE PULLEYS, BELTS OR THE FAN. DO NOT WEAR LOOSE CLOTHING.

(1) Start the engine.

(2) Spray a small stream of water (Spray Bottle) at the suspected leak area.

(3) If engine RPM'S change, the area of the suspected leak has been found.

(4) Repair as required.

INTAKE MANIFOLD - UPPER

STANDARD PROCEDURE

STANDARD PROCEDURE - MANIFOLD STRIPPED THREAD REPAIR

The composite upper intake manifold thread bosses, if stripped out, can be repaired by utilizing a

repair screw available through Mopar® parts. Repair screws are available for the following manifold attached components:

- MAP sensor
- Power steering reservoir
- EGR tube
- Throttle cable bracket

The repair screws require a unique tightening torque specification from the original screw. Refer to the following chart for specification.

DESCRIPTION	TORQUE*
STRIP-OUT REPAIR SCREWS ONLY	
MAP Sensor Repair Screw	4 N·m (35 in. lbs.)
Power Steering Reservoir Repair Screw	9 N·m (80 in. lbs.)
EGR Tube Attaching Repair Screw	9 N·m (80 in. lbs.)
Throttle Cable Bracket Repair Screw	9 N·m (80 in. lbs.)
*Install Slowly Using Hand Tools Only	

STANDARD PROCEDURE - INTAKE MANIFOLD VACUUM PORT REPAIR

The composite intake manifold vacuum ports can be repaired. Although, if the manifold plenum chamber is damaged or cracked, the manifold must be replaced.

To repair a broken or damaged vacuum nipple (port) on the composite intake manifold, perform the following procedure:

PARTS REQUIRED	TOOLS REQUIRED
· Brass Nipple – 1/4″ O.D. x 1/8″ pipe thread (LDP/Speed Control Port)	· Pipe Tap – 1/8″ - 18 NPT · Drill Bit – 11/32″ · File/Sandpaper
· Brass Nipple – 1/2″ O.D. x 1/4″ pipe thread (Brake Booster Port)	· Pipe Tap – 1/4″ - 18 NPT · Drill Bit – 7/16″ · File/Sandpaper

NOTE: While performing this procedure, avoid getting the manifold material residue into the plenum chamber.

(1) File or sand the remaining port back until a flat surface is obtained (plane normal to nipple (port) axis).

(2) Drill out the nipple (port) base using a 7/16” (brake booster port) or 11/32” (LDP/speed control port) drill bit (Fig. 119).

(3) Using a 1/4”–18 NPT (brake booster port) or 1/8”–18 NPT (LDP/speed control port) pipe tap, cut internal threads (Fig. 119). Use caution to start tap in a axis same as original nipple.

(4) Apply Mopar® Thread Sealant to threads of repair nipple(s).

(5) Install repair nipple(s). Do not over torque repair nipple(s).

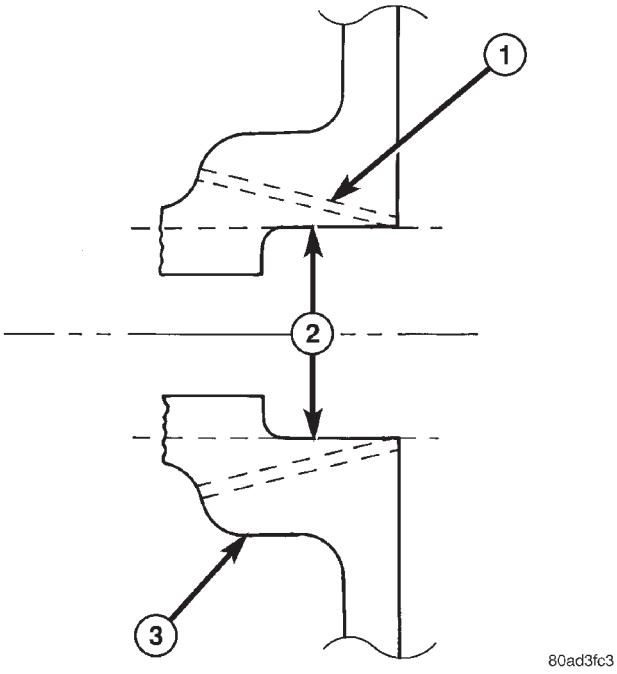

Fig. 119 Intake Manifold Port Repair

1 - BRAKE BOOSTER PORT = 1/4″–18 NPT PIPE TAP
1 - LDP/SPEED CONTROL PORT = 1/8″–18 NPT PIPE TAP
2 - DRILL BIT = 7/16″ BRAKE BOOSTER PORT
2 - DRILL BIT = 11/32″ LDP/SPEED CONTROL PORT
3 - INTAKE MANIFOLD

REMOVAL - UPPER INTAKE MANIFOLD

(1) Disconnect battery negative cable.

(2) Disconnect inlet air temperature (IAT) sensor electrical connector.

(3) Remove air inlet resonator to throttle body hose assembly.

(4) Disconnect throttle and speed control cables from throttle body (Refer to 14 - FUEL SYSTEM/ FUEL INJECTION/THROTTLE CONTROL CABLE - REMOVAL).

(5) Disconnect make-up air hose support clip from throttle cable bracket.

(6) Disconnect the automatic idle speed (AIS) motor and throttle position sensor (TPS) wiring connectors from throttle body.

INTAKE MANIFOLD - UPPER (Continued)

(7) Disconnect the manifold absolute pressure (MAP) sensor electrical connector.

(8) Disconnect the vapor purge vacuum hose from throttle body.

(9) Disconnect the PCV hose (Fig. 120).

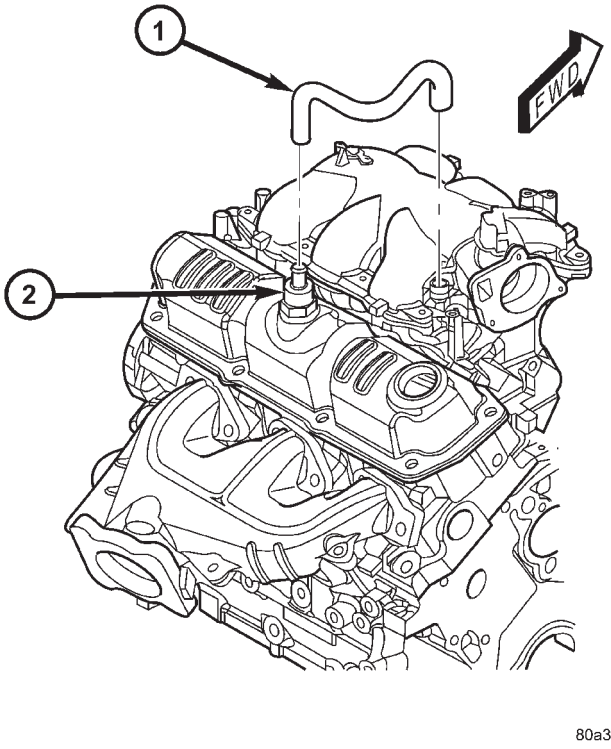

Fig. 120 PCV & HOSE

1 - HOSE - PCV
2 - PCV VALVE

(10) Remove the power steering reservoir attaching bolts and only loosen the nut (Fig. 121). Lift reservoir up to disengage lower mount from stud. Set reservoir aside. **Do not** disconnect hose.

(11) Disconnect the brake booster and leak detection pump (LDP) hoses from intake manifold (Fig. 122).

(12) Remove intake manifold bolts and remove the manifold (Fig. 123).

(13) Cover the lower intake manifold with a suitable cover while the upper manifold is removed.

(14) Clean and inspect the upper intake manifold (Refer to 9 - ENGINE/MANIFOLDS/INTAKE MANIFOLD - CLEANING) and (Refer to 9 - ENGINE/MANIFOLDS/INTAKE MANIFOLD - INSPECTION).

CLEANING

(1) Discard gasket(s).

(2) Clean all sealing surfaces.

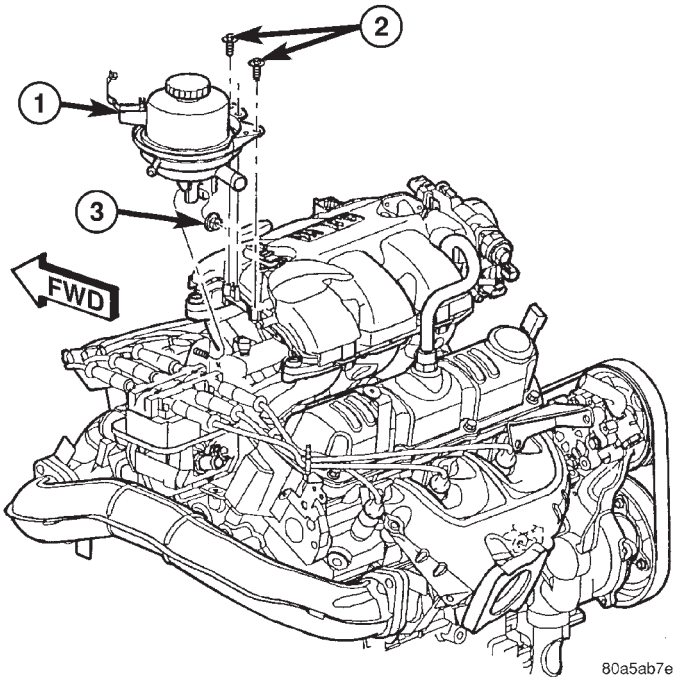

Fig. 121 POWER STEERING FLUID RESERVOIR

1 - POWER STEERING RESERVOIR
2 - BOLT - RESERVOIR TO MANIFOLD
3 - NUT - RESERVOIR TO COIL BRACKET

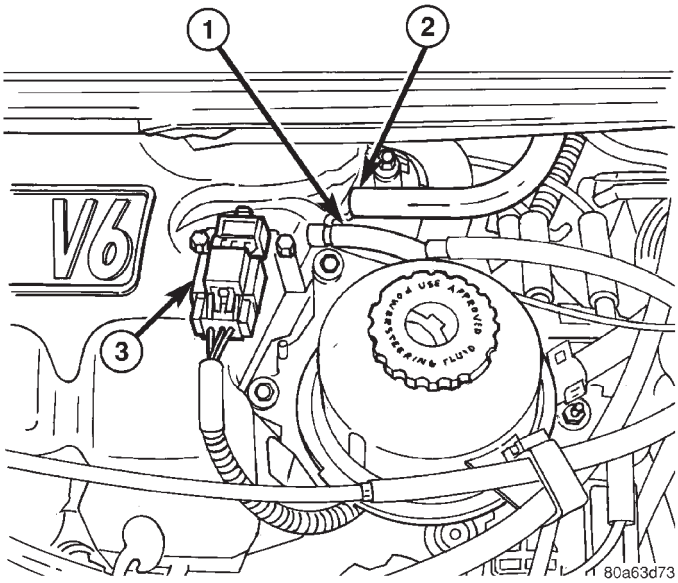

Fig. 122 BRAKE BOOSTER & LDP VACUUM HOSES

1 - LDP & SPEED CONTROL VACUUM HOSE
2 - BRAKE BOOSTER VACUUM HOSE
3 - MAP SENSOR

INTAKE MANIFOLD - UPPER (Continued)

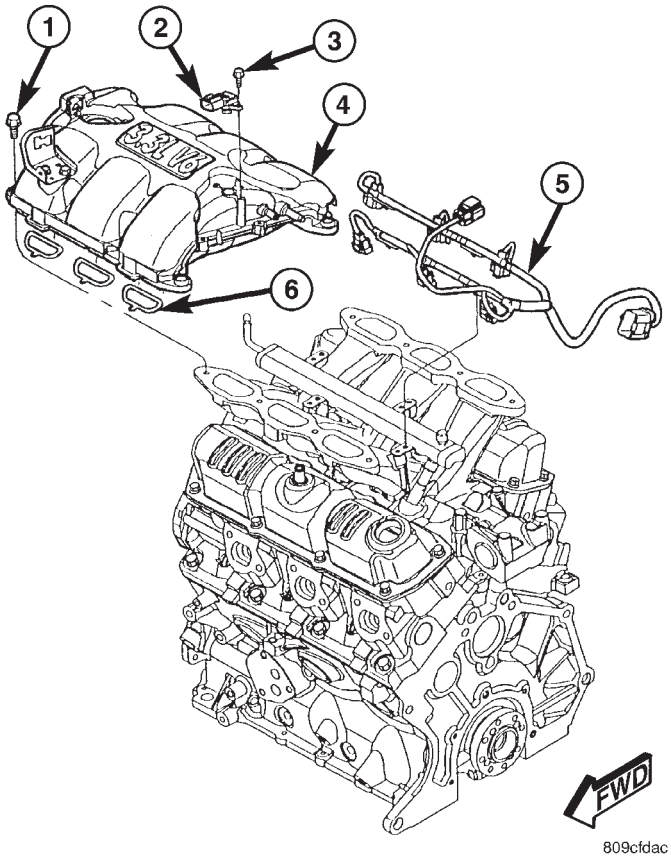

Fig. 123 INTAKE MANIFOLD - UPPER

1 - BOLT
2 - MAP SENSOR
3 - SCREW
4 - MANIFOLD - UPPER
5 - WIRE HARNESS
6 - GASKET (3 PER CYL. BANK)

INSPECTION

Check manifold for:

- Damage and cracks.
- Mounting surface distortion by using a straight-edge and thickness gauge.

INSTALLATION - UPPER INTAKE MANIFOLD

(1) If the following components were removed from manifold, install and tighten to specifications:

CAUTION: The special screws used for the composite manifold attached components must be installed slowly using hand tools only. This requirement is to prevent the melting of material that causes stripped threads. If threads become stripped, an oversize repair screw is available. For more information and procedure (Refer to 9 - ENGINE/MANIFOLDS/INTAKE MANIFOLD - STANDARD PROCEDURE - MANIFOLD STRIPPED THREAD REPAIR).

- MAP sensor - 1.7 N·m (15 in. lbs.)
- Throttle cable bracket - 5.6 N·m (50 in. lbs.)

(2) Remove covering on lower intake manifold and clean surfaces.

(3) Inspect manifold gasket condition. Gaskets can be re-used, if not damaged. To replace, remove gasket from upper manifold (Fig. 123). Position new gasket in seal channel and press lightly in-place. Repeat procedure for each gasket position.

(4) Position upper manifold on lower manifold (Fig. 123). Install and tighten bolts to 12 N·m (105 in. lbs.) following torque sequence in (Fig. 124).

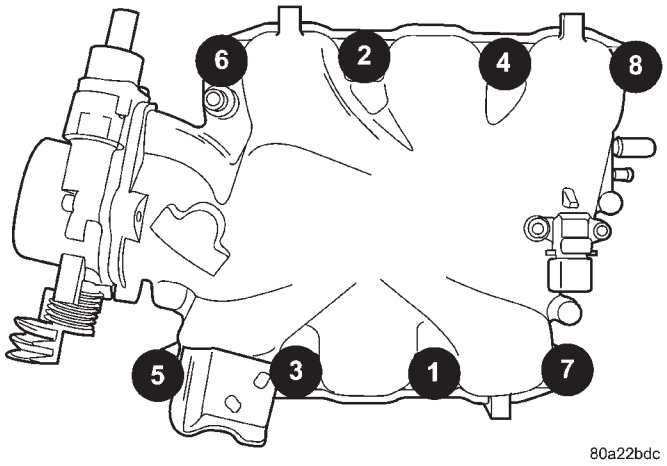

Fig. 124 UPPER MANIFOLD TIGHTENING SEQUENCE

(5) Connect the MAP sensor electrical connector.

(6) Connect the brake booster and LDP vacuum hose to intake manifold (Fig. 122).

CAUTION: The special screws used for attaching the EGR tube and power steering reservoir to the manifold must be installed slowly using hand tools only. This requirement is to prevent the melting of material that causes stripped threads. If threads become stripped, an oversize repair screw is available. For more information and procedure (Refer to 9 - ENGINE/MANIFOLDS/INTAKE MANIFOLD - STANDARD PROCEDURE - MANIFOLD STRIPPED THREAD REPAIR).

(7) Install the power steering reservoir (Fig. 121). Tighten screws to manifold to 5.6 N·m (50 in. lbs.).

(8) Connect throttle and speed control cables to throttle body (Refer to 14 - FUEL SYSTEM/FUEL INJECTION/THROTTLE CONTROL CABLE - INSTALLATION)

(9) Attach make up air hose clip into the hole in the throttle cable bracket.

(10) Connect the wiring connectors to the throttle position sensor (TPS) and Automatic Idle Speed (AIS) motor.

INTAKE MANIFOLD - UPPER (Continued)

(11) Install air cleaner and air inlet hose assembly.
(12) Connect the inlet air temperature (IAT) sensor electrical connector.
(13) Connect battery negative cable.

INTAKE MANIFOLD - LOWER

REMOVAL - LOWER INTAKE MANIFOLD

(1) Perform fuel system pressure release procedure **(before attempting any repairs).** (Refer to 14 - FUEL SYSTEM/FUEL DELIVERY - STANDARD PROCEDURE)
(2) Drain the cooling system. (Refer to 7 - COOLING - STANDARD PROCEDURE)
(3) Remove the upper intake manifold. (Refer to 9 - ENGINE/MANIFOLDS/INTAKE MANIFOLD - REMOVAL)
(4) Remove the fuel line. (Refer to 14 - FUEL SYSTEM/FUEL DELIVERY/FUEL LINES - STANDARD PROCEDURE) (Refer to 14 - FUEL SYSTEM/FUEL DELIVERY/QUICK CONNECT FITTING - STANDARD PROCEDURE)
(5) Remove ignition coil and bracket (Fig. 125).
(6) Disconnect heater supply hose and engine coolant temperature sensor (Fig. 126).
(7) Disconnect the fuel injector wire harness.
(8) Remove the fuel injectors and rail assembly (Fig. 125).
(9) Remove radiator upper hose.
(10) Remove the intake manifold bolts.
(11) Remove lower intake manifold (Fig. 127).

WARNING: INTAKE MANIFOLD GASKET IS MADE OF VERY THIN METAL AND MAY CAUSE PERSONAL INJURY, HANDLE WITH CARE.

(12) Remove intake manifold seal retainers screws (Fig. 127). Remove intake manifold gasket.
(13) Inspect and clean manifold. (Refer to 9 - ENGINE/MANIFOLDS/INTAKE MANIFOLD - INSPECTION) (Refer to 9 - ENGINE/MANIFOLDS/INTAKE MANIFOLD - CLEANING)

CLEANING

(1) Discard gasket(s).
(2) Clean all sealing surfaces.

INSPECTION

Check for:
- Damage and cracks of each section.
- Clogged water passages in end cross-overs (if equipped).
- Check for cylinder head mounting surface distortion using a straightedge and thickness gauge. (Refer to 9 - ENGINE/CYLINDER HEAD - INSPECTION)

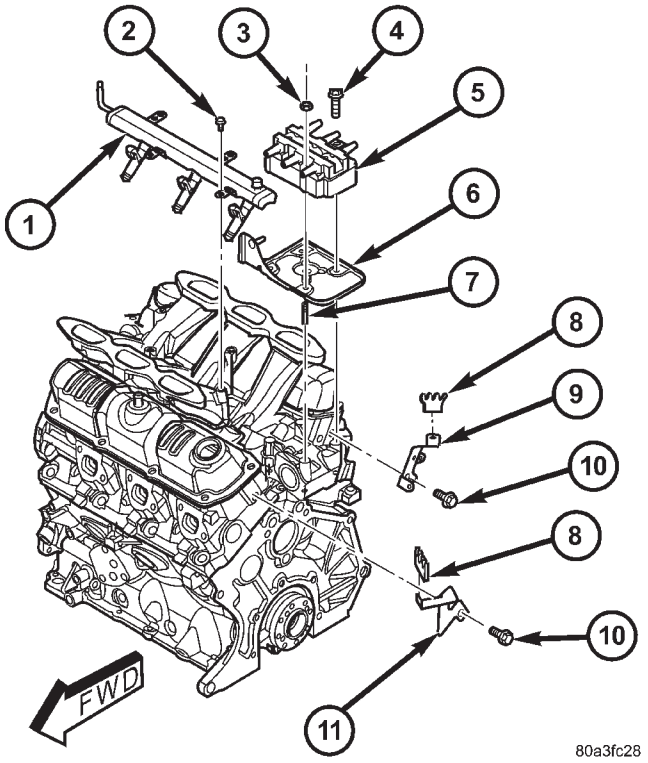

Fig. 125 FUEL RAIL AND IGNITION COIL & BRACKET

1 - FUEL RAIL
2 - BOLT - FUEL RAIL
3 - NUT - IGNITION COIL
4 - BOLT - IGNITION COIL
5 - IGNITION COIL
6 - BRACKET - IGNITION COIL
7 - STUD - IGNITION COIL
8 - SEPARATOR - SPARK PLUG CABLE
9 - BRACKET - SPARK PLUG CABLE SEPARATOR
10 - BOLT - SEPARATOR BRACKET
11 - BRACKET - SPARK PLUG CABLE SEPARATOR

INSTALLATION - LOWER INTAKE MANIFOLD

(1) Place a bead (approximately 1/4 in. diameter) of Mopar® Engine RTV GEN II onto each of the **four** manifold to cylinder head gasket corners (Fig. 128).
(2) Carefully install the new intake manifold gasket (Fig. 127). Tighten end seal retainer screws to 12 N·m (105 in. lbs.).
(3) Install lower intake manifold (Fig. 127). Install the bolts and torque to 1 N·m (10 in. lbs.). Then torque bolts to 22 N·m (200 in. lbs.) in sequence shown in (Fig. 129). Then torque again to 22 N·m (200 in. lbs.). After intake manifold is in place, **inspect to make sure seals are in place.**
(4) Install the fuel injectors and rail assembly. (Refer to 14 - FUEL SYSTEM/FUEL DELIVERY/FUEL RAIL - INSTALLATION)
(5) Connect fuel injector electrical harness.

INTAKE MANIFOLD - LOWER (Continued)

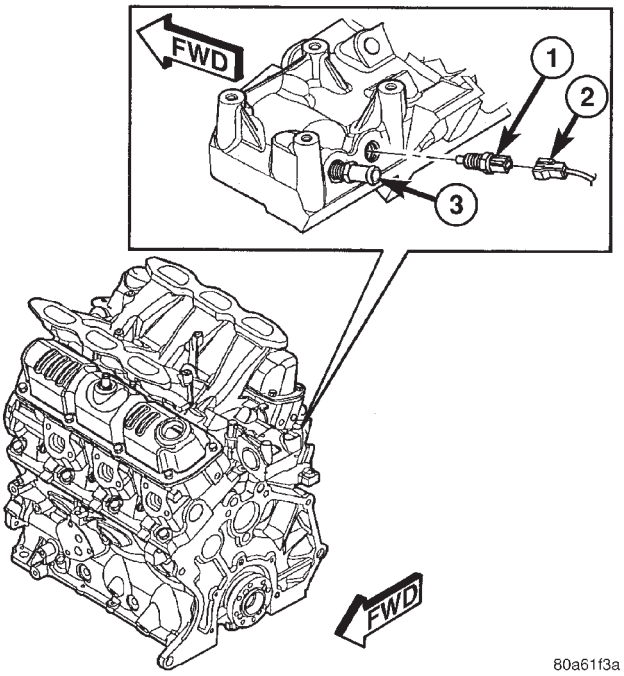

Fig. 126 ECT SENSOR & HEATER SUPPLY

1 - ENGINE COOLANT TEMPERATURE SENSOR
2 - CONNECTOR - ENGINE COOLANT SENSOR
3 - FITTING - HEATER SUPPLY

(6) Connect the engine coolant temperature sensor (Fig. 126).

(7) Connect the heater supply (Fig. 126) and radiator upper hoses to manifold.

(8) Connect the fuel line. (Refer to 14 - FUEL SYSTEM/FUEL DELIVERY/QUICK CONNECT FITTING - STANDARD PROCEDURE)

(9) Install the upper intake manifold. (Refer to 9 - ENGINE/MANIFOLDS/INTAKE MANIFOLD - INSTALLATION)

(10) Connect negative battery cable.

(11) Fill the cooling system. (Refer to 7 - COOLING - STANDARD PROCEDURE)

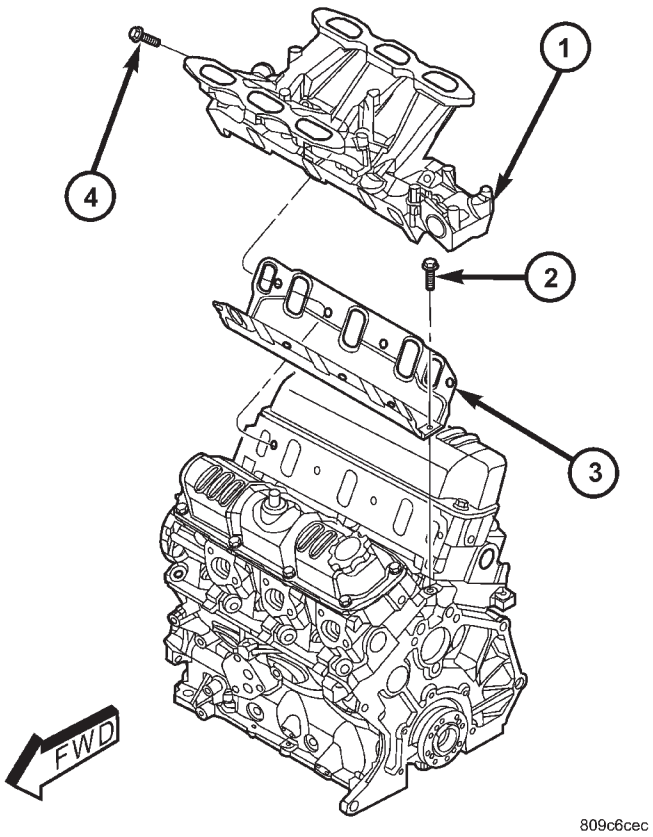

Fig. 127 INTAKE MANIFOLD - LOWER

1 - INTAKE MANIFOLD - LOWER
2 - BOLT - GASKET END SEAL RETAINER
3 - GASKET
4 - BOLT - LOWER INTAKE MANIFOLD

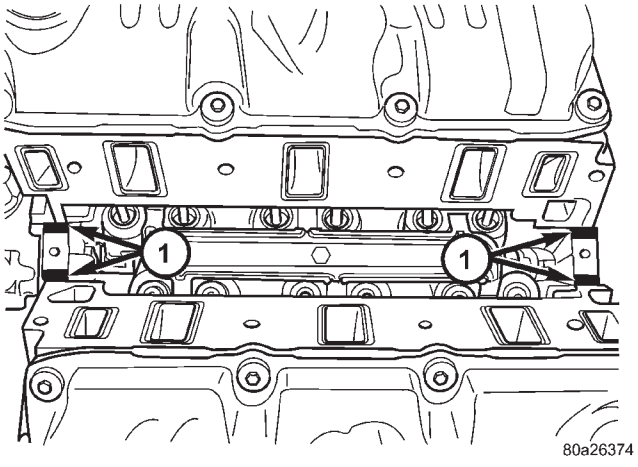

Fig. 128 Intake Manifold Gasket Sealing

1 - SEALER LOCATIONS

INTAKE MANIFOLD - LOWER (Continued)

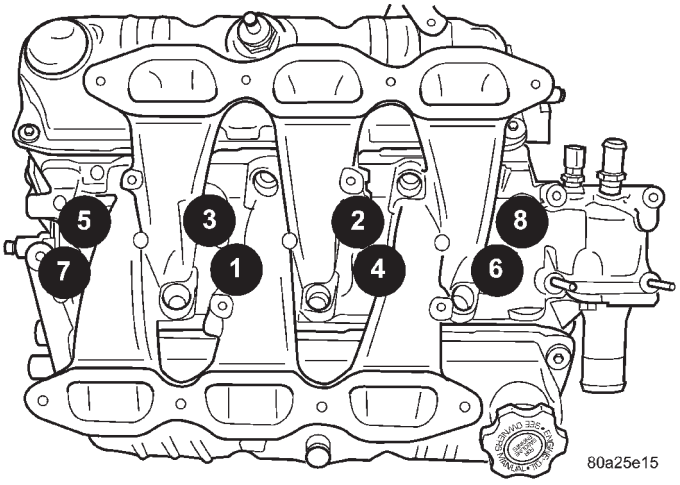

Fig. 129 LOWER MANIFOLD TIGHTENING SEQUENCE

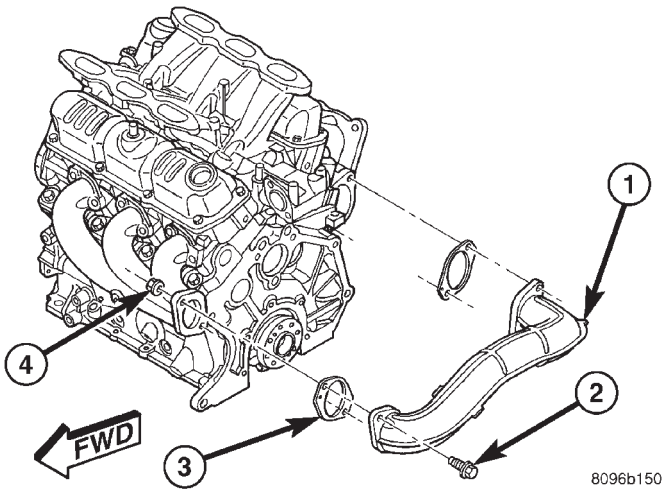

Fig. 130 CROSS-OVER PIPE

1 - CROSS-OVER PIPE
2 - BOLT
3 - GASKET
4 - FLAG NUT

EXHAUST MANIFOLD

DESCRIPTION

The exhaust manifolds are log type and made of Hi-Sil-Moly (high temperature resistant) nodular cast iron. The exhaust manifolds are attached directly to the cylinder heads and a cross-over pipe connects the two manifolds.

OPERATION

The exhaust manifolds collects the exhaust gases exiting the combustion chambers. It then channels the exhaust gases to the exhaust pipe that is attached to the rear (right side) manifold.

EXHAUST MANIFOLD - RIGHT

REMOVAL

(1) Disconnect battery negative cable.

(2) Remove the wiper module. (Refer to 8 - ELECTRICAL/WIPERS/WASHERS/WIPER MODULE - REMOVAL)

(3) Disconnect spark plug wires.

(4) Remove bolts fastening crossover pipe to exhaust manifold (Fig. 130).

(5) Disconnect and remove the upstream oxygen sensor (Fig. 133).

(6) Remove the heat shield attaching screws (Fig. 133).

(7) Remove the upper heat shield (Fig. 133).

(8) Raise vehicle on hoist and remove drive belt shield.

(9) Loosen the power steering pump support strut lower bolt (Fig. 131).

(10) Disconnect downstream oxygen sensor connector.

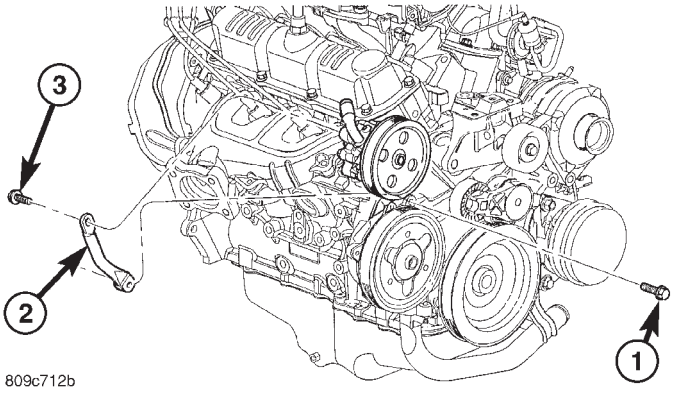

Fig. 131 P/S PUMP STRUT

1 - BOLT - LOWER
2 - STRUT - P/S PUMP
3 - BOLT - UPPER

(11) Disconnect catalytic converter pipe from exhaust manifold (Fig. 132).

(12) Lower vehicle and remove the power steering pump support strut upper bolt (Fig. 131).

(13) Remove bolts attaching exhaust manifold to cylinder head and remove manifold (Fig. 133).

(14) Inspect and clean manifold. (Refer to 9 - ENGINE/MANIFOLDS/EXHAUST MANIFOLD - CLEANING) (Refer to 9 - ENGINE/MANIFOLDS/EXHAUST MANIFOLD - INSPECTION)

CLEANING

(1) Discard gasket (if equipped) and clean all surfaces of manifold and cylinder head.

EXHAUST MANIFOLD - RIGHT (Continued)

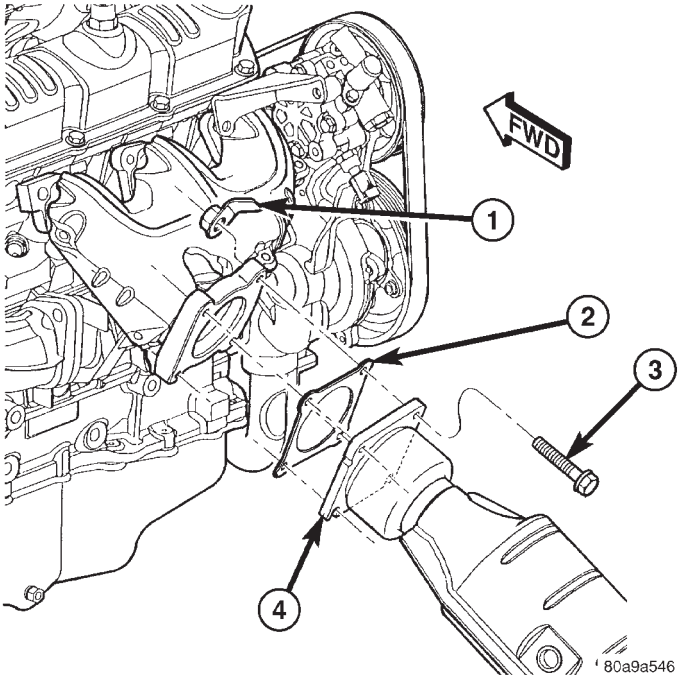

Fig. 132 Catalytic Converter to Exhaust Manifold

1 - FLAG NUT
2 - GASKET
3 - BOLT
4 - CATALYTIC CONVERTER

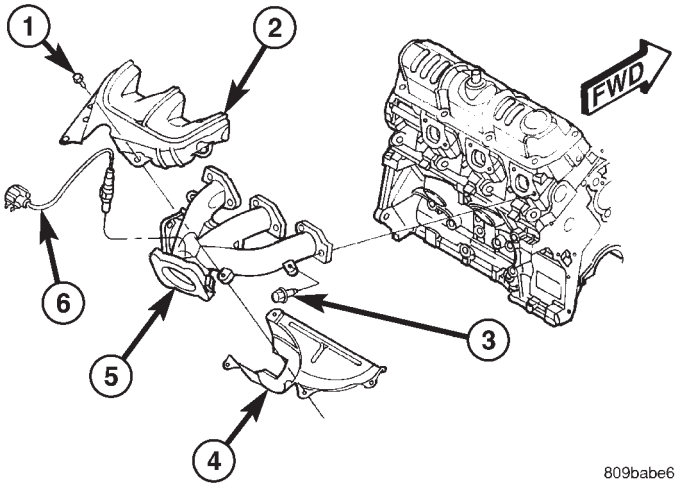

Fig. 133 EXHAUST MANIFOLD - RIGHT

1 - SCREW - HEAT SHIELD
2 - HEAT SHIELD - UPPER
3 - BOLT - EXHAUST MANIFOLD
4 - HEAT SHIELD - LOWER
5 - EXHAUST MANIFOLD - RIGHT
6 - OXYGEN SENSOR - UPSTREAM

INSPECTION

Inspect exhaust manifolds for damage or cracks and check distortion of the cylinder head mounting surface and exhaust crossover mounting surface with a straightedge and thickness gauge (Fig. 134).

Manifold surface flatness limits should not exceed 1.0 mm (0.039 in.).

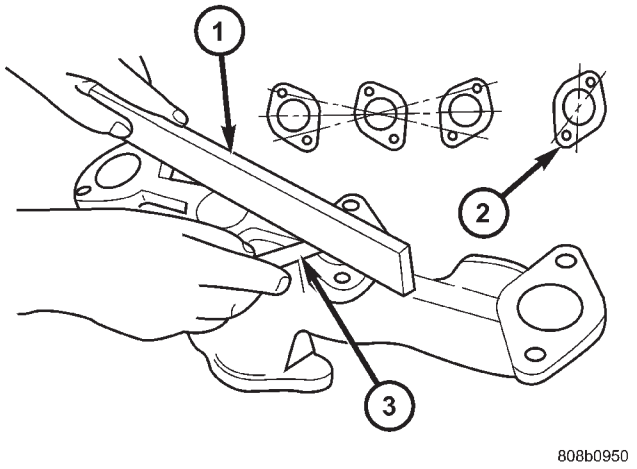

Fig. 134 Check Exhaust Manifold Mounting

1 - STRAIGHT EDGE
2 - CROSSOVER PIPE MOUNTING SURFACE
3 - FEELER GAUGE

INSTALLATION

(1) Position exhaust manifold on cylinder head and install bolts to center runner (cylinder #3) and initial tighten to 2.8 N·m (25 in. lbs.) (Fig. 133)

(2) Using a new gasket, attach crossover pipe to exhaust manifold and tighten bolts to 41 N·m (30 ft. lbs.) (Fig. 130).

NOTE: Inspect crossover pipe fasteners for damage from heat and corrosion. The cross-over bolts are made of a special stainless steel alloy. If replacement is required, OEM bolts are highly recommended.

(3) Install the remaining manifold attaching bolts. Tighten all bolts to 23 N·m (200 in. lbs.).

(4) Position the power steering pump support strut and install upper bolt (Fig. 131).

(5) Install heat shield and attaching screws (Fig. 133).

(6) Install and connect upstream oxygen sensor (Fig. 133).

(7) Raise the vehicle.

(8) Attach catalytic converter pipe to exhaust manifold using new gasket and tighten bolts to 37 N·m (27 ft. lbs.) (Fig. 132).

(9) Connect downstream oxygen sensor connector.

(10) Tighten the power steering pump support strut lower bolt (Fig. 131).

(11) Install the belt splash shield and lower the vehicle.

EXHAUST MANIFOLD - RIGHT (Continued)

(12) Install the wiper module. (Refer to 8 - ELECTRICAL/WIPERS/WASHERS/WIPER MODULE - INSTALLATION)
(13) Connect battery negative cable.

EXHAUST MANIFOLD - LEFT

REMOVAL

(1) Disconnect battery negative cable.
(2) Remove bolts attaching crossover pipe to exhaust manifold (Fig. 135).

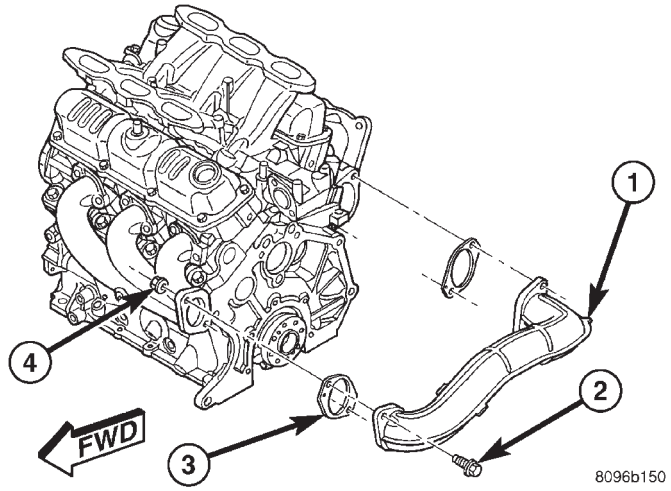

Fig. 135 CROSS-OVER PIPE

1 - CROSS-OVER PIPE
2 - BOLT
3 - GASKET
4 - FLAG NUT

(3) Disconnect left cylinder bank spark plug wires.
(4) Remove heat shield attaching bolts (Fig. 136).
(5) Remove bolts attaching exhaust manifold to cylinder head (Fig. 136).
(6) Remove the exhaust manifold (Fig. 136).
(7) Inspect and clean manifold. (Refer to 9 - ENGINE/MANIFOLDS/EXHAUST MANIFOLD - INSPECTION) (Refer to 9 - ENGINE/MANIFOLDS/EXHAUST MANIFOLD - CLEANING)

CLEANING

(1) Discard gasket (if equipped) and clean all surfaces of manifold and cylinder head.

INSPECTION

Inspect exhaust manifolds for damage or cracks and check distortion of the cylinder head mounting surface and exhaust crossover mounting surface with a straightedge and thickness gauge (Fig. 137).

Manifold surface flatness limits should not exceed 1.0 mm (0.039 in.).

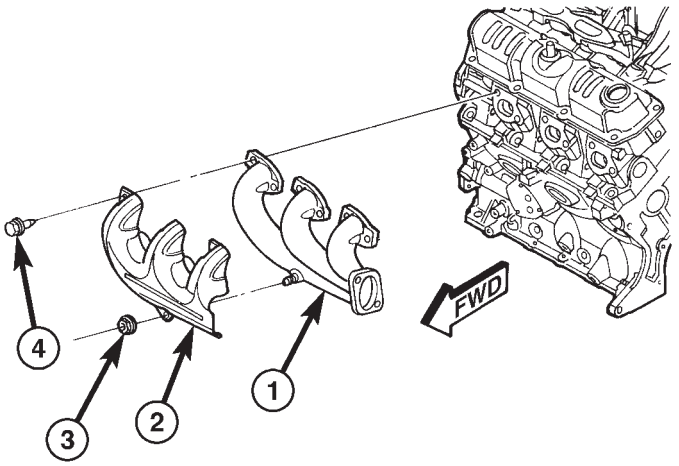

Fig. 136 EXHAUST MANIFOLD - LEFT

1 - EXHAUST MANIFOLD - LEFT BANK
2 - HEAT SHIELD
3 - NUT - HEAT SHIELD
4 - BOLT - EXHAUST MANIFOLD

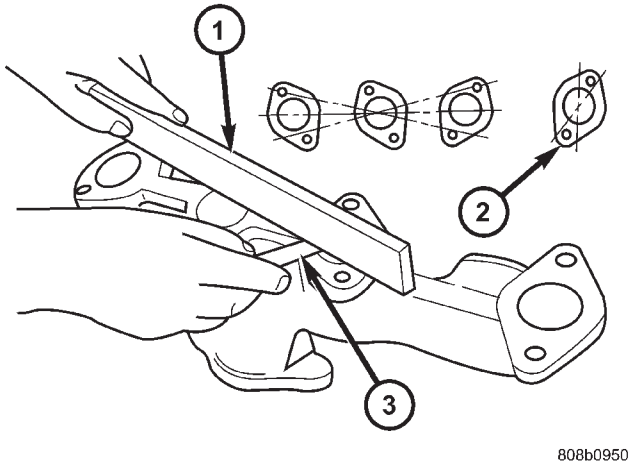

Fig. 137 Check Exhaust Manifold Mounting

1 - STRAIGHT EDGE
2 - CROSSOVER PIPE MOUNTING SURFACE
3 - FEELER GAUGE

INSTALLATION

(1) Position exhaust manifold on cylinder head (Fig. 136). Install bolts to center runner (cylinder #4) and initial tighten to 2.8 N·m (25 in. lbs.).

(2) Using a new gasket, attach crossover pipe to exhaust manifold and tighten bolts to 41 N·m (30 ft. lbs.) (Fig. 135).

NOTE: Inspect crossover pipe fasteners for damage from heat and corrosion. The cross-over bolts are made of a special stainless steel alloy. If replacement is required, OEM bolts are highly recommended.

EXHAUST MANIFOLD - LEFT (Continued)

(3) Position heat shield on manifold (Fig. 136).
(4) Install the remaining manifold attaching bolts. Tighten all bolts to 23 N·m (200 in. lbs.).
(5) Install and tighten heat shield attaching nut to 12 N·m (105 in. lbs.) (Fig. 136).
(6) Connect battery negative cable.

VALVE TIMING

STANDARD PROCEDURE

STANDARD PROCEDURE - VALVE TIMING VERIFICATION

(1) Remove front cylinder head cover and all 6 spark plugs.
(2) Rotate engine until the #2 piston is at TDC of the compression stroke.
(3) Install a degree wheel on the crankshaft pulley.
(4) With proper adaptor, install a dial indicator into #2 spark plug hole. Using the indicator find TDC on the compression stroke.
(5) Position the degree wheel to zero.
(6) Remove dial indicator from spark plug hole.
(7) Place a 5.08 mm (0.200 in.) spacer between the valve stem tip of #2 intake valve and rocker arm pad. Allow tappet to bleed down to give a solid tappet effect.
(8) Install a dial indicator so plunger contacts the #2 intake valve spring retainer as nearly perpendicular as possible. Zero the indicator.
(9) Rotate the engine clockwise until the intake valve has lifted .254 mm (0.010 in.).

CAUTION: Do not turn crankshaft any further clockwise as intake valve might bottom and result in serious damage.

(10) Degree wheel should read 6 degrees BTDC to 6 degrees ATDC.

STANDARD PROCEDURE - MEASURING TIMING CHAIN WEAR

NOTE: This procedure must be performed with the timing chain cover removed (Refer to 9 - ENGINE/VALVE TIMING/TIMING CHAIN COVER - REMOVAL).

(1) Position a scale next to timing chain so that any movement of chain may be measured (Fig. 138).
(2) Position a torque wrench and socket on the camshaft sprocket attaching bolt. Apply force in the direction of crankshaft rotation to take up slack to the following torque:
- 41 N·m (30 ft. lb.) with cylinder heads installed
- 20 N·m (15 ft. lb.) with cylinder heads removed

NOTE: With torque applied to the camshaft sprocket bolt, crankshaft should not be permitted to move. It may be necessary to block crankshaft to prevent rotation.

(3) Holding a measuring scale along edge of chain links (Fig. 138).
(4) Apply force in the reverse direction to the following torque:
- 41 N·m (30 ft. lb.) with cylinder heads installed
- 20 N·m (15 ft. lb.) with cylinder heads removed

(5) Measure amount of sprocket/chain movement.
(6) Install a new timing chain and sprockets if movement exceeds 3.175 mm (1/8 in.).

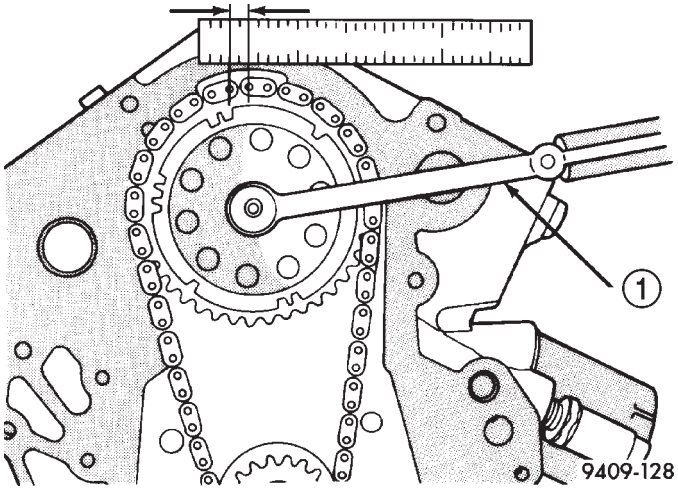

Fig. 138 Measuring Timing Chain Wear

1 - TORQUE WRENCH

TIMING CHAIN COVER

REMOVAL

(1) Disconnect negative cable from battery.
(2) Drain cooling system. (Refer to 7 - COOLING - STANDARD PROCEDURE)
(3) Raise vehicle on hoist.
(4) Drain engine oil.
(5) Remove right wheel and inner splash shield.
(6) Remove oil pan. (Refer to 9 - ENGINE/LUBRICATION/OIL PAN - REMOVAL)
(7) Remove oil pick-up tube (Fig. 139).
(8) Remove accessory drive belt. (Refer to 7 - COOLING/ACCESSORY DRIVE/DRIVE BELTS - REMOVAL)
(9) Remove A/C compressor and set aside.
(10) Remove crankshaft vibration damper. (Refer to 9 - ENGINE/ENGINE BLOCK/VIBRATION DAMPER - REMOVAL)
(11) Remove radiator lower hose.

TIMING CHAIN COVER (Continued)

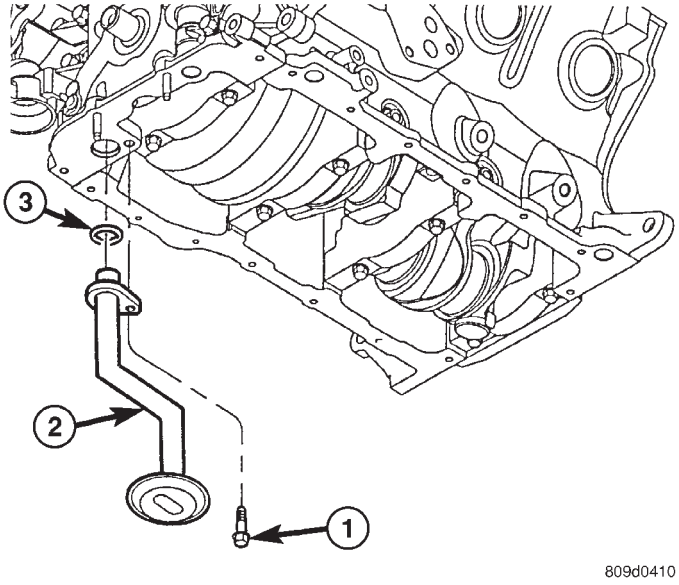

Fig. 139 OIL PICKUP TUBE

1 - BOLT
2 - OIL PICK-UP TUBE
3 - O-RING

(12) Remove heater hose from timing chain cover housing (Fig. 140) or water pump inlet tube (if engine oil cooler equipped) (Fig. 141).

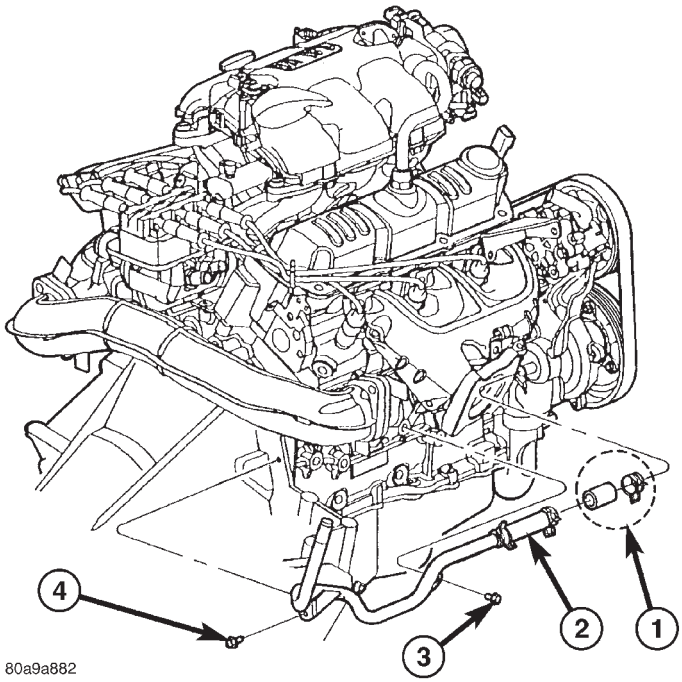

Fig. 140 HEATER RETURN HOSE (Without Engine Oil Cooler)

1 - CAP AND CLAMP (OIL COOLER EQUIPPED ONLY)
2 - HOSE ASSEMBLY - HEATER RETURN
3 - BOLT - HEATER TUBE ATTACHING
4 - BOLT - HEATER TUBE ATTACHING

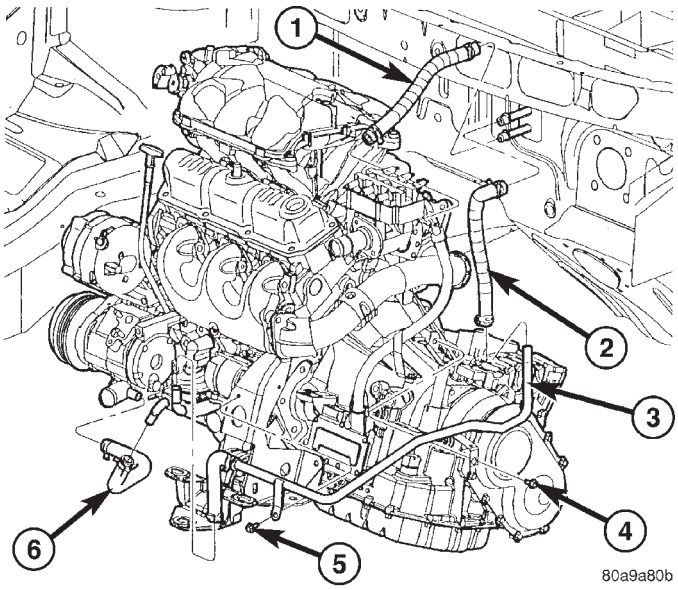

Fig. 141 HEATER HOSES 3.3/3.8L (With Engine Oil Cooler)

1 - HOSE - HEATER SUPPLY
2 - HOSE - HEATER RETURN
3 - TUBE ASSEMBLY - HEATER RETURN
4 - BOLT - TUBE ASSEMBLY
5 - BOLT - TUBE ASSEMBLY
6 - HOSE - HEATER RETURN/OIL COOLER OUTLET

(13) Remove the right side engine mount. (Refer to 9 - ENGINE/ENGINE MOUNTING/RIGHT MOUNT - REMOVAL)

(14) Remove idler pulley from engine bracket (Fig. 142).

(15) Remove the engine mount bracket (Fig. 142).

(16) Remove camshaft position sensor from timing chain cover (Fig. 142).

(17) Remove the water pump for cover removal clearance. (Refer to 7 - COOLING/ENGINE/WATER PUMP - REMOVAL)

(18) Remove the bolt attaching the power steering pump support strut to the front cover (Fig. 143).

(19) Remove the timing chain cover fasteners. Remove timing chain cover (Fig. 144).

INSTALLATION

(1) Be sure mating surfaces of chain case cover and cylinder block are clean and free from burrs. Crankshaft oil seal must be removed to insure correct oil pump engagement.

NOTE: DO NOT USE SEALER ON COVER GASKET

(2) Position new gasket on timing cover (Fig. 144). Adhere new gasket to chain case cover, making sure that the lower edge of the gasket is flush to 0.5 mm (0.020 in.) passed the lower edge of the cover.

TIMING CHAIN COVER (Continued)

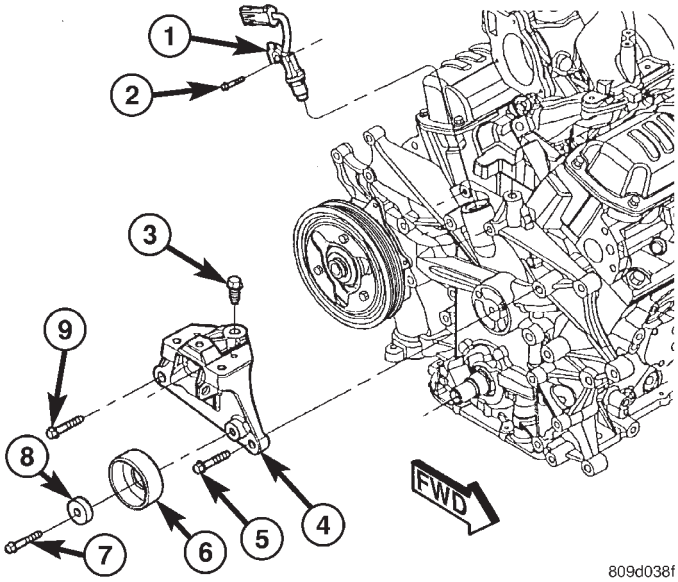

Fig. 142 Engine Mount Bracket

1 - CAMSHAFT SENSOR
2 - BOLT - CAMSHAFT SENSOR
3 - BOLT - MOUNT BRACKET (VERTICAL)
4 - BRACKET - ENGINE MOUNT
5 - BOLT - MOUNT BRACKET (HORIZONTAL)
6 - PULLEY - IDLER
7 - BOLT - IDLER PULLEY
8 - SPACER - IDLER PULLEY BOLT
9 - BOLT - MOUNT BRACKET (HORIZONTAL)

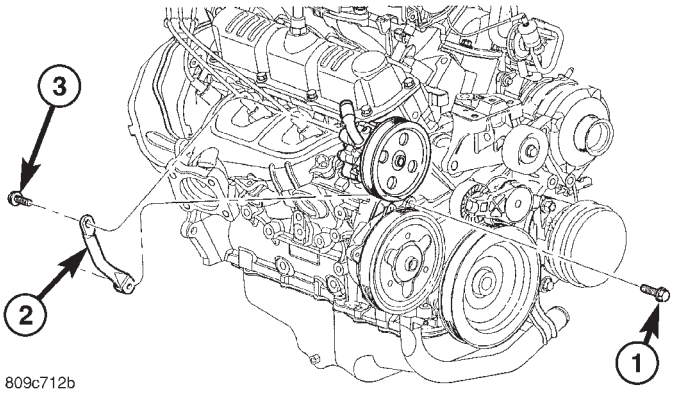

Fig. 143 Power Steering Pump Strut

1 - BOLT - LOWER
2 - STRUT - P/S PUMP
3 - BOLT - UPPER

(3) Rotate crankshaft so that the oil pump drive flats are in the vertical position.

(4) Position oil pump inner rotor so the mating flats are in the same position as the crankshaft drive flats (Fig. 144).

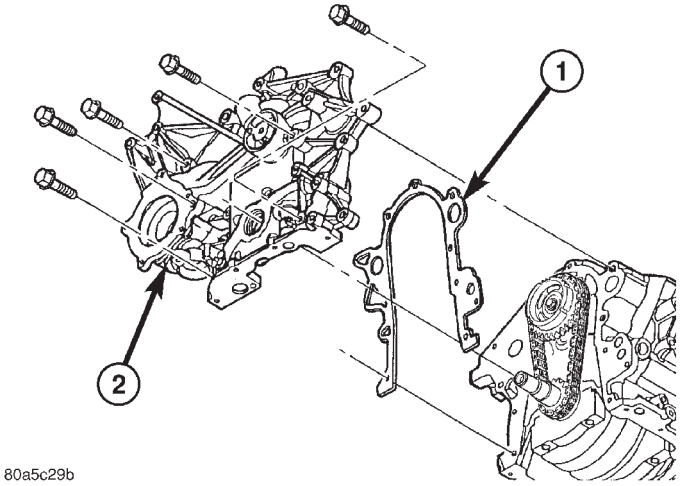

Fig. 144 Timing Chain Cover and Gasket

1 - GASKET
2 - TIMING CHAIN COVER

CAUTION: Make sure the oil pump is engaged on the crankshaft correctly or severe damage may result.

(5) Install timing cover (Fig. 144).

(6) Install timing chain cover bolts. Tighten M8 bolts to 27 N·m (20 ft. lbs.) and M10 bolts to 54 N·m (40 ft. lbs.) (Fig. 145).

(7) Install crankshaft front oil seal. (Refer to 9 - ENGINE/ENGINE BLOCK/CRANKSHAFT OIL SEAL - FRONT - INSTALLATION)

(8) Install water pump and pulley. (Refer to 7 - COOLING/ENGINE/WATER PUMP - INSTALLATION)

(9) Install crankshaft vibration damper. (Refer to 9 - ENGINE/ENGINE BLOCK/VIBRATION DAMPER - INSTALLATION)

(10) Install engine mount bracket (Fig. 142) and tighten M10 to 54 N·m (40 ft. lbs.), M8 bolt to 28 N·m (21 ft. lb. lbs.).

(11) Install idler pulley on engine mount bracket (Fig. 142).

(12) Install right side engine mount. (Refer to 9 - ENGINE/ENGINE MOUNTING/RIGHT MOUNT - INSTALLATION)

(13) Install camshaft position sensor (Refer to 8 - ELECTRICAL/IGNITION CONTROL/CAMSHAFT POSITION SENSOR - INSTALLATION).

(14) Connect the heater return hose at rear of timing chain cover (Fig. 140) or at water pump inlet tube (if engine oil cooler equipped) (Fig. 141).

(15) Connect the radiator lower hose.

(16) Install A/C compressor.

(17) Install accessory drive belt. (Refer to 7 - COOLING/ACCESSORY DRIVE/DRIVE BELTS - INSTALLATION)

TIMING CHAIN COVER (Continued)

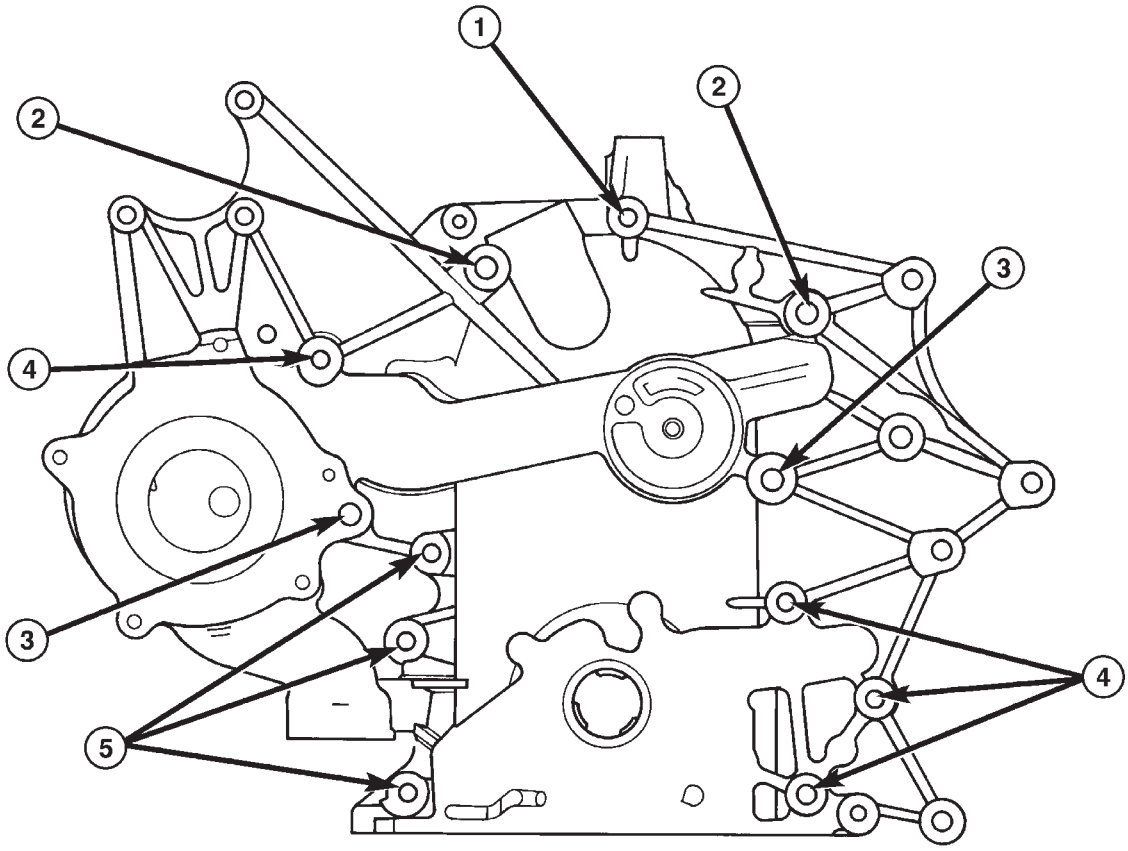

Fig. 145 TIMING CHAIN COVER BOLT LOCATIONS

1 - BOLT - M8 x 1.25 x 95
2 - BOLT - M10 x 1.5 x 100
3 - BOLT - M10 x 1.5 x 85
4 - BOLT - M8 x 1.25 x 80
5 - BOLT - M8 x 1.25 x 45

(18) Install oil pump pick-up tube with new O-ring. Tighten attaching bolt to 28 N·m (250 in. lbs.).

(19) Install oil pan. (Refer to 9 - ENGINE/LUBRICATION/OIL PAN - INSTALLATION)

(20) Install inner splash shield and right front wheel.

(21) Fill crankcase with engine oil to proper level.

(22) Fill cooling system. (Refer to 7 - COOLING - STANDARD PROCEDURE)

(23) Connect negative cable to battery.

TIMING CHAIN AND SPROCKETS

REMOVAL

REMOVAL - TIMING CHAIN AND CAMSHAFT SPROCKET

(1) Disconnect negative cable from battery.
(2) Remove the timing chain cover. (Refer to 9 - ENGINE/VALVE TIMING/TIMING BELT / CHAIN COVER(S) - REMOVAL)
(3) Rotate engine by turning crankshaft until the timing marks are aligned as shown in (Fig. 146).
(4) Remove camshaft sprocket attaching bolt.
(5) Remove the timing chain with camshaft sprocket.
(6) Remove the crankshaft sprocket. (Refer to 9 - ENGINE/VALVE TIMING/TIMING BELT/CHAIN AND SPROCKETS - REMOVAL)

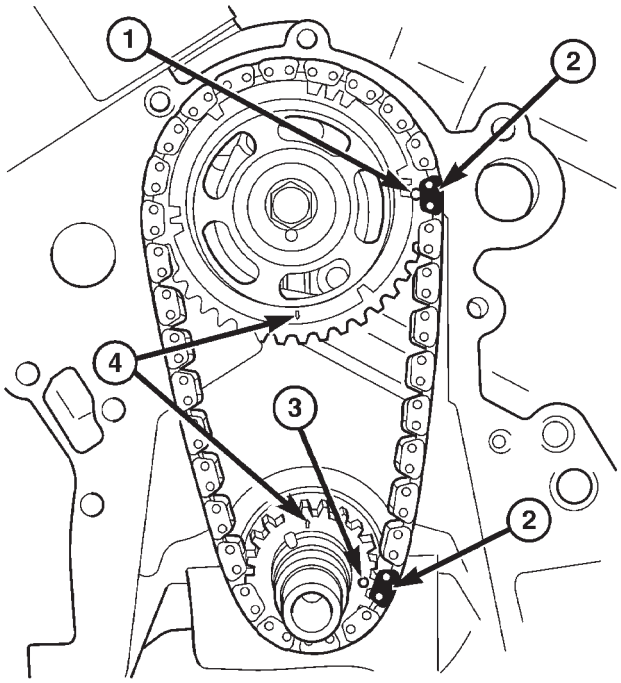

80a2ca28

Fig. 146 Timing Mark Alignment

1 - CAMSHAFT SPROCKET TIMING MARK (DOT)
2 - PLATED LINK
3 - CRANKSHAFT SPROCKET TIMING MARK (DOT)
4 - ARROWS

REMOVAL - CRANKSHAFT SPROCKET

(1) Remove the timing chain. (Refer to 9 - ENGINE/VALVE TIMING/TIMING BELT/CHAIN AND SPROCKETS - REMOVAL)
(2) Using Special Tools 8539, 5048-6, and 5048-1, remove the crankshaft sprocket while holding the crankshaft from turning (Fig. 147). Be careful not to damage the crankshaft surfaces.

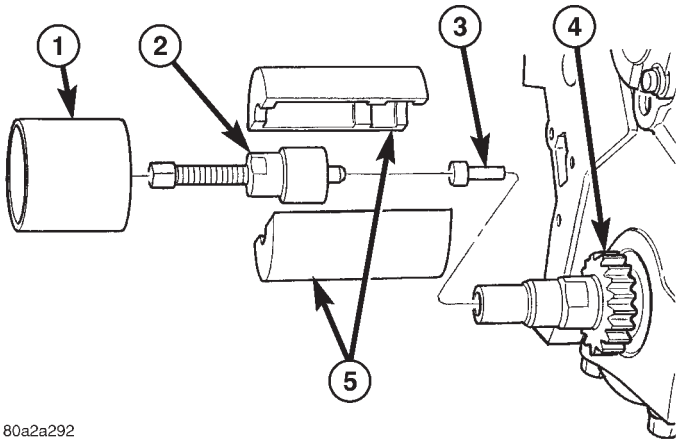

80a2a292

Fig. 147 CRANKSHAFT SPROCKET - REMOVAL

1 - SPECIAL TOOL 5048-6
2 - SPECIAL TOOL 5048-1
3 - SPECIAL TOOL 8450
4 - CRANKSHAFT SPROCKET
5 - SPECIAL TOOL 8539

INSTALLATION

INSTALLATION - CRANKSHAFT SPROCKET

(1) Position the sprocket on the crankshaft (timing mark out) with the timing slot aligned with the timing pin.
(2) Install sprocket using Special Tool 8452 (Fig. 148). Install sprocket until it is fully seats on the crankshaft.
(3) Install the timing chain and camshaft sprocket. (Refer to 9 - ENGINE/VALVE TIMING/TIMING BELT/CHAIN AND SPROCKETS - INSTALLATION)

INSTALLATION - TIMING CHAIN AND CAMSHAFT SPROCKET

(1) Rotate crankshaft so the timing arrow is to the 12 o'clock position (Fig. 146).

NOTE: Lubricate timing chain and sprockets with clean engine oil before installation.

(2) While holding camshaft sprocket and chain in hand, place timing chain around the sprocket, aligning the plated link with the dot on the sprocket. Position the timing arrow to the 6 o'clock position (Fig. 146).

TIMING CHAIN AND SPROCKETS (Continued)

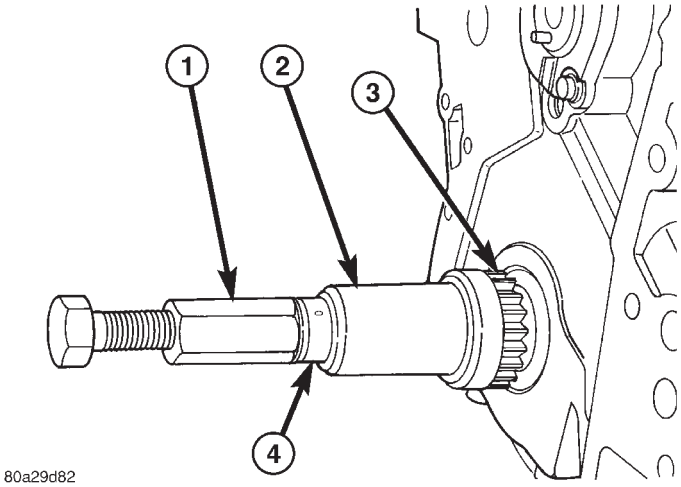

Fig. 148 CRANKSHAFT SPROCKET - INSTALLATION

1 - SPECIAL TOOL 8452-3
2 - SPECIAL TOOL 8452-1
3 - CRANKSHAFT SPROCKET
4 - THRUST BEARING / WASHER

(3) Place timing chain around crankshaft sprocket with the plated link lined up with the dot on the sprocket. Install camshaft sprocket into position.

(4) Use a straight edge to check alignment of timing marks.

(5) Install camshaft sprocket bolt and washer. Tighten bolt to 54 N·m (40 ft. lbs.).

(6) Rotate crankshaft 2 revolutions and check timing mark alignment (Fig. 146). If timing marks do not line up, remove camshaft sprocket and realign.

(7) Install the timing chain cover. (Refer to 9 - ENGINE/VALVE TIMING/TIMING BELT / CHAIN COVER(S) - INSTALLATION)

(8) Connect negative cable to battery.

ENGINE

TABLE OF CONTENTS

page

ENGINE 2.5L TURBO DIESEL
DESCRIPTION
DESCRIPTION - 2.5L COMMON RAIL DIESEL ENGINE . . . 2
DESCRIPTION - ENGINE COVER . . . 3
REMOVAL
REMOVAL - 2.5L DIESEL ENGINE . . . 3
REMOVAL - ENGINE COVER . . . 6
INSTALLATION
INSTALLATION - 2.5L TURBO DIESEL ENGINE . . . 7
INSTALLATION - ENGINE COVER . . . 7
SPECIFICATIONS
SPECIFICATIONS - 2.5L COMMON RAIL DIESEL ENGINE . . . 8
SPECIFICATIONS - TORQUE . . . 10
SPECIAL TOOLS . . . 12
CYLINDER HEAD
STANDARD PROCEDURE
STANDARD PROCEDURE - VALVE SERVICE . . . 17
STANDARD PROCEDURE - MEASURING PISTON PROTRUSION . . . 18
REMOVAL . . . 19
CLEANING . . . 21
INSPECTION . . . 21
INSTALLATION . . . 21
CAMSHAFT(S)
DESCRIPTION . . . 22
OPERATION . . . 22
REMOVAL . . . 22
INSTALLATION . . . 23
CYLINDER HEAD COVER(S)
DESCRIPTION . . . 24
REMOVAL . . . 24
INSTALLATION . . . 25
CAMSHAFT OIL SEAL(S)
REMOVAL . . . 27
INSTALLATION . . . 27
ROCKER ARMS
DESCRIPTION . . . 27
OPERATION . . . 27
REMOVAL . . . 27
INSTALLATION . . . 28
HYDRAULIC LIFTERS
DESCRIPTION . . . 29
REMOVAL . . . 29
INSPECTION . . . 30
INSTALLATION . . . 30

page

ENGINE BLOCK
DESCRIPTION . . . 30
CRANKSHAFT
DESCRIPTION . . . 30
OPERATION . . . 30
STANDARD PROCEDURE - CHECKING CRANKSHAFT END PLAY . . . 31
REMOVAL . . . 31
INSTALLATION . . . 32
CYLINDER LINERS
DESCRIPTION . . . 33
REMOVAL . . . 33
INSPECTION . . . 34
INSTALLATION . . . 34
INTERNAL VACUUM PUMP
DESCRIPTION . . . 35
REMOVAL . . . 35
INSTALLATION . . . 35
PISTON & CONNECTING ROD
DESCRIPTION . . . 36
STANDARD PROCEDURE - PISTON RING FITTING . . . 36
REMOVAL . . . 36
INSPECTION . . . 38
INSTALLATION . . . 39
CRANKSHAFT OIL SEAL - FRONT
REMOVAL . . . 41
INSTALLATION . . . 41
VIBRATION DAMPER
REMOVAL . . . 42
INSTALLATION . . . 42
ENGINE COVER - FRONT
DESCRIPTION . . . 43
REMOVAL . . . 43
INSTALLATION . . . 43
CRANKSHAFT MAIN BEARINGS
REMOVAL . . . 44
INSTALLATION . . . 45
CRANKSHAFT OIL SEAL - REAR
REMOVAL . . . 46
INSTALLATION . . . 46
OIL PAN
REMOVAL . . . 46
INSTALLATION . . . 46
OIL PUMP
REMOVAL
REMOVAL . . . 47
REMOVAL . . . 47

INSTALLATION
INSTALLATION 47
INSTALLATION 48
OIL PRESSURE SENSOR/SWITCH
DESCRIPTION 48
REMOVAL 48
INSTALLATION 48
OIL TEMPERATURE SENSOR
DESCRIPTION 48
REMOVAL 48
INSTALLATION 48
OIL PRESSURE RELIEF VALVE
DESCRIPTION 49
REMOVAL 49
INSTALLATION 49
OIL COOLER & LINES
REMOVAL 50
INSTALLATION 50
OIL FILTER
DESCRIPTION 51
REMOVAL 51
INSTALLATION 51
OIL JET
DESCRIPTION 52
REMOVAL 52
INSTALLATION 52
INTAKE MANIFOLD
DESCRIPTION 52
REMOVAL 52
INSTALLATION 52
VALVE TIMING
STANDARD PROCEDURE - LOCKING ENGINE 90° AFTER TDC 53
BALANCE SHAFT
DESCRIPTION 54
OPERATION 54
REMOVAL 55
INSTALLATION 55
TIMING BELT / CHAIN COVER(S)
REMOVAL
REMOVAL - TIMING BELT OUTER COVER . . 56
REMOVAL - TIMING BELT INNER COVER . . . 56
INSTALLATION
INSTALLATION - TIMING BELT OUTER COVER 56
INSTALLATION - TIMING BELT INNER COVER 57
TIMING BELT IDLER PULLEY
REMOVAL 58
INSTALLATION 58
TMNG BELT/CHAIN TENSIONER
REMOVAL 59
INSTALLATION 59
ADJUSTMENTS
ADJUSTMENT - TIMING BELT TENSIONER . 60
TIMING BELT/CHAIN AND SPROCKETS
REMOVAL 60
INSTALLATION 61

ENGINE 2.5L TURBO DIESEL

DESCRIPTION

DESCRIPTION - 2.5L COMMON RAIL DIESEL ENGINE

This 2.5 Liter (2500cc) four-cylinder “common rail” direct injection engine is an in-line overhead valve diesel engine. This engine utilizes a cast iron cylinder block and an aluminum cylinder head. The engine is turbocharged and intercooled. The engine also has four valves per cylinder and dual overhead camshafts (Fig. 1).

DESCRIPTION	SPECIFICATION
Displacement	2.5L (2499 cc)
Bore	92.00
Stroke	94.00
Compression Ratio	17.5:1
Vacuum at Idle	685.8 mm/Hg (27.0 In/Hg)
Belt Tension	Automatic Belt Tensioner

DESCRIPTION	SPECIFICATION
Thermostat Opening	80°C ± 2°C
Generator Rating	Denso 12V-95A
Cooling System Capacity	13.8 Liters W/O Auxiliary Heater 16.6 Liters With Auxiliary Heater
Engine Oil Capacity	6.0L W/Filter Change
Timing System	Belt Driven Camshafts In Cylinder Head Cover
Air Intake	Dry Filter
Fuel Feed	Vane Pump Incorporated In Injection Pump
Fuel System	Direct Fuel Injection
Combustion Cycle	4 Stroke
Cooling System	Water Cooling
Injection Pump	Rotary Pump and Electronically Managed
Lubrication	Pressure Lubricated By Rotary Pump
Engine Rotation	Clockwise Viewed From Front Cover

ENGINE 2.5L TURBO DIESEL (Continued)

DESCRIPTION - ENGINE COVER

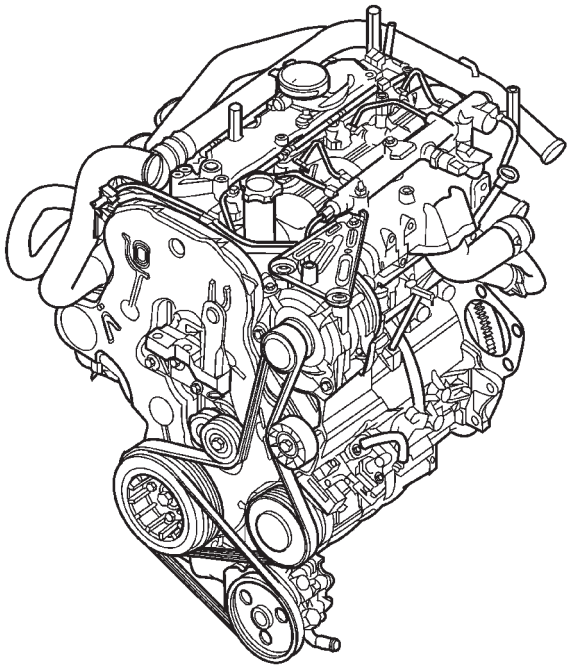

Fig. 1 2.5L COMMON RAIL DIESEL ENGINE

The engine cover is a black plastic cover used to cover the top of the engine (Fig. 10). It is used to isolate engine noises.

REMOVAL

REMOVAL - 2.5L DIESEL ENGINE

(1) Disconnect negative battery cable.
(2) Remove engine cover (Fig. 2). (Refer to 9 - ENGINE - REMOVAL)
(3) Remove air cleaner housing, MAF sensor, and air intake tube assembly (Fig. 3).
(4) Remove coolant pressure tank pressure cap.
(5) Raise vehicle on hoist.
(6) Drain cooling system (Refer to 7 - COOLING/ ENGINE/COOLANT - STANDARD PROCEDURE).
(7) Remove lower splash shield.
(8) Remove splash shield side panels.

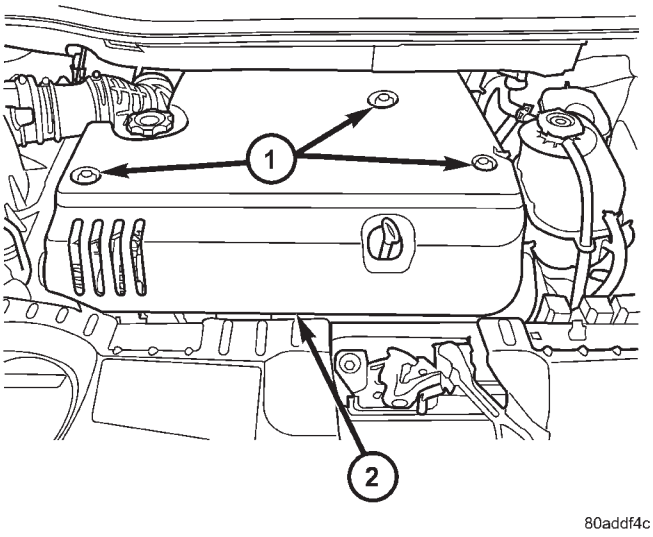

Fig. 2 ENGINE COVER

1 - ENGINE COVER MOUNTING BOLTS
2 - ENGINE COVER

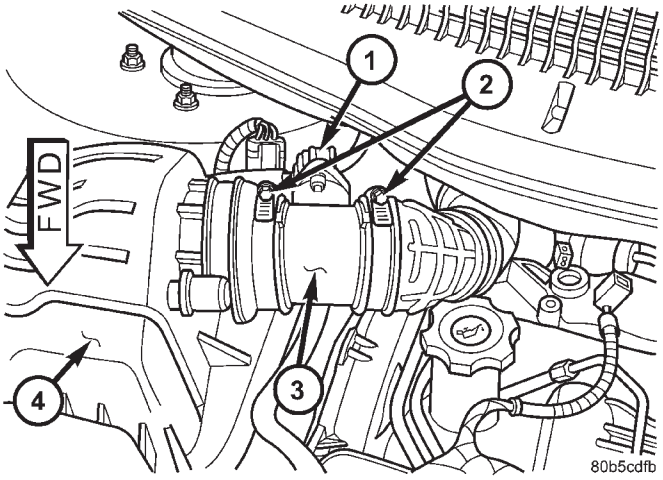

Fig. 3 MASS AIR FLOW (MAF) SENSOR LOCATION

1 - MAF SENSOR ELECTRICAL CONNECTOR
2 - RETAINING CLAMPS
3 - MASS AIR FLOW (MAF) SENSOR
4 - AIR CLEANER HOUSING

ENGINE 2.5L TURBO DIESEL (Continued)

(9) Remove power steering reservoir hose from power steering pump and drain power steering fluid (Fig. 4).

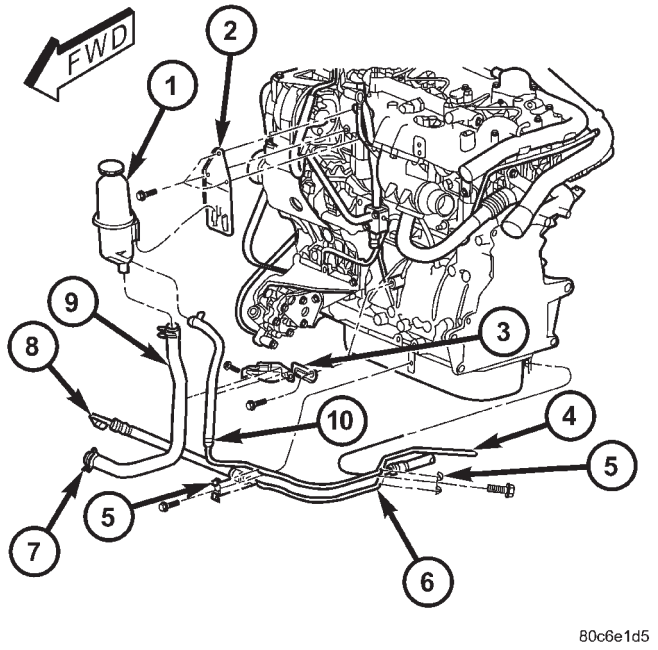

Fig. 4 RESERVOIR AND HOSES - 2.5L DIESEL

1 - POWER STEERING FLUID RESERVOIR
2 - RESERVOIR BRACKET
3 - SUPPLY HOSE BRACKET
4 - RETURN HOSE FROM GEAR
5 - ROUTING CLIP
6 - PRESSURE HOSE TO GEAR
7 - SUPPLY HOSE (PUMP END)
8 - PRESSURE HOSE (PUMP END)
9 - SUPPLY HOSE
10 - RETURN HOSE

(10) Disconnect high pressure line at pump (Fig. 4).

(11) Disconnect power steering pump return hose clamp (Fig. 4).

(12) Remove power steering return line retaining clamp (Fig. 4).

(13) Remove power steering line clamps from oil pan (Fig. 4).

(14) Remove power steering pump reservoir and bracket (Fig. 4).

(15) Drain coolant system (Refer to 7 - COOLING/ ENGINE/COOLANT - STANDARD PROCEDURE).

(16) Remove coolant pressure tank (Fig. 5).

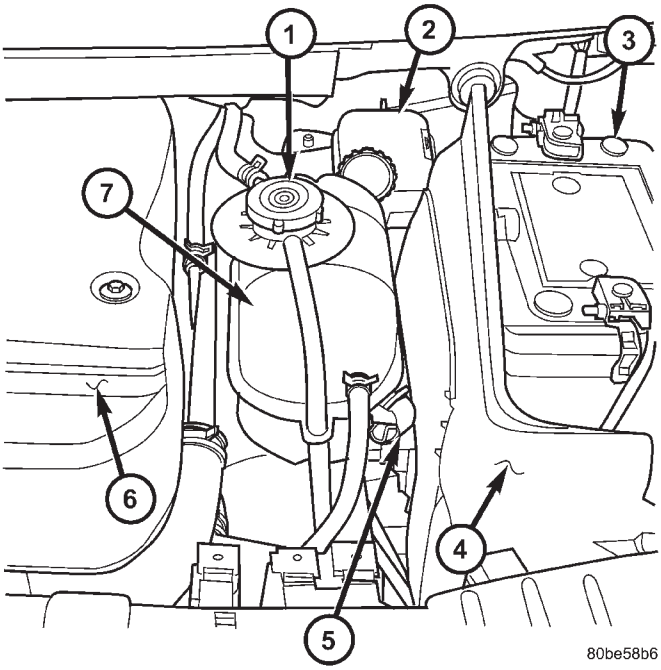

Fig. 5 COOLANT RECOVERY PRESSURE CONTAINER LOCATION

1 - PRESSURE/VENT CAP
2 - BRAKE MASTER CYLINDER
3 - BATTERY
4 - BATTERY SHIELD
5 - COOLANT RECOVERY PRESSURE CONTAINER RETAING CLIP
6 - ENGINE COVER
7 - COOLANT RECOVERY PRESSURE CONTAINER

ENGINE 2.5L TURBO DIESEL (Continued)

(17) Remove battery shield.
(18) Remove charge air cooler outlet hose.
(19) Remove charge air cooler inlet hose (Fig. 6).

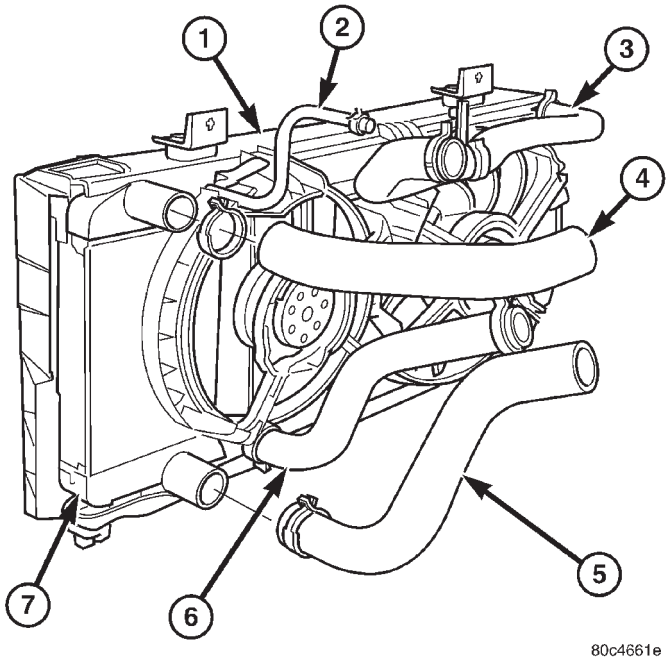

Fig. 6 CHARGE AIR COOLER HOSES

1 - COOLING MODULE
2 - BYPASS HOSE
3 - UPPER RADIATOR HOSE
4 - CHARGE AIR COOLER OULET HOSE
5 - CHARGE AIR COOLER INLET HOSE
6 - LOWER RADIATOR HOSE
7 - CHARGE AIR COOLER

(20) Disconnect upper radiator hose at engine (Fig. 7).
(21) Disconnect lower radiator hose at engine (Fig. 7).
(22) Disconnet brake booster vacuum supply hose.
(23) Disconnect heater core return hose at engine.
(24) Disconnect egr solenoid vacuum line at brake booster check valve.
(25) Disconnect fuel injector, cam sensor, boost pressure/intake air temp sensor, fuel rail high pressure, and egr solenoid connectors (Fig. 8).
(26) Disconnect generator electrical connectors.
(27) Disconnect coolant temp sensor and glow plug electrical connectors.
(28) Disconnect injection pump and A/C compressor electrical connectors.
(29) Disconnect starter electrical connectors.
(30) Disconnect ground wires at engine block.
(31) Raise vehicle on hoist.
(32) Disconnect oil temp sensor, oil pressure sensor, engine speed sensor, and vehicle speed sensor electrical connector (Fig. 9).

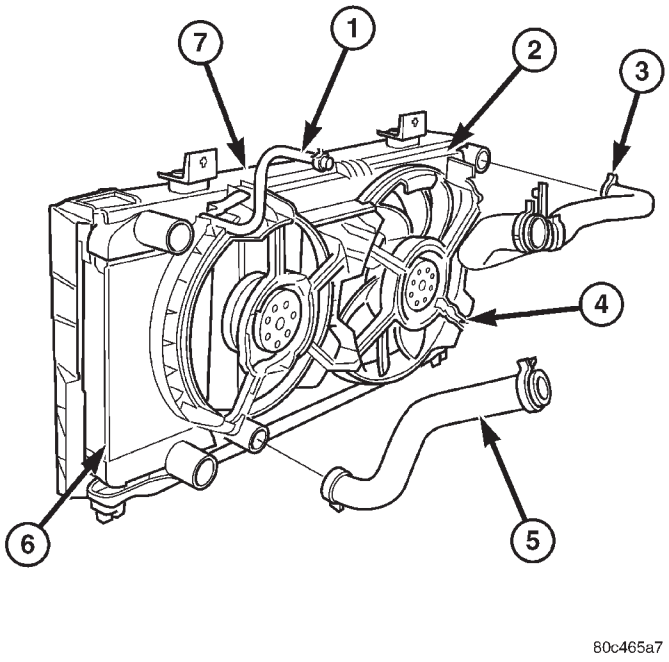

Fig. 7 UPPER AND LOWER RADIATOR HOSES

1 - COOLANT BYPASS HOSE
2 - RADIATOR ASSEMBLY
3 - UPPER RADIATOR HOSE
4 - COOLING FAN
5 - LOWER RADIATOR HOSE
6 - CHARGE AIR COOLER
7 - RADIATOR BRACKET

(33) Remove front wheels.
(34) Remove the suspension cradle assembly (Refer to 13 - FRAME & BUMPERS/FRAME/ENGINE CRADLE CROSSMEMBER - REMOVAL).
(35) Remove both axle shaft assemblies (Refer to 3 - DIFFERENTIAL & DRIVELINE/HALF SHAFT - REMOVAL).
(36) Disconnect the clutch slave cylinder quick disconnect line (RHD only)(Refer to 6 - CLUTCH/SLAVE CYLINDER - REMOVAL).
(37) Disconnect reverse lamp connector.
(38) Disconnect shifter cables at the tranmission (Refer to 21 - TRANSMISSION/TRANSAXLE/MANUAL/GEAR SHIFT CABLE - REMOVAL).
(39) Disconnect exhaust pipe from the turbocharger downpipe and reposition to right side of vehicle.
(40) Disconnect cabin heater coolant line (Refer to 24 - HEATING & AIR CONDITIONING/CABIN HEATER/HEATER UNIT - REMOVAL).
(41) Remove front engine mount bracket retaining bolts from lower radiator support
(42) Lower vehicle. Evacuate the A/C system (Refer to 24 - HEATING & AIR CONDITIONING/

ENGINE 2.5L TURBO DIESEL (Continued)

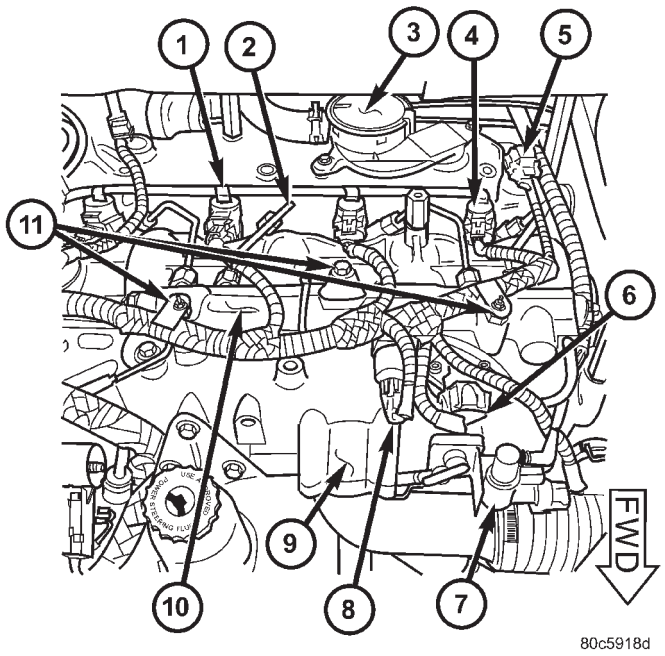

Fig. 8 ENGINE COMPONENT LOCATIONS

1 - FUEL INJECTOR RETURN LINE
2 - FUEL INJECTOR SUPPLY LINE
3 - OIL SEPARATOR
4 - FUEL INJECTOR
5 - CAMSHAFT POSITION SENSOR
6 - BOOST PRESSURE/INTAKE AIR TEMPERATURE SENSOR
7 - EGR SOLENOID
8 - FUEL PRESSURE SENSOR
9 - CYLINDER HEAD COVER/INTAKE MANIFOL
10 - FUEL RAIL
11 - WIRING HARNESS RETAINING CLIPS

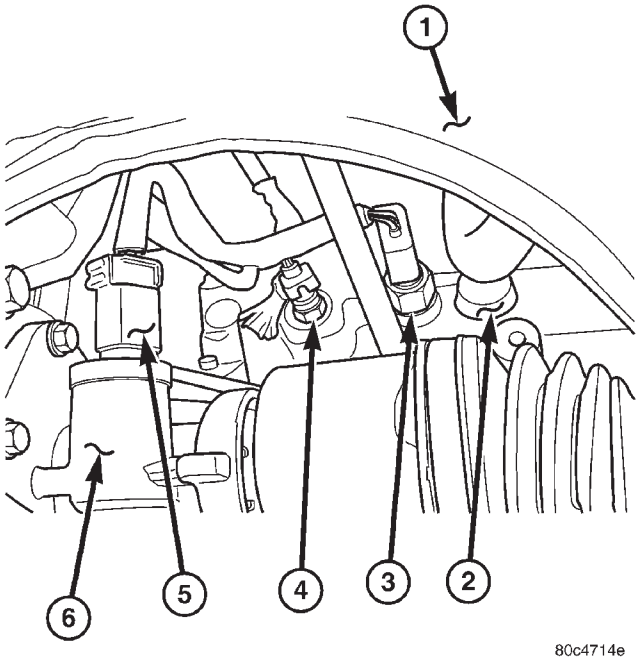

Fig. 9 REAR ENGINE VIEW

1 - SUSPENSION CRADLE
2 - ENGINE BLOCK
3 - OIL PRESSURE SWITCH
4 - OIL TEMPERATURE SENSOR
5 - VEHICLE SPEED SENSOR
6 - TRANSMISSION

PLUMBING/REFRIGERANT - STANDARD PROCEDURE).

(43) Disconnect the A/C lines at the A/C compressor.

(44) Disconnect the fuel supply and return lines.

(45) Position engine cradle under engine and lower vehicle over cradle.

(46) Remove right engine mount bolts.

(47) Remove left engine mount through bolt.

(48) Raise vehicle, leaving engine and transmission on engine cradle.

(49) Lift engine from engine cradle and diassemble as necessary.

REMOVAL - ENGINE COVER

(1) Remove engine cover retaining bolts.

(2) Remove engine cover from engine (Fig. 10).

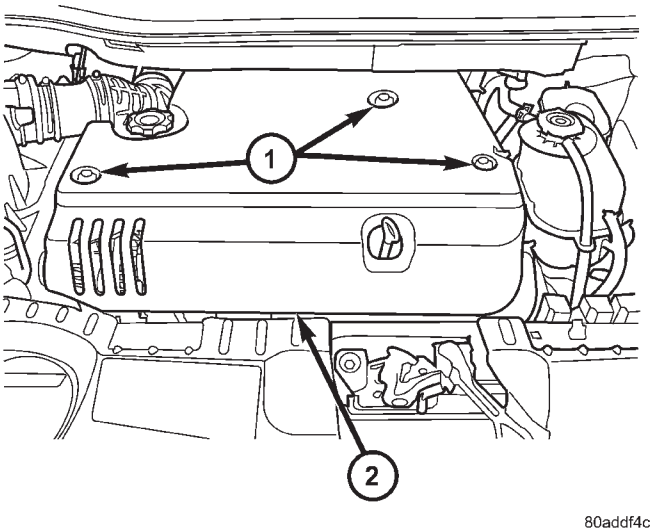

Fig. 10 ENGINE COVER

1 - ENGINE COVER MOUNTING BOLTS
2 - ENGINE COVER

ENGINE 2.5L TURBO DIESEL (Continued)

INSTALLATION

INSTALLATION - 2.5L TURBO DIESEL ENGINE

(1) Reassembly engine and transmission assembly and install on engine cradle.

(2) Position engine and cradle assembly under vehicle.

(3) Slowly lower the vehicle down over the engine and cradle assembly.

(4) Install right engine mount bolts. Torque to 54N·m (40 ft. lbs.)

(5) Install left engine mount through bolt. Torque to 75N·m (55 ft. lbs.)

(6) Raise vehicle and engine from engine cradle.

(7) Attach front engine mount bracket to lower radiator support. Torque to 54N·m (40 ft. lbs.)

(8) Connect cabin heater coolant hose.

(9) Connect exhaust pipe to the turbocharger downpipe flange. Torque to 28 N·m (250 in. lbs.)

(10) Connect reverse lamp electrical connector at transmission.

(11) Connect both shifter cables (Refer to 21 - TRANSMISSION/TRANSAXLE/MANUAL/GEAR SHIFT CABLE - INSTALLATION).

(12) Connect the clutch slave cylinder quick disconnect connector (RHD only)(Refer to 6 - CLUTCH/ SLAVE CYLINDER - INSTALLATION).

(13) Install engine harness into bracket on transmission.

(14) Lower vehicle.

(15) Connect fuel supply and return lines.

(16) Connect A/C lines to A/C compressor. Torque to 23N·m (17 ft. lbs.)

(17) Route engine wiring harnes to proper location.

(18) Connect engine harness ground cables to engine block

(19) Connect starter solenoid electrical connector and battery feed wire to starter. Torque to 10N·m (90 in. lbs.)

(20) Connect A/C compressor, injection pump, glow plugs, and coolant temperature sensor electrical connectors.

(21) Connect generator electrical connector. Torque to 9N·m (75 in. lbs.)

(22) Connect the fuel injector, fuel pressure sensor, boost pressure/intake air temp sensor, cam sensor, and egr solenoid electrical connectors (Fig. 8).

(23) Connect egr solenoid vacuum supply line to brake boost vacuum supply line.

(24) Connect brake booster vacuum supply line.

(25) Connect heater core return hose to coolant pipe.

(26) Connect lower radiator hose to engine (Fig. 7).

(27) Install charger air cooler inlet hose (Fig. 6).

(28) Install charge air cooler outlet hose (Fig. 6).

(29) Connect upper radiator hose to engine (Fig. 7).

(30) Install battery shield.

(31) Install coolant reserve pressure container (Refer to 7 - COOLING/ENGINE/COOLANT RECOVERY PRESS CONTAINER - INSTALLATION).

(32) Install power steering reservoir and bracket (Fig. 4).

(33) Raise vehicle

(34) Connect oil pressure sensor, oil temperature sensor, engine speed sensor, and vehicle speed sensor electrical connector (Fig. 9).

(35) Install suspension cradle in vehicle (Refer to 13 - FRAME & BUMPERS/FRAME/ENGINE CRADLE CROSSMEMBER - INSTALLATION).

(36) Install both axle shaft assemblies (Refer to 3 - DIFFERENTIAL & DRIVELINE/HALF SHAFT - INSTALLATION).

(37) Connect the power steering supply, pressure, and return lines to power steering pump (Fig. 4).

(38) Install the power steering line brackets on oil pan (Fig. 4).

(39) Install lower splash shield and side panels.

(40) Install both front wheel and tire assemblies.

(41) Lower vehicle.

(42) Install air cleaner housing, MAF sensor, and air intake tube assembly (Fig. 3).

(43) Refill transmission to proper level (Refer to 21 - TRANSMISSION/TRANSAXLE/MANUAL/FLUID - STANDARD PROCEDURE).

(44) Refill engine coolant (Refer to 7 - COOLING/ ENGINE/COOLANT - STANDARD PROCEDURE).

(45) Recharge A/C system (Refer to 24 - HEATING & AIR CONDITIONING/PLUMBING/REFRIGERANT - STANDARD PROCEDURE) .

(46) Install engine cover (Refer to 9 - ENGINE - INSTALLATION) (Fig. 2).

(47) Connect negative battery cable.

INSTALLATION - ENGINE COVER

(1) Install engine cover on engine.

(2) Install the engine cover mounting bolts (Fig. 10).

ENGINE 2.5L TURBO DIESEL (Continued)

SPECIFICATIONS

SPECIFICATIONS - 2.5L COMMON RAIL DIESEL ENGINE

ENGINE SPECIFICATIONS

DESCRIPTION	SPECIFICATION
Type	R2516C
Number of Cylinders	4
Bore	92 mm
Stroke	94 mm
Displacement	2499.5cc
Injection Order	1-3-4-2
Compression Ratio	17.5:1 (± 0.5)
Maximum Power	103kW (140 HP) @ 4000 RPM
Peak Torque	320Nm (32.6 kgm) @ 2000 RPM
CRANKSHAFT	
Front Journal Diameter	
Nominal	62.985-63.005 mm
-0.25	62.735-62.755 mm
Front Bearing Diameter	
Nominal	63.045-63.074 mm
-0.25	62.795-62.824 mm
Clearance Between Journal and Bearing	0.040-0.089 mm
Center Journal Diameter	
Nominal	63.005-63.020 mm
-0.25	62.755-62.770 mm
Center Bearing Diameter	
Nominal	63.005-63.020 mm
-0.25	62.755-62.770 mm
Clearance Between Journal and Bearing	0.008-0.051 mm
Rear Journal Diameter	
Nominal	89.980-90.000 mm
-0.25	89.730-99.750 mm
Rear Bearing Diameter	
Nominal	90.045-90.065 mm
-0.25	89.795-89.815 mm
Clearance Between Journal and Bearing	0.045-0.080 mm
Connecting Rod Journal	
Nominal	53.940-53.955 mm
-0.25	53.690-53.705 mm
Connecting Rod Bearing	
Nominal	53.977-54.016 mm
-0.25	53.727-53.766 mm
Clearance Between Journal and Bearing	0.022-0.076 mm
Crankshaft End Play	
End Play	0.080-0.280 mm
Adjustment	Thrust Washers
Thrust Washers Available	2.31-2.36 mm
	2.41-2.46 mm
	2.51-2.56 mm
Carrier with thrust washers installed	27.670-27.820 mm
MAIN BEARING CARRIERS	
Internal Diameter	
Front	67.025-67.050 mm
Center	66.670-66.690 mm
Rear	85.985-86.005 mm
LINERS	
Internal Diameter	91.997-92.015 mm
Protrusion	0.01-0.06 mm
Adjustment	Shims
Available Shims	0.15 mm
	0.17 mm
	0.20 mm
	0.23 mm
	0.25 mm
CYLINDER HEAD	
Minimum Thickness	89.95-90.05 mm
Gasket Thickness	1.32 mm ± 0.08, 0 notches
	1.42 mm ± 0.08, 1 notch
	1.52 mm ± 0.08, 2 notches
CONNECTING RODS	
Weight (without the crankbearing)	1129-1195 grams
Small End Bearing Internal Diameter	30.035-30.050 mm
Large End Internal Diameter	53.977-54.016 mm

ENGINE 2.5L TURBO DIESEL (Continued)

DESCRIPTION	SPECIFICATION
PISTONS	
Skirt Diameter (measured at approximately 10 mm above the bottom of the skirt)	91.912-91.928 mm
Piston Clearance	0.065-0.083 mm
Top of Piston to Cylinder Head	0.69-0.83 mm
Piston Potrusion	0.49-0.60 Fit Gasket Number (1.32), 0 notches or holes
	0.61-0.70 Fit Gasket Number (1.42), 1 notch or hole
	0.71-0.83 Fit Gasket Number (1.52), 2 notches or holes
PISTON PINS	
Type	Full Floating
Pin Diameter	29.992-29.996 mm
Clearance	0.004-0.012 mm
PISTON RINGS	
Clearance in Groove	
Top	0.078-0.137 mm
Second	0.070-0.110 mm
Oil Control	0.040-0.080 mm
Fitted Gap	
Top	0.30-0.45 mm
Second	0.30-0.45 mm
Oil Control	0.25-0.50 mm
CAMSHAFT	
Journal Diameter–Front	29.960-29.980 mm
Bearing Clearance	0.03-0.08 mm
Journal Diameter–Center	39.250-39.270 mm
Bearing Clearance	0.03-0.08 mm
Journal Diameter–Rear	39.250-39.270 mm
Bearing Clearance	0.03-0.08 mm
HYDRAULIC LIFTER	
Outside Diameter	11.994 ± 0.006 mm
VALVES	
Intake Valve	
Opens	16° B.T.D.C.
Closes	58° A.B.D.C.
Exhaust Valve	
Opens	65° B.B.D.C.
Closes	29° A.T.D.C.
Face Angle	
Intake	45° 25'-55° 35'
Exhaust	45° 25'-45° 35'
Head Diameter	
Intake	32.30-32.50 mm
Exhaust	30.80-31.00 mm
Head Stand Down	
Intake	1.08-1.34 mm
Exhaust	0.99-1.25 mm
Stem Diameter	
Intake	5.952-5.970 mm
Exhaust	5.942-5.960 mm
Clearance in Guide	
Intake	0.030-0.060 mm
Exhaust	0.040-0.070 mm
VALVE GUIDE	
Inside Diameter	6.00-6.012 mm
Fitted Height	
Intake	14.5-15.0 mm
Exhaust	16.5-17.0 mm
VALVE SPRINGS	
Free Length	45.26 mm
Fitted Length	38.00 mm
Load at Fitted Length	182 ± 5-10% Kg
Load at Top of Lift	395 ± 5% Kg
Number of Coils	8
LUBRICATION	
System Pressure at 4000 RPM	4.5-5.0 bar (oil at 90-100°C)
Pressure Relief Valve Opens	6.50 bar
Pressure Relief Valve Spring-Free Length	51.5 mm
OIL PUMP	
Outer Rotor End Float	0.060-0.160 mm
Inner Rotor End Float	0.060-0.160 mm
Outer Rotor to Body Diameter Clearance	0.130-0.240 mm
Rotor Body to Drive Gear Clearance (pump not fitted)	0.90-1.50 mm

ENGINE 2.5L TURBO DIESEL (Continued)

SPECIFICATIONS - TORQUE

2.5L DIESEL TORQUE SPECIFICATIONS

DESCRIPTION	N·m	Ft. Lbs.	In. Lbs.
Oil Pump Bolts	10.8	8	96
Vacuum Pump Bolts	10.8	8	96
Crankshaft Gear Bolts	10.8	8	96
Crankshaft Position Sensor Bolts	10.8	8	96
Flywheel Bolts - Refer to the Service Procedure			
Cylinder Head Bolts - Refer to the Service Procedure			
Reluctor Wheel Bolts	14.6	11	130
Rear Main Bearing Support Bolts	27.5	21	240
Oil Cooler to Engine Block Bolt	47.1	35	—
Oil Cooler Mounting Stud	50	37	—
Water Pump Housing Nuts	24.4	18	212
Connecting Rod Bolts - Refer to the Service Procedure			
Balance Shaft Bolts	32.4	24	—
Oil Jet Bolts	10.8	8	96
Oil Pan Bolts	11.8	8	96
Crankshaft Hub Bolt	304	225	—
Front Engine Cover Bolts	11.8	8	96
Transmission to Engine Bolts	83.4	62	—
Cylinder Head Cover / Intake Manifold Bolts	27.5	20	—
Camshaft Access Plugs	80	59	—
Oil Separator Bolts	10.8	8	96
Camshaft Position Sensor Bolt	10.8	8	96
Boost Pressure / Intake Air Temp. Sensor Bolts	5.4	—	48
Accessory Drive Bracket Bolts	47.1	35	—
Vacuum Line Fitting Bolt	56.9	42	—
Fuel Pump Nuts	27.5	21	—
Fuel Line Fittings at Pump	27.5	21	—
Inner Timing Belt Cover Bolts			

ENGINE 2.5L TURBO DIESEL (Continued)

DESCRIPTION	N·m	Ft. Lbs.	In. Lbs.
8mm	10.8	8	96
10mm	47.1	35	—
Outer Timing Belt Cover Bolts			
3mm	6	—	54
8mm	10.8	8	96
Engine Mount Bracket to Cylinder Head Bolts	47.1	35	—
Intake Inlet Tube Bolts	10.1	8	89
Camshaft Sprocket Bolts	108	80	—
Timing Belt Idler Pulley Bolt	47.1	35	—
Timing Belt Tensioner Bolt	34.7	26	—
Fuel Pump Nut	88.3	65	—
Engine Lift Hook Bolts	32.4	24	—
Thermostat Housing Bolts	27.5	21	—
Turbocharger Oil Feed Line Fitting	24.5	18	217
Exhaust Manifold Nuts	32.4	24	—
Exhaust Manifold Heatshield Bolts	27.5	21	—
EGR Valve Nuts	32.4	24	—
EGR Cooler to EGR Bolts	32.4	24	—
Turbocharger Downpipe Nuts	32.4	24	—
Turbocharger Bracket Bolts	47.1	35	—
Vibration Damper to Crankshaft Hub Bolts	27.5	21	—
Crankshaft Support Bolts	44.1	33	—
Turbocharger to Exhaust Manifold Nuts	32.4	24	—

ENGINE 2.5L TURBO DIESEL (Continued)

SPECIAL TOOLS

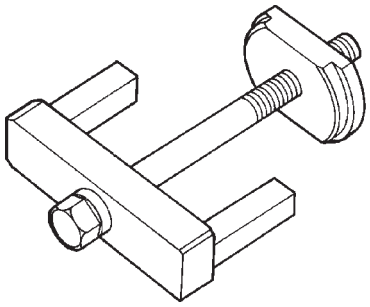

803fd6a2

VM.1001 CYLINDER LINER PULLER

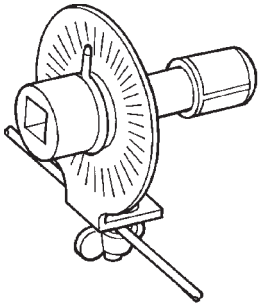

803fd6a6

VM.1005 TORQUE ANGLE GAUGE

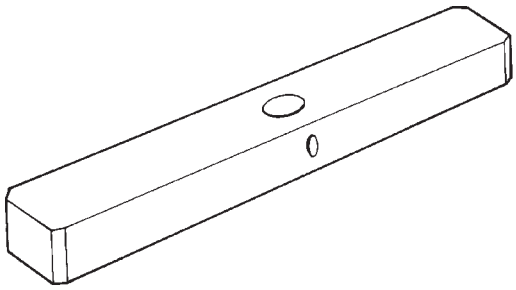

80a1aa43

VM.1010 CYLINDER LINER PROTRUSION TOOL

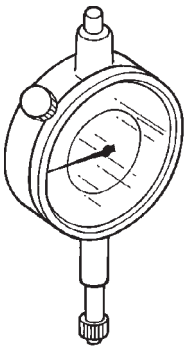

80a1aa46

VM.1013 DIAL INDICATOR

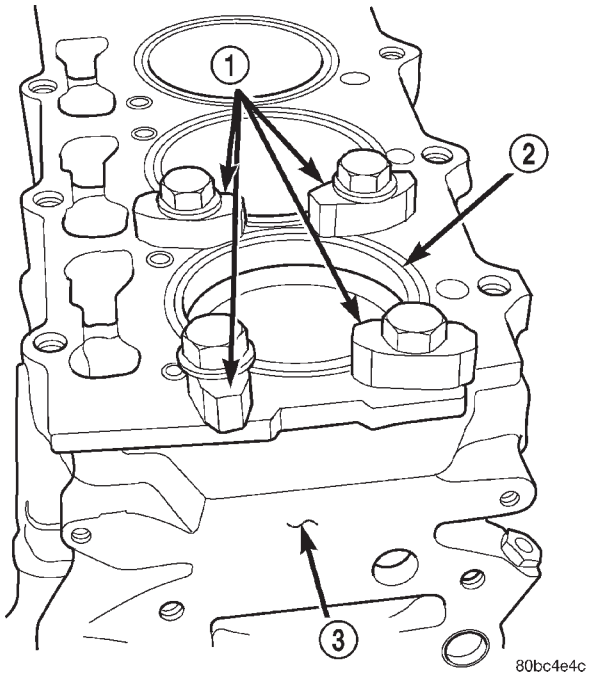

80bc4e4c

VM.1016 CYLINDER RETAINER

ENGINE 2.5L TURBO DIESEL (Continued)

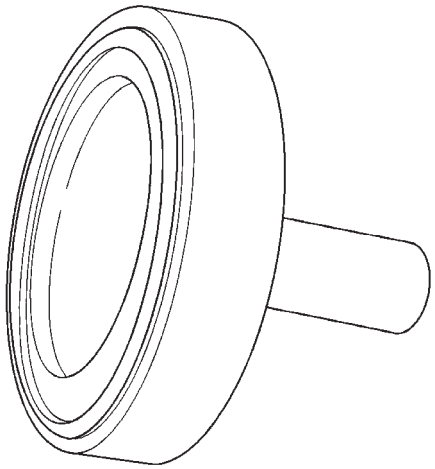

80c49992

VM.1050 CRANKSHAFT REAR SEAL INSTALLER

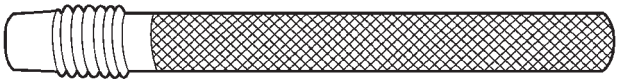

80c1426c

VM.1051 TDC ALIGNMENT PIN

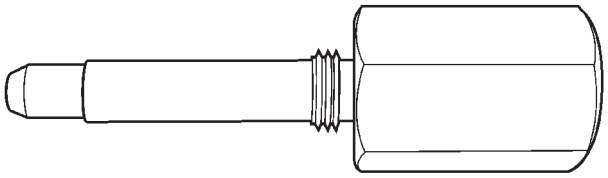

80c143ba

VM.1052 INTAKE CAMSHAFT ALIGNMENT PIN

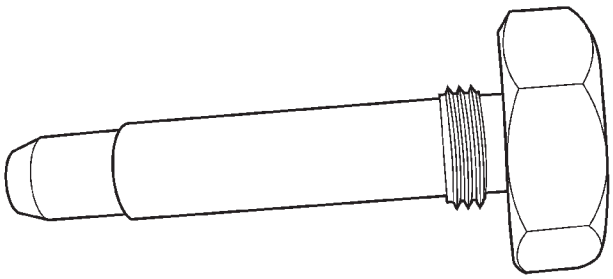

80c1449e

VM.1053 EXHAUST CAMSHAFT ALIGNMENT PIN



80c14546

VM.1054 RELIEF VALVE REMOVER/CENTRAL CARRIER PIN REMOVER/INSTALLER



80c13cec

VM.1055 CAMSHAFT/INJECTION PUMP GEAR HOLDER

ENGINE 2.5L TURBO DIESEL (Continued)

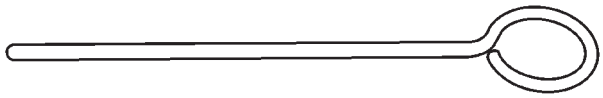

80c17320

VM.1056 BALANCE SHAFT LOCKING PIN

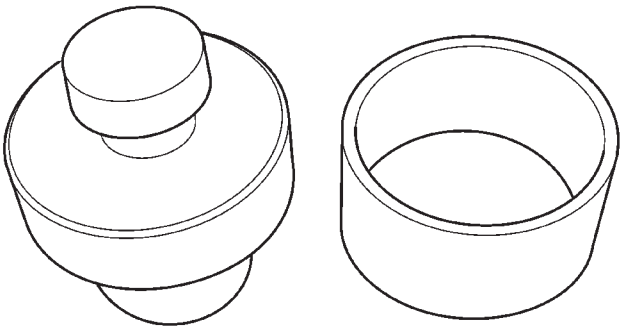

80c17810

VM.1061 FRONT OIL SEAL INSTALLER

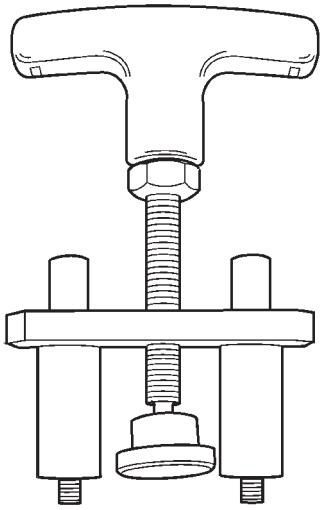

80c1570a

VM.1059 OIL PRESSURE RELIEF VALVE INSTALLER

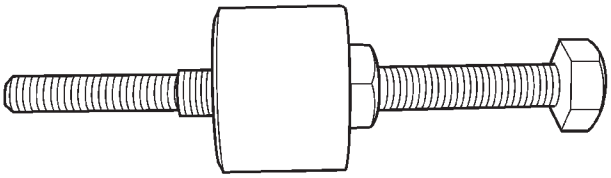

80c17ba4

VM.1062 POWER STEERING PUMP INSTALLER



80c17f19

VM.1060 OIL JET REMOVER /INSTALLER

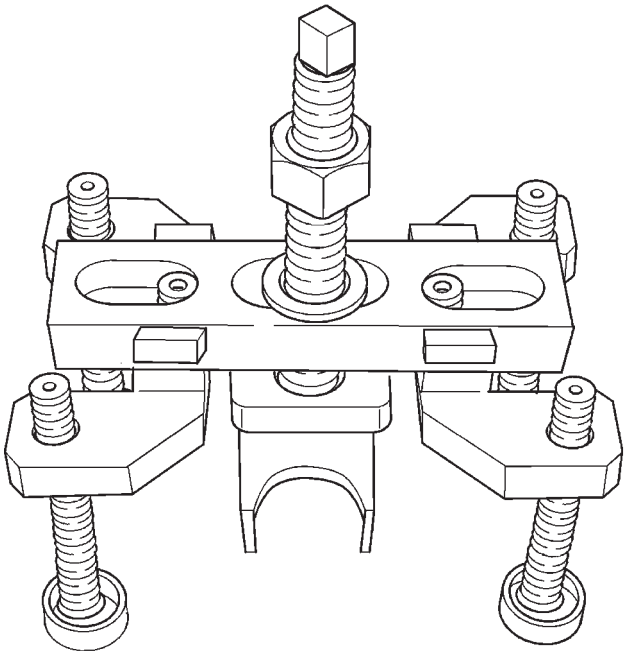

80c499a4

VM.1063 FUEL INJECTOR REMOVER

ENGINE 2.5L TURBO DIESEL (Continued)

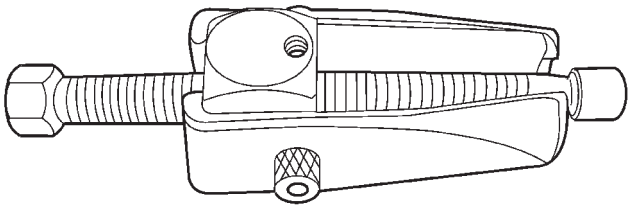

80c17fce

VM.1064 POWER STEERING PUMP GEAR REMOVER

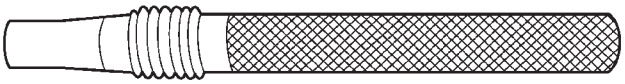

80c141ef

VM.1068 90 DEGREES AFTER TDC ALIGNMENT PIN

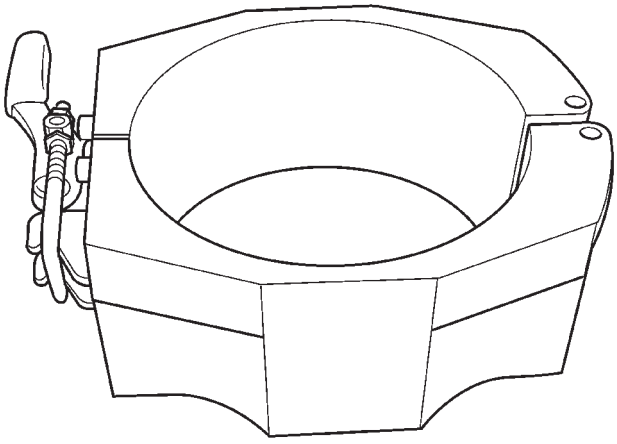

80c17f56

VM.1065 PISTON RING COMPRESSOR

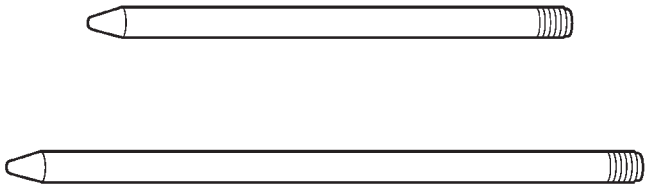

80c177d0

VM.1066 CYLINDER HEAD COVER ALIGNMENT PINS

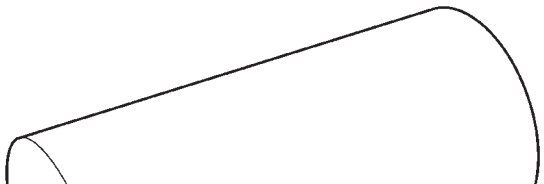

80c17f51

VM.1069 CRANKSHAFT REM/INSTALL SLEEVE

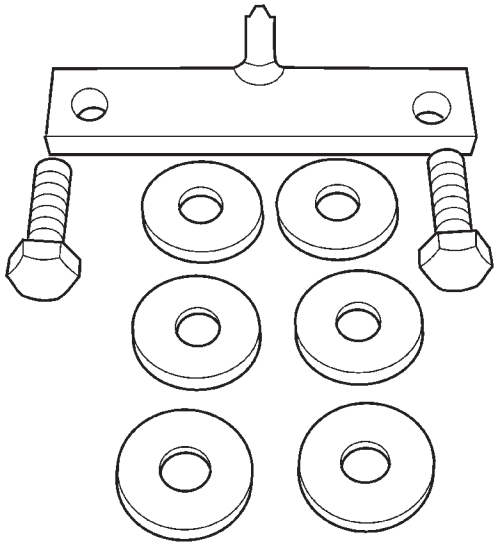

80c144ce

VM.1070 FLYWHEEL LOCKING TOOL

ENGINE 2.5L TURBO DIESEL (Continued)

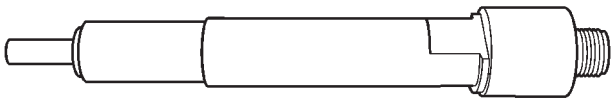

80c172d1

VM.1072 COMPRESSION TESTER ADAPTER

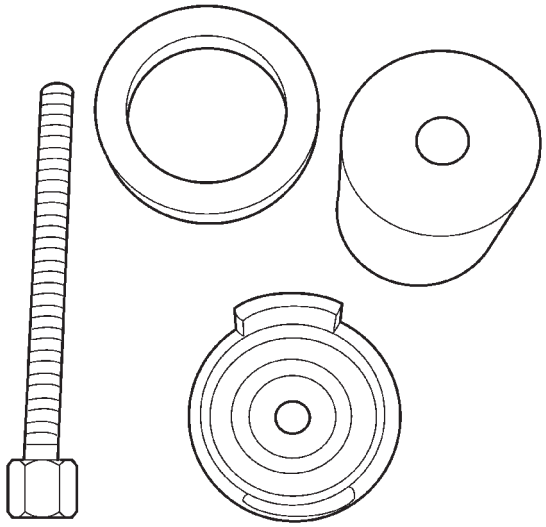

80c17883

VM.1073 CRANKSHAFT FRONT BEARING REMOVER/INSTALLER

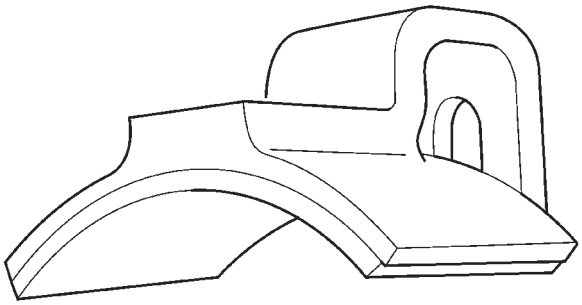

80c1727c

VM.1074 TIMING BELT RETAINER

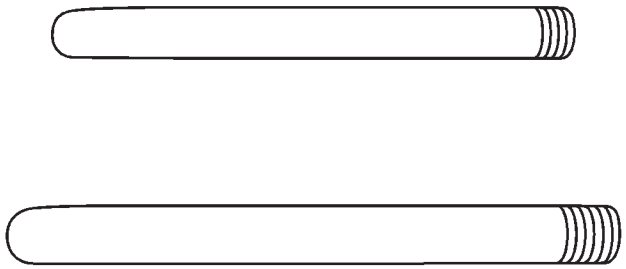

80c17b55

VM.1075 FLYWHEEL ALIGNMENT PINS



80c499af

VM.1077 POWER STEERING BELT REMOVER

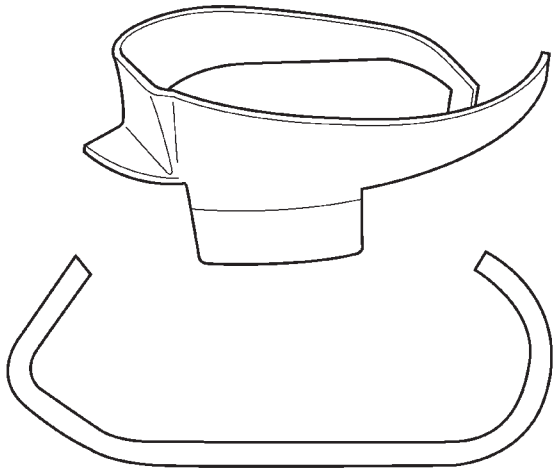

80cd86dd

VM.1078 POWER STEERING BELT INSTALLER

CYLINDER HEAD

STANDARD PROCEDURE

STANDARD PROCEDURE - VALVE SERVICE

This procedure is done with the engine cylinder head removed from the block.

DISASSEMBLY

(1) Remove the engine cylinder head from the cylinder block. Refer to cylinder head removal and installation in this section.

(2) Use Valve Spring Compressor Tool and compress each valve spring.

(3) Remove the valve locks, retainers, and springs.

(4) Use an Arkansas smooth stone or a jewelers file to remove any burrs on the top of the valve stem, especially around the groove for the locks.

(5) Remove the valves, and place them in a rack in the same order as removed.

VALVE CLEANING

(1) Clean all carbon deposits from the combustion chambers, valve ports, valve stems, valve stem guides and head.

(2) Clean all grime and gasket material from the engine cylinder head machined gasket surface.

INSPECTION

(1) Inspect for cracks in the combustion chambers and valve ports.

(2) Inspect for cracks on the exhaust seat.

(3) Inspect for cracks in the gasket surface at each coolant passage.

(4) Inspect valves for burned, cracked or warped heads.

(5) Inspect for scuffed or bent valve stems.

(6) Replace valves displaying any damage.

(7) Check valve spring height (Fig. 11).

VALVE REFACING

(1) Use a valve refacing machine to reface the intake and exhaust valves to the specified angle.

(2) After refacing, a margin of at least 4.52-4.49 mm (.178-.177 inch) must remain (Fig. 12). If the margin is less than 4.49 mm (.177 inch), the valve must be replaced.

VALVE SEAT REFACING

(1) Install a pilot of the correct size in the valve guide bore. Reface the valve seat to the specified angle with a good dressing stone. Remove only enough metal to provide a smooth finish.

(2) Use tapered stones to obtain the specified seat width when required.

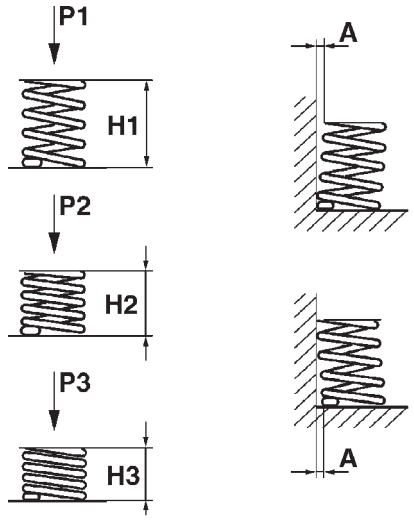

80bfe1e8

Fig. 11 VALVE SPRING CHART

	LOAD Kg		HEIGHT mm	STATE
P1	0.00	H1	45.26	FREE LENGTH
P2	182-5 +10%	H2	38.00	VALVE CLOSED
P3	395±5%	H3	28.20	VALVE OPEN

VALVE STAND DOWN

Valve stand down is to maintain the adequate compression ratio.

(1) Invert cylinder head.

(2) Fit each valve to its respective valve guide.

(3) Using a straight edge and feeler gauge, check valve head stand down: Inlet valve head stand down 1.08 to 1.34 mm (.042 to .052 ins.) and exhaust valve stand down .99 to 1.25 mm (.035 to .049 ins.).

(4) If valve head stand down is not in accordance with above, discard original valves, check stand down with new valves and recut valve seat inserts to obtain correct stand down.

VALVE GUIDES

(1) Valve Guides height requirement.

(2) Measurement A (Fig. 13): 16.50 - 17.00 mm. Measurment B : 14.50 - 15.00 mm.

VALVE STEM-TO-GUIDE CLEARANCE MEASUREMENT

(1) Measure and record internal diameter of valve guides. Valve guide internal diameter is 8.0 to 8.015 mm (.3149 to .3155 ins.).

(2) Measure valve stems and record diameters. Intake valve stem diameter 7.94 to 7.96 mm (.3125 to

CYLINDER HEAD (Continued)

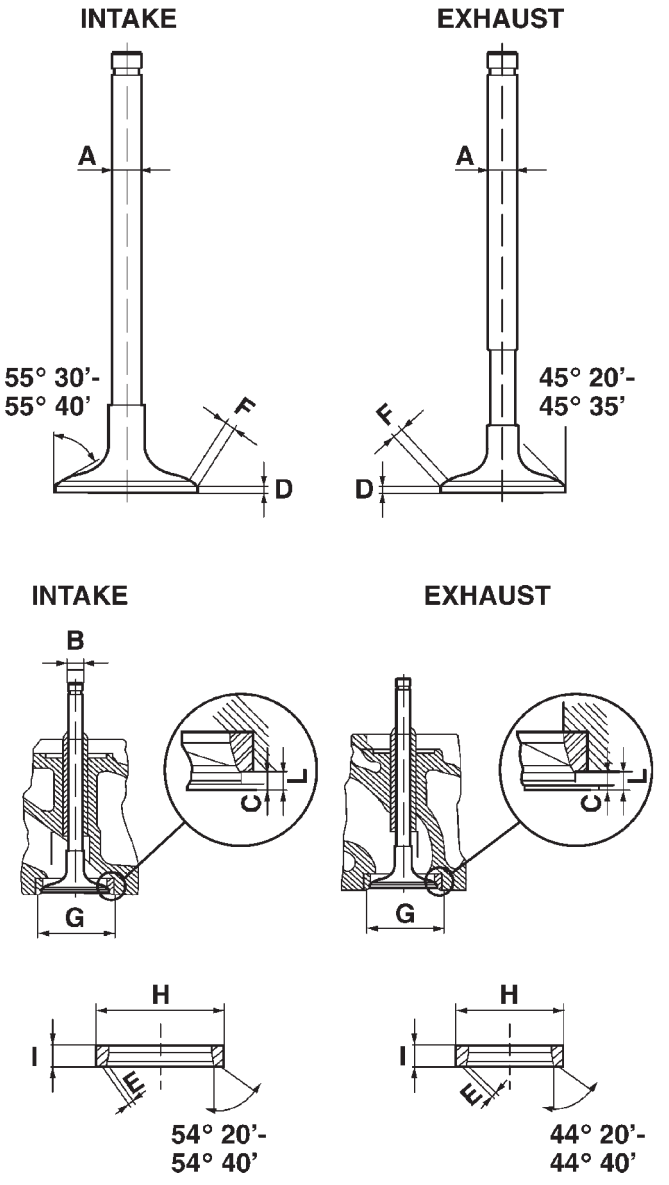

Fig. 12 VALVE SPECS.

MEASUREMENT	INTAKE	EXHAUST
A	7.940-7.960	7.922-7.940
B	8.00-8.015	8.000-8.015
C	1.08-1.34	0.990-1.250
D	2.2 ± 0.08	2.09 +0.07 −0.09
E	1.80-2.20	1.65-2.05
F	2.73-3.44	2.45-3.02
G	41.962-41.985	35.964-35.987
H	42.070-42.086	36.050-36.066
I	7.14-7.19	7.00-7.05
L	3.11-3.26	3.10-3.25

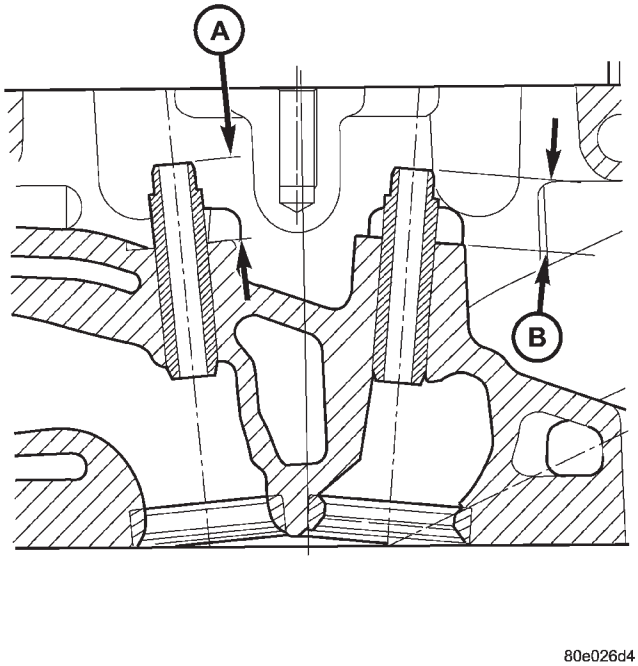

Fig. 13 VALVE GUIDE HEIGHT

.3133 in). Exhaust valve stem diameter 7.92 to 7.94 mm (.3118 to .31215 in).

(3) Subtract diameter of valve stem from internal diameter of its respective valve guide to obtain valve stem clearance in valve guide. Clearance of inlet valve stem in valve guide is .040 to .075 mm (.0015 to .0029 in). Clearance of exhaust valve stem in valve guide is .060 to .093 mm (.0023 to .0036 in).

(4) If valve stem clearance in valve guide exceeds tolerances, new valve guides must be installed.

STANDARD PROCEDURE - MEASURING PISTON PROTRUSION

(1) Use special tool VM.1010 with dial indicator special tool VM.1013 (Fig. 14).

(2) Bring the piston of cylinder no. 1 exactly to top dead center.

(3) Zero the dial indicator on the cylinder block mating surface.

(4) Setup the dial indicator on the piston crown (above the center of the piston pin) 5mm (1/8 in.) from the edge of the piston and note the measurement.

(5) Repeat the procedure with the rest of the cylinders.

(6) Establish the thickness of the steel gasket by averaging the four piston potrusion readings.

CYLINDER HEAD (Continued)

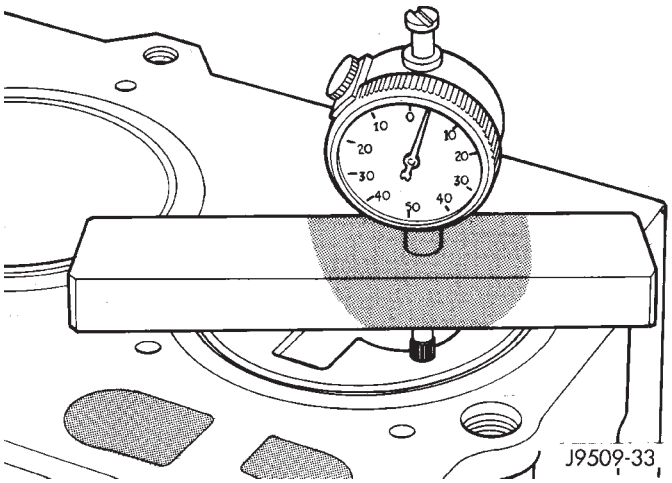

Fig. 14 MEASURING PISTON PROTRUSION

Measure Dimension (mm)	0.49-0.60
Cylinder Head Gasket Thickness (mm)	1.32 No Holes or Notches
Piston Clearance (mm)	0.72-0.83
Measure Dimension (mm)	0.61-0.70
Cylinder Head Gasket Thickness (mm)	1.42 1 Hole or Notch
Piston Clearance (mm)	0.72-0.84
Measure Dimension (mm)	0.71-0.83
Cylinder Head Gasket Thickness (mm)	1.52 2 Holes or Notches
Piston Clearance (mm)	0.68-0.81

REMOVAL

(1) Disconnect negative battery cable.

(2) Remove front wiper unit (Refer to 8 - ELECTRICAL/WIPERS/WASHERS/WIPER MODULE - REMOVAL).

(3) Remove engine cover (Refer to 9 - ENGINE - REMOVAL).

(4) Drain cooling system (Refer to 7 - COOLING/ENGINE/COOLANT - STANDARD PROCEDURE).

(5) Remove power steering belt (Refer to 7 - COOLING/ACCESSORY DRIVE/DRIVE BELTS - REMOVAL).

(6) Remove accessory drive belt (Refer to 7 - COOLING/ACCESSORY DRIVE/DRIVE BELTS - REMOVAL).

(7) Remove generator (Refer to 8 - ELECTRICAL/CHARGING/GENERATOR - REMOVAL).

(8) Support engine and remove right engine mount (Refer to 9 - ENGINE/ENGINE MOUNTING/RIGHT MOUNT - REMOVAL).

CAUTION: Before removing the cylinder head cover/intake manifold or timing belt the engine must put at 90° after TDC. Failure to do so could result in valve and/or piston damage during reassembly. (Refer to 9 - ENGINE/VALVE TIMING - STANDARD PROCEDURE)

(9) Remove timing belt outer cover (Refer to 9 - ENGINE/VALVE TIMING/TIMING BELT / CHAIN COVER(S) - REMOVAL).

(10) Remove timing belt (Refer to 9 - ENGINE/VALVE TIMING/TIMING BELT/CHAIN AND SPROCKETS - REMOVAL).

(11) Remove timing belt inner cover (Refer to 9 - ENGINE/VALVE TIMING/TIMING BELT / CHAIN COVER(S) - REMOVAL).

(12) Remove cylinder head cover/intake manifold (Fig. 15)(Refer to 9 - ENGINE/CYLINDER HEAD/CYLINDER HEAD COVER(S) - REMOVAL).

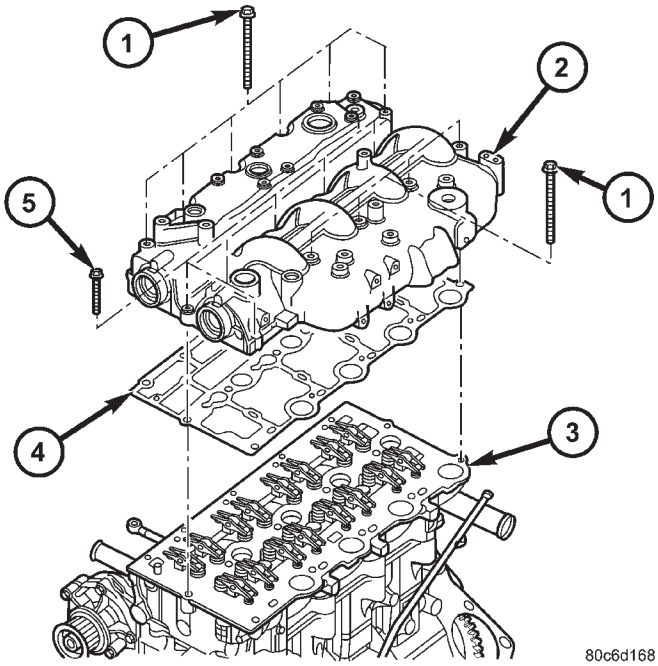

Fig. 15 CYLINDER HEAD COVER/INTAKE MANIFOLD ASSEMBLY

1 - CYLINDER HEAD COVER/INTAKE MANIFOLD BOLTS(LONG)
2 - CYLINDER HEAD COVER/INTAKE MANIFOLD
3 - CYLINDER HEAD
4 - CYLINDER HEAD COVER/INTAKE MANIFOLD GASKET
5 - CYLINDER HEAD COVER/INTAKE MANIFOLD BOLTS(SHORT)

CYLINDER HEAD (Continued)

(13) Remove rocker arm and lifter assemblies from cylinder head.

(14) Remove cylinder head cover/intake manifold gasket from cylinder head.

(15) Disconnect glow plug and engine coolant temperture electrical connectors.

(16) Remove coolant recovery pressure container (Refer to 7 - COOLING/ENGINE/COOLANT RECOVERY PRESS CONTAINER - REMOVAL).

(17) Remove thermostat housing to upper radiator hose pipe (Fig. 16).

(18) Remove turbocharger outlet to charge air cooler pipe (Fig. 16).

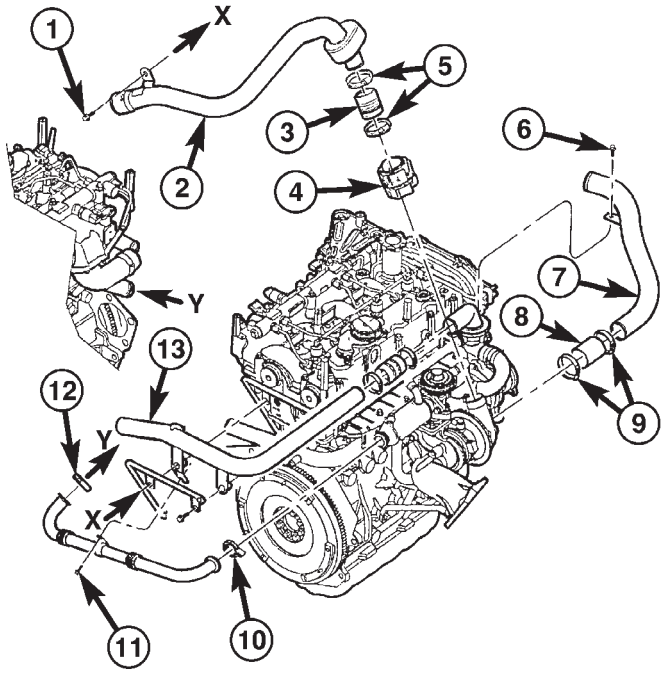

80c67730

Fig. 16 TURBOCHARGER AND COOLANT PIPES

1 - TURBOCHARGER OUTLET PIPE RETAINING BOLT
2 - TURBOCHARGER OUTLET PIPE
3 - ADAPTER HOSE
4 - HEAT SHIELD
5 - HOSE CLAMPS
6 - TURBOCHARGER INLET PIPE RETAINING BOLT
7 - TURBOCHARGER INLET PIPE
8 - ADAPTER HOSE
9 - HOSE CLAMPS
10 - CLAMP
11 - EGR VALVE TO INTAKE AIR INLET PIPE
12 - CLAMP
13 - THERMOSTAT HOUSING TO UPPER RADIATOR HOSE PIPE

(19) Remove exhaust manifold heat shield (Fig. 17).

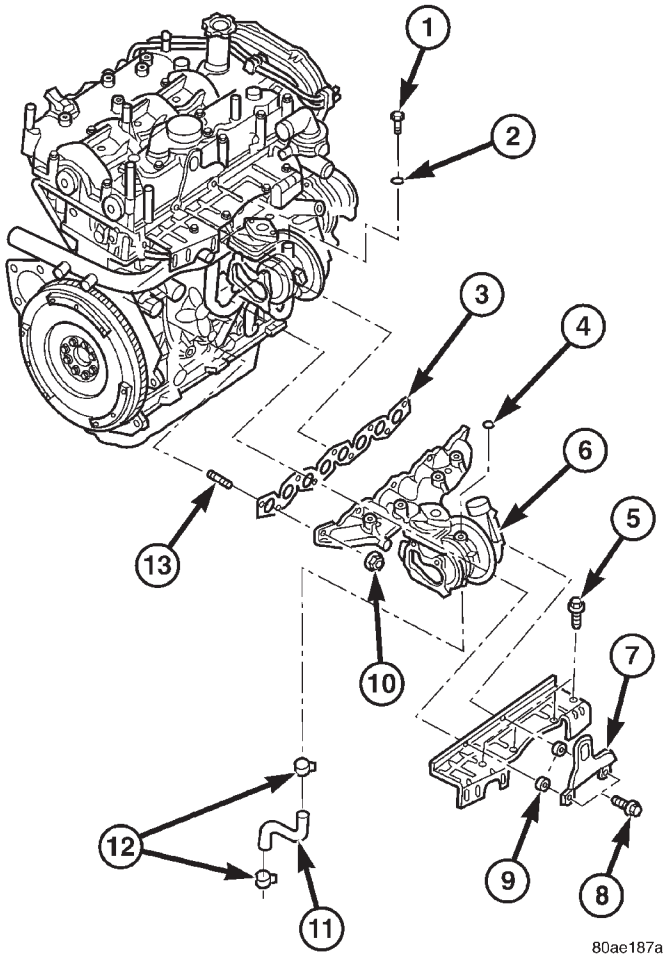

80ae187a

Fig. 17 EXHAUST MANIFOLD AND TURBOCHARGER

1 - TURBOCHARGER OIL SUPPLY BANJO BOLT
2 - COPPER WASHER
3 - EXHAUST MANIFOLD GASKET
4 - COPPER WASHER
5 - EXHAUST MANIFOLD HEAT SHIELD RETAINING BOLT
6 - TURBOCHARGER
7 - ENGINE LIFT HOOK
8 - ENGINE LIFT HOOK RETAINING BOLT
9 - SPACER
10 - EXHAUST MANIFOLD RETAINING NUT
11 - TURBOCHARGER OIL RETURN HOSE
12 - HOSE CLAMPS
13 - EXHAUST MANIFOLD STUDS

(20) Remove exhaust manifold retaining nuts (Fig. 17).

(21) Slide exhaust manifold and turbocharger off of exhaust manifold studs (Fig. 17).

(22) Remove cylinder head bolts.

CYLINDER HEAD (Continued)

(23) Remove cylinder head assembly from engine block (Fig. 18).

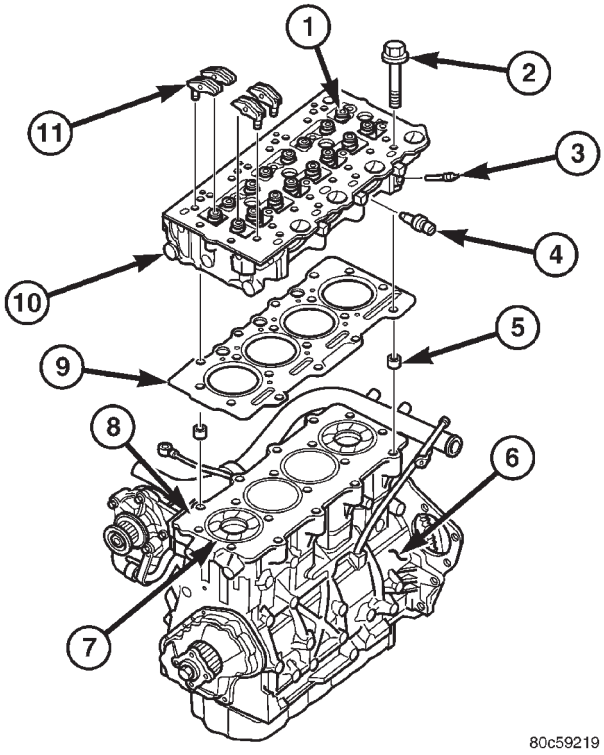

Fig. 18 CYLINDER HEAD ASSEMBLY

1 - VALVE SPRING
2 - CYLINDER HEAD BOLT
3 - GLOW PLUG
4 - COOLANT TEMPERATURE SENSOR
5 - CYLINDER HEAD ALIGNMENT DOWEL
6 - CYLINDER BLOCK
7 - CYLINDER LINER
8 - ENGINE BLOCK DECK
9 - CYLINDER HEAD GASKET
10 - CYLINDER HEAD
11 - ROCKER ARM AND LIFTER ASSEMBLY

CLEANING

Thoroughly clean the engine cylinder head and cylinder block mating surfaces. Clean the intake and exhaust manifold and engine cylinder head mating surfaces. Remove all gasket material and carbon.

Check to ensure that no coolant or foreign material has fallen into the tappet bore area.

Remove the carbon deposits from the combustion chambers and top of the pistons.

INSPECTION

Use a straightedge and feeler gauge to check the flatness of the engine cylinder head and block mating surfaces.

The minimum cylinder head thickness is 89.95mm (3.541 in.).

INSTALLATION

CAUTION: Piston protrusion must be measured to determine cylinder head gasket thickness if one or more cylinder liners have been replaced (Refer to 9 - ENGINE/CYLINDER HEAD - STANDARD PROCEDURE).

NOTE: If cylinder liner(s) have not been removed, the same thickness head gasket that was removed can be used.

(1) Clean and inspect gasket mating surfaces.
(2) Position correct head gasket on engine block.
(3) Place cylinder head on engine block (Fig. 18).

CAUTION: New cylinder head bolts must be used.

(4) Tighten cylinder head bolts following procedure below.

Cylinder Head Bolt Torquing Procedure

(1) Lubricate cylinder head bolts with engine oil.
(2) Torque bolts to 30N·m in numerical starting with bolt #1 (Fig. 19).
(3) Tighten all bolts an additional 75°, starting with bolt #4 then 5-6-7-8-9-10-1-2-3 (Fig. 19).
(4) Tighten all bolts an additional 50° in numerical order starting with bolt #11 then 12-13-14-15-16-17-18 (Fig. 19).
(5) Without loosening any bolts tighten all bolts an additional 75° in the following seguence: 4-5-6-7-8-9-10-1-2-3-11-12-13-14-15-16-17-18.

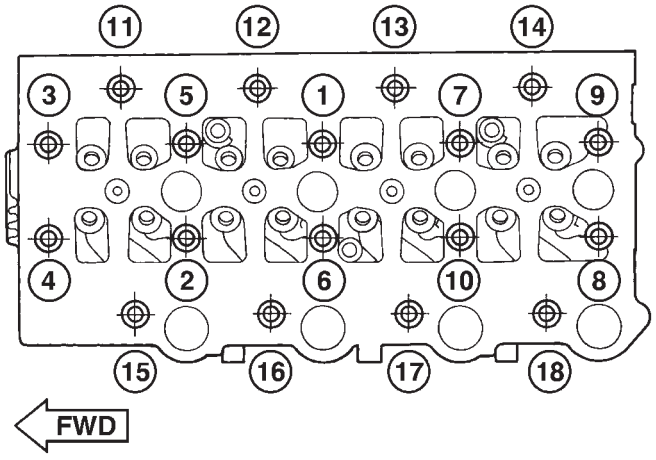

Fig. 19 CYLINDER HEAD TORQUE SEQUENCE

CYLINDER HEAD (Continued)

(5) Slide exhaust manifold and turbocharger on exhaust manifold studs (Fig. 17).

(6) Install exhaust manifold retaining nuts. Torque nuts to 32.4N·m.

(7) Install exhaust manifold heat shield (Fig. 17). Torque bolts to 27.5N·m.

(8) Install turbocharger outlet to charge air cooler pipe (Fig. 16).

(9) Install thermostat housing to upper radiator hose pipe (Fig. 16). Install retaining bolt and torque to 47.1N·m.

(10) Install coolant recovery pressure container (Refer to 7 - COOLING/ENGINE/COOLANT RECOVERY PRESS CONTAINER - INSTALLATION).

(11) Connect glow plug and coolant temperature sensor electrical connectors.

(12) Install new cylinder head cover/intake manifold gasket.

(13) Install rocker arm and lifter assemblies.**Be sure to put rocker arm and lifter assemblies in same location as removed.**

(14) Install cylinder head cover/intake manifold (Fig. 15)(Refer to 9 - ENGINE/CYLINDER HEAD/CYLINDER HEAD COVER(S) - INSTALLATION).

(15) Install timing belt inner cover (Refer to 9 - ENGINE/VALVE TIMING/TIMING BELT / CHAIN COVER(S) - INSTALLATION).

(16) Install timing belt (Refer to 9 - ENGINE/VALVE TIMING/TIMING BELT/CHAIN AND SPROCKETS - INSTALLATION) .

(17) Install timing belt outer cover (Refer to 9 - ENGINE/VALVE TIMING/TIMING BELT / CHAIN COVER(S) - INSTALLATION).

(18) **Remove crankshaft and both camshaft locking pins at this time** (Refer to 9 - ENGINE/VALVE TIMING - STANDARD PROCEDURE).

(19) Install generator (Refer to 8 - ELECTRICAL/CHARGING/GENERATOR - INSTALLATION).

(20) Install accessory drive belt (Refer to 7 - COOLING/ACCESSORY DRIVE/DRIVE BELTS - INSTALLATION).

(21) Install power steering belt (Refer to 7 - COOLING/ACCESSORY DRIVE/DRIVE BELTS - INSTALLATION).

(22) Install right engine mount (Refer to 9 - ENGINE/ENGINE MOUNTING/RIGHT MOUNT - INSTALLATION).

(23) Install air cleaner housing assembly.

(24) Refill cooling system (Refer to 7 - COOLING/ENGINE/COOLANT - STANDARD PROCEDURE).

(25) Install engine cover (Refer to 9 - ENGINE - INSTALLATION).

(26) Install front wiper unit (Refer to 8 - ELECTRICAL/WIPERS/WASHERS/WIPER MODULE - INSTALLATION).

(27) Connect negative battery cable.

CAMSHAFT(S)

DESCRIPTION

The camshafts are made of gray cast iron with eight machined lobes and four bearing journals (Fig. 20).

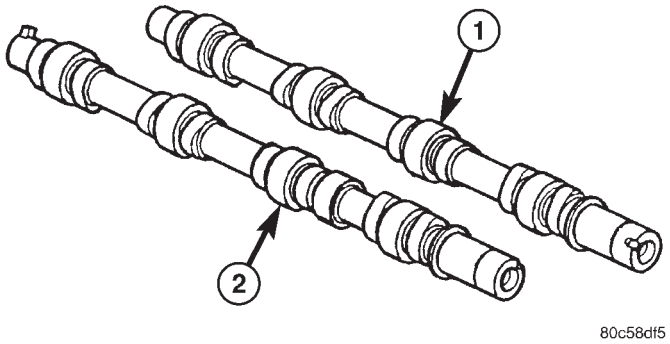

Fig. 20 CAMSHAFTS

1 - INTAKE CAMSHAFT
2 - EXHAUST CAMSHAFT

OPERATION

When the camshaft rotates the lobes actuate the hydraulic lifters and rocker arms, forcing downward on the rocker arms which opens the valves.

REMOVAL

(1) Disconnect negative battery cable.

(2) Remove front wiper unit (Refer to 8 - ELECTRICAL/WIPERS/WASHERS/WIPER MODULE - REMOVAL).

(3) Remove engine cover (Refer to 9 - ENGINE - REMOVAL).

(4) Drain cooling system (Refer to 7 - COOLING/ENGINE/COOLANT - STANDARD PROCEDURE).

(5) Remove air cleaner housing.

(6) Remove power steering belt (Refer to 7 - COOLING/ACCESSORY DRIVE/DRIVE BELTS - REMOVAL).

(7) Remove accessory drive belt (Refer to 7 - COOLING/ACCESSORY DRIVE/DRIVE BELTS - REMOVAL).

(8) Remove generator (Refer to 8 - ELECTRICAL/CHARGING/GENERATOR - REMOVAL).

(9) Support engine and remove right engine mount (Refer to 9 - ENGINE/ENGINE MOUNTING/RIGHT MOUNT - REMOVAL).

CAMSHAFT(S) (Continued)

CAUTION: Before removing the cylinder head cover/ intake manifold or timing belt the engine must put at 90° after TDC. Failure to do so could result in valve and/or piston damage during reassembly. (Refer to 9 - ENGINE/VALVE TIMING - STANDARD PROCEDURE)

(10) Remove timing belt outer cover (Refer to 9 - ENGINE/VALVE TIMING/TIMING BELT / CHAIN COVER(S) - REMOVAL).
(11) Remove timing belt (Refer to 9 - ENGINE/ VALVE TIMING/TIMING BELT/CHAIN AND SPROCKETS - REMOVAL).
(12) Remove timing belt inner cover (Refer to 9 - ENGINE/VALVE TIMING/TIMING BELT / CHAIN COVER(S) - REMOVAL).
(13) Remove cylinder head cover/intake manifold (Refer to 9 - ENGINE/CYLINDER HEAD/CYLINDER HEAD COVER(S) - REMOVAL).
(14) With cylinder head cover/intake manifold on work bench, remove plugs at rear of cylinder head cover/intake manifold.
(15) Remove camshaft oil seals (Fig. 21).
(16) Remove snapring and thrust washer from camshaft (Fig. 21).
(17) Slide camshaft through access hole at rear of cylinder head cover/intake manifold.

INSTALLATION

(1) Lubricate the camshafts with Mopar® Engine Oil Supplement, or equivalent.
(2) Carefully install camshafts into access holes in rear of cylinder head cover/intake manifold.
(3) Install thrust washer, snapring, and camshaft oil seal (Fig. 21).

CHECKING CAMSHAFT ENDPLAY

(1) After camshafts are properly installed in cylinder head cover check end play of camshafts with a dial indicator. The end play should be between .10 mm – .30 mm.

NOTE: If the camshaft endplay is not within specification, measure thickness of the camshaft spacer. Camshaft spacer thickness should be 2.8 ± .02mm.

(4) Install access hole plugs and gaskets at rear of cylinder head cover/intake manifold. Torque plugs to 80N·m.
(5) Install cylinder head cover/intake manifold on engine block (Refer to 9 - ENGINE/CYLINDER HEAD/CYLINDER HEAD COVER(S) - INSTALLATION).
(6) Install timing belt inner cover (Refer to 9 - ENGINE/VALVE TIMING/TIMING BELT / CHAIN COVER(S) - INSTALLATION).

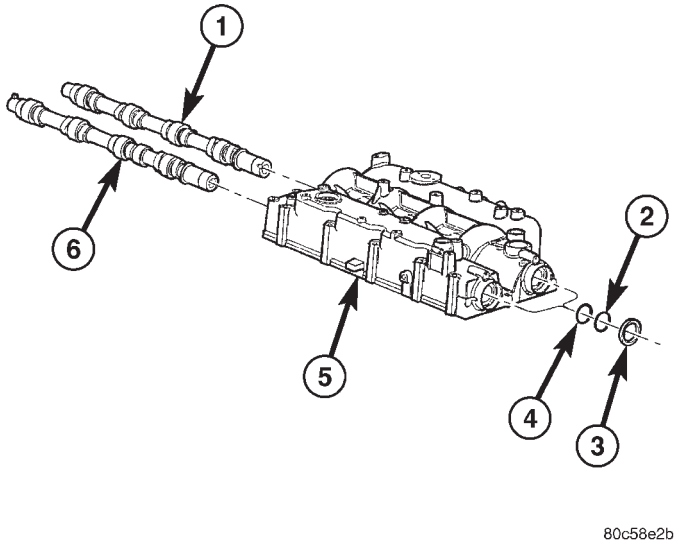

Fig. 21 CAMSHAFT ASSEMBLY

1 - INTAKE CAMSHAFT
2 - SNAPRING
3 - CAMSHAFT OIL SEAL
4 - THRUST WASHER
5 - CYLINDER HEAD COVER/INTAKE MANIFOLD
6 - EXHAUST CAMSHAFT

(7) Install timing belt (Refer to 9 - ENGINE/ VALVE TIMING/TIMING BELT/CHAIN AND SPROCKETS - INSTALLATION) .
(8) Install timing belt outer cover (Refer to 9 - ENGINE/VALVE TIMING/TIMING BELT / CHAIN COVER(S) - INSTALLATION).
(9) Install right engine mount (Refer to 9 - ENGINE/ENGINE MOUNTING/RIGHT MOUNT - INSTALLATION).
(10) Install generator (Refer to 8 - ELECTRICAL/ CHARGING/GENERATOR - INSTALLATION).
(11) Install accessory drive belt (Refer to 7 - COOLING/ACCESSORY DRIVE/DRIVE BELTS - INSTALLATION).
(12) Install power steering belt (Refer to 7 - COOLING/ACCESSORY DRIVE/DRIVE BELTS - INSTALLATION).
(13) Install air cleaner housing.
(14) Refill cooling system (Refer to 7 - COOLING/ ENGINE/COOLANT - STANDARD PROCEDURE).
(15) Install front wiper unit (Refer to 8 - ELECTRICAL/WIPERS/WASHERS/WIPER MODULE - INSTALLATION).
(16) Connect negative battery cable.

CYLINDER HEAD COVER(S)

DESCRIPTION

The cylinder head cover is made of cast aluminum and is also the intake manifold on this engine (Fig. 22).

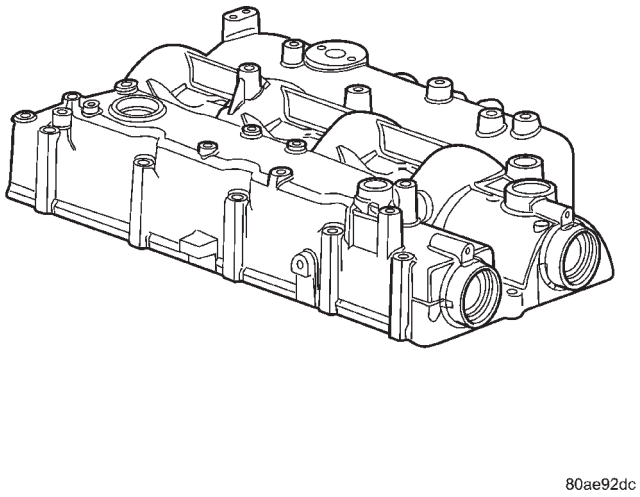

Fig. 22 CYLINDER HEAD COVER/INTAKE MANIFOLD

REMOVAL

CAUTION: Before removing the cylinder head cover/ intake manifold the engine must put at 90° after TDC. Failure to do so could result in valve and/or piston damage during reassembly. (Refer to 9 - ENGINE/VALVE TIMING - STANDARD PROCEDURE)

(1) Disconnect negative battery cable.

(2) Remove front wiper unit (Refer to 8 - ELECTRICAL/WIPERS/WASHERS/WIPER MODULE - REMOVAL).

(3) Remove engine cover (Refer to 9 - ENGINE - REMOVAL).

(4) Drain cooling system (Refer to 7 - COOLING/ ENGINE/COOLANT - STANDARD PROCEDURE).

(5) Rotate engine until 90° after TDC is reached. Install both camshaft locking pins and the crankshaft locking pin. (Refer to 9 - ENGINE/VALVE TIMING - STANDARD PROCEDURE)

(6) Remove air cleaner housing assembly.

(7) Remove power steering belt (Refer to 7 - COOLING/ACCESSORY DRIVE/DRIVE BELTS - REMOVAL).

(8) Remove accessory drive belt (Refer to 7 - COOLING/ACCESSORY DRIVE/DRIVE BELTS - REMOVAL).

(9) Remove generator (Refer to 8 - ELECTRICAL/ CHARGING/GENERATOR - REMOVAL).

(10) Support engine and remove right engine mount (Refer to 9 - ENGINE/ENGINE MOUNTING/ RIGHT MOUNT - REMOVAL).

(11) Remove outer timing belt cover (Refer to 9 - ENGINE/VALVE TIMING/TIMING BELT / CHAIN COVER(S) - REMOVAL).

(12) Remove timing belt (Refer to 9 - ENGINE/ VALVE TIMING/TIMING BELT/CHAIN AND SPROCKETS - REMOVAL).

(13) Remove inner timing belt cover (Refer to 9 - ENGINE/VALVE TIMING/TIMING BELT / CHAIN COVER(S) - REMOVAL).

(14) Disconnect camshaft position sensor, boost pressure/intake air temperature sensor, EGR solenoid, and fuel pressure sensor electrical connectors (Fig. 23).

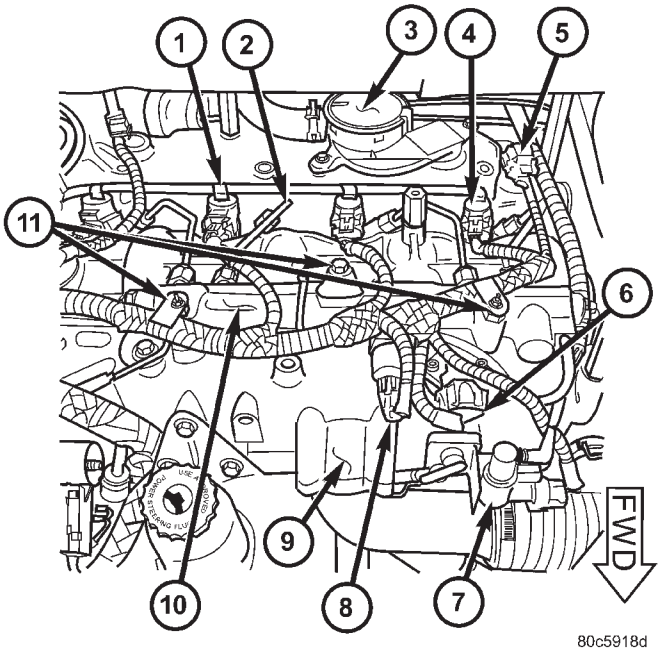

Fig. 23 ENGINE COMPONENT LOCATIONS

1 - FUEL INJECTOR RETURN LINE
2 - FUEL INJECTOR SUPPLY LINE
3 - OIL SEPARATOR
4 - FUEL INJECTOR
5 - CAMSHAFT POSITION SENSOR
6 - BOOST PRESSURE/INTAKE AIR TEMPERATURE SENSOR
7 - EGR SOLENOID
8 - FUEL PRESSURE SENSOR
9 - CYLINDER HEAD COVER/INTAKE MANIFOL
10 - FUEL RAIL
11 - WIRING HARNESS RETAINING CLIPS

CYLINDER HEAD COVER(S) (Continued)

(15) Disconnect vacuum lines at EGR solenoid.
(16) Position electrical harness out of way.
(17) Remove fuel injectors (Refer to 14 - FUEL SYSTEM/FUEL INJECTION/FUEL INJECTOR - REMOVAL).
(18) Remove fuel rail (Refer to 14 - FUEL SYSTEM/FUEL DELIVERY/FUEL RAIL - REMOVAL).
(19) Remove power steering pump reservoir from bracket.
(20) Remove oil dipstick tube retaining bolt at intake manifold inlet.
(21) Disconnect oil separator outlet hose at separator.
(22) Remove turbo inlet tube retaining bolt at intake manifold.
(23) Disconnect EGR tube at intake manifold inlet tube.
(24) Remove cylinder head cover/intake manifold retaining bolts (Fig. 24).
(25) Lift cylinder head cover/intake manifold from cylinder head (Fig. 24).

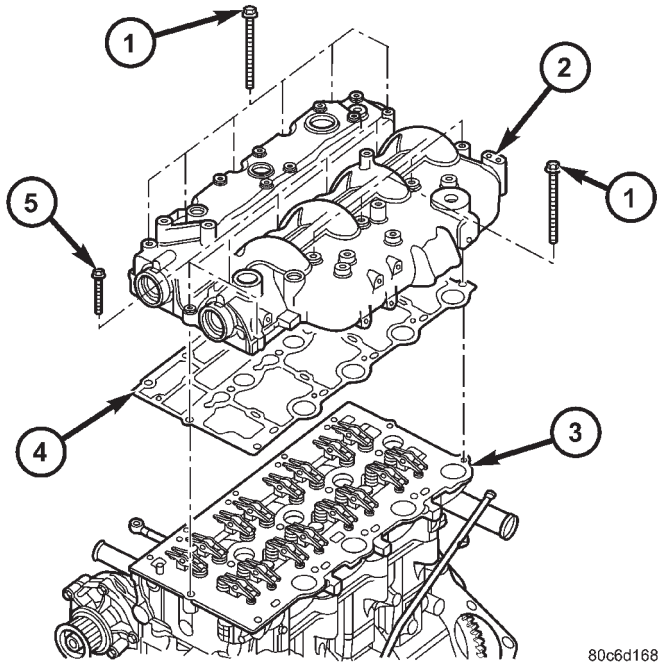

Fig. 24 CYLINDER HEAD COVER/INTAKE MANIFOLD ASSEMBLY

1 - CYLINDER HEAD COVER/INTAKE MANIFOLD BOLTS(LONG)
2 - CYLINDER HEAD COVER/INTAKE MANIFOLD
3 - CYLINDER HEAD
4 - CYLINDER HEAD COVER/INTAKE MANIFOLD GASKET
5 - CYLINDER HEAD COVER/INTAKE MANIFOLD BOLTS(SHORT)

NOTE: When removing rocker arm and lifter assemblies, be sure to keep them in order as they were removed from the cylinder head. Always keep lifters in an upright position when removed from cylinder head.

(26) Remove rocker arm and lifter assemblies from cylinder head (Fig. 25).

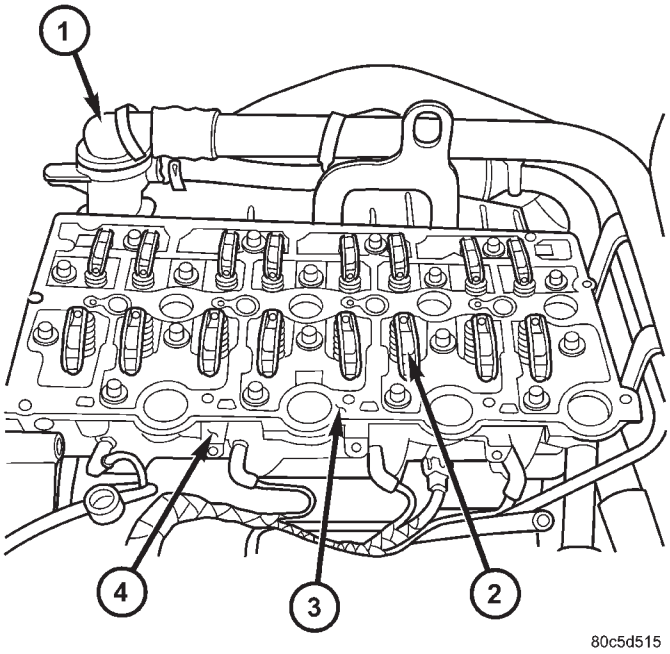

Fig. 25 CYLINDER HEAD COVER/INTAKE MANIFOLD GASKET LOCATION

1 - THERMOSTAT HOUSING
2 - ROCKER ARM AND LIFTER ASSEMBLY
3 - CYLINDER HEAD COVER/INTAKE MANIFOLD
4 - CYLINDER HEAD

(27) Remove cylinder head cover/intake manifold gasket from cylinder head.

INSTALLATION

(1) Clean and inspect sealing surfaces.
(2) Install new gasket on cylinder head.

NOTE: Apply a small amount of grease on each valve stem. This will help hold the rocker arm in position during the cylinder head cover installation.

(3) Install rocker arm and lifter assemblies in cylinder head (Fig. 25).**Be sure to put rocker arm and lifter assemblies in same location as removed.**
(4) Install cylinder head cover/intake manifold alignment studs in cylinder head (Fig. 26).
(5) Install cylinder head cover/intake manifold over alignment stud.

CYLINDER HEAD COVER(S) (Continued)

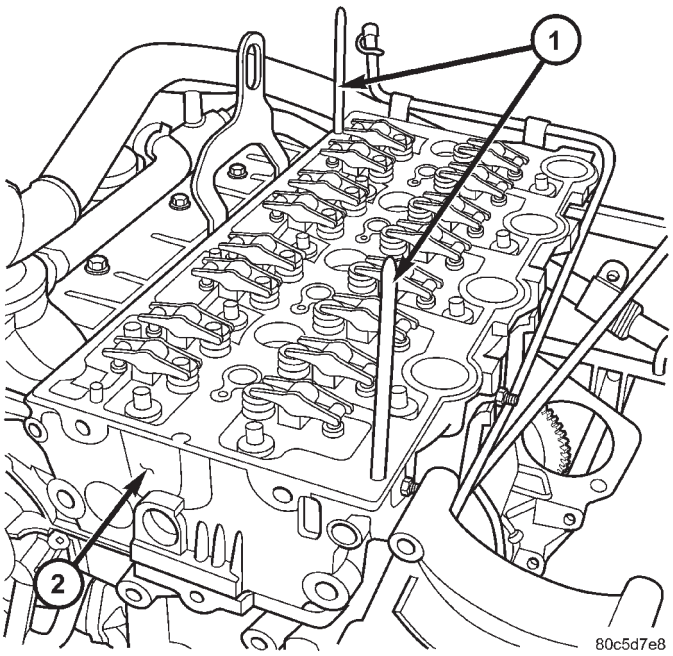

Fig. 26 CYLINDER HEAD COVER/INTAKE MANIFOLD ALIGNMENT STUDS VM.1066

1 - CYLINDER HEAD COVER/INTAKE MANIFOLD ALIGNMENT STUDS VM.1066
2 - CYLINDER HEAD

NOTE: Be sure to lubricate cylinder head cover/intake manifold retaining bolts with engine oil before assembly. If new bolts are being installed, DO NOT lubricate before assembly.

(6) Install two cylinder head cover/intake manifold retaining bolts and tighten finger tight.

(7) Remove alignment studs and install remaining retaining bolts (Fig. 24). Tighten retaining bolts finger tight.

(8) Torque cylinder head cover/intake manifold retaining bolts following procedure below.

CYLINDER HEAD COVER/INTAKE MANIFOLD TIGHTENING PROCEDURE

(1) Coat all bolts being reused with clean engine oil.

(2) Install the M8x35 bolts into holes 1,2,3,4,5, and 12. Install the M8x85 bolts into holes 6,7,8,9,10,11,13,14,15, and 16. Tighten all bolt **hand tight**.

(3) Alternate between bolts #11 and #16 to seat cylinder head cover/intake manifold on cylinder head (Fig. 27). Torque bolts to 7 N·m.

(4) Torque all cylinder head cover/intake manifold retaining bolts to 25 N·m in numerical order starting with #1 and ending with #16 (Fig. 27).

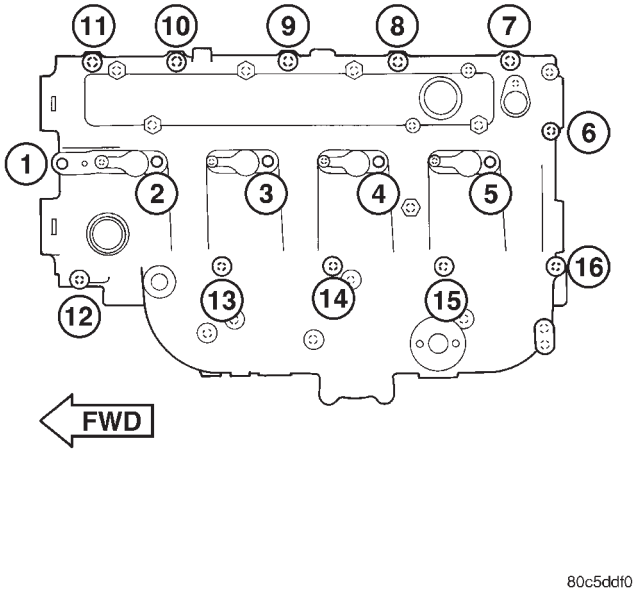

Fig. 27 CYLINDER HEAD COVER/INTAKE MANIFOLD TIGHTENING SEQUENCE

(9) Connect EGR tube at intake manifold inlet tube. Torque clamp to 10.8 N·m.

(10) Install turbo inlet tube retaining bolt at intake manifold. Torque bolt to 27.5 N·m.

(11) Connect oil separator outlet hose at separator.

(12) Install oil dipstick tube retaining bolt at intake manifold inlet. Torque bolt to 10 N·m.

(13) Install power steering pump reservoir in bracket.

(14) Install fuel rail (Refer to 14 - FUEL SYSTEM/FUEL DELIVERY/FUEL RAIL - INSTALLATION).

(15) Install fuel injectors and fuel injector supply lines (Refer to 14 - FUEL SYSTEM/FUEL INJECTION/FUEL INJECTOR - INSTALLATION).

(16) Connect vacuum lines at EGR solenoid.

(17) Clip wiring harness retainers on studs on fuel rail (Fig. 23).

(18) Connect camshaft position sensor, boost pressure/intake air temperature sensor, EGR solenoid, and fuel pressure sensor electrical connectors (Fig. 23).

(19) Install inner timing belt cover (Refer to 9 - ENGINE/VALVE TIMING/TIMING BELT / CHAIN COVER(S) - INSTALLATION).

(20) Install timing belt (Refer to 9 - ENGINE/VALVE TIMING/TIMING BELT/CHAIN AND SPROCKETS - INSTALLATION) .

(21) Install outer timing belt cover (Refer to 9 - ENGINE/VALVE TIMING/TIMING BELT / CHAIN COVER(S) - INSTALLATION).

CYLINDER HEAD COVER(S) (Continued)

(22) Install right engine mount (Refer to 9 - ENGINE/ENGINE MOUNTING/RIGHT MOUNT - INSTALLATION).
(23) Install generator (Refer to 8 - ELECTRICAL/ CHARGING/GENERATOR - INSTALLATION).
(24) Install accessory drive belt (Refer to 7 - COOLING/ACCESSORY DRIVE/DRIVE BELTS - INSTALLATION).
(25) Install power steering belt (Refer to 7 - COOLING/ACCESSORY DRIVE/DRIVE BELTS - INSTALLATION).
(26) Install air cleaner housing assembly.
(27) Remove crankshaft and both camshaft locking pins (Refer to 9 - ENGINE/VALVE TIMING - STANDARD PROCEDURE).
(28) Refill cooling system (Refer to 7 - COOLING/ ENGINE/COOLANT - STANDARD PROCEDURE).
(29) Install engine cover (Refer to 9 - ENGINE - INSTALLATION).
(30) Install front wiper unit (Refer to 8 - ELECTRICAL/WIPERS/WASHERS/WIPER MODULE - INSTALLATION).
(31) Connect negative battery cable.

CAMSHAFT OIL SEAL(S)

REMOVAL

(1) Disconnect negative battery cable.
(2) Remove air cleaner housing assembly.
(3) Support engine and remove right engine mount (Refer to 9 - ENGINE/ENGINE MOUNTING/RIGHT MOUNT - REMOVAL).
(4) Remove outer timing belt cover (Refer to 9 - ENGINE/VALVE TIMING/TIMING BELT / CHAIN COVER(S) - REMOVAL).

WARNING: Before removing the timing belt the engine must put at 90° after TDC. Failure to do so could result in valve and/or piston damage during reassembly. (Refer to 9 - ENGINE/VALVE TIMING - STANDARD PROCEDURE)

(5) Remove timing belt (Refer to 9 - ENGINE/ VALVE TIMING/TIMING BELT/CHAIN AND SPROCKETS - REMOVAL).
(6) Using VM.1055, remove both camshaft gears (Fig. 28).
(7) Remove both camshaft oil seals.

INSTALLATION

(1) Install new camshaft oil seal using VM.1057.
(2) Install camshaft sprockets and tighten retaining bolts finger tight.
(3) Install timing belt (Refer to 9 - ENGINE/ VALVE TIMING/TIMING BELT/CHAIN AND SPROCKETS - INSTALLATION) .

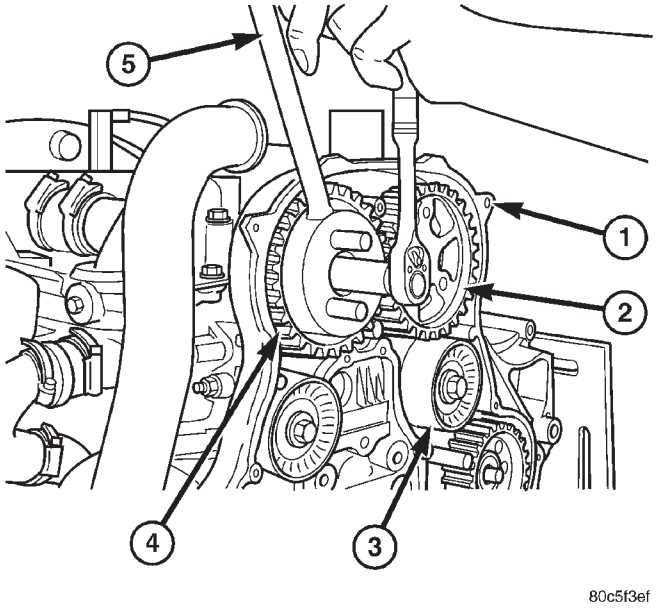

Fig. 28 CAMSHAFT GEAR REMOVAL/INSTALLATION

1 - TIMING BELT INNER COVER
2 - CAMSHAFT SPROCKET
3 - IDLER PULLEYS
4 - CAMSHAFT SPROCKET
5 - VM.1055

(4) Torque camshaft sprockets to 108 N·m using VM.1055 (Fig. 28).
(5) Install outer timing belt cover (Refer to 9 - ENGINE/VALVE TIMING/TIMING BELT / CHAIN COVER(S) - INSTALLATION).
(6) Install right engine mount (Refer to 9 - ENGINE/ENGINE MOUNTING/RIGHT MOUNT - INSTALLATION).
(7) Install air cleaner housing assembly.
(8) Connect negative battery cable.

ROCKER ARMS

DESCRIPTION

The rocker arms are made of stamped steel (Fig. 29).

OPERATION

The rocker arms are used as a link between the camshaft and valves. As the camshaft rotates the lobes of the camshafts apply downward pressure on the rocker arms. This pressure is then transmitted to the valves which causes the valves to open.

REMOVAL

(1) Disconnect negative battery cable.

ROCKER ARMS (Continued)

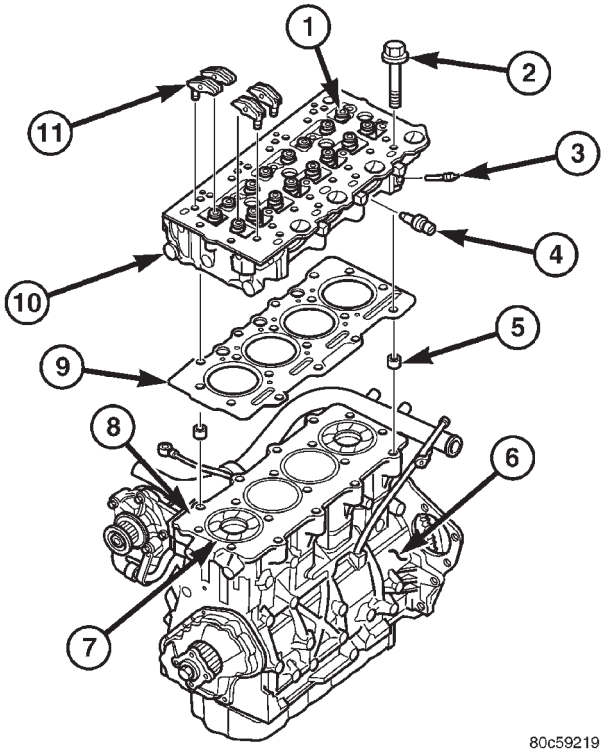

Fig. 29 CYLINDER HEAD ASSEMBLY

1 - VALVE SPRING
2 - CYLINDER HEAD BOLT
3 - GLOW PLUG
4 - COOLANT TEMPERATURE SENSOR
5 - CYLINDER HEAD ALIGNMENT DOWEL
6 - CYLINDER BLOCK
7 - CYLINDER LINER
8 - ENGINE BLOCK DECK
9 - CYLINDER HEAD GASKET
10 - CYLINDER HEAD
11 - ROCKER ARM AND LIFTER ASSEMBLY

(2) Remove front wiper unit (Refer to 8 - ELECTRICAL/WIPERS/WASHERS/WIPER MODULE - REMOVAL).

(3) Remove air cleaner housing assembly.

(4) Support engine and remove right engine mount (Refer to 9 - ENGINE/ENGINE MOUNTING/RIGHT MOUNT - REMOVAL).

(5) Remove outer timing belt cover (Refer to 9 - ENGINE/VALVE TIMING/TIMING BELT / CHAIN COVER(S) - REMOVAL).

(6) Remove timing belt (Refer to 9 - ENGINE/VALVE TIMING/TIMING BELT/CHAIN AND SPROCKETS - REMOVAL).

(7) Remove inner timing belt cover (Refer to 9 - ENGINE/VALVE TIMING/TIMING BELT / CHAIN COVER(S) - REMOVAL).

(8) Remove cylinder head cover/intake manifold (Refer to 9 - ENGINE/CYLINDER HEAD/CYLINDER HEAD COVER(S) - REMOVAL).

(9) Remove rocker arm from lifter (Fig. 30).

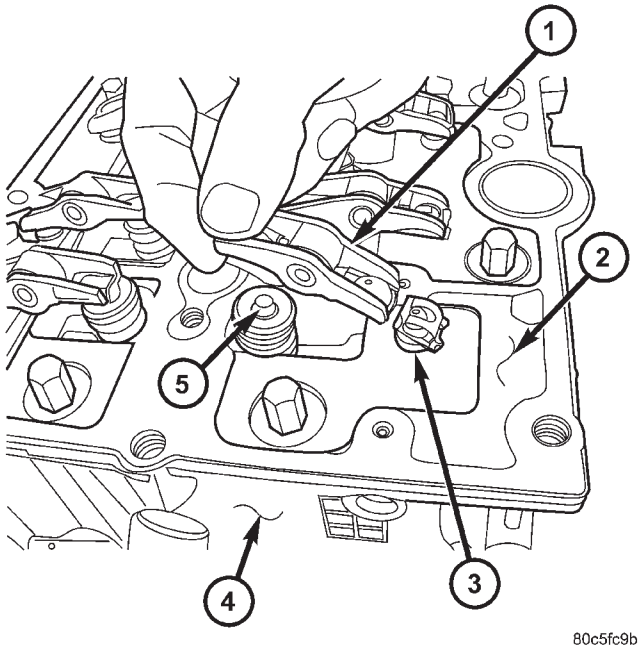

Fig. 30 ROCKER ARM ASSEMBLY

1 - ROCKER ARM ASSEMBLY
2 - CYLINDER HEAD COVER/INTAKE MANIFOLD
3 - HYDRAULIC LIFTER
4 - CYLINDER HEAD
5 - VALVE

INSTALLATION

(1) Clean and inspect gasket sealing surfaces.

(2) Install new gasket on cylinder head.

(3) Lubricate lifter ball end of lifter(s), valve(s), and rocker arm roller(s) with Mopar® Engine Oil Supplement or equivlalent.

(4) Connect rocker arm(s) to lifter and reposition on valve(s) (Fig. 30).

(5) Install cylinder head cover/intake manifold (Refer to 9 - ENGINE/CYLINDER HEAD/CYLINDER HEAD COVER(S) - INSTALLATION).

(6) Install inner timing belt cover (Refer to 9 - ENGINE/VALVE TIMING/TIMING BELT / CHAIN COVER(S) - INSTALLATION).

(7) Install timing belt (Refer to 9 - ENGINE/VALVE TIMING/TIMING BELT/CHAIN AND SPROCKETS - INSTALLATION) .

(8) Install outer timing belt cover (Refer to 9 - ENGINE/VALVE TIMING/TIMING BELT / CHAIN COVER(S) - INSTALLATION).

(9) Install right engine mount (Refer to 9 - ENGINE/ENGINE MOUNTING/RIGHT MOUNT - INSTALLATION).

(10) Install air cleaner housing assembly.

ROCKER ARMS (Continued)

(11) Install front wiper unit (Refer to 8 - ELECTRICAL/WIPERS/WASHERS/WIPER MODULE - INSTALLATION).

(12) Connect negative battery cable.

HYDRAULIC LIFTERS

DESCRIPTION

Valve lash is controlled by hydraulic tappets located inside the cylinder head, in tappet bores below the camshafts (Fig. 31).

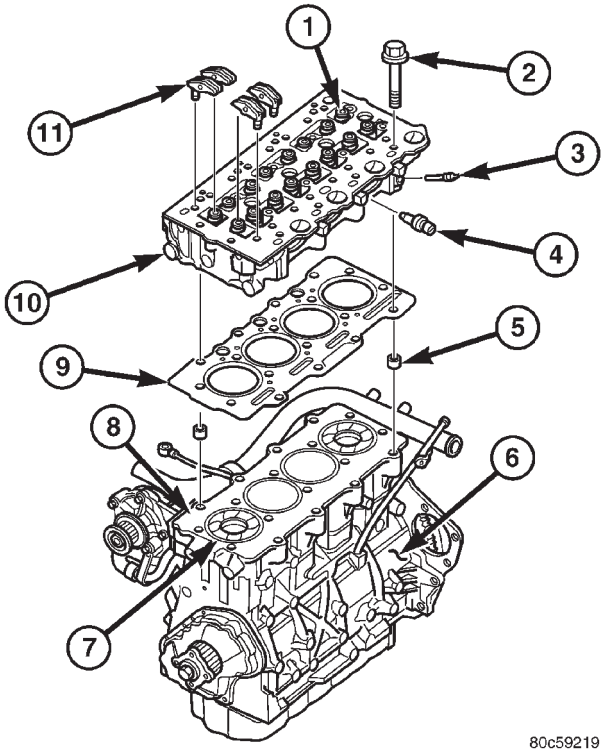

Fig. 31 CYLINDER HEAD ASSEMBLY

1 - VALVE SPRING
2 - CYLINDER HEAD BOLT
3 - GLOW PLUG
4 - COOLANT TEMPERATURE SENSOR
5 - CYLINDER HEAD ALIGNMENT DOWEL
6 - CYLINDER BLOCK
7 - CYLINDER LINER
8 - ENGINE BLOCK DECK
9 - CYLINDER HEAD GASKET
10 - CYLINDER HEAD
11 - ROCKER ARM AND LIFTER ASSEMBLY

REMOVAL

(1) Disconnect negative battery cable.

(2) Remove front wiper unit (Refer to 8 - ELECTRICAL/WIPERS/WASHERS/WIPER MODULE - REMOVAL).

(3) Remove engine cover (Refer to 9 - ENGINE - REMOVAL).

(4) Support engine and remove right engine mount (Refer to 9 - ENGINE/ENGINE MOUNTING/RIGHT MOUNT - REMOVAL).

(5) Remove outer timing belt cover (Refer to 9 - ENGINE/VALVE TIMING/TIMING BELT / CHAIN COVER(S) - REMOVAL).

CAUTION: Before removing the cylinder head cover/ intake manifold or the timing belt the engine must put at 90° after TDC. Failure to do so could result in valve and/or piston damage during reassembly. (Refer to 9 - ENGINE/VALVE TIMING - STANDARD PROCEDURE)

(6) Remove timing belt (Refer to 9 - ENGINE/ VALVE TIMING/TIMING BELT/CHAIN AND SPROCKETS - REMOVAL).

(7) Remove inner timing belt cover (Refer to 9 - ENGINE/VALVE TIMING/TIMING BELT / CHAIN COVER(S) - REMOVAL).

(8) Remove cylinder head cover/intake manifold (Fig. 32)(Refer to 9 - ENGINE/CYLINDER HEAD/ CYLINDER HEAD COVER(S) - REMOVAL).

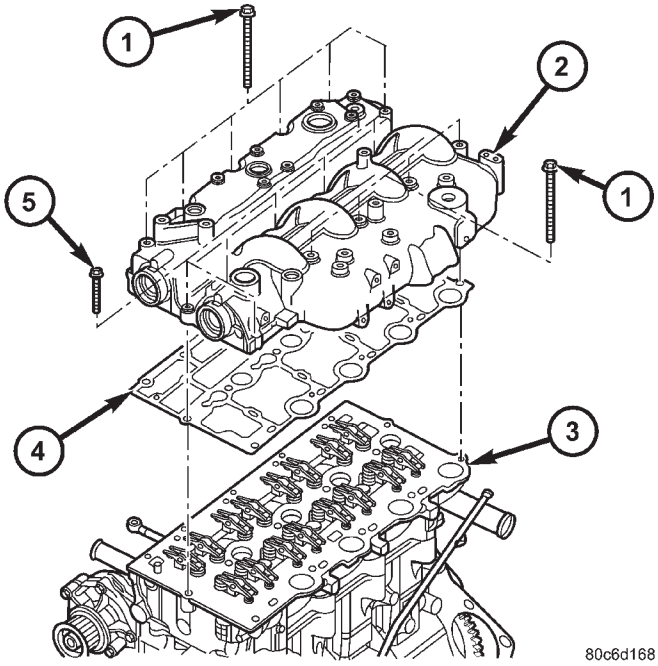

Fig. 32 CYLINDER HEAD COVER/INTAKE MANIFOLD

1 - CYLINDER HEAD COVER/INTAKE MANIFOLD BOLTS(LONG)
2 - CYLINDER HEAD COVER/INTAKE MANIFOLD
3 - CYLINDER HEAD
4 - CYLINDER HEAD COVER/INTAKE MANIFOLD GASKET
5 - CYLINDER HEAD COVER/INTAKE MANIFOLD BOLTS(SHORT)

HYDRAULIC LIFTERS (Continued)

(9) Remove rocker arm and lifter assemblies from lifter bores.

INSPECTION

Clean each lifter assembly in cleaning solvent to remove all varnish and sludge deposits. Inspect for indications of scuffing on the side and base of each lifter body.

INSTALLATION

(1) Install rocker arm and lifter assemblies in lifter bores.

(2) Install cylinder head cover/intake manifold (Fig. 32) (Refer to 9 - ENGINE/CYLINDER HEAD/ CYLINDER HEAD COVER(S) - INSTALLATION).

(3) Install timing belt inner cover (Refer to 9 - ENGINE/VALVE TIMING/TIMING BELT / CHAIN COVER(S) - INSTALLATION).

(4) Install timing belt (Refer to 9 - ENGINE/ VALVE TIMING/TIMING BELT/CHAIN AND SPROCKETS - INSTALLATION) .

(5) Install timing belt outer cover (Refer to 9 - ENGINE/VALVE TIMING/TIMING BELT / CHAIN COVER(S) - INSTALLATION).

(6) Install right engine mount (Refer to 9 - ENGINE/ENGINE MOUNTING/RIGHT MOUNT - INSTALLATION).

(7) Install engine cover (Refer to 9 - ENGINE - INSTALLATION).

(8) Install front wiper unit (Refer to 8 - ELECTRICAL/WIPERS/WASHERS/WIPER MODULE - INSTALLATION).

(9) Connect negative battery cable.

ENGINE BLOCK

DESCRIPTION

The 2.5L CRD Diesel engine uses a cast iron engine block with wet cast iron cylinder liners (Fig. 33).

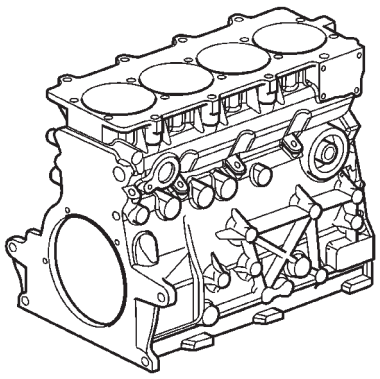

80c6aef8

Fig. 33 ENGINE BLOCK

CRANKSHAFT

DESCRIPTION

The crankshaft is a forged steel type design with five main bearing journals. The crankshaft is located at the bottom of the engine block and is held in place with three main bearing supports (Fig. 34).

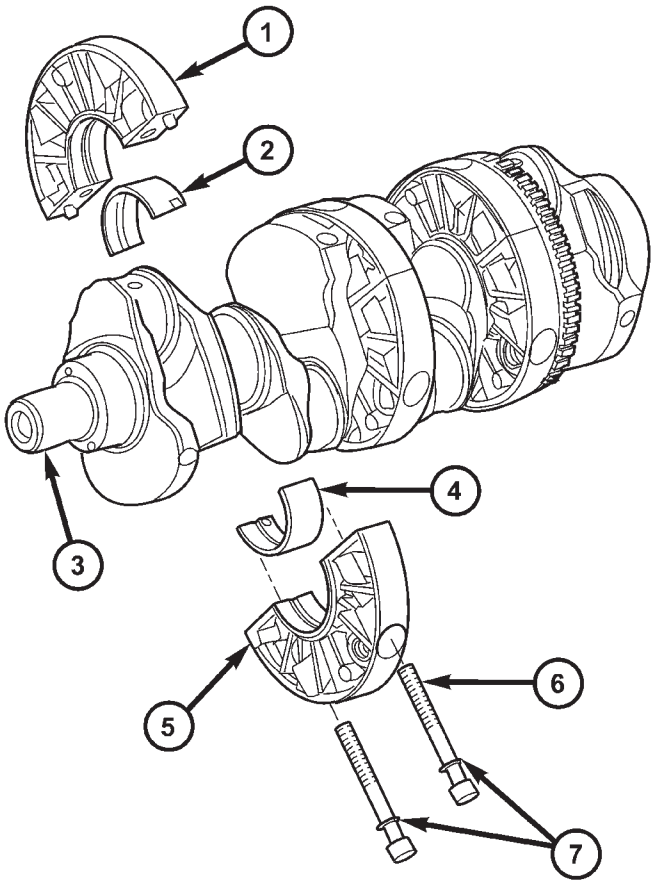

80adf230

Fig. 34 CRANKSHAFT ASSEMBLY

1 - CRANKSHAFT SUPPORT HALVE
2 - MAIN BEARING HALVE
3 - CRANKSHAFT
4 - MAIN BEARING HALVE
5 - CRANKSHAFT SUPPORT HALVE
6 - MAIN BEARING SUPPORT BOLTS
7 - WASHERS

OPERATION

The crankshaft transfers force generated by combustion within the cylinder bores to the flywheel or flexplate.

CRANKSHAFT (Continued)

STANDARD PROCEDURE - CHECKING CRANKSHAFT END PLAY

(1) Mount a dial indicator to a stationary point at rear of engine. Locate the probe perpendicular against the flywheel (Fig. 35).

(2) Move the crankshaft all the way to the front of its travel.

(3) Zero the dial indicator.

(4) Move the crankshaft all the way to the rear and read dial indicator. For crankshaft end play clearances (Refer to 9 - ENGINE - SPECIFICATIONS).

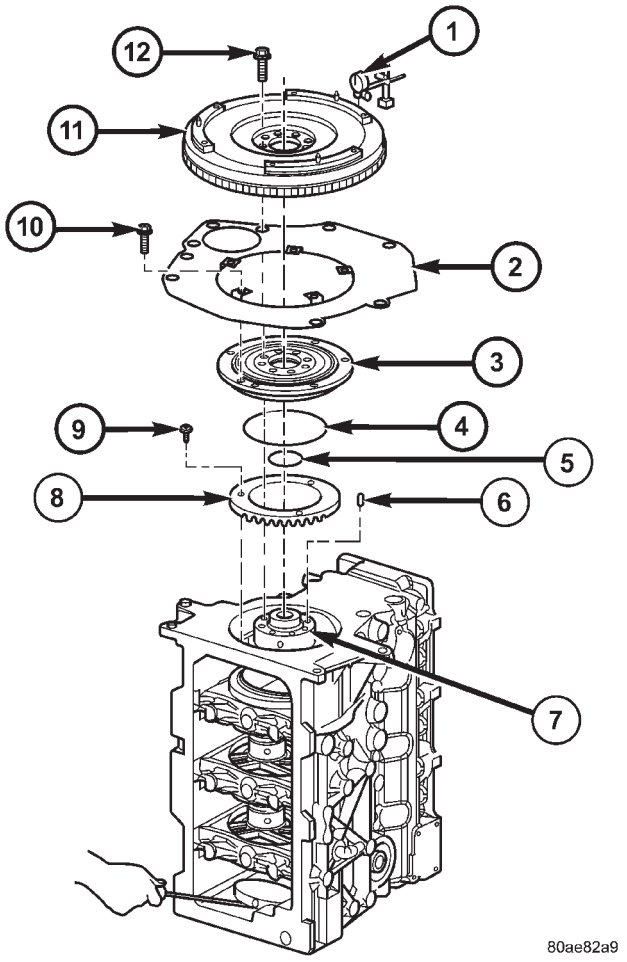

Fig. 35 CHECKING CRANKSHAFT END PLAY

1 - DIAL INDICATOR
2 - ADAPTER PLATE
3 - REAR MAIN BEARING SUPPORT
4 - SEALING RING
5 - SEALING RING
6 - ALIGNMENT PIN
7 - CRANKSHAFT
8 - RELUCTOR WHEEL
9 - RELUCTOR WHEEL RETAINING BOLT
10 - REAR MAIN BEARING SUPPORT RETAINING BOLTS
11 - FLYWHEEL
12 - FLYWHEEL BOLTS

REMOVAL

(1) Remove engine from vehicle (Refer to 9 - ENGINE - REMOVAL).

(2) Mount engine on an engine stand.

(3) Drain engine oil and remove oil filter.

(4) Remove timing belt outer cover (Refer to 9 - ENGINE/VALVE TIMING/TIMING BELT / CHAIN COVER(S) - REMOVAL).

(5) Remove timing belt (Refer to 9 - ENGINE/ VALVE TIMING/TIMING BELT/CHAIN AND SPROCKETS - REMOVAL).

(6) Remove timing belt inner cover (Refer to 9 - ENGINE/VALVE TIMING/TIMING BELT / CHAIN COVER(S) - REMOVAL).

(7) Remove cylinder head cover/intake manifold (Refer to 9 - ENGINE/CYLINDER HEAD/CYLINDER HEAD COVER(S) - REMOVAL).

(8) Remove cylinder head (Refer to 9 - ENGINE/ CYLINDER HEAD - REMOVAL).

(9) Remove flywheel.

(10) Remove rear main bearing support/adapter plate retaining bolts and remove adapter plate (Fig. 36).

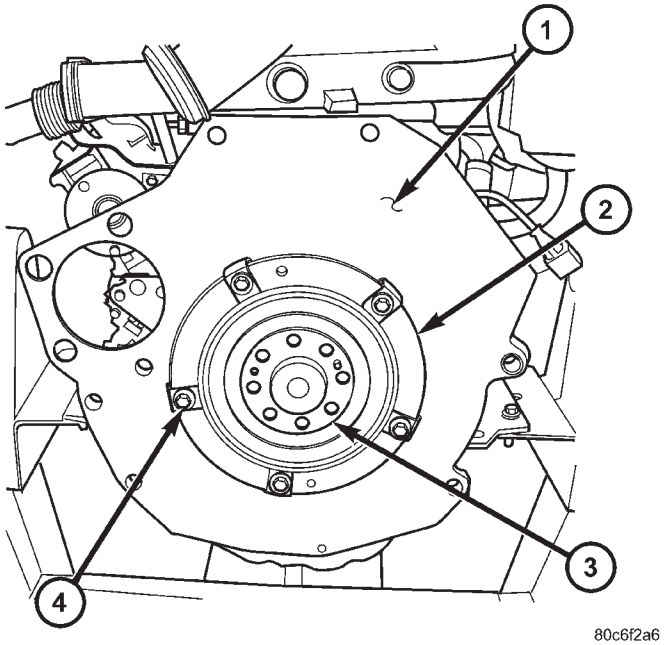

Fig. 36 REAR MAIN BEARING SUPPORT

1 - ADAPTER PLATE
2 - REAR MAIN BEARING SUPPORT
3 - CRANKSHAFT
4 - REAR MAIN BEARING SUPPORT RETAINING BOLTS

CRANKSHAFT (Continued)

(11) Remove rear main bearing support by threading two retaining bolts in holes provided. Tighten bolts equally to push main bearing support out of block (Fig. 37).

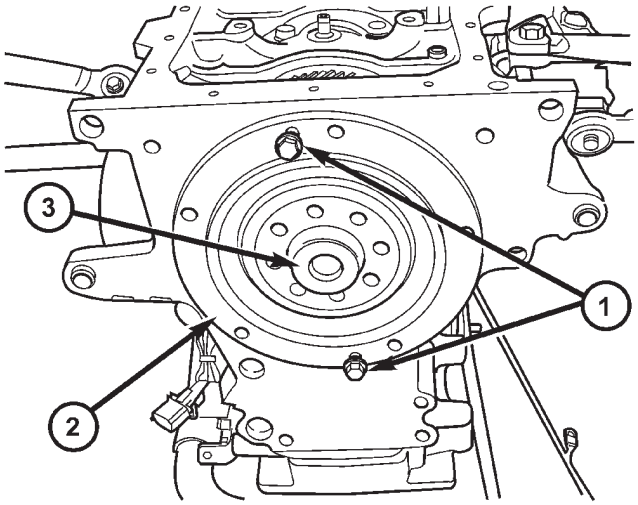

80c6ea3e

Fig. 37 REAR MAIN BEARING SUPPORT REMOVAL

1 - BOLTS
2 - REAR MAIN BEARING SUPPORT
3 - CRANKSHAFT

(12) Remove front engine cover (Refer to 9 - ENGINE/ENGINE BLOCK/ENGINE COVER - REMOVAL).

(13) Remove crankshaft sprocket.

(14) Remove oil pan (Refer to 9 - ENGINE/LUBRICATION/OIL PAN - REMOVAL).

(15) Remove oil pump pickup tube (Refer to 9 - ENGINE/LUBRICATION/OIL PUMP - REMOVAL).

(16) Remove balance shaft assembly (Refer to 9 - ENGINE/VALVE TIMING/BALANCE SHAFT - REMOVAL).

(17) Remove oil jets (Refer to 9 - ENGINE/LUBRICATION/OIL JET - REMOVAL).

(18) Remove piston and connecting rod assemblies (Refer to 9 - ENGINE/ENGINE BLOCK/PISTON & CONNECTING ROD - REMOVAL).

(19) Slide special tool VM.1069 on crankshaft (Fig. 38).

(20) Using special tool VM.1054, remove crankshaft support retainers (Fig. 39).

(21) Slide crankshaft out rear of engine block.

INSTALLATION

NOTE: Before installing crankshaft in engine block, be sure the notches in the crankshaft supports are facing towards the front of the engine.

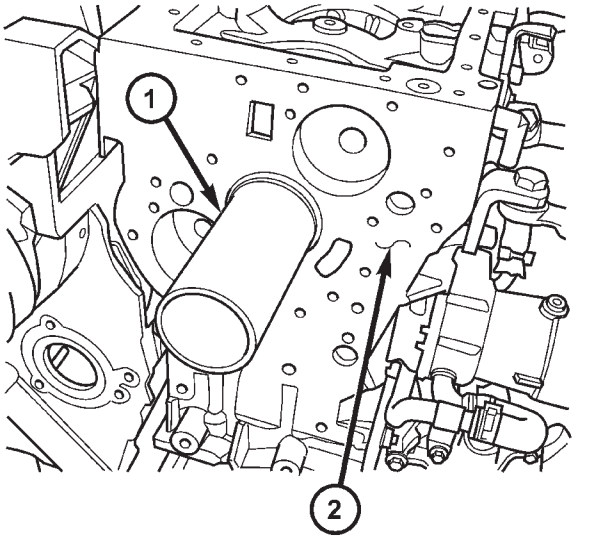

80c6ca52

Fig. 38 CRANKSHAFT SLEEVE VM.1069

1 - CRANKSHAFT SLEEVE VM.1069
2 - ENGINE BLOCK

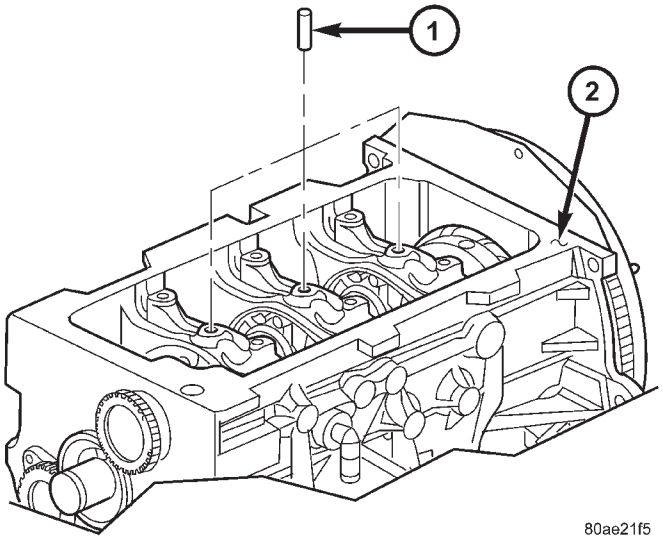

80ae21f5

Fig. 39 CRANKSHAFT SUPPORT RETAINERS/ BALANCE SHAFT OIL FEED

1 - CRANKSHAFT SUPPORT RETAINERS/BALANCE SHAFT OIL FEED
2 - ENGINE BLOCK

(1) Install crankshaft in engine block. **Be sure to align oil holes in crankshaft supports and engine block.**

(2) Install crankshaft support retainers (Fig. 39).

(3) Remove special tool VM.1069 from crankshaft (Fig. 38).

(4) Install crankshaft sprocket.

CRANKSHAFT (Continued)

(5) Install front engine cover (Refer to 9 - ENGINE/ENGINE BLOCK/ENGINE COVER - INSTALLATION).

(6) Install rear main bearing support in engine block. **Be sure to align oil hole in rear main bearing support with hole in block.**

(7) Install adapter plate and retaining bolts (Fig. 36). Torque bolts to 27.5N·m.

(8) Install flywheel.

(9) Install piston and connecting rod assemblies (Refer to 9 - ENGINE/ENGINE BLOCK/PISTON & CONNECTING ROD - INSTALLATION).

(10) Install oil jets (Refer to 9 - ENGINE/LUBRICATION/OIL JET - INSTALLATION).

(11) Install balance shaft assembly (Refer to 9 - ENGINE/VALVE TIMING/BALANCE SHAFT - INSTALLATION).

(12) Install oil pump pickup tube (Refer to 9 - ENGINE/LUBRICATION/OIL PUMP - INSTALLATION).

(13) Install oil pan (Refer to 9 - ENGINE/LUBRICATION/OIL PAN - INSTALLATION).

(14) Install cylinder head (Refer to 9 - ENGINE/CYLINDER HEAD - INSTALLATION).

(15) Install cylinder head cover/intake manifold (Refer to 9 - ENGINE/CYLINDER HEAD/CYLINDER HEAD COVER(S) - INSTALLATION).

(16) Install timing belt inner cover (Refer to 9 - ENGINE/VALVE TIMING/TIMING BELT / CHAIN COVER(S) - INSTALLATION).

(17) Install timing belt (Refer to 9 - ENGINE/VALVE TIMING/TIMING BELT/CHAIN AND SPROCKETS - INSTALLATION) .

(18) Install timing belt outer cover (Refer to 9 - ENGINE/VALVE TIMING/TIMING BELT / CHAIN COVER(S) - INSTALLATION).

(19) Install engine in vehicle.

(20) Fill engine oil with proper oil to correct level.

CYLINDER LINERS

DESCRIPTION

The cylinder wall liner used on this engine is of the wet design. O-rings are used to seal the liner to the engine block.

REMOVAL

(1) Remove engine from vehicle.

(2) With engine completely disassembled, use special tool VM.1001 to remove liner assembly (Fig. 40).

(3) Tighten bolt on VM.1001 to remove liner from block (Fig. 41).

(4) Remove shims from cylinder liner or cylinder block recess. Keep shims with each cylinder liner.

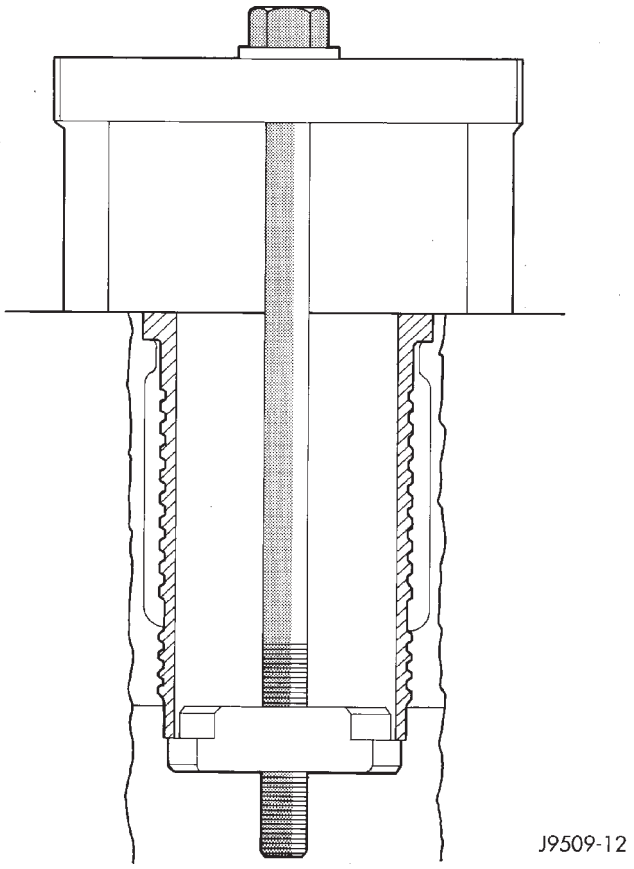

Fig. 40 CYLINDER LINER REMOVER

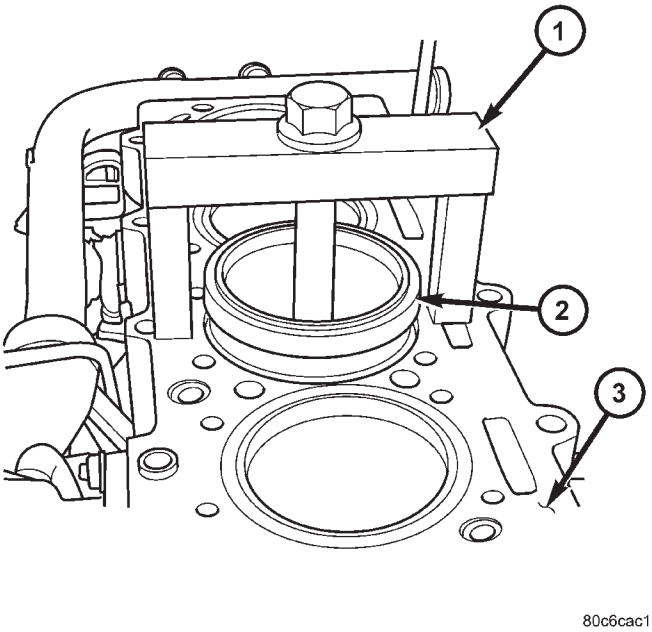

Fig. 41 CYLINDER LINER REMOVAL

1 - SPECIAL TOOL VM.1001
2 - CYLINDER LINER
3 - ENGINE BLOCK

CYLINDER LINERS (Continued)

INSPECTION

The cylinder walls should be checked for out-of-round and taper with a dial bore gauge. The cylinder bore out-of-round is 0.100 mm (.0039 in.) maximum and cylinder bore taper is 0.100 mm (.0039 in.) maximum. If the cylinder walls are badly scuffed or scored, new liners should be installed and honed, and new pistons and rings fitted.

Measure the cylinder bore at three levels in directions A and B (Fig. 42). Top measurement should be 10 mm (3/8 in.) down and bottom measurement should be 10 mm (3/8 in.) up from the bottom bore.

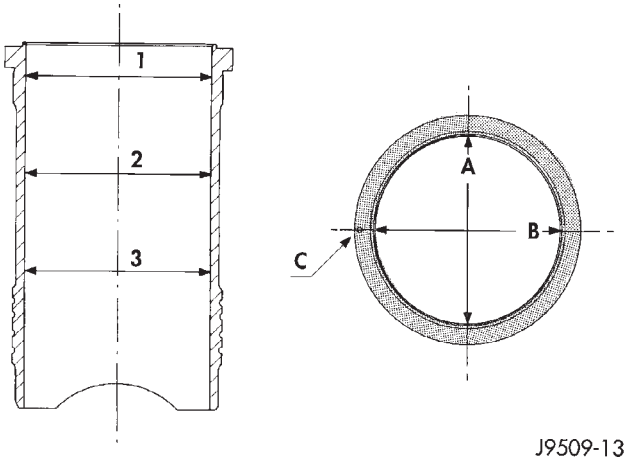

Fig. 42 LINER INSPECTION

INSTALLATION

(1) Carefully clean liner and engine block, and degrease the engine block where it comes into contact with the liners. Install the liners in the engine block as shown, rotating them back and forth by 45° in order to guarantee correct positioning (Fig. 43).

(2) Measure the liner recess relative to block deck with a dial indicator mounted on a special tool VM-1010 A. **All the measurements must be taken on high pressure pump side of engine block.**. Zero dial gauge on block deck.

(3) Move dial gauge to cylinder liner record reading on dial gauge.

(4) Remove liner and special tool.

(5) Then select the correct shim thickness to give proper protrusion (0.01 - 0.06 mm).

(6) Fit the shim and the O-rings onto the liner.

(7) Lubricate the lower liner location in the block.

(8) Fit the liners in the crankcase making sure that the shim is positioned correctly in the seat. Lock the liners in position using special tool (VM.1076) and bolts (Fig. 44). Clean the residual LOCTITE on the upper surface of the block deck.

(9) Recheck the liner protrusion. It should be 0.01 - 0.06 mm.

(10) Reassemble engine.

(11) Install engine in vehicle.

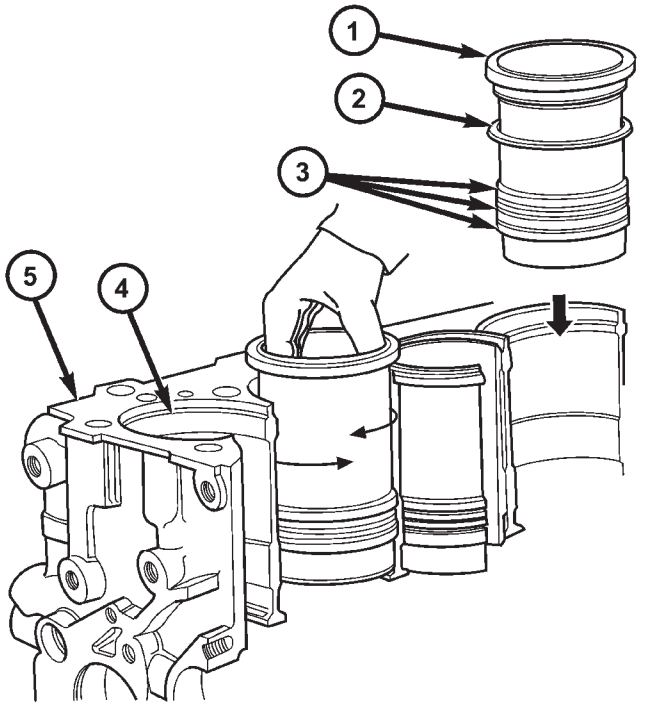

Fig. 43 LINER INSTALLATION

1 - CYLINDER LINER
2 - SHIMS
3 - O-RINGS
4 - BLOCK LEDGE
5 - ENGINE BLOCK

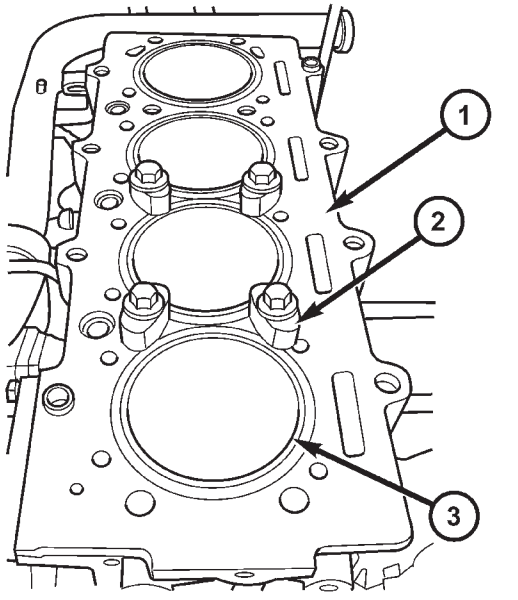

Fig. 44 LINER CLAMP LOCATION

1 - ENGINE BLOCK
2 - LINER RETAINER VM.1076
3 - CYLINDER LINER

INTERNAL VACUUM PUMP

DESCRIPTION

The diesel engine uses a internal vacuum pump. This vacuum pump is mounted in the front of the engine block under the engine front cover (Fig. 45). The vacuum pump is driven by a sprocket on the crankshaft.

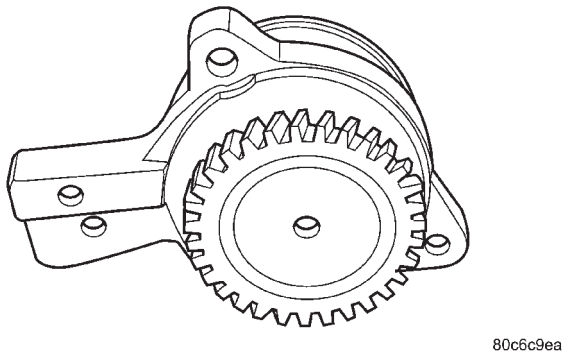

Fig. 45 VACUUM PUMP

REMOVAL

(1) Disconnect negative battery cable.
(2) Remove air cleaner housing.
(3) Remove power steering belt (Refer to 7 - COOLING/ACCESSORY DRIVE/DRIVE BELTS - REMOVAL).
(4) Remove accessory drive belt (Refer to 7 - COOLING/ACCESSORY DRIVE/DRIVE BELTS - REMOVAL).
(5) Support engine and remove right engine mount (Refer to 9 - ENGINE/ENGINE MOUNTING/RIGHT MOUNT - REMOVAL).
(6) Remove vibration damper/crankshaft pulley (Refer to 9 - ENGINE/ENGINE BLOCK/VIBRATION DAMPER - REMOVAL).
(7) Remove outer timing belt cover (Refer to 9 - ENGINE/VALVE TIMING/TIMING BELT / CHAIN COVER(S) - REMOVAL).
(8) Remove timing belt (Refer to 9 - ENGINE/ VALVE TIMING/TIMING BELT/CHAIN AND SPROCKETS - REMOVAL).
(9) Remove timing belt inner cover (Refer to 9 - ENGINE/VALVE TIMING/TIMING BELT / CHAIN COVER(S) - REMOVAL).

NOTE: Crankshaft hub has LHD thread.

(10) Remove crankshaft hub.
(11) Remove front engine cover (Refer to 9 - ENGINE/ENGINE BLOCK/ENGINE COVER - REMOVAL).
(12) Remove crankshaft sprocket (Fig. 46).
(13) Remove vacuum pump (Fig. 46).

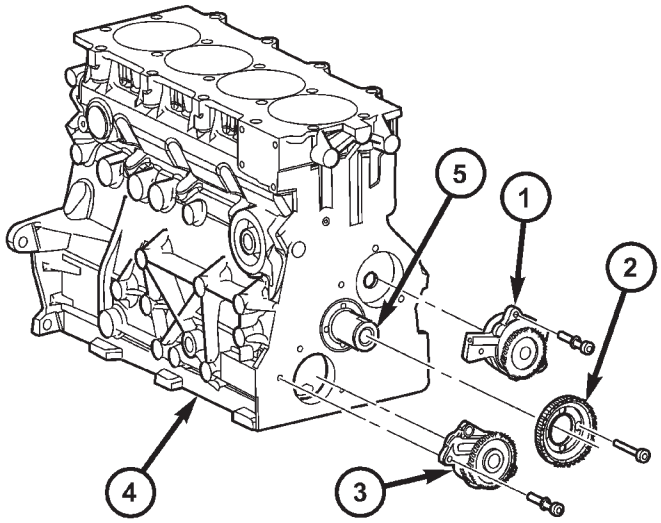

Fig. 46 OIL PUMP AND VACUUM PUMP

1 - VACUUM PUMP
2 - CRANKSHAFT SPROCKET
3 - OIL PUMP
4 - ENGINE BLOCK
5 - CRANKSHAFT

INSTALLATION

(1) Lubricate vacuum pump blades and install in vacuum pump body as shown (Fig. 47).
(2) Install vacuum pump in engine block (Fig. 46). Torque bolts to 10.8N·m.
(3) Install crankshaft sprocket (Fig. 46). Torque bolts to 10.8N·m.
(4) Install front engine cover (Refer to 9 - ENGINE/ENGINE BLOCK/ENGINE COVER - INSTALLATION).
(5) Install front crankshaft hub. Torque bolt to 304N·m.
(6) Install timing belt inner cover (Refer to 9 - ENGINE/VALVE TIMING/TIMING BELT / CHAIN COVER(S) - INSTALLATION).
(7) Install timing belt (Refer to 9 - ENGINE/ VALVE TIMING/TIMING BELT/CHAIN AND SPROCKETS - INSTALLATION) .
(8) Install timing belt outer cover (Refer to 9 - ENGINE/VALVE TIMING/TIMING BELT / CHAIN COVER(S) - INSTALLATION).
(9) Install vibration damper/crankshaft pulley.

INTERNAL VACUUM PUMP (Continued)

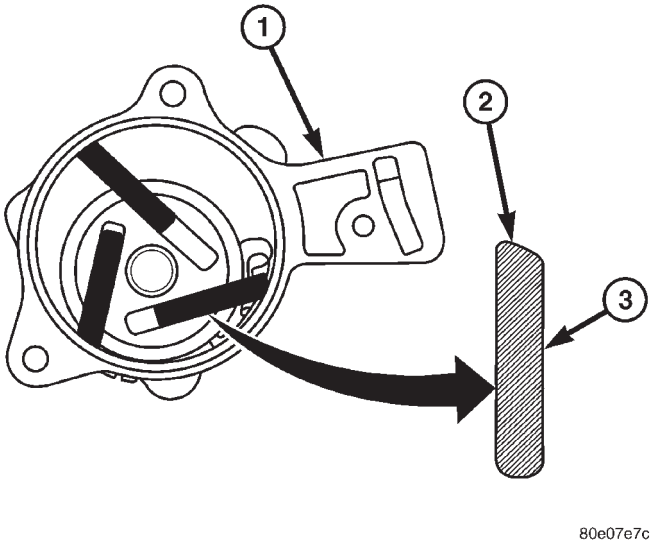

Fig. 47 VACUUM PUMP COMPONENTS

1 - VACUUM PUMP BODY
2 - VACUUM PUMP BLADE TAPERED EDGE
3 - VACUUM PUMP BLADE

(10) Install right engine mount (Refer to 9 - ENGINE/ENGINE MOUNTING/RIGHT MOUNT - INSTALLATION).

(11) Install accessory drive belt (Refer to 7 - COOLING/ACCESSORY DRIVE/DRIVE BELTS - INSTALLATION).

(12) Install power steering belt (Refer to 7 - COOLING/ACCESSORY DRIVE/DRIVE BELTS - INSTALLATION).

(13) Install air cleaner housing.

(14) Connect negative battery cable.

PISTON & CONNECTING ROD

DESCRIPTION

The pistons are of a free floating design. Oil jets in the engine block lubricate and cool the piston and pin assembly. The connecting rods have a pressed in place wrist pin bushing which is lubricated by the oil jets (Fig. 48).

STANDARD PROCEDURE - PISTON RING FITTING

(1) Wipe cylinder bore clean. Insert ring and push down with piston to ensure it is square in bore. The ring gap measurement must be made with the ring positioning at least 12 mm (0.50 in.) from bottom of cylinder bore (Fig. 49). Check gap with feeler gauge. Top compression ring gap .30 to .45mm (.0118 to .0177 in.). Second compression ring gap .30 to .45mm (.0118 to .0177 in.). Oil control ring gap .25 to .50mm (.0098 to .0196 in.).

(2) If ring gaps exceed dimension given, new rings or cylinder liners must be fitted. Keep piston rings in piston sets.

(3) Check piston ring to groove clearance (Fig. 50). Top compression ring gap .080 to .130mm (.0031 to .0051 in.). Second compression ring gap .070 to .110mm (.0027 to .0043 in.). Oil control ring gap .040 to .080mm (.0015 to .0031 in.).

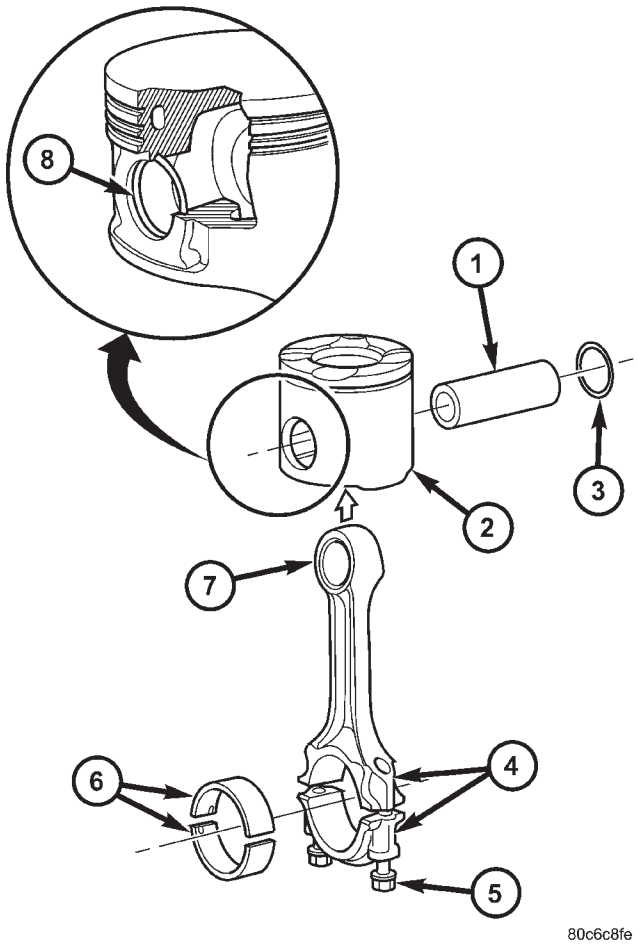

Fig. 48 PISTON AND CONNECTING ROD ASSEMBLY

1 - PISTON PIN
2 - PISTON
3 - SNAP RING
4 - CONNECTING ROD ALIGNMENT NUMBERS
5 - CONNECTING ROD BOLT
6 - CONNECTING ROD BEARING
7 - CONNECTING ROD
8 - SNAP RING

REMOVAL

(1) Disconnect negative battery cable.

(2) Remove cylinder head (Refer to 9 - ENGINE/ CYLINDER HEAD - REMOVAL).

PISTON & CONNECTING ROD (Continued)

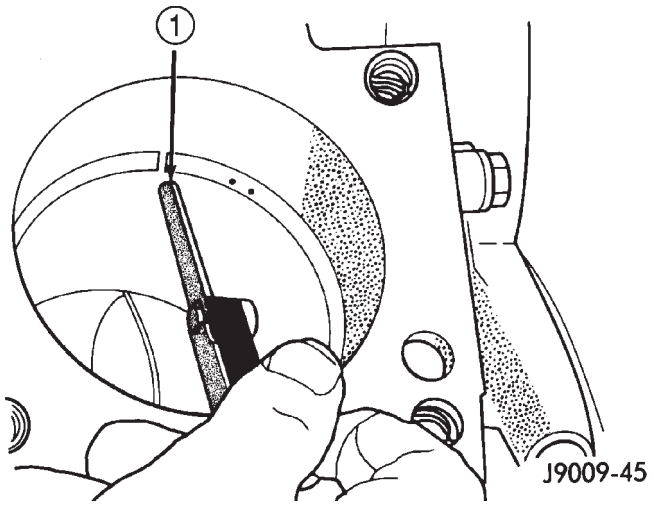

Fig. 49 RING END GAP MEASUREMENT

1 - FEELER GAUGE

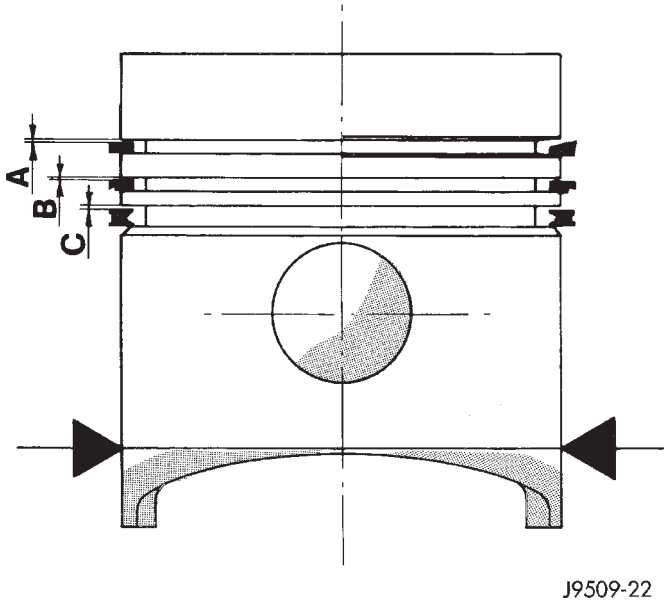

Fig. 50 PISTON RING TO GROOVE CLEARANCE

(3) Raise vehicle on hoist.

(4) Remove oil pan (Refer to 9 - ENGINE/LUBRICATION/OIL PAN - REMOVAL).

(5) Remove oil pump pickup tube.(Refer to 9 - ENGINE/LUBRICATION/OIL PUMP - REMOVAL)

(6) Remove balance shaft assembly (Refer to 9 - ENGINE/VALVE TIMING/BALANCE SHAFT - REMOVAL).

(7) Remove top ridge of cylinder bores with a ridge reamer before removing pistons from cylinder block. **Be sure to keep top of pistons covered during this operation.**

(8) Piston and connecting rods must be removed from top of cylinder block. Rotate crankshaft so that each connecting rod is centered in cylinder bore.

NOTE: Be careful not to nick or scratch crankshaft journals

(9) After removal, install bearing cap on the mating rod and mark pistons with matching cylinder number when removed from engine block.

PISTON PIN - REMOVAL

(1) Secure connecting rods in a soft jawed vice.

(2) Remove 2 snap rings securing piston pin (Fig. 51).

(3) Push piston pin out of piston and connecting rod (Fig. 51).

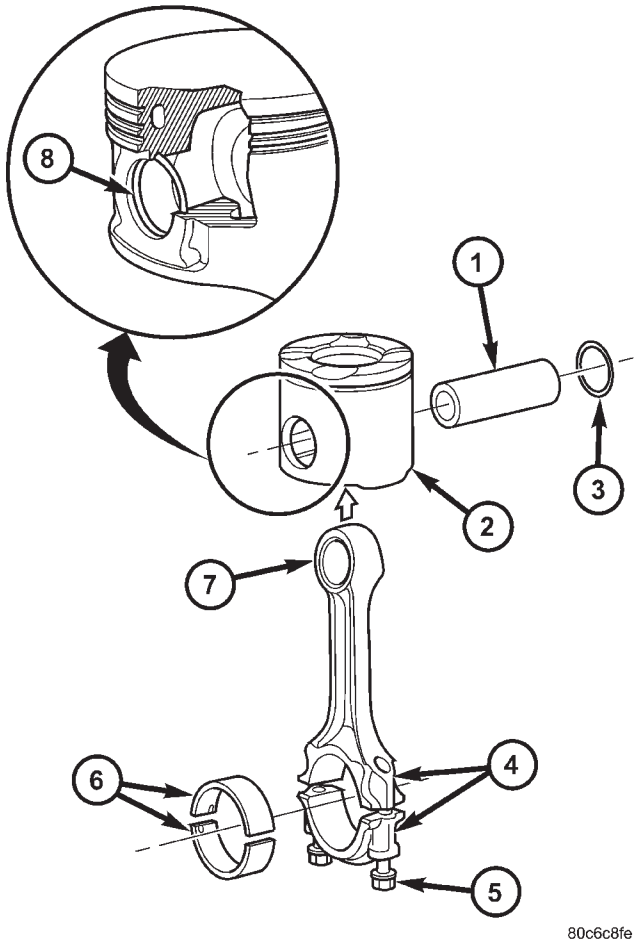

Fig. 51 PISTON AND CONNECTING ROD ASSEMBLY

1 - PISTON PIN
2 - PISTON
3 - SNAP RING
4 - CONNECTING ROD ALIGNMENT NUMBERS
5 - CONNECTING ROD BOLT
6 - CONNECTING ROD BEARING
7 - CONNECTING ROD
8 - SNAP RING

PISTON & CONNECTING ROD (Continued)

PISTON RING - REMOVAL

(1) ID mark on face of top and second piston rings must point toward piston crown.

(2) Using a suitable ring expander, remove top and second piston rings (Fig. 52).

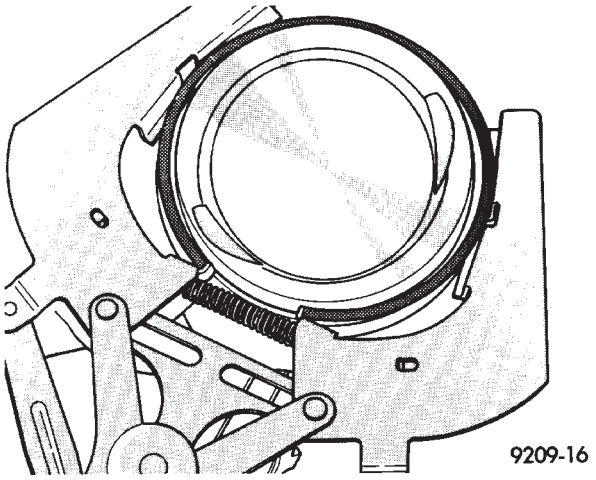

Fig. 52 PISTON RINGS - REMOVAL/INSTALLATION

(3) Remove upper oil ring side rail, lower oil ring side rail and then the oil expander from piston.

(4) Carefully clean carbon from piston crowns, skirts and ring grooves ensuring the 4 oil holes in the oil control ring groove are clear.

INSPECTION

PISTONS

(1) Piston Diameter: Size: 91.912-91.928mm (3.6185-3.6192 in.) Maximum wear limit .05mm (.0019 in.).

(2) Check piston pin bores in piston for roundness. Make 3 checks at 120° intervals. Maximum out of roundness .05mm (.0019in.).

(3) The piston diameter should be measured approximately 15 mm (.590 in.) up from the base.

(4) Skirt wear should not exceed 0.1 mm (.00039 in.).

(5) The clearance between the cylinder liner and piston should not exceed 0.065-0.083 mm (.0025-.0032 in.).

(6) Make sure the weight of the pistons does not differ by more than 5 g.

CONNECTING RODS

(1) Assemble bearing shells and bearing caps to their respective connecting rods ensuring that the serrations on the cap and reference marks are aligned.

(2) Tighten connecting cap bolts to 29 N·m (21 ft. lbs.) plus 60°.

(3) Without loosening connecting rod bolts, tighten all bolts to 88N·m.

(4) Check and record internal diameter of crank end of connecting rod.

NOTE: When changing connecting rods, all four must have the same weight and be stamped with the same number. Replacement connecting rods will only be supplied in sets of four.

Connecting rods are supplied in sets of four since they all must be of the same weight category. Max allowable weight difference is 5 gr.

NOTE: On one side of the big end of the con-rod there is a two-digit number which refers to the weight category. On the other side of the big end there is a four digit number on both the rod and the cap. These numbers must both face the injection pump side of the block (Fig. 53). Lightly heat the piston in oven. Insert piston pin in position and secure it with provided snap rings.

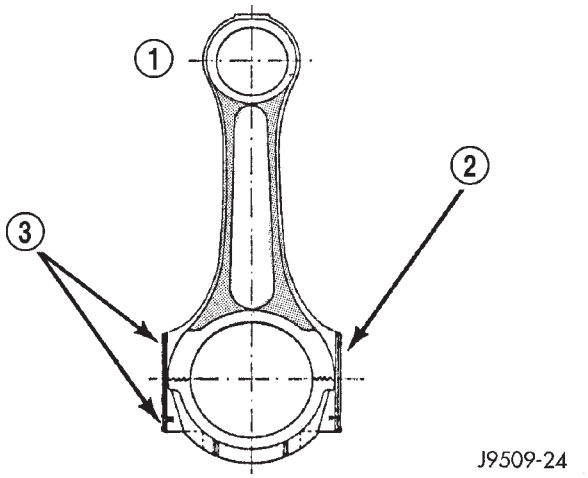

Fig. 53 CONNECTING ROD IDENTIFICATION

1 - SMALL END OF CONNECTING ROD
2 - 2 DIGIT NUMBER LOCATION
3 - 4 DIGIT NUMBER LOCATION

The Four digit numbers marked on con rod big end and rod cap must be on the same side as the injection pump (Fig. 53). After having coated threads with Molyguard, tighten con rod bolts to 29 N·m (21 ft. lbs.) plus 60°.

PISTON PINS

(1) Measure the diameter of piston pin in the center and both ends.

(2) Piston pin diameter is 29.992 to 29.996mm (1.1807 to 1.1809 in.).

PISTON & CONNECTING ROD (Continued)

INSTALLATION

PISTON PIN INSTALLATION

(1) Secure connecting rod in soft jawed vice.
(2) Lubricate piston pin and piston with clean engine oil.
(3) Position piston on connecting rod (Fig. 54).

CAUTION: Ensure arrow on piston crown and the bearing cap numbers on the connecting rod are on the opposite side.

(4) Install piston pin (Fig. 54).
(5) Install clips in piston to retain piston pin (Fig. 54).

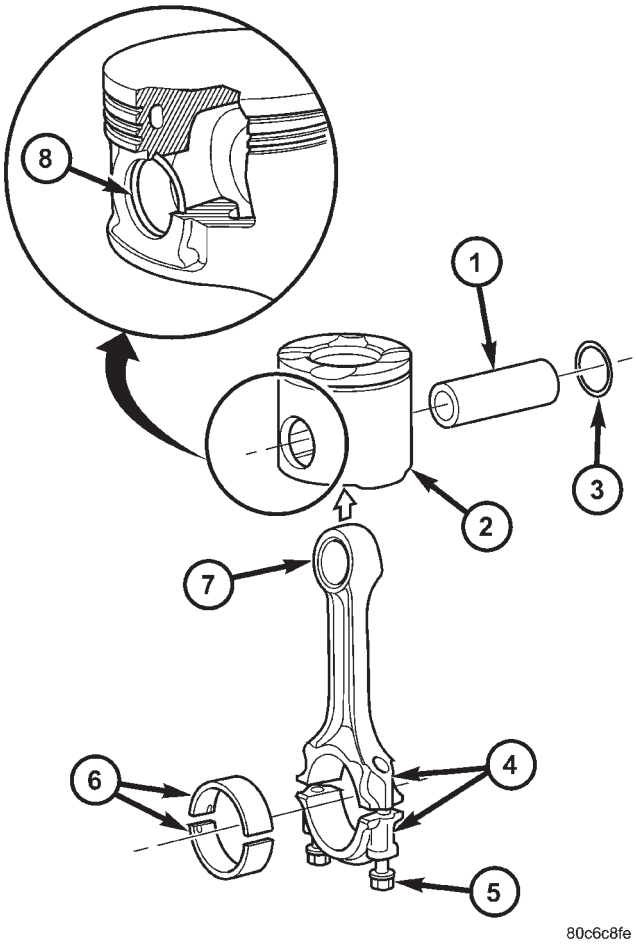

Fig. 54 PISTON AND CONNECTING ROD ASSEMBLY

1 - PISTON PIN
2 - PISTON
3 - SNAP RING
4 - CONNECTING ROD ALIGNMENT NUMBERS
5 - CONNECTING ROD BOLT
6 - CONNECTING ROD BEARING
7 - CONNECTING ROD
8 - SNAP RING

(6) Remove connecting rod from vice.

PISTON RINGS - INSTALLATION

(1) Install rings on the pistons using a suitable ring expander (Fig. 55).

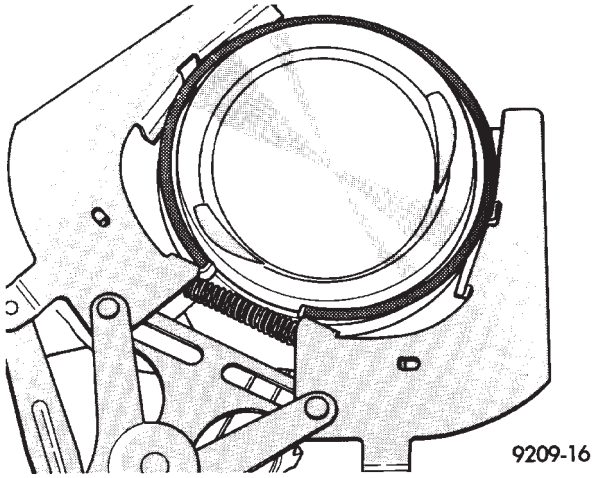

Fig. 55 PISTON RINGS-INSTALLATION

(2) Top compression ring is tapered and chromium plated. The second ring is of the scraper type and must be installed with scraping edge facing bottom of the piston. The third is an oil control ring. Ring gaps must be positioned, before inserting piston into the liners, as follows.
(3) Top ring gap must be positioned at the #3 position (looking at the piston crown from above) (Fig. 56).
(4) Second piston ring gap should be positioned at the #1 position (Fig. 56).
(5) Oil control ring gap should be positioned at the #2 position (Fig. 56).

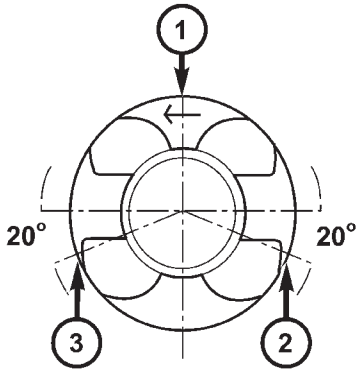

Fig. 56 PISTON RING GAP LOCATION

3 - TOP COMPRESSION RING GAP POSITION
1 - SECOND COMPRESSION RING GAP POSITION
2 - OIL CONTROL RING GAP POSITION

(6) When assembling pistons check that components are installed in the same position as before dis-

PISTON & CONNECTING ROD (Continued)

assembly, determined by the numbers stamped on the crown of individual pistons. Engine cylinders are numbered starting from gear train end of the engine. **Face arrow on top of piston toward front of engine**. Therefore, the numbers stamped on connecting rod big end should face toward the injection pump side of engine. To insert piston into cylinder use a ring compressor (VM.1065) as shown in (Fig. 57).

INSTALLATION

(1) Before installing pistons, and connecting rod assemblies into the bore, be sure that compression ring gaps are staggered so that neither is in line with oil ring rail gap (Fig. 56).

(2) Before installing the ring compressor, make sure the oil ring expander ends are butted together.

(3) Immerse the piston head and rings in clean engine oil, slide the ring compressor, over the piston and tighten (Fig. 57). **Ensure position of rings does not change during this operation**.

NOTE: Be sure arrow on top of piston faces towards front of engine.

NOTE: Be careful not to nick crankshaft journals.

(4) Rotate crankshaft so that the connecting rod journal is on the center of the cylinder bore. Insert rod and piston into cylinder bore and guide rod over the crankshaft journal.

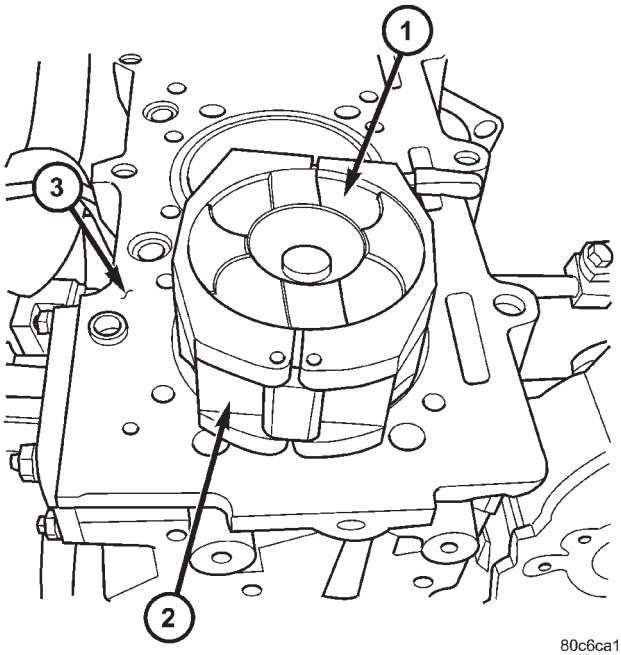

Fig. 57 PISTON INSTALLATION USING VM.1065

(5) Tap the piston down in cylinder bore, using a hammer handle. At the same time, guide connecting rod into position on connecting rod journal.

(6) Install connecting rod caps (Fig. 58). Install rod bolts and tighten to 30N·m (22 ft.lb.) plus 60°. Then torque to 88N·m (65 ft.lb).

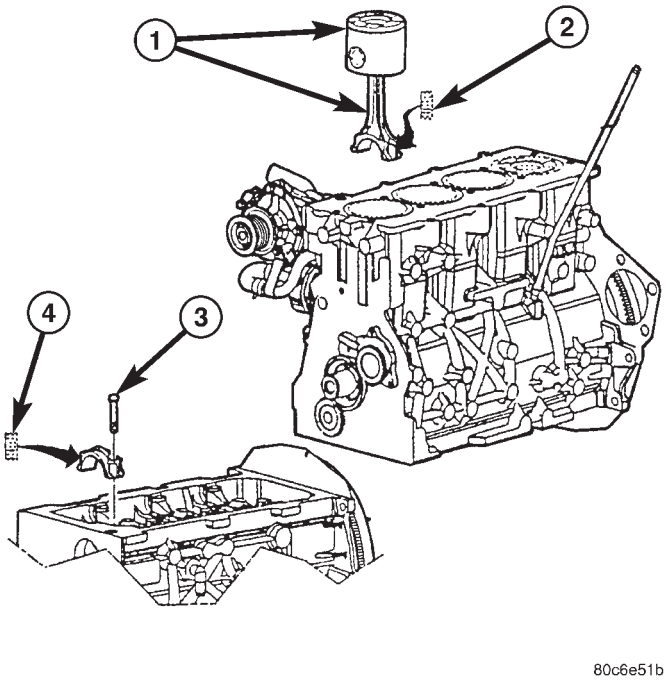

Fig. 58 PISTON AND CONNECTING ROD INSTALLATION

1 - PISTON AND CONNECTING ROD ASSEMBLY
2 - FOUR DIGIT NUMBER
3 - CONNECTING ROD BOLT
4 - FOUR DIGIT NUMBER

(7) Install cylinder head (Refer to 9 - ENGINE/ CYLINDER HEAD - INSTALLATION).

(8) Install balance shaft assembly (Refer to 9 - ENGINE/VALVE TIMING/BALANCE SHAFT - INSTALLATION).

(9) Install oil pump pickup tube (Refer to 9 - ENGINE/LUBRICATION/OIL PUMP - INSTALLATION).

(10) Install oil pan (Refer to 9 - ENGINE/LUBRICATION/OIL PAN - INSTALLATION).

(11) Connect negative battery cable.

CRANKSHAFT OIL SEAL - FRONT

REMOVAL

(1) Disconnect negative battery cable.
(2) Remove air cleaner housing.
(3) Support engine and remove right engine mount (Refer to 9 - ENGINE/ENGINE MOUNTING/RIGHT MOUNT - REMOVAL).
(4) Remove power steering belt (Refer to 7 - COOLING/ACCESSORY DRIVE/DRIVE BELTS - REMOVAL).
(5) Remove accessory drive belt (Refer to 7 - COOLING/ACCESSORY DRIVE/DRIVE BELTS - REMOVAL).
(6) Remove vibration damper/crankshaft pulley (Refer to 9 - ENGINE/ENGINE BLOCK/VIBRATION DAMPER - REMOVAL).
(7) Remove outer timing belt cover (Refer to 9 - ENGINE/VALVE TIMING/TIMING BELT / CHAIN COVER(S) - REMOVAL).
(8) Remove timing belt (Refer to 9 - ENGINE/ VALVE TIMING/TIMING BELT/CHAIN AND SPROCKETS - REMOVAL).
(9) Remove timing belt inner cover (Refer to 9 - ENGINE/VALVE TIMING/TIMING BELT / CHAIN COVER(S) - REMOVAL).

NOTE: Crankshaft hub retaining bolt has LHD thread.

(10) Remove crankshaft hub.
(11) Remove front engine cover (Fig. 59) (Refer to 9 - ENGINE/ENGINE BLOCK/ENGINE COVER - REMOVAL).
(12) With cover on work bench, pry out old seal.

INSTALLATION

(1) Clean engine block and front engine cover sealing surfaces.
(2) Install crankshaft oil seal on VM.1061 (Fig. 60).
(3) Place sleeve for VM.1061 on workbench as shown (Fig. 60).

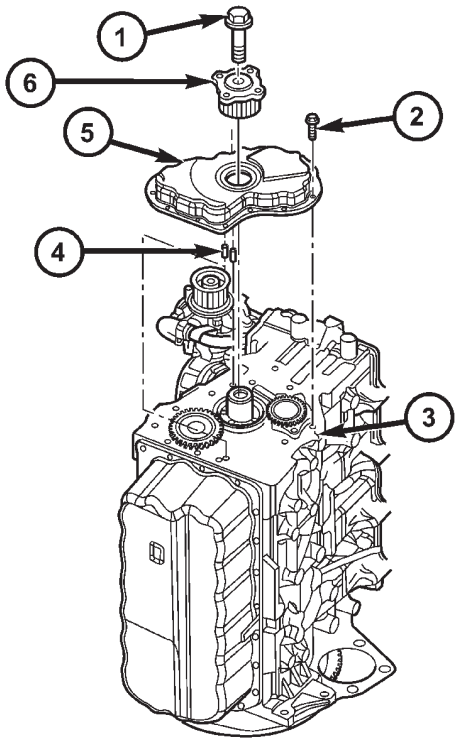

Fig. 59 ENGINE COVER - FRONT

1 - CRANKSHAFT HUB RETAINING BOLT
2 - FRONT ENGINE COVER RETAINING BOLTS
3 - ENGINE BLOCK
4 - FRONT ENGINE COVER ALIGNMENT DOWELS
5 - FRONT ENGINE COVER
6 - CRANKSHAFT HUB

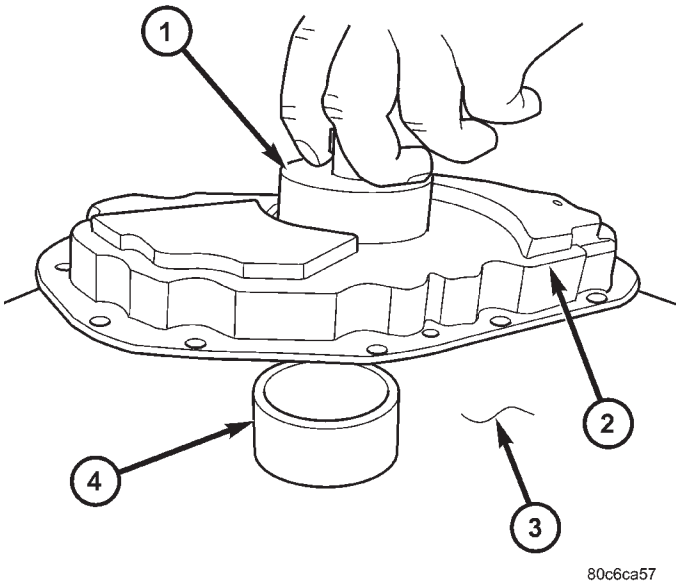

Fig. 60 VM.1061 PLACEMENT

1 - VM.1061
2 - FRONT ENGINE COVER
3 - WORK BENCH
4 - SLEEVE FROM VM.1061

CRANKSHAFT OIL SEAL - FRONT (Continued)

(4) Using hammer, install new seal into front engine cover (Fig. 61).

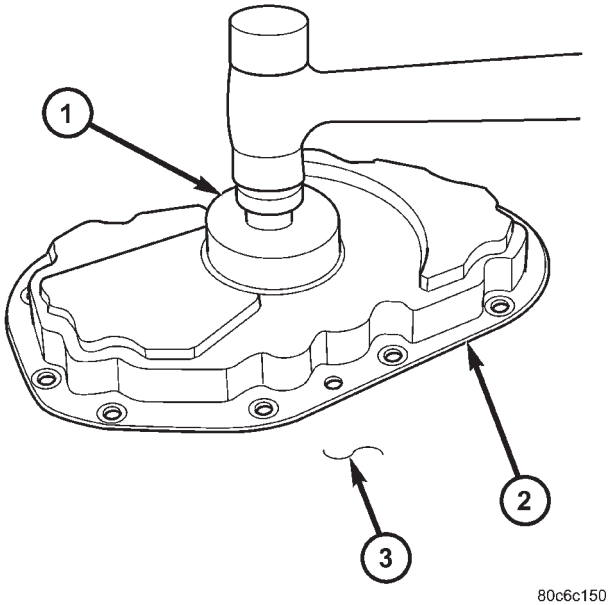

Fig. 61 CRANKSHAFT OIL SEAL INSTALLATION WITH VM.1061

1 - VM.1061
2 - FRONT ENGINE COVER
3 - WORK BENCH

(5) Install front engine cover (Refer to 9 - ENGINE/ENGINE BLOCK/ENGINE COVER - INSTALLATION).

(6) Install crankshaft hub and retaining bolt. Torque bolt to 304N·m.

(7) Install timing belt inner cover (Refer to 9 - ENGINE/VALVE TIMING/TIMING BELT / CHAIN COVER(S) - INSTALLATION).

(8) Install timing belt (Refer to 9 - ENGINE/ VALVE TIMING/TIMING BELT/CHAIN AND SPROCKETS - INSTALLATION) .

(9) Install timing belt outer cover (Refer to 9 - ENGINE/VALVE TIMING/TIMING BELT / CHAIN COVER(S) - INSTALLATION).

(10) Install vibration damper/crankshaft pulley (Refer to 9 - ENGINE/ENGINE BLOCK/VIBRATION DAMPER - INSTALLATION).

(11) Install accessory drive belt (Refer to 7 - COOLING/ACCESSORY DRIVE/DRIVE BELTS - INSTALLATION).

(12) Install power steering belt (Refer to 7 - COOLING/ACCESSORY DRIVE/DRIVE BELTS - INSTALLATION).

(13) Install right engine mount (Refer to 9 - ENGINE/ENGINE MOUNTING/RIGHT MOUNT - INSTALLATION).

(14) Install air cleaner housing.

(15) Connect negative battery cable.

VIBRATION DAMPER

REMOVAL

(1) Remove power steering belt (Refer to 7 - COOLING/ACCESSORY DRIVE/DRIVE BELTS - REMOVAL).

(2) Remove accessory drive belt (Refer to 7 - COOLING/ACCESSORY DRIVE/DRIVE BELTS - REMOVAL).

(3) Remove vibration damper retaining bolts and damper (Fig. 62).

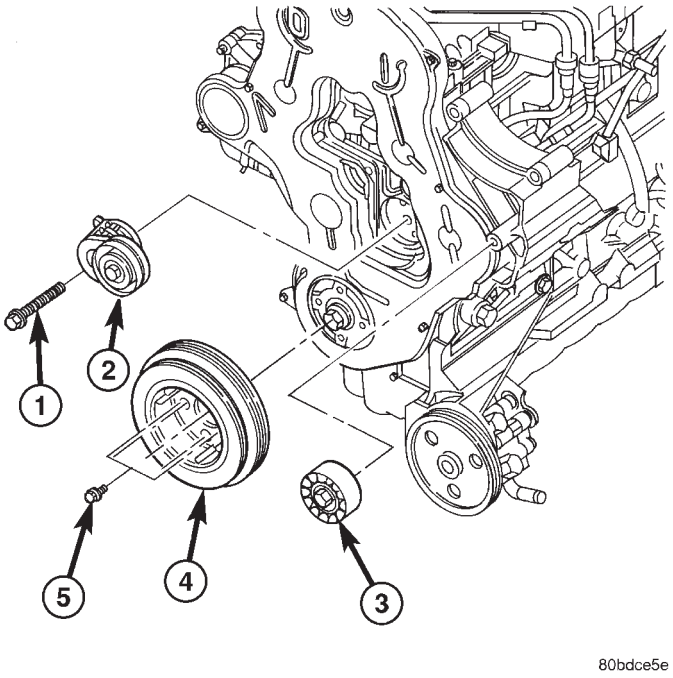

Fig. 62 VIBRATION DAMPER

1 - BELT TENSIONER RETAINING BOLT
2 - BELT TENSIONER
3 - IDLER PULLEY
4 - VIBRATION DAMPER/CRANKSHAFT PULLEY
5 - VIBRATION DAMPER/CRANKSHAFT PULLEY RETAINING BOLTS

INSTALLATION

(1) Install vibration damper and retaining bolts (Fig. 62). Torque bolts to 27.5N·m.

(2) Install accessory drive belt (Refer to 7 - COOLING/ACCESSORY DRIVE/DRIVE BELTS - INSTALLATION).

(3) Install power steering belt (Refer to 7 - COOLING/ACCESSORY DRIVE/DRIVE BELTS - INSTALLATION).

ENGINE COVER - FRONT

DESCRIPTION

The front engine cover on this engine is a stamped steel cover which covers the oil pump and vacuum pump.

REMOVAL

(1) Disconnect negative battery cable.
(2) Remove air cleaner housing.
(3) Support engine and remove right engine mount (Refer to 9 - ENGINE/ENGINE MOUNTING/RIGHT MOUNT - REMOVAL).
(4) Remove power steering belt (Refer to 7 - COOLING/ACCESSORY DRIVE/DRIVE BELTS - REMOVAL).
(5) Remove accessory drive belt (Refer to 7 - COOLING/ACCESSORY DRIVE/DRIVE BELTS - REMOVAL).
(6) Remove vibration damper (Refer to 9 - ENGINE/ENGINE BLOCK/VIBRATION DAMPER - REMOVAL).
(7) Remove timing belt outer cover (Refer to 9 - ENGINE/VALVE TIMING/TIMING BELT / CHAIN COVER(S) - REMOVAL).

CAUTION: Before removing the cylinder head cover/ intake manifold or timing belt the engine must put at 90° after TDC. Failure to do so could result in valve and/or piston damage during reassembly. (Refer to 9 - ENGINE/VALVE TIMING - STANDARD PROCEDURE)

(8) Remove timing belt (Refer to 9 - ENGINE/ VALVE TIMING/TIMING BELT/CHAIN AND SPROCKETS - REMOVAL).
(9) Remove timing belt inner cover (Refer to 9 - ENGINE/VALVE TIMING/TIMING BELT / CHAIN COVER(S) - REMOVAL).

NOTE: Crankshaft hub has LHD thread.

(10) Remove crankshaft hub.
(11) Remove front engine cover (Fig. 63).

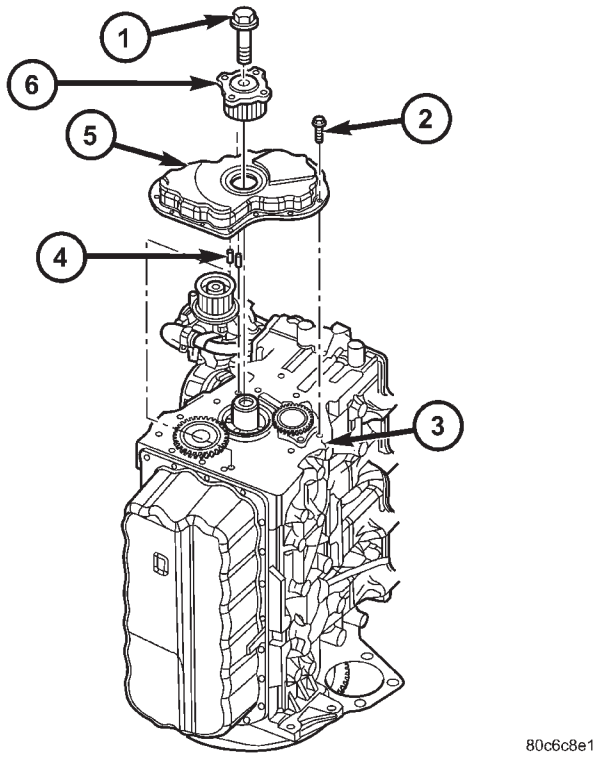

Fig. 63 ENGINE COVER - FRONT

1 - CRANKSHAFT HUB RETAINING BOLT
2 - FRONT ENGINE COVER RETAINING BOLTS
3 - ENGINE BLOCK
4 - FRONT ENGINE COVER ALIGNMENT DOWELS
5 - FRONT ENGINE COVER
6 - CRANKSHAFT HUB

INSTALLATION

(1) Clean engine block and front engine cover sealing surfaces.
(2) Apply a continous 3mm bead of Silicone Sealer to cover, install within 10 minutes (Fig. 63). Torque bolts to 11.8N·m.
(3) Install crankshaft hub (Fig. 63). Torque bolt to 304N·m.
(4) Install timing belt inner cover (Refer to 9 - ENGINE/VALVE TIMING/TIMING BELT / CHAIN COVER(S) - INSTALLATION).
(5) Install timing belt (Refer to 9 - ENGINE/ VALVE TIMING/TIMING BELT/CHAIN AND SPROCKETS - INSTALLATION) .
(6) Install timing belt outer cover (Refer to 9 - ENGINE/VALVE TIMING/TIMING BELT / CHAIN COVER(S) - INSTALLATION).
(7) Install vibration damper (Refer to 9 - ENGINE/ ENGINE BLOCK/VIBRATION DAMPER - INSTALLATION).
(8) Install right engine mount (Refer to 9 - ENGINE/ENGINE MOUNTING/RIGHT MOUNT - INSTALLATION).
(9) Install accessory drive belt (Refer to 7 - COOLING/ACCESSORY DRIVE/DRIVE BELTS - INSTALLATION).
(10) Install power steering belt (Refer to 7 - COOLING/ACCESSORY DRIVE/DRIVE BELTS - INSTALLATION).
(11) Install air cleaner housing.
(12) Connect negative battery cable.

CRANKSHAFT MAIN BEARINGS

REMOVAL

The engine must be removed from vehicle and completely disassembled to replace the front main bearing.

CRANKSHAFT MAIN BEARINGS

(1) With crankshaft assembly removed from engine.

(2) Remove crankshaft supports from crankshaft and remove bearing halves from supports (Fig. 64).

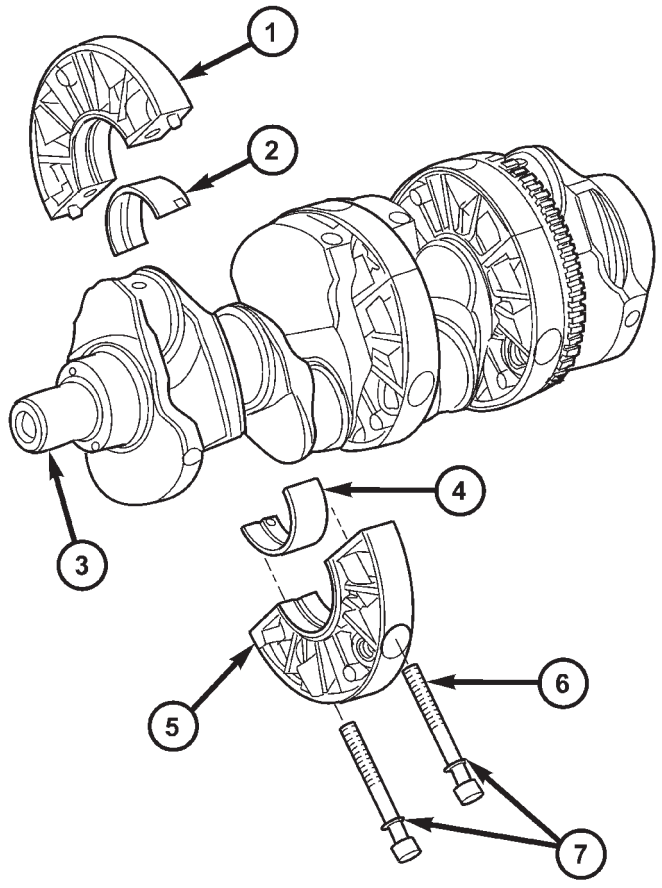

80adf230

Fig. 64 CRANKSHAFT ASSEMBLY

1 - CRANKSHAFT SUPPORT HALVE
2 - MAIN BEARING HALVE
3 - CRANKSHAFT
4 - MAIN BEARING HALVE
5 - CRANKSHAFT SUPPORT HALVE
6 - MAIN BEARING SUPPORT BOLTS
7 - WASHERS

CRANKSHAFT FRONT MAIN BEARING

(1) Using special tool VM.1073 push front main bearing out of front of engine block (Fig. 65).

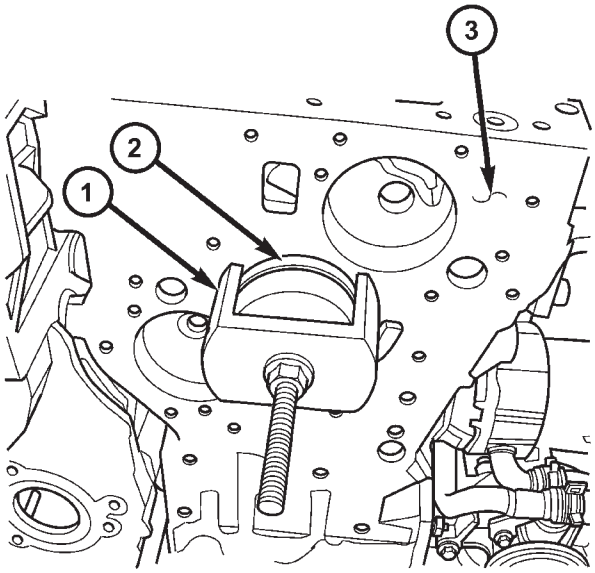

80c6ca73

Fig. 65 FRONT MAIN BEARING REMOVAL

1 - VM.1073
2 - FRONT CRANKSHAFT MAIN BEARING
3 - ENGINE BLOCK

CRANKSHAFT MAIN BEARINGS (Continued)

INSTALLATION

CRANKSHAFT MAIN BEARINGS

(1) Install bearing halves in crankshaft supports.
(2) Lubricate crankshaft and main bearings with clean engine oil.
(3) Install crankshaft supports on crankshaft (Fig. 66). Torque bolts to 44.1N·m.

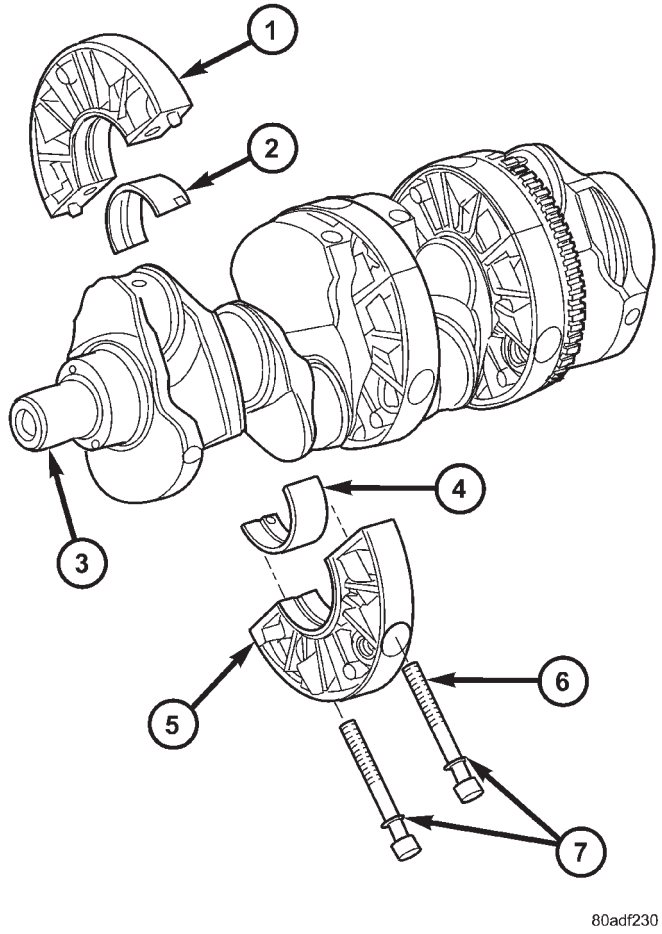

Fig. 66 CRANKSHAFT ASSEMBLY

1 - CRANKSHAFT SUPPORT HALVE
2 - MAIN BEARING HALVE
3 - CRANKSHAFT
4 - MAIN BEARING HALVE
5 - CRANKSHAFT SUPPORT HALVE
6 - MAIN BEARING SUPPORT BOLTS
7 - WASHERS

FRONT CRANKSHAFT MAIN BEARING

(1) Using special tool VM.1073, push front crankshaft main bearing in engine block (Fig. 67).
(2) Be sure oil hole in bearing lines up with oil gallery in engine block (Fig. 68).
(3) Reassemble engine and install in vehicle.

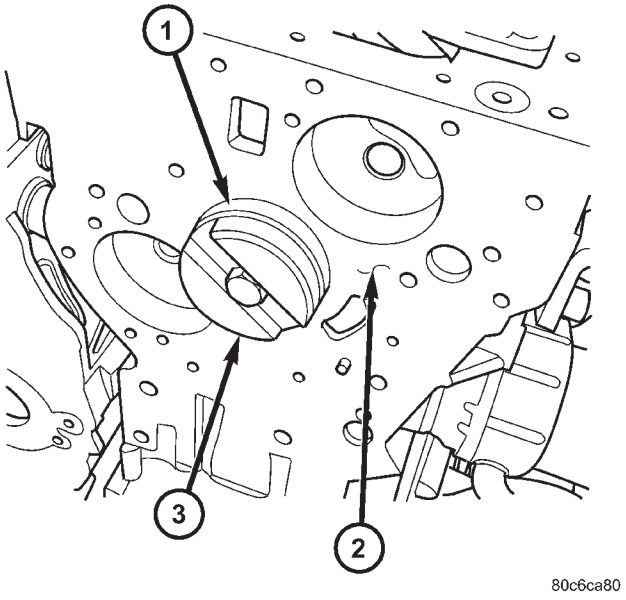

Fig. 67 FRONT MAIN BEARING INSTALLATION

1 - FRONT CRANKSHAFT MAIN BEARING
2 - ENGINE BLOCK
3 - SPECIAL TOOL VM.1073

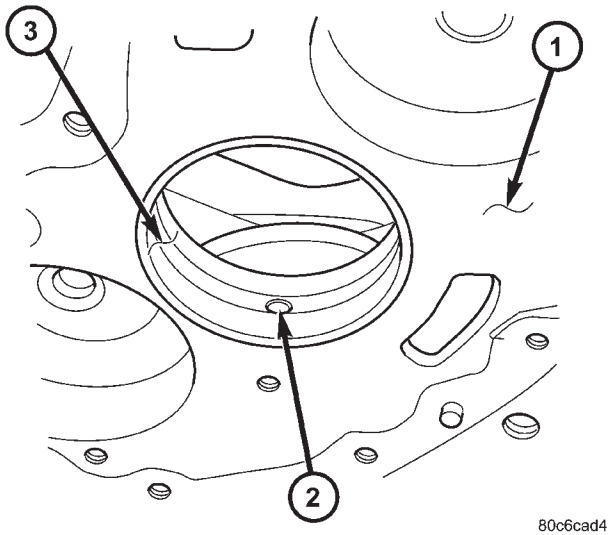

Fig. 68 FRONT MAIN BEARING ALIGNMENT

1 - ENGINE BLOCK
2 - OIL HOLE IN BEARING
3 - FRONT CRANKSHAFT MAIN BEARING

CRANKSHAFT OIL SEAL - REAR

REMOVAL

This must be done with either the engine or transmission removed from vehicle.

(1) Remove flywheel assembly.
(2) Pry out old crankshaft oil seal.

INSTALLATION

(1) Using special tool VM.1050, install rear crankshaft oil seal in rear main bearing support (Fig. 69).

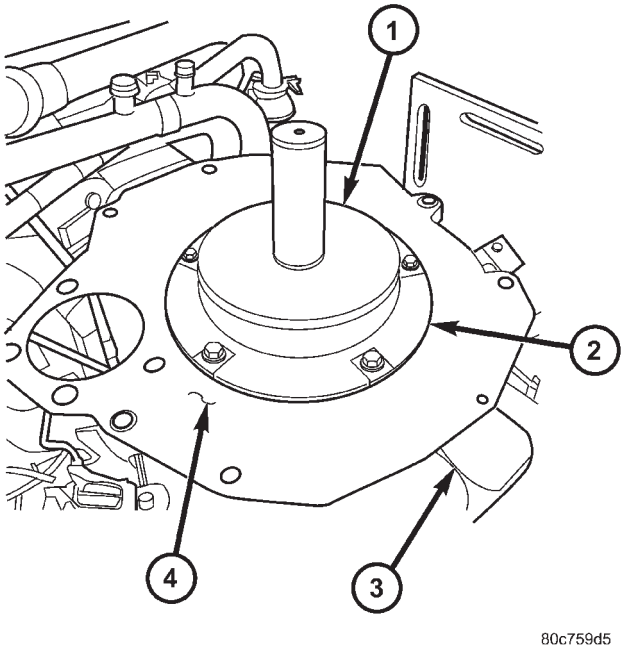

Fig. 69 REAR CRANKSHAFT OIL SEAL INSTALLATION USING VM.1050

1 - SPECIAL TOOL VM.1050
2 - REAR MAIN BEARING SUPPORT
3 - OIL PAN
4 - ENGINE TO TRANSMISSION ADAPTER PLATE

(2) Install engine or tranmission in vehicle.

OIL PAN

REMOVAL

(1) Disconnect negative battery cable.
(2) Raise vehicle on hoist.
(3) Drain engine oil from engine.
(4) Remove all oil pan retaining bolts and oil pan (Fig. 70).

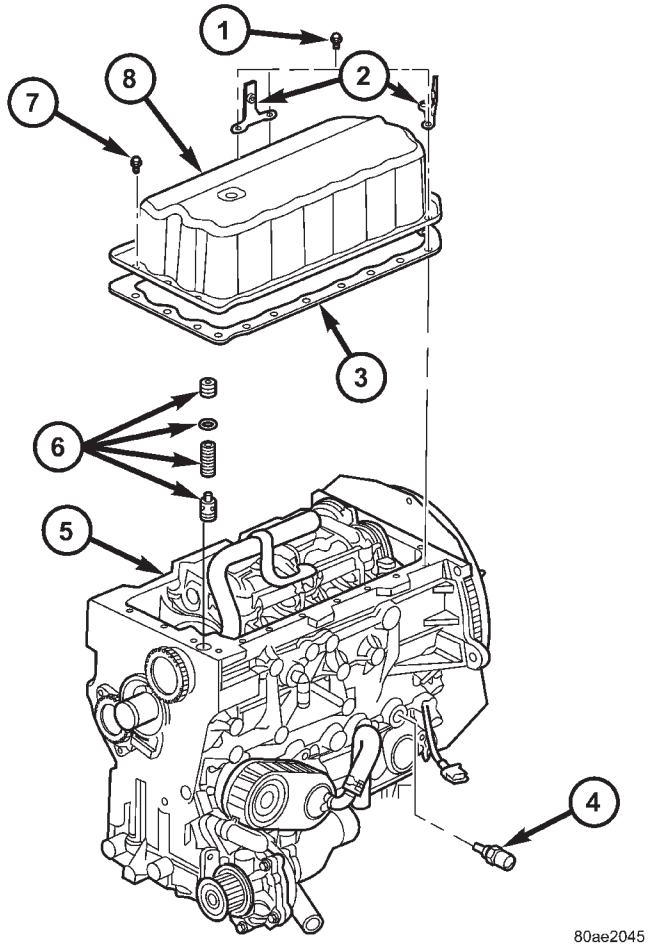

Fig. 70 OIL PAN AND PRESSURE RELIEF VALVE

1 - OIL PAN RETAINING BOLTS
2 - POWER STEERING LINE BRACKETS
3 - OIL PAN GASKET
4 - OIL PRESSURE SENSOR
5 - ENGINE BLOCK
6 - OIL PRESSURE RELIEF VALVE
7 - OIL PAN RETAINING BOLTS
8 - OIL PAN

INSTALLATION

(1) Clean oil pan and sealing surfaces. Inspect oil pan and engine block.
(2) Install oil pan, gasket, and retaining bolts (Fig. 70).
(3) Be sure power steering line brackets are in proper location (Fig. 70).
(4) Torque oil pan bolts to 11.8N·m.
(5) Lower vehicle.
(6) Refill engine oil to proper level.
(7) Connect negative battery cable.

OIL PUMP

REMOVAL

REMOVAL

(1) Disconnect negative battery cable.
(2) Remove power steering belt (Refer to 7 - COOLING/ACCESSORY DRIVE/DRIVE BELTS - REMOVAL).
(3) Remove accessory drive belt (Refer to 7 - COOLING/ACCESSORY DRIVE/DRIVE BELTS - REMOVAL).
(4) Remove timing belt outer cover (Refer to 9 - ENGINE/VALVE TIMING/TIMING BELT / CHAIN COVER(S) - REMOVAL).
(5) Remove timing belt (Refer to 9 - ENGINE/VALVE TIMING/TIMING BELT/CHAIN AND SPROCKETS - REMOVAL).
(6) Remove timing belt inner cover (Refer to 9 - ENGINE/VALVE TIMING/TIMING BELT / CHAIN COVER(S) - REMOVAL).
(7) Remove front engine cover (Refer to 9 - ENGINE/ENGINE BLOCK/ENGINE COVER - REMOVAL).
(8) Remove crankshaft sprocket (Fig. 71).
(9) Remove oil pump retaining bolts and remove pump from engine block (Fig. 71).

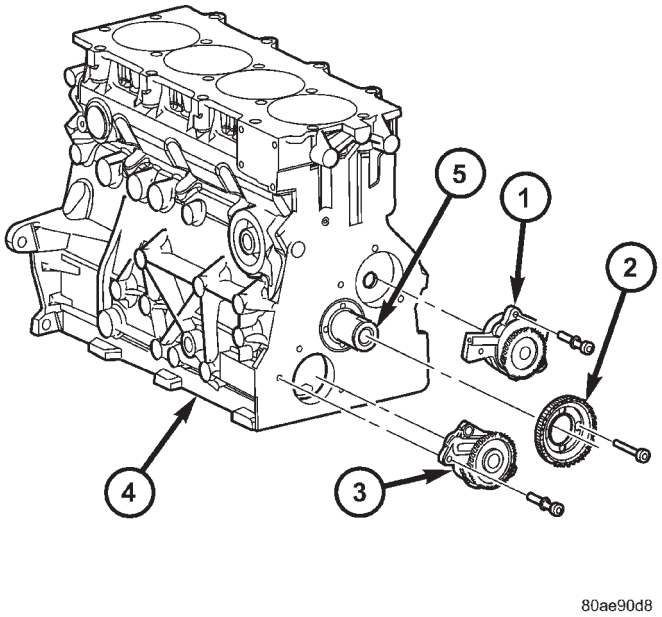

Fig. 71 OIL PUMP AND VACUUM PUMP

1 - VACUUM PUMP
2 - CRANKSHAFT SPROCKET
3 - OIL PUMP
4 - ENGINE BLOCK
5 - CRANKSHAFT

REMOVAL

(1) Disconnect negative battery cable.
(2) Raise vehicle on hoist.
(3) Remove oil pan (Refer to 9 - ENGINE/LUBRICATION/OIL PAN - REMOVAL).
(4) Remove oil pump pickup tube retaining bolt and pull pickup tube from engine block (Fig. 72).

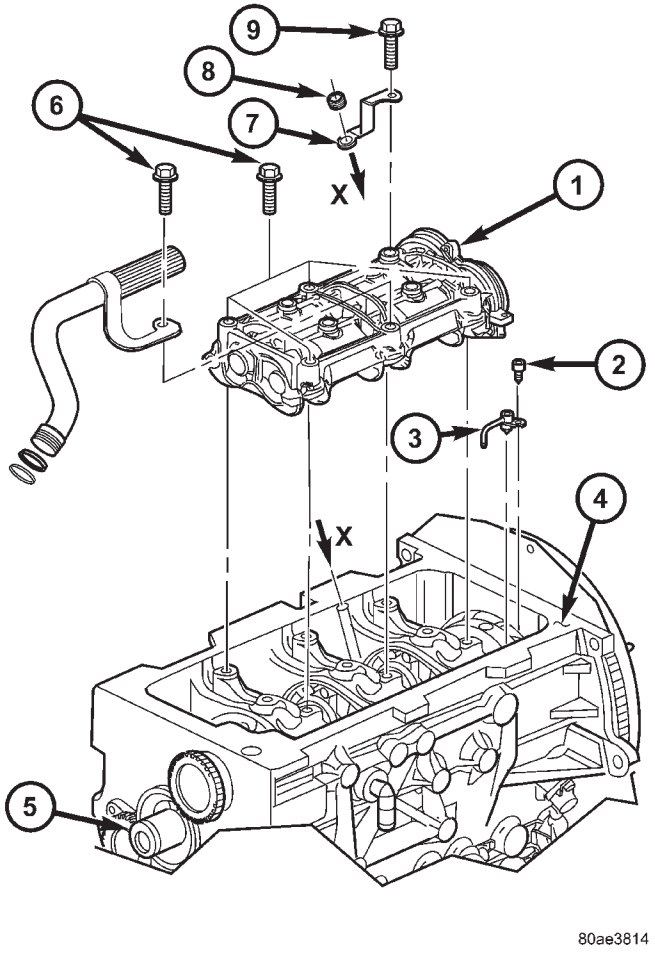

Fig. 72 OIL PUMP PICKUP TUBE ASSEMBLY

1 - BALANCE SHAFT
2 - OIL JET RETAINING BOLT
3 - OIL JET
4 - ENGINE BLOCK
5 - CRANKSHAFT
6 - BALANCE SHAFT RETAINING BOLTS
7 - OIL DIPSTICK TUBE RETAINER
8 - RUBBER BUSHING
9 - RETAINING BOLT

INSTALLATION

INSTALLATION

(1) Lubricate oil pump rotor with engine oil.
(2) Install oil pump in bore in engine block (Fig. 71).

OIL PUMP (Continued)

(3) Install oil pump retaining bolts (Fig. 71). Torque bolts to 10.8N·m.
(4) Install crankshaft sprocket (Fig. 71). Torque bolts to 10.8N·m.
(5) Install front engine cover (Refer to 9 - ENGINE/ENGINE BLOCK/ENGINE COVER - INSTALLATION).
(6) Install timing belt inner cover (Refer to 9 - ENGINE/VALVE TIMING/TIMING BELT / CHAIN COVER(S) - INSTALLATION).
(7) Install timing belt (Refer to 9 - ENGINE/ VALVE TIMING/TIMING BELT/CHAIN AND SPROCKETS - INSTALLATION) .
(8) Install timing belt outer cover (Refer to 9 - ENGINE/VALVE TIMING/TIMING BELT / CHAIN COVER(S) - INSTALLATION).
(9) Install accessory drive belt (Refer to 7 - COOLING/ACCESSORY DRIVE/DRIVE BELTS - INSTALLATION).
(10) Install power steering belt (Refer to 7 - COOLING/ACCESSORY DRIVE/DRIVE BELTS - INSTALLATION).
(11) Connect negative battery cable.

INSTALLATION

(1) Lubricate o-ring on oil pump pickup tube with engine oil.
(2) Install pickup tube in engine block and install retaining bolt (Fig. 72). Torque bolt to 32.4N·m.
(3) Install oil pan (Refer to 9 - ENGINE/LUBRICATION/OIL PAN - INSTALLATION).
(4) Refill engine oil to proper level.
(5) Connect negative battery cable.

OIL PRESSURE SENSOR/ SWITCH

DESCRIPTION

The oil pressure switch is located on the right side of the engine block. The switch screws into the engines main oil gallery (Fig. 73).

REMOVAL

(1) Disconnect negative battery cable.
(2) Raise vehicle on hoist.
(3) Disconnect oil pressure switch electrical connector (Fig. 73).
(4) Remove oil pressure switch from engine block.

INSTALLATION

(1) Apply Mopar® Thread Sealant to the switch threads.
(2) Install oil pressure switch in engine block.
(3) Connect oil pressure switch electrical connector (Fig. 73).

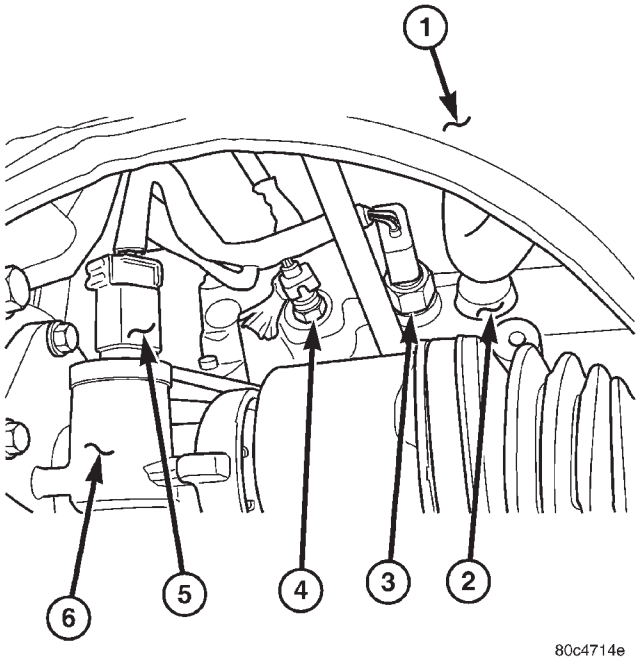

Fig. 73 REAR ENGINE VIEW

1 - SUSPENSION CRADLE
2 - ENGINE BLOCK
3 - OIL PRESSURE SWITCH
4 - OIL TEMPERATURE SENSOR
5 - VEHICLE SPEED SENSOR
6 - TRANSMISSION

(4) Lower vehicle.
(5) Start engine and check for leaks.
(6) Check and adjust oil level as necessary.

OIL TEMPERATURE SENSOR

DESCRIPTION

The oil temperature sensor is located on the right side of the engine block. The sensor screws into the engines main oil gallery (Fig. 74).

REMOVAL

(1) Disconnect negative battery cable.
(2) Raise vehicle on hoist.
(3) Disconnect oil temperature sensor electrical connector (Fig. 74).
(4) Remove oil temperature sensor from engine block.

INSTALLATION

(1) Apply Mopar® Thread Sealant to the sensor threads.
(2) Install oil temperature sensor in engine block.
(3) Connect oil temperature sensor electrical connector (Fig. 74)

OIL TEMPERATURE SENSOR (Continued)

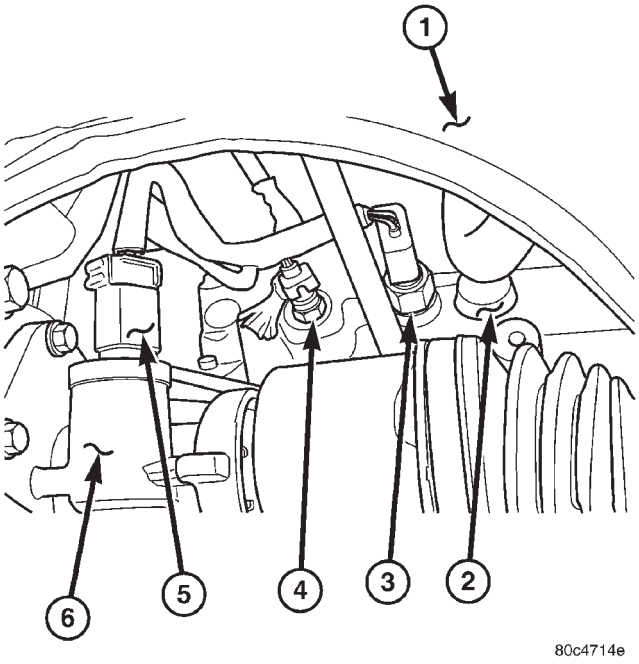

Fig. 74 REAR ENGINE VIEW

1 - SUSPENSION CRADLE
2 - ENGINE BLOCK
3 - OIL PRESSURE SWITCH
4 - OIL TEMPERATURE SENSOR
5 - VEHICLE SPEED SENSOR
6 - TRANSMISSION

(4) Lower vehicle.
(5) Start engine and check for leaks.
(6) Check and adjust oil level as necessary.

OIL PRESSURE RELIEF VALVE

DESCRIPTION

The oil pressure relief valve mounts in the front of the engine block and is used to control oil flow through the engines lubrication system (Fig. 75).

REMOVAL

(1) Remove engine oil pan (Refer to 9 - ENGINE/ LUBRICATION/OIL PAN - REMOVAL).
(2) Using special tool VM.1054, remove oil pressure relief valve from engine block (Fig. 76).

INSTALLATION

(1) Thoroughly clean all components and relief valve pocket in cylinder block.
(2) Lubricate all oil pressure relief valve components with engine oil.
(3) Install oil pressure relief valve plunger, spring, and cap.

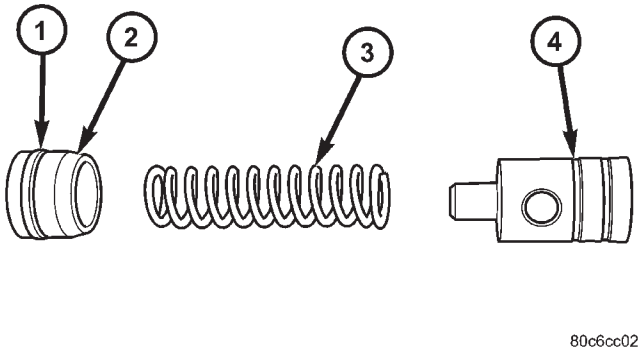

Fig. 75 OIL PRESSURE RELIEF VALVE

1 - O-RING
2 - OIL PRESSURE RELIEF VALVE CAP
3 - OIL PRESSURE RELIEF VALVE SPRING
4 - OIL PRESSURE RELIEF VALVE PLUNGER

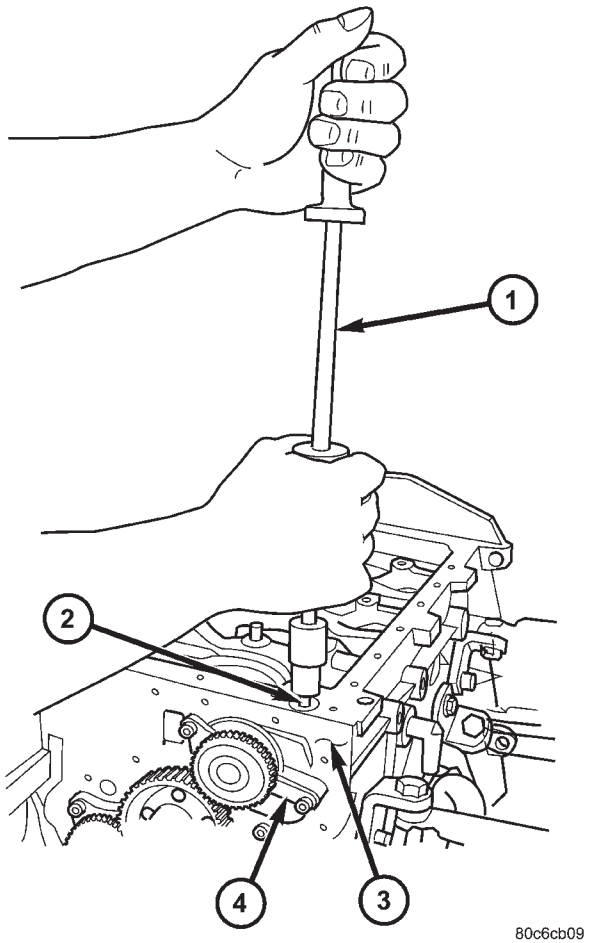

Fig. 76 OIL PRESSURE RELIEF VALVE REMOVAL

1 - VM.1054
2 - OIL PRESSURE RELIEF VALVE
3 - ENGINE BLOCK
4 - OIL PUMP

OIL PRESSURE RELIEF VALVE (Continued)

(4) Using special tool VM.1059, push oil pressure relief valve cap in untill flush with engine block (Fig. 77).

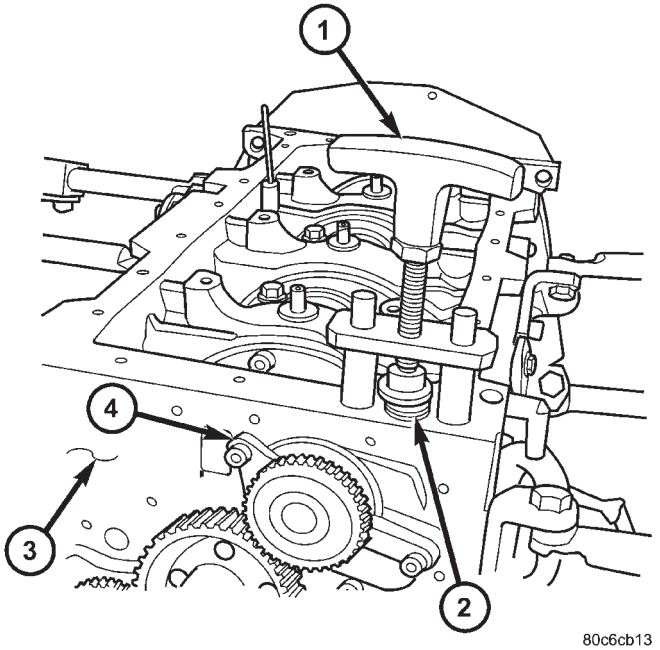

Fig. 77 OIL PRESSURE RELIEF VALVE INSTALLATION

1 - VM.1059
2 - OIL PRESSURE RELIEF VALVE
3 - ENGINE BLOCK
4 - OIL PUMP

(5) Install oil pan (Refer to 9 - ENGINE/LUBRICATION/OIL PAN - INSTALLATION).

OIL COOLER & LINES

REMOVAL

(1) Drain cooling system (Refer to 7 - COOLING/ENGINE/COOLANT - STANDARD PROCEDURE).
(2) Raise vehicle on hoist.
(3) Remove oil filter cap and filter (Refer to 9 - ENGINE/LUBRICATION/OIL FILTER - REMOVAL).
(4) Remove oil filter housing retaining nut and housing (Fig. 78).
(5) Disconnect coolant hoses at cooler (Fig. 79).
(6) Remove oil cooler retaining bolt at engine block (Fig. 79).
(7) Remove oil cooler retaining stud and remove oil cooler from engine block (Fig. 79).

INSTALLATION

(1) Clean oil cooler and engine block sealing surfaces.

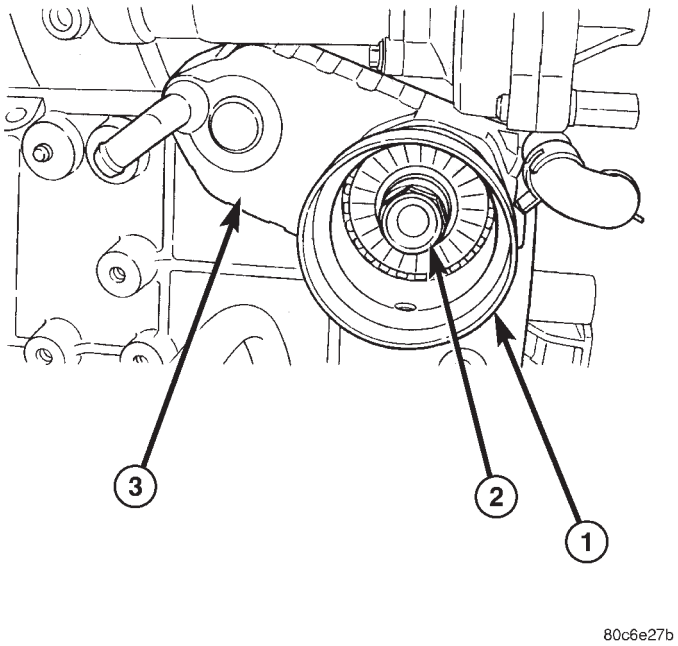

Fig. 78 OIL FILTER HOUSING RETAINING NUT

1 - OIL FILTER HOUSING
2 - OIL FILTER HOUSING RETAINING NUT
3 - OIL COOLER

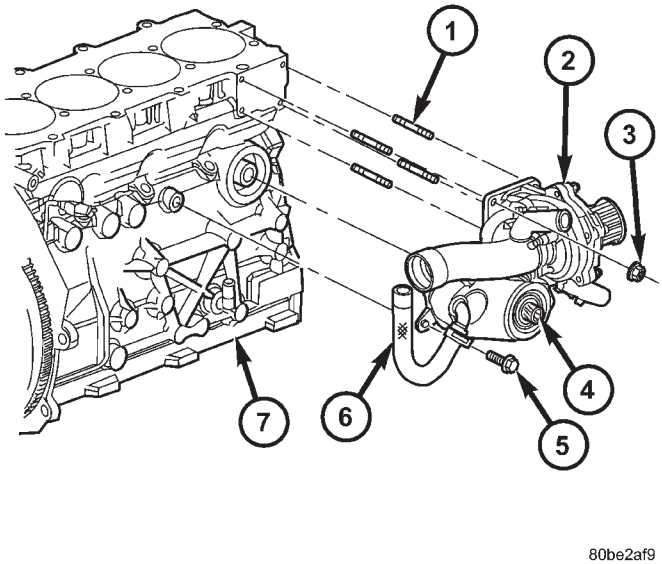

Fig. 79 WATER PUMP AND OIL COOLER ASSEMBLIES

1 - WATER PUMP HOUSING STUDS
2 - WATER PUMP
3 - RETAINING NUTS
4 - OIL COOLER RETAINING STUD
5 - OIL COOLER TO ENGINE BLOCK RETAINING BOLT
6 - OIL COOLER COOLANT HOSE
7 - ENGINE BLOCK

OIL COOLER & LINES (Continued)

(2) Install oil cooler, retaining bolt, and stud (Fig. 79). Torque retaining bolt to 47.1N·m and stud to 50N·m.
(3) Connect coolant hoses at cooler (Fig. 79).
(4) Install oil filter housing and retaining nut (Fig. 78). Torque retaining nut to 3.5 Kg.
(5) Install oil filter cartridge and oil filter cap (Refer to 9 - ENGINE/LUBRICATION/OIL FILTER - INSTALLATION).
(6) Lower vehicle.
(7) Refill cooling system (Refer to 7 - COOLING/ ENGINE/COOLANT - STANDARD PROCEDURE).
(8) Start engine and check for leaks.
(9) Check and adjust oil level as necessary.

OIL FILTER

DESCRIPTION

The oil filter used on this engine is a cartridge style filter (Fig. 80).

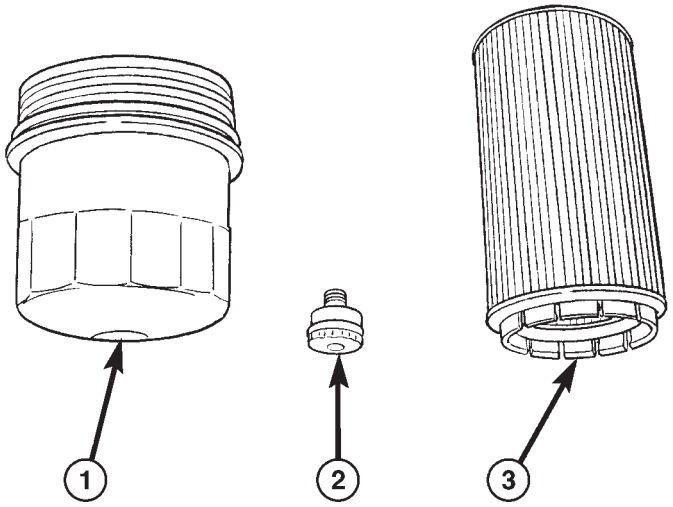

80c6e284

Fig. 80 OIL FILTER ASSEMBLY

1 - OIL FILTER CAP
2 - DRAIN PLUG
3 - OIL FILTER CARTRIDGE

REMOVAL

(1) Raise vehicle on hoist.
(2) Remove oil filter cap drain plug and drain oil from oil filter housing (Fig. 81).
(3) Remove oil filter cap with suitable oil filter wrench (Fig. 81).

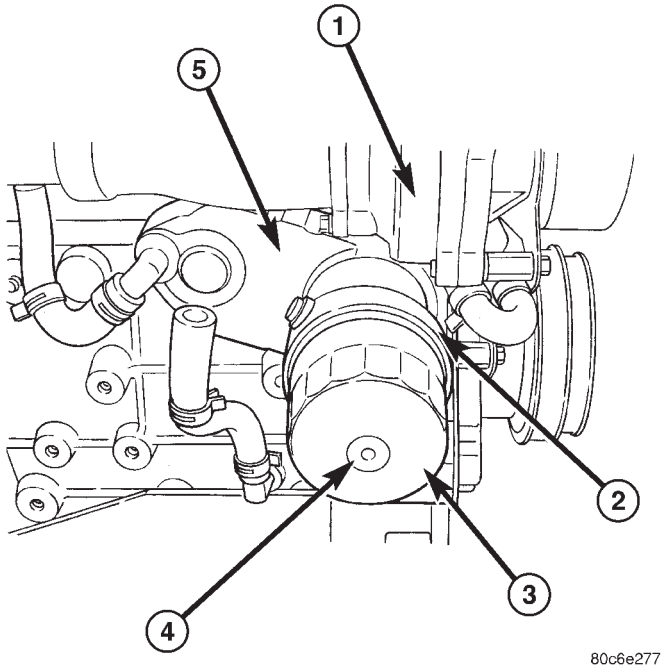

80c6e277

Fig. 81 OIL COOLER AND FILTER ASSEMBLY

1 - WATER PUMP HOUSING
2 - OIL FILTER HOUSING
3 - OIL FILTER CAP
4 - OIL FILTER CAP DRAIN PLUG
5 - OIL COOLER

(4) Remove oil filter cartridge from housing.

INSTALLATION

(1) Clean oil filter cap and drain plug with suitable solvent.
(2) Install new oil filter cartridge in oil filter housing.
(3) Install oil filter cap and drain plug
(4) Lower vehicle from hoist.
(5) Start engine and check for leaks.
(6) Check and adjust oil level as necessary.

OIL JET

DESCRIPTION

There are four oil jets installed in the engine block. These oil jets are used to cool and lubricate the piston assemblies (Fig. 82).

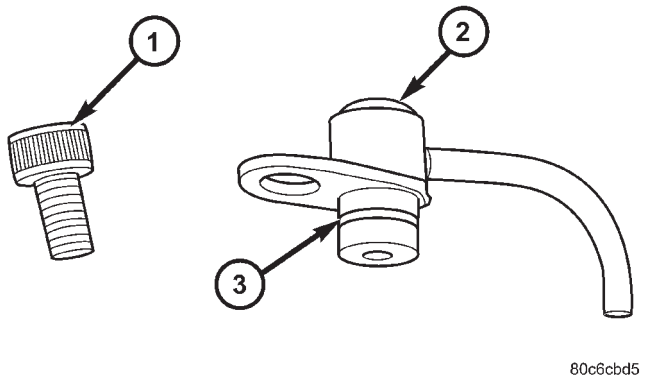

Fig. 82 OIL JET ASSEMBLY

1 - RETAINING BOLT
2 - OIL JET
3 - O-RING

REMOVAL

CAUTION: Use caution when removing and installing oil jets. Damage to oil jet nozzle could cause severe engine damage.

(1) Disconnect negative battery cable.
(2) Raise vehicle on hoist.
(3) Remove oil pan (Refer to 9 - ENGINE/LUBRICATION/OIL PAN - REMOVAL).
(4) Using special tool VM.1060 to hold oil jet. Remove oil jet retaining bolt and remove oil jet from engine block (Fig. 83).

INSTALLATION

CAUTION: Use caution when removing and installaing oil jets. Damage to oil jet nozzle could cause severe engine damage.

(1) Lubricate o-ring on oil jet.
(2) Using special tool VM.1060, install oil jet in engine block (Fig. 83).
(3) Install oil jet retaining bolt. Torque bolt to 10.8N·m.
(4) Install oil pan (Refer to 9 - ENGINE/LUBRICATION/OIL PAN - INSTALLATION).
(5) Refill engine oil to proper level.
(6) Connect negative battery cable.

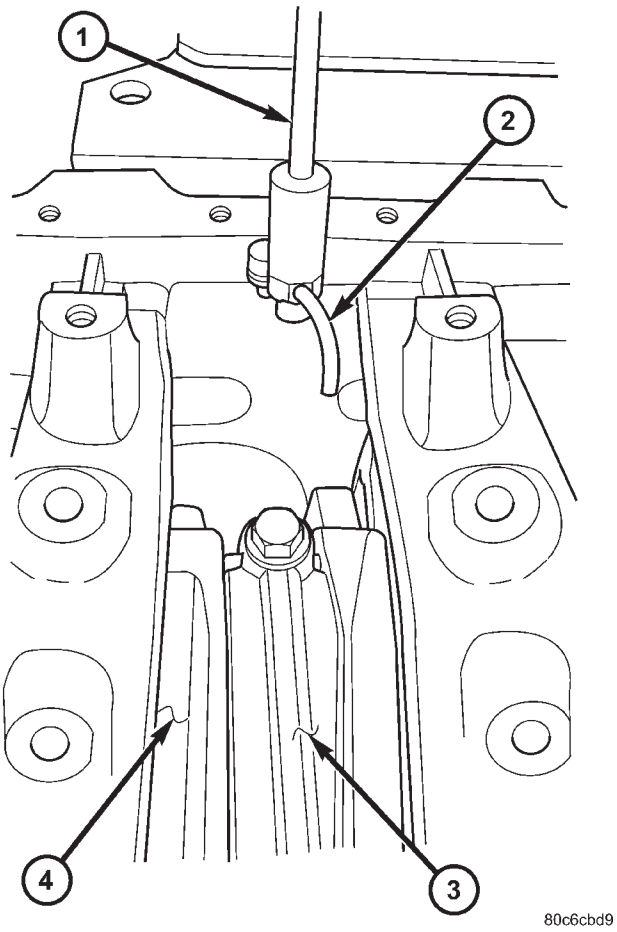

Fig. 83 OIL JET REMOVAL/INSTALLATION

1 - SPECIAL TOOL VM.1060
2 - OIL JET
3 - CONNECTING ROD
4 - CRANKSHAFT

INTAKE MANIFOLD

DESCRIPTION

(Refer to 9 - ENGINE/CYLINDER HEAD/CYLINDER HEAD COVER(S) - DESCRIPTION)

REMOVAL

(1) (Refer to 9 - ENGINE/CYLINDER HEAD/CYLINDER HEAD COVER(S) - REMOVAL)

INSTALLATION

(1) (Refer to 9 - ENGINE/CYLINDER HEAD/CYLINDER HEAD COVER(S) - INSTALLATION)

VALVE TIMING

STANDARD PROCEDURE - LOCKING ENGINE 90° AFTER TDC

(1) Disconnect negative battery cable.

(2) Remove starter motor (Refer to 8 - ELECTRICAL/STARTING/STARTER MOTOR - REMOVAL).

(3) Rotate engine untill notch in hub is in the following position (Fig. 84).

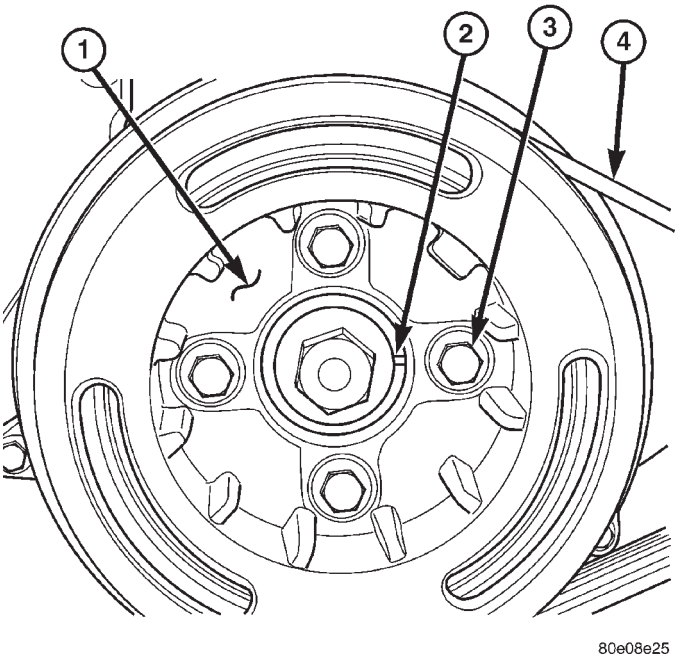

Fig. 84 CRANKSHAFT HUB ALIGNMENT

1 - VIBRATION DAMPER/CRANKSHAFT PULLEY
2 - CRANKSHAFT HUB NOTCH
3 - VIBRATION DAMPER/CRANKSHAFT PULLEY TO CRANKSHAFT HUB BOLTS

(4) Special tool VM.1068 can be install in engine block as shown at this time (Fig. 85). This will lock the engine at 90° after TDC.

(5) Remove front wiper unit (Refer to 8 - ELECTRICAL/WIPERS/WASHERS/WIPER MODULE - REMOVAL).

(6) Remove engine cover (Refer to 9 - ENGINE - REMOVAL).

(7) Remove plug in cylinder head cover/intake manifold and insert VM.1053 to lock exhaust camshaft in position (Fig. 86).

(8) Remove generator (Refer to 8 - ELECTRICAL/CHARGING/GENERATOR - REMOVAL).

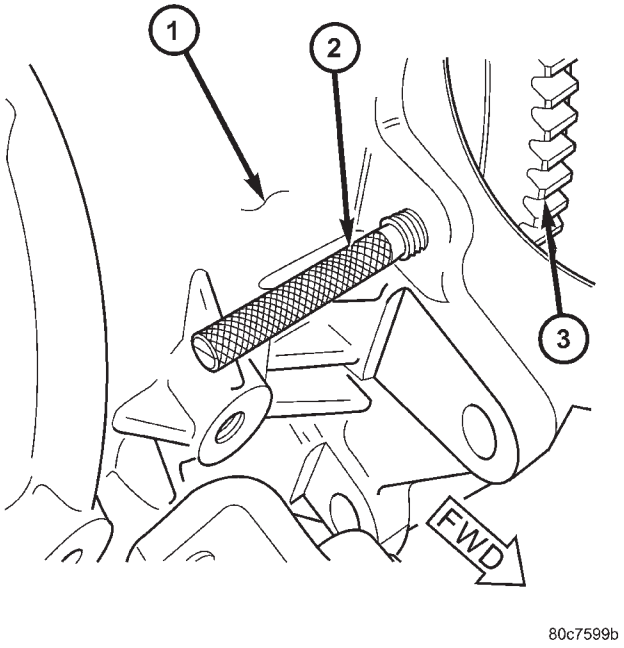

Fig. 85 TDC AND 90 DEGREES AFTER TDC ALIGNMENT PIN LOCATION

1 - ENGINE BLOCK
2 - VM.1051 TDC PIN OR VM.1068 90 DEGREES ATDC PIN
3 - FLYWHEEL

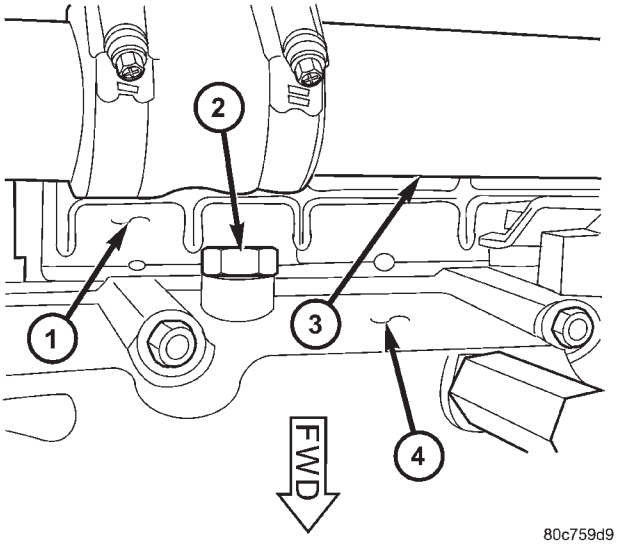

Fig. 86 EXHAUST CAMSHAFT LOCKING PIN VM.1053

1 - EXHAUST MANIFOLD HEAT SHIELD
2 - EXHAUST CAMSHAFT LOCKING PIN VM.1053
3 - COOLANT TUBE FROM THERMOSTAT HOUSING TO UPPER RADIATOR HOSE
4 - CYLINDER HEAD COVER/INTAKE MANIFOLD

VALVE TIMING (Continued)

(9) Remove plug in cylinder head cover/intake manifold and insert VM.1052 to lock intake camshaft in position (Fig. 87).

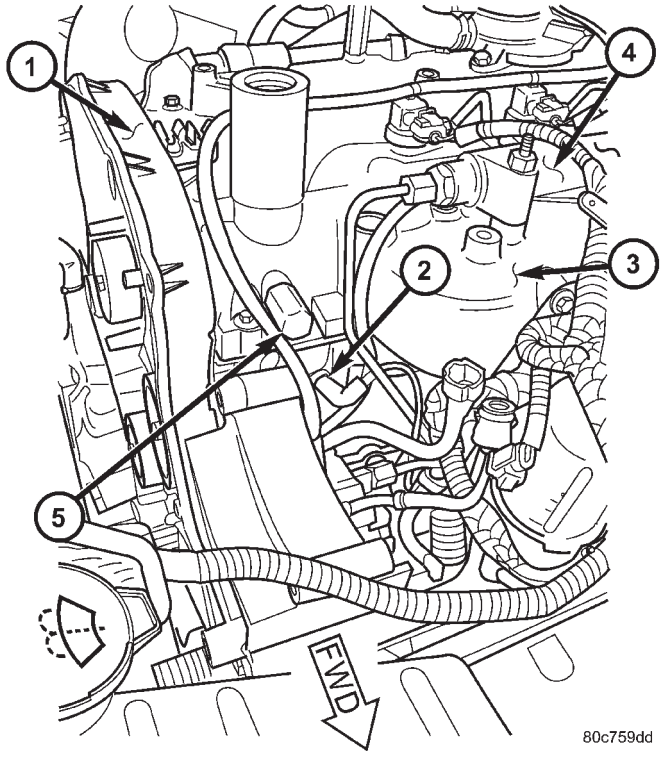

Fig. 87 INTAKE CAMSHAFT LOCKING PIN VM.1052

1 - TIMING BELT INNER COVER
2 - GLOW PLUG ELECTRICAL CONNECTOR
3 - CYLINDER HEAD COVER/INTAKE MANIFOLD
4 - FUEL RAIL
5 - INTAKE CAMSHAFT LOCKING PIN VM.1052

(10) At this point the timing belt can be removed for service.

(11) After engine service is completed and timing belt reinstalled, remove both camshaft locking pins from cylinder head cover/intake manifold.

(12) Install both camshaft access plugs.

(13) Remove 90° after TDC engine locking pin.

(14) Install starter motor (Refer to 8 - ELECTRICAL/STARTING/STARTER MOTOR - INSTALLATION).

(15) Install generator (Refer to 8 - ELECTRICAL/CHARGING/GENERATOR - INSTALLATION).

(16) Install engine cover (Refer to 9 - ENGINE - INSTALLATION).

(17) Install front wiper unit (Refer to 8 - ELECTRICAL/WIPERS/WASHERS/WIPER MODULE - INSTALLATION).

(18) Connect negative battery cable.

BALANCE SHAFT

DESCRIPTION

The 2.5L Common Rail Diesel engine is equipped with two nodular cast iron balance shafts in a cast aluminum carrier. The balance shaft assembly is mounted to the engine block (Fig. 88).

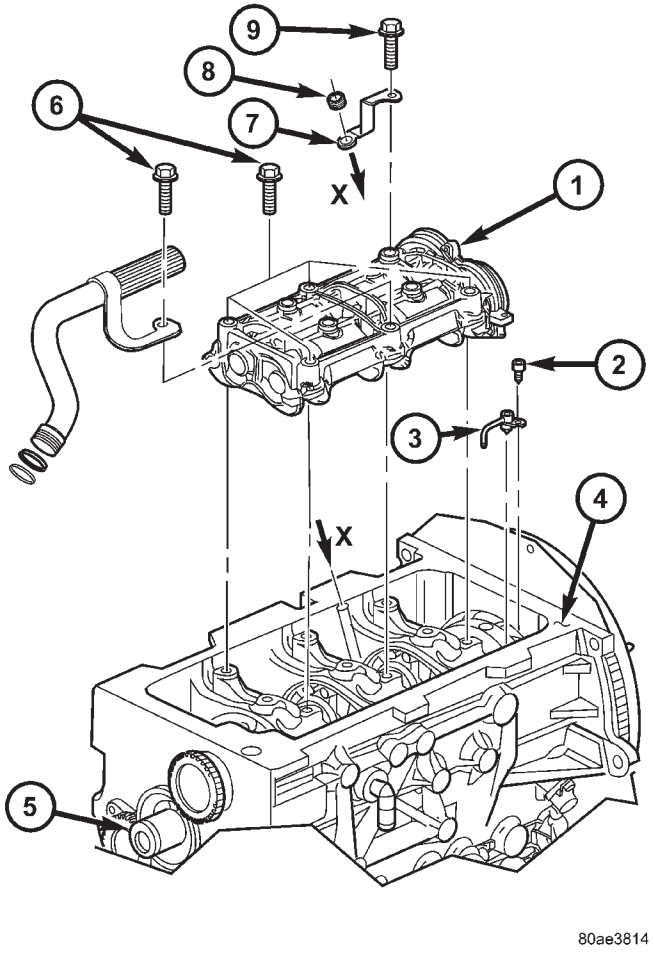

Fig. 88 BALANCE SHAFT ASSEMBLY

1 - BALANCE SHAFT
2 - OIL JET RETAINING BOLT
3 - OIL JET
4 - ENGINE BLOCK
5 - CRANKSHAFT
6 - BALANCE SHAFT RETAINING BOLTS
7 - OIL DIPSTICK TUBE RETAINER
8 - RUBBER BUSHING
9 - RETAINING BOLT

OPERATION

The balance shaft is driven by the crankshaft. The balance shafts are connected by heelical gears. The dual-counter rotating shafts decrease second order vertical shaking forces caused by component movement.

BALANCE SHAFT (Continued)

REMOVAL

(1) Disconnect negative battery cable.
(2) Raise vehicle on hoist.
(3) Remove oil pan (Refer to 9 - ENGINE/LUBRICATION/OIL PAN - REMOVAL).
(4) Remove balance shaft assembly (Fig. 89).

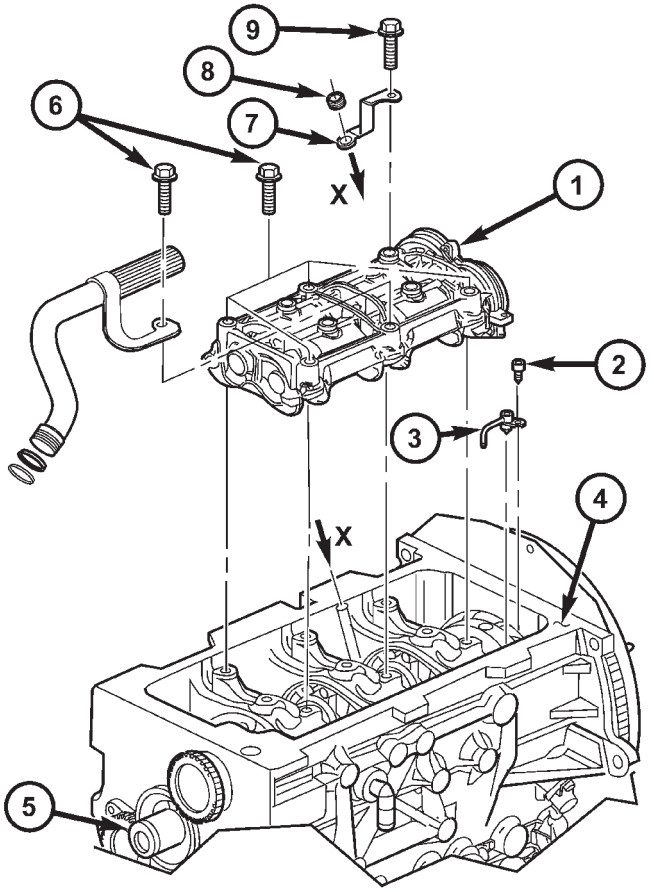

80ae3814

Fig. 89 BALANCE SHAFT ASSEMBLY

1 - BALANCE SHAFT
2 - OIL JET RETAINING BOLT
3 - OIL JET
4 - ENGINE BLOCK
5 - CRANKSHAFT
6 - BALANCE SHAFT RETAINING BOLTS
7 - OIL DIPSTICK TUBE RETAINER
8 - RUBBER BUSHING
9 - RETAINING BOLT

INSTALLATION

(1) Before installation of the balance shaft assembly, the # 1 cylinder must be brought to TDC. Using special tool VM.1051, roll engine over by hand until tool can be inserted into engine block locking flywheel from turning (Fig. 90). Once the # 1 cylinder is brought to TDC, the balance shaft assembly can be installed.

(2) With balance shaft assembly on work bench. Insert special tool VM.1056 into balance shaft assembly (Fig. 91). This will ensure proper balance shaft and crankshaft timing after assembly.

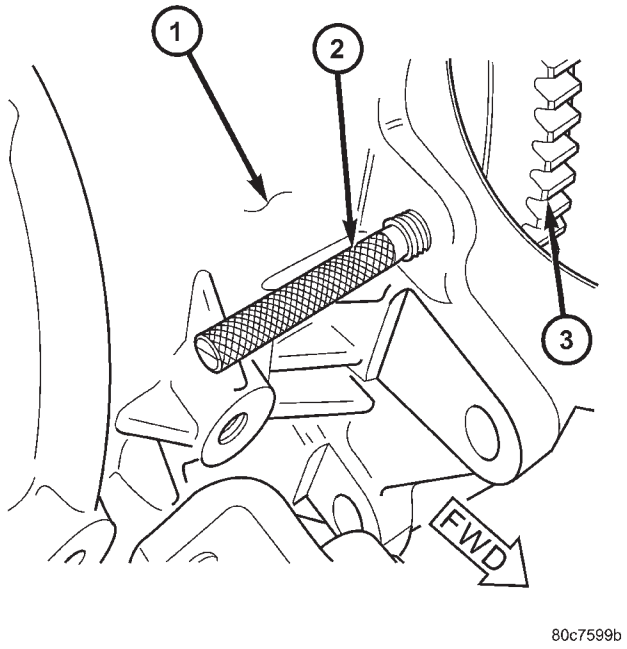

80c7599b

Fig. 90 TDC AND 90 DEGREES AFTER TDC ALIGNMENT PIN LOCATION

1 - ENGINE BLOCK
2 - VM.1051 TDC PIN OR VM.1068 90 DEGREES ATDC PIN
3 - FLYWHEEL

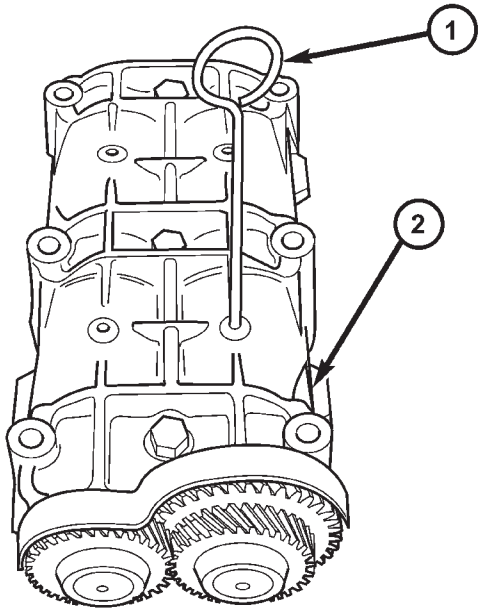

80c7595e

Fig. 91 BALANCE SHAFT ALIGNMENT PIN VM.1056

1 - VM.1056
2 - BALANCE SHAFT ASSEMBLY

BALANCE SHAFT (Continued)

(3) Install balance shaft assembly and retaining bolts (Fig. 89). Torque bolts to 32.4N·m.
(4) Install oil pan (Refer to 9 - ENGINE/LUBRICATION/OIL PAN - INSTALLATION).
(5) Refill engine oil to proper level.
(6) Connect negative battery cable.

TIMING BELT / CHAIN COVER(S)

REMOVAL

REMOVAL - TIMING BELT OUTER COVER

(1) Disconnect negative battery cable.
(2) Remove engine cover (Refer to 9 - ENGINE - REMOVAL).
(3) Remove air cleaner housing.
(4) Support engine and remove right engine mount and bracket.
(5) Remove power steering belt (Refer to 7 - COOLING/ACCESSORY DRIVE/DRIVE BELTS - REMOVAL).
(6) Remove accessory drive belt (Refer to 7 - COOLING/ACCESSORY DRIVE/DRIVE BELTS - REMOVAL).
(7) Remove vibration damper (Refer to 9 - ENGINE/ENGINE BLOCK/VIBRATION DAMPER - REMOVAL).
(8) Remove timing belt outer cover retaining bolts and remove cover (Fig. 92).

REMOVAL - TIMING BELT INNER COVER

(1) Disconnect negative battery cable.
(2) Remove engine cover (Refer to 9 - ENGINE - REMOVAL).
(3) Remove air cleaner housing.
(4) Support engine and remove right engine mount and bracket.
(5) Remove power steering belt (Refer to 7 - COOLING/ACCESSORY DRIVE/DRIVE BELTS - REMOVAL).
(6) Remove accessory drive belt (Refer to 7 - COOLING/ACCESSORY DRIVE/DRIVE BELTS - REMOVAL).
(7) Remove vibration damper (Refer to 9 - ENGINE/ENGINE BLOCK/VIBRATION DAMPER - REMOVAL).
(8) Remove timing belt outer cover (Refer to 9 - ENGINE/VALVE TIMING/TIMING BELT / CHAIN COVER(S) - REMOVAL).
(9) Remove timing belt (Refer to 9 - ENGINE/VALVE TIMING/TIMING BELT/CHAIN AND SPROCKETS - REMOVAL).

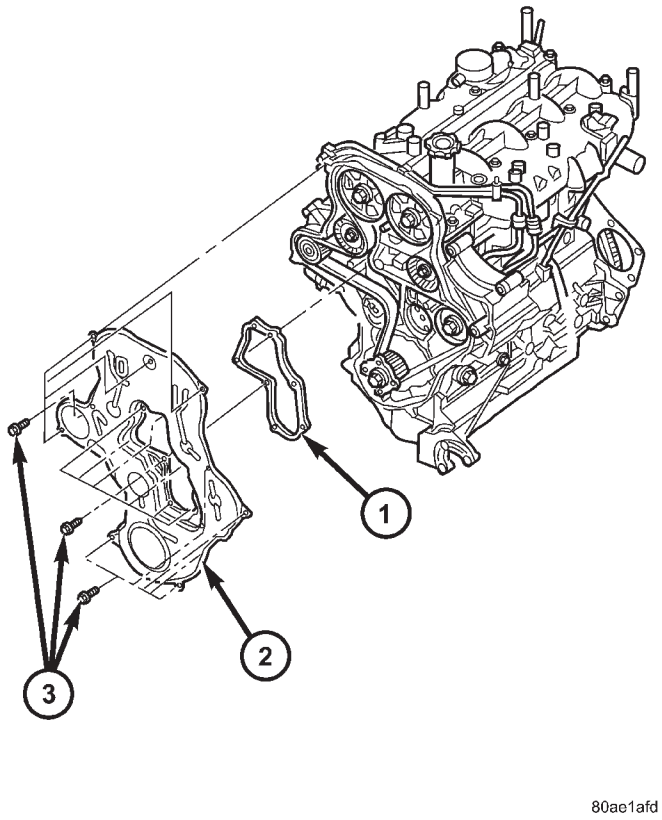

Fig. 92 TIMING BELT COVER (OUTER)

1 - SEAL
2 - TIMING BELT OUTER COVER
3 - RETAINING BOLTS

(10) Remove timing belt idler pulleys (Refer to 9 - ENGINE/VALVE TIMING/TIMING BELT IDLER PULLEY - REMOVAL).
(11) Using special tool VM.1055, remove camshaft sprockets (Fig. 93).
(12) Remove timing belt tensioner (Refer to 9 - ENGINE/VALVE TIMING/TMNG BELT/CHAIN TENSIONER&PULLEY - REMOVAL) .
(13) Remove injection pump sprocket (Refer to 14 - FUEL SYSTEM/FUEL DELIVERY/FUEL INJECTION PUMP - REMOVAL).
(14) Remove timing belt inner cover retaining bolts and remove cover (Fig. 94).

INSTALLATION

INSTALLATION - TIMING BELT OUTER COVER

(1) Install timing belt outer cover seal and cover (Fig. 92). Torque 3mm bolts to 10.8N·m and 8mm bolts to 10.8N·m.
(2) Install vibration damper (Refer to 9 - ENGINE/ENGINE BLOCK/VIBRATION DAMPER - INSTALLATION).

TIMING BELT / CHAIN COVER(S) (Continued)

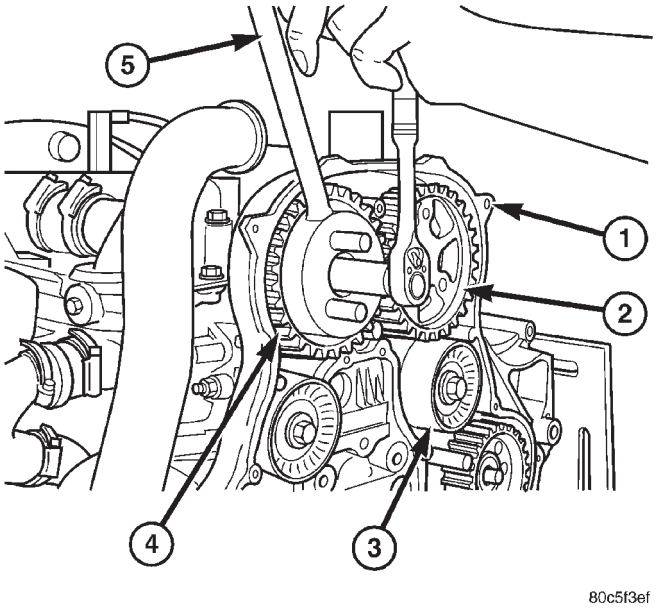

Fig. 93 CAMSHAFT SPROCKET REMOVAL/ INSTALLATION

1 - TIMING BELT INNER COVER
2 - CAMSHAFT SPROCKET
3 - IDLER PULLEYS
4 - CAMSHAFT SPROCKET
5 - VM.1055

(3) Install accessory drive belt (Refer to 7 - COOLING/ACCESSORY DRIVE/DRIVE BELTS - INSTALLATION).

(4) Install power steering belt (Refer to 7 - COOLING/ACCESSORY DRIVE/DRIVE BELTS - INSTALLATION).

(5) Install right engine mount.

(6) Install air cleaner housing.

(7) Install engine cover (Refer to 9 - ENGINE - INSTALLATION).

(8) Connect negative battery cable.

INSTALLATION - TIMING BELT INNER COVER

(1) Install timing belt inner cover to engine front cover seal (Fig. 94).

(2) Install timing belt inner cover to cylinder head cover gaskets (Fig. 94).

(3) Install timing belt inner cover and retaining bolts (Fig. 94). Torque 10mm bolts to 47.1N·m and 8mm bolts to 10.8N·m.

(4) Install injection pump sprocket (Refer to 14 - FUEL SYSTEM/FUEL DELIVERY/FUEL INJECTION PUMP - INSTALLATION).

(5) Install camshaft sprockets (Fig. 93). Torque bolts to 108N·m.

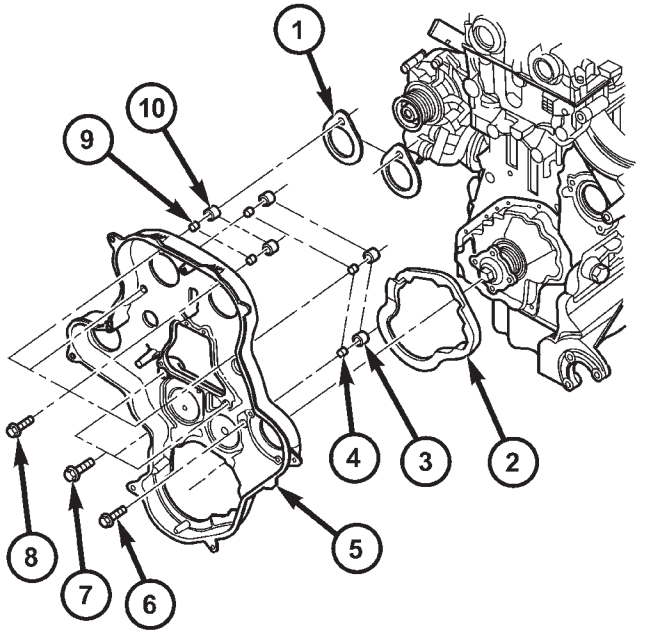

Fig. 94 TIMING BELT COVER - INNER

1 - TIMING BELT COVER TO CYLINDER HEAD COVER GASKET
2 - TIMING BELT COVER TO FRONT ENGINE COVER SEAL
3 - RUBBER GROMMET
4 - BUSHING
5 - TIMING BELT COVER - INNER
6 - RETAINING BOLT
7 - RETAINING BOLT
8 - RETAINING BOLT
9 - BUSHING
10 - RUBBER GROMMET

(6) Install timing belt idler pulleys (Refer to 9 - ENGINE/VALVE TIMING/TIMING BELT IDLER PULLEY - INSTALLATION).

(7) Install timing belt and tensioner (Refer to 9 - ENGINE/VALVE TIMING/TIMING BELT/CHAIN AND SPROCKETS - INSTALLATION) .

(8) Install timing belt outer cover (Refer to 9 - ENGINE/VALVE TIMING/TIMING BELT / CHAIN COVER(S) - INSTALLATION).

TIMING BELT / CHAIN COVER(S) (Continued)

(9) Install vibration damper (Refer to 9 - ENGINE/ ENGINE BLOCK/VIBRATION DAMPER - INSTALLATION).

(10) Install accessory drive belt (Refer to 7 - COOLING/ACCESSORY DRIVE/DRIVE BELTS - INSTALLATION).

(11) Install power steering belt (Refer to 7 - COOLING/ACCESSORY DRIVE/DRIVE BELTS - INSTALLATION).

(12) Install right engine mount assembly.

(13) Install air cleaner housing.

(14) Install engine cover (Refer to 9 - ENGINE - INSTALLATION).

(15) Connect negative battery cable.

TIMING BELT IDLER PULLEY

REMOVAL

(1) Disconnect negative battery cable.

(2) Remove engine cover (Refer to 9 - ENGINE - REMOVAL).

(3) Remove air cleaner housing.

(4) Support engine and remove right engine mount.

(5) Remove power steering belt (Refer to 7 - COOLING/ACCESSORY DRIVE/DRIVE BELTS - REMOVAL).

(6) Remove accessory drive belt (Refer to 7 - COOLING/ACCESSORY DRIVE/DRIVE BELTS - REMOVAL).

(7) Remove vibration damper (Refer to 9 - ENGINE/ENGINE BLOCK/VIBRATION DAMPER - REMOVAL).

(8) Remove timing belt outer cover (Refer to 9 - ENGINE/VALVE TIMING/TIMING BELT / CHAIN COVER(S) - REMOVAL).

(9) Remove timing belt (Refer to 9 - ENGINE/ VALVE TIMING/TIMING BELT/CHAIN AND SPROCKETS - REMOVAL).

NOTE: Idler pulley retaining bolts are LHD thread.

(10) Remove timing belt idler pulleys (Fig. 95).

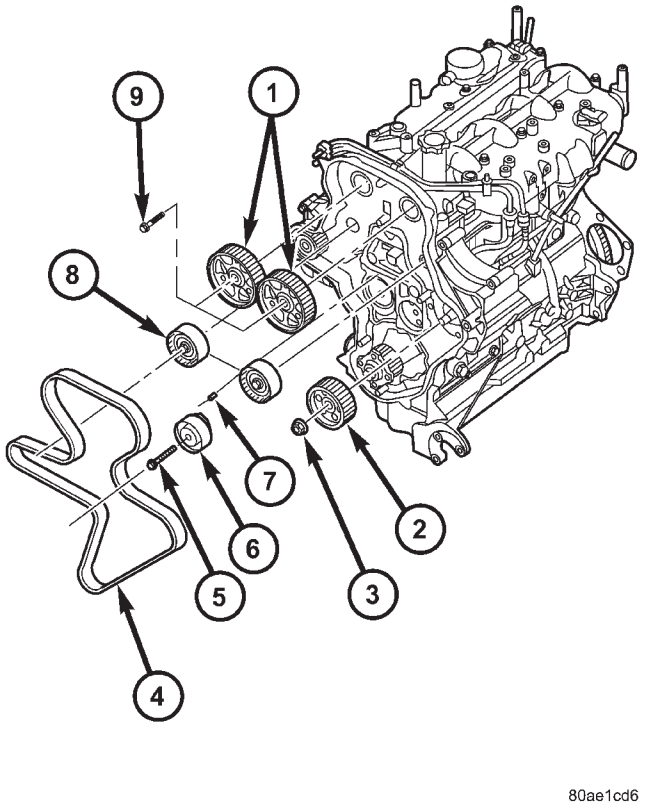

Fig. 95 TIMING BELT AND SPROCKETS

1 -CAMSHAFT SPROCKETS
2 - INJECTION PUMP SPROCKET
3 - INJECTION PUMP SPROCKET RETAINING NUT
4 - TIMING BELT
5 - TIMING BELT TENSIONER RETAINING BOLT
6 - TIMING BELT TENSIONER
7 - TENSIONER ALIGNMENT PIN
8 - IDLER PULLEY
9 - CAMSHAFT SPROCKET RETAINING BOLT

INSTALLATION

(1) Install timing belt idler pulleys (Fig. 95). Torque bolts to 47.1N·m.

(2) Install timing belt (Refer to 9 - ENGINE/ VALVE TIMING/TIMING BELT/CHAIN AND SPROCKETS - INSTALLATION) .

(3) Install timing belt outer cover (Refer to 9 - ENGINE/VALVE TIMING/TIMING BELT / CHAIN COVER(S) - INSTALLATION).

(4) Install vibration damper (Refer to 9 - ENGINE/ ENGINE BLOCK/VIBRATION DAMPER - INSTALLATION).

(5) Install accessory drive belt (Refer to 7 - COOLING/ACCESSORY DRIVE/DRIVE BELTS - INSTALLATION).

(6) Install power steering belt (Refer to 7 - COOLING/ACCESSORY DRIVE/DRIVE BELTS - INSTALLATION).

(7) Install right engine mount.

(8) Install air cleaner housing.

(9) Install engine cover (Refer to 9 - ENGINE - INSTALLATION).

(10) Connect negative battery cable.

TMNG BELT/CHAIN TENSIONER

REMOVAL

(1) Disconnect negative battery cable.
(2) Remove engine cover (Refer to 9 - ENGINE - REMOVAL).
(3) Remove air cleaner housing.
(4) Support engine and remove right engine mount.
(5) Remove power steering belt (Refer to 7 - COOLING/ACCESSORY DRIVE/DRIVE BELTS - REMOVAL).
(6) Remove accessory drive belt (Refer to 7 - COOLING/ACCESSORY DRIVE/DRIVE BELTS - REMOVAL).
(7) Remove vibration damper (Refer to 9 - ENGINE/ENGINE BLOCK/VIBRATION DAMPER - REMOVAL).
(8) Remove timing belt outer cover (Refer to 9 - ENGINE/VALVE TIMING/TIMING BELT / CHAIN COVER(S) - REMOVAL).
(9) Loosen and remove timing belt tensioner (Fig. 96).

INSTALLATION

(1) Install timing belt tensioner and retaining bolt (Fig. 96).
(2) Adjust timing belt tensioner (Refer to 9 - ENGINE/VALVE TIMING/TMNG BELT/CHAIN TENSIONER&PULLEY - ADJUSTMENTS) .
(3) Install timing belt outer cover (Refer to 9 - ENGINE/VALVE TIMING/TIMING BELT / CHAIN COVER(S) - INSTALLATION).
(4) Install vibration damper (Refer to 9 - ENGINE/ ENGINE BLOCK/VIBRATION DAMPER - INSTALLATION).
(5) Install accessory drive belt (Refer to 7 - COOLING/ACCESSORY DRIVE/DRIVE BELTS - INSTALLATION).

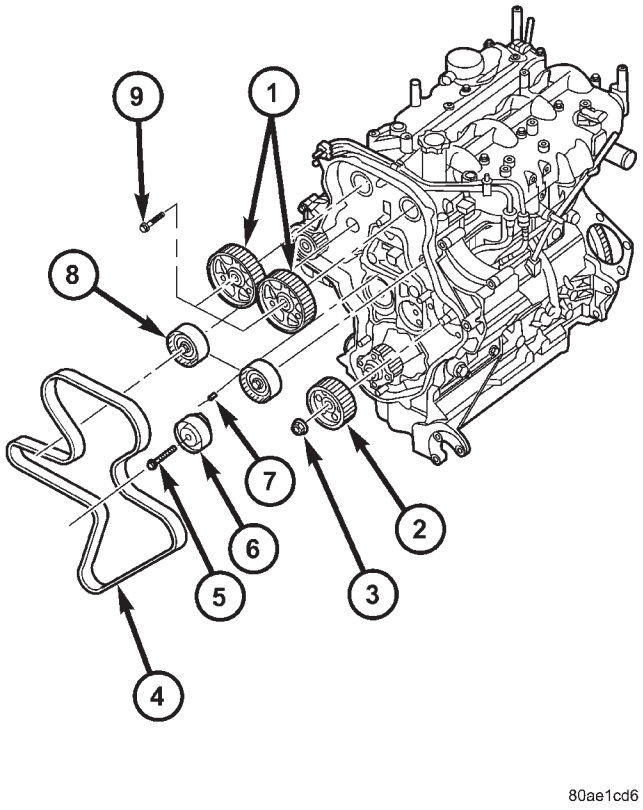

Fig. 96 TIMING BELT AND SPROCKETS

1 -CAMSHAFT SPROCKETS
2 - INJECTION PUMP SPROCKET
3 - INJECTION PUMP SPROCKET RETAINING NUT
4 - TIMING BELT
5 - TIMING BELT TENSIONER RETAINING BOLT
6 - TIMING BELT TENSIONER
7 - TENSIONER ALIGNMENT PIN
8 - IDLER PULLEY
9 - CAMSHAFT SPROCKET RETAINING BOLT

(6) Install power steering belt (Refer to 7 - COOLING/ACCESSORY DRIVE/DRIVE BELTS - INSTALLATION).
(7) Install right engine mount.
(8) Install air cleaner housing.
(9) Install engine cover (Refer to 9 - ENGINE - INSTALLATION).
(10) Connect negative battery cable.

ADJUSTMENTS

ADJUSTMENT - TIMING BELT TENSIONER

(1) With timing belt outer cover removed and timing belt installed.

(2) Loosen timing belt tensioner (Fig. 97).

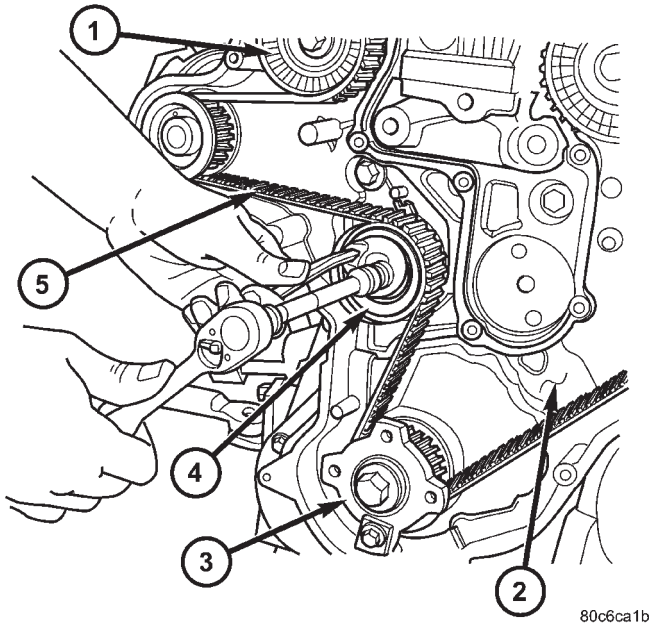

Fig. 97 TIMING BELT TENSIONER ADJUSTMENT

1 - TIMING BELT IDLER PULLEY
2 - ENGINE FRONT COVER
3 - CRANKSHAFT HUB
4 - TIMING BELT TENSIONER
5 - TIMING BELT

(3) Align timing belt tensioner spring stop with tensioner as shown (Fig. 98) and torque timing belt tensioner retaining bolt to 34.7N·m.

(4) Rotate engine 2 complete revolution and then recheck tensioner alignment. Readjust tensioner alignment as necessary.

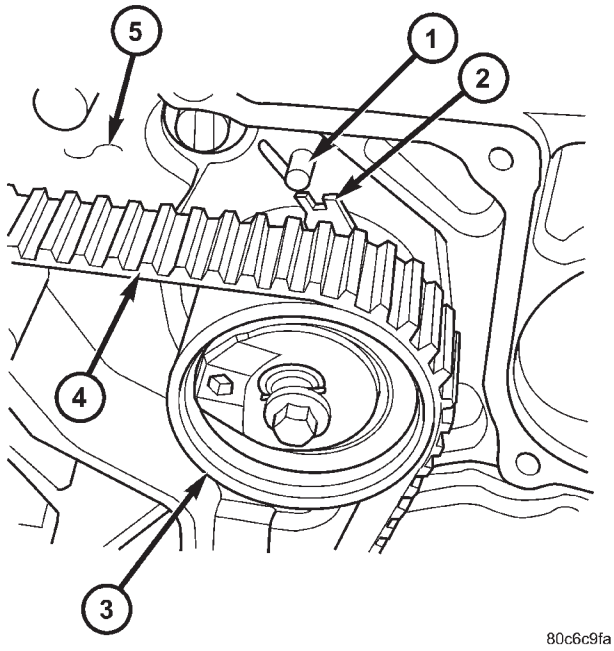

Fig. 98 TIMING BELT TENSIONER ALIGNMENT

1 - TENSIONER SPRING STOP
2 - TIMING BELT TENSIONER
3 - TIMING BELT TENSIONER
4 - TIMING BELT
5 - TIMING BELT INNER COVER

TIMING BELT/CHAIN AND SPROCKETS

REMOVAL

CAUTION: Before removing the timing belt, the engine must put at 90° after TDC. Failure to do so could result in valve and/or piston damage during reassembly. (Refer to 9 - ENGINE/VALVE TIMING - STANDARD PROCEDURE)

(1) Disconnect negative battery cable.

(2) Remove engine cover (Refer to 9 - ENGINE - REMOVAL).

(3) Remove air cleaner housing assembly.

(4) Support engine and remove right engine mount.

(5) Remove power steering belt (Refer to 7 - COOLING/ACCESSORY DRIVE/DRIVE BELTS - REMOVAL).

(6) Remove accessory drive belt (Refer to 7 - COOLING/ACCESSORY DRIVE/DRIVE BELTS - REMOVAL).

(7) Remove vibration damper (Refer to 9 - ENGINE/ENGINE BLOCK/VIBRATION DAMPER - REMOVAL).

TIMING BELT/CHAIN AND SPROCKETS (Continued)

(8) Remove timing belt outer cover (Refer to 9 - ENGINE/VALVE TIMING/TIMING BELT / CHAIN COVER(S) - REMOVAL).

(9) Loosen timing belt tensioner and remove timing belt (Fig. 99).

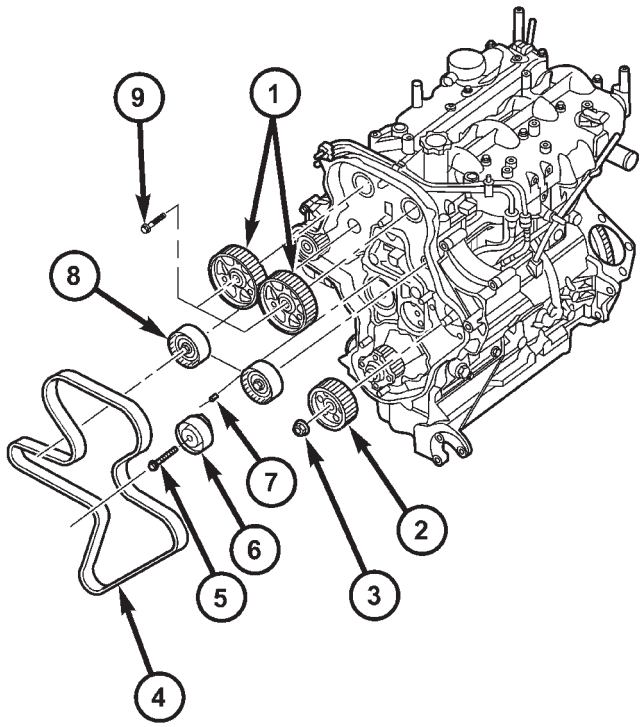

Fig. 99 TIMING BELT AND SPROCKETS

1 -CAMSHAFT SPROCKETS
2 - INJECTION PUMP SPROCKET
3 - INJECTION PUMP SPROCKET RETAINING NUT
4 - TIMING BELT
5 - TIMING BELT TENSIONER RETAINING BOLT
6 - TIMING BELT TENSIONER
7 - TENSIONER ALIGNMENT PIN
8 - IDLER PULLEY
9 - CAMSHAFT SPROCKET RETAINING BOLT

INSTALLATION

(1) With both camshaft alignment pins still installed and the engine locked at 90° after TDC.

(2) Align timing mark on injection pump sprocket with timing mark on timing belt (Fig. 100).

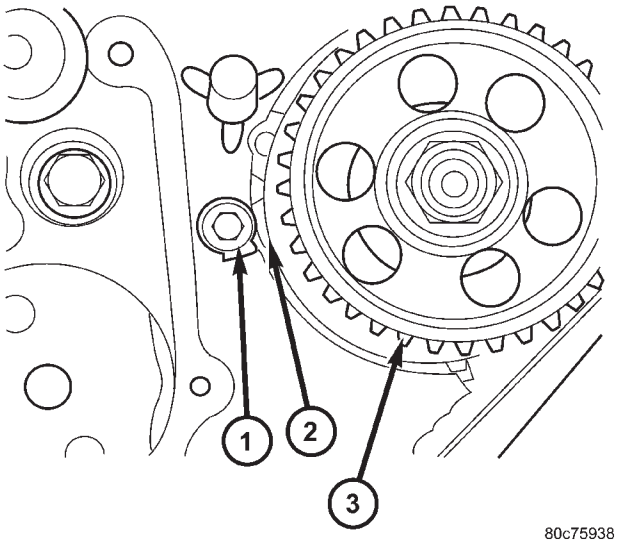

Fig. 100 INJECTION PUMP GEAR TIMING MARKS

1 - TIMING MARK ON COVER
2 - TIMING MARK ON INJECTION PUMP SPROCKET
3 - INJECTION PUMP SPROCKET

(3) Install timing belt.

(4) Adjust the timing belt tensioner (Refer to 9 - ENGINE/VALVE TIMING/TMNG BELT/CHAIN TENSIONER&PULLEY - ADJUSTMENTS) .

(5) Remove both camshaft alignment pins from cylinder head cover/intake manifold and engine locking pin from engine block (Refer to 9 - ENGINE/VALVE TIMING - STANDARD PROCEDURE).

(6) Install timing belt outer cover (Refer to 9 - ENGINE/VALVE TIMING/TIMING BELT / CHAIN COVER(S) - INSTALLATION).

(7) Install vibration damper (Refer to 9 - ENGINE/ENGINE BLOCK/VIBRATION DAMPER - INSTALLATION).

(8) Install accessory drive belt (Refer to 7 - COOLING/ACCESSORY DRIVE/DRIVE BELTS - INSTALLATION).

(9) Install power steering belt (Refer to 7 - COOLING/ACCESSORY DRIVE/DRIVE BELTS - INSTALLATION).

(10) Install right engine mount.

(11) Install air cleaner housing.

(12) Install engine cover (Refer to 9 - ENGINE - INSTALLATION).

(13) Connect negative battery cable.

EXHAUST SYSTEM

TABLE OF CONTENTS

page

EXHAUST SYSTEM
DESCRIPTION 1
OPERATION 2
DIAGNOSIS AND TESTING
DIAGNOSIS AND TESTING - EXCESSIVE EXHAUST SYSTEM NOISE 2
DIAGNOSIS AND TESTING - EXHAUST SYSTEM RESTRICTION CHECK 2
INSPECTION 3
ADJUSTMENTS 3
SPECIFICATIONS
TORQUE 3
SPECIAL TOOLS
EXHAUST SYSTEM 4
CATALYTIC CONVERTER
DESCRIPTION 4
OPERATION 4
REMOVAL 5
INSPECTION 6
INSTALLATION 6
CROSS-OVER PIPE - 3.3/3.8L
REMOVAL 6
INSTALLATION 6
HEAT SHIELDS
DESCRIPTION 6
OPERATION 7
REMOVAL 7
INSTALLATION 7
MUFFLER
REMOVAL 7
INSTALLATION 8
RESONATOR
REMOVAL 9
INSTALLATION 9

EXHAUST SYSTEM

DESCRIPTION

The exhaust system consists of a catalytic converter, muffler, and a resonator with connecting pipes in-between (Fig. 1). The system is serviced in two sections; the catalytic converter and pipe, and the muffler and resonator with connecting pipe. A band clamp is used to connect the joint between the two components. Three support hanger rods with rubber isolators are used to support and isolate the exhaust system. A flexible joint, integral to the catalytic converter, allows for engine movement. On vehicles equipped with AWD, an additional heat shield is mounted to the catalytic converter. The exhaust system is tuned for each vehicle/powertrain combination.

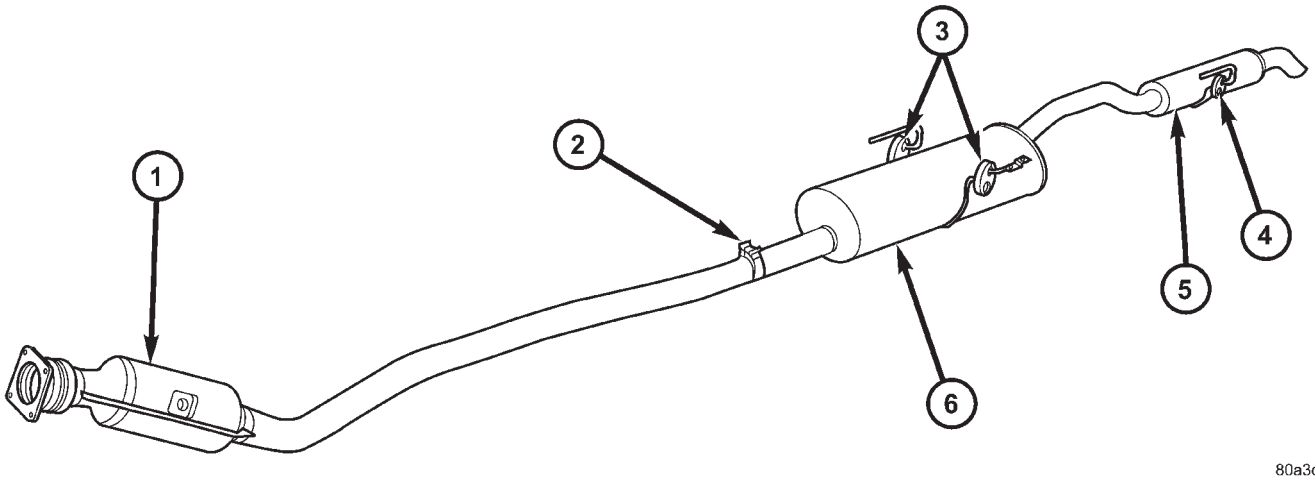

Fig. 1 Exhaust System - Typical (All Vehicles)

1 - CATALYTIC CONVERTER
2 - BAND CLAMP
3 - SUPPORTS - MUFFLER
4 - SUPPORT - RESONATOR
5 - RESONATOR
6 - MUFFLER

EXHAUST SYSTEM (Continued)

OPERATION

The exhaust system contains, quiets, and cleans the exhaust gases generated by the engine.

DIAGNOSIS AND TESTING

DIAGNOSIS AND TESTING - EXCESSIVE EXHAUST SYSTEM NOISE

CONDITION	POSSIBLE CAUSES	CORRECTION
EXCESSIVE EXHAUST NOISE (UNDER HOOD)	1. Exhaust manifold cracked or broken.	1. Replace manifold.
	2. Manifold to cylinder head leak.	2. Tighten manifold and/or replace gasket.
	3. EGR Valve to manifold gasket leakage.	3. Tighten fasteners or replace gasket.
	4. EGR Valve to EGR tube gasket leakage.	4. Tighten fasteners or replace gasket.
	5. EGR tube to manifold tube leakage.	5. Tighten tube nut.
	6. Exhaust flex-joint to manifold leak.	6. Tighten joint fasteners and/or replace gasket.
	7. Exhaust flex-joint.	7. Replace catalytic converter assembly.
	8. Pipe and shell noise from front exhaust pipe.	8. Characteristic of single wall pipe.
EXCESSIVE EXHAUST NOISE	1. Leak at exhaust pipe joints.	1. Tighten clamps at leaking joints.
	2. Burned or rusted out muffler assembly or exhaust pipe.	2. Replace muffler resonator tailpipe assembly or exhaust pipe with catalytic converter assembly.
	3. Burned or rusted out resonator.	3. Replace muffler resonator tailpipe assembly.
	4. Restriction in exhaust system.	4. Perform Exhaust System Restriction Check. Replace component as necessary.
	5. Converter material in muffler.	5. Replace muffler and converter assemblies. Check fuel injection and ignition systems for proper operation.

DIAGNOSIS AND TESTING - EXHAUST SYSTEM RESTRICTION CHECK

Exhaust system restriction can be checked by measuring back pressure using the DRB III® and PEP module pressure tester.

WARNING: THE NORMAL OPERATING TEMPERATURE OF THE EXHAUST SYSTEM IS VERY HIGH. THEREFORE, NEVER WORK AROUND OR ATTEMPT TO SERVICE ANY PART OF THE EXHAUST SYSTEM UNTIL IT IS COOLED. SPECIAL CARE SHOULD BE TAKEN WHEN WORKING NEAR THE CATALYTIC CONVERTER. THE TEMPERATURE OF THE CONVERTER RISES TO A HIGH LEVEL AFTER A SHORT PERIOD OF ENGINE OPERATION TIME.

EXHAUST SYSTEM (Continued)

(1) Disconnect and remove the upstream (before catalytic converter) oxygen sensor. (Refer to 14 - FUEL SYSTEM/FUEL INJECTION/O2 SENSOR - REMOVAL)

(2) Install the Exhaust Back Pressure Fitting Adaptor CH8519.

(3) Connect the Low Pressure Sensor (15 psi) CH7063 to the back pressure fitting.

(4) Following the PEP module instruction manual, connect all required cables to the DRB III® and PEP module. Select the available menu options on the DRBIII® display screen for using the digital pressure gauge function.

(5) Apply the park brake and start the engine.

(6) With transmission in Park or Neutral, raise engine speed to 2000 RPM. Monitor the pressure readings on the DRBIII®. Back pressure should not exceed specified limit. Refer to specification in table below EXHAUST BACK PRESSURE LIMITS .

NOTE: For applications with dual catalytic converters, repeat test on opposite converter using the previous steps.

(7) If pressure exceeds maximum limits, inspect exhaust system for restricted component. For further catalytic converter inspection procedures, (Refer to 11 - EXHAUST SYSTEM/CATALYTIC CONVERTER - INSPECTION). Replace component(s) as necessary.

EXHAUST BACK PRESSURE LIMITS

Exhaust Back Pressure Limit (Max)	
Vehicle in Park/Neutral (no load) RPM	3.45 Kpa (0.5 psi)

INSPECTION

Inspect the exhaust pipes, catalytic converters, muffler, and resonators for cracked joints, broken welds and corrosion damage that would result in a leaking exhaust system. Inspect the clamps, support brackets, and insulators for cracks and corrosion damage.

NOTE: Slip joint band clamps are spot welded to exhaust system. If a band clamp must be replaced, the spot weld must be ground off.

ADJUSTMENTS

A misaligned exhaust system is usually indicated by a vibration, rattling noise, or binding of exhaust system components. These noises are sometimes hard to distinguish from other chassis noises. Inspect exhaust system for broken, damaged or loose components such as; clamps, heat shields, isolators, and hanger brackets. Replace or tighten as necessary. It is important that exhaust system clearances and alignment be maintained.

Perform the following procedures to align the exhaust system:

(1) Loosen band clamp at catalytic converter pipe to muffler/resonator assembly.

(2) Align the exhaust system by inserting pipe inward or outward until specification is achieved as shown in (Fig. 2).

(3) Tighten band clamp to 54 N·m (40 ft. lbs.).

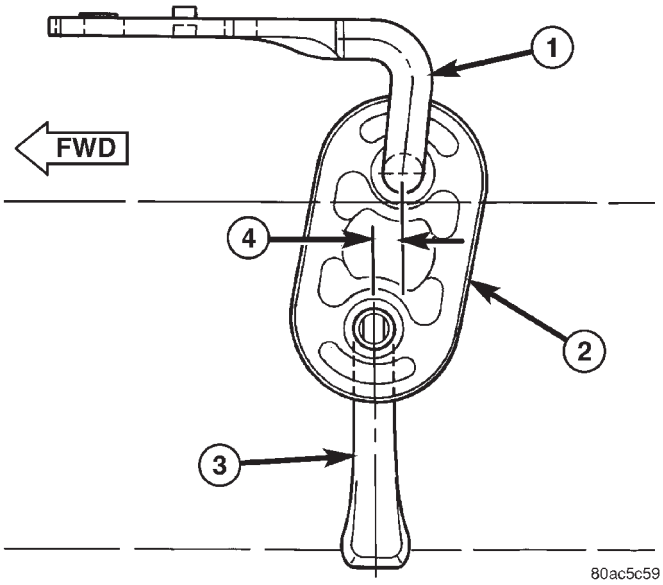

Fig. 2 Exhaust System Alignment

1 - HANGER BRACKET TO BODY
2 - ISOLATOR
3 - HANGER - MUFFLER/RESONATOR SUPPORT
4 - 6 mm (0.25 in.)

SPECIFICATIONS

TORQUE

DESCRIPTION	N·m	Ft. Lbs.	In. Lbs.
Band Clamp	54	40	—
Cross-over Pipe—Fastener	41	30	—
Exhaust Manifold Flange—Fastener	37	—	325
Heat Shield (Muffler)—Fastener	2.6	—	23
Heat Shield (Toe Board)—Fastener	2.6	—	23
Heat Shield (Resonator Pipe)—Fastener	2.6	—	23
Insulator Mounting Bracket—Bolts	28	—	250

EXHAUST SYSTEM (Continued)

SPECIAL TOOLS

EXHAUST SYSTEM

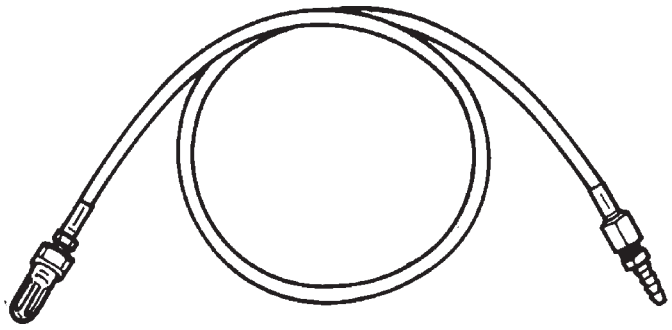

Back Pressure Test Adapter - CH8519

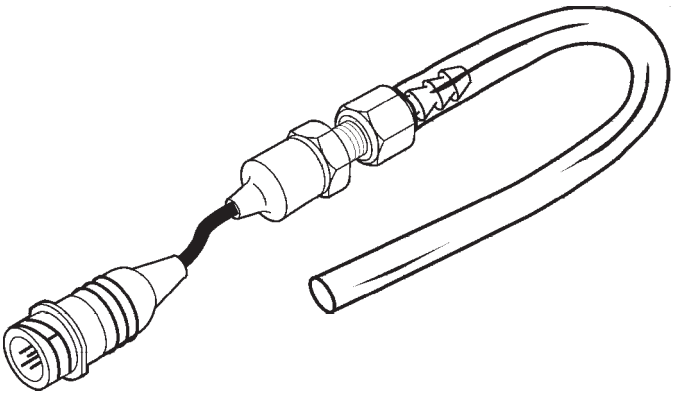

Pressure Transducer CH7063

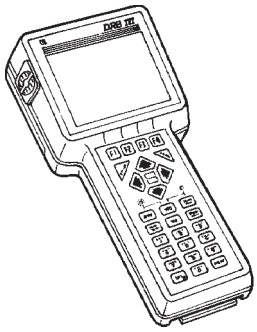

DRB III & PEP Module - OT-CH6010A

CATALYTIC CONVERTER

DESCRIPTION

The toe board three-way catalytic converter is connected to the exhaust manifold by the use of flex joint and a gasket. The outlet connects to the muffler inlet pipe and is secured with a band type clamp (Fig. 1).

The exhaust flex-joint coupling (Fig. 3) is used to secure the catalytic converter to the exhaust manifold. The flex-joint has four bolts, four flag nuts and a gasket that are separate parts from the exhaust flex-joint. The flex-joint is welded to the catalytic converter.

CAUTION: When servicing, care must be exercised not to dent or bend the bellows or bellows cover of the flex-joint. Should this occur, the flex-joint will eventually fail and require the catalytic converter be replaced.

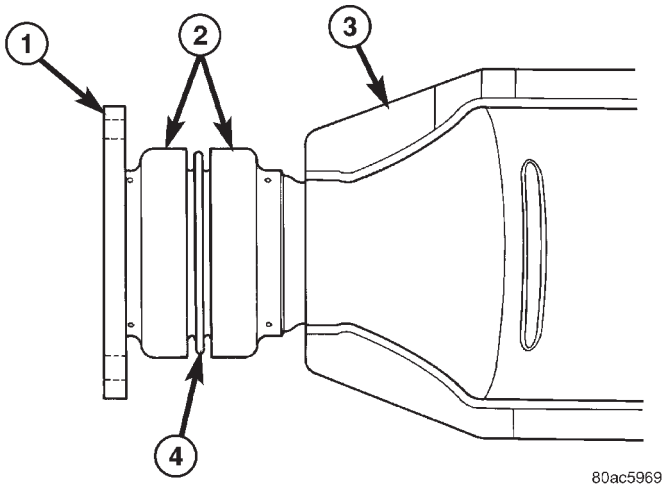

Fig. 3 Flex-joint

1 - FLANGE
2 - END CAPS
3 - CATALYTIC CONVERTER
4 - FLEXIBLE BELLOWS

OPERATION

The three-way catalytic converter simultaneously converts three exhaust emissions into harmless gases. Specifically, HC and CO emissions are converted into water (H2O) and carbon dioxide (CO2). Oxides of Nitrogen (NOx) are converted into elemental Nitrogen (N) and water. The three-way catalyst is most efficient in converting HC, CO and NOx at the stoichiometric air fuel ratio of 14.7:1.

The oxygen content in a catalyst is important for efficient conversion of exhaust gases. When a high oxygen content (lean) air/fuel ratio is present for an extended period, oxygen content in a catalyst can reach a maximum. When a rich air/fuel ratio is present for an extended period, the oxygen content in the catalyst can become totally depleted. When this occurs, the catalyst fails to convert the gases. This is known as catalyst ″punch through.″

CATALYTIC CONVERTER (Continued)

Catalyst operation is dependent on its ability to store and release the oxygen needed to complete the emissions-reducing chemical reactions. As a catalyst deteriorates, its ability to store oxygen is reduced. Since the catalyst's ability to store oxygen is somewhat related to proper operation, oxygen storage can be used as an indicator of catalyst performance. Refer to the appropriate Diagnostic Information for diagnosis of a catalyst related Diagnostic Trouble Code (DTC).

The combustion reaction caused by the catalyst releases additional heat in the exhaust system, causing temperature increases in the area of the reactor under severe operating conditions. Such conditions can exist when the engine misfires or otherwise does not operate at peak efficiency. **Do not** remove spark plug wires from plugs or by any other means short out cylinders, if exhaust system is equipped with a catalytic converter. Failure of the catalytic converter can occur due to temperature increases caused by unburned fuel passing through the converter. This deterioration of the catalyst core can result in excessively high emission levels, noise complaints, and exhaust restrictions.

Unleaded gasoline must be used to avoid ruining the catalyst core. Do not allow engine to operate above 1200 RPM in neutral for extended periods over 5 minutes. This condition may result in excessive exhaust system/floor pan temperatures because of no air movement under the vehicle.

The flex joint allows flexing as the engine moves, preventing breakage that could occur from the back-and-forth motion of a transverse mounted engine.

CAUTION: Due to exterior physical similarities of some catalytic converters with pipe assemblies, extreme care should be taken with replacement parts. There are internal converter differences required in some parts of the country (particularly vehicles built for States with strict emission requirements) and between model years.

REMOVAL

(1) Loosen clamp and disconnect the muffler/resonator assembly from catalytic converter pipe.

(2) Disconnect downstream oxygen sensor electrical connector (Fig. 4). For removal of downstream oxygen sensor, (Refer to 14 - FUEL SYSTEM/FUEL INJECTION/O2 SENSOR - REMOVAL).

(3) Remove catalytic converter to exhaust manifold attaching fasteners (Fig. 5).

(4) Remove catalytic converter and gasket (Fig. 5).

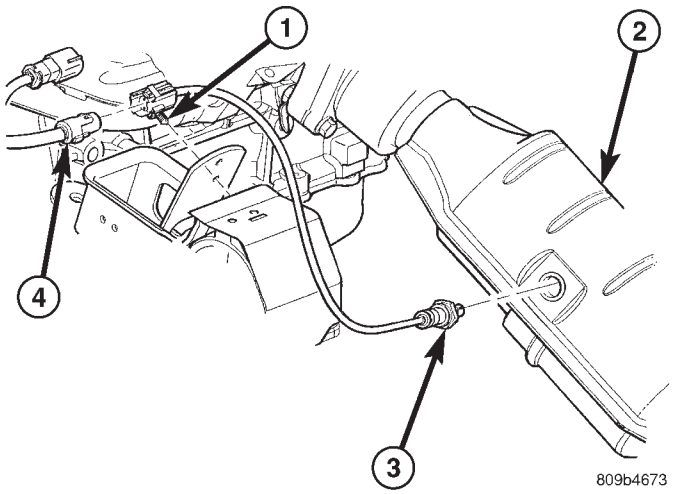

Fig. 4 Downstream Oxygen Sensor

1 - OXYGEN SENSOR CONNECTOR
2 - CATALYTIC CONVERTER
3 - DOWNSTREAM OXYGEN SENSOR
4 - ENGINE HARNESS CONNECTOR

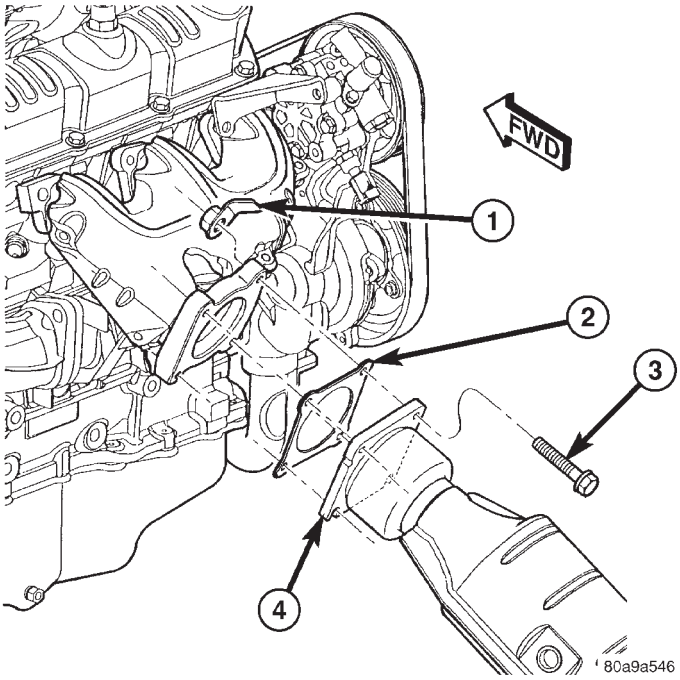

Fig. 5 Catalytic Converter to Exhaust Manifold

1 - FLAG NUT
2 - GASKET
3 - BOLT
4 - CATALYTIC CONVERTER

CATALYTIC CONVERTER (Continued)

INSPECTION

WARNING: THE NORMAL OPERATING TEMPERATURE OF THE EXHAUST SYSTEM IS VERY HIGH. THEREFORE, NEVER ATTEMPT TO SERVICE ANY PART OF THE EXHAUST SYSTEM UNTIL IT IS COOLED. SPECIAL CARE SHOULD BE TAKEN WHEN WORKING NEAR THE CATALYTIC CONVERTER. THE TEMPERATURE OF THE CONVERTER RISES TO A HIGH LEVEL AFTER A SHORT PERIOD OF ENGINE OPERATION TIME.

Check catalytic converter for a flow restriction. (Refer to 11 - EXHAUST SYSTEM - DIAGNOSIS AND TESTING) Exhaust System Restriction Check for procedure.

Visually inspect the catalytic converter element by using a borescope or equivalent. Remove oxygen sensor(s) and insert borescope. If borescope is not available, remove converter and inspect element using a flashlight. Inspect element for cracked or melted substrate.

NOTE: Before replacing a catalytic converter, determine the root cause of failure. Most catalytic converter failures are caused by air, fuel or ignition problems. (Refer to Appropriate Diagnostic Information) for test procedures.

INSTALLATION

(1) Position new gasket onto the manifold flange and install catalytic converter (Fig. 5). Tighten fasteners to 37 N·m (325 in. lbs.).

NOTE: Be careful not to twist or kink the oxygen sensor wires.

(2) Install (if removed) and connect the downstream oxygen sensor (Fig. 4).

(3) Install the muffler/resonator assembly. (Refer to 11 - EXHAUST SYSTEM/MUFFLER - INSTALLATION)

CROSS-OVER PIPE - 3.3/3.8L

REMOVAL

(1) Disconnect negative cable from battery.

(2) Remove the fasteners attaching the left bank manifold connection to cross-over pipe (Fig. 6).

(3) Raise vehicle and remove the left front wheel.

(4) Access the lower right bank pipe connection fastener through the left front wheel opening using a long ratchet extension. Loosen and remove the lower fastener.

(5) Remove the upper right bank pipe connection fastener by accessing though the catalytic converter floor pan tunnel.

(6) Lower the vehicle.

(7) Remove the cross-over pipe (Fig. 6).

(8) Remove gaskets and discard (Fig. 6).

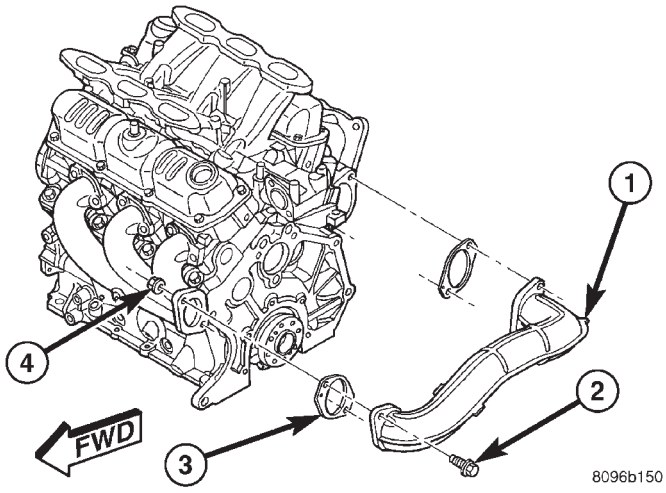

Fig. 6 CROSS-OVER PIPE

1 - CROSS-OVER PIPE
2 - BOLT
3 - GASKET
4 - FLAG NUT

INSTALLATION

(1) Position cross-over pipe to the manifold connections (Fig. 6).

(2) Position new gasket on left bank (front) pipe connection and loosely install fasteners (Fig. 6).

(3) Raise the vehicle.

(4) Position new gasket on the right bank pipe connection and install fasteners.

(5) Tighten right bank upper fastener to 41 N·m (30 ft. lbs.).

(6) Tighten right bank lower fastener to 41 N·m (30 ft. lbs.) using a long ratchet extension accessing through the left wheel opening.

(7) Install the left front wheel and lower vehicle.

(8) Tighten the left bank pipe connection fasteners to 41 N·m (30 ft. lbs.) (Fig. 6).

HEAT SHIELDS

DESCRIPTION

The exhaust system heat shields (Fig. 7), (Fig. 8), or (Fig. 9) are attached to the under body of the vehicle. On vehicles equipped with All Wheel Dive (AWD), an additional heat shield is mounted to the catalytic converter.

HEAT SHIELDS (Continued)

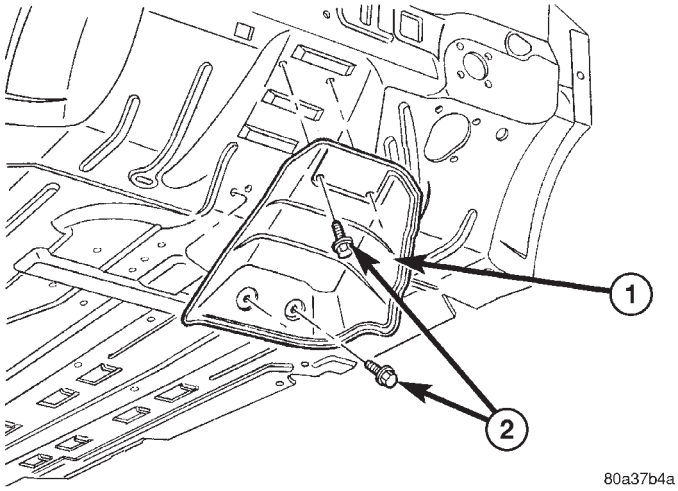

Fig. 7 CATALYTIC CONVERTER HEAT SHIELD

1 - HEAT SHIELD - CATALYTIC CONVERTER
2 - SCREW (QTY. 4)

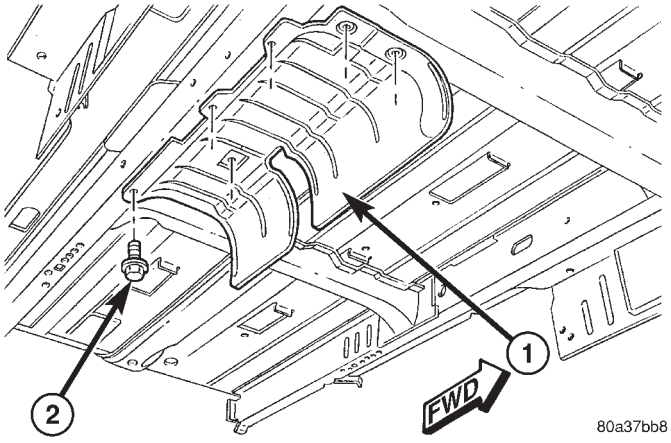

Fig. 8 MUFFLER HEAT SHIELD

1 - HEAT SHIELD - MUFFLER
2 - SCREW (QTY. 6)

OPERATION

Heat shields are needed to protect both the vehicle and the environment from the high temperatures developed near the catalytic converter.

Avoid application of rust prevention compounds or undercoating materials to exhaust system floor pan heat shields on cars so equipped. Light over spray near the edges is permitted. Application of coating will greatly reduce the efficiency of the heat shields resulting in excessive floor pan temperatures and objectionable fumes.

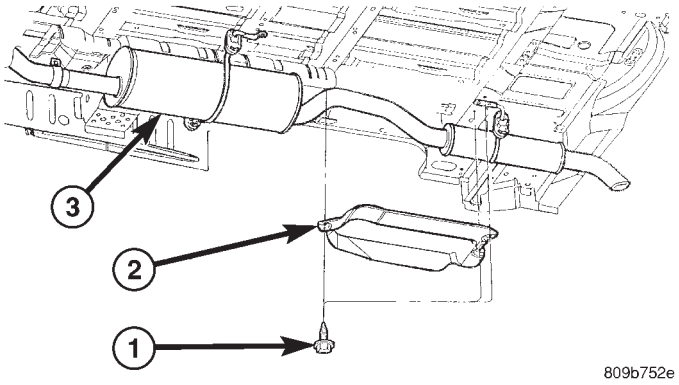

Fig. 9 RESONATOR PIPE HEAT SHIELD

1 - SCREW (QTY. 3)
2 - HEAT SHIELD - RESONATOR PIPE
3 - MUFFLER

REMOVAL

(1) Raise vehicle on hoist.
(2) Remove fasteners attaching applicable heat shield (Fig. 7), (Fig. 8), or (Fig. 9).
(3) Remove heat shield(s).

INSTALLATION

(1) Position heat shield(s) to underbody.
(2) Install heat shield fasteners and tighten to 2.6 N·m (23 in. lbs.) (Fig. 7), (Fig. 8), or (Fig. 9).
(3) Lower vehicle.

MUFFLER

REMOVAL

(1) Raise vehicle on a body contact type hoist.

NOTE: To provide removal clearance between muffler/resonator pipe and rear axle parts, the rear suspension must be relieved of all body weight.

(2) Apply a penetrating oil to clamp nuts of component requiring removal.

CAUTION: When servicing the exhaust system, care must be exercised not to dent or bend the bellows of the flex-joint. Should this occur, the flex-joint will eventually fail, requiring replacement of the catalytic converter.

(3) Disconnect the right side axle half shaft from the rear differential module (AWD equipped only).

MUFFLER (Continued)

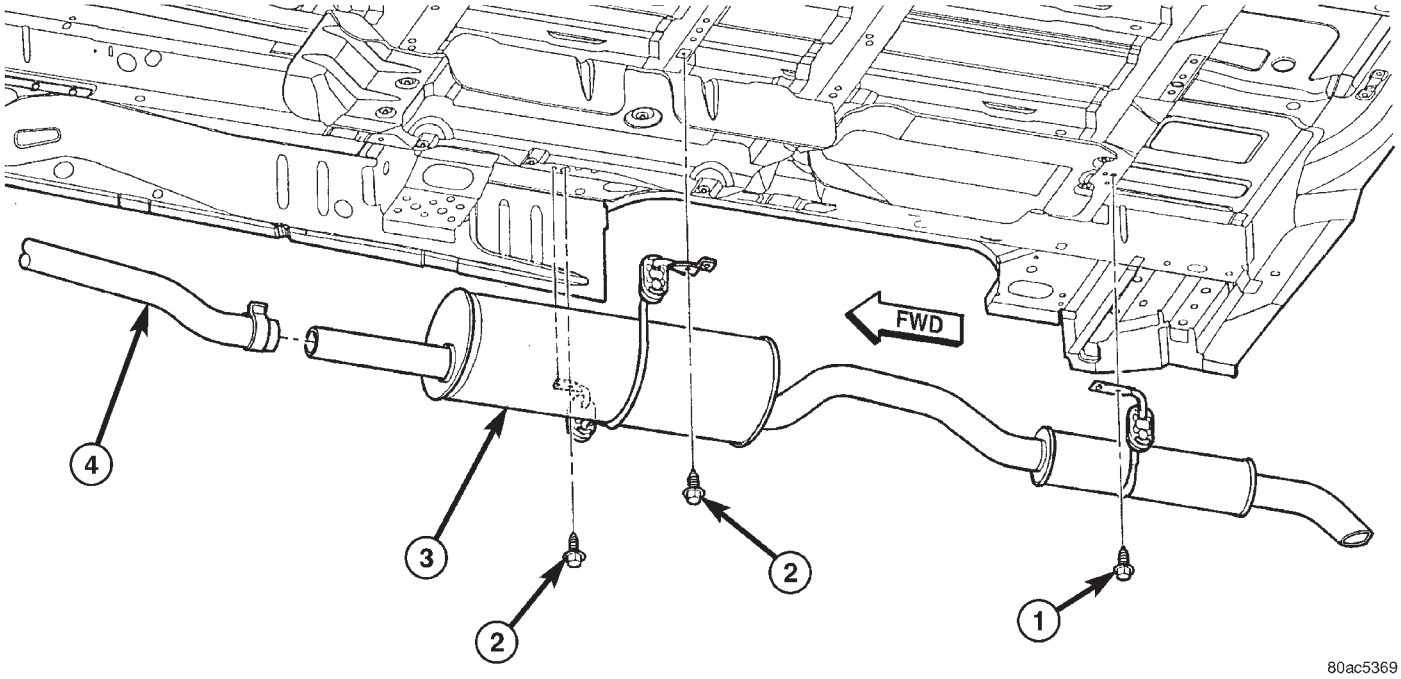

Fig. 10 Exhaust System - Typical (All Vehicles)

1 - SCREW - RESONATOR HANGER TO BODY
2 - SCREW - MUFFLER HANGER TO BODY
3 - MUFFLER & RESONATOR ASSEMBLY
4 - CATALYTIC CONVERTER PIPE

(4) Loosen the band clamp (Fig. 10) at the muffler to converter pipe connection.

(5) Remove the exhaust hangers to body screws (Fig. 10).

(6) Separate muffler pipe from converter pipe.

(7) Remove muffler/resonator assembly by moving assembly forward and guiding the resonator through the rear axle to body opening.

(8) Clean ends of pipes or muffler to assure mating of all parts. Discard broken or worn insulators, rusted clamps, supports and attaching parts. **When replacement is required on any component of the exhaust system, it is important that original equipment parts (or equivalent) be used for the following conditions:**

- Ensure proper alignment with other components in the system.
- Provide acceptable exhaust noise levels.
- Provide proper exhaust system back pressure for maintaining emission and performance levels.

INSTALLATION

(1) Install the muffler/resonator assembly by guiding resonator between the rear axle and body.

(2) Connect the muffler pipe to the converter pipe but do not tighten band clamp (Fig. 10).

(3) Position hangers to body and install screws starting at the resonator working forward (Fig. 10). Tighten hanger screws to 28 N·m (250 in. lbs.).

(4) Insert muffler pipe into catalytic converter pipe until the hangers are positioned as shown in (Fig. 11)

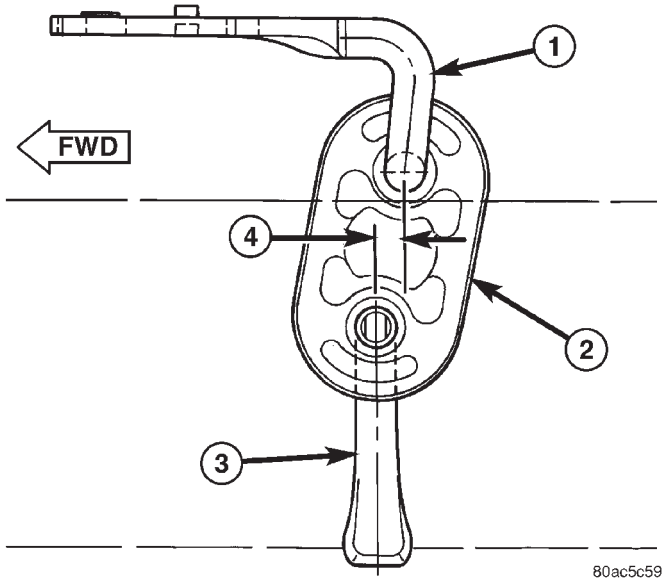

Fig. 11 Exhaust System Alignment

1 - HANGER BRACKET TO BODY
2 - ISOLATOR
3 - HANGER - MUFFLER/RESONATOR SUPPORT
4 - 6 mm (0.25 in.)

MUFFLER (Continued)

CAUTION: Band clamps should never be tightened such that the two sides of the clamps are bottomed out against the center hourglass shaped center block. Once this occurs, the clamp band has been stretched and has lost its clamping force and must be replaced.
To replace the band clamp; remove the nut and peel back the ends of the clamp until spot weld breaks. Clean remaining spot weld from the pipe using a file or grinder until surface is smooth.

NOTE: Maintain proper clamp orientation when replacing with new clamp.

(5) Tighten the band clamp to 55 N·m (40 ft. lbs.) (Fig. 12).
(6) Connect the right side half shaft to the rear differential module (AWD equipped only).

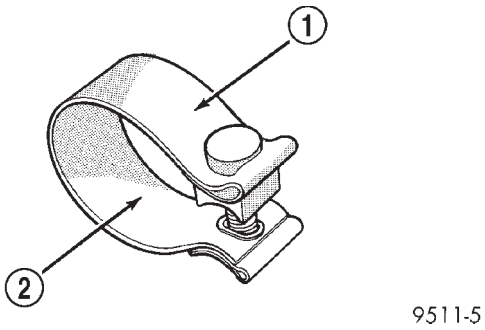

Fig. 12 Band Clamp

1 - BAND CLAMP
2 - TORQUE SPECIFICATION

RESONATOR

REMOVAL

(1) (Refer to 11 - EXHAUST SYSTEM/MUFFLER - REMOVAL)

INSTALLATION

(1) (Refer to 11 - EXHAUST SYSTEM/MUFFLER - INSTALLATION)

EXHAUST SYSTEM AND TURBOCHARGER

TABLE OF CONTENTS

page

EXHAUST SYSTEM AND TURBOCHARGER
DESCRIPTION 1
SPECIFICATIONS - TORQUE 1
TURBOCHARGER SYSTEM
DESCRIPTION 2
OPERATION 2
TURBOCHARGER
REMOVAL 4
CLEANING 5
INSTALLATION 5
HEAT SHIELDS
REMOVAL 5
INSTALLATION 6

EXHAUST SYSTEM AND TURBOCHARGER

DESCRIPTION

The basic exhaust system consists of an engine exhaust manifold, turbocharger, exhaust down pipe, exhaust pipe, exhaust heat shield(s), muffler and exhaust tailpipe

The exhaust system uses a single muffler.

The exhaust system must be properly aligned to prevent stress, leakage and body contact. If the system contacts any body panel, it will transfer objectionable noises originating from the engine to the body.

When inspecting an exhaust system, critically inspect for cracked or loose joints, stripped screw or bolt threads, corrosion damage and worn, cracked or broken hangers. Replace all components that are badly corroded or damaged. DO NOT attempt to repair.

When replacement is required, use original equipment parts (or equivalent). This will assure proper alignment and provide acceptable exhaust noise levels.

CAUTION: Avoid application of rust prevention compounds or undercoating materials to exhaust system floor pan exhaust heat shields. Light overspray near the edges is permitted. Application of coating will result in excessive floor pan temperatures and objectionable fumes.

SPECIFICATIONS - TORQUE

2.5L DIESEL - TORQUE SPECIFICATIONS

DESCRIPTION	N·m	Ft. Lbs.	In. Lbs.
Exhaust Manifold Nuts	32.4	24	—
Exhaust Manifold Heat shield Bolts	27.5	21	—
Turbocharger Bracket Bolts	47.1	35	—
Turbocharger Downpipe Nuts	32.4	24	—
Turbocharger Oil Feed Line Fitting	24.5	18	215
Turbocharger to Exhaust Manifold Nuts	32.4	24	—

TURBOCHARGER SYSTEM

DESCRIPTION

CAUTION: The turbocharger is a performance part and must not be tampered with. The wastegate bracket is an integral part of the turbocharger. Tampering with the wastegate components can reduce durability by increasing cylinder pressure and thermal loading due to incorrect inlet and exhaust manifold pressure. Poor fuel economy and failure to meet regulatory emissions laws may result. Increasing the turbocharger boost WILL NOT increase engine power.

The turbocharger is an exhaust-driven supercharger which increases the pressure and density of the air entering the engine. With the increase of air entering the engine, more fuel can be injected into the cylinders, which creates more power during combustion.

The turbocharger assembly consists of four (4) major component systems (Fig. 1) (Fig. 2):

- Turbine section
- Compressor section
- Bearing housing
- Wastegate

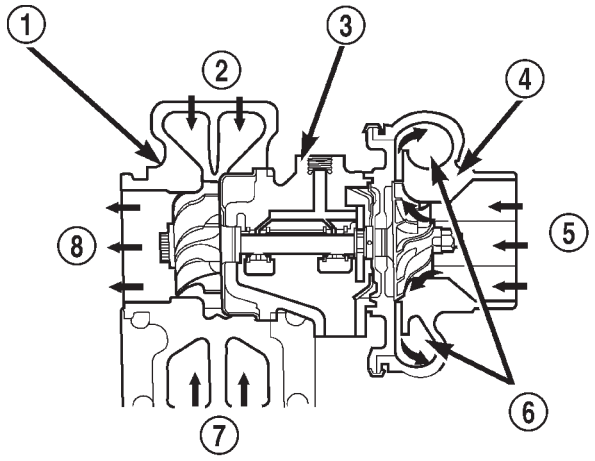

Fig. 1 Turbocharger Operation

1 - TURBINE SECTION
2 - EXHAUST GAS
3 - BEARING HOUSING
4 - COMPRESSOR SECTION
5 - INLET AIR
6 - COMPRESSED AIR TO ENGINE
7 - EXHAUST GAS
8 - EXHAUST GAS TO EXHAUST PIPE

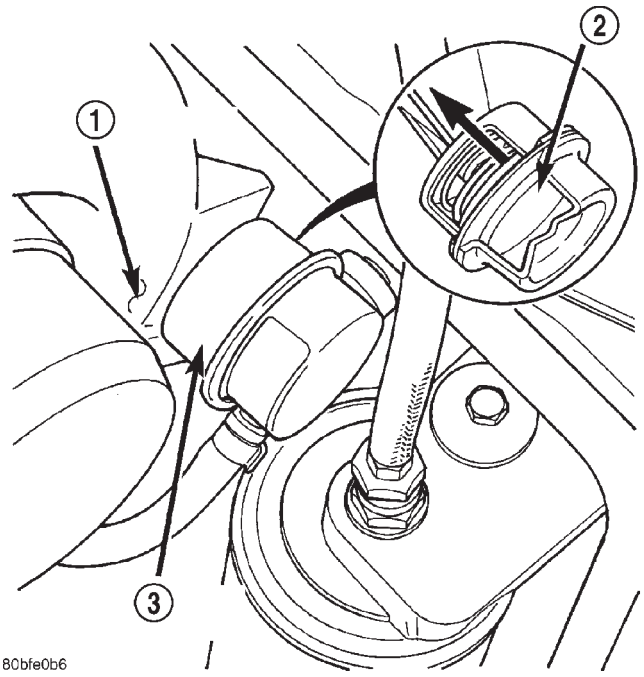

Fig. 2 Turbocharger Wastegate Actuator

1 - TURBOCHARGER
2 - DIAPHRAGM
3 - WASTE GATE ACTUATOR

OPERATION

Exhaust gas pressure and energy drive the turbine, which in turn drives a centrifugal compressor that compresses the inlet air, and forces the air into the engine through the charge air cooler and plumbing. Since heat is a by-product of this compression, the air must pass through a charge air cooler to cool the incoming air and maintain power and efficiency.

Increasing air flow to the engine provides:

- Improved engine performance
- Lower exhaust smoke density
- Improved operating economy
- Altitude compensation
- Noise reduction.

The turbocharger also uses a wastegate (Fig. 3), which regulates intake manifold air pressure and prevents over boosting at high engine speeds. When the wastegate valve is closed, all of the exhaust gases flow through the turbine wheel. As the intake manifold pressure increases, the wastegate actuator opens the valve, diverting some of the exhaust gases away from the turbine wheel. This limits turbine shaft speed and air output from the impeller.

The turbocharger is lubricated by engine oil that is pressurized, cooled, and filtered. The oil is delivered to the turbocharger by a supply line that is tapped into the oil filter head. The oil travels into the bearing housing, where it lubricates the shaft and bearings (Fig. 4). A return pipe at the bottom of the

TURBOCHARGER SYSTEM (Continued)

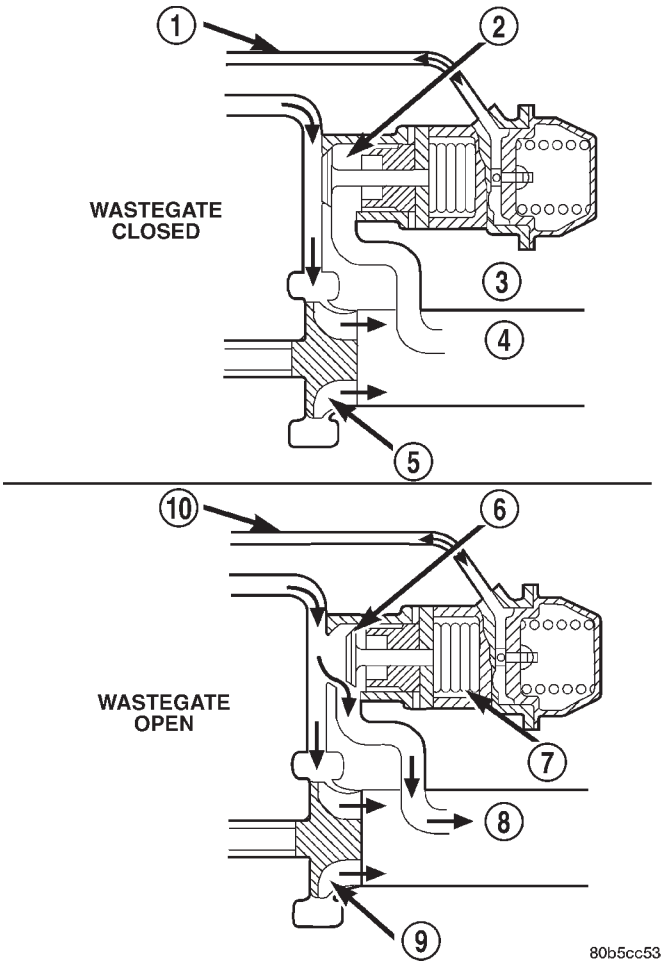

Fig. 3 Wastegate Operation

1 - SIGNAL LINE
2 - EXHAUST BYPASS VALVE
3 - WASTEGATE
4 - EXHAUST
5 - TURBINE
6 - EXHAUST BYPASS VALVE
7 - WASTEGATE
8 - EXHAUST
9 - TURBINE
10 - SIGNAL LINE

bearing housing, routes the engine oil back to the crankcase.

The most common turbocharger failure is bearing failure related to repeated hot shutdowns with inadequate “cool-down” periods. A sudden engine shut down after prolonged operation will result in the transfer of heat from the turbine section of the turbocharger to the bearing housing. This causes the oil to overheat and break down, which causes bearing and shaft damage the next time the vehicle is started.

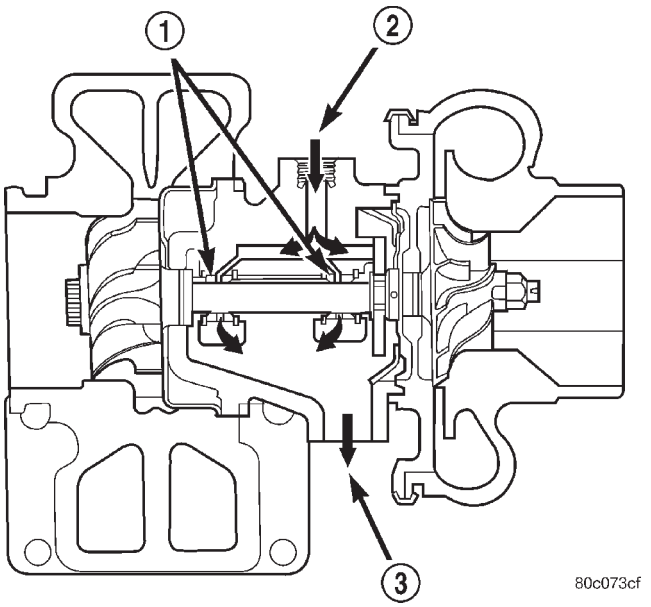

Fig. 4 Turbocharger Oil Supply and Drain

1 - BEARINGS
2 - OIL SUPPLY (FROM ENGINE BLOCK)
3 - OIL RETURN (TO OIL PAN)

Letting the engine idle after extended operation allows the turbine housing to cool to normal operating temperature. The following chart should be used as a guide in determining the amount of engine idle time required to sufficiently cool down the turbocharger before shut down, depending upon the type of driving and the amount of cargo.

TURBOCHARGER ″COOL DOWN″ CHART			
Driving Condition	**Load**	**Turbocharger Temperature**	**Idle Time (in minuetes) Before Shut Down**
Stop & Go	Empty	Cool	Less than 1
Stop & Go	Medium	Warm	1
Highway Speeds	Medium	Warm	2
City Traffic	Max. GCWR	Warm	3
Highway Speeds	Max. GCWR	Warm	4
Uphill Grade	Max. GCWR	Hot	5

TURBOCHARGER

REMOVAL

The exhaust manifold and turbocharger cannot be remove with the engine in vehicle.

(1) Remove engine from vehicle and mount on engine stand (Refer to 9 - ENGINE - REMOVAL).

(2) Remove thermostat to upper radiator hose pipe (Fig. 5).

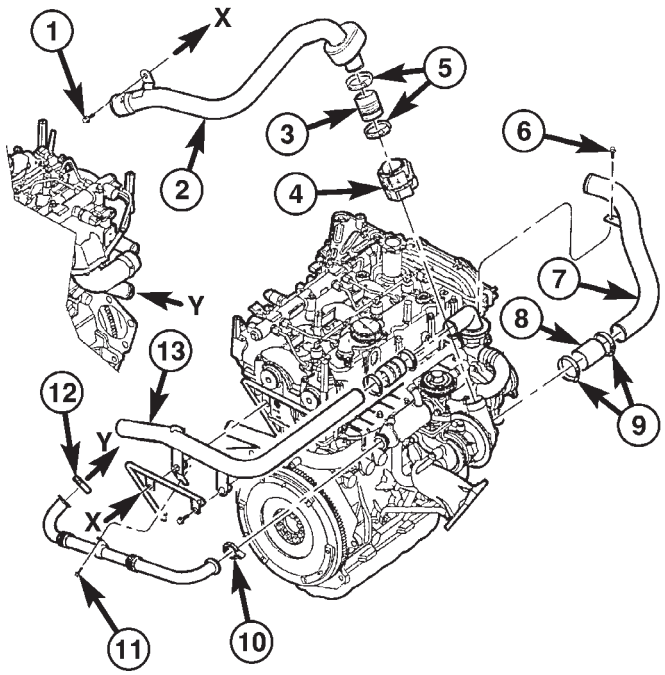

80c67730

Fig. 5 TURBOCHARGER AND COOLANT PIPES

1 - TURBOCHARGER OUTLET PIPE RETAINING BOLT
2 - TURBOCHARGER OUTLET PIPE
3 - ADAPTER HOSE
4 - HEAT SHIELD
5 - HOSE CLAMPS
6 - TURBOCHARGER INLET PIPE RETAINING BOLT
7 - TURBOCHARGER INLET PIPE
8 - ADAPTER HOSE
9 - HOSE CLAMPS
10 - CLAMP
11 - EGR VALVE TO INTAKE AIR INLET PIPE
12 - CLAMP
13 - THERMOSTAT HOUSING TO UPPER RADIATOR HOSE PIPE

(3) Remove engine lift hook (Fig. 6).

(4) Remove exhaust manifold heat shield (Fig. 6).

(5) Disconnect turbocharger oil supply and return lines at turbocharger (Fig. 6).

(6) Remove exhaust manifold retaining nuts (Fig. 6).

(7) Remove exhaust manifold and turbocharger from engine (Fig. 6).

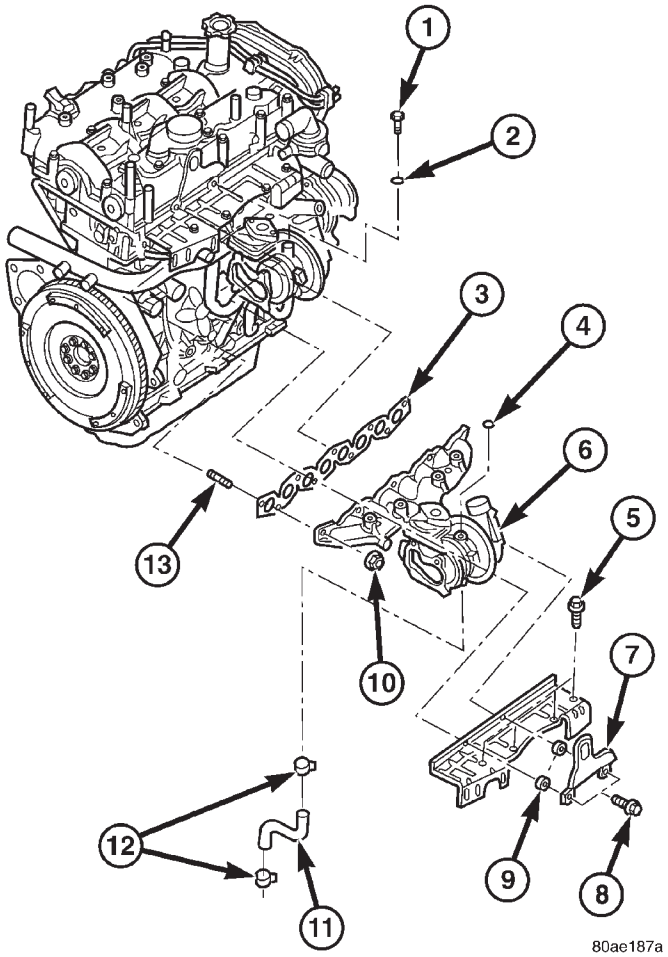

80ae187a

Fig. 6 EXHAUST MANIFOLD AND TURBOCHARGER

1 - TURBOCHARGER OIL SUPPLY BANJO BOLT
2 - COPPER WASHER
3 - EXHAUST MANIFOLD GASKET
4 - COPPER WASHER
5 - EXHAUST MANIFOL HEAT SHIEL RETAINING BOLT
6 - TURBOCHARGER
7 - ENGINE LIFT HOOK
8 - ENGINE LIFT HOOK RETAINING BOLT
9 - SPACER
10 - EXHAUST MANIFOLD RETAINING NUT
11 - TURBOCHARGER OIL RETURN HOSE
12 - HOSE CLAMPS
13 - EXHAUST MANIFOLD STUDS

TURBOCHARGER (Continued)

(8) With exhaust manifold and turbocharger assembly on work bench, remove turbocharger to exhaust manifold retaining bolts. Separate exhaust manifold and turbocharger.

CLEANING

All old gaskets should be inspected for any tears or signs of prior leakage. If any gaskets show such indications, they should be replaced with new gaskets. All gasket mating surfaces must be cleaned of old gasket material to produce a smooth and dirt free sealing surface for the new gasket.

INSTALLATION

(1) Connect exhaust manifold and turbocharger. Torque nuts to 32.4N·m.

(2) Position new exhaust manifol gasket on exhaust manifol studs (Fig. 6).

(3) Install exhaust manifold and turbocharger on engine (Fig. 6). Torque nuts to 32.4N·m.

(4) Connect turbocharger oil supply and return lines at turbocharger (Fig. 6). Torque oil supply line to 24.5N·m.

(5) Install exhaust manifold shield (Fig. 6). Torque bolts to 27.5N·m.

(6) Install engine lift hook (Fig. 6). Torque bolts to 32.4N·m.

(7) Install thermostat to upper radiator hose tube and turbocharger outlet tube (Fig. 5).

(8) Install engine in vehicle (Refer to 9 - ENGINE - INSTALLATION).

HEAT SHIELDS

REMOVAL

(1) Remove front wiper unit (Refer to 8 - ELECTRICAL/WIPERS/WASHERS/WIPER MODULE - REMOVAL).

(2) Remove engine cover (Refer to 9 - ENGINE - REMOVAL).

(3) Partially drain cooling system (Refer to 7 - COOLING/ENGINE/COOLANT - STANDARD PROCEDURE).

(4) Remove thermostat housing to upper radiator hose tube (Fig. 7).

(5) Remove exhaust manifold heat shield retaining bolts and remove shield (Fig. 8).

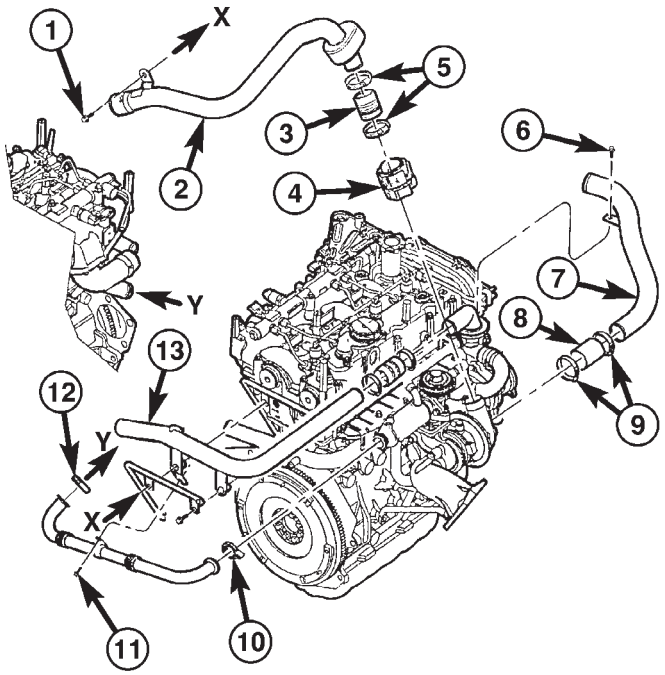

80c67730

Fig. 7 TURBOCHARGER AND COOLANT PIPES

1 - TURBOCHARGER OUTLET PIPE RETAINING BOLT
2 - TURBOCHARGER OUTLET PIPE
3 - ADAPTER HOSE
4 - HEAT SHIELD
5 - HOSE CLAMPS
6 - TURBOCHARGER INLET PIPE RETAINING BOLT
7 - TURBOCHARGER INLET PIPE
8 - ADAPTER HOSE
9 - HOSE CLAMPS
10 - CLAMP
11 - EGR VALVE TO INTAKE AIR INLET PIPE
12 - CLAMP
13 - THERMOSTAT HOUSING TO UPPER RADIATOR HOSE PIPE

HEAT SHIELDS (Continued)

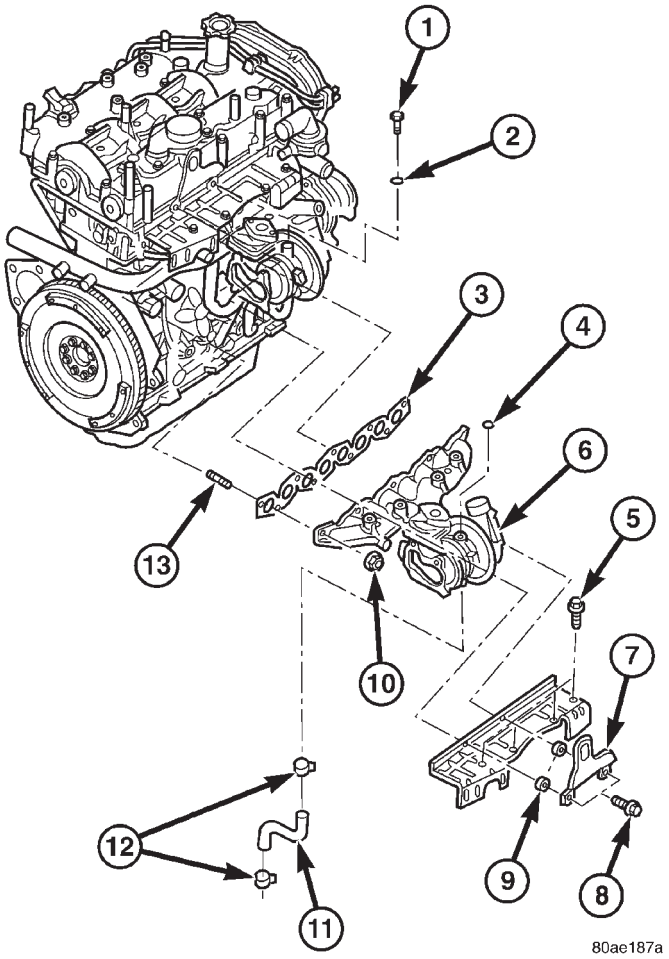

Fig. 8 EXHAUST MANIFOLD AND TURBOCHARGER

1 - TURBOCHARGER OIL SUPPLY BANJO BOLT
2 - COPPER WASHER
3 - EXHAUST MANIFOLD GASKET
4 - COPPER WASHER
5 - EXHAUST MANIFOL HEAT SHIEL RETAINING BOLT
6 - TURBOCHARGER
7 - ENGINE LIFT HOOK
8 - ENGINE LIFT HOOK RETAINING BOLT
9 - SPACER
10 - EXHAUST MANIFOLD RETAINING NUT
11 - TURBOCHARGER OIL RETURN HOSE
12 - HOSE CLAMPS
13 - EXHAUST MANIFOLD STUDS

INSTALLATION

(1) Reposition exhaust heat shield (Fig. 8).

(2) Install exhaust heat shield retaining bolts (Fig. 8). Torque bolts to 27.5N·m.

(3) Install thermostat housing to upper radiator hose tube (Fig. 7).

(4) Refill cooling system (Refer to 7 - COOLING/ ENGINE/COOLANT - STANDARD PROCEDURE).

(5) Install engine cover (Refer to 9 - ENGINE - INSTALLATION).

(6) Install front wiper unit (Refer to 8 - ELECTRICAL/WIPERS/WASHERS/WIPER MODULE - INSTALLATION).

FRAME & BUMPERS

TABLE OF CONTENTS

page

BUMPERS
SPECIFICATIONS - TORQUE 1
FRONT FASCIA
REMOVAL 1
INSTALLATION 1
FRONT BUMPER REINFORCEMENT
REMOVAL 2
INSTALLATION 2
REAR FASCIA
REMOVAL 3
INSTALLATION 3
REAR BUMPER REINFORCEMENT
REMOVAL 3
INSTALLATION 3
REAR FASCIA - SCUFF PAD
REMOVAL 4
INSTALLATION 4
FRAME
SPECIFICATIONS
FRAME DIMENSIONS 4
SPECIFICATIONS - TORQUE 9
FRONT CRADLE CROSSMEMBER
DESCRIPTION
DESCRIPTION - FRONT CRADLE CROSSMEMBER 9
DESCRIPTION - FRONT CRADLE CROSSMEMBER THREAD REPAIR 9
REMOVAL 10
INSTALLATION 12
FRONT CROSSMEMBER MOUNT BUSHINGS
REMOVAL 12
INSTALLATION 12

BUMPERS

SPECIFICATIONS - TORQUE

DESCRIPTION	N·m	Ft. Lbs.	In. Lbs.
Front bumper reinforcement attaching nut	54	40	—
Rear bumper reinforcement attaching nut	27	20	—

FRONT FASCIA

REMOVAL

(1) Release hood latch and open hood.
(2) Remove the headlamp assemblies (Refer to 8 - ELECTRICAL/LAMPS/LIGHTING - EXTERIOR/ HEADLAMP - REMOVAL).
(3) Hoist vehicle and support with safety stands.
(4) Remove the five bolts attaching bottom of fascia/air dam to radiator closure panel.
(5) Remove front wheels.
(6) Remove front wheelhouse splash shields fasteners as necessary to gain access to bolts attaching front fascia to fender. (Refer to 23 - BODY/EXTERIOR/ WHEELHOUSE SPLASH SHIELD - REMOVAL).
(7) Remove the two bolts and two nuts attaching fascia to the front fenders (Fig. 1).
(8) Disconnect fog lamp wire connectors, if necessary.
(9) Lower vehicle.
(10) Remove two bolts attaching the upper grille support to the headlamp mounting panel at each side of the grille.
(11) Remove bumper fascia from vehicle.

INSTALLATION

(1) Position front bumper fascia on vehicle.
(2) Install the two bolts attaching fascia to headlamp mounting panel at each side of grille.
(3) Hoist vehicle and support with safety stands.
(4) Install the two bolts and two nuts attaching fascia to the front fenders (Fig. 1). The fascia should be flush to fender.
(5) Install front wheelhouse splash shields fasteners. (Refer to 23 - BODY/EXTERIOR/ WHEELHOUSE SPLASH SHIELD - INSTALLATION).
(6) Install front wheels.
(7) Connect fog lamp wire connectors, if necessary.
(8) Install the five bolts attaching bottom of fascia to radiator closure panel.
(9) Lower the vehicle.

FRONT FASCIA (Continued)

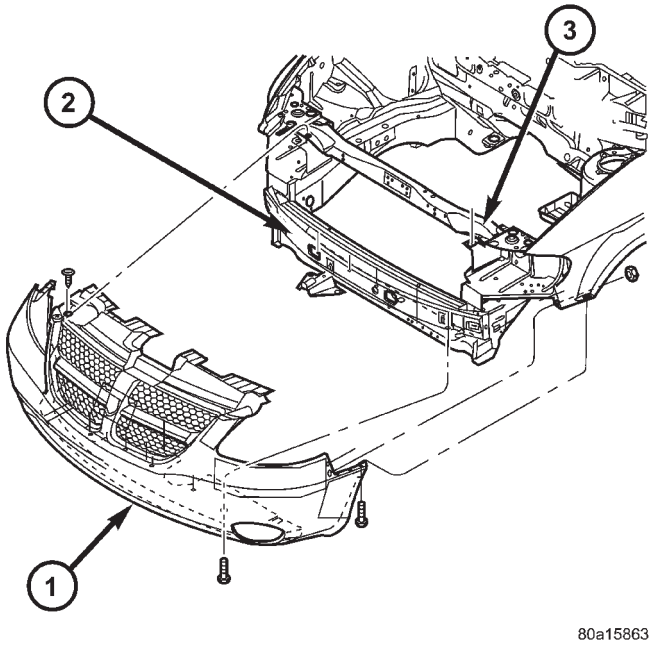

Fig. 1 FRONT BUMPER FASCIA

1 - FRONT BUMPER FASCIA
2 - FRONT BUMPER REINFORCEMENT
3 - RADIATOR ENCLOSURE

(10) Install the headlamp assemblies. (Refer to 8 - ELECTRICAL/LAMPS/LIGHTING - EXTERIOR/ HEADLAMP - INSTALLATION).

FRONT BUMPER REINFORCEMENT

REMOVAL

(1) Remove front bumper fascia. (Refer to 13 - FRAMES & BUMPERS/BUMPERS/FRONT FASCIA - REMOVAL)

(2) Support front bumper reinforcement on a suitable lifting device.

(3) Remove the four nuts attaching front bumper reinforcement to frame rail (Fig. 2).

(4) Remove front bumper reinforcement from vehicle.

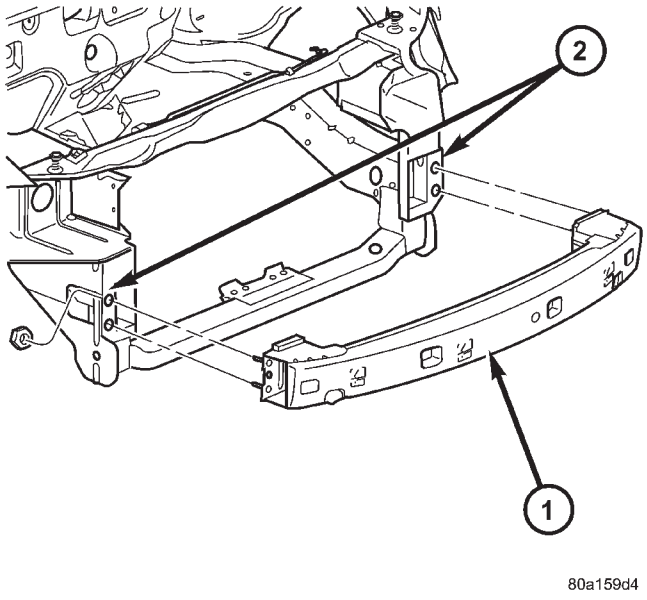

Fig. 2 FRT BUMPER REINFORCEMENT

1 - FRONT BUMPER REINFORCEMENT
2 - FRAME RAILS

INSTALLATION

NOTE: Check position of the arrows molded into the foam for correct orientation.

(1) Support front bumper reinforcement using a suitable lifting device and lift into position.

(2) Install the four nuts attaching reinforcement to frame rails. Tighten nuts to 54 N·m (40 ft. lbs.) torque.

(3) Install front fascia. (Refer to 13 - FRAMES & BUMPERS/BUMPERS/FRONT FASCIA - INSTALLATION).

REAR FASCIA

REMOVAL

(1) Open liftgate.
(2) Remove the two screws attaching the upper fascia to the fascia support.
(3) Hoist and support vehicle with safety stands.
(4) Remove the six screws attaching rear fascia to rear fascia brackets (Fig. 3).
(5) Remove the four plastic push pin attaching bottom of rear fascia to fascia support.
(6) Remove rear fascia from vehicle by lifting sides of fascia up and outboard to release from rear fascia brackets.

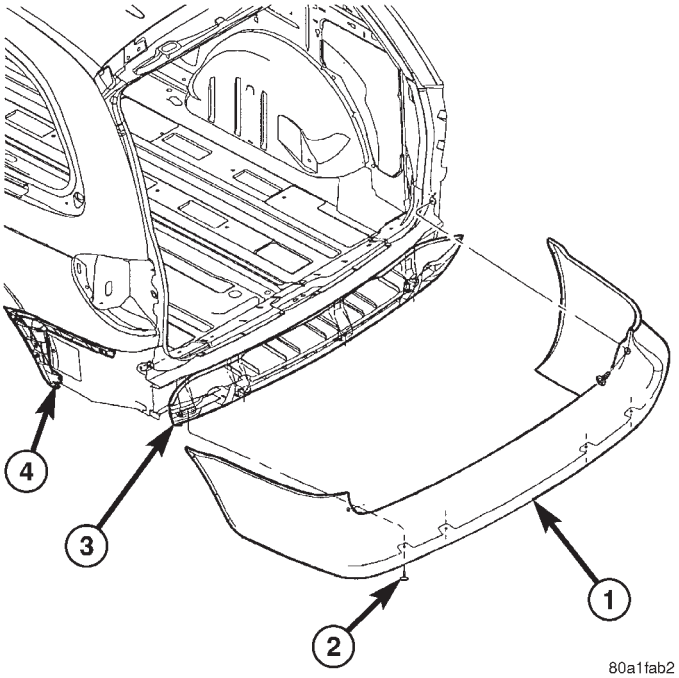

Fig. 3 REAR BUMPER FASCIA

1 - REAR FASCIA
2 - PUSH PINS
3 - REAR BUMPER REINFORCEMENT
2 - REAR FASCIA BRACKET

INSTALLATION

(1) Hoist and support vehicle with safety stands.
(2) Position rear fascia on vehicle.
(3) Engage front edge of fascia under the fascia support flange.
(4) Engage sides of fascia to top and front edge of the rear fascia brackets.

NOTE: Verify fascia is still engaged under the liftgate. Ensure acceptable and consistent gap between liftgate and fascia.

(5) Install the six screws attaching rear fascia to rear fascia brackets.
(6) Install the four plastic push pins attaching bottom of rear fascia to fascia support.
(7) Lower vehicle.
(8) Install the two screws attaching the upper fascia to the fascia support.

REAR BUMPER REINFORCEMENT

REMOVAL

(1) Remove rear bumper fascia. (Refer to 13 - FRAMES & BUMPERS/BUMPERS/REAR FASCIA - REMOVAL)
(2) Support rear bumper reinforcement on a suitable lifting device.
(3) Remove the six nuts attaching rear bumper reinforcement to frame rail extensions (Fig. 4).
(4) Remove rear bumper reinforcement from vehicle.

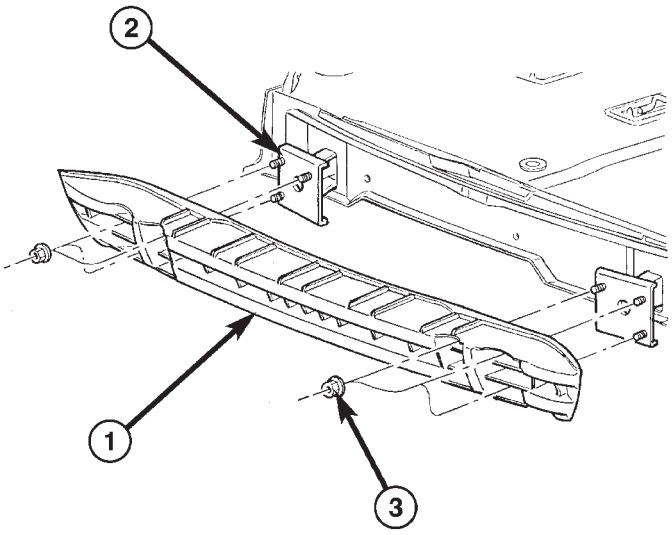

Fig. 4 REAR BUMPER REINFORCEMENT

1 - REAR BUMPER REINFORCEMENT
2 - FRAME RAIL EXTENSIONS
3 - NUTS

INSTALLATION

(1) Support rear bumper reinforcement using a suitable lifting device to lift into position.
(2) Position rear bumper reinforcement on vehicle.

REAR BUMPER REINFORCEMENT (Continued)

(3) Install the six nuts attaching rear bumper reinforcement to frame rail extensions and tighten to 27 N·m (20 ft. lbs.) torque (Fig. 4).

(4) Install rear bumper fascia. (Refer to 13 - FRAMES & BUMPERS/BUMPERS/REAR FASCIA - INSTALLATION).

REAR FASCIA - SCUFF PAD

REMOVAL

The scuff pad may not be salvageable during the removal process. The scuff pad should be replaced if damaged or broken. Check availability before servicing. The scuff pad serviceability is improved if the rear fascia is to be removed for service.

NOTE: If the rear fascia is to be removed for other service issues or If the scuff pad is to be reused use the steps below.

(1) Remove rear bumper fascia.(Refer to 13 - FRAMES & BUMPERS/BUMPERS/REAR FASCIA - REMOVAL)

(2) Using a trim stick, pry up the rear edge of the scuff pad while squeezing the rear locking tabs from underneath the fascia to release the rear edge of scuff pad from the rear bumper fascia. Pull the scuff pad up and squeeze the remaining tabs to release the remaining of the scuff pad. (Fig. 5).

NOTE: If the rear fascia is to not to be removed for other service issues use the step below.

(3) Using a trim stick, pry up the rear edge of the scuff pad to release tabs from the rear bumper fascia and pull scuff pad to release the forward tabs (Fig. 5).

INSTALLATION

(1) Verify that there are fifteen slots in the fascia.

(2) Place scuff pad in position (Fig. 5).

(3) Align and insert the center forward tab.

(4) Align the remaining tabs and press into the slots, starting in the center and working outboard.

(5) Assure all tabs are fully engaged into the fascia.

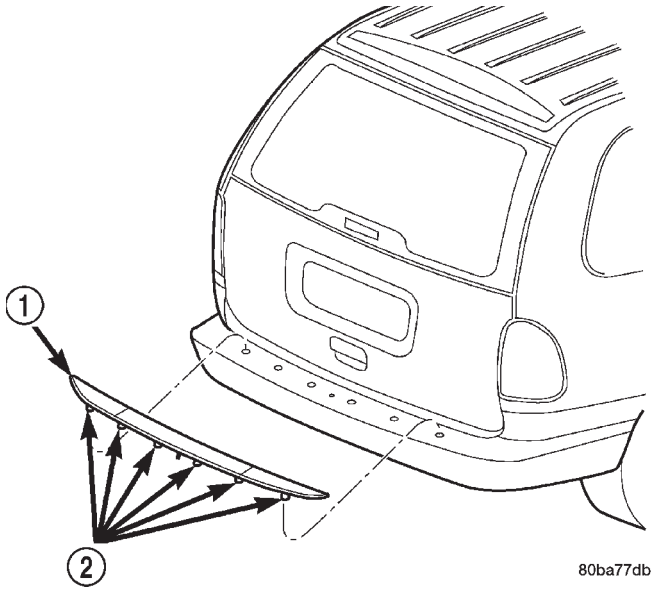

Fig. 5 SCUFF PAD

1 - SCUFF PAD
2 - TABS

(6) If rear bumper fascia has been removed install. (Refer to 13 - FRAME & BUMPERS/BUMPERS/REAR FASCIA - INSTALLATION).

FRAME

SPECIFICATIONS

FRAME DIMENSIONS

Frame dimensions are listed in metric scale. All dimensions are from center to center of Principal Locating Point (PLP), or from center to center of PLP and fastener location.

VEHICLE PREPARATION

Position the vehicle on a frame alignment rack, refer to instructions provided with equipment being used. Adjust the vehicle PLP heights to the specified dimension above the work surface (datum line). Vertical dimensions can be taken from the datum line to the locations indicated were applicable.

INDEX

DESCRIPTION	FIGURE
CROSSMEMBER DIMENSIONS	6
ENGINE BOX - TOP VIEW	7
ENGINE COMPARTMENT AND FRAME RAIL - SIDE VIEW	8
FULL VEHICLE - BOTTOM VIEW	9

FRAME (Continued)

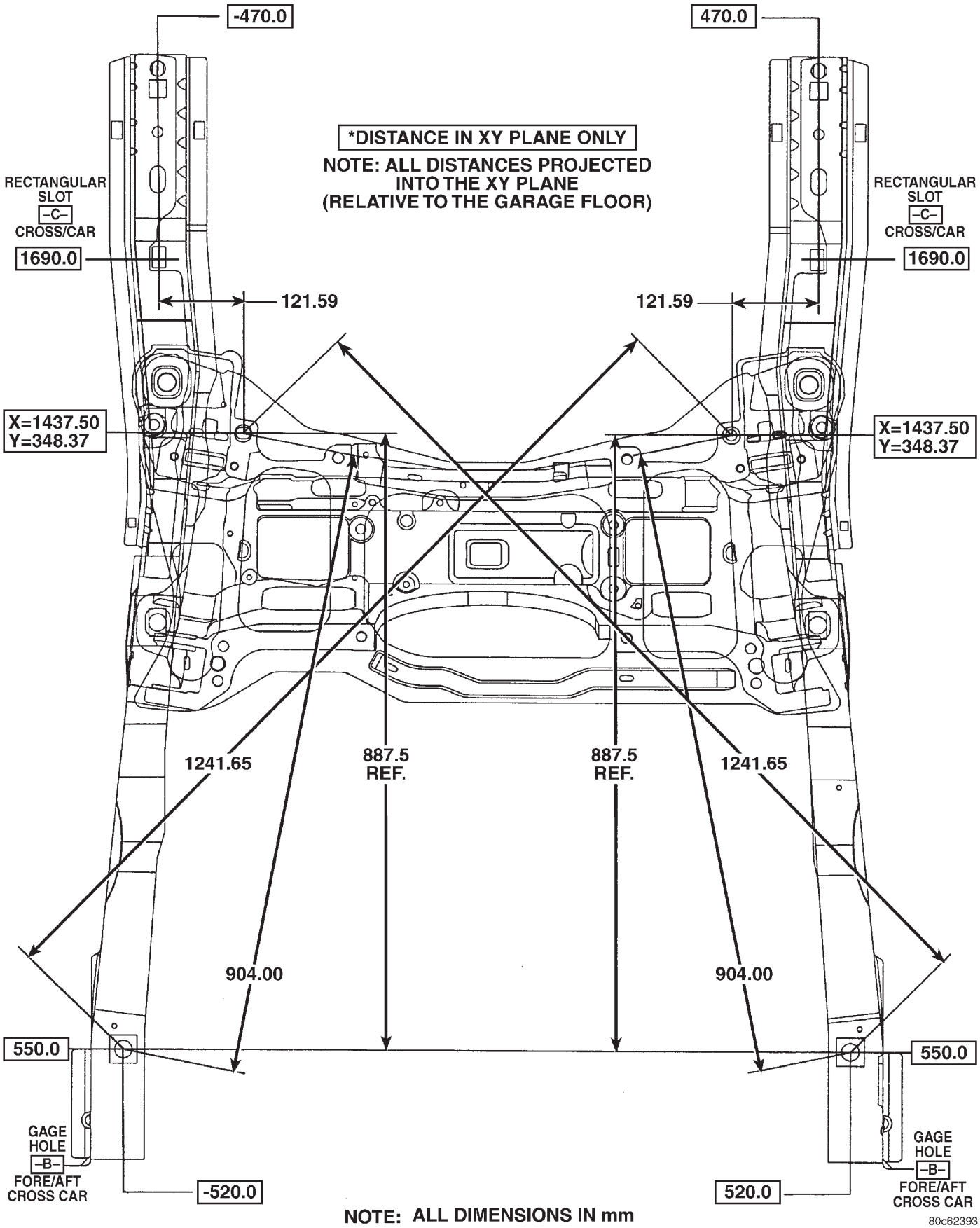

Fig. 6 CROSSMEMBER DIMENSIONS

FRAME (Continued)

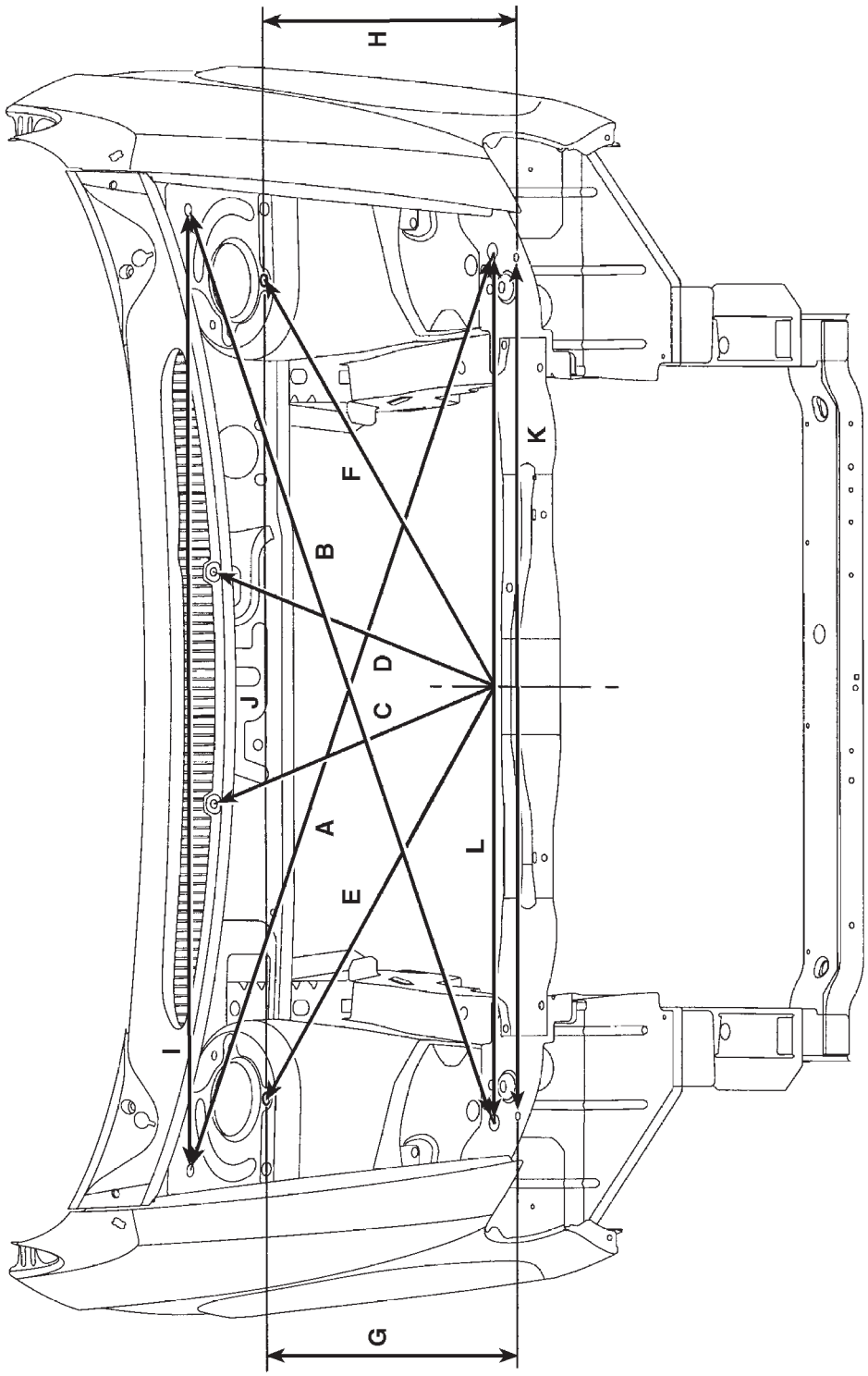

Fig. 7 ENGINE BOX - TOP VIEW

A – CENTER OF UPPER BUMPER REINFORCEMENT BOLT HOLE
B – BOTTOM OF FRONT FRAME RAIL PLP CENTER
C – STRUT TOWER FRONT BOLT HOLE LOWER SURFACE
D – FRONT SUSPENSION CRADLE MOUNT SURFACE
E – REAR SUSPENSION CRADLE MOUNT SURFACE
F – BOTTOM REAR OF FRONT FRAME RAIL EXTENSION
G – CENTER OF FOURTH HOLE BEHIND CROSSMEMBER
H – CENTER OF PLP BEHIND DARTS IN SIDE OF FRAME RAIL
I – CENTER OF PLP HOLE AT REAR OF FRAME RAIL

ALL DIMENSIONS IN mm

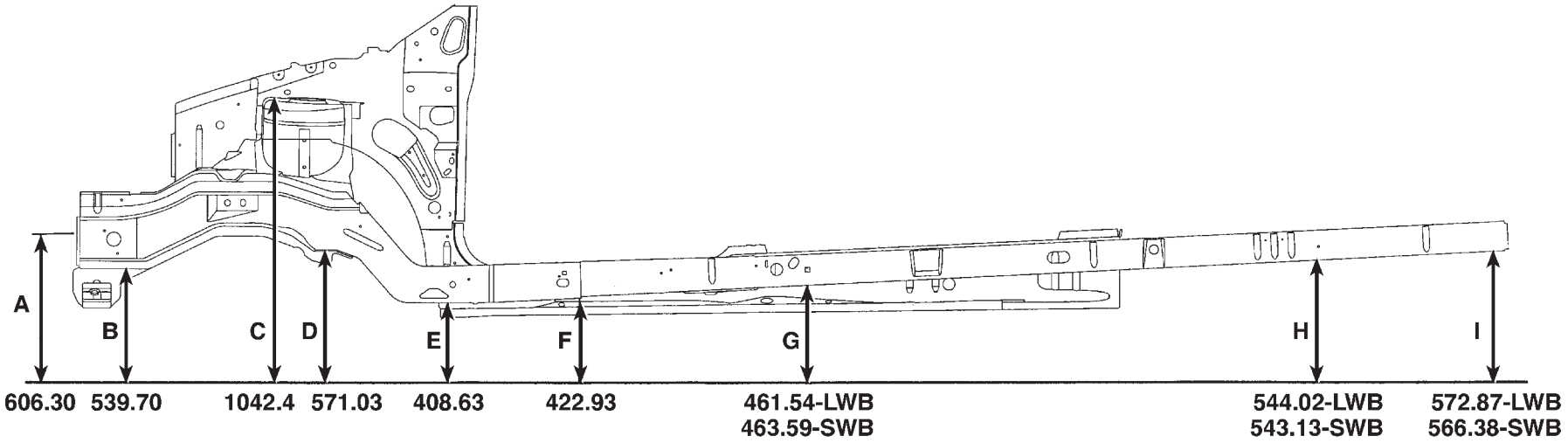

80c62395

Fig. 8 ENGINE COMPARTMENT AND FRAME RAIL - SIDE VIEW

FRAME (Continued)

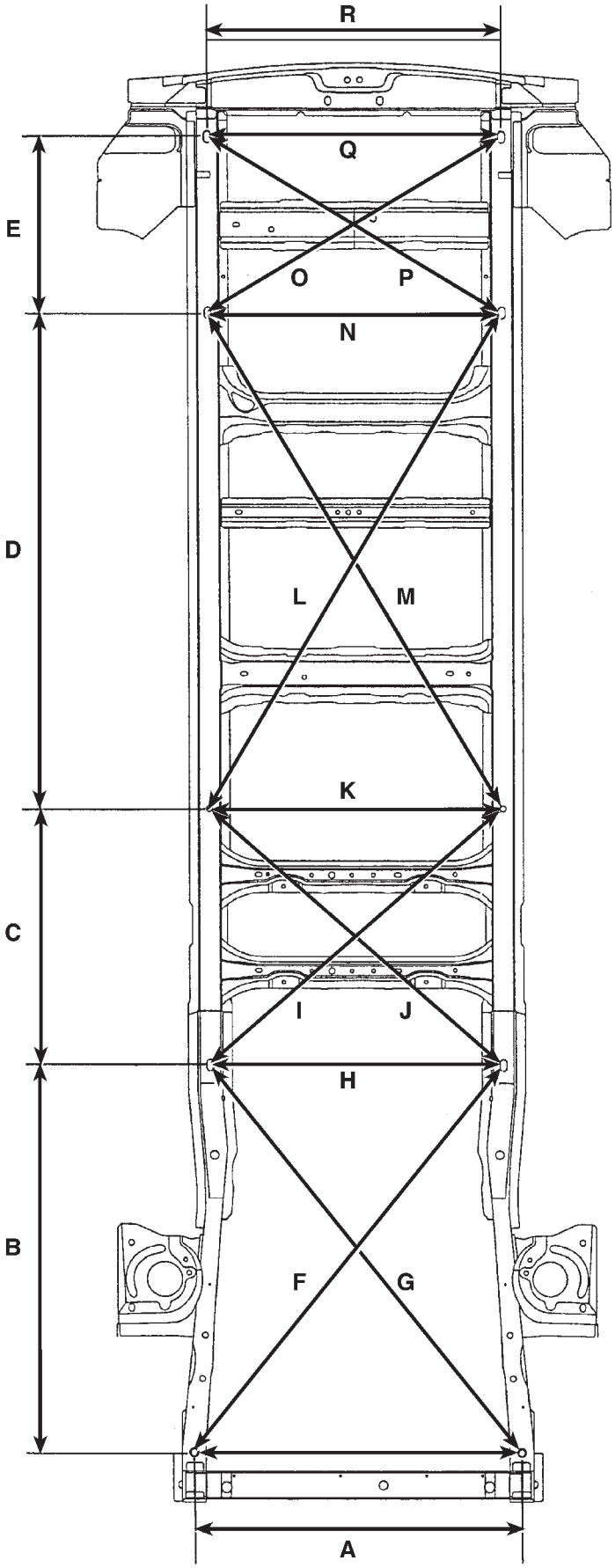

	LONG WHEELBASE	SHORT WHEELBASE
A	1040.00	1040.00
B	1141.09	1141.09
C	949.72	949.72
D	1614.53	1462.55
E	564.65	427.58
F	1509.86	1509.86
G	1509.86	1509.86
H	944.00	944.00
I	1337.66	1337.66
J	1337.66	1337.66
K	944.00	944.00
L	1870.25	1740.76
M	1870.25	1740.76
N	944.00	944.00
O	1099.98	1036.32
P	1099.98	1036.32
Q	944.00	944.00
R	944.00	944.00

A, B, C, D, E, H, K, N, Q, R ARE FROM CENTER OF PLP OR CONSTANT HOLE CENTER.

F, G, J, I, L, M, O, P ARE ALL CROSS MEASURMENTS

ALL DIMENSIONS IN mm

80c62396

Fig. 9 FULL VEHICLE - BOTTOM VIEW

FRAME (Continued)

SPECIFICATIONS - TORQUE

DESCRIPTION	N·m	Ft. Lbs.	In. Lbs.
Front Cradle Crossmember to Fram Rail Attaching Bolts (4)	163	120	—
Reinforcement Plate to Crossmember Attaching Bolt Size M14 (9)	153	113	—
Reinforcement Plate to Crossmember Attaching Bolt Size M12 (1)	106	78	—
Reinforcement Plate to Crossmember Attaching Bolt Size M10 (4)	61	45	—
Rear Engine Mount to Crossmember Attaching Through Bolt	68	50	—
Radiator Support Crossmember Attaching Bolts	51	38	—

FRONT CRADLE CROSSMEMBER

DESCRIPTION

DESCRIPTION - FRONT CRADLE CROSSMEMBER

This vehicle uses a one piece cast aluminum cradle for the front cradle crossmember. The cradle crossmember is used as the attaching points for the lower control arms, stabilizer bar and steering gear. The cradle also has the power steering hoses and the chassis brake tubes attached to it.

WARNING: If a threaded hole in the suspension cradle needs to be repaired, only use the type of thread insert and installation procedure specified for this application.

The threaded holes in the front cradle crossmember that are used for attachment of the lower control arm rear bushing retainer, power steering hose and chassis brake tubes can be repaired. The repair is done by the installation of a Heli-Coil® thread insert which has been specifically developed for this application. Refer to the Mopar Parts Catalog for the specified Heli-Coil® thread insert to be used for this application. The procedure for installing the Heli-Coil® thread insert is detailed in the Service Procedures section in this group of the service manual.

DESCRIPTION - FRONT CRADLE CROSSMEMBER THREAD REPAIR

WARNING: When performing this procedure use only the thread inserts which are specified in the Mopar Parts Catalog for this repair procedure. These thread inserts have been specifically developed for this application and use of other types of thread inserts can result in an inferior long term repair.

The threaded holes in the front cradle crossmember, if damaged, can repaired by installing a Heli-Coil® thread insert.

The threaded holes that are repairable using the thread insert, are the lower control arm rear bushing retainer mounting bolt holes, routing bracket attaching locations for the power steering hoses, and brake hose attachment holes.

This repair procedure now allows the threaded holes in the cradle crossmember to be repaired, eliminating the need to replace the cradle crossmember if damage occurs to one of the threaded holes.

The thread inserts for this application are specified by part number in the Mopar Parts Catalog. **Do not use a substitute thread insert.**

The specific tools and equipment required to install the thread insert are listed below. Refer to the instructions included with the thread insert for the detailed procedure used for the installation of the thread insert.

NOTE: The thread inserts for this application are for the repair of M8x1.25 and M10x1.5 threads. Be sure the correct tools are used for the required thread insert size.

TOOL REQUIREMENT FOR M8x1.25 Thread

- 8.3mm (5/16 in.) Drill Bit
- 120° Countersink
- Heli-Coil® Tap #4863-8
- Heli-Coil® Gage #4624-8
- Heli-Coil® Hand Inserting Tool 7751-8
- Needle Nose Pliers – For Removal Of Thread Insert Driving Tang

TOOL REQUIREMENT FOR M10x1.5 Thread

- 10.5mm (25/64 in.) Drill Bit
- 120° Countersink
- Heli-Coil® Tap #4863-10
- Heli-Coil® Gage #4624-10
- Heli-Coil® Hand Inserting Tool 7751-10
- Needle Nose Pliers – For Removal Of Thread Insert Driving Tang

FRONT CRADLE CROSSMEMBER (Continued)

REMOVAL

The front cradle crossmember must be installed in the design location to achieve proper front end suspension alignment. If the cradle crossmember is removed without applying reference marks on the frame rails, align the cradle crossmember according to the dimensions provided in this group.

NOTE: If the caged nuts in the frame rails become damaged and cannot be reused, a replacement nut can be obtained through Mopar®.

REMOVAL

(1) Disconnect battery negative cable.

(2) Remove steering column lower cover from instrument panel (Refer to 23 - BODY/INSTRUMENT PANEL/STEERING COLUMN OPENING COVER - REMOVAL).

(3) Remove steering column cover backing plate (Refer to 23 - BODY/INSTRUMENT PANEL/STEERING COLUMN COVER BACKING PLATE - REMOVAL).

(4) Position steering so front wheels are straight ahead.

CAUTION: Do not rotate steering wheel after disengaging lower coupling from steering gear, damage to air bag clock spring can result.

(5) Remove clinch bolt attaching steering column coupling to steering gear shaft (Fig. 10).

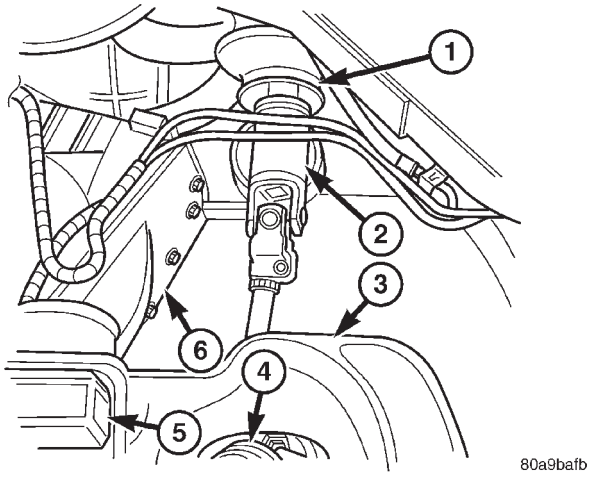

Fig. 10 STEERING COUPLING

1 - STEERING SHAFT BOOT
2 - STEERING SHAFT
3 - CROSSMEMBER
4 - STEERING GEAR
5 - MOUNT
6 - TRANSAXLE

(6) Remove steering column coupling from telescoping steering gear shaft.

(7) Hoist vehicle and support on safety stands.

(8) Position a drain pan under power steering pump and oil return hose coupling.

(9) Using a hose pinch-off pliers (C-4390), pinch power steering oil return hose off between the crossmember coupling and the pump.

(10) Loosen hose clamp at the cradle crossmember coupling.

(11) Disconnect return hose from metal tube.

(12) While holding pressure relief valve nut on back of power steering pump, Remove flare nut attaching high pressure hose to back of pump.

(13) Remove high pressure hose from pump.

(14) Allow power steering fluid to drain into pan.

(15) Remove bolts attaching anti-lock brake sensor leads to cradle crossmember.

(16) Position anti-lock brake leads out of the way.

(17) Disconnect stabilizer bar links from ends of stabilizer bar.

(18) Disconnect lower ball joints from lower steering knuckles (Refer to 2 - SUSPENSION/FRONT/LOWER BALL JOINT - REMOVAL).

(19) Remove the rear engine mount heat shield (Fig. 11).

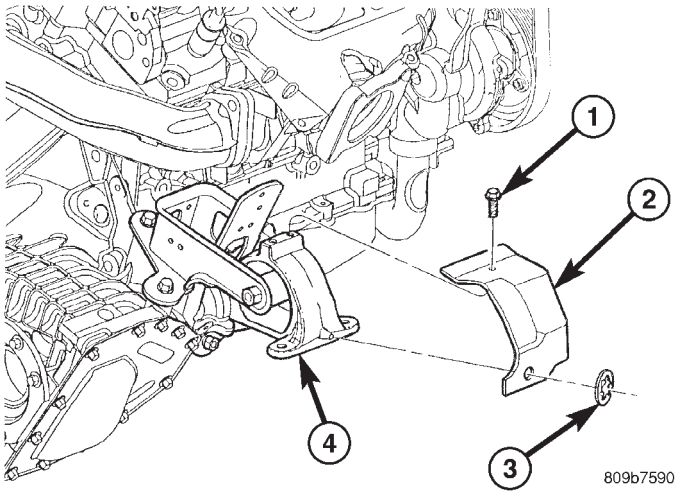

Fig. 11 REAR MOUNT HEAT SHIELD

1 - BOLT
2 - HEAT SHIELD
3 - CLIP
4 - REAR ENGINE MOUNT

(20) Remove through bolt attaching rear engine mount to cradle crossmember (Fig. 12).

(21) Using paint or grease pencil, mark outline of cradle crossmember on frame rails to aid installation.

(22) Support cradle crossmember on suitable lifting device (Fig. 14).

(23) Remove bolts attaching crossmember to front frame rails (Fig. 13).

FRONT CRADLE CROSSMEMBER (Continued)

(24) Remove cradle crossmember from vehicle (Fig. 14).

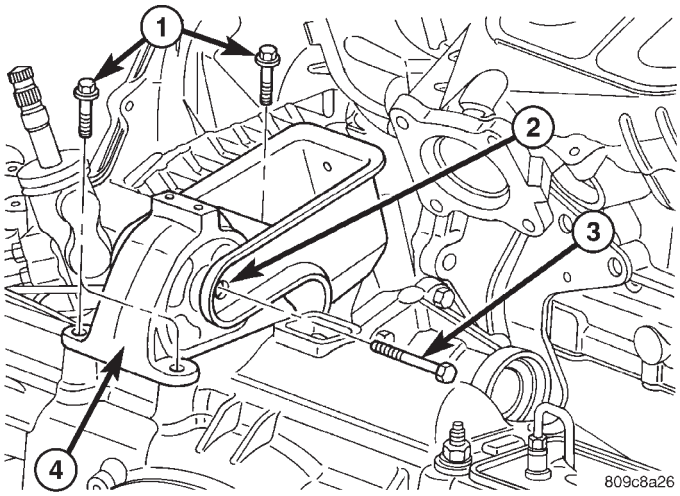

Fig. 12 REAR MOUNT

1 - BOLT
2 - REAR MOUNT BRACKET
3 - THROUGH BOLT
4 - REAR MOUNT

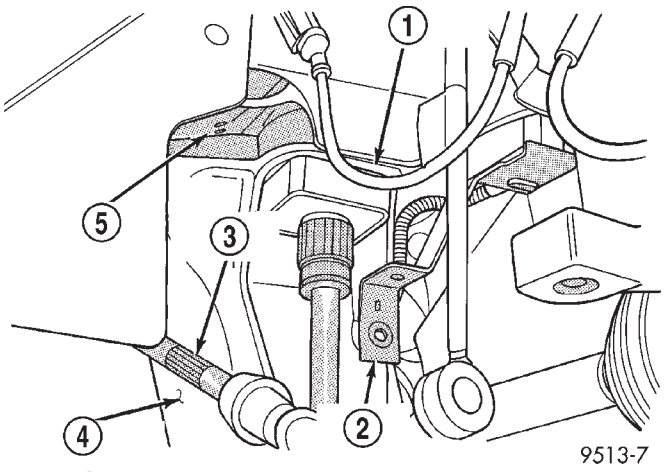

Fig. 13 CRADLE CROSSMEMBER MOUNT

1 - CROSSMEMBER MOUNT
2 - BRAKE HOSE MOUNT
3 - STEERING TIE ROD
4 - FRONT CROSSMEMBER
5 - FRAME RAIL

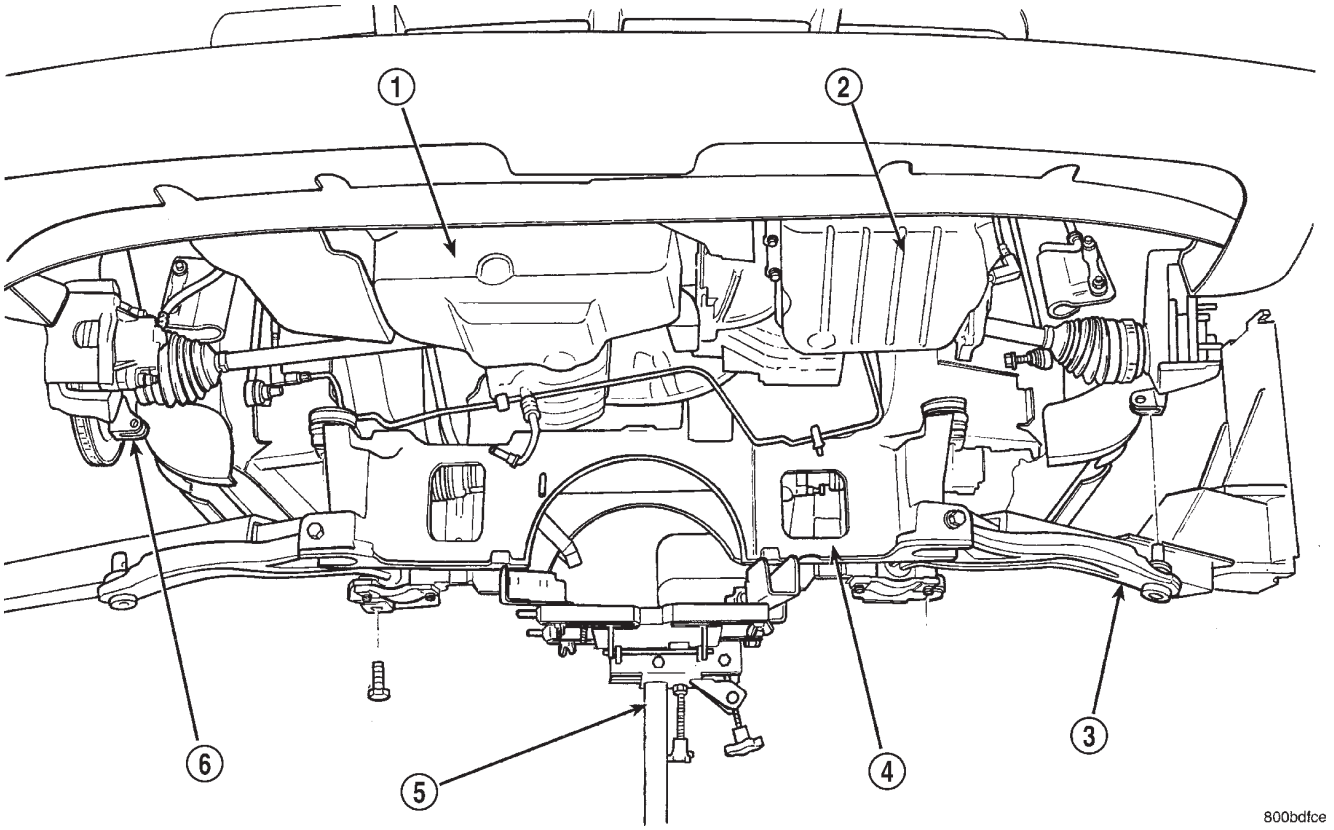

Fig. 14 CRADLE CROSSMEMBER

1 - ENGINE OIL PAN
2 - TRANSAXLE
3 - LOWER CONTROL ARM
4 - FRONT CROSSMEMBER
5 - LIFT DEVICE
6 - SPINDLE

FRONT CRADLE CROSSMEMBER (Continued)

INSTALLATION

NOTE: If cradle crossmember requires replacement. Refer to Group 2, Suspension, to transfer suspension components and Group 19, Steering, to transfer steering components.

(1) Support crossmember on suitable lifting device (Fig. 14).
(2) Position crossmember to vehicle.
(3) Loosely install bolts attaching cradle crossmember to front frame rails.
(4) Align crossmember to previously made marks on frame rails.
(5) Tighten bolts attaching cradle crossmember to frame rails.
(6) Install through bolt attaching rear engine mount to cradle crossmember (Fig. 12) and tighten to 68 N·m (50 ft. lbs.) torque.
(7) Install the rear mount heat shield (Fig. 11).
(8) Connect lower ball joints to steering knuckles (Refer to 2 - SUSPENSION/FRONT/LOWER BALL JOINT - INSTALLATION)
(9) Connect stabilizer bar links to ends of stabilizer bar.
(10) Install bolts attaching anti-lock brake sensor leads to cradle crossmember.
(11) Install high pressure hose to pump.
(12) Connect return hose to metal tube.
(13) Tighten hose clamp at the cradle crossmember coupling.
(14) Remove pinch-off pliers.
(15) Position steering so front wheels are straight ahead.
(16) Install steering column coupling to telescoping steering gear shaft.
(17) Install clinch bolt attaching steering column coupling to steering gear shaft.
(18) Install steering column cover backing plate (Refer to 23 - BODY/INSTRUMENT PANEL/STEERING COLUMN COVER BACKING PLATE - INSTALLATION)
(19) Install steering column lower cover from instrument panel (Refer to 23 - BODY/INSTRUMENT PANEL/STEERING COLUMN OPENING COVER - INSTALLATION).
(20) Connect battery negative cable.

FRONT CROSSMEMBER MOUNT BUSHINGS

REMOVAL

(1) Using paint or grease pencil, mark outline of cradle crossmember on frame rails.
(2) Loosen bolts attaching crossmember to frame rails.
(3) Remove bolt on bushing that requires replacement.
(4) Allow cradle crossmember to drop down enough to gain clearance for bushing removal.
(5) Remove bushing from vehicle.

INSTALLATION

(1) Apply rubber lubrication or soap to replacement bushing.
(2) Insert lower half of bushing into square hole in cradle crossmember.
(3) Place upper half of bushing on top of crossmember aligned to receive square tube protruding upward from lower bushing half.
(4) Squeeze bushing halves together to ensure they are properly mated.
(5) Lift cradle crossmember upward to close gap between the bushing and frame.
(6) Verify that lower bushing is fully seated into cradle crossmember and upper bushing.
(7) Install bolt attaching bushing and crossmember to frame rail hand tight.
(8) Align cradle crossmember to reference marks on frame rails.
(9) Tighten cradle crossmember to frame rails attaching bolts to 163 N·m (120 ft. lbs.) torque.

FUEL SYSTEM

TABLE OF CONTENTS

page

FUEL DELIVERY 1

FUEL INJECTION 16

FUEL DELIVERY

TABLE OF CONTENTS

page

FUEL DELIVERY
DESCRIPTION
DESCRIPTION 2
DESCRIPTION - FFV REPLACEMENT PARTS 2
OPERATION 2
DIAGNOSIS AND TESTING - FUEL DELIVERY SYSTEM 2
STANDARD PROCEDURE
STANDARD PROCEDURE - FUEL SYSTEM PRESSURE RELEASE PROCEDURE 2
STANDARD PROCEDURE - DRAINING FUEL TANK 2
SPECIFICATIONS
FUEL SYSTEM PRESSURE 3
TORQUE 3
SPECIAL TOOLS
FUEL 3
FUEL FILTER
REMOVAL 4
INSTALLATION 4
FUEL LEVEL SENDING UNIT / SENSOR
DESCRIPTION 4
OPERATION 4
REMOVAL 4
INSTALLATION 6
FUEL LINES
DESCRIPTION - FUEL LINES/HOSES AND CLAMPS 6
STANDARD PROCEDURE - HOSES AND CLAMP 6
FUEL PRESSURE REGULATOR
OPERATION 7
REMOVAL 7
INSTALLATION 7
FUEL PUMP
DESCRIPTION 7
OPERATION 7
FUEL PUMP MODULE
DESCRIPTION 8
OPERATION 8
REMOVAL 8
INSTALLATION 9
FUEL RAIL
REMOVAL
REMOVAL - 2.4L 9
REMOVAL - 3.3/3.8L 9
INSTALLATION
INSTALLATION - 2.4L 10
INSTALLATION - 3.3/3.8L 10
FUEL TANK
DESCRIPTION 10
OPERATION 10
REMOVAL 11
INSTALLATION 11
FUEL TANK FILLER TUBE
REMOVAL 12
INSTALLATION 12
INLET FILTER
REMOVAL 13
INSTALLATION 13
QUICK CONNECT FITTING
STANDARD PROCEDURE - QUICK-CONNECT FITTINGS 13

FUEL DELIVERY

DESCRIPTION

DESCRIPTION

The front wheel drive car uses a plastic fuel tank located rear center of the vehicle.

The Fuel Delivery System consists of: the following items:

- Electric fuel pump module
- Fuel filter
- Tubes/lines/hoses
- Fuel injectors

The in-tank fuel pump module contains the fuel pump. The pump is serviced as part of the fuel pump module. Refer to Fuel Pump Module.

The fuel filter is replaceable, it is mounted on the outside, on top of, the fuel tank. Refer to the Maintenance Schedules in the Introduction section of this manual for recommended fuel filter replacement intervals.

DESCRIPTION - FFV REPLACEMENT PARTS

Many components in a Flexible Fuel Vehicle (FFV) are designed to be compatible with ethanol. Always be sure that the vehicle is serviced with correct ethanol compatible parts.

CAUTION: Replacing fuel system components with non-ethanol compatible components can damage your vehicle and may void the warranty.

OPERATION

The fuel system provides fuel pressure by an in-tank pump module. The PCM controls the operation of the fuel system by providing battery voltage to the fuel pump through the fuel pump relay. The PCM requires only three inputs and a good ground to operate the fuel pump relay. The three inputs are:

- Ignition voltage
- Crankshaft Position (CKP) sensor
- Camshaft Position (CMP) sensor

DIAGNOSIS AND TESTING - FUEL DELIVERY SYSTEM

(Refer to Appropriate Diagnostic Information)

STANDARD PROCEDURE

STANDARD PROCEDURE - FUEL SYSTEM PRESSURE RELEASE PROCEDURE

(1) Remove Fuel Pump relay from Power Distribution Center (PDC). For location of relay, refer to label on underside of PDC cover.

(2) Start and run engine until it stalls.

(3) Attempt restarting engine until it will no longer run.

(4) Turn ignition key to OFF position.

(5) Return fuel pump relay to PDC.

(6) One or more Diagnostic Trouble Codes (DTC's) may have been stored in PCM memory due to fuel pump relay removal. The DRB III® scan tool must be used to erase a DTC.

STANDARD PROCEDURE - DRAINING FUEL TANK

(1) Release fuel system pressure, refer to the Fuel System Release Procedure in this section.

(2) Insert a 1/4 inch siphon (max. O. D. 5/16) hose from a portable fuel siphoning tank through the fuel filler neck opening into the fuel tank. Hose most have a 30 degree angle cut on the end to bypass the check valve in the end of the filler neck. Refer to the siphoning tank's Manufacturing Instructions.

(3) Drain fuel from fuel tank into siphoning tank.

FUEL DELIVERY (Continued)

SPECIFICATIONS

FUEL SYSTEM PRESSURE

400 kpa ±34 kpa (58 psi ± 5 psi)

TORQUE

DESCRIPTION	N·m	Ft. Lbs.	In. Lbs.
Fuel Filler Neck Clamp	3.3		30
Fuel Rail 2.4L	22		200
Fuel Rail 3.3/3.8L	11.8		105
Fuel Tank Strap	54	40	
Fuel Tank T Strap	28.2		250
Fuel Filter Bolt	4.5		40

SPECIAL TOOLS

FUEL

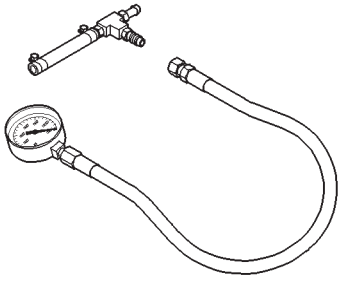

Pressure Gauge Assembly C–4799–B

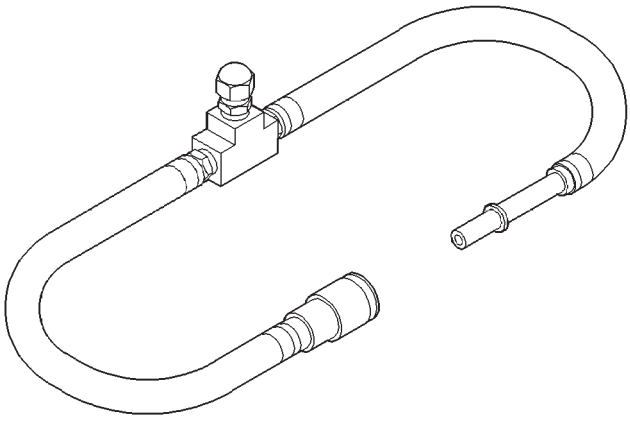

Fuel Pressure Test Adapter 6539

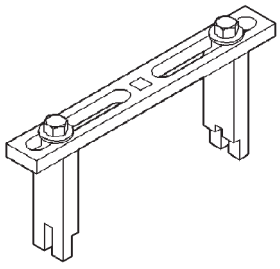

Spanner Wrench 6856

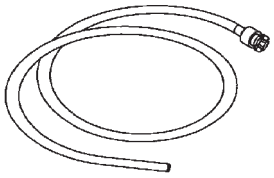

Fuel Line Adapter 1/4

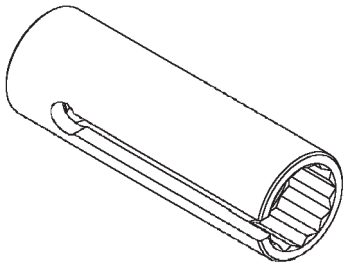

O2S (Oxygen Sensor) Remover/Installer—C-4907

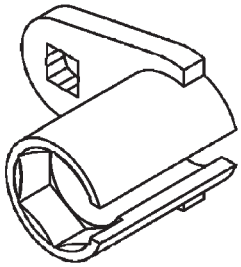

O2S(Oxygen Sensor) Remover/Installer - 8439

FUEL FILTER

REMOVAL

(1) Release fuel pressure, refer to the Fuel release procedure in this section.
(2) Disconnect the negative battery cable.
(3) Raise vehicle and support.
(4) Support the fuel tank with a transmission jack.
(5) Remove fuel line from the front of the tank.
(6) Remove ground strap
(7) Remove the inboard side of the fuel tank straps and front T strap fastner.
(8) Lower the tank about 6 inches (Fig. 1).

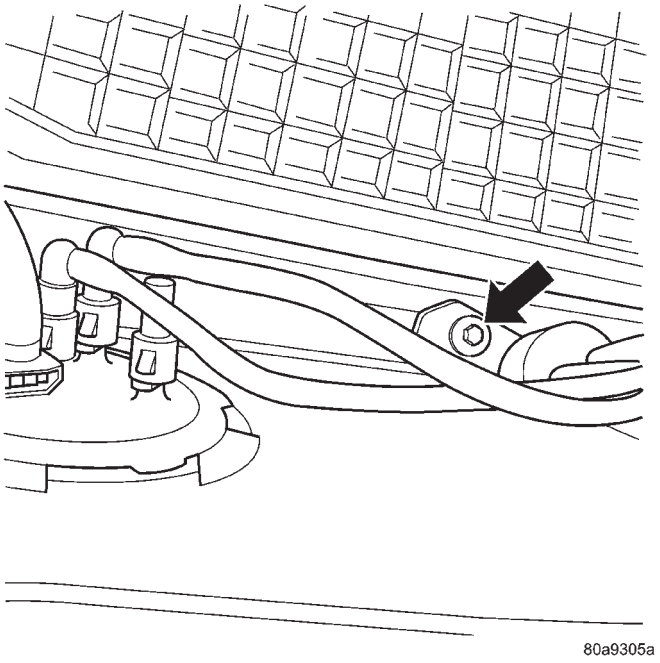

Fig. 1 FUEL FILTER

(9) Remove fuel lines from the fuel pump module.
(10) Remove fuel filter from tank.

INSTALLATION

(1) Install fuel filter to tank. Tighten bolt to 4.5 N·m (40 in. lbs.)
(2) Install fuel lines to the fuel pump module (Fig. 1).
(3) Raise tank into position.
(4) Install the fuel tank straps.Tighten bolt for main straps to 54 N·m (40 ft. lbs.) and the T strap bolt to 28.2 N·m (250 in. lbs.)
(5) Install the ground strap
(6) Connect the fuel line at the front of the tank.
(7) Lower vehicle.
(8) Connect the negative battery cable.
(9) Pressurize the fuel system with the DRBIII® and check for leaks.

FUEL LEVEL SENDING UNIT / SENSOR

DESCRIPTION

The fuel gauge level sending unit is attached to the side of fuel pump module. The level sensor is a variable resistor.

OPERATION

Its resistance changes with the amount of fuel in the tank. The float arm attached to the sensor moves as the fuel level changes.

The fuel level input is used as an input for OBD II. If the fuel level is below 15% or above 85% of total tank capacity several monitors are disabled. There are diagnostics for the level circuit open and shorted.

REMOVAL

Remove fuel pump module. Refer to Fuel Pump Module in this section.

(1) Depress retaining tab and remove the fuel pump/level sensor connector from the **BOTTOM** of the fuel pump module electrical connector (Fig. 2) .

NOTE: The pump module harness on TOP of flange is not serviceable or removable.

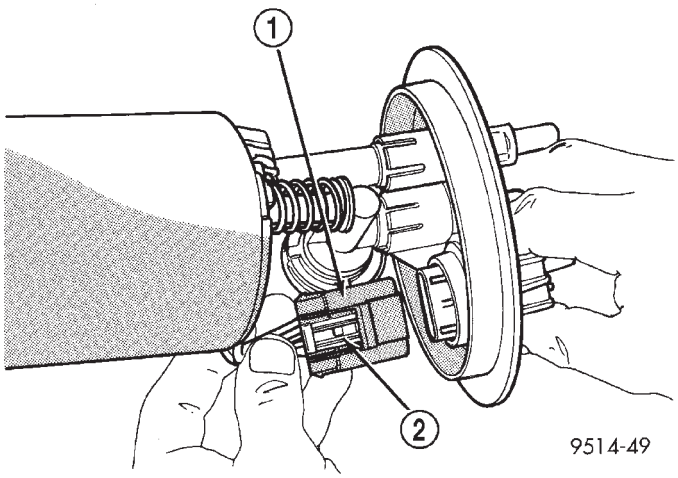

Fig. 2 Fuel Pump/Level Sensor Electrical Connector

1 - ELECTRICAL CONNECTOR
2 - RETAINING TAB

FUEL LEVEL SENDING UNIT / SENSOR (Continued)

(2) Pull off the locking wedge.

(3) Using a small screwdriver lift locking finger away from terminal and push terminal out of connector (Fig. 3).

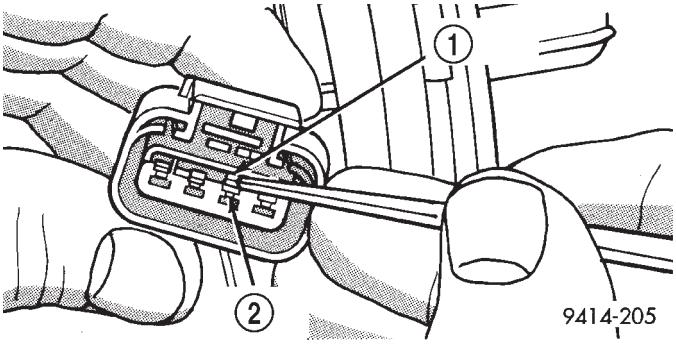

Fig. 3 Wire Terminal Locking Finger

1 - LOCKING FINGER
2 - WIRE TERMINAL

(4) Push level sensor signal and ground terminals out of the connector (Fig. 4).

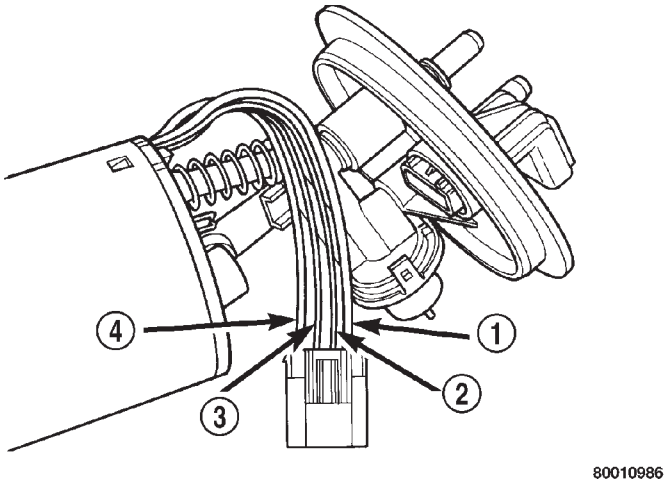

Fig. 4 Removing Wires From

1 - FUEL PUMP FEED (RED B+)
2 - LEVEL SENSOR SIGNAL
3 - LEVEL SENSOR GROUND
4 - FUEL PUMP GROUND (BK)

(5) Insert a screwdriver between the fuel pump module and the top of the level sensor housing (Fig. 5) . Push level sensor down slightly.

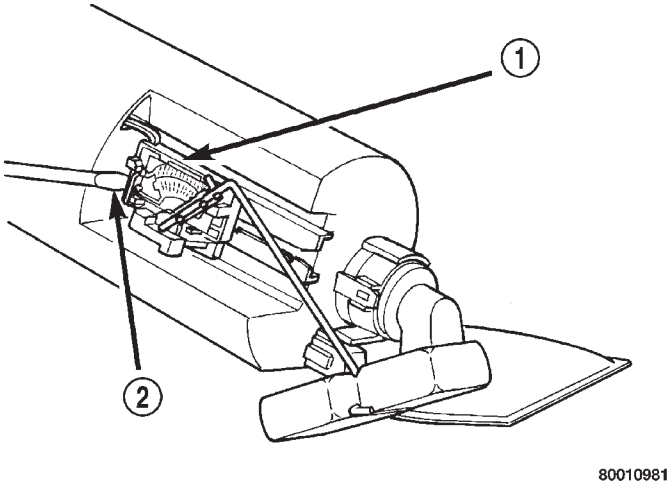

Fig. 5 Loosening Level Sensor

1 - LEVEL SENSOR
2 - PRY DOWN ON LEVEL SENSOR

(6) Slide level sensor wires through opening fuel pump module (Fig. 6).

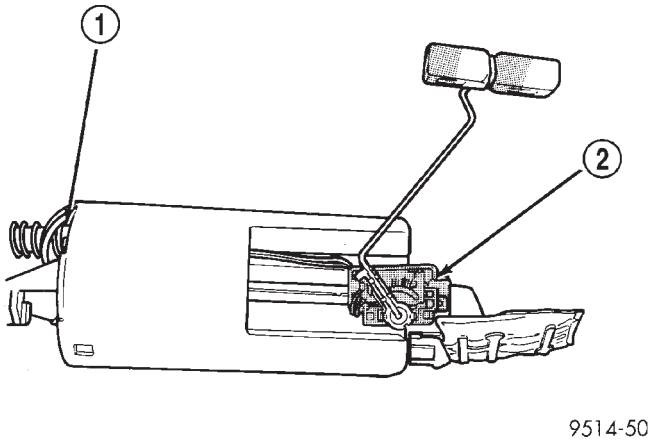

Fig. 6 Level Sensor Removal/Installation

1 - OPENING IN MODULE
2 - FUEL LEVEL SENSOR

(7) Slide level sensor out of installation channel in module.

FUEL LEVEL SENDING UNIT / SENSOR (Continued)

INSTALLATION

(1) Insert level sensor wires into bottom of opening in module.

(2) Wrap wires into groove in back of level sensor (Fig. 7) .

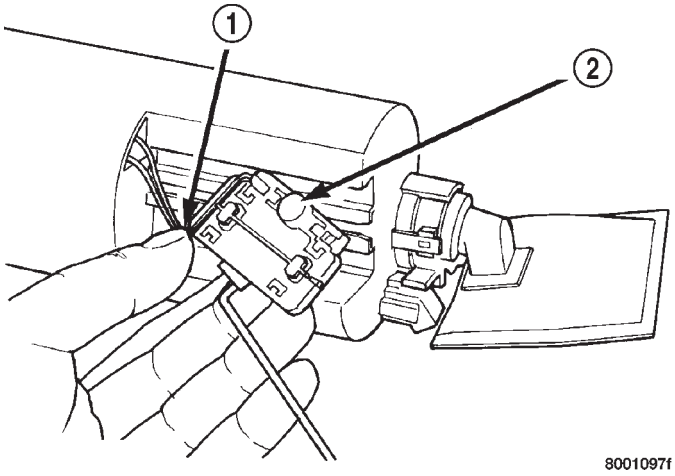

Fig. 7 Groove in Back Side of Level Sensor

1 - WRAP WIRES IN GROOVE
2 - REAR VIEW OF LEVEL SENSOR

(3) While feeding wires into guide grooves, slide level sensor up into channel until it snaps into place (Fig. 8) . Ensure tab at bottom of sensor locks in place.

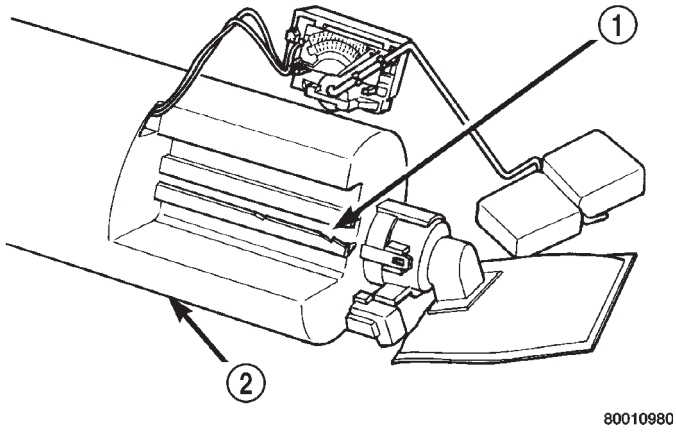

Fig. 8 Installation Channel

1 - CHANNEL FOR LEVEL SENSOR
2 - PUMP MODULE

(4) Install level sensor wires in connector. Push the wires up through the connector and then pull them down until they lock in place. Ensure signal and ground wires are installed in the correct position.

(5) Install locking wedge on connector.

(6) Push connector up into bottom of fuel pump module electrical connector.

(7) Install fuel pump module. Refer to Fuel Pump Module in this section.

FUEL LINES

DESCRIPTION - FUEL LINES/HOSES AND CLAMPS

Also refer to Quick-Connect Fittings.

WARNING: THE FUEL SYSTEM IS UNDER A CONSTANT PRESSURE (EVEN WITH THE ENGINE OFF). BEFORE SERVICING ANY FUEL SYSTEM HOSES, FITTINGS OR LINES, THE FUEL SYSTEM PRESSURE MUST BE RELEASED. REFER TO THE FUEL SYSTEM PRESSURE RELEASE PROCEDURE IN THIS GROUP.

The lines/tubes/hoses used on fuel injected vehicles are of a special construction. This is due to the higher fuel pressures and the possibility of contaminated fuel in this system. If it is necessary to replace these lines/tubes/hoses, only those marked EFM/EFI may be used.

If equipped: The hose clamps used to secure rubber hoses on fuel injected vehicles are of a special rolled edge construction. This construction is used to prevent the edge of the clamp from cutting into the hose. Only these rolled edge type clamps may be used in this system. All other types of clamps may cut into the hoses and cause high-pressure fuel leaks.

Use new original equipment type hose clamps.

STANDARD PROCEDURE - HOSES AND CLAMP

Inspect all hose connections (clamps and quick connect fittings) for completeness and leaks. Replace cracked, scuffed, or swelled hoses. Replace hoses that rub against other vehicle components or show sign of wear.

Fuel injected vehicles use specially constructed hoses. When replacing hoses, only use hoses marked EFM/EFI.

When installing hoses, ensure that they are routed away from contact with other vehicle components that could rub against them and cause failure. Avoid contact with clamps or other components that cause abrasions or scuffing. Ensure that rubber hoses are properly routed and avoid heat sources.

The hose clamps have rolled edges to prevent the clamp from cutting into the hose. Only use clamps that are original equipment or equivalent. Other types of clamps may cut into the hoses and cause high pressure fuel leaks. Tighten hose clamps to 1 N·m (10 in. lbs.) torque.

Inspect all hose connections such as clamps, couplings and fittings to make sure they are secure and

FUEL LINES (Continued)

leaks are not present. The component should be replaced immediately if there is any evidence of degradation that could result in failure.

Never attempt to repair a plastic fuel line/tube. Replace as necessary.

Avoid contact of any fuel tubes/hoses with other vehicle components that could cause abrasions or scuffing. Be sure that the plastic fuel lines/tubes are properly routed to prevent pinching and to avoid heat sources.

FUEL PRESSURE REGULATOR

OPERATION

The fuel system uses a nonadjustable pressure regulator that maintains fuel system pressure at approximately 400 ±34 kPa (58 ±5 psi). The fuel pressure regulator contains a diaphragm, calibrated spring and a fuel return valve. The spring pushes down on the diaphragm and closes off the fuel return port. System fuel pressure reflects the amount of fuel pressure required to open the return port.

The pressure regulator is a mechanical device that is NOT controlled by the PCM or engine vacuum.

REMOVAL

The fuel pressure regulator is part of the fuel pump module (Fig. 9). Remove the fuel pump module from the fuel tank to access the fuel pressure regulator. Refer to the Fuel Pump Module removal in this section.

(1) Spread tangs on pressure regulator retainer.

(2) Pry fuel pressure regulator out of housing.

(3) Ensure both upper and lower O-rings were removed with regulator.

INSTALLATION

The fuel pressure regulator is part of the fuel pump module. Remove the fuel pump module from the fuel tank to access the fuel pressure regulator. Refer to the Fuel Pump Module removal in this section.

(1) Lightly lubricate the O-rings with clean engine oil and place them into opening in pump module (Fig. 9).

(2) Push regulator into opening in pump module.

(3) Fold tangs on regulator retainer over tabs on housing.

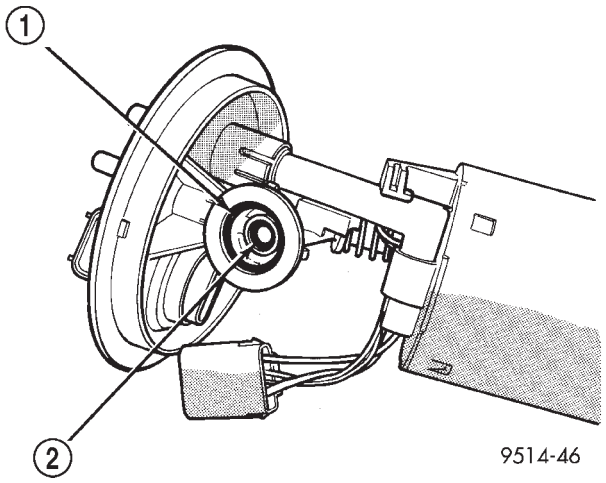

Fig. 9 Fuel Pressure Regulator O-rings

1 - UPPER O-RING
2 - LOWER 0-RING

FUEL PUMP

DESCRIPTION

The electric fuel pump is located in and is part of the fuel pump module. It is a positive displacement, gerotor type, immersible pump with a permanent magnet electric motor. The fuel pump module is suspended in fuel in the fuel tank.

OPERATION

The pump draws fuel through a strainer and pushes it through the motor to the outlet. The pump contains a check valve. The valve, in the pump outlet, maintains pump pressure during engine off conditions, for a short while. It is normal for fuel pressure to drop to zero after cooldown. The fuel pump relay provides voltage to the fuel pump. The fuel pump has a maximum deadheaded pressure output of approximately 880 kPa (130 psi). The regulator adjusts fuel system pressure to approximately 400 kpa ±34 kpa (58 psi ± 5 psi).

NOTE: Checkvalve maintains volume of fuel in the rail and lines, not pressure.

FUEL PUMP MODULE

DESCRIPTION

The fuel pump module is installed in the top of the fuel tank (Fig. 10) .

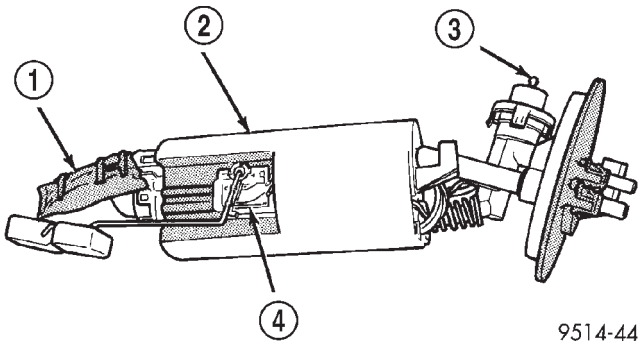

Fig. 10 Fuel Pump Module

1 - INLET STRAINER
2 - FUEL RESERVOIR
3 - FUEL PRESSURE REGULATOR
4 - FUEL LEVEL SENSOR

The fuel pump module contains the following:

- Electric fuel pump
- Fuel pump reservoir
- Inlet strainer
- Fuel pressure regulator
- Fuel gauge sending unit
- Fuel supply line connection

The inlet strainer, fuel pressure regulator and fuel level sensor are the only serviceable items. If the fuel pump or electrical wiring harness requires service, replace the fuel pump module.

The electric fuel pump is located in and is part of the fuel pump module. It is a positive displacement, gerotor type, immersible pump with a permanent magnet electric motor.

OPERATION

The pump draws fuel through a strainer and pushes it through the motor to the outlet. The pump contains one check valve. The check valve, in the pump outlet, maintains pump pressure during engine off conditions. The fuel pump relay provides voltage to the fuel pump.

The fuel pump has a maximum deadheaded pressure output of approximately 880 kPa (130 psi). The regulator adjusts fuel system pressure to approximately 400 ±34 kPa (58 ±5 psi).

FUEL PUMP ELECTRICAL CONTROL

Voltage to operate the electric pump is supplied through the fuel pump relay. For an electrical operational description of the fuel pump refer to fuel Pump Relay—PCM Output.

ELECTRICAL PUMP REPLACEMENT

The electric fuel pump is not serviceable. If the fuel pump or electrical wiring harness needs replacement, the complete fuel pump module must be replaced. Perform the Fuel System Pressure Release procedure before servicing the fuel pump.

REMOVAL

WARNING: RELEASE FUEL SYSTEM PRESSURE BEFORE SERVICING FUEL SYSTEM COMPONENTS. SERVICE VEHICLES IN WELL VENTILATED AREAS AND AVOID IGNITION SOURCES. NEVER SMOKE WHILE SERVICING THE VEHICLE.

(1) Remove fuel filler cap and perform Fuel System Pressure Release procedure.
(2) Disconnect negative cable from auxiliary jumper terminal.
(3) Drain fuel tank, refer to the Fuel Tank procedure in the Fuel Delivery section.
(4) Remove fuel tank, refer to the Fuel Tank removal section.
(5) Clean top of tank to remove loose dirt and debris.
(6) Using a brass punch and hammer remove locknut to release pump module (Fig. 11).

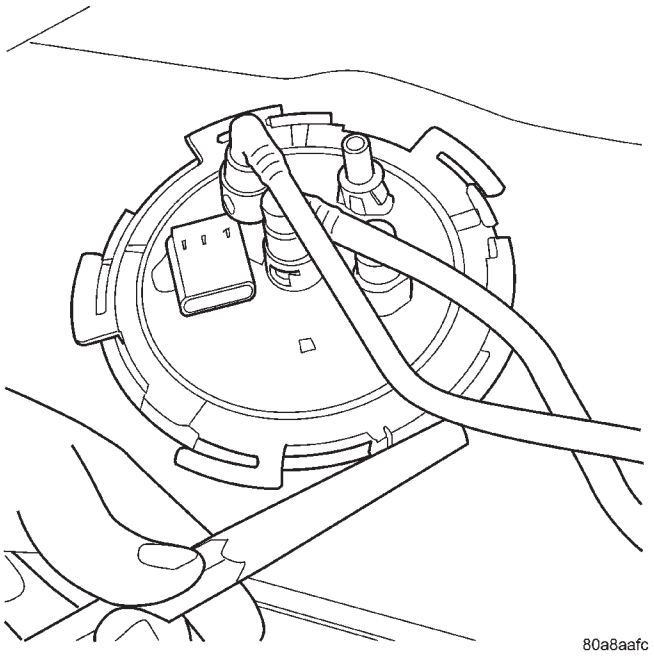

Fig. 11 FUEL PUMP MODULE LOCKING RING

FUEL PUMP MODULE (Continued)

WARNING: THE FUEL RESERVOIR OF THE FUEL PUMP MODULE DOES NOT EMPTY OUT WHEN THE TANK IS DRAINED. THE FUEL IN THE RESERVOIR MAY SPILL OUT WHEN THE MODULE IS REMOVED.

(7) Remove fuel pump module and O-ring from tank (Fig. 12). Discard O-ring.

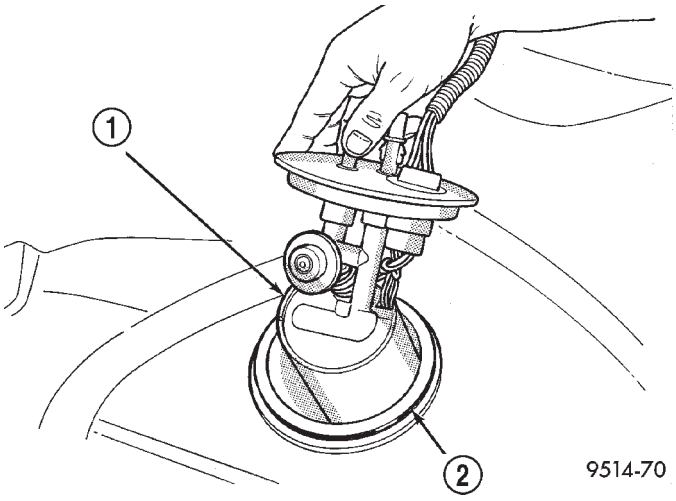

Fig. 12 Fuel Pump Module Removal

1 - FUEL PUMP MODULE
2 - O-RING

INSTALLATION

(1) Wipe seal area of tank clean and place a new O-ring seal in position on pump.
(2) Position fuel pump module in tank.
(3) Tighten locknut using a brass punch and hammer to install the locknut (Fig. 11).
(4) Install fuel tank, refer to the Fuel Tank installation section.
(5) Lower vehicle.
(6) Connect negative cable battery.
(7) Fill fuel tank. Check for leaks.
(8) Install fuel filler cap.

FUEL RAIL

REMOVAL

REMOVAL - 2.4L

(1) Perform fuel system pressure release procedure **before servicing or starting repairs.** Refer to Fuel System Pressure Release Procedure in this section.
(2) Disconnect negative cable from battery.
(3) Disconnect the wiring connectors for fuel injectors harness (Fig. 13).
(4) Remove wiring harness from brackets.

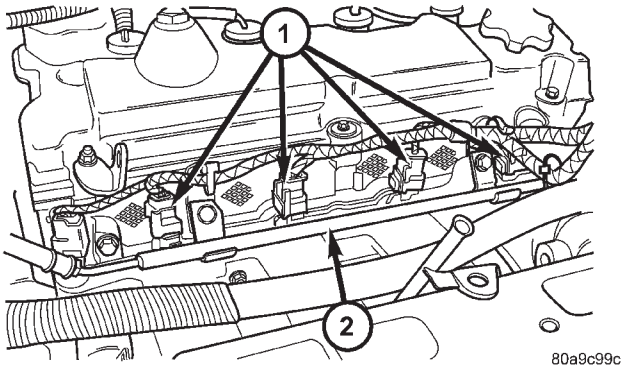

Fig. 13 FUEL RAIL AND INJECTORS 2.4L

1 - Fuel Injectors
2 - Fuel Rail

(5) Disconnect the connectors from the fuel injectors.
(6) Remove harness from vehicle.
(7) Remove fuel hose quick connect fitting from the chassis tube. **Refer to Fuel Hoses, Clamps and Quick Connect Fittings in this Section.** Place a shop towel under the connections to absorb any fuel spilled from the fitting.

WARNING: WRAP A SHOP TOWEL AROUND HOSES TO CATCH ANY GASOLINE SPILLAGE.

(8) Remove fuel rail attaching bolts.
(9) Remove fuel rail. Be careful not to damage the injector O-rings upon removal from their ports.

REMOVAL - 3.3/3.8L

(1) Perform fuel system pressure release procedure **before servicing or starting repairs.** Refer to Fuel System Pressure Release Procedure in this section.
(2) Disconnect negative cable from battery.
(3) Remove upper intake manifold, refer to the Engine/Manifolds/Upper Intake for more information..
(4) Cover intake manifold with suitable cover when servicing.
(5) Remove the fuel hose quick connect fitting from the chassis tube. **Refer to Fuel Hoses, Clamps and Quick Connect Fittings in this Section.**

WARNING: WRAP A SHOP TOWEL AROUND HOSES TO CATCH ANY GASOLINE SPILLAGE.

(6) Remove the fuel rail attaching bolts (Fig. 14).
(7) Remove fuel rail. Be careful not to damage the injector O-rings upon removal from their ports.

FUEL RAIL (Continued)

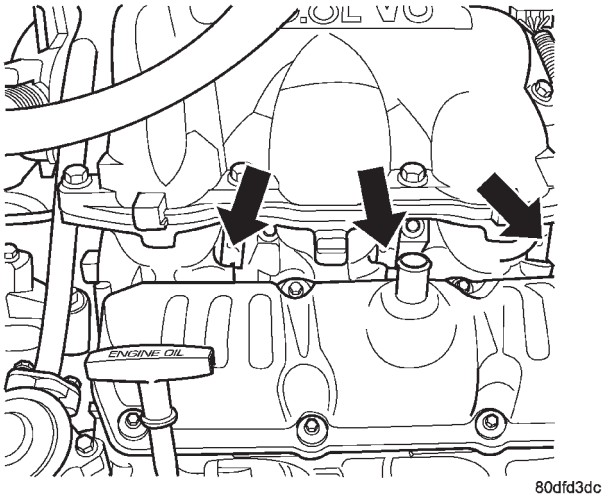

Fig. 14 FUEL INJECTORS 3.3/3.8L

INSTALLATION

INSTALLATION - 2.4L

(1) Ensure injector holes are clean. Replace O-rings if damaged.

(2) Lubricate injector O-rings with a drop of clean engine oil to ease installation.

(3) Put the tip of each injector into their ports. Push the assembly into place until the injectors are seated in the ports.

(4) Install the fuel rail mounting bolts. Tighten bolts to 22 N·m (200 in. lbs.) torque.

(5) Connect the connectors to the fuel injectors.

(6) Install wiring harness to brackets.

(7) Connect the wiring connectors to fuel injectors harness (Fig. 13).

(8) Connect negative battery cable.

(9) Use the DRBIII® scan tool to pressurize the fuel system. Check for leaks.

INSTALLATION - 3.3/3.8L

(1) Ensure injector holes are clean. Replace O-rings if damaged.

(2) Lubricate injector O-rings with a drop of clean engine oil to ease installation.

(3) Put the tip of each injector into their ports. Push the assembly into place until the injectors are seated in the ports.

(4) Install the fuel rail mounting bolts. Tighten bolts to 22 N·m (200 in. lbs.) torque.

(5) Remove covering on lower intake manifold and clean surface.

(6) Install the Upper Intake Manifold, refer to Engine/Manifolds/Upper Intake for more information.

(7) Install fuel hose quick connector fitting to chassis tubes. **Refer to Fuel Hoses, Clamps and Quick Connect Fittings in this Section.** Push the fitting onto the chassis tube until it clicks into place. Pull on the fitting to ensure complete insertion.

(8) Connect negative cable to battery.

(9) Use the DRBIII® scan tool to pressurize the fuel system. Check for leaks.

FUEL TANK

DESCRIPTION

The fuel tank is constructed of a plastic material. Its main functions are for fuel storage and for placement of the fuel pump module. The tank is made from High density Polyethylene (HDPE) material.If equipped with ORVR (Onboard Refueling Vapor Recovery) it has been added to the fuel tank to control refueling vapor emissions.

OPERATION

All models pass a full 360 degree rollover test without fuel leakage. To accomplish this, fuel and vapor flow controls are required for all fuel tank connections.

All models are equipped with either one or two rollover valves mounted into the top of the fuel tank (or pump module).

An evaporation control system is connected to the rollover valve(s)/control valve(Refer to 25 - EMISSIONS CONTROL/EVAPORATIVE EMISSIONS/ ORVR - OPERATION) to reduce emissions of fuel vapors into the atmosphere, when the tank is vented due to vapor expansion in the tank. When fuel evaporates from the fuel tank, vapors pass through vent hoses or tubes to a charcoal canister where they are temporarily held. When the engine is running, the vapors are drawn into the intake manifold. In addition, fuel vapors produced during vehicle refueling are allowed to pass through the vent hoses/tubes to the charcoal canister(s) for temporary storage (prior to being drawn into the intake manifold). All models are equipped with a self-diagnosing system using a Leak Detection Pump (LDP). Refer to the Emission Control System for additional information.

INLET CHECK VALVE

All vehicles have an inlet check valve on the inside of the fuel tank at the filler inlet

The valve prevents fuel from splashing back on customer during vehicle refueling. The valve is a non-serviceable item.

FUEL TANK (Continued)

REMOVAL

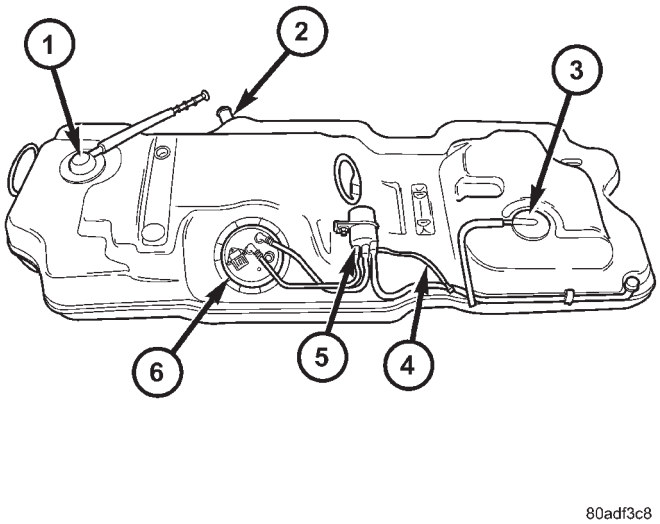

Fig. 15 Fuel Tank

1 - ROLLOVER VALVE
2 - FUEL FILLER INLET
3 - ROLLOVER VALVE
4 - GROUND STRAP
5 - FUEL FILTER
6 - FUEL PUMP MODULE

(1) Remove fuel filler cap and perform Fuel System Pressure Release procedure (Fig. 15).

(2) Disconnect negative cable from battery.

(3) Insert fuel siphon hose into fuel filler neck and push it into the tank.

(4) Drain fuel tank dry into holding tank or a properly labeled **GASOLINE** safety container.

(5) Raise vehicle on hoist and support.

(6) Use a transmission jack to support fuel tank. Remove bolts from fuel tank straps.

(7) Lower tank slightly.

(8) Disconnect the fuel filler vent tube. Squeeze tabs and pull apart (Fig. 16).

(9) Disconnect the fuel fill hose at the fuel tank filler metal tube **NOT AT THE FUEL TANK** (Fig. 16).

(10) Disconnect fuel line and vapor line at the front of the fuel tank.

The fuel pump module electrical connector has a retainer that locks it in place.

(11) Slide fuel pump module electrical connector lock to unlock (Fig. 17).

(12) Push down on connector retainer (Fig. 18) and pull connector off module.

(13) Lower tank from vehicle. Remove fuel filler vent tube from frame (Fig. 19).

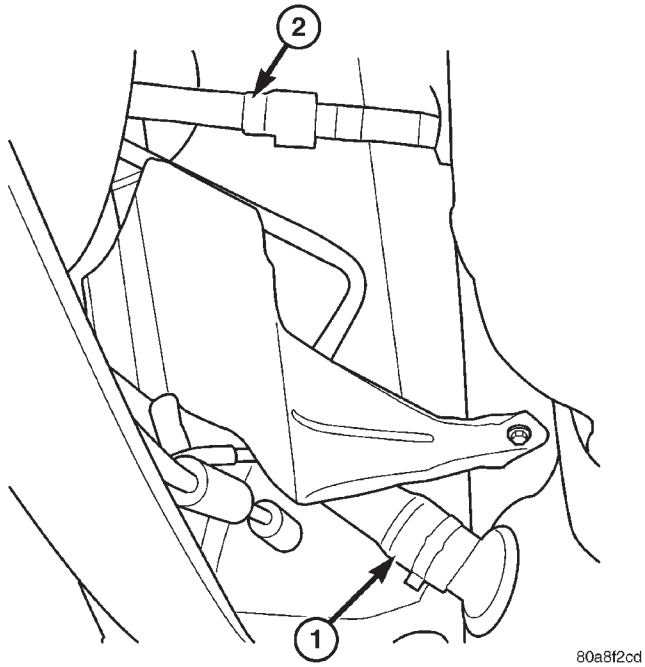

Fig. 16 FUEL FILLER AND VENT TUBE

1 - Filler Tube
2 - Vent Tube

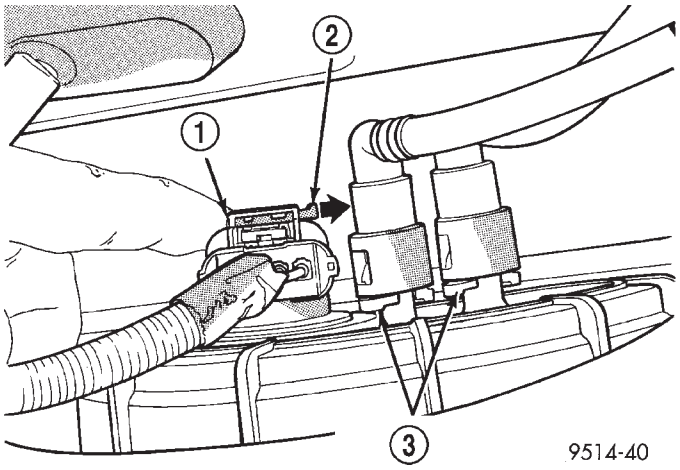

Fig. 17 Fuel Line Retainers and Pump Connector Lock

1 - PUSH
2 - CONNECTOR LOCK
3 - QUICK CONNECT RETAINERS

INSTALLATION

(1) Position fuel tank on transmission jack. Connect rollover valve hose. Connect fuel filler tube vent hose and tighten clamp.

(2) Raise tank into position and carefully work filler metal tube into the rubber hose on fuel tank. A light coating of clean engine oil on the tube end may be used to aid assembly.

FUEL TANK (Continued)

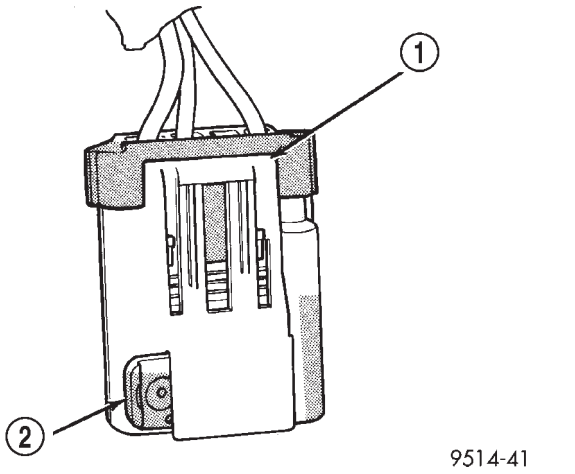

Fig. 18 Pump Module Connector Retainer and Lock

1 - PUSH DOWN ON RETAINER
2 - CONNECTOR LOCK

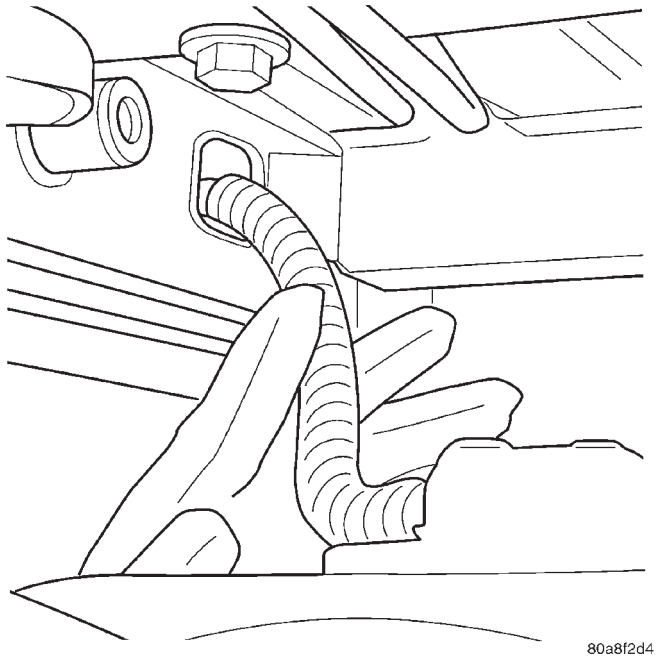

Fig. 19 VENT HOSE

(3) Feed filler vent line thru frame rail. Careful not to cross lines.

(4) Tighten strap bolts to 54 N·m (40 ft. lbs.) torque. Tighten T strap bolt to 28.2 N·m (250 in. lbs.). Remove transmission jack.

(5) Tighten filler hose clamp to 3.3 N·m (30 in. lbs.).

CAUTION: Ensure straps are not twisted or bent before or after tightening strap nuts.

(6) Connect fuel pump/module electrical connector. Place retainer in locked position.

(7) Lubricate the fuel supply line with clean 30 weight engine oil, install the quick connect fuel fitting. Refer to Tube/Fitting Assembly in the Fuel Delivery section of this section.

(8) Attach filler vent line to filler tube. Pull on connector to make sure of connection.

(9) Fill fuel tank, replace cap, and connect battery negative cable.

(10) Use the DRBIII® scan tool to pressurize the fuel system. Check for leaks.

FUEL TANK FILLER TUBE

REMOVAL

(1) Disconnect the negative battery cable.
(2) Remove the 3 screws at the filler door.
(3) Raise and support vehicle
(4) Remove the left rear tire.
(5) Remove the splash shield (Fig. 20).

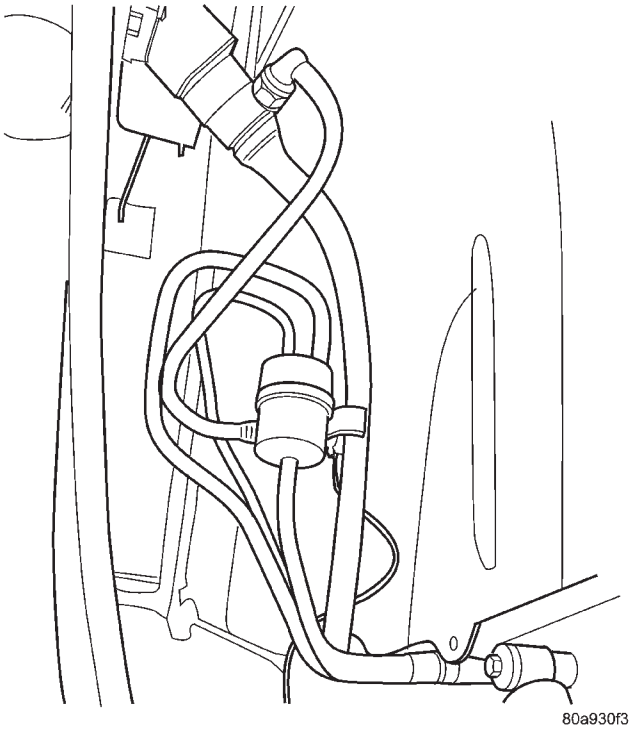

Fig. 20 FUEL FILLER TUBE AND VENT TUBE

(6) Remove the canister from filler tube (Fig. 21).
(7) Disconnect the vent at the top of the filler tube.
(8) Remove the ground strap.
(9) Remove filler tube at tank.

INSTALLATION

(1) Install filler tube to tank (Fig. 20).
(2) Install the ground strap.
(3) Connect the vent at the top of the filler tube.

FUEL TANK FILLER TUBE (Continued)

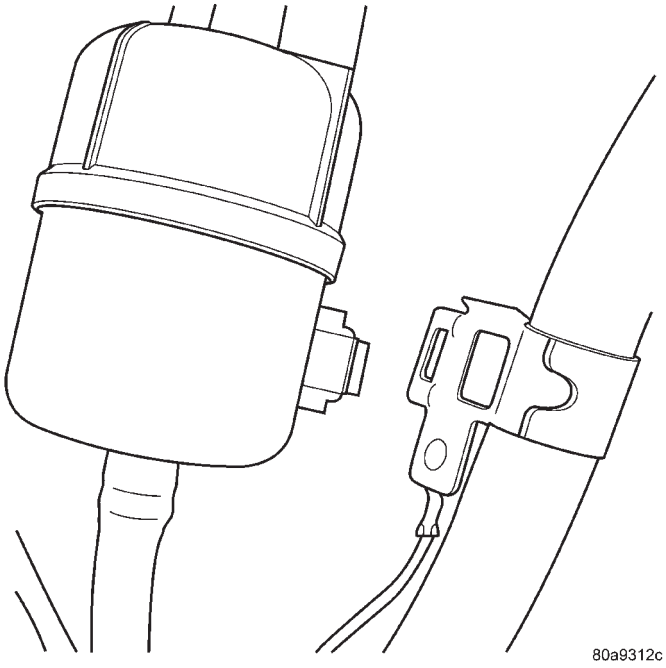

Fig. 21 FUEL TUBE VENT CANISTER

(4) Install the 3 screws at the filler door.
(5) Install the canister from filler tube (Fig. 21).
(6) Install the splash shield.
(7) Install the left rear tire.
(8) lower vehicle.
(9) Connect the negative battery cable.

INLET FILTER

REMOVAL

(1) Remove fuel pump module. Refer to Fuel Pump Module Removal in this section.
(2) Using a thin straight blade screwdriver, pry back the locking tabs on fuel pump reservoir and remove the strainer (Fig. 22).
(3) Remove strainer O-ring from the fuel pump reservoir body.
(4) Remove any contaminants in the fuel tank by washing the inside of the fuel tank.

INSTALLATION

(1) Lubricate the strainer O-ring with clean engine oil.
(2) Insert strainer O-ring into outlet of strainer so that it sits evenly on the step inside the outlet.
(3) Push strainer onto the inlet of the fuel pump reservoir body. Make sure the locking tabs on the reservoir body lock over the locking tangs on the strainer.
(4) Install fuel pump module. Refer to Fuel Pump Module Installation in this section.

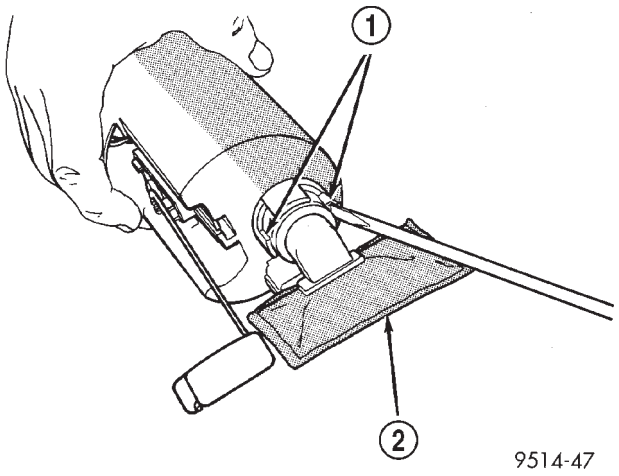

Fig. 22 Inlet

1 - TABS
2 - INLET STRAINER

QUICK CONNECT FITTING

STANDARD PROCEDURE - QUICK-CONNECT FITTINGS

REMOVAL

When disconnecting a quick-connect fitting, the retainer will remain on the fuel tube nipple.

WARNING: RELEASE FUEL SYSTEM PRESSURE BEFORE DISCONNECTING A QUICK-CONNECT FITTINGS. REFER TO THE FUEL PRESSURE RELEASE PROCEDURE.

(1) Perform Fuel Pressure Release Procedure. Refer to the Fuel Pressure Release Procedure in this section.
(2) Disconnect negative cable from battery or auxiliary jumper terminal.
(3) Squeeze retainer tabs together and pull fuel tube/quick-connect fitting assembly off of fuel tube nipple. The retainer will remain on fuel tube.

INSTALLATION

CAUTION: Never install a quick-connect fitting without the retainer being either on the fuel tube or already in the quick-connect fitting. In either case, ensure the retainer locks securely into the quick-connect fitting by firmly pulling on fuel tube and fitting to ensure it is secured.

(1) Using a clean lint free cloth, clean the fuel tube nipple and retainer.
(2) Prior to connecting the fitting to the fuel tube, coat the fuel tube nipple with clean engine oil.

QUICK CONNECT FITTING (Continued)

(3) Push the quick-connect fitting over the fuel tube until the **retainer seats and a click is heard.**

(4) The plastic quick-connect fitting has windows in the sides of the casing. When the fitting completely attaches to the fuel tube, the retainer locking ears and the fuel tube shoulder are visible in the windows. If they are not visible, the retainer was not properly installed (Fig. 23). **Do not rely upon the audible click to confirm a secure connection.**

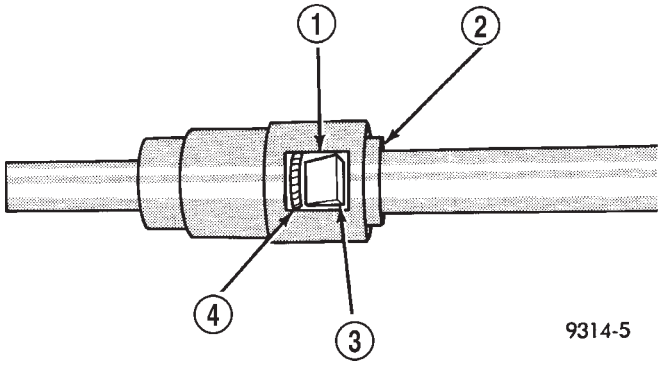

Fig. 23 Plastic Quick-Connect Fitting/Fuel Tube Connection

1 - WINDOW
2 - TAB (2)
3 - EAR
4 - SHOULDER (ON TUBE)

(5) Connect negative cable to battery or auxiliary jumper terminal.

CAUTION: When using the ASD Fuel System Test, the Auto Shutdown (ASD) Relay remains energized for several minutes, until the test is stopped, or until the ignition switch is turned to the Off position.

(6) Use the DRB III® scan tool ASD Fuel System Test to pressurize the fuel system. Check for leaks.

TWO-TAB TYPE FITTING

This type of fitting is equipped with tabs located on both sides of the fitting (Fig. 24). These tabs are supplied for disconnecting the quick-connect fitting from component being serviced.

CAUTION: The interior components (O-rings, spacers) of this type of quick-connect fitting are not serviced separately, but new plastic retainers are available. Do not attempt to repair damaged fittings or fuel lines/tubes. If repair is necessary, replace the complete fuel tube assembly.

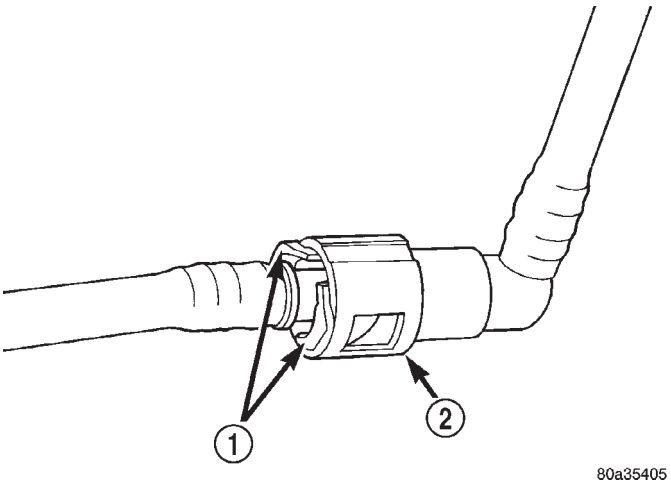

Fig. 24 Typical Two-Tab Type Quick-Connect Fitting

1 - TAB(S)
2 - QUICK-CONNECT FITTING

WARNING: THE FUEL SYSTEM IS UNDER A CONSTANT PRESSURE (EVEN WITH THE ENGINE OFF). BEFORE SERVICING ANY FUEL SYSTEM HOSES, FITTINGS OR LINES, THE FUEL SYSTEM PRESSURE MUST BE RELEASED. REFER TO THE FUEL PRESSURE RELEASE PROCEDURE IN THIS GROUP.

DISCONNECTION/CONNECTION

(1) Perform fuel pressure release procedure. Refer to Fuel Pressure Release Procedure in this group.

(2) Disconnect negative battery cable from battery or auxiliary jumper terminal.

(3) Clean fitting of any foreign material before disassembly.

(4) To disconnect quick-connect fitting, squeeze plastic retainer tabs (Fig. 24) against sides of quick-connect fitting with your fingers. Tool use is not required for removal and may damage plastic retainer. Pull fitting from fuel system component being serviced. The plastic retainer will remain on component being serviced after fitting is disconnected. The O-rings and spacer will remain in quick-connect fitting connector body.

(5) Inspect quick-connect fitting body and component for damage. Replace as necessary.

CAUTION: When the quick-connect fitting was disconnected, the plastic retainer will remain on the component being serviced. If this retainer must be removed, very carefully release the retainer from the component with two small screwdrivers. After removal, inspect the retainer for cracks or any damage.

QUICK CONNECT FITTING (Continued)

(6) Prior to connecting quick-connect fitting to component being serviced, check condition of fitting and component. Clean parts with a lint-free cloth. Lubricate with clean engine oil.

(7) Insert quick-connect fitting to component being serviced and into plastic retainer. When a connection is made, a click will be heard.

(8) Verify a locked condition by firmly pulling on fuel tube and fitting (15-30 lbs.).

(9) Connect negative cable to battery or auxiliary jumper terminal.

(10) Use the DRB III® scan tool ASD Fuel System Test to pressurize the fuel system. Check for leaks.

PLASTIC RETAINER RING TYPE FITTING

This type of fitting can be identified by the use of a full-round plastic retainer ring (Fig. 25) usually black in color.

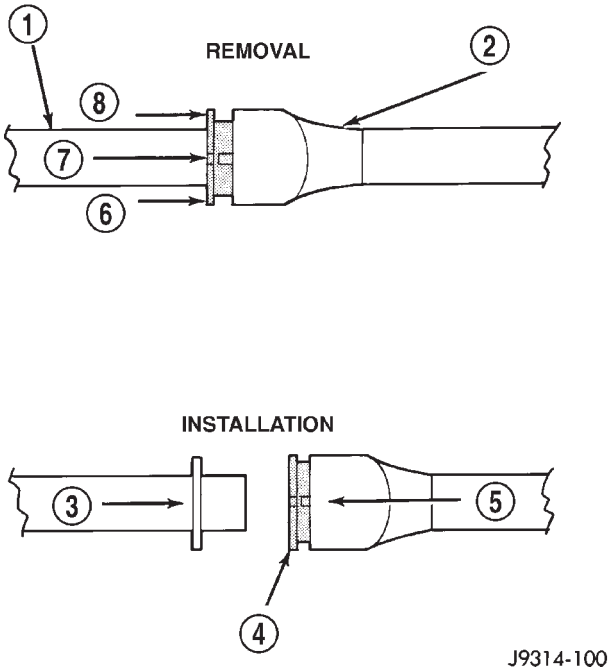

Fig. 25 Plastic Retainer Ring Type Fitting

1 - FUEL TUBE
2 - QUICK CONNECT FITTING
3 - PUSH
4 - PLASTIC RETAINER
5 - PUSH
6 - PUSH
7 - PUSH
8 - PUSH

CAUTION: The interior components (O-rings, spacers, retainers) of this type of quick-connect fitting are not serviced separately. Do not attempt to repair damaged fittings or fuel lines/tubes. If repair is necessary, replace the complete fuel tube assembly.

WARNING: THE FUEL SYSTEM IS UNDER A CONSTANT PRESSURE (EVEN WITH THE ENGINE OFF). BEFORE SERVICING ANY FUEL SYSTEM HOSES, FITTINGS OR LINES, THE FUEL SYSTEM PRESSURE MUST BE RELEASED. REFER TO THE FUEL SYSTEM PRESSURE RELEASE PROCEDURE IN THIS GROUP.

DISCONNECTION/CONNECTION

(1) Perform fuel pressure release procedure. Refer to Fuel Pressure Release Procedure in this section.

(2) Disconnect negative battery cable from battery or auxiliary jumper terminal.

(3) Clean fitting of any foreign material before disassembly.

(4) To release fuel system component from quick-connect fitting, firmly push fitting towards component being serviced while firmly pushing plastic retainer ring into fitting (Fig. 25). With plastic ring depressed, pull fitting from component. **The plastic retainer ring must be pressed squarely into fitting body. If this retainer is cocked during removal, it may be difficult to disconnect fitting. Use an open-end wrench on shoulder of plastic retainer ring to aid in disconnection.**

(5) After disconnection, plastic retainer ring will remain with quick-connect fitting connector body.

(6) Inspect fitting connector body, plastic retainer ring and fuel system component for damage. Replace as necessary.

(7) Prior to connecting quick-connect fitting to component being serviced, check condition of fitting and component. Clean parts with a lint-free cloth. Lubricate with clean engine oil.

(8) Insert quick-connect fitting into component being serviced until a click is felt.

(9) Verify a locked condition by firmly pulling on fuel tube and fitting (15-30 lbs.).

(10) Connect negative battery cable to battery or auxiliary jumper terminal.

(11) Use the DRB III® scan tool ASD Fuel System Test to pressurize the fuel system. Check for leaks.

FUEL INJECTION

TABLE OF CONTENTS

page

FUEL INJECTION
OPERATION
OPERATION - INJECTION SYSTEM 17
OPERATION - MODES OF OPERATION 17
FUEL CORRECTION or ADAPTIVE MEMORIES 19
PROGRAMMABLE COMMUNICATIONS INTERFACE (PCI) BUS 20
SYSTEM DIAGNOSIS 21
SPECIFICATIONS
TORQUE 21
SPECIAL TOOLS
FUEL 22
ACCELERATOR PEDAL
REMOVAL 22
INSTALLATION 23
CRANKSHAFT POSITION SENSOR
DESCRIPTION 23
OPERATION 24
REMOVAL 24
INSTALLATION - 2.4L 24
ENGINE SPEED SENSOR
DESCRIPTION 24
OPERATION 25
FUEL INJECTOR
DESCRIPTION 25
OPERATION 25
REMOVAL
REMOVAL - 2.4L 25
REMOVAL - 3.3/3.8L 26
INSTALLATION
INSTALLATION - 2.4L 26
INSTALLATION - 3.3/3.8L 26
FUEL PUMP RELAY
DESCRIPTION 27
OPERATION 27
IDLE AIR CONTROL MOTOR
DESCRIPTION 27
OPERATION 27
REMOVAL 28
INSTALLATION 28
INLET AIR TEMPERATURE SENSOR
DESCRIPTION 28
OPERATION 28
MAP SENSOR
DESCRIPTION 29
OPERATION 29
REMOVAL
REMOVAL - 2.4L 30
REMOVAL - 3.3/3.8L 30
INSTALLATION
INSTALLATION - 2.4L 30
INSTALLATION - 3.3/3.8L 30
O2 SENSOR
DESCRIPTION 30
OPERATION 31
REMOVAL
REMOVAL - UPSTREAM 1/1 - 2.4L 32
REMOVAL - UPSTREAM 1/1 - 3.3/3.8L 32
REMOVAL - DOWNSTREAM 1/2 - 2.4/3.3/3.8L 32
INSTALLATION
INSTALLATION - UPSTREAM 1/1 - 2.4L 32
INSTALLATION - UPSTREAM 1/1 - 3.3/3.8L . . 33
INSTALLATION DOWNSTREAM 2/1 - 2.4/3.3/3.8L 33
THROTTLE BODY
DESCRIPTION 33
OPERATION 33
REMOVAL 34
INSTALLATION 34
THROTTLE CONTROL CABLE
REMOVAL 34
INSTALLATION 34
THROTTLE POSITION SENSOR
DESCRIPTION 35
OPERATION 35
REMOVAL - 3.3/3.8L 35
INSTALLATION - 3.3/3.8L 35

FUEL INJECTION

OPERATION

OPERATION - INJECTION SYSTEM

All engines used in this section have a sequential Multi-Port Electronic Fuel Injection system. The MPI system is computer regulated and provides precise air/fuel ratios for all driving conditions. The Powertrain Control Module (PCM) operates the fuel injection system.

The PCM regulates:

- Ignition timing
- Air/fuel ratio
- Emission control devices
- Cooling fan
- Charging system
- Idle speed
- Vehicle speed control

Various sensors provide the inputs necessary for the PCM to correctly operate these systems. In addition to the sensors, various switches also provide inputs to the PCM.

The PCM can adapt its programming to meet changing operating conditions.

Fuel is injected into the intake port above the intake valve in precise metered amounts through electrically operated injectors. The PCM fires the injectors in a specific sequence. Under most operating conditions, the PCM maintains an air fuel ratio of 14.7 parts air to 1 part fuel by constantly adjusting injector pulse width. Injector pulse width is the length of time the injector is open.

The PCM adjusts injector pulse width by opening and closing the ground path to the injector. Engine RPM (speed) and manifold absolute pressure (air density) are the **primary** inputs that determine injector pulse width.

OPERATION - MODES OF OPERATION

As input signals to the PCM change, the PCM adjusts its response to output devices. For example, the PCM must calculate a different injector pulse width and ignition timing for idle than it does for Wide Open Throttle (WOT). There are several different modes of operation that determine how the PCM responds to the various input signals.

There are two different areas of operation, OPEN LOOP and CLOSED LOOP.

During OPEN LOOP modes the PCM receives input signals and responds according to preset PCM programming. Inputs from the upstream and downstream heated oxygen sensors are not monitored during OPEN LOOP modes, except for heated oxygen sensor diagnostics (they are checked for shorted conditions at all times).

During CLOSED LOOP modes the PCM monitors the inputs from the upstream and downstream heated oxygen sensors. The upstream heated oxygen sensor input tells the PCM if the calculated injector pulse width resulted in the ideal air-fuel ratio of 14.7 to one. By monitoring the exhaust oxygen content through the upstream heated oxygen sensor, the PCM can fine tune injector pulse width. Fine tuning injector pulse width allows the PCM to achieve optimum fuel economy combined with low emissions.

For the PCM to enter CLOSED LOOP operation, the following must occur:

(1) Engine coolant temperature must be over 35°F.

- If the coolant is over 35°F the PCM will wait 38 seconds.
- If the coolant is over 50°F the PCM will wait 15 seconds.
- If the coolant is over 167°F the PCM will wait 3 seconds.

(2) For other temperatures the PCM will interpolate the correct waiting time.

(3) O2 sensor must read either greater than 0.745 volts or less than 0.29 volt.

(4) The multi-port fuel injection systems has the following modes of operation:

- Ignition switch ON (Zero RPM)
- Engine start-up
- Engine warm-up
- Cruise
- Idle
- Acceleration
- Deceleration
- Wide Open Throttle
- Ignition switch OFF

(5) The engine start-up (crank), engine warm-up, deceleration with fuel shutoff and wide open throttle modes are OPEN LOOP modes. Under most operating conditions, the acceleration, deceleration (with A/C on), idle and cruise modes, **with the engine at operating temperature** are CLOSED LOOP modes.

IGNITION SWITCH ON (ZERO RPM) MODE

When the ignition switch activates the fuel injection system, the following actions occur:

- The PCM monitors the engine coolant temperature sensor and throttle position sensor input. The PCM determines basic fuel injector pulse width from this input.
- The PCM determines atmospheric air pressure from the MAP sensor input to modify injector pulse width.

When the key is in the ON position and the engine is not running (zero rpm), the Auto Shutdown (ASD) and fuel pump relays de-energize after approximately

1 second. Therefore, battery voltage is not supplied to the fuel pump, ignition coil, fuel injectors and heated oxygen sensors.

ENGINE START-UP MODE

This is an OPEN LOOP mode. If the vehicle is in park or neutral (automatic transaxles) or the clutch pedal is depressed (manual transaxles) the ignition switch energizes the starter relay. The following actions occur when the starter motor is engaged.

- If the PCM receives the camshaft position sensor and crankshaft position sensor signals, it energizes the Auto Shutdown (ASD) relay and fuel pump relay. If the PCM does not receive both signals within approximately one second, it will not energize the ASD relay and fuel pump relay. The ASD and fuel pump relays supply battery voltage to the fuel pump, fuel injectors, ignition coil, (EGR solenoid and PCV heater if equipped) and heated oxygen sensors.
- The PCM energizes the injectors (on the 69° degree falling edge) for a calculated pulse width until it determines crankshaft position from the camshaft position sensor and crankshaft position sensor signals. The PCM determines crankshaft position within 1 engine revolution.
- After determining crankshaft position, the PCM begins energizing the injectors in sequence. It adjusts injector pulse width and controls injector synchronization by turning the individual ground paths to the injectors On and Off.
- When the engine idles within ±64 RPM of its target RPM, the PCM compares current MAP sensor value with the atmospheric pressure value received during the Ignition Switch On (zero RPM) mode.

Once the ASD and fuel pump relays have been energized, the PCM determines injector pulse width based on the following:

- MAP
- Engine RPM
- Battery voltage
- Engine coolant temperature
- Inlet/Intake air temperature (IAT)
- Throttle position
- The number of engine revolutions since cranking was initiated

During Start-up the PCM maintains ignition timing at 9° BTDC.

ENGINE WARM-UP MODE

This is an OPEN LOOP mode. The following inputs are received by the PCM:

- Manifold Absolute Pressure (MAP)
- Crankshaft position (engine speed)
- Engine coolant temperature
- Inlet/Intake air temperature (IAT)
- Camshaft position
- Knock sensor
- Throttle position
- A/C switch
- Battery voltage
- Vehicle speed
- Speed control
- O2 sensors

The PCM adjusts injector pulse width and controls injector synchronization by turning the individual ground paths to the injectors On and Off.

The PCM adjusts ignition timing and engine idle speed. Engine idle speed is adjusted through the idle air control motor.

CRUISE OR IDLE MODE

When the engine is at operating temperature this is a CLOSED LOOP mode. During cruising or idle the following inputs are received by the PCM:

- Manifold absolute pressure
- Crankshaft position (engine speed)
- Inlet/Intake air temperature
- Engine coolant temperature
- Camshaft position
- Knock sensor
- Throttle position
- Exhaust gas oxygen content
- A/C control positions
- Battery voltage
- Vehicle speed

The PCM adjusts injector pulse width and controls injector synchronization by turning the individual ground paths to the injectors On and Off.

The PCM adjusts engine idle speed and ignition timing. The PCM adjusts the air/fuel ratio according to the oxygen content in the exhaust gas (measured by the upstream and downstream heated oxygen sensor).

The PCM monitors for engine misfire. During active misfire and depending on the severity, the PCM either continuously illuminates or flashes the malfunction indicator lamp (Check Engine light on instrument panel). Also, the PCM stores an engine misfire DTC in memory, if 2nd trip with fault.

The PCM performs several diagnostic routines. They include:

- Oxygen sensor monitor
- Downstream heated oxygen sensor diagnostics during open loop operation (except for shorted)
- Fuel system monitor
- EGR monitor (if equipped)
- Purge system monitor
- Catalyst efficiency monitor
- All inputs monitored for proper voltage range, rationality.
- All monitored components (refer to the Emission section for On-Board Diagnostics).

FUEL INJECTION (Continued)

The PCM compares the upstream and downstream heated oxygen sensor inputs to measure catalytic convertor efficiency. If the catalyst efficiency drops below the minimum acceptable percentage, the PCM stores a diagnostic trouble code in memory, after 2 trips.

During certain idle conditions, the PCM may enter a variable idle speed strategy. During variable idle speed strategy the PCM adjusts engine speed based on the following inputs.

- A/C sense
- Battery voltage
- Battery temperature or Calculated Battery Temperature
- Engine coolant temperature
- Engine run time
- Inlet/Intake air temperature
- Vehicle mileage

ACCELERATION MODE

This is a CLOSED LOOP mode. The PCM recognizes an abrupt increase in Throttle Position sensor output voltage or MAP sensor output voltage as a demand for increased engine output and vehicle acceleration. The PCM increases injector pulse width in response to increased fuel demand.

- Wide Open Throttle-open loop

DECELERATION MODE

This is a CLOSED LOOP mode. During deceleration the following inputs are received by the PCM:

- A/C sense
- Battery voltage
- Inlet/Intake air temperature
- Engine coolant temperature
- Crankshaft position (engine speed)
- Exhaust gas oxygen content (upstream heated oxygen sensor)
- Knock sensor
- Manifold absolute pressure
- Throttle position sensor
- IAC motor (solenoid) control changes in response to MAP sensor feedback

The PCM may receive a closed throttle input from the Throttle Position Sensor (TPS) when it senses an abrupt decrease in manifold pressure. This indicates a hard deceleration (Open Loop). In response, the PCM may momentarily turn off the injectors. This helps improve fuel economy, emissions and engine braking.

WIDE-OPEN-THROTTLE MODE

This is an OPEN LOOP mode. During wide-open-throttle operation, the following inputs are used by the PCM:

- Inlet/Intake air temperature
- Engine coolant temperature
- Engine speed
- Knock sensor
- Manifold absolute pressure
- Throttle position

When the PCM senses a wide-open-throttle condition through the Throttle Position Sensor (TPS) it de-energizes the A/C compressor clutch relay. This disables the air conditioning system and disables EGR (if equipped).

The PCM adjusts injector pulse width to supply a predetermined amount of additional fuel, based on MAP and RPM.

IGNITION SWITCH OFF MODE

When the operator turns the ignition switch to the OFF position, the following occurs:

- All outputs are turned off, unless 02 Heater Monitor test is being run. Refer to the Emission section for On-Board Diagnostics.
- No inputs are monitored except for the heated oxygen sensors. The PCM monitors the heating elements in the oxygen sensors and then shuts down.

FUEL CORRECTION or ADAPTIVE MEMORIES

DESCRIPTION

In Open Loop, the PCM changes pulse width without feedback from the O2 Sensors. Once the engine warms up to approximately 30 to 35° F, the PCM goes into closed loop **Short Term Correction** and utilizes feedback from the O2 Sensors. Closed loop **Long Term Adaptive Memory** is maintained above 170° to 190° F unless the PCM senses wide open throttle. At that time the PCM returns to Open Loop operation.

OPERATION

Short Term

The first fuel correction program that begins functioning is the short term fuel correction. This system corrects fuel delivery in direct proportion to the readings from the Upstream O2 Sensor.

The PCM monitors the air/fuel ratio by using the input voltage from the O2 Sensor. When the voltage reaches its preset high or low limit, the PCM begins to add or remove fuel until the sensor reaches its switch point. The short term corrections then begin.

The PCM makes a series of quick changes in the injector pulse-width until the O2 Sensor reaches its opposite preset limit or switch point. The process then repeats itself in the opposite direction.

Short term fuel correction will keep increasing or decreasing injector pulse-width based upon the upstream O2 Sensor input. The maximum range of authority for short term memory is 25% (+/-) of base pulse-width. Short term is violated and is lost when ignition is turned OFF.

FUEL INJECTION (Continued)

Long Term

The second fuel correction program is the long term adaptive memory. In order to maintain correct emission throughout all operating ranges of the engine, a cell structure based on engine rpm and load (MAP) is used.

Ther number of cells varies upon the driving conditions. Two cells are used only during idle, based upon TPS and Park/Neutral switch inputs. There may be two other cells used for deceleration, based on TPS, engine rpm, and vehicle speed. The other twelve cells represent a manifold pressure and an rpm range. Six of the cells are high rpm and the other six are low rpm. Each of these cells is a specific MAP voltage range Typical Adaptive Memory Fuel Cells .

As the engine enters one of these cells the PCM looks at the amount of short term correction being used. Because the goal is to keep short term at 0 (O2 Sensor switching at 0.5 volt), long term will update in the same direction as short term correction was moving to bring the short term back to 0. Once short term is back at 0, this long term correction factor is stored in memory.

The values stored in long term adaptive memory are used for all operating conditions, including open loop and cold starting. However, the updating of the long term memory occurs after the engine has exceeded approximately 170°-190° F, with fuel control in closed loop and two minutes of engine run time. This is done to prevent any transitional temperature or start-up compensations from corrupting long term fuel correction.

Long term adaptive memory can change the pulse-width by as much as 25%, which means it can correct for all of short term. It is possible to have a problem that would drive long term to 25% and short term to another 25% for a total change of 50% away from base pulse-width calculation.

TYPICAL ADAPTIVE MEMORY FUEL CELLS

	Open Throttle	Open Throttle	Open Throttle	Open Throttle	Open Throttle	Open Throttle	Idle	Decel
Vacuum	20	17	13	9	5	0		
Above 1,984 rpm	1	3	5	7	9	11	13 Drive	15
Below 1,984 rpm	0	2	4	6	8	10	12 Neutral	14
MAP volt =	0	1.4	2.0	2.6	3.3	3.9		

Fuel Correction Diagnostics

There are two fuel correction diagnostic routines:

- Fuel System Rich
- Fuel System Lean

A DTC is set and the MIL is illuminated if the PCM detects either of these conditions. This is determined based on total fuel correction, short term times long term.

PROGRAMMABLE COMMUNICATIONS INTERFACE (PCI) BUS

DESCRIPTION

The Programmable Communication Interface Multiplex system (PCI Bus) consist of a single wire. The Body Control Module (BCM) acts as a splice to connect each module and the Data Link Connector (DLC) together. Each module is wired in parallel to the data bus through its PCI chip set and uses its ground as the bus reference. The wiring is a minimum 20 gage wire.

OPERATION

Various modules exchange information through a communications port called the PCI Bus. The Powertrain Control Module (PCM) transmits the Malfunction Indicator Lamp (Check Engine) On/Off signal and engine RPM on the PCI Bus. The PCM receives the Air Conditioning select input, transaxle gear position inputs over the PCI Bus. The PCM also receives the air conditioning evaporator temperature signal from the PCI Bus.

The following components access or send information on the PCI Bus.

- Instrument Panel
- Body Control Module
- Air Bag System Diagnostic Module
- Full ATC Display Head (if equipped)
- ABS Module
- Transmission Control Module
- Powertrain Control Module
- Travel Module
- SKIM

FUEL INJECTION (Continued)

SYSTEM DIAGNOSIS

OPERATION

The PCM can test many of its own input and output circuits. If the PCM senses a fault in a major system, the PCM stores a Diagnostic Trouble Code (DTC) in memory.

For DTC information see On-Board Diagnostics (Refer to 8 - ELECTRICAL/ELECTRONIC CONTROL MODULES/POWERTRAIN CONTROL MODULE - DESCRIPTION) .

SPECIFICATIONS

TORQUE

DESCRIPTION	N·m	Ft. Lbs.	In. Lbs.
MAP SENSOR PLASTIC MANIFOLD	1.7		15
MAP SENSOR ALUMINUM MANIFOLD	3.3		30
POWER STEERING RESERVOIR PLASTIC MANIFOLD	5.7		50
POWER STEERING RESERVOIR ALUMINUM MANIFOLD	11.9		105
THROTTLE CABLE BRACKET PLASTIC MANIFOLD	5.7		50
THROTTLE CABLE BRACKET ALUMINUM MANIFOLD	11.9		105
EGR TUBE PLASTIC MANIFOLD	5.7		50
EGR TUBE ALUMINUM MANIFOLD	11.9		105
THROTTLE BODY BOLTS 2.4L	28	20.65	250 ±50
THROTTLE BODY BOLTS 3.3/3.8L	11.8	8.7	105 ±20
O2 Sensors	27	20	
The composite manifolds uses special Plastic screws. The factory installed Plastic screws can be removed and installed up to 5 times. Do not exceed the specified torque. These screws must be installed slowly (less than 600 rpms) to avoid melting the parent material. There are service repair screws avialable for repair. They require a higher torque than the original screws..			

FUEL INJECTION (Continued)

SPECIAL TOOLS

FUEL

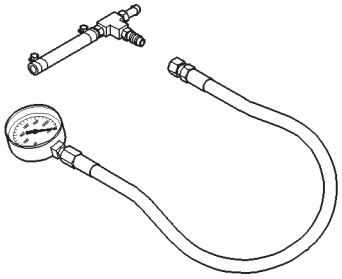

Pressure Gauge Assembly C–4799–B

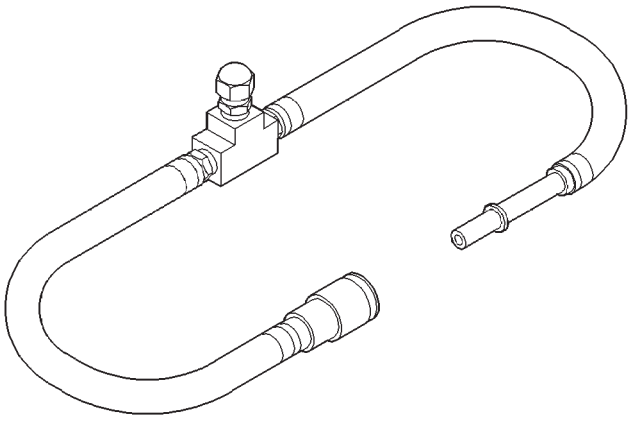

Fuel Pressure Test Adapter 6539

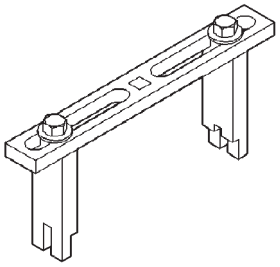

Spanner Wrench 6856

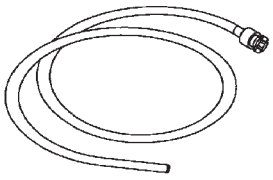

Fuel Line Adapter 1/4

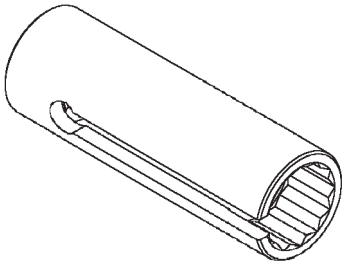

O2S (Oxygen Sensor) Remover/Installer—C-4907

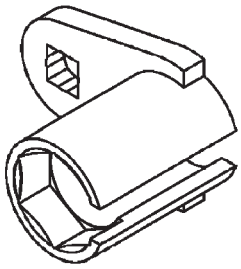

O2S(Oxygen Sensor) Remover/Installer - 8439

ACCELERATOR PEDAL

REMOVAL

(1) Hold the throttle body throttle lever in the wide open position. Remove the throttle cable from the throttle body cam (Fig. 1).

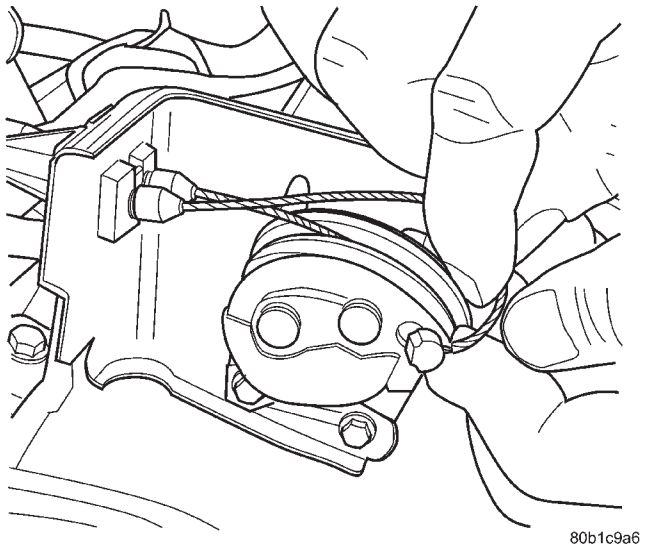

Fig. 1 THROTTLE CABLE RELEASE

(2) From inside the vehicle, hold up the pedal and remove the pedal retainer and throttle cable from the upper end of the pedal lever (Fig. 2).

(3) Remove nuts from accelerator pedal attaching studs. Remove assembly from vehicle (Fig. 3).

ACCELERATOR PEDAL (Continued)

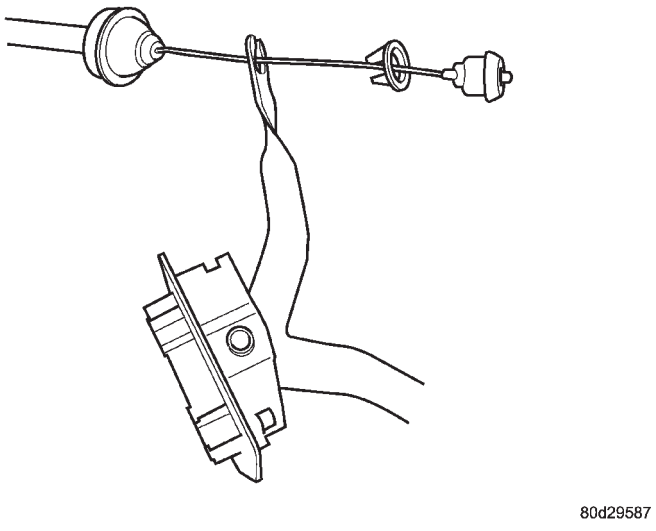

Fig. 2 CABLE CLIP

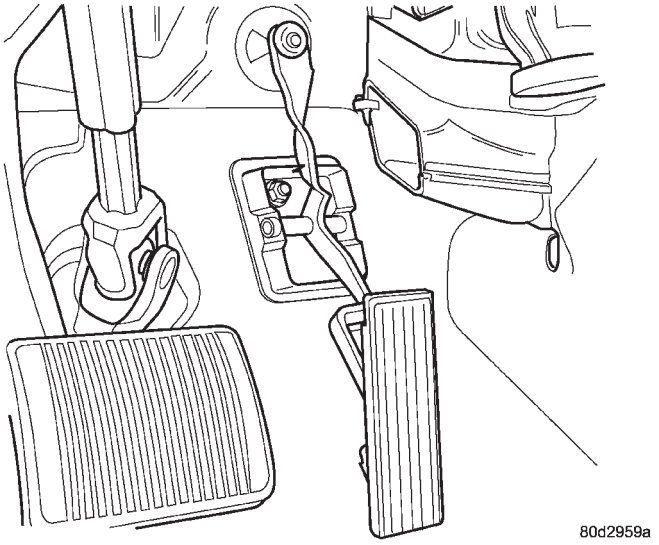

Fig. 3 ACCELERATOR PEDAL

INSTALLATION

(1) Position accelerator pedal assembly on dash panel. Install retaining nuts. Tighten retaining nuts to 12 N·m (105 in. lbs.) torque (Fig. 3).

(2) From inside the vehicle, hold up the pedal and install the throttle cable and pedal retainer in the upper end of the pedal lever (Fig. 2).

(3) From the engine compartment, hold the throttle body lever in the wide open position and install the throttle cable (Fig. 1).

CRANKSHAFT POSITION SENSOR

DESCRIPTION

The 2.4L crankshaft sensor is located on the rear of the engine near the accessory drive belt (Fig. 4). The 3.3/3.8L crankshaft sensor is located on the rear of the transmission housing, above the differential housing (Fig. 5). The bottom of the sensor is positioned next to the drive plate.

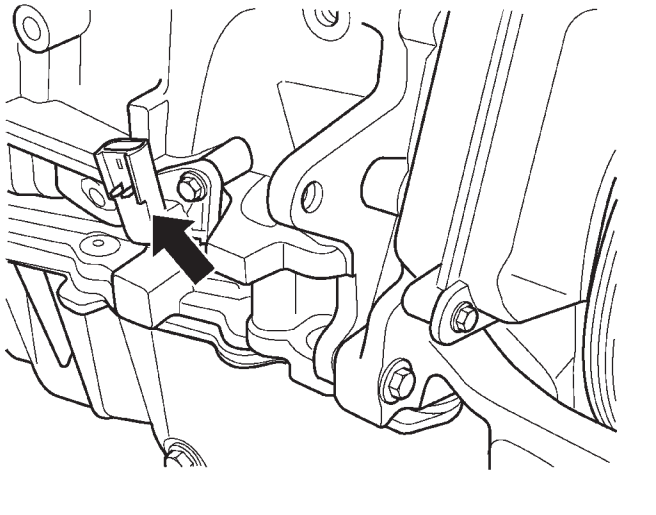

Fig. 4 CRANKSHAFT SENSOR 2.4L

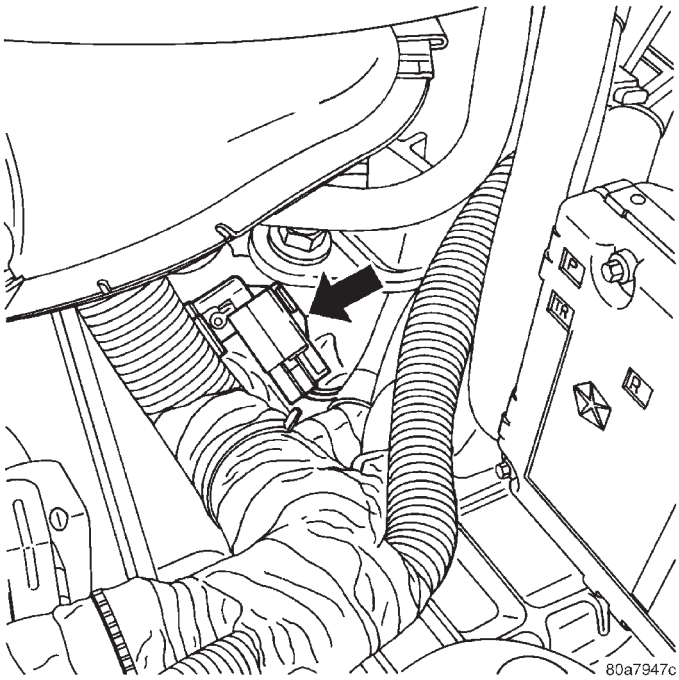

Fig. 5 CRANKSHAFT SENSOR 3.3/3.8L

CRANKSHAFT POSITION SENSOR (Continued)

OPERATION

The crankshaft position sensor detects slots cut into the transmission driveplate extension (Fig. 6). There are 3 sets of slots. Each set contains 4 slots, for a total of 12 slots (Fig. 7). Basic timing is set by the position of the last slot in each group. Once the Powertrain Control Module (PCM) senses the last slot, it determines crankshaft position (which piston will next be at TDC) from the camshaft position sensor input. The 4 pulses generated by the crankshaft position sensor represent the 69°, 49°, 29°, and 9° BTDC marks. It may take the PCM one engine revolution to determine crankshaft position.

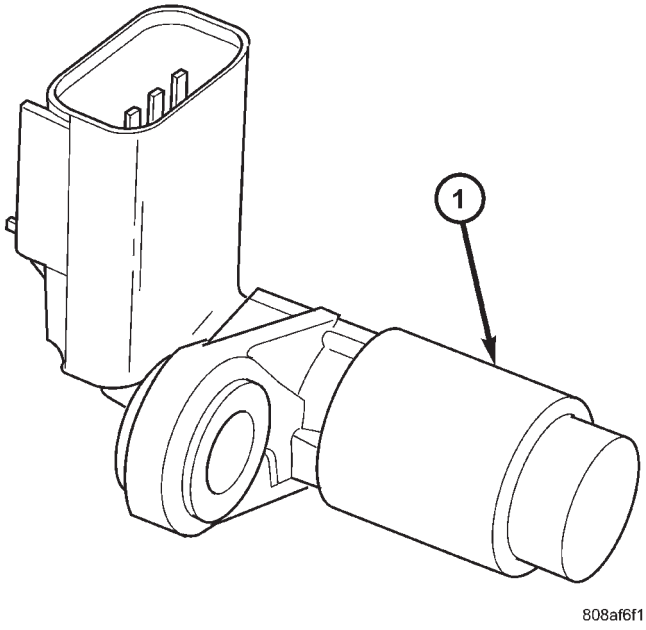

Fig. 6 Crankshaft Position Sensor

1 - CRANKSHAFT POSITION SENSOR

The PCM uses crankshaft position reference to determine injector sequence, ignition timing and the presence of misfire. Once the PCM determines crankshaft position, it begins energizing the injectors in sequence.

REMOVAL

(1) Disconnect the negative battery cable.
(2) Raise vehicle and support.
(3) Disconnect the electrical connector (Fig. 8).
(4) Remove crankshaft sensor bolt.
(5) Remove the crankshaft sensor.

INSTALLATION - 2.4L

(1) Install the crankshaft sensor.
(2) Install crankshaft sensor bolt and tighten.
(3) Connect the electrical connector (Fig. 8).

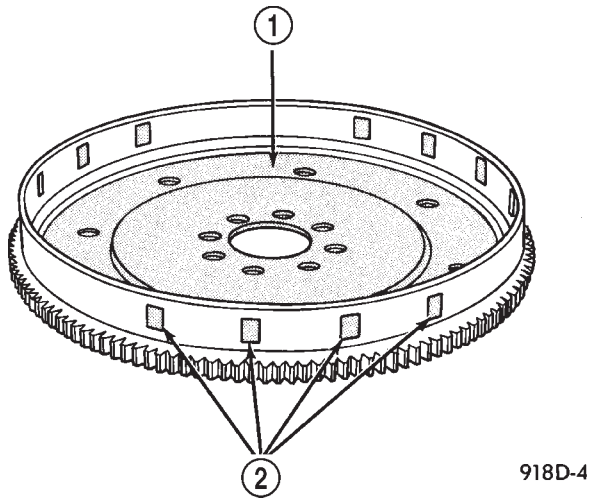

Fig. 7 Timing Slots

1 - TORQUE CONVERTER DRIVE PLATE
2 - SLOTS

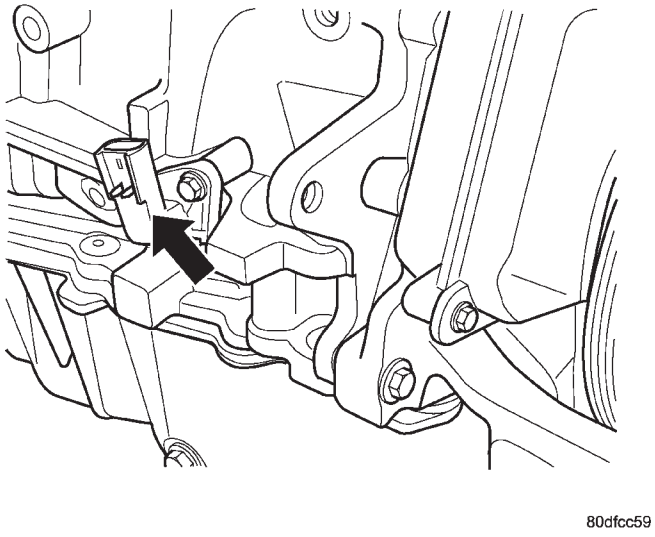

Fig. 8 CRANKSHAFT SENSOR 2.4L

(4) Lower vehicle.
(5) Connect the negative battery cable.

ENGINE SPEED SENSOR

DESCRIPTION

The PCM receives a signal from the TCM and the transaxle output speed sensor over the bus communication line to indicate vehicle speed on automatic transmission cars. On Manual transmission cars (if equipped) vehicle, a dedicated vehicle speed sensor is connected to the PCM.

ENGINE SPEED SENSOR (Continued)

OPERATION

The Transmission Control Module (TCM) supplies the road speed and distance traveled inputs to the PCM. From these inputs and the throttle position sensor input, the PCM determines when a deceleration condition occurs.

FUEL INJECTOR

DESCRIPTION

The injectors are positioned in the intake manifold or cylinder head with the nozzle ends directly above the intake valve port (Fig. 9).

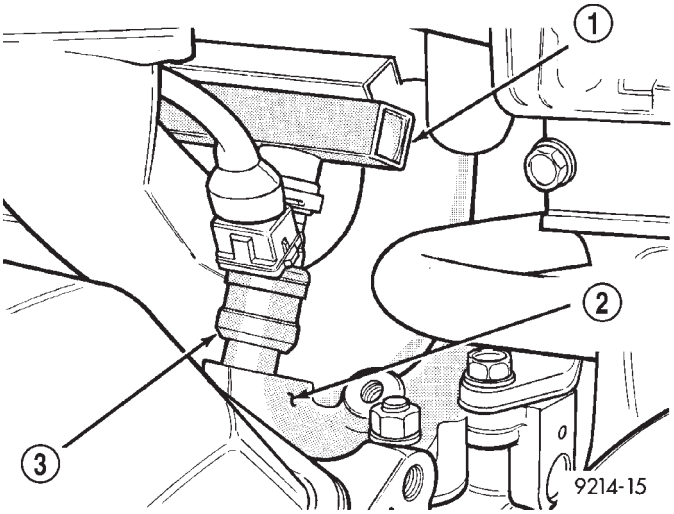

Fig. 9 Fuel Injector Location - Typical

1 - FUEL RAIL
2 - INTAKE MANIFOLD
3 - FUEL INJECTORS

OPERATION

The fuel injectors are 12 volt electrical solenoids (Fig. 10). The injector contains a pintle that closes off an orifice at the nozzle end. When electric current is supplied to the injector, the armature and needle move a short distance against a spring, allowing fuel to flow out the orifice. Because the fuel is under high pressure, a fine spray is developed in the shape of a hollow cone or two streams. The spraying action atomizes the fuel, adding it to the air entering the combustion chamber. Fuel injectors are not interchangeable between engines.

The PCM provides battery voltage to each injector through the ASD relay. Injector operation is controlled by a ground path provided for each injector by the PCM. Injector on-time (pulse-width) is variable, and is determined by the PCM processing all the data previously discussed to obtain the optimum injector pulse width for each operating condition. The pulse width is controlled by the duration of the ground path provided.

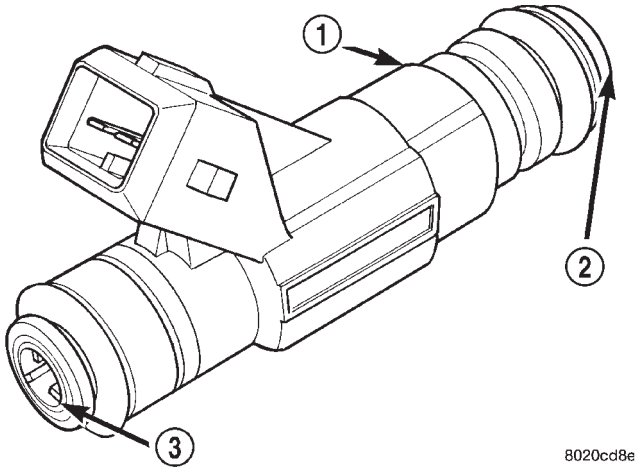

Fig. 10 FUEL INJECTOR - TYPICAL

1 - FUEL INJECTOR
2 - NOZZLE
3 - TOP (FUEL ENTRY)

REMOVAL

REMOVAL - 2.4L

The fuel rail must be removed first (Fig. 11). Refer to Fuel Rail Removal in this section.

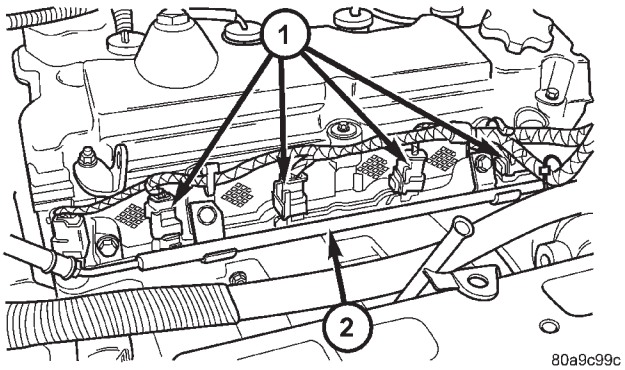

Fig. 11 FUEL RAIL AND INJECTORS 2.4L

1 - Fuel Injectors
2 - Fuel Rail

(1) Disconnect injector wiring connector from injector.

(2) Position fuel rail assembly so that the fuel injectors are easily accessible (Fig. 12).

(3) Rotate injector and pull injector out of fuel rail. The clip will stay on the injector.

(4) Check injector O-ring for damage. If O-ring is damaged, it must be replaced. If injector is reused, a protective cap must be installed on the injector tip to

FUEL INJECTOR (Continued)

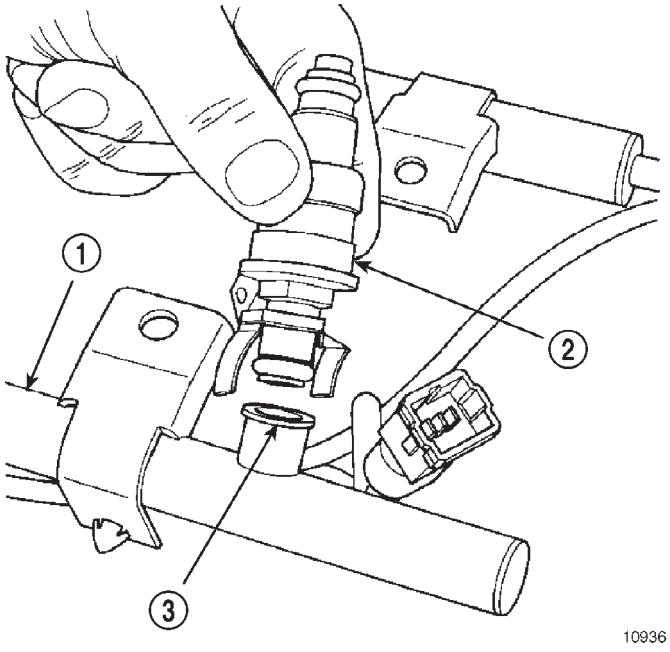

Fig. 12 FUEL INJECTOR AND RAIL TYPICAL

1 - FUEL RAIL ASSEMBLY
2 - FUEL INJECTOR
3 - FUEL RAIL RECEIVER

prevent damage. Replace the injector clip if it is damaged.

(5) Repeat for remaining injectors.

REMOVAL - 3.3/3.8L

(1) Disconnect the negative battery cable.

(2) Remove the Intake Manifold, (Refer to 9 - ENGINE/MANIFOLDS/INTAKE MANIFOLD - REMOVAL)

(3) Disconnect injector wiring connector from injector.

(4) Position fuel rail assembly so that the fuel injectors are easily accessible (Fig. 12).

(5) Rotate injector and pull injector out of fuel rail. The clip will stay on the injector.

(6) Check injector O-ring for damage. If O-ring is damaged, it must be replaced. If injector is reused, a protective cap must be installed on the injector tip to prevent damage. Replace the injector clip if it is damaged.

(7) Repeat for remaining injectors.

INSTALLATION

INSTALLATION - 2.4L

The fuel rail must be removed first. Refer to Fuel Injector Rail Removal in this section.

(1) Before installing an injector the rubber O-ring must be lubricated with a drop of clean engine oil to aid in installation.

(2) Install injector clip by sliding open end into the top slot of the injector. The edge of the receiver cup will slide into the side slots of clip.

(3) Install injector top end into fuel rail receiver cap. Be careful not to damage O-ring during installation (Fig. 13).

(4) Repeat steps for remaining injectors.

(5) Connect fuel injector wiring.

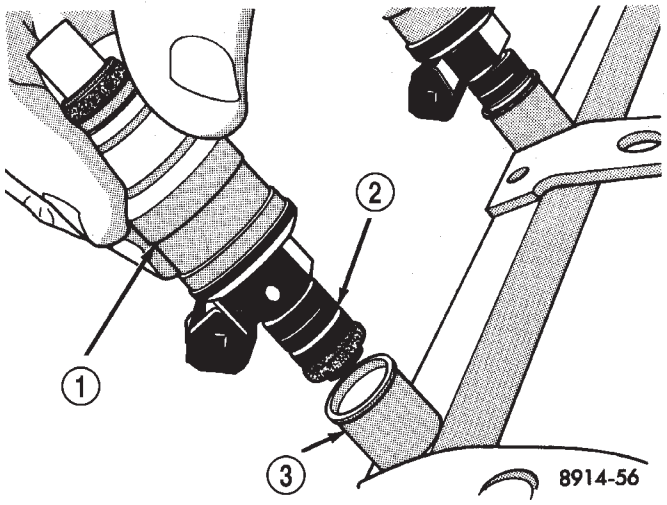

Fig. 13 SERVICING FUEL INJECTOR TYPICAL

1 - FUEL INJECTOR
2 - LOCKING SLOT
3 - FUEL RAIL RECEIVER CUP

INSTALLATION - 3.3/3.8L

(1) Before installing an injector the rubber O-ring must be lubricated with a drop of clean engine oil to aid in installation.

(2) Install injector clip by sliding open end into the top slot of the injector. The edge of the receiver cup will slide into the side slots of clip (Fig. 12).

(3) Install injector top end into fuel rail receiver cap. Be careful not to damage O-ring during installation (Fig. 12).

(4) Repeat steps for remaining injectors.

(5) Install fuel rail, refer to Fuel Rail in the Fuel Delivery section.

(6) Connect fuel injector wiring.

(7) Install the Intake Manifold, (Refer to 9 - ENGINE/MANIFOLDS/INTAKE MANIFOLD - INSTALLATION)

(8) Connect the negative battery cable.

FUEL PUMP RELAY

DESCRIPTION

The fuel pump relay is located in the PDC. The inside top of the PDC cover has a label showing relay and fuse location.

OPERATION

The fuel pump relay supplies battery voltage to the fuel pump. A buss bar in the Power Distribution Center (PDC) supplies voltage to the solenoid side and contact side of the relay. The fuel pump relay power circuit contains a fuse between the buss bar in the PDC and the relay. The fuse is located in the PDC. Refer to the Wiring Diagrams for circuit information.

The PCM controls the fuel pump relay by switching the ground path for the solenoid side of the relay on and off. The PCM turns the ground path off when the ignition switch is in the Off position. When the ignition switch is in the On position, the PCM energizes the fuel pump. If the crankshaft position sensor does not detect engine rotation, the PCM de-energizes the relay after approximately one second.

IDLE AIR CONTROL MOTOR

DESCRIPTION

The idle air control motor is mounted on the throttle body. The PCM operates the idle air control motor (Fig. 14) or (Fig. 15).

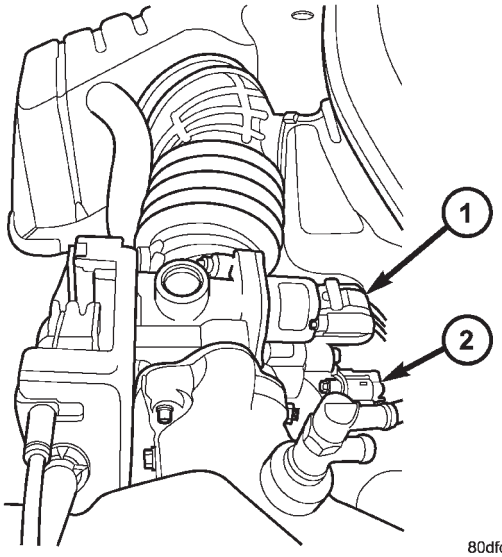

Fig. 14 TPS/IAC 2.4L

1 - Idle Air Control Motor
2 - Throttle Position Sensor

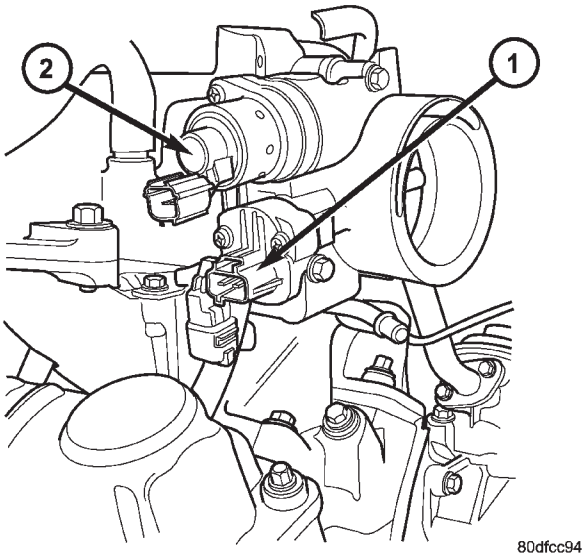

Fig. 15 TPS/IAC 3.3/3.8L

1 - Idle Air Control Motor
2 - Throttle Position Sensor

OPERATION

The PCM adjusts engine idle speed through the idle air control motor to compensate for engine load, coolant temperature or barometric pressure changes.

The throttle body has an air bypass passage that provides air for the engine during closed throttle idle. The idle air control motor pintle protrudes into the air bypass passage and regulates air flow through it.

The PCM adjusts engine idle speed by moving the IAC motor pintle in and out of the bypass passage. The adjustments are based on inputs the PCM receives. The inputs are from the throttle position sensor, crankshaft position sensor, coolant temperature sensor, MAP sensor, vehicle speed sensor and various switch operations (brake, park/neutral, air conditioning).

When engine rpm is above idle speed, the IAC is used for the following functions:

- Off-idle dashpot
- Deceleration air flow control
- A/C compressor load control (also opens the passage slightly before the compressor is engaged so that the engine rpm does not dip down when the compressor engages)

Target Idle

Target idle is determined by the following inputs:

- Gear position
- ECT Sensor
- Battery voltage
- Ambient/Battery Temperature Sensor
- VSS
- TPS
- MAP Sensor

IDLE AIR CONTROL MOTOR (Continued)

REMOVAL

When servicing throttle body components, always reassemble components with new O-rings and seals where applicable. Never use lubricants on O-rings or seals, damage may result. If assembly of component is difficult, use water to aid assembly. Use care when removing hoses to prevent damage to hose or hose nipple.

(1) Disconnect negative cable from battery.

(2) Remove electrical connector from idle air control motor.

(3) Remove idle air control motor mounting screws.

(4) Remove motor from throttle body. Ensure the O-rings is removed with the motor.

INSTALLATION

When servicing throttle body components, always reassemble components with new O-rings and seals where applicable. Never use lubricants on O-rings or seals, damage may result. If assembly of component is difficult, **a light coat of engine oil may be applied to the O-RINGS ONLY (Fig. 16)** to aid assembly. Use care when removing hoses to prevent damage to hose or hose nipple.

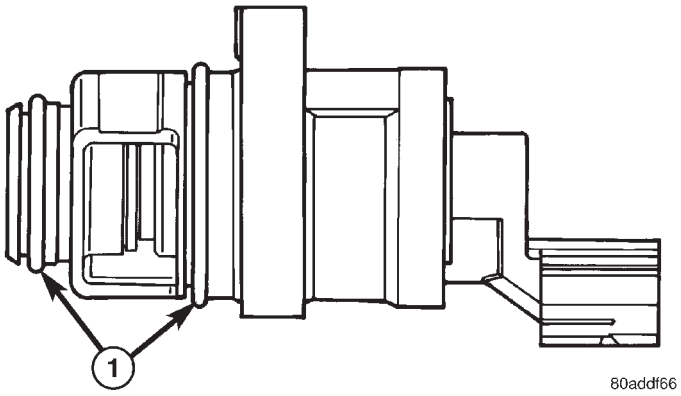

Fig. 16 O-RINGS

1 - O-rings

(1) The new idle air control motor has a new O-ring installed on it. For 2.4L only, if pintle measures more than 1 inch (25 mm) it must be retracted. Use the DRB Idle Air Control Motor Open/Close Test to retract the pintle (battery must be connected.)

(2) Carefully place idle air control motor into throttle body.

(3) Install mounting screw(s). Tighten screws to 2 N·m (17 in. lbs.) torque.

(4) Connect electrical connector to idle air control motor.

(5) Connect negative cable to battery.

INLET AIR TEMPERATURE SENSOR

DESCRIPTION

The IAT Sensor is a Negative Temperature Coefficient (NTC) Sensor that provides information to the PCM regarding the temperature of the air entering the intake manifold (Fig. 17).

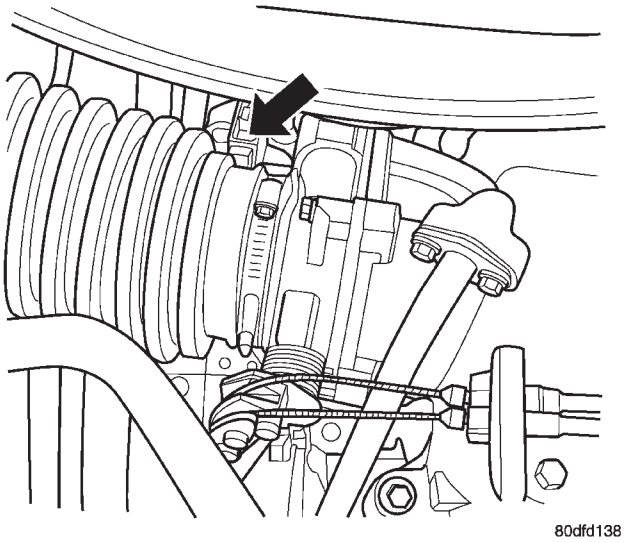

Fig. 17 3.3/3.8L IAT SENSOR

OPERATION

Inlet/Intake Air Temperature

The inlet air temperature sensor replaces the intake air temperature sensor and the battery temperature sensor. The PCM uses the information from the inlet air temperature sensor to determine values to use as an intake air temperature sensor and a battery temperature sensor.

The Intake Air Temperature (IAT) sensor value is used by the PCM to determine air density.

The PCM uses this information to calculate:

- Injector pulse width
- Adjustment of ignition timing (to prevent spark knock at high intake air temperatures)

Battery Temperature

The inlet air temperature sensor replaces the intake air temperature sensor and the battery temperature sensor. The PCM uses the information from the inlet air temperature sensor to determine values for the PCM to use as an intake air temperature sensor and a battery temperature sensor.

The battery temperature information along with data from monitored line voltage (B+), is used by the PCM to vary the battery charging rate. System volt-

age will be higher at colder temperatures and is gradually reduced at warmer temperatures.

The battery temperature information is also used for OBD II diagnostics. Certain faults and OBD II monitors are either enabled or disabled depending upon the battery temperature sensor input (example: disable purge, enable LDP). Most OBD II monitors are disabled below 20°F.

MAP SENSOR

DESCRIPTION

The MAP sensor (Fig. 18) or (Fig. 19) mounts to the intake manifold. The sensor is connects electrically to the PCM.

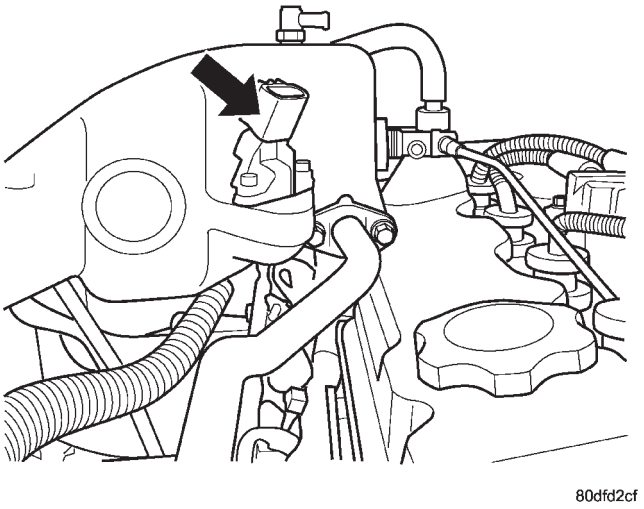

Fig. 18 MAP SENSOR - 2.4L

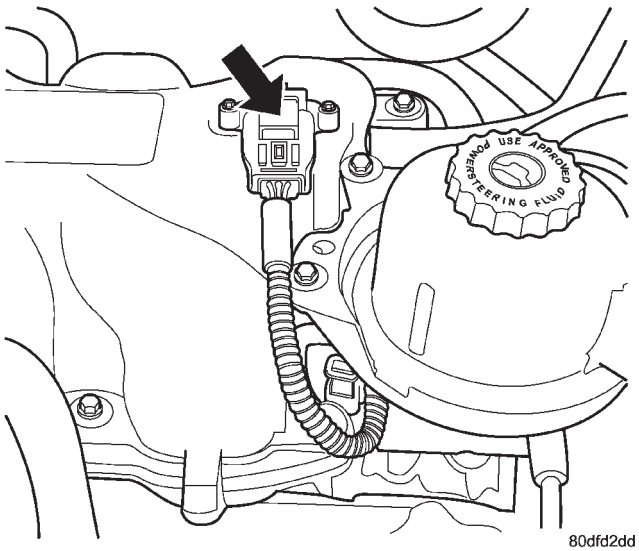

Fig. 19 MAP SENSOR - 3.3/3.8L

OPERATION

The MAP serves as a PCM input, using a silicon based sensing unit, to provide data on the manifold vacuum that draws the air/fuel mixture into the combustion chamber. The PCM requires this information to determine injector pulse width and spark advance. When MAP equals Barometric pressure, the pulse width will be at maximum.

Also like the cam and crank sensors, a 5 volt reference is supplied from the PCM and returns a voltage signal to the PCM that reflects manifold pressure. The zero pressure reading is 0.5V and full scale is 4.5V. For a pressure swing of 0 — 15 psi the voltage changes 4.0V. The sensor is supplied a regulated 4.8 to 5.1 volts to operate the sensor. Like the cam and crank sensors ground is provided through the sensor return circuit.

The MAP sensor input is the number one contributor to pulse width. The most important function of the MAP sensor is to determine barometric pressure. The PCM needs to know if the vehicle is at sea level or is it in Denver at 5000 feet above sea level, because the air density changes with altitude. It will also help to correct for varying weather conditions. If a hurricane was coming through the pressure would be very, very low or there could be a real fair weather, high pressure area. This is important because as air pressure changes the barometric pressure changes. Barometric pressure and altitude have a direct inverse correlation, as altitude goes up barometric goes down. The first thing that happens as the key is rolled on, before reaching the crank position, the PCM powers up, comes around and looks at the MAP voltage, and based upon the voltage it sees, it knows the current barometric pressure relative to altitude. Once the engine starts, the PCM looks at the voltage again, continuously every 12 milliseconds, and compares the current voltage to what it was at key on. The difference between current and what it was at key on is manifold vacuum.

During key On (engine not running) the sensor reads (updates) barometric pressure. A normal range can be obtained by monitoring known good sensor in you work area.

As the altitude increases the air becomes thinner (less oxygen). If a vehicle is started and driven to a very different altitude than where it was at key On the barometric pressure needs to be updated. Any time the PCM sees Wide Open throttle, based upon TPS angle and RPM it will update barometric pressure in the MAP memory cell. With periodic updates, the PCM can make its calculations more effectively.

The PCM uses the MAP sensor to aid in calculating the following:

- Barometric pressure
- Engine load

MAP SENSOR (Continued)

- Manifold pressure
- Injector pulse-width
- Spark-advance programs
- Shift-point strategies (F4AC1 transmissions only, via the PCI bus)
- Idle speed
- Decel fuel shutoff

The PCM recognizes a decrease in manifold pressure by monitoring a decrease in voltage from the reading stored in the barometric pressure memory cell. The MAP sensor is a linear sensor; as pressure changes, voltage changes proportionately. The range of voltage output from the sensor is usually between 4.6 volts at sea level to as low as 0.3 volts at 26 in. of Hg. Barometric pressure is the pressure exerted by the atmosphere upon an object. At sea level on a standard day, no storm, barometric pressure is 29.92 in Hg. For every 100 feet of altitude barometric pressure drops .10 in. Hg. If a storm goes through it can either add, high pressure, or decrease, low pressure, from what should be present for that altitude. You should make a habit of knowing what the average pressure and corresponding barometric pressure is for your area.

REMOVAL

REMOVAL - 2.4L

(1) Disconnect the negative battery cable.
(2) Disconnect electrical connector and vacuum hose from MAP sensor (Fig. 18).
(3) Remove two screws holding sensor to the intake manifold.

REMOVAL - 3.3/3.8L

(1) Disconnect the negative battery cable.
(2) Remove vacuum hose and mounting screws from manifold absolute pressure (MAP) sensor (Fig. 19).
(3) Disconnect electrical connector from sensor. Remove sensor.

INSTALLATION

INSTALLATION - 2.4L

(1) Install sensor.
(2) Install two screws and tighten.
(3) Connect the electrical connector and vacuum hose to the MAP sensor (Fig. 18).
(4) Connect the negative battery cable.

INSTALLATION - 3.3/3.8L

(1) Install sensor (Fig. 19).
(2) Install screws and tighten to **PLASTIC MANIFOLD 1.7 N·m (15 in. lbs.) ALUMINUM MANIFOLD 3.3 N·m (30 in. lbs.)** .
(3) Connect the electrical connector to the sensor. Install vacuum hose.
(4) Connect the negative battery cable.

O2 SENSOR

DESCRIPTION

The upstream oxygen sensor threads into the outlet flange of the exhaust manifold (Fig. 20) or (Fig. 21).

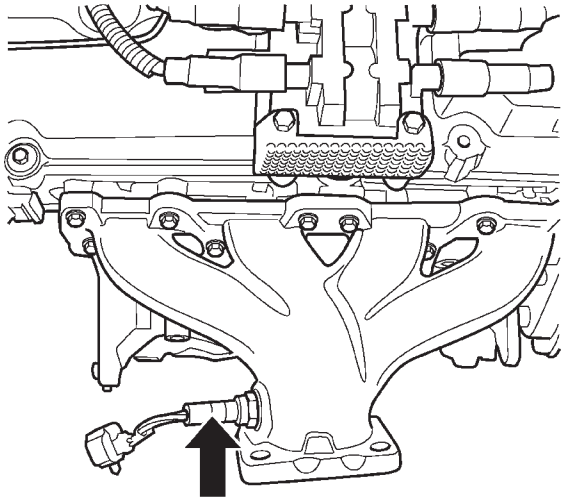

Fig. 20 O2 SENSOR UPSTREAM 1/1 - 2.4L

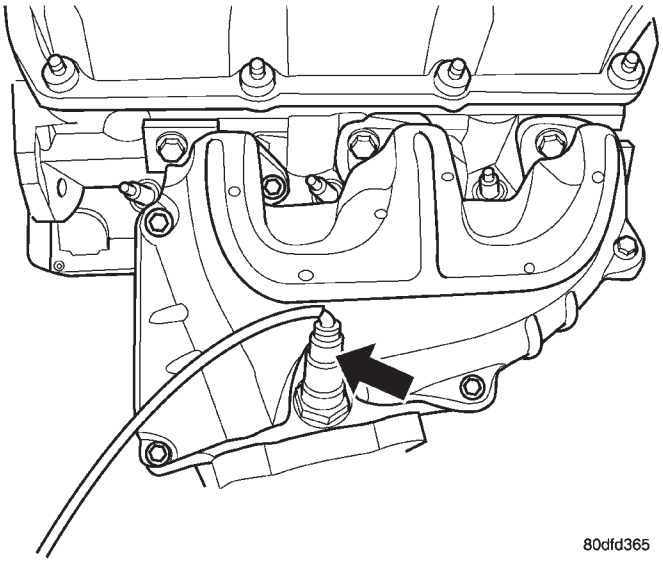

Fig. 21 O2 SENSOR UPSTREAM 1/1 - 3.3/3.8L

O2 SENSOR (Continued)

The downstream heated oxygen sensor threads into the outlet pipe at the rear of the catalytic convertor (Fig. 22).

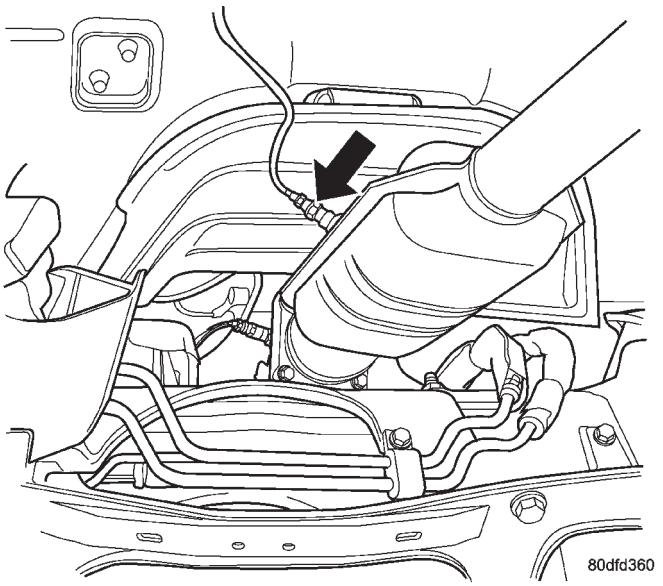

Fig. 22 O2 SENSOR DOWNSTREAM 1/2 - 2.4/3.3/ 3.8L

OPERATION

A single sensor ground is used for all O2 sensors (2 senors on 4 cyl. vehicles and 4 sensors on 6 cyl. vehicles).

As vehicles accumulate mileage, the catalytic convertor deteriorates. The deterioration results in a less efficient catalyst. To monitor catalytic convertor deterioration, the fuel injection system uses two heated oxygen sensors. One sensor upstream of the catalytic convertor, one downstream of the convertor. The PCM compares the reading from the sensors to calculate the catalytic convertor oxygen storage capacity and converter efficiency. Also, the PCM uses the upstream heated oxygen sensor input when adjusting injector pulse width.

When the catalytic converter efficiency drops below emission standards, the PCM stores a diagnostic trouble code and illuminates the malfunction indicator lamp (MIL).

The O2 sensors produce voltages from 0 to 1 volt, depending upon the oxygen content of the exhaust gas. When a large amount of oxygen is present (caused by a lean air/fuel mixture, can be caused by misfire and exhaust leaks), the sensors produces a low voltage. When there is a lesser amount of oxygen present (caused by a rich air/fuel mixture, can be caused by internal engine problems) it produces a higher voltage. By monitoring the oxygen content and converting it to electrical voltage, the sensors act as a rich-lean switch.

The oxygen sensors are equipped with a heating element that keeps the sensors at proper operating temperature during all operating modes. Maintaining correct sensor temperature at all times allows the system to enter into closed loop operation sooner. Also, it allows the system to remain in closed loop operation during periods of extended idle.

In Closed Loop operation the PCM monitors the O2 sensors input (along with other inputs) and adjusts the injector pulse width accordingly. During Open Loop operation the PCM ignores the O2 sensor input. The PCM adjusts injector pulse width based on preprogrammed (fixed) values and inputs from other sensors.

The Automatic Shutdown (ASD) relay supplies battery voltage to both the upstream and downstream heated oxygen sensors. The oxygen sensors are equipped with a heating element. The heating elements reduce the time required for the sensors to reach operating temperature. The PCM uses pulse width modulation to control the ground side of the heater to regulate the temperature on 4 cyl. upstream O2 heater only. All other 4 cyl. and 6 cyl. O2 heaters do not use pulse width modulation.

UPSTREAM OXYGEN SENSOR

The input from the upstream heated oxygen sensor tells the PCM the oxygen content of the exhaust gas. Based on this input, the PCM fine tunes the air-fuel ratio by adjusting injector pulse width.

The sensor input switches from 0 to 1 volt, depending upon the oxygen content of the exhaust gas in the exhaust manifold. When a large amount of oxygen is present (caused by a lean air-fuel mixture), the sensor produces voltage as low as 0.1 volt. When there is a lesser amount of oxygen present (rich air-fuel mixture) the sensor produces a voltage as high as 1.0 volt. By monitoring the oxygen content and converting it to electrical voltage, the sensor acts as a rich-lean switch.

The heating element in the sensor provides heat to the sensor ceramic element. Heating the sensor allows the system to enter into closed loop operation sooner. Also, it allows the system to remain in closed loop operation during periods of extended idle.

In Closed Loop, the PCM adjusts injector pulse width based on the upstream heated oxygen sensor input along with other inputs. In Open Loop, the PCM adjusts injector pulse width based on preprogrammed (fixed) values and inputs from other sensors.

DOWNSTREAM OXYGEN SENSOR

The downstream heated oxygen sensor input is used to detect catalytic convertor deterioration. As the convertor deteriorates, the input from the down-

O2 SENSOR (Continued)

stream sensor begins to match the upstream sensor input except for a slight time delay. By comparing the downstream heated oxygen sensor input to the input from the upstream sensor, the PCM calculates catalytic convertor efficiency. Also used to establish the upstream O2 goal voltage (switching point).

REMOVAL

REMOVAL - UPSTREAM 1/1 - 2.4L

(1) Disconnect the negative battery cable.
(2) Raise and support the vehicle.
(3) Disconnect the electrical connector (Fig. 21).
(4) Use a socket such as the Snap-On® YA8875 or equivalent to remove the sensor
(5) When the sensor is removed, the threads must be cleaned with an 18 mm X 1.5 + 6E tap. If using the original sensor, coat the threads with Loctite 771–64 anti-seize compound or equivalent.

REMOVAL - UPSTREAM 1/1 - 3.3/3.8L

(1) Remove battery, refer to the Battery section for more information.
(2) Remove the battery tray, refer to the Battery section for more information.
(3) Disconnect the speed control vacuum harness from servo.
(4) Disconnect the electrical connector from servo.

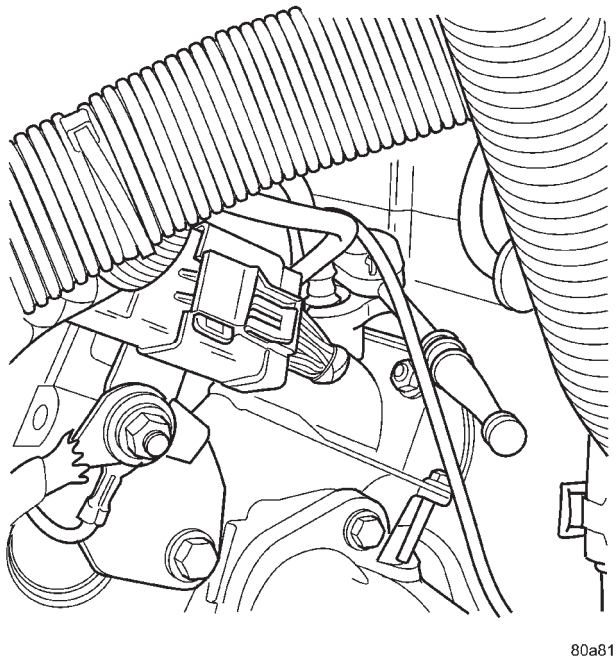

Fig. 23 O2 SENSOR 1/1

(5) Remove the speed control servo and bracket and reposition.
(6) Use a socket such as the Snap-On® YA8875 or equivalent to remove the sensor (Fig. 23).
(7) When the sensor is removed, the threads must be cleaned with an 18 mm X 1.5 + 6E tap. If using the original sensor, coat the threads with Loctite 771–64 anti-seize compound or equivalent.

REMOVAL - DOWNSTREAM 1/2 - 2.4/3.3/3.8L

(1) Disconnect the negative battery cable.
(2) Raise and support the vehicle.
(3) Disconnect the electrical connector (Fig. 24).

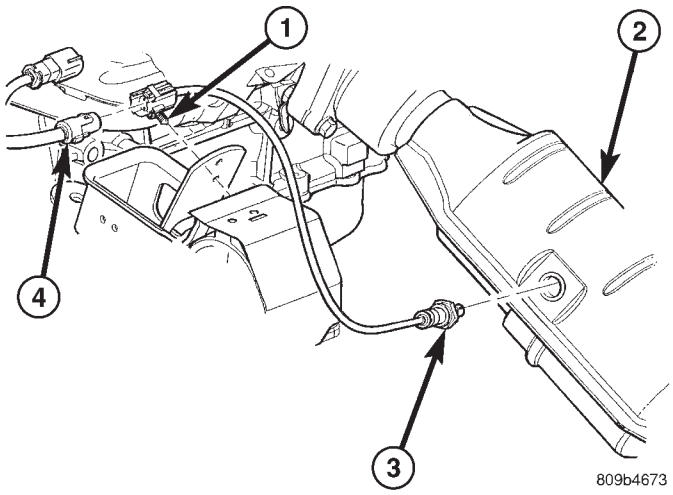

Fig. 24 Downstream Oxygen Sensor (1/2)

1 - OXYGEN SENSOR CONNECTOR
2 - CATALYTIC CONVERTER
3 - DOWNSTREAM OXYGEN SENSOR
4 - ENGINE HARNESS CONNECTOR

(4) Use a socket such as the Snap-On® YA8875 or equivalent to remove the sensor (Fig. 25).
(5) When the sensor is removed, the threads must be cleaned with an 18 mm X 1.5 + 6E tap. If using the original sensor, coat the threads with Loctite 771–64 anti-seize compound or equivalent.

INSTALLATION

INSTALLATION - UPSTREAM 1/1 - 2.4L

The engines uses two heated oxygen sensors.
(1) After removing the sensor, the exhaust manifold threads must be cleaned with an 18 mm X 1.5 + 6E tap. If reusing the original sensor, coat the sensor threads with an anti-seize compound such as Loctite 771- 64 or equivalent. New sensors have compound on the threads and do not require an additional coating.
(2) Install sensor and tighten to 27 N·m (20 ft. lbs.) (Fig. 21).
(3) Connect the electrical connector for the O2 sensor and install onto bracket.
(4) Lower vehicle.
(5) Connect the negative battery cable.

O2 SENSOR (Continued)

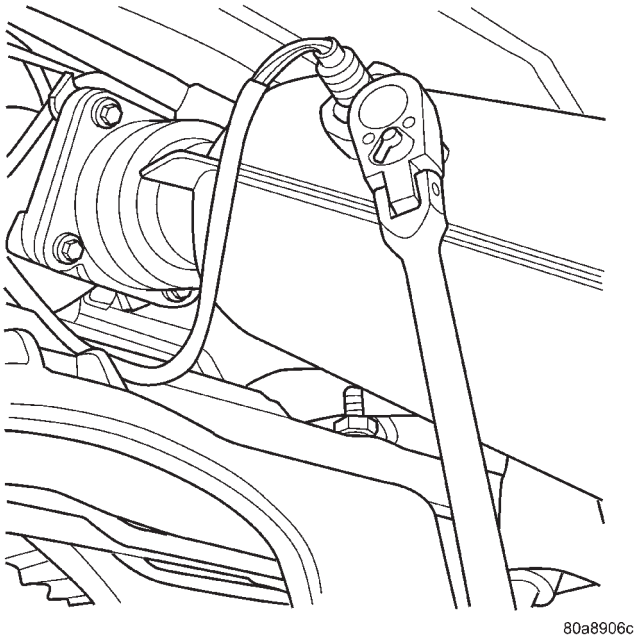

Fig. 25 DOWNSTREAM 2/1 O2 SENSOR

INSTALLATION - UPSTREAM 1/1 - 3.3/3.8L

The engines uses two heated oxygen sensors.

(1) After removing the sensor, the exhaust manifold threads must be cleaned with an 18 mm X 1.5 + 6E tap. If reusing the original sensor, coat the sensor threads with an anti-seize compound such as Loctite 771- 64 or equivalent. New sensors have compound on the threads and do not require an additional coating.

(2) Install sensor and tighten to 27 N·m (20 ft. lbs.).

(3) Connect the electrical connector for the O2 sensor and install onto bracket.

(4) Connect the electrical connector for the speed control servo.

(5) Install the speed control servo and bracket refer to the Speed Control Servo for more information.

(6) Connect the speed control vacuum harness to servo.

(7) Install the battery tray, refer to the Battery section for more information.

(8) Install battery, refer to the Battery section for more information.

INSTALLATION DOWNSTREAM 2/1 - 2.4/3.3/3.8L

The O2S is located on the side of the catalytic converter.

Threads of new oxygen sensors are factory coated with anti-seize compound to aid in removal. **DO NOT add any additional anti-seize compound to the threads of a new oxygen sensor.**

(1) Install sensor and tighten to 27 N·m (20 ft. lbs.).

(2) Connect the electrical connector.

(3) Lower vehicle.

(4) Install the negative battery cable.

THROTTLE BODY

DESCRIPTION

The throttle body is located on the intake manifold (Fig. 26) or (Fig. 27). Fuel does not enter the intake manifold through the throttle body. Fuel is sprayed into the manifold by the fuel injectors.

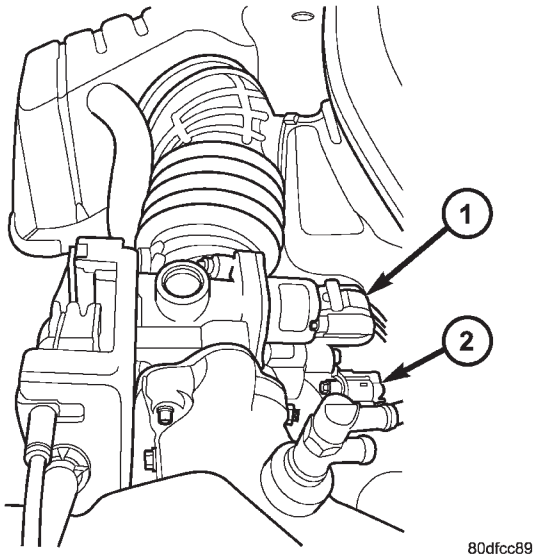

Fig. 26 IAC MOTOR 2.4L

1 - Idle Air Control Motor
2 - Throttle Position Sensor

OPERATION

Filtered air from the air cleaner enters the intake manifold through the throttle body. The throttle body contains an air control passage controlled by an Idle Air Control (IAC) motor. The air control passage is used to supply air for idle conditions. A throttle valve (plate) is used to supply air for above idle conditions.

Certain sensors are attached to the throttle body. The accelerator pedal cable, speed control cable and transmission control cable (when equipped) are connected to the throttle body linkage arm.

A (factory adjusted) set screw is used to mechanically limit the position of the throttle body throttle plate. **Never attempt to adjust the engine idle speed using this screw.** All idle speed functions are controlled by the PCM.

THROTTLE BODY (Continued)

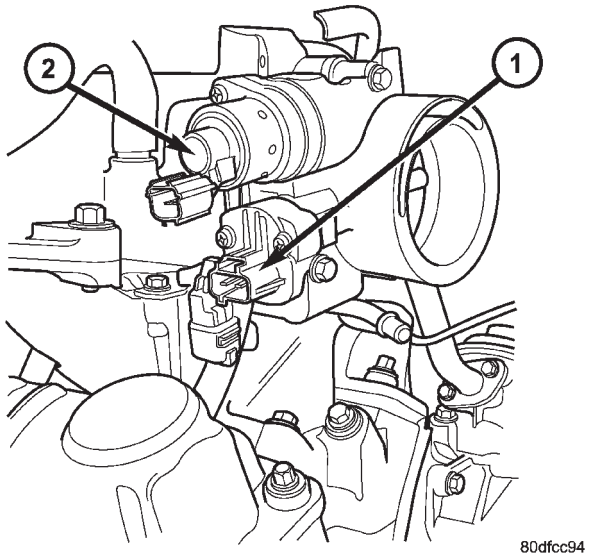

Fig. 27 IAC MOTOR LOCATION 3.3/3.8L

1 - Idle Air Control Motor
2 - Throttle Position Sensor

REMOVAL

(1) Disconnect negative cable from battery cable.
(2) Remove air inlet to throttle body hose clamp.
(3) Remove throttle and the speed control (if equipped) cables from lever and bracket.
(4) Disconnect electrical connectors from the idle air control motor and throttle position sensor (TPS) (Fig. 26) or (Fig. 27).
(5) Remove throttle body to intake manifold attaching bolts.
(6) Remove throttle body and gasket.

INSTALLATION

(1) Install a new gasket.
(2) Install throttle body.
(3) Tighten throttle body mounting bolts. The 2.4L to 28.2 N·m (250 ±50 in. lbs.) torque, The 3.3/3.8L to 11.6 N·m (105 ±20 in. lbs.) torque.
(4) Connect electrical connectors to the idle air control motor and throttle position sensor (TPS) (Fig. 26) or (Fig. 27).
(5) Install air inlet to throttle body hose clamp and tighten.
(6) Connect negative cable to battery cable.

THROTTLE CONTROL CABLE

REMOVAL

(1) Working from the engine compartment, hold the throttle body throttle lever in the wide open position.
(2) Remove the throttle cable from the throttle body cam.
(3) From inside the vehicle, hold up the pedal and remove the cable retainer and throttle cable from the upper end of the pedal shaft.
(4) Remove retainer clip from throttle cable and grommet at dash panel.
(5) From the engine compartment, pull the throttle cable and gromment out of the dash panel.
(6) Remove the throttle cable from throttle bracket by carefully compressing both retaining ears simultaneously then gently pull the throttle cable from throttle bracket or if it is the slide snap design you have to slide the locking tab out of the hole and then slide the cable assembly out of the bracket.

INSTALLATION

(1) From the engine compartment, push the housing end fitting and grommet into the dash panel.Install gromment into the dash panel.
(2) Install the cable housing (throttle body end) into the cable mounting bracket on the engine.
(3) From inside the vehicle, hold up the pedal and install throttle cable and cable retainer in the upper end of the pedal shaft.
(4) At the dash panel, install the cable retainer clip between the end of the throttle cable fitting and grommet
(5) From the engine compartment, rotate the throttle lever wide open and install the throttle cable.

THROTTLE POSITION SENSOR

DESCRIPTION

The throttle position sensor mounts to the side of the throttle body (Fig. 28) or (Fig. 29).The sensor connects to the throttle blade shaft. The TPS is a variable resistor that provides the Powertrain Control Module (PCM) with an input signal (voltage).

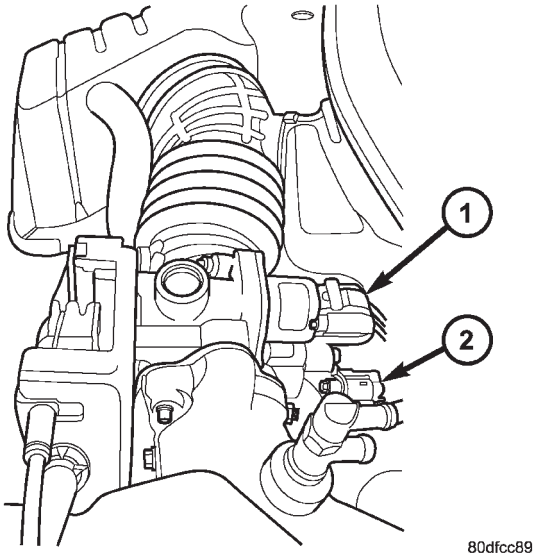

Fig. 28 Throttle Position Sensor—2.4L Engine

1 - Idle Air Control Motor
2 - Throttle Position Sensor

OPERATION

The signal represents throttle blade position. As the position of the throttle blade changes, the resistance of the TPS changes.

The PCM supplies approximately 5 volts to the TPS. The TPS output voltage (input signal to the powertrain control module) represents throttle blade position. The TPS output voltage to the PCM varies from approximately 0.6 volt at minimum throttle opening (idle) to a maximum of 4.5 volts at wide open throttle.

Along with inputs from other sensors, the PCM uses the TPS input to determine current engine operating conditions. The PCM also adjusts fuel injector pulse width and ignition timing based on these inputs.

REMOVAL - 3.3/3.8L

(1) Disconnect the negative battery cable.
(2) Remove the electrical connector from the Inlet Air Temperature sensor.

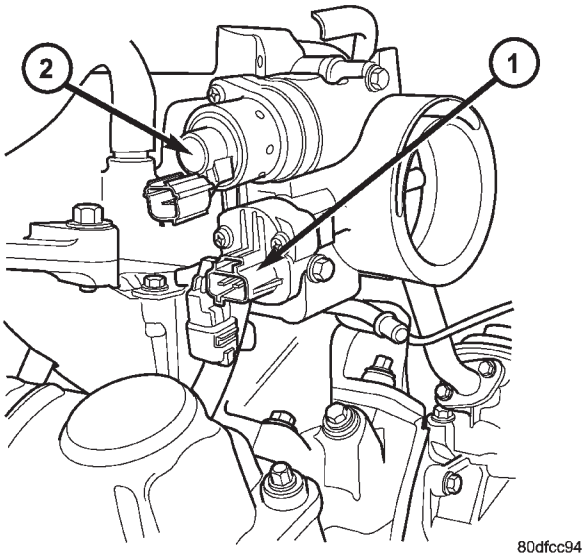

Fig. 29 Throttle Position Sensor—3.3/3.8L Engine

1 - Idle Air Control Motor
2 - Throttle Position Sensor

(3) Remove the air cleaner box lid. Remove hose from throttle body.
(4) Disconnect the electrical connector at TPS.
(5) Disconnect the electrical connector at IAC.
(6) Remove the throttle and speed control cables from throttle body.
(7) Remove 3 mounting bolts from throttle body.
(8) Remove throttle body.
(9) Disconnect the purge vacuum line from the throttle body.
(10) Remove TPS from throttle body.

INSTALLATION - 3.3/3.8L

(1) Install TPS to throttle body.
(2) Disconnect the purge vacuum line from the throttle body.
(3) Install throttle body.
(4) Install 3 mounting bolts from throttle body. Tighten bolts.
(5) Install the throttle and speed control cables to throttle body.
(6) Connect the electrical connector at TPS.
(7) Connect the electrical connector at IAC.
(8) Install the air cleaner box lid. Install hose to throttle body.
(9) Install the electrical connector to the Inlet Air Temperature sensor.
(10) Connect the negative battery cable.

FUEL SYSTEM

TABLE OF CONTENTS

page

FUEL SYSTEM 2.5L TURBO DIESEL
DESCRIPTION - DIESEL FUEL DELIVERY SYSTEM 1
WARNING - HIGH FUEL SYSTEM PRESSURE . . 1
DIAGNOSIS AND TESTING
DIAGNOSIS AND TESTING - AIR IN FUEL SYSTEM 1
DIAGNOSIS AND TESTING - FUEL SUPPLY RESTRICTIONS 1
STANDARD PROCEDURE
STANDARD PROCEDURES - DRAINING WATER FROM FUEL FILTER 2
STANDARD PROCEDURE - FUEL SYSTEM AIR PURGE 2
STANDARD PROCEDURES - CLEANING FUEL SYSTEM COMPONENTS 2
SPECIFICATIONS - TORQUE 3
FUEL DELIVERY 4
FUEL INJECTION 11

FUEL SYSTEM 2.5L TURBO DIESEL

DESCRIPTION - DIESEL FUEL DELIVERY SYSTEM

The fuel system on the 2.5L Common Rail Diesel Engine uses a fuel injection pump and an Electronic Control Module (ECM).

The fuel delivery system consists of the:

- Accelerator pedal
- Air cleaner housing/element
- Fuel filter/water separator
- Fuel heater
- Fuel heater relay
- Fuel transfer (lift) pump
- Fuel injection pump
- Fuel injectors
- Fuel tank
- Fuel tank filler/vent tube assembly
- Fuel tank filler tube cap
- Fuel tank module containing the rollover valve and a fuel gauge sending unit (fuel level sensor).
- Fuel tubes/lines/hoses
- High-pressure fuel injector lines
- Low-pressure fuel supply lines
- Low-pressure fuel return line
- Overflow valve
- Quick-connect fittings
- Water draining

WARNING - HIGH FUEL SYSTEM PRESSURE

WARNING:: THE INJECTION PUMP SUPPLIES HIGH-PRESSURE FUEL TO EACH INDIVIDUAL INJECTOR THROUGH HIGH-PRESSURE LINES. FUEL UNDER THIS AMOUNT OF PRESSURE CAN PENETRATE SKIN AND CAUSE PERSONAL INJURY. WEAR SAFETY GOGGLES AND ADEQUATE PROTECTIVE CLOTHING. AVOID CONTACT WITH FUEL SPRAY WHEN BLEEDING HIGH-PRESSURE FUEL LINES.

DIAGNOSIS AND TESTING

DIAGNOSIS AND TESTING - AIR IN FUEL SYSTEM

Air will enter the fuel system whenever fuel supply lines, separator filters, injection pump, high-pressure lines or injectors are removed or disconnected. Air trapped in the fuel system can result in hard starting, a rough running engine, engine misfire, low power, excessive smoke and fuel knock. After service is performed, air must be bled from the system before starting the engine.

Inspect the fuel system from the fuel tank to the injectors for loose connections. Leaking fuel is an indicator of loose connections or defective seals. Air can also enter the fuel system between the fuel tank and the transfer pump. Inspect the fuel tank and fuel lines for damage that might allow air into the system.

DIAGNOSIS AND TESTING - FUEL SUPPLY RESTRICTIONS

LOW-PRESSURE LINES

Fuel supply line restrictions or a defective fuel transfer pump can cause starting problems and prevent engine from accelerating. The starting problems include; low power and/or white fog like exhaust.

FUEL SYSTEM 2.5L TURBO DIESEL (Continued)

Test all fuel supply lines for restrictions or blockage. Flush or replace as necessary. Bleed fuel system of air once a fuel supply line has been replaced. Refer to Air Bleed Procedure for procedures.

To test for fuel line restrictions, a vacuum restriction test may be performed.

HIGH-PRESSURE LINES

Restricted (kinked or bent) high-pressure lines can cause starting problems, poor engine performance, engine mis-fire and white smoke from exhaust.

Examine all high-pressure lines for any damage. Each radius on each high-pressure line must be smooth and free of any bends or kinks.

Replace damaged, restricted or leaking high-pressure fuel lines with correct replacement line.

CAUTION: High pressure lines cannot contact each other or other components. Do not attempt to weld high-pressure fuel lines or to repair lines that are damaged. If line is kinked or bent, it must be replaced. Use only recommended lines when replacement of high-pressure fuel line is necessary.

STANDARD PROCEDURE

STANDARD PROCEDURES - DRAINING WATER FROM FUEL FILTER

Refer to Fuel Filter/Water Separator removal/installation for procedures.

STANDARD PROCEDURE - FUEL SYSTEM AIR PURGE

(1) Remove engine cover (Refer to 9 - ENGINE COVER - REMOVAL).

(2) Remove cap from air purge fitting on the fuel supply line. This fitting is located just behind the alternator (Fig. 1).

(3) Attach a hose of about 1 or 2 meters to this fitting using an appropriate connector.

(4) Direct the end of the hose into an appropriate fuel container.

(5) Turn the ignition to the “ON” position,**Do not crank the engine.** Keep key on until about 1 liter of fuel has been pumped into the container.

(6) While keeping end of hose below fuel level in conatiner, turn the ignition “OFF”.

(7) Remove hose from air purge fitting on the fuel supply line and replace cap.

(8) Install engine cover (Refer to 9 - ENGINE COVER - INSTALLATION).

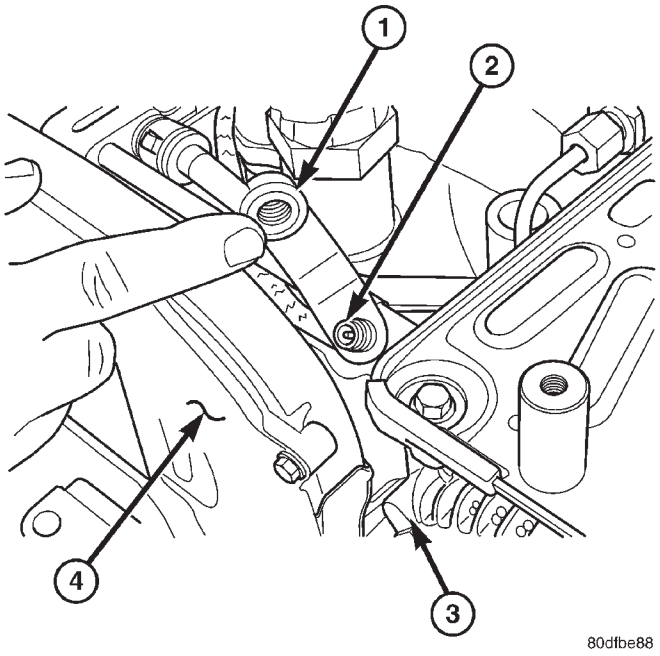

Fig. 1 AIR PURGE VALVE

1 - AIR PURGE VALVE CAP
2 - AIR PURGE VALVE
3 - ALTERNATOR
4 - ENGINE FRONT COVER

STANDARD PROCEDURES - CLEANING FUEL SYSTEM COMPONENTS

CAUTION: Cleanliness cannot be overemphasized when handling or replacing diesel fuel system components. This especially includes the fuel injectors, high-pressure fuel lines, fuel rail, and fuel injection pump. Very tight tolerances are used with these parts. Dirt contamination could cause rapid part wear and possible plugging of fuel injector nozzle tip holes. This in turn could lead to possible engine misfire. Always wash/clean any fuel system component thoroughly before disassembly and then air dry. Cap or cover any open part after disassembly. Before assembly, examine each part for dirt, grease or other contaminants and clean if necessary. When installing new parts, lubricate them with clean engine oil or clean diesel fuel only.

FUEL SYSTEM 2.5L TURBO DIESEL (Continued)

SPECIFICATIONS - TORQUE

2.5L DIESEL - TORQUE SPECIFICATIONS

DESCRIPTION	N·m	Ft. Lbs.	In. Lbs.
Crankshaft Position Sensor Bolt	10.8	8	96
Boost Pressure / Intake Air Temperature Sensor Bolts	5.4	—	48
Fuel Pump Nuts	27.5	21	—
Fuel Line Fittings at Pump	27.5	21	—
Fuel Pump Sprocket Nut	88.3	65	—
Fuel Injector Retaining Bolts	32.4	24	—
High Pressure Fuel Lines	22	17	194
Fuel Rail Bolts	27.5	21	—

FUEL DELIVERY

TABLE OF CONTENTS

page

FUEL RAIL
DESCRIPTION 4
OPERATION 4
REMOVAL - FUEL RAIL 4
INSTALLATION - FUEL RAIL 5
FUEL FILTER / WATER SEPARATOR
DESCRIPTION 5
OPERATION 5
FUEL LINES
DESCRIPTION
DESCRIPTION 6
DESCRIPTION - HIGH PRESSURE FUEL LINES 6
OPERATION - HIGH PRESSURE FUEL LINES . . 6
DIAGNOSIS AND TESTING - HIGH PRESSURE FUEL LINES 6
FUEL TRANSFER PUMP
DESCRIPTION 7
OPERATION 7
FUEL INJECTION PUMP
DESCRIPTION 7
REMOVAL 7
INSTALLATION 9
WATER IN FUEL SENSOR
DESCRIPTION 10
OPERATION 10

FUEL RAIL

DESCRIPTION

The fuel rail is mounted to the cylinder head cover/ intake manifold (Fig. 1).

OPERATION

The fuel rail stores the fuel for the injectors at high pressure. At the same time, the pressure oscillations which are generated due to the high-pressure pump delivery and the injection of fuel are dampened by the rail volume.

The fuel rail is common to all cylinders, hence it's name "common rail". Even when large quantities of fuel are extracted, the fuel rail maintains a constant inner pressure. This ensures that the injection pressure remains constant from the moment the injector opens.

REMOVAL - FUEL RAIL

(1) Disconnect negative battery cable.

(2) Remove engine cover (Refer to 9 - ENGINE - REMOVAL).

(3) Disconnect fuel injector high pressure lines.

(4) Disconnect fuel rail supply line. (Fig. 2)

(5) Disconnect fuel rail return line. (Fig. 2)

(6) Disconnect fuel rail high pressure sensor connector. (Fig. 2)

(7) Remove engine electrical harness retainers from the fuel rail retaining bolts/studs. (Fig. 2)

(8) Remove fuel rail retaining bolts and remove fuel rail (Fig. 2).

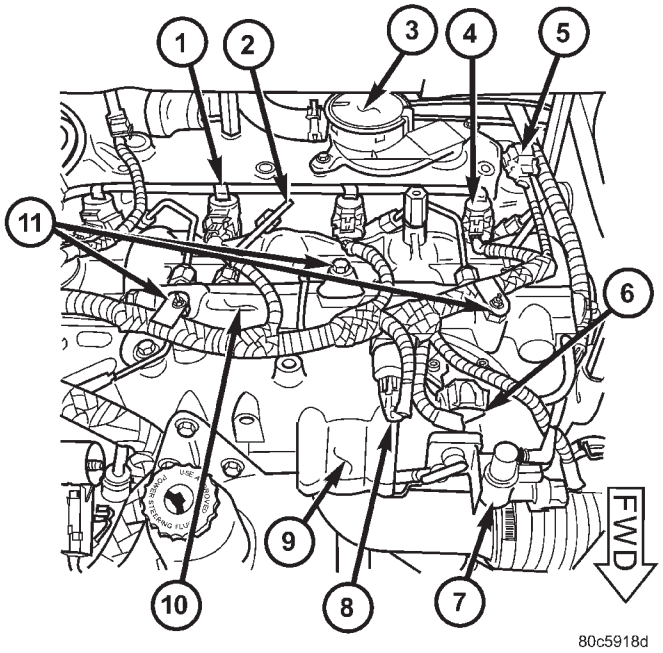

Fig. 1 ENGINE COMPONENT LOCATIONS

1 - FUEL INJECTOR RETURN LINE
2 - FUEL INJECTOR HIGH PRESSURE LINE
3 - OIL SEPARATOR
4 - FUEL INJECTOR
5 - CAMSHAFT POSITION SENSOR
6 - BOOST PRESSURE/INTAKE AIR TEMPERATURE SENSOR
7 - EGR SOLENOID
8 - FUEL PRESSURE SENSOR
9 - CYLINDER HEAD COVER/INTAKE MANIFOLD
10 - FUEL RAIL

FUEL RAIL (Continued)

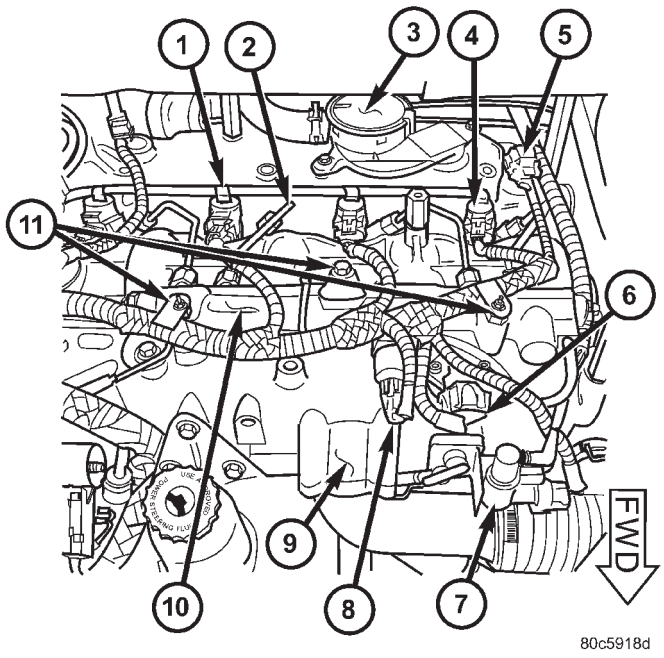

Fig. 2 FUEL RAIL COMPONENTS

1 - FUEL INJECTOR RETURN LINE
2 - FUEL INJECTOR HIGH PRESSURE LINE
3 - OIL SEPARATOR
4 - FUEL INJECTOR
5 - CAMSHAFT POSITION SENSOR
6 - BOOST PRESSURE/INTAKE AIR TEMPERATURE SENSOR
7 - EGR SOLENOID
8 - FUEL PRESSURE SENSOR
9 - CYLINDER HEAD COVER/INTAKE MANIFOLD
10 - FUEL RAIL

INSTALLATION - FUEL RAIL

(1) Install fuel rail to intake manifold/cylinder head cover (Fig. 2). Torque retaining bolts to 27.5N·m.

(2) Install engine electrical harness retainers from the fuel rail retaining bolts/studs. (Fig. 2)

(3) Connect fuel rail high pressure sensor electrical connector. (Fig. 2)

(4) Connect fuel rail return line. (Fig. 2)

(5) Connect fuel rail supply line. (Fig. 2)

(6) Connect fuel injector high pressure lines. (Fig. 2)

(7) Install engine cover (Refer to 9 - ENGINE - INSTALLATION).

(8) Connect negative battery cable.

FUEL FILTER / WATER SEPARATOR

DESCRIPTION

The fuel filter/water separator assembly is located under the vehicle in front of the rear axle assembly (Fig. 3). The assembly also includes the fuel heater and Water-In-Fuel (WIF) sensor.

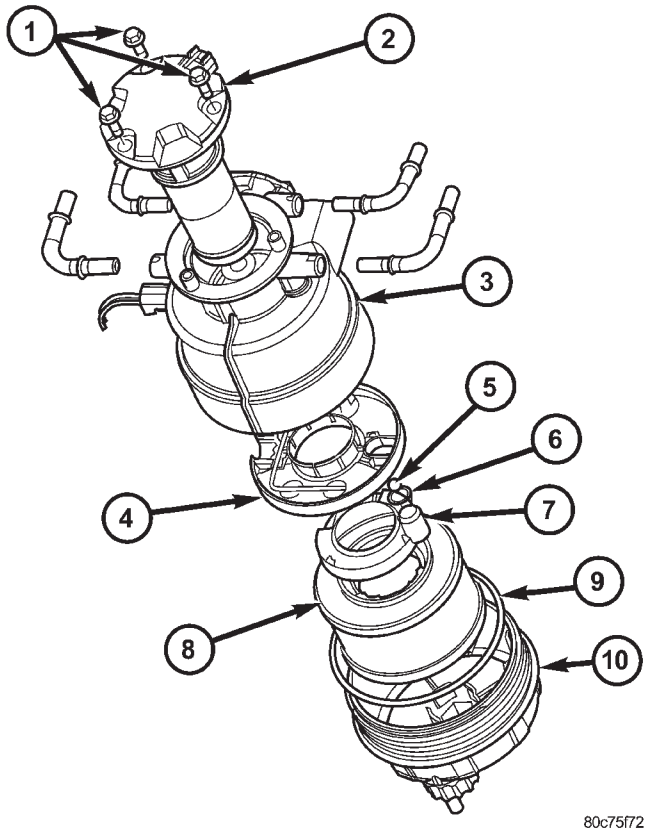

Fig. 3 FUEL FILTER/WATER SEPARATOR

1 - LIFT PUMP RETAINING BOLTS
2 - LIFT PUMP
3 - FUEL FILTER/WATER SEPARATOR HOUSING
4 - FUEL HEATER
5 - CHECK BALL
6 - O-RING
7 - FLOW DIVERTER
8 - FUEL FILTER
9 - O-RING
10 - FUEL FILTER BOWL ASSEMBLY

OPERATION

The fuel filter/water separator protects the fuel injection pump by removing water and contaminants from the fuel. The construction of the filter/separator allows fuel to pass through it, but helps prevent moisture (water) from doing so. Moisture collects at the bottom of the canister.

FUEL FILTER / WATER SEPARATOR (Continued)

Refer to the maintenance schedules for the recommended fuel filter replacement intervals.

For draining of water from canister, refer to Fuel Filter/Water Separator Removal/Installation section.

A Water-In-Fuel (WIF) sensor is part of the fuel filter cap. Refer to Water-In-Fuel Sensor Description/Operation.

The fuel heater is installed into the filter/separator housing above the fuel filter. Refer to Fuel Heater Description/Operation.

FUEL LINES

DESCRIPTION

DESCRIPTION

All fuel lines up to the fuel injection pump are considered low-pressure. This includes the fuel lines from: the fuel tank to the fuel transfer pump, and the fuel transfer pump to the fuel injection pump. The fuel return lines and the fuel drain lines are also considered low-pressure lines. High-pressure lines are used between the fuel injection pump and the fuel injectors. Also refer to High-Pressure Fuel Lines Description/Operation.

DESCRIPTION - HIGH PRESSURE FUEL LINES

The high-pressure fuel lines are the 4 lines located between the fuel injection pump and the fuel injectorsctor tubes. All other fuel lines are considered low-pressure lines.

OPERATION - HIGH PRESSURE FUEL LINES

CAUTION: The high-pressure fuel lines cannot contact each other or other components. Do not attempt to weld high-pressure fuel lines or to repair lines that are damaged. If lines are ever kinked or bent, they must be replaced. Use only the recommended lines when replacement of high-pressure fuel line is necessary.

High-pressure fuel lines deliver fuel under extremely high pressure from the injection pump to the fuel injectors. The lines expand and contract from the high-pressure fuel pulses generated during the injection process. All high-pressure fuel lines are of the same length and inside diameter. Correct high-pressure fuel line usage and installation is critical to smooth engine operation.

WARNING: USE EXTREME CAUTION WHEN INSPECTING FOR HIGH-PRESSURE FUEL LEAKS. INSPECT FOR HIGH-PRESSURE FUEL LEAKS WITH A SHEET OF CARDBOARD. HIGH FUEL INJECTION PRESSURE CAN CAUSE PERSONAL INJURY IF CONTACT IS MADE WITH THE SKIN.

DIAGNOSIS AND TESTING - HIGH PRESSURE FUEL LINES

High-pressure fuel line leaks can cause starting problems and poor engine performance.

WARNING: DUE TO EXTREME FUEL PRESSURES, USE EXTREME CAUTION WHEN INSPECTING FOR HIGH-PRESSURE FUEL LEAKS. DO NOT GET YOUR HAND NEAR A SUSPECTED LEAK. INSPECT FOR HIGH-PRESSURE FUEL LEAKS WITH A SHEET OF CARDBOARD. HIGH FUEL INJECTION PRESSURE CAN CAUSE PERSONAL INJURY IF CONTACT IS MADE WITH THE SKIN.

Start the engine. Move the cardboard over the high-pressure fuel lines and check for fuel spray onto the cardboard (Fig. 4). If a high-pressure line connection is leaking, bleed the system and tighten the connection. Refer to the Air Bleed Procedure in this group for procedures. Replace damaged, restricted or leaking high-pressure fuel lines with the correct replacement line.

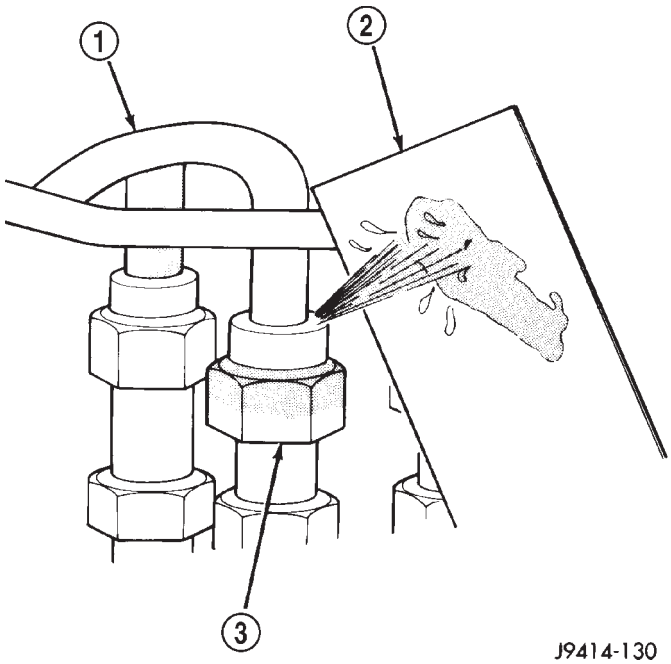

Fig. 4 Typical Test for Leaks with Cardboard

1 - HIGH-PRESSURE LINE
2 - CARDBOARD
3 - FITTING

FUEL LINES (Continued)

CAUTION: The high-pressure fuel lines cannot contact each other or other components. Do not attempt to weld high-pressure fuel lines or to repair lines that are damaged. Only use the recommended lines when replacement of high-pressure fuel line is necessary.

FUEL TRANSFER PUMP

DESCRIPTION

The fuel transfer pump (fuel lift pump) is located under the vehicle in front of the rear axle assembly (Fig. 5). The 12–volt electric vane-type pump is operated and controlled by the Engine Control Module (ECM).

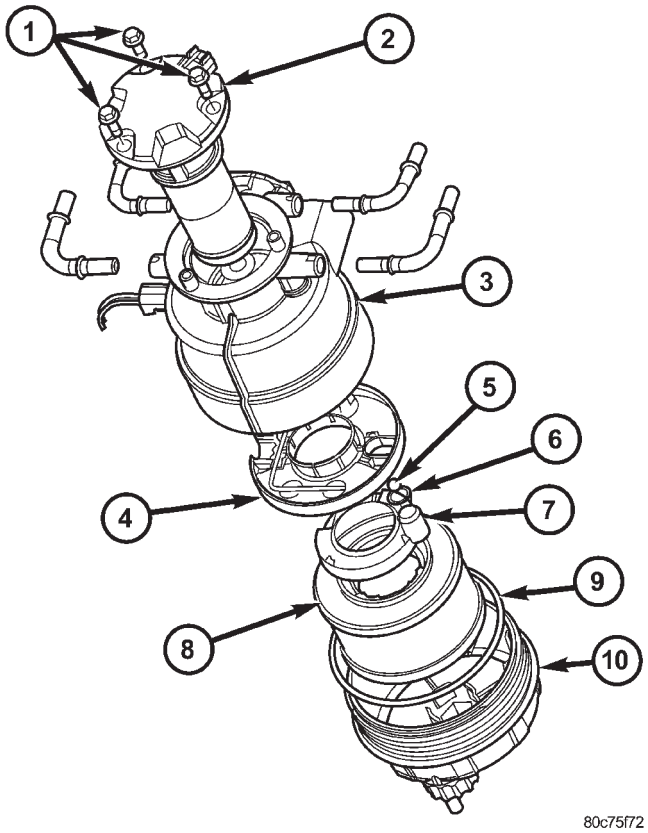

Fig. 5 FUEL TRANSFER(LIFT) PUMP LOCATION

1 - LIFT PUMP RETAINING BOLTS
2 - LIFT PUMP
3 - FUEL FILTER/WATER SEPARATOR HOUSING
4 - FUEL HEATER
5 - CHECK BALL
6 - O-RING
7 - FLOW DIVERTER
8 - FUEL FILTER
9 - O-RING
10 - FUEL FILTER BOWL ASSEMBLY

OPERATION

The purpose of the fuel transfer pump is to supply (transfer) a low-pressure fuel source: **from** the fuel tank, **through** the fuel filter/water separator and **to** the fuel injection pump. Here, the low-pressure is raised to a high-pressure by the fuel injection pump for operation of the high-pressure fuel injectors.

The fuel transfer pump is controlled by the Engine Control Module(ECM). The ECM turns the fuel transfer pump on for 30 seconds when the ignition ket is turned “ON”.

With the ignition “ON” and fuel tranfer pump running, the low-pressure fuel pressure should be 13-17 psi.

FUEL INJECTION PUMP

DESCRIPTION

A radial-piston pump is used as the high pressure pump for fuel pressure generation (Fig. 6).

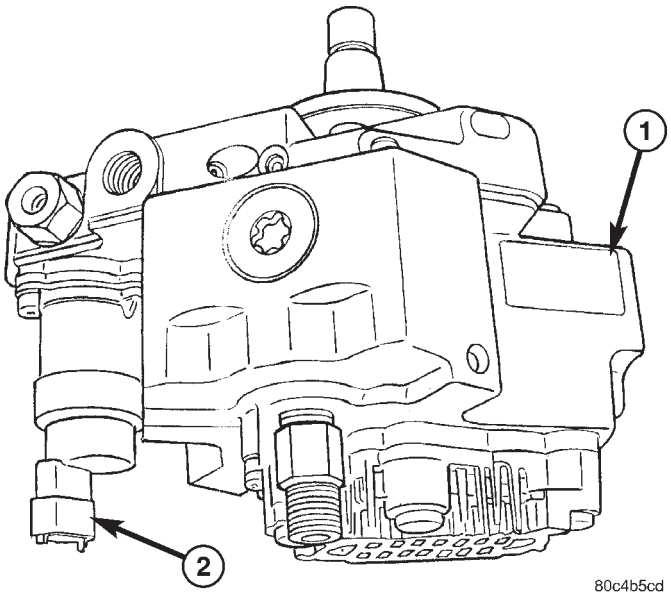

Fig. 6 FUEL INJECTION PUMP

1 - FUEL INJECTION PUMP
2 - INJECTION PUMP PRESSURE SOLENOID

REMOVAL

(1) Disconnect negative battery cable.

(2) Remove engine cover (Refer to 9 - ENGINE - REMOVAL)

(3) Remove air cleaner housing assembly.

(4) Remove power steering belt (Refer to 7 - COOLING/ACCESSORY DRIVE/DRIVE BELTS - REMOVAL).

(5) Remove accessory drive belt (Refer to 7 - COOLING/ACCESSORY DRIVE/DRIVE BELTS - REMOVAL).

FUEL INJECTION PUMP (Continued)

(6) Support engine and remove right engine mount assembly.

(7) Remove outer timing belt cover (Refer to 9 - ENGINE/VALVE TIMING/TIMING BELT / CHAIN COVER(S) - REMOVAL).

(8) Using special tool VM.1055, remove injection pump sprocket retaining nut (Fig. 7).

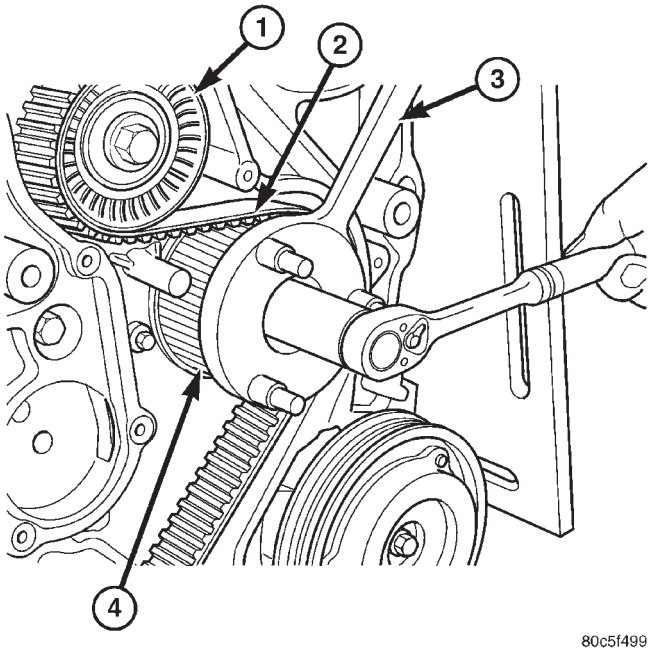

Fig. 7 INJECTION PUMP SPROCKET RETAINING NUT REMOVAL/INSTALLATION

1 - IDLER PULLEY
2 - TIMING BELT
3 - VM.1055
4 - INJECTION PUMP SPROCKET

NOTE: The use of special tool VM.1067 will allow you to remove the injection pump without removing the timing belt from the engine. This will allow you to remove and install the injection pump without altering injection pump timing.

(9) Install feet from VM.1067 in injection pump sprocket as shown (Fig. 8).

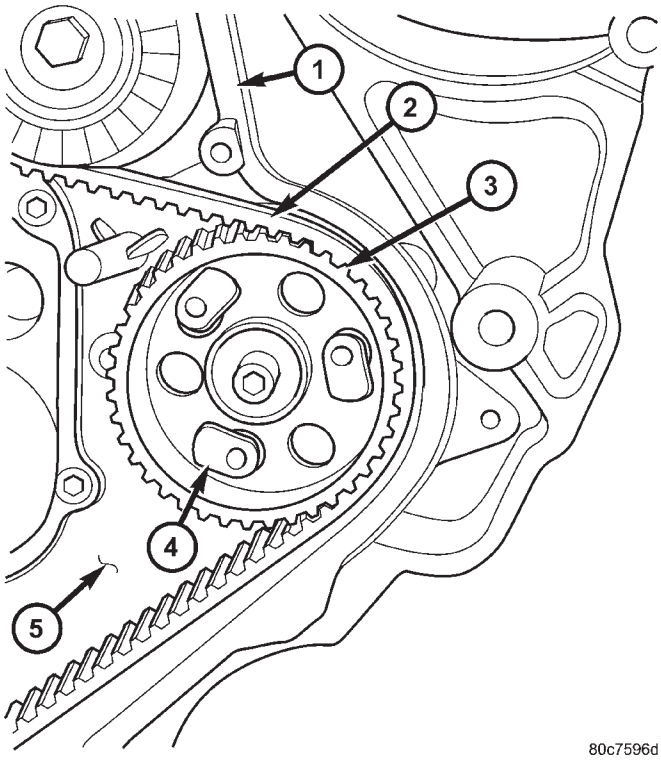

Fig. 8 VM.1067 FEET INSTALLATION

1 - OUTER TIMING BELT SEALING SURFACE
2 - TIMING BELT
3 - TIMING BELT SPROCKET
4 - FEET FOR SPECIAL TOOL VM.1067
5 - INNER TIMING BELT COVER

(10) Install inner flange of special tool VM.1067 on injection pump sprocket as shown (Fig. 9). Secure flange to feet in injection pump sprocket with allen bolts supplied with tool.

(11) Screw injection pump sprocket holding plate assembly into flange of VM.1067 (Fig. 10) Using LHD threaded bolt supplied, secure holding plate assembly to timing belt inner cover.

FUEL INJECTION PUMP (Continued)

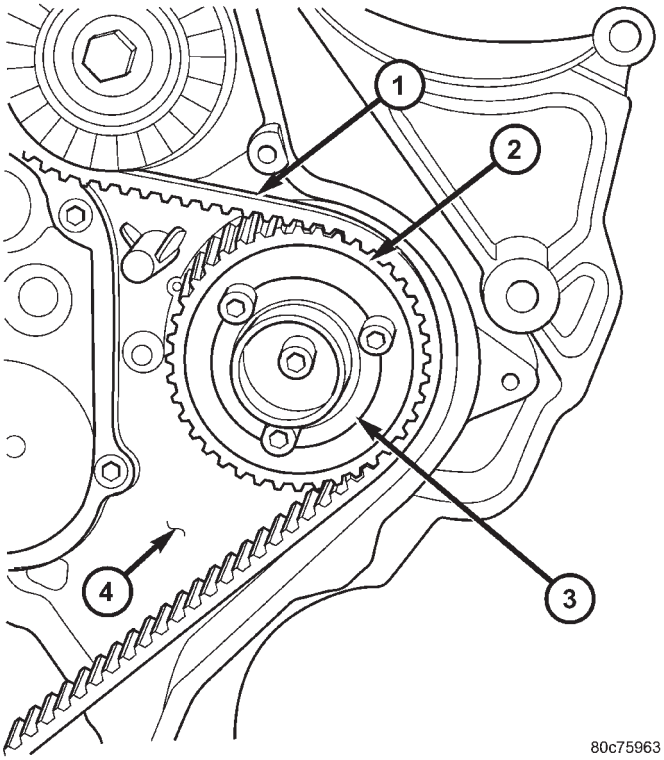

Fig. 9 VM.1067 INSTALLATION

1 - TIMING BELT
2 - INJECTION PUMP SPROCKET
3 - FLANGE OF VM.1067
4 - INNER TIMING BELT COVER

(12) Remove generator (Fig. 11). (Refer to 8 - ELECTRICAL/CHARGING/GENERATOR - REMOVAL)

(13) Disconnect fuel supply and return lines at injection pump (Fig. 11)

(14) Disconnect fuel pressure solenoid electrical connector at injection pump (Fig. 11)

(15) Remove injection pump retaining nuts.

(16) While holding injection pump, tighten bolt in center of injection pump holding plate (Fig. 10).This will push the injection pump out of the injection pump sprocket.

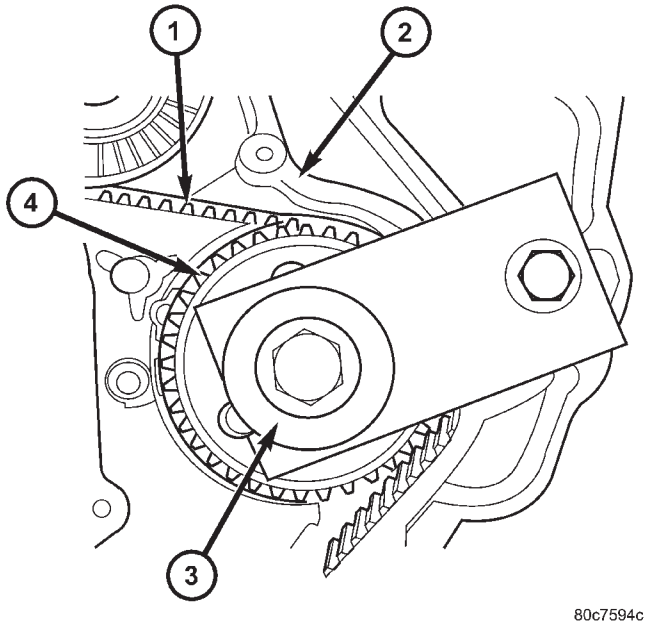

Fig. 10 INJECTION PUMP/GEAR REMOVAL USING VM.1067

1 - TIMING BELT
2 - INNER TIMING BELT COVER
3 - INJECTION PUMP SPROCKET HOLDING PLATE ASSEMBLY PART OF VM.1067
4 - INJECTION PUMP SPROCKET

INSTALLATION

(1) Loosen bolt in center of injection pump holding plate and slide injection pump through the accessory bracket into the injection pump sprocket.

(2) Install injection pump retaining nuts (Fig. 11). Torque nuts to 27.5N·m.

(3) Unscrew injection pump holding plate (part of VM.1067) from inner timing belt cover and remove (Fig. 10).

(4) Install injection pump sprocket retaining nut to hold sprocket in place.

(5) Remove flange and feet (both part of VM.1067) from injection pump sprocket (Fig. 9) (Fig. 8).

FUEL INJECTION PUMP (Continued)

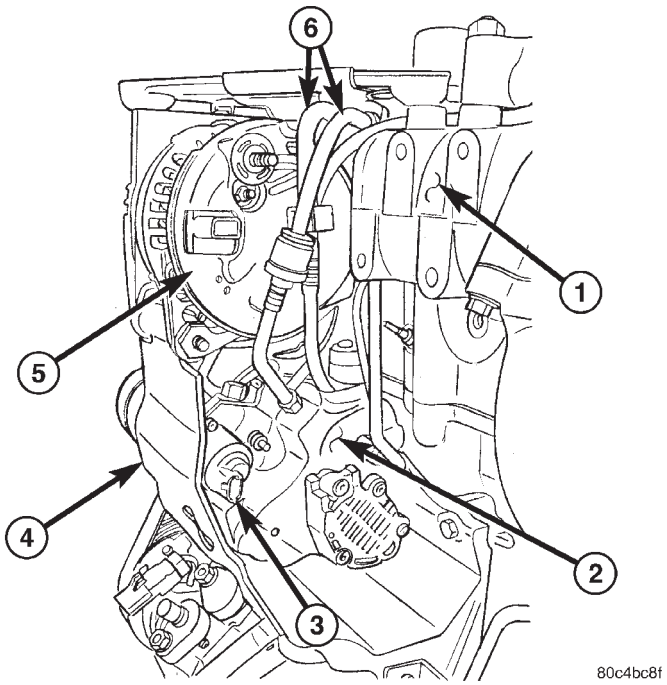

Fig. 11 FUEL INJECTION PUMP LOCATION

1 - CYLINDER HEAD COVER/INTAKE MANIFOLD
2 - INJECTION PUMP
3 - FUEL PRESSURE SOLENOID
4 - ACCESSORY MOUNTING BRACKET
5 - GENERATOR

(6) Using special tool VM.1055 (Fig. 7), torque injection pump sprocket retaining nut to 88.3N·m.

(7) Connect fuel pressure solenoid electrical connector (Fig. 11).

(8) Connect fuel supply and return lines at injection pump (Fig. 11).

(9) Install generator (Fig. 11)(Refer to 8 - ELECTRICAL/CHARGING/GENERATOR - INSTALLATION).

(10) Install outer timing belt cover (Refer to 9 - ENGINE/VALVE TIMING/TIMING BELT / CHAIN COVER(S) - INSTALLATION).

(11) Install right engine mount assembly.

(12) Install accessory drive belt (Refer to 7 - COOLING/ACCESSORY DRIVE/DRIVE BELTS - INSTALLATION).

(13) Install power steering belt (Refer to 7 - COOLING/ACCESSORY DRIVE/DRIVE BELTS - INSTALLATION).

(14) Install air cleaner housing assembly.

(15) Install engine cover (Refer to 9 - ENGINE - INSTALLATION).

(16) Connect negative battery cable.

WATER IN FUEL SENSOR

DESCRIPTION

The WIF sensor is located in the bowl assembly of the fuel filter/water separator.

OPERATION

The sensor sends an input to the Engine Control Module (ECM) when it senses water in the fuel filter/water separator. As the water level in the filter/separator increases, the resistance across the WIF sensor decreases. This decrease in resistance is sent as a signal to the ECM and compared to a high water standard value. Once the value reaches 30 to 40 kilohms, the ECM will activate the water-in-fuel warning lamp through CCD bus circuits. This all takes place when the ignition key is initially put in the ON position. The ECM continues to monitor the input at the end of the intake manifold air heater post-heat cycle.

FUEL INJECTION

TABLE OF CONTENTS

page

FUEL INJECTOR
DESCRIPTION
FUEL INJECTOR 11
OPERATION 11
REMOVAL 12
INSTALLATION 13
ACCELERATOR PEDAL POSITION SENSOR
DESCRIPTION 13
OPERATION 13
REMOVAL
REMOVAL - PEDAL POSITION SENSOR (LHD) 14
REMOVAL - PEDAL POSITION SENSOR (RHD) 14
INSTALLATION
INSTALLATION - PEDAL POSITION SENSOR (LHD) 14
INSTALLATION - PEDAL POSITION SENSOR (RHD) 14

page

BOOST PRESSURE SENSOR
DESCRIPTION 14
OPERATION 14
DIAGNOSIS AND TESTING - BOOST PRESSURE/INTAKE AIR TEMPERATURE SENSOR 14
INTAKE AIR TEMPERATURE SENSOR
DESCRIPTION 15
OPERATION 15
REMOVAL 15
INSTALLATION 15
CRANKSHAFT POSITION SENSOR
DESCRIPTION 15
OPERATION 15
MASS AIR FLOW (MAF) SENSOR
DESCRIPTION 16
OPERATION 16
REMOVAL 16
INSTALLATION 16

FUEL INJECTOR

DESCRIPTION

FUEL INJECTOR

There are individual fuel injectors for all four cylinders. These fuel injectors are used to spray fuel into the combustion chamber (Fig. 1).

OPERATION

The injector operation can be subdivided into four operating states with the engine running and the high-pressure pump generating pressure:

- Injector closed (with high pressure applied)
- Injector opens (start of injection)
- Injector opened fully
- Injector closes (end of injection)

Injector closed (with high pressure applied)

With the injector closed (at-rest state), the solenoid valve is not energized and is therefore closed. With the bleed orifice closed, the valve spring forces the armature's ball onto the bleed-orifice seat. The rail's high pressure build up in the valve control chamber, and the same pressure is also present in the nozzle's chamber volume. The rail pressure applied at the control plunger's end face, together with the force of

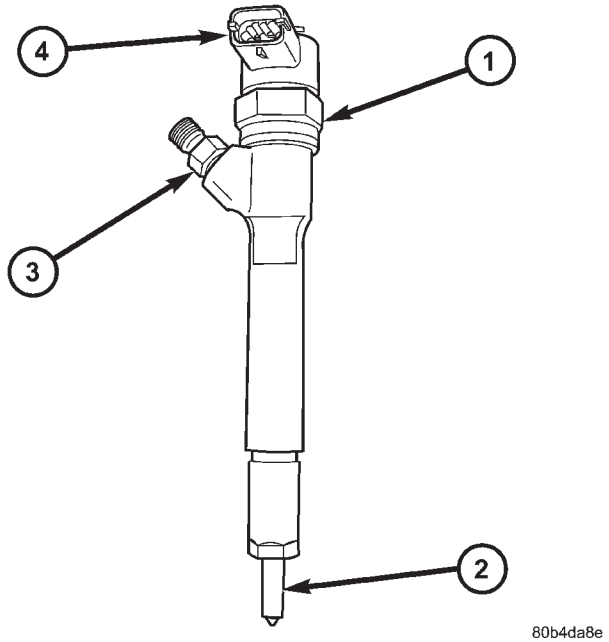

Fig. 1 FUEL INJECTOR

1 - FUEL INJECTOR
2 - NOZZLE
3 - FUEL INLET FITTING
4 - ELECTRICAL CONNECTION

FUEL INJECTOR (Continued)

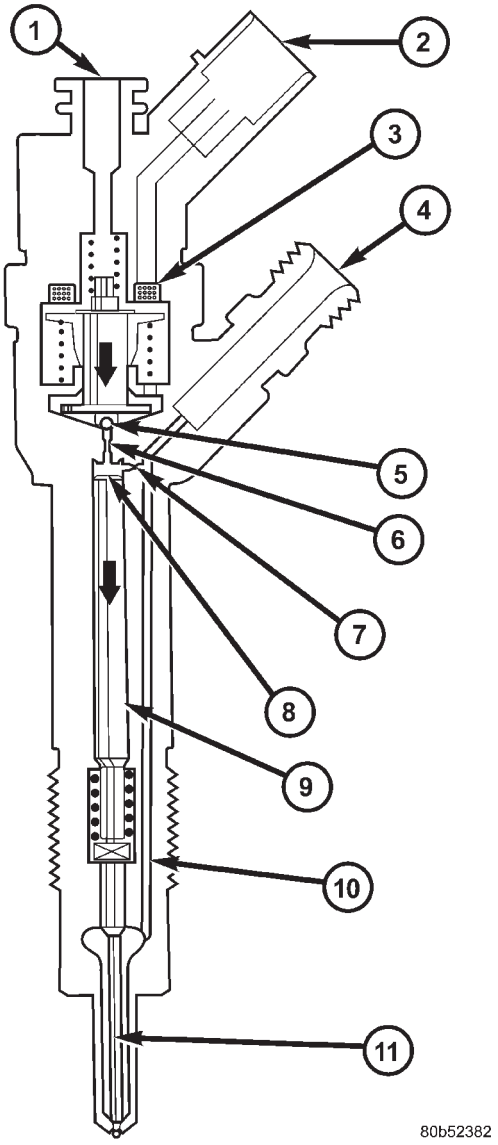

Fig. 2 INJECTOR COMPONENTS

1 - INJECTOR CLOSED (AT-REST STATUS)
2 - ELECTRICAL CONNECTION
3 - TRIGGERING ELEMENT (SOLENOID VALVE)
4 - FUEL INLET (HIGH PRESSURE) FROM THE RAIL
5 - VALVE BALL
6 - BLEED ORIFICE
7 - FEED ORIFICE
8 - VALVE CONTROL CHAMBER
9 - VALVE CONTROL PLUNGER
10 - FEED PASSAGE TO THE NOZZLE
11 - NOZZLE NEEDLE

the nozzle spring, maintain the nozzle in the closed position against the opening forces applied to its pressure stage (Fig. 2).

Injector opens (start of injection)

The solenoid valve is energized with the pickup current which serves to ensure that it open quickly. The force exerted by the triggered solenoid now exceeds that of the valve spring and the armature opens the bleed orifice. Almost immediately, the high-level pick-up current is reduced to the lower holding current required for the electromagnet. This is possible due to the magnetic circuit's air gap now being smaller. When the bleed orifice opens, fuel can flow from the valve control chamber into the cavity situated above it, and from there via the fuel return to the tank. The bleed orifice prevents complete pressure balance, and the pressure in the valve control chamber sinks as a result. This leads to the pressure in the valve-control chamber being lower than that in the nozzle's chamber volume which is still at the same pressure level as the rail. The reduced pressure in the valve-control chamber causes a reduction in the force exerted on the control plunger, the nozzle needle open as a result, and injection starts (Fig. 2).

Injector opens fully

The control plunger reaches its upper stop where it remains supported by a cushion of fuel which is generated by the flow of fuel between the bleed and feed orifices. The injector nozzle has now opened fully, and the fuel is injected into the combustion chamber at a pressure almost equal to that in the fuel rail (Fig. 2).

Injector closes (end of injection)

As soon as the solenoid valve is no longer triggered, the valve spring forces the armature downwards and the ball closes the bleed orifice. The armature is a 2–piece design. Here, although the armature plate is guided by a driver shoulder in its downward movement, it can “overspring” with the return spring so that it exerts no downwards-acting forces on the armature and the ball. The closing of the bleed orifice lead to pressure build up in the control chamber via the input from the feed orifice. This pressure is the same as that in the rail and exerts an increased force on the control plunger through its end face. This force, together with that of the spring, now exceeds the force exerted by the chamber volume and the nozzle needle closes. Injection ceases as soon as the nozzle needle comes up against its bottom stop again (Fig. 2).

REMOVAL

(1) Disconnect negative battery cable.
(2) Remove engine cover (Refer to 9 - ENGINE COVER - REMOVAL).
(3) Disconnect injector electrical connector.
(4) Remove fuel return line from injector (Fig. 3).
(5) Remove fuel injector high pressure line (Fig. 3).
(6) Remove fuel injector retainer and retaining bolt (Fig. 3).

FUEL INJECTOR (Continued)

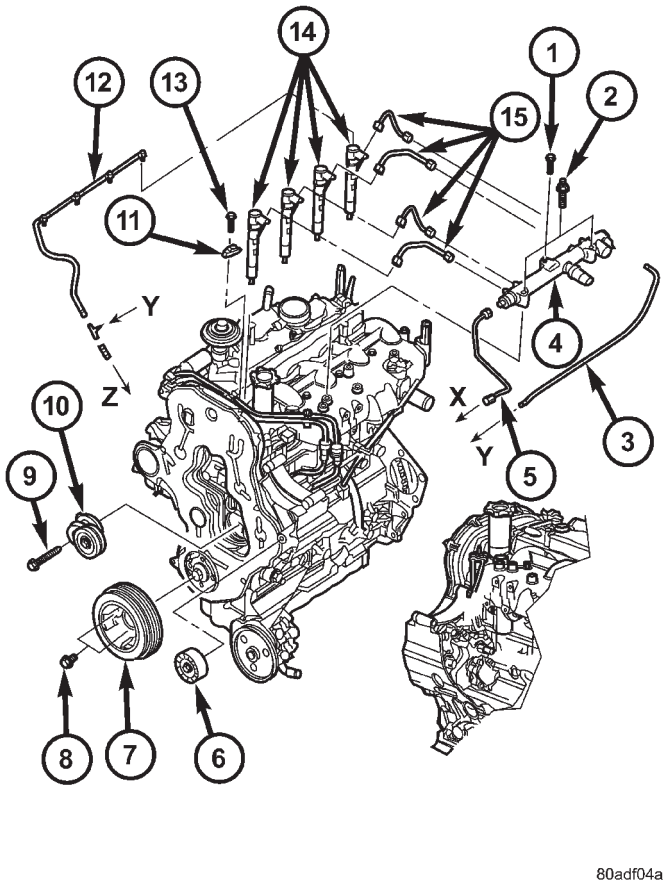

Fig. 3 FUEL SYSTEM COMPONENTS

1 - FUEL RAIL RETAINING BOLT
2 - FUEL RAIL RETAINING STUD
3 - FUEL RAIL RETURN LINE
4 - FUEL RAIL
5 - FUEL RAIL SUPPLY LINE
6 - IDLER PULLEY
7 - CRANKSHAFT PULLEY
8 - CRANKSHAFT PULLEY RETAINING BOLTS
9 - BELT TENSIONER RETAINING BOLT
10 - BELT TENSIONER
11 - FUEL INJECTOR RETAINER
12 - FUEL INJECTOR RETURN LINE
13 - FUEL INJECTOR RETAINING BOLT
14 - FUEL INJECTORS
15 - FUEL INJECTOR HIGH PRESSURE SUPPLY LINES

(7) Remove fuel injector from cylinder head (Fig. 3).

INSTALLATION

NOTE: Be sure the copper washer is installed on end of injector before installing in cylinder head.

(1) Install fuel injector in cylinder head.

(2) Install fuel injector retainer and bolt (Fig. 3). Torque bolt to 32.4 N·m.

(3) Install fuel injector high pressure line (Fig. 3).

(4) Install fuel return line to injector (Fig. 3).

(5) Connect fuel injector electrical connector.

(6) Install engine cover (Refer to 9 - ENGINE COVER - INSTALLATION).

(7) Connect negative battery cable.

ACCELERATOR PEDAL POSITION SENSOR

DESCRIPTION

The accelerator pedal position sensor mounts to the accelerator pedal bracket (Fig. 4).

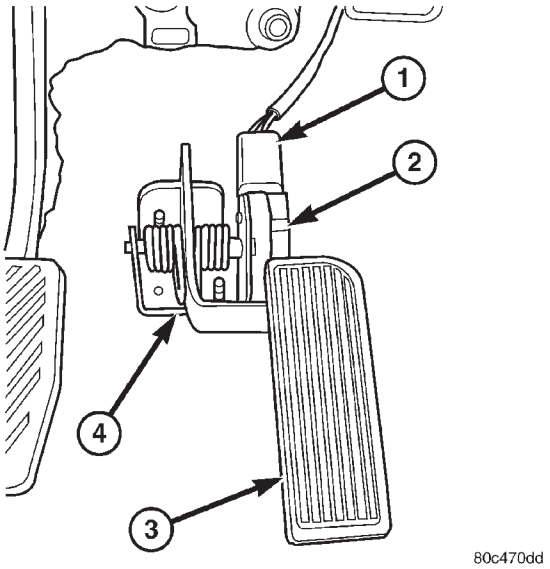

Fig. 4 ACCELERATOR PEDAL POSITION SENSOR LOCATION (TYPICAL)

1 - ACCELERATOR PEDAL POSITION SENSOR ELECTRICAL CONNECTOR
2 - ACCELERATOR PEDAL POSITION SENSOR
3 - ACCELERATOR PEDAL
4 - ACCELERATOR PEDAL MOUNTING BRACKET

OPERATION

The accelerator pedal position sensor contains a potentiometer that is operated by the accelerator pedal. As the accelerator pedal is depressed and released, the sensor provides a variable voltage signal to the engine control module. This voltage signal is directly proportional to accelerator pedal position. When the pedal is fully depressed, the voltage signal is high.

ACCELERATOR PEDAL POSITION SENSOR (Continued)

REMOVAL

REMOVAL - PEDAL POSITION SENSOR (LHD)

(1) Disconnect negative battery cable.
(2) Disconnect pedal position sensor electrical connector (Fig. 4).
(3) Remove 2 pedal position sensor retaining nuts (Fig. 4).
(4) Remove pedal position sensor from vehicle.

REMOVAL - PEDAL POSITION SENSOR (RHD)

(1) Disconnect negative battery cable.
(2) Disconnect pedal position sensor electrical connector (Fig. 4).
(3) Remove 2 pedal position sensor retaining nuts (Fig. 4).
(4) Remove pedal position sensor from vehicle.

INSTALLATION

INSTALLATION - PEDAL POSITION SENSOR (LHD)

(1) Position pedal position sensor in vehicle.
(2) Install pedal position sensor retaining nuts (Fig. 4).
(3) Connect pedal position sensor electrical connector (Fig. 4).
(4) Connect negative battery cable.

INSTALLATION - PEDAL POSITION SENSOR (RHD)

(1) Position pedal position sensor in vehicle.
(2) Install 2 pedal position sensor retaining nuts (Fig. 4).
(3) Connect pedal position sensor electrical connector (Fig. 4).
(4) Connect negative battery cable.

BOOST PRESSURE SENSOR

DESCRIPTION

The boost pressure/ intake air temperature sensor is mounted to the top of the intake manifold. The sensor allows the ECM to monitor air pressure within the intake manifold. This sensor is also used to monitor the intake air temperature (Fig. 5).

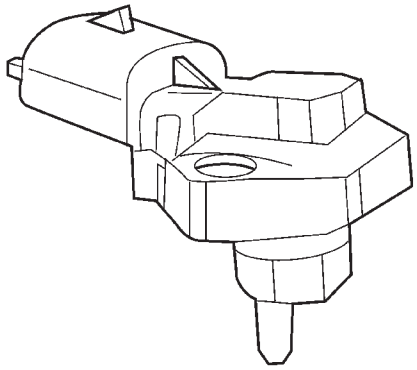

Fig. 5 BOOST PRESSURE SENSOR/INTAKE AIR TEMPERATURE SENSOR

OPERATION

When the intake manifold pressure is low (high vacuum) sensor voltage output is 0.25-1.8 volts at the ECM. When the intake manifold pressure is high due to turbo boost, sensor voltage output is 2.0-4.7 volts. The sensor receives a 5-volts reference from the ECM. Sensor ground is also provides by the ECM. The ECM uses boost pressure combined with intake air temerature to determine the volume of air entering the engine.

DIAGNOSIS AND TESTING - BOOST PRESSURE/INTAKE AIR TEMPERATURE SENSOR

If the boost pressure sensor fails, the ECM records a DTC into memory and continues to operate the engine in one of the three limp-in modes. When the ECM is operating in this mode, a loss of power will be present, as if the turbocharger was not operating. The best method for diagnosing faults with the boost pressure sensor is with the DRB III® scan tool. Refer to the Diesel Powertrain Diagnostic Manual for more information.

Refer to On-Board Diagnostics in Emissions Control System for a list of Diagnostic Trouble Codes (DTC's) for certain fuel system components.

INTAKE AIR TEMPERATURE SENSOR

DESCRIPTION

The boost pressure sensor/intake air temperature sensor is located in the top of the intake manifold (Fig. 6). The intake air temperature sensor is used to measure the intake air temperature. The intake air temperture sensor is a dual purpose sensor. It is also used as a boost pressure sensor.

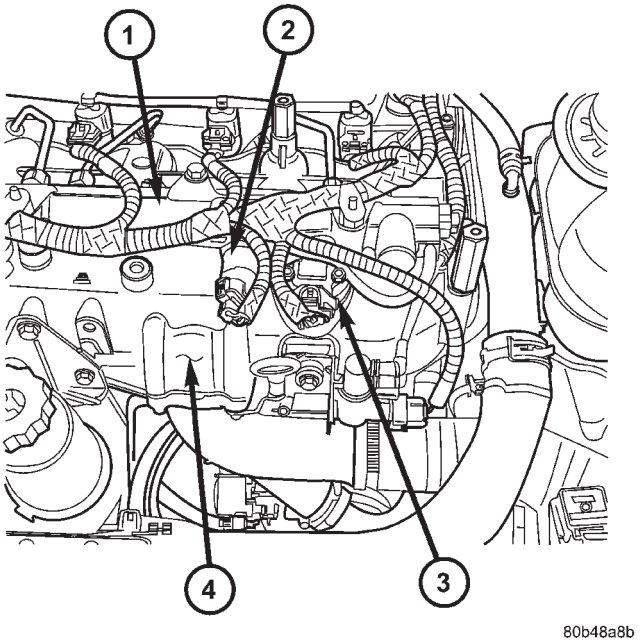

Fig. 6 BOOST PRESSURE SENSOR/INTAKE AIR TEMPERATURE SENSOR LOCATION

1 - FUEL RAIL
2 - FUEL PRESSURE SENSOR
3 - INTAKE AIR TEMPERATURE/BOOST PRESSURE SENSOR
4 - CYLINDER HEAD COVER/INTAKE MANIFOLD

OPERATION

The intake air temperature sensor is a negative temperature coefficient (NTC) thermistor (resistance varies inversly with temperature). This means at cold air temperature its resistance is high, sothe voltage signal will be high. As intake air temperature increases, sensor resistance decreases and the signal voltage will be low. This allows the sensor to provide an analog voltage signal (0.2-4.8 volts) to the ECM.

REMOVAL

(1) Disconnect negative battery cable.
(2) Remove engine cover retaining bolts and cover-(Refer to 9 - ENGINE COVER - REMOVAL).
(3) Disconnect intake air temperature electrical connector.
(4) Remove intake air temperature sensor retaining screws and sensor (Fig. 6).

INSTALLATION

(1) Install intake air temperature sensor and retaining bolts (Fig. 6). Torque to 5.4 N·m.
(2) Connect intake air temperature sensor.
(3) Install engine cover and retaining bolts (Refer to 9 - ENGINE COVER - INSTALLATION).

CRANKSHAFT POSITION SENSOR

DESCRIPTION

The crankshaft position sensor is mounted in the right rear of the engine block below the turbocharger (Fig. 7). This sensor is used to detect engine speed.

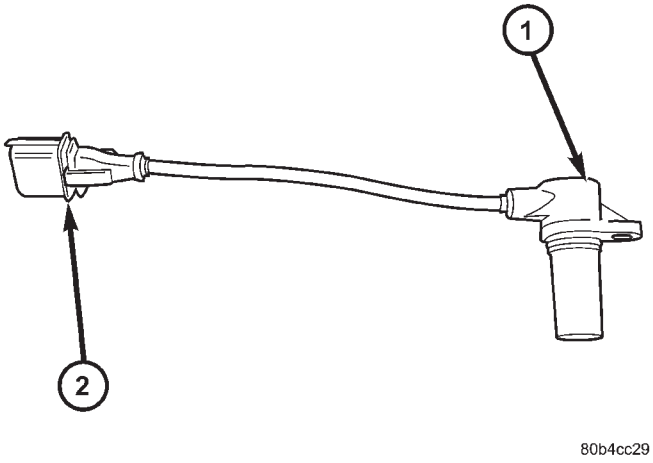

Fig. 7 CRANKSHAFT POSITION SENSOR

1 - CRANKSHAFT POSITION SENSOR
2 - CRANKSHAFT POSITION SENSOR ELECTRICAL CONNECTOR

OPERATION

The crankshaft position sensor is a magnetic pickup type sensor that generates an ac signal. The sensor contains a permanent magent and a coil of wire. The sensor generates an ac signal each time a notch in the reluctor wheel on the crankshaft passes across the permanent magnet. The ECM calculates engine speed based on the frequency of the ac signal. The ECM supplies the sensor ground.

MASS AIR FLOW (MAF) SENSOR

DESCRIPTION

The Mass Air Flow (MAF) Sensor is mounted inline in the air intake between the air filter and the turbocharger (Fig. 8).

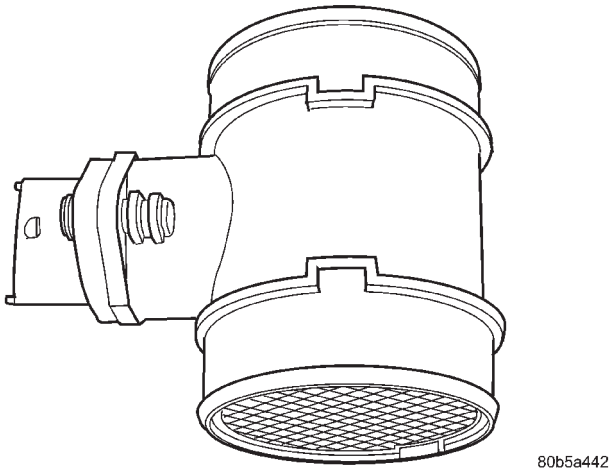

Fig. 8 MASS AIR FLOW (MAF) SENSOR

OPERATION

The ECM uses the mass air flow (MAF) sensor to measure air density. The MAF sensor contains a ceramic element. A signal voltage is provided to the element. As engine speed increases, airflow across the ceramic element increases. Changes in air flow and air density cause the temperature of the ceramic element to fluxuate. The ceramic element changes resistance respectively to changes in temperature. The change in resistance varies the signal voltage output to the ECM. The diesel power relay supplies battery power the to MAF sensor. Ground is provided by the ECM. The MAF sensor signal is provided by the ECM.

REMOVAL

(1) Disconnect negative battery cable.
(2) Disconnect MAF sensor electrical connector (Fig. 9).
(3) Loosen MAF sensor retaining clamps (Fig. 9).
(4) Remove MAF sensor from airduct (Fig. 9).

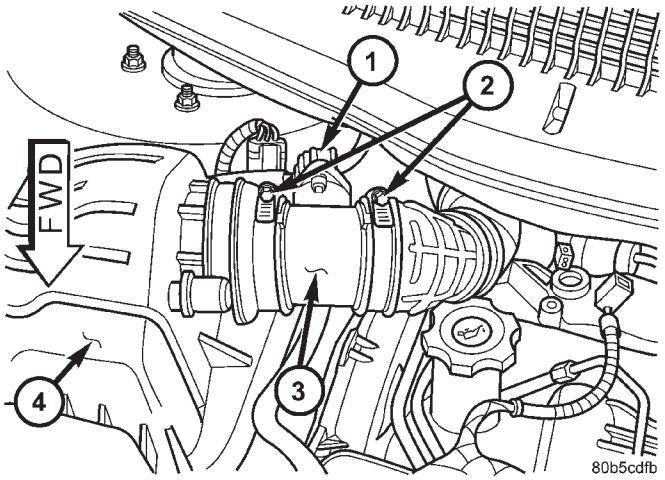

Fig. 9 MASS AIR FLOW (MAF) SENSOR LOCATION

1 - MAF SENSOR ELECTRICAL CONNECTOR
2 - RETAINING CLAMPS
3 - MASS AIR FLOW (MAF) SENSOR
4 - AIR CLEANER HOUSING

INSTALLATION

(1) Install MAF sensor in airduct (Fig. 9).
(2) Tighten retaining clamps (Fig. 9).
(3) Connect MAF sensor electrical connector (Fig. 9).
(4) Connect negative battery cable.

STEERING

TABLE OF CONTENTS

	page
STEERING	
DESCRIPTION - POWER STEERING SYSTEM	1
OPERATION - POWER STEERING SYSTEM	1
DIAGNOSIS AND TESTING	
DIAGNOSIS AND TESTING - POWER STEERING SYSTEM FLOW AND PRESSURE TEST	1
DIAGNOSIS AND TESTING - STEERING SYSTEM DIAGNOSIS CHARTS	3
SPECIFICATIONS	
POWER STEERING FASTENER TORQUE	9
SPECIAL TOOLS	
POWER STEERING	9
COLUMN	10
GEAR	26
PUMP	36

STEERING

DESCRIPTION - POWER STEERING SYSTEM

This vehicle comes with power steering as standard equipment. The power steering system consists of these major components:

- POWER STEERING PUMP
- POWER STEERING GEAR
- POWER STEERING FLUID
- POWER STEERING FLUID COOLER
- POWER STEERING FLUID RESERVOIR
- POWER STEERING FLUID SUPPLY HOSE
- POWER STEERING FLUID PRESSURE HOSE
- POWER STEERING FLUID RETURN HOSE

For information on the first two components, refer to their respective sections within this service manual group. Information on all other components can be found in POWER STEERING PUMP.

OPERATION - POWER STEERING SYSTEM

Turning of the steering wheel is converted into linear (side-to-side) travel through the meshing of the helical pinion teeth with the rack teeth within the steering gear. The lateral travel pushes and pulls the tie rods to change the direction of the vehicle's front wheels.

Power assist steering is provided by a belt driven rotary type pump. It directs fluid through power steering fluid hoses to the power steering gear where it is used to assist the driver's turning effort.

Manual steering control of the vehicle can be maintained if power steering assist is lost. However, under this condition, steering effort is significantly increased.

DIAGNOSIS AND TESTING

DIAGNOSIS AND TESTING - POWER STEERING SYSTEM FLOW AND PRESSURE TEST

ALL ENGINES

The following procedure is to be used to test the operation of the power steering system on this vehicle. This test will provide the flow rate of the power steering pump along with the maximum relief pressure. This test is to be performed to determine if the power steering pump or power steering gear is not functioning properly. The following flow and pressure test is performed using the Power Steering Analyzer Kit, Special Tool 6815 (Fig. 1), hoses, Special Tools 6905 and 6959, and fittings from adapter kit, Special Tool 6893.

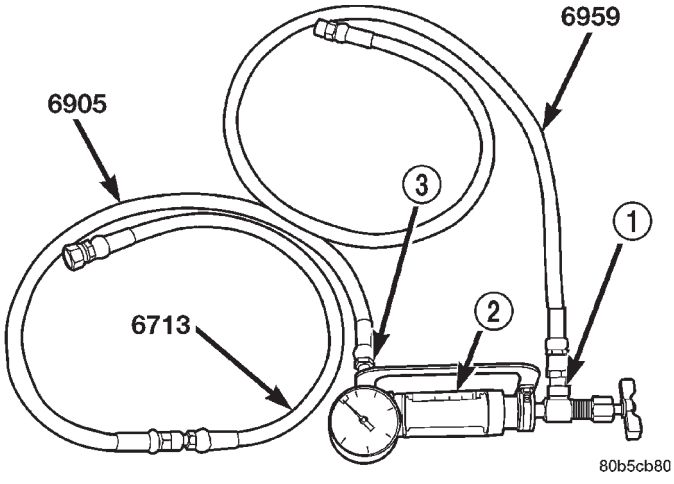

Fig. 1 Power Steering Analyzer With Hoses Installed

1 - OUTLET
2 - SPECIAL TOOL 6815
3 - INLET

STEERING (Continued)

Assemble hoses on Power Steering Analyzer, Special Tool 6815, as shown. Install Pressure Hose, Special Tool 6905 (in 6893 kit), in the inlet fitting on Power Steering Analyzer. Install Pressure Hose, Special Tool 6713 (in 6815 kit) on Pressure Hose, Special Tool 6905. Install Pressure Hose, Special Tool 6959, in the outlet fitting on Power Steering Analyzer.

Install the following adapters from Adapter Set, Special Tool 6893 (Fig. 2), on the analyzer hose ends: Install Adapter Fitting, Special Tool 6844, on Pressure Hose, Special Tool 6713. Install Adapter Fitting, Special Tool 6826, on Pressure Hose, Special Tool 6959.

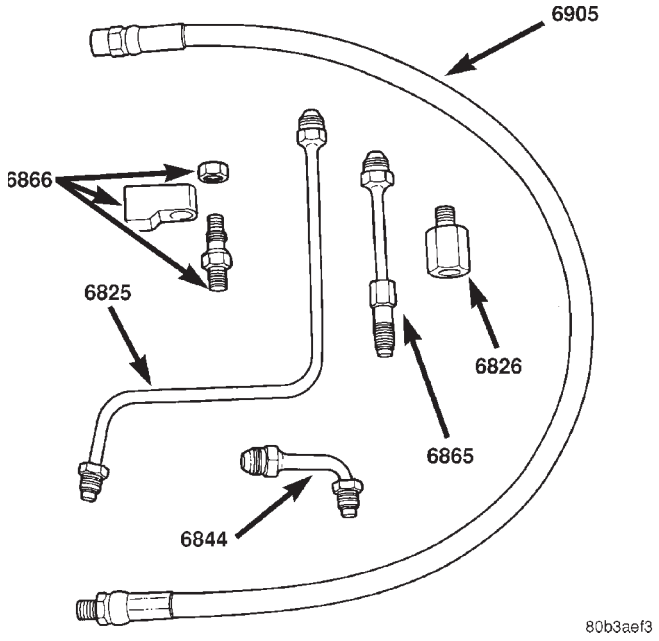

Fig. 2 Power Steering Analyzer Adapters 6893

CAUTION: To prevent personal injury, safety goggles should be worn at all times when performing any test procedures on the power steering pump or power steering gear.

The following procedure is to be used to test the operation of the power steering system on the vehicle.

(1) Check belt tension and adjust as necessary.

(2) Disconnect the power steering fluid pressure hose from the power steering pump (Fig. 3) (Fig. 4).

(3) Connect Adapter Fitting, Special Tool 6844, attached to pressure hose from inlet (gauge end) of Power Steering Analyzer to the pressure fitting on the power steering pump.

(4) Connect vehicle power steering fluid pressure hose to Adapter Fitting, Special Tool 6826, which should be already installed in the outlet hose (valve end) of Power Steering Analyzer.

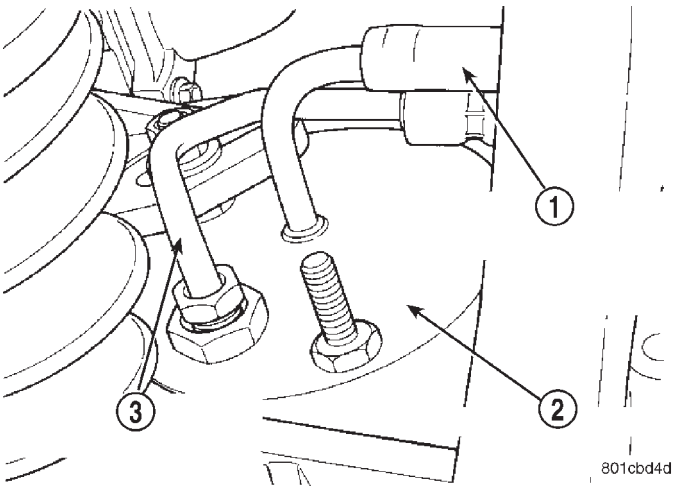

Fig. 3 Pressure Hose Connection To Power Steering Pump - 2.4L Engine

1 - POWER STEERING FLUID RETURN HOSE
2 - POWER STEERING PUMP
3 - POWER STEERING FLUID PRESSURE HOSE

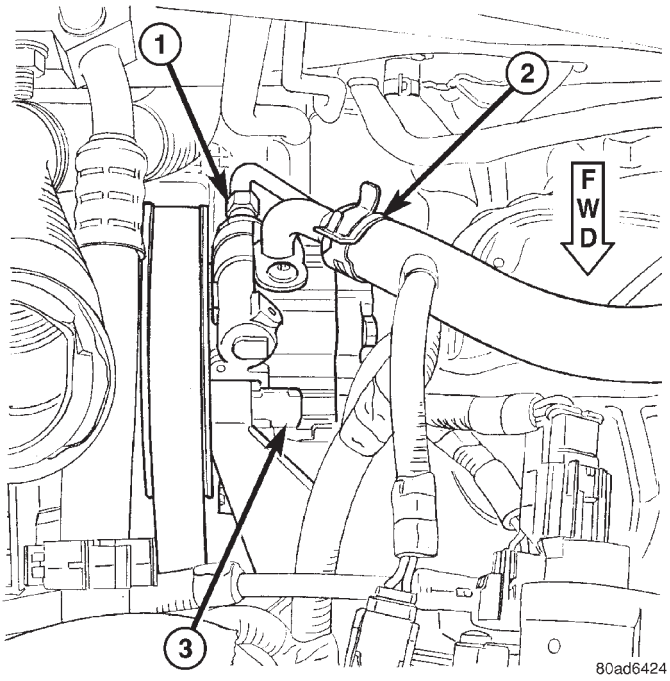

Fig. 4 Supply & Pressure Hoses At Pump - 3.3L/3.8L Engine

1 - PRESSURE HOSE AND FITTING
2 - SUPPLY HOSE AND CLAMP
3 - POWER STEERING PUMP

NOTE: During the next few steps, do not steer vehicle as air will be forced into the steering gear.

(5) Completely open valve on Power Steering Analyzer.

(6) Start engine and let idle just long enough to circulate power steering fluid through the analyzer and hoses. Shut off engine.

(7) Check power steering fluid level and add fluid as necessary. Start engine again and let idle until the air is out of the fluid.

(8) Gauge should read below 300 psi (2068 kPa). If above, inspect the hoses for restrictions and repair as necessary. The initial pressure should be in the range of 100-275 psi (689-1896 kPa) depending on fluid temperature. The flow meter should read above 1.5 GPM.

CAUTION: The following test procedure involves testing maximum pump pressure output and flow control valve operation. Do not leave valve closed for more than four seconds as the pump could be damaged.

NOTE: Power steering pump maximum pressure for 2.4L engines is 1,200 – 1,350 psi (8,274 – 9,308 kPa). Power steering pump maximum pressure for all other engines is 1,400 – 1,500 psi (9,653 – 10,342 kPa).

(9) Close analyzer valve fully three times and record highest pressure indicated each time. All three readings must be within specifications. If any of the three power steering pump pressures are above or below specifications, replace pump. (Refer to 19 - STEERING/PUMP - REMOVAL)

CAUTION: Do not force the steering to operate against the stops for more than 4 seconds at a time because pump damage can result.

(10) Once the pump has been verified as working correctly, completely open the valve on the Power Steering Analyzer. Turn the steering wheel to the extreme left until the stop in the steering gear is met. Hold it there for 2–4 seconds, then release it. Now turn the steering wheel to the right until the right stop is met. Hold it there for 2–4 seconds, then release it. Record the stabilized pressure at each position. Compare the recorded readings to the specifications. If the output pressures are not within 100 psi (689 kPa) of one another against either stop or are below specifications, the steering gear is leaking internally and must be replaced. (Refer to 19 - STEERING/GEAR - REMOVAL)

DIAGNOSIS AND TESTING - STEERING SYSTEM DIAGNOSIS CHARTS

NOTE: There are three diagnosis charts following that cover POWER STEERING NOISE, STEERING WHEEL FEEL, and POWER STEERING FLUID.

POWER STEERING NOISE

CONDITION	POSSIBLE CAUSES	CORRECTION
OBJECTIONABLE HISS OR WHISTLE*	1. Damaged or mispositioned steering column shaft/coupling dash panel seal.	1. Reposition or replace steering column shaft/coupling dash panel seal.
	2. Noisy valve in power steering gear.	2. Replace power steering gear.
	3. Mis-routed power steering hose.	3. Check routing of power steering hoses. Ensure hoses do not come in unwanted contact with other components and objects.
RATTLE OR EXCESSIVE CLUNK**	1. Power steering gear loose on front suspension crossmember.	1. Inspect power steering gear mounting bolts. Replace as necessary. Tighten to the specified torque.
	2. Front suspension crossmember mounting fasteners loose at frame.	2. Tighten the front suspension crossmember mounting fasteners to the specified torque.
	3. Loose tie rod (outer or inner).	3. Check tie rod pivot points for wear. Replace worn/loose parts as required.

STEERING (Continued)

CONDITION	POSSIBLE CAUSES	CORRECTION
	4. Loose lower control arm mounting bolts at front suspension crossmember.	4. Tighten control arm mounting bolts to the specified torques.
	5. Lower control arm pivot bushing worn.	5. Replace lower control arm pivot bushing.
	6. Loose strut assembly mounting fasteners at tower or knuckle.	6. Tighten strut assembly fasteners to the specified torque.
	7. Power steering fluid hose touching the body of the vehicle.	7. Adjust hose to proper position by loosening, repositioning, and tightening attachments to specified torque. Do not bend tubing.
	8. Internal power steering gear noise.	8. Replace power steering gear.
	9. Damaged front suspension crossmember.	9. Replace front suspension crossmember.
	10. Stabilizer bar link ball joints worn.	10. Replace stabilizer bar link.
	11. Lug nuts loose.	11. Tighten lug nuts to specifications.
	12. Excessive Wheel bearing free-play.	12. Verify correct driveshaft hub nut torque. Replace bearing if torque is okay.
POPPING NOISE	1. Worn outer tie rod.	1. Check ball joint for free-play; Replace outer tie rod.
	2. Loose inner tie rod.	2. Replace power steering gear.
CHIRP OR SQUEAL (POWER STEERING PUMP)	1. Loose power steering pump drive belt.	1. Check and adjust power steering pump drive belt to specifications or replace automatic tensioner where applicable. Replace belt if worn or glazed.
	2. Malfuctioning belt auto-tensioner	2. Replace belt auto-tensioner.
WHINE, GROWL, MOAN OR GROAN (POWER STEERING PUMP)***	1. Low fluid level.	1. Fill power steering fluid reservoir to proper level and check for leaks (make sure all air is bled from the system fluid).
	2. Power steering hose touching vehicle body or frame.	2. Adjust hose to proper position by loosening, repositioning, and tightening fitting to specified torque. Do not bend tubing. Replace hose if damaged.
	3. Extreme wear of power steering pump internal components.	3. Replace power steering pump and flush system as necessary.
	4. Extremely low ambient temperature.	4. Some noise can be expected, but will go away as vehicle warms. Replace pump if noise is excessive.
SUCKING AIR SOUND	1. Loose clamp on power steering fluid return hose.	1. Tighten or replace hose clamp.
	2. Missing O-Ring on power steering hose connection.	2. Inspect connection and replace O-Ring as required.

STEERING (Continued)

CONDITION	POSSIBLE CAUSES	CORRECTION
	3. Low power steering fluid level.	3. Fill power steering fluid reservoir to proper level and check for leaks.
	4. Loose clamp on fluid supply hose.	4. Tighten or replace hose clamp.
SQUEAK OR RUBBING SOUND	1. Steering column shroud rubbing.	1. Realign shrouds as necessary.
	2. Steering column shaft rubbing.	2. Move or realign item rubbing shaft.
	3. Clockspring noisy.	3. Remove clockspring. Reinstall wheel. If noise is gone, replace clockspring.
	4. Seal lubrication inadequate.	4. Lube seal (if external).
	5. Steering gear internally noisy.	5. Replace steering gear (if no other cause can be found).
SCRUBBING OR KNOCKING NOISE.	1. Incorrect tire or wheel size.	1. Replace incorrect size tire or wheel with size used as original equipment.
	2. Interference between steering gear and other vehicle components.	2. Check for bent or misaligned components and correct as necessary.
	3. Steering gear internal stops worn excessively allowing tires to be steered excessively far.	3. Replace steering gear.

NOTE: * There is some noise in all power steering systems. One of the most common is a hissing sound evident when turning the steering wheel when at a standstill or when parking and the steering wheel is at the end of its travel. Hiss is a very high frequency noise similar to that experienced while slowly closing a water tap. The noise is present in every valve and results when high velocity fluid passes valve orifice edges. There is no relationship between this noise and the performance of the steering system.

NOTE: ** A light clunk may be felt or heard during steering wheel reversal while vehicle is stationary. This results from internal steering gear rack movement at the bushings and in no way affects the performance of the steering system. This movement may be felt in the steering components during steering wheel reversal.

NOTE: * Power steering pump growl/moan/groan results from the development of high pressure fluid flow. Normally this noise level should not be high enough to be objectionable.**

STEERING WHEEL FEEL

CONDITION	POSSIBLE CAUSES	CORRECTION
STEERING WHEEL/ COLUMN CLICKING, CLUNKING OR RATTLING.	1. Loose steering coupling pinch bolt.	1. Replace pinch bolt and torque to specifications.
	2. Steering column bearings.	2. Replace steering column.
	3. Excessive intermediate shaft coupling free-play.	3. Replace intermediate shaft.
STEERING WHEEL HAS FORE AND AFT LOOSENESS.	1. Steering wheel retaining nut not properly tightened and torqued.	1. Tighten the steering wheel retaining nut to its specified torque.

STEERING (Continued)

CONDITION	POSSIBLE CAUSES	CORRECTION
	2. Steering column lower bearing spring retainer slipped on steering column shaft.	2. Replace steering column.
	3. Loose steering column to instrument panel fasteners.	3. Tighten fasteners to specified torque.
STEERING WHEEL, DASH OR VEHICLE VIBRATES DURING LOW SPEED OR STANDSTILL STEERING MANEUVERS.	1. Air in the fluid of the power steering system.	1. Bleed air from system following the power steering pump initial operation service procedure.*
	2. Tires not properly inflated.	2. Inflate tires to the specified pressure.
	3. Excessive engine vibration.	3. Ensure that the engine is tuned properly.
	4. Loose tie rod end jam nut.	4. Tighten the inner to outer tie rod jam nut to the specified torque.
	5.Overcharged air conditioning system.	5.Check air conditioning pump head pressure and correct as necessary.
	6. Grounded engine mount.	6. Repair as necessary.
	7. Loose outer tie rod.	7. Replace outer tie rod.
STEERING CATCHES, SURGES OR STICKS IN CERTAIN POSITIONS OR IS DIFFICULT TO TURN. ***	1. Low power steering fluid level.	1. Fill power steering fluid reservoir to specified level and check for leaks.
	2. Tires not inflated to specified pressure.	2. Inflate tires to the specified pressure.
	3. Lack of lubrication in front lower control arm ball joints.	3. Lubricate ball joints if ball joints are not a lubricated-for-life type ball joint. If ball joint is a lubricated-for-life ball joint, replace ball joint.
	4. Worn or binding lower control arm ball joint.	4. Replace lower control arm ball joint.
	5. Lack of lubrication in steering gear outer tie rod ends.	5. Lubricate tie rod ends if they are not a lubricated-for-life type. If tie rod end is a lubricated-for-life type, replace tie rod end.
	6. Loose power steering pump drive belt.	6. Tighten the power steering pump drive belt to specifications or replace automatic tensioner where applicable. If drive belt is worn or glazed, replace belt.
	7. Faulty power steering pump (Perform Power Steering Flow and Pressure Test).	7. Replace power steering pump.
	8. Faulty power steering gear (Perform Power Steering Flow and Pressure Test).	8. Replace power steering gear.
	9. Excessive friction in steering column or intermediate shaft/coupler.	9. Isolate and correct condition.
	10. Excessive friction in power steering gear.	10. Replace power steering gear.

STEERING (Continued)

CONDITION	POSSIBLE CAUSES	CORRECTION
	11. Worn or binding seat and bearing in front strut assembly.	11. Replace seat and bearing in front strut assembly.
STEERING WHEEL DOES NOT RETURN TO CENTER POSITION.	1. Tires not inflated properly.	1. Inflate tires to specified pressure.
	2. Improper front wheel alignment.	2. Check and adjust wheel alignment as necessary.
	3. Lack of lubrication causing binding in front lower control arm ball joints.	3. Lubricate ball joints if ball joints are not a lubricated for life type of ball joint, then inspect ball joint for wear, replace lower control arm as necessary. If ball joint is a lubricated for life ball joint, replace lower control arm ball joint.
	4. Steering column coupling joints misaligned.	4. Realign steering column coupling joints.
	5. Steering wheel rubbing.**	5. Adjust steering column shrouds to eliminate rubbing condition.
	6. Damaged, mispositioned or unlubricated steering column coupler to dash seal.**	6. Replace, reposition, or lubricate dash seal.
	7. Binding mount bearing in front strut assembly.	7. Replace mount bearing in front strut assembly.
	8. Binding shaft bearing in steering column.	8. Replace the steering column.
	9. Excessive friction in steering column coupling.	9. Replace steering column coupling.
	10. Excessive friction in power steering gear.	10. Replace power steering gear.
EXCESSIVE STEERING WHEEL KICKBACK OR TOO MUCH STEERING WHEEL FREE PLAY.	1. Air in the fluid of the power steering system.	1. Bleed air from system following the the power steering pump initial operation service procedure.*
	2. Power steering gear loose on cradle/crossmember.	2. Inspect power steering gear mounting bolts. Replace as necessary. Tighten to the specified torque.
	3. Steering column coupling or intermediate shaft worn, broken or loose.	3. Replace steering column coupling or intermediate shaft.
	4. Free play in steering column.	4. Check all components of the steering column and repair or replace as required.
	5. Worn lower control arm ball joints.	5. Replace lower control arm ball joints as required.
	6. Loose steering knuckle-to-ball joint stud pinch bolt.	6. Inspect pinch bolt, replace as necessary, and tighten to specified torque.
	7. Front wheel bearing loose or worn.	7. Replace hub and bearing as necessary.
	8. Loose outer tie rod end.	8. Replace outer tie rod end that has excessive free play.

STEERING (Continued)

CONDITION	POSSIBLE CAUSES	CORRECTION
	9. Loose inner tie rod.	9. Replace power steering gear.
	10. Defective steering gear rotary valve.	10. Replace power steering gear.

NOTE: * Steering shudder can be expected in new vehicles and vehicles with recent steering system repairs. Shudder should dissipate after the vehicle has been driven several weeks.

NOTE: ** To evaluate this condition, it may be necessary to disconnect the coupling at the base of the steering column. Turn the steering wheel and feel or listen for internal rubbing in steering column. To avoid damaging the column clockspring, note the following. Before disconnecting coupling, place tires in the straight-ahead position and center steering wheel. Once disconnected, DO NOT rotate steering wheel more than one revolution in either direction and place steering wheel in original location before reconnecting coupling. If this position is lost, the steering column clockspring must be recentered following the procedure found within the procedure for steering column installation in the steering column section.

NOTE: * Increased low speed or stationary steering effort can be expected if the steering fluid is at a high temperature. High fluid temperature usually results from high engine rpm due to trailer towing, ascending grades, or racing the engine for prolonged periods of time.**

POWER STEERING FLUID

CONDITION	POSSIBLE CAUSES	CORRECTION
LOW FLUID LEVEL WITH VISIBLE LEAK.	1. Loose power steering hose fittings.	1. Tighten the fitting to its specified torque.
	2. Damaged or missing fitting seal, gasket, or O-ring.	2. Replace as necessary.
	3. Power steering component leaking.	3. Repair or replace the leaking component as required.
AERATED FLUID.*	1. Low fluid level.	1. Fill power steering fluid reservoir to proper level.
	2. Air leak at supply hose, power steering fluid reservoir or pump.	2. Inspect for proper sealing. Repair as necessary.
	3. Cracked power steering pump housing.	3. Replace the power steering pump.
RESERVOIR FLUID OVERFLOW AND FLUID THAT IS MILKY IN COLOR	1. Water contamination of power steering fluid.	1. Drain the power steering fluid from the system. Flush the system with fresh clean power steering fluid, drain, then refill to the proper level.

NOTE: * Extremely cold temperatures may cause power steering fluid aeration. Aeration should subside as fluid warms.

STEERING (Continued)

SPECIFICATIONS

POWER STEERING FASTENER TORQUE

DESCRIPTION	TORQUE
Power Steering Pump:	
Flow Control Valve Pressure Fitting	75 N·m (55 ft. lbs.)
Mounting Bolts	54 N·m (40 ft. lbs.)
Rear Bracket To Engine Mounting Bolts	54 N·m (40 ft. lbs.)
Steering Gear:	
Mounting Bolt - Size-M14	183 N·m (135 ft. lbs.)
Mounting Bolts - Size-M12	95 N·m (70 ft. lbs.)
Tie Rod Steering Knuckle Nut	75 N·m (55 ft. lbs.)
Tie Rod Jam Nut	75 N·m (55 ft. lbs.)
Coupling Pinch Bolt	28 N·m (250 in. lbs.)
Power Steering Fluid Hoses:	
Hose Tube Nuts	31 N·m (275 in. lbs.)
Routing Bracket Bolts	23 N·m (200 in. lbs.)

SPECIAL TOOLS

POWER STEERING

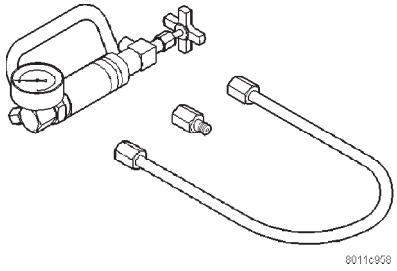

Power Steering Analyzer 6815

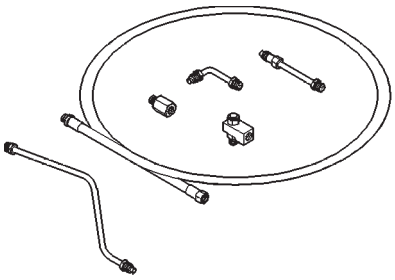

Adapters, Power Steering Analyzer 6893

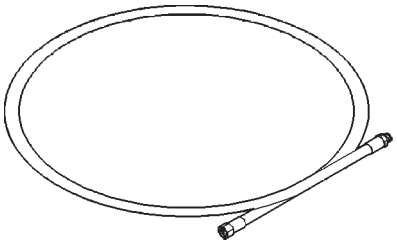

HOSE, POWER STEERING ANALYZER 6959

COLUMN

TABLE OF CONTENTS

	page
COLUMN	
DESCRIPTION - STEERING COLUMN	10
WARNING	
WARNINGS AND CAUTIONS	10
DIAGNOSIS AND TESTING - STEERING COLUMN	12
REMOVAL	12
INSTALLATION	13
SPECIFICATIONS	
COLUMN TORQUE	14
IGNITION SWITCH	
REMOVAL	15
INSTALLATION	16
LOCK CYLINDER HOUSING	
DESCRIPTION - IGNITION INTERLOCK	17
REMOVAL	17
INSTALLATION	20
KEY/LOCK CYLINDER	
DESCRIPTION	21
OPERATION	21
REMOVAL	22
INSTALLATION	22
GEAR SHIFT LEVER	
REMOVAL	22
INSTALLATION	22
SHROUD	
REMOVAL	23
INSTALLATION	23
STEERING WHEEL	
REMOVAL	23
INSTALLATION	25

COLUMN

DESCRIPTION - STEERING COLUMN

The steering column has been designed to be serviced as a complete assembly (Fig. 1), except for the components listed here. They are the key cylinder, ignition switch, lock cylinder housing, multi-function switch, clockspring, halo lamp, speed control switches, driver airbag, trim shrouds, steering wheel and steering column intermediate shaft (Fig. 2). These replaceable components of the steering column can be serviced without requiring removal of the steering column from the vehicle.

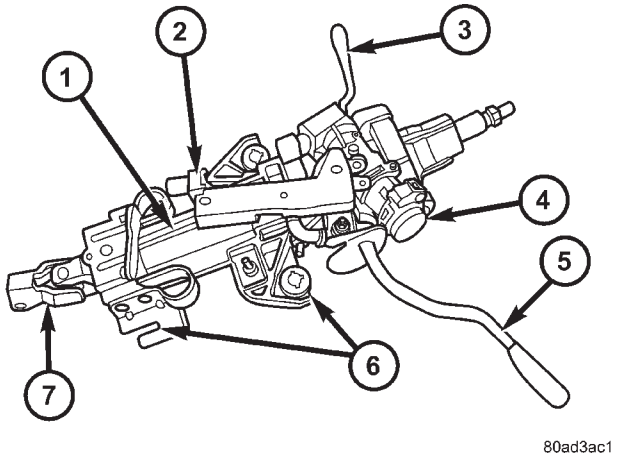

Fig. 1 Steering Column

1 - STEERING COLUMN
2 - B.T.S.I.
3 - TILT RELEASE LEVER
4 - KEY CYLINDER
5 - SHIFT LEVER
6 - MOUNTING HOLES
7 - COUPLING

WARNING

WARNINGS AND CAUTIONS

(Refer to 8 - ELECTRICAL/RESTRAINTS - WARNING)

WARNING: BEFORE BEGINNING ANY SERVICE PROCEDURES THAT INVOLVES REMOVING THE AIR BAG. REMOVE AND ISOLATE THE NEGATIVE (-) BATTERY CABLE (GROUND) FROM THE VEHICLE BATTERY. THIS IS THE ONLY SURE WAY TO DISABLE THE AIR BAG SYSTEM. FAILURE TO DO THIS COULD RESULT IN ACCIDENTAL AIR BAG DEPLOYMENT AND POSSIBLE PERSONAL INJURY.

COLUMN (Continued)

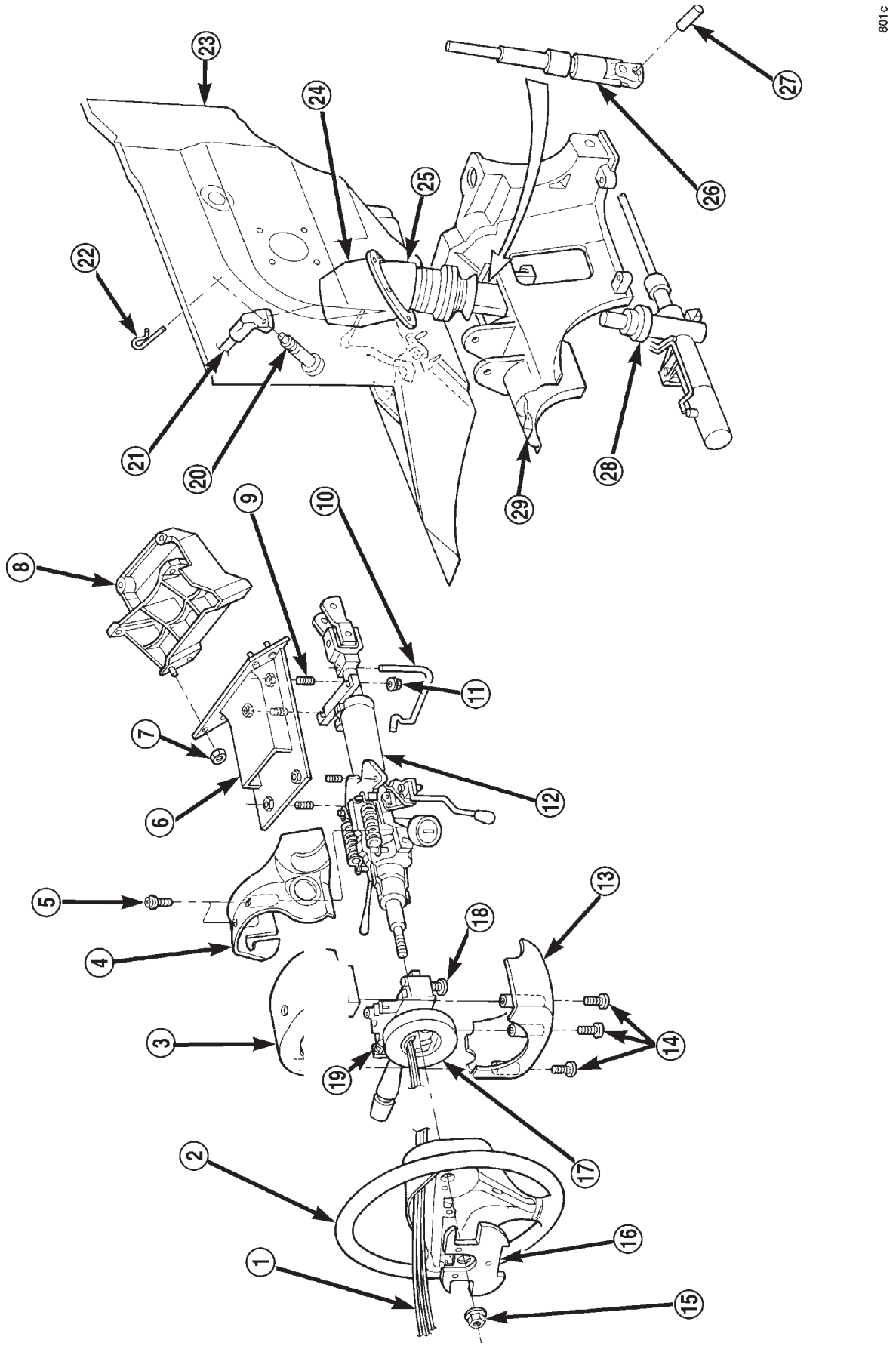

Fig. 2 Steering Column And Components (Typical)

COLUMN (Continued)

1 - CLOCKSPRING WIRING
2 - STEERING WHEEL
3 - UPPER SHROUD
4 - FIXED SHROUD
5 - SCREW
6 - STEERING COLUMN MOUNTING PLATE
7 - NUT
8 - DASH PANEL STEERING COLUMN MOUNTING BRACKET
9 - STUDS (4)
10 - STEERING COLUMN LOCKING PIN
11 - NUT/WASHER ASSEMBLY
12 - STEERING COLUMN ASSEMBLY
13 - LOWER SHROUD
14 - SCREWS
15 - STEERING WHEEL RETAINING NUT
16 - STEERING WHEEL DAMPER
17 - CLOCKSPRING
18 - SCREW
19 - MULTI-FUNCTION SWITCH
20 - PINCH BOLT
21 - STEERING COLUMN COUPLER
22 - PINCH BOLT RETAINING PIN
23 - DASH PANEL
24 - SILENCER SHELL
25 - INTERMEDIATE SHAFT SHIELD AND SEAL
26 - INTERMEDIATE SHAFT
27 - ROLL PIN
28 - POWER STEERING GEAR
29 - FRONT SUSPENSION CRADLE/CROSSMEMBER

WARNING: THE AIR BAG SYSTEM IS A SENSITIVE, COMPLEX ELECTRO-MECHANICAL UNIT. BEFORE ATTEMPTING TO DIAGNOSE, REMOVE OR INSTALL THE AIR BAG SYSTEM COMPONENTS YOU MUST FIRST DISCONNECT AND ISOLATE THE BATTERY NEGATIVE (GROUND) CABLE. THEN WAIT TWO MINUTES FOR THE SYSTEM CAPACITOR TO DISCHARGE. FAILURE TO DO SO COULD RESULT IN ACCIDENTAL DEPLOYMENT OF THE AIR BAG AND POSSIBLE PERSONAL INJURY. THE FASTENERS, SCREWS, AND BOLTS, ORIGINALLY USED FOR THE AIR BAG COMPONENTS, HAVE SPECIAL COATINGS AND ARE SPECIFICALLY DESIGNED FOR THE AIR BAG SYSTEM. THEY MUST NEVER BE REPLACED WITH ANY SUBSTITUTES. ANYTIME A NEW FASTENER IS NEEDED, REPLACE WITH THE CORRECT FASTENERS PROVIDED IN THE SERVICE PACKAGE OR FASTENERS LISTED IN THE PARTS BOOKS.

WARNING: SAFETY GOGGLES SHOULD BE WORN AT ALL TIMES WHEN WORKING ON STEERING COLUMNS.

CAUTION: Disconnect negative (ground) cable from the battery before servicing any column component.

CAUTION: Do not attempt to remove the pivot pins to disassemble the tilting mechanism. Damage will occur.

DIAGNOSIS AND TESTING - STEERING COLUMN

For diagnosis of conditions relating to the steering column (Refer to 19 - STEERING - DIAGNOSIS AND TESTING) and (Refer to 19 - STEERING - DIAGNOSIS AND TESTING).

REMOVAL

NOTE: Before proceeding, (Refer to 19 - STEERING/COLUMN - WARNING).

(1) Make sure the front wheels of the vehicle are in the STRAIGHT AHEAD position before beginning the column removal procedure.
(2) Disconnect negative (ground) cable from the battery and isolate cable from battery terminal.
(3) Remove the lower shroud (Refer to 19 - STEERING/COLUMN/LOWER SHROUD - REMOVAL).
(4) Remove the traction off switch.
(5) Remove the upper shroud.
(6) Remove the cluster trim bezel (Refer to 23 - BODY/INSTRUMENT PANEL/CLUSTER BEZEL - REMOVAL).
(7) Remove the knee blocker (Refer to 23 - BODY/INSTRUMENT PANEL/STEERING COLUMN OPENING COVER - REMOVAL).
(8) Remove the parking brake handle link.
(9) Remove the knee blocker reinforcement (Refer to 23 - BODY/INSTRUMENT PANEL/KNEE BLOCKER - REMOVAL).
(10) Remove the airbag (Refer to 8 - ELECTRICAL/RESTRAINTS/DRIVER AIRBAG - REMOVAL).
(11) Remove the steering wheel retaining nut.
(12) Remove the vibration damper weight.
(13) Remove the steering wheel (Refer to 19 - STEERING/COLUMN/STEERING WHEEL - REMOVAL). (Fig. 3)
(14) Disconnect the wiring harness connectors from the clockspring, multi-function switch, halo lamp, SKIM module, ignition switch and BTSI solenoid.

COLUMN (Continued)

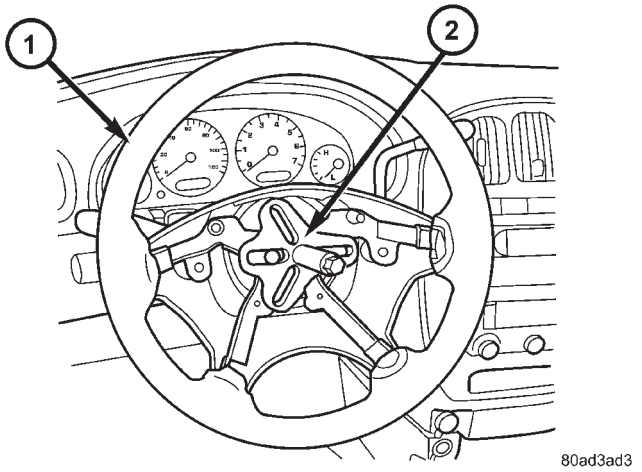

Fig. 3 STEERING WHEEL REMOVAL

1 - STEERING WHEEL
2 - PULLER

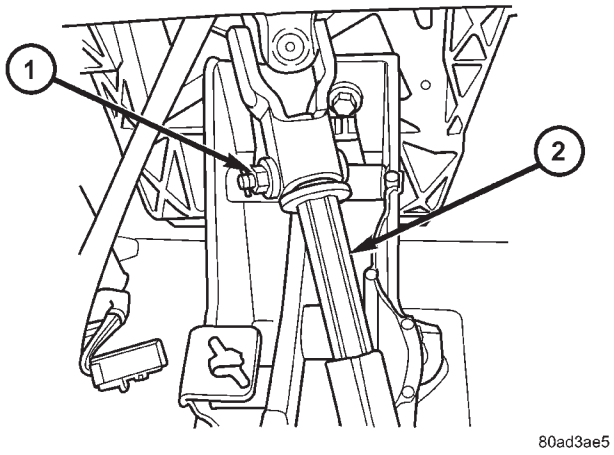

Fig. 5 PINCH BOLT

1 - PINCH BOLT
2 - STEERING COLUMN

(15) Disconnect the shift cable at the lever. (Fig. 4)

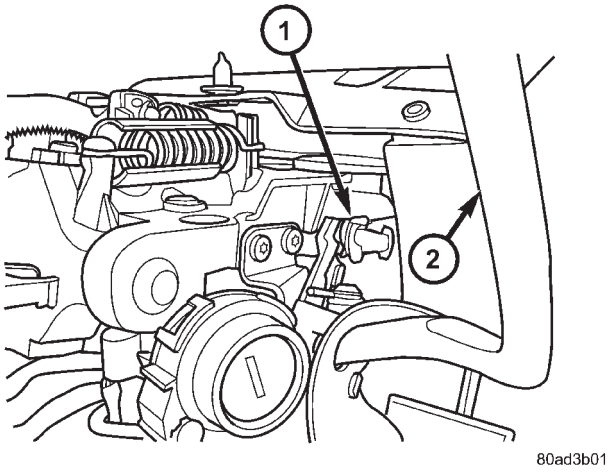

Fig. 4 SHIFT CABLE MOUNTING

1 - SHIFT CABLE MOUNT
2 - SHIFT LEVER

(16) Remove the pinch side clip, then remove the cable from the bracket on the column.

(17) Remove the pinch bolt coupling. (Fig. 5)

(18) Loosen the two lower mounting nuts.

(19) Remove the two upper mounting nuts

(20) Remove the steering column.

(21) Remove the clockspring (Refer to 8 - ELECTRICAL/RESTRAINTS/CLOCKSPRING - REMOVAL). (Fig. 6)

(22) Remove the mounting plate with the multifunction switch.

(23) Remove the halo-lamp.

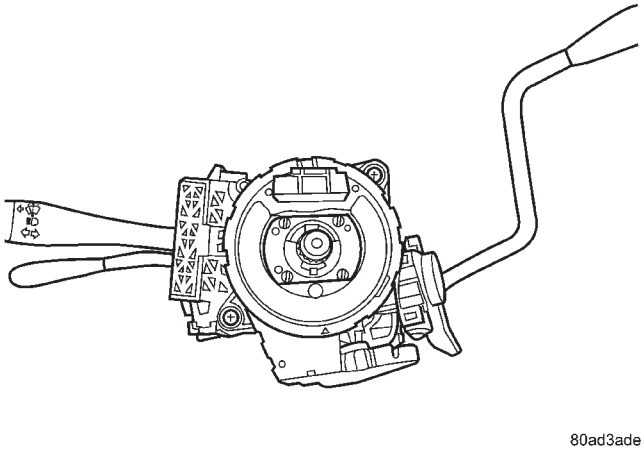

Fig. 6 CLOCKSPRING

(24) Remove the ignition key cylinder (Refer to 19 - STEERING/COLUMN/KEY/LOCK CYLINDER - REMOVAL).

(25) Remove the BTSI.

INSTALLATION

To service the steering wheel components or the airbag (Refer to 8 - ELECTRICAL/RESTRAINTS/DRIVER AIRBAG - REMOVAL). Follow all WARNINGS AND CAUTIONS.

(1) Make sure the front wheels of the vehicle are still in the STRAIGHT AHEAD position before beginning the column installation procedure.

(2) Install the BTSI.

(3) Install the ignition key cylinder (Refer to 19 - STEERING/COLUMN/KEY/LOCK CYLINDER - INSTALLATION).

(4) Install the halo-lamp.

COLUMN (Continued)

(5) Install the mounting plate with the multi-function switch.

(6) Install the clockspring (Refer to 8 - ELECTRICAL/RESTRAINTS/CLOCKSPRING - INSTALLATION).

(7) Install the steering column to the vehicle.

(8) Install the two upper mounting nuts

(9) Tighten the two lower mounting nuts and the two upper mounting nuts. Tighten to 12 N·m (105 in. lbs.).

(10) Install the coupling onto the intermediate shaft and install the pinch bolt. Tighten the pinch bolt to 28 N·m (250 in. lbs.).

(11) Install the cable from the bracket on the column, then install the pinch side clips.

(12) Reconnect the shift cable at the lever.

(13) Reconnect the wiring harness connectors to the clockspring, multi-function switch, halo lamp, SKIM module, ignition switch and BTSI solenoid.

(14) Install the steering wheel (Refer to 19 - STEERING/COLUMN/STEERING WHEEL - INSTALLATION).

(15) Install the vibration damper weight.

(16) Install the steering wheel retaining nut. Tighten the nut to 61 N·m (45 ft. lbs.)

(17) Install the airbag (Refer to 8 - ELECTRICAL/RESTRAINTS/DRIVER AIRBAG - INSTALLATION).

(18) Install the knee blocker reinforcement (Refer to 23 - BODY/INSTRUMENT PANEL/KNEE BLOCKER - INSTALLATION).

(19) Install the parking brake handle link.

(20) Install the knee blocker (Refer to 23 - BODY/INSTRUMENT PANEL/STEERING COLUMN OPENING COVER - INSTALLATION).

(21) Install the cluster trim bezel (Refer to 23 - BODY/INSTRUMENT PANEL/CLUSTER BEZEL - INSTALLATION).

(22) Install the upper shroud (Refer to 19 - STEERING/COLUMN/LOWER SHROUD - INSTALLATION).

(23) Install the traction off switch.

(24) Install the lower shroud.

SPECIFICATIONS

COLUMN TORQUE

DESCRIPTION	N·m	Ft. Lbs.	In. Lbs.
Steering Wheel Retaining Nut	61	45	—
Steering Column Mounting Bracket Attaching Nuts	12	—	105
Steering Column Coupling Pinch Bolt	28	—	250
Steering Column Airbag Module Attaching Nuts	11	—	100

IGNITION SWITCH

REMOVAL

The ignition switch attaches to the lock cylinder housing on the end opposite the lock cylinder (Fig. 7). For ignition switch terminal and circuit identification, refer to the appropriate wiring information. The wiring information includes wiring diagrams, proper wire and connector repair procedures, further details on wire harness routing and retention, as well as pin-out and location views for the various wire harness connectors, splices and grounds.

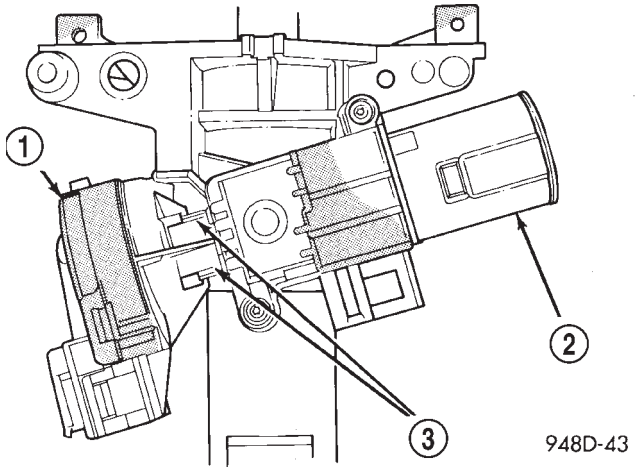

Fig. 7 Ignition Switch—Viewed From Below Column

1 - IGNITION SWITCH
2 - LOCK CYLINDER HOUSING
3 - RETAINING TABS

(1) Disconnect negative cable from battery.
(2) Remove steering column cover retaining screws (Fig. 8).

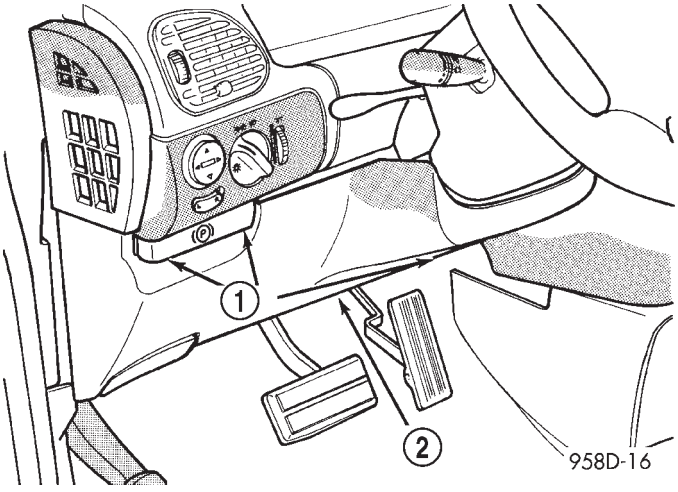

Fig. 8 Steering Column Cover

1 - SCREWS
2 - STEERING COLUMN COVER

(3) Remove parking brake release cable from handle (Fig. 9).

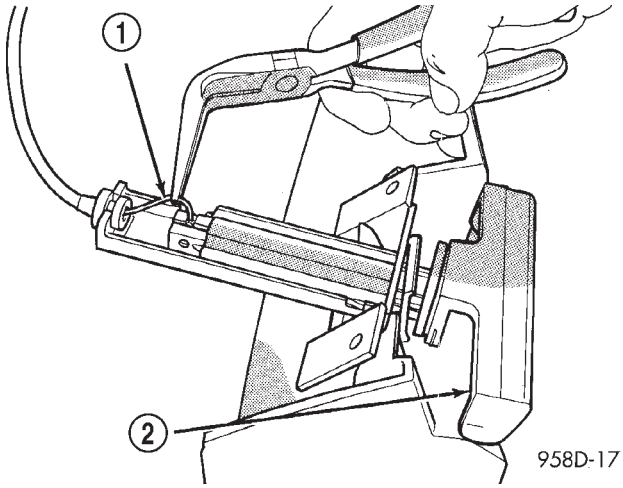

Fig. 9 Parking Brake Release Cable

1 - PARKING BRAKE CABLE
2 - PARKING BRAKE HANDLE

(4) Remove screws holding steering column shrouds (Fig. 10)and remove lower shroud.

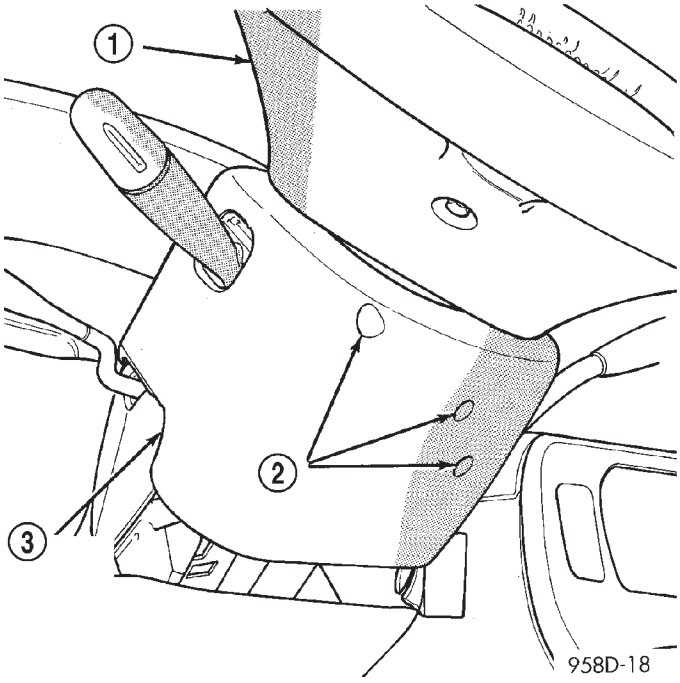

Fig. 10 Steering Column Shroud Screws

1 - STEERING WHEEL
2 - SCREWS
3 - LOWER STEERING COLUMN SHROUD

IGNITION SWITCH (Continued)

(5) Place key cylinder in RUN position. Depress lock cylinder retaining tab and remove key cylinder (Fig. 11).

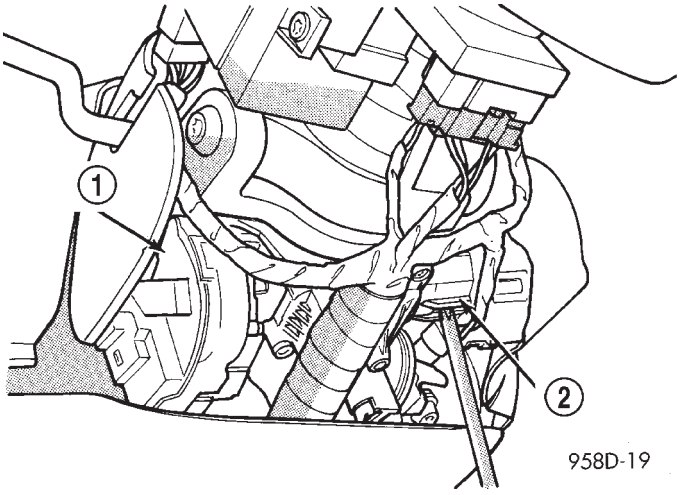

Fig. 11 Lock Cylinder Retaining Tab

1 - IGNITION SWITCH
2 - RETAINING TAB

(6) Remove ignition switch mounting screw (Fig. 12) with a #10 Torx® tamper proof bit.

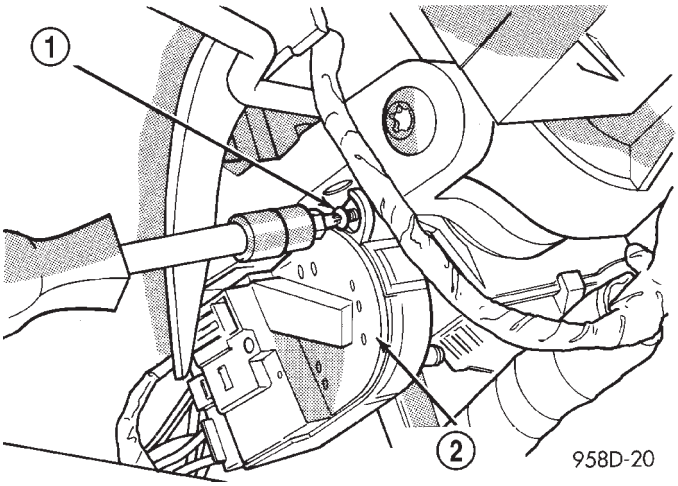

Fig. 12 Ignition Switch Mounting Screw

1 - MOUNTING SCREW
2 - IGNITION SWITCH

(7) Depress retaining tab (Fig. 8) or (Fig. 13) and gently pry ignition switch from steering column (Fig. 14).

(8) Disconnect electrical connectors from ignition switch and remove switch (Fig. 15).

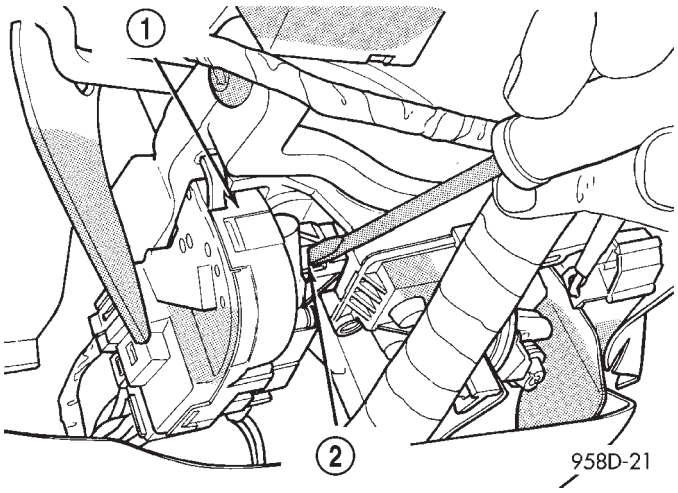

Fig. 13 Ignition Switch Retaining Tab

1 - IGNITION SWITCH
2 - RETAINING TAB

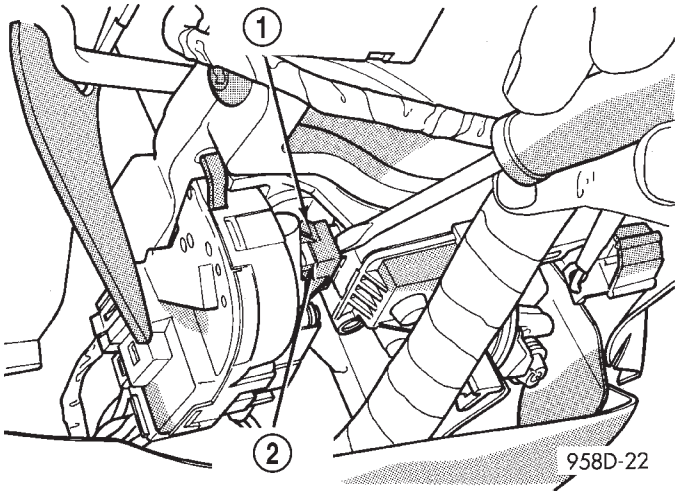

Fig. 14 Removing Ignition Switch

1 - IGNITION SWITCH
2 - RETAINING TAB

INSTALLATION

The ignition switch attaches to the lock cylinder housing on the end opposite the lock cylinder (Fig. 7) . For ignition switch terminal and circuit identification, refer to the Wiring Diagrams section.

(1) Ensure the ignition switch is in the RUN position and the actuator shaft in the lock housing is in the RUN position.

(2) Install electrical connectors to ignition switch.

IGNITION SWITCH (Continued)

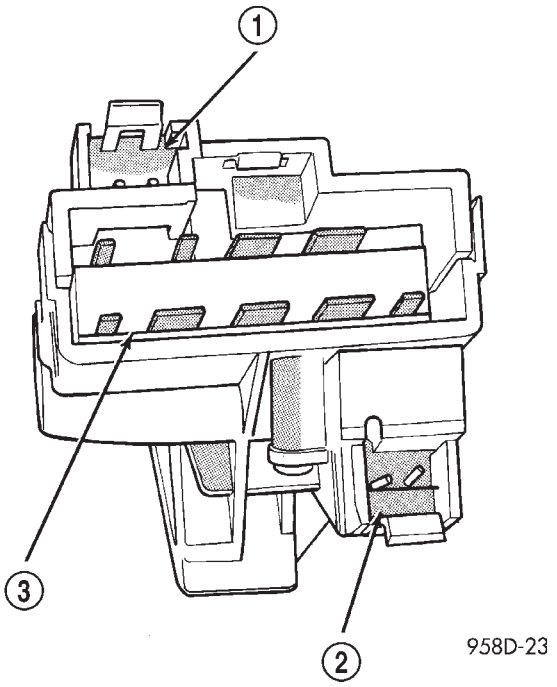

Fig. 15 Ignition Switch Connectors

1 - KEY IN SWITCH
2 - PRNDL SWITCH
3 - IGNITION SWITCH

(3) Carefully install the ignition switch. The switch will snap over the retaining tabs (Fig. 16) . Install mounting screw (Fig. 12).

(4) Install upper and lower shrouds.

(5) Install key cylinder (cylinder retaining tab will depress only in the RUN position).

(6) Connect negative cable to battery.

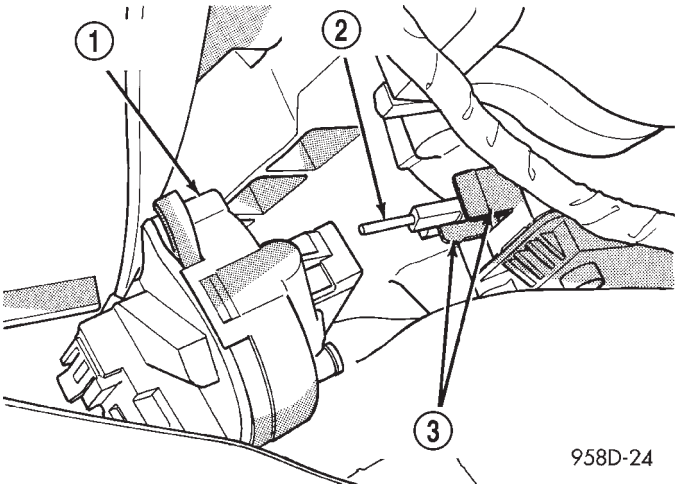

Fig. 16 Ignition Switch Installation

1 - IGNITION SWITCH
2 - ACTUATOR SHAFT
3 - RETAINING TABS

(7) Check for proper operation of ignition switch and key-in warning switch.

LOCK CYLINDER HOUSING

DESCRIPTION - IGNITION INTERLOCK

All vehicles equipped with automatic transaxles have an interlock system. The system prevents shifting the vehicle out of Park unless the ignition lock cylinder is in the Unlock, Run or Start position. In addition, the operator cannot rotate the key to the lock position unless the shifter is in the park position. On vehicles equipped with floor shift refer to the - Transaxle for Automatic Transmission Shifter/ Ignition Interlock.

REMOVAL

(1) Disconnect negative (ground) cable from the battery and isolate cable from battery terminal.

(2) Remove the screws attaching the lower steering column cover to the instrument panel (Fig. 17), then remove the cover from the lower instrument panel.

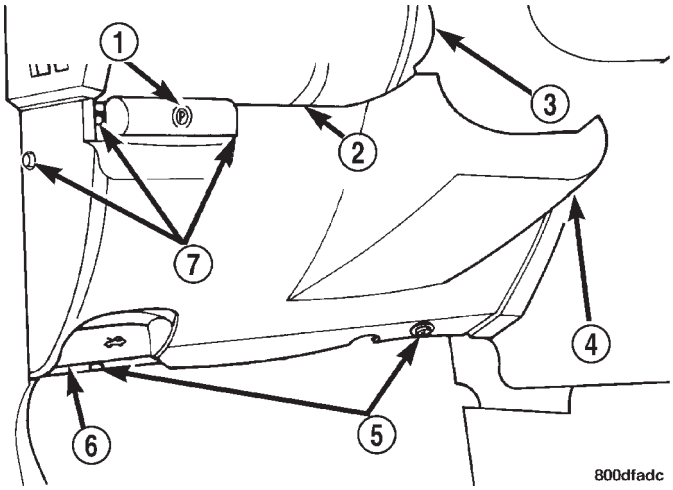

Fig. 17 Lower Steering Column Cover Attachment

1 - PARK BRAKE RELEASE HANDLE
2 - STEERING COLUMN COVER
3 - STEERING COLUMN
4 - ATTACHING CLIP
5 - ATTACHING SCREWS
6 - HOOD RELEASE LEVER
7 - ATTACHING SCREWS

LOCK CYLINDER HOUSING (Continued)

(3) Remove the parking brake release cable from the parking brake release lever (Fig. 18), then move the lower steering column cover out of the way.

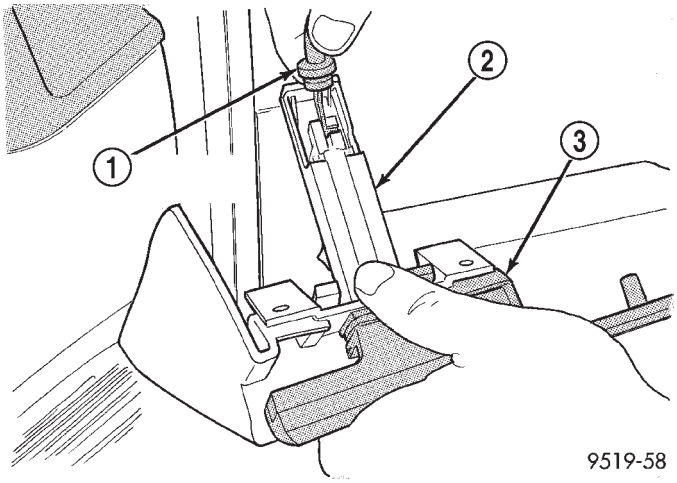

Fig. 18 Parking Brake Release Cable Attachment To Release Lever

1 - PARK BRAKE PEDAL RELEASE CABLE
2 - PARK BRAKE RELEASE LEVER
3 - LOWER STEERING COLUMN COVER

(4) Remove the 10 bolts attaching the lower steering column cover liner to the instrument panel (Fig. 19), then remove the lower steering column cover liner.

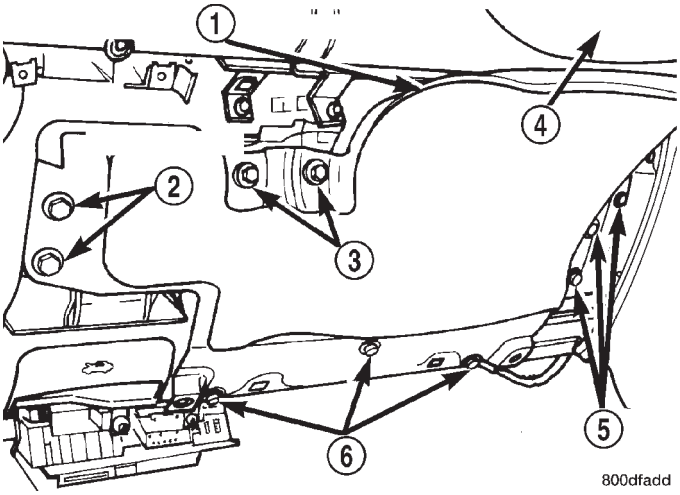

Fig. 19 Liner Attachment

1 - STEERING COLUMN COVER LINER
2 - ATTACHING BOLTS
3 - ATTACHING BOLTS
4 - STEERING COLUMN
5 - ATTACHING BOLTS
6 - ATTACHING BOLTS

(5) Remove the 3 screws attaching the upper and lower shrouds to the steering column (Fig. 20), then separate and remove both shrouds.

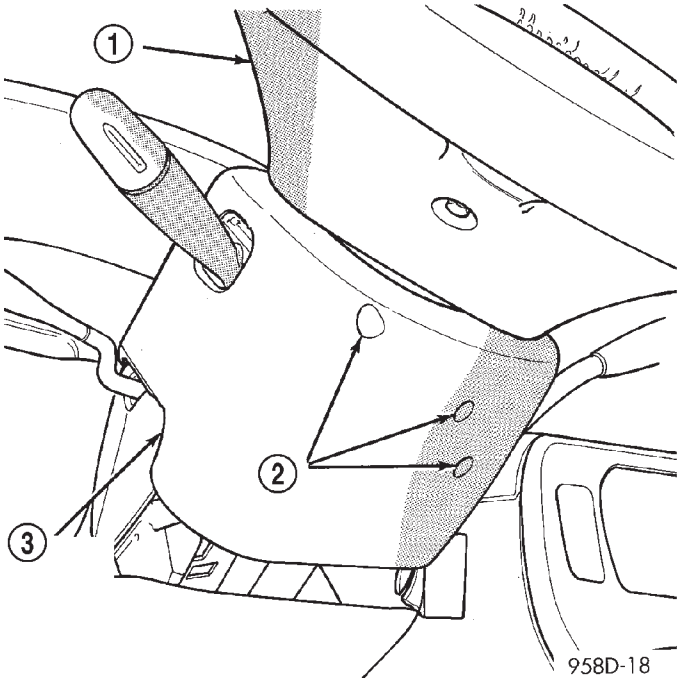

Fig. 20 Steering Column Shroud Screws

1 - STEERING WHEEL
2 - SCREWS
3 - LOWER STEERING COLUMN SHROUD

(6) Remove the trim bezel on the instrument panel above the steering column. The trim bezel is mounted to the instrument panel using 2 screws (one on each side of the column) and retaining clips.

(7) Remove the 2 screws securing the steering column fixed shroud to the steering column (Fig. 21), then remove the shroud.

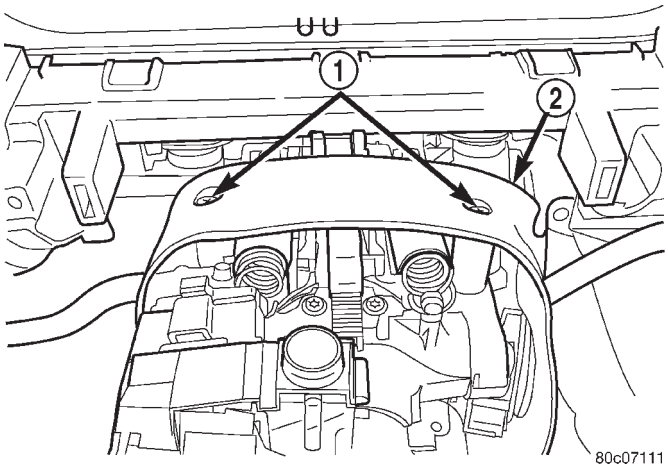

Fig. 21 Fixed Shroud Mounting

1 - SCREWS
2 - SHROUD

LOCK CYLINDER HOUSING (Continued)

(8) Remove the two screws holding the metal cover in place below the shifter/ignition interlock linkage (Fig. 22), then remove the cover.

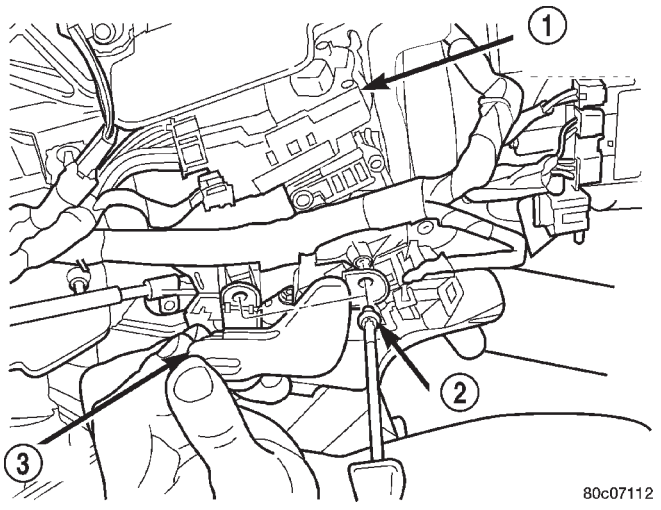

Fig. 22 Cover Removal/Installation

1 - IGNITION SWITCH
2 - SCREW
3 - COVER

(9) Disconnect the shifter/ignition interlock link from the lever on the lock cylinder housing (Fig. 23).

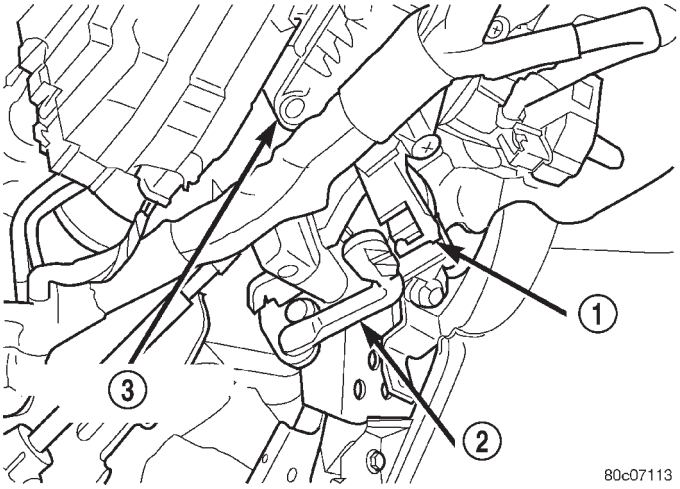

Fig. 23 Shifter/Ignition Interlock Linkage Disconnected

1 - LEVER
2 - LINK
3 - LOCK CYLINDER HOUSING

(10) Remove the key cylinder. To do this:

- Turn the key placing the key cylinder in the ON position.
- Depress and hold the retaining tab on the bottom of the lock cylinder housing (Fig. 24).
- Pull the key cylinder straight out of the lock cylinder housing.

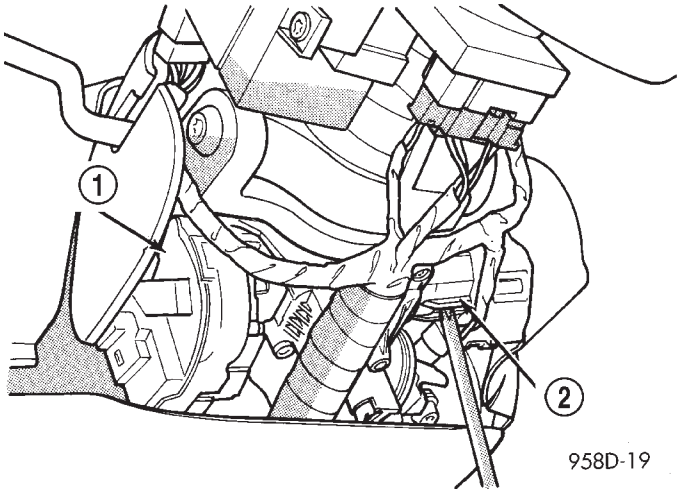

Fig. 24 Cylinder Retaining Tab

1 - IGNITION SWITCH
2 - RETAINING TAB

(11) Remove the vehicle wiring harness connector from the key cylinder halo lamp (Fig. 25).

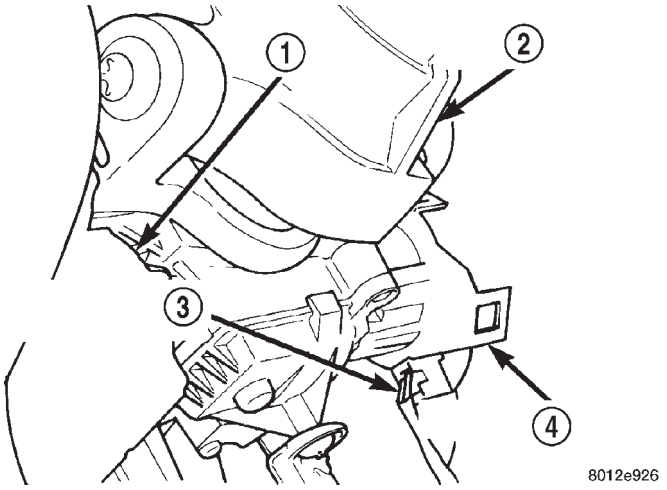

Fig. 25 Wiring Harness Connection To Halo Lamp

1 - IGNITION SWITCH
2 - STEERING COLUMN ASSEMBLY
3 - WIRING HARNESS CONNECTOR
4 - IGNITION SWITCH HALO LIGHT

(12) Remove the key cylinder halo lamp from the lock cylinder housing.

LOCK CYLINDER HOUSING (Continued)

(13) Remove the ignition switch mounting screw (Fig. 26).

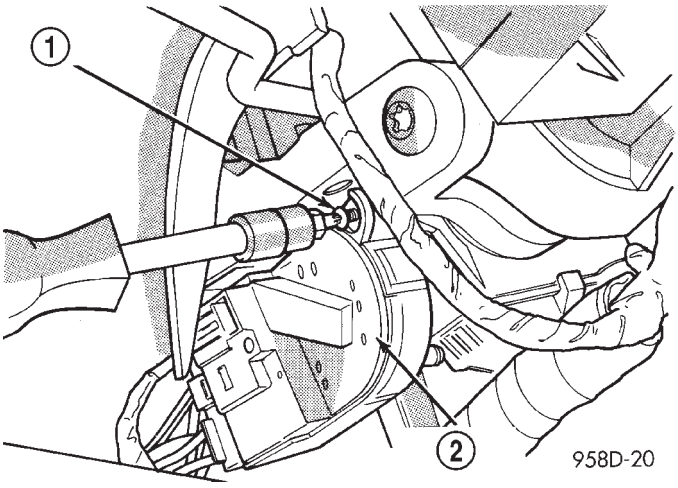

Fig. 26 Ignition Switch Mounting Screw

1 - MOUNTING SCREW
2 - IGNITION SWITCH

(14) Depress the two retaining tabs (Fig. 27), then remove the ignition switch from the lock cylinder housing.

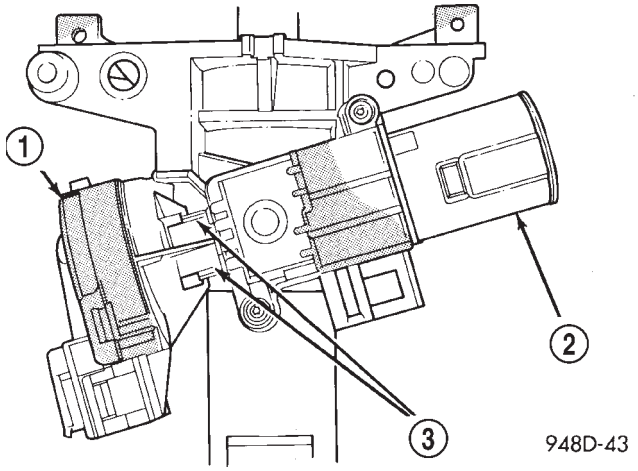

Fig. 27 Ignition Switch Retaining Tabs

1 - IGNITION SWITCH
2 - LOCK CYLINDER HOUSING
3 - RETAINING TABS

(15) Disconnect both tilt mechanism springs from their mounting posts on the tilt housing (Fig. 28), then move them to the side out of the way (Fig. 29).

(16) While supporting the lock cylinder housing, remove both mounting screws securing the lock cylinder housing to the column (Fig. 29).

(17) Remove the lock cylinder housing from the bottom of the steering column.

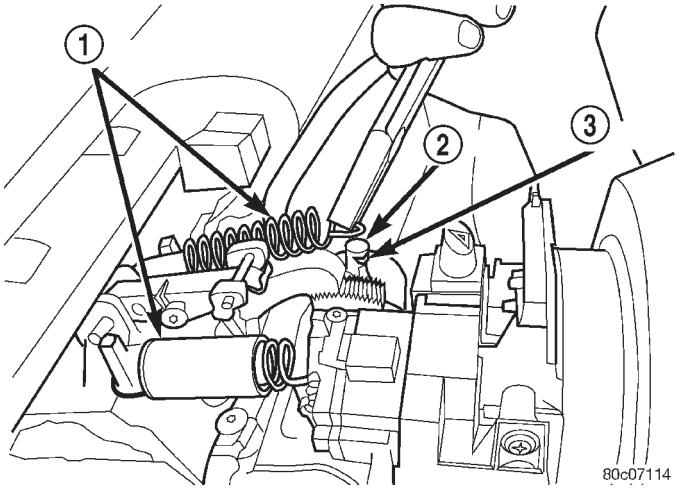

Fig. 28 Tilt Mechanism Spring Removal/Installation

1 - SPRINGS
2 - POST
3 - GROOVE

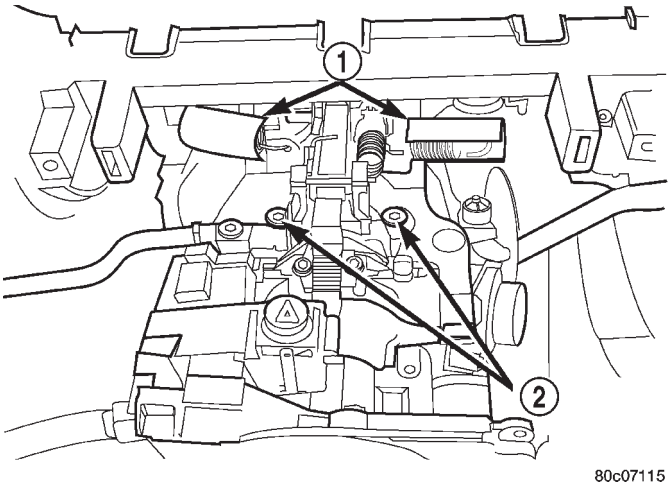

Fig. 29 Lock Cylinder Housing Mounting Screw Location

1 - SPRINGS
2 - MOUNTING SCREWS

INSTALLATION

(1) Install the lock cylinder housing in the bottom of the steering column lining up the mounting holes.

(2) Install the self-tapping lock cylinder housing mounting screws through the top of the column into the housing (Fig. 29) . Tighten the two mounting screws to a torque of 11 N·m (100 in. lbs.).

(3) Connect both tilt mechanism springs back onto their mounting posts making sure the spring hooks engage the grooves in the posts (Fig. 28) .

(4) Ensure that the ignition switch and the actuator shaft in the lock cylinder housing are in the ON position.

LOCK CYLINDER HOUSING (Continued)

(5) Carefully install the ignition switch over the actuator shaft (Fig. 30) . The switch will snap over the retaining tabs on the housing.

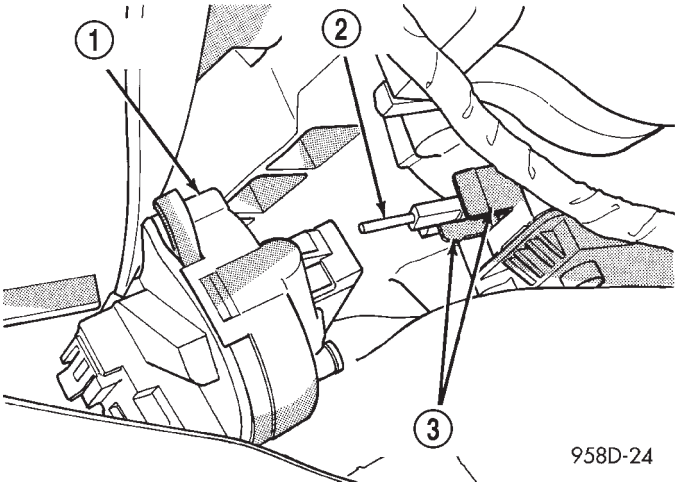

Fig. 30 Ignition Switch Installation

1 - IGNITION SWITCH
2 - ACTUATOR SHAFT
3 - RETAINING TABS

(6) Install the ignition switch mounting screw (Fig. 26) .

(7) Install the key cylinder halo lamp on the lock cylinder housing.

(8) Install the vehicle wiring harness connector onto the key cylinder halo lamp (Fig. 25) .

(9) Install the key cylinder (with key in it turned to the ON position) by sliding it straight into the lock cylinder housing aligning the retaining tab on the key cylinder with the hole in the lock cylinder housing.

(10) Turn the key to the OFF position and remove the key.

(11) Connect the shifter/ignition interlock link to the lever on the lock cylinder housing by aligning the retaining tab on the lever with the ramp on the link (Fig. 23) , then pushing the two together.

(12) Install the metal cover in place below the shifter/ignition interlock linkage using the two screws (Fig. 22) .

(13) Install the steering column fixed shroud on the steering column (Fig. 21) using its 2 mounting screws.

(14) Install the trim bezel on the instrument panel above the steering column. The trim bezel is mounted to the instrument panel using 2 screws (one on each side of the column) and retaining clips.

(15) Install the lower steering column shroud on the steering column. Install and securely tighten the center screw attaching the lower shroud to the tilt head on the column (Fig. 20) .

(16) Install the upper steering column shroud over the tilt head of the steering column snapping it into place on the lower shroud. Install and securely tighten the 2 remaining screws attaching the upper shroud to the lower shroud (Fig. 20) .

(17) Install the steering column cover liner on the instrument panel below the steering column (Fig. 19) . Install and securely tighten the 10 bolts attaching the steering column cover liner to the instrument panel.

(18) Install the parking brake pedal release cable on the parking brake release lever in the lower steering column cover (Fig. 18) .

(19) Install the lower steering column trim cover on the instrument panel below the steering column. Install and securely the screws attaching the lower steering column cover to the instrument panel (Fig. 17) .

(20) Connect the negative (ground) cable on the battery terminal.

KEY/LOCK CYLINDER

DESCRIPTION

The lock cylinder is inserted in the end of the housing opposite the ignition switch.

OPERATION

The ignition key rotates the cylinder to 5 different detents (Fig. 31) :

- Accessory
- Off (lock)
- Unlock
- On/Run
- Start

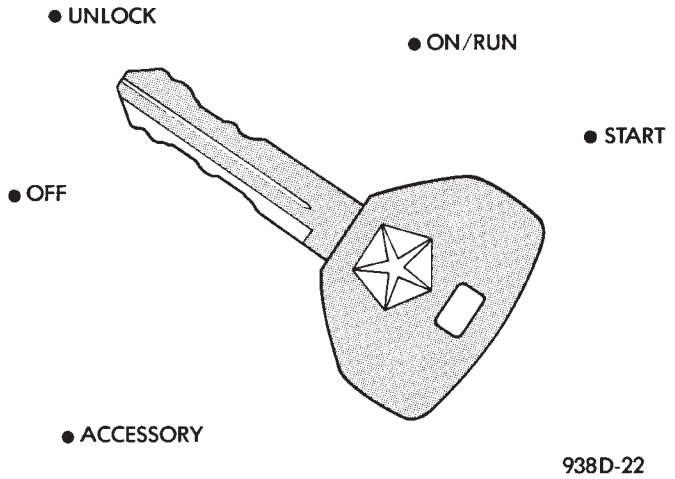

Fig. 31 Ignition Lock Cylinder Detents

KEY/LOCK CYLINDER (Continued)

REMOVAL

(1) Disconnect negative cable from battery.
(2) Remove steering column cover retaining screws.
(3) Remove screws holding steering column shrouds and remove lower shroud.
(4) Place key cylinder in RUN position. Depress lock cylinder retaining tab on the bottom of the lock housing and remove key cylinder.

INSTALLATION

(1) Install key in lock cylinder. Turn key to run position (retaining tab on lock cylinder can be depressed).
(2) The shaft at the end of the lock cylinder aligns with the socket in the end of the housing. To align the socket with the lock cylinder, ensure the socket is in the Run position (Fig. 32) .

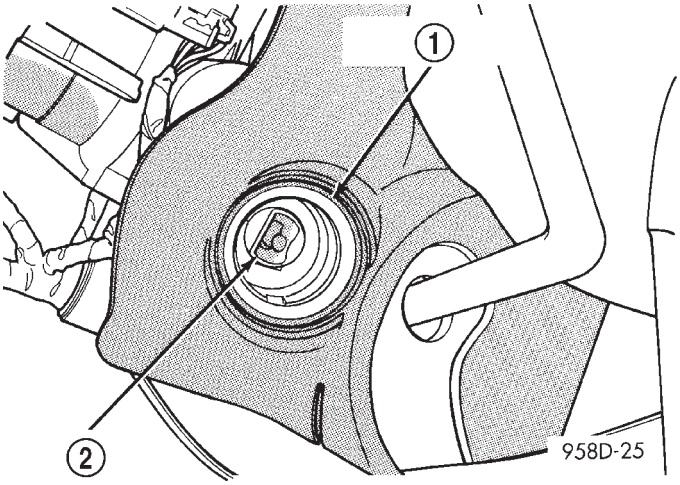

Fig. 32 Socket in Lock Cylinder Housing

1 - LOCK CYLINDER HOUSING
2 - SOCKET

(3) Align the lock cylinder with the grooves in the housing. Slide the lock cylinder into the housing until the tab sticks through the opening in the housing.
(4) Turn the key to the Off position. Remove the key.
(5) Install lower steering column shroud.
(6) Install steering column cover.
(7) Connect negative cable to battery.

GEAR SHIFT LEVER

REMOVAL

(1) Remove the knee blocker (Refer to 23 - BODY/INSTRUMENT PANEL/STEERING COLUMN OPENING COVER - REMOVAL).
(2) Remove the knee blocker reinforcement (Refer to 23 - BODY/INSTRUMENT PANEL/KNEE BLOCKER - REMOVAL).
(3) Remove the upper and lower shrouds (Refer to 19 - STEERING/COLUMN/LOWER SHROUD - REMOVAL).
(4) Remove the cluster trim bezel (Refer to 23 - BODY/INSTRUMENT PANEL/CLUSTER BEZEL - REMOVAL).
(5) Remove the fixed shroud from the column.
(6) Disconnect the electrical connector to the BTSI.
(7) Remove the two screws securing the BTSI to the steering column. (Fig. 33)

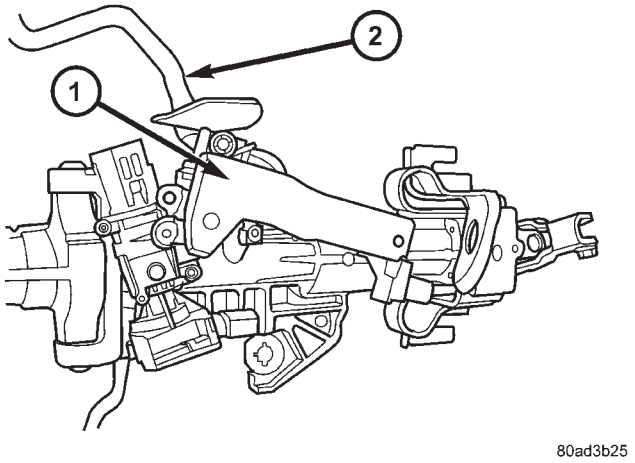

Fig. 33 SHIFT LEVER / B.T.S.I

1 - B.T.S.I.
2 - SHIFT LEVER

(8) Disconnect the SKIM electrical wire connector.
(9) Remove the SKIM from the steering column.
(10) Disconnect the autostick wiring connector (if equipped with autostick).
(11) Disconnect the shifter cable at the shifter.
(12) Remove the three screws securing the shifter to the steering column. (Fig. 34)
(13) Remove the shift lever from the column.

INSTALLATION

(1) Install the shifter cable to the shifter.
(2) Install the three screws securing the shifter to the steering column.
(3) Install the shifter cable at the handle.
(4) Install the SKIM to the steering column.
(5) Reconnect the SKIM electrical wire connector.
(6) Reconnect the autostick wiring connector (if equipped with autostick).
(7) Install the two screws securing the BTSI to the steering column.
(8) Reconnect the electrical connector to the BTSI.
(9) Install the fixed shroud to the column.

GEAR SHIFT LEVER (Continued)

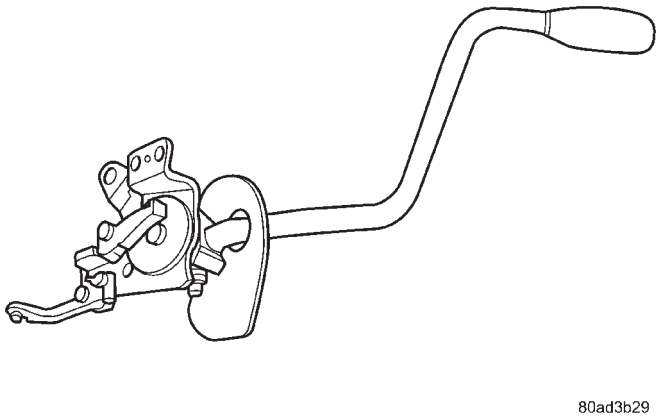

Fig. 34 SHIFT LEVER

(10) Install the cluster trim bezel (Refer to 23 - BODY/INSTRUMENT PANEL/CLUSTER BEZEL - INSTALLATION).

(11) Install the upper and lower shrouds (Refer to 19 - STEERING/COLUMN/LOWER SHROUD - INSTALLATION).

(12) Install the knee blocker reinforcement (Refer to 23 - BODY/INSTRUMENT PANEL/KNEE BLOCKER - INSTALLATION).

(13) Install the knee blocker (Refer to 23 - BODY/INSTRUMENT PANEL/STEERING COLUMN OPENING COVER - INSTALLATION).

SHROUD

REMOVAL

(1) Remove the three screws from the lower shroud.

(2) Unsnap and remove the lower shroud.

(3) Lift off upper shroud from the steering column. (Fig. 35)

INSTALLATION

(1) Install the upper shroud in place over the steering column.

(2) Snap the lower shroud to the upper shroud.

(3) Install and tighten the three retaining screws. Tighten the screws to 11 N·m (100 in. lbs.). (Fig. 35)

STEERING WHEEL

REMOVAL

NOTE: Before proceeding, (Refer to 19 - STEERING/COLUMN - WARNING).

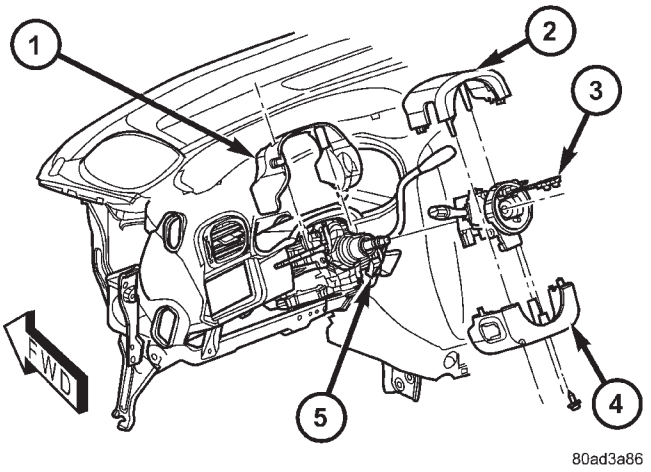

Fig. 35 UPPER AND LOWER SHROUDS

1 - FIXED SHROUD
2 - UPPER SHROUD
3 - CLOCKSPRING
4 - LOWER SHROUD
5 - STEERING COLUMN

(1) Rotate key cylinder to the lock position and remove key. Rotate the steering wheel a half turn to the left until the steering column lock engages keeping the steering column in the locked position (Fig. 36).

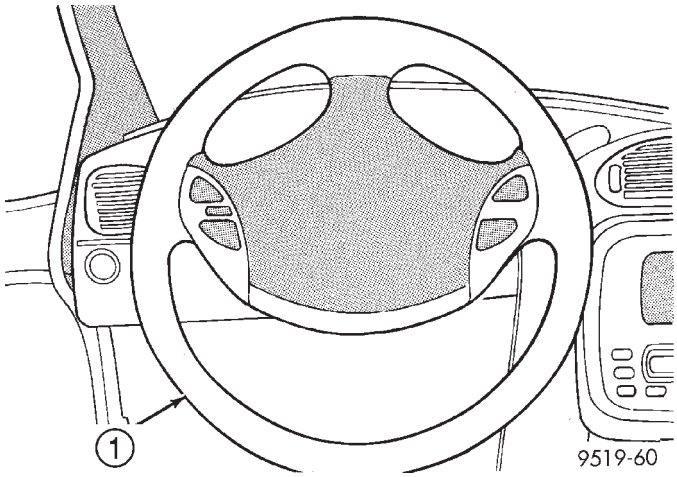

Fig. 36 Steering Wheel In Locked Position

1 - STEERING WHEEL

(2) Remove the 3 bolts (one in each spoke of the steering wheel) attaching the airbag module to the steering wheel. Lift the airbag module from the steering wheel.

(3) Disconnect wiring connectors from the airbag, horn switch wire, and speed control switches (Fig. 37). Remove the wiring harness routing clip from the airbag module studs.

STEERING WHEEL (Continued)

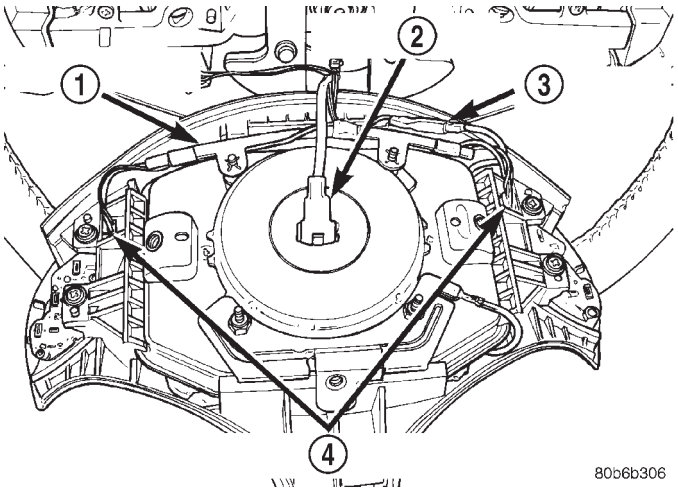

Fig. 37 Airbag Module Wiring Connections

1 - WIRING HARNESS ROUTING CLIP
2 - AIRBAG MODULE CONNECTOR
3 - HORN SWITCH CONNECTOR
4 - SPEED CONTROL SWITCH CONNECTORS

If the steering wheel is equipped with remote radio controls, disconnect the connector from the clockspring. Release the connector by depressing the tang as shown (Fig. 38), then slide the connector apart.

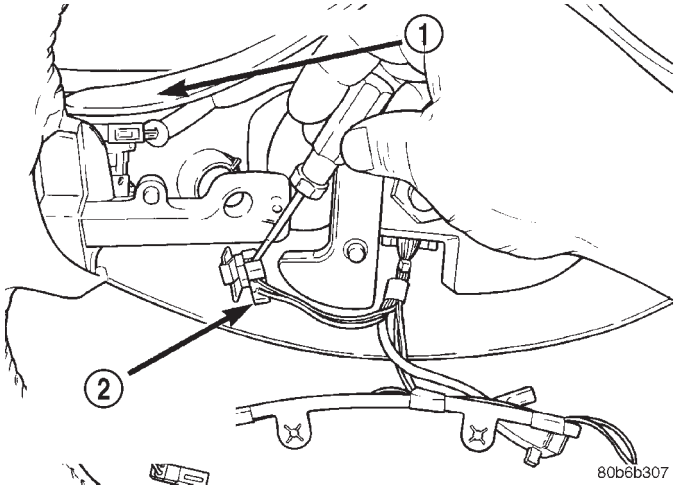

Fig. 38 Releasing Remote Radio Control Connector

1 - STEERING WHEEL
2 - REMOTE RADIO CONTROL CONNECTOR

(4) Remove the steering wheel retaining nut (Fig. 39) from the steering column shaft.

(5) Remove the steering wheel damper (Fig. 39) from the steering wheel.

CAUTION: Do not bump or hammer on steering column or steering column shaft when removing steering wheel from steering column shaft.

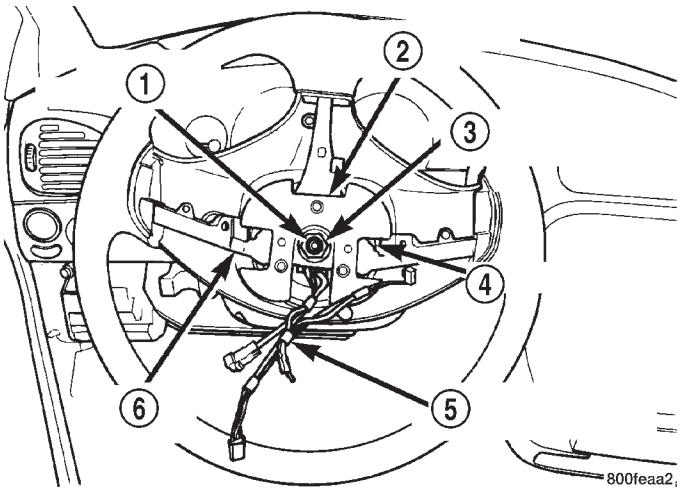

Fig. 39 Steering Wheel Retaining Nut

1 - STEERING COLUMN SHAFT
2 - STEERING WHEEL DAMPER
3 - STEERING WHEEL RETAINING NUT
4 - CLOCKSPRING
5 - CLOCKSPRING WIRING HARNESS
6 - STEERING WHEEL

CAUTION: When installing steering wheel puller bolts in steering wheel, (Fig. 40) do not thread bolt into steering wheel more than a half inch. If bolts are threaded into the steering wheel more than a half inch they will contact and damage the clockspring.

(6) Remove the steering wheel from steering column shaft using a steering wheel puller (Fig. 40).

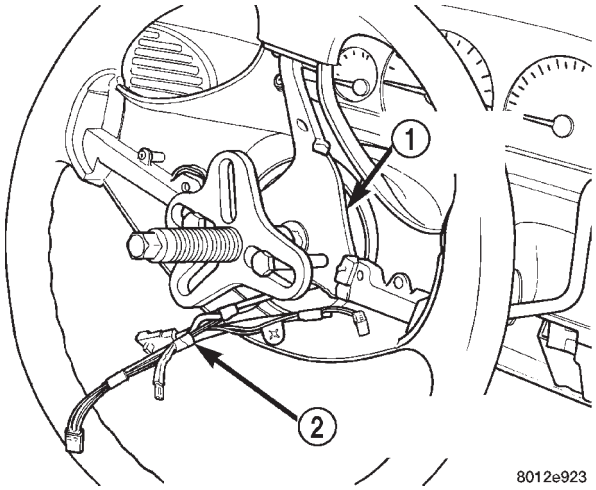

Fig. 40 Removing Steering Wheel From Steering Column Shaft

1 - STEERING WHEEL
2 - CLOCK SPRING WIRING HARNESS

STEERING WHEEL (Continued)

INSTALLATION

CAUTION: Do not force steering wheel onto steering column shaft by driving it on. Pull steering wheel down onto shaft using only the steering wheel retaining nut.

(1) Align master splines on steering wheel and steering shaft, and flats on steering wheel with formations on clockspring. Install the steering wheel on the steering column shaft. All wiring leads from the clockspring must be routed as shown (Fig. 41).

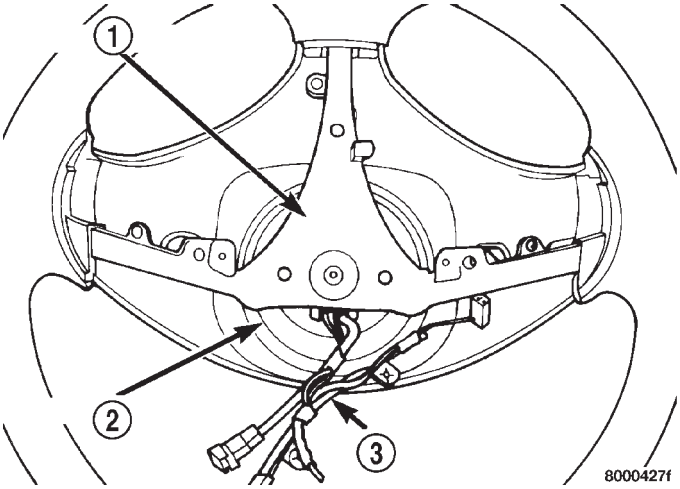

Fig. 41 Steering Wheel And Clock Spring Wire Routing

1 - STEERING WHEEL
2 - CLOCK SPRING
3 - CLOCK SPRING WIRING LEADS

NOTE: Before installing the damper on the steering wheel, inspect the damper to ensure the rubber isolator on the damper is not deteriorated or damaged. If the damper is installed with a damaged isolator a buzz, squeak or rattle condition may develop.

(2) Install the steering wheel damper on the steering wheel. When damper is installed, it must be positioned on the steering wheel as shown in (Fig. 39).

(3) Install the steering wheel retaining nut. Tighten the steering wheel retaining nut to a torque of 61 N·m (45 ft. lbs.).

(4) Connect the wiring lead from the clockspring to the remote radio control connector (Fig. 38).

(5) Install the wiring leads from the clockspring on the airbag, horn switch wire, and speed control switches (Fig. 37). Attach the wire routing clip to the studs on the airbag module.

(6) Install the airbag module in the steering wheel.

(7) Install the 3 bolts (1 in each spoke of the steering wheel) attaching the airbag module to the steering wheel. Tighten the 3 airbag module attaching nuts to a torque of 11 N·m (100 in. lbs.).

GEAR

TABLE OF CONTENTS

	page
GEAR	
DESCRIPTION	26
OPERATION	26
WARNING	
WARNINGS AND CAUTIONS	26
REMOVAL	
REMOVAL - LHD GEAR	26
REMOVAL - RHD GEAR	29
INSTALLATION	
INSTALLATION - LHD GEAR	32
INSTALLATION - RHD GEAR	33
SPECIAL TOOLS	
POWER STEERING GEAR	34
OUTER TIE ROD	
REMOVAL	34
INSTALLATION	34

GEAR

DESCRIPTION

This vehicle is equipped with a rack and pinion power steering gear (Fig. 1). It is mounted to the underside of the front suspension cradle/crossmember.

The steering column is attached to the gear through the use of an intermediate shaft and couplers. The outer ends of the power steering gear's outer tie rods connect to the steering knuckles.

NOTE: The power steering gear should NOT be serviced or adjusted unless DaimlerChrysler Corporation authorizes. If a malfunction or oil leak occurs, the complete steering gear should be replaced. Only the outer tie rods may be replaced separately from the rest of the gear.

OPERATION

Turning of the steering wheel is converted into linear (side-to-side) travel through the meshing of the helical pinion teeth with the rack teeth in the steering gear. This travel pushes and pulls the tie rods to change the direction of the vehicle's front wheels.

Power assist steering provided by the power steering pump is controlled by an open center, rotary type control valve which directs oil from the pump to either side of the integral rack piston upon demand.

Road feel is controlled by the diameter of a torsion bar which initially steers the vehicle. As required steering effort increases, as in a turn, the torsion bar twists, causing relative rotary motion between the rotary valve body and the valve spool. This movement directs oil behind the integral rack piston which, in turn, builds hydraulic pressure and assists in the turning effort.

Manual steering control of the vehicle can be maintained if power steering assist is lost. However, under this condition, steering effort is significantly increased.

WARNING

WARNINGS AND CAUTIONS

WARNING: POWER STEERING FLUID, ENGINE PARTS AND EXHAUST SYSTEM MAY BE EXTREMELY HOT IF ENGINE HAS BEEN RUNNING. DO NOT START ENGINE WITH ANY LOOSE OR DISCONNECTED HOSES. DO NOT ALLOW HOSES TO TOUCH HOT EXHAUST MANIFOLD OR CATALYST.

WARNING: FLUID LEVEL SHOULD BE CHECKED WITH THE ENGINE OFF TO PREVENT PERSONAL INJURY FROM MOVING PARTS.

CAUTION: When the system is open, cap all open ends of the hoses, power steering pump fittings or power steering gear ports to prevent entry of foreign material into the components.

REMOVAL

REMOVAL - LHD GEAR

(1) Remove cap from power steering fluid reservoir.

(2) Using a siphon pump, remove as much fluid as possible from the power steering fluid reservoir. **Use care not to damage the filter mesh below the fluid surface.**

GEAR (Continued)

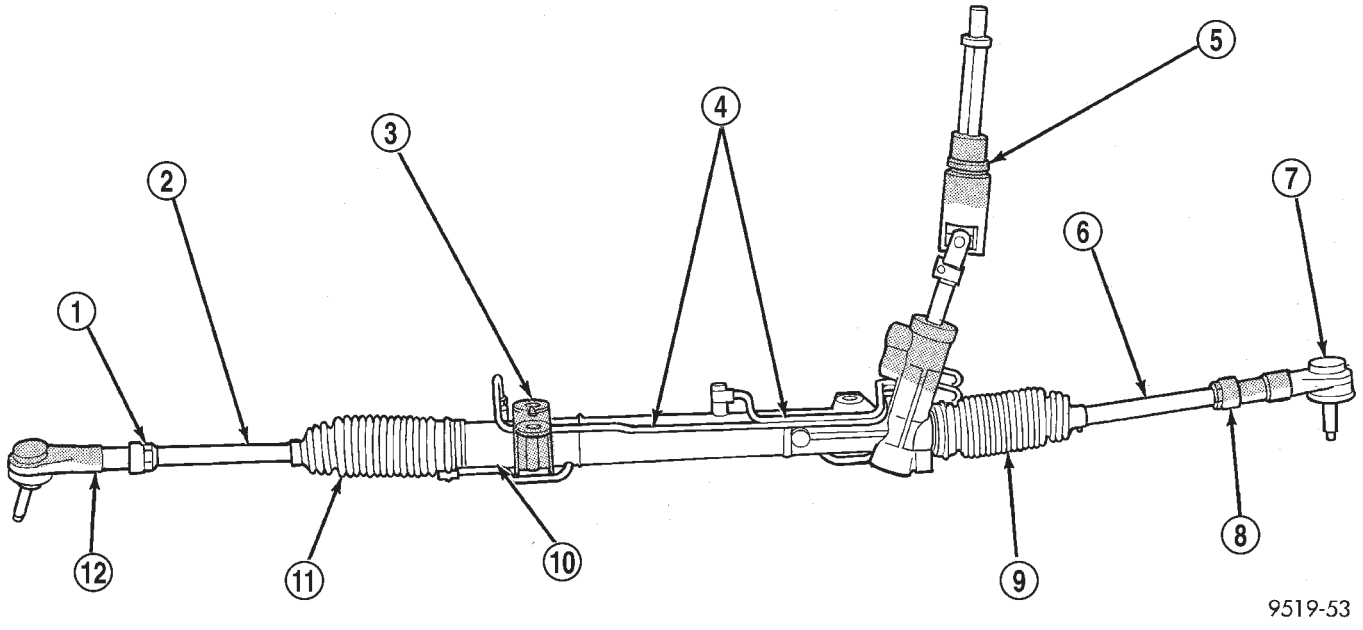

Fig. 1 Power Steering Gear (Typical)

1 - TIE ROD JAM NUT
2 - INNER TIE ROD
3 - STEERING GEAR MOUNTING BRACKET
4 - POWER STEERING GEAR FLUID LINES
5 - STEERING COLUMN INTERMEDIATE SHAFT
6 - INNER TIE ROD
7 - OUTER TIE ROD
8 - TIE ROD JAM NUT
9 - BOOT/BELLOWS
10 - STEERING GEAR BOOT BREATHER TUBE
11 - BOOT/BELLOWS
12 - OUTER TIE ROD

CAUTION: Locking the steering column in the straight-ahead position will prevent the clockspring from being accidentally over-extended when the steering column is disconnected from the intermediate steering coupler.

(3) Position the steering wheel in the STRAIGHT-AHEAD position. Lock the steering wheel in place using a steering wheel holding tool.

(4) With the vehicle on the ground, disconnect the steering column shaft coupler from the steering gear intermediate coupler (Fig. 2).

(5) Raise vehicle. (Refer to LUBRICATION & MAINTENANCE/HOISTING - STANDARD PROCEDURE)

(6) Remove front wheel and tire assemblies.

(7) Remove front emissions vapor canister. (Refer to 25 - EMISSIONS CONTROL/EVAPORATIVE EMISSIONS/VAPOR CANISTER - REMOVAL)

(8) Remove a single hose at power steering cooler and allow fluid to drain.

(9) Remove 2 bolts attaching power steering cooler to cradle crossmember reinforcement (Fig. 3).

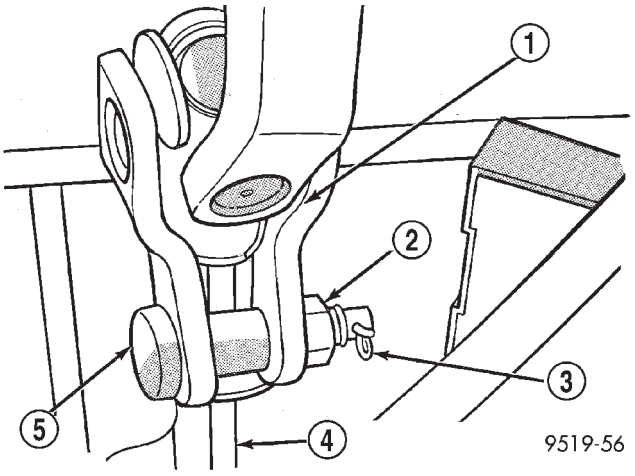

Fig. 2 Steering Column Shaft To Intermediate Shaft Attachment

1 - STEERING COLUMN SHAFT COUPLER
2 - NUT
3 - SAFETY PIN
4 - INTERMEDIATE SHAFT
5 - PINCH BOLT

GEAR (Continued)

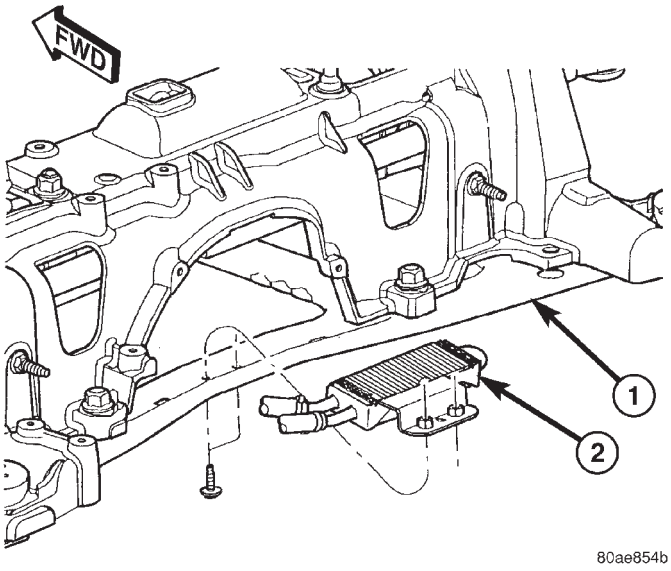

Fig. 3 Power Steering Cooler

1 - CRADLE CROSSMEMBER REINFORCEMENT
2 - POWER STEERING COOLER

(10) On both sides of vehicle, remove nut attaching outer tie rod end to steering knuckle (Fig. 4). **Remove nut by holding tie rod end stud with a socket while loosening and removing nut with wrench.**

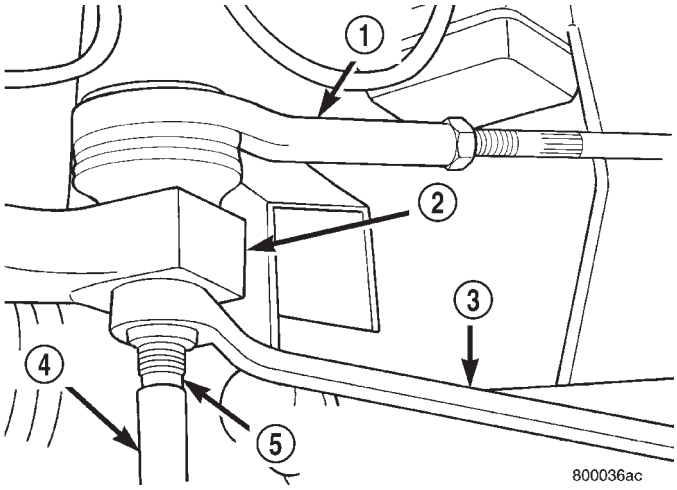

Fig. 4 Removing/Installing Tie Rod End Attaching Nut

1 - TIE ROD END
2 - STEERING KNUCKLE
3 - WRENCH
4 - SOCKET
5 - TIE ROD END STUD

(11) Remove bolts fastening leak detection pump to cradle crossmember reinforcement. (Refer to 25 - EMISSIONS CONTROL/EVAPORATIVE EMISSIONS/LEAK DETECTION PUMP - REMOVAL)

(12) Remove both outer tie rods from steering knuckles, using Puller, Special Tool C-3894–A (Fig. 5).

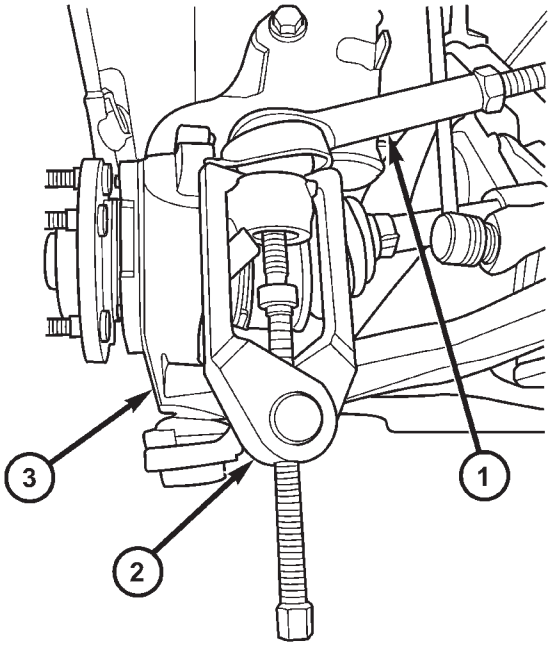

Fig. 5 Tie Rod Removal With Tool C-3894-A

1 - OUTER TIE ROD
2 - SPECIAL TOOL C-3894-A
3 - STEERING KNUCKLE

(13) Remove the lower control arm rear bushing retainer bolts located on each side of each lower control arm rear bushing.

NOTE: The bolts fastening the cradle crossmember reinforcement are of two different thread sizes. Note the location of the various sizes.

(14) Remove the bolts attaching the cradle crossmember reinforcement to the front suspension cradle crossmember (Fig. 6). Remove the 2 bolts fastening the reinforcement and rear of cradle crossmember to the body of the vehicle. Remove lower rear bushings, then the reinforcement.

(15) If the vehicle is equipped with All-Wheel-Drive, remove the power transfer unit (Refer to 21 - TRANSMISSION/TRANSAXLE/POWER TRANSFER UNIT - REMOVAL).

(16) Remove tube nuts and power steering pressure and return hoses from the power steering gear (Fig. 7).

GEAR (Continued)

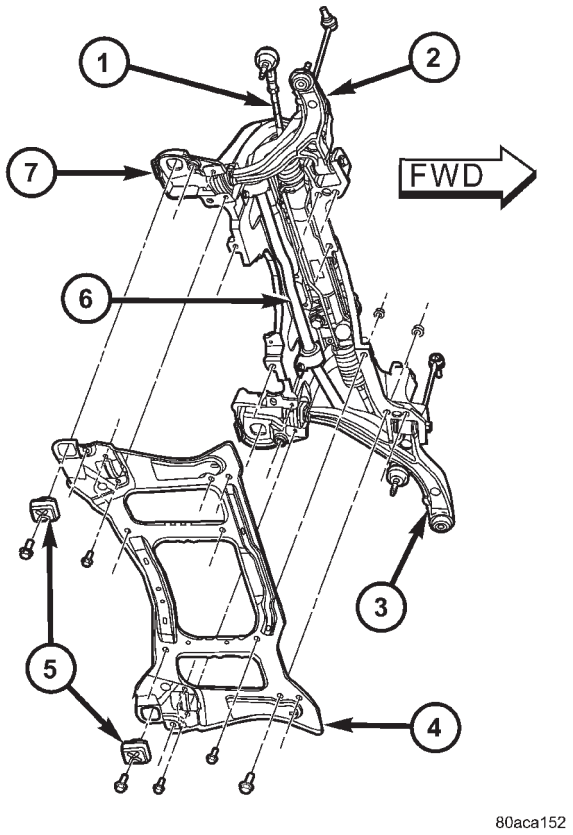

Fig. 6 Cradle Crossmember Reinforcement Attachment

1 - STEERING GEAR
2 - RIGHT LOWER CONTROL ARM
3 - LEFT LOWER CONTROL ARM
4 - CRADLE CROSSMEMBER REINFORCEMENT
5 - REAR CRADLE CROSSMEMBER ISOLATOR BUSHING
6 - STABILIZER BAR
7 - CRADLE CROSSMEMBER

(17) Remove the 3 bolts and nuts mounting the steering gear to the front suspension cradle (Fig. 8).

NOTE: The next step must be done to allow the removal of the steering gear from the front suspension cradle. The steering gear can not be removed from the vehicle with the intermediate coupler attached to the steering gear.

(18) Lower steering gear from suspension cradle enough to allow access to the intermediate coupler roll pin (Fig. 9). Install Remover/Installer Special Tool 6831A through the center of the roll pin, securing with the knurled nut (Fig. 9). Hold threaded rod stationary while turning nut, this will pull the roll pin out of the intermediate coupler.

(19) Separate the coupler from the shaft of the steering gear.

(20) Remove the power steering gear from the vehicle.

REMOVAL - RHD GEAR

(1) Remove cap from power steering fluid reservoir.

(2) Using a siphon pump, remove as much fluid as possible from the power steering fluid reservoir.

CAUTION: Locking the steering column in the straight-ahead position will prevent the clockspring from being accidentally over-extended when the steering column is disconnected from the intermediate steering coupler.

(3) Position the steering wheel in the STRAIGHT-AHEAD position. Lock the steering wheel in place using a steering wheel holding tool.

(4) With the ignition key in the locked position turn the steering wheel to the left until the steering wheel is in the locked position.

(5) With the vehicle on the ground, disconnect the steering column shaft coupler from the steering gear intermediate coupler (Fig. 2).

(6) Raise vehicle. (Refer to LUBRICATION & MAINTENANCE/HOISTING - STANDARD PROCEDURE)

(7) Remove front wheel and tire assemblies.

(8) If power steering cooler equipped, remove a hose at power steering cooler and allow fluid to drain.

(9) Remove 2 bolts attaching power steering cooler to cradle crossmember reinforcement (Fig. 3).

(10) On both sides of vehicle, remove nut attaching outer tie rod end to steering knuckle (Fig. 4). **Remove nut by holding tie rod end stud with a socket while loosening and removing nut with wrench.**

(11) Remove both tie rod ends from steering knuckles using Puller, Special Tool C-3894–A (Fig. 5).

(12) Remove the lower control arm rear bushing retainer bolts located on each side of each lower control arm rear bushing.

NOTE: The bolts fastening the cradle crossmember reinforcement are of two different thread sizes. Note the location of the various sizes.

(13) Remove the bolts attaching the cradle crossmember reinforcement to the front suspension cradle crossmember (Fig. 6). Remove the 2 bolts fastening the reinforcement and rear of cradle crossmember to the body of the vehicle. Remove the reinforcement.

(14) If the vehicle is equipped with All-Wheel-Drive, remove the power transfer unit (Refer to 21 - TRANSMISSION/TRANSAXLE/POWER TRANSFER UNIT - REMOVAL).

GEAR (Continued)

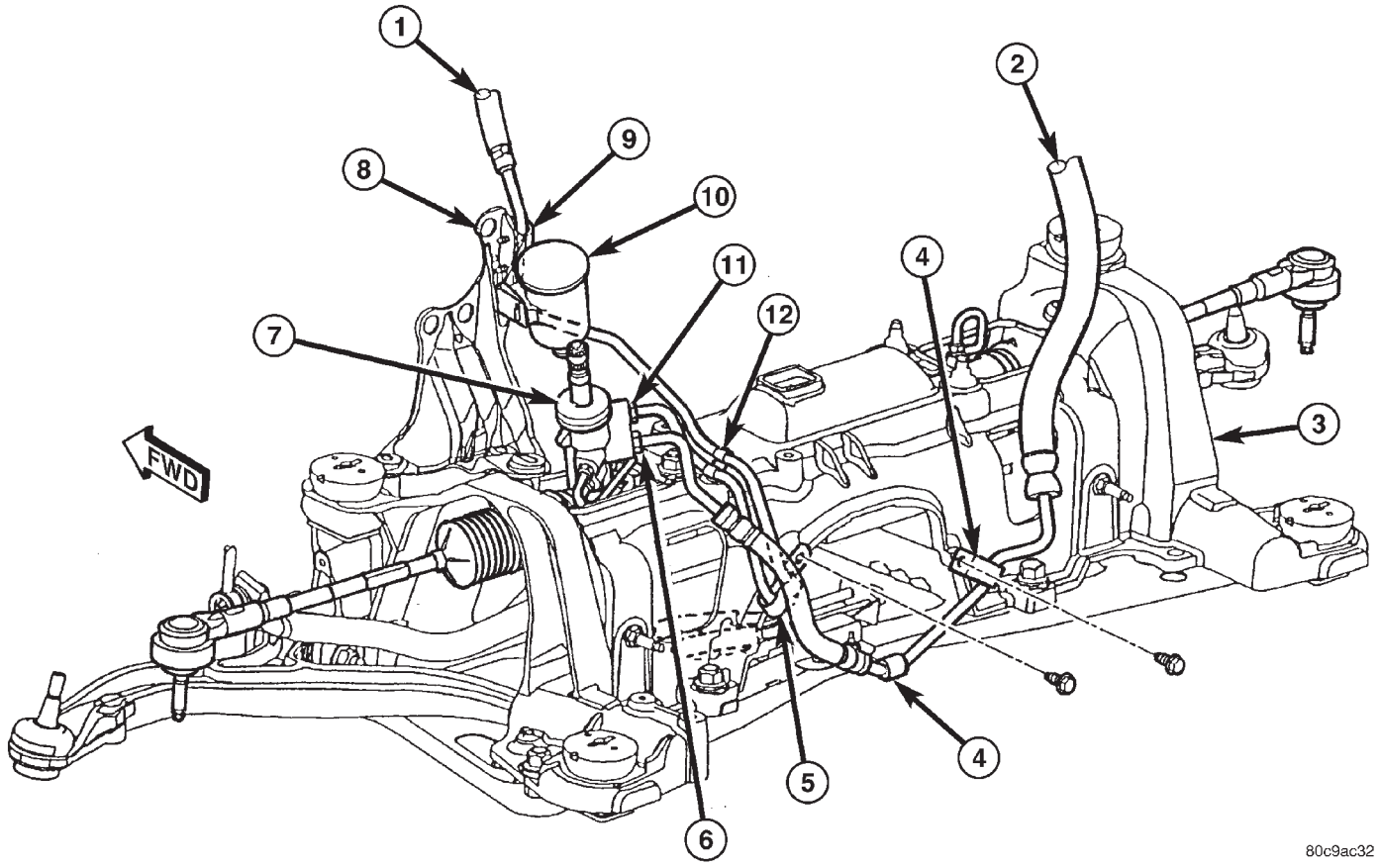

Fig. 7 Hoses To Power Steering Gear - 3.3L/3.8L Engine

1 - RETURN HOSE (TO RESERVOIR)
2 - PRESSURE HOSE (FROM PUMP)
3 - CRADLE CROSSMEMBER
4 - PRESSURE HOSE ROUTING CLAMP
5 - RETURN HOSE ROUTING CLAMP
6 - PRESSURE HOSE TUBE NUT
7 - POWER STEERING GEAR
8 - ABS BRACKET
9 - ROUTING CLIP
10 - LEAK DETECTION PUMP FILTER
11 - RETURN HOSE TUBE NUT
12 - ROUTING CLIP

(15) Remove the power steering fluid pressure and return hoses from the power steering gear (Fig. 10).

(16) Remove the routing clamp bolt securing the power steering fluid hoses to the rear of the cradle crossmember (Fig. 11). Allow the hoses to hang down out of the way.

(17) Remove the heat shield from the steering gear (Fig. 10).

(18) Remove the 2 bolts and nuts mounting the steering gear to the front suspension cradle.

NOTE: The next step must be done to allow the removal of the steering gear from the front suspension cradle. The steering gear cannot be removed from the vehicle with the intermediate coupler attached to the steering gear.

(19) Lower steering gear from suspension cradle enough to allow access to the intermediate coupler roll pin (Fig. 9). Install Remover/Installer, Special Tool 6831A, through the center of the roll pin, securing with the knurled nut (Fig. 9). Hold threaded rod stationary while turning nut, this will pull the roll pin out of the intermediate coupler.

(20) Separate the coupler from the steering gear shaft.

(21) Remove the power steering gear from the vehicle.

GEAR (Continued)

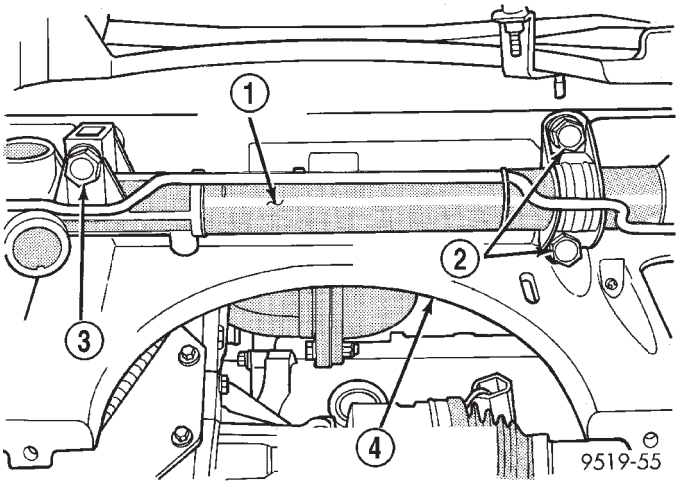

Fig. 8 Steering Gear Mounting To Suspension Cradle

1 - POWER STEERING GEAR
2 - MOUNTING BOLTS (12 MM)
3 - MOUNTING BOLT (14 MM)
4 - FRONT SUSPENSION CRADLE CROSSMEMBER

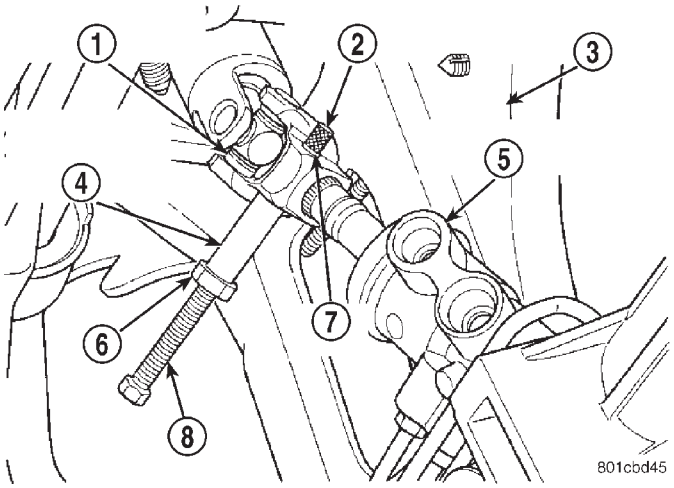

Fig. 9 Removing Roll Pin From Intermediate Coupler

1 - INTERMEDIATE COUPLER
2 - KNURLED NUT
3 - SUSPENSION CRADLE
4 - REMOVER SPECIAL TOOL 6831A
5 - STEERING GEAR
6 - NUT
7 - ROLL PIN
8 - THREADED ROD

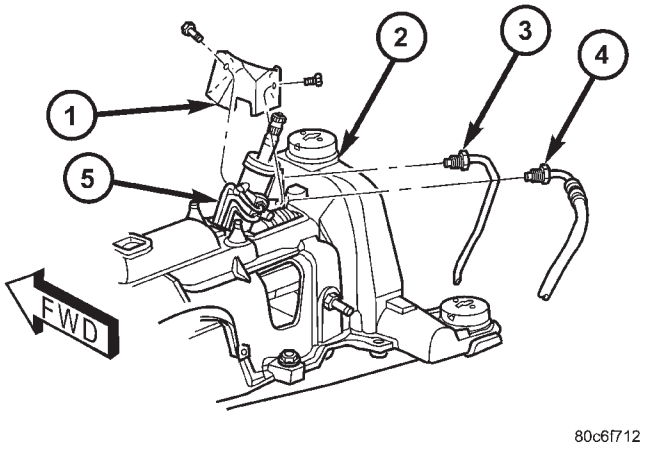

Fig. 10 RHD Gear Heat Shield And Hose Fittings

1 - HEAT SHIELD
2 - CRADLE CROSSMEMBER
3 - RETURN HOSE FITTING
4 - PRESSURE HOSE FITTING
5 - POWER STEERING GEAR

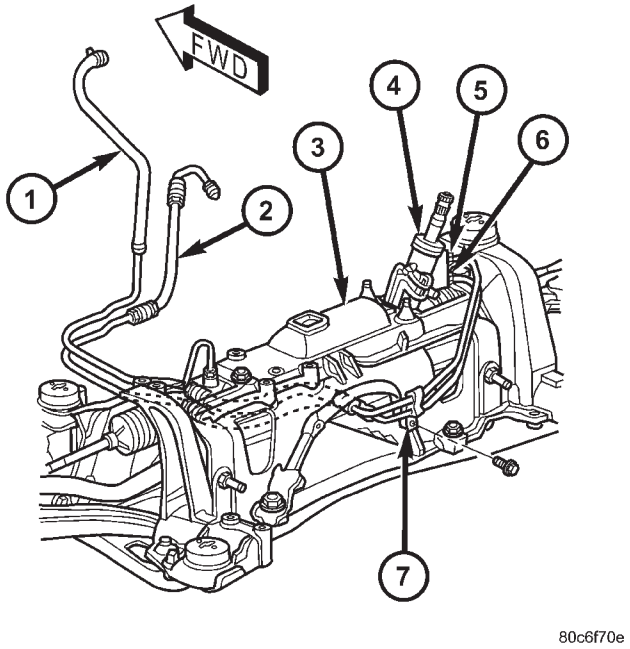

Fig. 11 RHD Power Steering Gear - 2.5L Diesel Shown

1 - RETURN HOSE
2 - PRESSURE HOSE
3 - CRADLE CROSSMEMBER
4 - POWER STEERING GEAR
5 - RETURN HOSE FITTING
6 - PRESSURE HOSE FITTING
7 - HOSE ROUTING CLAMP

GEAR (Continued)

INSTALLATION

INSTALLATION - LHD GEAR

(1) Install the power steering gear up in the front suspension cradle, leaving room to install intermediate coupler.

(2) Start the roll pin into the intermediate coupler before installing coupler on steering gear shaft. Start roll pin into coupler, using a hammer and tapping it into the coupler. Then install the intermediate coupler on the shaft of the steering gear.

(3) Install Remover/Installer Special Tool 6831A through the center of the roll pin, securing it with the knurled nut (Fig. 12). Hold threaded rod stationary while turning nut, this will pull the roll pin into the intermediate coupler.

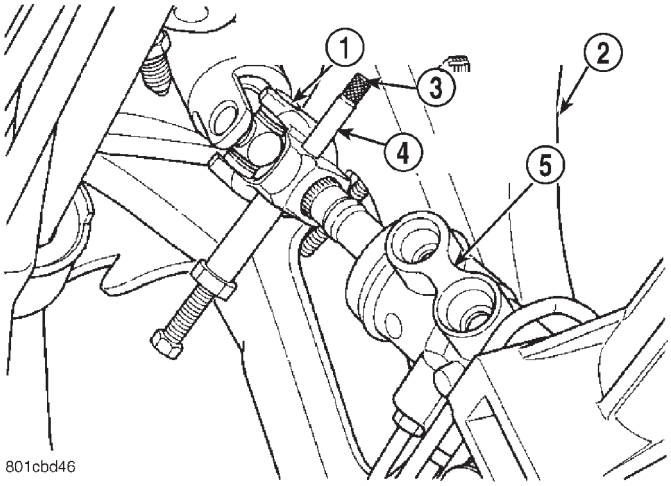

Fig. 12 Installing Roll Pin In Intermediate Coupler

1 - INTERMEDIATE SHAFT COUPLER
2 - SUSPENSION CRADLE CROSSMEMBER
3 - KNURLED NUT
4 - ROLL PIN
5 - POWER STEERING GEAR

CAUTION: Proper torque on the steering gear to suspension cradle mounting bolts is very important.

(4) Install steering gear on the front suspension cradle. Install the 3 steering gear mounting bolts and nuts (Fig. 8). Tighten the 3 mounting bolts to the following torque values:

- 14 mm bolt – 183 N·m (135 ft. lbs.) torque
- 12 mm bolt – 95 N·m (70 ft. lbs.) torque

(5) Attach the power steering fluid pressure and return hoses to the correct ports on the power steering gear (Fig. 7). Tighten the hose tube nuts at the gear to a torque of 31 N·m (275 in. lbs.).

(6) If the vehicle is equipped with All-Wheel-Drive, install the power transfer unit (Refer to 21 - TRANSMISSION/TRANSAXLE/POWER TRANSFER UNIT - INSTALLATION).

CAUTION: Proper torque on the cradle reinforcement to suspension cradle mounting bolts is very important.

(7) Install the reinforcement on the front suspension cradle crossmember and install the bolts attaching the reinforcement to the cradle crossmember (Fig. 6). Tighten the M-14 size bolts to a torque of 153 N·m (113 ft. lbs.). Tighten the M-12 size bolts to a torque of 106 N·m (78 ft. lbs.).

(8) Install the lower control arm rear bushing retainer bolts (M-10 size) through reinforcement on each side of each lower control arm rear bushing. Tighten bolts to a torque of 61 N·m (45 ft. lbs.).

(9) Install the two bolts and bushings attaching the reinforcement and rear of cradle crossmember to body of vehicle (Fig. 6). Tighten bolts to a torque of 163 N·m (120 ft. lbs.).

(10) Install outer tie rod end into steering knuckle. Start outer tie rod to steering knuckle attaching nut onto stud of tie rod end. While holding stud of tie rod end stationary using a socket (Fig. 4), tighten tie rod end to steering knuckle attaching nut. Then using a crowfoot and socket (Fig. 13), tighten the tie rod end attaching nut to a torque of 75 N·m (55 ft. lbs.).

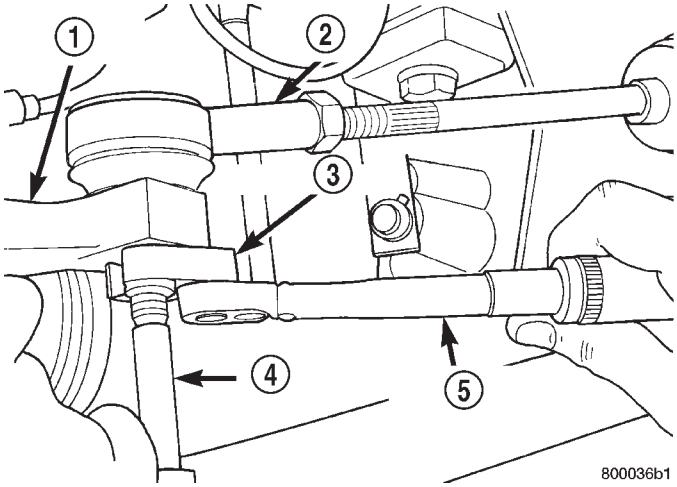

Fig. 13 Torquing Tie Rod End Attaching Nut

1 - STEERING KNUCKLE
2 - TIE ROD END
3 - CROWFOOT
4 - SOCKET
5 - TORQUE WRENCH

(11) Install leak detection pump on cradle crossmember reinforcement. (Refer to 25 - EMISSIONS CONTROL/EVAPORATIVE EMISSIONS/LEAK DETECTION PUMP - INSTALLATION)

GEAR (Continued)

(12) Install the power steering fluid cooler on the cradle crossmember reinforcement (Fig. 3). Install the mounting bolts and tighten to 11 N·m (100 in. lbs.). When installing mounting bolts, include pressure hose routing clamp.

(13) Reconnect previously disconnected hose at power steering cooler and install clamp.

(14) Install the front tire and wheel assemblies on vehicle. Install the wheel lug nuts and torque to 135 N·m (100 ft. lbs.).

(15) Install front emissions vapor canister. (Refer to 25 - EMISSIONS CONTROL/EVAPORATIVE EMISSIONS/VAPOR CANISTER - INSTALLATION)

(16) Lower the vehicle to a level where the interior of vehicle is accessible.

(17) With the wheels pointed approximately STRAIGHT-AHEAD, align the intermediate shaft with the steering column coupler. Assemble the steering column shaft coupler onto the steering gear intermediate coupler (Fig. 2). Install steering column coupler to intermediate shaft retaining pinch bolt. Tighten the pinch bolt nut to a torque of 28 N·m (250 in. lbs.).

(18) Remove the steering wheel holding tool.

(19) Fill and bleed the power steering system using the Power Steering Pump Initial Operation Procedure. (Refer to 19 - STEERING/PUMP - STANDARD PROCEDURE)

(20) Inspect system for leaks.

(21) Adjust front toe (Refer to 2 - SUSPENSION/WHEEL ALIGNMENT - STANDARD PROCEDURE).

INSTALLATION - RHD GEAR

(1) Install the steering gear up in the front suspension cradle crossmember, leaving room to install intermediate coupler.

(2) Start the roll pin into the intermediate coupler before installing coupler on steering gear shaft. Start roll pin into coupler, using a hammer and tapping it into the coupler. Then install the intermediate coupler on the shaft of the steering gear.

(3) Install Remover/Installer Special Tool 6831A through the center of the roll pin, securing it with the knurled nut (Fig. 12). Hold threaded rod stationary while turning nut. This will pull the roll pin into the intermediate coupler.

(4) Install power steering gear on the front suspension cradle. Install the 2 steering gear mounting bolts and nuts. Tighten the M-14 size steering gear to suspension cradle mounting bolt to a torque of 183 N·m (135 ft. lbs.). Tighten the M-12 size steering gear to suspension cradle mounting bolt to a torque of 95 N·m (70 ft. lbs.).

CAUTION: Proper torque on the steering gear to suspension cradle mounting bolts is very important.

(5) Install the heat shield on the steering gear (Fig. 10).

(6) Attach the power steering fluid pressure and return hoses to the proper fittings on the steering gear (Fig. 10). Do not fully tighten the fittings at this time.

(7) Install the routing clamp with the bolt securing the power steering fluid hoses to the rear of the cradle crossmember (Fig. 11).

(8) Using a crowfoot wrench on a torque wrench, tighten the power steering fluid hose tube nuts at the gear to a torque of 31 N·m (275 in. lbs.).

(9) Install tie rod end into steering knuckle. Start tie rod end to steering knuckle attaching nut onto stud of tie rod end. While holding stud of tie rod end stationary using a socket (Fig. 4), tighten tie rod end to steering knuckle attaching nut. Then using a crowfoot and socket (Fig. 13), tighten the tie rod end attaching nut to a torque of 75 N·m (55 ft. lbs.).

(10) If the vehicle is equipped with All-Wheel-Drive, install the power transfer unit (Refer to 21 - TRANSMISSION/TRANSAXLE/POWER TRANSFER UNIT - INSTALLATION).

CAUTION: Proper torque on the cradle reinforcement to suspension cradle mounting bolts is very important.

(11) Install the reinforcement on the front suspension cradle crossmember and install the bolts attaching the reinforcement to the cradle crossmember (Fig. 6). Tighten the M-14 size bolts to a torque of 163 N·m (120 ft. lbs.). Tighten the M-12 size bolts to a torque of 108 N·m (80 ft. lbs.).

(12) Install the lower control arm rear bushing retainer bolts through reinforcement on each side of each lower control arm rear bushing. Tighten bolts to a torque of 61 N·m (45 ft. lbs.).

(13) Install the two bolts and bushings attaching the reinforcement and rear of cradle crossmember to body of vehicle (Fig. 6). Tighten bolts to a torque of 163 N·m (120 ft. lbs.).

(14) If power steering cooler equipped, install the previously disconnected power steering cooler hose on the cooler. Install the clamp.

(15) If power steering cooler equipped, install the power steering fluid cooler on the cradle crossmember reinforcement (Fig. 3). Install the mounting bolts and tighten to 11 N·m (100 in. lbs.).

(16) Install the front tire and wheel assemblies on vehicle. Install the wheel mounting lug nuts and tighten to a torque to 135 N·m (100 ft. lbs.).

GEAR (Continued)

(17) Lower the vehicle to a level were the interior of vehicle is accessible (keeping tires off the ground).

(18) With the wheels pointed approximately STRAIGHT-AHEAD, align the intermediate shaft with the steering column coupler. Assemble the steering column shaft coupler onto the steering gear intermediate coupler (Fig. 2). Install steering column coupler to intermediate shaft retaining pinch bolt. Tighten the pinch bolt nut to a torque of 28 N·m (250 in. lbs.).

(19) Remove the steering wheel holding tool.

(20) Perform the POWER STEERING PUMP INITIAL OPERATION procedure to properly fill and bleed the power steering system. (Refer to 19 - STEERING/PUMP - STANDARD PROCEDURE)

(21) Inspect for leaks.

(22) Adjust front wheel toe (Refer to 2 - SUSPENSION/WHEEL ALIGNMENT - STANDARD PROCEDURE).

SPECIAL TOOLS

POWER STEERING GEAR

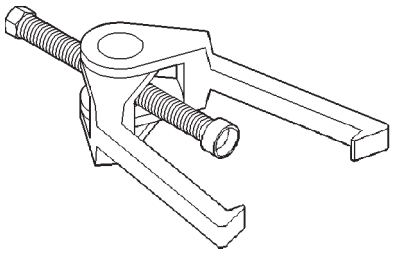

Puller C-3894A

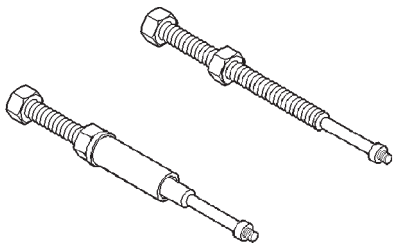

Remover/Installer Steering Shaft Roll Pin 6831A

OUTER TIE ROD

REMOVAL

(1) Loosen inner tie rod to outer tie rod jam nut (Fig. 14).

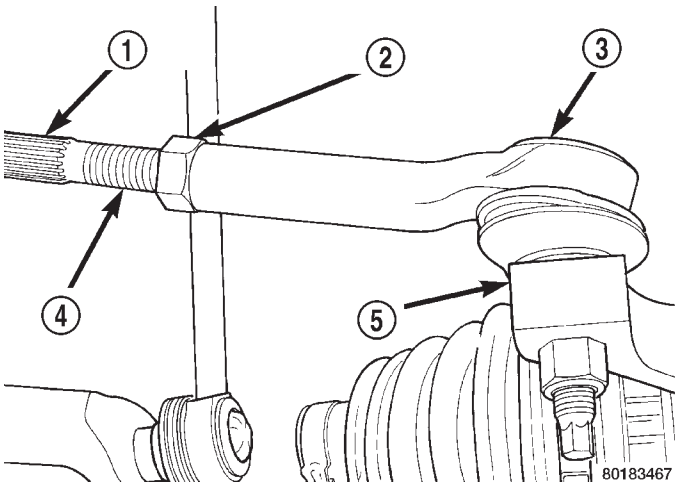

Fig. 14 Inner To Outer Tie Rod Jam Nut

1 - INNER TIE ROD SERRATION
2 - OUTER TIE ROD JAM NUT
3 - OUTER TIE ROD END
4 - INNER TIE ROD
5 - STEERING KNUCKLE

(2) Remove nut attaching outer tie rod end to steering knuckle (Fig. 15). The nut is to be removed from tie rod end by holding tie rod end stud with a 11/32 socket while loosening and removing nut with a wrench.

(3) Remove the tie rod end stud from steering knuckle arm, using Remover, Special Tool C-3894–A (Fig. 16).

(4) Remove outer tie rod end by un-threading it from the inner tie rod.

INSTALLATION

NOTE: Before installing the outer tie rod, make sure the jam nut is on inner tie rod (Fig. 14).

OUTER TIE ROD (Continued)

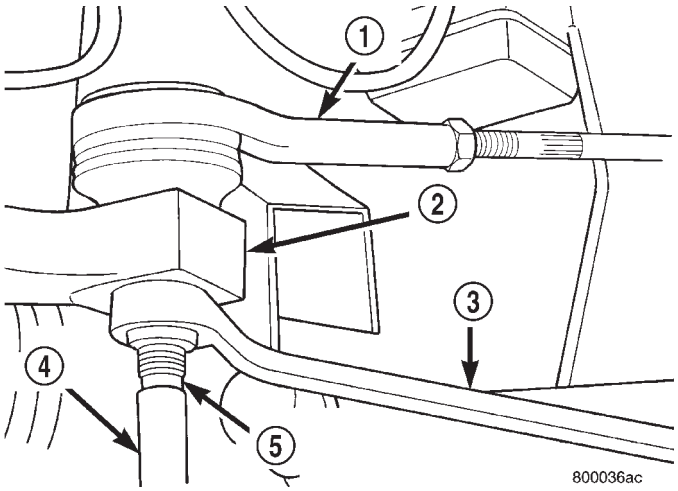

Fig. 15 Tie Rod End Attaching Nut (Typical)

1 - TIE ROD END
2 - STEERING KNUCKLE
3 - WRENCH
4 - SOCKET
5 - TIE ROD END STUD

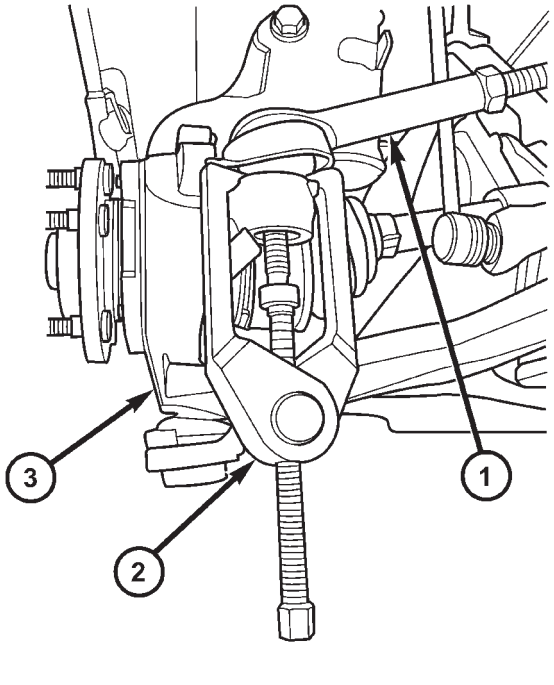

Fig. 16 TIE ROD REMOVAL WITH TOOL C-3894-A

1 - OUTER TIE ROD
2 - SPECIAL TOOL C-3894-A
3 - STEERING KNUCKLE

(1) Install outer tie rod onto inner tie rod.
(2) Do not tighten jam nut.

(3) Install tie rod end into the steering knuckle. Start tie rod end to steering knuckle attaching nut onto stud of tie rod end. While holding stud of tie rod end stationary, tighten tie rod end to steering knuckle attaching nut (Fig. 15). Then using a crowfoot and 11/32 socket (Fig. 17), torque tie rod end attaching nut to 75 N·m (55 ft. lbs.).

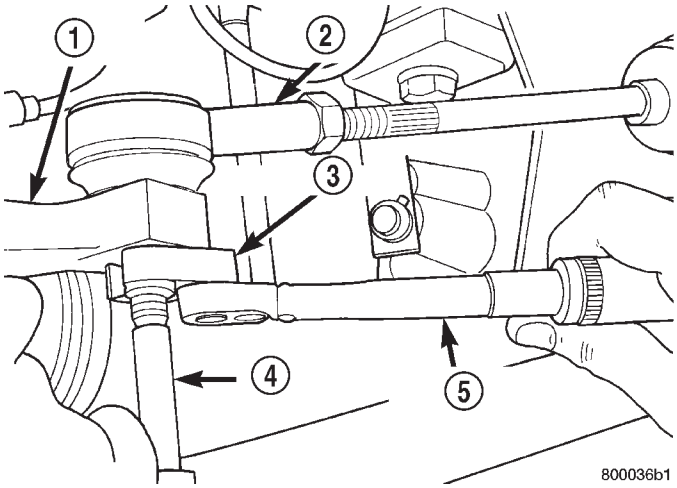

Fig. 17 Torquing Tie Rod End Attaching Nut

1 - STEERING KNUCKLE
2 - TIE ROD END
3 - CROWFOOT
4 - SOCKET
5 - TORQUE WRENCH

(4) Tighten tie rod jam nut (Fig. 14) to 75 N·m (55 ft. lbs.) torque.

CAUTION: During this procedure do not allow the steering gear boot to become twisted.

(5) Adjust the front toe setting on the vehicle (Refer to 2 - SUSPENSION/WHEEL ALIGNMENT - STANDARD PROCEDURE).

PUMP

TABLE OF CONTENTS

page

PUMP
DESCRIPTION
DESCRIPTION - PUMP (2.4L/3.3L/3.8L ENGINE) . . . 36
DESCRIPTION - PUMP (2.5L DIESEL) . . . 37
OPERATION . . . 37
WARNING . . . 37
CAUTION . . . 37
STANDARD PROCEDURE - POWER STEERING PUMP INITIAL OPERATION . . . 37
REMOVAL
REMOVAL - PUMP (2.4L ENGINE) . . . 38
REMOVAL - PUMP (3.3L/3.8L ENGINE) . . . 40
REMOVAL - PUMP (2.5L DIESEL) . . . 41
DISASSEMBLY - PUMP (PULLEY) . . . 41
ASSEMBLY - PUMP (PULLEY) . . . 42
INSTALLATION
INSTALLATION - PUMP (2.4L ENGINE) . . . 43
INSTALLATION - PUMP (3.3L/3.8L ENGINE) . 43
INSTALLATION - PUMP (2.5L DIESEL) . . . 43
SPECIAL TOOLS
POWER STEERING PUMP . . . 44
FLUID
STANDARD PROCEDURE - POWER STEERING FLUID LEVEL CHECKING . . . 44
FLUID COOLER
DESCRIPTION . . . 45
OPERATION . . . 45
REMOVAL . . . 45
INSTALLATION . . . 45
HOSE - POWER STEERING PRESSURE
REMOVAL
REMOVAL - 2.4L ENGINE . . . 45
REMOVAL - 3.3L/3.8L ENGINE . . . 46
INSTALLATION
INSTALLATION - 2.4L ENGINE . . . 46
INSTALLATION - 3.3L/3.8L ENGINE . . . 47
HOSE - POWER STEERING RETURN
REMOVAL
REMOVAL - 2.4L ENGINE . . . 49
REMOVAL - 3.3L/3.8L ENGINE . . . 49
INSTALLATION
INSTALLATION - 2.4L ENGINE . . . 50
INSTALLATION - 3.3L/3.8L ENGINE . . . 50
HOSE - POWER STEERING SUPPLY
REMOVAL
REMOVAL - 2.4L ENGINE . . . 51
REMOVAL - 3.3L/3.8L ENGINE . . . 51
INSTALLATION
INSTALLATION - 2.4L ENGINE . . . 51
INSTALLATION - 3.3L/3.8L ENGINE . . . 51
RESERVOIR - POWER STEERING FLUID
DESCRIPTION
DESCRIPTION - 2.4L/3.3L/3.8L ENGINE . . . 51
DESCRIPTION - 2.5L DIESEL . . . 52
OPERATION . . . 52
REMOVAL
REMOVAL - 2.4L ENGINE . . . 52
REMOVAL - 3.3L/3.8L ENGINE . . . 52
REMOVAL - 2.5L DIESEL . . . 52
INSTALLATION
INSTALLATION - 2.4L ENGINE . . . 53
INSTALLATION - 3.3L/3.8L ENGINE . . . 53
INSTALLATION - 2.5L DIESEL . . . 53

PUMP

DESCRIPTION

DESCRIPTION - PUMP (2.4L/3.3L/3.8L ENGINE)

Hydraulic pressure for the operation of the power steering gear is provided by a belt driven power steering pump. The power steering pump is mounted on the back side of the engine on all engine applications. The pumps are different depending on the engine option. The pump for the 2.4L engine is made out of cast iron and steel (Fig. 1). The pump used on the 3.3L/3.8L engine is made of aluminum (Fig. 2).

The pump for the 3.3L/3.8L engine does not have a return fitting as the pump for the 2.4L engine does. The power steering return hose on the 3.3L/3.8L engine goes to the reservoir instead of the pump.

PUMP (Continued)

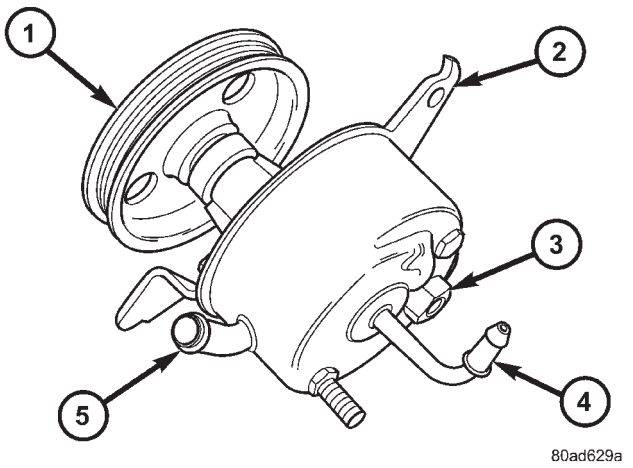

Fig. 1 POWER STEERING PUMP (2.4L)

1 - PULLEY
2 - BRACKET
3 - PRESSURE FITTING
4 - RETURN FITTING
5 - SUPPLY FITTING

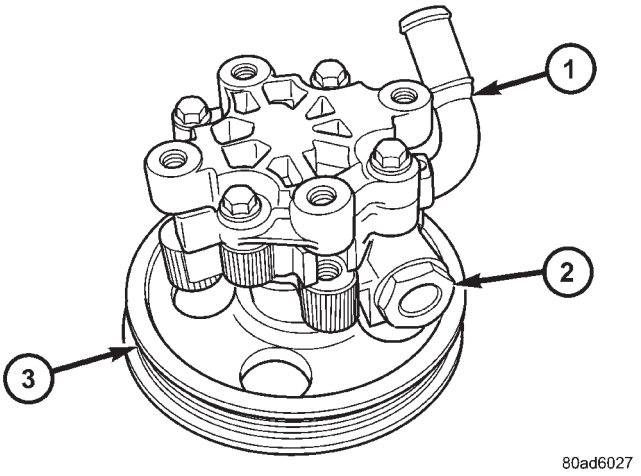

Fig. 2 POWER STEERING PUMP (3.3L/3.8L)

1 - SUPPLY FITTING
2 - PRESSURE FITTING
3 - PULLEY

DESCRIPTION - PUMP (2.5L DIESEL)

Hydraulic pressure for the operation of the power steering gear is provided by a belt driven power steering pump. The power steering pump is mounted front lower right corner of the engine (Fig. 13).

The pump has a supply fitting for fluid coming from the reservoir and a pressure port for exiting fluid that is headed for the steering gear.

OPERATION

The power steering pump is a constant displacement vane type pump. The 2.4L pump has an integral fluid reservoir and there is a secondary remote non-flow reservoir which acts only as a fluid fill and check point. The 3.3L/3.8L pump houses very little fluid and is therefore supplied by a remote flow through reservoir.

WARNING

WARNING: POWER STEERING FLUID, ENGINE PARTS AND EXHAUST SYSTEM MAY BE EXTREMELY HOT IF ENGINE HAS BEEN RUNNING. DO NOT START ENGINE WITH ANY LOOSE OR DISCONNECTED HOSES. DO NOT ALLOW HOSES TO TOUCH HOT EXHAUST MANIFOLD OR CATALYST.

WARNING: FLUID LEVEL SHOULD BE CHECKED WITH THE ENGINE OFF TO PREVENT PERSONAL INJURY FROM MOVING PARTS.

CAUTION

CAUTION: When the system is open, cap all open ends of the hoses, power steering pump fittings or power steering gear ports to prevent entry of foreign material into the components.

STANDARD PROCEDURE - POWER STEERING PUMP INITIAL OPERATION

WARNING: FLUID LEVEL SHOULD BE CHECKED AND ADJUSTED WITH ENGINE OFF TO PREVENT INJURY FROM MOVING ENGINE COMPONENTS.

CAUTION: Use only Mopar® Automatic Transmission Fluid (MS-9602) in power steering system. Use of other Mopar® power steering fluids (MS5931 and MS9933) should be avoided to ensure peak performance of the power steering system under all operating conditions. Do not overfill.

Read the fluid level through the side of the power steering fluid reservoir. The fluid level should indicate **"FILL RANGE"** when the fluid is at a temperature of approximately 21°C to 27°C (70°F to 80°F).

(1) Wipe the filler cap and area clean, then remove the cap.

PUMP (Continued)

(2) Fill the fluid reservoir to the proper level and let the fluid settle for at least two (2) minutes.

(3) Start the engine and let run for a few seconds, then turn the engine off.

(4) Add fluid if necessary. Repeat the above steps until the fluid level remains constant after running the engine.

(5) Raise the front wheels off the ground.

(6) Start the engine.

(7) Slowly turn the steering wheel right and left, lightly contacting the wheel stops.

(8) Add fluid if necessary.

(9) Lower the vehicle, then turn the steering wheel slowly from lock-to-lock.

(10) Stop the engine. Check the fluid level and refill as required.

(11) If the fluid is extremely foamy, allow the vehicle to stabilize a few minutes, then repeat the above procedure.

REMOVAL

REMOVAL - PUMP (2.4L ENGINE)

(1) Remove the (-) negative battery cable from the battery and isolate cable.

(2) Remove the cap from the power steering fluid reservoir.

(3) Using a siphon pump, remove as much power steering fluid as possible from the power steering fluid reservoir.

(4) Raise the vehicle on jack stands or centered on a frame contact type hoist. See Hoisting in Lubrication and Maintenance.

(5) Disconnect the oxygen sensor wiring harness from the vehicle wiring harness at the rear engine mount bracket.

NOTE: The exhaust system needs to be removed from the engine to allow for an area to remove the power steering pump from the vehicle.

(6) Remove the four bolts and flag nuts securing the catalytic converter from the exhaust manifold (Fig. 3).

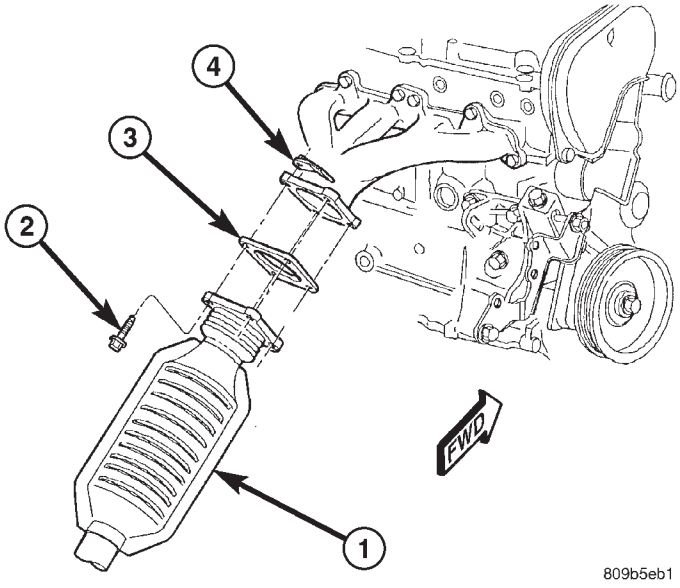

Fig. 3 Catalytic Converter to Exhaust Manifold

1 - CATALYTIC CONVERTER
2 - BOLT
3 - GASKET
4 - FLAG NUT

(7) Disconnect all the exhaust system isolators/hangers from the brackets on the exhaust system (2 at the mufflers and 1 at the resonator) (Fig. 4).

(8) Remove the exhaust system by moving it as far rearward, then lowering the front below the crossmember and out of the vehicle.

(9) Remove the power steering fluid supply hose from the fitting on the power steering pump. Drain off excess power steering fluid from hose.

(10) Move the heat sleeve on the power steering return hose to expose the hose connection at the pump (Fig. 5). Remove the hose from the power steering Pump. Allow the remaining power steering fluid to drain from the power steering pump and reservoir through the removed return hose.

(11) Remove the power steering fluid pressure line from the power steering pump (Fig. 6). Drain excess power steering fluid from tube.

(12) Remove the fasteners, then the accessory drive splash shield.

PUMP (Continued)

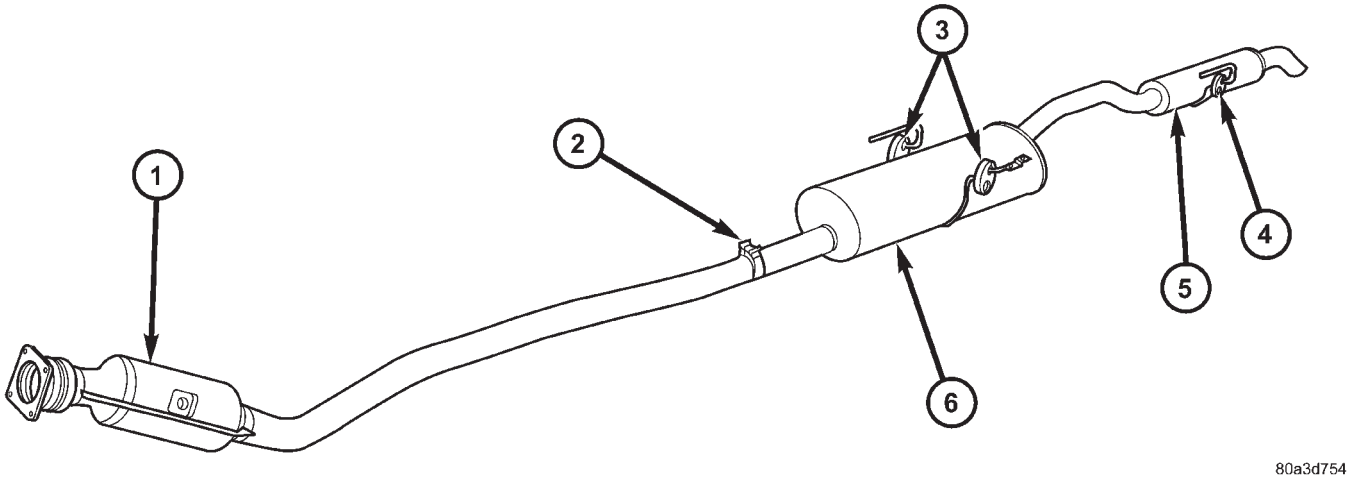

Fig. 4 Exhaust System - Typical (All Vehicles)

1 - CATALYTIC CONVERTER
2 - BAND CLAMP
3 - SUPPORTS - MUFFLER
4 - SUPPORT - RESONATOR
5 - RESONATOR
6 - MUFFLER

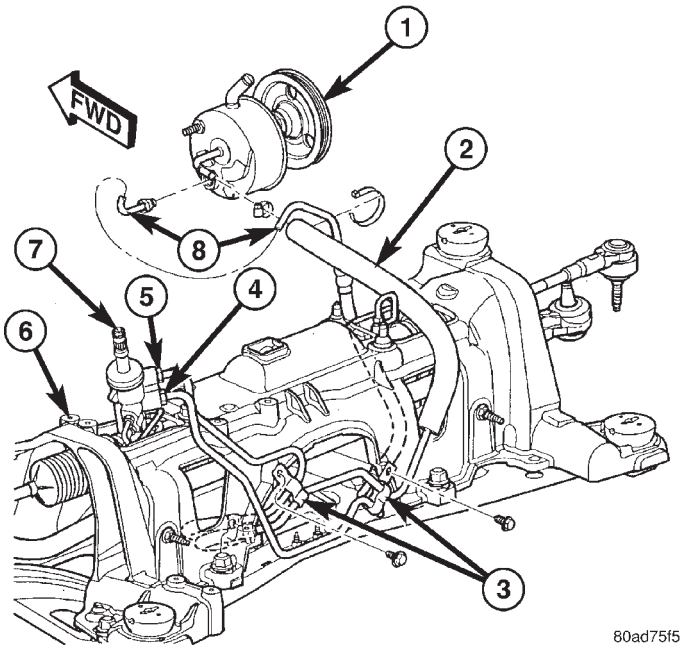

Fig. 5 Pressure And Return Hoses - 2.4L

1 - POWER STEERING PUMP
2 - RETURN HOSE (HEAT SLEEVE COVERED)
3 - ROUTING CLAMPS
4 - PRESSURE HOSE TUBE NUT
5 - RETURN HOSE TUBE NUT
6 - CRADLE CROSSMEMBER
7 - POWER STEERING GEAR
8 - PRESSURE HOSE

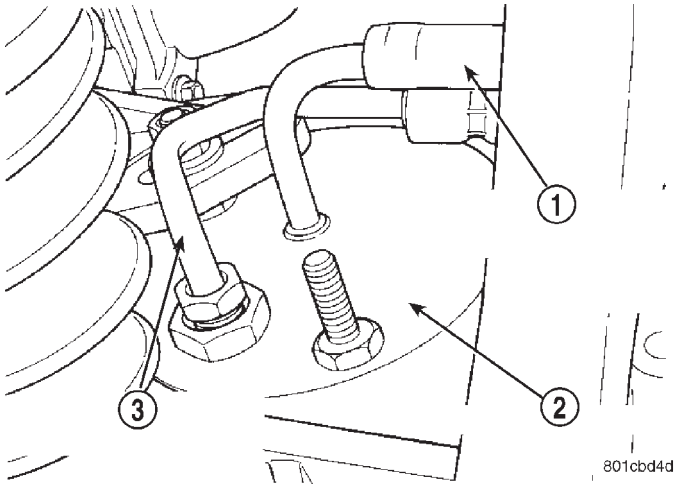

Fig. 6 Power Steering Fluid Pressure And Return Hose

1 - POWER STEERING FLUID RETURN HOSE
2 - POWER STEERING PUMP
3 - POWER STEERING FLUID PRESSURE HOSE

PUMP (Continued)

(13) Remove the adjuster nut attaching rear of power steering pump to the cast mounting bracket. (Fig. 7)

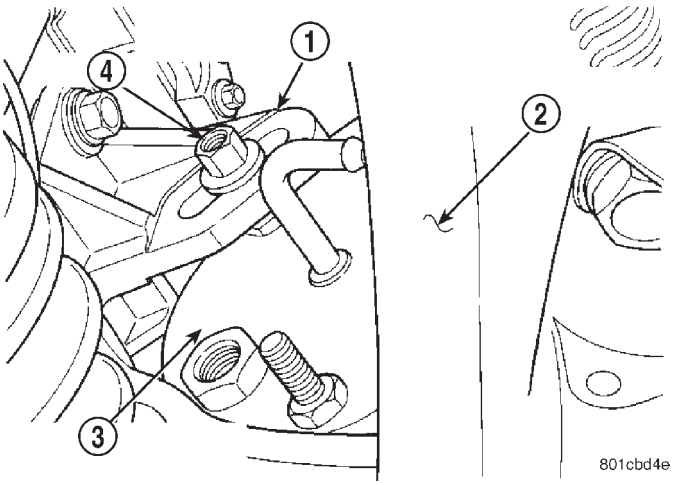

Fig. 7 Power Steering Pump Attaching Nut

1 - POWER STEERING PUMP MOUNTING BRACKET
2 - FRONT SUSPENSION CRADLE
3 - POWER STEERING PUMP
4 - ADJUSTER NUT

(14) Remove the front adjuster nut and the lower pivot bolt (Fig. 8) attaching power steering pump bracket to cast bracket.

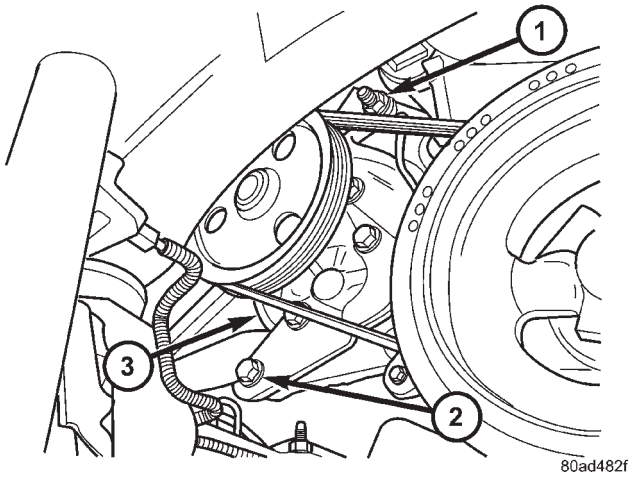

Fig. 8 Pump Front Mounting

1 - ADJUSTER NUT
2 - PIVOT BOLT
3 - PUMP

(15) Remove the drive belt from the power steering pump pulley.

(16) Remove the power steering pump and the front bracket from the cast bracket on the engine as an assembly through the exhaust tunnel.

(17) Remove the 3 bolts attaching the front bracket to the power steering pump and separate the power steering pump from the front bracket.

(18) If the power steering pump pulley needs to be transferred, (Refer to 19 - STEERING/PUMP - DISASSEMBLY).

REMOVAL - PUMP (3.3L/3.8L ENGINE)

(1) Remove the (-) negative battery cable from the battery and isolate cable.

(2) Remove the wiper module (unit)(Refer to 8 - ELECTRICAL/WIPERS/WASHERS/WIPER MODULE - REMOVAL).

(3) Raise the vehicle. (Refer to LUBRICATION & MAINTENANCE/HOISTING - STANDARD PROCEDURE)

(4) Remove the drive belt splash shield.

(5) Remove the pressure hose routing bracket bolt (Fig. 9).

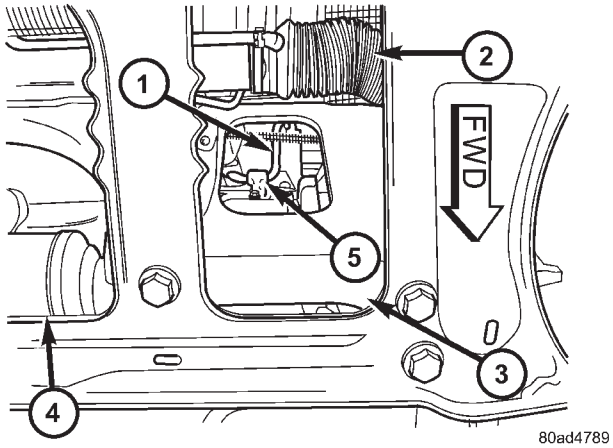

Fig. 9 Pressure Hose Routing Clamp

1 - PRESSURE HOSE TUBE
2 - STEERING GEAR
3 - CRADLE CROSSMEMBER
4 - DRIVESHAFT
5 - ROUTING CLAMP BRACKET

(6) lower the vehicle.

(7) Remove cap from power steering fluid reservoir.

(8) Using a siphon pump, remove as much power steering fluid as possible from the power steering fluid reservoir.

(9) Disconnect the pressure hose from the pump (Fig. 10).

(10) Disconnect the fluid supply hose from the pump (Fig. 10).

(11) Remove the three front mounting bolts through the pulley (Fig. 11)

PUMP (Continued)

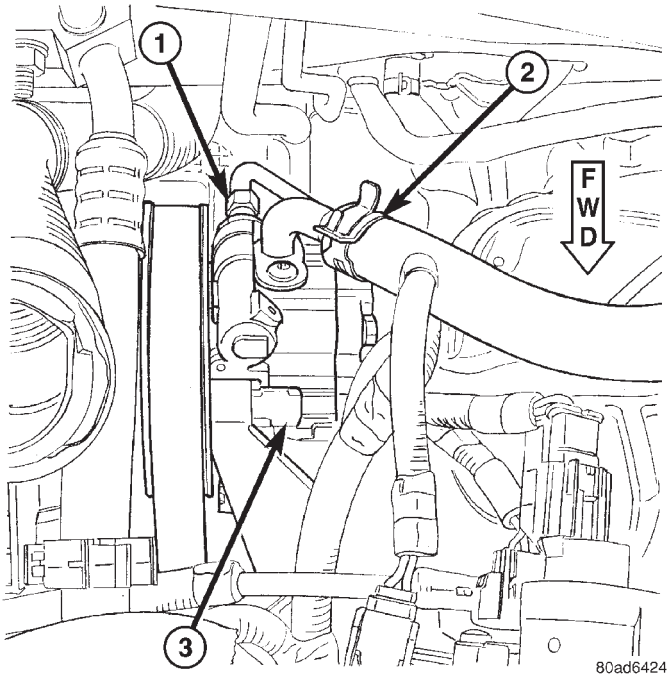

Fig. 10 Supply And Pressure Hoses At Pump

1 - PRESSURE HOSE AND FITTING
2 - SUPPLY HOSE AND CLAMP
3 - POWER STEERING PUMP

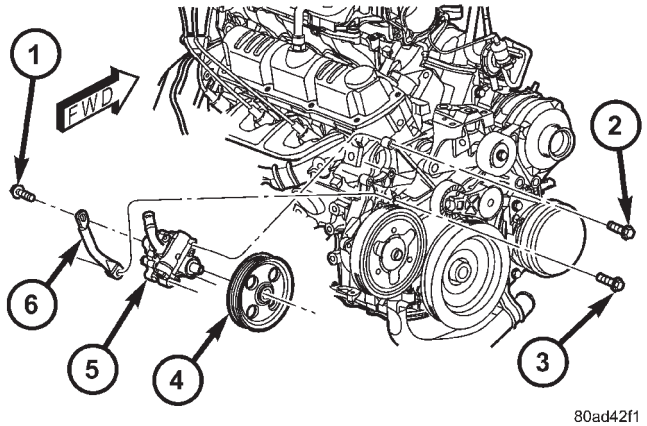

Fig. 11 Pump Mounting

1 - PUMP REAR MOUNTING BOLT (2001 ONLY)
2 - PUMP FRONT MOUNTING BOLT (3)
3 - TIMING CHAIN COVER AND PUMP BRACKET THRU BOLT (2001 ONLY)
4 - PUMP BELT PULLEY
5 - POWER STEERING PUMP
6 - BRACKET (2001 ONLY)

(12) Remove the pump (with pulley) through the engine compartment rocking it over the aluminum bracket.

REMOVAL - PUMP (2.5L DIESEL)

(1) Remove the negative (-) battery cable from the battery and isolate cable.

(2) Remove the fill cap from the power steering fluid reservoir.

(3) Using a siphon pump, remove as much power steering fluid as possible from the fluid reservoir.

(4) Raise the vehicle. (Refer to LUBRICATION & MAINTENANCE/HOISTING - STANDARD PROCEDURE)

(5) Remove the splash shields from below the engine compartment.

(6) Remove the accessory drive belt from the power steering pump pulley. (Refer to 7 - COOLING/ACCESSORY DRIVE/DRIVE BELTS - REMOVAL)

(7) Disconnect the fluid supply hose from the pump (Fig. 12).

(8) Disconnect the pressure hose from the pump (Fig. 12).

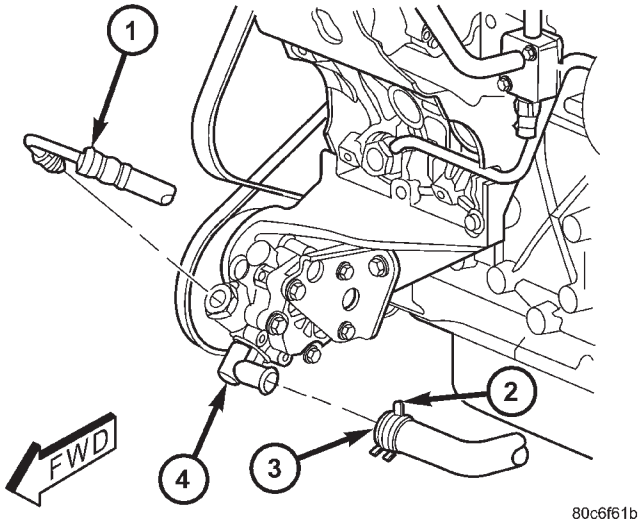

Fig. 12 Power Steering Pump - 2.5L Diesel

1 - PRESSURE HOSE
2 - HOSE CLAMP
3 - SUPPLY HOSE
4 - POWER STEERING PUMP

(9) Remove the bolt fastening the stamped bracket on the rear of the pump to the cast bracket (Fig. 13).

(10) Remove the three front mounting bolts through the pulley.

(11) Remove the pump from the cast bracket and vehicle.

DISASSEMBLY - PUMP (PULLEY)

The only serviceable part of the power steering pump is the pulley. The procedure following is for removal and installation of the pulley from the pump once the pump is removed from the vehicle.

PUMP (Continued)

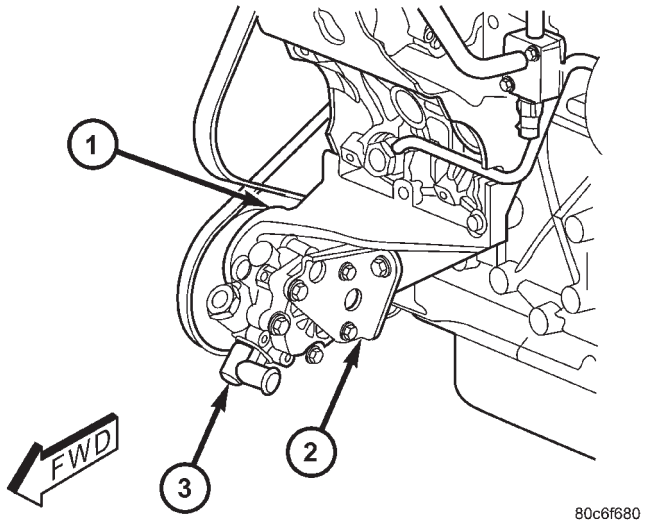

Fig. 13 Pump And Brackets - 2.5L Diesel

1 - CAST BRACKET
2 - STAMPED BRACKET
3 - POWER STEERING PUMP

(1) Remove the power steering pump from the vehicle. Refer to Removal And Installation in this section of the service manual.

(2) Remove the pulley from the shaft of the power steering pump using Puller C-4333 (Fig. 14).

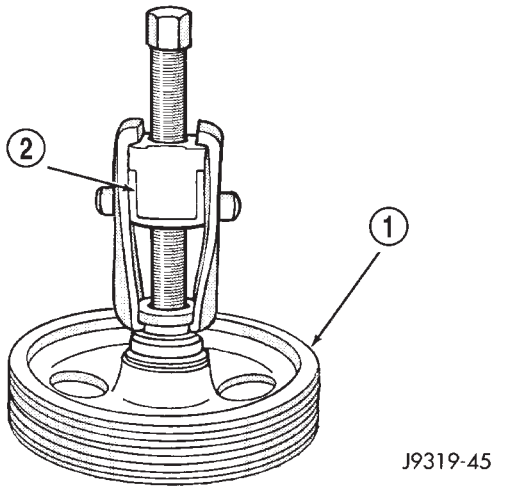

Fig. 14 Pulley Removal

1 - POWER STEERING PUMP DRIVE PULLEY
2 - SPECIAL TOOL C-4333

CAUTION: Do not hammer on power steering pump pulley. This will damage the pulley and the power steering pump.

(3) Replace pulley if it is found to be bent, cracked, or loose.

ASSEMBLY - PUMP (PULLEY)

The only serviceable part of the power steering pump is the pulley. The procedure following is for removal and installation of the pulley from the pump once the pump is removed from the vehicle.

(1) Install the pulley with Installer C-4063 (Fig. 15). Do not use the tool adapters.

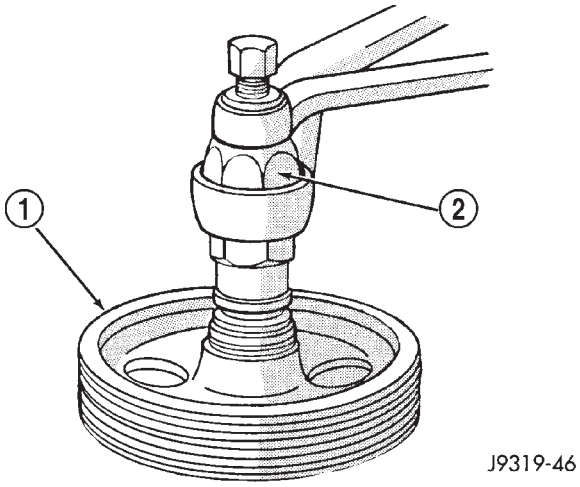

Fig. 15 Pulley Installation

1 - POWER STEERING PUMP DRIVE PULLEY
2 - SPECIAL TOOL C-4063–A

(2) Ensure that the tool and the pulley remain aligned with the pump shaft. Prevent the pulley from being cocked on the shaft.

(3) Install the pulley until it is flush with the end of the power steering pump shaft (Fig. 16).

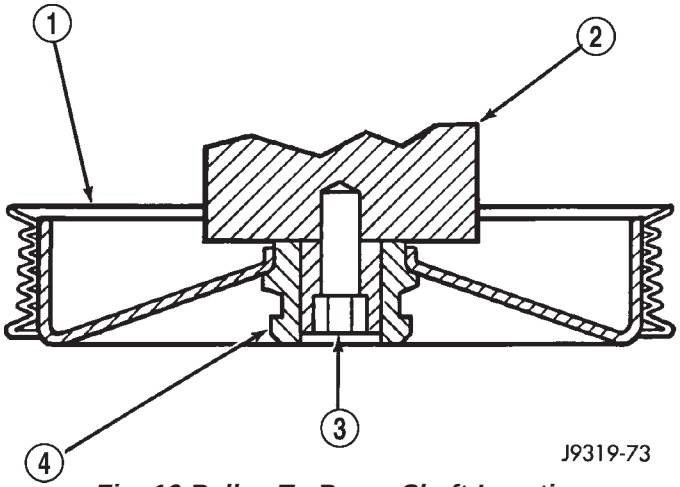

Fig. 16 Pulley To Pump Shaft Location

1 - PULLEY
2 - PUMP BODY
3 - PUMP SHAFT
4 - HUB

(4) Install the power steering pump on the vehicle.

PUMP (Continued)

INSTALLATION

INSTALLATION - PUMP (2.4L ENGINE)

(1) Install power steering pump back in vehicle using the reverse order of its removal through the exhaust tunnel of the vehicle.

(2) Install the power steering pump on its cast mounting bracket (Fig. 7), then install the nut and bolt attaching the front bracket to the cast bracket (Fig. 8). **Do not fully tighten at this time.**.

(3) Install the rear nut (Fig. 7).

(4) Install the power steering pump drive belt on pulley and adjust (Refer to 7 - COOLING/ACCESSORY DRIVE/DRIVE BELTS - INSTALLATION).

(5) Tighten the two adjustment slot bolts and the one pivot bolt to 54 N·m (40 ft. lbs.) torque.

(6) Install the accessory drive splash shield.

NOTE: Before installing power steering fluid pressure hose on power steering pump, inspect the O-ring on the pressure hose for damage and replace if necessary.

(7) Install the power steering fluid pressure line onto the output fitting of the power steering pump (Fig. 6). Tighten the pressure line to pump fitting tube nut to a torque of 31 N·m (275 in. lbs.).

(8) Install the power steering fluid low pressure return hose on the power steering pump low pressure fitting (Fig. 6). **Be sure hose clamps are properly reinstalled.**

(9) Install the power steering fluid supply hose on the power steering pump fluid fitting. **Be sure hose is clear of accessory drive belts all hose clamps are properly reinstalled.**

CAUTION: Heat sleeve must cover entire rubber portion of return hose to ensure desired thermal protection from exhaust.

(10) Properly position the protective heat sleeve over the power steering return hose. Securely tie strap the heat sleeve to the power steering hose to keep in it's proper position.

(11) Install the exhaust system (Fig. 4). Install all exhaust system isolators/hangers on the exhaust system brackets, then the four bolts and flag nuts (Fig. 3).

(12) Connect the oxygen sensor wiring harness to the vehicle wiring harness.

(13) Lower vehicle.

(14) Connect the negative battery cable on the negative battery post.

(15) Perform the POWER STEERING PUMP INITIAL OPERATION procedure to properly fill and bleed the power steering system. (Refer to 19 - STEERING/PUMP - STANDARD PROCEDURE)

(16) Inspect for leaks.

INSTALLATION - PUMP (3.3L/3.8L ENGINE)

(1) Install power steering pump back in vehicle using the reverse order of its removal through the engine compartment of the vehicle.

(2) Install the power steering pump on its mounting bracket.

(3) Install the 3 front power steering pump mounting bolts (Fig. 11). Tighten the 3 front power steering pump mounting bolts to a torque of 54 N·m (40 ft. lbs.).

NOTE: Before installing power steering pressure hose on power steering pump, inspect the O-ring on the power steering pressure hose for damage and replace if required.

(4) Install the power steering fluid pressure line into the pressure output fitting of the power steering pump (Fig. 10). **Do not fully tighten tube nut at this time.**

(5) Install the power steering fluid supply hose on the power steering pump supply fitting (Fig. 10). **Be sure hose clamp is properly installed.**

(6) Raise the vehicle.

(7) Install the routing clip on the engine for the pressure hose (Fig. 9) and tighten fastener.

(8) Install the serpentine drive belt (Refer to 7 - COOLING/ACCESSORY DRIVE/DRIVE BELTS - INSTALLATION).

(9) Install the drive belt splash shield.

(10) Lower the vehicle.

(11) Tighten the pressure line to pump pressure fitting tube nut to a torque of 31 N·m (275 in. lbs.).

(12) Install the wiper module (unit)(Refer to 8 - ELECTRICAL/WIPERS/WASHERS/WIPER MODULE - INSTALLATION).

(13) Connect the negative battery cable on the negative battery post.

(14) Fill and bleed the power steering system using the Power Steering Pump Initial Operation Procedure (Refer to 19 - STEERING/PUMP - STANDARD PROCEDURE).

(15) Inspect for leaks.

INSTALLATION - PUMP (2.5L DIESEL)

(1) Install the power steering pump on its cast mounting bracket.

(2) Install the three front power steering pump mounting bolts. Tighten the mounting bolts to a torque of 54 N·m (40 ft. lbs.).

(3) Install the rear mounting bolt fastening the stamped bracket to the cast bracket (Fig. 13). Tighten the mounting bolt to a torque of 54 N·m (40 ft. lbs.).

PUMP (Continued)

NOTE: Before installing power steering pressure hose on power steering pump, inspect the O-ring on the power steering pressure hose for damage and replace if required.

(4) Install the power steering fluid pressure hose fitting into the pressure port of the power steering pump (Fig. 12). Tighten the pressure line to pump fitting tube nut to a torque of 31 N·m (275 in. lbs.).

(5) Install the power steering fluid supply hose on the power steering pump supply fitting (Fig. 12). **Be sure hose clamp is properly reinstalled.**

(6) Install the accessary drive belt (Refer to 7 - COOLING/ACCESSORY DRIVE/DRIVE BELTS - INSTALLATION).

(7) Install the splash shields below the engine compartment.

(8) Lower the vehicle.

(9) Connect the negative (-) battery cable on the negative battery post.

(10) Fill and bleed the power steering system using the Power Steering Pump Initial Operation Procedure (Refer to 19 - STEERING/PUMP - STANDARD PROCEDURE).

(11) Inspect for leaks.

SPECIAL TOOLS

POWER STEERING PUMP

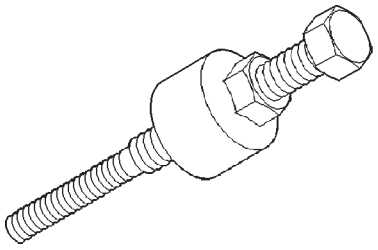

Installer C-4063B

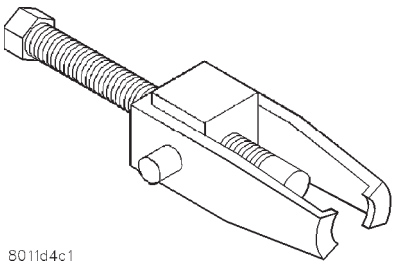

Puller C-4333

FLUID

STANDARD PROCEDURE - POWER STEERING FLUID LEVEL CHECKING

WARNING: FLUID LEVEL SHOULD BE CHECKED WITH THE ENGINE OFF TO PREVENT INJURY FROM MOVING PARTS AND TO ENSURE ACCURATE FLUID LEVEL READING.

The fluid level can be read on the exterior of the power steering fluid reservoir. The fluid level should be within the “FILL RANGE” when the fluid is at normal ambient temperature, approximately 21°C to 27°C (70°F to 80°F) (Fig. 17).

Before removing the power steering filler cap, wipe the reservoir filler cap free of dirt and debris. Do not overfill the power steering system. **Use only Mopar® ATF+4 Automatic Transmission Fluid (MS-9602) in the power steering system.** For additional information on Automatic Transmission Fluid, (Refer to LUBRICATION & MAINTENANCE/ FLUID TYPES - DESCRIPTION).

CAUTION: Use only Mopar® ATF+4 Automatic Transmission Fluid (MS-9602). Use of other Mopar® power steering fluids (MS5931 and MS9933) should be avoided to ensure peak performance of the power steering system under all operating conditions.

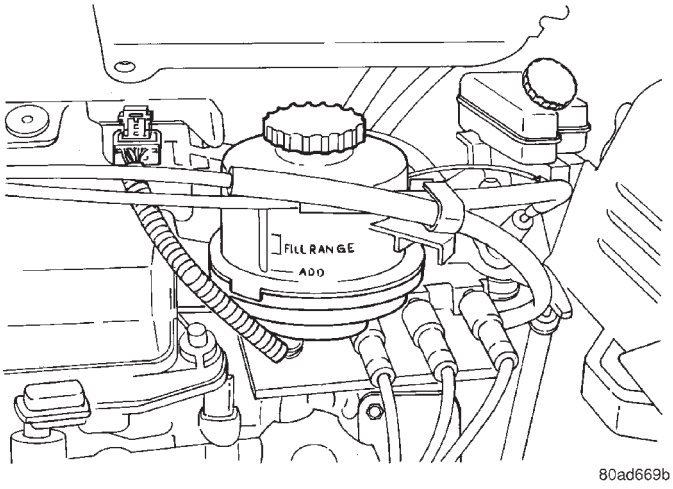

Fig. 17 Power Steering Fluid Reservoir

FLUID COOLER

DESCRIPTION

All models (except 2.5L Diesel) are equipped with a cooler for the power steering system fluid. The power steering fluid cooler is located on the front suspension cradle crossmember reinforcement (Fig. 18). There are two different size coolers depending on model and options. There is a standard 6-inch and an 8-inch.

OPERATION

The purpose of the power steering fluid cooler is to keep the temperature of the power steering system fluid from rising to a level that would affect the performance of the power steering system.

The cooler used on this vehicle is referred to as a fluid-to-air type cooler. This means that the air flow across the tubes (and fines surrounding them) of the cooler is used to extract the heat from the cooler which it has absorbed from the power steering fluid flowing through it. The cooler is placed in the power steering fluid return line, between the steering gear and the power steering fluid reservoir.

REMOVAL

(1) Using a siphon pump, remove as much fluid as possible from the power steering fluid reservoir.

(2) Raise vehicle. (Refer to LUBRICATION & MAINTENANCE/HOISTING - STANDARD PROCEDURE)

(3) Remove the hose clamps at the cooler and remove the hoses from the cooler inlet and outlet tubes.

(4) Remove the 2 bolts attaching the power steering cooler cradle crossmember reinforcement (Fig. 18). Remove the cooler.

INSTALLATION

(1) Install the power steering fluid cooler on the cradle crossmember reinforcement (Fig. 18). Install the mounting bolts and tighten to 11 N·m (100 in. lbs.).

(2) Install power steering fluid hoses on the cooler. **Be sure hose clamps are installed on hose past the upset bead on the power steering cooler tubes.**

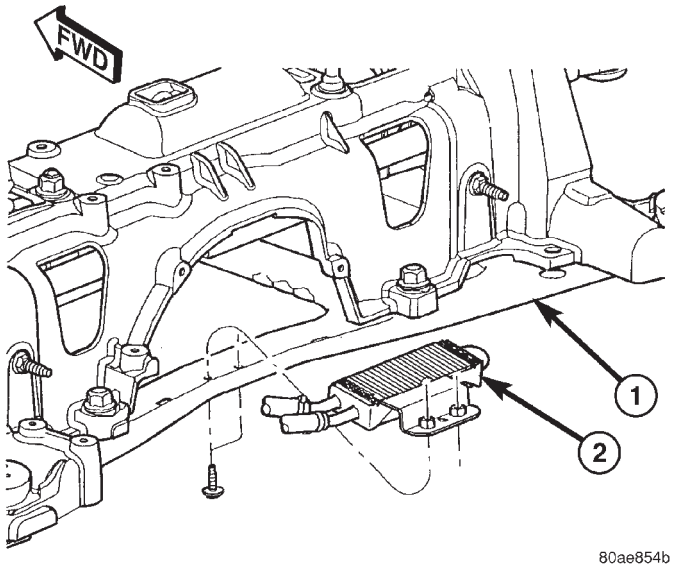

Fig. 18 Power Steering Cooler

1 - CRADLE CROSSMEMBER REINFORCEMENT
2 - POWER STEERING COOLER

(3) Lower the vehicle to a point where front tires are just off the ground.

(4) Perform Power Steering Pump Initial Operation procedure. (Refer to 19 - STEERING/PUMP - STANDARD PROCEDURE)

HOSE - POWER STEERING PRESSURE

REMOVAL

REMOVAL - 2.4L ENGINE

NOTE: Before proceeding, review all WARNINGS and CAUTIONS. (Refer to 19 - STEERING/PUMP - WARNING)(Refer to 19 - STEERING/PUMP - CAUTION)

(1) Remove cap from power steering fluid reservoir.

(2) Using a siphon pump, remove as much power steering fluid as possible from power steering fluid reservoir.

HOSE - POWER STEERING PRESSURE (Continued)

(3) Raise vehicle. (Refer to LUBRICATION & MAINTENANCE/HOISTING - STANDARD PROCEDURE)

(4) Remove front emissions vapor canister. (Refer to 25 - EMISSIONS CONTROL/EVAPORATIVE EMISSIONS/VAPOR CANISTER - REMOVAL)

(5) Place an oil drain pan under vehicle to catch power steering fluid.

(6) Back out pressure hose tube nut at power steering pump pressure fitting and remove hose from pump (Fig. 19).

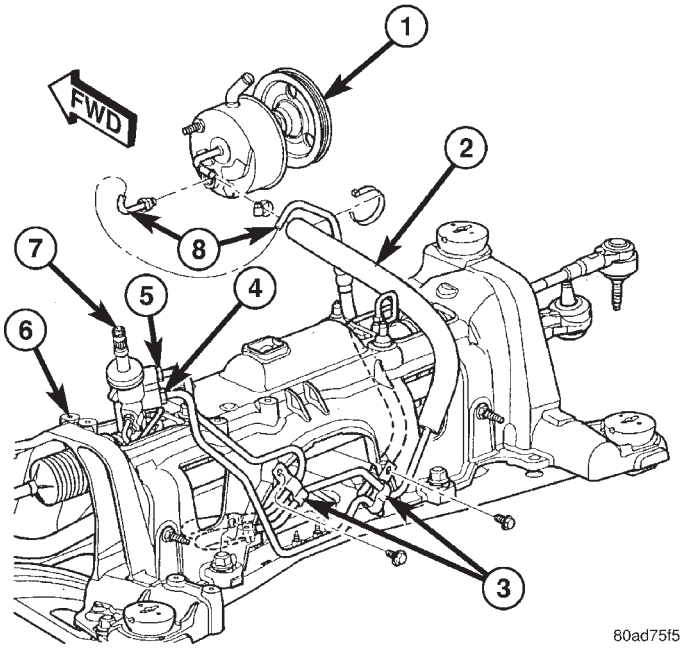

Fig. 19 PRESSURE AND RETURN HOSES - 2.4L

1 - POWER STEERING PUMP
2 - RETURN HOSE (HEAT SLEEVE COVERED)
3 - ROUTING CLAMPS
4 - PRESSURE HOSE TUBE NUT
5 - RETURN HOSE TUBE NUT
6 - CRADLE CROSSMEMBER
7 - POWER STEERING GEAR
8 - PRESSURE HOSE

(7) Remove bolt attaching right routing clamp to front suspension cradle crossmember (Fig. 19). Remove pressure hose from clamp.

(8) Back out pressure hose tube nut at power steering gear and remove hose from gear (Fig. 19).

(9) Remove power steering fluid pressure hose from vehicle.

REMOVAL - 3.3L/3.8L ENGINE

NOTE: Before proceeding, review all WARNINGS and CAUTIONS. (Refer to 19 - STEERING/PUMP - WARNING)(Refer to 19 - STEERING/PUMP - CAUTION)

(1) Remove cap from power steering fluid reservoir.

(2) Using a siphon pump, remove as much power steering fluid as possible from power steering fluid reservoir.

(3) Raise vehicle. (Refer to LUBRICATION & MAINTENANCE/HOISTING - STANDARD PROCEDURE)

(4) Remove front emissions vapor canister. (Refer to 25 - EMISSIONS CONTROL/EVAPORATIVE EMISSIONS/VAPOR CANISTER - REMOVAL)

(5) Remove two bolts securing pressure hose routing clamps to suspension cradle crossmember and steel reinforcement (Fig. 20).

(6) Place an oil drain pan under vehicle to catch draining power steering fluid.

(7) Disconnect pressure hose at power steering gear (Fig. 20).

(8) Remove pressure hose routing bracket bolt at engine (Fig. 21). Bolt can be accessed through hole in cradle crossmember (Fig. 22).

(9) Disconnect pressure hose tube nut at power steering pump (Fig. 21).

(10) Remove power steering fluid pressure hose from vehicle.

INSTALLATION

INSTALLATION - 2.4L ENGINE

(1) Remove any used O-rings from ends of power steering hose.

(2) Using a lint free towel, wipe clean hose ends, power steering pump pressure outlet fitting and steering gear port.

(3) Install new O-rings on ends of power steering fluid pressure hose. Lubricate O-rings using clean power steering fluid.

CAUTION: Use care not to bend tube ends of power steering hoses when installing. Leaks and restrictions may occur.

CAUTION: Power steering fluid hoses must remain away from exhaust system and must not come in contact with any unfriendly surfaces on vehicle.

(4) Route hose up through cradle crossmember toward power steering pump avoiding tight bends or kinking.

(5) Install power steering pressure hose end into pump pressure outlet fitting (Fig. 19). Thread tube nut into outlet fitting, but do not tighten at this time.

(6) Route hose behind cradle crossmember and start hose end into gear port. Do not tighten hose tube nut at this time.

HOSE - POWER STEERING PRESSURE (Continued)

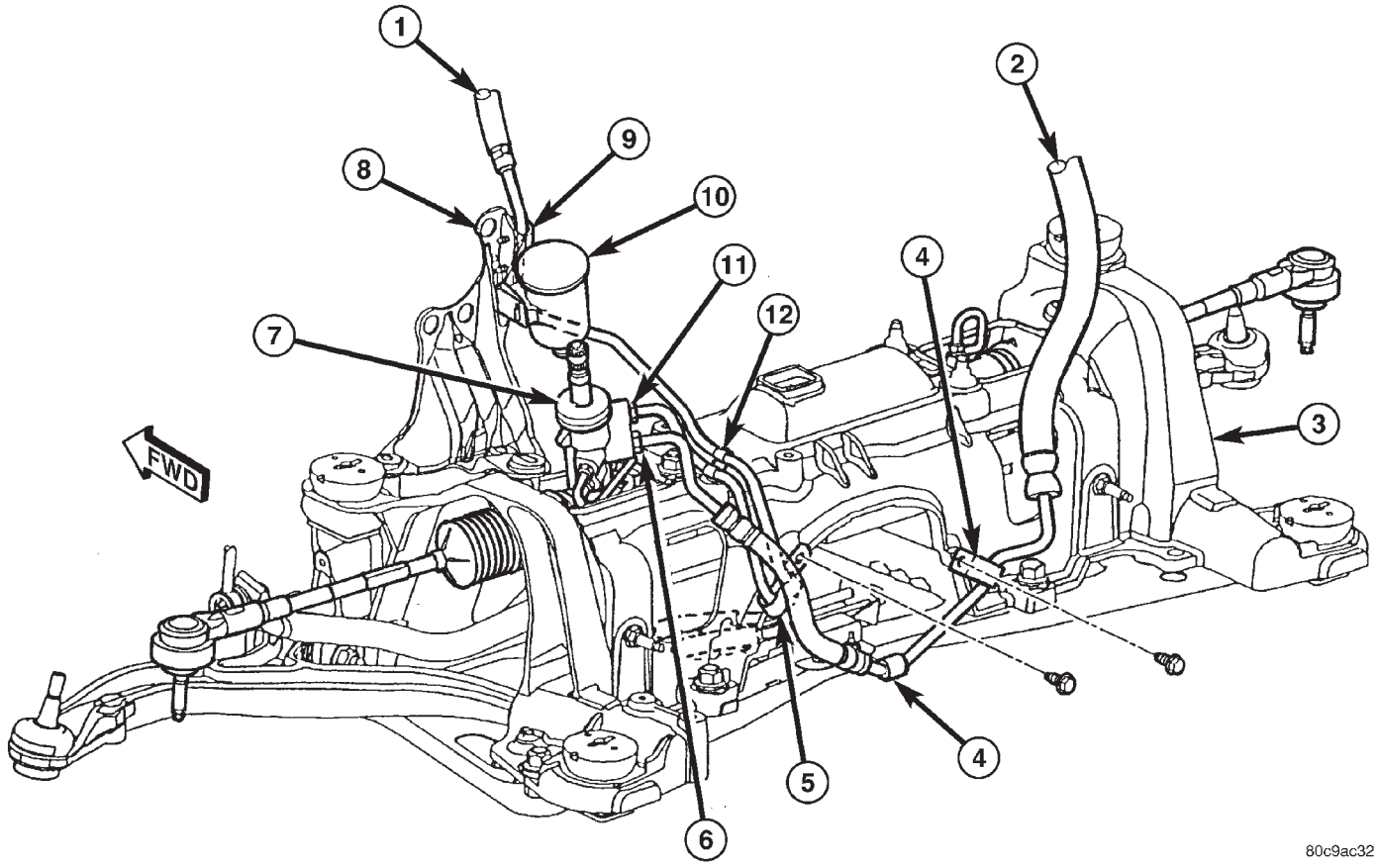

Fig. 20 HOSES TO POWER STEERING GEAR - 3.3L/3.8L ENGINE

1 - RETURN HOSE (TO RESERVOIR)
2 - PRESSURE HOSE (FROM PUMP)
3 - CRADLE CROSSMEMBER
4 - PRESSURE HOSE ROUTING CLAMP
5 - RETURN HOSE ROUTING CLAMP
6 - PRESSURE HOSE TUBE NUT
7 - POWER STEERING GEAR
8 - ABS BRACKET
9 - ROUTING CLIP
10 - LEAK DETECTION PUMP FILTER
11 - RETURN HOSE TUBE NUT
12 - ROUTING CLIP

(7) Install hose into right routing clamp (Fig. 19), then install mounting bolt into cradle crossmember. Tighten bolt to 23 N·m (200 in. lbs.) torque.

CAUTION: When tightening and torquing the pressure hose at the power steering pump, the pressure hose is to be rotated against the fluid return hose fitting on the pump.

(8) Tighten pressure hose tube nuts at pump and gear to 31 N·m (275 in. lbs.) torque.

(9) Install front emissions vapor canister. (Refer to 25 - EMISSIONS CONTROL/EVAPORATIVE EMISSIONS/VAPOR CANISTER - INSTALLATION)

(10) Lower vehicle.

(11) Fill and bleed the power steering system using the Power Steering Pump Initial Operation Procedure. (Refer to 19 - STEERING/PUMP - STANDARD PROCEDURE)

(12) Inspect system for leaks.

INSTALLATION - 3.3L/3.8L ENGINE

(1) Remove any used O-rings from ends of power steering hose.

(2) Using a lint free towel, wipe clean hose ends, power steering pump pressure outlet fitting and steering gear port.

(3) Install new O-rings on ends of power steering fluid pressure hose. Lubricate O-rings using clean power steering fluid.

CAUTION: Use care not to bend tube ends of the power steering hoses when installing. Leaks and restrictions may occur.

HOSE - POWER STEERING PRESSURE (Continued)

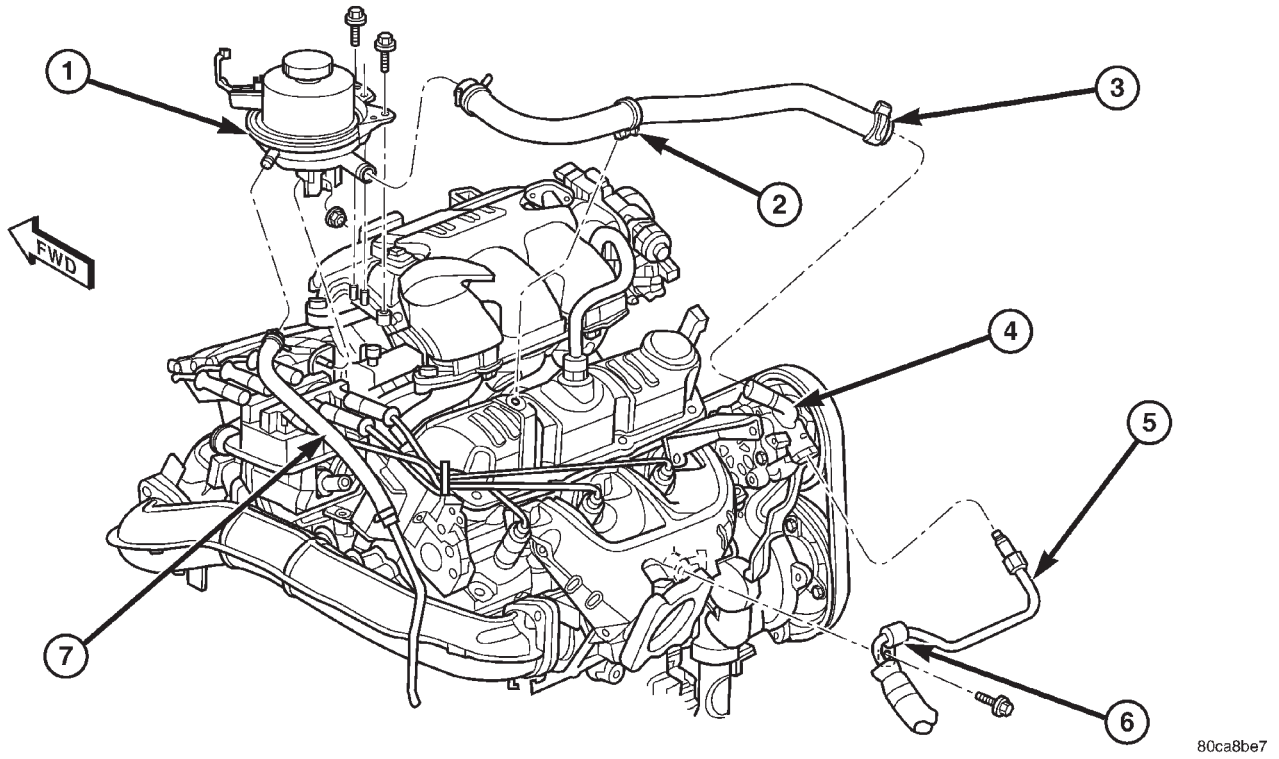

Fig. 21 RESERVOIR AND HOSES - 3.3L/3.8L

1 - RESERVOIR
2 - ROUTING CLIP (2001 ONLY)
3 - SUPPLY HOSE
4 - POWER STEERING PUMP
5 - PRESSURE HOSE (TO GEAR)
6 - ROUTING BRACKET
7 - RETURN HOSE (FROM GEAR)

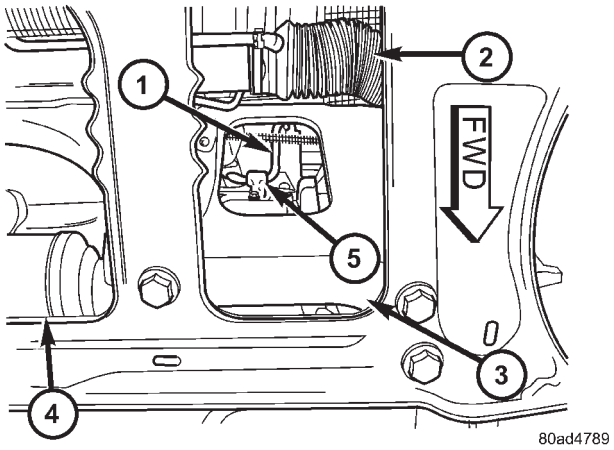

Fig. 22 PRESSURE HOSE ROUTING CLAMP

1 - PRESSURE HOSE TUBE
2 - STEERING GEAR
3 - CRADLE CROSSMEMBER
4 - DRIVESHAFT
5 - ROUTING CLAMP BRACKET

CAUTION: Power steering fluid hoses must remain away from the exhaust system and must not come in contact with any unfriendly surfaces on the vehicle.

(4) Route hose up behind engine toward pump avoiding tight bends or kinking.

(5) Install power steering pressure hose end into pump pressure outlet fitting (Fig. 21). Thread tube nut into outlet fitting, but do not tighten at this time.

(6) Attach pressure hose routing bracket to engine (Fig. 21). Tighten bolt to 23 N·m (200 in. lbs.) torque.

(7) Tighten hose tube nut at pump outlet fitting to 31 N·m (275 in. lbs.) torque.

(8) Route hose behind cradle crossmember and start hose end into gear port. Do not tighten hose tube nut at this time.

(9) Attach hose to suspension cradle crossmember and steel reinforcement using two routing clamps and bolts (Fig. 20). Tighten clamp bolt at steel reinforcement to 11 N·m (100 in. lbs.) torque. Tighten clamp bolt at cradle crossmember to 23 N·m (200 in. lbs.) torque.

HOSE - POWER STEERING PRESSURE (Continued)

(10) Tighten hose tube nut at power steering gear port to 31 N·m (275 in. lbs.) torque.

(11) Install front emissions vapor canister. (Refer to 25 - EMISSIONS CONTROL/EVAPORATIVE EMISSIONS/VAPOR CANISTER - INSTALLATION)

(12) Lower vehicle.

(13) Fill and bleed the power steering system using the Power Steering Pump Initial Operation Procedure. (Refer to 19 - STEERING/PUMP - STANDARD PROCEDURE)

(14) Inspect system for leaks.

HOSE - POWER STEERING RETURN

REMOVAL

REMOVAL - 2.4L ENGINE

NOTE: Before proceeding, review all WARNINGS and CAUTIONS. (Refer to 19 - STEERING/PUMP - WARNING)(Refer to 19 - STEERING/PUMP - CAUTION)

(1) Remove cap from power steering fluid reservoir.

(2) Using a siphon pump, remove as much power steering fluid as possible from power steering fluid reservoir.

(3) Raise vehicle. (Refer to LUBRICATION & MAINTENANCE/HOISTING - STANDARD PROCEDURE)

(4) Remove front emissions vapor canister. (Refer to 25 - EMISSIONS CONTROL/EVAPORATIVE EMISSIONS/VAPOR CANISTER - REMOVAL)

(5) Place an oil drain pan under vehicle to catch power steering fluid.

(6) Cut tie-strap securing insulating heat sleeve to power steering fluid return hose near power steering pump. Pull back heat sleeve to expose hose clamp.

(7) Remove clamp, then return hose from power steering pump (Fig. 19).

(8) Remove 2 bolts attaching power steering cooler to cradle crossmember reinforcement (Fig. 23).

(9) Remove bolts attaching routing clamps to front suspension cradle crossmember (Fig. 19). Remove return hose from clamps.

(10) Back out return hose tube nut at power steering gear and remove hose (Fig. 19).

REMOVAL - 3.3L/3.8L ENGINE

NOTE: Before proceeding, review all WARNINGS and CAUTIONS. (Refer to 19 - STEERING/PUMP - WARNING)(Refer to 19 - STEERING/PUMP - CAUTION)

(1) Remove cap from power steering fluid reservoir.

(2) Using a siphon pump, remove as much power steering fluid as possible from power steering fluid reservoir.

(3) Place an oil drain pan under vehicle to catch any draining power steering fluid.

(4) Remove clamp attaching return hose to power steering fluid reservoir. Disconnect hose from reservoir (Fig. 21).

(5) Follow return hose downward and open retainer at ABS bracket (Fig. 20). Remove hose tube from retainer.

(6) Raise vehicle. (Refer to LUBRICATION & MAINTENANCE/HOISTING - STANDARD PROCEDURE)

(7) Remove front emissions vapor canister. (Refer to 25 - EMISSIONS CONTROL/EVAPORATIVE EMISSIONS/VAPOR CANISTER - REMOVAL)

(8) Remove bolt securing return hose routing clamp to suspension cradle crossmember (Fig. 20).

(9) Remove 2 bolts attaching power steering cooler to cradle crossmember reinforcement (Fig. 23).

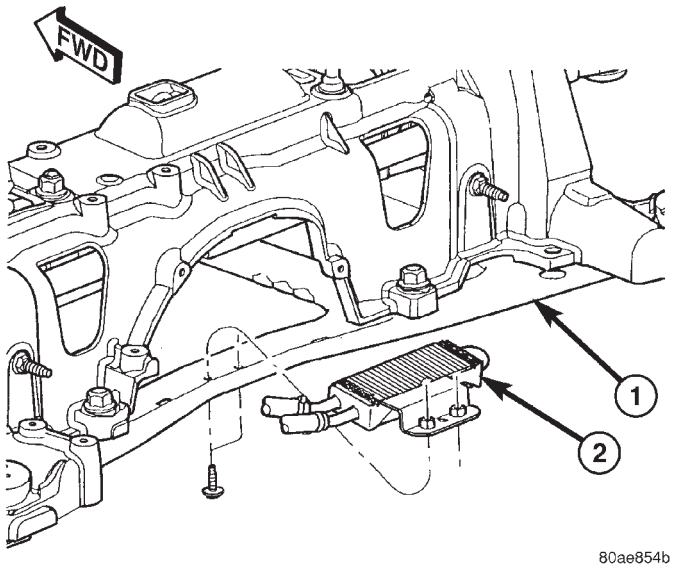

Fig. 23 POWER STEERING COOLER

1 - CRADLE CROSSMEMBER REINFORCEMENT
2 - POWER STEERING COOLER

(10) Disconnect return hose at power steering gear (Fig. 20).

(11) Remove power steering fluid return hose with cooler from vehicle.

HOSE - POWER STEERING RETURN (Continued)

INSTALLATION

INSTALLATION - 2.4L ENGINE

(1) Remove any used O-rings from ends of power steering hose.

(2) Using a lint free towel, wipe clean hose ends, power steering pump fitting and steering gear port.

(3) Install new O-ring on power steering gear end of return hose. Lubricate O-ring using clean power steering fluid.

CAUTION: Use care not to bend tube ends of the power steering hoses when installing. Leaks and restrictions may occur.

CAUTION: If a new return hose is being installed and it does not have an insulating heat sleeve installed, the heat shield from the original hose must be transferred before hose installation.

(4) Route hose along rear of cradle crossmember and start gear end of hose into gear port. Do not tighten hose tube nut at this time.

(5) Attach hose to suspension cradle crossmember using two routing clamps and bolts (Fig. 19). Tighten clamp bolts to 23 N·m (200 in. lbs.) torque.

(6) Tighten return hose tube nut at power steering gear port to 31 N·m (275 in. lbs.) torque.

(7) Install the power steering fluid cooler on the cradle crossmember reinforcement (Fig. 23). Install the mounting bolts and tighten to 11 N·m (100 in. lbs.).

CAUTION: Power steering fluid hoses must remain away from the exhaust system and must not come in contact with any unfriendly surfaces on the vehicle.

(8) Route pump end of hose over cradle crossmember toward pump avoiding tight bends or kinking.

(9) Install return hose onto power steering pump return fitting and secure with hose clamp (Fig. 19). Tighten the screw-type clamp to a torque of 2 N·m (18 in. lbs.).

CAUTION: To prevent overheating of power steering fluid return hose, protective heat shield sleeve must cover entire rubber hose.

(10) Slide insulating heat shield up over the clamp on the return hose and tie-strap it in place.

(11) Install front emissions vapor canister. (Refer to 25 - EMISSIONS CONTROL/EVAPORATIVE EMISSIONS/VAPOR CANISTER - INSTALLATION)

(12) Lower vehicle.

(13) Fill and bleed the power steering system using the Power Steering Pump Initial Operation Procedure. (Refer to 19 - STEERING/PUMP - STANDARD PROCEDURE)

(14) Inspect system for leaks.

INSTALLATION - 3.3L/3.8L ENGINE

(1) Remove any used O-rings from ends of power steering hose.

(2) Using a lint free towel, wipe clean hose ends and power steering gear hose port.

(3) Install a new O-ring on gear port end of power steering fluid hose. Lubricate O-ring using clean power steering fluid.

CAUTION: Use care not to bend tube ends of the power steering hoses when installing. Leaks and restrictions may occur.

CAUTION: Power steering fluid hoses must remain away from the exhaust system and must not come in contact with any unfriendly surfaces on the vehicle.

(4) Route hose (with cooler attached) up toward reservoir avoiding tight bends or kinking.

(5) Start steering gear end of hose into gear port. Do not tighten hose tube nut at this time.

(6) Attach return hose tubes to suspension cradle crossmember using routing clamp and bolt (Fig. 20). Tighten clamp bolt to 23 N·m (200 in. lbs.) torque.

(7) Install the power steering fluid cooler on the cradle crossmember reinforcement (Fig. 23). Install the mounting bolts and tighten to 11 N·m (100 in. lbs.). When installing mounting bolts, include pressure hose routing clamp.

(8) Tighten hose tube nut at power steering gear port to 31 N·m (275 in. lbs.) torque.

(9) Install front emissions vapor canister. (Refer to 25 - EMISSIONS CONTROL/EVAPORATIVE EMISSIONS/VAPOR CANISTER - INSTALLATION)

(10) Lower vehicle.

(11) Install return hose tube into retainer on ABS bracket (Fig. 20). Close the bracket.

(12) Install return hose onto reservoir (Fig. 21). Slide the hose clamp into position on fluid reservoir and attach it. **Be sure hose clamp in installed past bead on fluid reservoir fitting.**

(13) Fill and bleed power steering system using the Power Steering Pump Initial Operation Procedure. (Refer to 19 - STEERING/PUMP - STANDARD PROCEDURE)

(14) Inspect system for leaks.

HOSE - POWER STEERING SUPPLY

REMOVAL

REMOVAL - 2.4L ENGINE

(1) Remove filler cap from power steering fluid reservoir.
(2) Using a siphon pump, remove as much power steering fluid as possible from the power steering fluid reservoir.
(3) Raise vehicle. (Refer to LUBRICATION & MAINTENANCE/HOISTING - STANDARD PROCEDURE)
(4) Remove hose clamp securing supply hose to power steering pump, then remove supply hose from pump fitting.
(5) Lower vehicle.
(6) Remove hose clamp attaching power steering fluid supply hose to power steering fluid reservoir, then remove supply hose.
(7) Remove the power steering fluid supply hose from the vehicle.

REMOVAL - 3.3L/3.8L ENGINE

NOTE: Before proceeding, review all WARNINGS and CAUTIONS. (Refer to 19 - STEERING/PUMP - WARNING)(Refer to 19 - STEERING/PUMP - CAUTION)

(1) Remove cap from power steering fluid reservoir.
(2) Using a siphon pump, remove as much power steering fluid as possible from power steering fluid reservoir.
(3) Place an oil drain pan under vehicle to catch any draining power steering fluid.
(4) Remove clamp attaching supply hose to power steering fluid reservoir. Disconnect hose from reservoir (Fig. 21).
(5) Pull upward on hose routing clip releasing it from bracket on cylinder head cover (Fig. 21).

NOTE: It may be necessary to remove air cleaner housing to gain greater access to supply hose at power steering pump. (Refer to 9 - ENGINE/AIR INTAKE SYSTEM/AIR CLEANER HOUSING - REMOVAL)

(6) Remove clamp attaching supply hose to power steering pump. Disconnect hose from pump and remove from vehicle (Fig. 21).

INSTALLATION

INSTALLATION - 2.4L ENGINE

(1) Install and correctly route power steering fluid supply hose from remote fluid reservoir to power steering pump.
(2) Install fluid supply hose onto power steering fluid reservoir. Install hose clamp. **Be sure hose clamp is installed past bead on fluid reservoir fitting.**
(3) Raise vehicle. (Refer to LUBRICATION & MAINTENANCE/HOISTING - STANDARD PROCEDURE)
(4) Install power steering fluid supply hose on power steering pump supply fitting. Install hose clamp. **Be sure hose clamp is installed past bead on pump fitting.**
(5) Lower vehicle.
(6) Fill and bleed power steering system using Power Steering Pump Initial Operation Procedure. (Refer to 19 - STEERING/PUMP - STANDARD PROCEDURE)
(7) Inspect system for leaks.

INSTALLATION - 3.3L/3.8L ENGINE

(1) Install supply hose onto supply fitting on power steering pump (Fig. 21). Slide the hose clamp into position on fluid reservoir and attach it. **Be sure hose clamp in installed past bead on fluid reservoir fitting.**
(2) Align routing clip located toward center of supply hose with hole in bracket on cylinder head cover and push into place (Fig. 21).
(3) Install supply hose onto reservoir (Fig. 21). Slide the hose clamp into position on fluid reservoir and attach it. **Be sure hose clamp in installed past bead on fluid reservoir fitting.**
(4) Fill and bleed power steering system using Power Steering Pump Initial Operation Procedure. (Refer to 19 - STEERING/PUMP - STANDARD PROCEDURE)
(5) Inspect system for leaks.

RESERVOIR - POWER STEERING FLUID

DESCRIPTION

DESCRIPTION - 2.4L/3.3L/3.8L ENGINE

All vehicles use a remote mounted power steering fluid reservoir. The power steering fluid reservoir is mounted to the engine near the battery (Fig. 24).

RESERVOIR - POWER STEERING FLUID (Continued)

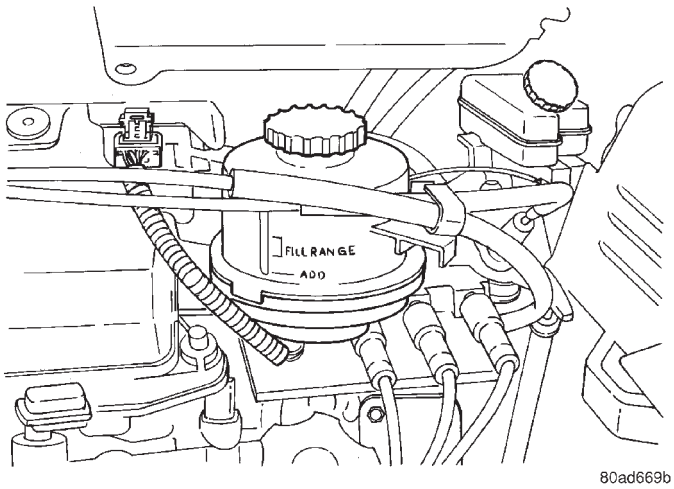

Fig. 24 Power Steering Fluid Reservoir (Typical)

DESCRIPTION - 2.5L DIESEL

All vehicles use a remote mounted power steering fluid reservoir. The power steering fluid reservoir is mounted to a bracket on the engine manifold (Fig. 25).

OPERATION

The power steering fluid reservoir stores and supplies power steering fluid for the power steering system.

REMOVAL

REMOVAL - 2.4L ENGINE

(1) Remove cap from power steering fluid reservoir.

(2) Using a siphon pump, remove as much power steering fluid as possible from power steering fluid reservoir.

(3) Open retainer on side of reservoir and remove cables from retainer.

(4) Remove clamp attaching supply hose to power steering fluid reservoir. Disconnect hose from reservoir.

(5) Remove bolts and nut securing reservoir in place.

(6) Remove reservoir.

REMOVAL - 3.3L/3.8L ENGINE

(1) Remove cap from power steering fluid reservoir.

(2) Using a siphon pump, remove as much power steering fluid as possible from power steering fluid reservoir.

(3) Open retainer on side of reservoir and remove cables from retainer.

(4) Remove clamp attaching supply hose to power steering fluid reservoir. Disconnect hose from reservoir (Fig. 21).

(5) Remove clamp attaching return hose to power steering fluid reservoir. Disconnect hose from reservoir (Fig. 21).

(6) Remove bolts and nut securing reservoir in place (Fig. 21).

(7) Remove reservoir.

REMOVAL - 2.5L DIESEL

(1) Open hood.

(2) Remove engine cover.

(3) Remove the filler cap from remote power steering fluid reservoir.

(4) Siphon as much fluid as possible from the fluid reservoir.

(5) Remove the clamp attaching the return hose to the power steering fluid reservoir. Disconnect hose from reservoir (Fig. 25).

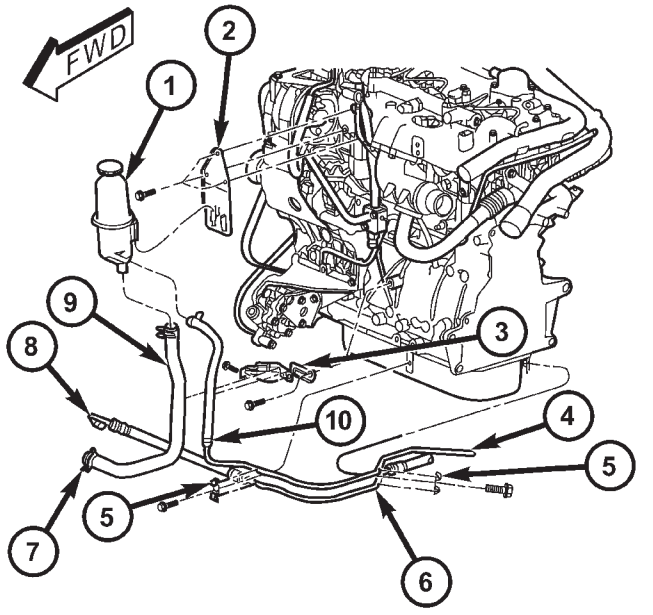

Fig. 25 Reservoir And Hoses - 2.5L Diesel

1 - POWER STEERING FLUID RESERVOIR
2 - RESERVOIR BRACKET
3 - SUPPLY HOSE BRACKET
4 - RETURN HOSE FROM GEAR
5 - ROUTING CLIP
6 - PRESSURE HOSE TO GEAR
7 - SUPPLY HOSE (PUMP END)
8 - PRESSURE HOSE (PUMP END)
9 - SUPPLY HOSE
10 - RETURN HOSE

(6) Remove the clamp attaching the supply hose to the power steering fluid reservoir. Disconnect hose from reservoir (Fig. 25).

(7) Press the tang on the reservoir mounting bracket retaining the reservoir to the bracket, then pull upward on reservoir and remove it from the bracket.

INSTALLATION

INSTALLATION - 2.4L ENGINE

(1) Place reservoir into position on engine.

(2) Install reservoir mounting bolts and nut. Tighten fasteners to 12 N·m (105 in. lbs.) torque.

(3) Install supply hose onto reservoir. Slide the hose clamp into position on fluid reservoir and attach it. **Be sure hose clamp in installed past bead on fluid reservoir fitting.**

(4) Fill and bleed power steering system using Power Steering Pump Initial Operation Procedure. (Refer to 19 - STEERING/PUMP - STANDARD PROCEDURE)

(5) Inspect system for leaks.

INSTALLATION - 3.3L/3.8L ENGINE

(1) Place reservoir into place on engine (Fig. 21).

(2) Install reservoir mounting bolts and nut (Fig. 21). Tighten fasteners to 12 N·m (105 in. lbs.) torque.

(3) Install supply hose onto reservoir (Fig. 21). Slide the hose clamp into position on fluid reservoir and attach it. **Be sure hose clamp in installed past bead on fluid reservoir fitting.**

(4) Install return hose onto reservoir (Fig. 21). Slide the hose clamp into position on fluid reservoir and attach it. **Be sure hose clamp in installed past bead on fluid reservoir fitting.**

(5) Fill and bleed power steering system using Power Steering Pump Initial Operation Procedure. (Refer to 19 - STEERING/PUMP - STANDARD PROCEDURE)

(6) Inspect system for leaks.

INSTALLATION - 2.5L DIESEL

(1) Align the guide on the rear of the reservoir with the mounting bracket and push reservoir downward until reservoir clicks into place in the bracket.

(2) Install the supply hose onto the reservoir (Fig. 25). Slide the hose clamp into position on the fluid reservoir and attach it. **Be sure hose clamp in installed past bead on fluid reservoir fitting.**

(3) Install the return hose onto the reservoir (Fig. 25). Slide the hose clamp into position on the fluid reservoir and attach it. **Be sure hose clamp in installed past bead on fluid reservoir fitting.**

(4) Fill the fluid reservoir to the proper level with the correct Mopar® power steering fluid or equivalent.

(5) Start the engine and let run for a few seconds, then turn the engine off.

(6) Add fluid as necessary.

(7) Install the filler cap.

(8) Install engine cover.

TRANSMISSION/TRANSAXLE

TABLE OF CONTENTS

	page
POWER TRANSFER UNIT	1
31TH AUTOMATIC TRANSAXLE	21
41TE AUTOMATIC TRANSAXLE	161
T850 MANUAL TRANSAXLE	308

POWER TRANSFER UNIT

TABLE OF CONTENTS

	page
POWER TRANSFER UNIT	
DESCRIPTION	1
OPERATION	3
DIAGNOSIS AND TESTING	
SEAL IDENTIFICATION	3
FLUID LEAK DIAGNOSIS	4
STANDARD PROCEDURE	
STANDARD PROCEDURE - FLUID LEVEL INSPECTION	5
STANDARD PROCEDURE - PTU FLUID CHANGE	5
REMOVAL	6
INSTALLATION	7
ADJUSTMENTS	
OUTPUT FLANGE SHIM SELECTION	7
SPECIFICATIONS	
TORQUE	8
SPECIAL TOOLS	
SDP POWER TRANSFER UNIT	8
DIFFERENTIAL CARRIER SEAL	
REMOVAL	9
INSTALLATION	9
END COVER BALL BEARING	
REMOVAL	9
INSTALLATION	10
END COVER SEAL	
REMOVAL	11
INSTALLATION	11
HALF SHAFT INNER SEAL	
REMOVAL	12
INSTALLATION	13
INPUT SHAFT COVER SEAL	
REMOVAL	13
INSTALLATION	14
INPUT SHAFT END SEAL	
REMOVAL	16
INSTALLATION	16
INPUT SHAFT SEAL	
REMOVAL	17
INSTALLATION	18
OUTER HALF SHAFT SEAL	
REMOVAL	19
INSTALLATION	19
REAR COVER O-RING	
REMOVAL	19
INSTALLATION	20

POWER TRANSFER UNIT

DESCRIPTION

The Power Transfer Unit (P.T.U.) is attached to a modified automatic transaxle case where the right half shaft extension housing would normally be located.

The Power Transfer Unit is sealed from the transaxle and has its own oil sump. The Unit uses Mopar® SAE 80W-90 Gear and Axle Lubricant (MS-9020) and holds 1.15 liters (1.22 quarts).

Service of the Power Transfer Unit is limited to:

- Fluid Change
- Seals
- Gaskets
- One ball bearing
- Output flange

If the ring gear and pinion, any tapered roller bearings, case, covers, or pinion carrier fail the entire unit must be replaced.

POWER TRANSFER UNIT (Continued)

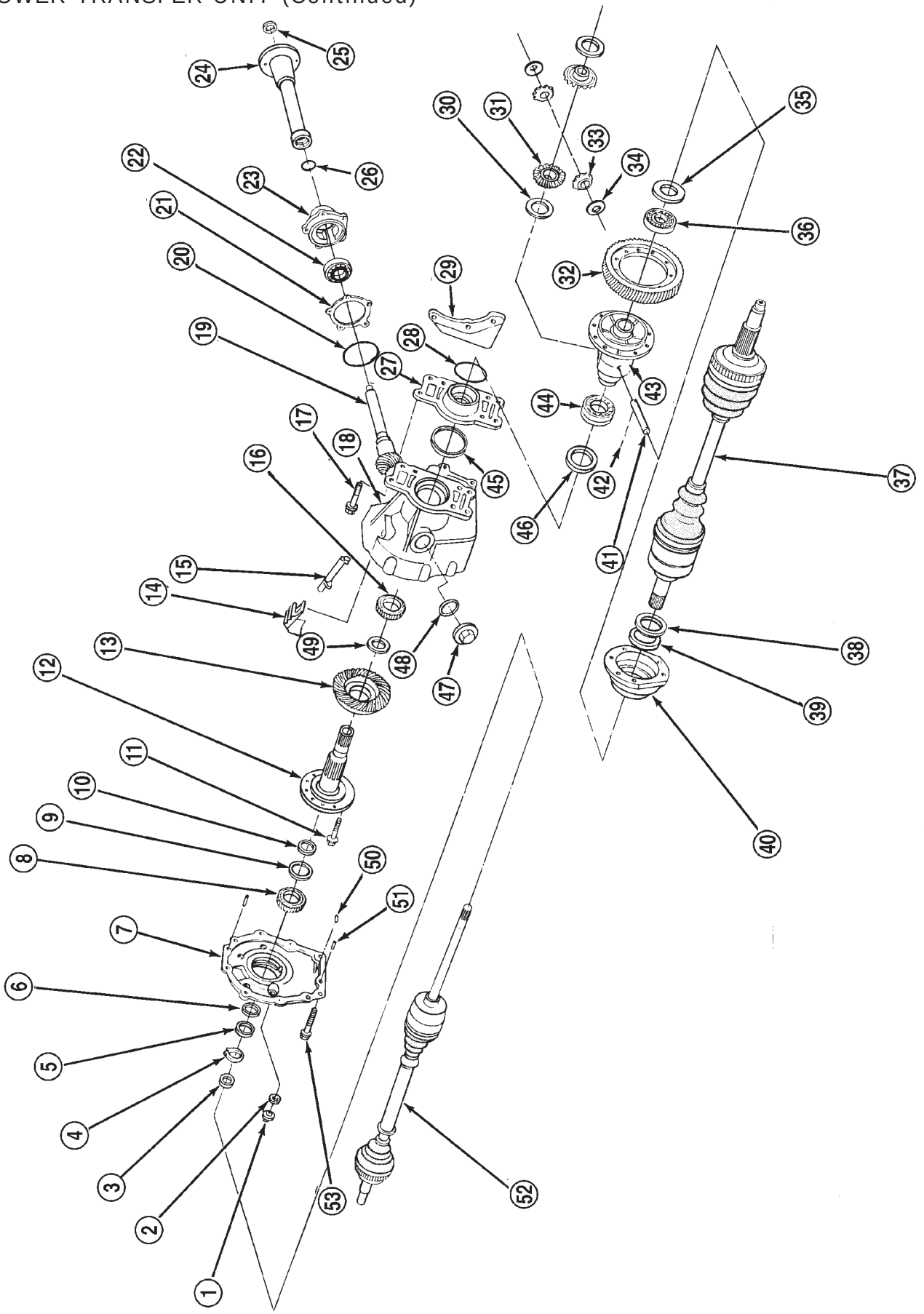

Power Transfer Unit Components

POWER TRANSFER UNIT (Continued)

1 - PLUG
2 - WASHER FLAT
3 - SEAL RING
4 - SNAP RING
5 - BALL BEARING
6 - SEAL RING
7 - COVER-PTU CASE END
8 - TAPERED ROLLER BEARING
9 - SEAL RING
10 - SEAL RING
11 - HEX HEAD SCREW
12 - SHAFT-PTU INPUT
13 - GEAR-PTU RING
14 - TROUGH-PTU (RT.)
15 - TROUGH-PTU (LT.)
16 - TAPERED ROLLER BEARING
17 - HEX HEAD SCREW
18 - CASE-PTU
19 - PINION-PTU
20 - O-RING
21 - SHIM
22 - TAPERED ROLLER BEARING
23 - COVER-PTU CASE REAR
24 - FLANGE TUBE-PTU-OUTPUT ASSY.
25 - LOCK NUT-HEX FLANGE
26 - O- RING
27 - RETAINER PLATE
28 - O-RING
29 - BRACKET
30 - THRUST WASHER
31 - SIDE GEAR-DIFFERENTIAL
32 - FINAL DRIVE GEAR
33 - PINION DIFFERENTIAL
34 - WASHER DIFFERENTIAL PINION
35 - SHIM
36 - TAPERED ROLLER BEARING
37 - SHAFT ASSY. FRONT L.H.
38 - SEAL RING
39 - OIL WIPER
40 - RETAINER DIFFERENTIAL BEARING
41 - SHAFT DIFFERENTIAL PINION
42 - PIN
43 - CASE DIFFERENTIAL
44 - TAPERED ROLLER BEARING CONE
45 - SEAL RING
46 - SEAL RING
47 - PLUG
48 - O-RING
49 - SHIM
50 - MAGNET
51 - DOWEL
52 - SHAFT ASSY. FRONT R.H.
53 - HEX HEAD SCREW

OPERATION

The Transfer Unit provides the power to the rear wheels through a hypoid ring gear and pinion set.

DIAGNOSIS AND TESTING

SEAL IDENTIFICATION

For accurate seal diagnosis, repair seal name and location is critical. Refer to (Fig. 1), (Fig. 2), (Fig. 3) and (Fig. 4) for correct seal name and location.

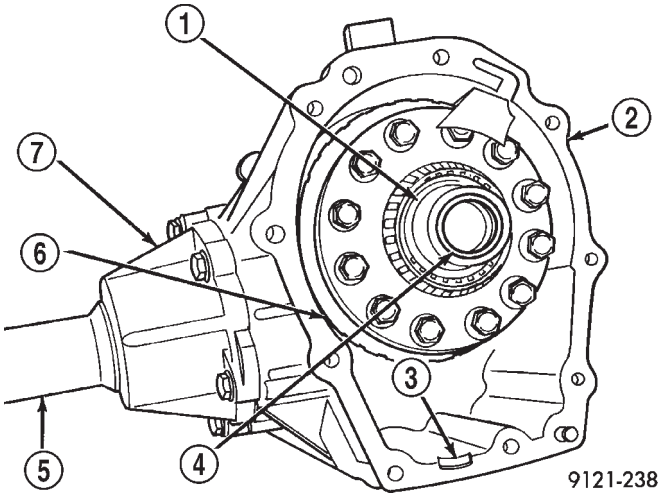

Fig. 1 Seal

1 - INPUT SHAFT
2 - P.T.U. CASE
3 - MAGNET
4 - INPUT SHAFT END SEAL
5 - OUTPUT SHAFT
6 - RING GEAR
7 - REAR COVER

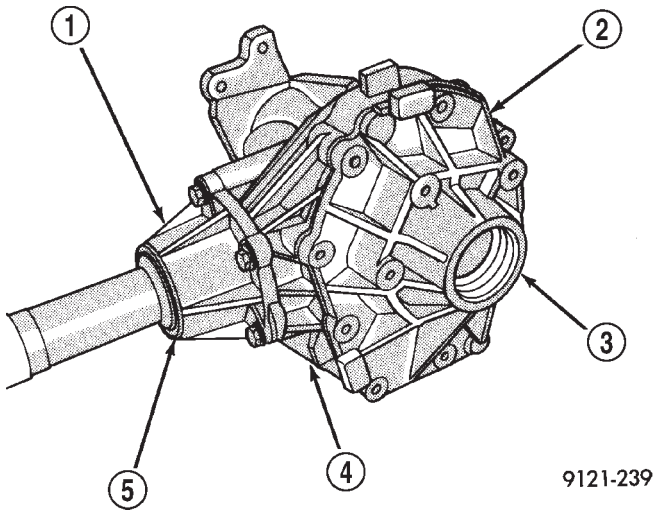

Fig. 2 Seal Location

1 - REAR COVER
2 - END COVER
3 - OUTER HALFSHAFT SEAL
4 - P.T.U. CASE
5 - P.T.U. OUTPUT SEAL

POWER TRANSFER UNIT (Continued)

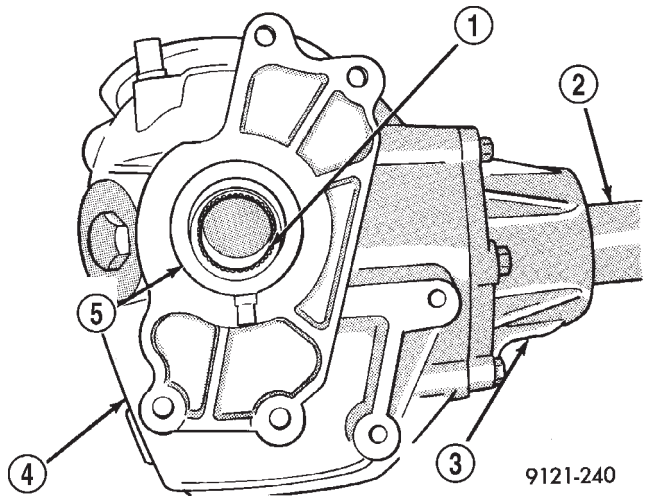

Fig. 3 Seal Location

1 - INPUT SHAFT
2 - OUTPUT SHAFT
3 - REAR COVER
4 - P.T.U. CASE
5 - INPUT SHAFT SEAL

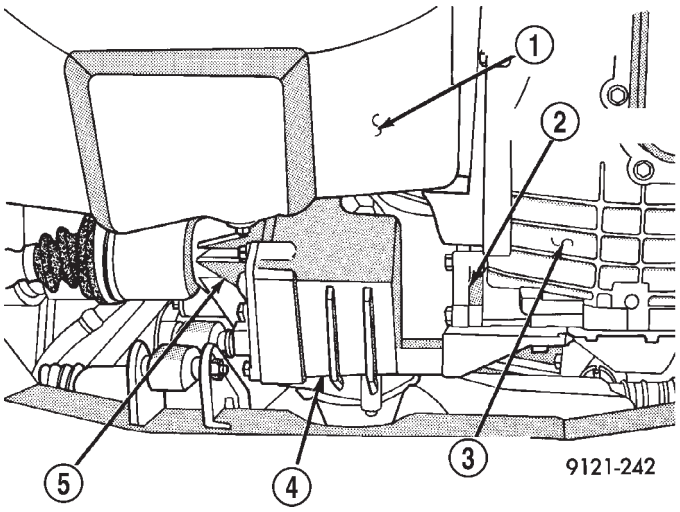

Fig. 5 Weep Hole Locations

1 - ENGINE OIL PAN
2 - WEEP HOLE “A”
3 - TRANSAXLE CASE
4 - P.T.U.
5 - WEEP HOLE “B”

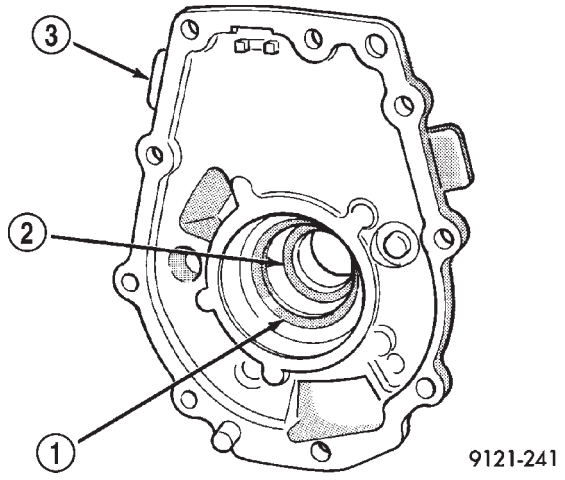

Fig. 4 Seal Location

1 - P.T.U. INPUT SHAFT COVER SEAL
2 - HALF SHAFT INNER SEAL
3 - INSIDE VIEW OF P.T.U. END COVER

FLUID LEAK DIAGNOSIS

When diagnosing fluid leaks on the Power Transfer Unit two weep holes are provided to diagnose certain seal leaks. These holes are located on the bottom side of the assembly (Fig. 5).

If fluid leak is detected from either weep hole, seal replacement is necessary. **Do not attempt to repair the leak by sealing weep holes,** they must be kept clear of sealants for proper seal operation.

If fluid is leaking from weep hole A (Fig. 5) the type of fluid leaking will determine which seal needs to be replaced. If the fluid leaking is red in color (transmission fluid) this indicates that the Transmission differential carrier seal should be replaced. If the fluid leaking is light brown (gear lube) this indicates that the Power Transfer Unit input seal should be replaced. For replacement of these seals refer to Power Transfer Unit Service Procedures.

If fluid is leaking from weep hole B (Fig. 5) the type of fluid leaking will determine which seal is leaking. If the fluid leaking is red in color (transmission fluid) this indicates that the input shaft end seal should be replaced. If the fluid leaking is light brown (gear lube) this indicates that the half shaft inner seal and P.T.U. input shaft cover seal should be replaced. For replacement of these seals refer to Power Transfer Unit Service Procedures.

Before condemning any seal or gasket be sure that the rear rocker arm cover on the engine is not the cause of the oil leak. Oil leaking from the rocker arm cover is easily mistaken for a leaking Power Transfer Unit.

POWER TRANSFER UNIT (Continued)

STANDARD PROCEDURE

STANDARD PROCEDURE - FLUID LEVEL INSPECTION

(1) Raise vehicle on hoist.
(2) Remove PTU inspection plug (Fig. 6).

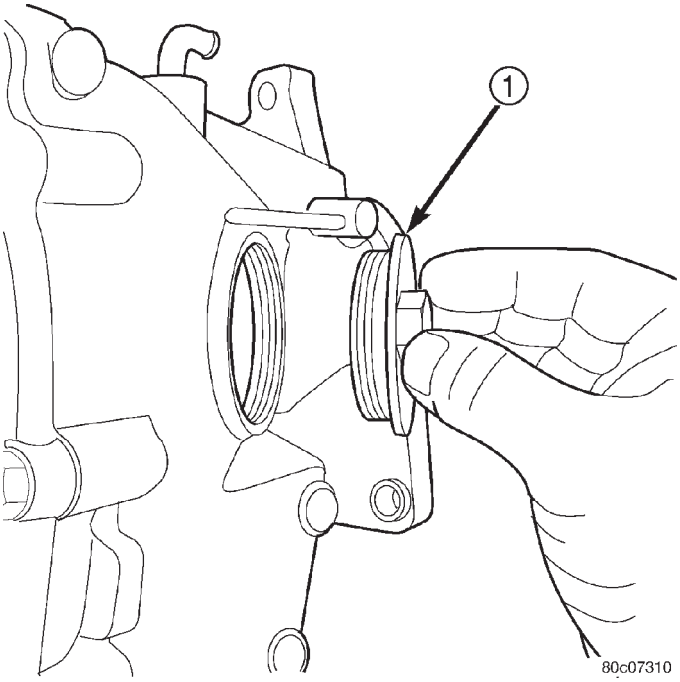

Fig. 6 Inspection Plug

1 - INSPECTION PLUG

(3) Fluid level should be within 3/16" from bottom of inspection hole. Add Mopar® Gear and Axle Lubricant 80W-90 as necessary with suitable suction gun (Fig. 7).
(4) Install inspection plug and torque to 20 N·m (180 in. lbs.) torque.
(5) Lower vehicle.

STANDARD PROCEDURE - PTU FLUID CHANGE

NOTE: PTU Fluid should be changed upon servicing the unit, or at the unit's regular scheduled interval. (Refer to LUBRICATION & MAINTENANCE/ MAINTENANCE SCHEDULES - DESCRIPTION)

(1) Raise vehicle on hoist.
(2) Remove PTU inspection plug (Fig. 8).
(3) Using suitable suction gun, draw fluid from PTU. Make sure hose contacts bottom of case to ensure all fluid is removed.

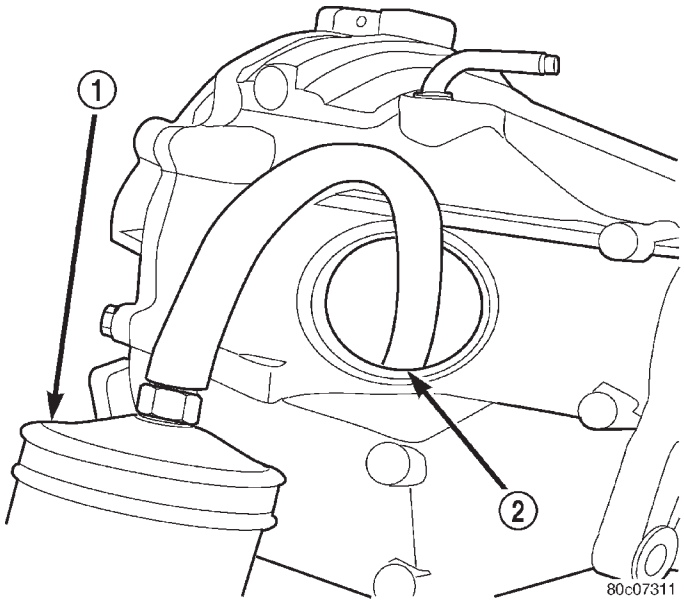

Fig. 7 Removing/Adding PTU Fluid

1 - SUCTION GUN
2 - INSPECTION HOLE

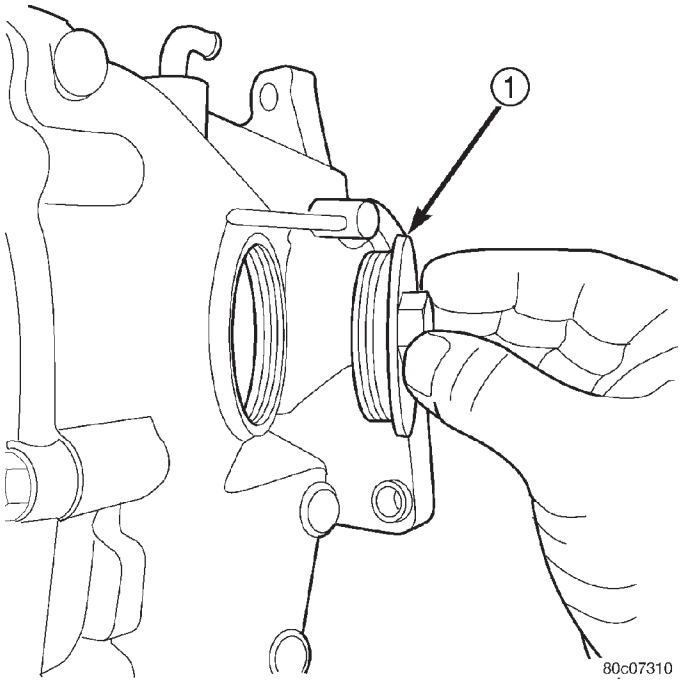

Fig. 8 Inspection Plug

1 - INSPECTION PLUG

POWER TRANSFER UNIT (Continued)

(4) Add 1.15 liters (1.22 quarts) of Mopar® Gear and Axle Lubricant 80W-90 with suction gun (Fig. 9).

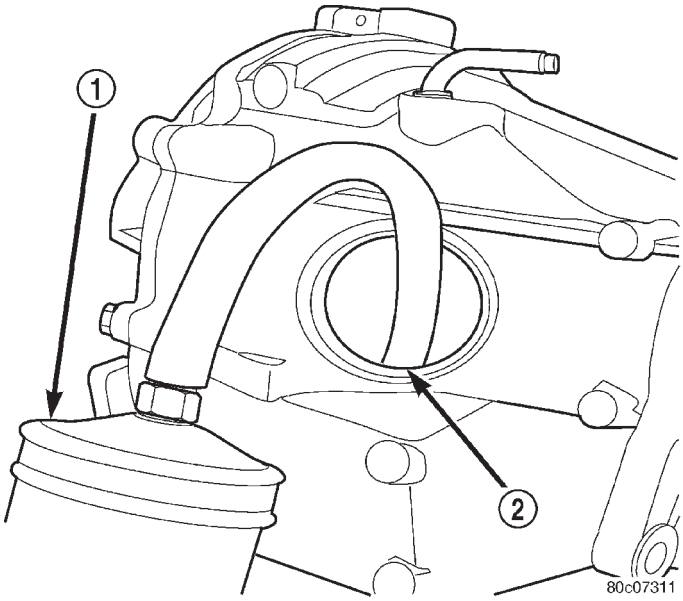

Fig. 9 Adding Fluid to PTU

1 - SUCTION GUN
2 - INSPECTION HOLE

(5) Install inspection plug and torque to 20 N·m (180 in. lbs.) torque.

(6) Lower vehicle.

REMOVAL

(1) Raise vehicle and remove front wheels.

CAUTION: A certain amount of oil will drain out of the transaxle when the drive shaft is removed.

(2) Remove right front drive shaft. Install a plug into the right driveshaft seal hole. (Refer to 3 - DIFFERENTIAL & DRIVELINE/HALF SHAFT - REMOVAL)

(3) Mark propeller shaft front flange.

CAUTION: Do not let propeller shaft to hang freely. Damage to the shaft will occur.

(4) Remove propeller shaft assembly (Fig. 10). (Refer to 3 - DIFFERENTIAL & DRIVELINE/PROPELLER SHAFT - REMOVAL)

(5) Remove cradle plate (Fig. 11).

(6) Remove the Power Transfer Unit mounting bracket bolts at the rear of the unit (Fig. 12).

(7) Remove the right outboard support bracket and bolts near the right axle shaft.

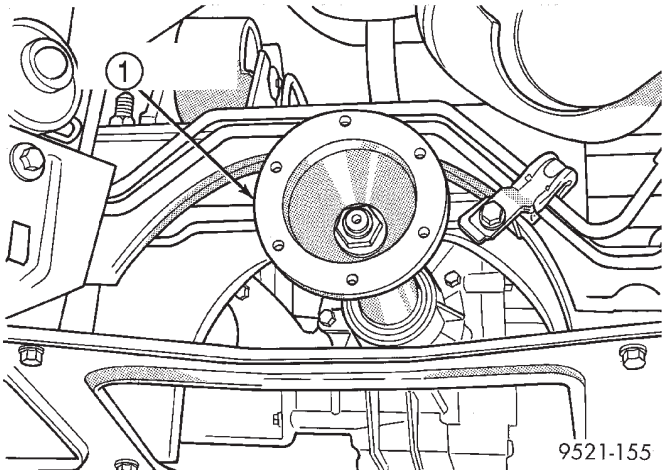

Fig. 10 Driveshaft Flange

1 - DRIVESHAFT FLANGE

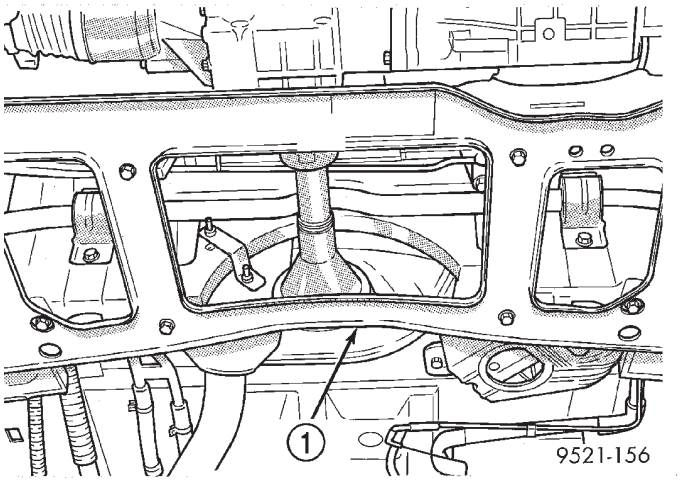

Fig. 11 Cradle Plate

1 - CRADLE PLATE

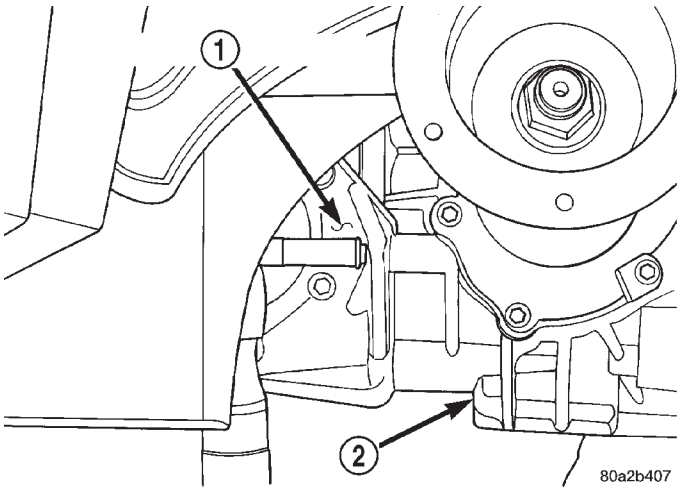

Fig. 12 Remove Rear P.T.U Bracket Bolts

1 - P.T.U. MOUNT BRACKET
2 - P.T.U.

POWER TRANSFER UNIT (Continued)

(8) Remove the four mounting bolts for the P.T.U. (Fig. 13)and (Fig. 14).

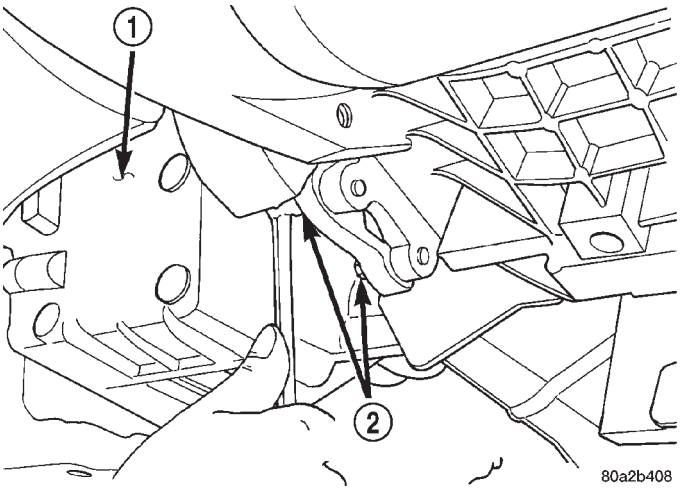

Fig. 13 P.T.U. Lower Mounting Bolts

1 - P.T.U.
2 - P.T.U. MOUNTING BOLTS

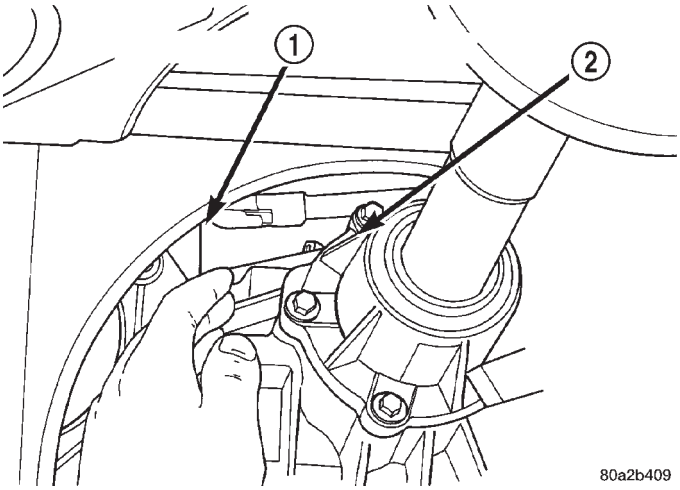

Fig. 14 P.T.U. Upper Mounting Bolts

1 - P.T.U. UPPER MOUNTING BOLTS
2 - P.T.U.

(9) Remove P.T.U. assembly from vehicle.

INSTALLATION

(1) To install, reverse removal procedure. Check transaxle fluid and P.T.U. fluid and fill to level.

(2) Refer to the Specifications section for the proper torque specifications.

ADJUSTMENTS

OUTPUT FLANGE SHIM SELECTION

This procedure is used when the output flange is replaced. Replacement of the output flange requires installation of the correct size shim to maintain bearing preload. **The shim must protrude from the new output flange the same distance that the original shim protruded from the original flange.**

(1) Stand the original output flange on end with shim side pointing up.

(2) Place original shim into groove in top of flange.

(3) Place a straight edge across the shim.

(4) Using feeler gauge, measure the distance between the straight edge and the top of the flange (Fig. 15). Record this measurement.

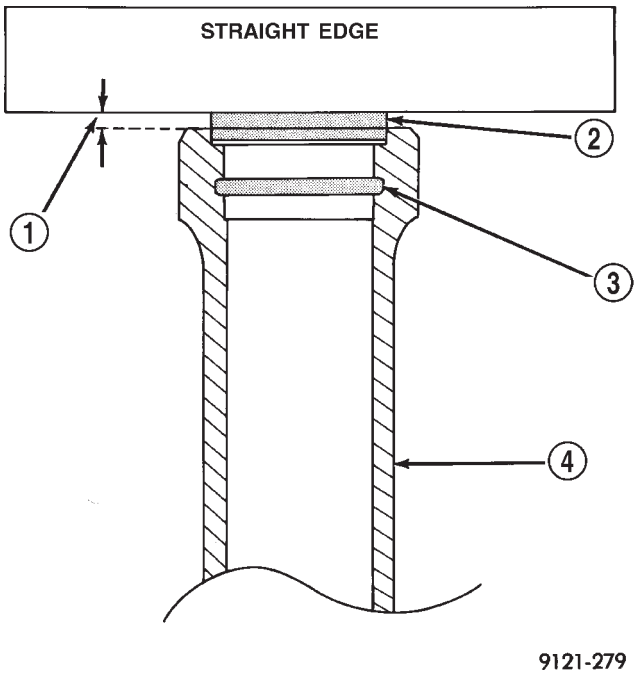

Fig. 15 Output Flange Shim Measurement

1 - MEASURE THIS DIMENSION
2 - SHIM
3 - O-RING
4 - OUTPUT FLANGE

(5) Repeat steps Step 1 through Step 4using the **new flange and the original shim.** Record this measurement.

(6) If measurements are not equal, use a new shim that protrudes from new output flange. Make sure it protrudes the same amount.

(7) For Example: The original shim protrudes 0.075 inch from the original output flange. Place the **original shim** into the new output flange. The protrusion of the shim in the new flange is 0.085 inch. This indicates that a 0.010 inch thinner shim is required to maintain the original protrusion.

(8) Install output flange and torque flange nut to 244 N·m (180 ft. lbs.).

(9) Check the turning torque of the pinion before installing the rear cover into the P.T.U. The turning torque should be between 2.0 N·m and 2.5 N·m (17 in. lbs. and 22 in. lbs.).

POWER TRANSFER UNIT (Continued)

SPECIFICATIONS

TORQUE

DESCRIPTION	TORQUE
End Cover	28 N·m (250 in. lbs.)
Fill Plug	27 N·m (240 in. lbs.)
Flange Nut	162 N·m (120 ft. lbs.)
Inspection Plug	20 N·m (180 in. lbs.)
Rear Cover	28 N·m (250 in. lbs.)
Ring Gear	94 N·m (70 ft. lbs.)

SPECIAL TOOLS

SDP POWER TRANSFER UNIT

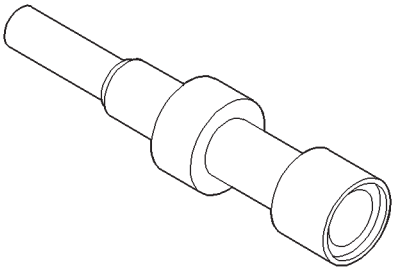

5049-a Seal Puller

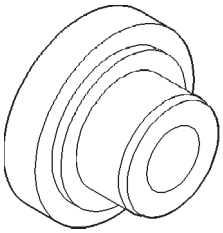

5065 Bearing Installer

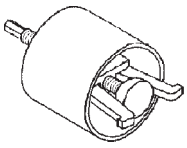

6514 Bearing Remover

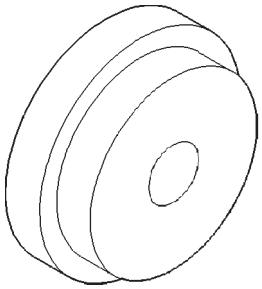

6522 Bearing Remover

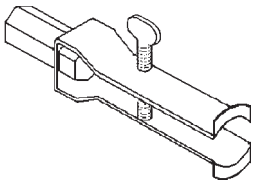

7794-a Bearing Remover

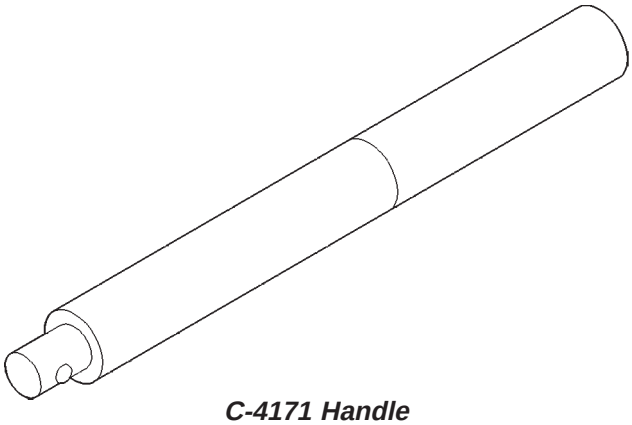

C-4171 Handle

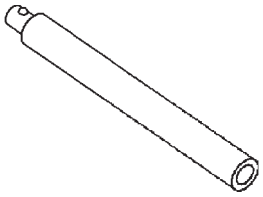

C-4171-2 Handle

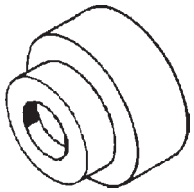

C-4657 Seal Installer

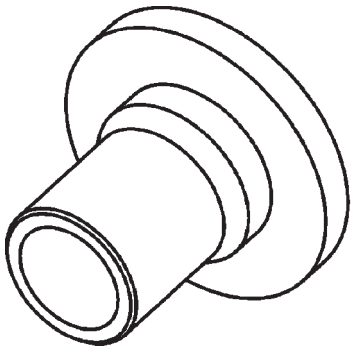

MD998200 Intaller

POWER TRANSFER UNIT (Continued)

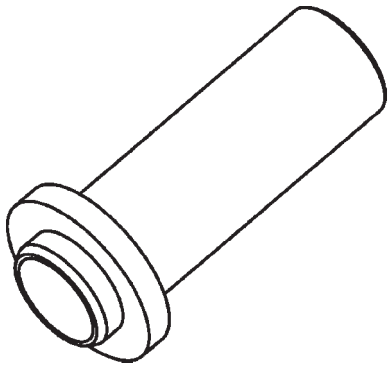

MD998334 Seal Installer

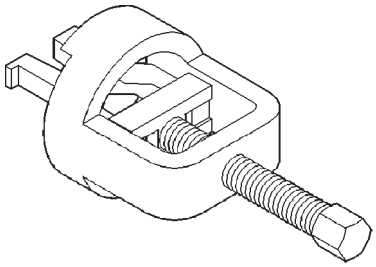

MD998346 Bearing Puller

DIFFERENTIAL CARRIER SEAL

REMOVAL

The Power Transfer Unit must be removed from the vehicle to replace this seal.

(1) Remove P.T.U. from vehicle.

(2) Use a pry bar to remove seal from retainer plate (Fig. 16). Be careful not to damage seal journal when removing seal.

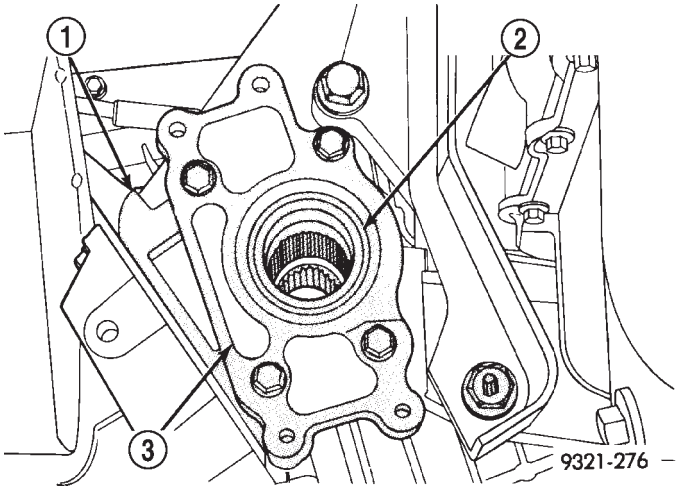

Fig. 16 Transaxle Differential Carrier Seal

1 - TRANSAXLE CASE
2 - DIFFERENTIAL CARRIER SEAL
3 - RETAINER PLATE

INSTALLATION

The Power Transfer Unit must be removed from the vehicle to replace this seal.

(1) Using a large socket, carefully install new seal. The spring side of the seal must face the transaxle differential.

(2) Reinstall the P.T.U. into the vehicle.

(3) Check and fill fluids as required.

END COVER BALL BEARING

REMOVAL

The end cover ball bearing can be removed and installed without removing the Power Transfer Unit from the vehicle. When replacing the bearing the output seal must be removed to gain access to the bearing.

(1) Raise vehicle on hoist.

(2) Remove right front half shaft from vehicle.

(3) Remove output seal with a hammer and chisel (Fig. 17).

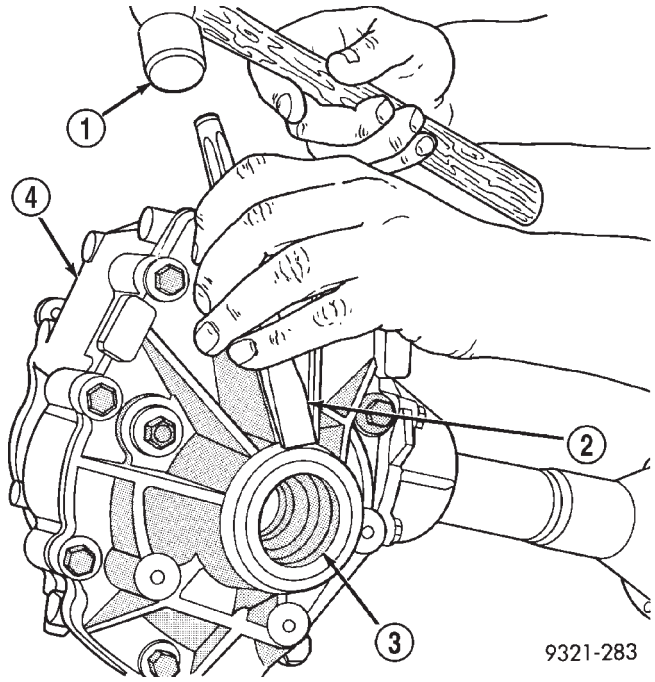

Fig. 17 Output Seal Removal

1 - HAMMER
2 - CHISEL
3 - SEAL
4 - POWER TRANSFER UNIT

END COVER BALL BEARING (Continued)

(4) Remove bearing retaining snap ring (Fig. 18).

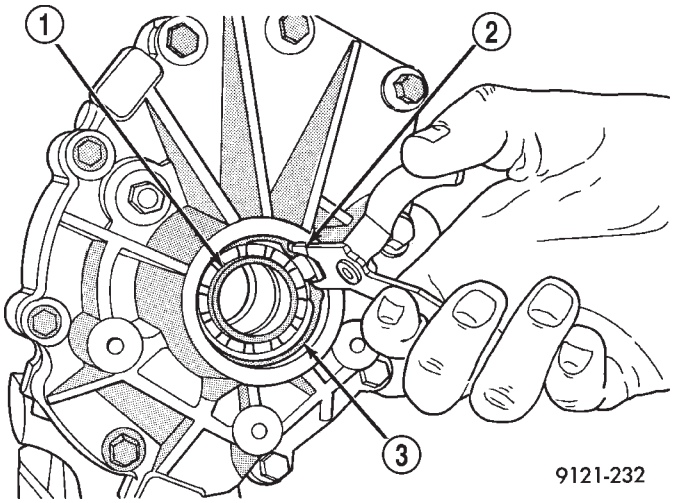

Fig. 18 Bearing Snap Ring

1 - BEARING
2 - SNAP RING PLIERS
3 - BEARING SNAP RING

(5) Use bearing puller MD998346 to remove bearing (Fig. 19).

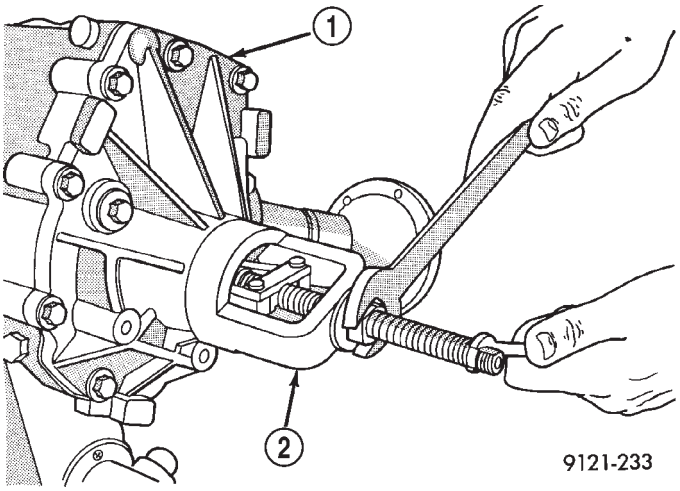

Fig. 19 Bearing Removal

1 - P.T.U. END COVER
2 - SPECIAL TOOL MD998346

INSTALLATION

The end cover ball bearing can be removed and installed without removing the Power Transfer Unit from the vehicle. When replacing the bearing the output seal must be removed to gain access to the bearing.

CAUTION: When installing bearing, position the bearing in place by hand square to the bore. Otherwise, bearing and/or housing damage may occur upon installation.

(1) Use installer MD998200 and driver handle C-4171 to install bearing (Fig. 20) into the housing.

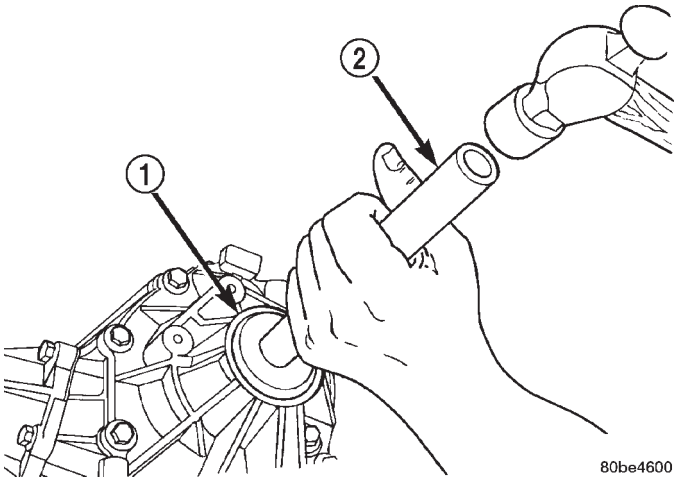

Fig. 20 Bearing Installation

1 - SPECIAL TOOL MD998200
2 - SPECIAL C-4171

(2) Install bearing retaining snap ring.

CAUTION: When installing bearing retaining snap ring, be sure to index the snap ring so that the snap ring does not cover bearing oil passage.

(3) Install new outer half shaft seal using MD998334 seal installer (Fig. 21). **Do not reuse the old seal.**

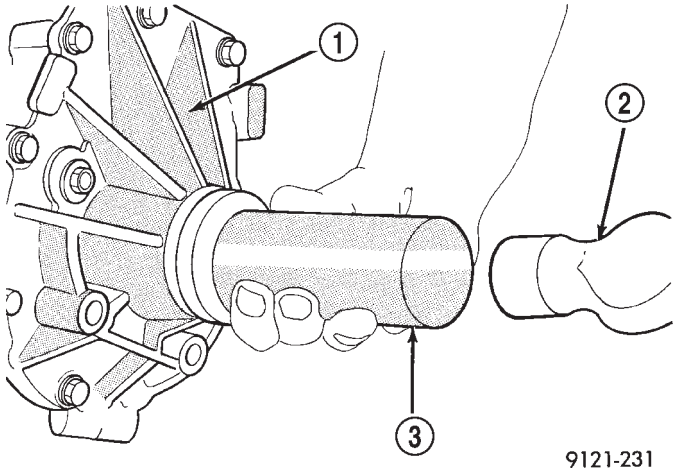

Fig. 21 Installing New Seal

1 - P.T.U. END COVER
2 - HAMMER
3 - SPECIAL TOOL MD998334

(4) Reinstall right front half shaft.
(5) Check and fill fluids as required.

END COVER SEAL

REMOVAL

The Power Transfer Unit must be removed from the vehicle to perform this operation. (Refer to 21 - TRANSMISSION/TRANSAXLE/POWER TRANSFER UNIT - REMOVAL)

(1) Remove P.T.U. end cover bolts (Fig. 22).

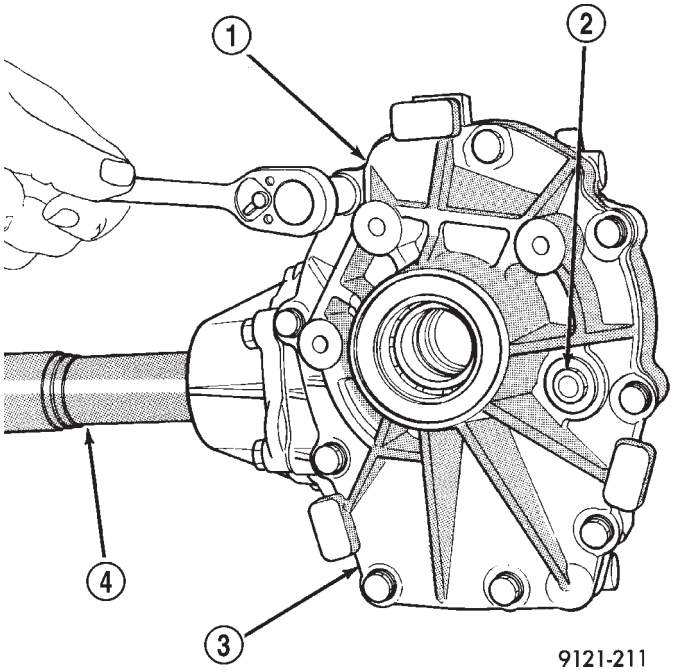

Fig. 22 P.T.U. End Cover Bolts

1 - POWER TRANSFER UNIT
2 - FILL PLUG
3 - END COVER
4 - OUTPUT SHAFT

(2) Gently tap on end cover ears with a hammer to separate end cover from the case (Fig. 23).

(3) Clean and inspect sealer surfaces.

INSTALLATION

(1) Reinstall cover and tighten bolts to 28 N·m (250 in. lbs.) in the sequence shown in (Fig. 24). Retighten first bolt after all others are tight.

CAUTION: When end cover is installed be careful not to damage the P.T.U. Input Shaft Cover Seal.

(2) Reinstall P.T.U. into vehicle.

(3) Check and fill fluids as required.

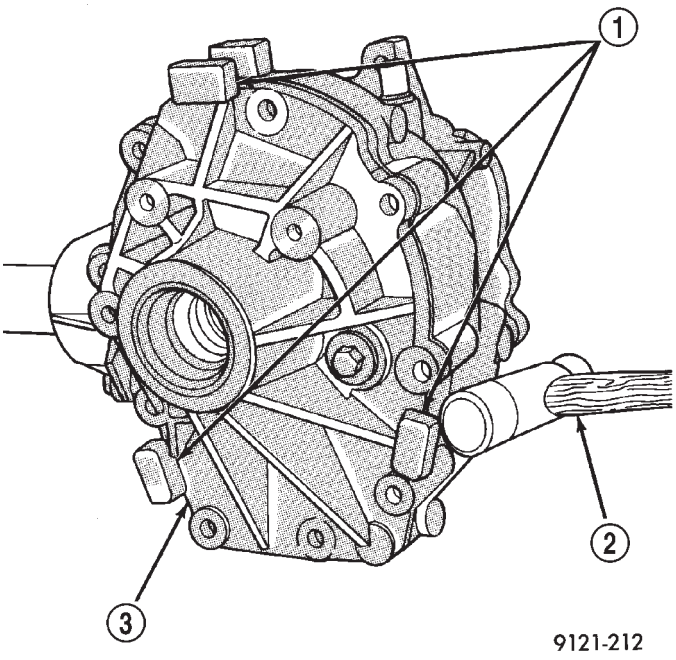

Fig. 23 End Cover Removal

1 - END COVER EARS
2 - HAMMER
3 - POWER TRANSFER UNIT

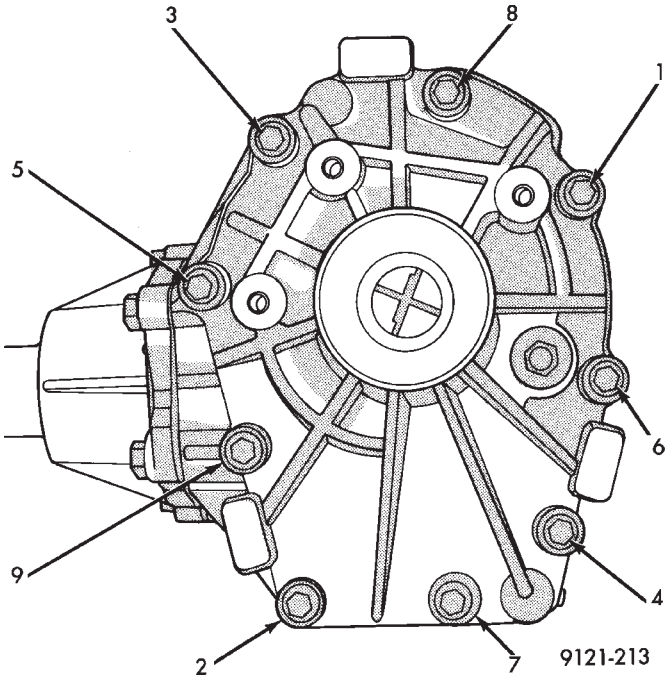

Fig. 24 Bolt Tightening Sequence

HALF SHAFT INNER SEAL

REMOVAL

The power transfer unit half shaft inner seal is the smaller of the two seals located on the inside of the end cover.

(1) Remove power transfer unit from the vehicle.

(2) Remove end cover bolts (Fig. 25).

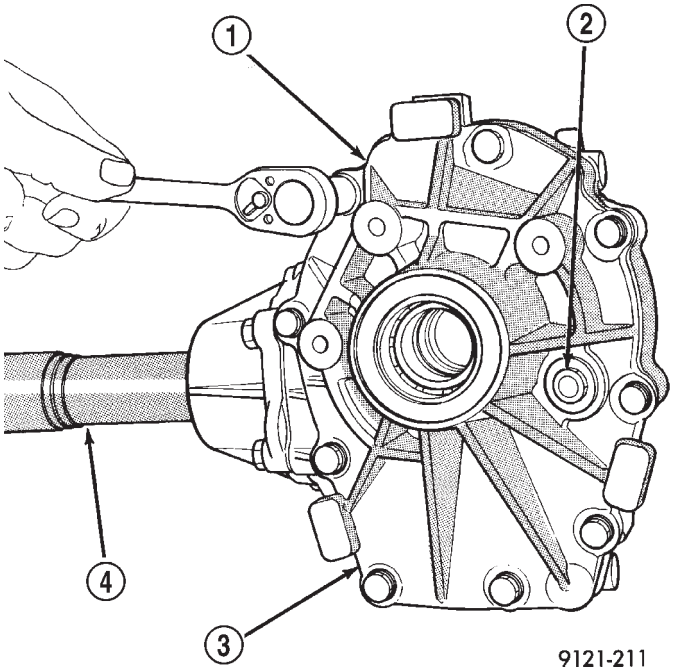

Fig. 25 End Cover Bolts

1 - POWER TRANSFER UNIT
2 - FILL PLUG
3 - END COVER
4 - OUTPUT SHAFT

(3) Tap on end cover ears to separate cover from case (Fig. 26).

(4) Drive seal out with a hammer and small chisel (Fig. 27).

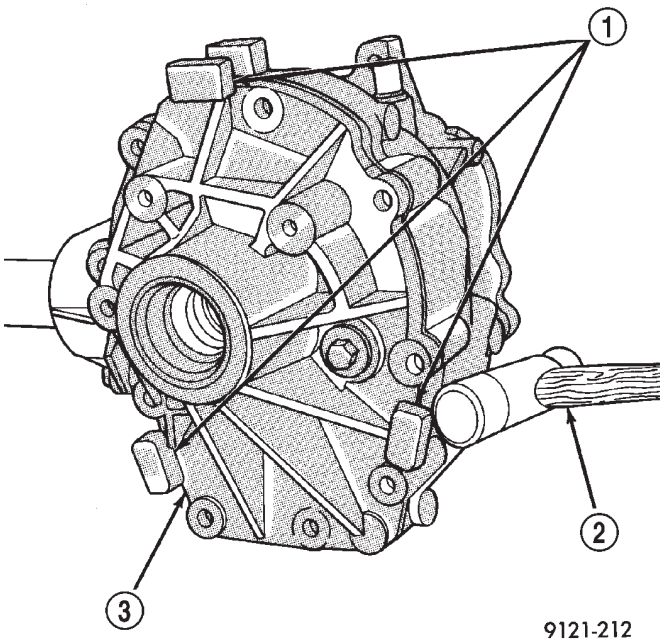

Fig. 26 End Cover Removal

1 - END COVER EARS
2 - HAMMER
3 - POWER TRANSFER UNIT

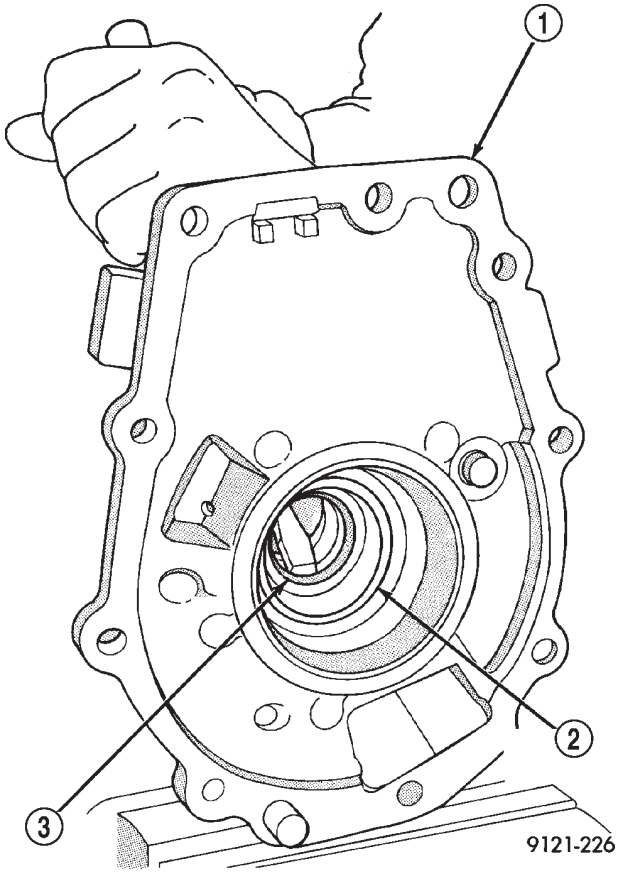

Fig. 27 Seal Removal

1 - END COVER
2 - END COVER SEAL
3 - AXLE SHAFT SEAL

HALF SHAFT INNER SEAL (Continued)

INSTALLATION

The power transfer unit half shaft inner seal is the smaller of the two seals located on the inside of the end cover.

(1) Clean and inspect seal area.

(2) Install seal with a 1 1/16 inch socket (Fig. 28). The seal must be installed with the spring side of the seal facing end cover ball bearing. The seal will bottom against a machined shoulder in the cover.

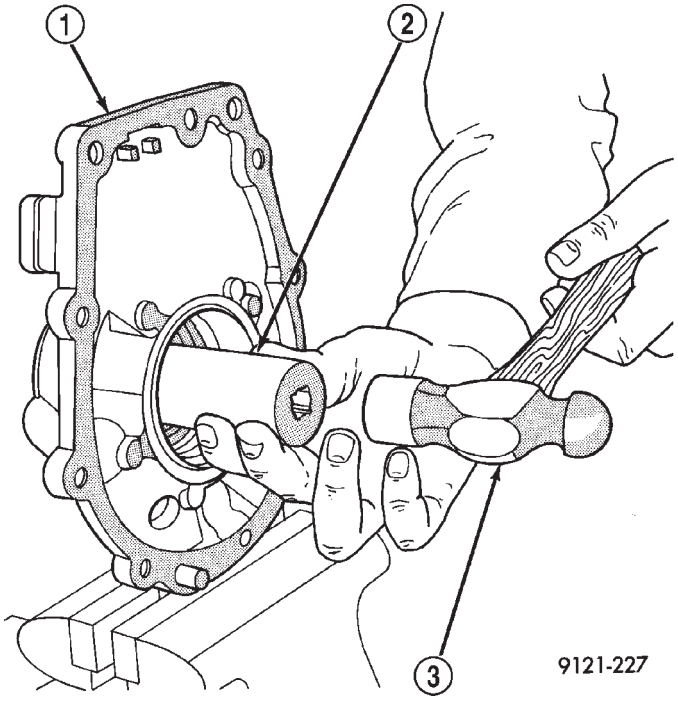

Fig. 28 Seal Installation

1 - END COVER
2 - SOCKET
3 - HAMMER

(3) Clean sealing surfaces of the end cover and P.T.U. case. Apply a bead of Mopar® Gasket Maker, Loctite Gasket Eliminator No. 518 or equivalent.

(4) Place end cover onto P.T.U. case and install bolts. Tighten bolts to 28 N·m (250 in. lbs.) in the sequence shown in (Fig. 29). Retighten first bolt after all other bolts are tight.

(5) Reinstall P.T.U. assembly.

(6) Check and fill fluids as required.

INPUT SHAFT COVER SEAL

REMOVAL

The power transfer unit input shaft cover seal is the larger of the two seals located on the inside of the end cover. The differential bearing cup must be removed to service this seal.

(1) Remove P.T.U. end cover bolts (Fig. 30).

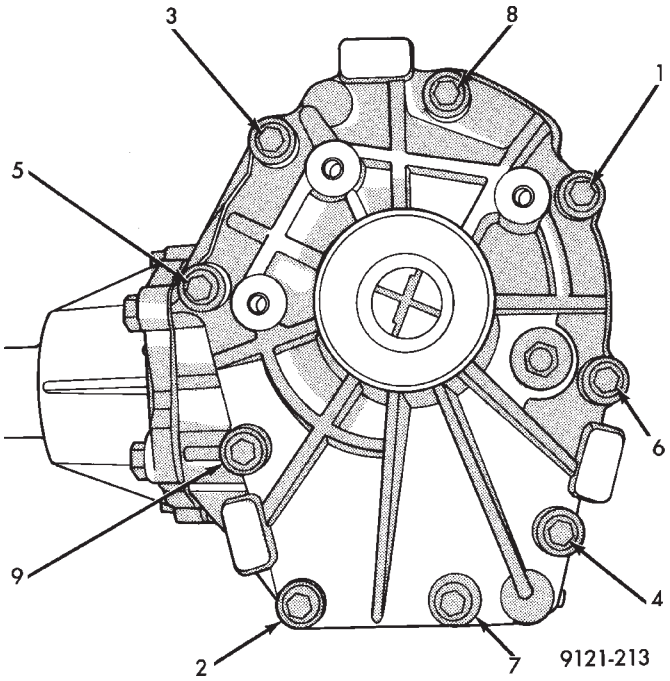

Fig. 29 Bolt Tightening Sequence

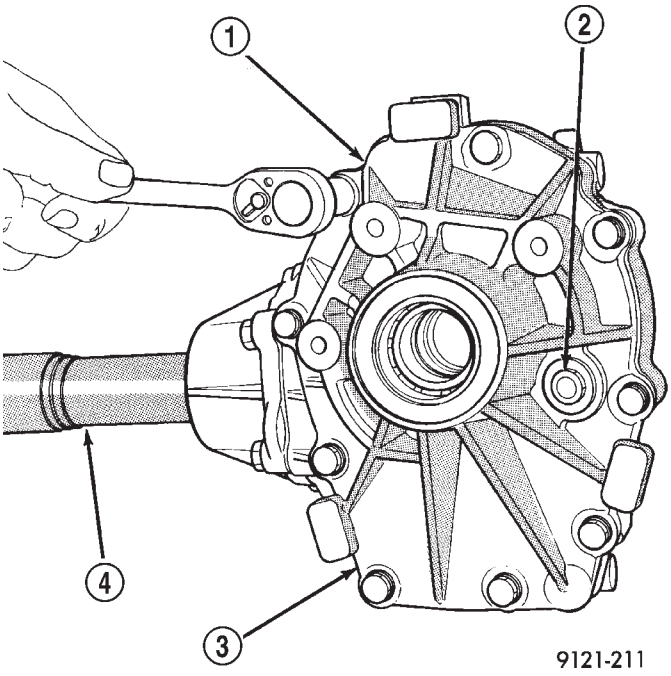

Fig. 30 P.T.U. End Cover Bolts

1 - POWER TRANSFER UNIT
2 - FILL PLUG
3 - END COVER
4 - OUTPUT SHAFT

INPUT SHAFT COVER SEAL (Continued)

(2) Gently tap on end cover ears to separate cover from case (Fig. 31).

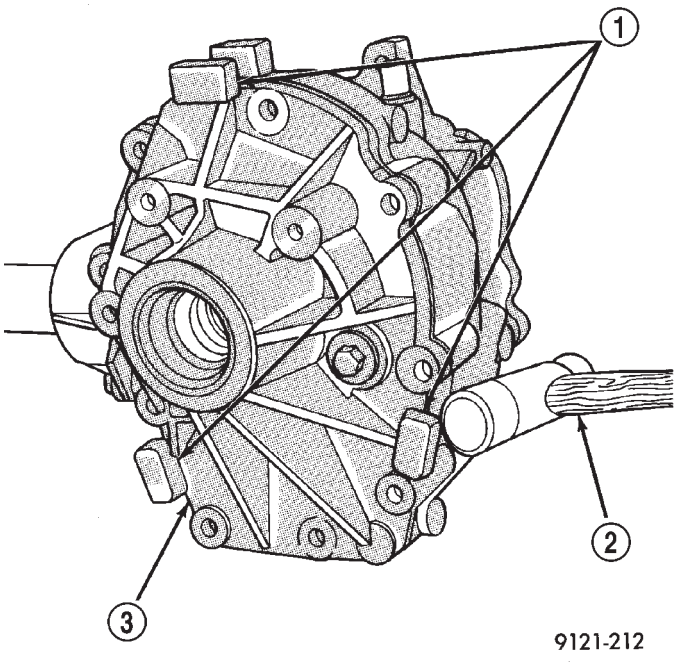

Fig. 31 End Cover Removal

1 - END COVER EARS
2 - HAMMER
3 - POWER TRANSFER UNIT

(3) Use special tool No. 6514 and remove the differential bearing race located in the end cover (Fig. 32). The race must be removed to gain access to the seal.

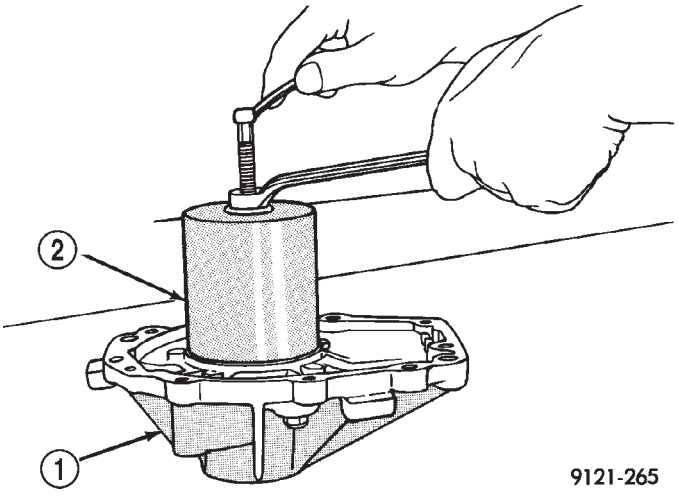

Fig. 32 Bearing Race Removal

1 - END COVER
2 - SPECIAL TOOL No. 6514

(4) Use special tool No. 7794-A to remove seal (Fig. 33).

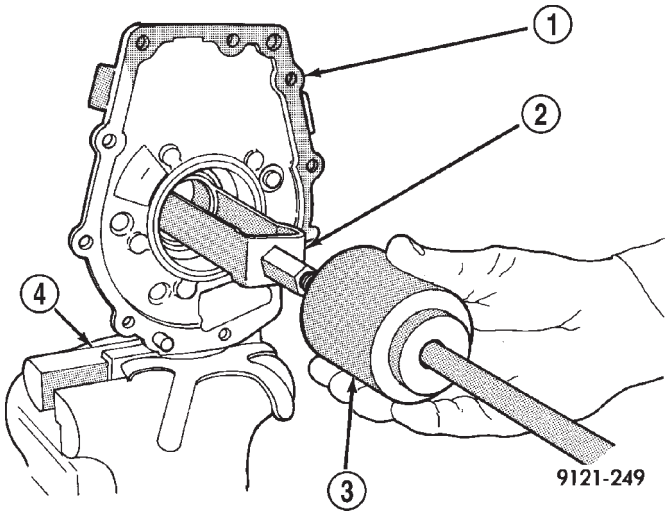

Fig. 33 Seal Removal

1 - END COVER
2 - SPECIAL TOOL 7794–A
3 - SLIDE HAMMER
4 - SOFT JAW VICE

INSTALLATION

The power transfer unit input shaft cover seal is the larger of the two seals located on the inside of the end cover. The differential bearing cup must be removed to service this seal.

(1) Clean and inspect seal area.

(2) Use special tool No. MD998803 and install seal (Fig. 34). When installing seal the spring side of the seal must face toward the special tool.

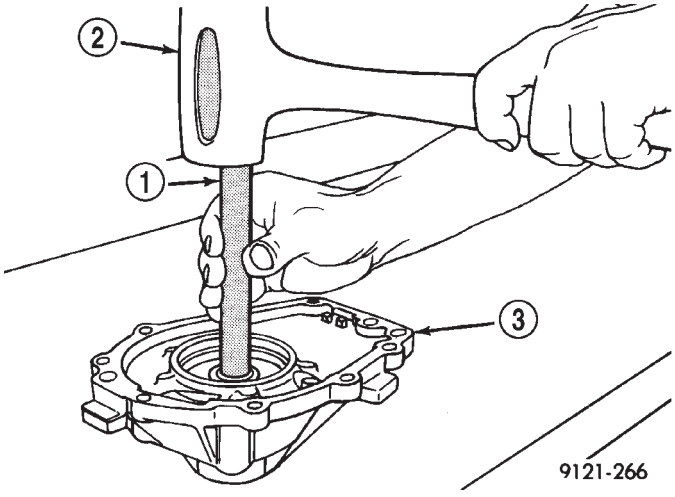

Fig. 34 Seal Installation

1 - SPECIAL TOOL No. MD998803
2 - HAMMER
3 - END COVER

INPUT SHAFT COVER SEAL (Continued)

(3) Reinstall the original bearing race and shim using special tool No. 6522 (Fig. 35) and (Fig. 36).

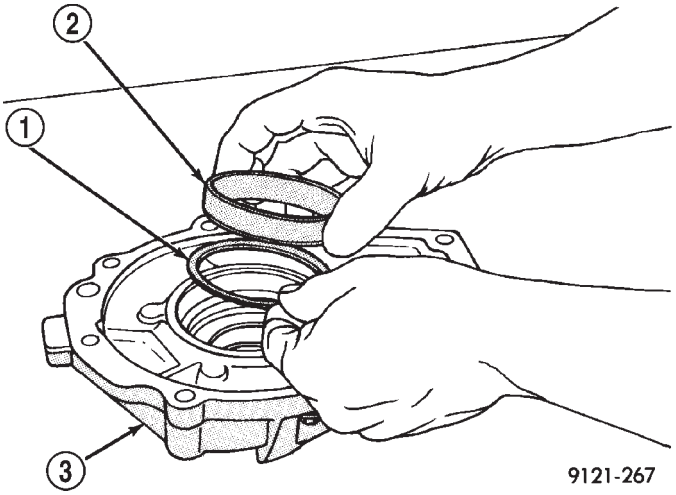

Fig. 35 Bearing Shim and Race

1 - SHIM
2 - BEARING RACE
3 - END COVER

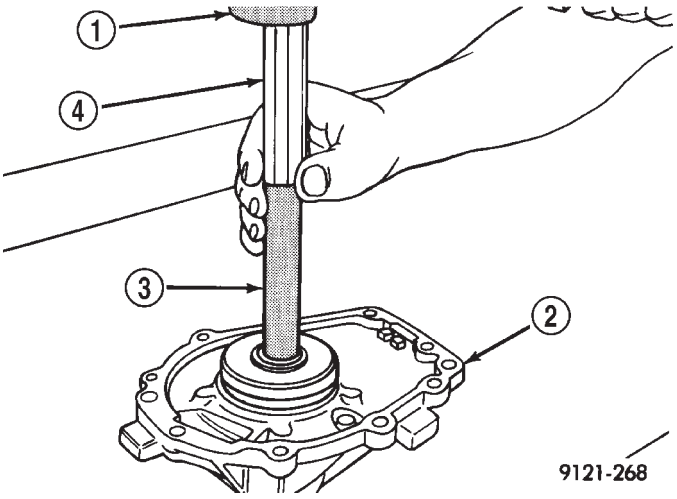

Fig. 36 Installing Bearing Race

1 - HAMMER
2 - END COVER
3 - SPECIAL TOOL No. 6522
4 - HANDLE 4171

CAUTION: The original shim must be installed behind the bearing cup to maintain proper bearing preload.

(4) Apply Mopar® Gasket Maker, Loctite Gasket Eliminator No. 518 or equivalent to sealing surfaces of end cover.

(5) Place end cover onto P.T.U. case and install bolts. Tighten bolts to 28 N·m (250 in. lbs.) in the sequence shown in (Fig. 37). Retighten first bolt after all others are tight.

CAUTION: When end cover is installed be careful not to damage the P.T.U. Input Shaft Cover Seal.

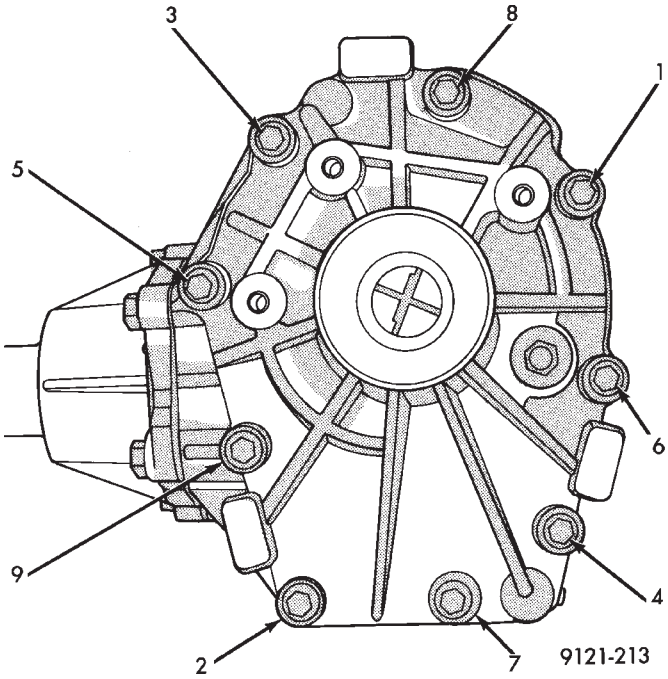

Fig. 37 Bolt Tightening Sequence

(6) Reinstall P.T.U. assembly into vehicle.
(7) Check and fill fluids as required.

INPUT SHAFT END SEAL

REMOVAL

The input shaft end seal is located on the end of the input shaft.

(1) Remove power transfer unit from the vehicle.

(2) Remove end cover bolts (Fig. 38).

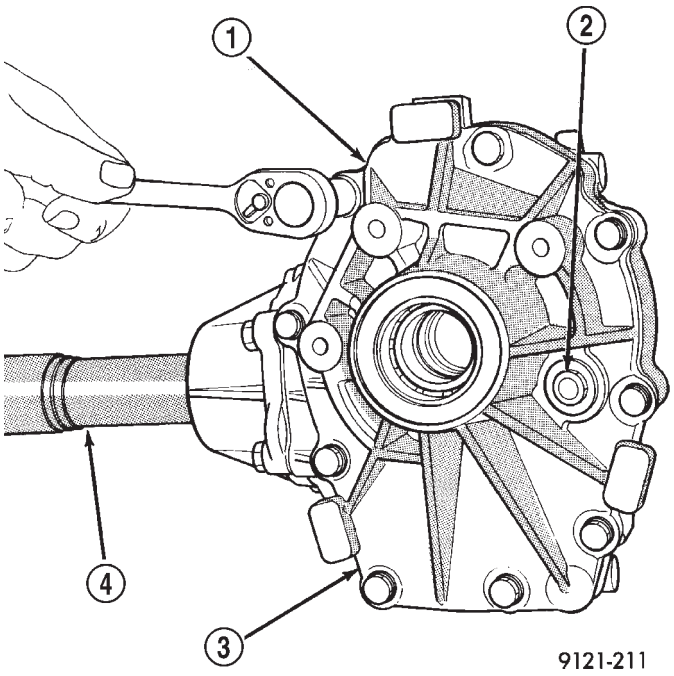

Fig. 38 End Cover Bolts

1 - POWER TRANSFER UNIT
2 - FILL PLUG
3 - END COVER
4 - OUTPUT SHAFT

(3) Tap on end cover ears to separate end cover from case (Fig. 39).

(4) Pry out seal with a pry bar (Fig. 40).

INSTALLATION

The input shaft end seal is located on the end of the input shaft.

(1) Clean and inspect seal area.

(2) Remove input shaft from housing and stand on soft block of wood. Install input shaft end seal with seal installer 5065 and handle C-4171.

(3) Lubricate seal lip after installing seal into input shaft.

(4) Clean sealing surfaces of the end cover and P.T.U. case. Apply a bead of Mopar® Gasket Maker, Loctite Gasket Eliminator No. 518 or equivalent.

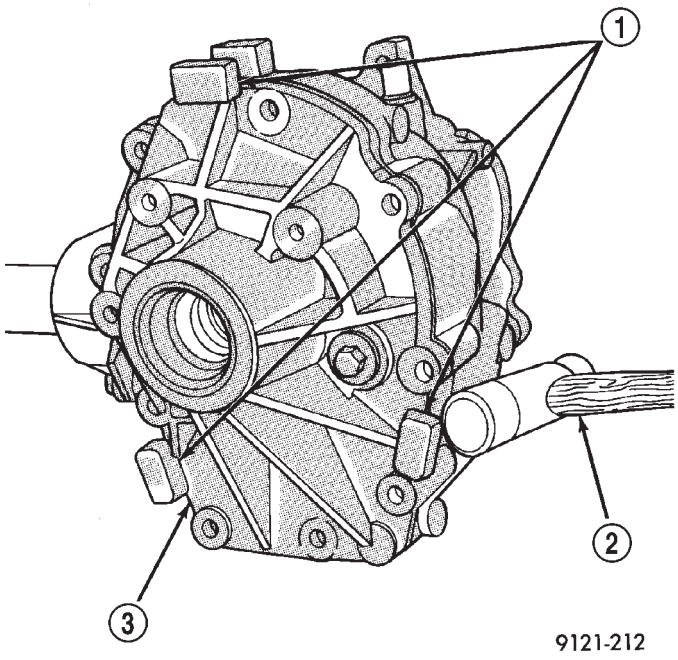

Fig. 39 Side Cover Removal

1 - END COVER EARS
2 - HAMMER
3 - POWER TRANSFER UNIT

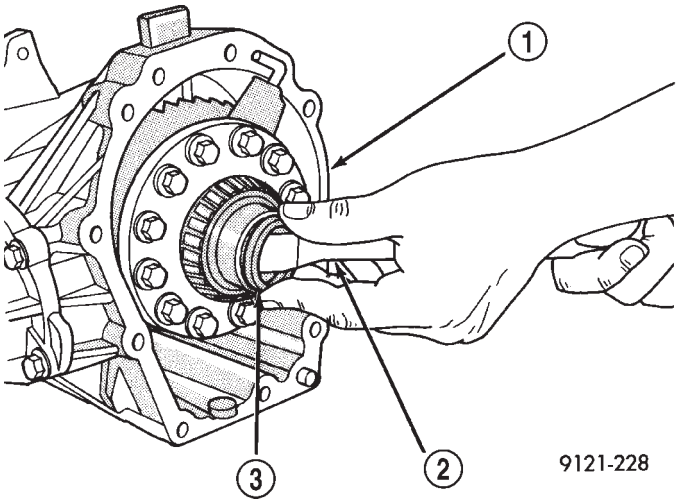

Fig. 40 Seal Removal

1 - POWER TRANSFER UNIT
2 - PRYBAR
3 - SEAL

INPUT SHAFT END SEAL (Continued)

(5) Place end cover onto P.T.U. case and install bolts. Tighten bolts to 28 N·m (250 in. lbs.) in the sequence shown in (Fig. 41). Retighten first bolt after all others are tight.

CAUTION: When end cover is installed be careful not to damage the P.T.U. Input Shaft Cover Seal.

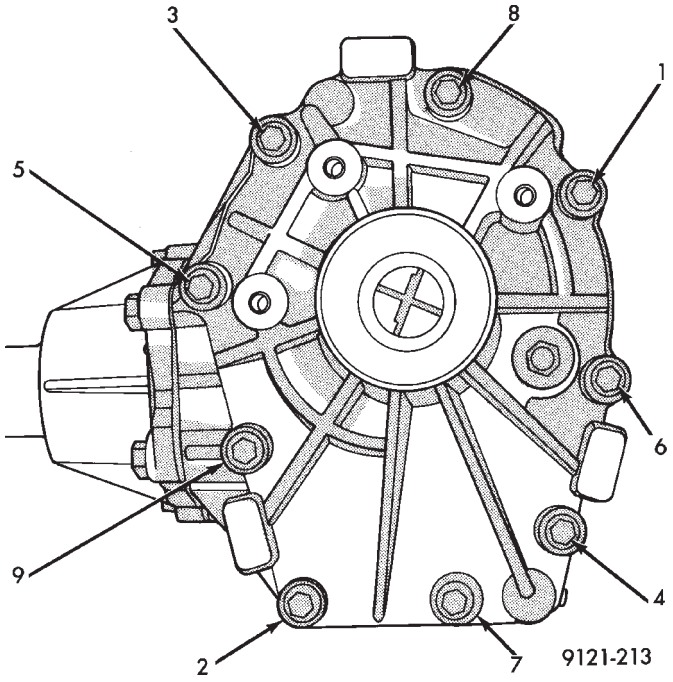

Fig. 41 Bolt Tightening Sequence

(6) Reinstall P.T.U. assembly.
(7) Check and fill fluids as required.

INPUT SHAFT SEAL

REMOVAL

The Power Transfer Unit must be removed from the vehicle to service this seal. Refer to Power Transfer Unit Removal in this section for procedures.

(1) Remove P.T.U. end cover bolts (Fig. 42).
(2) Gently tap on end cover ears to separate cover from case (Fig. 43).
(3) Remove ring gear oil trough (Fig. 44).
(4) Remove input shaft and ring gear from case (Fig. 45).
(5) Use Special Tool No. 7794-A (seal puller) to remove seal (Fig. 46).

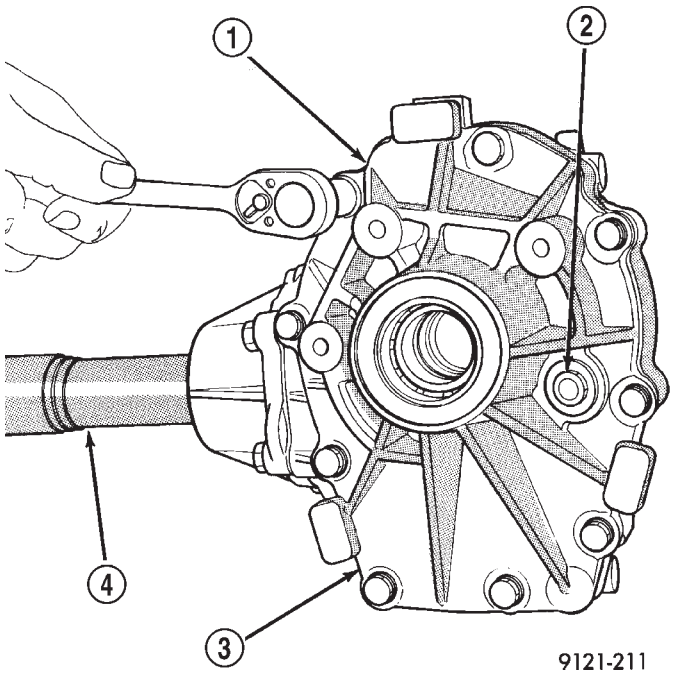

Fig. 42 P.T.U. End Cover Bolts

1 - POWER TRANSFER UNIT
2 - FILL PLUG
3 - END COVER
4 - OUTPUT SHAFT

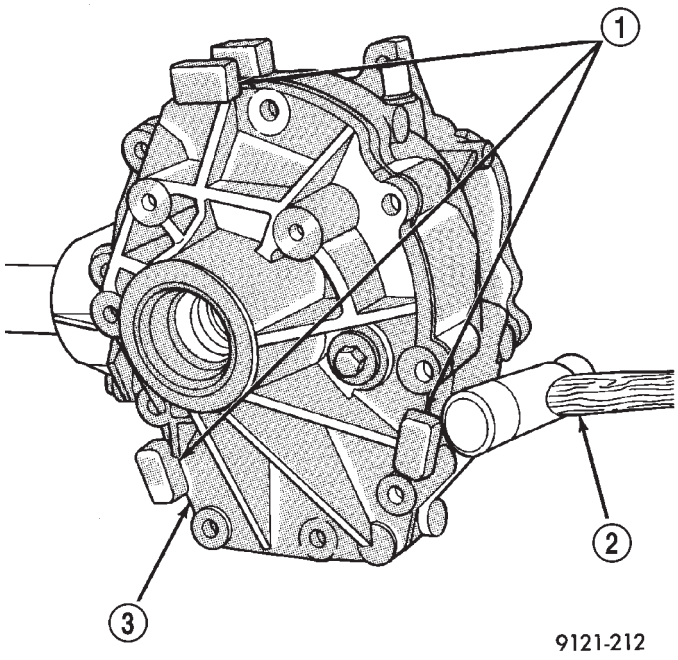

Fig. 43 End Cover Removal

1 - END COVER EARS
2 - HAMMER
3 - POWER TRANSFER UNIT

INPUT SHAFT SEAL (Continued)

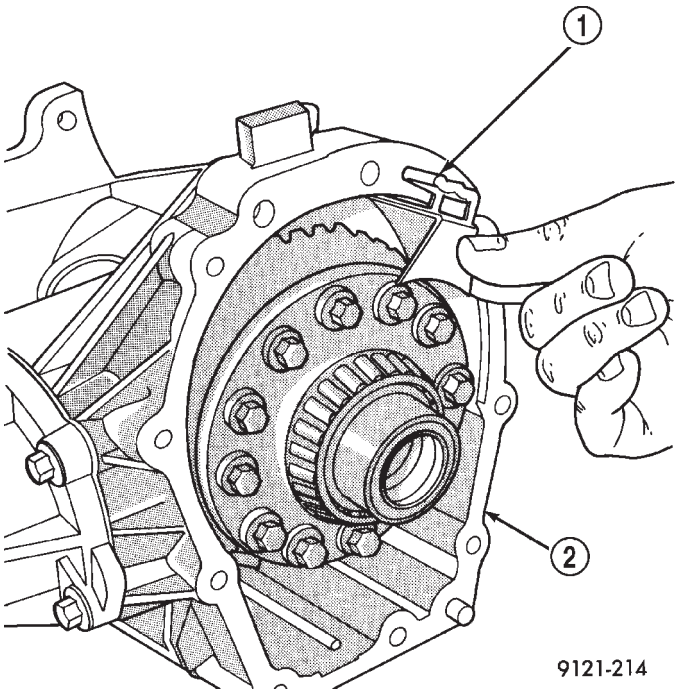

Fig. 44 Oil Trough

1 - OIL TROUGH
2 - POWER TRANSFER UNIT

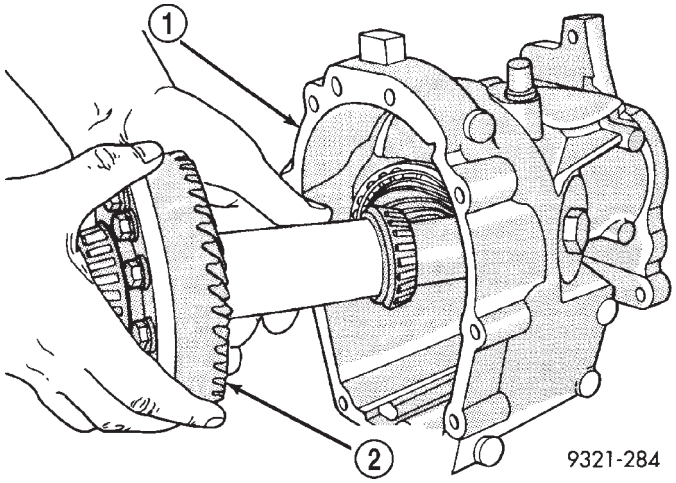

Fig. 45 Input Shaft and Ring Gear Removal

1 - POWER TRANSFER UNIT
2 - RING GEAR

INSTALLATION

The Power Transfer Unit must be removed from the vehicle to service this seal. Refer to Power Transfer Unit Removal in this section for procedures.

(1) Clean and inspect seal area.

(2) Lay housing on bench and install new seal with seal driver C-4657 and handle C-4171 (Fig. 47). The seal must be installed with the spring side facing towards the ring gear. Drive the seal in until it bottoms against the case shoulder.

(3) Install input shaft.

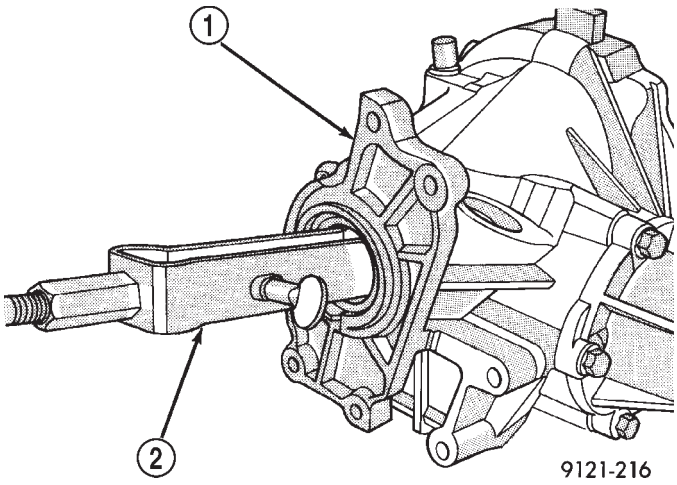

Fig. 46 Seal Removal

1 - POWER TRANSFER UNIT
2 - SPECIAL TOOL 7794–A

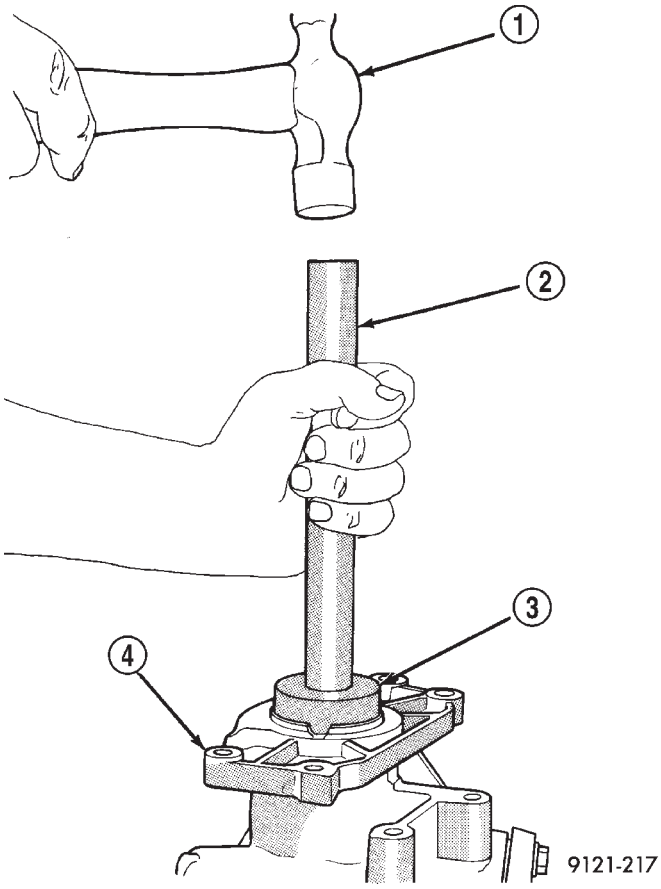

Fig. 47 Seal Installation

1 - HAMMER
2 - SPECIAL TOOL C-4171
3 - SPECIAL TOOL C-4657
4 - POWER TRANSFER UNIT

(4) Install oil trough.

INPUT SHAFT SEAL (Continued)

(5) Apply Mopar® Gasket Maker or equivalent to sealing surfaces of end cover and reinstall. Tighten bolts to 28 N·m (250 in. lbs.)

CAUTION: When end cover is installed be careful not to damage the P.T.U. Input Shaft Cover Seal.

(6) Reinstall P.T.U. assembly into vehicle.
(7) Check and fill fluids as required.

OUTER HALF SHAFT SEAL

REMOVAL

The outer half shaft seal is located on the outside of the end cover. The P.T.U. does not have to be removed to replace this seal.

(1) Lift vehicle on hoist.
(2) Remove right front half shaft from vehicle.
(3) Remove seal with a chisel and hammer (Fig. 48).

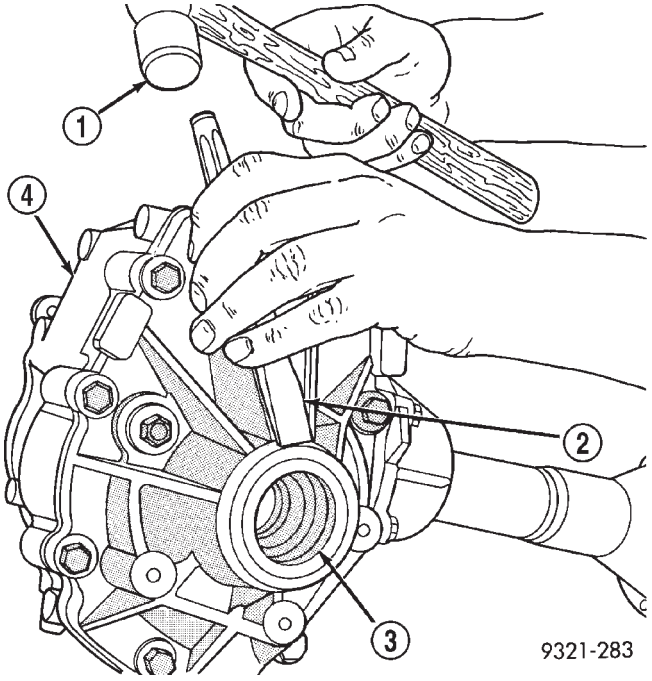

Fig. 48 Seal Removal

1 - HAMMER
2 - CHISEL
3 - SEAL
4 - POWER TRANSFER UNIT

INSTALLATION

The outer half shaft seal is located on the outside of the end cover. The P.T.U. does not have to be removed to replace this seal.

(1) Clean and inspect seal area.
(2) Install new seal with seal installer MD998334 (Fig. 49).

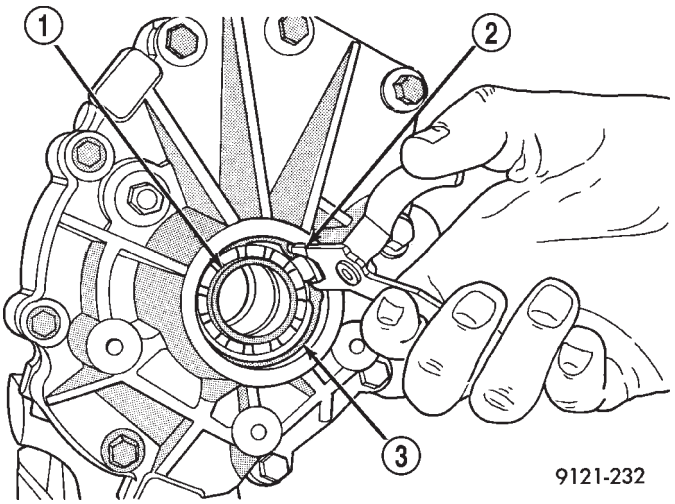

Fig. 49 Seal Installation

1 - BEARING
2 - SNAP RING PLIERS
3 - BEARING SNAP RING

(3) Reinstall right front half shaft.
(4) Check and fill fluids as required.

REAR COVER O-RING

REMOVAL

(1) Raise vehicle on hoist.
(2) Remove rear cover retaining bolts (Fig. 50).

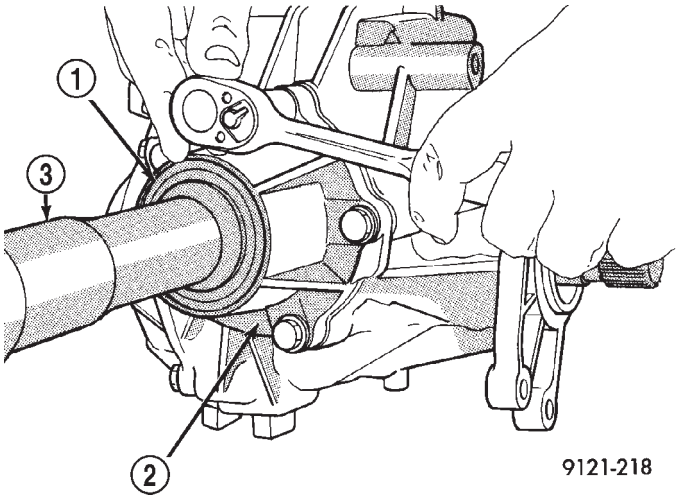

Fig. 50 Rear Cover Bolts

1 - OUTPUT FLANGE SEAL
2 - REAR COVER
3 - OUTPUT SHAFT

REAR COVER O-RING (Continued)

(3) Index rear cover to the case for later reassembly (Fig. 51).

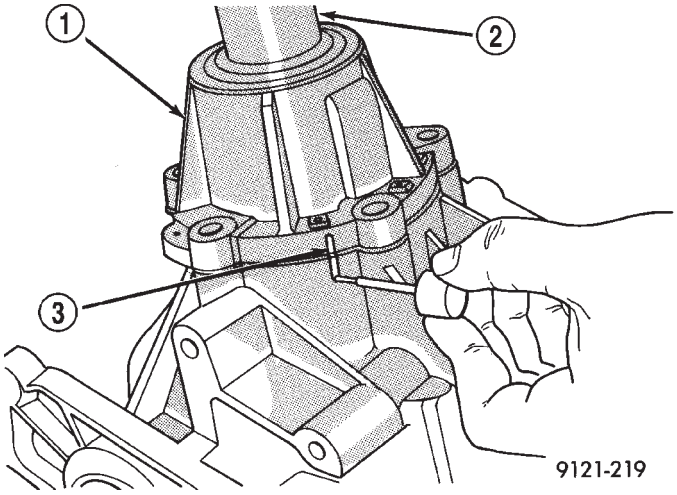

Fig. 51 Mark Rear Cover

1 - REAR COVER
2 - OUTPUT SHAFT
3 - PAINT MARK

(4) Pull rear cover out of the P.T.U. case (Fig. 52).

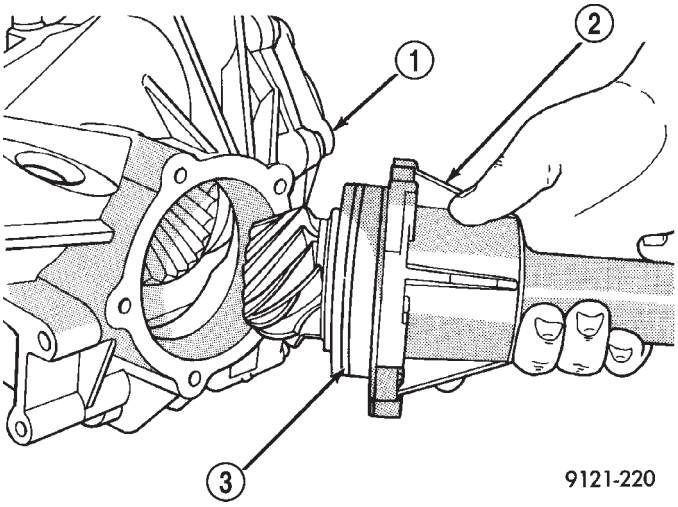

Fig. 52 Rear Cover Removal

1 - POWER TRANSFER UNIT ASSEMBLY
2 - REAR COVER
3 - O-RING

(5) Remove rear cover O-Ring (Fig. 53).

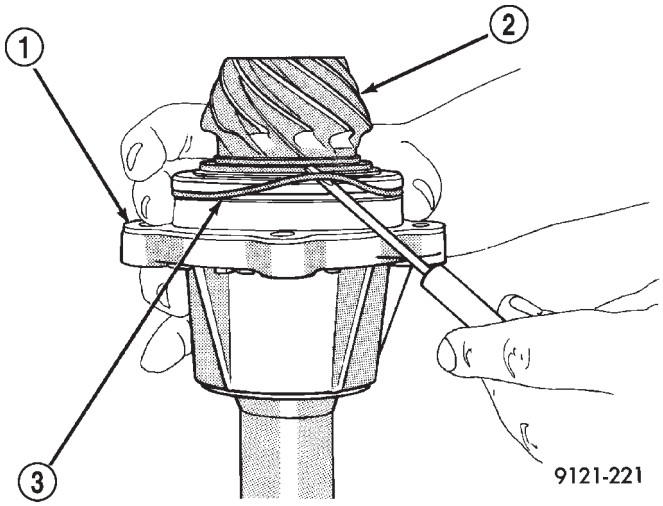

Fig. 53 O-Ring Removal

1 - REAR COVER
2 - PINION GEAR
3 - O-RING

INSTALLATION

(1) To install, reverse removal procedure.

31TH AUTOMATIC TRANSAXLE

TABLE OF CONTENTS

page

31TH AUTOMATIC TRANSAXLE
DESCRIPTION 22
OPERATION 24
DIAGNOSIS AND TESTING
DIAGNOSIS AND TESTING - PRELIMINARY DIAGNOSIS 24
DIAGNOSIS AND TESTING - ROAD TEST . . . 31
DIAGNOSIS AND TESTING - HYDRAULIC PRESSURE TESTS 32
DIAGNOSIS AND TESTING - TORQUE CONVERTER HOUSING FLUID LEAKAGE . . . 35
DIAGNOSIS AND TESTING - CLUTCH AND SERVO AIR PRESSURE TESTS 35
STANDARD PROCEDURE - ALUMINUM THREAD REPAIR 37
REMOVAL 37
DISASSEMBLY 40
ASSEMBLY 51
INSTALLATION 61
SCHEMATICS AND DIAGRAMS
31TH TRANSAXLE HYDRAULIC SCHEMATICS 64
SPECIFICATIONS
31TH AUTOMATIC TRANSAXLE 72
SPECIAL TOOLS
31TH AUTOMATIC TRANSAXLE 75
ACCUMULATOR
DESCRIPTION 79
OPERATION 79
BANDS
DESCRIPTION
KICKDOWN (FRONT) BAND 80
OPERATION
LOW/REVERSE (REAR) BAND 80
ADJUSTMENTS
ADJUSTMENT - FRONT BAND 80
ADJUSTMENTS - REAR BAND 80
CLUTCH - FRONT
DESCRIPTION 82
OPERATION 82
DISASSEMBLY 82
ASSEMBLY 84
CLUTCH - REAR
DESCRIPTION 86
OPERATION 86
DISASSEMBLY 87
ASSEMBLY 89
FINAL DRIVE
DISASSEMBLY 91
ASSEMBLY 94

page

ADJUSTMENTS
ADJUSTMENT - DIFFERENTIAL BEARING . . 97
FLUID
STANDARD PROCEDURE
STANDARD PROCEDURE - FLUID LEVEL AND CONDITION CHECK 99
STANDARD PROCEDURE - FLUID AND FILTER CHANGE 99
GEAR SHIFT CABLE
REMOVAL 101
INSTALLATION 102
ADJUSTMENTS
GEARSHIFT CABLE ADJUSTMENT 104
GOVERNOR
DESCRIPTION 104
OPERATION 104
CLEANING 104
INSPECTION 104
OIL PUMP
DESCRIPTION 105
OPERATION 105
STANDARD PROCEDURE - OIL PUMP VOLUME CHECK 105
DISASSEMBLY 106
CLEANING 106
INSPECTION 106
ASSEMBLY 107
PARK/NEUTRAL POSITION SWITCH
DIAGNOSIS AND TESTING - PARK/NEUTRAL POSITION SWITCH 107
REMOVAL 107
INSTALLATION 107
PLANETARY GEARTRAIN
DISASSEMBLY 108
ASSEMBLY 109
SEAL - OIL PUMP
REMOVAL 110
INSTALLATION 110
SERVO - KICKDOWN
DESCRIPTION 111
OPERATION 111
DISASSEMBLY 111
CLEANING 112
INSPECTION 113
ASSEMBLY 113
SERVO - LOW/REVERSE
DESCRIPTION 113
OPERATION 113
DISASSEMBLY 114
CLEANING 114

ASSEMBLY 115
SHIFT INTERLOCK SOLENOID
DESCRIPTION 115
OPERATION 115
DIAGNOSIS AND TESTING - BRAKE/ TRANSMISSION SHIFT INTERLOCK SOLENOID 117
REMOVAL 117
INSTALLATION 118
SOLENOID - TCC
DESCRIPTION 119
OPERATION 119
REMOVAL 119
INSTALLATION 120
THROTTLE VALVE CABLE
REMOVAL 120
INSTALLATION 121
ADJUSTMENTS
THROTTLE VALVE LINKAGE ADJUSTMENT 122
TORQUE CONVERTER
DESCRIPTION 122
OPERATION 126
REMOVAL 127
INSTALLATION 127
TRANSFER SYSTEM - OUTPUT SHAFT/GEAR/ BEARING
REMOVAL 128
INSTALLATION 131
ADJUSTMENTS
ADJUSTMENT - OUTPUT SHAFT BEARING . 135
TRANSFER SYSTEM - TRANSFER SHAFT/ GEAR/BEARING
REMOVAL 137
INSTALLATION 141
ADJUSTMENTS
ADJUSTMENT - TRANSFER SHAFT BEARING 145
VALVE BODY
REMOVAL 146
DISASSEMBLY 148
CLEANING 154
INSPECTION 155
ASSEMBLY 155
INSTALLATION 158
ADJUSTMENTS
HYDRAULIC CONTROL PRESSURE ADJUSTMENTS 160
VEHICLE SPEED SENSOR/PINION GEAR
REMOVAL 160
INSTALLATION 160

31TH AUTOMATIC TRANSAXLE

DESCRIPTION

This transaxle combines torque converter, three speed transmission, final drive gearing, and differential into a front wheel drive system.

Within this transaxle, there are three primary areas:

(1) Main center line plus valve body.

(2) Transfer shaft center line (includes governor and parking sprag).

(3) Differential center line.

Center distances between the main rotating parts in these three areas are held precise to maintain a low noise level.

The torque converter, transaxle area, and differential are housed in an integral aluminum die casting. **The differential oil sump is common with the transaxle sump. Separate filling of the differential is NOT necessary.**

The torque converter is attached to the crankshaft through a flexible driving plate. Cooling of the converter is accomplished by circulating the transaxle fluid through a remote cooler. There are two types of coolers used. An oil-to-water type cooler located in the radiator side tank and/or an oil-to-air heat exchanger. The torque converter assembly is a sealed unit that cannot be disassembled.

The transaxle fluid is filtered by an internal filter attached to the lower side of the valve body assembly.

Engine torque is transmitted to the torque converter and then through the input shaft to multiple-disc clutches in the transaxle. The power flow depends on the application of the clutches and bands. Refer to Elements in Use Chart in Diagnosis and Tests section.

The transaxle consists of:

- Two multiple-disc clutches
- An overrunning clutch
- Two servos
- A hydraulic accumulator
- Two bands
- Two planetary gear sets

This provides three forward ratios and a reverse ratio. The common sun gear of the planetary gear sets is connected to the front clutch by a driving shell. The driving shell is splined to the sun gear and front clutch retainer. The hydraulic system consists of an oil pump and a single valve body which contains all of the valves except the governor valves. The transaxle sump and differential sump are both vented through the dipstick. Output torque from the main center line is delivered through helical gears to the transfer shaft. This gear set is a factor in the transaxle final drive (axle) ratio. The shaft also car-

31TH AUTOMATIC TRANSAXLE (Continued)

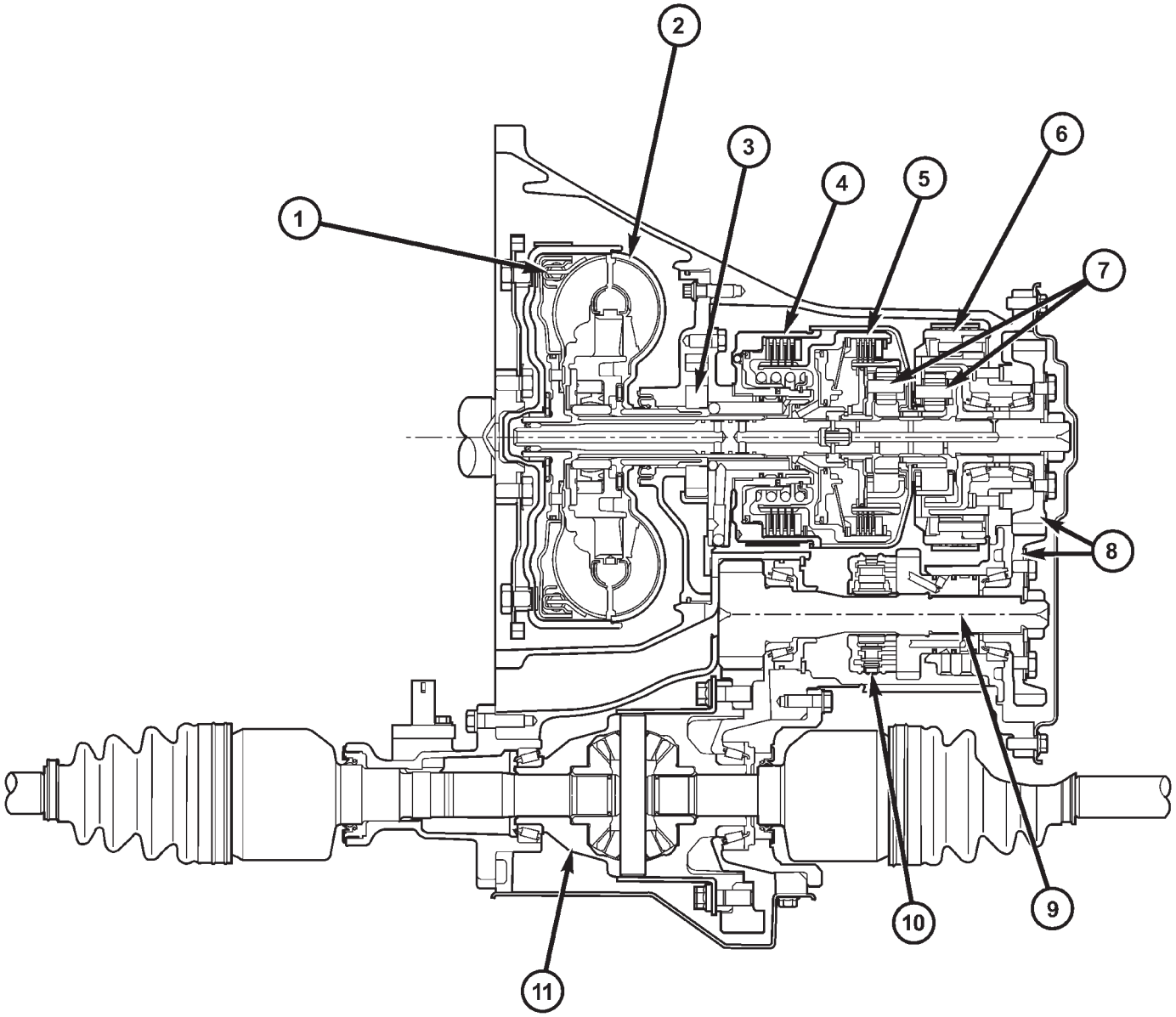

31TH Automatic Transaxle

1 - TORQUE CONVERTER CLUTCH
2 - TORQUE CONVERTER
3 - OIL PUMP
4 - FRONT CLUTCH
5 - REAR CLUTCH
6 - OVER-RUNNING CLUTCH
7 - PLANETARY GEARS
8 - TRANSFER GEARS
9 - SHAFT
10 - GOVERNOR
11 - DIFFERENTIAL

ries the governor and parking sprag. An integral helical gear on the transfer shaft drives the differential ring gear.

OPERATION

Transmission output is directed to an integral differential by a transfer gear system in the following input-to-output ratios:

FIRST	2.69:1
SECOND	1.55:1
THIRD	1.00:1
REVERSE	2.10:1

DIAGNOSIS AND TESTING

DIAGNOSIS AND TESTING - PRELIMINARY DIAGNOSIS

Automatic transaxle malfunctions are usually caused by the following general conditions:

- Improper fluid level/condition
- Poor engine performance
- Improper engine or transaxle adjustments
- Transaxle hydraulic malfunctions
- Transaxle mechanical malfunctions

Diagnosis of transaxle problems should always begin with checking the easily accessible variables:

- Fluid level and condition
- Gearshift cable adjustment
- Throttle valve cable adjustment

After verifying or adjusting these variables, road test the vehicle to determine if the problem has been corrected or that further diagnosis is necessary. If the problem still exists, refer to the following diagnosis charts to aid in determining the source or cause of failure.

Hydraulic pressure tests should be performed when a transaxle internal failure is suspected. The hydraulic flow charts, in the Schematics and Diagrams section of this group, outline fluid flow and hydraulic circuitry. Circuit operation is provided for all gear ranges. Normal working pressures are also supplied for each of the gear ranges.

31TH AUTOMATIC TRANSAXLE (Continued)

TRANSAXLE DIAGNOSIS CHARTS

CONDITION	POSSIBLE CAUSES	CORRECTION
HARSH ENGAGEMENT (FROM NEUTRAL TO DRIVE OR REVERSE)	1. Fluid Level Low	1. Add Fluid
	2. Throttle Linkage Misadjusted	2. Adjust linkage - setting may be too long.
	3. Excessive Pinion Backlash	3. Check per Service Manual. Correct as needed.
	4. Hydraulic Pressure Incorrect	4. Check pressure. Remove, overhaul or adjust valve body as needed.
	5. Band Misadjusted.	5. Adjust rear band.
	6. Valve Body Check Balls Missing.	6. Inspect valve body for proper check ball installation.
	7. Clutch, band or planetary component Damaged.	7. Remove, disassemble and repair transmission as necessary.
	8. Converter Clutch (if equipped) Faulty.	8. Replace converter and flush cooler and line before installing new converter.
DELAYED ENGAGEMENT (FROM NEUTRAL TO DRIVE OR REVERSE)	1. Fluid Level Low.	1. Correct level and check for leaks.
	2. Filter Clogged.	2. Change filter.
	3. Gearshift Linkage Misadjusted.	3. Adjust linkage and repair linkage if worn or damaged.
	4. Rear Band Misadjusted.	4. Adjust band.
	5. Valve Body Filter Plugged.	5. Replace fluid and filter. If oil pan and old fluid were full of clutch disc material and/or metal particles, overhaul will be necessary.
	6. Oil Pump Gears Worn/Damaged.	6. Remove transmission and replace oil pump.
	7. Hydraulic Pressure Incorrect.	7. Perform pressure test, remove transmission and repair as needed.
	8. Reaction Shaft Seal Rings Worn/Broken.	8. Remove transmission, remove oil pump and replace seal rings.
	9. Rear Clutch/Input Shaft, Rear Clutch Seal Rings Damaged.	9. Remove and disassemble transmission and repair as necessary.
	10. Governor Valve Stuck.	10. Remove and inspect governor components. Replace worn or damaged parts.
	11. Regulator Valve Stuck.	11. Clean.

31TH AUTOMATIC TRANSAXLE (Continued)

CONDITION	POSSIBLE CAUSES	CORRECTION
NO DRIVE RANGE (REVERSE OK)	1. Fluid Level Low.	1. Add fluid and check for leaks if drive is restored.
	2. Gearshift Linkage/Cable Loose/Misadjusted.	2. Repair or replace linkage components.
	3. Rear Clutch Burnt.	3. Remove and disassemble transmission and rear clutch and seals. Repair/replace worn or damaged parts as needed.
	4. Valve Body Malfunction.	4. Remove and disassemble valve body. Replace assembly if any valves or bores are damaged.
	5. Transmission Overrunning Clutch Broken.	5. Remove and disassemble transmission. Replace overrunning clutch.
	6. Input Shaft Seal Rings Worn/ Damaged.	6. Remove and disassemble transmission. Replace seal rings and any other worn or damaged parts.
	7. Front Planetary Failed Broken.	7. Remove and repair.
NO DRIVE OR REVERSE (VEHICLE WILL NOT MOVE)	1. Fluid Level Low.	1. Add fluid and check for leaks if drive is restored.
	2. Gearshift Linkage/Cable Loose/Misadjusted.	2. Inspect, adjust and reassemble linkage as needed. Replace worn/damaged parts.
	3. Filter Plugged.	3. Remove and disassemble transmission. Repair or replace failed components as needed. Replace filter. If filter and fluid contained clutch material or metal particles, an overhaul may be necessary. Perform lube flow test. Flush oil. Replace cooler as necessary.
	4. Oil Pump Damaged.	4. Perform pressure test to confirm low pressure. Replace pump body assembly if necessary.
	5. Valve Body Malfunctioned.	5. Check press and inspect valve body. Replace valve body (as assembly) if any valve or bore is damaged. Clean and reassemble correctly if all parts are in good condition.
	6. Transmission Internal Component Damaged.	6. Remove and disassemble transmission. Repair or replace failed components as needed. Remove and disassemble transmission. Repair or replace failed components as needed.
	7. Park Sprag not Releasing - Check Stall Speed, Worn/Damaged/Stuck.	7. Remove, disassemble, repair.
	8. Torque Converter Damage.	8. Inspect and replace as required.

31TH AUTOMATIC TRANSAXLE (Continued)

CONDITION	POSSIBLE CAUSES	CORRECTION
SHIFTS DELAYED OR ERRATIC (ALSO SHIFTS HARSH AT TIMES)	1. Fluid Level Low/High.	1. Correct fluid level and check for leaks if low.
	2. Fluid Filter Clogged.	2. Replace filter. If filter and fluid contained clutch material or metal particles, an overhaul may be necessary. Perform lube flow test.
	3. Throttle Linkage Misadjusted.	3. Adjust linkage as described in service section.
	4. Throttle Linkage Binding.	4. Check cable for binding. Check for return to closed throttle at transmission.
	5. Gearshift Linkage/Cable Misadjusted.	5. Adjust linkage/cable as described in service section.
	6. Governor Valve Sticking.	6. Inspect, clean or repair.
	7. Governor Seal Rings Worn/ Damaged.	7. Inspect/replace.
	8. Clutch or Servo Failure.	8. Remove valve body and air test clutch, and band servo operation. Disassemble and repair transmission as needed.
	9. Front Band Misadjusted.	9. Adjust band.
	10. Pump Suction Passage Leak.	10. Check for excessive foam on dipstick after normal driving. Check for loose pump bolts, defective gasket. Replace pump assembly if needed.
NO REVERSE (D RANGES OK)	1. Gearshift Linkage/Cable Misadjusted/Damaged.	1. Repair or replace linkage parts as needed.
	2. Rear Band Misadjusted/Worn.	2. Adjust band; replace.
	3. Valve Body Malfunction.	3. Remove and service valve body. Replace valve body if any valves or valve bores are worn or damaged.
	4. Rear Servo Malfunction.	4. Remove and disassemble transmission. Replace worn/damaged servo parts as necessary.
	5. Direct Clutch in Overdrive Worn	5. Disassemble overdrive. Replace worn or damaged parts.
	6. Front Clutch Burnt.	6. Remove and disassemble transmission. Replace worn, damaged clutch parts as required.
HAS FIRST/REVERSE ONLY (NO 1-2 OR 2-3 UPSHIFT)	1. Governor Valve, Shaft, Weights or Body Damaged/Stuck.	1. Remove governor assembly and clean or repair as necessary.
	2. Valve Body Malfunction.	2. Stuck 1-2 shift valve or governor plug.
	3. Front Servo/Kickdown Band Damaged/Burned.	3. Repair/replace.
MOVES IN 2ND OR 3RD GEAR, ABRUPTLY DOWNSHIFTS TO LOW	1. Valve Body Malfunction.	1. Remove, clean and inspect. Look for stuck 1-2 valve or governor plug.
	2. Governor Valve Sticking.	2. Remove, clean and inspect. Replace faulty parts.

31TH AUTOMATIC TRANSAXLE (Continued)

CONDITION	POSSIBLE CAUSES	CORRECTION
NO LOW GEAR (MOVES IN 2ND OR 3RD GEAR ONLY)	1. Governor Valve Sticking.	1. Remove governor, clean, inspect and repair as required.
	2. Valve Body Malfunction.	2. Remove, clean and inspect. Look for sticking 1-2 shift valve, 2-3 shift valve, governor plug or broken springs.
	3. Front Servo Piston Cocked in Bore.	3. Inspect servo and repair as required.
	4. Front Band Linkage Malfunction	4. Inspect linkage and look for bind in linkage.
NO KICKDOWN OR NORMAL DOWNSHIFT	1. Throttle Linkage Misadjusted.	1. Adjust linkage.
	2. Accelerator Pedal Travel Restricted.	2. Floor mat under pedal, accelerator cable worn or brackets bent.
	3. Governor/Valve Body Hydraulic Pressures Too High or Too Low Due to Sticking Governor, Valve Body Malfunction or Incorrect Hydraulic Control Pressure Adjustments.	3. Perform hydraulic pressure tests to determine cause and repair as required. Correct valve body pressure adjustments as required.
	4. Valve Body Malfunction.	4. Perform hydraulic pressure tests to determine cause and repair as required. Correct valve body pressure adjustments as required.
	5. Valve Body Malfunction.	5. Sticking 1-2, 2-3 shift valves, governor plugs, 3-4 solenoid, 3-4 shift valve, 3-4 timing valve.
STUCK IN LOW GEAR (WILL NOT UPSHIFT)	1. Throttle Linkage Misadjusted/ Stuck.	1. Adjust linkage and repair linkage if worn or damaged. Check for binding cable.
	2. Gearshift Linkage Misadjusted.	2. Adjust linkage and repair linkage if worn or damaged.
	3. Governor/Valve Body, Governor Valve Stuck Closed; Loose Output Shaft Support or Governor Housing Bolts, Leaking Seal Rings or Valve Body Problem (i.e., Stuck 1- 2 Shift Valve/Gov. Plug).	3. Check line and governor pressures to determine cause. Correct as required.
	4. Front Band Out of Adjustment .	4. Adjust Band.
	5. Clutch or Servo Malfunction.	5. Air pressure check operation of clutches and bands. Repair faulty component.
CREEPS IN NEUTRAL	1. Gearshift Linkage Misadjusted.	1. Adjust linkage.
	2. Rear Clutch Dragging/Warped Welded.	2. Disassemble and repair.
	3. Valve Body Malfunction.	3. Perform hydraulic pressure test to determine cause and repair as required.

31TH AUTOMATIC TRANSAXLE (Continued)

CONDITION	POSSIBLE CAUSES	CORRECTION
BUZZING NOISE	1. Fluid Level Low	1. Add fluid and check for leaks.
	2. Shift Cable Misassembled.	2. Route cable away from engine and bell housing.
	3. Valve Body Misassembled.	3. Remove, disassemble, inspect valve body. Reassemble correctly if necessary. Replace assembly if valves or springs are damaged. Check for loose bolts or screws.
	4. Pump Passages Leaking	4. Check pump for porous casting, scores on mating surfaces and excess rotor clearance. Repair as required. Loose pump bolts.
	5. Cooling System Cooler Plugged.	5. Flow check cooler circuit. Repair as needed.
	6.Overrunning Clutch Damaged.	6. Replace clutch.
SLIPS IN REVERSE ONLY	1. Fluid Level Low.	1. Add fluid and check for leaks.
	2. Gearshift Linkage Misadjusted.	2. Adjust linkage.
	3. Rear Band Misadjusted.	3. Adjust band.
	4. Rear Band Worn.	4. Replace as required.
	5. Hydraulic Pressure Too Low.	5. Perform hydraulic pressure tests to determine cause.
	6. Rear Servo Leaking.	6. Air pressure check clutch-servo operation and repair as required.
	7. Band Linkage Binding.	7. Inspect and repair as required.
SLIPS IN FORWARD DRIVE RANGES	1. Fluid Level Low.	1. Add fluid and check for leaks.
	2. Fluid Foaming.	2. Check for high oil level, bad pump gasket or seals, dirt between pump halves and loose pump bolts. Replace pump if necessary.
	3. Throttle Linkage Misadjusted.	3. Adjust linkage.
	4. Gearshift Linkage Misadjusted.	4. Adjust linkage.
	5. Rear Clutch Worn.	5. Inspect and replace as needed.
	6. Low Hydraulic Pressure Due to Worn Pump, Incorrect Control Pressure Adjustments, Valve Body Warpage or Malfunction, Sticking Governor, Leaking Seal Rings, Clutch Seals Leaking, Servo Leaks, Clogged Filter or Cooler Lines	6. Perform hydraulic and air pressure tests to determine cause.
	7. Rear Clutch Malfunction, Leaking Seals or Worn Plates.	7. Air pressure check clutch-servo operation and repair as required.
	8. Overrunning Clutch Worn, Not Holding (Slips in 1 Only).	8. Replace Clutch.
SLIPS IN LOW GEAR ″D″ ONLY, BUT NOT IN 1 POSITION	Overrunning Clutch Faulty.	Replace overrunning clutch.

31TH AUTOMATIC TRANSAXLE (Continued)

CONDITION	POSSIBLE CAUSES	CORRECTION
GROWLING, GRATING OR SCRAPING NOISES	1. Drive Plate Broken.	1. Replace.
	2. Torque Converter Bolts Hitting Dust Shield.	2. Dust shield bent. Replace or repair.
	3. Planetary Gear Set Broken/ Seized.	3. Check for debris in oil pan and repair as required.
	4. Overrunning Clutch Worn/Broken.	4. Inspect and check for debris in oil pan. Repair as required.
	5. Oil Pump Components Scored/ Binding.	5. Remove, inspect and repair as required.
	6. Output Shaft Bearing or Bushing Damaged.	6. Remove, inspect and repair as required.
	7. Clutch Operation Faulty.	7. Perform air pressure check and repair as required.
	8. Front and Rear Bands Misadjusted.	8. Adjust bands.
DRAGS OR LOCKS UP	1. Fluid Level Low.	1. Check and adjust level.
	2. Clutch Dragging/Failed	2. Air pressure check clutch operation and repair as required.
	3. Front or Rear Band Misadjusted.	3. Adjust bands.
	4. Case Leaks Internally.	4. Check for leakage between passages in case.
	5. Servo Band or Linkage Malfunction.	5. Air pressure check servo operation and repair as required.
	6. Overrunning Clutch Worn.	6. Remove and inspect clutch. Repair as required.
	7. Planetary Gears Broken.	7. Remove, inspect and repair as required (look for debris in oil pan).
WHINE/NOISE RELATED TO ENGINE SPEED	1. Fluid Level Low.	1. Add fluid and check for leaks.
	2. Shift Cable Incorrect Routing.	2. Check shift cable for correct routing. Should not touch engine or bell housing.
TORQUE CONVERTER LOCKS UP IN SECOND AND/OR THIRD GEAR	Lockup Solenoid, Relay or Wiring Shorted/Open.	Test solenoid, relay and wiring for continuity, shorts or grounds. Replace solenoid and relay if faulty. Repair wiring and connectors as necessary.
HARSH 1-2 OR 2-3 SHIFTS	Lockup Solenoid Malfunction.	Remove valve body and replace solenoid assembly.
NO START IN PARK OR NEUTRAL	1. Gearshift Linkage/Cable Misadjusted.	1. Adjust linkage/cable.
	2. Neutral Switch Wire Open/Cut.	2. Check continuity with test lamp. Repair as required.
	3. Neutral Switch Faulty.	3. Refer to service section for test and replacement procedure.
	4. Neutral Switch Connect Faulty.	4. Connectors spread open. Repair.
	5. Valve Body Manual Lever Assembly Bent/Worn/Broken.	5. Inspect lever assembly and replace if damaged.

31TH AUTOMATIC TRANSAXLE (Continued)

CONDITION	POSSIBLE CAUSES	CORRECTION
NO REVERSE (OR SLIPS IN REVERSE)	1. Direct Clutch Pack (front clutch) Worn.	1. Disassemble unit and rebuild clutch pack.
	2. Rear Band Misadjusted.	2. Adjust band.
	3. Front Clutch Malfunctioned/Burnt.	3. Air pressure test clutch operation. Remove and rebuild if necessary.
OIL LEAKS (ITEMS LISTED REPRESENT POSSIBLE LEAK POINTS AND SHOULD ALL BE CHECKED.	1. Fluid Lines and Fittings Loose/ Leaks/Damaged.	1. Tighten fittings. If leaks persist, replace fittings and lines if necessary.
	2. Filler Tube (where tube enters case) Leaks/Damaged.	2. Replace tube seal. Inspect tube for cracks in tube.
	3. Pressure Port Plug Loose Loose/Damaged.	3. Tighten to correct torque. Replace plug or reseal if leak persists.
	4. Pan Gasket Leaks.	4. Tighten pan screws to 150 inch pounds. If leaks persist, replace gasket. Do no over tighten screws.
	5. Valve Body Manual Lever Shaft Seal Leaks/Worn.	5. Replace shaft seal.
	6. Rear Bearing Access Plate Leaks.	6. Replace gasket. Tighten screws.
	7. Gasket Damaged or Bolts are Loose.	7. Replace bolts or gasket or tighten both.
	8. Adapter/Extension Gasket Damaged Leaks/Damaged.	8. Replace gasket.
	9. Neutral Switch Leaks/Damaged.	9. Replace switch and gasket.
	10. Converter Housing Area Leaks.	10. Check for leaks at seal caused by worn seal or burr on converter hub (cutting seal), worn bushing, missing oil return, oil in front pump housing or hole plugged. Check for leaks past O-ring seal on pump or past pump-to-case bolts; pump housing porous, oil coming out vent due to overfill or leak past front band shaft access plug.
	11. Pump Seal Leaks/Worn/ Damaged.	11. Replace seal.
	12. Torque Converter Weld Leak/Cracked Hub.	12. Replace converter.
	13. Case Porosity Leaks.	13. Replace case.

DIAGNOSIS AND TESTING - ROAD TEST

Prior to performing a road test, check the fluid level and throttle valve cable adjustments.

During the road test, the transaxle should be operated in each position to check for slipping and any variation in shifting.

If vehicle operates at high speeds, but has poor acceleration, the converter's overrunning clutch may be slipping. If acceleration is normal, but high throttle opening is needed for high speeds, the stator clutch may have seized.

Observe closely for slipping or engine speed flare-up. Slipping or flare-up in any gear usually indicates clutch, band, or overrunning clutch problems. If the condition is far advanced, an overhaul will probably be necessary to restore normal operation.

In most cases, the clutch or band that is slipping can be determined by noting the transaxle operation in all selector positions and then comparing which internal units are applied in those positions. The Elements–in–Use Chart provides a basis for road test analysis.

31TH AUTOMATIC TRANSAXLE (Continued)

			CLUTCHES				BANDS	
LEVER POSITION	START SAFETY	PARK SPRAG	FRONT	REAR	LOCKUP	OVER-RUNNING	(KICKDOWN) FRONT	LOW/REV REAR
P - PARK	X	X						
R - REVERSE			X					X
N - NEUTRAL	X							
D - DRIVE								
First				X		X		
Second				X			X	
Third			X	X	X			
2 - SECOND								
First				X		X		
Second				X			X	
1 - Low				X				X

The rear clutch is applied in both the D first gear and 1 first gear positions. Also, the overrunning clutch is applied in D first gear and the low/reverse band is applied in 1 first gear position. If the transaxle slips in D range first gear, but does not slip in 1 first gear, the overrunning clutch is slipping. Similarly, if the transaxle slips in any two forward gears, the rear clutch is slipping.

Using the same procedure, the rear clutch and front clutch are applied in D third gear. If the transaxle slips in third gear, either the front clutch or the rear clutch is slipping. By selecting another gear that does not use one of those units, the unit that is slipping can be determined. If the transaxle also slips in reverse, the front clutch is slipping. If the transaxle does not slip in reverse, the rear clutch is slipping.

The process of elimination can be used to detect any unit that slips and to confirm proper operation of good units. Road testing can usually diagnose slipping units, although the actual cause of the problem may not be detected. Practically any condition can be caused by leaking hydraulic circuits or sticking valves.

Therefore, unless the condition is obvious, the transaxle should never be disassembled until hydraulic pressure tests have been performed.

DIAGNOSIS AND TESTING - HYDRAULIC PRESSURE TESTS

Pressure testing is a very important step in the diagnostic procedure. These tests usually reveal the cause of most transaxle problems.

Before performing pressure tests, check fluid level and condition, as well as control cable adjustments. Fluid must be at operating temperature (150-200 degrees F.).

Install an engine tachometer. Raise vehicle on a hoist that allows front wheels to turn, and position tachometer so it can be read.

Disconnect throttle cable and shift cable from transaxle levers so they can be controlled from outside the vehicle.

Attach 100 psi gauges (C-3292) to ports required for test being conducted. A 300 psi gauge (C-3293SP) is required for reverse pressure test at rear servo.

Test port locations are shown in (Fig. 1).

TEST ONE (SELECTOR IN 1)

(1) Attach gauges to line and low-reverse ports.

(2) Operate engine at 1000 rpm for test.

(3) Move selector lever on transaxle all the way rearward (1 position).

(4) Read pressures on both gauges as throttle lever on transaxle is moved from full clockwise position to full counterclockwise position.

31TH AUTOMATIC TRANSAXLE (Continued)

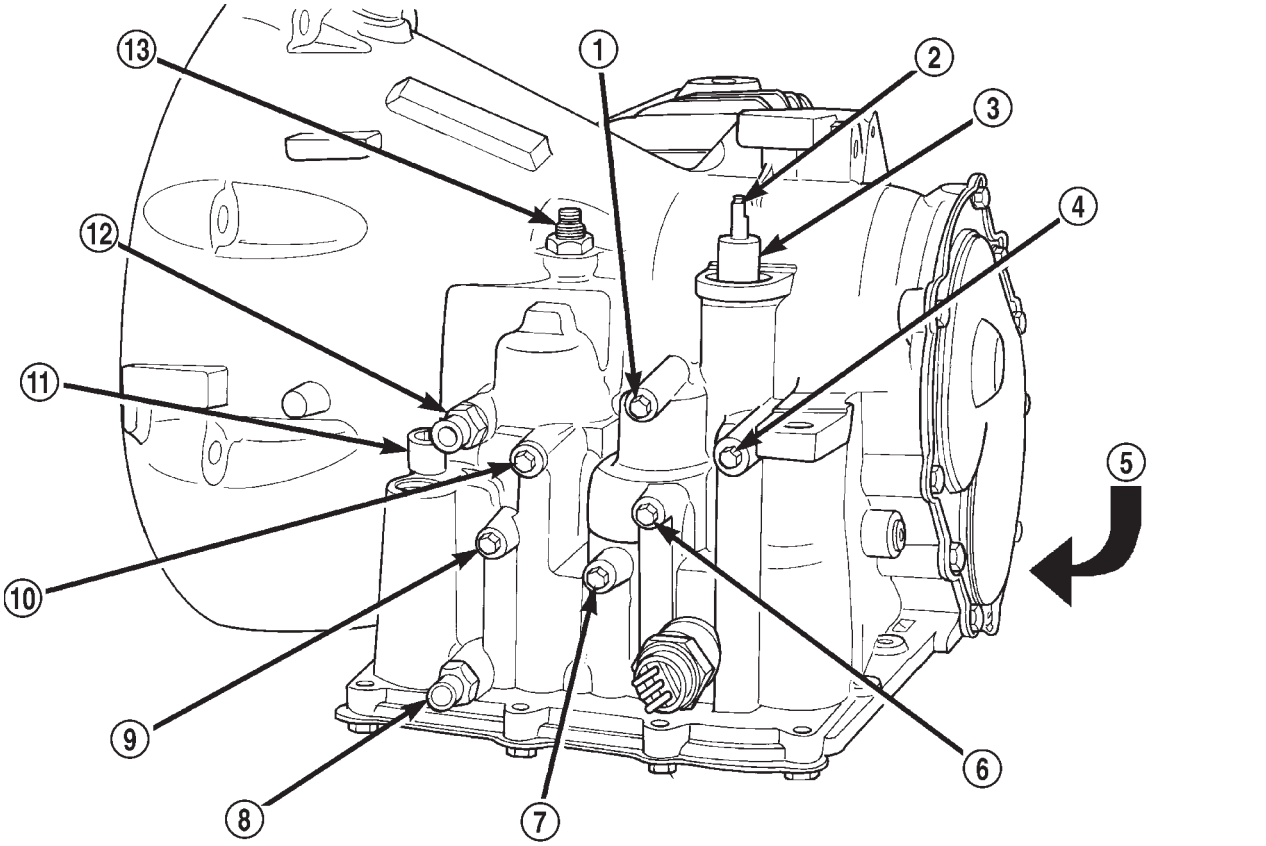

Fig. 1 Test Port Locations

1 - ACCUMULATOR VENT
2 - MANUAL THROTTLE LEVER SHAFT
3 - MANUAL SHIFT LEVER SHAFT
4 - LOW-REVERSE PRESSURE
5 - GOVERNER PRESSURE (BELOW DIFFERENTIAL COVER ON RIGHT SIDE)
6 - LINE PRESSURE
7 - KICKDOWN APPLY AT ACCUMULATOR
8 - TO COOLER
9 - KICKDOWN RELEASE (FRONT CLUTCH)
10 - KICKDOWN APPLY
11 - CONVERTER CLUTCH SOLENOID CONNECTOR
12 - FROM COOLER
13 - KICKDOWN BAND ADJUSTING SCREW

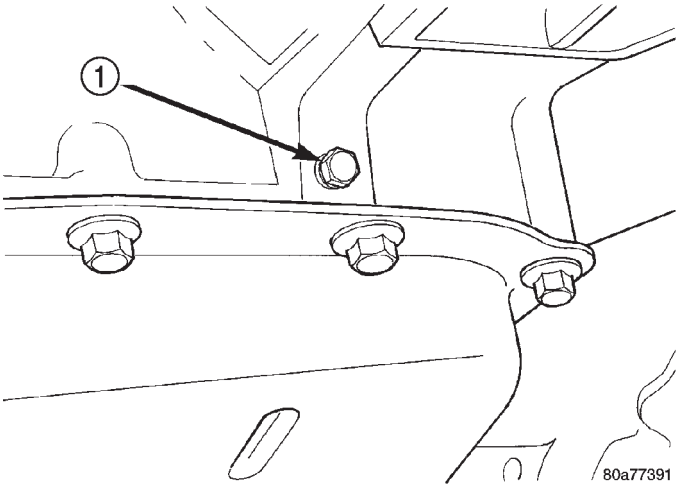

Fig. 2 Governor Pressure Tap

1 - GOVERNOR PRESSURE PLUG

(5) Line pressure should read 52 to 58 psi with throttle lever clockwise. Pressure should gradually increase to 80 to 88 psi.as lever is moved counter-clockwise.

(6) Low/reverse pressure should read the same as line pressure, within 3 psi.

(7) This tests pump output, pressure regulation, and condition of rear clutch and rear servo hydraulic circuits.

TEST TWO (SELECTOR IN 2)

(1) Attach one gauge to line pressure port, and tee another gauge into lower cooler line fitting. This will allow lubrication pressure readings to be taken.

(2) Operate engine at 1000 rpm for test.

(3) Move selector lever on transaxle one detent forward from full rearward position. This is selector 2 position.

(4) Read pressures on both gauges as throttle lever on transaxle is moved from full clockwise position to full counterclockwise position.

(5) Line pressure should read 52 to 58 psi with throttle lever clockwise. Pressure should gradually increase to 80 to 88 psi. as lever is moved counterclockwise.

(6) Lubrication pressure should be 10 to 25 psi with lever clockwise and 10 to 35 psi with lever at full counterclockwise.

(7) This tests pump output, pressure regulation, and condition of rear clutch and lubrication hydraulic circuits.

TEST THREE (SELECTOR IN D)

(1) Attach gauges to line and kickdown release ports.

(2) Operate engine at 1600 rpm for test.

(3) Move selector lever on transaxle two detents forward from full rearward position. This is selector D position.

(4) Read pressures on both gauges as throttle lever on transaxle is moved from full clockwise to the full counterclockwise position.

(5) Line pressure should read 52 to 58 psi with throttle lever clockwise. Pressure should gradually increase to 80 to 88 psi. as lever is moved counterclockwise.

(6) Kickdown release is pressurized only in direct drive and should be same as line pressure within 3 psi, up to kickdown point.

(7) This tests pump output, pressure regulation, and condition of rear clutch, front clutch, and hydraulic circuits.

TEST FOUR (SELECTOR IN REVERSE)

(1) Attach 300 psi gauge (C-3292SP) to low-reverse port.

(2) Operate engine at 1600 rpm for test.

(3) Move selector lever on transaxle four detents forward from full rearward position. This is selector R position.

(4) Low/reverse pressure should read 180 to 220 psi with throttle lever clockwise. Pressure should gradually increase to 260 to 300 psi. as lever is moved counterclockwise.

(5) This tests pump output, pressure regulation, and condition of front clutch and rear servo hydraulic circuits.

(6) Move selector lever on transaxle to D position to check that low/reverse pressure drops to zero.

(7) This tests for leakage into rear servo, due to case porosity, which can cause reverse band burn out.

TEST RESULT INDICATIONS

(1) If proper line pressure, minimum to maximum, is found in any one test, the pump and pressure regulator are working properly.

(2) Low pressure in D, 1, and 2 but correct pressure in R, indicates rear clutch circuit leakage.

(3) Low pressure in D and R, but correct pressure in 1 indicates front clutch circuit leakage.

(4) Low pressure in R and 1, but correct pressure in 2 indicates rear servo circuit leakage.

(5) Low line pressure in all positions indicates a defective pump, a clogged filter, or a stuck pressure regulator valve.

GOVERNOR PRESSURE

Test only if transaxle shifts at wrong vehicle speeds when throttle cable is correctly adjusted.

(1) Connect a 100 psi gauge to governor pressure port. It is located at lower right side of case, below differential cover (Fig. 2).

(2) Operate transaxle in third gear to read pressures. The governor pressure should respond smoothly to changes in mph and should return to 0 to 3 psi when vehicle is stopped. High pressure (above 3 psi) at standstill will prevent the transaxle from downshifting.

THROTTLE PRESSURE

No gauge port is provided for throttle pressure. Incorrect throttle pressure should be suspected if part throttle upshift speeds are either delayed or occur too early in relation to vehicle speed. Engine runaway on shifts can also be an indicator of low throttle pressure setting, or misadjusted throttle cable.

In no case should throttle pressure be adjusted until the transaxle throttle cable adjustment has been verified to be correct.

31TH AUTOMATIC TRANSAXLE (Continued)

DIAGNOSIS AND TESTING - TORQUE CONVERTER HOUSING FLUID LEAKAGE

When diagnosing converter housing fluid leaks, three actions must be taken before repair:

(1) Verify proper transmission fluid level.

(2) Verify that the leak originates from the converter housing area and is transmission fluid.

(3) Determine the true source of the leak.

Fluid leakage at or around the torque converter area may originate from an engine oil leak (Fig. 3). The area should be examined closely. Factory fill fluid is red and, therefore, can be distinguished from engine oil.

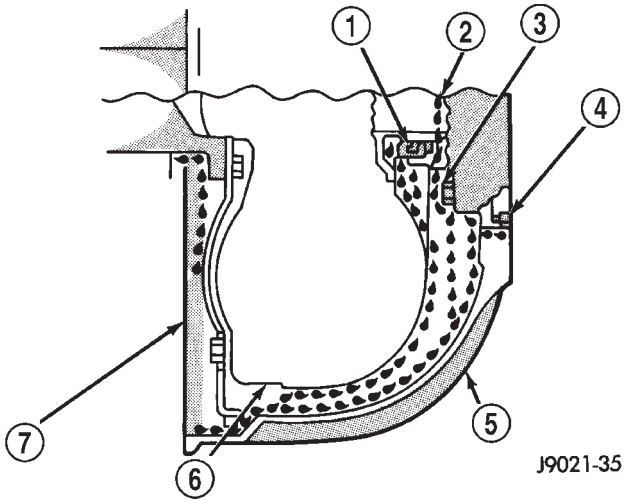

Fig. 3 Converter Housing Leak Paths

1 - PUMP SEAL
2 - PUMP VENT
3 - PUMP BOLT
4 - PUMP GASKET
5 - CONVERTER HOUSING
6 - CONVERTER
7 - REAR MAIN SEAL LEAK

Some suspected converter housing fluid leaks may not be leaks at all. They may only be the result of residual fluid in the converter housing, or excess fluid spilled during factory fill, or fill after repair. Converter housing leaks have several potential sources. Through careful observation, a leak source can be identified before removing the transmission for repair.

Pump seal leaks tend to move along the drive hub and onto the rear of the converter (Fig. 3). Pump o-ring or pump body leaks follow the same path as a seal leak. Pump attaching bolt leaks are generally deposited on the inside of the converter housing and not on the converter itself. Pump seal or gasket leaks usually travel down the inside of the converter housing (Fig. 3).

TORQUE CONVERTER LEAKAGE

Possible sources of torque converter leakage are:

- Torque converter weld leaks at the outside diameter weld (Fig. 4).
- Torque converter hub weld (Fig. 4).

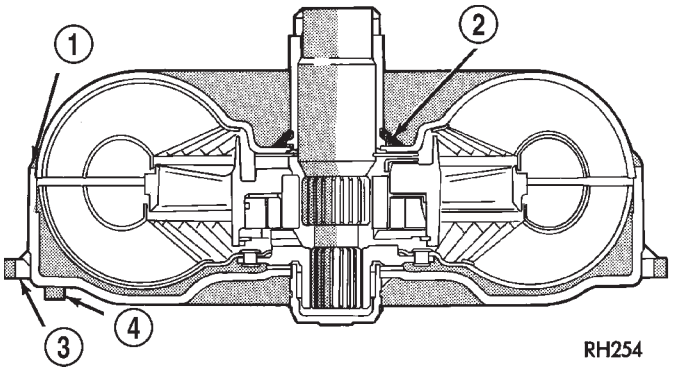

Fig. 4 Converter Leak Points—Typical

1 - OUTSIDE DIAMETER WELD
2 - TORQUE CONVERTER HUB WELD
3 - STARTER RING GEAR
4 - LUG

DIAGNOSIS AND TESTING - CLUTCH AND SERVO AIR PRESSURE TESTS

A no drive condition might exist even with correct fluid pressure, because of inoperative clutches or bands. The inoperative units, clutches, bands, and servos can be located through a series of tests. This is done by substituting air pressure for fluid pressure (Fig. 5).

The front and rear clutches, kickdown servo, and low-reverse servo may be tested by applying air pressure to their respective passages. To make air pressure tests, proceed as follows:

NOTE: Compressed air supply must be free of all dirt or moisture. Use a pressure of 30 psi.

Remove oil pan and valve body. Refer to Valve Body for removal procedure.

FRONT CLUTCH

Apply air pressure to front clutch apply passage and listen for a dull thud which indicates that front clutch is operating. Hold air pressure on for a few seconds and inspect system for excessive oil leaks.

31TH AUTOMATIC TRANSAXLE (Continued)

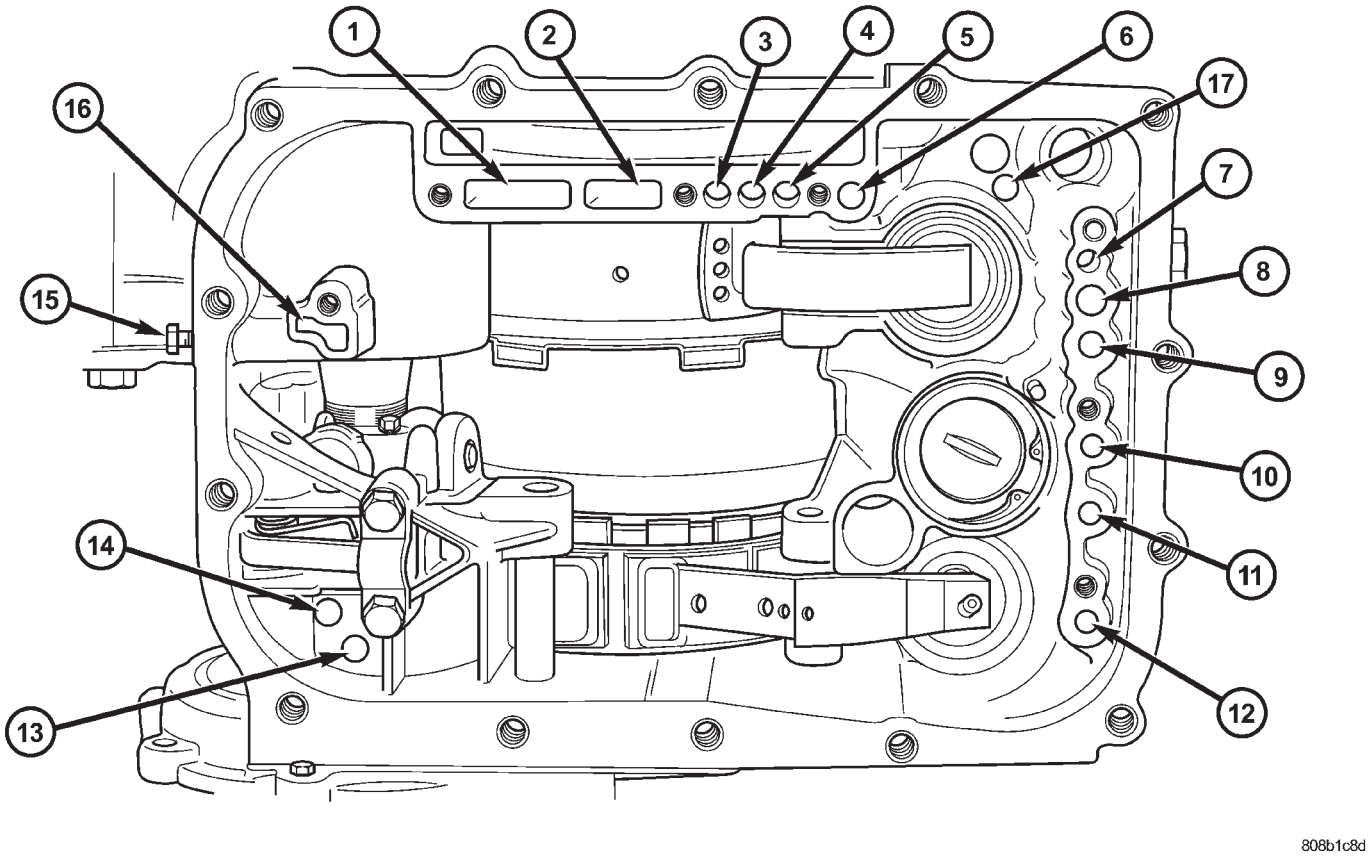

Fig. 5 Air Pressure Tests

1 - PUMP SUCTION	7 - TO OIL COOLER	13 - GOVERNOR PRESSURE
2 - PUMP PRESSURE	8 - KICKDOWN SERVO OFF	14 - LINE PRESSURE TO GOVERNOR
3 - FRONT CLUTCH APPLY	9 - KICKDOWN SERVO ON	15 - GOVERNOR PRESSURE PLUG
4 - REAR CLUTCH APPLY	10 - ACCUMULATOR OFF	16 - GOVERNOR PRESSURE
5 - TO TORQUE CONVERTER	11 - ACCUMULATOR ON	17 - BYPASS VALVE BORE
6 - FROM TORQUE CONVERTER	12 - LOW-REVERSE SERVO APPLY	

REAR CLUTCH

Apply air pressure to rear clutch apply passage and listen for a dull thud which indicates that rear clutch is operating. Also inspect for excessive oil leaks. If a dull thud cannot be heard in the clutches, place finger tips on clutch housing and again apply air pressure. Movement of piston can be felt as the clutch is applied.

KICKDOWN SERVO (FRONT)

Direct air pressure into KICKDOWN SERVO ON passage. Operation of servo is indicated by a tightening of front band. Spring tension on servo piston should release the band.

LOW AND REVERSE SERVO (REAR)

Direct air pressure into LOW-REVERSE SERVO APPLY passage. Operation of servo is indicated by a tightening of rear band. Spring tension on servo piston should release the band.

If clutches and servos operate properly, no upshift indicates that a malfunction exists in the valve body.

31TH AUTOMATIC TRANSAXLE (Continued)

STANDARD PROCEDURE - ALUMINUM THREAD REPAIR

Damaged or worn threads in the aluminum transaxle case and valve body can be repaired by the use of Heli-Coils, or equivalent. This repair consists of drilling out the worn-out damaged threads. Then tapping the hole with a Heli-Coil tap, or equivalent, and installing a Heli-Coil insert, or equivalent, into the hole. This brings the hole back to its original thread size.

Heli-Coil, or equivalent, tools and inserts are readily available from most automotive parts suppliers.

REMOVAL

(1) Disconnect battery negative cable.

(2) Remove fluid level indicator tube bolt and tube/indicator assembly (Fig. 6). Plug opening to prevent debris intrusion.

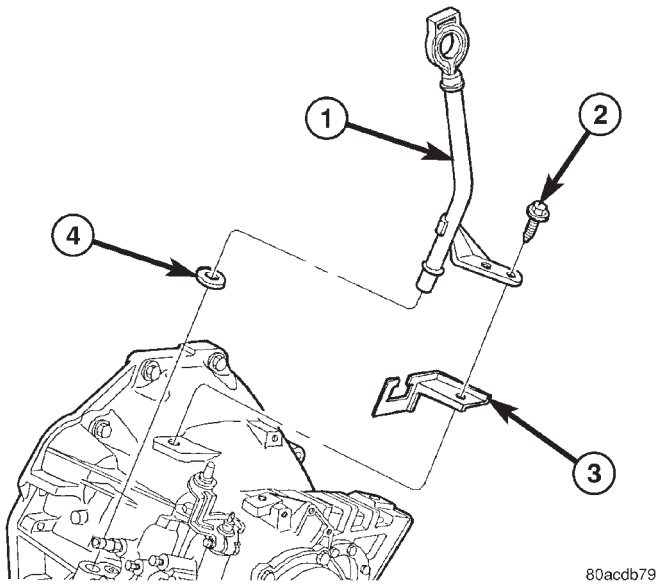

Fig. 6 Fluid Level Indicator Assembly

1 - INDICATOR ASSEMBLY
2 - BOLT
3 - KICKDOWN CABLE BRACKET
4 - SEAL

(3) Disconnect torque converter clutch solenoid (TCC) connector.

(4) Disconnect kickdown cable from lever and bracket (Fig. 7). Position out of way.

(5) Disconnect gearshift cable from manual valve lever and upper mount bracket (Fig. 8). Position out of way.

(6) Disconnect back-up lamp switch connector.

(7) Remove upper two (2) transaxle-to-engine bolts.

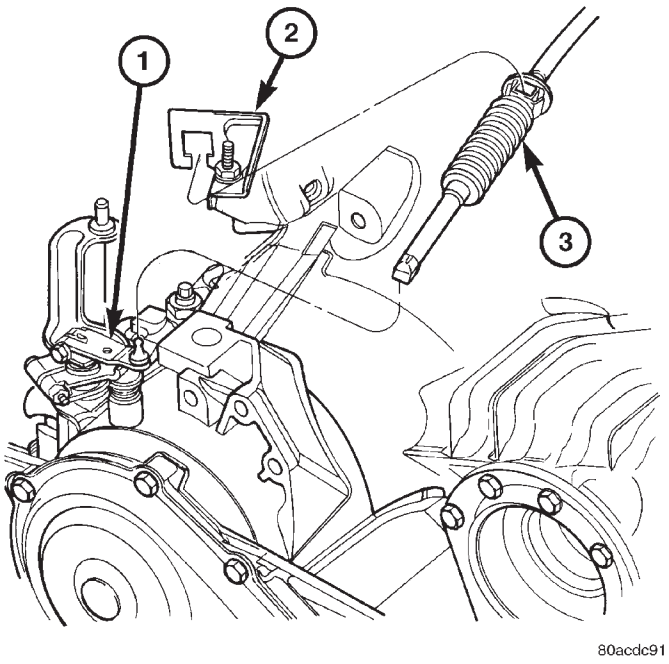

Fig. 7 Throttle Valve Cable at Transaxle

1 - LEVER
2 - BRACKET
3 - THROTTLE VALVE CABLE

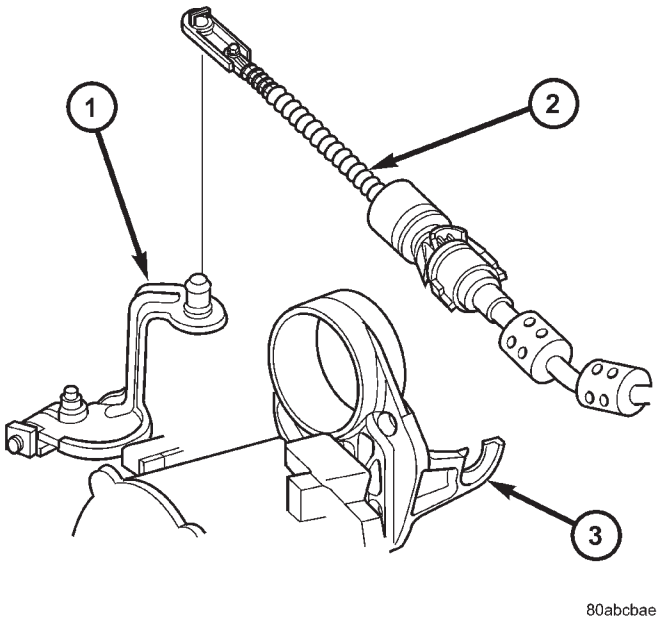

Fig. 8 Gearshift Cable at Transaxle

1 - MANUAL VALVE LEVER
2 - GEAR SHIFT CABLE
3 - UPPER MOUNT BRACKET

31TH AUTOMATIC TRANSAXLE (Continued)

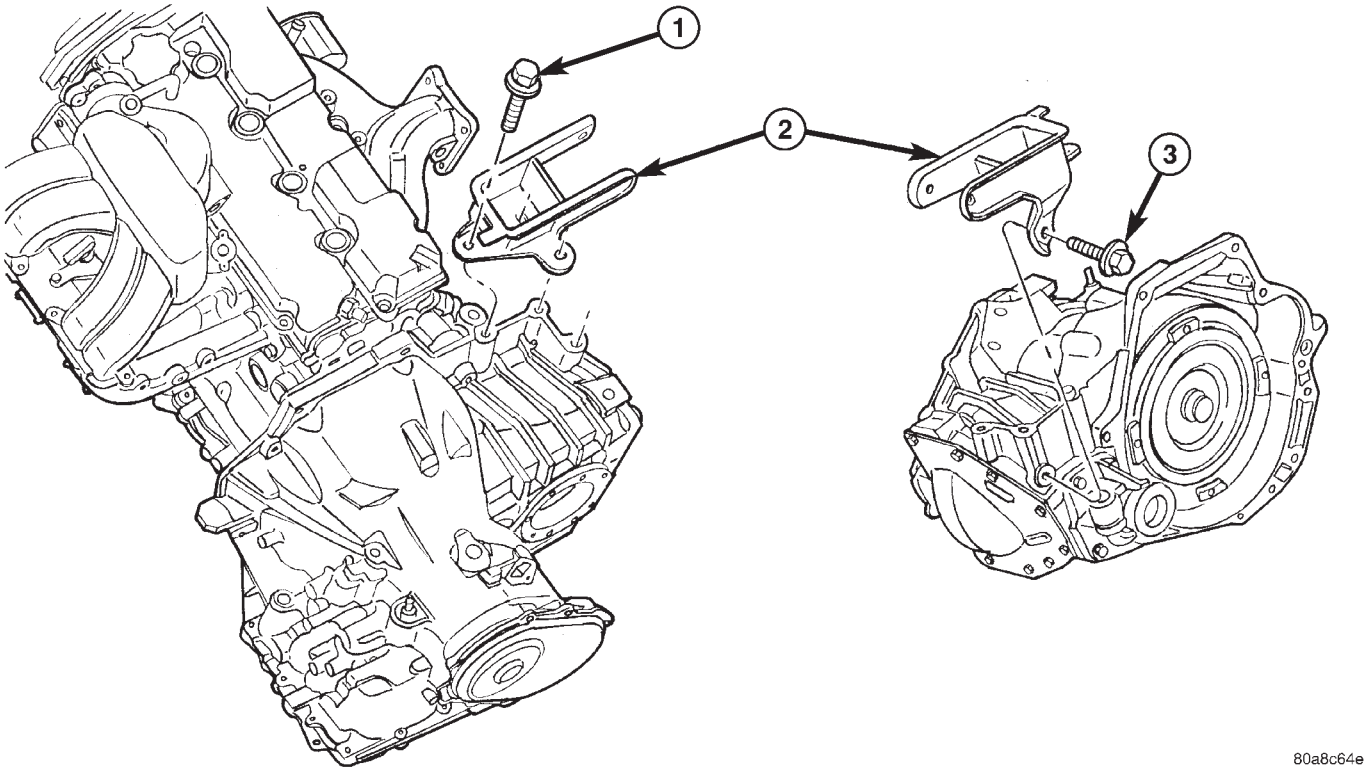

Fig. 9 Rear Mount Bracket

1 - BOLT - VERTICAL
2 - BRACKET - REAR MOUNT
3 - BOLT - HORIZONTAL

(8) Remove three (3) rear mount bracket-to-transaxle case bolts (Fig. 9).
(9) Raise vehicle on hoist.
(10) Remove halfshafts. (Refer to 3 - DIFFERENTIAL & DRIVELINE/HALF SHAFT - REMOVAL)
(11) Remove starter motor assembly (Fig. 10).

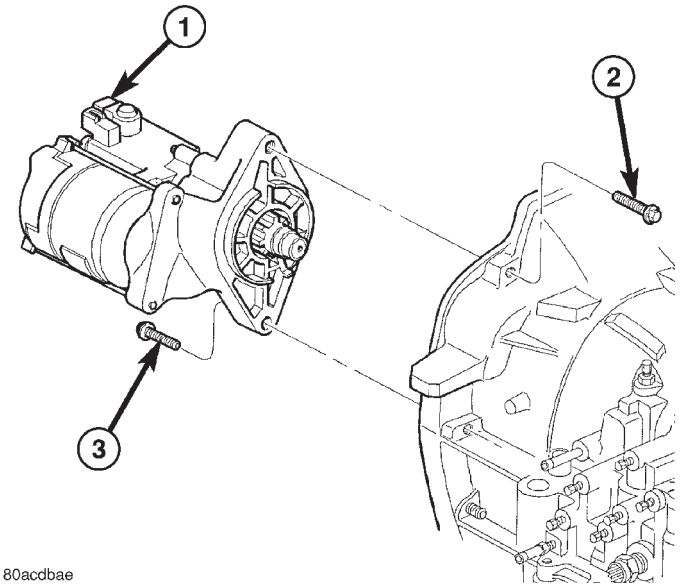

Fig. 10 Starter Motor Removal/Installation

1 - STARTER MOTOR
2 - BOLT
3 - BOLT

31TH AUTOMATIC TRANSAXLE (Continued)

(12) Remove front mount and bracket (Fig. 11).

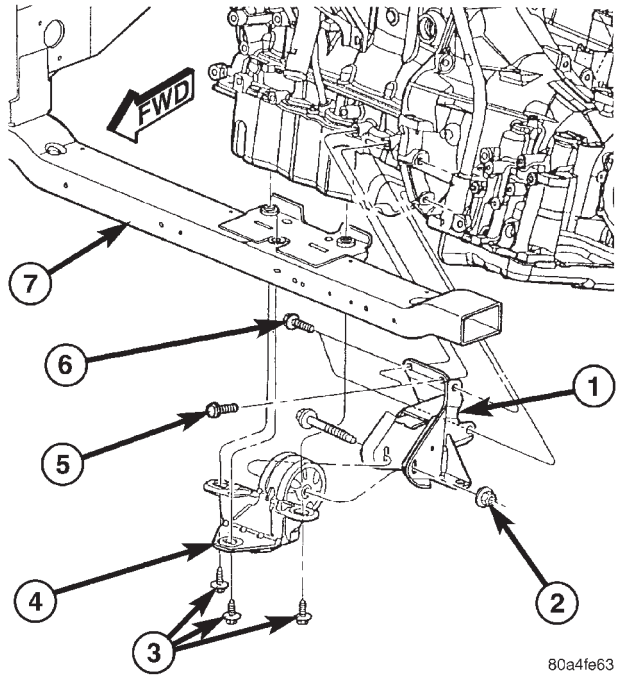

Fig. 11 Front Mount and Bracket

1 - BRACKET - FRONT MOUNT
2 - NUT
3 - BOLT
4 - MOUNT - FRONT INSULATOR
5 - BOLT
6 - BOLT
7 - FRONT CROSSMEMBER

(13) Cut transaxle oil cooler lines flush with fittings. a service kit will be installed upon reintallation. Plug lines and fittings to prevent debris intrusion.

(14) Remove structural collar (Fig. 12).

(15) Disconnect vehicle speed sensor connector.

(16) Remove rear mount shield (Fig. 13).

(17) Remove rear mount thru-bolt.

(18) Support engine with screw jack and wood block.

(19) Remove torque converter-to-drive plate bolts.

(20) Remove left wheel splash shield.

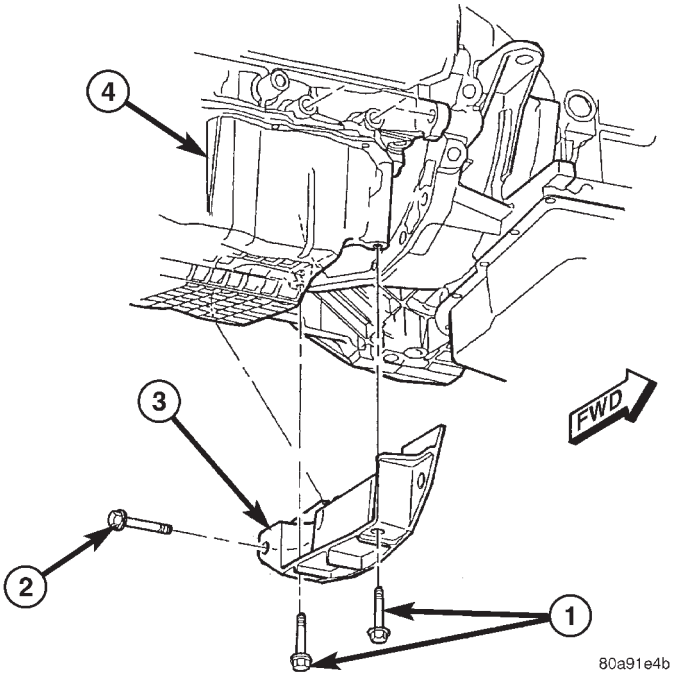

Fig. 12 Structural Collar

1 - BOLT - COLLAR TO OIL PAN
2 - BOLT - COLLAR TO TRANSAXLE
3 - STRUCTURAL COLLAR
4 - OIL PAN

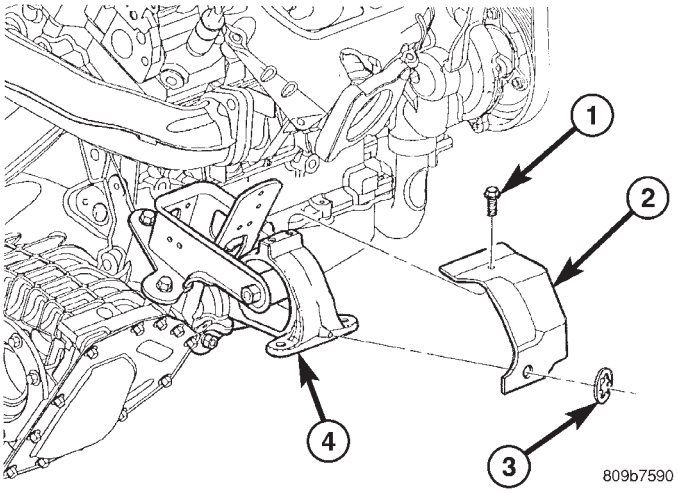

Fig. 13 Rear Mount Heat Shield

1 - BOLT - HEAT SHIELD
2 - HEAT SHIELD
3 - CLIP
4 - REAR MOUNT

31TH AUTOMATIC TRANSAXLE (Continued)

(21) Remove left upper mount thru-bolt (Fig. 14).

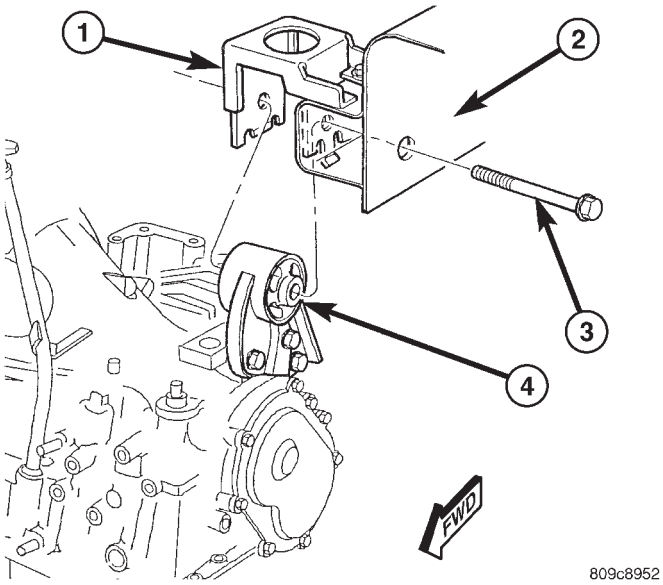

Fig. 14 Left Rail-to-Mount

1 - FRAME BRACKET
2 - FRAME RAIL - LEFT
3 - BOLT
4 - TRANSAXLE MOUNT

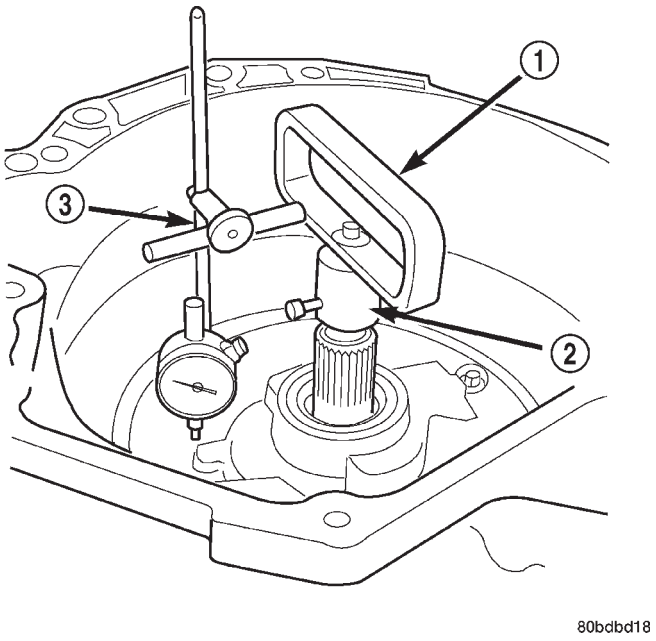

Fig. 15 Measure Input Shaft End Play using End Play Set 8266

1 - TOOL 8266–8
2 - TOOL 8266–2
3 - TOOL C-3339

(22) Lower engine/transaxle assembly.
(23) Obtain transmission jack and helper.
(24) Remove remaining transaxle-to-engine bolts and remove transaxle assembly from vehicle.

DISASSEMBLY

CAUTION: If transaxle failure has occured, it is necessary to flush the transaxle oil cooler and lines to remove debris and particles that could contaminate and/or fail a new or rebuilt unit. (Refer to 7 - COOLING/TRANSMISSION - STANDARD PROCEDURE)

NOTE: This procedure does not include disassembly of final drive (differential) components. (Refer to 21 - TRANSMISSION/TRANSAXLE/AUTOMATIC - 31TH/FINAL DRIVE - DISASSEMBLY)

(1) Measure input shaft end play before disassembly using Tool 8266 and dial indicator C-3339 (Fig. 15):
(a) Set up tools as shown in (Fig. 15).
(b) Move input shaft in and out to obtain end play reading. End play specifications are 0.19 to 1.50 mm (0.008 to 0.060 inch).
(c) Record indicator reading for reference when reassembling the transaxle.
(2) Remove transaxle oil pan-to-case bolts (Fig. 16).

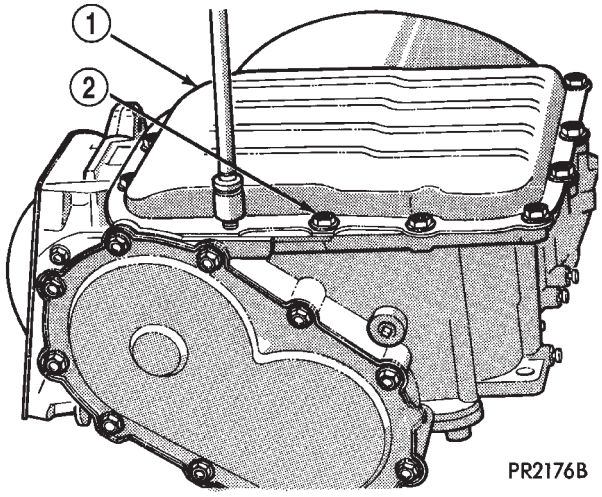

Fig. 16 Transaxle Oil Pan Bolts

1 - TRANSAXLE OIL PAN
2 - OIL PAN BOLTS

31TH AUTOMATIC TRANSAXLE (Continued)

(3) Remove oil pan (Fig. 17). Clean sealing surfaces of old adhesive prior to reassembly.

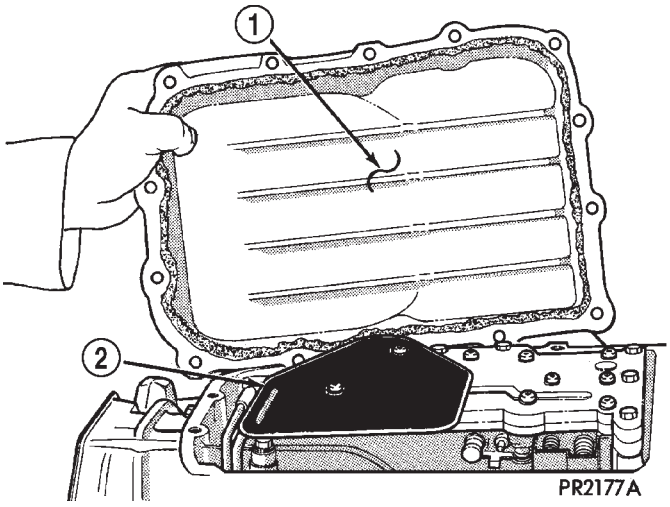

Fig. 17 Transaxle Oil Pan

1 - TRANSAXLE OIL PAN
2 - OIL FILTER

(4) Remove oil filter-to-valve body screws (Fig. 18).

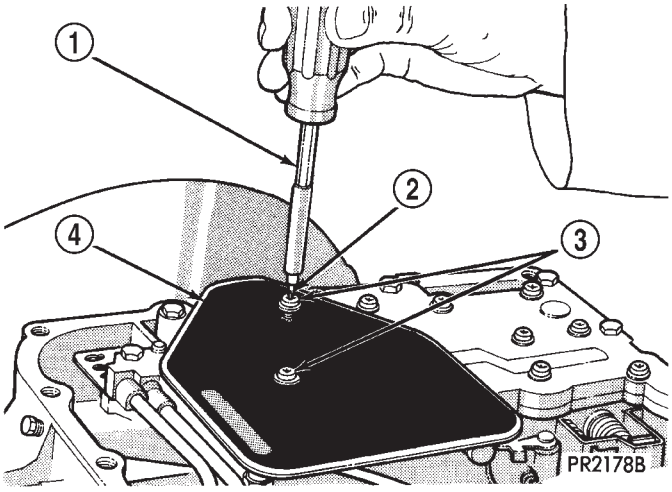

Fig. 18 Oil Filter Screws

1 - SCREWDRIVER HANDLE
2 - SPECIAL TOOL L-4553
3 - OIL FILTER SCREWS (2)
4 - OIL FILTER

(5) Remove oil filter and gasket (Fig. 19).

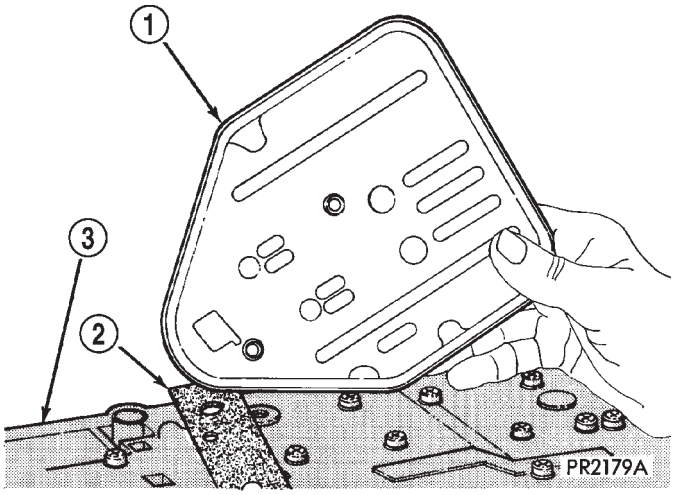

Fig. 19 Oil Filter and Gasket

1 - OIL FILTER
2 - GASKET
3 - VALVE BODY

(6) Remove neutral starting and back-up lamp switch.

(7) Remove park rod retainer e-clip (Fig. 20).

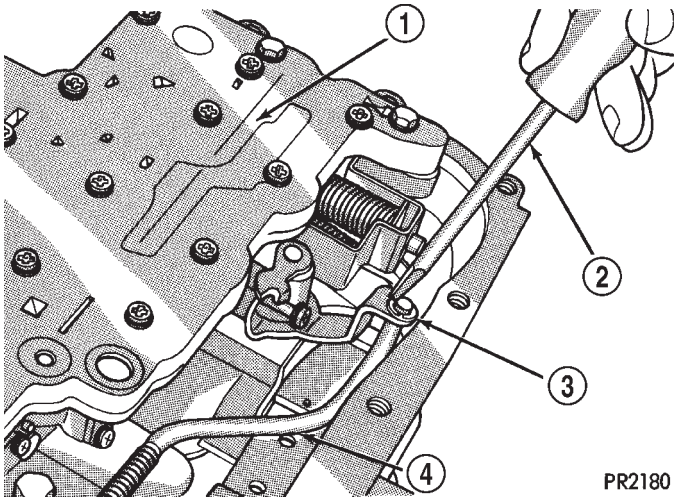

Fig. 20 Parking Rod E-Clip

1 - VALVE BODY
2 - SCREWDRIVER
3 - “E” CLIP
4 - PARKING ROD

31TH AUTOMATIC TRANSAXLE (Continued)

(8) Remove park rod from transaxle (Fig. 21).

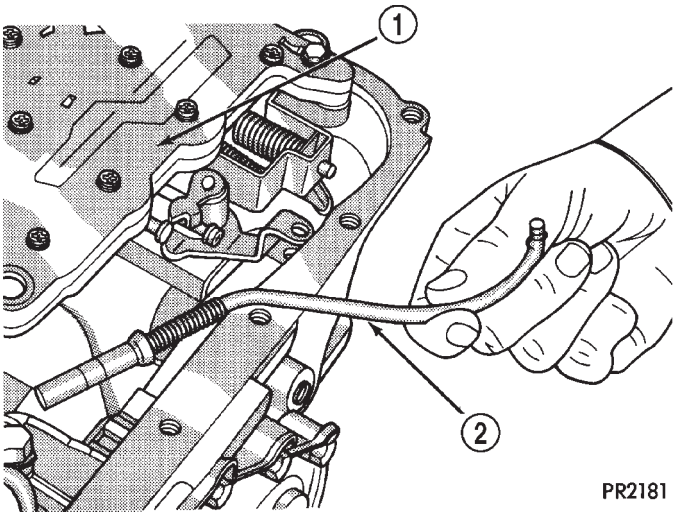

Fig. 21 Parking Rod

1 - VALVE BODY
2 - PARKING ROD

(9) Remove cooler bypass valve and seal (Fig. 22).

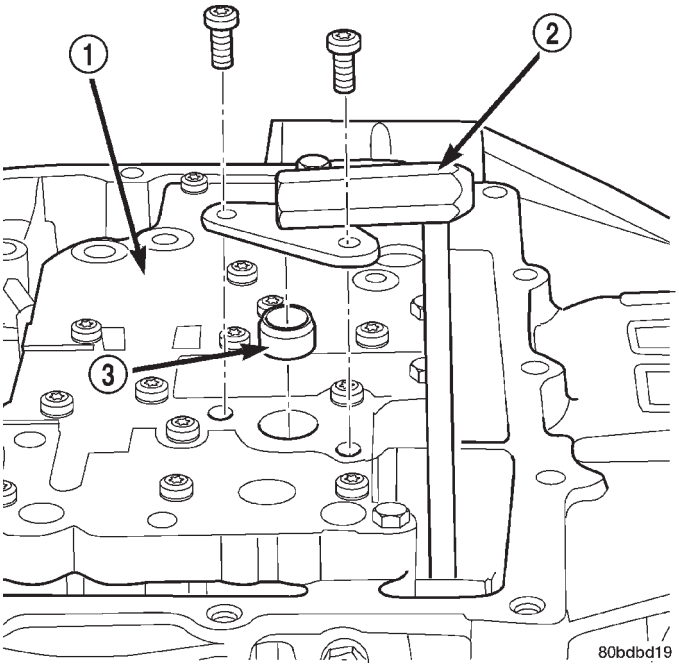

Fig. 22 Cooler Bypass Valve and Seal

1 - TRANSFER PLATE
2 - BYPASS VALVE
3 - SEAL

(10) Remove valve body-to-transaxle bolts (Fig. 23).

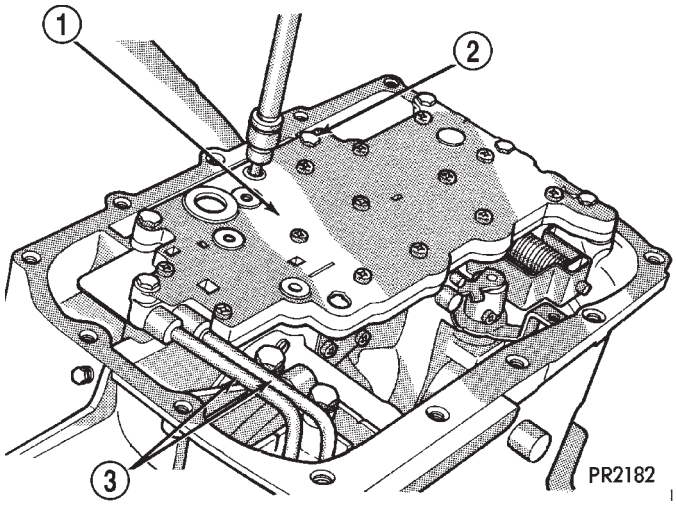

Fig. 23 Valve Body Attaching Bolts

1 - VALVE BODY
2 - VALVE BODY ATTACHING BOLTS (7)
3 - GOVERNOR TUBES

(11) Remove valve body from transaxle (Fig. 24). Note orientation and location of governor tubes.

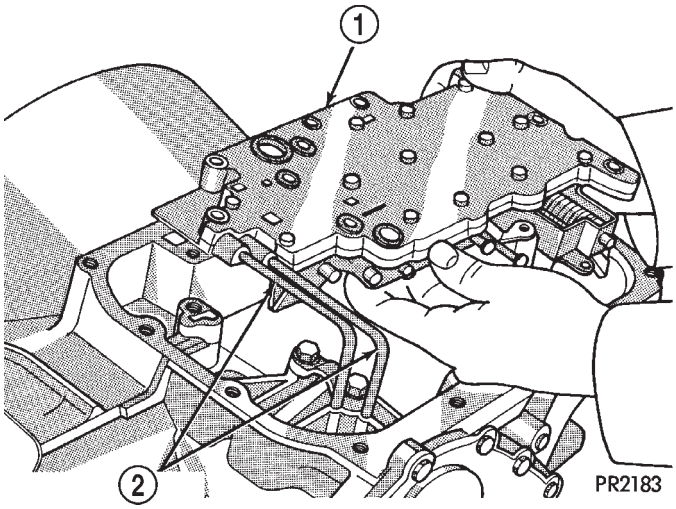

Fig. 24 Valve Body and Governor Tubes

1 - VALVE BODY ASSEMBLY
2 - GOVERNOR TUBES

31TH AUTOMATIC TRANSAXLE (Continued)

(12) Loosen low/reverse band lock nut and adjusting screw to facilitate strut removal (Fig. 25).

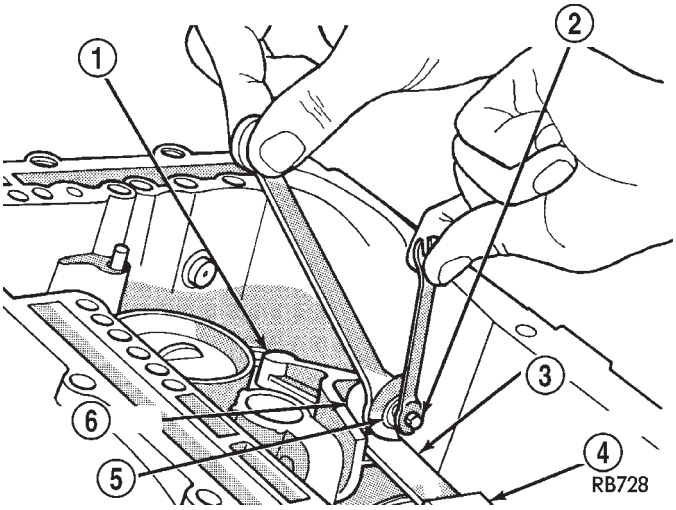

Fig. 25 Loosen Low/Reverse Band

1 - LOW-REVERSE BAND LEVER
2 - ADJUSTING SCREW
3 - STRUT
4 - LOW-REVERSE BAND
5 - LOCK NUT
6 - LEVER (SHORT)

(13) Remove low/reverse servo snap ring (Fig. 26).

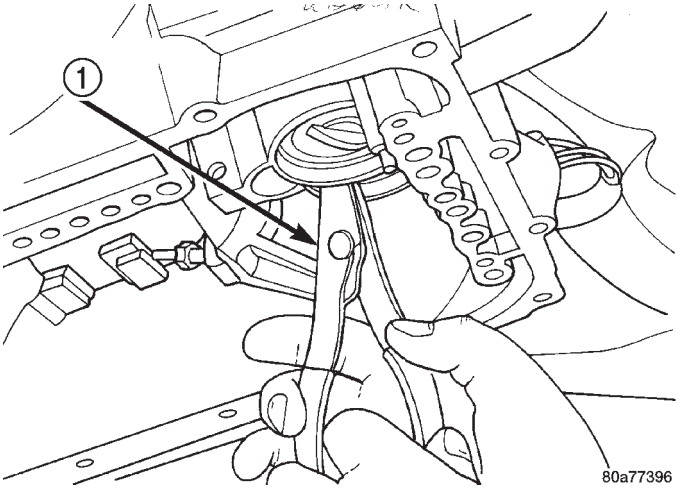

Fig. 26 Low/Reverse Servo Snap Ring

1 - SNAP-RING PLIERS

(14) Remove low/reverse servo retainer, spring, and servo (Fig. 27).

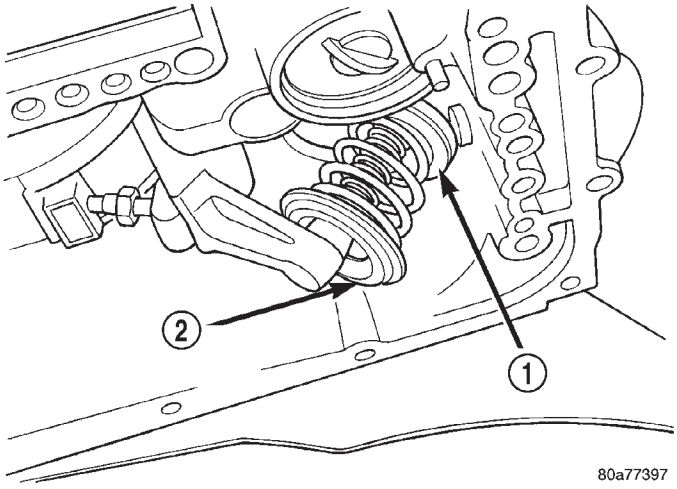

Fig. 27 Remove Retainer, Spring and Servo

1 - SERVO PISTON
2 - SPRING AND RETAINER

(15) Remove accumulator snap ring (Fig. 28).

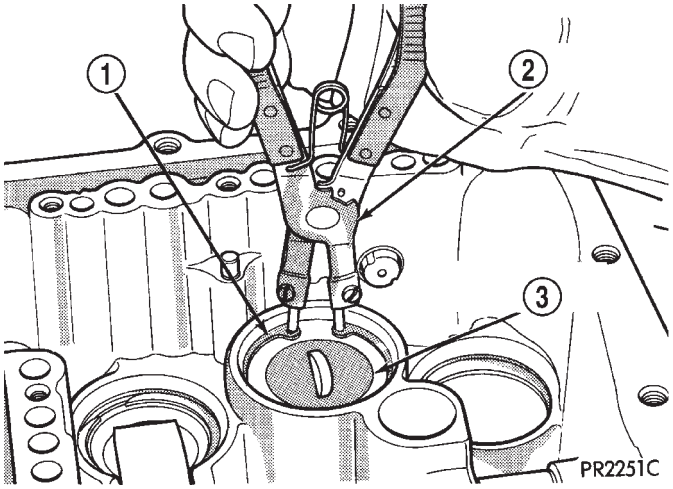

Fig. 28 Accumulator Snap Ring

1 - ACCUMULATOR PLATE SNAP RING
2 - SNAP RING PLIERS
3 - ACCUMULATOR PLATE

31TH AUTOMATIC TRANSAXLE (Continued)

(16) Remove accumulator plate (Fig. 29).

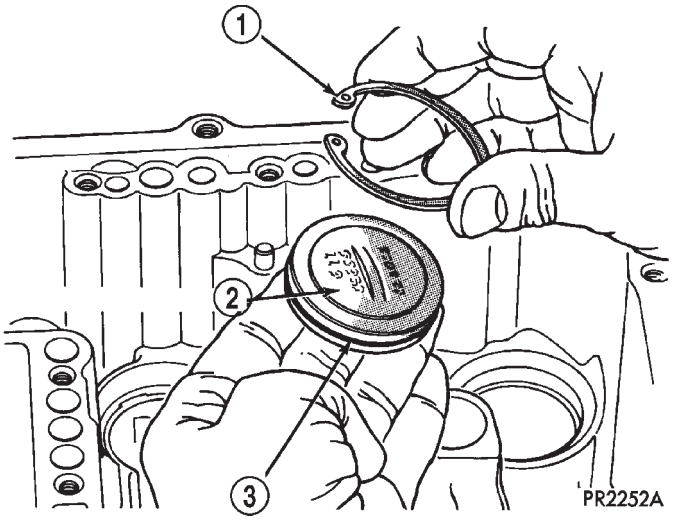

Fig. 29 Accumulator Plate and Snap Ring

1 - SNAP RING
2 - ACCUMULATOR PLATE
3 - ''O'' RING

(17) Remove accumulator spring and piston (Fig. 30).

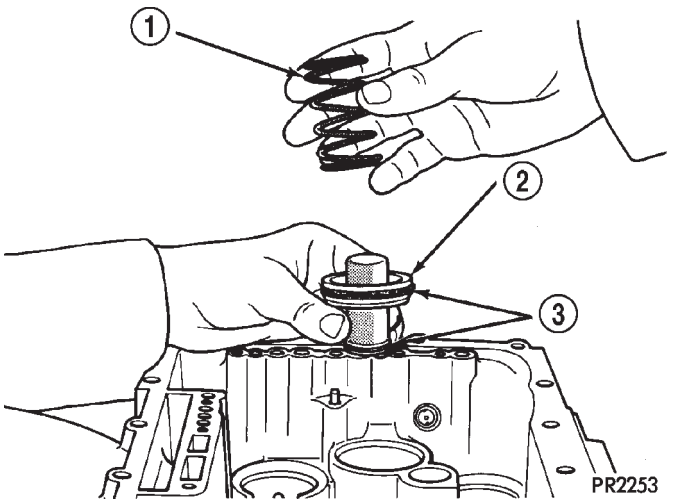

Fig. 30 Accumulator Spring and Piston

1 - ACCUMULATOR SPRING
2 - ACCUMULATOR PISTON
3 - SEAL RINGS

(18) Loosen kickdown band adjusting screw lock nut (Fig. 31).

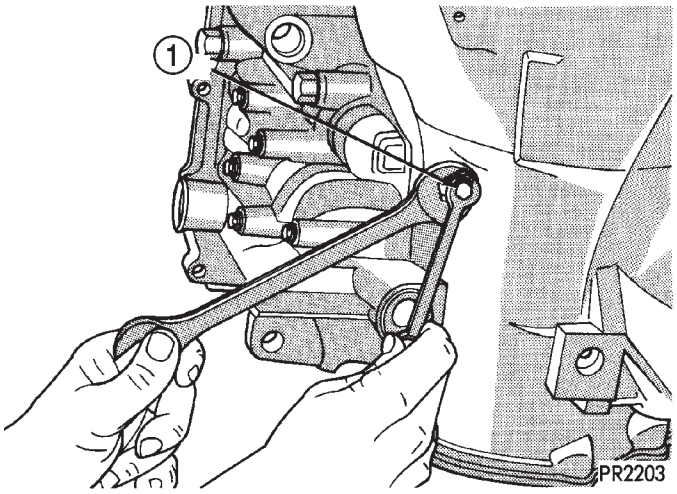

Fig. 31 Kickdown Band Adjusting Screw Lock Nut

1 - KICKDOWN BAND ADJUSTING SCREW

(19) Loosen kickdown band adjusting screw (Fig. 32) enough to facilitate strut removal.

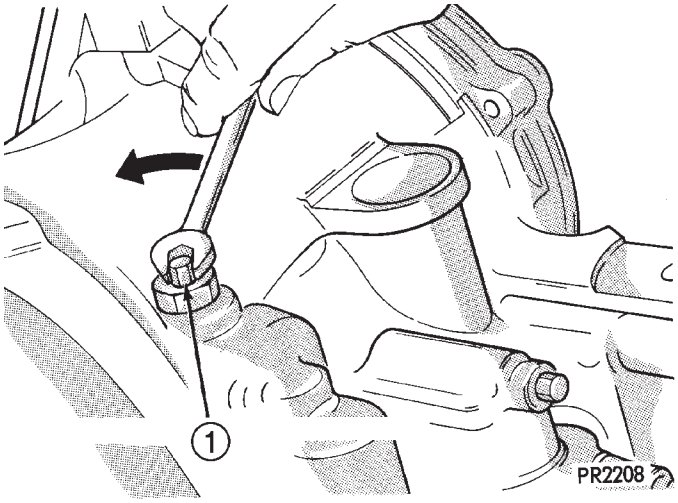

Fig. 32 Kickdown Band Adjusting Screw

1 - KICKDOWN BAND ADJUSTING SCREW

31TH AUTOMATIC TRANSAXLE (Continued)

(20) Remove kickdown servo snap ring (Fig. 33).

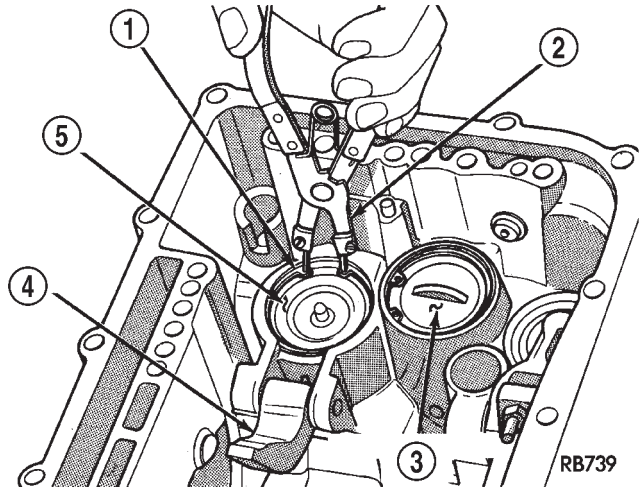

Fig. 33 Kickdown Servo Snap Ring

1 - SNAP RING
2 - SNAP RING PLIERS
3 - ACCUMULATOR PLATE
4 - KICKDOWN LEVER
5 - KICKDOWN PISTON ROD GUIDE

(21) Remove kickdown servo guide (Fig. 34).

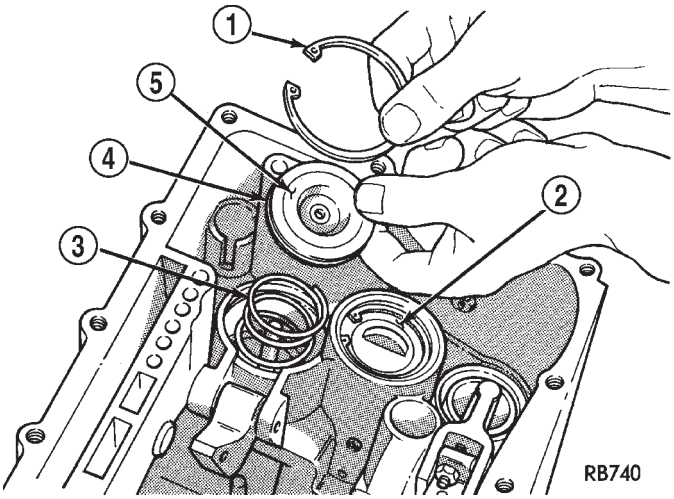

Fig. 34 Kickdown Servo Rod Guide and Snap Ring

1 - SNAP RING
2 - ACCUMULATOR PLATE
3 - RETURN SPRING
4 - O-RING
5 - PISTON ROD GUIDE

(22) Remove kickdown servo spring and piston (Fig. 35). Disassemble kickdown servo assembly as shown in (Fig. 36).

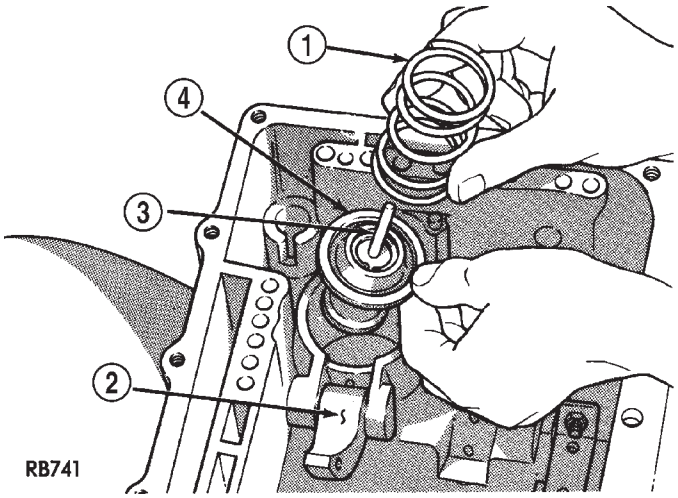

Fig. 35 Kickdown Piston Return Spring and Piston

1 - RETURN SPRING
2 - KICKDOWN LEVER
3 - PISTON ROD
4 - KICKDOWN SERVO PISTON

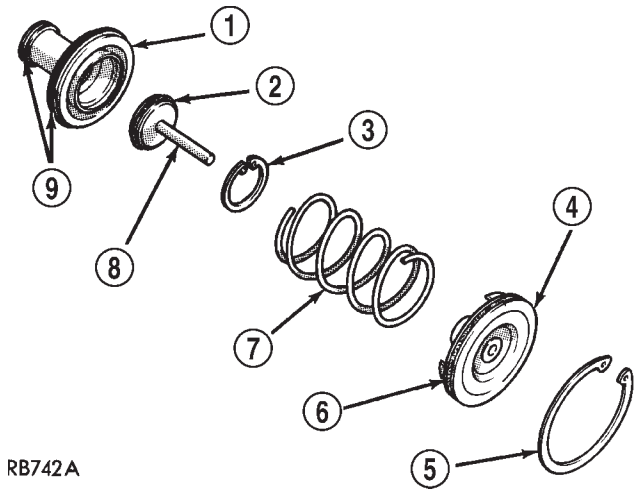

Fig. 36 Controlled Load Kickdown Servo

1 - KICKDOWN PISTON
2 - O-RING
3 - SNAP RING
4 - PISTON ROD GUIDE
5 - SNAP RING
6 - O-RING
7 - PISTON RETURN SPRING
8 - PISTON ROD
9 - SEAL RINGS

31TH AUTOMATIC TRANSAXLE (Continued)

(23) Remove park sprag rod support-to-case bolts (Fig. 37).

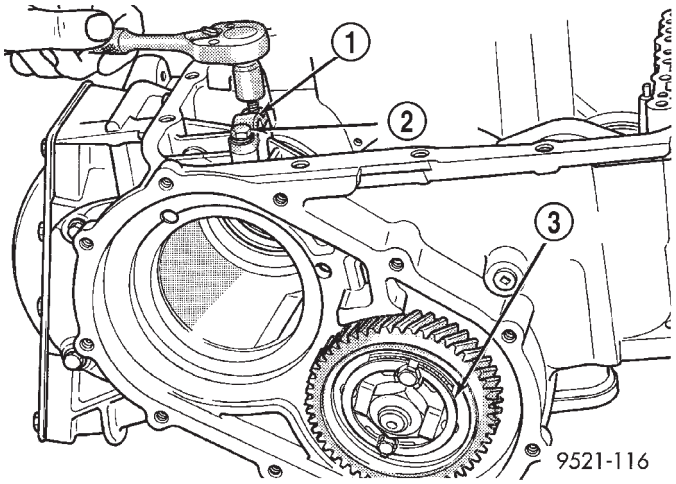

Fig. 37 Parking Sprag Rod Support

1 - PARKING SPRAG ROD SUPPORT
2 - BOLT (2)
3 - OUTPUT SHAFT GEAR

(24) Remove support and bolts (Fig. 38).

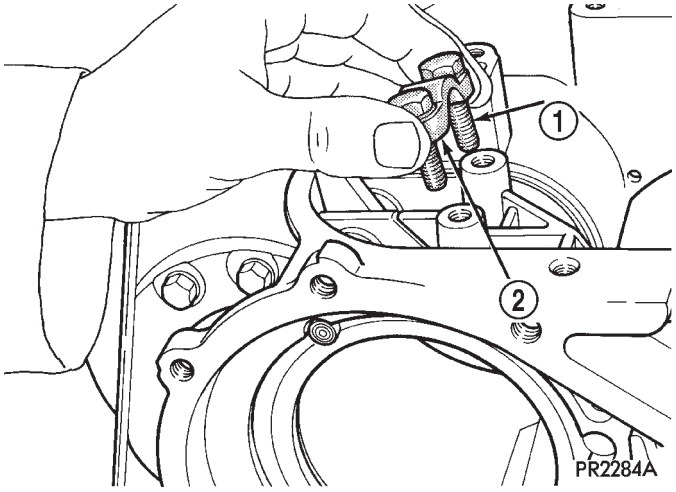

Fig. 38 Support and Bolts

1 - BOLT (2)
2 - PARKING SPRAG ROD SUPPORT

NOTE: To remove pawl, spring, and pivot shaft, the governor support retainer must be removed. (Refer to 21 - TRANSMISSION/TRANSAXLE/AUTOMATIC - 31TH/TRANSFER SYSTEM - REMOVAL)

(25) Remove park pawl, spring, and pivot shaft (Fig. 39).

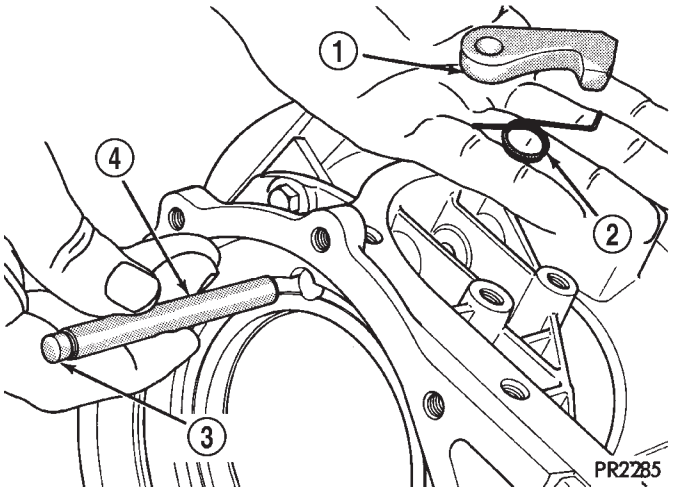

Fig. 39 Parking Pawl, Return Spring, and Pivot Shaft

1 - PARK PAWL
2 - RETURN SPRING
3 - NOTE: SMALL DIAMETER TO REAR
4 - PIVOT SHAFT

(26) Remove oil pump-to-transaxle case bolts (Fig. 40).

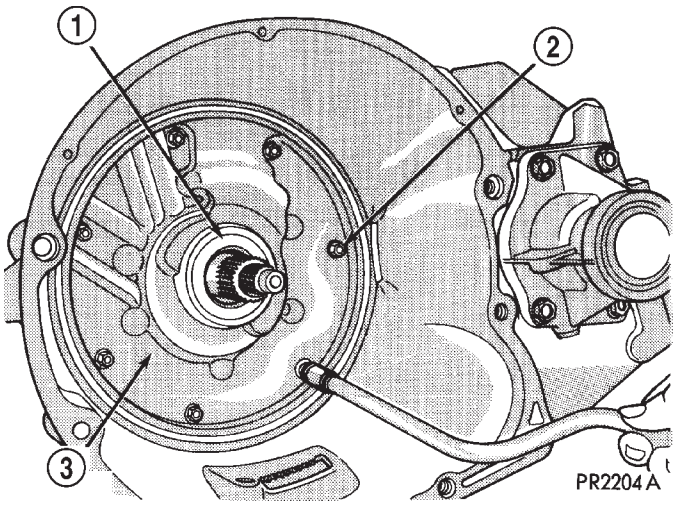

Fig. 40 Oil Pump Attaching Bolts

1 - SEAL
2 - PUMP ATTACHING BOLTS (7)
3 - PUMP HOUSING

31TH AUTOMATIC TRANSAXLE (Continued)

(27) Install Tool C-3752 and adapters L-4437 as shown in (Fig. 41).

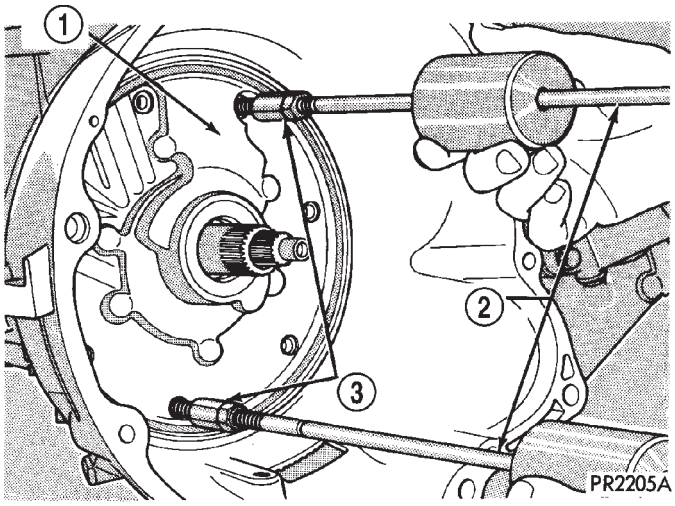

Fig. 41 Install Tool C-3752 with Adapters L-4437

1 - PUMP
2 - PULLERS TOOL C-3752
3 - ADAPTERS TOOL L-4437

(28) Remove oil pump with slide hammer setup (Fig. 42). Inspect #1 thrust washer.

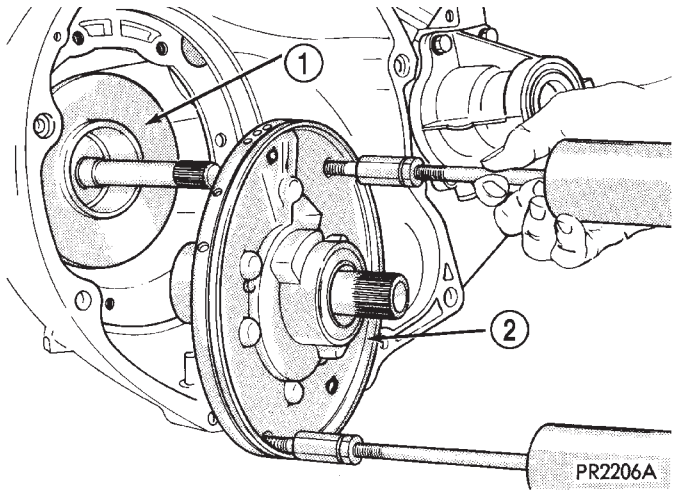

Fig. 42 Oil Pump Removal

1 - FRONT CLUTCH
2 - OIL PUMP ASSEMBLY

(29) Remove oil pump gasket (Fig. 43).

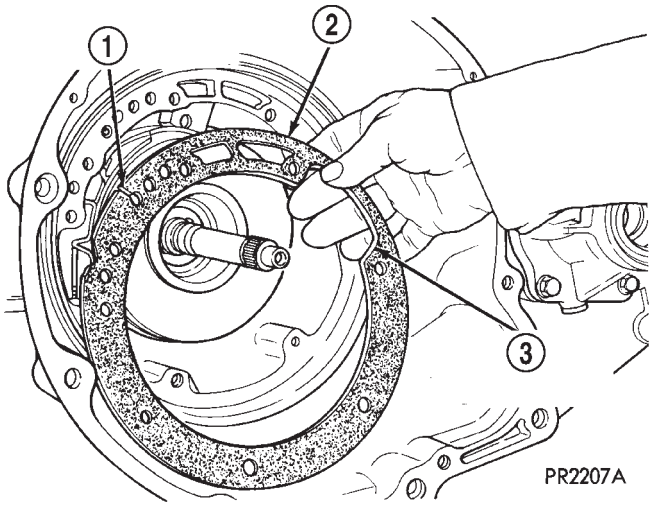

Fig. 43 Oil Pump Gasket

1 - SPLIT IN GASKET (DIFFERENTIAL OIL FEED)
2 - PUMP GASKET
3 - PUMP GASKET DIFFERENTIAL OIL FEED CUTOUT

(30) Remove kickdown band and strut (Fig. 44).

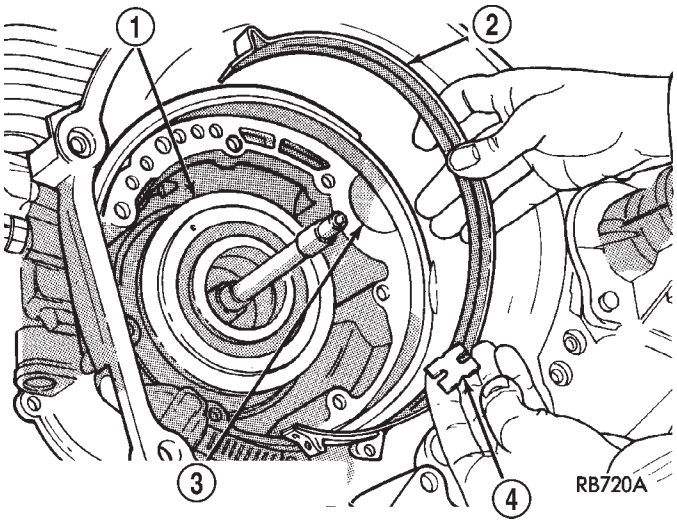

Fig. 44 Kickdown Band and Strut

1 - FRONT CLUTCH
2 - KICKDOWN BAND
3 - OIL RETURN AND FEED HOLE TO DIFFERENTIAL
4 - STRUT

31TH AUTOMATIC TRANSAXLE (Continued)

(31) Remove front clutch assembly (Fig. 45).

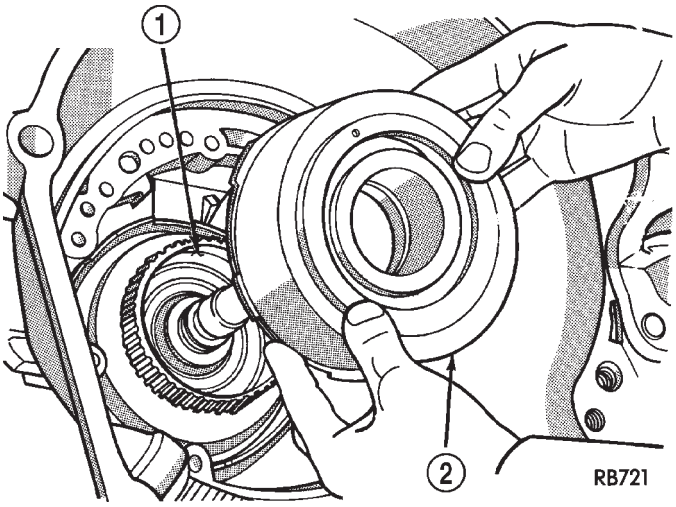

Fig. 45 Front Clutch Assembly

1 - REAR CLUTCH ASSEMBLY
2 - FRONT CLUTCH ASSEMBLY

(32) Remove rear clutch assembly (Fig. 46). Inspect #2 thrust washer.

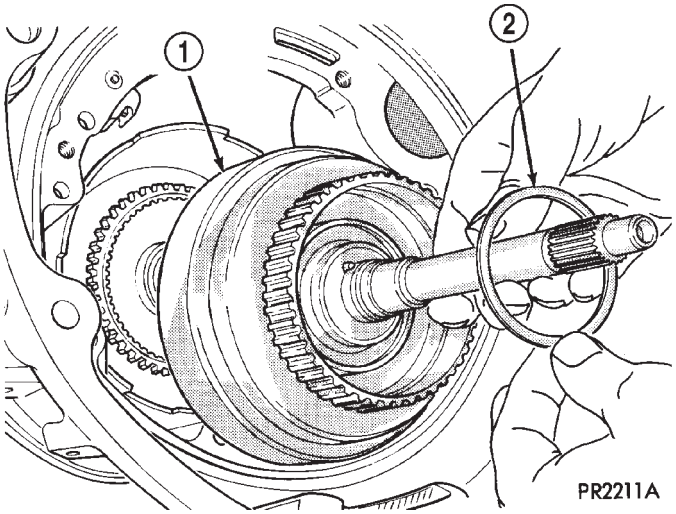

Fig. 46 No. 2 Thrust Washer and Rear Clutch

1 - REAR CLUTCH ASSEMBLY
2 - #2 THRUST WASHER

(33) Remove #3 thrust washer (Fig. 47).

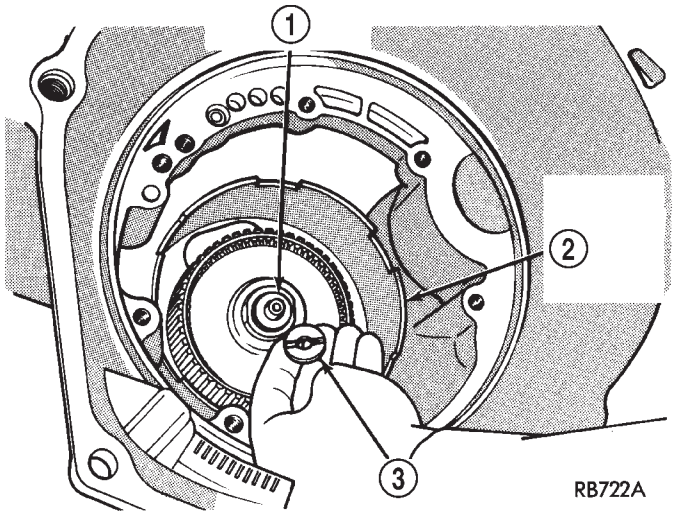

Fig. 47 No. 3 Thrust Washer

1 - OUTPUT SHAFT
2 - SUN GEAR DRIVING SHELL
3 - #3 THRUST WASHER (SELECT FIT)

(34) Remove front planetary gear-to-output shaft snap ring (Fig. 48).

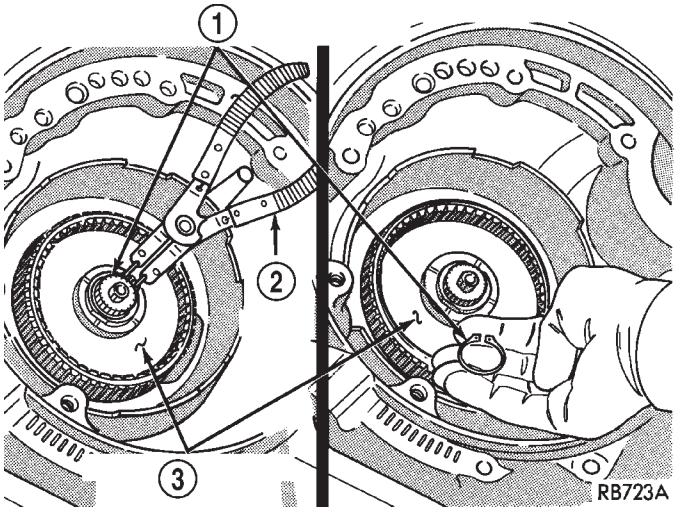

Fig. 48 Front Planetary Gear Snap Ring

1 - FRONT PLANETARY GEAR SNAP RING
2 - SNAP RING PLIERS
3 - FRONT PLANETARY GEAR ASSEMBLY

31TH AUTOMATIC TRANSAXLE (Continued)

(35) Remove front planetary gear assembly from output shaft (Fig. 49).

(36) Remove #6 thrust washer from sun gear driving shell (Fig. 49).

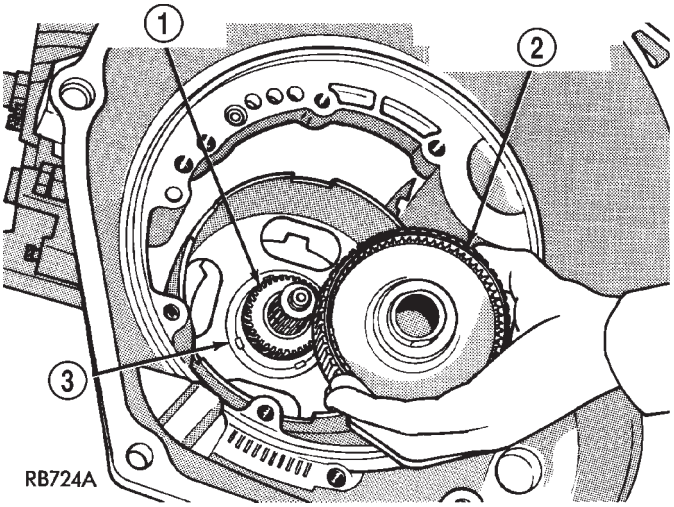

Fig. 49 Front Planetary Gear Assembly

1 - SUN GEAR
2 - FRONT PLANETARY GEAR ASSEMBLY
3 - #6 THRUST WASHER

(37) Remove sun gear driving shell (Fig. 50) (Fig. 51).

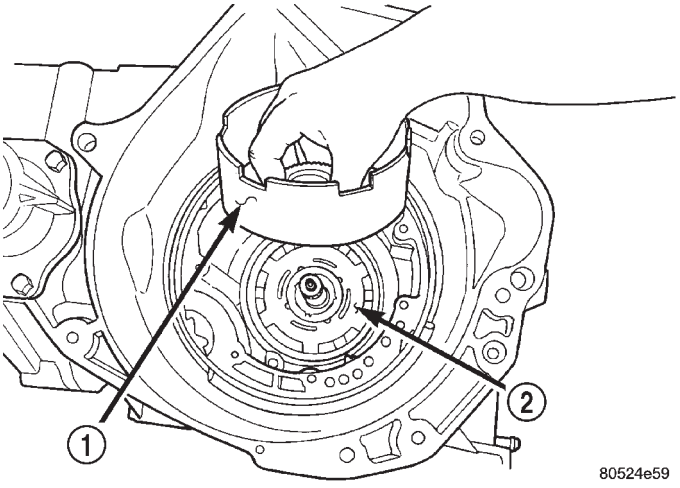

Fig. 50 Sun Gear Driving Shell

1 - SUN GEAR DRIVING SHELL
2 - REAR PLANETARY GEAR

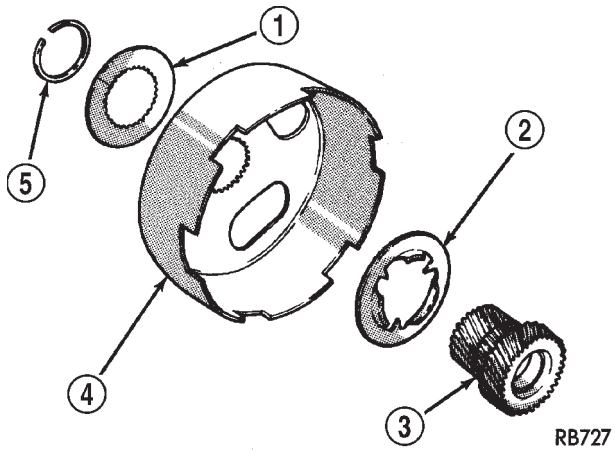

Fig. 51 Sun Gear Driving Shell Components

1 - #8 THRUST WASHER (STEEL)
2 - #7 SPACER (STEEL)
3 - SUN GEAR
4 - SUN GEAR DRIVING SHELL
5 - SNAP RING

(38) Remove #9 thrust washer from rear planetary gear assembly (Fig. 52).

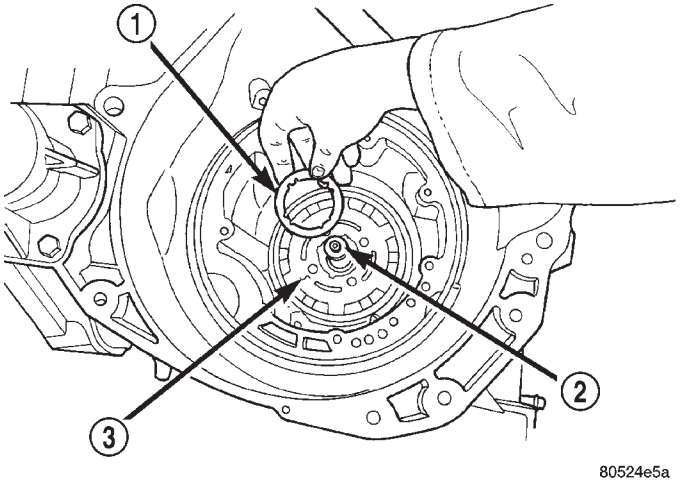

Fig. 52 No. 9 Thrust Washer

1 - #9 THRUST WASHER
2 - OUTPUT SHAFT
3 - REAR PLANETARY GEAR ASSEMBLY

31TH AUTOMATIC TRANSAXLE (Continued)

(39) Remove rear planetary gear assembly (Fig. 53).

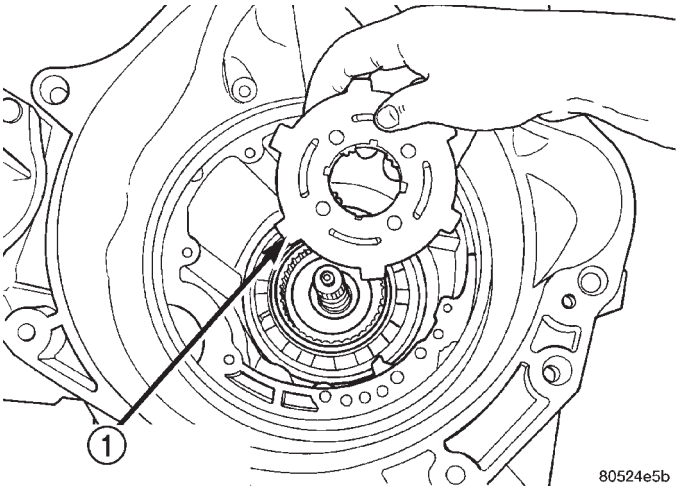

Fig. 53 Rear Planetary Gear Assembly

1 - REAR PLANETARY GEAR ASSEMBLY

(40) Remove #10 thrust washer (Fig. 54).

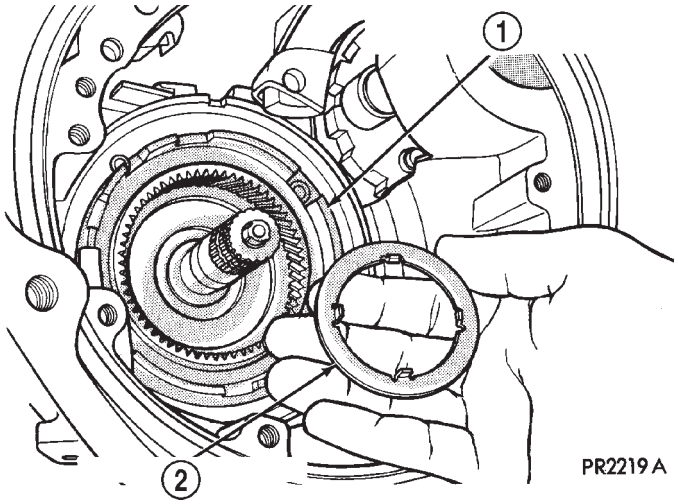

Fig. 54 No. 10 Thrust Washer

1 - OVERRUNNING CLUTCH CAM ASSEMBLY
2 - #10 THRUST WASHER

(41) Remove overrunning clutch cam assembly (Fig. 55). Collect eight rollers and eight springs from rear of case (Fig. 56).

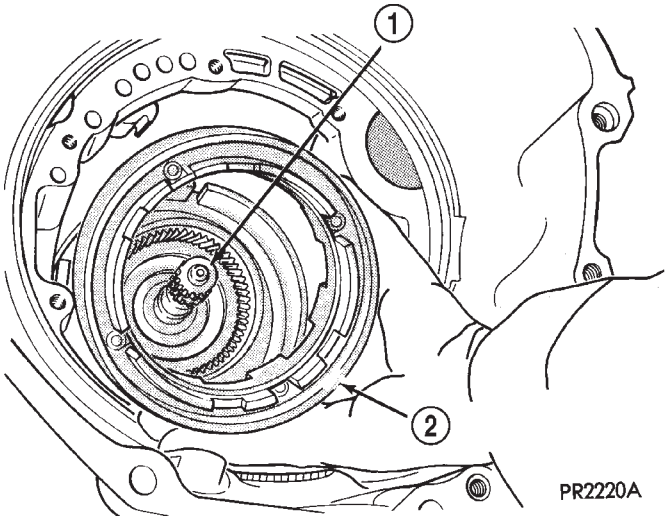

Fig. 55 Overrunning Clutch Cam Assembly

1 - OUTPUT SHAFT
2 - OVERRUNNING CLUTCH CAM ASSEMBLY

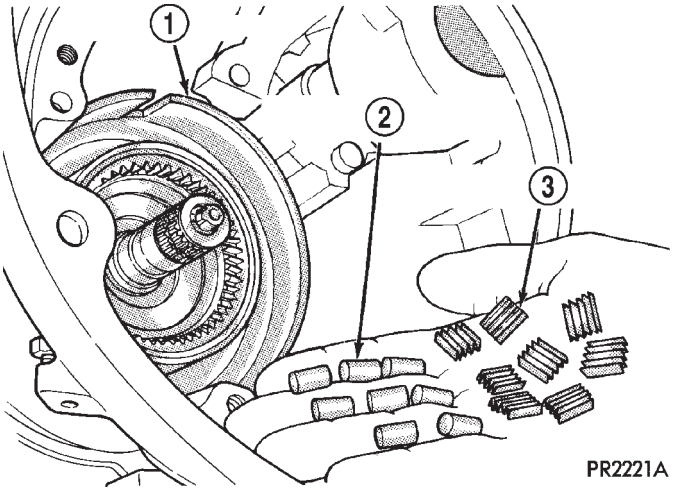

Fig. 56 Overrunning Clutch Rollers and Spring

1 - LOW-REVERSE BAND
2 - OVERRUNNING CLUTCH ROLLERS (8)
3 - OVERRUNNING CLUTCH SPRINGS (8)

31TH AUTOMATIC TRANSAXLE (Continued)

(42) Remove low/reverse band (Fig. 57).

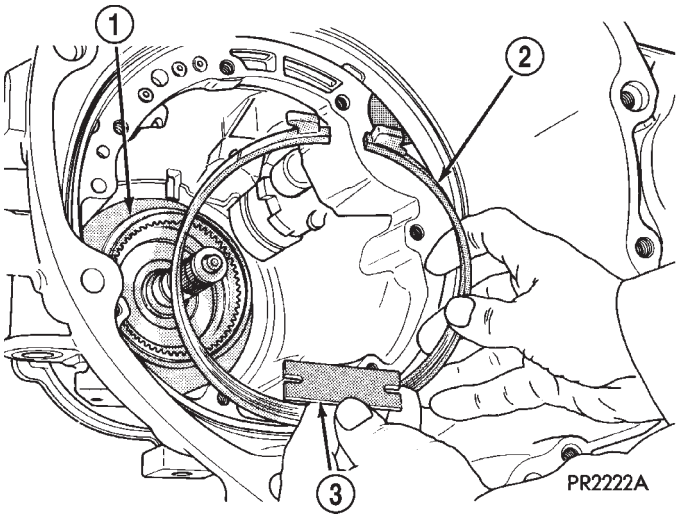

Fig. 57 Low/Reverse Band and Strut

1 - #11 THRUST WASHER
2 - LOW-REVERSE BAND
3 - STRUT

(43) Remove and inspect #11 thrust washer (Fig. 58).

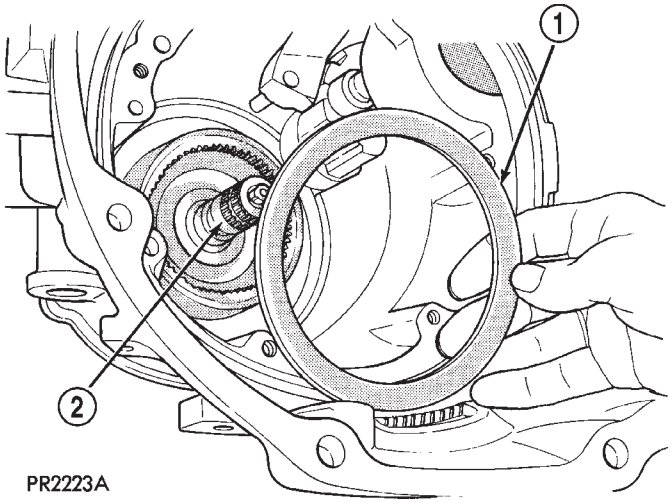

Fig. 58 No. 11 Thrust Washer

1 - #11 THRUST WASHER
2 - OUTPUT SHAFT

ASSEMBLY

CAUTION: If transaxle failure has occurred, it is necessary to flush the transaxle oil cooler and lines to remove debris and particles that could contaminate and/or fail a new or rebuilt unit. (Refer to 7 - COOLING/ TRANSMISSION - STANDARD PROCEDURE)

NOTE: This procedure does not include assembly of final drive (differential) components. (Refer to 21 - TRANSMISSION/TRANSAXLE/AUTOMATIC - 31TH/ FINAL DRIVE - ASSEMBLY)

NOTE: This procedure does not include assembly of transfer system (transfer shaft and output shaft) components. (Refer to 21 - TRANSMISSION/TRANSAXLE/AUTOMATIC - 31TH/TRANSFER SYSTEM - INSTALLATION)

(1) Install #11 thrust washer (Fig. 59).

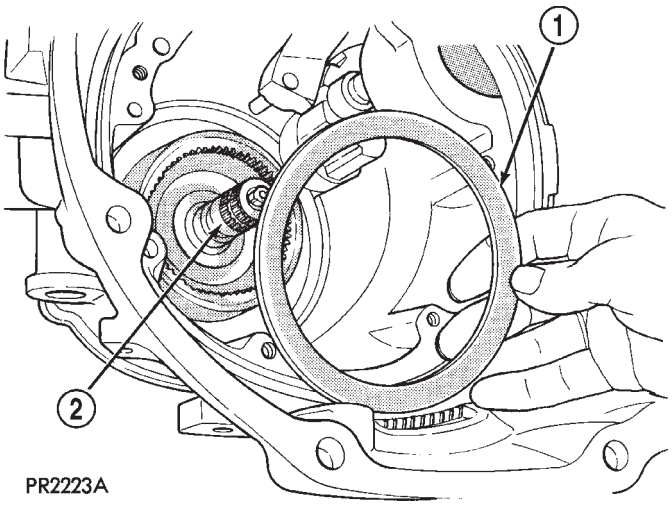

Fig. 59 No. 11 Thrust Washer

1 - #11 THRUST WASHER
2 - OUTPUT SHAFT

(2) Install low/reverse band (Fig. 60). Do not install strut or adjust at this time.

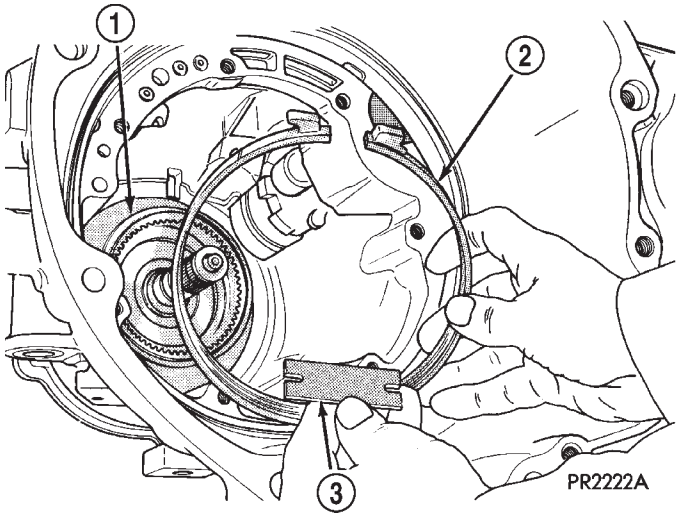

Fig. 60 Low/Reverse Band and Strut

1 - #11 THRUST WASHER
2 - LOW-REVERSE BAND
3 - STRUT

31TH AUTOMATIC TRANSAXLE (Continued)

(3) Assemble Tool L-4440 to overrunning clutch as shown in (Fig. 61).

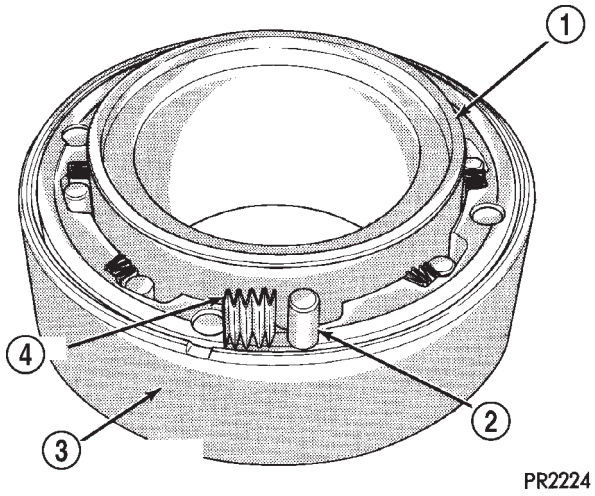

Fig. 61 Install Overrunning Clutch Rollers and Springs

1 - TOOL L-4440
2 - ROLLER (8)
3 - OVERRUNNING CLUTCH CAM ASSEMBLY
4 - SPRING (8)

(4) Orient springs as shown on left side of (Fig. 62).

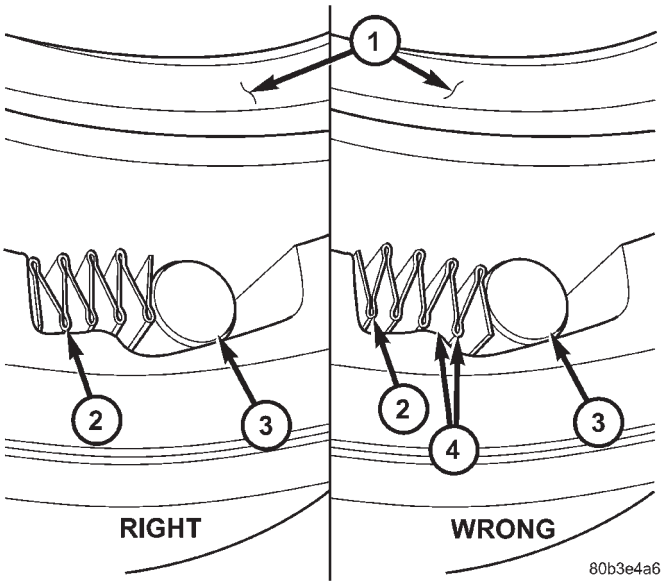

Fig. 62 Proper Spring/Roller Orientation

1 - TOOL L-4440
2 - SPRING
3 - ROLLER
4 - CONTACT AREA

(5) Install overrunning clutch/tool assembly to transaxle and remove Tool L-4440.

(6) Install #10 thrust washer to rear of rear planetary gear assembly. Use petrolatum to retain and secure during installation.

(7) Install rear planetary gear assembly (Fig. 63).

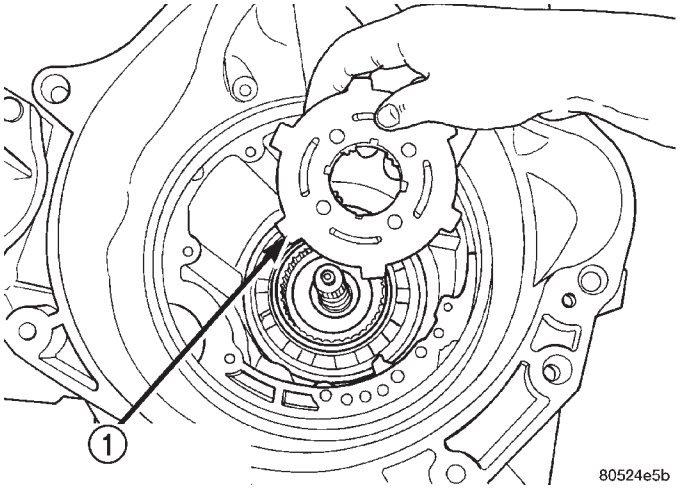

Fig. 63 Rear Planetary Gear Assembly

1 - REAR PLANETARY GEAR ASSEMBLY

(8) Install #9 thrust washer (Fig. 64). Use petrolatum to secure.

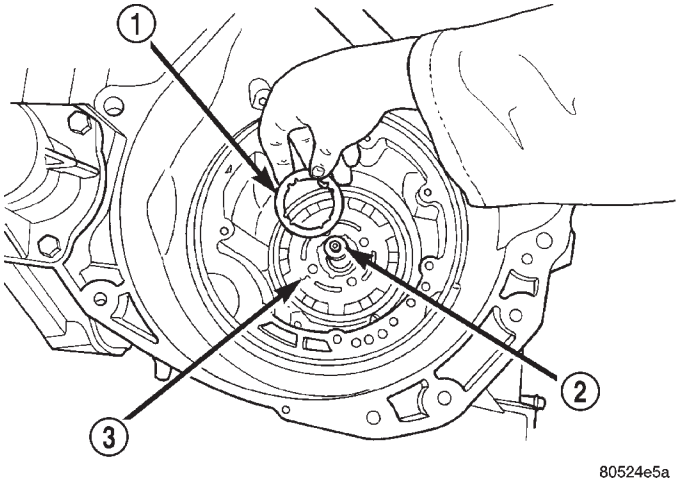

Fig. 64 No. 9 Thrust Washer

1 - #9 THRUST WASHER
2 - OUTPUT SHAFT
3 - REAR PLANETARY GEAR ASSEMBLY

31TH AUTOMATIC TRANSAXLE (Continued)

(9) Install sun gear driving shell (Fig. 65).

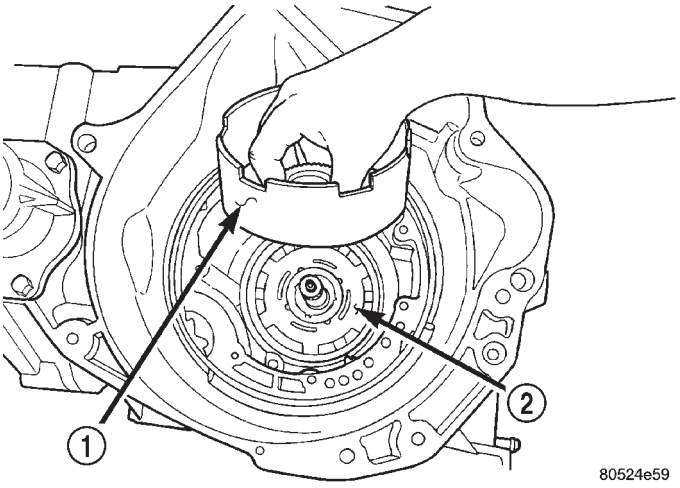

Fig. 65 Sun Gear Driving Shell

1 - SUN GEAR DRIVING SHELL
2 - REAR PLANETARY GEAR

(10) Install front planetary gear assembly (Fig. 66).

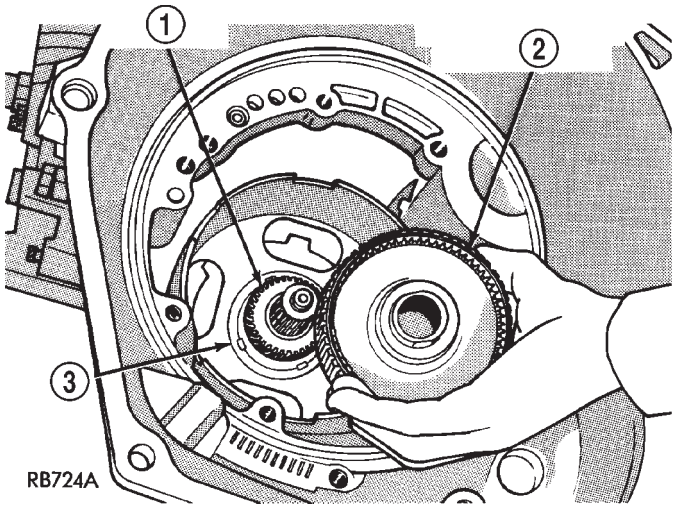

Fig. 66 Front Planetary Gear Assembly

1 - SUN GEAR
2 - FRONT PLANETARY GEAR ASSEMBLY
3 - #6 THRUST WASHER

(11) Install front planetary gear snap ring (Fig. 67).

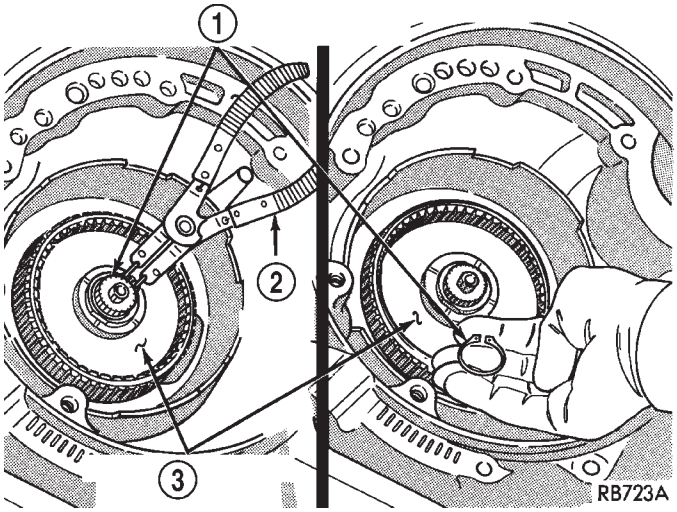

Fig. 67 Front Planetary Gear Snap Ring

1 - FRONT PLANETARY GEAR SNAP RING
2 - SNAP RING PLIERS
3 - FRONT PLANETARY GEAR ASSEMBLY

(12) Install #3 thrust washer (Fig. 68). Refer to end play specification recorded during transaxle disassembly to determine whether or not replacement is necessary.

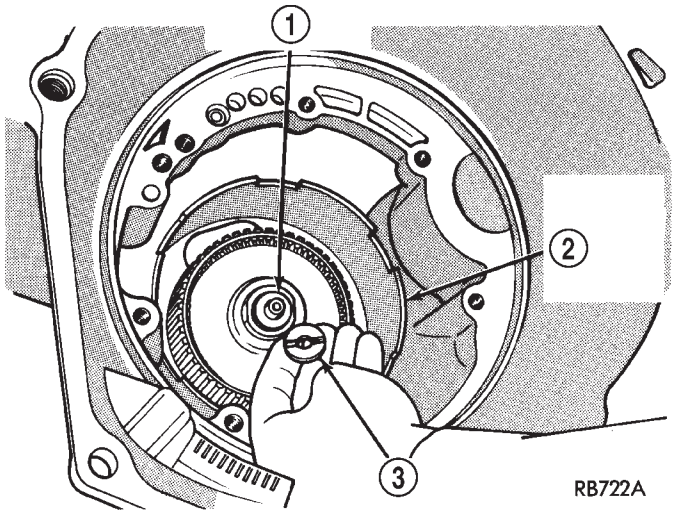

Fig. 68 No. 3 Thrust Washer

1 - OUTPUT SHAFT
2 - SUN GEAR DRIVING SHELL
3 - #3 THRUST WASHER (SELECT FIT)

31TH AUTOMATIC TRANSAXLE (Continued)

(13) Install rear clutch assembly (Fig. 69). Ensure that all clutch discs are engaged to front planetary gear splines or transaxle failure will result.

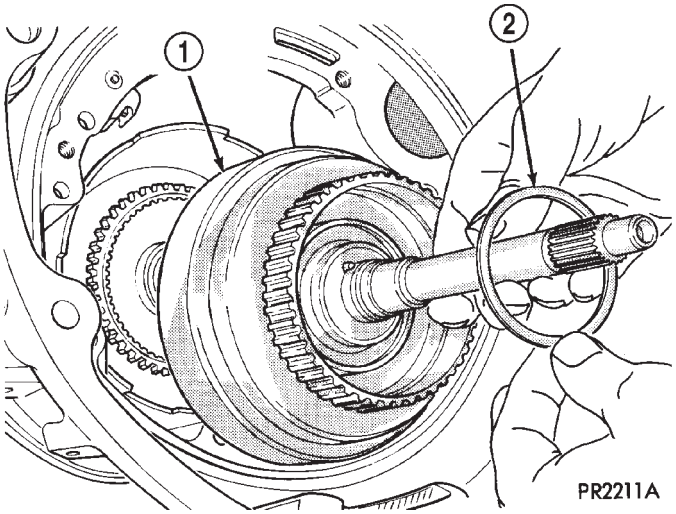

Fig. 69 No. 2 Thrust Washer and Rear Clutch

1 - REAR CLUTCH ASSEMBLY
2 - #2 THRUST WASHER

(14) Install #2 thrust washer (Fig. 69).

(15) Install front clutch assembly (Fig. 70). Ensure that all clutch discs are engaged to rear clutch retainer splines or transaxle failure will result.

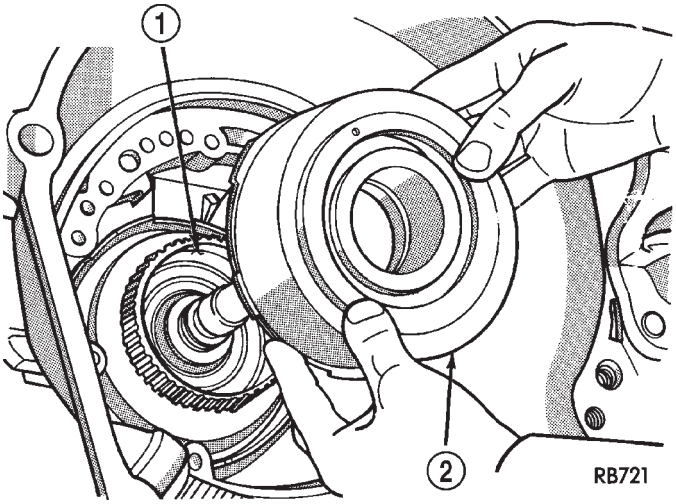

Fig. 70 Front Clutch Assembly

1 - REAR CLUTCH ASSEMBLY
2 - FRONT CLUTCH ASSEMBLY

(16) Install kickdown band (Fig. 71). Do not install strut or adjust at this time.

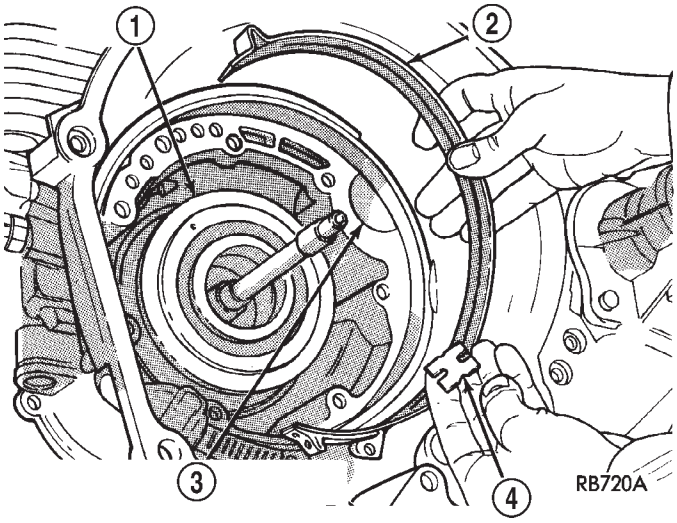

Fig. 71 Kickdown Band and Strut

1 - FRONT CLUTCH
2 - KICKDOWN BAND
3 - OIL RETURN AND FEED HOLE TO DIFFERENTIAL
4 - STRUT

(17) Install oil pump gasket (Fig. 72).

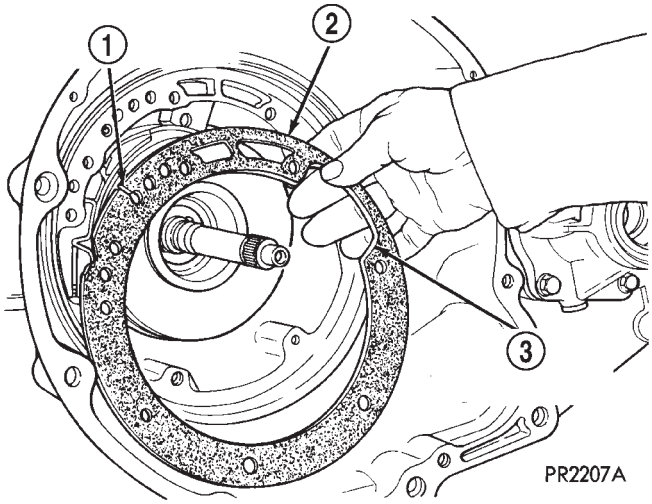

Fig. 72 Oil Pump Gasket

1 - SPLIT IN GASKET (DIFFERENTIAL OIL FEED)
2 - PUMP GASKET
3 - PUMP GASKET DIFFERENTIAL OIL FEED CUTOUT

31TH AUTOMATIC TRANSAXLE (Continued)

(18) Inspect #1 thrust washer (on reaction support) and replace as necessary.

(19) Install oil pump to transaxle (Fig. 73). Torque bolts to 31 N·m (275 in. lbs.).

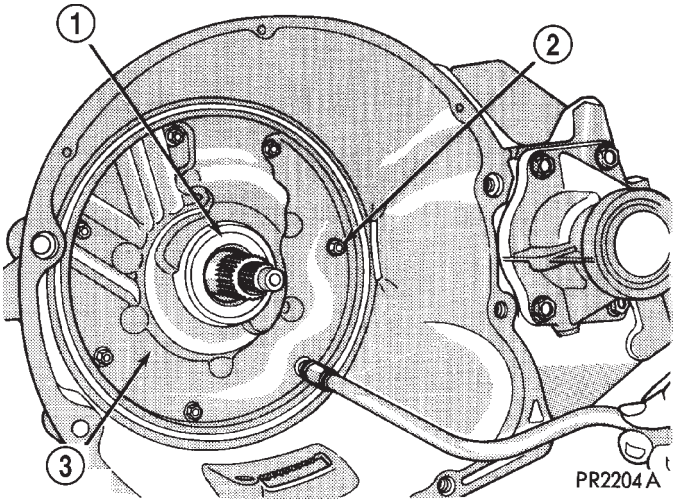

Fig. 73 Oil Pump Attaching Bolts

1 - SEAL
2 - PUMP ATTACHING BOLTS (7)
3 - PUMP HOUSING

(20) Set up tools as shown in (Fig. 74) to measure input shaft end play. **Input shaft end play should be within 0.19-1.50mm (0.008-0.060 in.).**

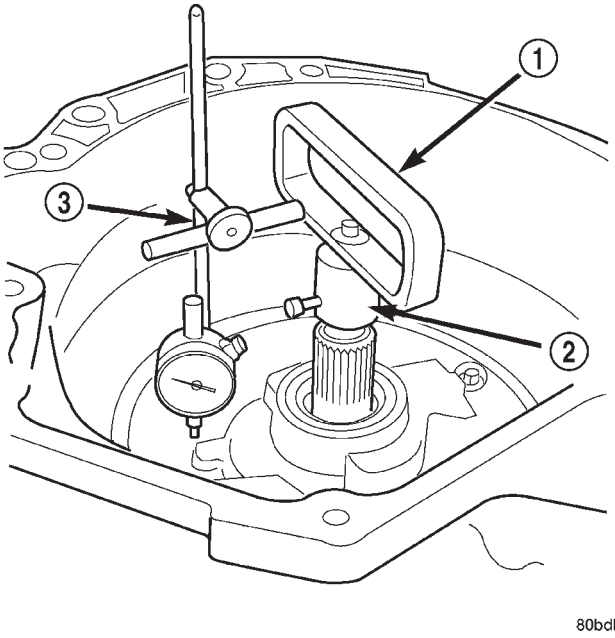

Fig. 74 Measure Input Shaft End Play using End Play Set 8266

1 - TOOL 8266–8
2 - TOOL 8266–2
3 - TOOL C-3339

(21) Install park pawl, spring, and pivot shaft (Fig. 75)

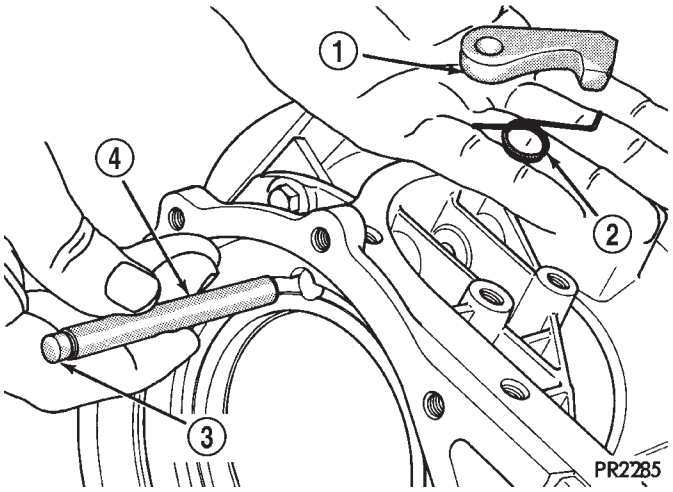

Fig. 75 Parking Pawl, Return Spring, and Pivot Shaft

1 - PARK PAWL
2 - RETURN SPRING
3 - NOTE: SMALL DIAMETER TO REAR
4 - PIVOT SHAFT

(22) Install rod support and bolts (Fig. 76). Torque bolts to 28 N·m (250 in. lbs.). (Fig. 77).

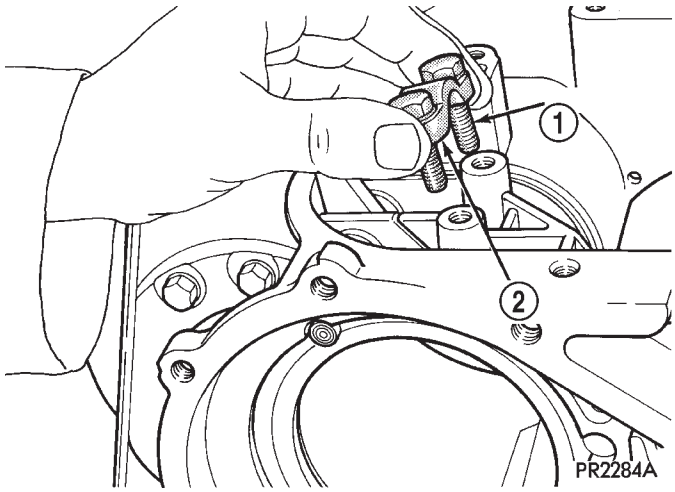

Fig. 76 Support and Bolts

1 - BOLT (2)
2 - PARKING SPRAG ROD SUPPORT

31TH AUTOMATIC TRANSAXLE (Continued)

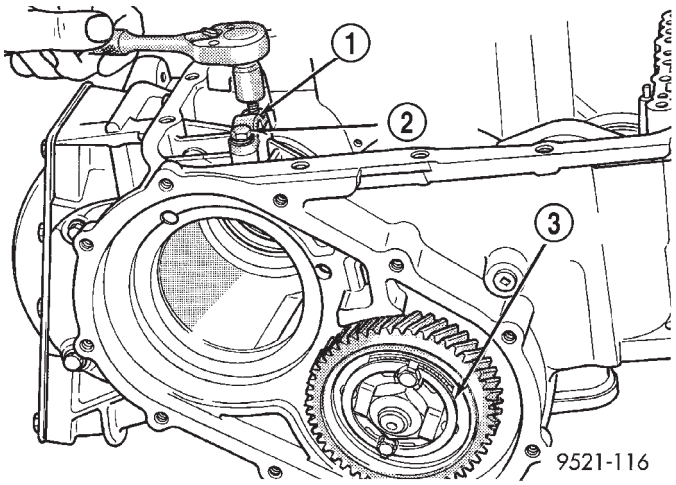

Fig. 77 Parking Sprag Rod Support

1 - PARKING SPRAG ROD SUPPORT
2 - BOLT (2)
3 - OUTPUT SHAFT GEAR

(23) Assemble kickdown servo as shown in (Fig. 78).

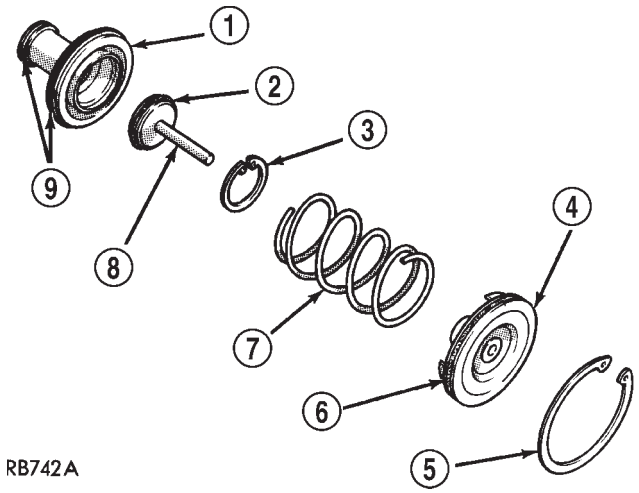

Fig. 78 Controlled Load Kickdown Servo

1 - KICKDOWN PISTON
2 - O-RING
3 - SNAP RING
4 - PISTON ROD GUIDE
5 - SNAP RING
6 - O-RING
7 - PISTON RETURN SPRING
8 - PISTON ROD
9 - SEAL RINGS

(24) Install kickdown servo piston assembly and return spring (Fig. 79).

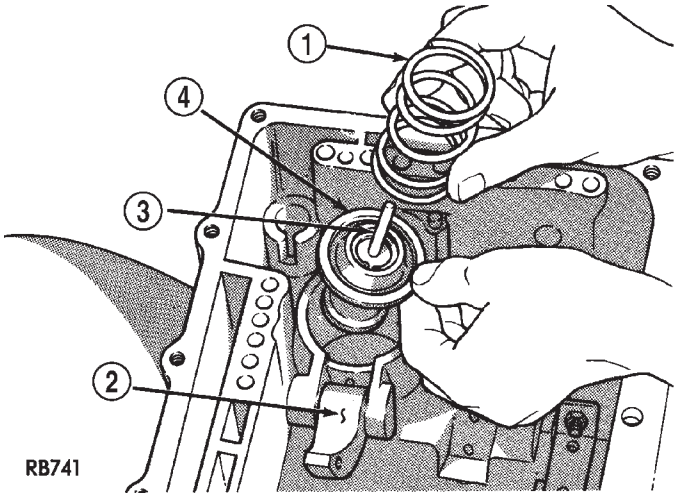

Fig. 79 Kickdown Piston Return Spring and Piston

1 - RETURN SPRING
2 - KICKDOWN LEVER
3 - PISTON ROD
4 - KICKDOWN SERVO PISTON

(25) Install kickdown servo rod guide (Fig. 80). Place snap ring into position for installation.

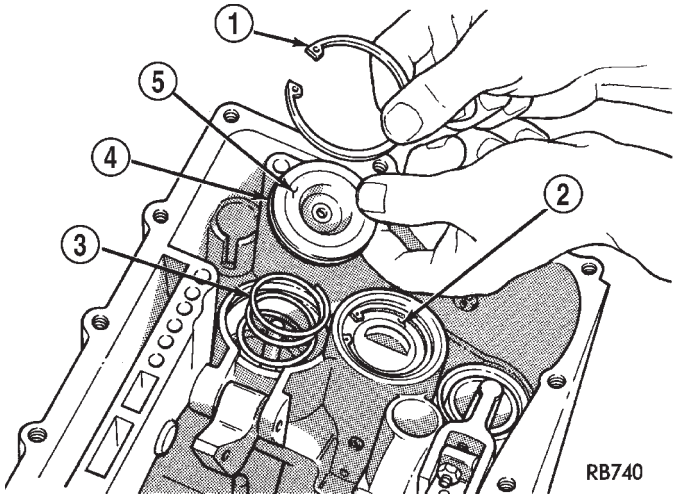

Fig. 80 Kickdown Servo Rod Guide and Snap Ring

1 - SNAP RING
2 - ACCUMULATOR PLATE
3 - RETURN SPRING
4 - O-RING
5 - PISTON ROD GUIDE

31TH AUTOMATIC TRANSAXLE (Continued)

(26) Install snap ring (Fig. 81).

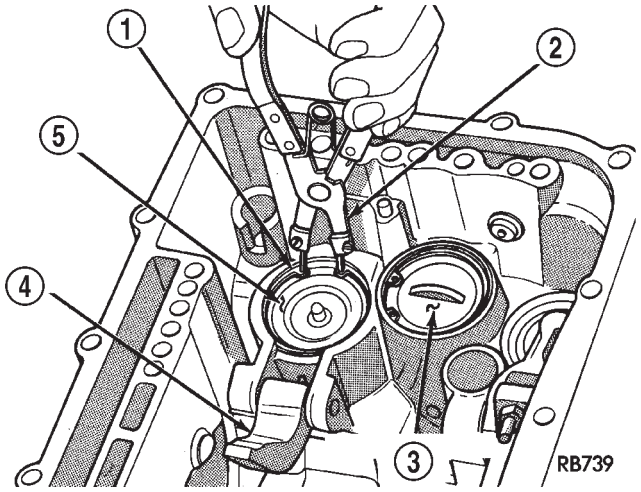

Fig. 81 Kickdown Servo Snap Ring

1 - SNAP RING
2 - SNAP RING PLIERS
3 - ACCUMULATOR PLATE
4 - KICKDOWN LEVER
5 - KICKDOWN PISTON ROD GUIDE

(27) Install kickdown band strut.

(28) Torque kickdown band adjusting screw (Fig. 82) to 8 N·m (72 in. lbs.) torque. Back off adjusting screw 2¼ turns. Torque lock nut to 47 N·m (35 ft. lbs.).

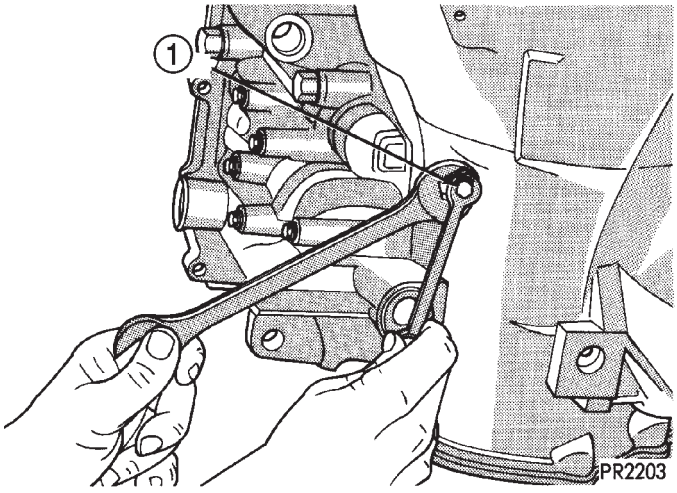

Fig. 82 Adjust Kickdown Band

1 - KICKDOWN BAND ADJUSTING SCREW

(29) Install accumulator piston and spring (Fig. 83).

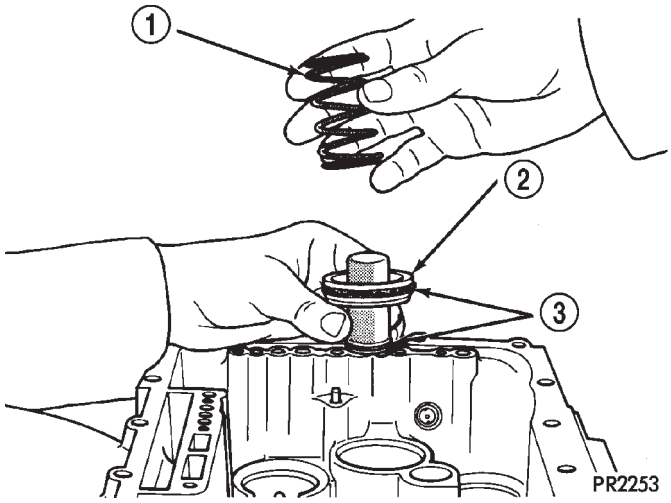

Fig. 83 Accumulator Spring and Piston

1 - ACCUMULATOR SPRING
2 - ACCUMULATOR PISTON
3 - SEAL RINGS

(30) Install accumulator plate (Fig. 84) and place snap ring into position for installation.

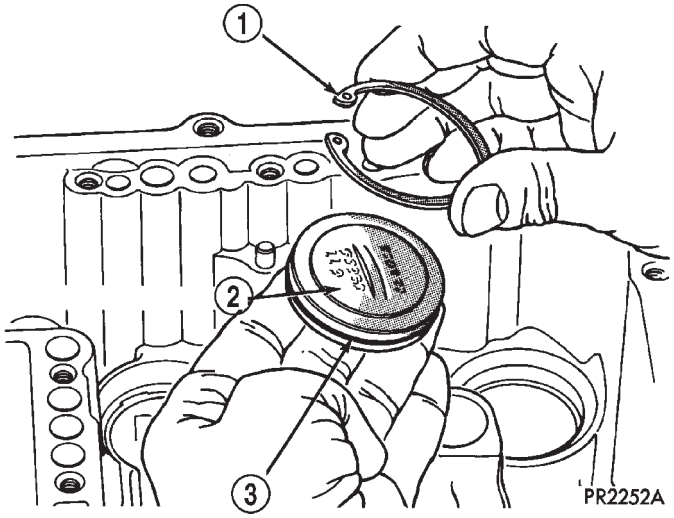

Fig. 84 Accumulator Plate and Snap Ring

1 - SNAP RING
2 - ACCUMULATOR PLATE
3 - ''O'' RING

31TH AUTOMATIC TRANSAXLE (Continued)

(31) Install accumulator snap ring (Fig. 85).

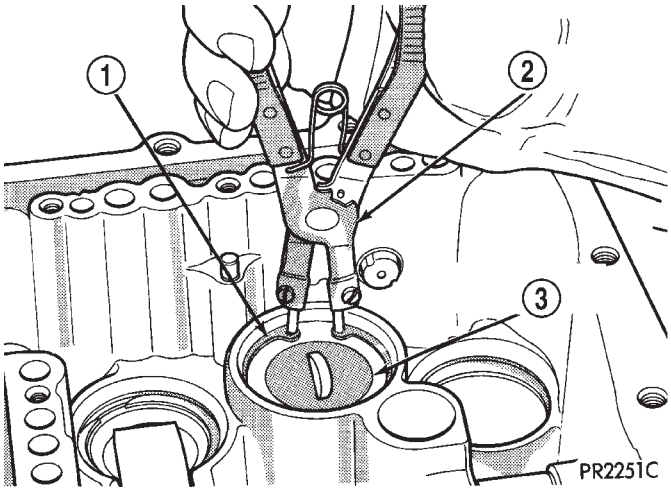

Fig. 85 Accumulator Snap Ring

1 - ACCUMULATOR PLATE SNAP RING
2 - SNAP RING PLIERS
3 - ACCUMULATOR PLATE

(32) Install low/reverse servo piston, spring, and retainer (Fig. 86).

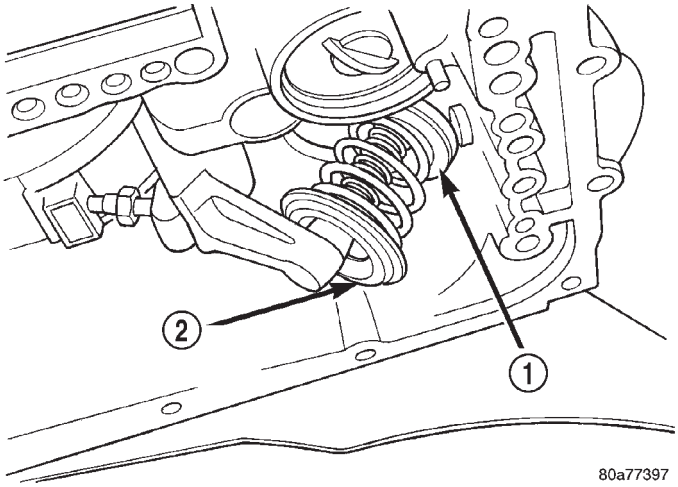

Fig. 86 Install Retainer, Spring and Servo

1 - SERVO PISTON
2 - SPRING AND RETAINER

(33) Install low/reverse piston snap ring (Fig. 87).

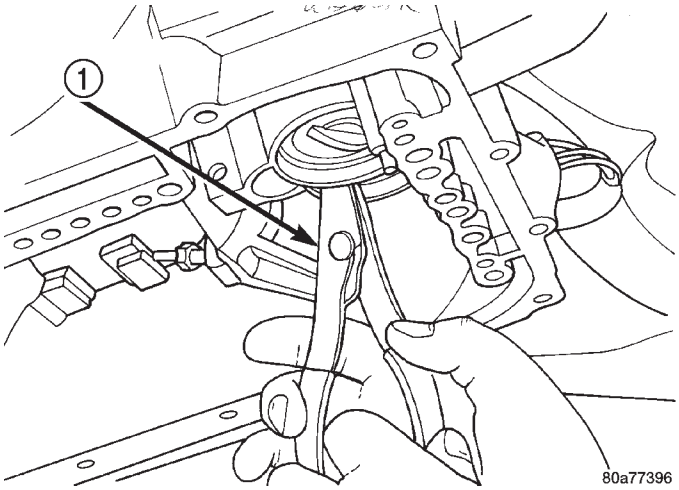

Fig. 87 Low/Reverse Servo Snap Ring

1 - SNAP-RING PLIERS

(34) Install low/reverse band strut.

(35) Adjust low/reverse band. Tighten adjusting nut (Fig. 88) to 5 N·m (41 in. lbs.) torque. Back off adjusting nut 3½ turns. Torque lock nut to 14 N·m (125 in. lbs.).

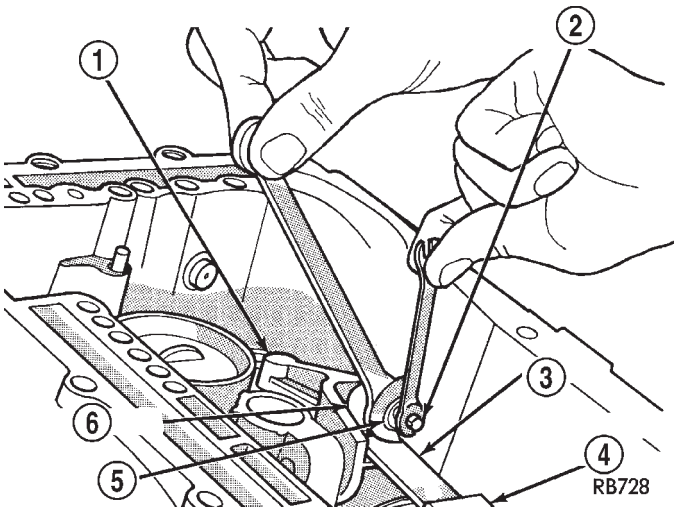

Fig. 88 Adjust Low/Reverse Band

1 - LOW-REVERSE BAND LEVER
2 - ADJUSTING SCREW
3 - STRUT
4 - LOW-REVERSE BAND
5 - LOCK NUT
6 - LEVER (SHORT)

31TH AUTOMATIC TRANSAXLE (Continued)

(36) Install valve body assembly (Fig. 89). Make sure governor tubes are properly engaged to the transaxle case and valve body.

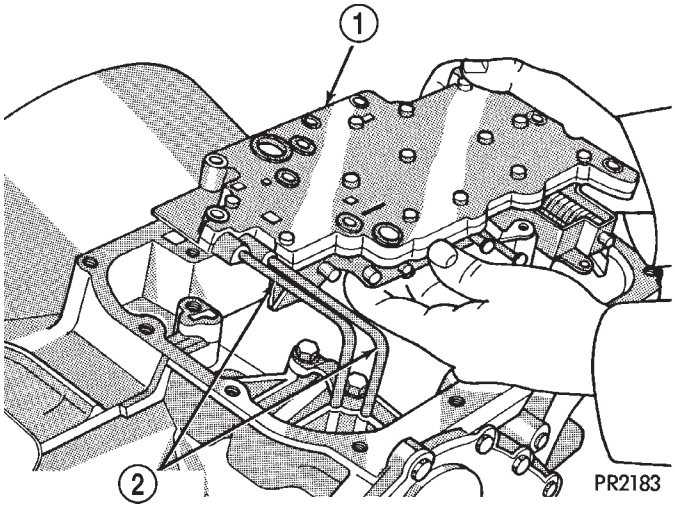

Fig. 89 Valve Body and Governor Tubes

1 - VALVE BODY ASSEMBLY
2 - GOVERNOR TUBES

(37) Install and torque valve body-to-transaxle case bolts (Fig. 90) to 12 N·m (105 in. lbs.) torque.

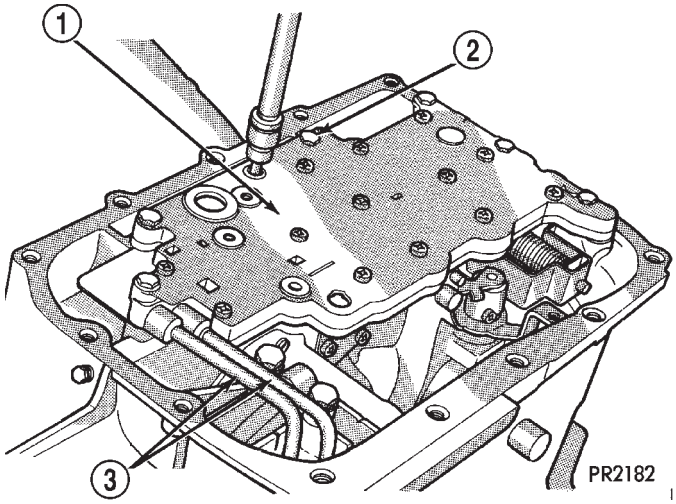

Fig. 90 Valve Body Attaching Bolts

1 - VALVE BODY
2 - VALVE BODY ATTACHING BOLTS (7)
3 - GOVERNOR TUBES

(38) Install cooler bypass valve and seal (Fig. 91). Torque bolts to 5 N·m (40 in. lbs.)..

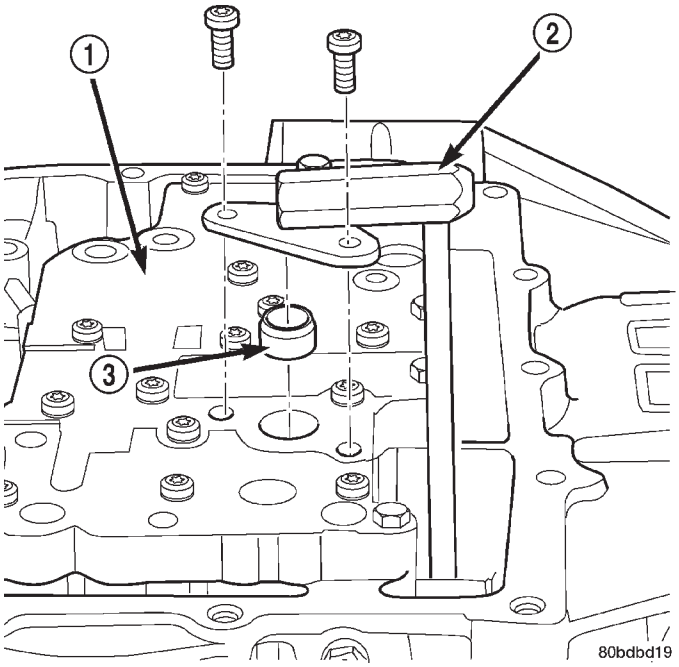

Fig. 91 Cooler Bypass Valve and Seal

1 - TRANSFER PLATE
2 - BYPASS VALVE
3 - SEAL

(39) Install park rod into position and retain with e-clip (Fig. 92).

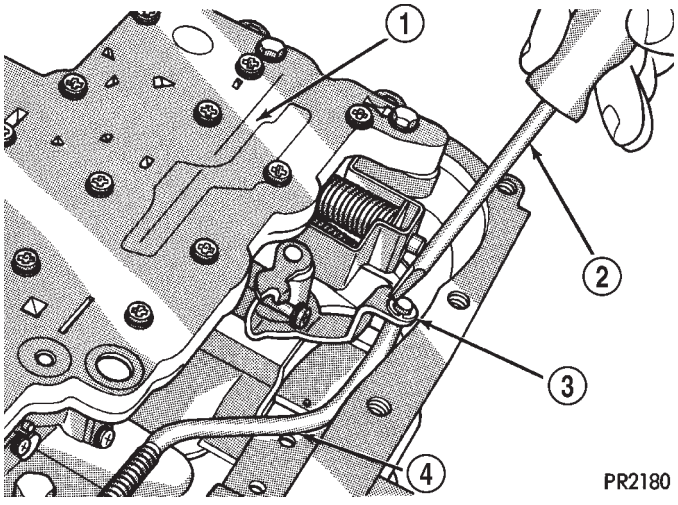

Fig. 92 Parking Rod E-Clip

1 - VALVE BODY
2 - SCREWDRIVER
3 - “E” CLIP
4 - PARKING ROD

31TH AUTOMATIC TRANSAXLE (Continued)

(40) Install oil filter and gasket into position (Fig. 93).

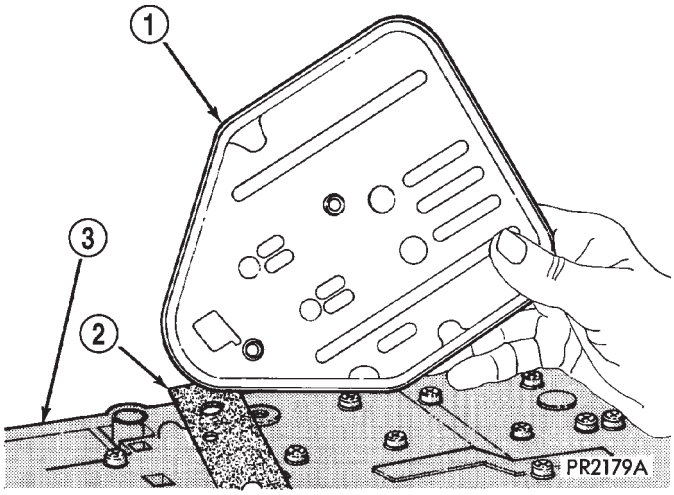

Fig. 93 Oil Filter and Gasket

1 - OIL FILTER
2 - GASKET
3 - VALVE BODY

(41) Install oil filter-to-valve body screws (Fig. 94) and torque to 5 N·m (45 in. lbs.) torque.

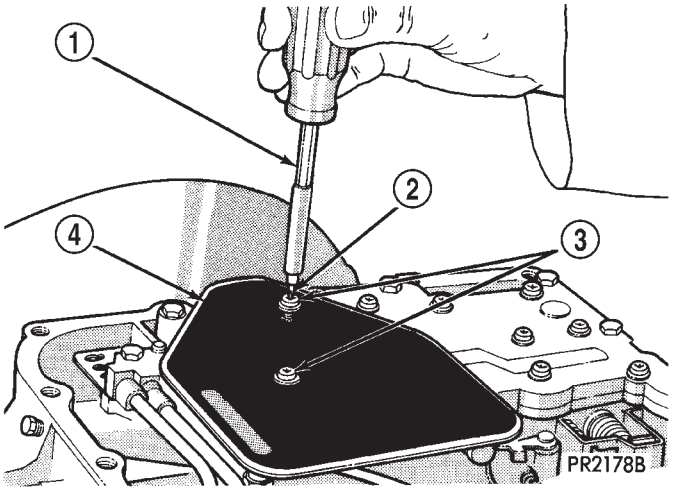

Fig. 94 Oil Filter Screws

1 - SCREWDRIVER HANDLE
2 - SPECIAL TOOL L-4553
3 - OIL FILTER SCREWS (2)
4 - OIL FILTER

(42) Install an 1/8" bead of Mopar® Silicone Rubber Adhesive Sealant to the transaxle oil pan (Fig. 95). Install oil pan to case and immediately install and torque oil pan-to-case bolts (Fig. 96) to 19 N·m (165 in. lbs.) torque.

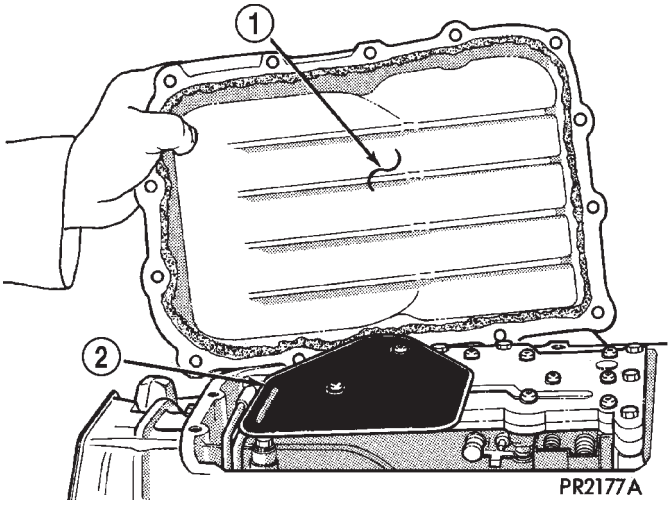

Fig. 95 Transaxle Oil Pan

1 - TRANSAXLE OIL PAN
2 - OIL FILTER

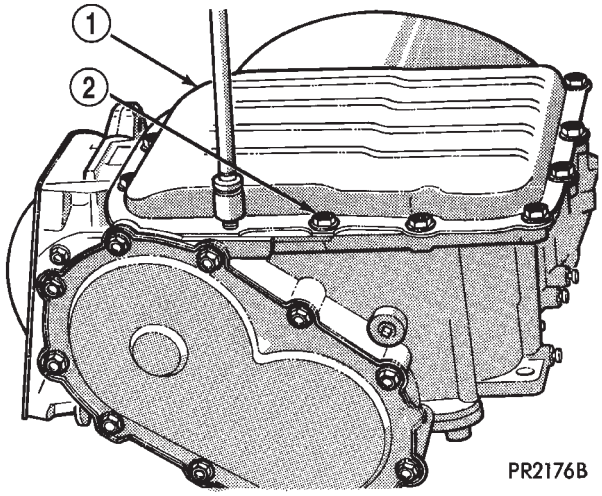

Fig. 96 Transaxle Oil Pan Bolts

1 - TRANSAXLE OIL PAN
2 - OIL PAN BOLTS

31TH AUTOMATIC TRANSAXLE (Continued)

INSTALLATION

(1) Install transaxle assembly to engine using a transmission jack and helper.

(2) Install and torque transaxle-to-engine bolts to 95 N·m (70 ft. lbs.).

(3) Using screw jack and wood block, raise engine/transaxle assembly into position and install left upper mount thru-bolt (Fig. 97). Torque bolt to 75 N·m (55 ft. lbs.).

(4) Install left wheel splash shield.

(5) Install torque converter-to-drive plate bolts and torque to 88 N·m (65 ft. lbs.).

(6) Install rear mount bracket to transaxle (Fig. 98). Install bolts by hand but do not tighten at this time.

(7) Align rear mount bracket to mount and install thru-bolt. Do not tighten at this time.

(8) Connect vehicle speed sensor connector.

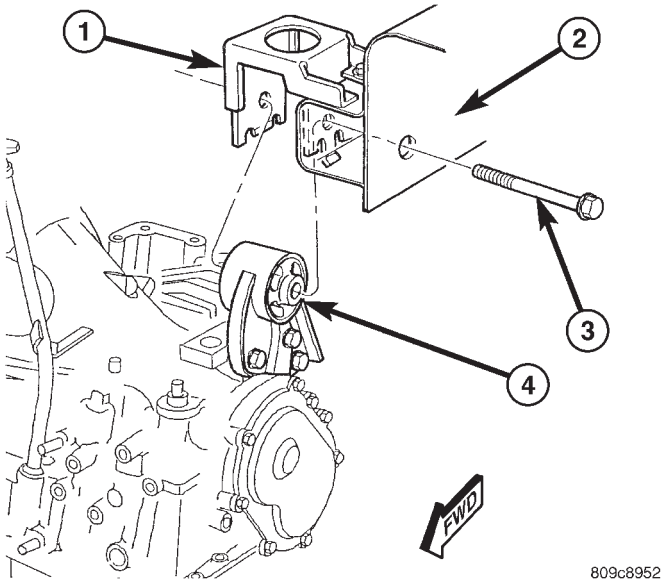

Fig. 97 Left Mount-to-Rail

1 - FRAME BRACKET
2 - FRAME RAIL - LEFT
3 - BOLT
4 - TRANSAXLE MOUNT

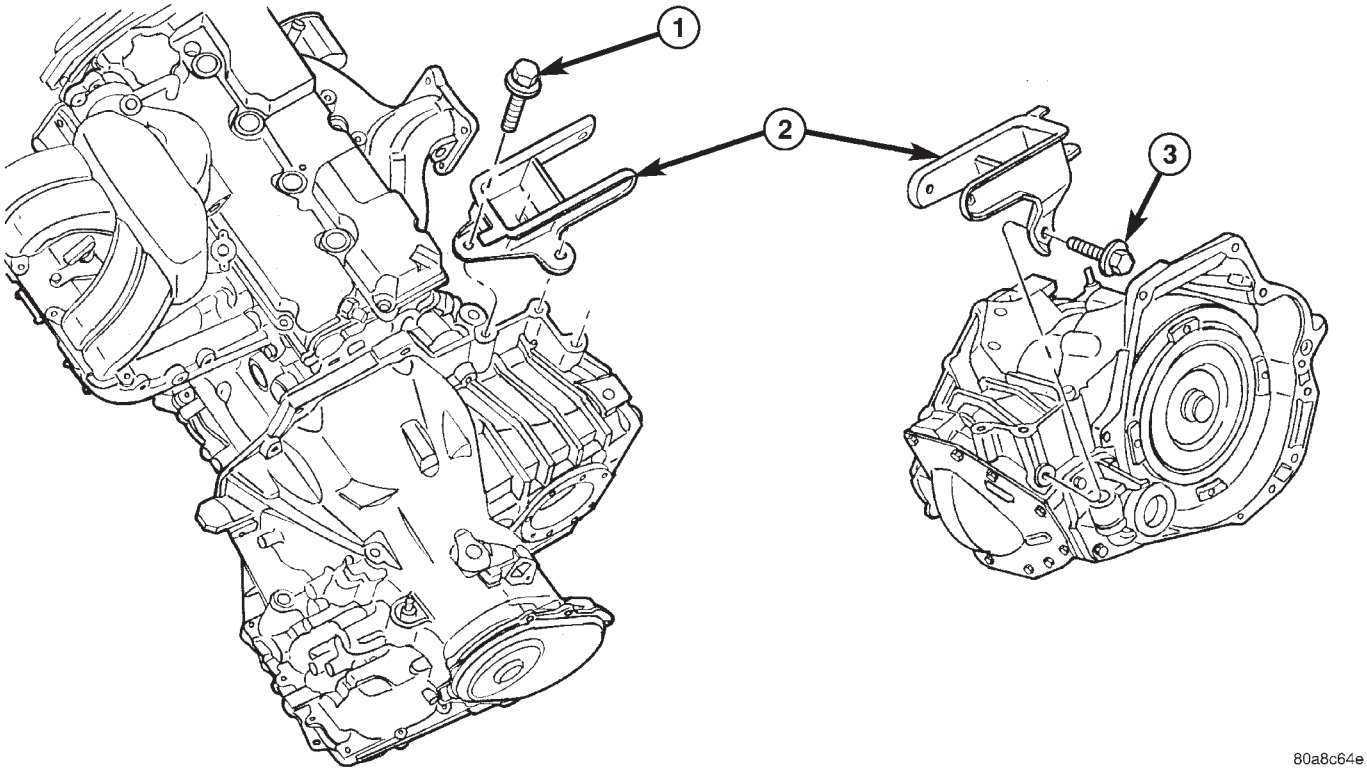

Fig. 98 Rear Mount Bracket

1 - BOLT - VERTICAL
2 - BRACKET - REAR MOUNT
3 - BOLT - HORIZONTAL

31TH AUTOMATIC TRANSAXLE (Continued)

(9) Install structural collar (Fig. 99).

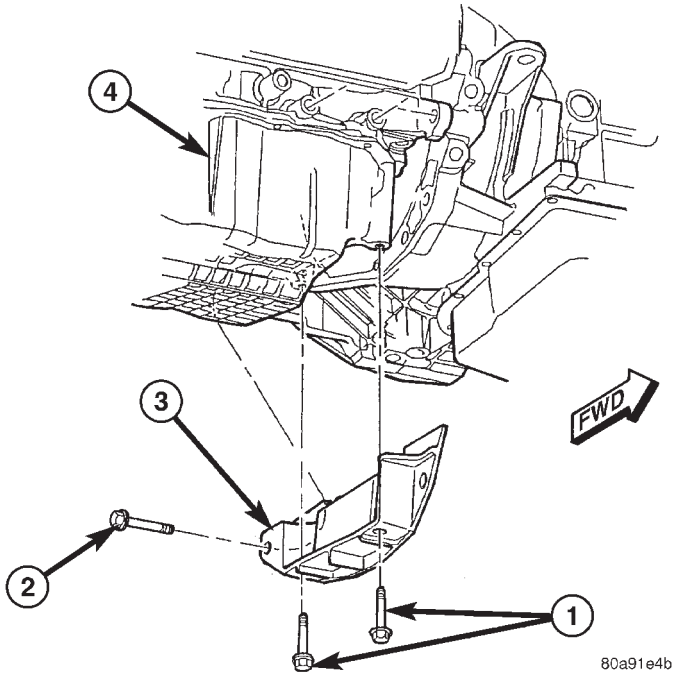

Fig. 99 Structural Collar

1 - BOLT - COLLAR TO OIL PAN
2 - BOLT - COLLAR TO TRANSAXLE
3 - STRUCTURAL COLLAR
4 - OIL PAN

(10) Connect transaxle cooler lines using service splice kit. Refer to instructions included with kit.

(11) Install starter motor assembly (Fig. 100).

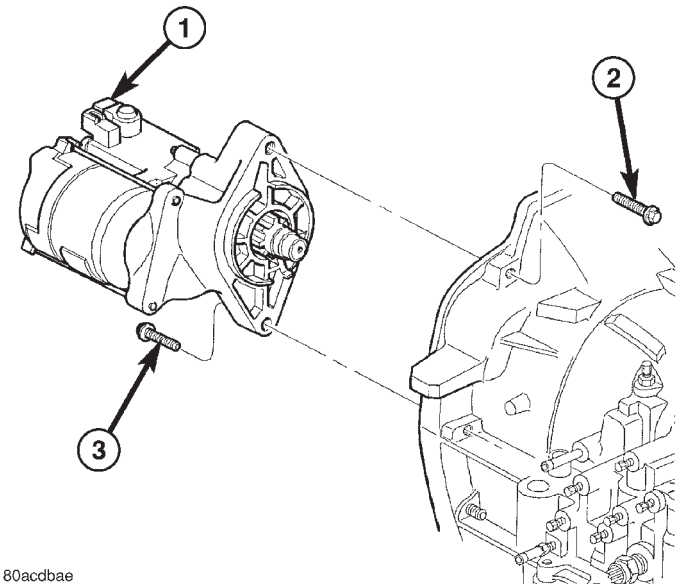

Fig. 100 Starter Motor Removal/Installation

1 - STARTER MOTOR
2 - BOLT
3 - BOLT

(12) Install front mount and bracket (Fig. 101).

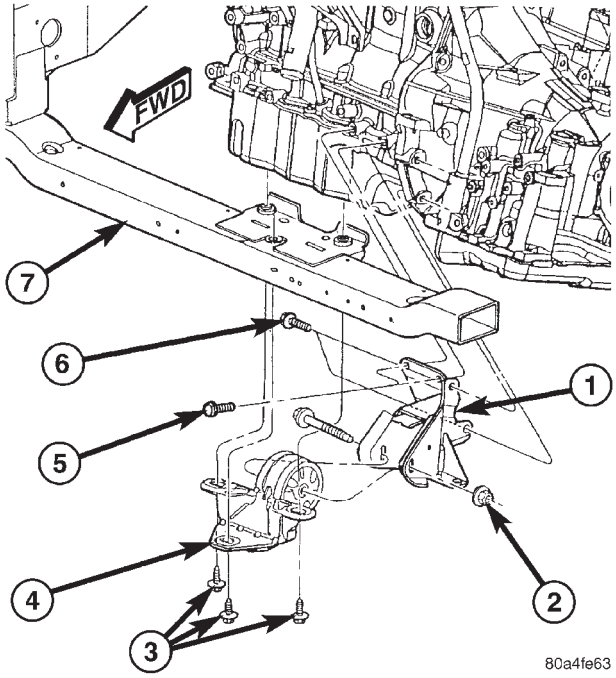

Fig. 101 Front Mount and Bracket

1 - BRACKET - FRONT MOUNT
2 - NUT
3 - BOLT
4 - MOUNT - FRONT INSULATOR
5 - BOLT
6 - BOLT
7 - FRONT CROSSMEMBER

31TH AUTOMATIC TRANSAXLE (Continued)

(13) Install halfshafts. (Refer to 3 - DIFFERENTIAL & DRIVELINE/HALF SHAFT - INSTALLATION)

(14) Lower vehicle.

(15) Torque rear mount bracket-to-transaxle vertical bolts (Fig. 98) to 102 N·m (75 ft. lbs.).

(16) Connect back up lamp switch connector.

(17) Connect gearshift cable to manual valve and left upper mount bracket (Fig. 102).

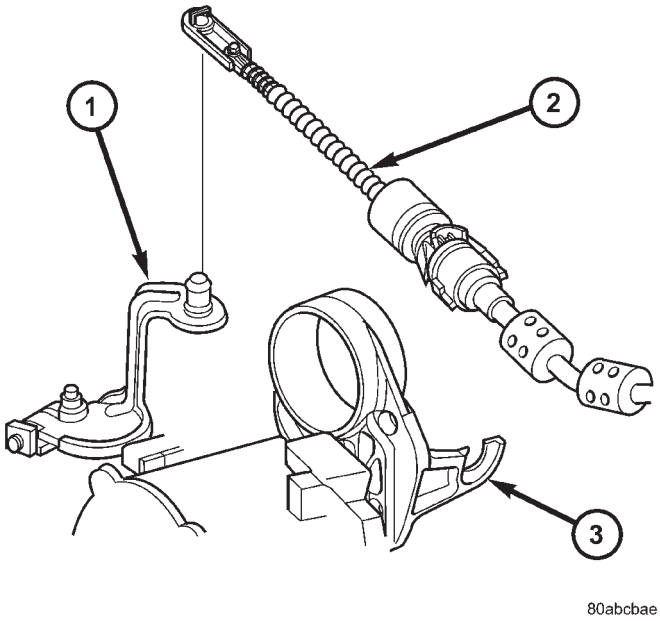

Fig. 102 Gearshift Cable at Transaxle

1 - MANUAL VALVE LEVER
2 - GEAR SHIFT CABLE
3 - UPPER MOUNT BRACKET

(18) Connect throttle valve cable to lever and bracket (Fig. 103).

(19) Connect torque converter clutch connector.

(20) Install fluid level indicator/tube assembly (Fig. 104).

(21) Raise vehicle on hoist.

(22) Torque rear mount bracket-to-transaxle case horizontal bolt (Fig. 98) to 102 N·m (75 ft. lbs.).

(23) Torque rear mount thru-bolt to 54 N·m (40 ft. lbs.).

(24) Lower vehicle.

(25) Connect battery negative cable.

(26) Fill transaxle with ATF+4 transmission fluid. (Refer to 21 - TRANSMISSION/TRANSAXLE/AUTOMATIC - 31TH/FLUID - STANDARD PROCEDURE)

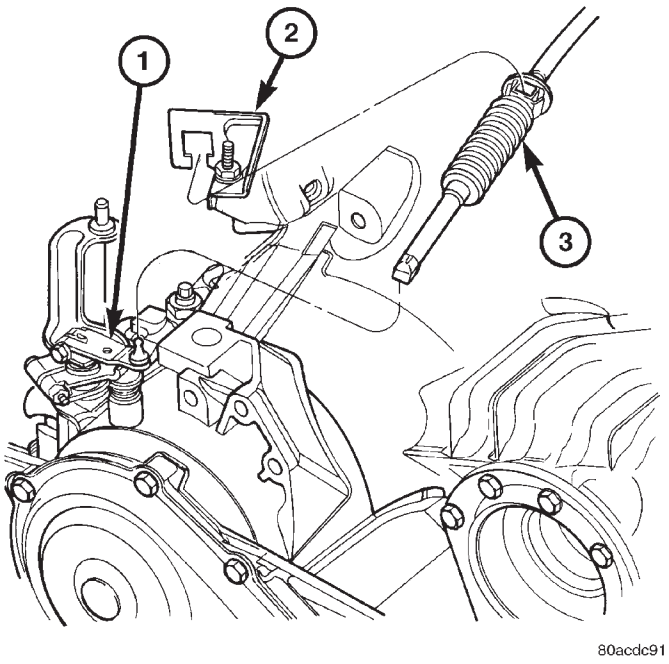

Fig. 103 Kickdown Cable at Transaxle—Typical

1 - LEVER
2 - BRACKET
3 - THROTTLE VALVE CABLE

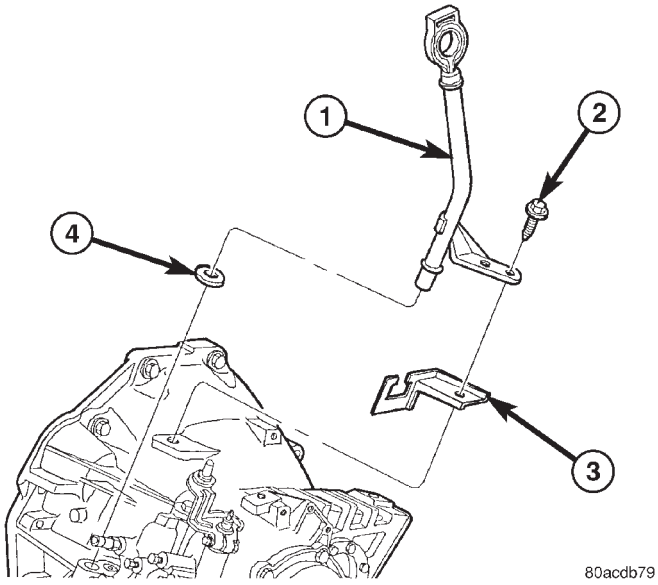

Fig. 104 Fluid Level Indicator Assembly

1 - INDICATOR ASSEMBLY
2 - BOLT
3 - KICKDOWN CABLE BRACKET
4 - SEAL

31TH AUTOMATIC TRANSAXLE (Continued)

SCHEMATICS AND DIAGRAMS

31TH TRANSAXLE HYDRAULIC SCHEMATICS

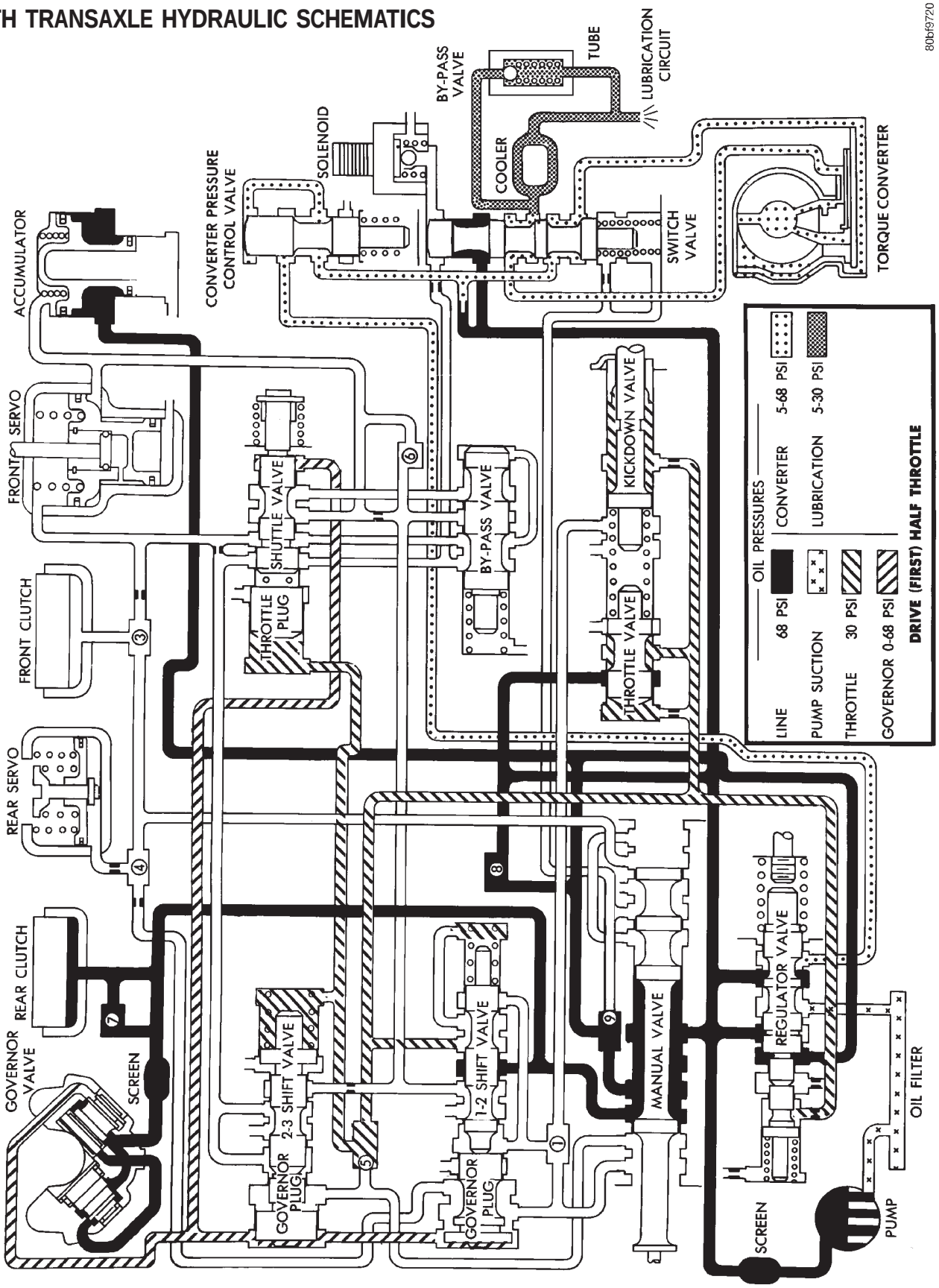

Drive (First) Half Throttle

31TH AUTOMATIC TRANSAXLE (Continued)

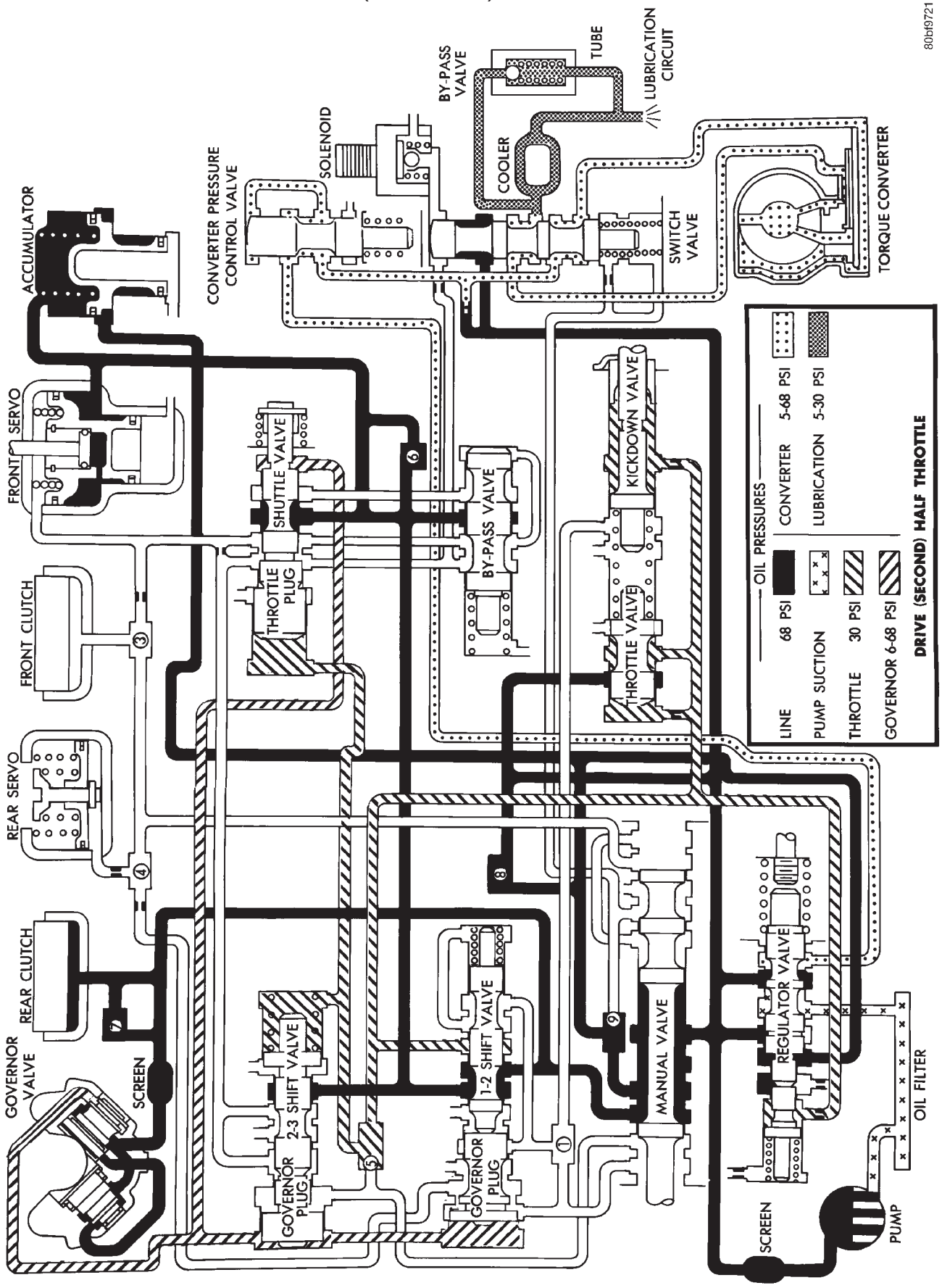

Drive (Second) Half Throttle

31TH AUTOMATIC TRANSAXLE (Continued)

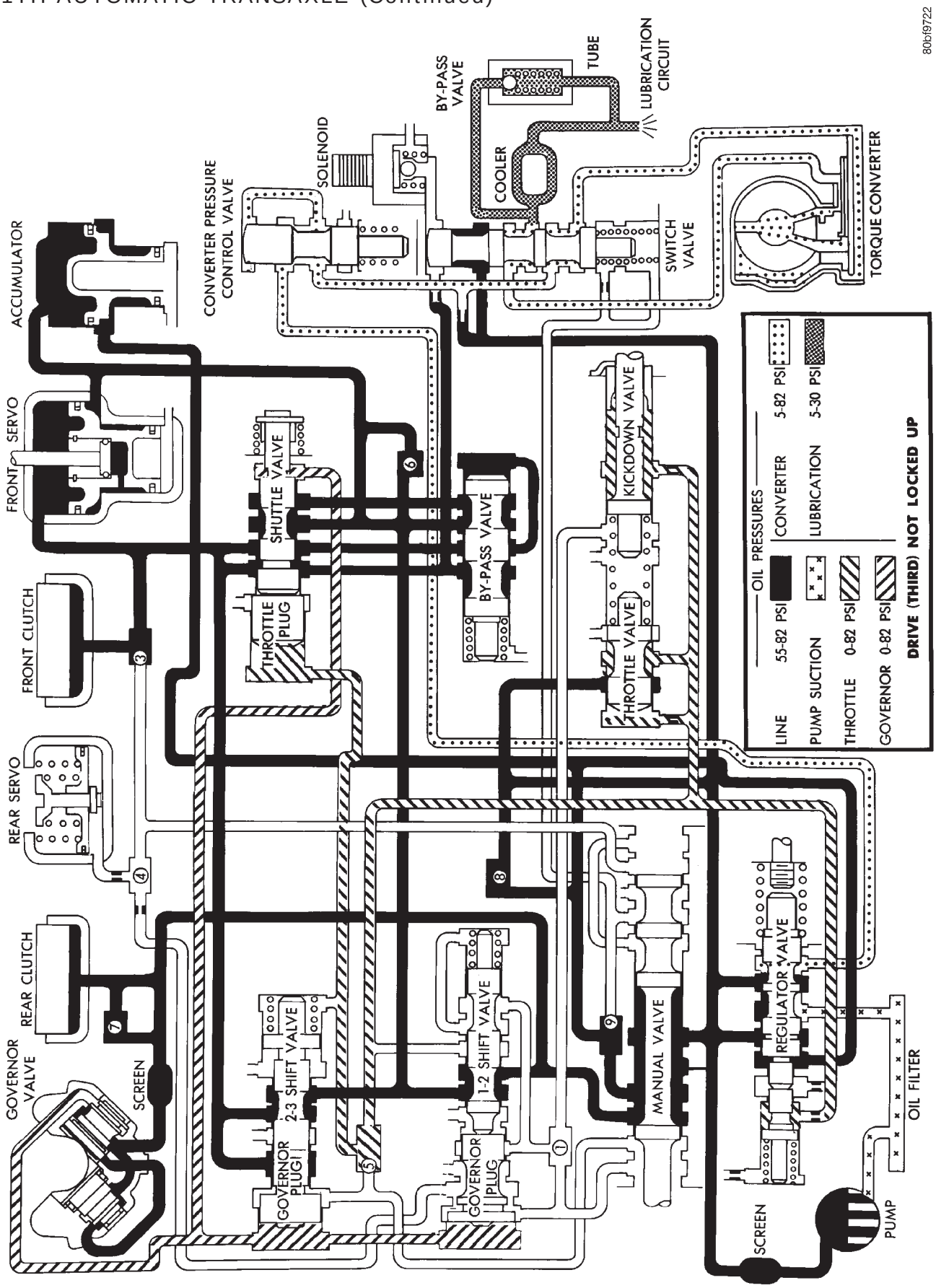

Drive (Third) Not Locked Up

31TH AUTOMATIC TRANSAXLE (Continued)

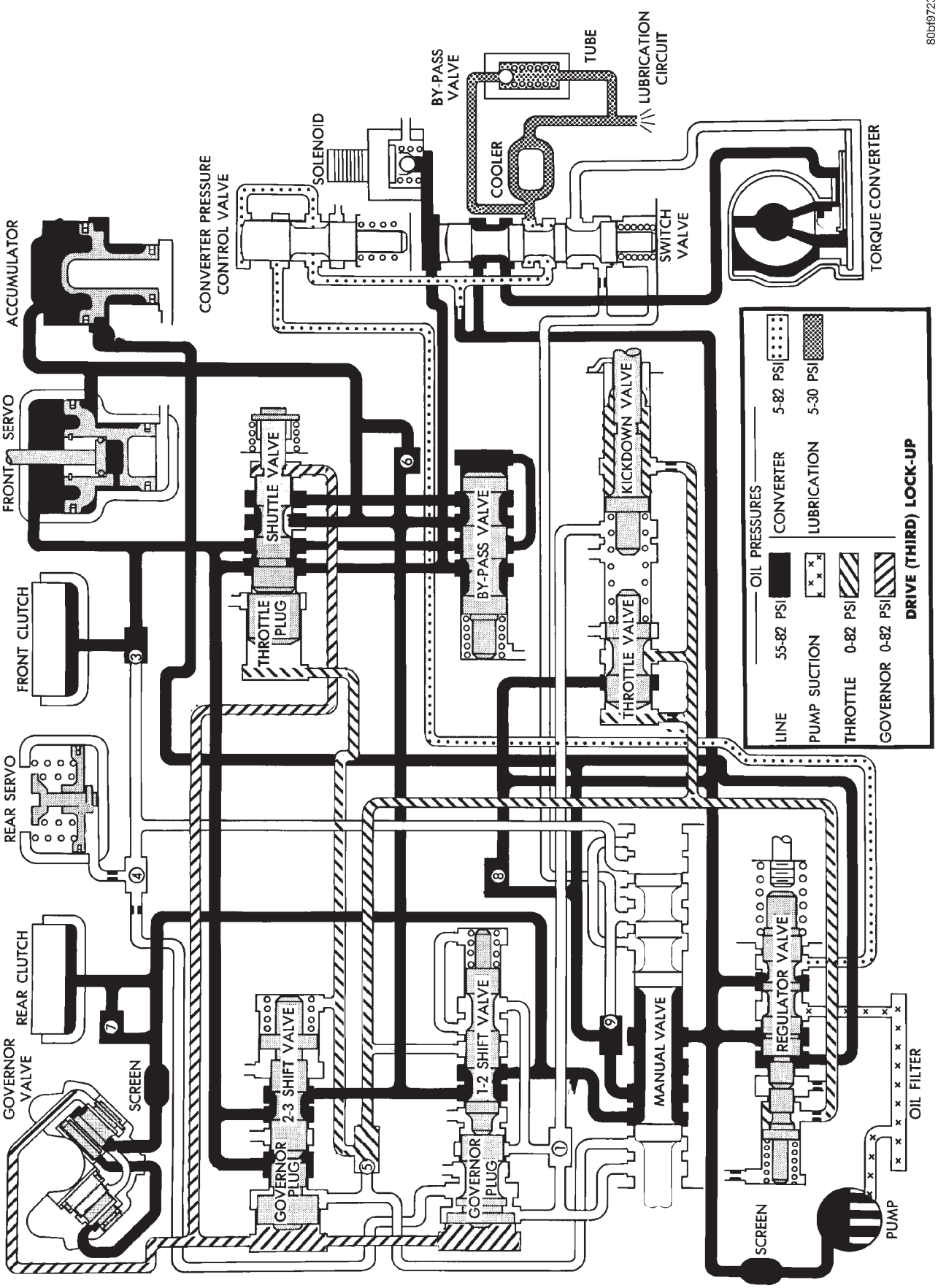

Drive (Third) Lock-Up

31TH AUTOMATIC TRANSAXLE (Continued)

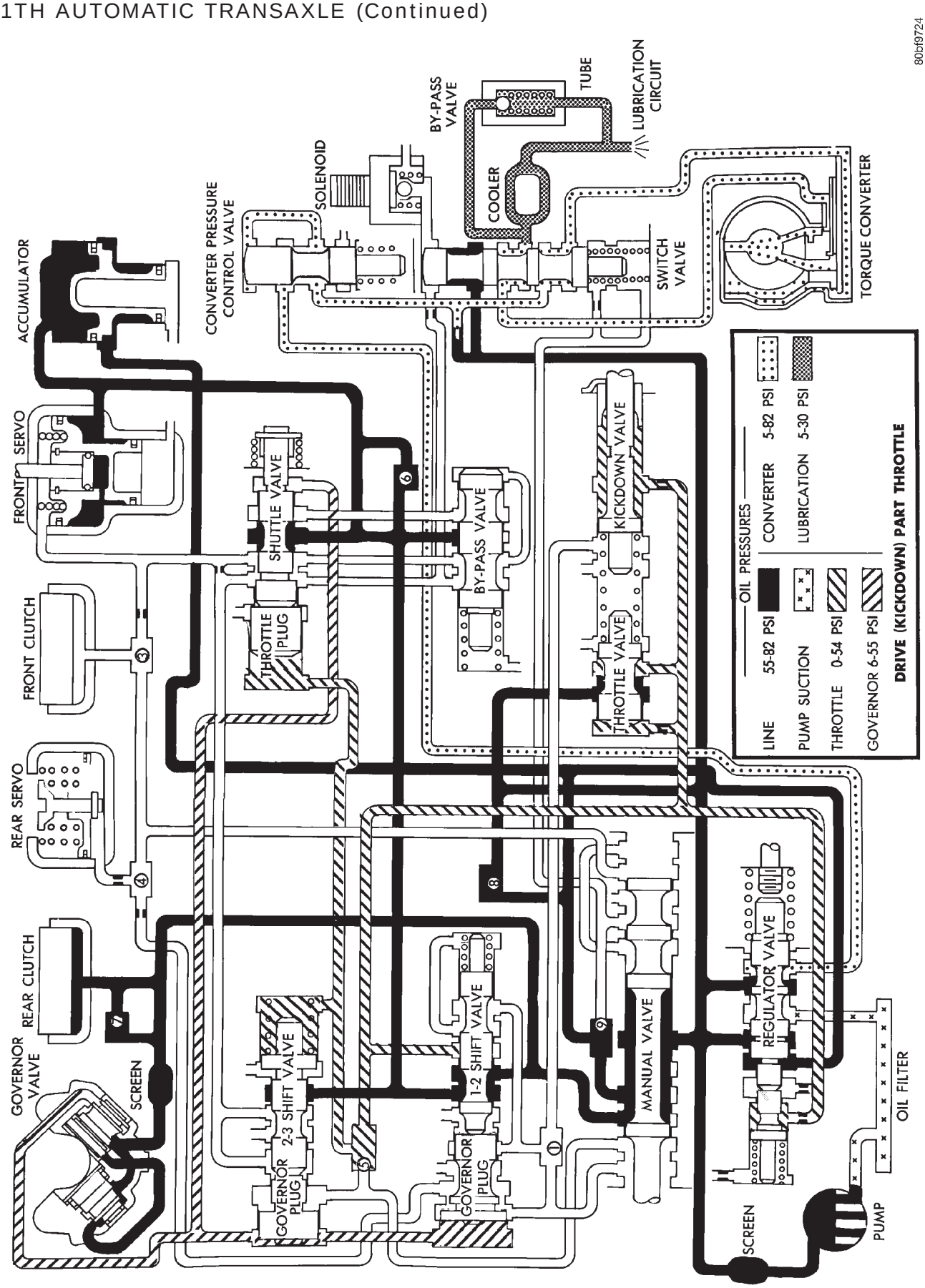

Drive (Kickdown) Part Throttle

31TH AUTOMATIC TRANSAXLE (Continued)

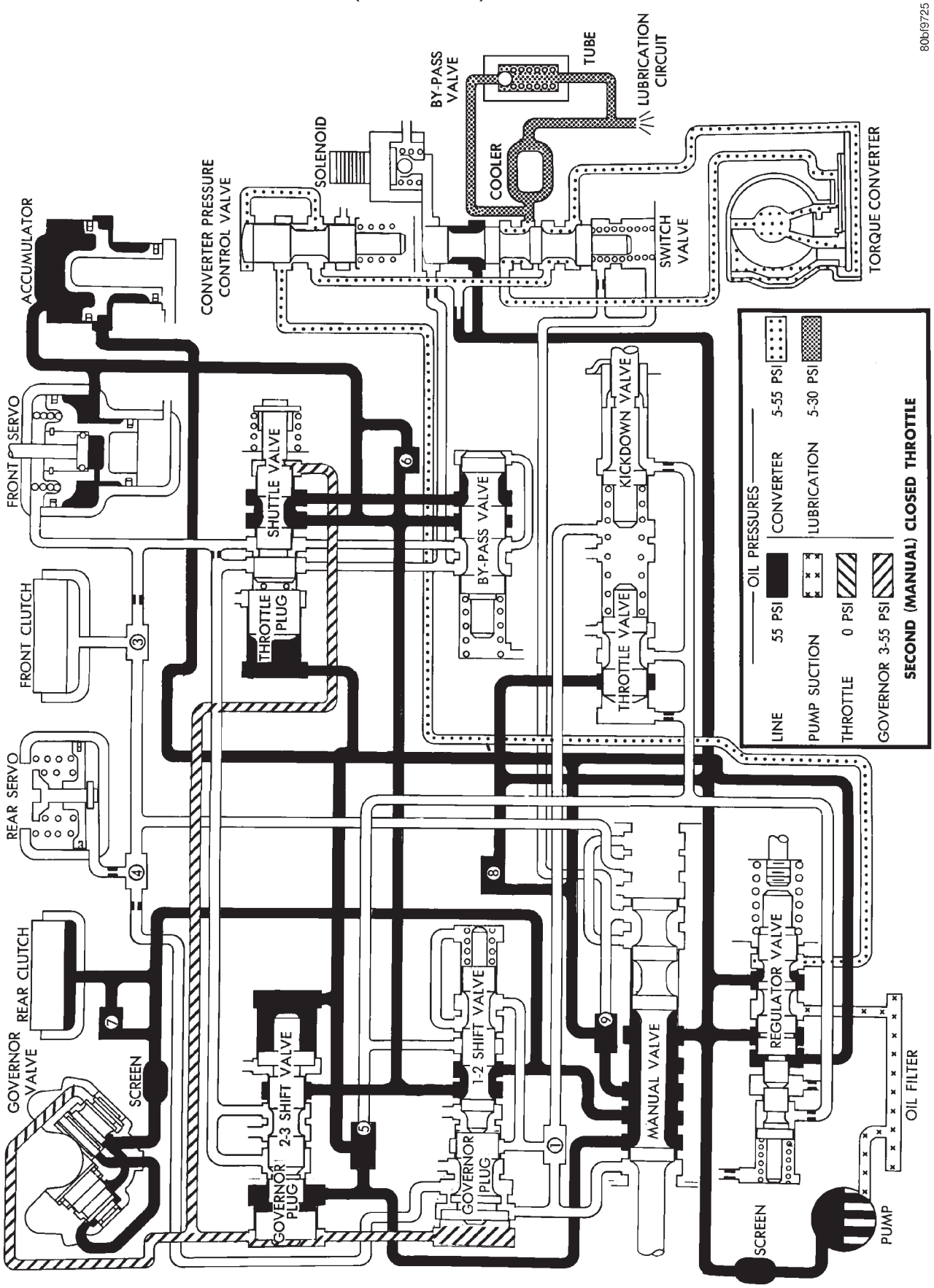

Second (Manual) Closed Throttle

31TH AUTOMATIC TRANSAXLE (Continued)

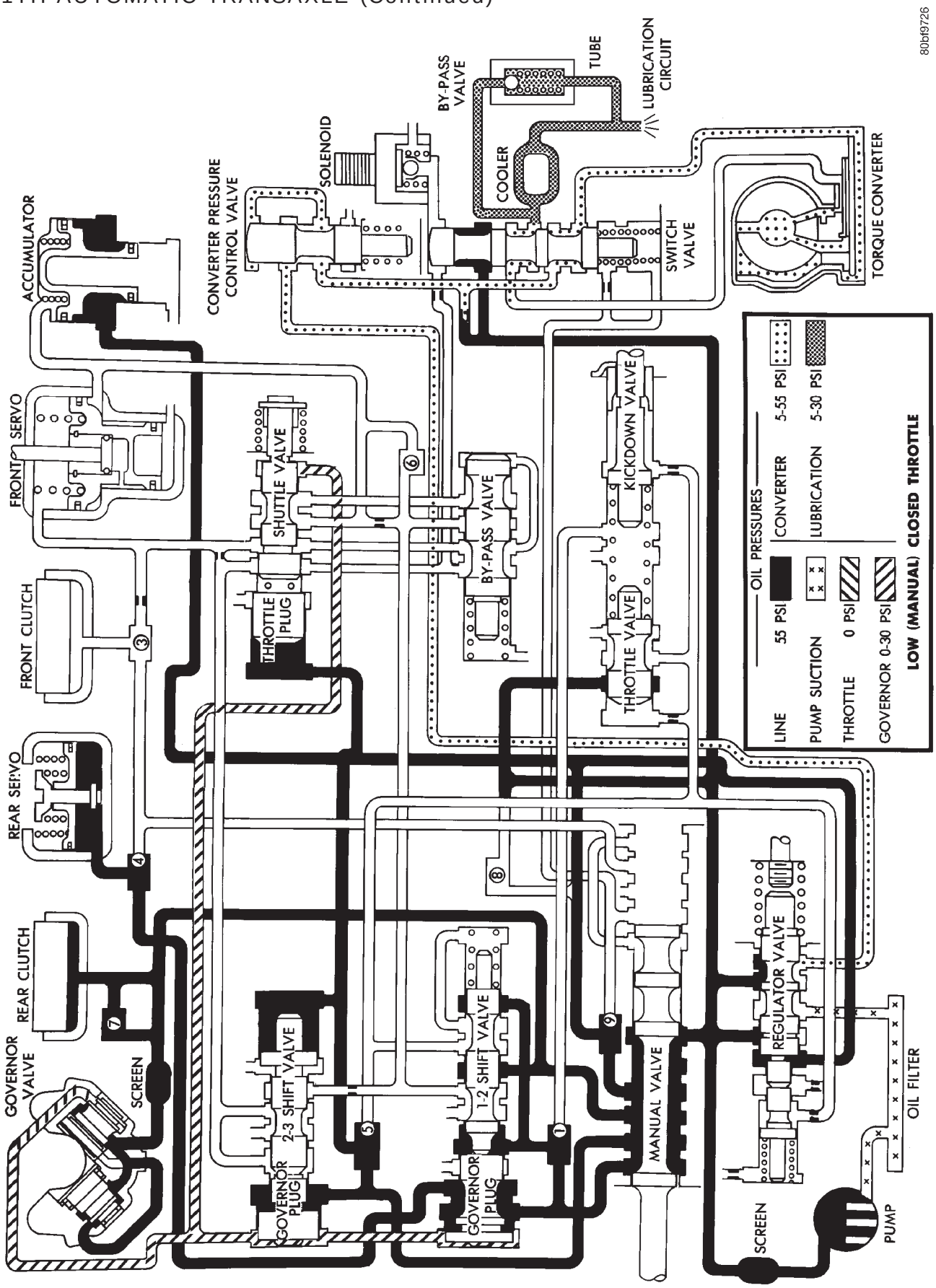

Low (Manual) Closed Throttle

31TH AUTOMATIC TRANSAXLE (Continued)

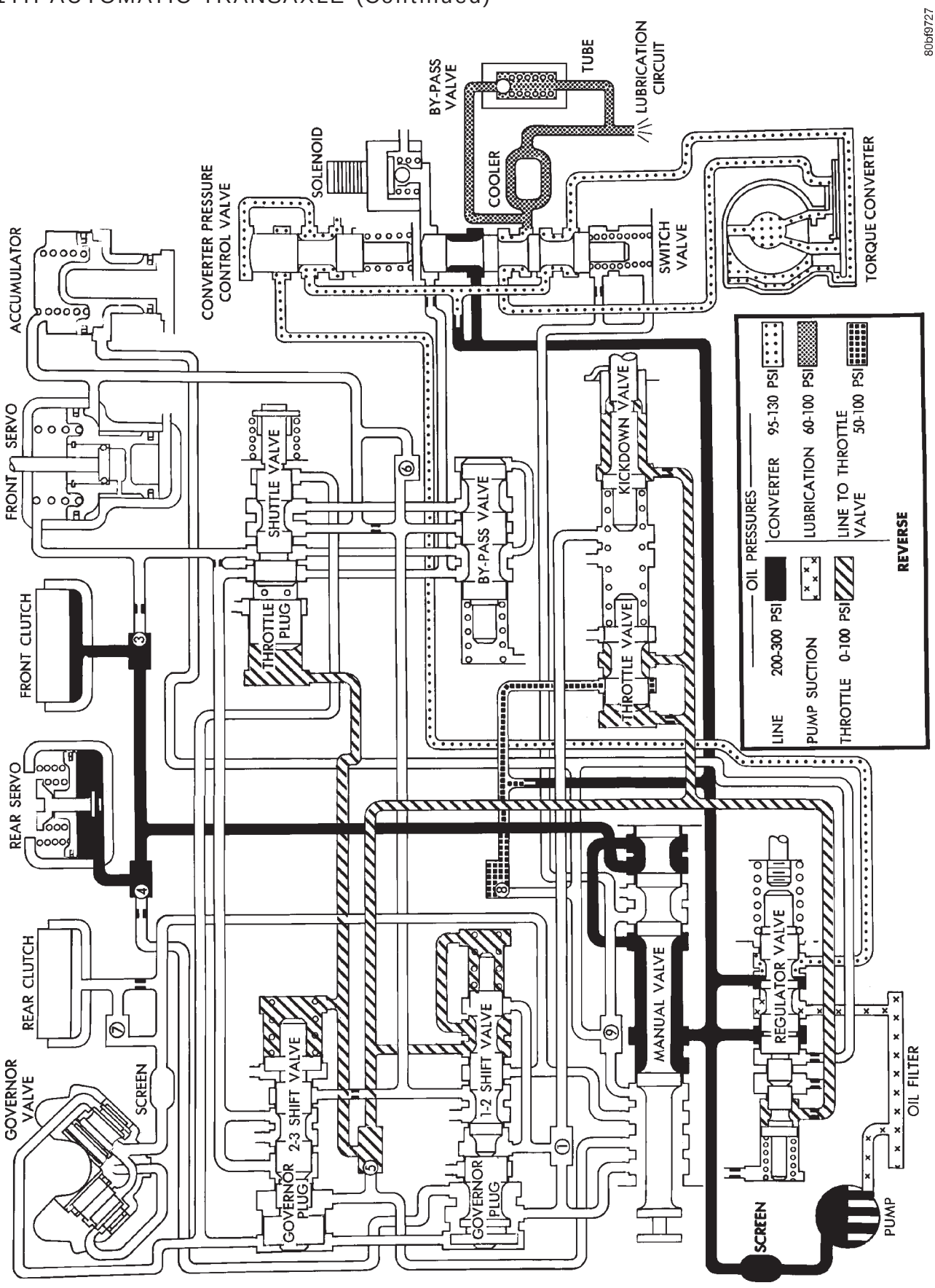

Reverse

31TH AUTOMATIC TRANSAXLE (Continued)

SPECIFICATIONS

31TH AUTOMATIC TRANSAXLE

GENERAL SPECIFICATIONS

Transaxle Type	Three speed automatic with torque converter and integral differential
Cooling Method	Air to oil heat exchanger
Lubrication Method	Pump (internal-external gear-type)

GEAR RATIOS

1st Gear	2.69
2nd Gear	1.55
3rd Gear	1.00
Reverse Gear	2.10

BAND ADJUSTMENT

Kickdown (Front)—Backed Off From 8 N•m (72 in. lbs.)	2¼ turns
Low-Reverse (Rear)—Backed Off From 5 N•m (41 in. lbs.)	3½ Turns

BEARING SETTINGS (END PLAY & TURNING TORQUE)

Description	Metric	Standard
Differential Assembly	0.7-1.4 N·m	6-12 in. lbs.
Output Shaft	0-0.3 N·m	0-3 in. lbs.
Transfer Shaft	0.051-0.254 mm	0.002-0.010 in. (end play)
Overall Drag At Output Hub	0.03-1.8 N·m	3-16 in. lbs.

CLUTCH CLEARANCES

Description	Metric	Standard
Front Clutch (Not Adjustable)	1.27-2.79 mm	0.050-0.110 in.
Rear Clutch	0.71-1.10 mm	0.028-0.043 in.

END PLAY

Description	Metric	Standard
Input Shaft	0.19-1.50 mm	0.008-0.060 in.
Front Clutch Retainer	0.76-2.69 mm	0.030-0.106 in.
Front Carrier	0.18-1.45 mm	0.007-0.057 in.
Front Annulus Gear	0.09-0.50 mm	0.0035-0.020 in.
Planet Pinion	0.15-0.59 mm	0.006-0.023 in.
Reverse Drum	0.76-3.36 mm	0.030-0.132 in.

31TH AUTOMATIC TRANSAXLE (Continued)

OIL PUMP CLEARANCE

Description	Metric	Standard
Outer Gear-to-Pocket	0.045-0.141mm	0.0018-0.0056 in.
Outer Gear Side Clearance	0.020-0.046mm	0.0008-0.0018 in.
Inner Gear Side Clearance	0.020-0.046mm	0.0008-0.0018 in.

THRUST WASHERS

Description	Metric	Standard
Reaction Shaft Support (No. 1)	1.34-1.62 mm	0.053-0.064 in.
Rear Clutch Retainer (No. 2)	1.53-1.62 mm	0.060-0.064 in.
Output Shaft (No. 3) (Select)	1.96-2.03 mm	0.077-0.080 in
Output Shaft (No. 3) (Select)	2.15-2.22 mm	0.085-0.087 in.
Output Shaft (No. 3) (Select)	2.34-2.41 mm	0.092-0.095 in.
Front Annulus (No. 4)	2.95-3.05 mm	0.116-0.120 in.
Front Carrier (Nos. 5&6)	1.21-1.28 mm	0.048-0.050 in.
Sun Gear-Front (No. 7)	0.85-0.91 mm	0.033-0.036 in
Sun Gear-Rear (No. 8)	0.85-0.91 mm	0.033-0.036 in.
Rear Carrier (Nos. 9&10)	1.21-1.28 mm	0.048-0.050 in.
Rev. Drum (No. 11)	1.53-1.62 mm	0.060-0.064 in.

31TH AUTOMATIC TRANSAXLE (Continued)

TORQUE SPECIFICATIONS

Description	N·m	Ft. Lbs.	In. Lbs.
Bolt, Differential Bearing Retainer-to-Case	34	—	300
Bolt, Differential Cover-to-Case	19	—	165
Bolt, Differential Ring Gear-to-Case	95	70	—
Bolt, Extension Housing-to-Case	28	—	250
Bolt, Drive Plate-to-Crankshaft	95	70	—
Bolt, Drive Plate-to-Torque Converter	68	50	—
Bolt, Governor-to-Support	7	—	60
Bolt, Output Gear Strap	23	17	—
Bolt, Oil Pan-to-Case	19	—	165
Bolt, Oil Pump-to-Case	31	—	275
Bolt, Park Rod Support-to-Case	28	—	250
Bolt, Reaction Support-to-Pump Body	28	—	250
Bolt, Sprag Retainer-to-Case	28	—	250
Bolt, Starter Motor-to-Transaxle	54	40	—
Bolt, Transaxle Case-to-Engine Block	95	70	—
Bolt, Transfer Gear Cover-to-Case	19	—	165
Bolt, Transfer Gear Strap	23	17	—
Bolt, Valve Body-to-Case	12	—	105
Fitting, Transaxle Oil Cooler-to-Case	7	—	60
Screw, Fluid Filter	5	—	45
Screw, Cooler Bypass Valve-to-Transfer Plate	5	—	40
Screw, Governor Counterweight	28	—	250
Screw, Manual Valve Lever-to-Shaft	12	—	105
Screw, Speedo Adapter-to-Extension Housing	7	—	60
Screw, Valve Body-to-Transfer Plate	5	—	45
Nut, Kickdown Band Adjuster Lock	47	35	—
Nut, Output Gear-to-Shaft	271	200	—
Nut, Reverse Band Adjuster Lock	14	—	125
Nut, Transfer Gear-to-Shaft	271	200	—
Plug, Pressure Tap	5	—	45
Plug, Rear Band Lever Pivot Shaft	7	—	60
Switch, Park/Neutral	34	25	—

31TH AUTOMATIC TRANSAXLE (Continued)

SPECIAL TOOLS

31TH AUTOMATIC TRANSAXLE

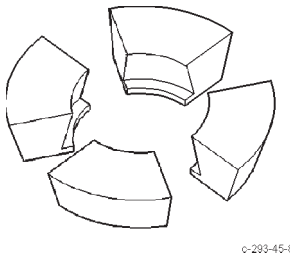

Adapter Blocks C-293–45

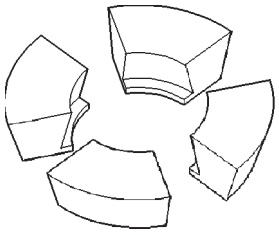

Adapter Blocks C-293–52

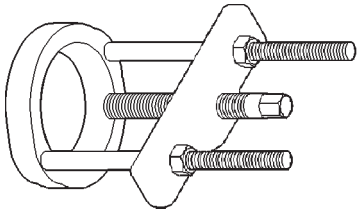

Puller Press C-293–PA

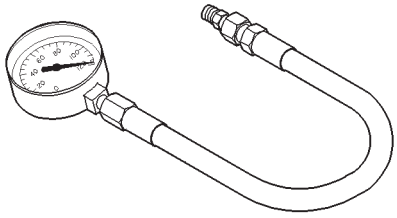

Pressure Gauge (High) C-3293SP

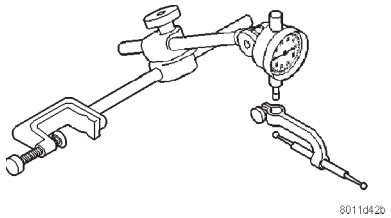

Dial Indicator C-3339

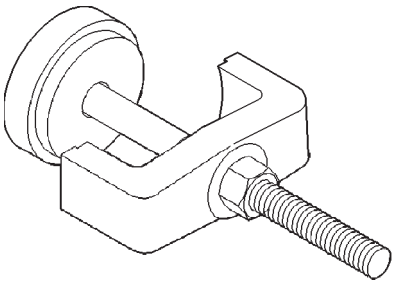

Spring Compressor C-3575-A

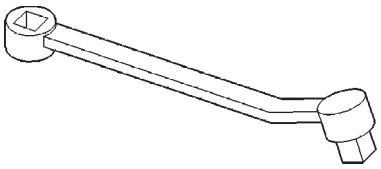

Band Adjusting Adapter C-3705

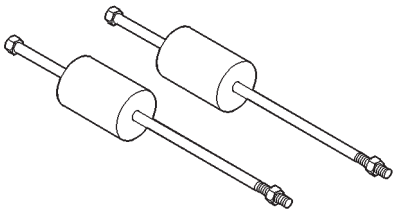

Oil Pump Puller C-3752

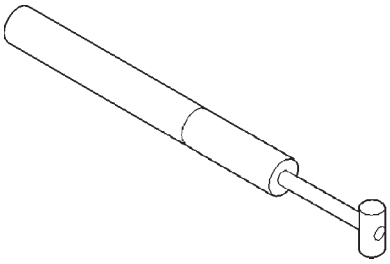

Throttle Setting Gauge C-3763

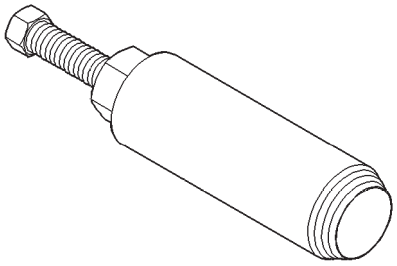

Seal Puller C-3981B

31TH AUTOMATIC TRANSAXLE (Continued)

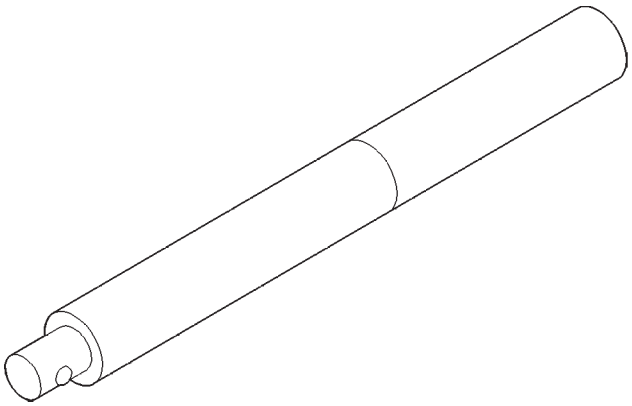

Universal Handle C-4171

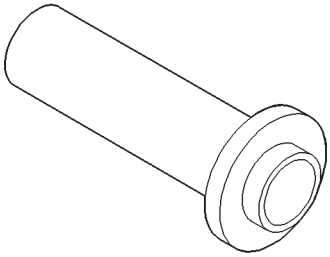

Seal Installer C-4193A

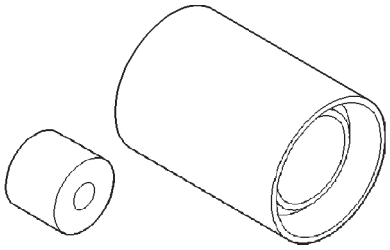

Bearing Installer C-4637

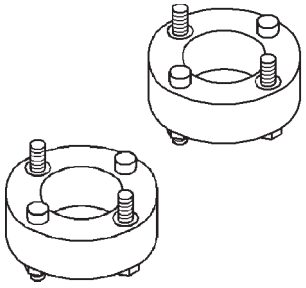

Adapter C-4658

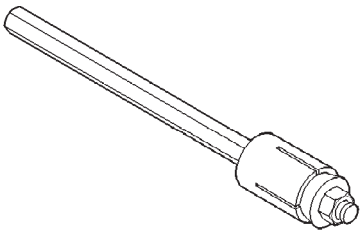

Torque Tool C-4995

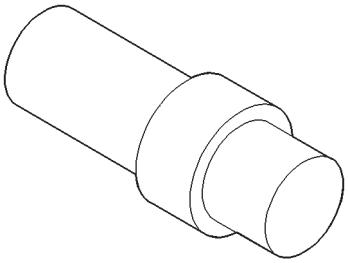

Adapter C-4996

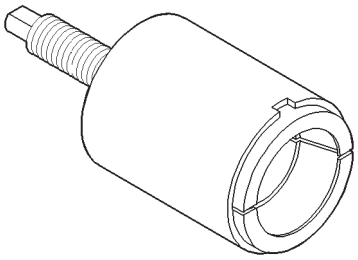

Remover Kit L-4406

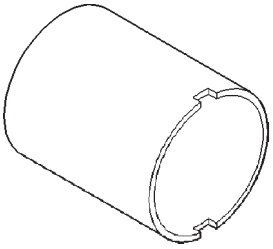

Bearing Remover Cup L-4406–1

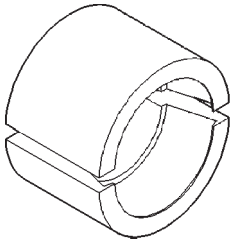

Bearing Remover Jaws L-4406–2

31TH AUTOMATIC TRANSAXLE (Continued)

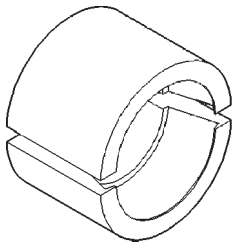

Adapter L-4406–3

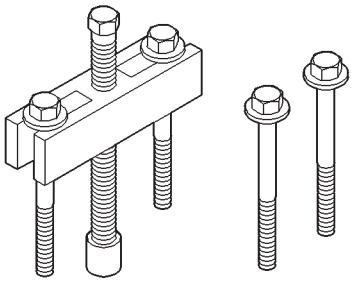

Gear Puller L-4407A

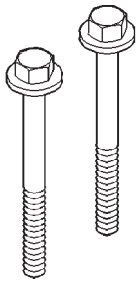

Puller L-4407–6

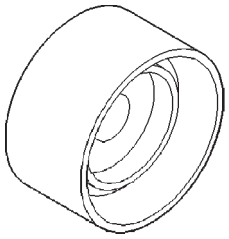

Bearing Installer L-4408

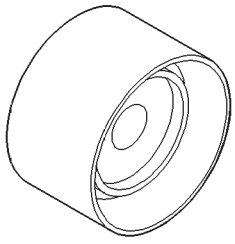

Bearing Installer L-4410

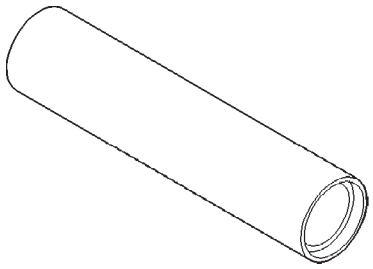

Bearing Installer L-4411

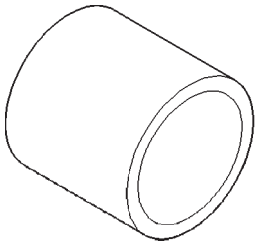

Installer Adapter L-4429-3

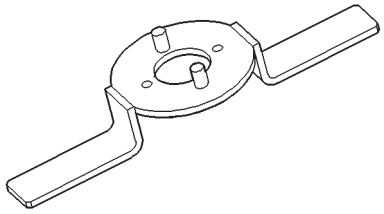

Gear Checking Plate L-4432

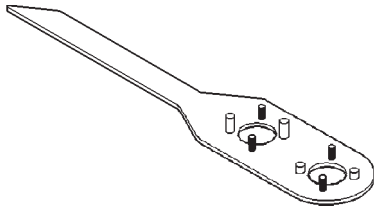

Gear Removing Plate L-4434

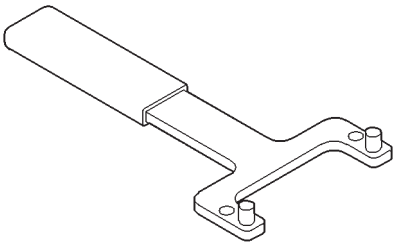

Bearing Puller L-4435

31TH AUTOMATIC TRANSAXLE (Continued)

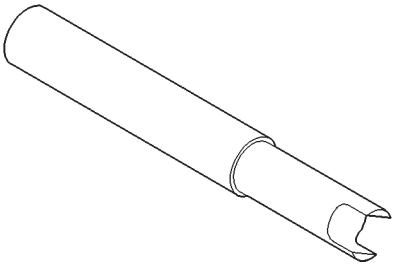

Differential Tool L-4436A

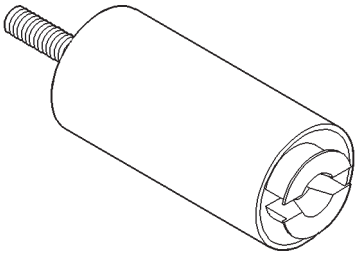

Special Jaw Set L-4518

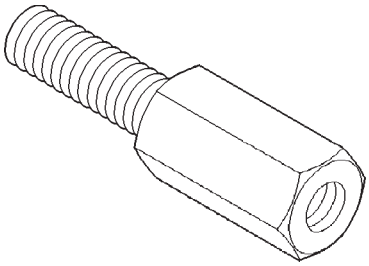

Housing Remover Adapter L-4437

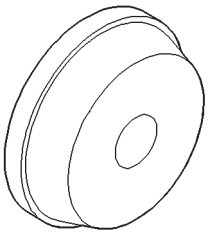

Installer L-4520

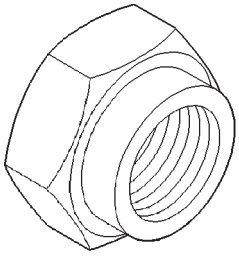

Starter Nut L-4439

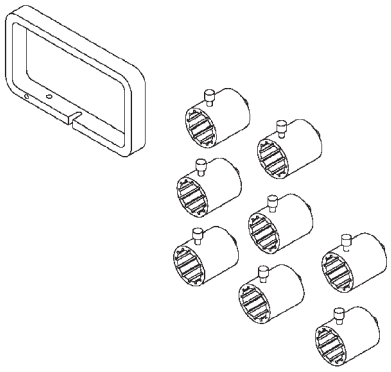

End Play Socket Set 8266

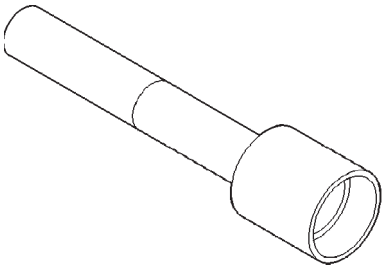

Transfer Shaft Remover-Installer L-4512

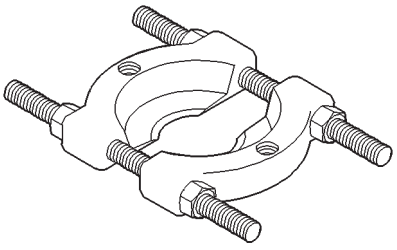

Bearing Splitter P-334

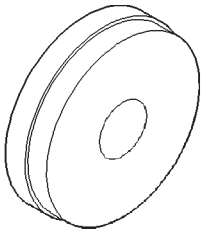

Bearing Cup Remover L-4517

ACCUMULATOR

DESCRIPTION

The accumulator (Fig. 105) is a hydraulic device that has the sole purpose of cushioning the application of a band or clutch. The accumulator consists of a dual-land piston and a spring located in a bore in the transmission case.

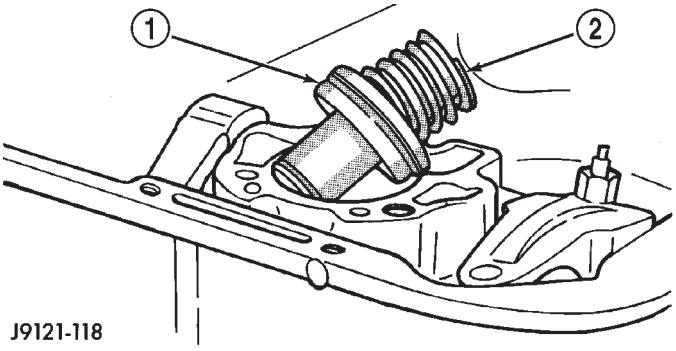

Fig. 105 Accumulator

1 - ACCUMULATOR PISTON
2 - PISTON SPRING

OPERATION

Line pressure is directed between the lands of the piston (Fig. 106), bottoming it against the accumulator plate. The accumulator stays in this position after the transmission is placed into a Drive position. When the 1-2 upshift occurs (Fig. 107), line pressure is directed to the large end of the piston and then to the kickdown servo. As the line pressure reaches the accumulator, the combination of spring pressure and line pressure forces the piston away from the accumulator plate. This causes a balanced pressure situation, which results in a cushioned band application. After the kickdown servo has become immovable, line pressure will finish pushing the accumulator up into its bore. When the large end of the accumulator piston is seated in its bore, the band or clutch is fully applied.

NOTE: The accumulator is shown in the inverted position for illustrative purposes.

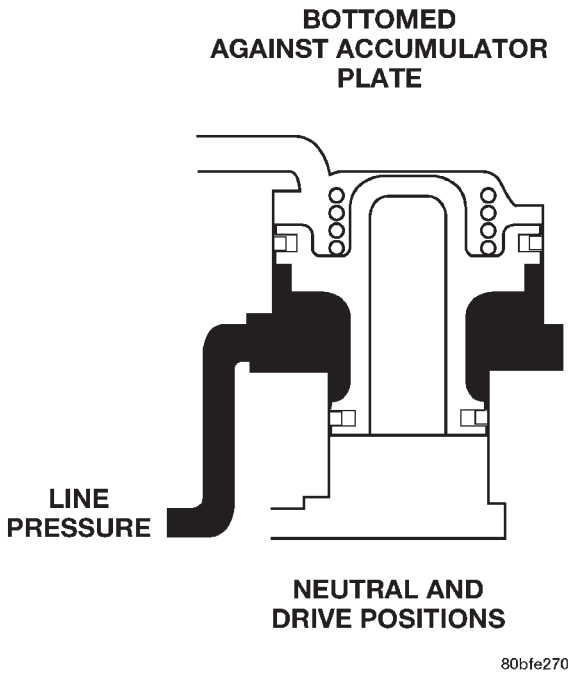

Fig. 106 Accumulator in Neutral and Drive Positions

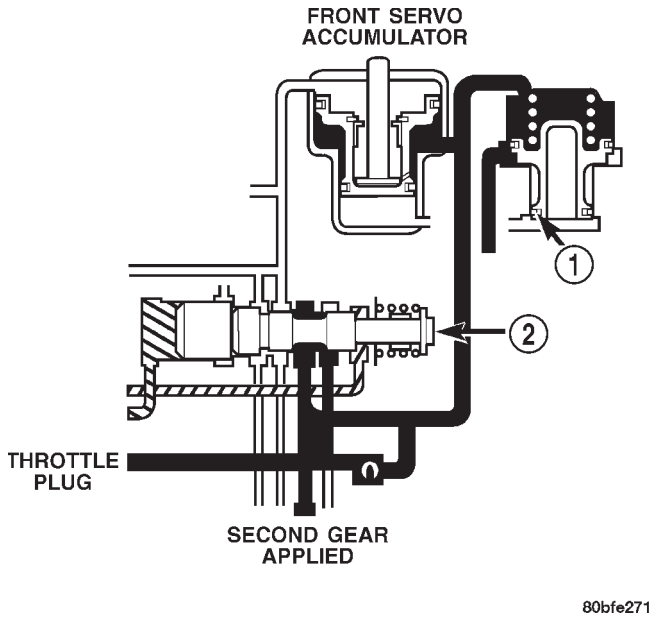

Fig. 107 Accumulator in Second Gear Position

1 - BOTTOM IN BORE
2 - SHUTTLE VALVE

BANDS

DESCRIPTION

KICKDOWN (FRONT) BAND

DESCRIPTION

The kickdown, or “front”, band (Fig. 108) holds the common sun gear of the planetary gear sets. The front (kickdown) band is made of steel, and faced on its inner circumference with a friction-type lining. One end of the band is anchored to the transmission case, and the other is acted on with a pushing force by a servo piston. The front band is a single-wrap design (the band does not completely encompass/ wrap the drum that it holds).

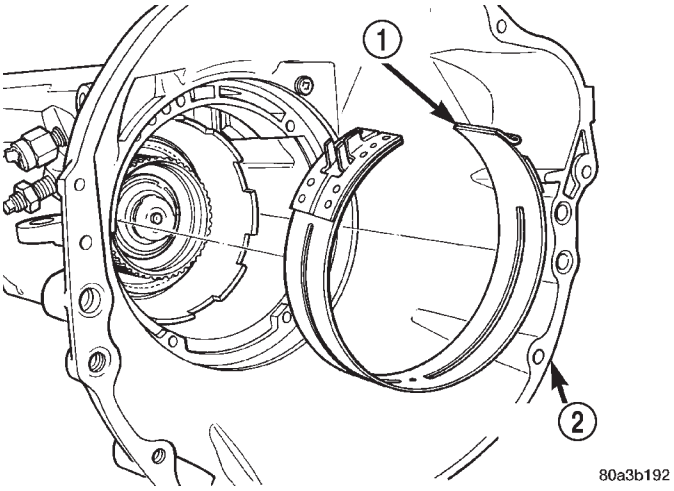

Fig. 108 Front Band—Typical

1 - FRONT BAND
2 - TRANSMISSION HOUSING

OPERATION

The kickdown band holds the common sun gear of the planetary gear sets by applying and holding the front clutch retainer, which is splined to the sun gear driving shell, and in turn splined directly to the sun gear. The application of the band by the servo is typically done by an apply lever and link bar.

OPERATION

LOW/REVERSE (REAR) BAND

DESCRIPTION

The low/reverse band, or “rear”, band (Fig. 109) is similar in appearance and operation to the front band. The rear band is also a single-wrap design (the band does not completely encompass/wrap the drum that it holds).

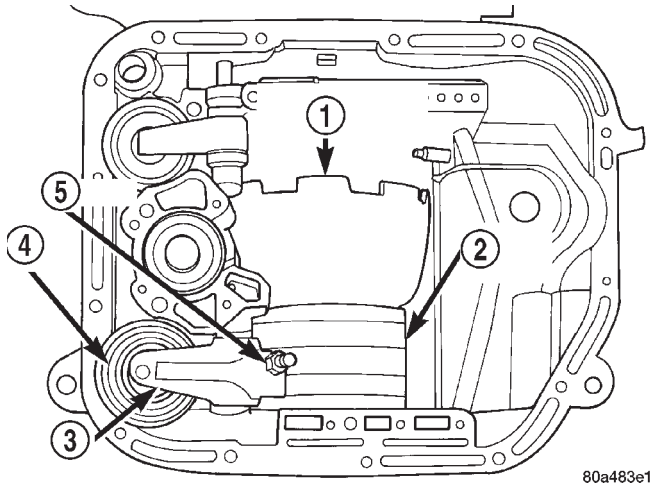

Fig. 109 Rear Band

1 - PLANETARY GEARTRAIN
2 - REAR BAND
3 - LEVER
4 - SERVO
5 - ADJUSTER

OPERATION

The rear band holds the rear planet carrier stationary by being mounted around and applied to the low/reverse drum.

ADJUSTMENTS

ADJUSTMENT - FRONT BAND

The front (kickdown) band adjusting screw is located on the left side of the transmission case above the manual valve and throttle valve levers.

(1) Disconnect battery negative cable.
(2) Remove air cleaner assembly.
(3) Loosen band adjusting screw locknut (Fig. 110). Then back locknut off 3-5 turns. Be sure adjusting screw turns freely in case. Apply lubricant to screw threads if necessary.
(4) Tighten band adjusting screw to 8 N·m (72 in. lbs.).
(5) Back off front band adjusting screw 2¼ turns.
(6) Hold adjuster screw in position and tighten locknut to 47 N·m (35 ft. lbs.) torque.
(7) Install air cleaner assembly.
(8) Connect battery negative cable.

ADJUSTMENTS - REAR BAND

The transmission oil pan must be removed for access to the rear (low/reverse) band adjusting screw.

(1) Raise vehicle.

BANDS (Continued)

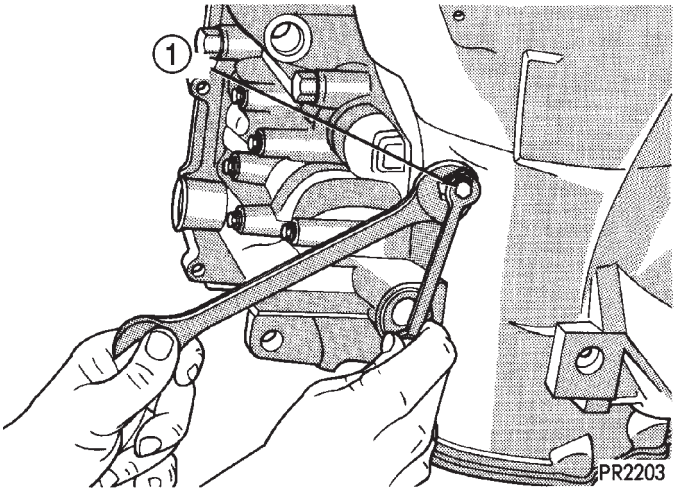

Fig. 110 Front (Kickdown) Band Adjustment Location

1 - KICKDOWN BAND ADJUSTING SCREW

(2) Remove transaxle oil pan and drain fluid (Fig. 111) (Fig. 112).

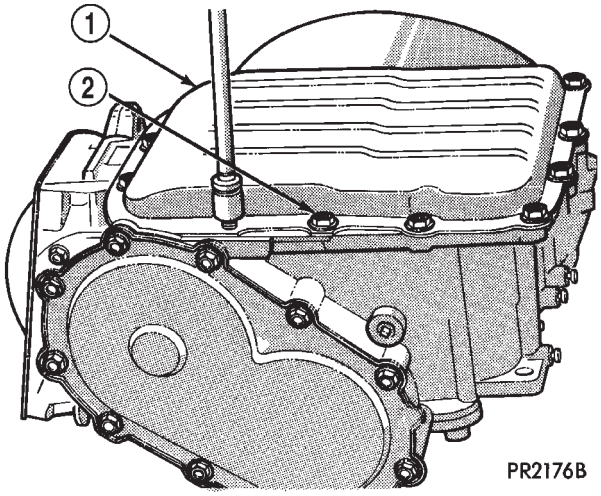

Fig. 111 Transaxle Oil Pan Bolts

1 - TRANSAXLE OIL PAN
2 - OIL PAN BOLTS

(3) Loosen band adjusting screw locknut 5-6 turns. Be sure adjusting screw turns freely in lever.

(4) Tighten adjusting screw to 5 N·m (41 in. lbs.) (Fig. 113).

(5) Back off adjusting screw 3½ turns.

(6) Hold adjusting screw in place and tighten locknut to 14 N·m (125 ft. lbs.) torque.

(7) Install a bead of Mopar® Silicone Rubber Adhesive Sealant to the oil pan and install to case immediately.

(8) Install oil pan-to-case bolts and torque to 19 N·m (165 in. lbs.).

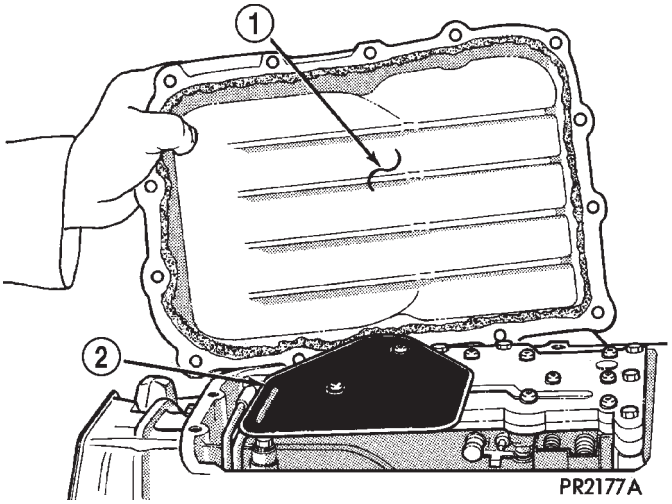

Fig. 112 Transaxle Oil Pan

1 - TRANSAXLE OIL PAN
2 - OIL FILTER

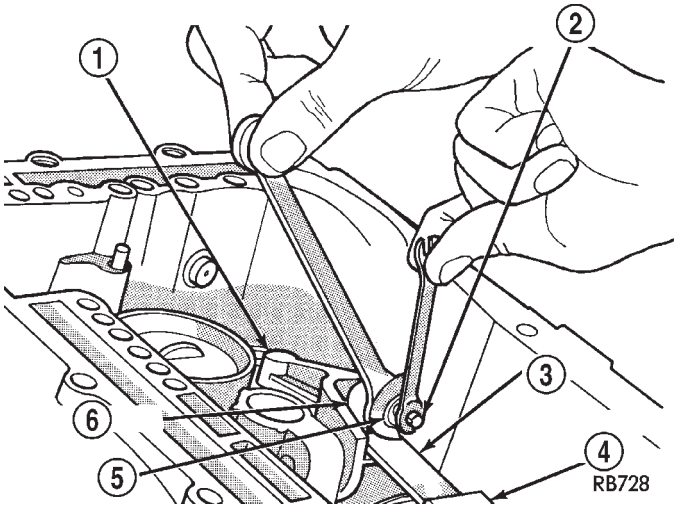

Fig. 113 Adjust Low/Reverse Band

1 - LOW-REVERSE BAND LEVER
2 - ADJUSTING SCREW
3 - STRUT
4 - LOW-REVERSE BAND
5 - LOCK NUT
6 - LEVER (SHORT)

(9) Lower vehicle and refill transmission with Mopar® ATF Plus 4, Type 9602, fluid.

CLUTCH - FRONT

DESCRIPTION

The front clutch assembly (Fig. 119) is composed of the front clutch retainer, pressure plate, clutch plates, driving discs, piston, piston return spring, return spring retainer, and snap-rings. The front clutch is the forward-most component in the transmission geartrain and is directly behind the oil pump. It is considered a driving component.

NOTE: The number of discs and plates may vary with each engine and vehicle combination.

OPERATION

To apply the clutch, pressure is applied between the clutch retainer and piston. The fluid pressure is provided by the oil pump, transferred through the control valves and passageways, and enters the clutch through the hub of the reaction shaft support. With pressure applied between the clutch retainer and piston, the piston moves away from the clutch retainer and compresses the clutch pack. This action applies the clutch pack, allowing torque to flow through the input shaft into the driving discs, and into the clutch plates and pressure plate that are lugged to the clutch retainer. The waved snap-ring is used to cushion the application of the clutch pack. In some transmissions, the snap-ring is selective and used to adjust clutch pack clearance.

When pressure is released from the piston, the spring returns the piston to its fully released position and disengages the clutch. The release spring also helps to cushion the application of the clutch assembly. When the clutch is in the process of being released by the release spring, fluid flows through a vent and one-way ball-check-valve located in the clutch retainer. The check-valve is needed to eliminate the possibility of plate drag caused by centrifugal force acting on the residual fluid trapped in the clutch piston retainer.

DISASSEMBLY

(1) Remove front clutch waved snap ring using a suitable screwdriver (Fig. 114).

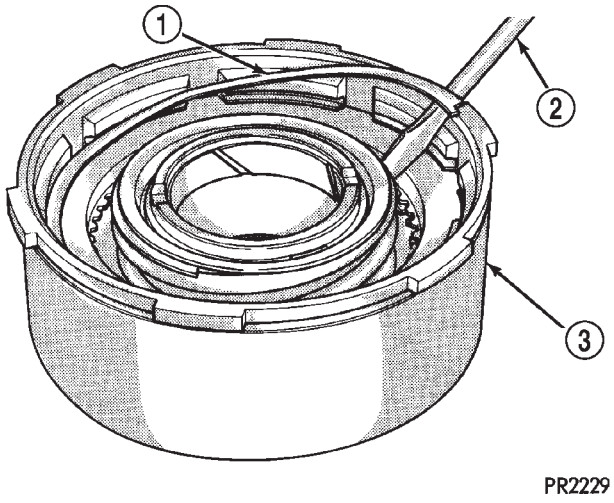

Fig. 114 Front Clutch Waved Snap Ring

1 - WAVED SNAP RING
2 - SCREWDRIVER
3 - FRONT CLUTCH ASSEMBLY

(2) Remove waved snap ring and reaction plate (Fig. 115).

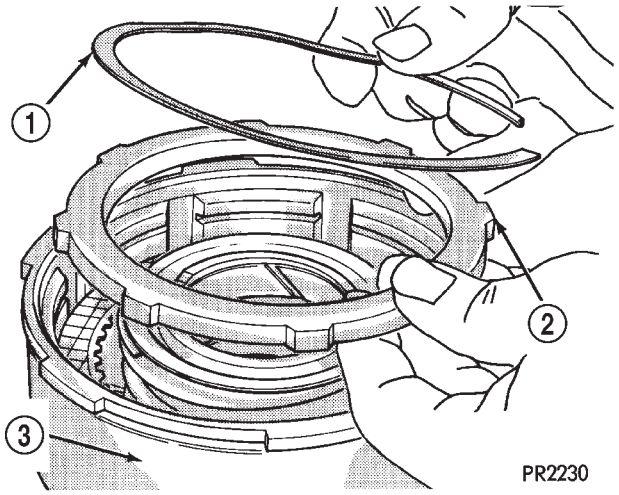

Fig. 115 Thick Steel Plate and Waved Snap Ring

1 - WAVED SNAP RING
2 - THICK STEEL PLATE
3 - FRONT CLUTCH RETAINER

CLUTCH - FRONT (Continued)

(3) Remove clutch pack (Fig. 116).

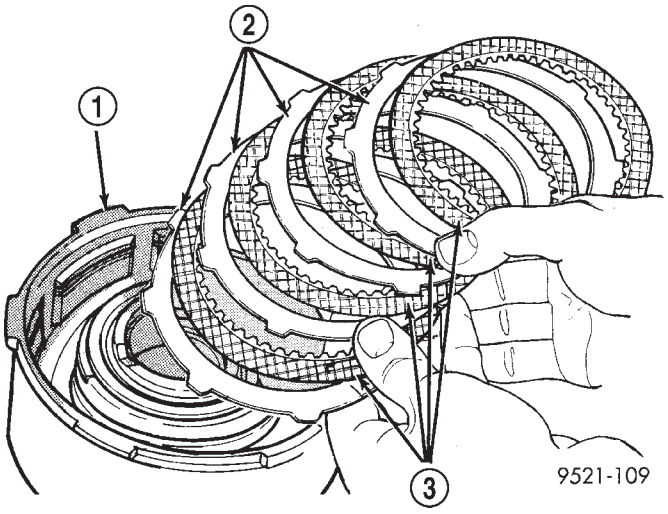

Fig. 116 Front Clutch (4-Disc Shown)

1 - FRONT CLUTCH RETAINER
2 - CLUTCH PLATES
3 - DRIVING DISCS

(4) Using tool C3575A, compress front clutch return spring and remove snap ring (Fig. 117).

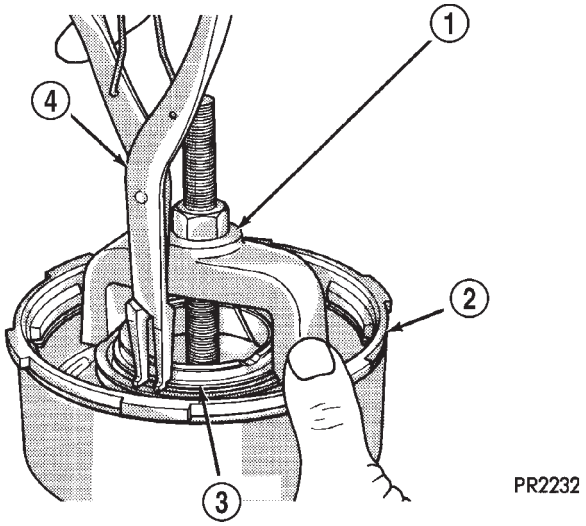

Fig. 117 Front Clutch Return Spring Snap Ring

1 - COMPRESSOR TOOL C-3575-A
2 - FRONT CLUTCH RETAINER
3 - SNAP RING
4 - SNAP RING PLIERS

(5) Remove retainer, return spring and piston (Fig. 118) (Fig. 119).

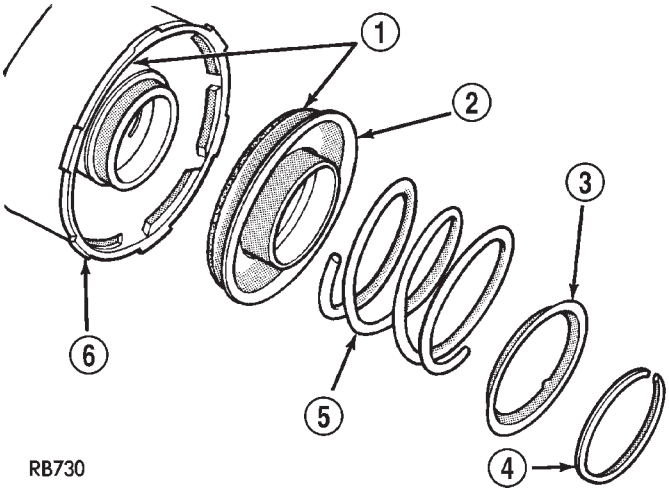

Fig. 118 Front Clutch Return Spring and Piston

1 - LIP SEALS
2 - PISTON
3 - RETURN SPRING RETAINER
4 - SNAP RING
5 - PISTON RETURN SPRING
6 - FRONT CLUTCH RETAINER

CLUTCH - FRONT (Continued)

ASSEMBLY

(1) Install front clutch piston, return spring, and retainer (Fig. 119) (Fig. 120).

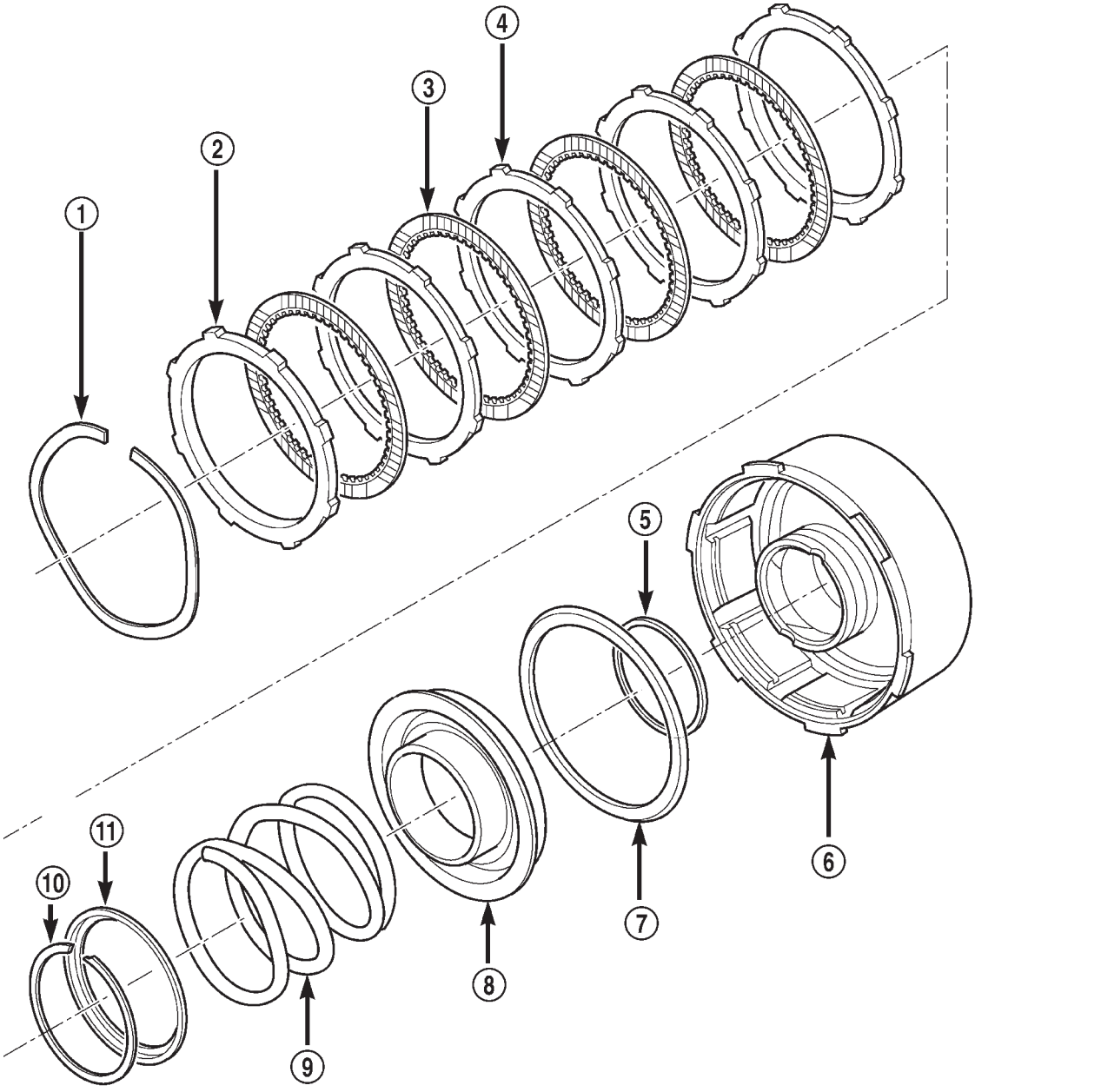

Fig. 119 Front Clutch Assembly

1 - SNAP RING (WAVE)
2 - REACTION PLATE
3 - CLUTCH DISC
4 - CLUTCH PLATE
5 - SEAL
6 - CLUTCH RETAINER
7 - SEAL
8 - PISTON
9 - SPRING
10 - SNAP RING
11 - SPRING RETAINER

CLUTCH - FRONT (Continued)

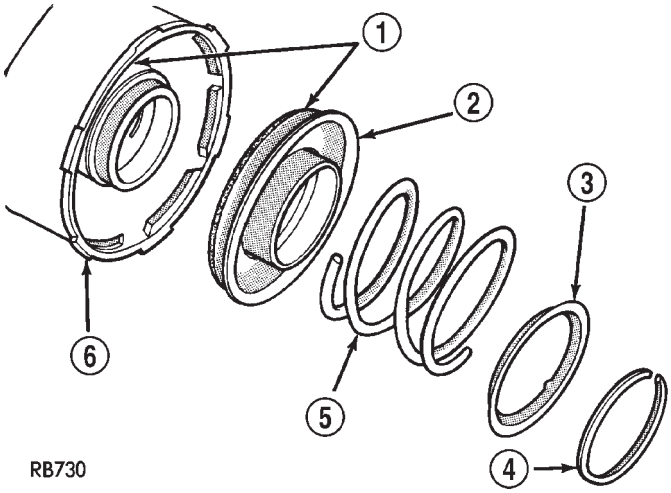

Fig. 120 Front Clutch Return Spring and Piston

1 - LIP SEALS
2 - PISTON
3 - RETURN SPRING RETAINER
4 - SNAP RING
5 - PISTON RETURN SPRING
6 - FRONT CLUTCH RETAINER

(2) Compress front clutch return spring using Tool C3575A and install snap ring (Fig. 121).

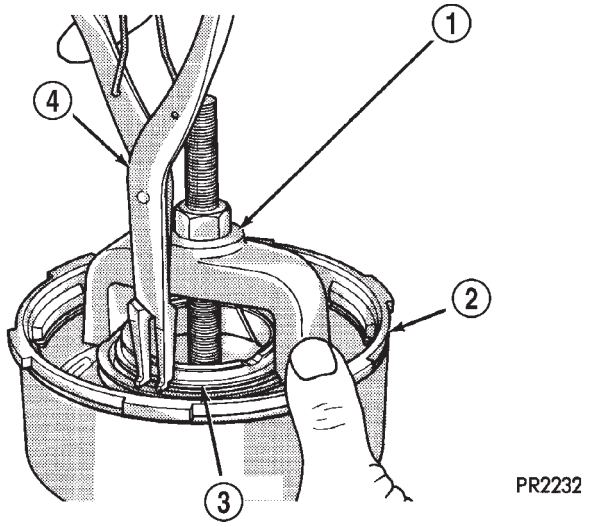

Fig. 121 Front Clutch Return Spring Snap Ring

1 - COMPRESSOR TOOL C-3575-A
2 - FRONT CLUTCH RETAINER
3 - SNAP RING
4 - SNAP RING PLIERS

(3) Install front clutch pack (Fig. 122).

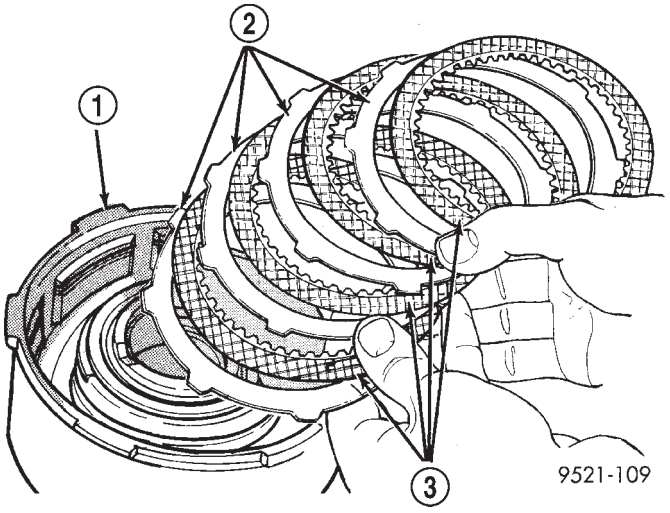

Fig. 122 Front Clutch (4-Disc Shown)

1 - FRONT CLUTCH RETAINER
2 - CLUTCH PLATES
3 - DRIVING DISCS

(4) Install reaction plate and waved snap ring (Fig. 123) (Fig. 124).

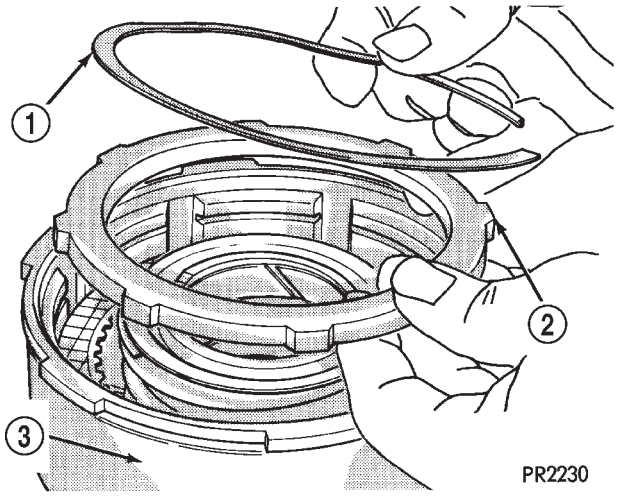

Fig. 123 Thick Steel Plate and Waved Snap Ring

1 - WAVED SNAP RING
2 - THICK STEEL PLATE
3 - FRONT CLUTCH RETAINER

CLUTCH - FRONT (Continued)

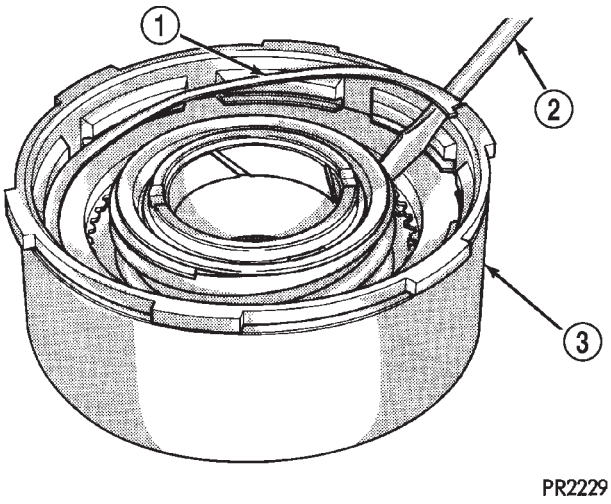

Fig. 124 Front Clutch Waved Snap Ring

1 - WAVED SNAP RING
2 - SCREWDRIVER
3 - FRONT CLUTCH ASSEMBLY

(5) Using feeler gauge, measure front clutch clearance (Fig. 125). **Front clutch clearance should be within 1.27-2.79 mm (0.050-0.110 in.) and is not adjustable.**

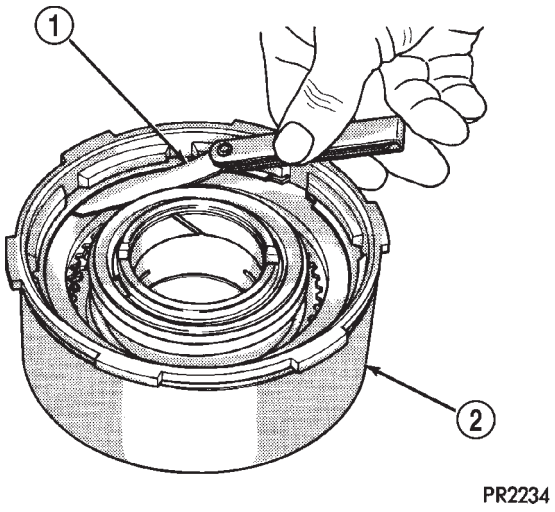

Fig. 125 Measuring Front Clutch Plate Clearance

1 - FEELER GAUGE
2 - FRONT CLUTCH ASSEMBLY

CLUTCH - REAR

DESCRIPTION

The rear clutch assembly (Fig. 132) is composed of the input shaft, rear clutch retainer, pressure plate, clutch plates, driving discs, piston, Belleville spring, and snap-rings. The Belleville spring acts as a lever to multiply the force applied on to it by the apply piston. The increased apply force on the rear clutch pack, in comparison to the front clutch pack, is needed to hold against the greater torque load imposed onto the rear pack. The rear clutch is directly behind the front clutch and is considered a driving component.

NOTE: The number of discs and plates may vary with each engine and vehicle combination.

OPERATION

To apply the clutch, pressure is applied between the clutch retainer and piston. The fluid pressure is provided by the oil pump, transferred through the control valves and passageways, and enters the clutch through the hub of the reaction shaft support. With pressure applied between the clutch retainer and piston, the piston moves away from the clutch retainer and compresses the clutch pack. This action applies the clutch pack, allowing torque to flow through the input shaft into the driving discs, and into the clutch plates and pressure plate that are lugged to the clutch retainer. The waved snap-ring is used to cushion the application of the clutch pack. In some transmissions, the snap-ring is selective and used to adjust clutch pack clearance.

When pressure is released from the piston, the spring returns the piston to its fully released position and disengages the clutch. The release spring also helps to cushion the application of the clutch assembly. When the clutch is in the process of being released by the release spring, fluid flows through a vent and one-way ball-check-valve located in the clutch retainer. The check-valve is needed to eliminate the possibility of plate drag caused by centrifugal force acting on the residual fluid trapped in the clutch piston retainer.

CLUTCH - REAR (Continued)

DISASSEMBLY

(1) Remove rear clutch snap ring (Fig. 126) (Fig. 132).

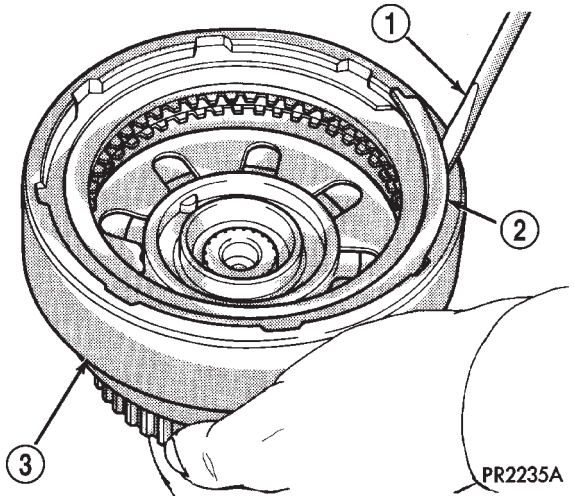

Fig. 126 Rear Clutch Outer Snap Ring

1 - SCREWDRIVER
2 - SNAP RING
3 - REAR CLUTCH ASSEMBLY

(2) Remove rear clutch pack (Fig. 127).

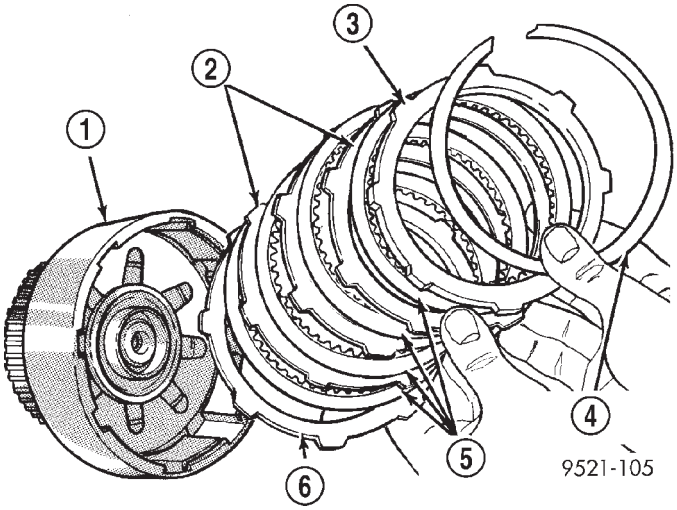

Fig. 127 Rear Clutch (4-Disc Shown)

1 - REAR CLUTCH RETAINER
2 - CLUTCH PLATES
3 - THICK STEEL PLATE
4 - SNAP RING (SELECTIVE)
5 - DRIVING DISCS
6 - PRESSURE PLATE

(3) Remove piston/belleville snap ring (Fig. 128).

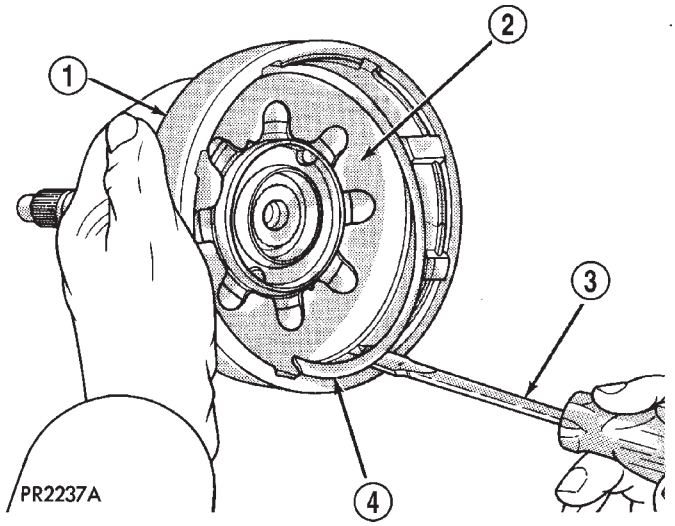

Fig. 128 Piston Spring Waved Snap Ring

1 - REAR CLUTCH RETAINER
2 - PISTON SPRING
3 - SCREWDRIVER
4 - WAVED SNAP RING

CLUTCH - REAR (Continued)

(4) Remove rear clutch piston and belleville spring (Fig. 129).

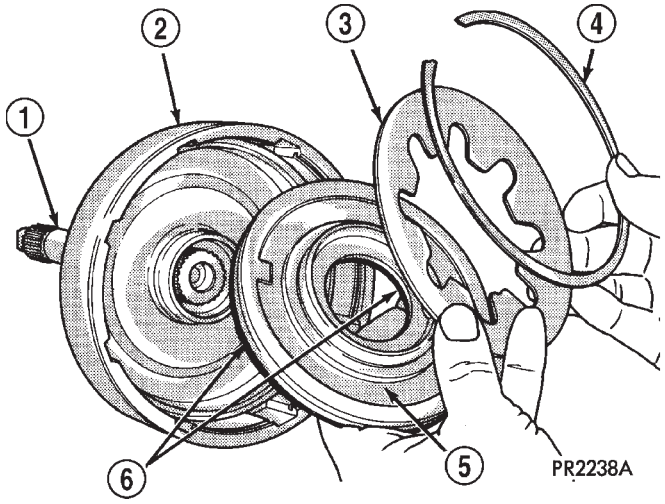

Fig. 129 Rear Clutch Piston and Piston Spring

1 - INPUT SHAFT
2 - REAR CLUTCH RETAINER
3 - PISTON SPRING
4 - WAVED SNAP RING
5 - PISTON
6 - PISTON SEALS

Remove input shaft-to-clutch retainer snap ring (Fig. 130) (Fig. 131). Press input shaft out of retainer if necessary.

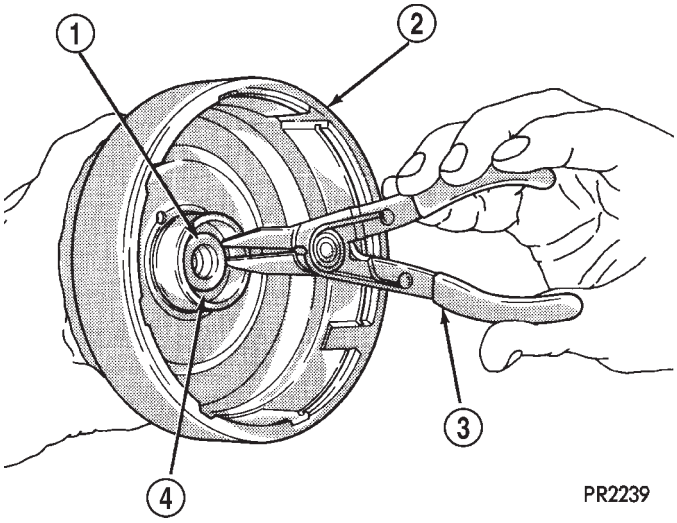

Fig. 130 Input Shaft Snap Ring

1 - INPUT SHAFT
2 - REAR CLUTCH RETAINER
3 - SNAP RING PLIERS
4 - SNAP RING

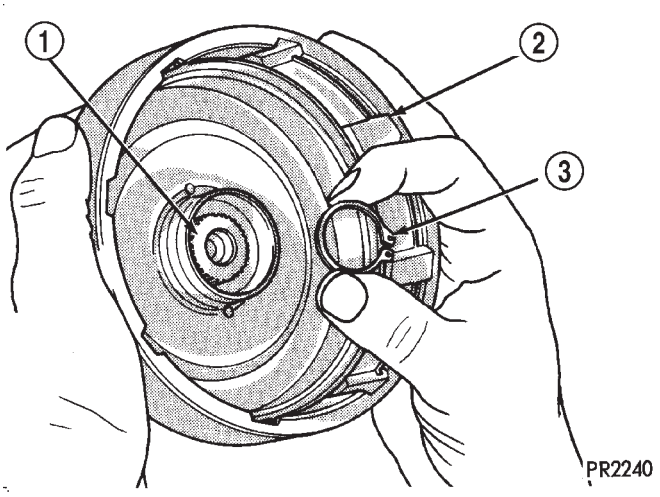

Fig. 131 Input Shaft Snap Ring

1 - INPUT SHAFT
2 - REAR CLUTCH RETAINER
3 - SNAP RING

CLUTCH - REAR (Continued)

ASSEMBLY

(1) Install input shaft-to-clutch retainer snap ring (Fig. 133) (Fig. 134) (Fig. 132).

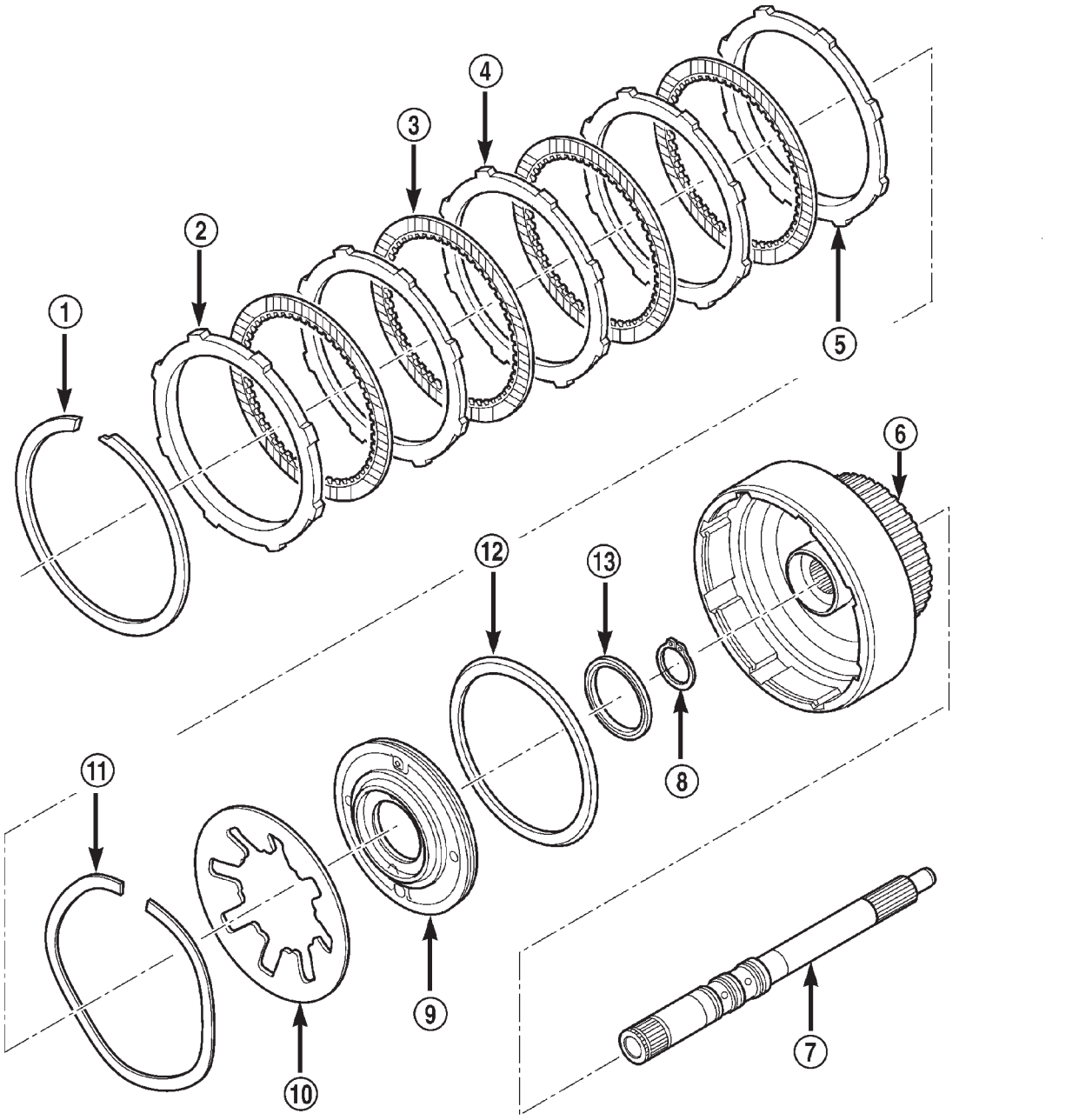

Fig. 132 Rear Clutch Assembly

1 - SNAP RING (SELECT)
2 - REACTION PLATE
3 - CLUTCH DISC
4 - CLUTCH PLATE
5 - REACTION PLATE
6 - CLUTCH RETAINER
7 - INPUT SHAFT
8 - SNAP RING
9 - PISTON
10 - SPRING
11 - SNAP RING (WAVE)
12 - SEAL
13 - SEAL

CLUTCH - REAR (Continued)

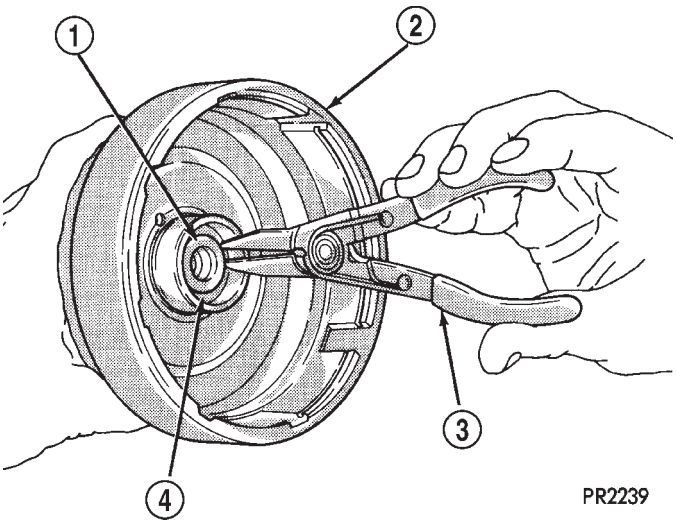

Fig. 133 Install Input Shaft Snap Ring

1 - INPUT SHAFT
2 - REAR CLUTCH RETAINER
3 - SNAP RING PLIERS
4 - SNAP RING

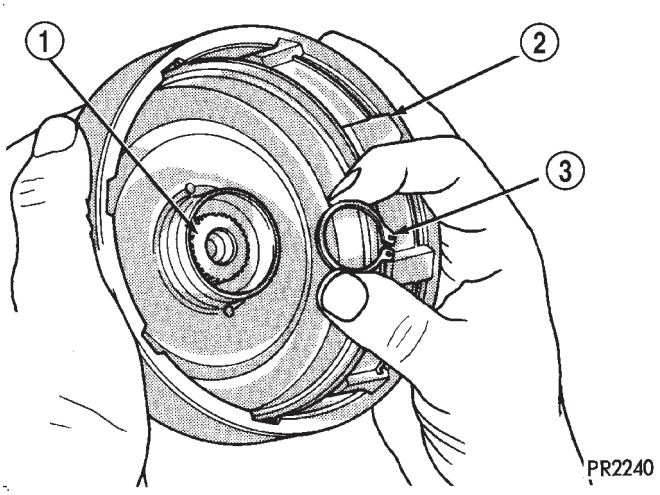

Fig. 134 Input Shaft Snap Ring

1 - INPUT SHAFT
2 - REAR CLUTCH RETAINER
3 - SNAP RING

(2) Install rear clutch piston, belleville spring and waved snap ring (Fig. 135). Install snap ring using a suitable screwdriver (Fig. 136).

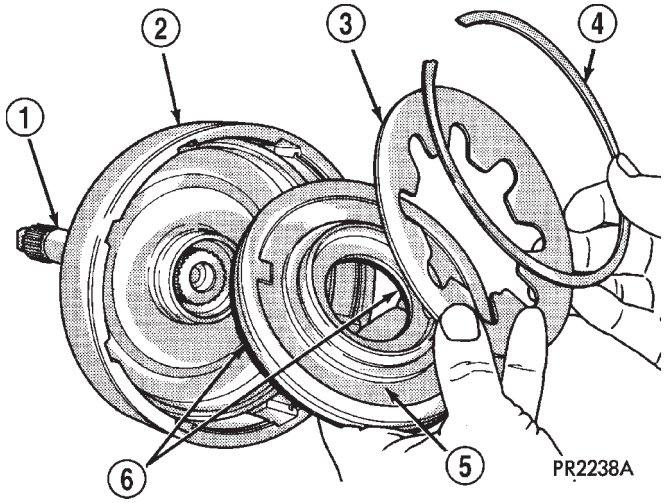

Fig. 135 Rear Clutch Piston and Piston Spring

1 - INPUT SHAFT
2 - REAR CLUTCH RETAINER
3 - PISTON SPRING
4 - WAVED SNAP RING
5 - PISTON
6 - PISTON SEALS

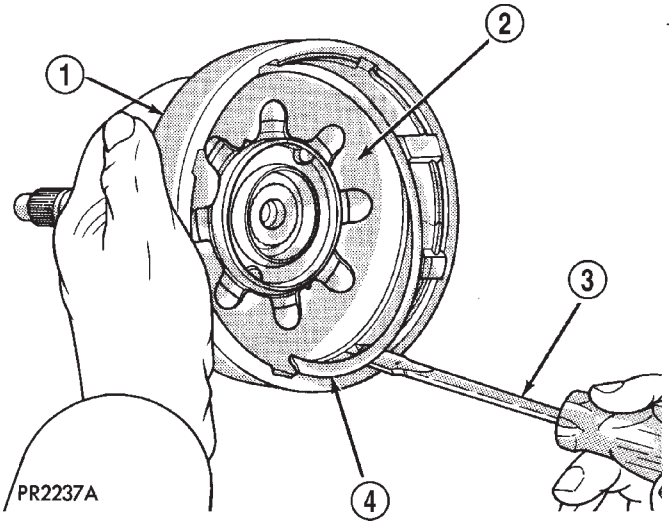

Fig. 136 Piston Spring Waved Snap Ring

1 - REAR CLUTCH RETAINER
2 - PISTON SPRING
3 - SCREWDRIVER
4 - WAVED SNAP RING

CLUTCH - REAR (Continued)

(3) Install rear clutch pack (Fig. 137).

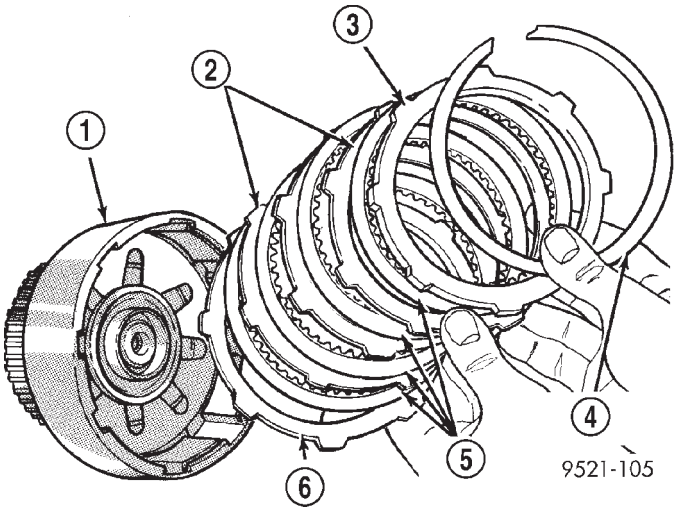

Fig. 137 Rear Clutch (4-Disc Shown)

1 - REAR CLUTCH RETAINER
2 - CLUTCH PLATES
3 - THICK STEEL PLATE
4 - SNAP RING (SELECTIVE)
5 - DRIVING DISCS
6 - PRESSURE PLATE

(4) Install snap ring using a suitable screwdriver (Fig. 138).

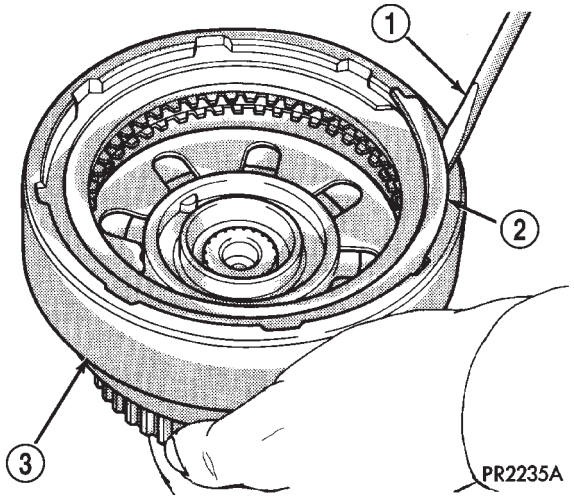

Fig. 138 Rear Clutch Outer Snap Ring

1 - SCREWDRIVER
2 - SNAP RING
3 - REAR CLUTCH ASSEMBLY

(5) Using feeler gauges, measure rear clutch clearance (Fig. 139). **Rear clutch clearance should be within 0.71-1.10 mm (0.028-0.043 in.).**

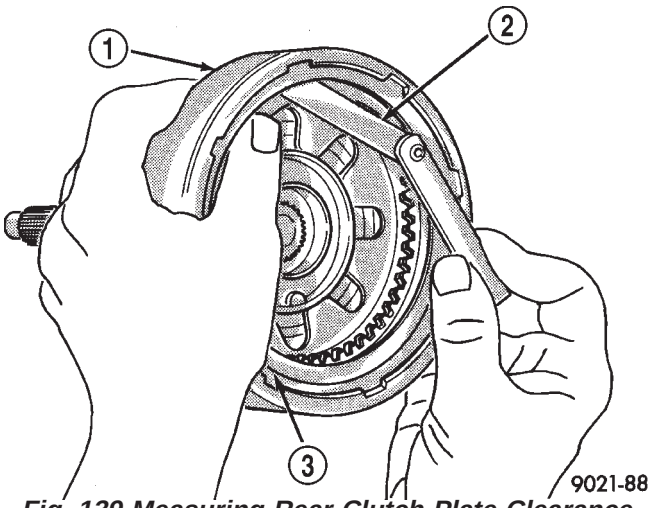

Fig. 139 Measuring Rear Clutch Plate Clearance

1 - REAR CLUTCH ASSEMBLY
2 - FEELER GAUGE
3 - SELECTIVE SNAP RING

FINAL DRIVE

DISASSEMBLY

NOTE: The differential is serviced as an assembly. Service is limited to bearing cups and cones. Any other failure must be repaired by differential assembly and transfer shaft replacement.

(1) Remove transfer shaft.
(2) Measure differential bearing turning torque. (Refer to 21 - TRANSMISSION/TRANSAXLE/AUTOMATIC - 31TH/BEARINGS - ADJUSTMENTS)
(3) Remove adapter plate seal.
(4) Remove differential cover-to-transaxle case bolts (Fig. 140).

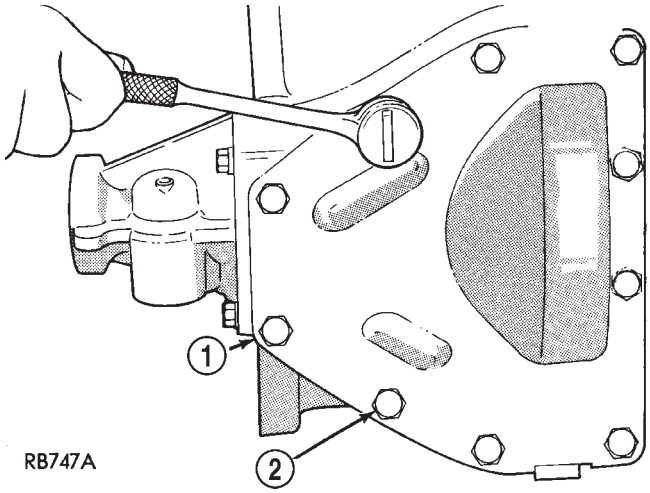

Fig. 140 Differential Cover Bolts

1 - DIFFERENTIAL COVER
2 - DIFFERENTIAL COVER BOLT

FINAL DRIVE (Continued)

(5) Remove differential cover (Fig. 141). Clean surfaces of old adhesive prior to reassembly.

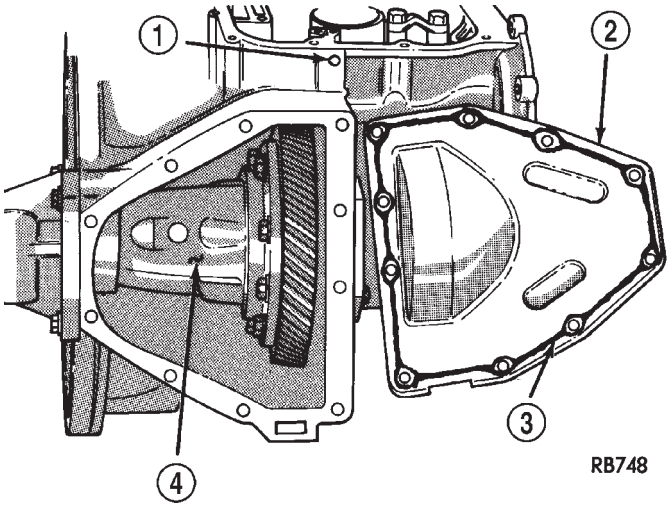

Fig. 141 Remove Differential Cover

1 - GOVERNOR PRESSURE PLUG
2 - DIFFERENTIAL COVER
3 - 1/8 INCH BEAD OF R T V SEALANT
4 - DIFFERENTIAL ASSEMBLY

(6) Remove bearing retainer axle seal using slide hammer C-637 and Tool 7794A, or Tool L-4518.

(7) Remove differential bearing retainer-to-transaxle case bolts (Fig. 142).

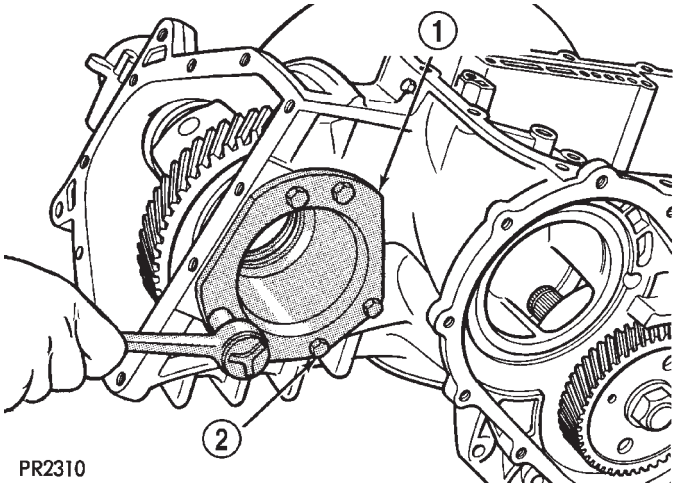

Fig. 142 Differential Bearing Retainer Bolts

1 - DIFFERENTIAL BEARING RETAINER
2 - DIFFERENTIAL BEARING RETAINER BOLTS (6)

(8) Remove bearing retainer from transaxle. Use to L-4435 to aid in removal by rotating retainer out of assembly (Fig. 143). Clean surfaces of old adhesive prior to reassembly.

(9) Remove adapter plate-to-transaxle case bolts.

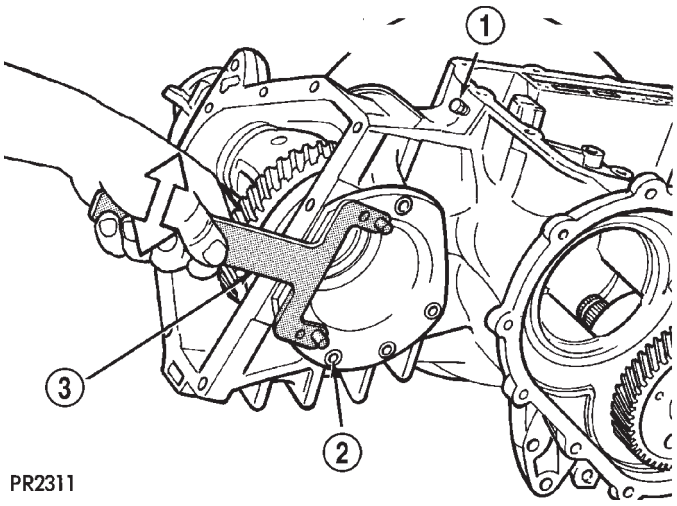

Fig. 143 Remove Bearing Retainer Using Tool L-4435

1 - GOVERNOR PRESSURE PLUG
2 - DIFFERENTIAL BEARING RETAINER
3 - SPECIAL TOOL L-4435

WARNING: HOLD ON TO DIFFERENTIAL WHILE REMOVING EXTENSION HOUSING TO PREVENT IT FROM ROLLING OUT OF TRANSAXLE.

(10) Remove extension housing from transaxle case. Use Tool L-4435 to aid in removal by rotating plate out of assembly. Clean surfaces of old adhesive prior to reassembly.

(11) Measure and record differential side gear end play using dial indicator C-3339 and Tool C-4995 as shown in (Fig. 144) and (Fig. 145). **Side gear end play must be within 0.001-0.013 in. Replace differential assembly if outside this range.**

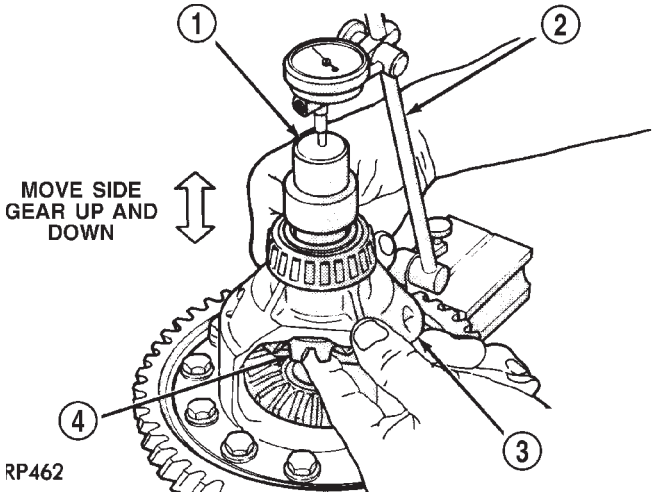

Fig. 144 Checking Side Gear End Play

1 - SPECIAL TOOL C-4996 (NOTE POSITION)
2 - DIAL INDICATOR SET
3 - DIFFERENTIAL ASSEMBLY
4 - SIDE GEAR

FINAL DRIVE (Continued)

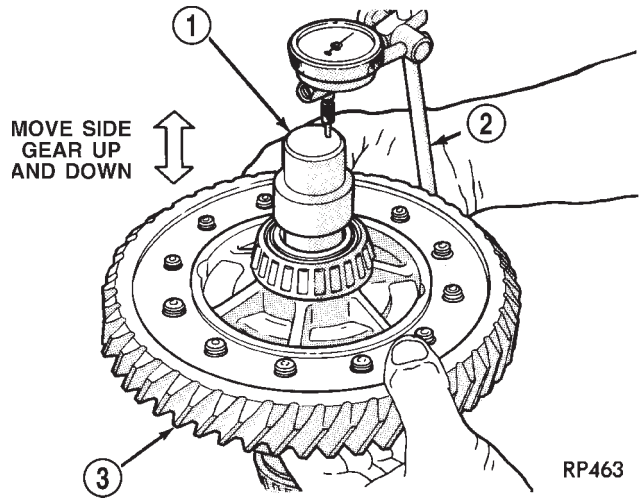

Fig. 145 Checking Side Gear End Play (Typical)

1 - SPECIAL TOOL C-4996 (NOTE POSITION)
2 - DIAL INDICATOR SET
3 - DIFFERENTIAL ASSEMBLY

(12) Remove differential bearing cone (from extension housing side) using Tool C-293, and adapters C-293-3, and C-293-36 (Fig. 146).

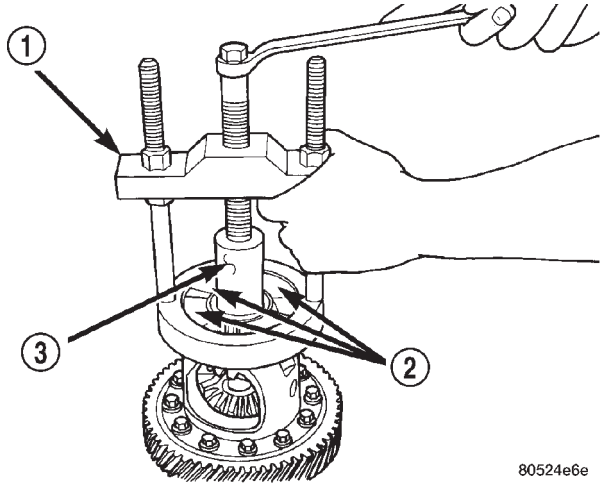

Fig. 146 Remove Differential Bearing Cone (Extension Housing Side)

1 - SPECIAL TOOL C-293
2 - SPECIAL TOOL C-293-36
3 - SPECIAL TOOL C-293-3

(13) Set up tools as shown in (Fig. 147) and (Fig. 148) to facilitate differential bearing removal from ring gear side.

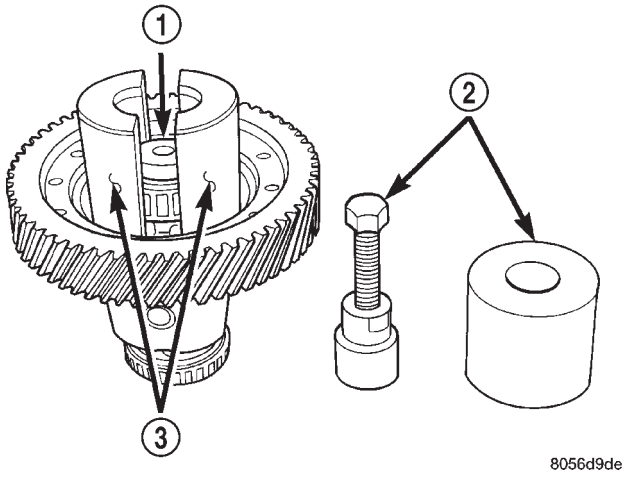

Fig. 147 Differential Bearing Removal Set-Up (Ring Gear Side)

1 - SPECIAL TOOL L-4539-2
2 - SPECIAL TOOL 5048
3 - SPECIAL TOOL 5048-4

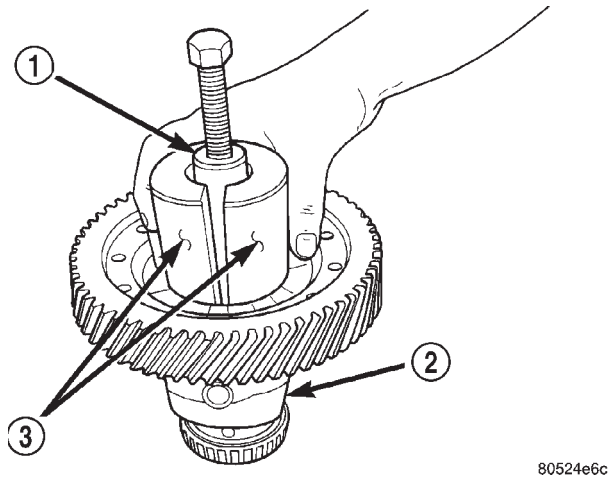

Fig. 148 Position Tool 5048 Over Button and Collets at Differential Bearing

1 - SPECIAL TO0L 5048
2 - DIFFERENTIAL
3 - SPECIAL TOOL 5048-4

FINAL DRIVE (Continued)

(14) Remove differential bearing cone (Fig. 149).

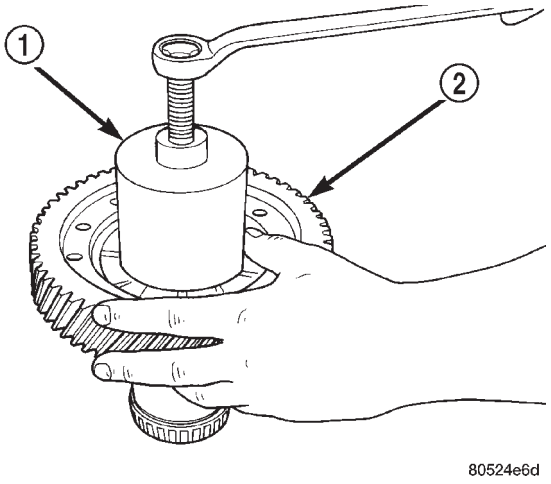

Fig. 149 Remove Differential Bearing Cone

1 - SPECIAL TOOL 5048
2 - RING GEAR

(15) Remove bearing retainer bearing cup using Tool 6062A (Fig. 150) (Fig. 151). Remove shim and oil baffle.

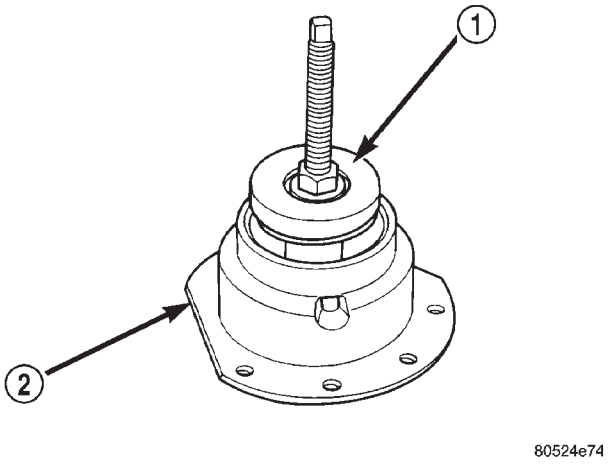

Fig. 150 Position Bearing Cup Remover Tool in Retainer

1 - SPECIAL TOOL 6062A
2 - DIFFERENTIAL BEARING RETAINER

ASSEMBLY

NOTE: The differential is serviced as an assembly. Service is limited to bearing cups and cones. Any other failure must be repaired by differential assembly and transfer shaft replacement.

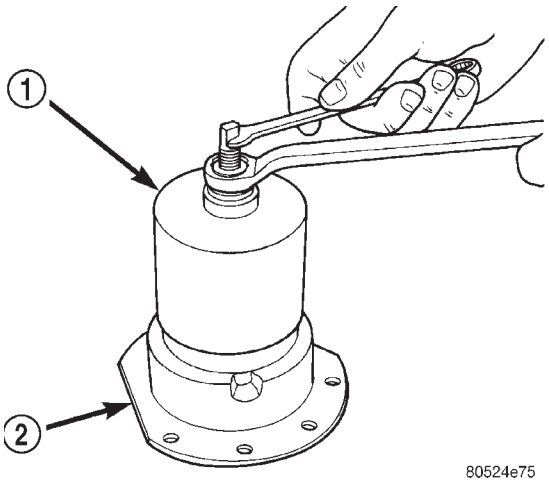

Fig. 151 Remove Bearing Cup using 6062A

1 - SPECIAL TOOL 6062A
2 - DIFFERENTIAL BEARING RETAINER

(1) Install shim and bearing cup using Tool 5052 and driver handle C-4171 (Fig. 152). Install bearing cup into extension housing using Tool 6536 and driver handle C-4171.

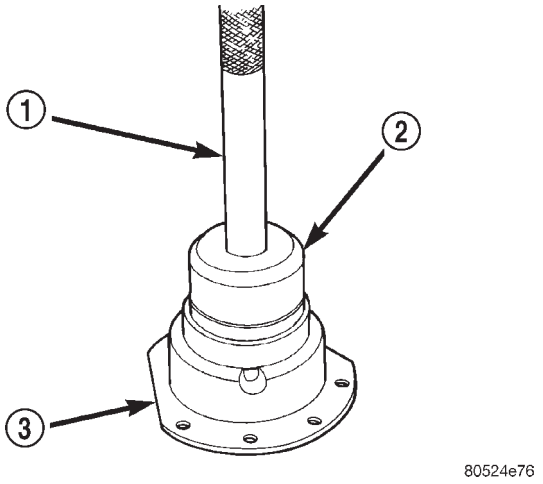

Fig. 152 Bearing Retainer Bearing Cup Installation

1 - SPECIAL TOOL C-4171
2 - SPECIAL TOOL 5052
3 - DIFFERENTIAL BEARING RETAINER

FINAL DRIVE (Continued)

(2) Position bearing cone onto differential (Fig. 153), and install bearing cone using Tool 6536 and driver handle C-4171 (Fig. 154).

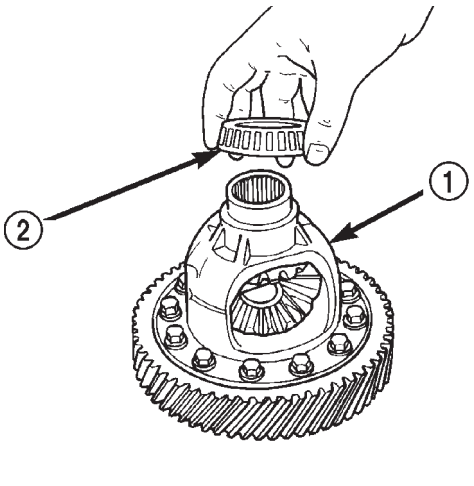

Fig. 153 Position Bearing Cone Onto Differential

1 - DIFFERENTIAL ASSEMBLY
2 - DIFFERENTIAL BEARING

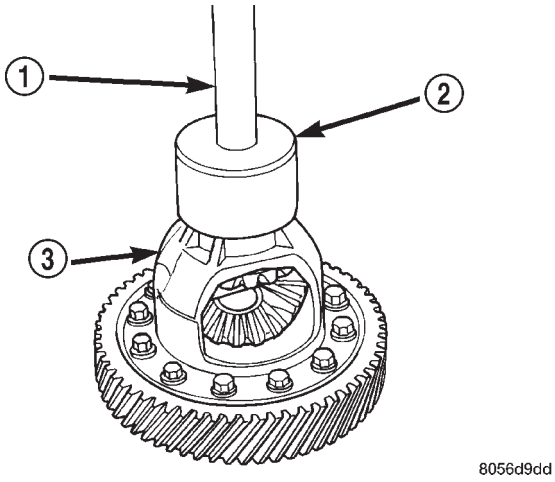

Fig. 154 Install Differential Bearing Cone

1 - SPECIAL TOOL C-4171
2 - SPECIAL TOOL 6536
3 - DIFFERENTIAL ASSEMBLY

(3) Measure side gear end play using dial indicator C-3339 and Tool C-4996 (Fig. 155) (Fig. 156). **Side gear end play must be between 0.001 and 0.013 in.**

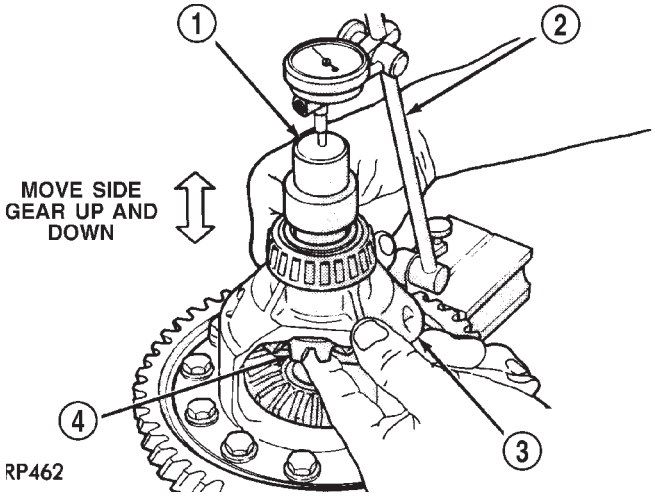

Fig. 155 Checking Side Gear End Play

1 - SPECIAL TOOL C-4996 (NOTE POSITION)
2 - DIAL INDICATOR SET
3 - DIFFERENTIAL ASSEMBLY
4 - SIDE GEAR

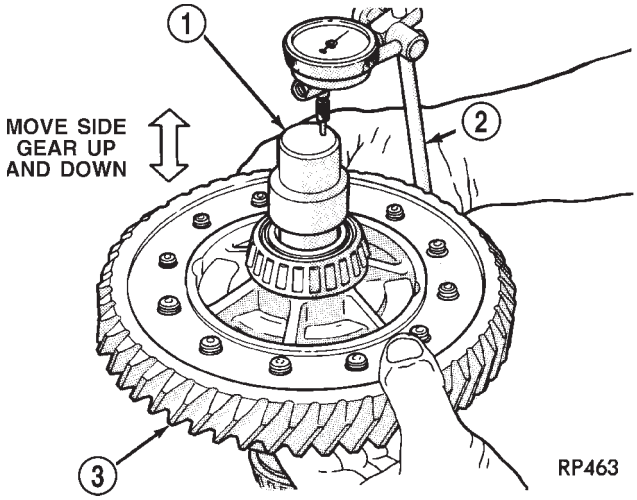

Fig. 156 Checking Side Gear End Play (Typical)

1 - SPECIAL TOOL C-4996 (NOTE POSITION)
2 - DIAL INDICATOR SET
3 - DIFFERENTIAL ASSEMBLY

FINAL DRIVE (Continued)

(4) Apply a bead of Mopar® Silicone Rubber Adhesive Sealant to the adapter plate. Load differential assembly into position and install adapter plate.

(5) Using Tool L-4435, index adapter plate until bolt holes align.

(6) Install adapter plate-to-transaxle case bolts and torque to 28 N·m (250 in. lbs.) torque.

(7) Apply a bead of Mopar® Silicone Rubber Adhesive Sealant to the differential bearing retainer (Fig. 157).

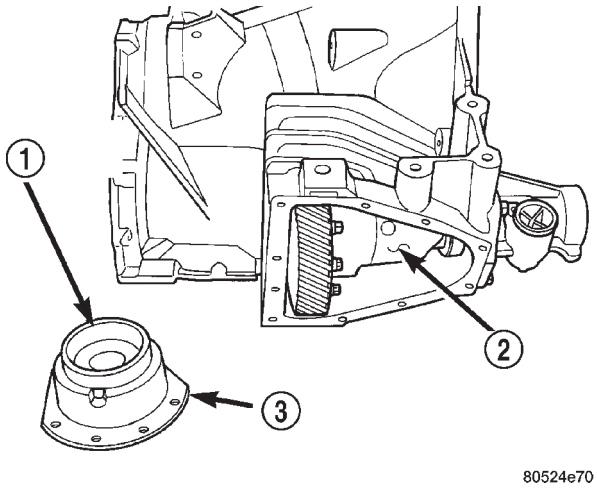

Fig. 157 Differential Bearing Retainer (Typical)

1 - DIFFERENTIAL BEARING CUP
2 - DIFFERENTIAL
3 - DIFFERENTIAL BEARING RETAINER

(8) Install bearing retainer and index using Tool L-4435 until bolt holes align (Fig. 158).

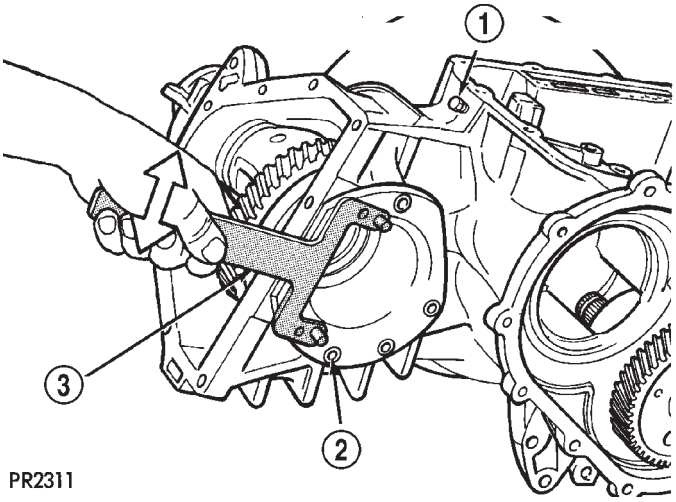

Fig. 158 Index Bearing Retainer using Tool L-4435

1 - GOVERNOR PRESSURE PLUG
2 - DIFFERENTIAL BEARING RETAINER
3 - SPECIAL TOOL L-4435

(9) Install and torque bearing retainer bolts to 34 N·m (25 ft. lbs.) torque (Fig. 159).

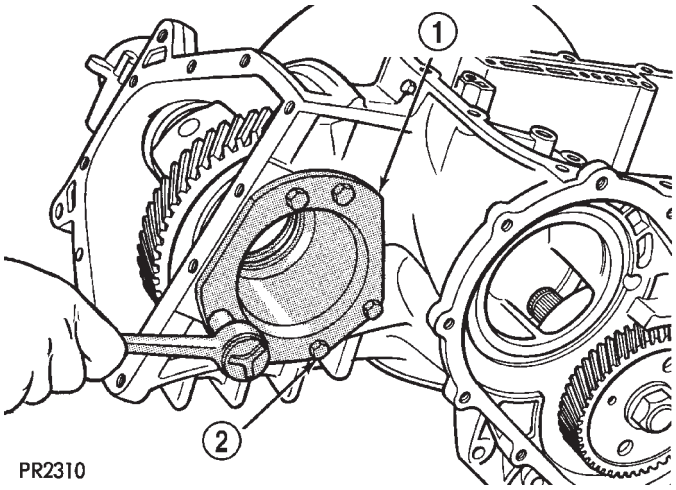

Fig. 159 Differential Bearing Retainer Bolts

1 - DIFFERENTIAL BEARING RETAINER
2 - DIFFERENTIAL BEARING RETAINER BOLTS (6)

(10) Install bearing retainer axle seal using Tool L-4520 (inverted), and driver handle C-4171 (Fig. 160).

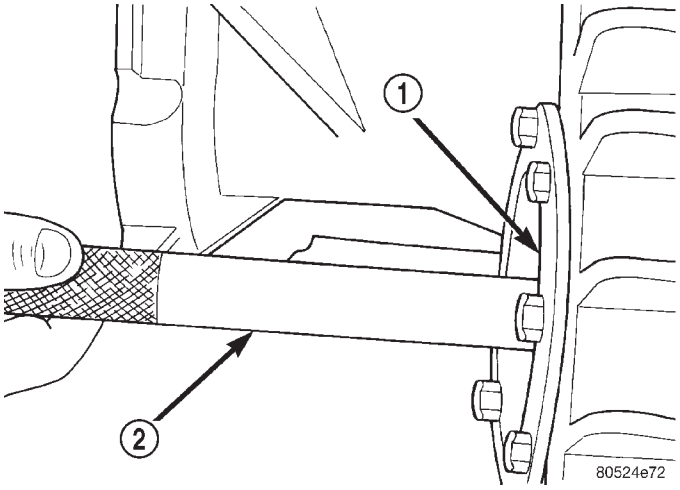

Fig. 160 Install Bearing Retainer Axle Seal

1 - SPECIAL TOOL L-4520
2 - SPECIAL TOOL C-4171

FINAL DRIVE (Continued)

(11) Install adapter plate axle seal using Tool L-4520 (inverted), and driver handle C-4171.

(12) Check differential turning torque. (Refer to 21 - TRANSMISSION/TRANSAXLE/AUTOMATIC - 31TH/BEARINGS - ADJUSTMENTS)

(13) Apply an 1/8" bead of Mopar® Silicone Rubber Adhesive Sealant to the differential cover (Fig. 161).

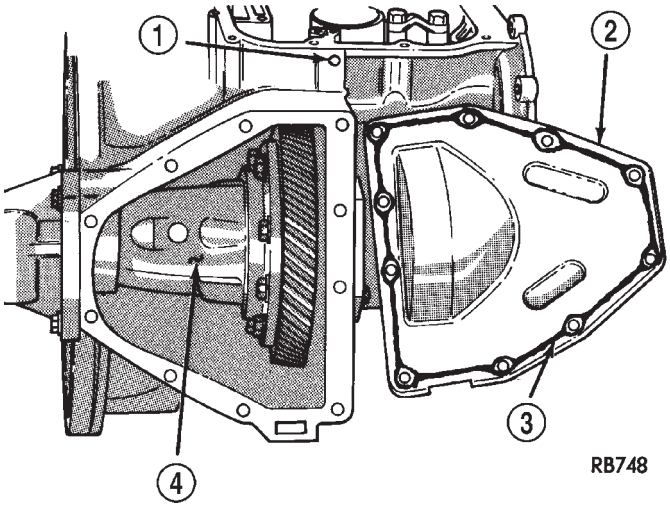

Fig. 161 Install Differential Cover

1 - GOVERNOR PRESSURE PLUG
2 - DIFFERENTIAL COVER
3 - 1/8 INCH BEAD OF R T V SEALANT
4 - DIFFERENTIAL ASSEMBLY

(14) Install differential cover-to-transaxle case bolts and torque to 19 N·m (165 in. lbs.) torque (Fig. 162).

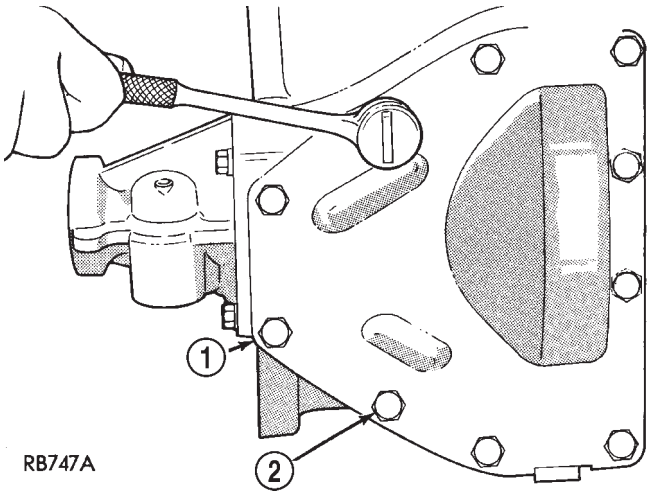

Fig. 162 Differential Cover Bolts

1 - DIFFERENTIAL COVER
2 - DIFFERENTIAL COVER BOLT

(15) Install transfer shaft and related components.

ADJUSTMENTS

ADJUSTMENT - DIFFERENTIAL BEARING

NOTE: Transfer shaft MUST be removed from transaxle to obtain an accurate differential turning torque measurement.

Differential turning torque should be measured and adjusted during any transaxle or differential teardown/assembly, or if any of the following parts are replaced:

- Transaxle case
- Differential carrier
- Differential bearing retainer
- Extension housing
- Differential bearing cups and cones

(1) Position the transaxle assembly vertically on the support stand, differential bearing retainer side up.

(2) Install Tool L-4436A into the differential and onto the pinion mate shaft (Fig. 163).

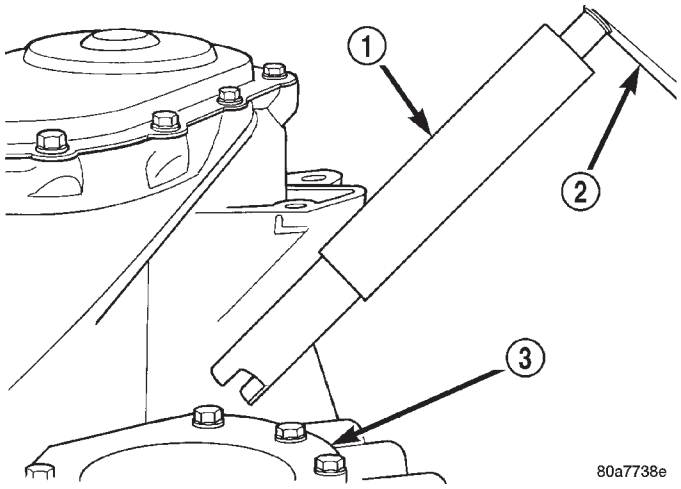

Fig. 163 Tool L-4436 and Torque Wrench

1 - SPECIAL TOOL L-4436–A
2 - TORQUE WRENCH
3 - DIFFERENTIAL BEARING RETAINER

(3) Rotate the differential at least one full revolution to ensure the tapered roller bearings are fully seated.

FINAL DRIVE (Continued)

(4) Using Tool L-4436A and an inch-pound torque wrench, check the turning torque of the differential (Fig. 164). **Turning torque should be within 5–18 in. lbs.**

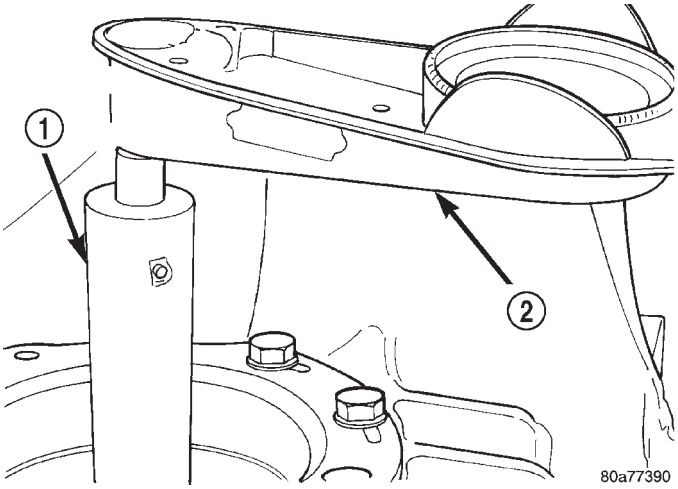

Fig. 164 Checking Differential Bearings Turning Torque

1 - SPECIAL TOOL L-4436–A
2 - TORQUE WRENCH

(5) If the turning torque is within specifications, remove tools. Setup is complete.

(6) If turning torque is not within specifications proceed with the following steps to obtain proper shim selection:

(a) Remove differential bearing retainer from the transaxle case.

(b) Remove the bearing cup from the differential bearing retainer using Tool 6062A.

(c) Remove the existing shim from under the cup.

(d) Measure the existing shim.

NOTE: If the turning torque was too high when measured, install a 0.05 mm (0.002 inch) thinner shim. If the turning torque is was too low, install a 0.05 mm (0.002 inch) thicker shim. Repeat until 5 to 18 inch-pounds turning torque is obtained. Refer to the "Differential Bearing Shim Chart." Oil Baffle is not required when making shim selection.

(e) Install the proper shim under the bearing cup. Make sure the oil baffle is installed properly in the bearing retainer, below the bearing shim and cup.

(f) Install the differential bearing cup, shim, and oil baffle using Tool 5052 and C-4171. Seal the retainer to the housing with MOPAR® Silicone Rubber Adhesive Sealant and torque bolts to 28 N·m (250 in. lbs.).

DIFFERENTIAL BEARING SHIM CHART

SHIM THICKNESS	
MM	INCH
.980	0.0386
1.02	0.0402
1.06	0.0418
1.10	0.0434
1.14	0.0449
1.18	0.0465
1.22	0.0481
1.26	0.0497
1.30	0.0512
1.34	0.0528
1.38	0.0544
1.42	0.0560
1.46	0.0575
1.50	0.0591
1.54	0.0607
1.58	0.0623
1.62	0.0638
1.66	0.0654
1.70	0.0670
2.02	0.0796
2.06	0.0812

(7) Using Tool L-4436A and an inch-pound torque wrench, recheck differential turning torque. **Turning torque should be within 5–18 in. lbs.**

FLUID

STANDARD PROCEDURE

STANDARD PROCEDURE - FLUID LEVEL AND CONDITION CHECK

NOTE: The transmission and differential sump have a common oil sump with a communicating opening between the two.

FLUID LEVEL CHECK

The torque converter fills in both the P Park and N Neutral positions. Place the selector lever in P Park to be sure that the fluid level check is accurate. **The engine should be running at idle speed for at least one minute, with the vehicle on level ground. This will assure complete oil level stabilization between differential and transmission.** The fluid should be at normal operating temperature (approximately 82 C. or 180 F.). The fluid level is correct if it is in the HOT region (cross-hatched area) on the fluid level indicator (Fig. 165).

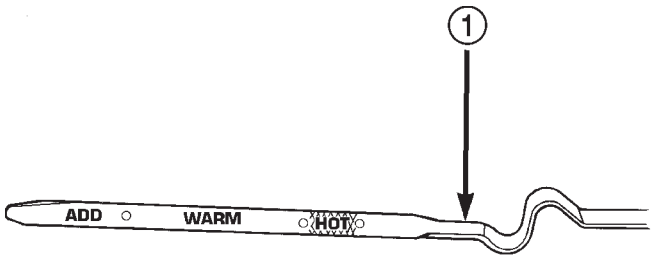

Fig. 165 Fluid Level Indicator Markings

1 - TRANSAXLE DIPSTICK

Low fluid level can cause a variety of conditions because it allows the pump to take in air along with the fluid. As in any hydraulic system, air bubbles make the fluid spongy, therefore, pressures will be low and build up slowly.

Improper filling can also raise the fluid level too high. When the transaxle has too much fluid, the gears churn up foam and cause the same conditions which occur with a low fluid level.

In either case, the air bubbles can cause overheating, fluid oxidation, and varnishing. This can interfere with normal valve, clutch, and servo operation. Foaming can also result in fluid escaping from the transaxle dipstick where it may be mistaken for a leak.

FLUID CONDITION

Along with fluid level, it is important to check the condition of the fluid. Mopar® ATF+4 (Automatic Transmission Fluid-Type 9602) when new is red in color. The ATF is dyed red so it can be identified from other fluids used in the vehicle such as engine oil or antifreeze. The red color is not permanent and is not an indicator of fluid condition. As the vehicle is driven, the ATF will begin to look darker in color and may eventually become brown. **This is normal.** ATF+4 also has a unique odor that may change with age. Consequently, **odor and color cannot be used to indicate the fluid condition, or the need for a fluid change.**

After the fluid has been checked, seat the dipstick fully to seal out water and dirt.

STANDARD PROCEDURE - FLUID AND FILTER CHANGE

NOTE: For the recommended maintenance (fluid/filter change) intervals for this transaxle, (Refer to LUBRICATION & MAINTENANCE/MAINTENANCE SCHEDULES - DESCRIPTION)

NOTE: Only fluids of the type labeled Mopar® ATF+4 (Automatic Transmission Fluid) Type 9602 should be used. A filter change should be made at the time of the transmission oil change. The magnet (on the inside of the oil pan) should also be cleaned with a clean, dry cloth.

NOTE: If the transaxle is disassembled for any reason, the fluid and filter should be changed.

FLUID/FILTER SERVICE (RECOMMENDED)

(1) Raise vehicle on a hoist. Place a drain container with a large opening, under transaxle oil pan.

(2) Loosen pan bolts and tap the pan at one corner to break it loose allowing fluid to drain, then remove the oil pan.

(3) Remove oil filter-to-valve body screws (Fig. 166).

(4) Remove oil filter and gasket (Fig. 167).

(5) Install a new filter and gasket (Fig. 167).

(6) Clean the oil pan and magnet. Reinstall pan using new Mopar® Silicone Rubber Adhesive Sealant. Torque oil pan bolts to 19 N·m (165 in. lbs.).

(7) Pour four quarts of Mopar® ATF+4 (Automatic Transmission Fluid-Type 9602) through the dipstick opening.

FLUID (Continued)

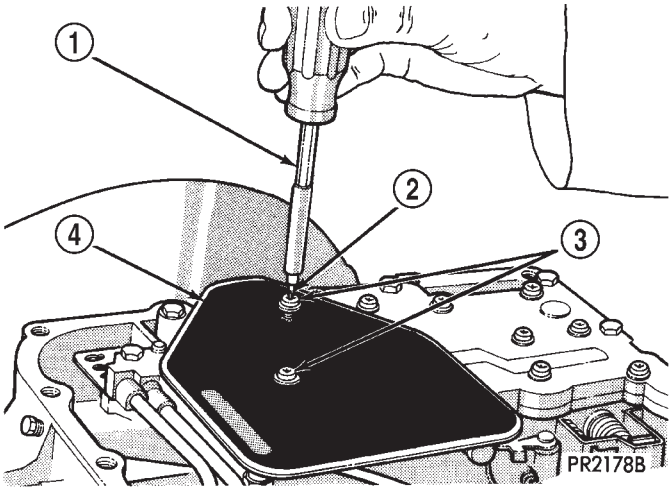

Fig. 166 Oil Filter Screws

1 - SCREWDRIVER HANDLE
2 - SPECIAL TOOL L-4553
3 - OIL FILTER SCREWS (2)
4 - OIL FILTER

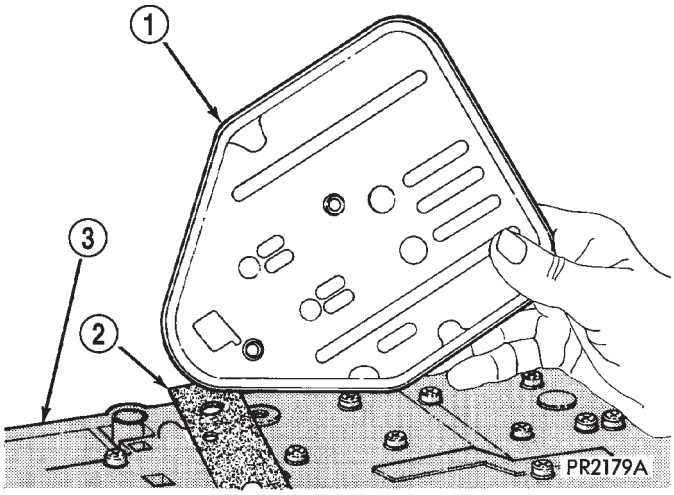

Fig. 167 Oil Filter and Gasket

1 - OIL FILTER
2 - GASKET
3 - VALVE BODY

(8) Start engine and allow to idle for at least one minute. Then, with parking and service brakes applied, move selector lever momentarily to each position, ending in the park or neutral position.

(9) Check the transaxle fluid level and add an appropriate amount to bring the transaxle fluid level to 3mm (1/8 in.) below the “ADD” mark on the dipstick (Fig. 168).

(10) Recheck the fluid level after the transaxle has reached normal operating temperature (180°F.). (Refer to 21 - TRANSMISSION/TRANSAXLE/AUTOMATIC - 31TH/FLUID - STANDARD PROCEDURE)

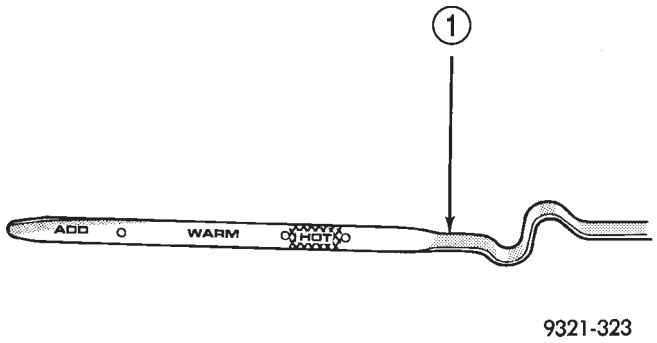

Fig. 168 Dipstick Markings

1 - TRANSAXLE DIPSTICK

(11) To prevent dirt from entering transaxle, make certain that dipstick is fully seated into the dipstick opening.

DIPSTICK TUBE FLUID SUCTION METHOD (ALTERNATIVE)

(1) When performing the fluid suction method, make sure the transaxle is at full operating temperature.

(2) To perform the dipstick tube fluid suction method, use a suitable fluid suction device (Vacula™ or equivalent).

(3) Insert the fluid suction line into the dipstick tube.

NOTE: Verify that the suction line is inserted to the lowest point of the transaxle oil pan. This will ensure complete evacuation of the fluid in the pan.

(4) Follow the manufacturers recommended procedure and evacuate the fluid from the transaxle.

(5) Remove the suction line from the dipstick tube.

(6) Pour four quarts of Mopar® ATF+4 (Automatic Transmission Fluid—Type 9602) through the dipstick opening.

(7) Start engine and allow to idle for at least one minute. Then, with parking and service brakes applied, move selector lever momentarily to each position, ending in the park or neutral position.

(8) Check the transaxle fluid level and add an appropriate amount to bring the transaxle fluid level to 3mm (1/8 in.) below the “ADD” mark on the dipstick (Fig. 168).

(9) Recheck the fluid level after the transaxle has reached normal operating temperature (180°F.). (Refer to 21 - TRANSMISSION/TRANSAXLE/AUTOMATIC - 31TH/FLUID - STANDARD PROCEDURE)

(10) To prevent dirt from entering transaxle, make certain that dipstick is fully seated into the dipstick opening.

GEAR SHIFT CABLE

REMOVAL

(1) Disconnect battery negative cable.
(2) Disconnect gear shift cable at manual valve lever (Fig. 169).
(3) Disconnect gear shift cable from upper mount bracket (Fig. 169).

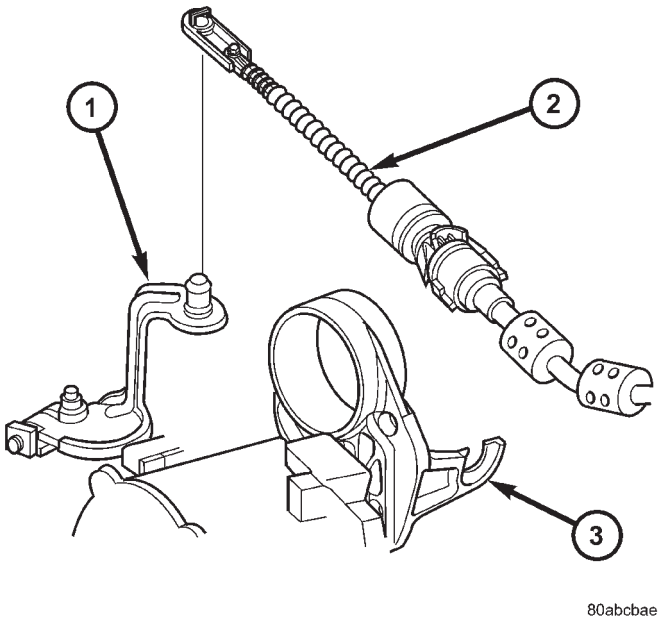

Fig. 169 Gearshift Cable at Transaxle

1 - MANUAL VALVE LEVER
2 - GEAR SHIFT CABLE
3 - UPPER MOUNT BRACKET

(4) Remove instrument panel lower silencer (Fig. 170).

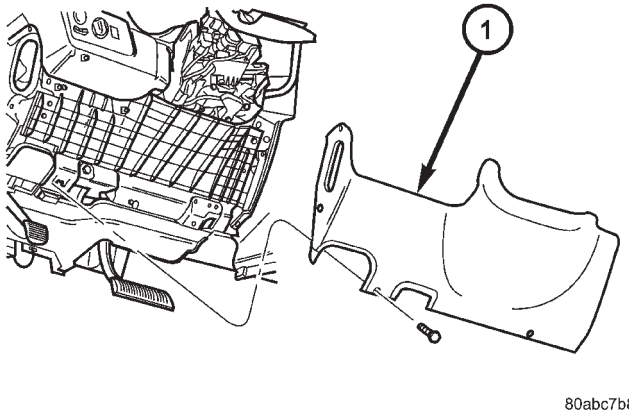

Fig. 170 Instrument Panel Lower Silencer

1 - INSTRUMENT PANEL LOWER SILENCER

(5) Remove knee bolster (Fig. 171).

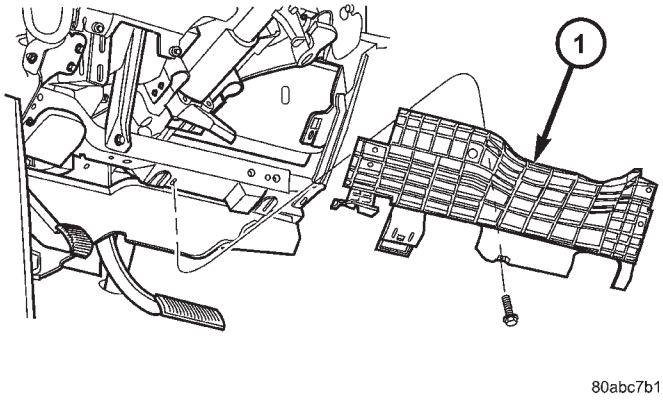

Fig. 171 Knee Bolster

1 - KNEE BOLSTER

(6) Disconnect PRNDL cable from gear shift lever (Fig. 172).

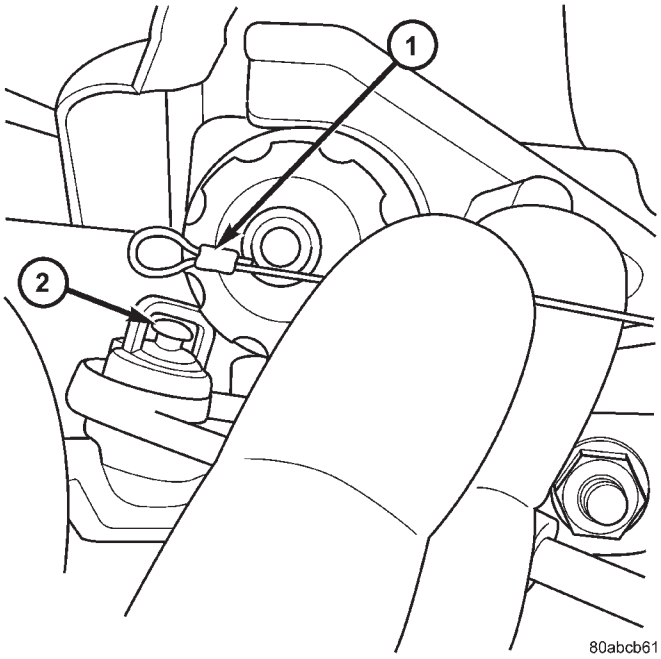

Fig. 172 PRNDL Cable

1 - PRNDL CABLE
2 - GEAR SHIFT LEVER

GEAR SHIFT CABLE (Continued)

(7) Disconnect gear shift cable from gear shift lever (Fig. 173).

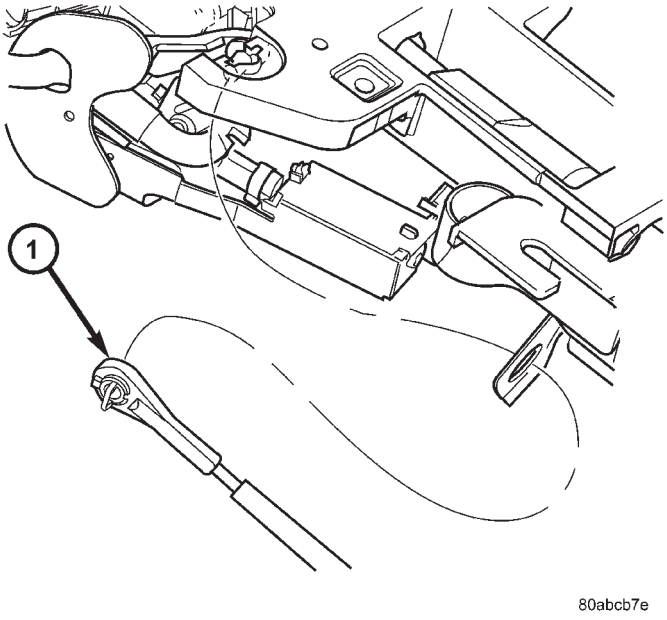

Fig. 173 Gearshift Cable at Column

1 - GEAR SHIFT CABLE

(8) Remove gear shift cable from column bracket (Fig. 173).

(9) Disengage grommet from dash panel and remove gear shift cable from inside vehicle (Fig. 174).

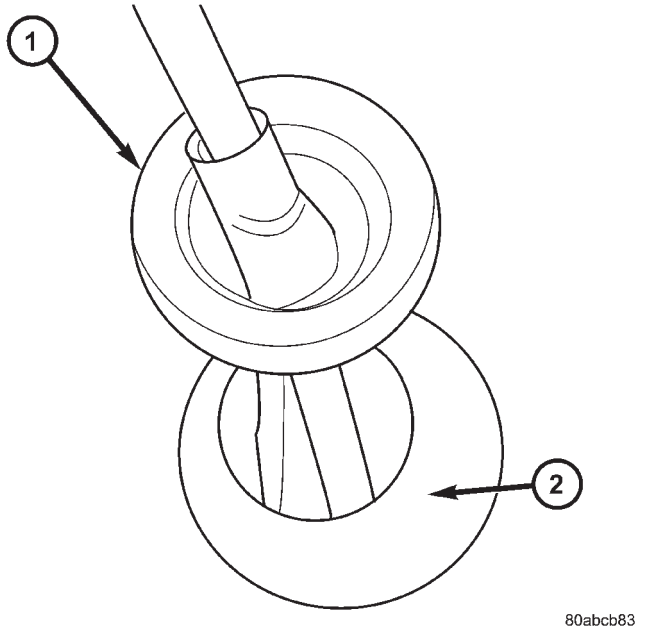

Fig. 174 Gearshift Cable/Grommet at Dash Panel

1 - CABLE GROMMET
2 - DASH PANEL

INSTALLATION

(1) Fish gear shift cable dash panel opening into engine compartment and secure grommet (Fig. 175).

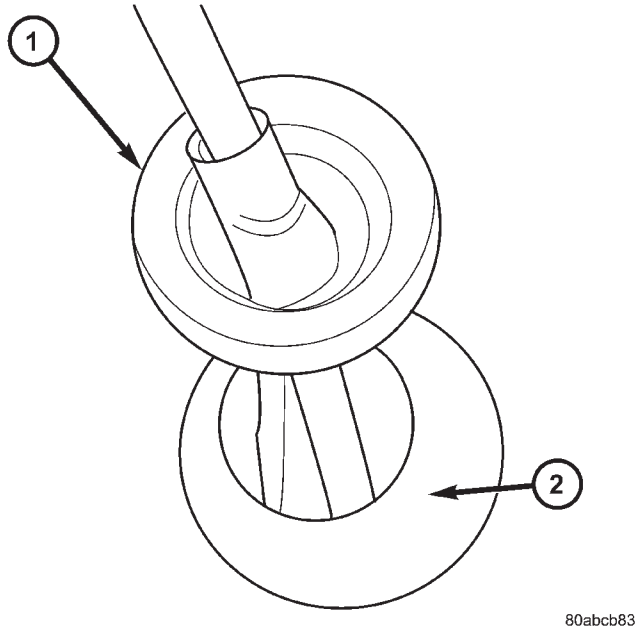

Fig. 175 Gearshift Cable/Grommet at Dash Panel

1 - CABLE GROMMET
2 - DASH PANEL

(2) Install gear shift cable through column bracket (Fig. 176) until audible “click” is heard.

(3) Connect gear shift cable to gear shift lever (Fig. 176).

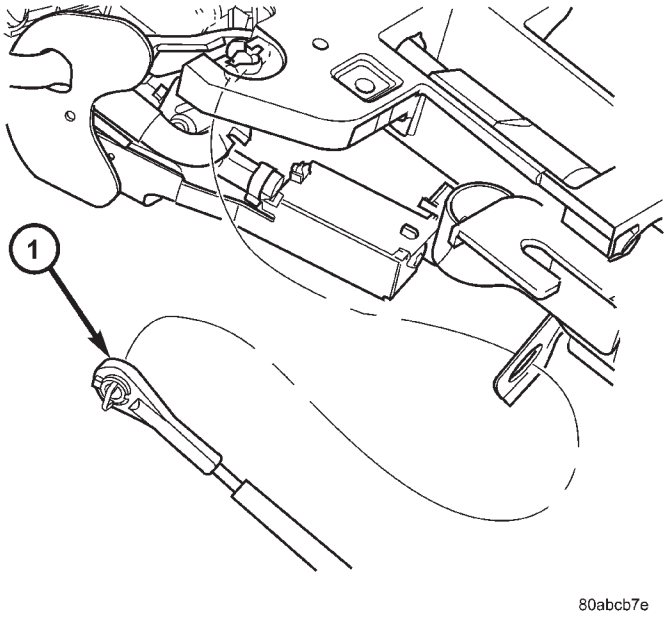

Fig. 176 Gearshift Cable at Column

1 - GEAR SHIFT CABLE

GEAR SHIFT CABLE (Continued)

(4) Connect PRNDL cable to gear shift lever (Fig. 177). Adjust if necessary.

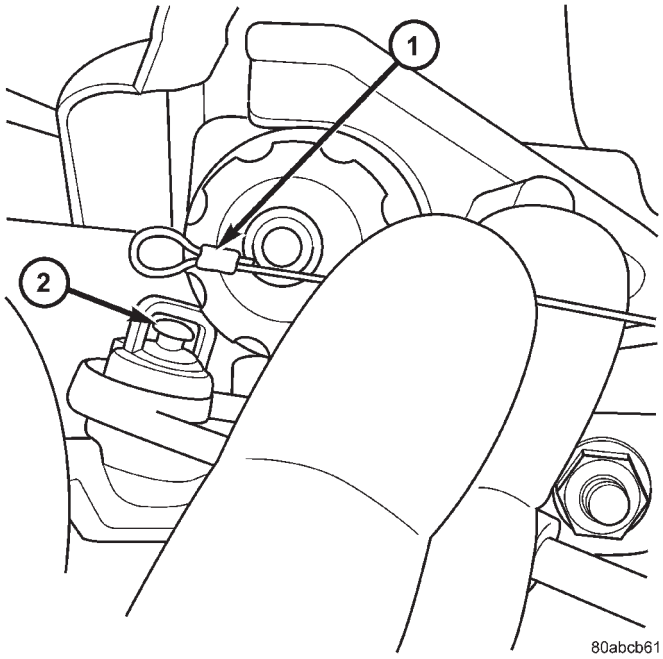

Fig. 177 PRNDL Cable

1 - PRNDL CABLE
2 - GEAR SHIFT LEVER

(5) Install knee bolster (Fig. 178).

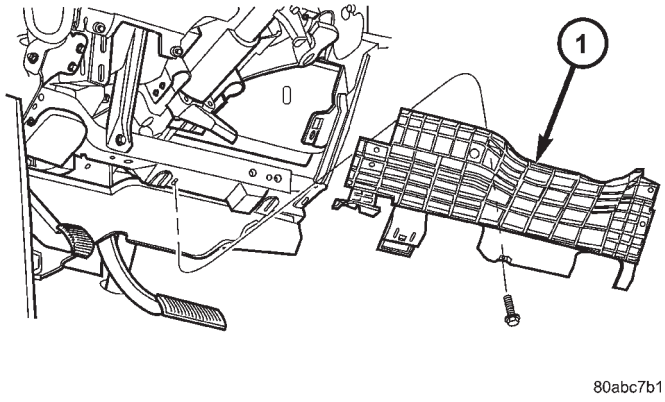

Fig. 178 Knee Bolster

1 - KNEE BOLSTER

(6) Install instrument panel lower silencer (Fig. 179).

(7) Install gear shift cable to transaxle upper mount bracket (Fig. 180). An audible “click” should be heard.

(8) Connect gear shift cable end to transaxle manual valve lever (Fig. 180).

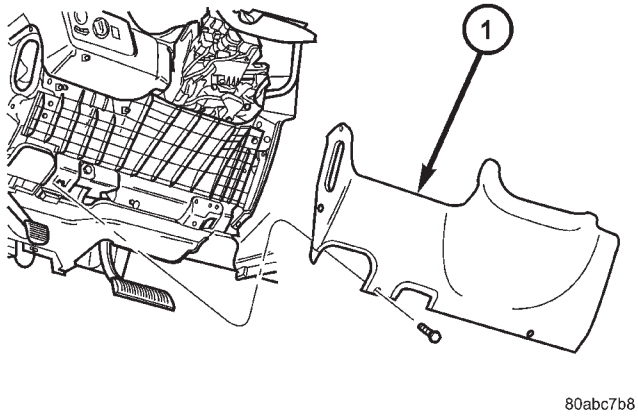

Fig. 179 Instrument Panel Lower Silencer

1 - INSTRUMENT PANEL LOWER SILENCER

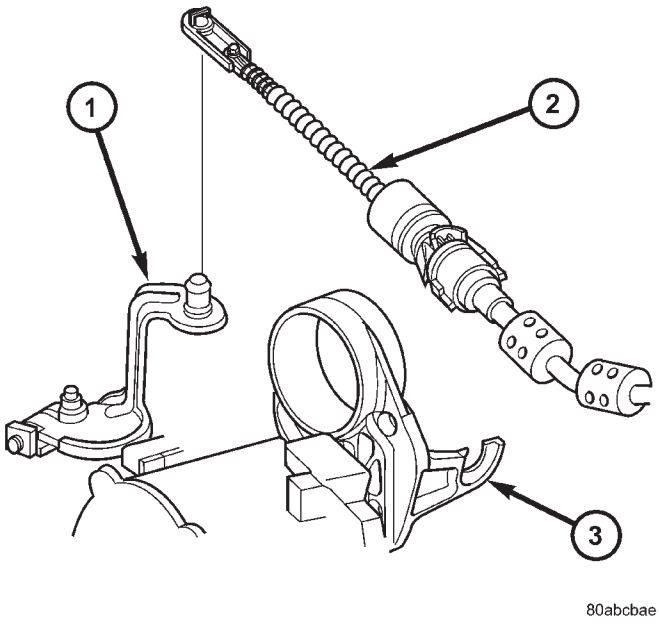

Fig. 180 Gearshift Cable at Transaxle

1 - MANUAL VALVE LEVER
2 - GEAR SHIFT CABLE
3 - UPPER MOUNT BRACKET

(9) Adjust gearshift cable. (Refer to 21 - TRANSMISSION/TRANSAXLE/AUTOMATIC - 31TH/GEAR SHIFT CABLE - ADJUSTMENTS)

ADJUSTMENTS

GEARSHIFT CABLE ADJUSTMENT

Lift and rotate the gearshift hand lever into the park (P) gate position and remove the ignition key. This confirms the shift lever is in the gated park (P) position.

After confirming the park gate position, turn the ignition switch . If the starter will operate, the park gate position is correct. Move the shift lever into the neutral (N) position. If the starter will operate in this position, the linkage is properly adjusted. If the starter fails to operate in either position, linkage adjustment is required.

(1) Park the vehicle on level ground and set the parking brake.

(2) Place the gearshift lever in park (P) gate position and remove key.

(3) Loosen the cable adjustment screw at the transaxle operating lever (Fig. 181).

(4) Pull the transaxle operating lever fully forward to the park detent position.

(5) Release the park brake, then rock the vehicle to assure it is in park lock. Reset the park brake.

(6) Tighten the cable adjustment screw to 8 N·m (70 in. lbs.). Gearshift cable should now be properly adjusted.

(7) Verify PRNDL indicator still displays the corresponding gear completely. If not, readjustment of PRNDL may be required.

(8) Check adjustment by using the preceding procedure.

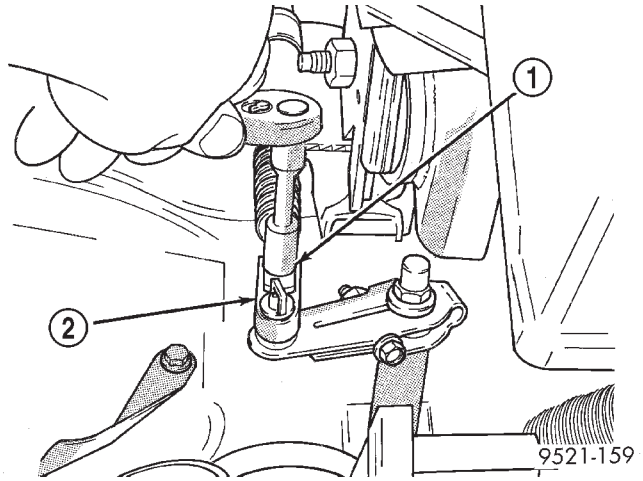

Fig. 181 Gearshift Cable Adjustment

1 - SHIFT CABLE ADJUSTMENT
2 - SHIFT CABLE

GOVERNOR

DESCRIPTION

The governor assembly is fastened to the transaxle transfer shaft. It consists of a governor body, weight, valve, and shaft.

OPERATION

The governor meters hydraulic pressure, and this metered pressure is used to signal the transmission when it is time for a shift to occur. It does this by balancing governor pressure on one side of a shift valve, and throttle pressure on the other. When governor pressure increases far enough to overcome the throttle pressure on the valve, a shift occurs.

With the gearshift selector in a forward driving range, line pressure flows from the manual valve and down to the governor valve. When the output shaft starts to rotate with vehicle motion, the governor weight assembly will start to move outward due to centrifugal force. As the weight is moved outward, it will pull the valve with it until the land of the valve uncovers the line pressure port. As the port begins to become uncovered, governor pressure is metered. As the vehicle's speed continues to increase, the weight assembly will be at a point at which governor pressure is acting on the left side of the reaction area of the valve. This produces sufficient force to compress the spring and allow the outer weight to move out against the outer governor body retaining ring. At a very high speed, the governor valve will be opened as far as possible. In this condition, it is possible for governor pressure to meet, but not to exceed, line pressure. Generally governor pressure ranges from 0-100 psi from idle to maximum speed, and rises proportionally with the increase in output shaft speed. Governor pressure and throttle pressure are acting upon the shift valves to determine when a shift will occur. Governor pressure is a direct indication of road speed, and throttle pressure is an indication of engine load. When both parameters have been met by the throttle and governor pressures, an upshift or downshift will occur.

CLEANING

Thoroughly clean all the governor parts in a suitable cleaning solution but do not use any type of caustic cleaning agents.

The governor weight components and the governor valve, must slide freely in their bores when clean and dry. Minor surface scratches and burrs can be smoothed with crocus cloth.

INSPECTION

The aluminum governor valve and outer weight have a hard coating on them. Check condition of this

GOVERNOR (Continued)

coating carefully. Do not reuse either part if the coating is damaged.

Inspect the governor weight spring for distortion. Replace the spring, if distorted, collapsed, or broken. Clean the filter in solvent and dry it with compressed air. Replace the filter, if damaged. Inspect the park gear for chipped or worn gear teeth or damaged ring grooves. Replace the gear, if damaged.

Check the teeth on the park gear for wear or damage. Replace the gear if necessary. Inspect the metal seal rings on the park gear hub. Replace the rings only if severely worn, or broken.

OIL PUMP

DESCRIPTION

The oil pump is located in the pump housing inside the bell housing of the transmission case. The oil pump consists of an inner and outer gear, a housing, and a cover that also serves as the reaction shaft support (Fig. 182).

OPERATION

As the torque converter rotates, the converter hub rotates the inner and outer gears. As the gears rotate, the clearance between the gear teeth increases in the crescent area, and creates a suction at the inlet side of the pump. This suction draws fluid through the pump inlet from the oil pan. As the clearance between the gear teeth in the crescent area decreases, it forces pressurized fluid into the pump outlet and to the valve body.

STANDARD PROCEDURE - OIL PUMP VOLUME CHECK

Measuring the oil pump output volume will determine if sufficient oil flow to the transmission oil cooler exists, and whether or not an internal transmission failure is present.

Verify that the transmission fluid is at the proper level. Refer to the Fluid Level Check procedure in this section. If necessary, fill the transmission to the proper level with Mopar® ATF +4, type 9602, Automatic Transmission Fluid.

(1) Using hose cutters or a suitable blade, cut the **To cooler** line off flush with the cooler inlet fitting and place a collecting container under the open line.

CAUTION: With the fluid set at the proper level, fluid collection should not exceed (1) quart or internal damage to the transmission may occur.

(2) Run the engine **at curb idle speed**, with the shift selector in neutral.

(3) If one quart of transmission fluid is collected in the container in 20 seconds or less, oil pump flow volume is within acceptable limits. If fluid flow is inter-

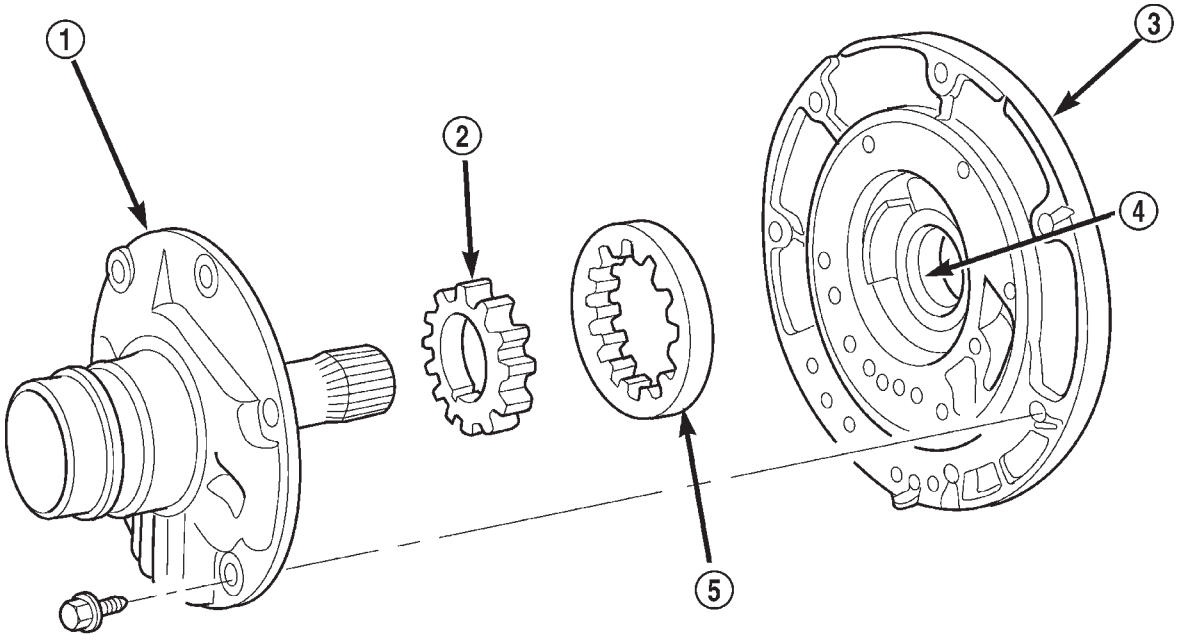

80bdbd50

Fig. 182 Oil Pump Assembly

1 - REACTION SHAFT SUPPORT
2 - INNER GEAR
3 - PUMP BODY
4 - PUMP BUSHING
5 - OUTER GEAR

OIL PUMP (Continued)

mittent, or it takes more than 20 seconds to collect one quart of fluid, (Refer to 21 - TRANSMISSION/ TRANSAXLE/AUTOMATIC - 31TH - DIAGNOSIS AND TESTING) for further diagnosis.

(4) Re-connect the **To cooler** line to the transmission cooler inlet using a service splice kit. Refer to instructions included with the kit.

(5) Refill the transmission to proper level. (Refer to 21 - TRANSMISSION/TRANSAXLE/AUTOMATIC - 31TH/FLUID - STANDARD PROCEDURE)

DISASSEMBLY

(1) Remove reaction shaft support-to-pump body bolts.

(2) Remove reaction shaft support, and the inner and outer pump gears (Fig. 183).

CLEANING

Clean pump and support components with solvent and dry them with compressed air.

INSPECTION

(1) Check condition of the seal rings and thrust washer on the reaction shaft support. The seal rings do not need to be replaced unless cracked, broken, or severely worn.

(2) Visually inspect the pump and support components. Replace the pump assembly if the seal ring grooves or machined surfaces are worn, scored, pitted, or damaged. Replace the pump assembly if the gears if pitted, worn chipped, or damaged.

(3) Inspect the pump bushing. Then check the reaction shaft support bushing. Replace the pump assembly if either bushing is heavily worn, scored or damaged.

(4) Clearance between outer gear and reaction shaft housing should be 0.010 to 0.063 mm (0.0004 to 0.0025 in.). Clearance between inner gear and reaction shaft housing should be 0.010 to 0.063 mm (0.0004 to 0.0025 in.). Both clearances can be measured at the same time by installing the gears in the pump body and measure pump component clearances as follows:

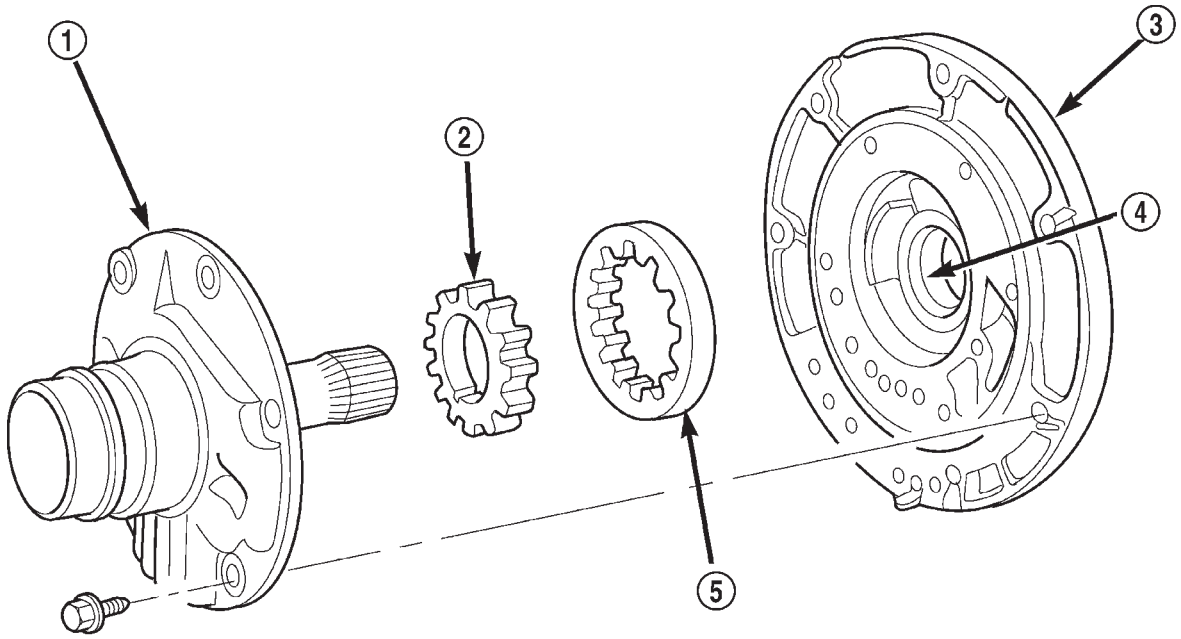

80bdbd50

Fig. 183 Oil Pump Assembly

1 - REACTION SHAFT SUPPORT
2 - INNER GEAR
3 - PUMP BODY
4 - PUMP BUSHING
5 - OUTER GEAR

OIL PUMP (Continued)

(5) Reinstall gears to pump body and measure outer gear-to-pocket clearance with a feeler gauge (Fig. 184). **Outer gear-to-pocket clearance should be within 0.045-0.141 mm (0.0018-0.0056 in.).**

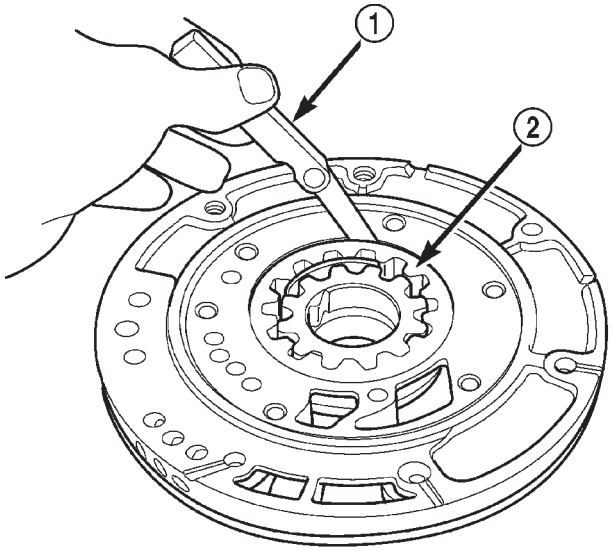

Fig. 184 Measuring Pump Outer Gear-to-Pocket Clearance

1 - FEELER GAUGE
2 - OUTER GEAR

(6) Measure both inner and outer gear side clearance with Plastigage™. If Plastigage™ is not available, measure across the pump body with a straight edge and feeler gauge.

(a) Position an appropriate piece of Plastigage™ across both gears.

(b) Align the plastigage to a flat area on the reaction shaft housing.

(c) Install the reaction shaft support to the pump housing and torque to 28 N·m (250 in. lbs.).

(d) Separate the reaction shaft housing from the pump housing and measure the Plastigage™ following the instructions supplied with it. **Inner and outer gear side clearance should be within 0.020-0.046 mm (0.0008-0.0018 in.)**.

ASSEMBLY

(1) Install inner and outer gears to pump body (Fig. 183). Lubricate gears with Mopar® ATF+4 (Automatic Transmission Fluid-Type 9602).

(2) Install reaction shaft support to pump body and align holes.

(3) Install and torque reaction shaft support-to-pump body bolts to 28 N·m (250 in. lbs.).

PARK/NEUTRAL POSITION SWITCH

DIAGNOSIS AND TESTING - PARK/NEUTRAL POSITION SWITCH

The park/neutral starting switch is the center terminal of the 3 terminal switch. It provides ground for the starter solenoid circuit through the selector lever in only Park (P) and Neutral (N) positions.

(1) To test switch, remove wiring connector from switch and test for continuity between center pin of switch and transaxle case. Continuity should exist only when transaxle is in Park or Neutral.

(2) Check gearshift cable adjustment before replacing a switch which tests bad.

REMOVAL

(1) Unscrew switch from transaxle case allowing fluid to drain into a container. Move selector lever to Park, then to Neutral position, and inspect to see the switch operating lever fingers are centered in switch opening.

INSTALLATION

(1) Screw the switch with a new seal into transaxle case and tighten to 33 N·m (24 ft. lbs.). Retest switch with the test lamp.

(2) Add fluid to transaxle to bring up to proper level.

(3) The back-up lamp switch circuit is through the two outside terminals of the 3 terminal switch.

(4) To test switch, remove wiring connector from switch and test for continuity between the two outside pins.

(5) Continuity should exist only with transaxle in Reverse position.

(6) No continuity should exist from either pin to the case.

PLANETARY GEARTRAIN

DISASSEMBLY

(1) Remove snap ring and #4 thrust washer (Fig. 185)

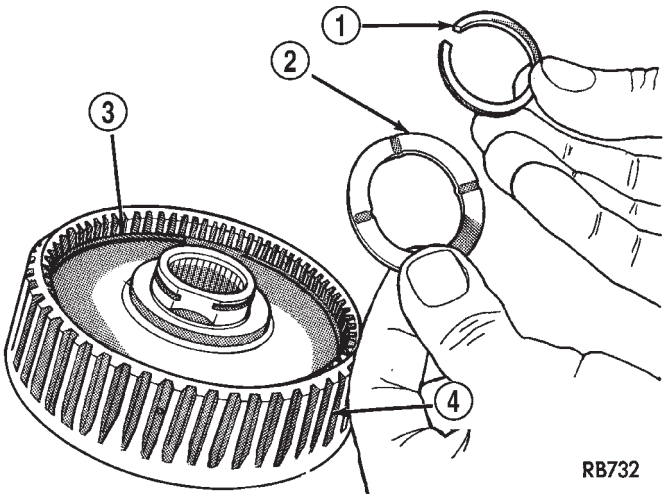

Fig. 185 Front Planetary Gear Snap Ring and No. 4 Thrust Washer

1 - SNAP RING
2 - #4 THRUST WASHER
3 - SNAP RING
4 - FRONT PLANETARY GEAR ASSEMBLY

(2) Remove annulus gear support front snap ring (Fig. 186).

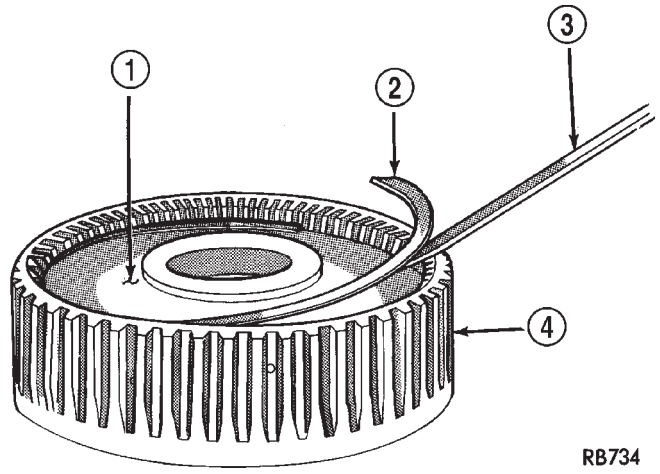

Fig. 186 Annulus Gear Support Front Snap Ring

1 - ANNULUS GEAR SUPPORT
2 - FRONT SNAP RING
3 - SCREWDRIVER
4 - FRONT PLANETARY ANNULUS GEAR

(3) Remove annulus gear support and snap ring (Fig. 187).

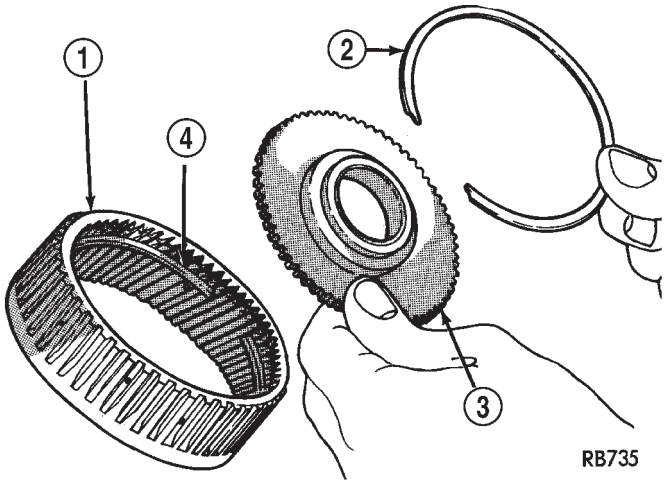

Fig. 187 Front Annulus Gear Support and Snap Ring

1 - FRONT ANNULUS GEAR
2 - FRONT SNAP RING
3 - FRONT ANNULUS GEAR SUPPORT
4 - REAR SNAP RING

(4) Remove remaining snap ring (Fig. 188).

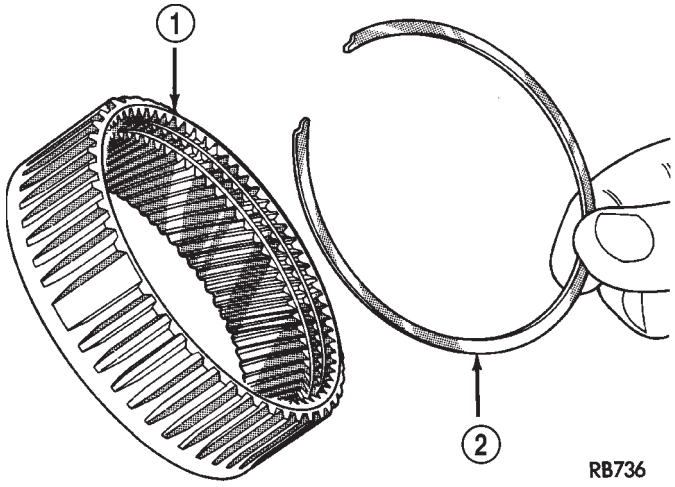

Fig. 188 Front Annulus Gear Support Snap Ring

1 - FRONT ANNULUS GEAR
2 - REAR SNAP RING

PLANETARY GEARTRAIN (Continued)

(5) Remove and inspect front planetary carrier assembly (Fig. 189).

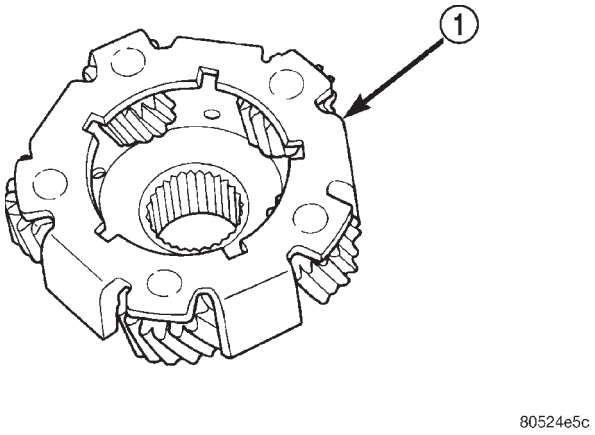

Fig. 189 Front Planetary Gear

1 - FRONT PLANETARY GEAR ASSEMBLY

ASSEMBLY

(1) Install front planetary gear assembly to annulus gear (Fig. 190).

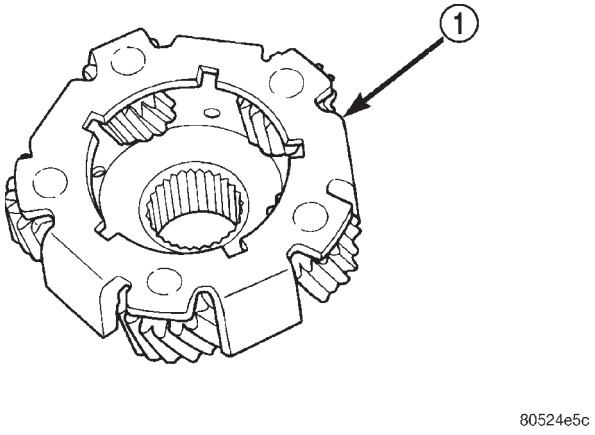

Fig. 190 Front Planetary Gear

1 - FRONT PLANETARY GEAR ASSEMBLY

(2) Install first support snap ring (Fig. 191).

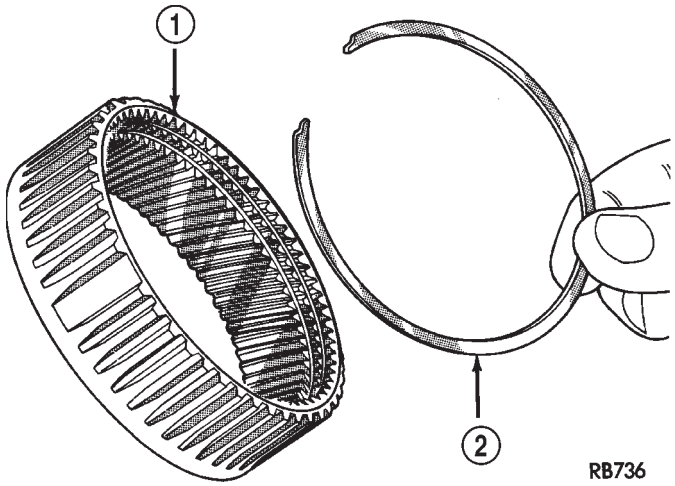

Fig. 191 Front Annulus Gear Support Snap Ring

1 - FRONT ANNULUS GEAR
2 - REAR SNAP RING

(3) Install annulus gear support and snap ring (Fig. 192).

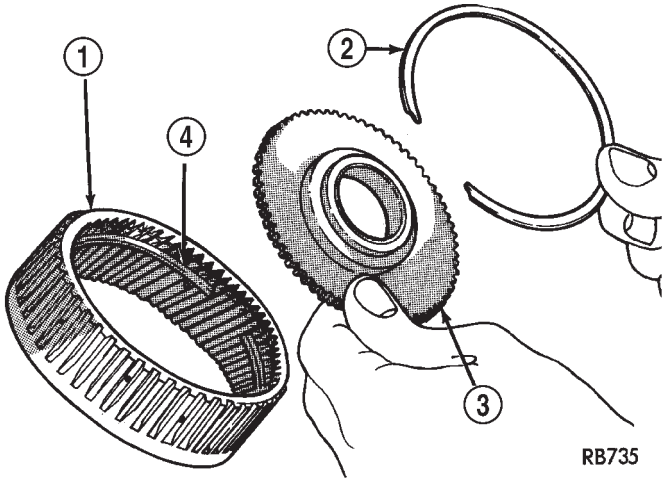

Fig. 192 Front Annulus Gear Support and Snap Ring

1 - FRONT ANNULUS GEAR
2 - FRONT SNAP RING
3 - FRONT ANNULUS GEAR SUPPORT
4 - REAR SNAP RING

PLANETARY GEARTRAIN (Continued)

(4) Install a NEW front planetary gear snap ring and #4 thrust washer (Fig. 193).

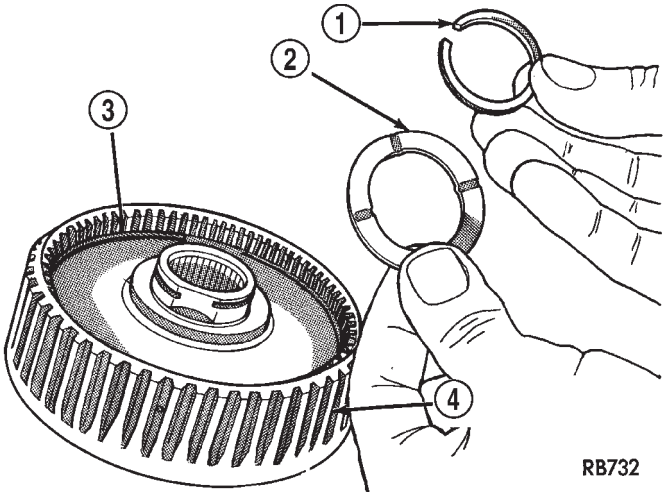

Fig. 193 Front Planetary Gear Snap Ring and No. 4 Thrust Washer

1 - SNAP RING
2 - #4 THRUST WASHER
3 - SNAP RING
4 - FRONT PLANETARY GEAR ASSEMBLY

SEAL - OIL PUMP

REMOVAL

The pump oil seal can be replaced without removing the pump and reaction shaft support assembly from the transaxle case.

(1) Screw seal remover Tool C-3981-B into seal (Fig. 194), then tighten screw portion of tool to withdraw the seal.

INSTALLATION

The pump oil seal can be replaced without removing the pump and reaction shaft support assembly from the transaxle case.

(1) To install a new seal, place seal in opening of the pump housing (lip side facing inward). Using Tool C-4193 and Handle Tool C-4171, drive new seal into housing until tool bottoms (Fig. 195).

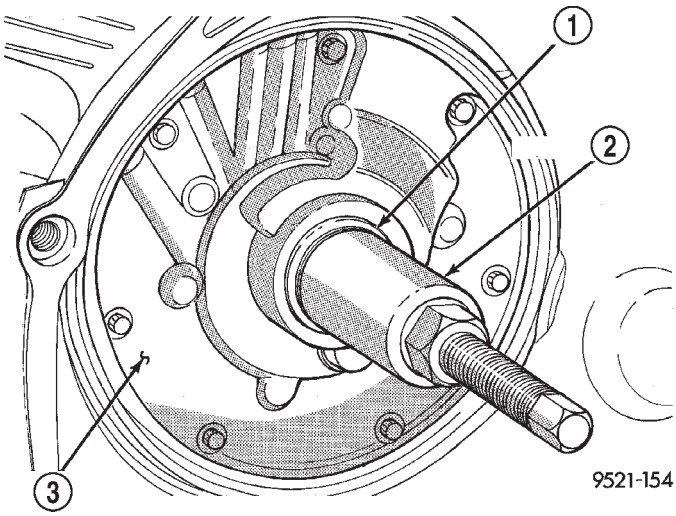

Fig. 194 Remove Pump Oil Seal

1 - PUMP OIL SEAL
2 - OIL SEAL REMOVER TOOL C-3981-B
3 - OIL PUMP

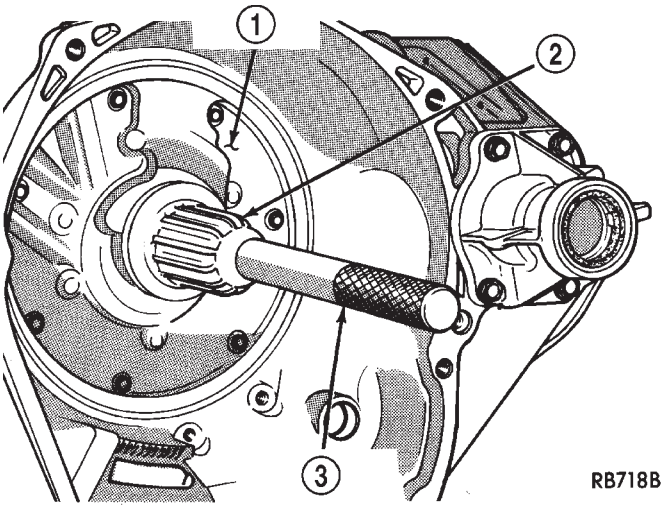

Fig. 195 Install Pump Oil

1 - OIL PUMP
2 - OIL SEAL INSTALLER TOOL C-4193
3 - SPECIAL TOOL HANDLE C-4171

SERVO - KICKDOWN

DESCRIPTION

The kickdown servo (Fig. 196) consists of a two-land piston with an inner piston, a piston rod and guide, and a return spring. The dual-land piston uses seal rings on its outer diameters and an O-ring for the inner piston.

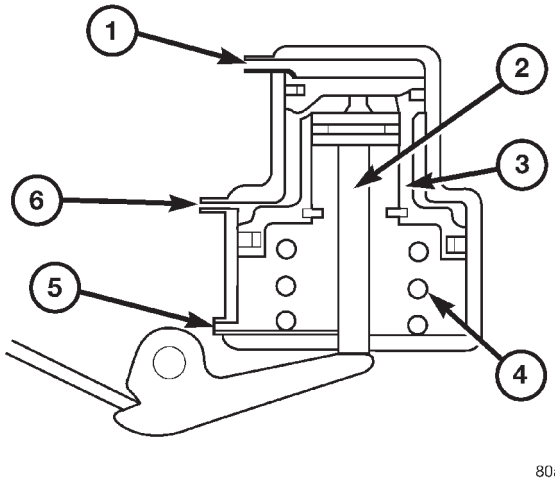

Fig. 196 Front Servo

1 - VENT
2 -PISTON ROD
3 - PISTON
4 - SPRING
5 - RELEASE PRESSURE
6 - APPLY PRESSURE

OPERATION

The application of the piston is accomplished by applying pressure between the two lands of the piston. The pressure acts against the larger lower land to push the piston downward, allowing the piston rod to extend though its guide against the apply lever. Release of the servo at the 2-3 upshift is accomplished by a combination of spring and line pressure, acting on the bottom of the larger land of the piston. The small piston is used to cushion the application of the band by bleeding oil through a small orifice in the larger piston. The release timing of the kickdown servo is very important to obtain a smooth but firm shift. The release has to be very quick, just as the front clutch application is taking place. Otherwise, engine runaway or a shift hesitation will occur. To accomplish this, the band retains its holding capacity until the front clutch is applied, giving a small amount of overlap between them.

DISASSEMBLY

(1) Remove kickdown servo snap ring (Fig. 197).

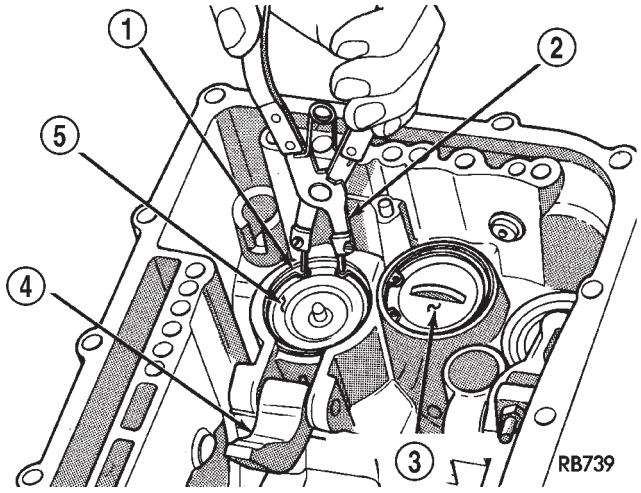

Fig. 197 Kickdown Servo Snap Ring

1 - SNAP RING
2 - SNAP RING PLIERS
3 - ACCUMULATOR PLATE
4 - KICKDOWN LEVER
5 - KICKDOWN PISTON ROD GUIDE

(2) Remove kickdown servo rod guide and snap ring (Fig. 198).

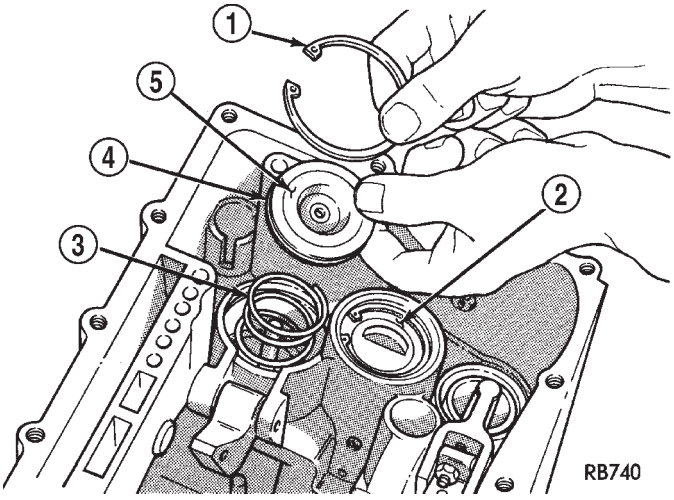

Fig. 198 Kickdown Servo Rod Guide and Snap Ring

1 - SNAP RING
2 - ACCUMULATOR PLATE
3 - RETURN SPRING
4 - O-RING
5 - PISTON ROD GUIDE

SERVO - KICKDOWN (Continued)

(3) Remove kickdown piston return spring and piston (Fig. 199).

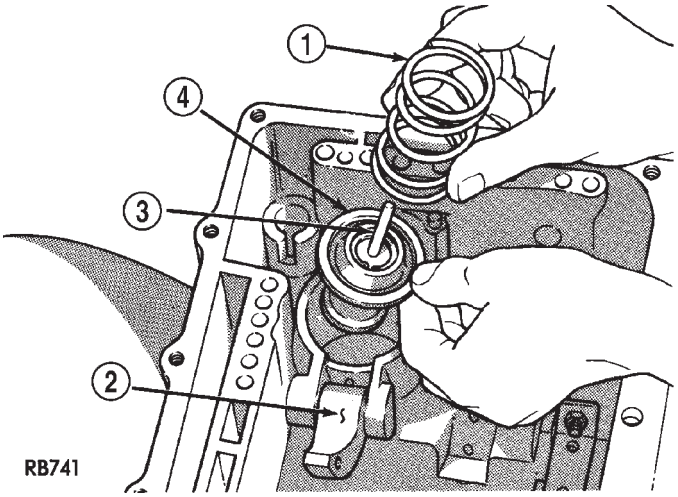

Fig. 199 Kickdown Piston Return Spring and Piston

1 - RETURN SPRING
2 - KICKDOWN LEVER
3 - PISTON ROD
4 - KICKDOWN SERVO PISTON

(4) Disassemble piston assembly as shown in (Fig. 200).

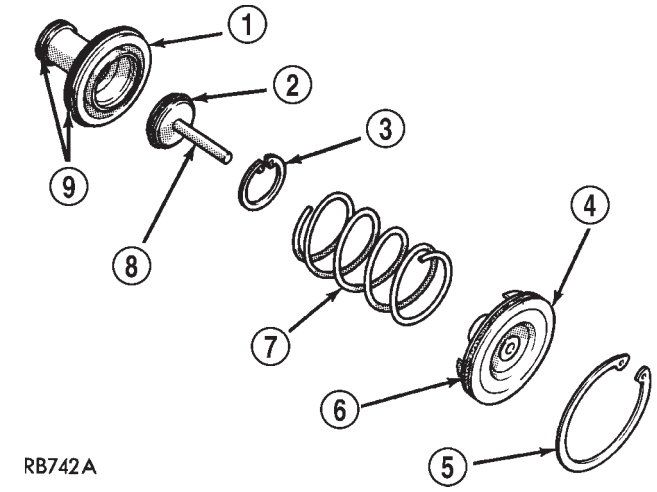

Fig. 200 Controlled Load Kickdown Servo

1 - KICKDOWN PISTON
2 - O-RING
3 - SNAP RING
4 - PISTON ROD GUIDE
5 - SNAP RING
6 - O-RING
7 - PISTON RETURN SPRING
8 - PISTON ROD
9 - SEAL RINGS

CLEANING

Clean the servo piston components (Fig. 201) with solvent and dry them with compressed air. Wipe the band clean with lint free shop towels.

Replace the front band if distorted, lining is burned, flaking off, or worn to the point where the grooves in the lining material are no longer visible.

Replace any servo component if doubt exists about condition. Do not reuse suspect parts.

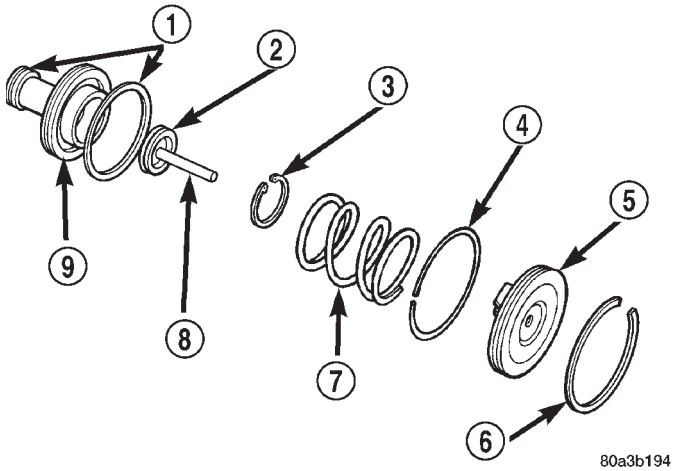

Fig. 201 Front Servo Piston

1 - PISTON RINGS
2 - O-RING
3 - SNAP-RING
4 - SEAL RING
5 - PISTON ROD GUIDE
6 - SNAP-RING
7 - SERVO SPRING
8 - PISTON ROD
9 - SERVO PISTON

SERVO - KICKDOWN (Continued)

INSPECTION

Inspect the servo components (Fig. 202). Replace the springs if collapsed, distorted or broken. Replace the guide, rod and piston if cracked, bent, or worn. Discard the servo snap-ring if distorted or warped.

Check the servo piston bore for wear. If the bore is severely scored, or damaged, it will be necessary to replace the case.

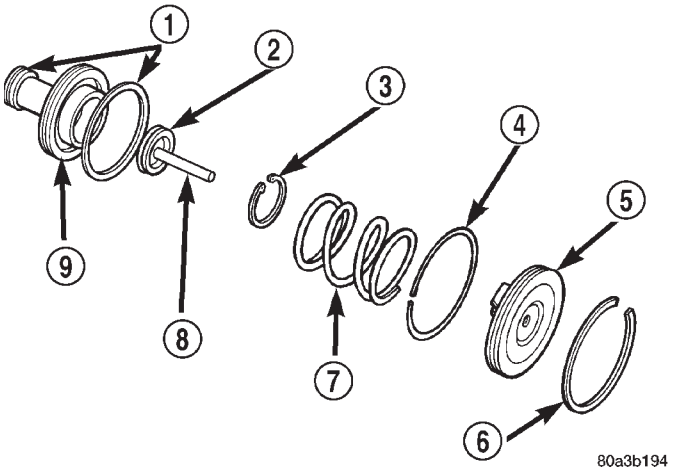

Fig. 202 Front Servo Piston

1 - PISTON RINGS
2 - O-RING
3 - SNAP-RING
4 - SEAL RING
5 - PISTON ROD GUIDE
6 - SNAP-RING
7 - SERVO SPRING
8 - PISTON ROD
9 - SERVO PISTON

ASSEMBLY

(1) Lubricate new O-ring and seal rings with petroleum jelly and install them on piston, guide and rod.

(2) Install rod in piston. Install spring and washer on rod. Compress spring and install snap-ring (Fig. 203).

(3) Install piston and return spring (Fig. 199).

(4) Install rod guide and snap ring (Fig. 198) (Fig. 197).

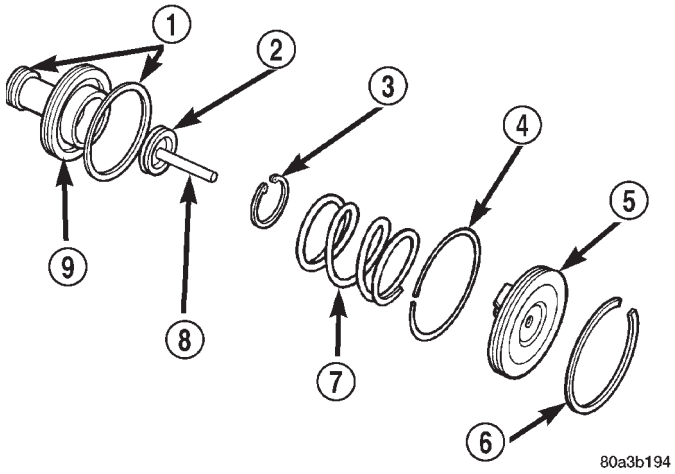

Fig. 203 Front Servo Piston

1 - PISTON RINGS
2 - O-RING
3 - SNAP-RING
4 - SEAL RING
5 - PISTON ROD GUIDE
6 - SNAP-RING
7 - SERVO SPRING
8 - PISTON ROD
9 - SERVO PISTON

SERVO - LOW/REVERSE

DESCRIPTION

The rear (low/reverse) servo consists of a single stage or diameter piston and a spring loaded plug. The spring is used to cushion the application of the rear (low/reverse) band.

OPERATION

While in the de-energized state (no pressure applied), the piston is held up in its bore by the piston spring. The plug is held down in its bore, in the piston, by the plug spring. When pressure is applied to the top of the piston, the plug is forced down in its bore, taking up any clearance. As the piston moves, it causes the plug spring to compress, and the piston moves down over the plug. The piston continues to move down until it hits the shoulder of the plug and fully applies the band. The period of time from the initial application, until the piston is against the shoulder of the plug, represents a reduced shocking of the band that cushions the shift.

SERVO - LOW/REVERSE (Continued)

DISASSEMBLY

(1) Back off low/reverse band adjustment and position lever out of the way (Fig. 204).

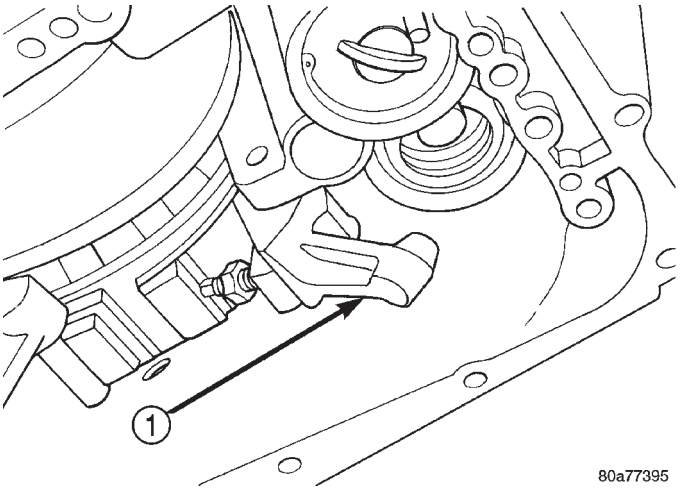

Fig. 204 Low/Reverse Lever

1 - LOW-REVERSE LEVER

(2) Remove low/reverse servo snap ring (Fig. 205).

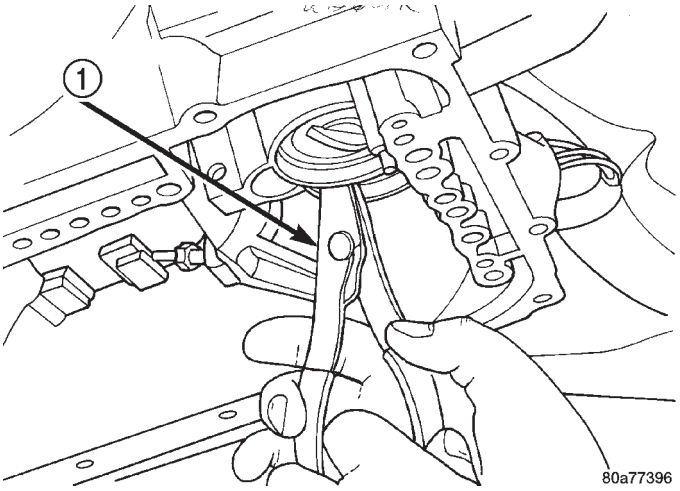

Fig. 205 Low/Reverse Servo Snap Ring

1 - SNAP-RING PLIERS

(3) Remove retainer, spring and servo (Fig. 206).

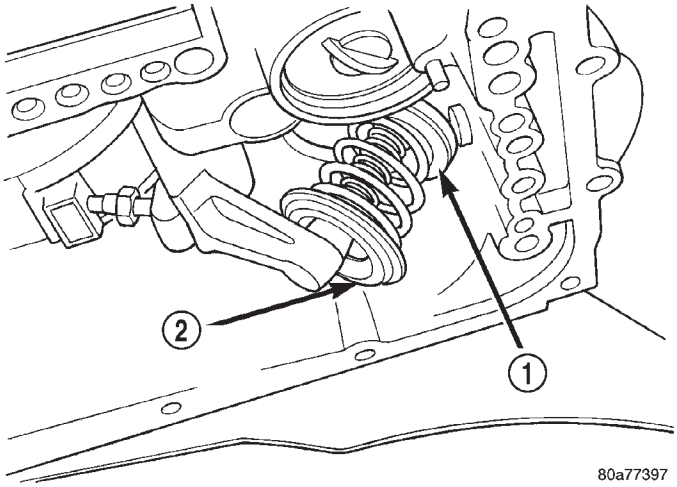

Fig. 206 Remove Retainer, Spring and Servo

1 - SERVO PISTON
2 - SPRING AND RETAINER

CLEANING

Remove and discard the servo piston seal ring (Fig. 207). Then clean the servo components with solvent and dry with compressed air. Replace either spring if collapsed, distorted or broken. Replace the plug and piston if cracked, bent, or worn. Discard the servo snap-rings and use new ones at assembly.

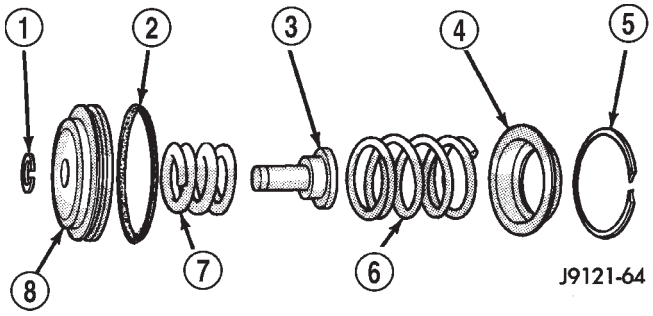

Fig. 207 Rear Servo Components

1 - SNAP-RING
2 - PISTON SEAL
3 - PISTON PLUG
4 - SPRING RETAINER
5 - SNAP-RING
6 - PISTON SPRING
7 - CUSHION SPRING
8 - PISTON

SERVO - LOW/REVERSE (Continued)

ASSEMBLY

(1) Install low/reverse servo assembly (Fig. 208).

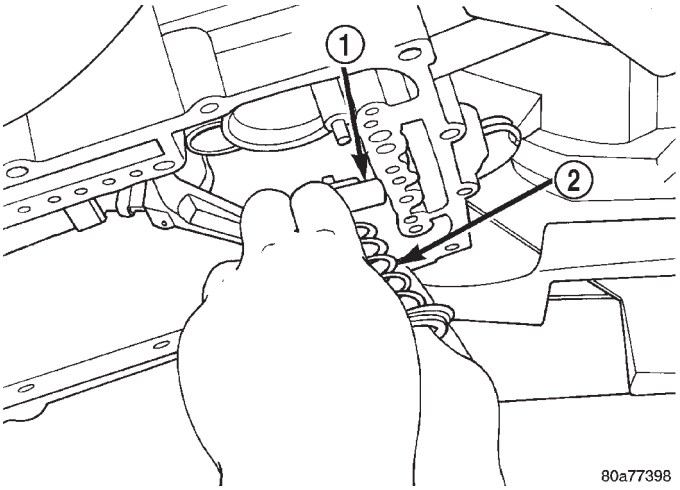

Fig. 208 Low/Reverse Servo Assembly

1 - SERVO PISTON
2 - SPRING

(2) Install low/reverse servo snap ring (Fig. 205).

SHIFT INTERLOCK SOLENOID

DESCRIPTION

The Brake/Transmission Shift Interlock system consists of an electro-magnetic solenoid mounted to the steering column (Fig. 209). The solenoid's plunger consists of an integrated hook, which operates the shift lever pawl (part of shift lever assembly), and a plunger return spring (Fig. 210). The solenoid also has an integrated bracket, which facilitates fastening to the steering column.

OPERATION

The Brake/Transmission Shift Interlock (BTSI) Solenoid prevents the transmission shift lever from being moved out of PARK (P) unless the brake pedal is applied. The BTSI solenoid is hardwired to and controlled by the Intelligent Power Module (IPM). Battery voltage is applied to one side of the solenoid with the ignition key is in either the OFF, ON/RUN, or START positions (Fig. 211). The ground side of the solenoid is controlled by a driver within the IPM. It relies on voltage supplied from the stop lamp switch to the stop lamp sense circuit within the IPM to tell when the brake pedal is depressed. When the brake pedal is depressed, the ground circuit opens, de-energizing the solenoid. When the brake pedal is released, the ground circuit is closed, energizing the solenoid.

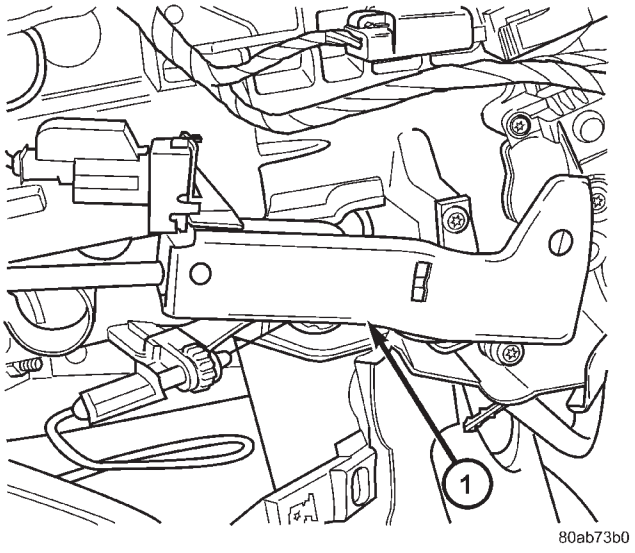

Fig. 209 Brake/Transmission Shift Interlock (BTSI) Solenoid Location

1 - BTSI SOLENOID

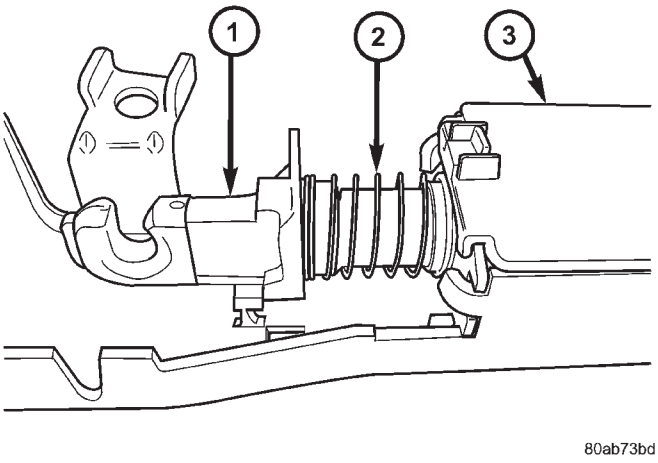

Fig. 210 Solenoid Plunger and Return Spring

1 - PLUNGER
2 - RETURN SPRING
3 - BTSI SOLENOID

SHIFT INTERLOCK SOLENOID (Continued)

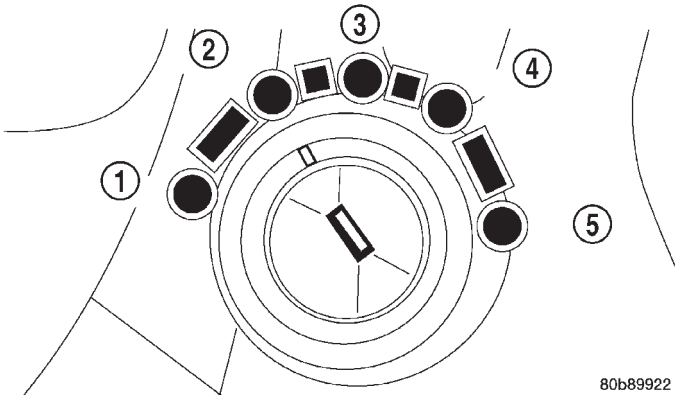

Fig. 211 Ignition Key/Switch Positions

1 - ACC
2 - LOCK
3 - OFF
4 - ON/RUN
5 - START

When the ignition key is in either the OFF, ON/RUN, or START positions, the BTSI solenoid is energized, and the solenoid plunger hook pulls the shift lever pawl into position, prohibiting the shift lever from moving out of PARK (P) (Fig. 212). When the brake pedal is depressed, the ground circuit opens, de-energizing the solenoid. This moves the gearshift lever pawl out of the way (Fig. 213), allowing the shift lever to be moved into any gear position.

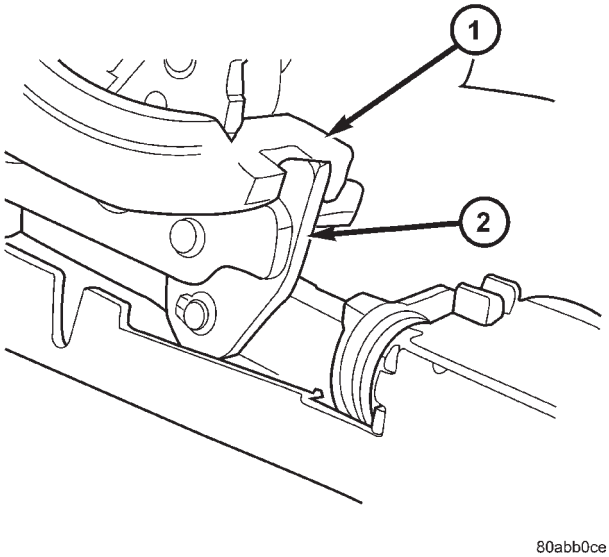

Fig. 212 Pawl Engaged to Shift Lever

1 - GEAR SHIFT LEVER
2 - GEAR SHIFT LEVER PAWL

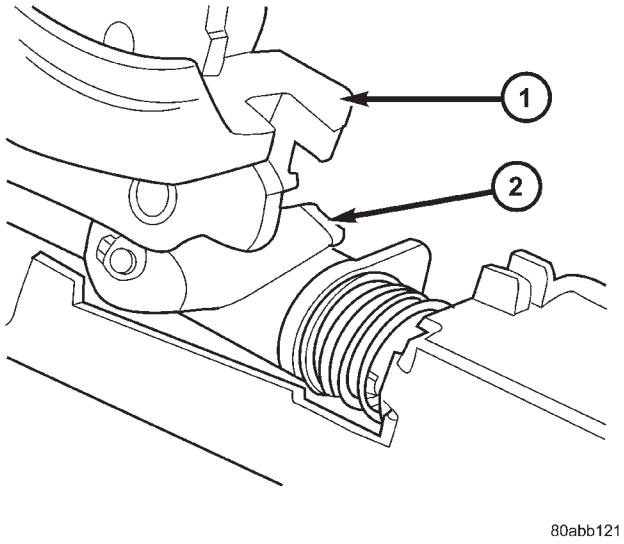

Fig. 213 Pawl Disengaged From Shift Lever

1 - GEAR SHIFT LEVER
2 - GEAR SHIFT LEVER PAWL

A conventional mechanical interlock system is also used. This system manually prohibits shifter movement when the ignition switch is in the LOCK or ACC positions. Solenoid operation is not required in these key positions.

For intended BTSI system operation, refer to the following chart:

ACTION	EXPECTED RESPONSE
1. Turn key to the ″OFF″ position.	1. Shifter CAN be shifted out of park with brake pedal applied.
2. Turn key to the ″ON/RUN″ position.	2. Shifter CANNOT be shifted out of park.
3. Turn key to the ″ON/RUN″ position and depress the brake pedal.	3. Shifter CAN be shifted out of park.
4. Leave shifter in any gear and try to return key to the ″LOCK″ or ″ACC″ position.	4. Key cannot be returned to the ″LOCK″ or ″ACC″ position.
5. Return shifter to ″PARK″ and try to remove the key.	5. Key can be removed (after returning to ″LOCK″ position).
6. With the key removed, try to shift out of ″PARK″.	6. Shifter cannot be shifted out of ″PARK″.
NOTE: Any failure to meet these expected responses requires system adjustment or repair.	

SHIFT INTERLOCK SOLENOID (Continued)

DIAGNOSIS AND TESTING - BRAKE/ TRANSMISSION SHIFT INTERLOCK SOLENOID

For intended BTSI system operation, refer to the following chart:

ACTION	EXPECTED RESPONSE
1. Turn key to the ″OFF″ position.	1. Shifter CAN be shifted out of park with brake pedal applied.
2. Turn key to the ″ON/RUN″ position.	2. Shifter CANNOT be shifted out of park.
3. Turn key to the ″ON/RUN″ position and depress the brake pedal.	3. Shifter CAN be shifted out of park.
4. Leave shifter in any gear and try to return key to the ″LOCK″ or ″ACC″ position.	4. Key cannot be returned to the ″LOCK″ or ″ACC″ position.
5. Return shifter to ″PARK″ and try to remove the key.	5. Key can be removed (after returning to ″LOCK″ position).
6. With the key removed, try to shift out of ″PARK″.	6. Shifter cannot be shifted out of ″PARK″.
NOTE: Any failure to meet these expected responses requires system repair. Refer to the appropriate Diagnostic Information.	

REMOVAL

(1) Disconnect battery negative cable.

(2) Remove instrument panel lower shroud (Fig. 214).

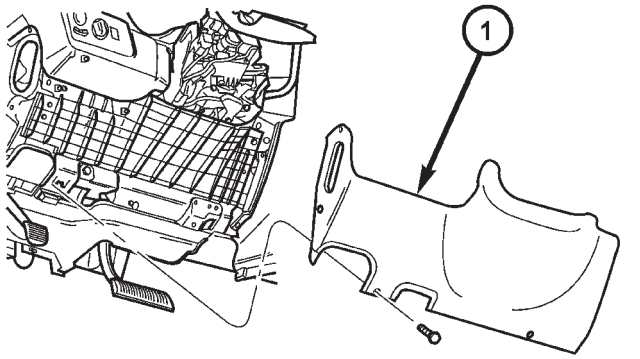

Fig. 214 Instrument Panel Lower Silencer

1 - INSTRUMENT PANEL LOWER SILENCER

(3) Remove knee bolster (Fig. 215).

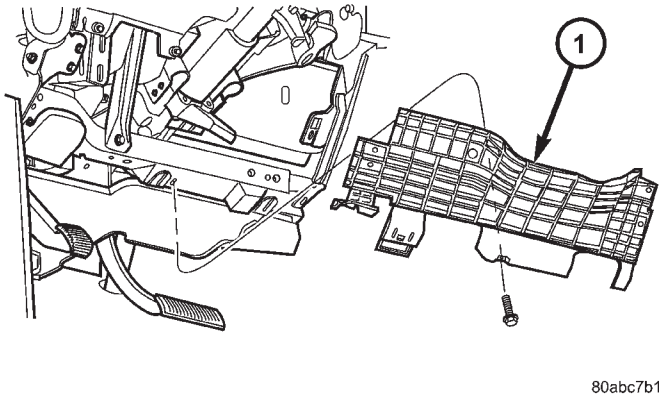

Fig. 215 Knee Bolster

1 - KNEE BOLSTER

(4) Remove steering column lower shroud.

(5) Disconnect brake/transmission shift interlock (BTSI) solenoid connector (Fig. 216).

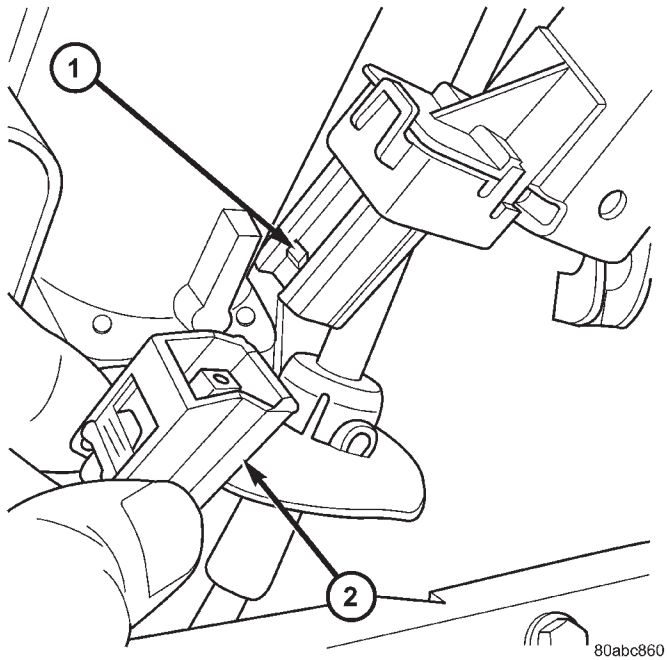

Fig. 216 BTSI Solenoid Connector

1 - BTSI SOLENOID
2 - SOLENOID CONNECTOR

SHIFT INTERLOCK SOLENOID (Continued)

(6) Remove two (2) solenoid-to-column screws (Fig. 217).

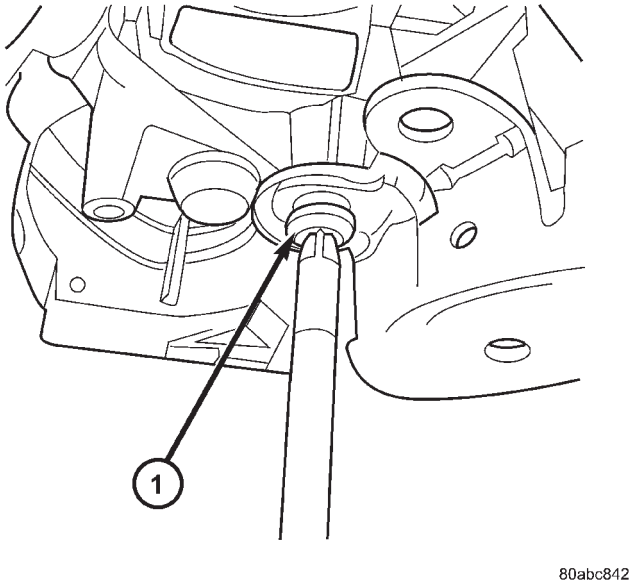

Fig. 217 Solenoid Retaining Screw

1 - SOLENOID RETAINING SCREW (2)

(7) Remove solenoid.

INSTALLATION

(1) Place interlock solenoid into position ensuring hook on end of solenoid plunger engages gearshift lever pawl pin. Install and tighten screws (Fig. 218).

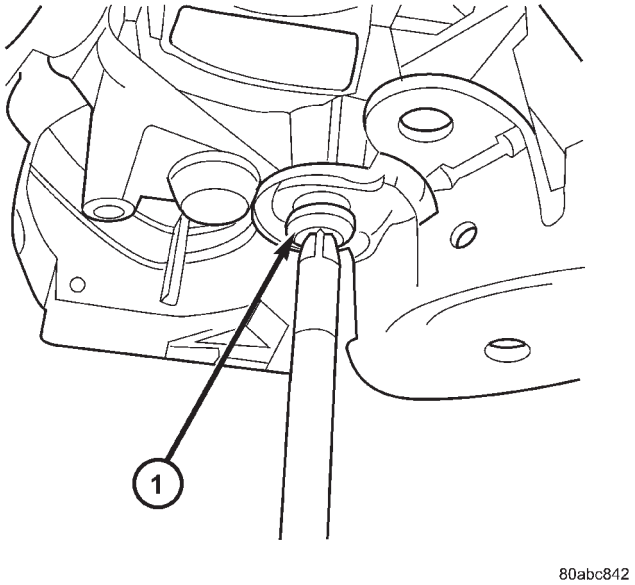

Fig. 218 Solenoid Retaining Screw

1 - SOLENOID RETAINING SCREW (2)

(2) Verify gearshift lever is in PARK (P) and connect solenoid connector (Fig. 219).

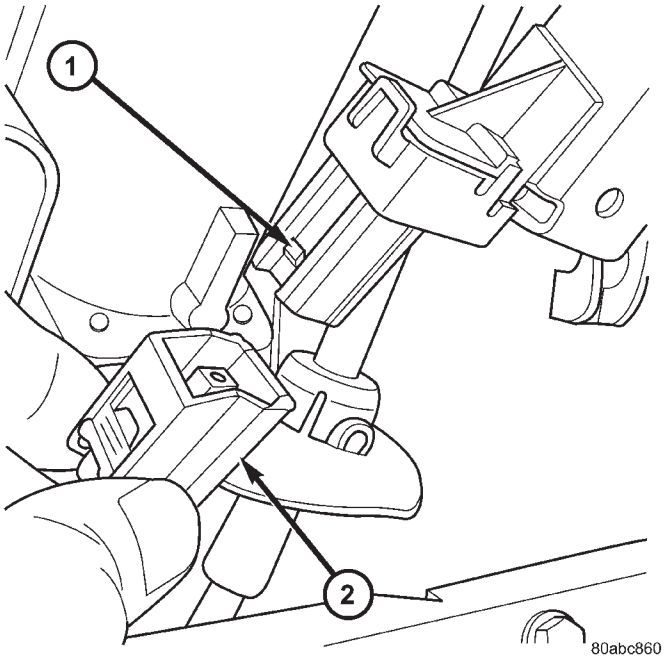

Fig. 219 BTSI Solenoid Connector

1 - BTSI SOLENOID
2 - SOLENOID CONNECTOR

(3) Install steering column lower shroud.
(4) Install knee bolster (Fig. 220).

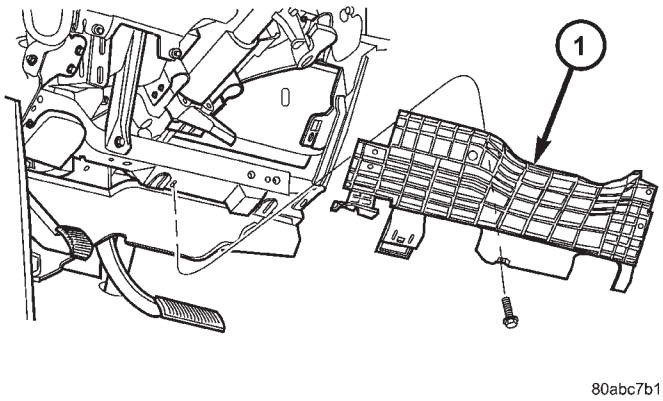

Fig. 220 Knee Bolster

1 - KNEE BOLSTER

SHIFT INTERLOCK SOLENOID (Continued)

(5) Install instrument panel lower silencer (Fig. 221).

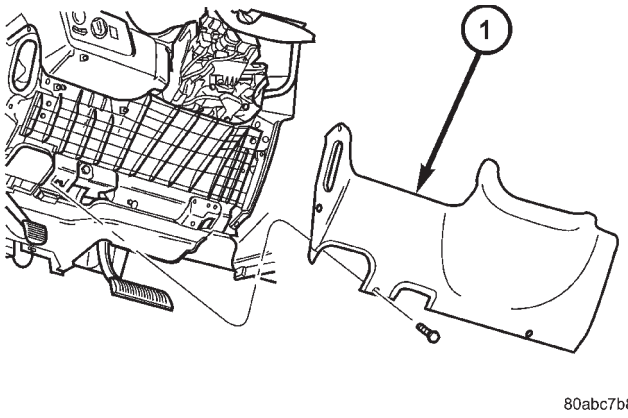

Fig. 221 Instrument Panel Lower Silencer

1 - INSTRUMENT PANEL LOWER SILENCER

(6) Connect battery negative cable.

(7) Verify proper shift interlock system operation. (Refer to 21 - TRANSMISSION/TRANSAXLE/AUTOMATIC - 31TH/SHIFT INTERLOCK SOLENOID - OPERATION)

SOLENOID - TCC

DESCRIPTION

The torque converter clutch (TCC) solenoid is fastened to the transaxle valve body, and its connector protrudes through the transaxle case (Fig. 222).

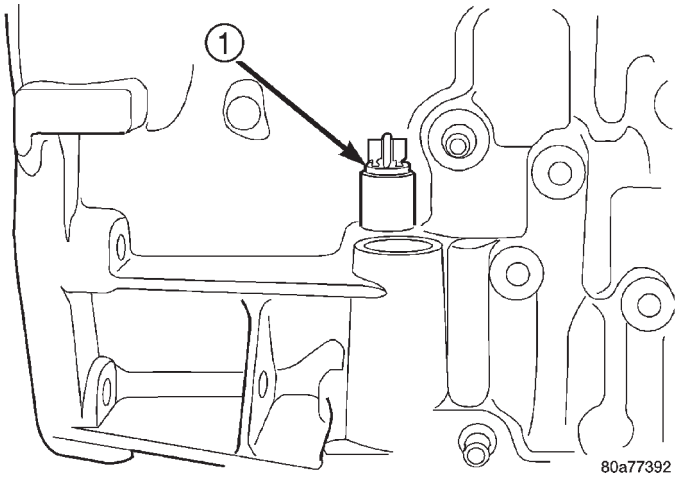

Fig. 222 Torque Converter Clutch Solenoid

1 - TCC SOLENOID WIRING CONNECTOR

OPERATION

The torque converter clutch solenoid is responsible for controlling application of the torque converter clutch. It is controlled by the Powertrain Control Module (PCM), which determines when conditions are acceptable for torque converter lock-up.

REMOVAL

(1) Remove valve body from transaxle. (Refer to 21 - TRANSMISSION/TRANSAXLE/AUTOMATIC - 31TH/VALVE BODY - REMOVAL)

(2) Remove three (3) torque converter clutch solenoid-to-valve body screws (Fig. 223).

(3) Remove torque converter clutch solenoid (Fig. 223). Note orientation of plug and spring.

SOLENOID - TCC (Continued)

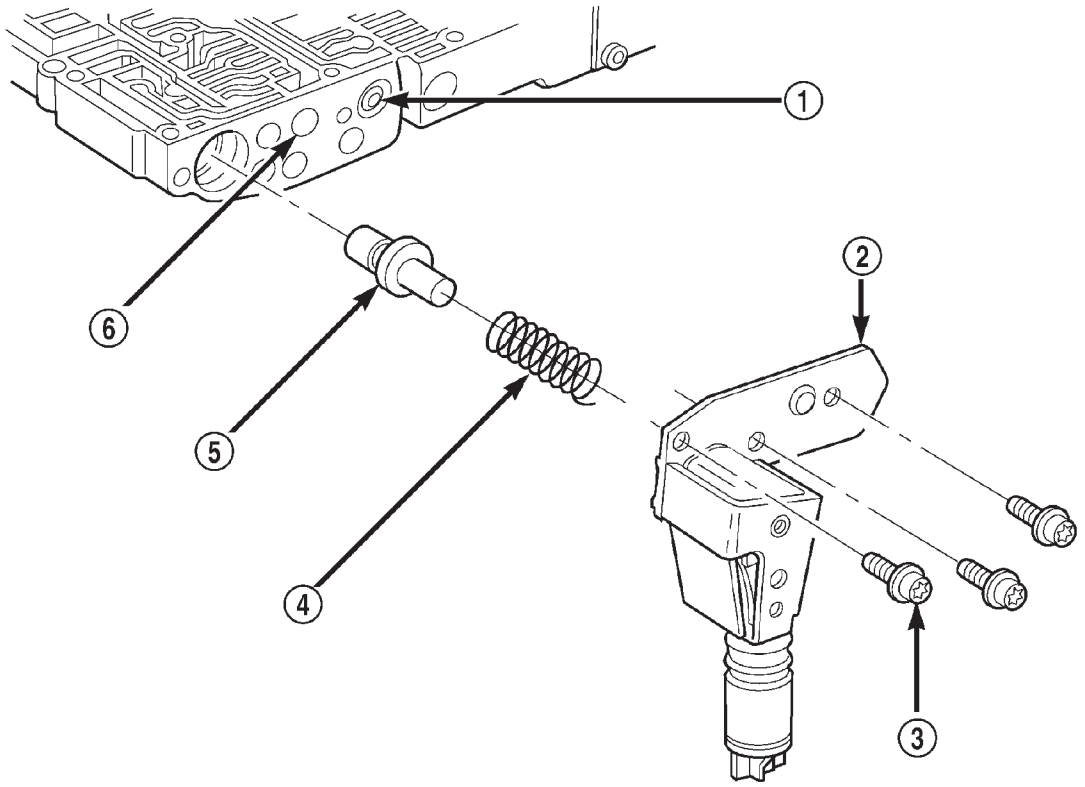

80bdbd32

Fig. 223 Torque Converter Clutch Solenoid and Regulator/Control Valves

1 - CONVERTER PRESSURE CONTROL VALVE
2 - END COVER
3 - SCREW (3)
4 - REGULATOR VALVE THROTTLE PRESSURE PLUG SPRING
5 - REGULATOR VALVE THROTTLE PRESSURE PLUG
6 - SWITCH VALVE

INSTALLATION

(1) Install plug and spring as shown in (Fig. 223).
(2) Install torque converter clutch solenoid to valve body (Fig. 223) and torque screws to 5 N·m (45 in. lbs.).
(3) Install valve body to transaxle. (Refer to 21 - TRANSMISSION/TRANSAXLE/AUTOMATIC - 31TH/VALVE BODY - INSTALLATION)

THROTTLE VALVE CABLE

REMOVAL

(1) Disconnect battery negative cable.
(2) Disconnect cable core from throttle lever pin (Fig. 224).
(3) Disconnect cable retainer from throttle body bracket (Fig. 224).

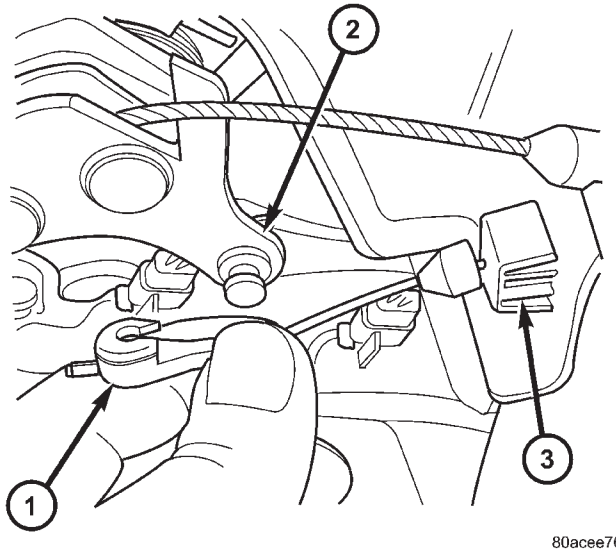

80acee76

Fig. 224 Throttle Valve Cable at Throttle Body

1 - THROTTLE VALVE CABLE CLIP
2 - THROTTLE BODY LEVER
3 - CABLE RETAINER

THROTTLE VALVE CABLE (Continued)

(4) Disconnect cable from throttle valve lever at transaxle (Fig. 225).

(5) Disconnect cable retainer at transaxle bracket (Fig. 225).

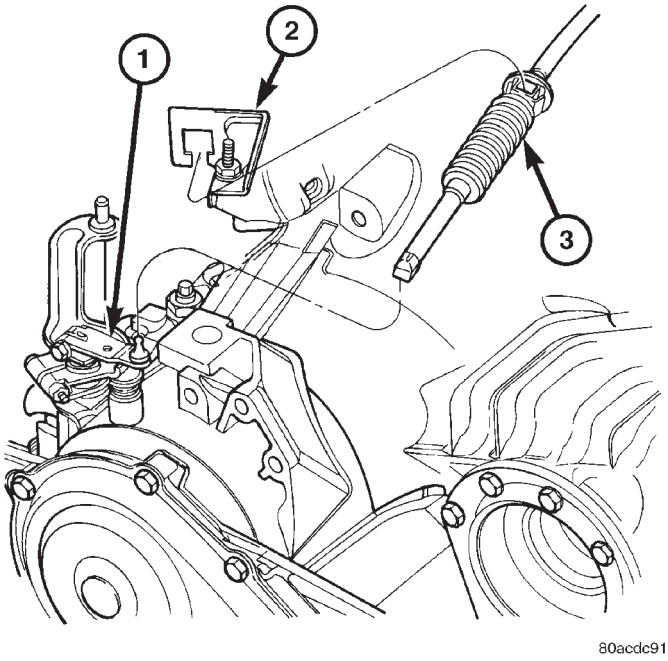

Fig. 225 Throttle Valve Cable at Transaxle

1 - LEVER
2 - BRACKET
3 - THROTTLE VALVE CABLE

INSTALLATION

(1) Install throttle valve cable to bracket at transaxle (Fig. 226). Connect cable to transaxle throttle valve lever.

(2) Route cable through center of intake manifold (#2 & #3) runners.

(3) Connect throttle valve cable retainer to throttle body bracket (Fig. 227).

(4) Connect cable core clip to throttle lever (Fig. 227).

(5) Adjust throttle valve cable. (Refer to 21 - TRANSMISSION/TRANSAXLE/AUTOMATIC - 31TH/THROTTLE VALVE CABLE - ADJUSTMENTS)

(6) Connect battery negative cable.

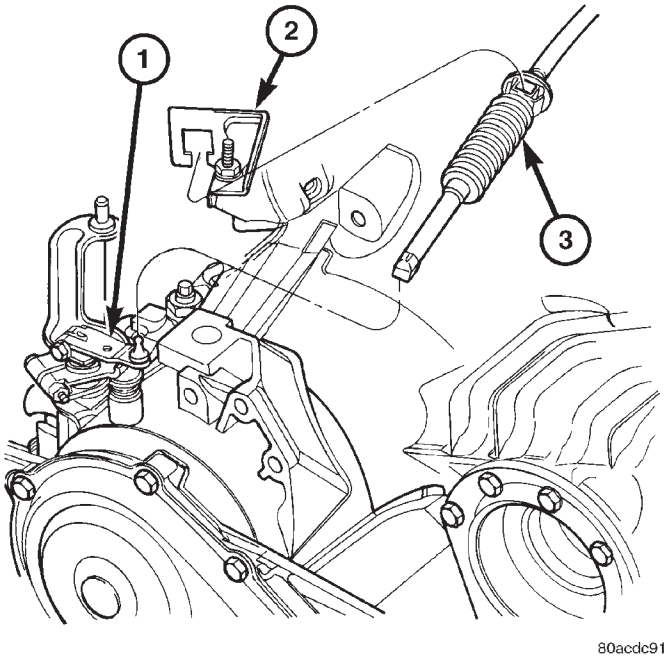

Fig. 226 Throttle Valve Cable at Transaxle

1 - LEVER
2 - BRACKET
3 - THROTTLE VALVE CABLE

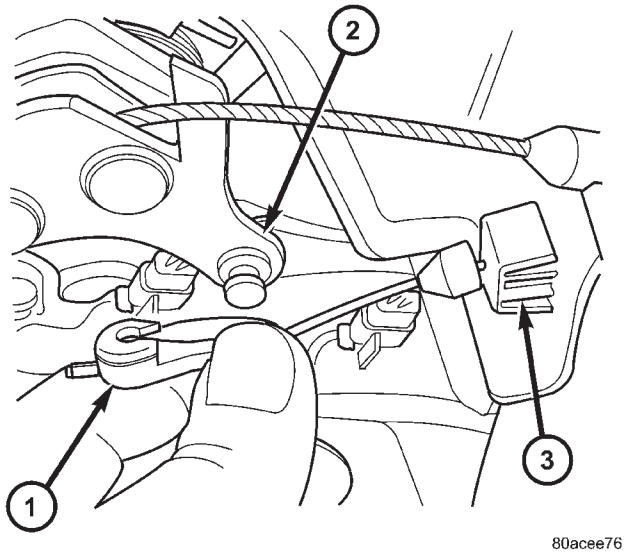

Fig. 227 Throttle Valve Cable at Throttle Body

1 - THROTTLE VALVE CABLE CLIP
2 - THROTTLE BODY LEVER
3 - CABLE RETAINER

THROTTLE VALVE CABLE (Continued)

ADJUSTMENTS

THROTTLE VALVE LINKAGE ADJUSTMENT

The throttle valve linkage adjustment is very important to proper transaxle operation. This adjustment positions a valve which controls shift speed, shift quality, and part throttle downshift sensitivity. If the setting is too short, early shifts and slippage between shifts may occur. If the setting is too long, shifts may be delayed and part throttle downshifts may be very sensitive.

LINKAGE ADJUSTMENT PROCEDURE

(1) Perform transaxle throttle valve linkage adjustment while engine is at normal operating temperature.

(2) Using small screwdriver, disengage adjustment lock at transaxle.

(3) Rotate lever at transaxle all the way to the left side of vehicle against stop.

(4) Slide cable adjuster until cable core end touches clip at throttle valve lever.

(5) Press adjuster lock (Fig. 228) to retain setting.

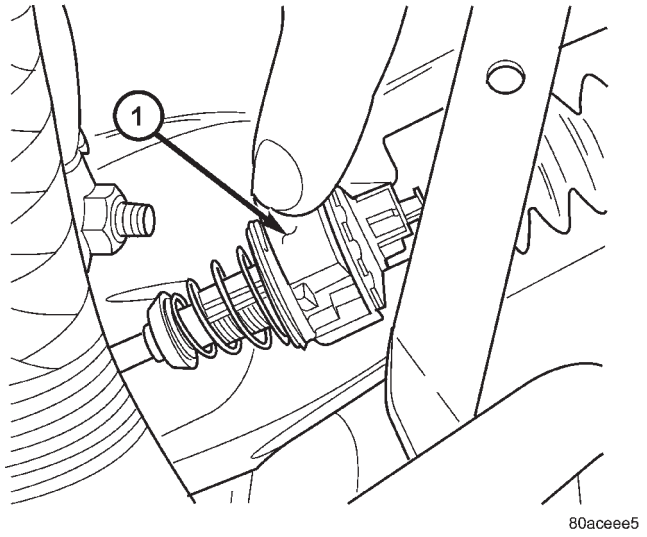

Fig. 228 Throttle Valve Cable Adjustment Lock

1 - ADJUSTER LOCK

TORQUE CONVERTER

DESCRIPTION

The torque converter (Fig. 229) is a hydraulic device that couples the engine crankshaft to the transmission. The torque converter consists of an outer shell with an internal turbine, a stator, an overrunning clutch, an impeller and an electronically applied converter clutch. The converter clutch provides reduced engine speed and greater fuel economy when engaged. Clutch engagement also provides reduced transmission fluid temperatures. The converter clutch engages in third gear. The torque converter hub drives the transmission oil (fluid) pump.

The torque converter is a sealed, welded unit that is not repairable and is serviced as an assembly.

CAUTION: The torque converter must be replaced if a transmission failure resulted in large amounts of metal or fiber contamination in the fluid. If the fluid is contaminated, flush the fluid cooler and lines.

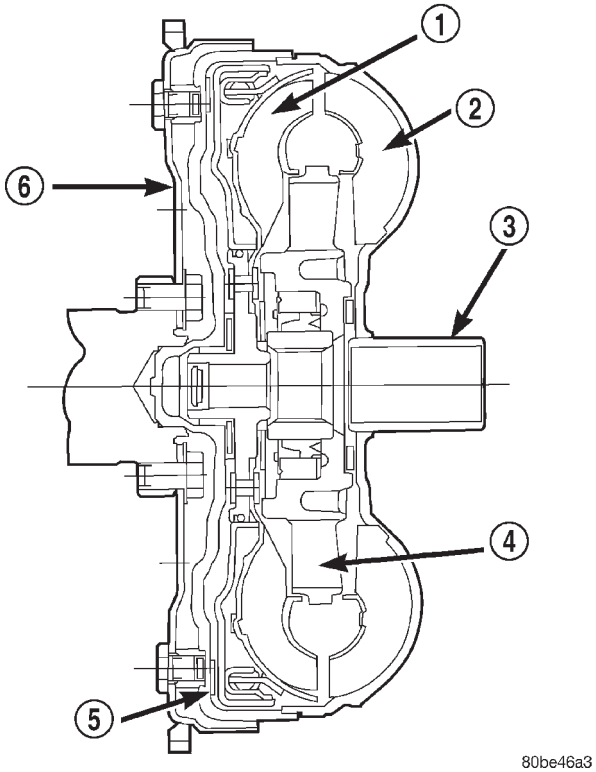

Fig. 229 Torque Converter Assembly

1 - TURBINE
2 - IMPELLER
3 - HUB
4 - STATOR
5 - CONVERTER CLUTCH DISC
6 - DRIVE PLATE

TORQUE CONVERTER (Continued)

IMPELLER

The impeller (Fig. 230) is an integral part of the converter housing. The impeller consists of curved blades placed radially along the inside of the housing on the transmission side of the converter. As the converter housing is rotated by the engine, so is the impeller, because they are one and the same and are the driving member of the system.

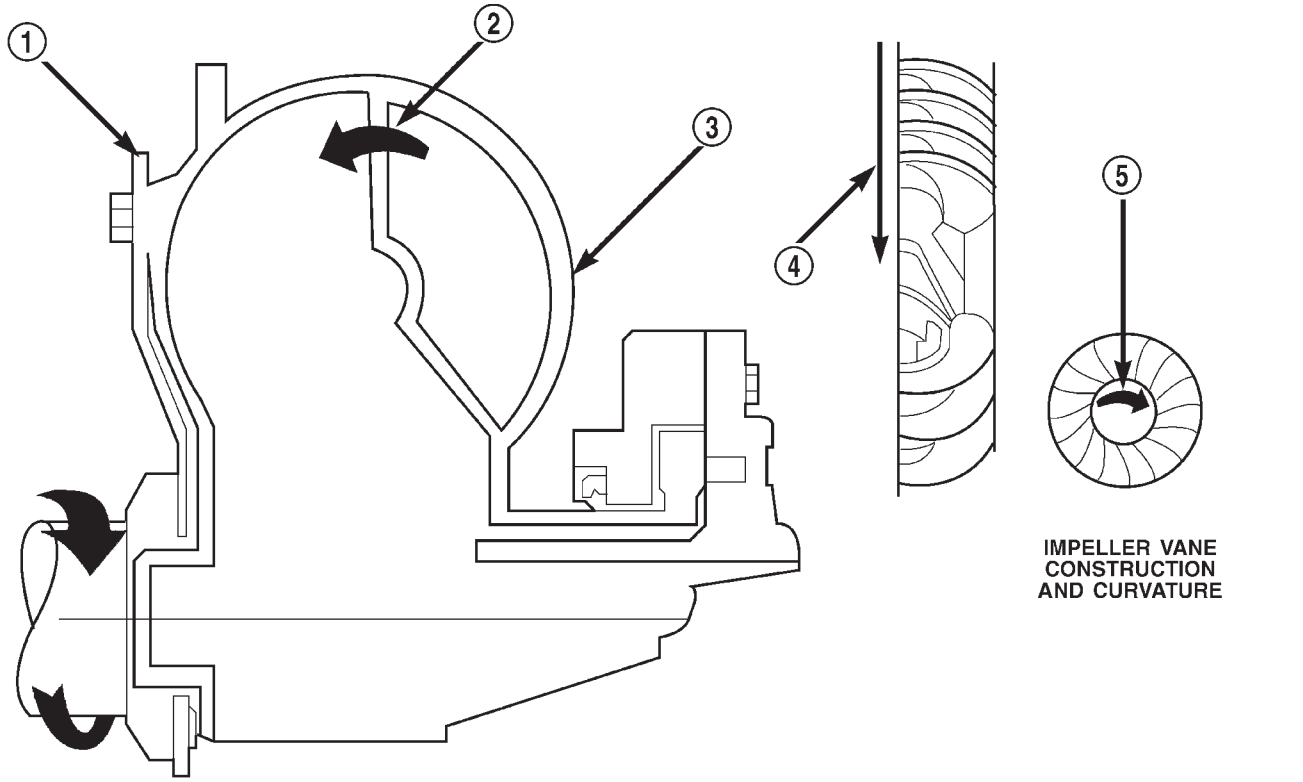

Fig. 230 Impeller

1 - ENGINE FLEXPLATE
2 - OIL FLOW FROM IMPELLER SECTION INTO TURBINE SECTION
3 - IMPELLER VANES AND COVER ARE INTEGRAL
4 - ENGINE ROTATION
5 - ENGINE ROTATION

TORQUE CONVERTER (Continued)

TURBINE

The turbine (Fig. 231) is the output, or driven, member of the converter. The turbine is mounted within the housing opposite the impeller, but is not attached to the housing. The input shaft is inserted through the center of the impeller and splined into the turbine. The design of the turbine is similar to the impeller, except the blades of the turbine are curved in the opposite direction.

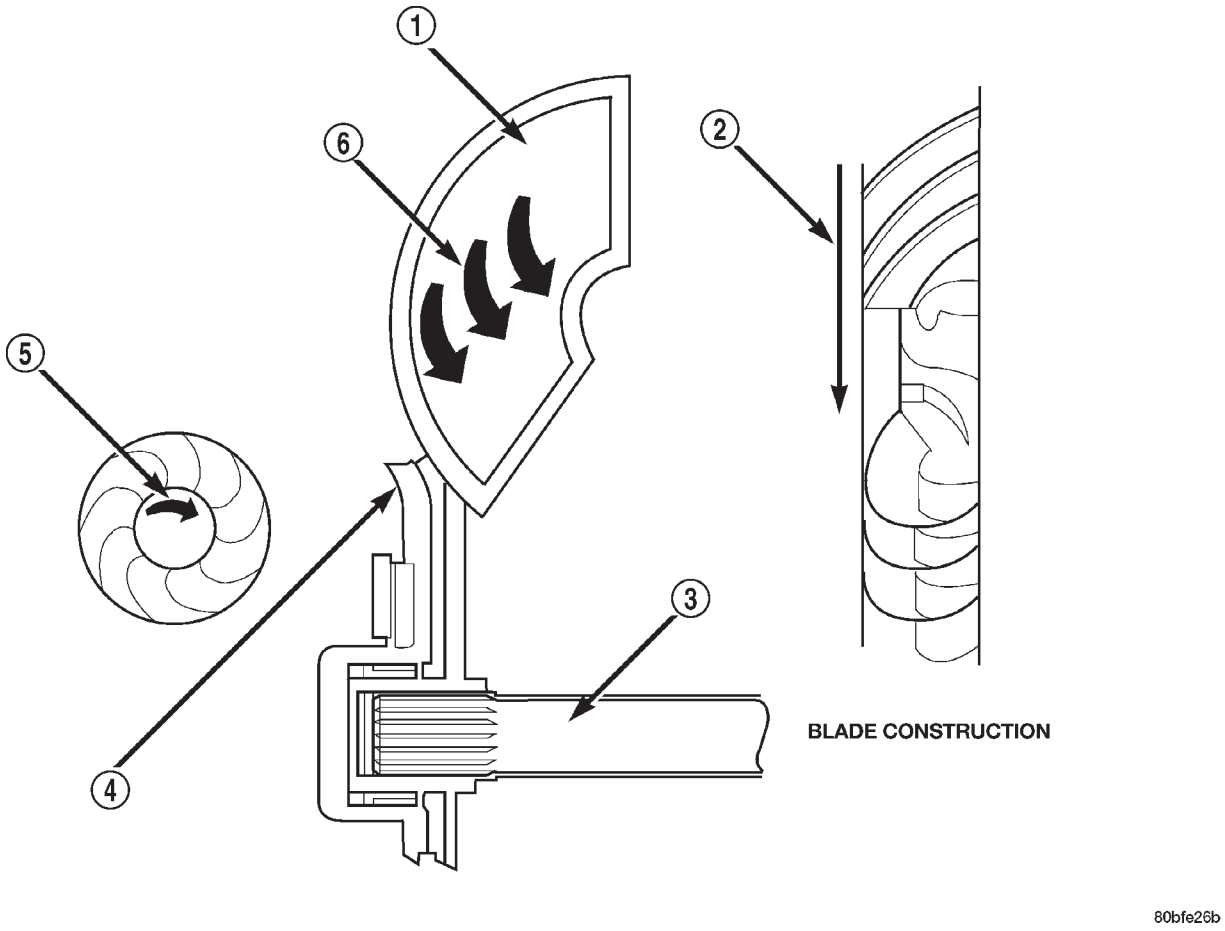

Fig. 231 Turbine

1 - TURBINE VANE
2 - ENGINE ROTATION
3 - INPUT SHAFT
4 - PORTION OF TORQUE CONVERTER COVER
5 - ENGINE ROTATION
6 - OIL FLOW WITHIN TURBINE SECTION

TORQUE CONVERTER (Continued)

STATOR

The stator assembly (Fig. 232) is mounted on a stationary shaft which is an integral part of the oil pump. The stator is located between the impeller and turbine within the torque converter case (Fig. 233). The stator contains an over-running clutch, which allows the stator to rotate only in a clockwise direction. When the stator is locked against the over-running clutch, the torque multiplication feature of the torque converter is operational.

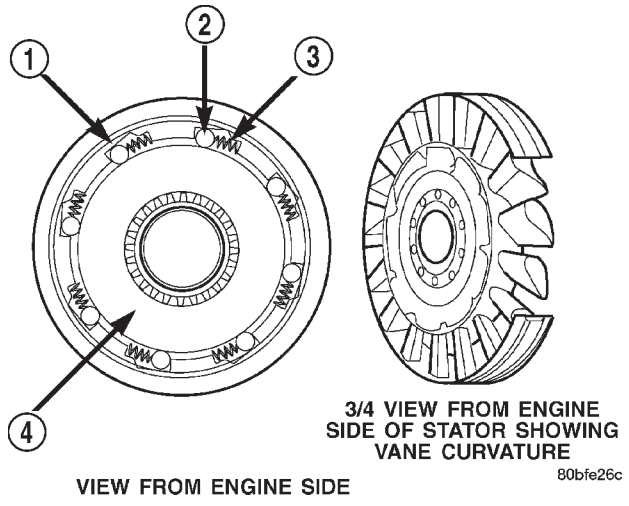

Fig. 232 Stator Components

1 - CAM (OUTER RACE)
2 - ROLLER
3 - SPRING
4 - INNER RACE

TORQUE CONVERTER CLUTCH (TCC)

The TCC (Fig. 234) was installed to improve the efficiency of the torque converter that is lost to the slippage of the fluid coupling. Although the fluid coupling provides smooth, shock–free power transfer, it is natural for all fluid couplings to slip. If the impeller and turbine were mechanically locked together, a zero slippage condition could be obtained. A hydraulic piston was added to the turbine, and a friction material was added to the inside of the front cover to provide this mechanical lock-up.

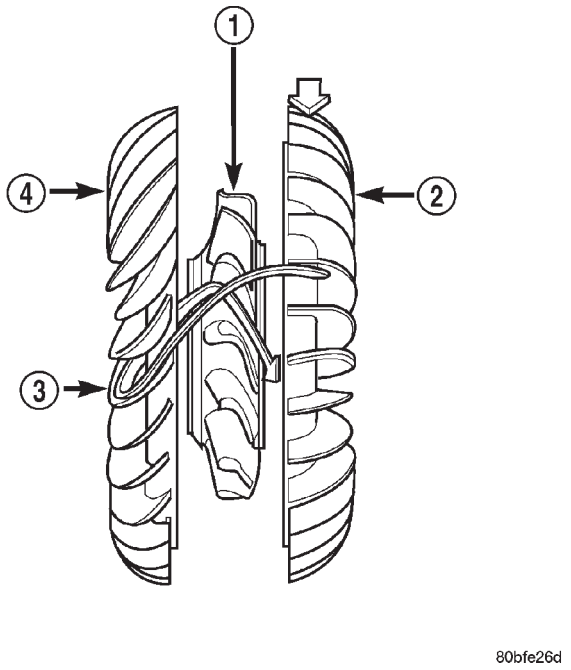

Fig. 233 Stator Location

1 - STATOR
2 - IMPELLER
3 - FLUID FLOW
4 - TURBINE

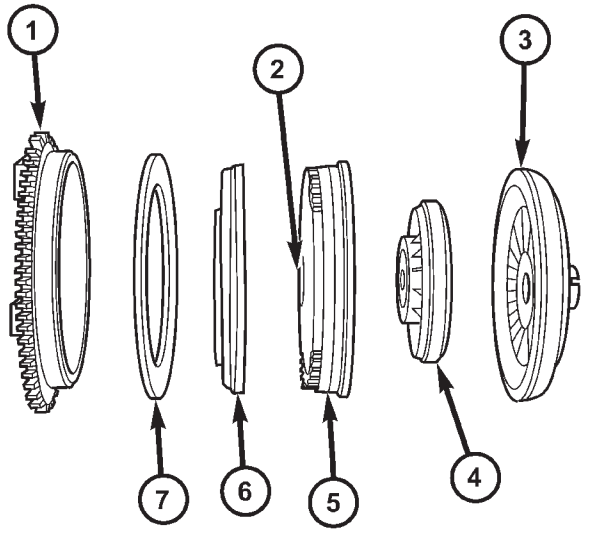

Fig. 234 Torque Converter Clutch (TCC)

1 - IMPELLER FRONT COVER
2 - THRUST WASHER ASSEMBLY
3 - IMPELLER
4 - STATOR
5 - TURBINE
6 - PISTON
7 - FRICTION DISC

TORQUE CONVERTER (Continued)

OPERATION

The converter impeller (Fig. 235) (driving member), which is integral to the converter housing and bolted to the engine drive plate, rotates at engine speed. The converter turbine (driven member), which reacts from fluid pressure generated by the impeller, rotates and turns the transmission input shaft.

TURBINE

As the fluid that was put into motion by the impeller blades strikes the blades of the turbine, some of the energy and rotational force is transferred into the turbine and the input shaft. This causes both of them (turbine and input shaft) to rotate in a clockwise direction following the impeller. As the fluid is leaving the trailing edges of the turbine's blades it continues in a "hindering" direction back toward the impeller. If the fluid is not redirected before it strikes the impeller, it will strike the impeller in such a direction that it would tend to slow it down.

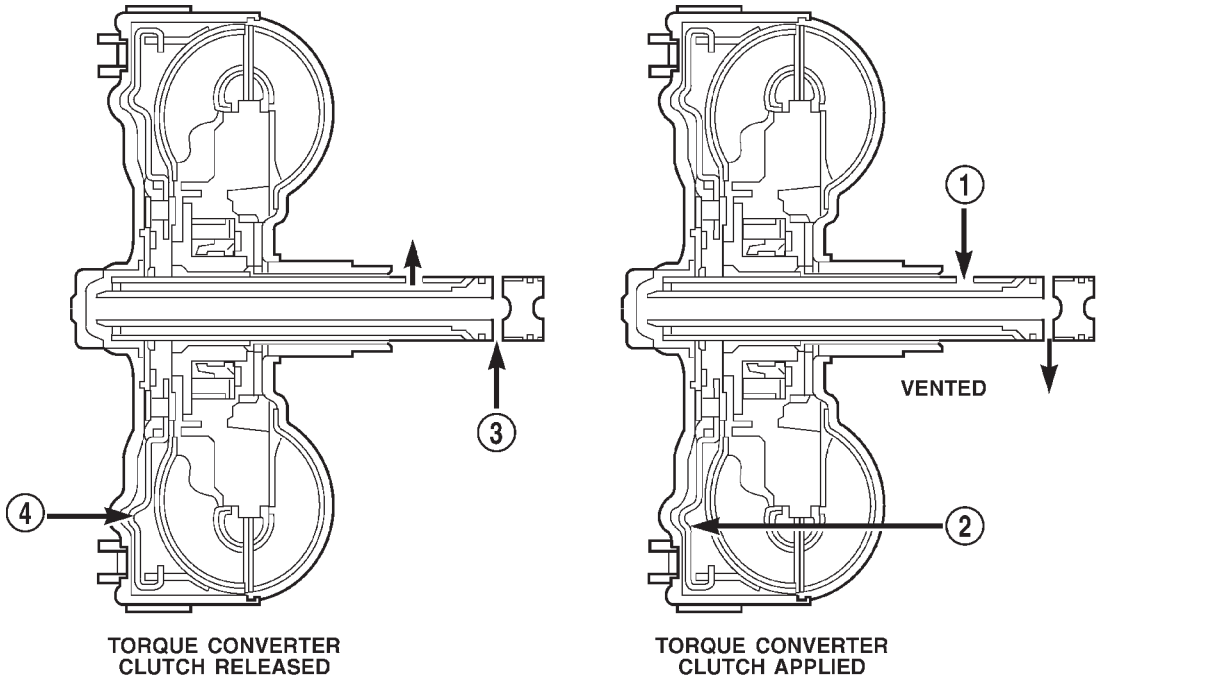

Fig. 235 Torque Converter Fluid Operation

1 - APPLY PRESSURE
2 - THE PISTON MOVES SLIGHTLY FORWARD
3 - RELEASE PRESSURE
4 - THE PISTON MOVES SLIGHTLY REARWARD

TORQUE CONVERTER (Continued)

STATOR

Torque multiplication is achieved by locking the stator's over-running clutch to its shaft (Fig. 236). Under stall conditions (the turbine is stationary), the oil leaving the turbine blades strikes the face of the stator blades and tries to rotate them in a counter-clockwise direction. When this happens the over–running clutch of the stator locks and holds the stator from rotating. With the stator locked, the oil strikes the stator blades and is redirected into a "helping" direction before it enters the impeller. This circulation of oil from impeller to turbine, turbine to stator, and stator to impeller, can produce a maximum torque multiplication of about 2.4:1. As the turbine begins to match the speed of the impeller, the fluid that was hitting the stator in such as way as to cause it to lock–up is no longer doing so. In this condition of operation, the stator begins to free wheel and the converter acts as a fluid coupling.

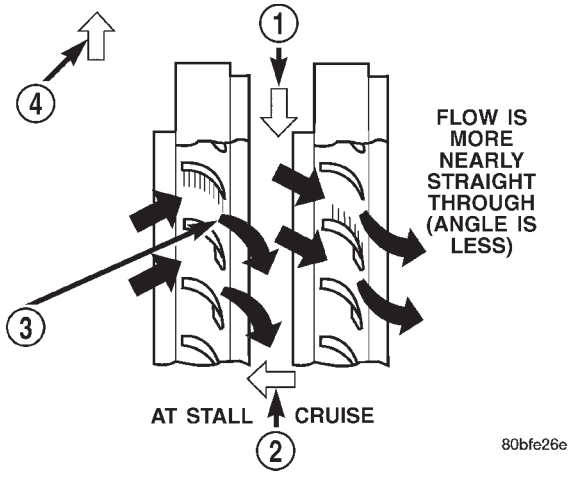

Fig. 236 Stator Operation

1 - DIRECTION STATOR WILL FREE WHEEL DUE TO OIL PUSHING ON BACKSIDE OF VANES
2 - FRONT OF ENGINE
3 - INCREASED ANGLE AS OIL STRIKES VANES
4 - DIRECTION STATOR IS LOCKED UP DUE TO OIL PUSHING AGAINST STATOR VANES

TORQUE CONVERTER CLUTCH (TCC)

In a standard torque converter, the impeller and turbine are rotating at about the same speed and the stator is freewheeling, providing no torque multiplication. By applying the turbine's piston to the front cover's friction material, a total converter engagement can be obtained. The result of this engagement is a direct 1:1 mechanical link between the engine and the transmission.

The engagement and disengagement of the TCC are automatic and controlled by the Powertrain Control Module (PCM). The engagement cannot be activated in the lower gears because it eliminates the torque multiplication effect of the torque converter necessary for acceleration. Inputs that determine clutch engagement are: coolant temperature, vehicle speed and throttle position. The torque converter clutch is engaged by the clutch solenoid on the valve body. The clutch will engage at approximately 56 km/h (35 mph) with light throttle, after the shift to third gear.

REMOVAL

(1) Remove transmission and torque converter from vehicle. (Refer to 21 - TRANSMISSION/TRANSAXLE/AUTOMATIC - 31TH - REMOVAL)

(2) Place a suitable drain pan under the converter housing end of the transmission.

CAUTION: Verify that transmission is secure on the lifting device or work surface, the center of gravity of the transmission will shift when the torque converter is removed creating an unstable condition. The torque converter is a heavy unit. Use caution when separating the torque converter from the transmission.

(3) Pull the torque converter forward until the center hub clears the oil pump seal.

(4) Separate the torque converter from the transmission.

INSTALLATION

Check converter hub and drive notches for sharp edges, burrs, scratches, or nicks. Polish the hub and notches with 320/400 grit paper or crocus cloth if necessary. The hub must be smooth to avoid damaging the pump seal at installation.

(1) Lubricate converter hub and oil pump seal lip with transmission fluid.

(2) Place torque converter in position on transmission.

CAUTION: Do not damage oil pump seal or bushing while inserting torque converter into the front of the transmission.

(3) Align torque converter to oil pump seal opening.

(4) Insert torque converter hub into oil pump.

(5) While pushing torque converter inward, rotate converter until converter is fully seated in the oil pump gears.

(6) Check converter seating with a scale and straightedge (Fig. 237). Surface of converter lugs should be 1/2 in. to rear of straightedge when converter is fully seated.

(7) If necessary, temporarily secure converter with C-clamp attached to the converter housing.

TORQUE CONVERTER (Continued)

(8) Install the transmission in the vehicle. (Refer to 21 - TRANSMISSION/TRANSAXLE/AUTOMATIC - 31TH - INSTALLATION)

(9) Fill the transmission with the recommended fluid.

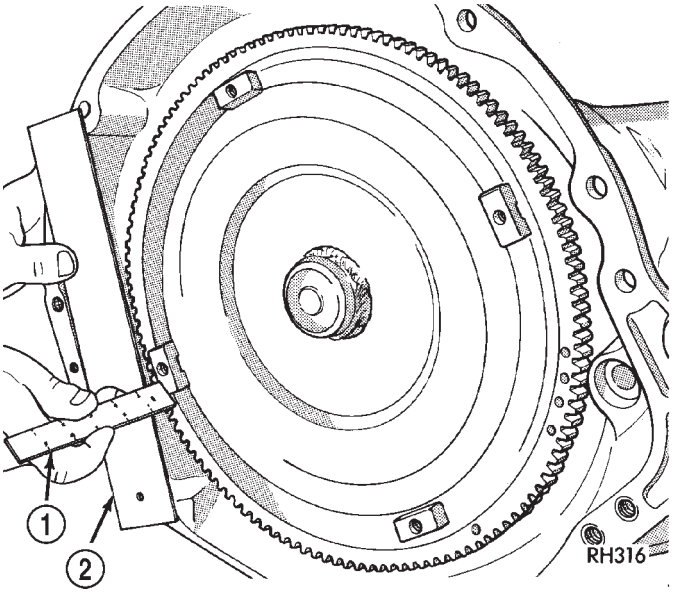

Fig. 237 Checking Torque Converter Seating

1 - SCALE
2 - STRAIGHTEDGE

TRANSFER SYSTEM - OUTPUT SHAFT/GEAR/BEARING

REMOVAL

NOTE: Transfer Gear should be removed for repair of output shaft, to obtain an accurate output shaft turning torque measurement upon reassembly. (Refer to 21 - TRANSMISSION/TRANSAXLE/AUTOMATIC - 31TH/TRANSFER SYSTEM - REMOVAL)

NOTE: Transaxle geartrain must be removed to gain access to and service output shaft. (Refer to 21 - TRANSMISSION/TRANSAXLE/AUTOMATIC - 31TH - DISASSEMBLY)

(1) Using a suitable punch, bend retaining strap tabs flat to facilitate bolt removal (Fig. 238).

(2) Remove retaining strap and stirrup-to-gear bolts (Fig. 239).

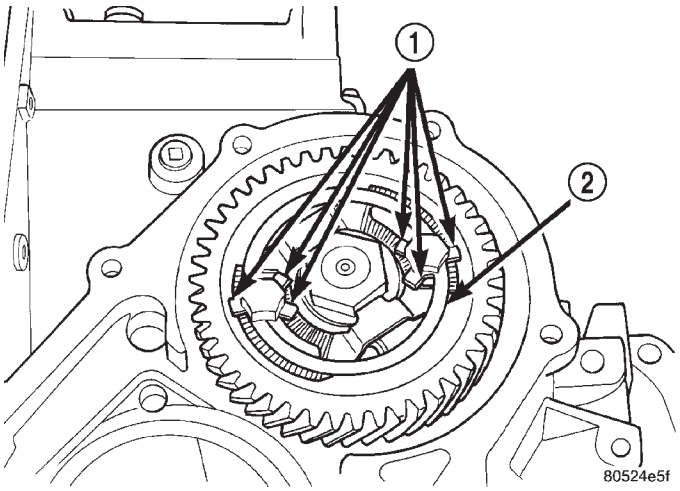

Fig. 238 Bend Strap Tabs Flat

1 - RETAINING TABS
2 - STRAP

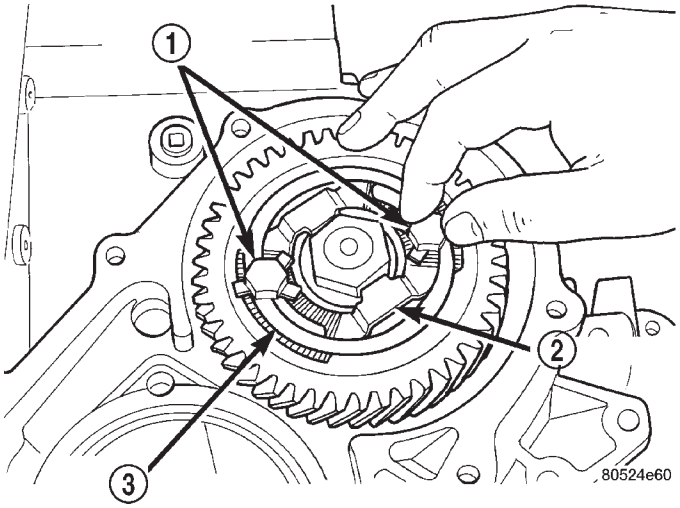

Fig. 239 Remove Strap Bolts

1 - RETAINING BOLTS
2 - STIRRUP
3 - STRAP

TRANSFER SYSTEM - OUTPUT SHAFT/GEAR/BEARING (Continued)

(3) Remove retaining strap (Fig. 240).

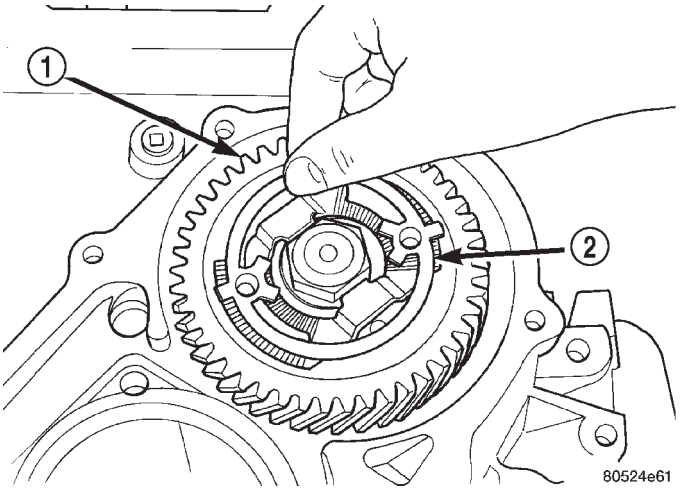

Fig. 240 Remove Strap From Stirrup and Gear

1 - OUTPUT GEAR
2 - STRAP

(4) Remove stirrup (Fig. 241).

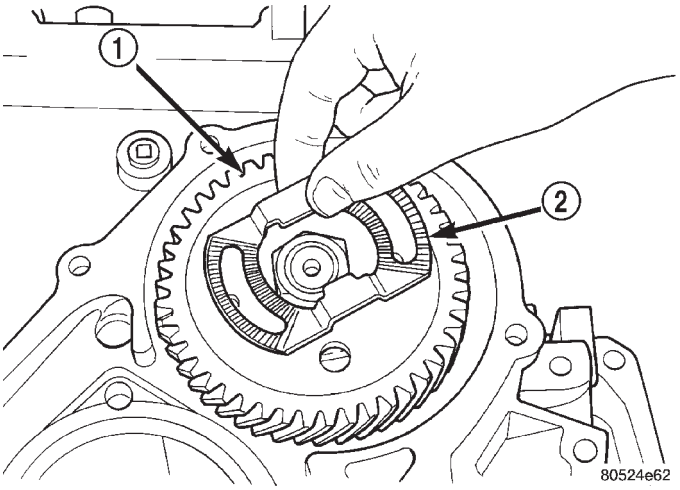

Fig. 241 Remove Stirrup From Gear

1 - OUTPUT GEAR
2 - STIRRUP

(5) Using Tool L-4434, remove output shaft retaining nut and washer (Fig. 242).

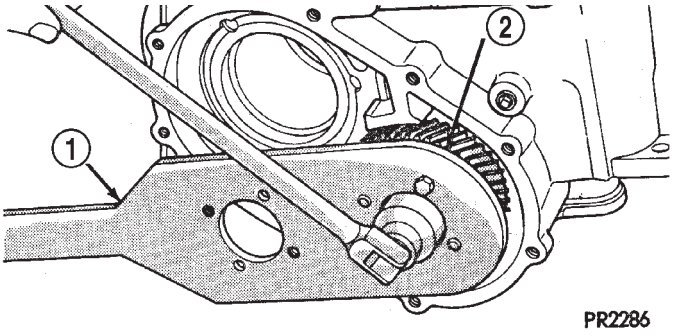

Fig. 242 Remove Output Shaft Retaining Nut and Washer

1 - SPECIAL TOOL L-4434
2 - OUTPUT SHAFT GEAR

(6) Using Tool L-4407 as shown in (Fig. 243), remove output shaft gear and select shim (Fig. 244).

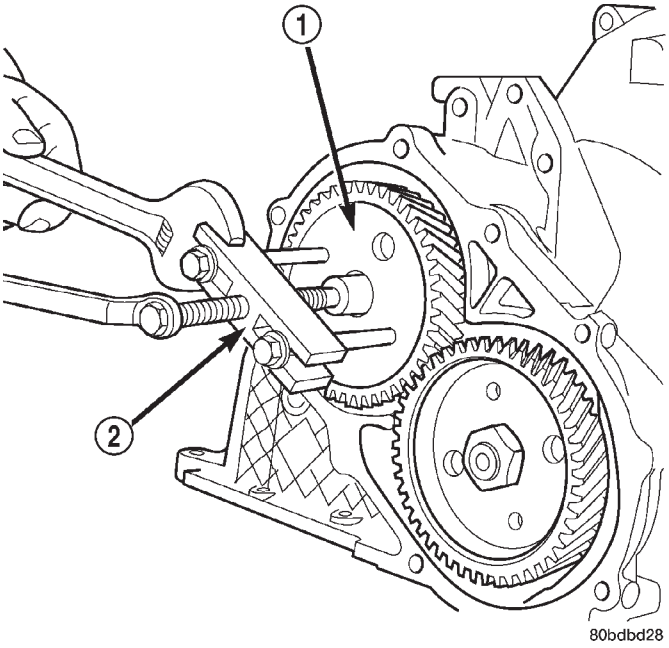

Fig. 243 Remove Output Shaft Gear

1 - OUTPUT GEAR
2 - TOOL L-4407A

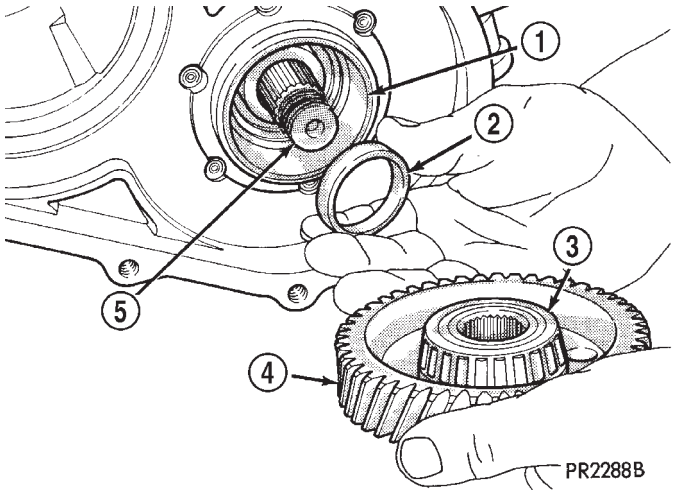

Fig. 244 Output Shaft Gear and (Select) Shim

1 - BEARING CUP
2 - SHIM (SELECT)
3 - BEARING CONE
4 - OUTPUT SHAFT GEAR
5 - OUTPUT SHAFT

(7) Remove output shaft/rear annulus gear assembly (Fig. 245).

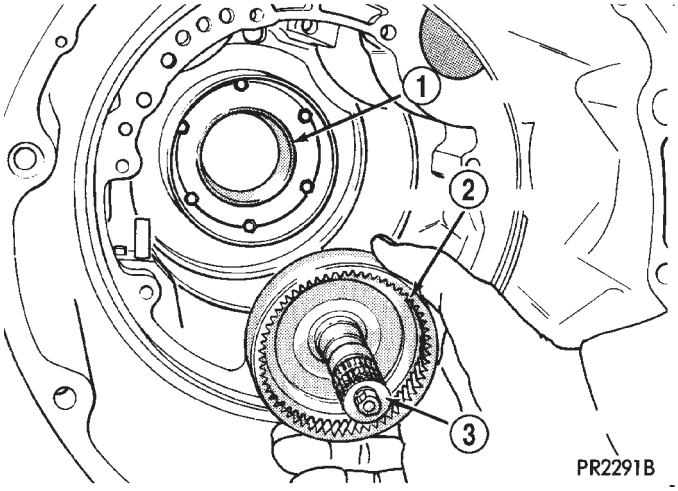

Fig. 245 Remove Output Shaft and Rear Annulus Gear Assembly

1 - BEARING CUP
2 - REAR ANNULUS GEAR
3 - OUTPUT SHAFT

(8) Remove output shaft gear bearing cone using Tool L-4406-1 and adapters L-4406-2 (Fig. 246).

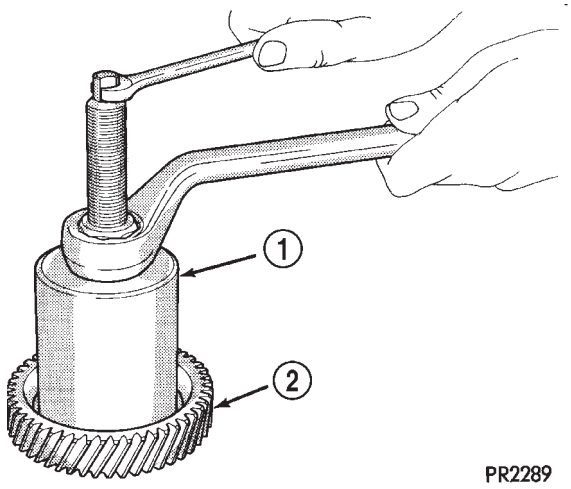

Fig. 246 Remove Output Shaft Gear Bearing Cone

1 - SPECIAL TOOL L-4406-1 WITH ADAPTERS L-4406-2
2 - OUTPUT SHAFT GEAR

(9) Using an arbor press, remove output shaft from rear annulus gear (Fig. 247).

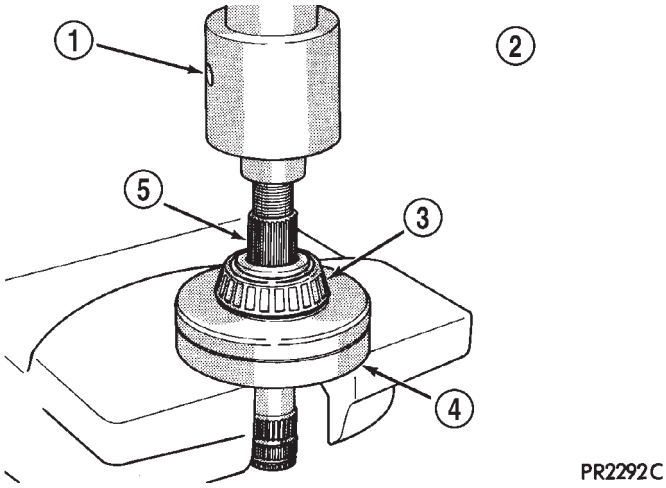

Fig. 247 Remove Output Shaft

1 - ARBOR PRESS RAM
2 - CAUTION: SUPPORT ANNULUS GEAR UNDERNEATH, NEAR GEAR CENTER.
3 - BEARING CONE
4 - REAR ANNULUS GEAR
5 - OUTPUT SHAFT

TRANSFER SYSTEM - OUTPUT SHAFT/GEAR/BEARING (Continued)

(10) Using Tool L-4406-1 and adapters L-4406-2, remove rear planetary annulus gear bearing cone (Fig. 248).

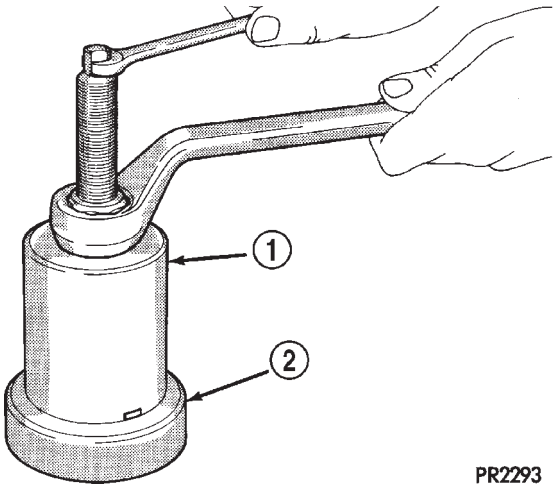

Fig. 248 Remove Rear Planetary Annulus Gear Bearing Cone

1 - SPECIAL TOOL L-4406-1 WITH ADAPTERS L-4406-2
2 - REAR PLANETARY ANNULUS GEAR

(11) Using Tool L-4518, remove output shaft gear bearing cup from rear of transaxle case (Fig. 249).

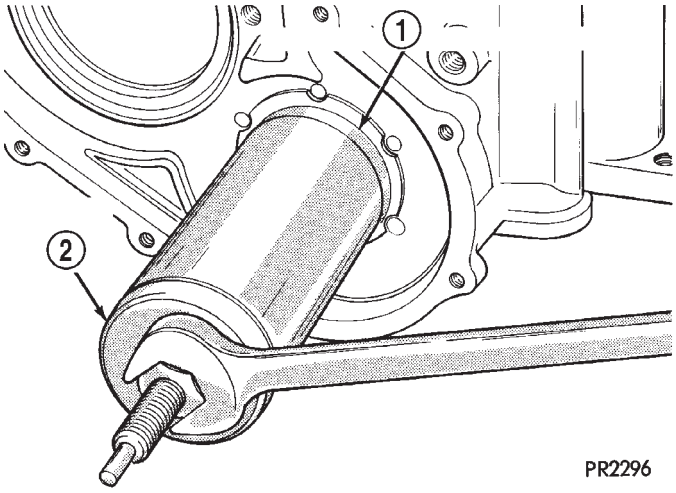

Fig. 249 Remove Output Shaft Gear Bearing Cup

1 - OUTPUT SHAFT GEAR BEARING CUP
2 - SPECIAL TOOL L-4518

(12) Using Tool L-4518, remove output shaft gear bearing cup from inside transaxle case (Fig. 250).

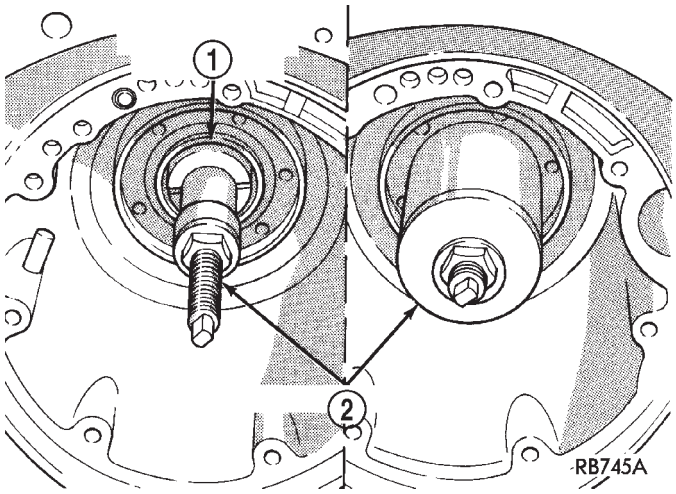

Fig. 250 Remove Rear Planetary Annulus Gear Bearing Cup

1 - REAR PLANETARY ANNULUS GEAR BEARING CUP
2 - SPECIAL TOOL L-4518

INSTALLATION

(1) Install output shaft bearing cone using Tool L-4408, C-4171, and a suitable press (Fig. 251).

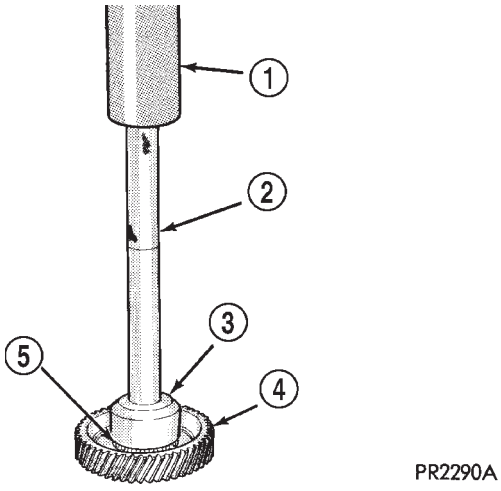

Fig. 251 Install Output Shaft Gear Bearing Cone

1 - PRESS
2 - HANDLE C-4171
3 - SPECIAL TOOL L-4408
4 - OUTPUT SHAFT GEAR
5 - BEARING CONE

(2) Install rear planetary annulus gear bearing cone using tool C-4637 and cup from Tool L-4518 (Fig. 252).

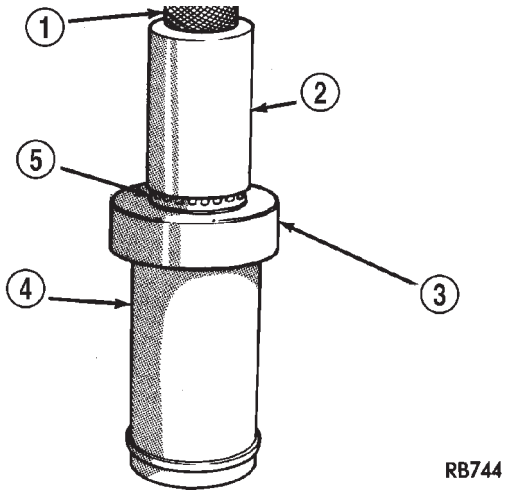

Fig. 252 Install Rear Planetary Annulus Gear Bearing Cone

1 - ARBOR PRESS RAM
2 - SPECIAL TOOL C-4637
3 - REAR PLANETARY ANNULUS GEAR
4 - CUP FROM TOOL L-4518
5 - BEARING CONE

(3) Using a press and a ½" socket to protect the shaft, install output shaft into rear planetary annulus gear (Fig. 253).

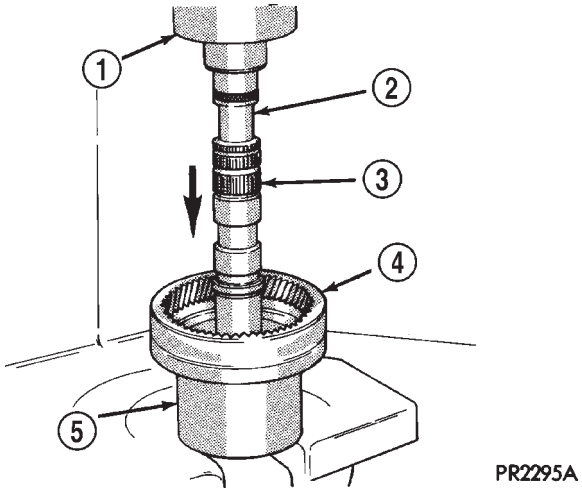

Fig. 253 Install Output Shaft into Rear Planetary Annulus Gear

1 - PRESS
2 - 1/2 INCH SOCKET
3 - OUTPUT SHAFT
4 - REAR ANNULUS GEAR
5 - SPACER

(4) Using Tool L-4429-3, install both output shaft bearing cups to transaxle case (Fig. 254) (Fig. 255).

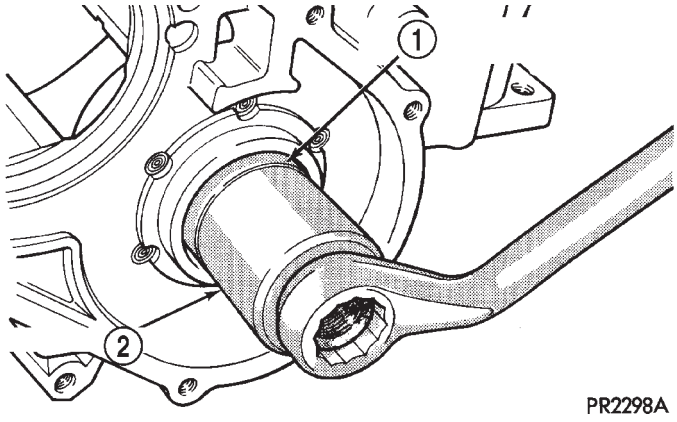

Fig. 254 Install Output Shaft Gear Bearing Cup

1 - OUTPUT SHAFT GEAR BEARING CUP
2 - SPECIAL TOOL L-4429-3

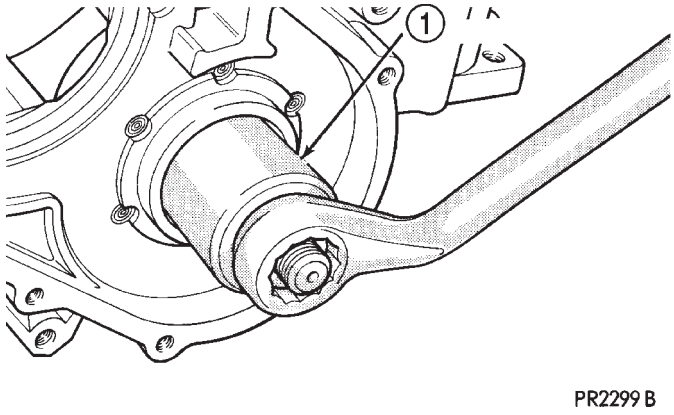

Fig. 255 Install Rear Planetary Annulus Gear Bearing Cup

1 - SPECIAL TOOL L-4429-3

(5) Determine output shaft bearing shim thickness. Shim thickness need be determined only if any of the following parts are replaced:

- Transaxle case
- Output shaft
- Rear planetary annulus gear
- Output shaft gear
- Rear annulus and output shaft gear bearing cones
- Overrunning clutch race cups

To determine proper shim thickness, Refer to Output Shaft Bearing Adjustment. **Check output shaft bearing turning torque, using an inch-pound torque wrench. If turning torque is 3-8 in. lbs., the proper shim has been installed.**

TRANSFER SYSTEM - OUTPUT SHAFT/GEAR/BEARING (Continued)

(6) Install output shaft assembly with appropriate shim (Fig. 256) (Fig. 257).

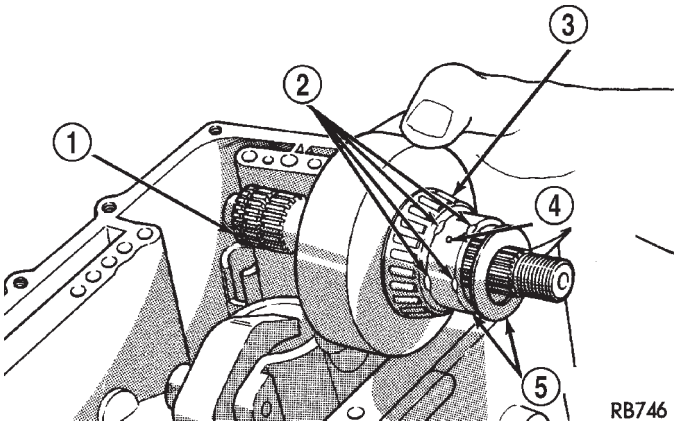

Fig. 256 Install Output Shaft Assembly

1 - OUTPUT SHAFT ASSEMBLY
2 - USE GREASE TO HOLD SHIMS IN POSITION
3 - BEARING CONE
4 - LUBRICATION HOLE
5 - SELECT SHIMS

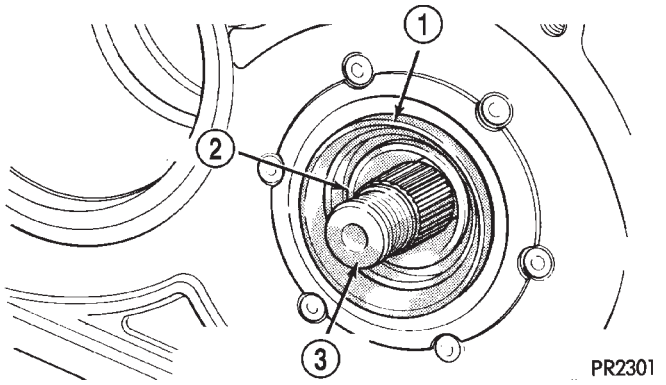

Fig. 257 Output Shaft and (Select) Shims in Position

1 - BEARING CUP
2 - (SELECT) SHIM
3 - OUTPUT SHAFT ASSEMBLY

(7) Install output shaft gear onto shaft. Use Tool L-4439 to get gear started (Fig. 258).

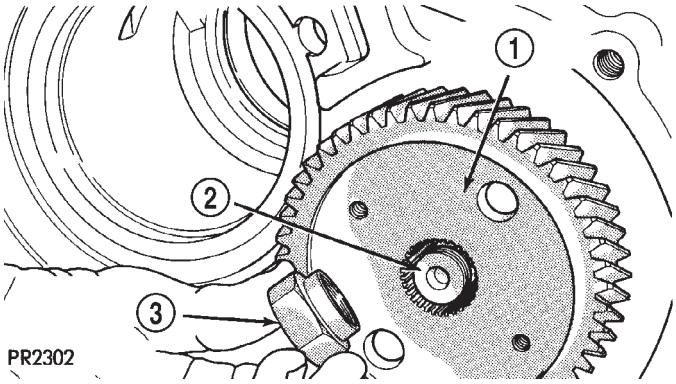

Fig. 258 Start Output Shaft Gear onto Output Shaft

1 - OUTPUT SHAFT GEAR
2 - OUTPUT SHAFT
3 - SPECIAL TOOL L-4439

(8) Install Tool L-4434 and C-4658. Install washer and nut (Fig. 259).

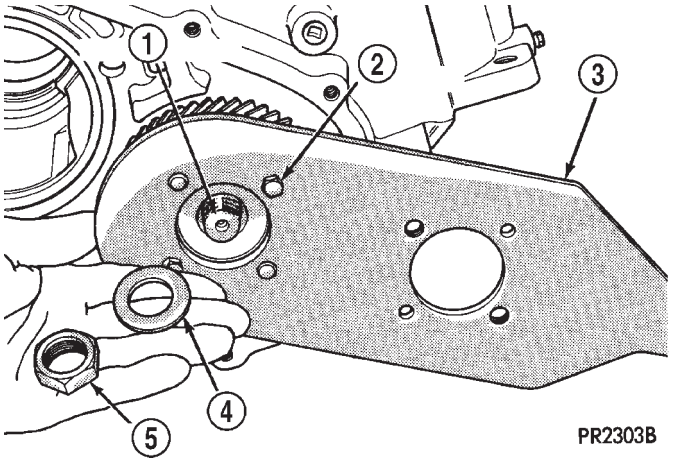

Fig. 259 Holding Output Shaft Gear

1 - OUTPUT SHAFT
2 - SCREW (2)
3 - SPECIAL TOOL L-4434 AND C-4658
4 - WASHER
5 - NUT

(9) Torque output shaft retaining nut to 271 N·m (200 ft. lbs.) (Fig. 260).

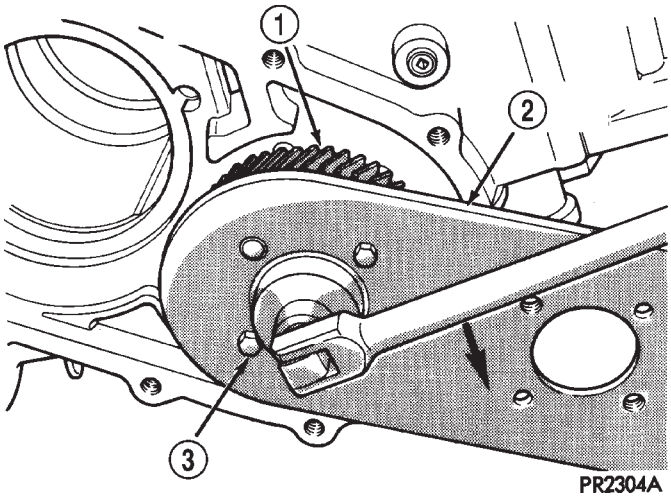

Fig. 260 Tighten Output Shaft Retaining Nut

1 - OUTPUT SHAFT GEAR
2 - SPECIAL TOOL L-4434 AND C-4658
3 - SCREW (2)

(10) Set up Tool L-4432 and C-4658 as shown in (Fig. 261). Install dial indicator and measure output shaft end play.

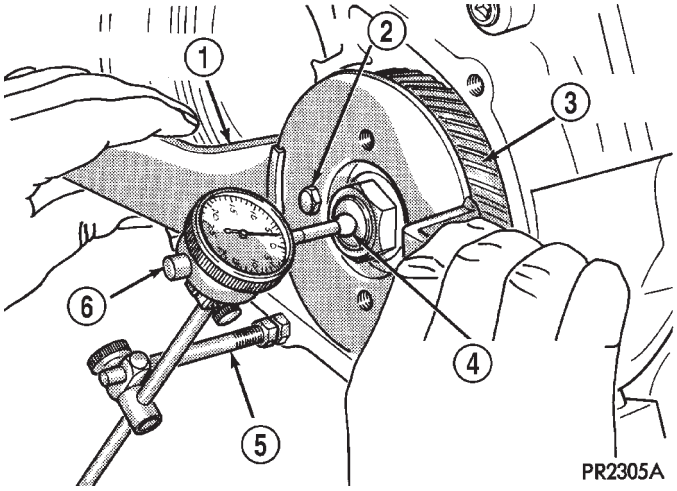

Fig. 261 Checking Output Shaft End Play

1 - SPECIAL TOOL L-4432 AND C-4658
2 - SCREW (2)
3 - OUTPUT SHAFT GEAR
4 - STEEL BALL (GREASE IN PLACE)
5 - SPECIAL TOOL L-4438
6 - DIAL INDICATOR

(11) Using an in. lb. torque wrench, measure output shaft bearing turning torque (Fig. 262).

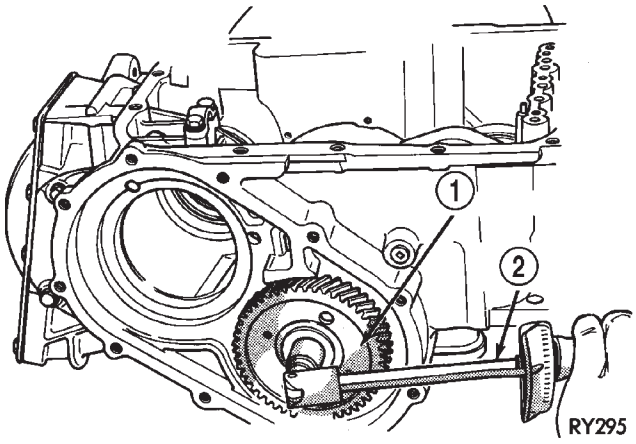

Fig. 262 Checking Bearing Turning Torque

1 - OUTPUT SHAFT GEAR
2 - TORQUE WRENCH

(12) Install stirrup and strap. Install bolts but do not tighten.

NOTE: Once the stirrup assembly is positioned onto the output gear, it is necessary to "clock" the stirrup against the flats of the output gear retaining nut.

(13) Rotate stirrup clockwise against flats of gear retaining nut (Fig. 263).

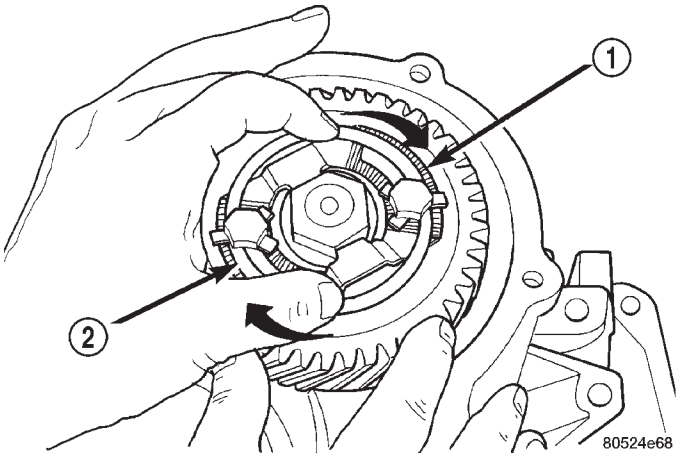

Fig. 263 Turn Stirrup Clockwise Against Flats of Retaining Nut

1 - TURN STIRRUP CLOCKWISE
2 - STRAP

(14) Torque stirrup and strap bolts to 23 N·m (200 in. lbs..) (Fig. 264).

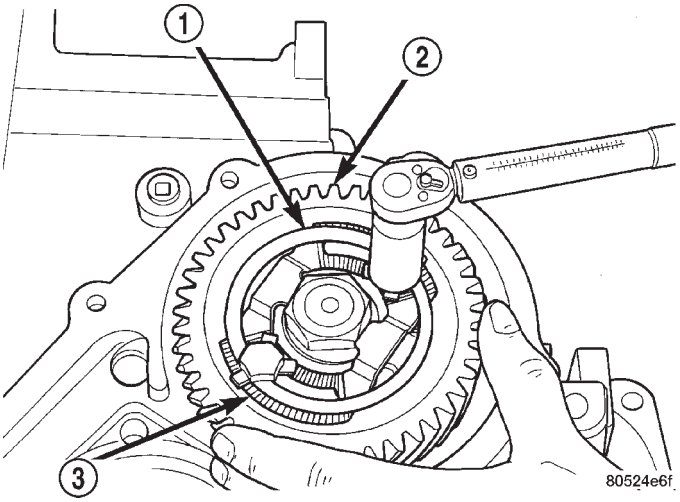

Fig. 264 Tighten Strap Retaining Nuts

1 - STRAP
2 - OUTPUT GEAR
3 - STIRRUP

(15) Bend tabs of strap up against “flats”of retaining bolts to prevent bolts from backing out of gear in the event they come loose.

(16) Install transfer shaft and gear. (Refer to 21 - TRANSMISSION/TRANSAXLE/AUTOMATIC - 31TH/TRANSFER SYSTEM - INSTALLATION)

(17) Assemble transaxle geartrain. (Refer to 21 - TRANSMISSION/TRANSAXLE/AUTOMATIC - 31TH - ASSEMBLY)

ADJUSTMENTS

ADJUSTMENT - OUTPUT SHAFT BEARING

(1) With output shaft gear removed, install a 13.65 mm (0.537 inch) and a 1.34 mm (0.053 inch) gauging shims on the planetary rear annulus gear hub using grease to hold the shims in place. The 13.65 mm shim has a larger inside diameter and must be installed over the output shaft first. The 1.34 mm shim pilots on the output shaft.

(2) Install output shaft gear and bearing assembly, torque to 271 N·m (200 ft. lbs.).

(3) To measure bearing end play:

(4) Attach Tool L-4432 to the output shaft gear.

(5) Mount a steel ball with grease into the end of the output shaft.

(6) Push and pull the gear while rotating back and forth to insure seating of the bearing rollers.

(7) Using a dial indicator, mounted to the transaxle case, measure output shaft end play.

(8) Once bearing end play has been determined, refer to the output shaft bearing shim chart.

(9) The 12.65 mm (0.498 inch), 13.15 mm (0.518 inch) or 13.65 mm (0.537 inch) shims are always installed first. **These shims have lubrication slots which are necessary for proper bearing lubrication.**

(10) Shims thinner than 12.65 mm listed in the chart are common to both the transfer shaft and output shaft bearings.

(11) Use Tool L-4434 to remove the retaining nut and washer. To remove the output shaft gear use Tool L-4407.

(12) Remove the two gauging shims and install the proper shim combination, making sure to install the 12.65, 13.15, or 13.65 mm shim first. Use grease to hold the shims in place. Install the output shaft gear and bearing assembly.

(13) Install the retaining nut and washer and torque to 271 N·m (200 ft. lbs.).

(14) Using an inch-pound torque wrench, check the turning torque. **The torque should be between 3 and 8 inch-pounds.**

(15) If the turning torque is too high, install a 0.05mm (0.002 inch) thicker shim. If the turning torque is too low, install a 0.05 mm (0.002 inch) thinner shim. Repeat until the proper turning torque is 3 to 8 inch pounds.

TRANSFER SYSTEM - OUTPUT SHAFT/GEAR/BEARING (Continued)

OUTPUT SHAFT BEARING SHIM CHART

End Play (with 13.65 mm and 1.34 mm gauging shims installed)		Required Shim Combination	Total Thickness	
mm	inch	mm	mm	inch
.0	.0	13.65 + 1.34	14.99	.590
.05	.002	13.65 + 1.24	14.89	.586
.10	.004	13.65 + 1.19	14.84	.584
.15	.006	13.65 + 1.14	14.79	.582
.20	.008	13.65 + 1.09	14.74	.580
.25	.010	13.65 + 1.04	14.69	.578
.30	.012	13.65 + .99	14.64	.576
.35	.014	13.65 + .94	14.59	.574
.40	.016	13.15 + 1.39	14.54	.572
.45	.018	13.15 + 1.34	14.49	.570
.50	.020	13.15 + 1.29	14.44	.568
.55	.022	13.15 + 1.24	14.39	.566
.60	.024	13.15 + 1.19	14.34	.564
.65	.026	13.15 + 1.14	14.29	.562
.70	.028	13.15 + 1.09	14.24	.560
.75	.030	13.15 + 1.04	14.19	.558
.80	.032	13.15 + .99	14.14	.556
.85	.034	13.15 + .94	14.09	.554
.90	.036	12.65 + 1.39	14.04	.552
.95	.038	12.65 + 1.34	13.99	.550
1.00	.040	12.65 + 1.29	13.94	.548
1.05	.042	12.65 + 1.24	13.89	.547
1.10	.044	12.65 + 1.19	13.84	.545
1.15	.046	12.65 + 1.14	13.79	.543
1.20	.048	12.65 + 1.09	13.74	.541
1.25	.049	12.65 + 1.04	13.69	.539
1.30	.051	12.65 + .99	13.64	.537
1.35	.053	12.65 + .94	13.59	.535

TRANSFER SYSTEM - TRANSFER SHAFT/GEAR/ BEARING

REMOVAL

(1) Remove transfer gear cover bolts (Fig. 265).

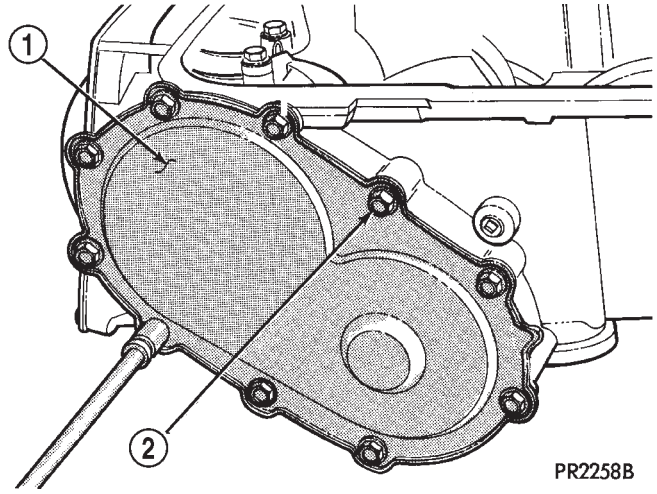

Fig. 265 Rear Cover Bolts

1 - REAR COVER
2 - REAR COVER BOLTS (10)

(2) Separate transfer gear cover from transaxle (Fig. 266). Repair any cover imperfections. Clean cover and case of old adhesive sealant.

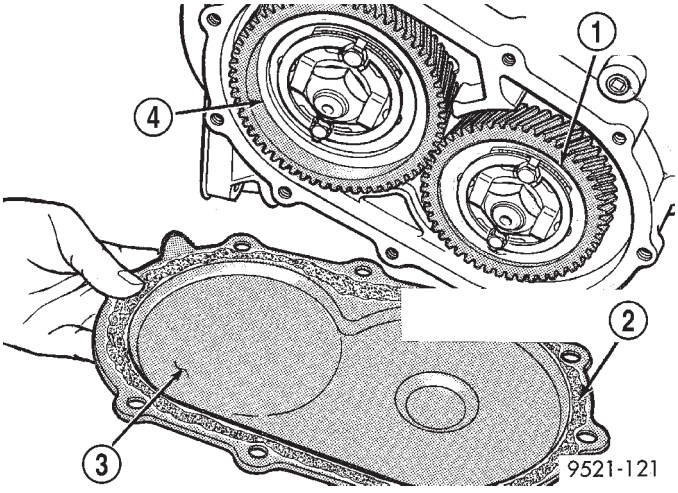

Fig. 266 Remove Rear Cover

1 - OUTPUT SHAFT GEAR
2 - USE MOPAR SILICONE RUBBER ADHESIVE SEALER
3 - REAR COVER
4 - TRANSFER SHAFT GEAR

(3) Using a suitable punch, bend retaining strap tabs to facilitate bolt removal.

(4) Remove stirrup and retaining strap-to-transfer gear bolts.

(5) Remove stirrup and retaining strap.

(6) Using Tool L-4434 (Fig. 267), remove transfer shaft gear retaining nut and washer (Fig. 268).

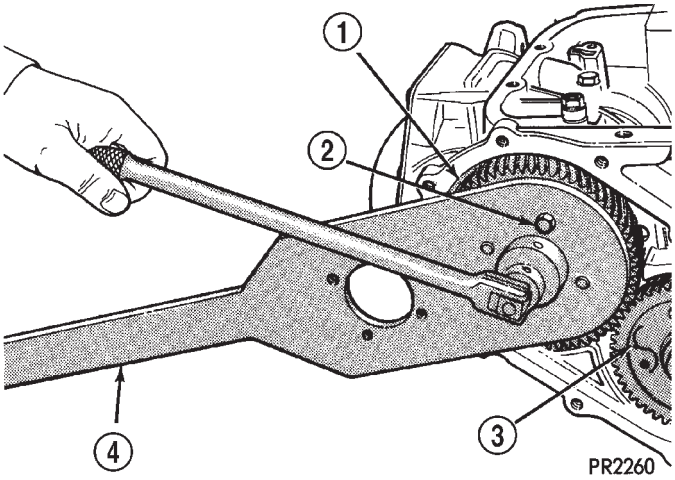

Fig. 267 Remove Transfer Shaft Gear Retaining Nut

1 - TRANSFER SHAFT GEAR
2 - SCREW (2)
3 - OUTPUT SHAFT GEAR
4 - SPECIAL TOOL L-4434

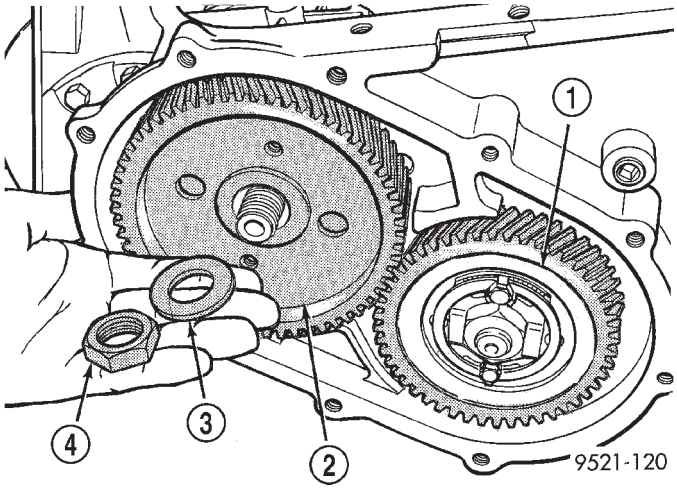

Fig. 268 Transfer Shaft Gear Nut and Washer

1 - OUTPUT SHAFT GEAR
2 - TRANSFER SHAFT GEAR
3 - WASHER
4 - NUT

TRANSFER SYSTEM - TRANSFER SHAFT/GEAR/BEARING (Continued)

(7) Using Tool L-4407A, remove transfer shaft gear and select shim (Fig. 269).

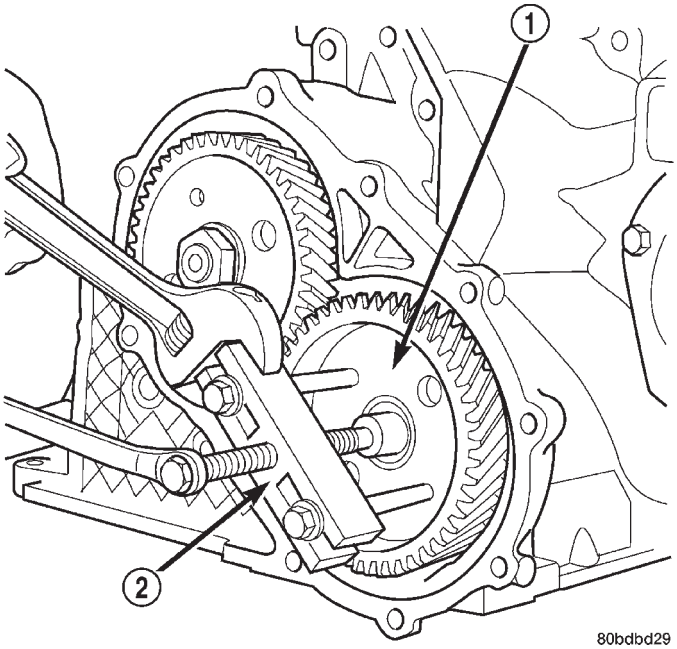

Fig. 269 Remove Transfer Shaft Gear using L-4407A

1 - TRANSFER GEAR
2 - TOOL L-4407A

(8) Using Tool L-4406-1 and adapter L-4406-3, remove transfer shaft gear bearing cone (Fig. 270).

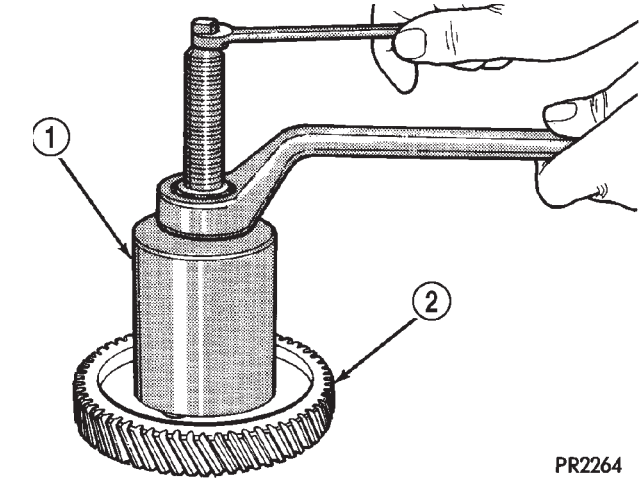

Fig. 270 Remove Transfer Shaft Gear Bearing Cone

1 - SPECIAL TOOL L-4406-1
2 - TRANSFER SHAFT GEAR

(9) Remove governor support retainer (Fig. 271).

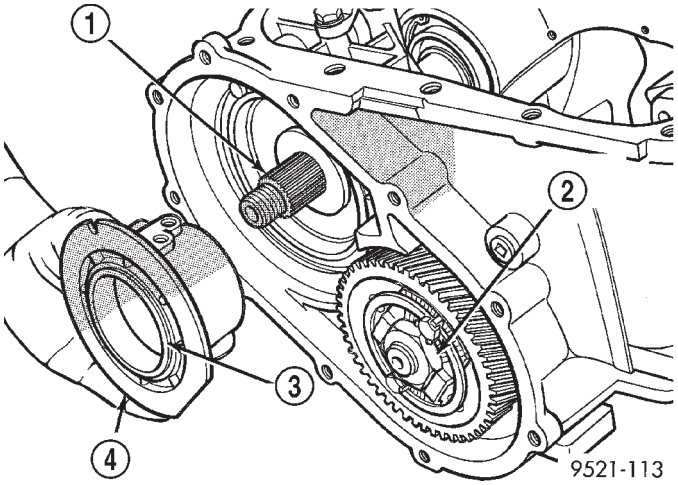

Fig. 271 Governor Support Retainer

1 - TRANSFER SHAFT
2 - OUTPUT SHAFT GEAR
3 - BEARING CUP
4 - GOVERNOR SUPPORT RETAINER

(10) Remove governor support retainer bearing cup (Fig. 272).

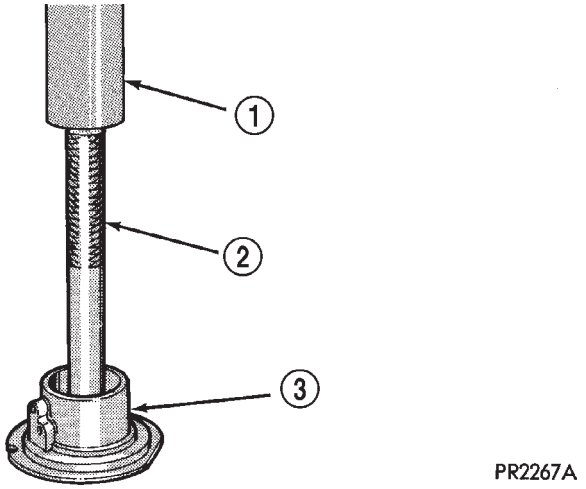

Fig. 272 Remove Governor Support Retainer Bearing Cup

1 - PRESS
2 - HANDLE C-4171 (WITH SPECIAL TOOL L-4517)
3 - GOVERNOR SUPPORT RETAINER

TRANSFER SYSTEM - TRANSFER SHAFT/GEAR/BEARING (Continued)

(11) If necessary, remove low/reverse band anchor pin (Fig. 273).

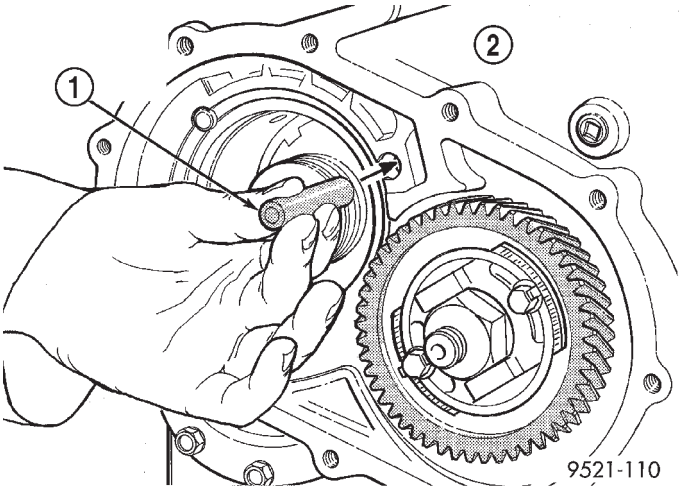

Fig. 273 Low/Reverse Band Anchor Pin

1 - LOW-REVERSE BAND ANCHOR PIN
2 - OUTPUT SHAFT GEAR

(12) Remove governor assembly (Fig. 274).

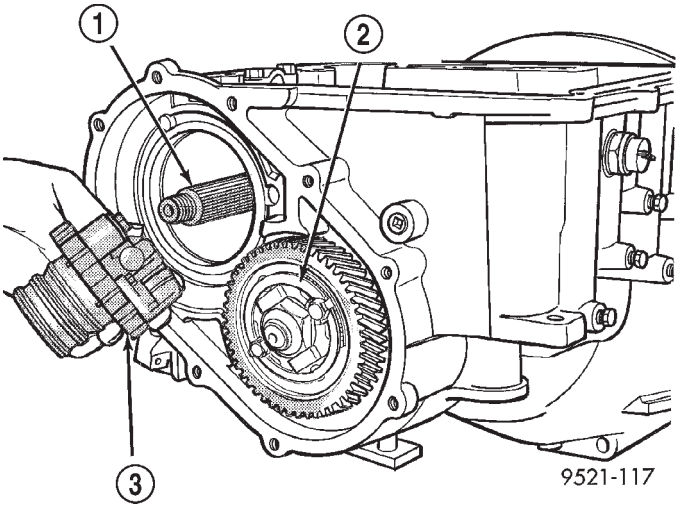

Fig. 274 Governor Assembly

1 - TRANSFER SHAFT
2 - OUTPUT SHAFT GEAR
3 - GOVERNOR ASSEMBLY

(13) Remove transfer shaft bearing retainer snap ring (Fig. 275).

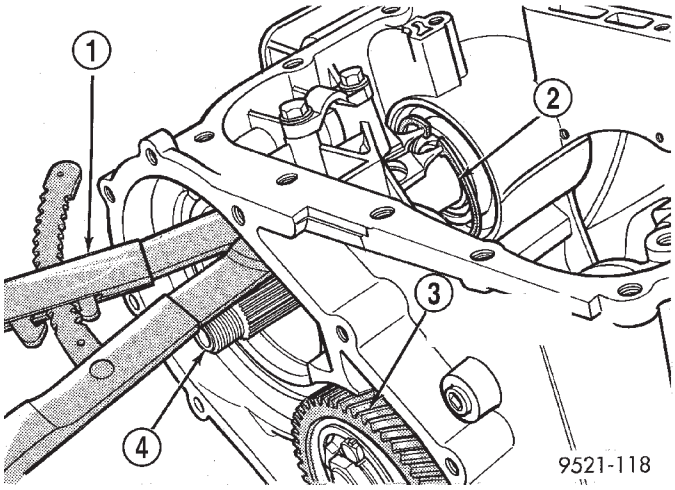

Fig. 275 Transfer Shaft Bearing Snap Ring

1 - SNAP RING PLIERS
2 - SNAP RING
3 - OUTPUT SHAFT GEAR
4 - TRANSFER SHAFT

(14) Set up tools as shown in (Fig. 276).

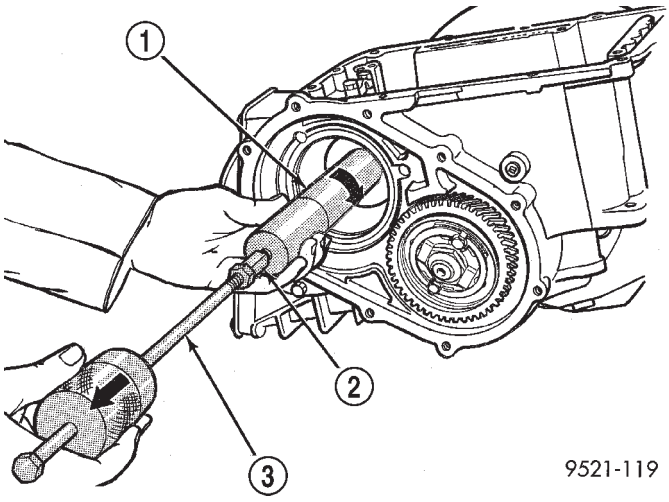

Fig. 276 Remove Transfer Shaft and Bearing Retainer Assembly

1 - SPECIAL TOOL L-4512
2 - SPECIAL TOOL L-4437
3 - SPECIAL TOOL C-3752

TRANSFER SYSTEM - TRANSFER SHAFT/GEAR/BEARING (Continued)

(15) Remove transfer shaft/bearing retainer assembly (Fig. 277).

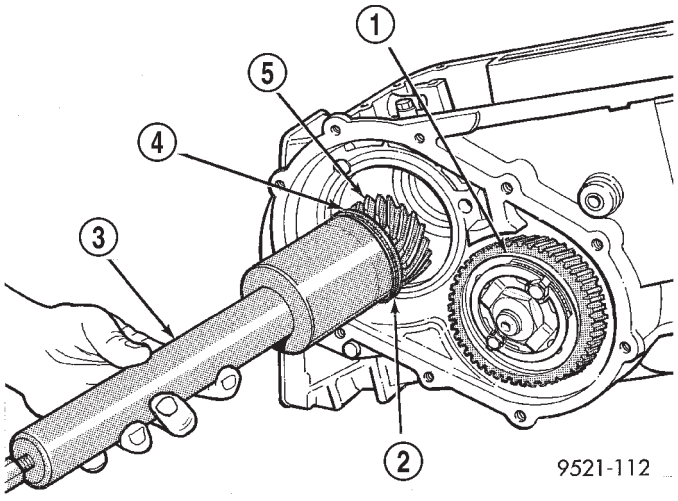

Fig. 277 Remove or Install Transfer Shaft and Bearing Retainer Assembly

1 - OUTPUT SHAFT GEAR
2 - O-RING
3 - SPECIAL TOOL L-4512
4 - BEARING RETAINER ASSEMBLY
5 - TRANSFER SHAFT

(16) Separate bearing retainer from transfer shaft (Fig. 278).

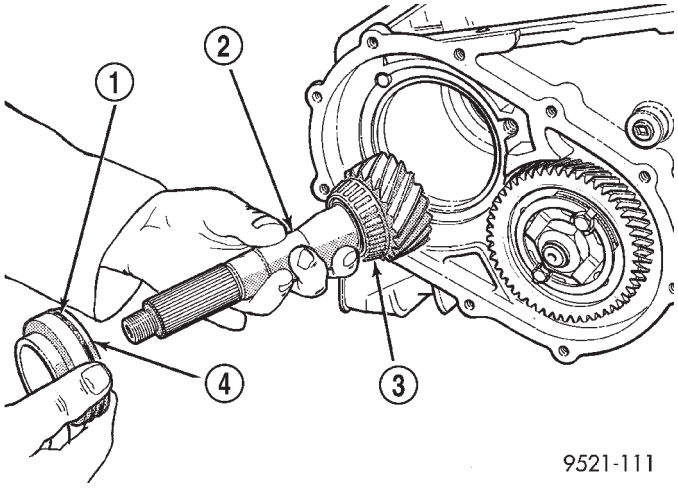

Fig. 278 Transfer Shaft and Bearing Retainer

1 - O-RING
2 - TRANSFER SHAFT
3 - BEARING CONE
4 - TRANSFER SHAFT BEARING RETAINER

(17) Remove transfer shaft bearing cone from shaft using Tool C-293-PA and adapters C-293-52 (Fig. 279).

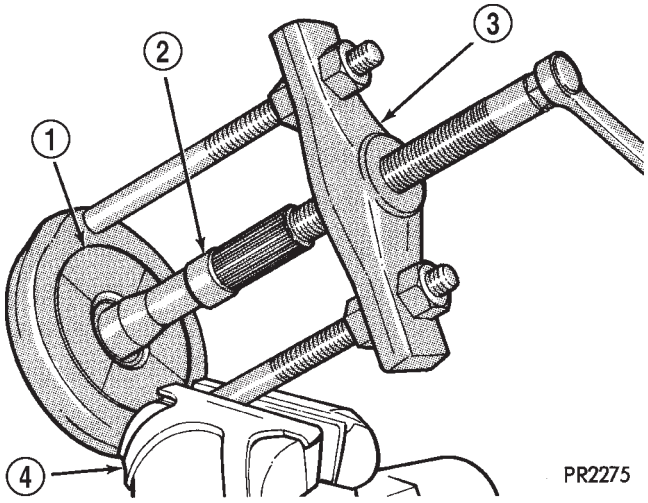

Fig. 279 Remove Transfer Shaft Bearing Cone

1 - TOOL C-293-52
2 - TRANSFER SHAFT
3 - TOOL C-293-PA
4 - VISE

(18) Remove transfer shaft bearing cup from bearing retainer (Fig. 280).

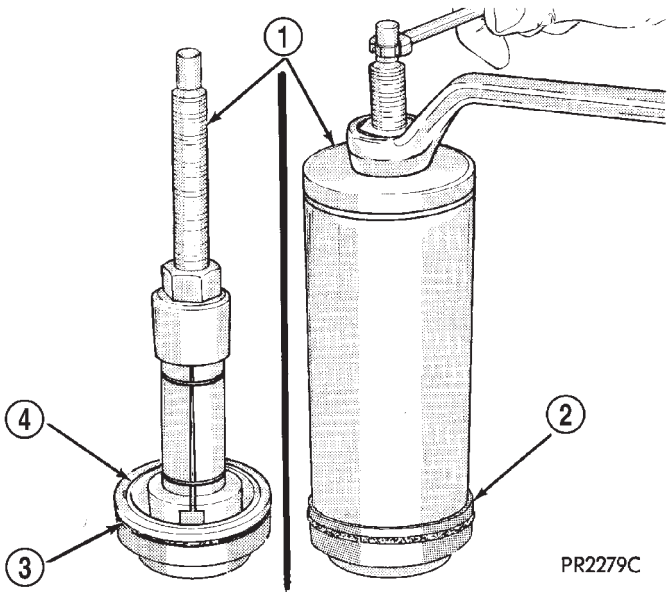

Fig. 280 Remove Transfer Shaft Bearing Cup

1 - SPECIAL TOOL L-4518
2 - TRANSFER SHAFT BEARING RETAINER
3 - ''O'' RING
4 - BEARING CUP

TRANSFER SYSTEM - TRANSFER SHAFT/GEAR/BEARING (Continued)

INSTALLATION

(1) Install transfer shaft bearing cup to bearing retainer using Tool L-4520 (Fig. 281).

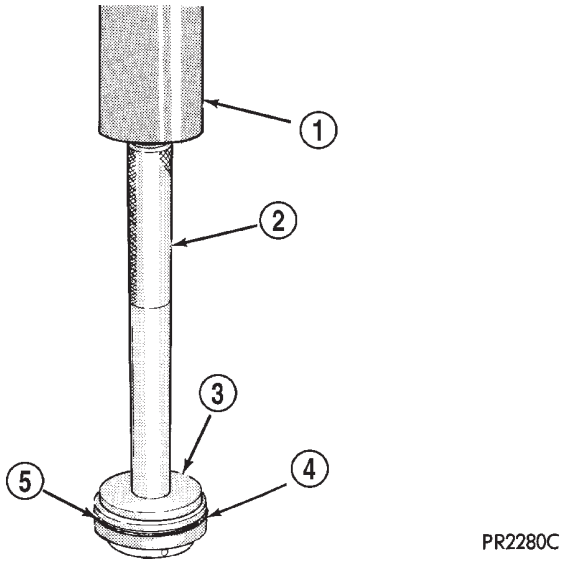

Fig. 281 Install Transfer Shaft Bearing Cup

1 - PRESS
2 - HANDLE C-4171
3 - SPECIAL TOOL L-4520
4 - TRANSFER SHAFT BEARING RETAINER
5 - "O" RING

(2) Install transfer shaft bearing cone to transfer shaft using Tool L-4111 (Fig. 282).

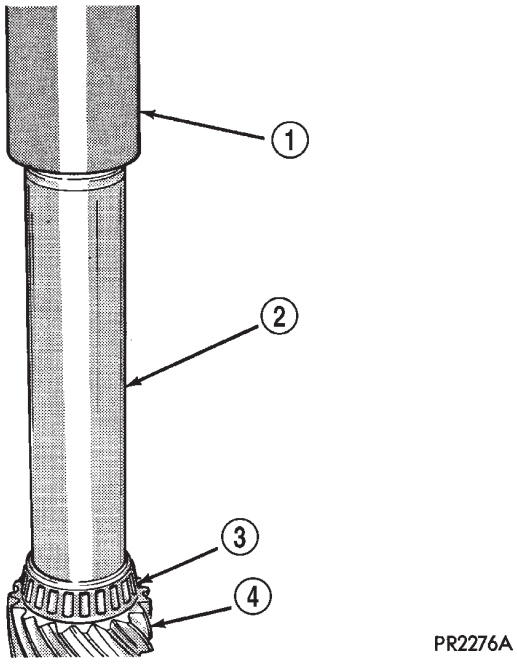

Fig. 282 Install Transfer Shaft Bearing Cone

1 - PRESS
2 - SPECIAL TOOL L-4411
3 - BEARING CONE
4 - TRANSFER SHAFT

(3) Assemble transfer shaft to bearing retainer (Fig. 283).

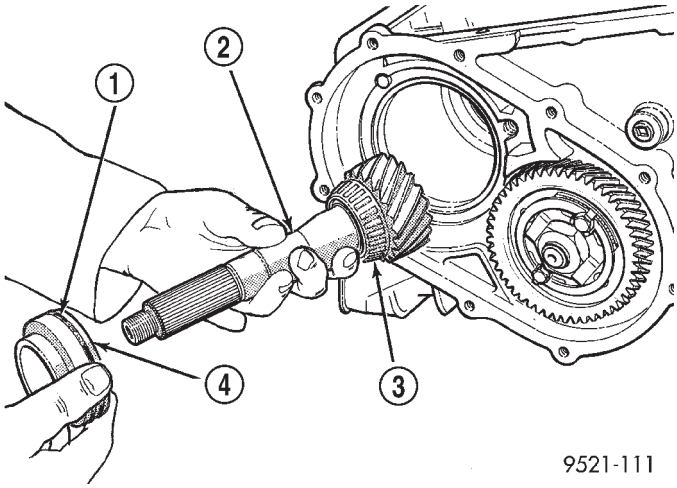

Fig. 283 Transfer Shaft and Bearing Retainer

1 - O-RING
2 - TRANSFER SHAFT
3 - BEARING CONE
4 - TRANSFER SHAFT BEARING RETAINER

(4) Install transfer shaft/bearing retainer assembly using tool L-4512 (Fig. 284).

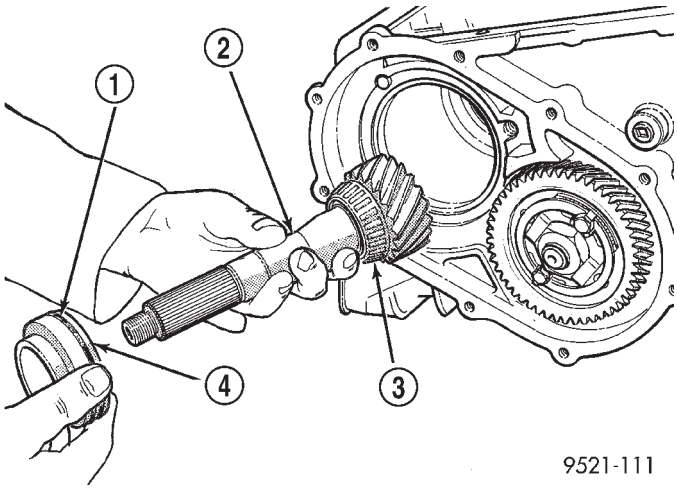

Fig. 284 Transfer Shaft and Bearing Retainer

1 - O-RING
2 - TRANSFER SHAFT
3 - BEARING CONE
4 - TRANSFER SHAFT BEARING RETAINER

TRANSFER SYSTEM - TRANSFER SHAFT/GEAR/BEARING (Continued)

(5) Install transfer shaft bearing retainer snap ring (Fig. 285).

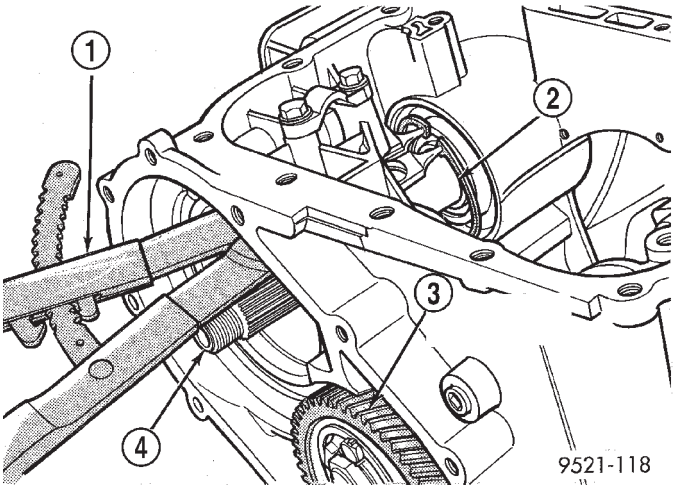

Fig. 285 Transfer Shaft Bearing Snap Ring

1 - SNAP RING PLIERS
2 - SNAP RING
3 - OUTPUT SHAFT GEAR
4 - TRANSFER SHAFT

(6) Install governor assembly (Fig. 286).

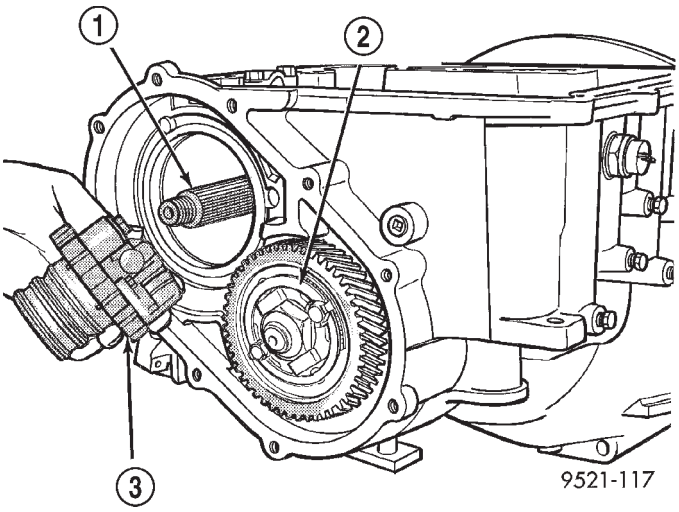

Fig. 286 Governor Assembly

1 - TRANSFER SHAFT
2 - OUTPUT SHAFT GEAR
3 - GOVERNOR ASSEMBLY

(7) Install low/reverse band anchor pin if previously removed (Fig. 287).

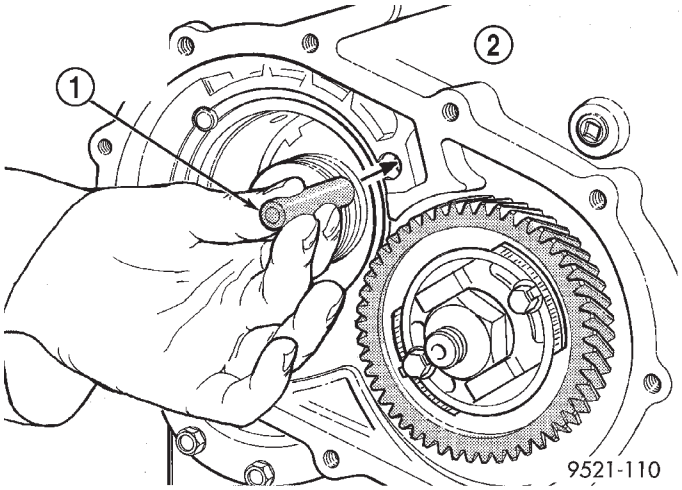

Fig. 287 Low/Reverse Band Anchor Pin

1 - LOW-REVERSE BAND ANCHOR PIN
2 - OUTPUT SHAFT GEAR

(8) Install governor support retainer bearing cup using Tool L-4520 (Fig. 288).

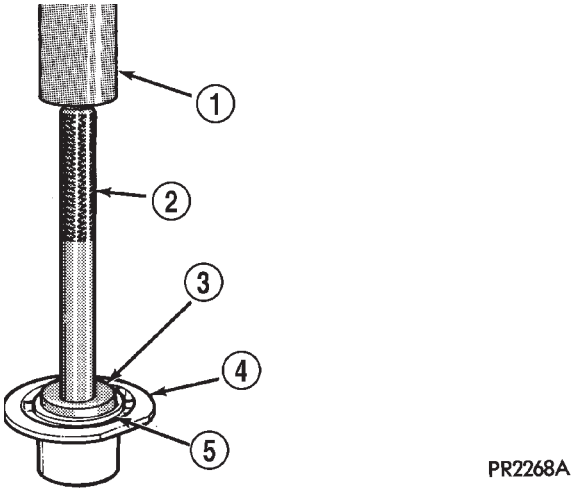

Fig. 288 Install Governor Support Retainer Bearing Cup

1 - PRESS
2 - HANDLE C-4171
3 - SPECIAL TOOL L-4520
4 - GOVERNOR SUPPORT RETAINER
5 - BEARING CUP

TRANSFER SYSTEM - TRANSFER SHAFT/GEAR/BEARING (Continued)

(9) Install governor support retainer (Fig. 289).

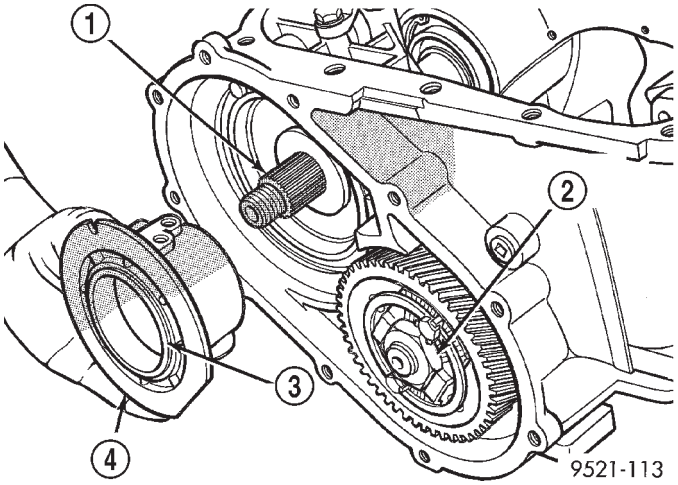

Fig. 289 Governor Support Retainer

1 - TRANSFER SHAFT
2 - OUTPUT SHAFT GEAR
3 - BEARING CUP
4 - GOVERNOR SUPPORT RETAINER

(10) Install transfer shaft gear bearing cone using Tool L-4410 (Fig. 290).

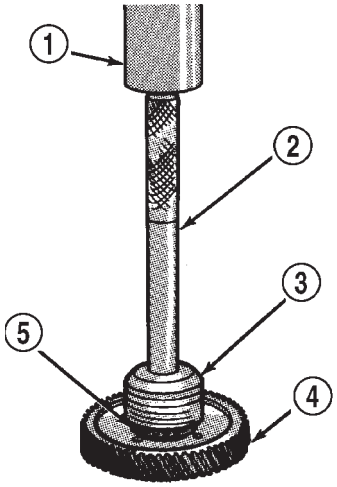

Fig. 290 Install Transfer Shaft Gear Bearing Cone

1 - PRESS
2 - HANDLE C-4171
3 - SPECIAL TOOL L-4410
4 - TRANSFER SHAFT GEAR
5 - BEARING CONE

(11) Determine transfer shaft bearing shim thickness. (Refer to 21 - TRANSMISSION/TRANSAXLE/ AUTOMATIC - 31TH/TRANSFER SYSTEM - ADJUSTMENTS) Shim thickness need be determined only if any of the following parts are replaced:

- Transaxle case
- Transfer shaft
- Transfer shaft gear
- Transfer shaft bearings
- Governor support retainer
- Transfer shaft bearing retainer
- Retainer snap ring
- Governor support

(12) Install transfer shaft gear and select shim (Fig. 291).

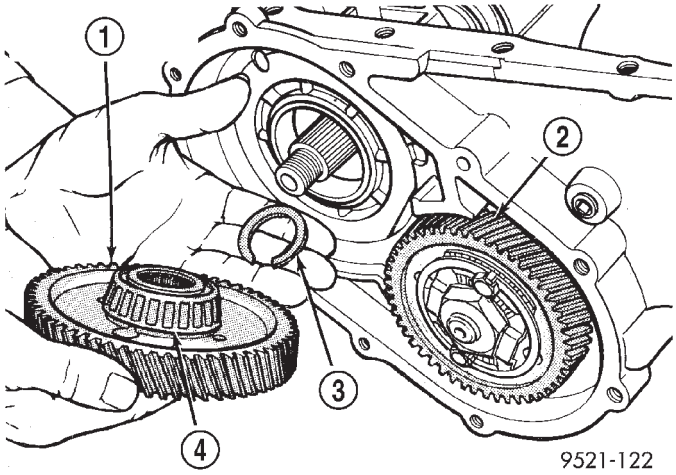

Fig. 291 Transfer Shaft Gear and (Select) Shim

1 - TRANSFER SHAFT GEAR
2 - OUTPUT SHAFT GEAR
3 - SHIM (SELECT)
4 - BEARING CONE

(13) Install transfer shaft gear nut and washer (Fig. 292).

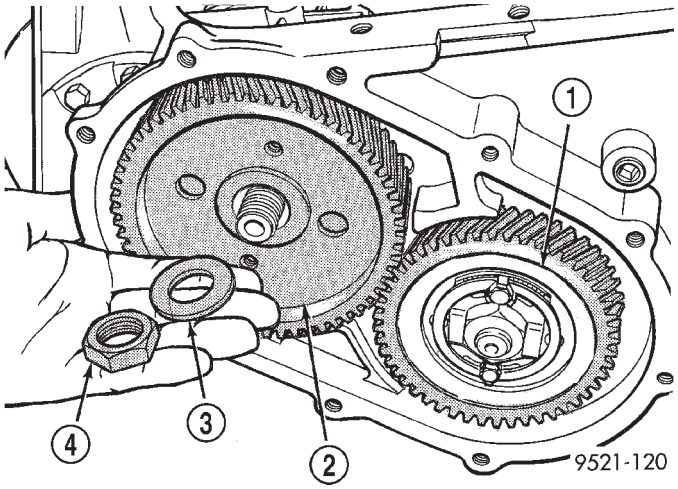

Fig. 292 Transfer Shaft Gear Nut and Washer

1 - OUTPUT SHAFT GEAR
2 - TRANSFER SHAFT GEAR
3 - WASHER
4 - NUT

(14) Using Tool L-4434 and adapter C-4658 (Fig. 293), torque transfer shaft gear retaining nut to 271 N·m (200 ft. lbs.).

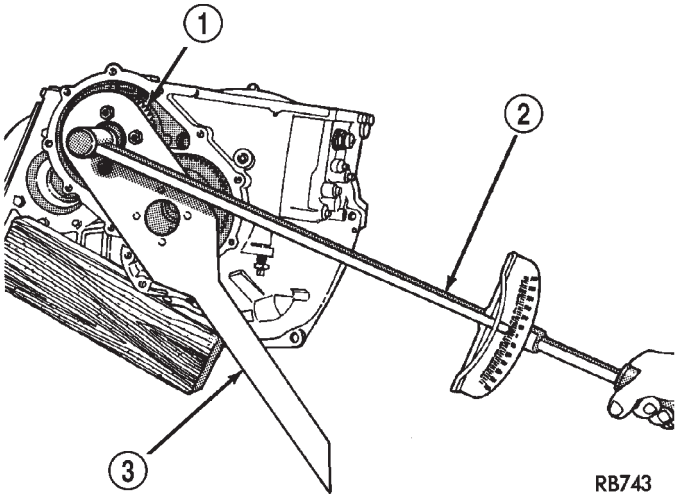

Fig. 293 Tighten Transfer Shaft Gear Retaining Nut to 271 N·m (200

1 - TRANSFER SHAFT GEAR
2 - TORQUE WRENCH
3 - SPECIAL TOOL L-4434 AND ADAPTER C-4658

(15) Measure transfer shaft end play. Set up Tool L-4432 and C-4658 as shown in (Fig. 294). Measure end play with dial indicator.

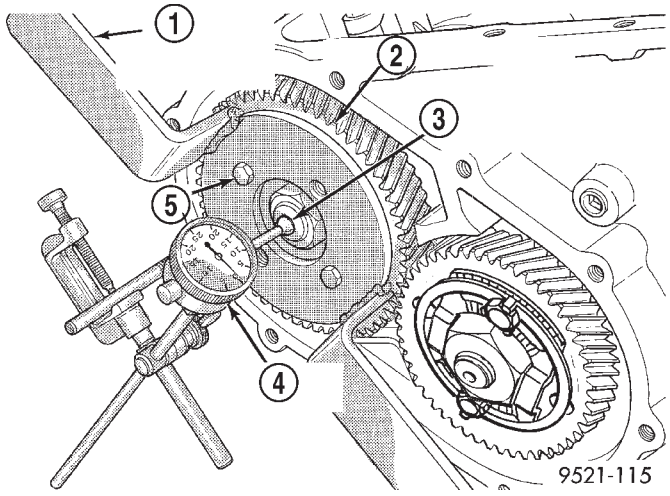

Fig. 294 Measuring Transfer Shaft End-Play

1 - SPECIAL TOOL L-4432 AND C-4658
2 - TRANSFER SHAFT GEAR
3 - STEEL BALL (USE GREASE TO HOLD IN PLACE)
4 - DIAL INDICATOR
5 - SCREW (2)

(16) Position stirrup and strap on transfer gear.
(17) Install bolts but do not tighten.
(18) Rotate stirrup clockwise until it contacts transfer gear retaining nut flat.
(19) Torque stirrup and strap-to-transfer gear bolts to 23 N·m (200 in. lbs.).
(20) Bend tabs of strap up against “flats” of retaining bolts.
(21) Install a bead of Mopar® Silicone Rubber Adhesive Sealant to transfer gear cover (Fig. 295). Immediately install to transaxle case.

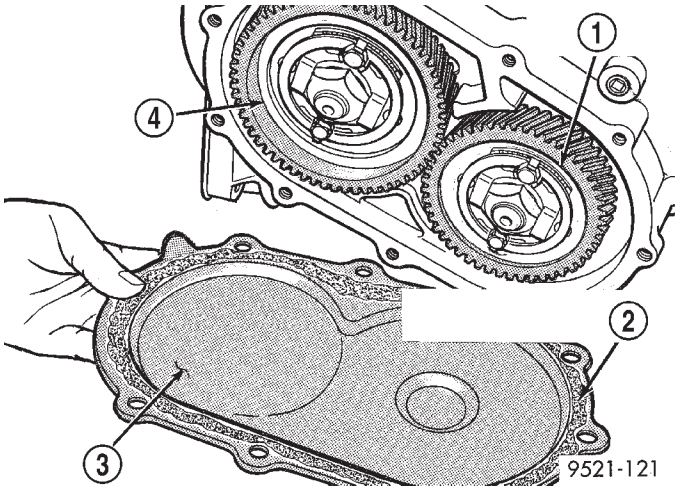

Fig. 295 Install Rear Cover

1 - OUTPUT SHAFT GEAR
2 - USE MOPAR SILICONE RUBBER ADHESIVE SEALER
3 - REAR COVER
4 - TRANSFER SHAFT GEAR

(22) Install and torque transfer gear cover-to-case bolts (Fig. 296) to 19 N·m (165 in. lbs.).

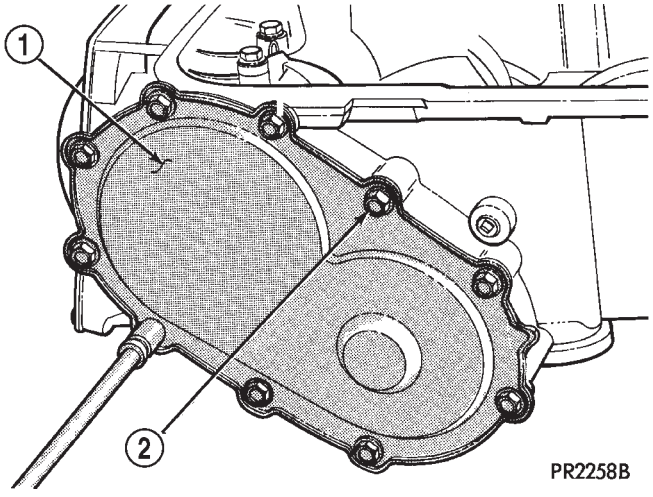

Fig. 296 Rear Cover Bolts

1 - REAR COVER
2 - REAR COVER BOLTS (10)

TRANSFER SYSTEM - TRANSFER SHAFT/GEAR/BEARING (Continued)

ADJUSTMENTS

ADJUSTMENT - TRANSFER SHAFT BEARING

(1) Use Tool L-4434 to remove the retaining nut and washer. Remove the transfer shaft gear using Tool L-4407.

(2) Install a 2.29 mm (0.090 inch) and a 1.39 mm (0.055 inch) gauging shims on the transfer shaft behind the governor support.

(3) Install transfer shaft gear and bearing assembly and torque the nut to 271 N·m (200 ft. lbs.).

(4) To measure bearing end play:Attach Tool L-4432 to the transfer gear.

(5) Mount a steel ball with grease into the end of the transfer shaft.

(6) Push and pull the gear while rotating back and forth to insure seating of the bearing rollers.

(7) Using a dial indicator, measure transfer shaft end play.

(8) Refer to the Transfer Bearing Shim Chart for the required shim combination to obtain the proper bearing setting.

(9) Use Tool L-4434 to remove the retaining nut and washer. Remove the transfer shaft gear using Tool L-4407.

(10) Remove the two gauging shims and install the correct shim combination. Install the transfer gear and bearing assembly.

(11) Install the retaining nut and washer and torque to 271 N·m (200 ft. lbs.). Measure transfer shaft end play, end play should be 0.05 to 0.25 mm (0.002 to 0.010 inch).

(12) Measure bearing end play as outlined in Step (4). End play should be between 0.05 mm and 0.25 mm (0.002 to 0.010 inch).

NOTE: If end play is too high, install a 0.05 mm (0.002 inch) thinner shim combination. If end play is too low, install a 0.05 mm (0.002 inch) thicker shim combination. Repeat until 0.05 to 0.25 mm (0.002 to 0.010 inch) end play is obtained.

End Play (with 2.29 mm and 1.39 mm gauging shims installed)		Required Shim Combination	Total Thickness	
mm	inch	mm	mm	inch
.0	.0	2.29 + 1.39	3.68	.145
.05	.002	2.29 + 1.39	3.68	.145
.10	.004	2.29 + 1.39	3.68	.145
.15	.006	2.29 + 1.39	3.68	.145
.20	.008	2.29 + 1.34	3.63	.143
.25	.010	2.29 + 1.29	3.58	.141
.30	.012	2.29 + 1.24	3.53	.139
.35	.014	2.29 + 1.19	3.48	.137
.40	.016	2.29 + 1.14	3.43	.135
.45	.018	2.29 + 1.09	3.38	.133
.50	.020	2.29 + 1.04	3.33	.131
.55	.022	2.29 + .99	3.28	.129
.60	.024	1.84 + 1.39	3.23	.127
.65	.026	1.84 + 1.34	3.18	.125
.70	.028	1.84 + 1.29	3.13	.123
.75	.030	1.84 + 1.24	3.08	.121
.80	.032	1.84 + 1.19	3.03	.119
.85	.034	1.84 + 1.14	2.98	.117
.90	.036	1.84 + 1.09	2.93	.115
.95	.038	1.84 + 1.04	2.88	.113
1.00	.040	1.84 + .99	2.83	.111
1.05	.042	1.39 + 1.39	2.78	.109
1.10	.044	1.39 + 1.34	2.73	.107
1.15	.046	1.39 + 1.29	2.68	.105
1.20	.048	1.39 + 1.24	2.63	.103
1.25	.049	1.39 + 1.19	2.58	.101
1.30	.050	1.39 + 1.14	2.53	.099
1.35	.052	1.39 + 1.09	2.48	.097
1.40	.055	1.39 + 1.04	2.43	.095
1.45	.057	1.39 + .99	2.38	.093
1.50	.059	.94 + 1.39	2.33	.091
1.55	.061	.94 + 1.34	2.28	.089
1.60	.063	.94 + 1.29	2.23	.087

VALVE BODY

REMOVAL

(1) Disconnect battery negative cable.
(2) Disconnect throttle valve cable from throttle valve lever at transaxle.
(3) Disconnect gearshift cable from gearshift lever at transaxle.
(4) Disconnect torque converter clutch solenoid connector.
(5) Raise vehicle on hoist.
(6) Remove transaxle oil pan bolts (Fig. 297).

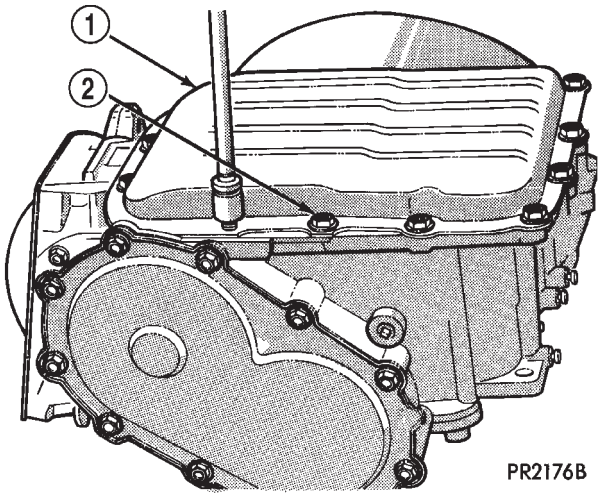

Fig. 297 Transaxle Oil Pan Bolts

1 - TRANSAXLE OIL PAN
2 - OIL PAN BOLTS

(7) Separate oil pan from case and drain fluid into suitable container (Fig. 298).

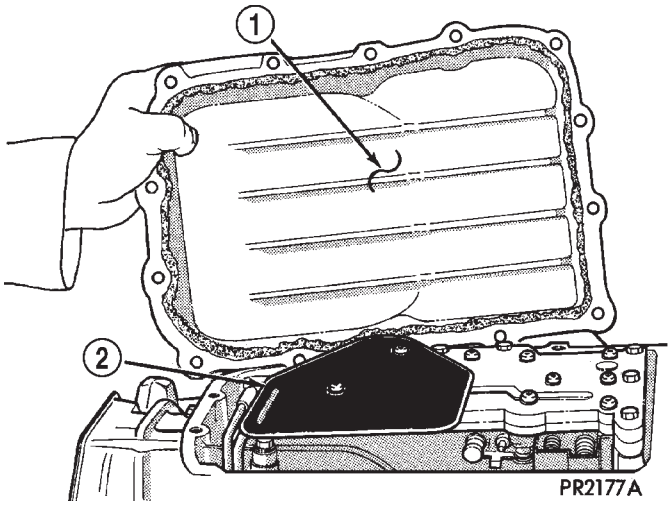

Fig. 298 Transaxle Oil Pan

1 - TRANSAXLE OIL PAN
2 - OIL FILTER

(8) Remove oil filter-to-valve body screws (Fig. 299).

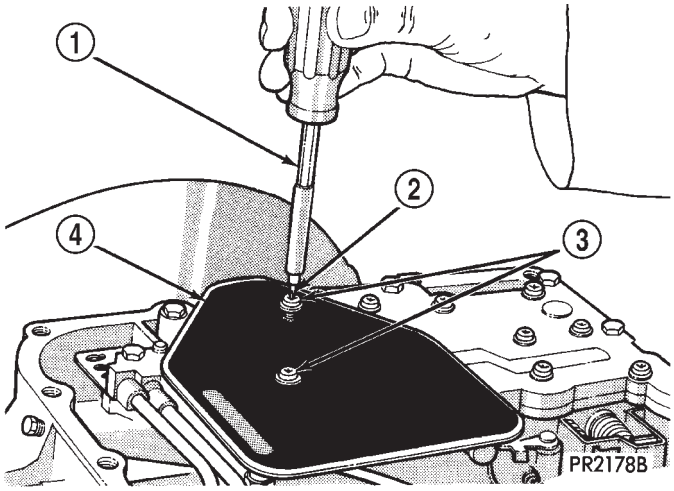

Fig. 299 Oil Filter Screws

1 - SCREWDRIVER HANDLE
2 - SPECIAL TOOL L-4553
3 - OIL FILTER SCREWS (2)
4 - OIL FILTER

(9) Remove oil filter and gasket (Fig. 300).

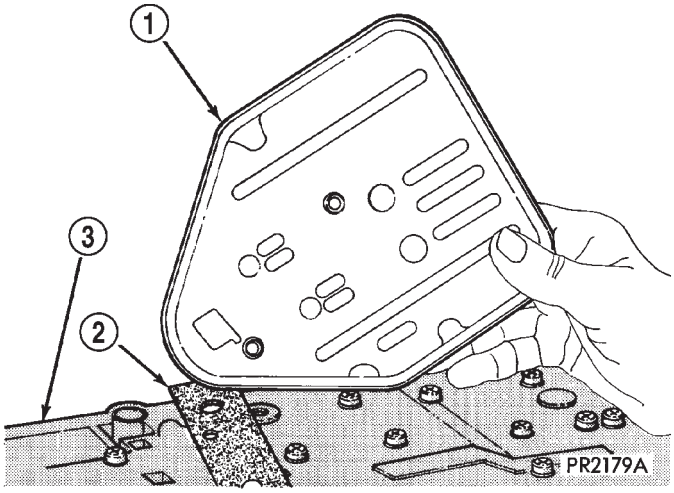

Fig. 300 Oil Filter and Gasket

1 - OIL FILTER
2 - GASKET
3 - VALVE BODY

VALVE BODY (Continued)

(10) Remove cooler bypass valve from valve body (Fig. 301).

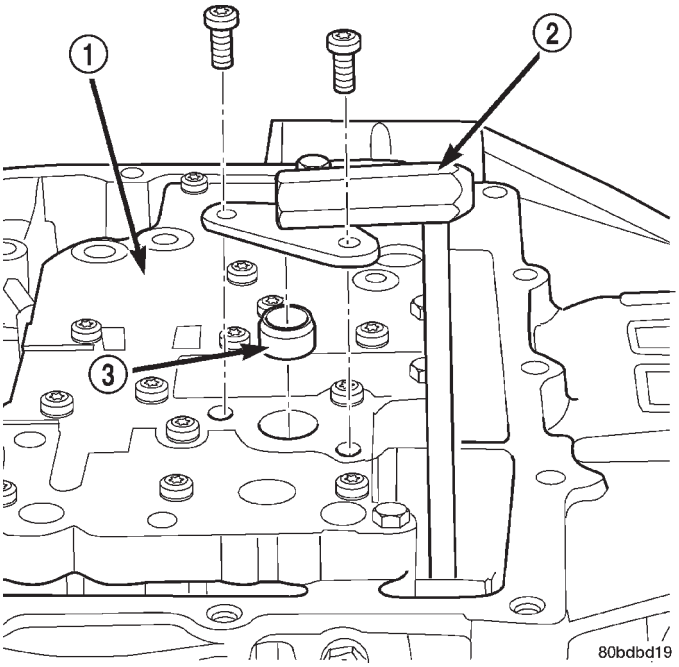

Fig. 301 Cooler Bypass Valve and Seal

1 - TRANSFER PLATE
2 - BYPASS VALVE
3 - SEAL

(11) Remove park rod e-clip (Fig. 302).

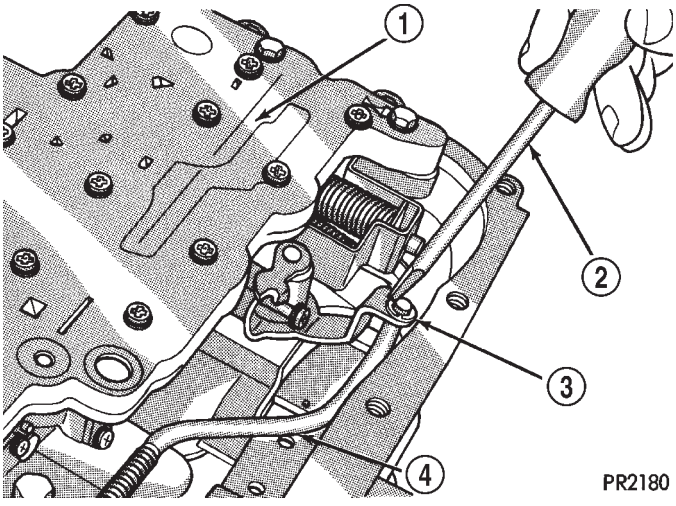

Fig. 302 Parking Rod E-Clip

1 - VALVE BODY
2 - SCREWDRIVER
3 - "E" CLIP
4 - PARKING ROD

(12) Remove park rod from valve body (Fig. 303).

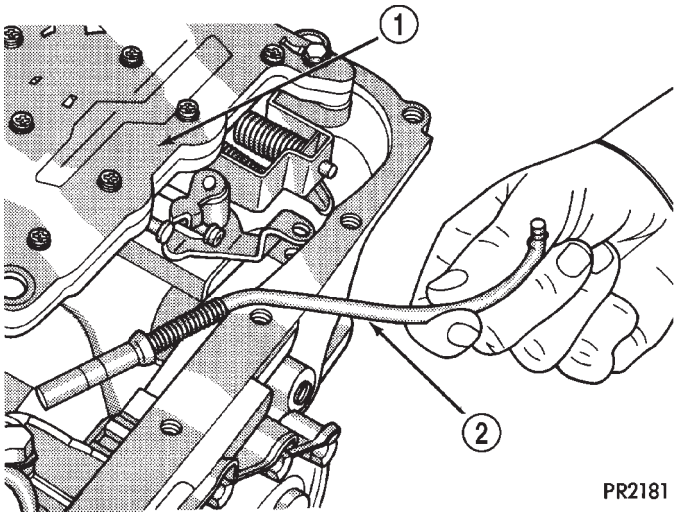

Fig. 303 Parking Rod

1 - VALVE BODY
2 - PARKING ROD

(13) Remove valve body-to-transaxle case bolts (Fig. 304).

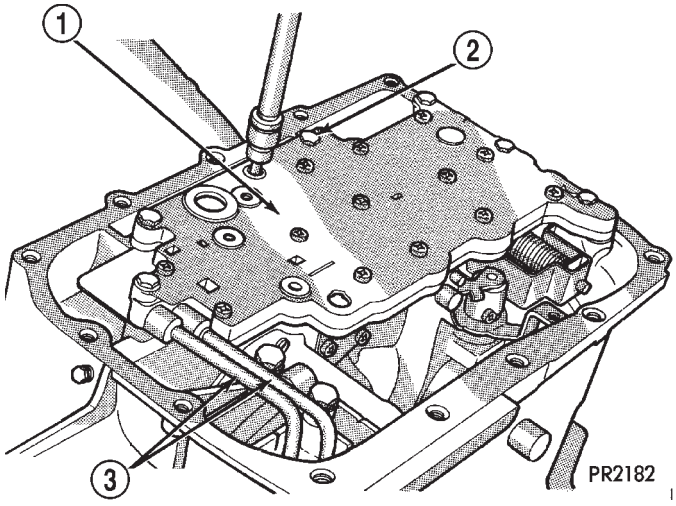

Fig. 304 Valve Body Attaching Bolts

1 - VALVE BODY
2 - VALVE BODY ATTACHING BOLTS (7)
3 - GOVERNOR TUBES

VALVE BODY (Continued)

(14) Remove valve body from transaxle. Note orientation of governor tubes (Fig. 305).

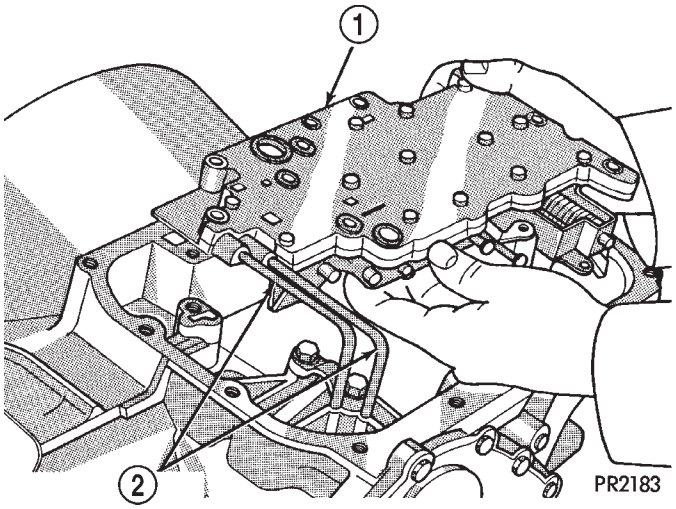

Fig. 305 Valve Body and Governor Tubes

1 - VALVE BODY ASSEMBLY
2 - GOVERNOR TUBES

DISASSEMBLY

CAUTION: Do not clamp any portion of valve body or transfer plate in a vise. Any slight distortion of the aluminum body or transfer plate will result in sticking valves, excessive leakage, or both. When removing or installing valves or plugs, slide them in or out carefully. Do not use force.

NOTE: TAG ALL SPRINGS AS THEY ARE REMOVED FOR REASSEMBLY IDENTIFICATION.

(1) Remove detent spring-to-valve body screws and remove spring (Fig. 306).

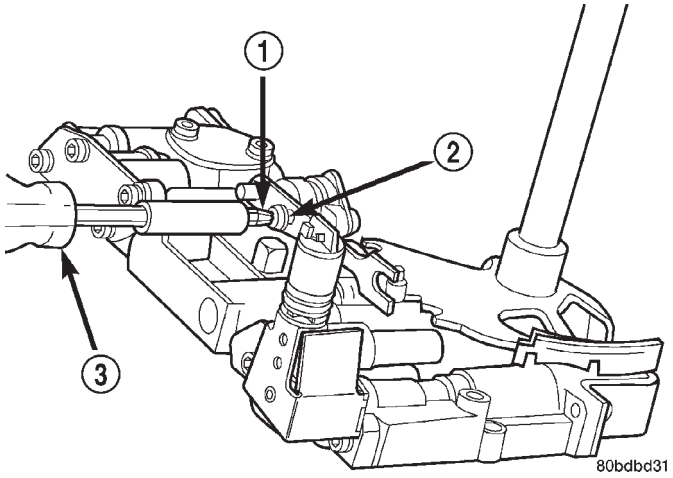

Fig. 306 Detent Spring Attaching Screw and Spring

1 - SPECIAL TOOL L-4553
2 - DETENT SPRING SCREW
3 - SCREWDRIVER HANDLE

(2) Remove valve body-to-separator plate screws (Fig. 307) (Fig. 308).

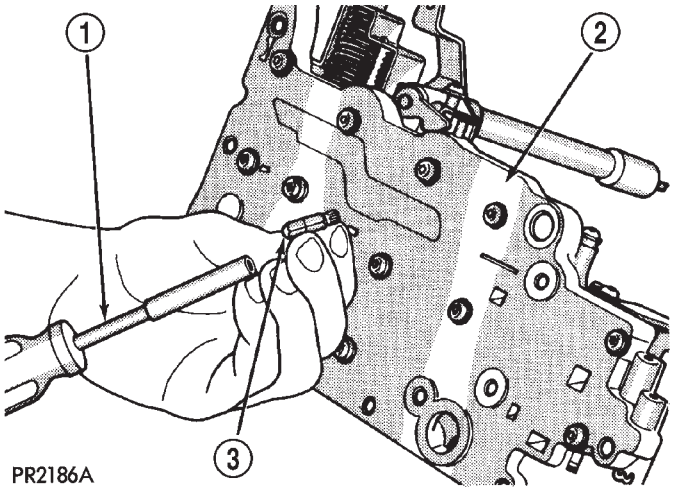

Fig. 307 Using Tool L-4553 on Valve Body Screw

1 - SCREWDRIVER HANDLE
2 - VALVE BODY ASSEMBLY
3 - SPECIAL TOOL L-4553

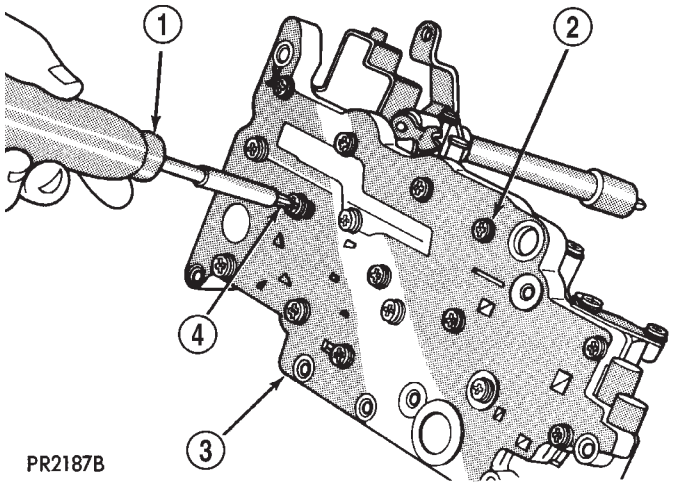

Fig. 308 Remove Valve Body-to-Transfer Plate Screws

1 - SCREWDRIVER HANDLE
2 - VALVE BODY SCREWS (16)
3 - VALVE BODY
4 - SPECIAL TOOL L-4553

VALVE BODY (Continued)

(3) Separate transfer and separator plate from valve body assembly (Fig. 309). Note check ball locations (Fig. 310) for proper reassembly.

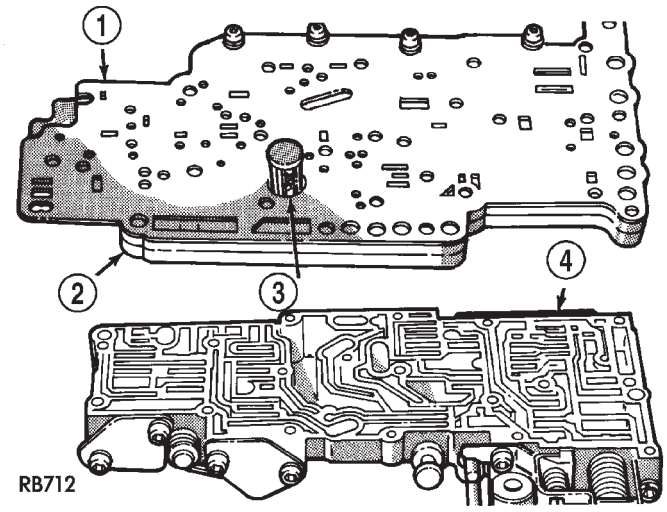

Fig. 309 Separate Transfer Plate and Separator Plate from Valve Body

1 - SEPARATOR PLATE
2 - TRANSFER PLATE
3 - OIL SCREEN
4 - VALVE BODY

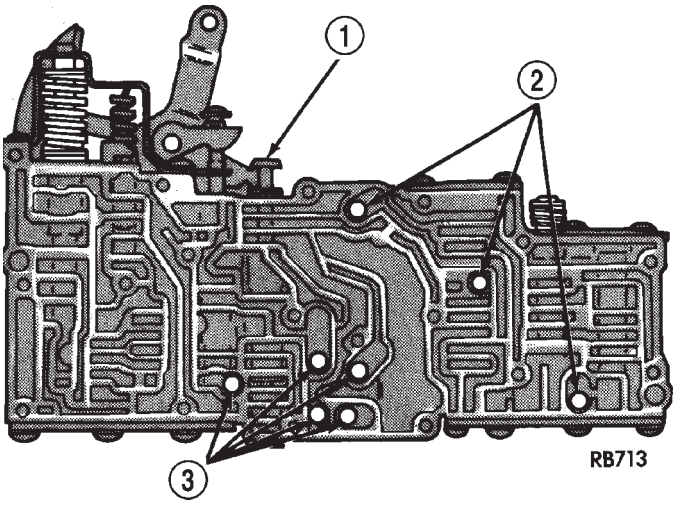

Fig. 310 Steel Ball Locations

1 - MANUAL VALVE
2 - STEEL BALLS (8)
3 - STEEL BALLS

(4) Remove throttle valve shaft-to-manual valve shaft e-clip (Fig. 311). Note orientation of washer and seal (Fig. 312).

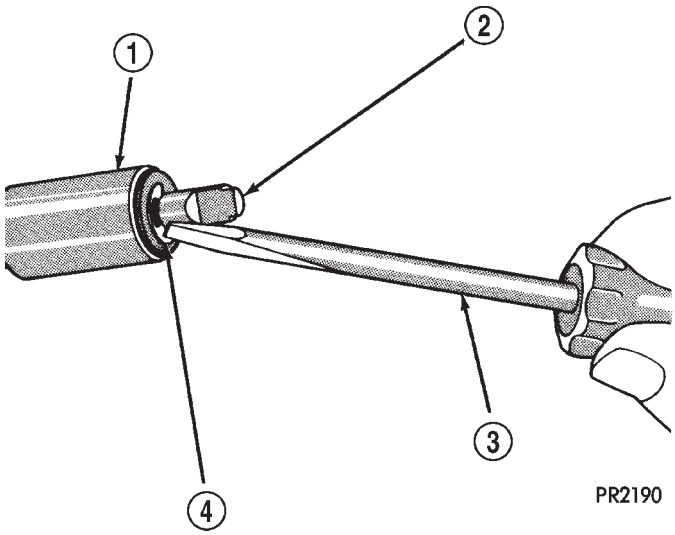

Fig. 311 Remove Throttle Shaft E-Clip

1 - MANUAL VALVE LEVER ASSEMBLY
2 - THROTTLE VALVE LEVER ASSEMBLY
3 - SCREWDRIVER
4 - “E” CLIP

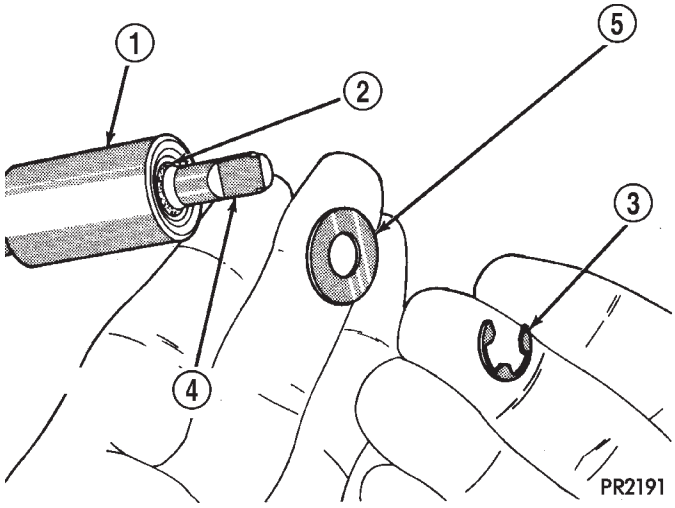

Fig. 312 Throttle Shaft E-Clip, Washer, and Seal

1 - MANUAL VALVE LEVER ASSEMBLY
2 - OIL SEAL
3 - “E” CLIP
4 - THROTTLE VALVE LEVER ASSEMBLY
5 - WASHER

VALVE BODY (Continued)

(5) Remove manual valve shaft/lever from throttle valve shaft (Fig. 313).

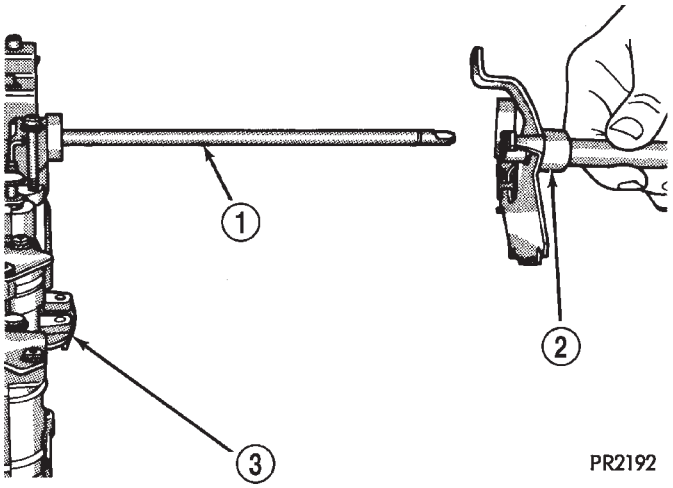

Fig. 313 Manual Valve Lever

1 - THROTTLE VALVE LEVER ASSEMBLY
2 - MANUAL VALVE LEVER ASSEMBLY
3 - VALVE BODY

(6) Remove throttle valve lever/shaft (Fig. 314).

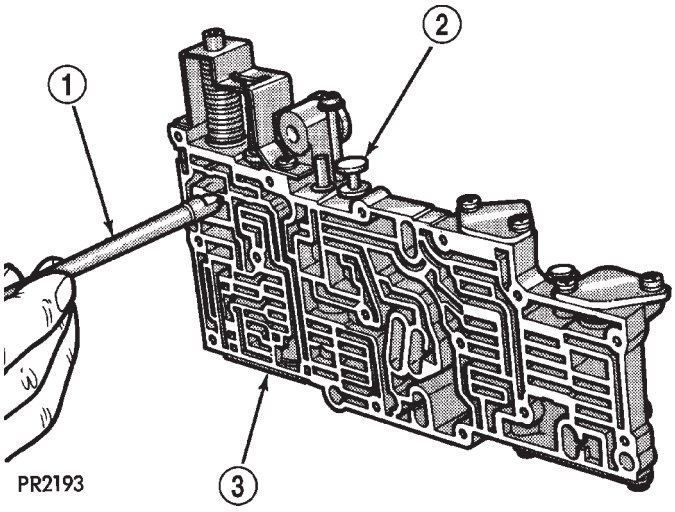

Fig. 314 Throttle Valve Lever Assembly

1 - THROTTLE VALVE LEVER ASSEMBLY
2 - MANUAL VALVE
3 - VALVE BODY

(7) Remove manual valve from valve body (Fig. 315).

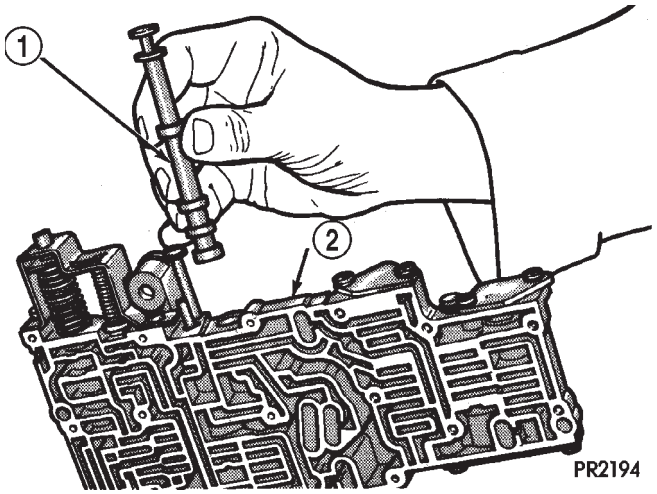

Fig. 315 Manual Valve

1 - MANUAL VALVE
2 - VALVE BODY

(8) Remove pressure regulator spring retainer/adjusting screw bracket (Fig. 316).

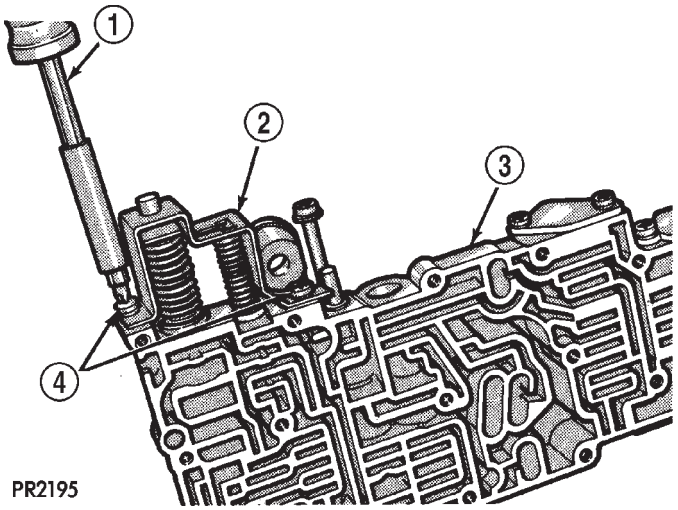

Fig. 316 Pressure Regulator and Adjusting Screw Bracket

1 - SCREWDRIVER HANDLE
2 - PRESSURE REGULATOR SPRING RETAINER AND ADJUSTING SCREW BRACKET
3 - VALVE BODY
4 - SCREWS

VALVE BODY (Continued)

(9) Remove springs and valves as shown in (Fig. 317).

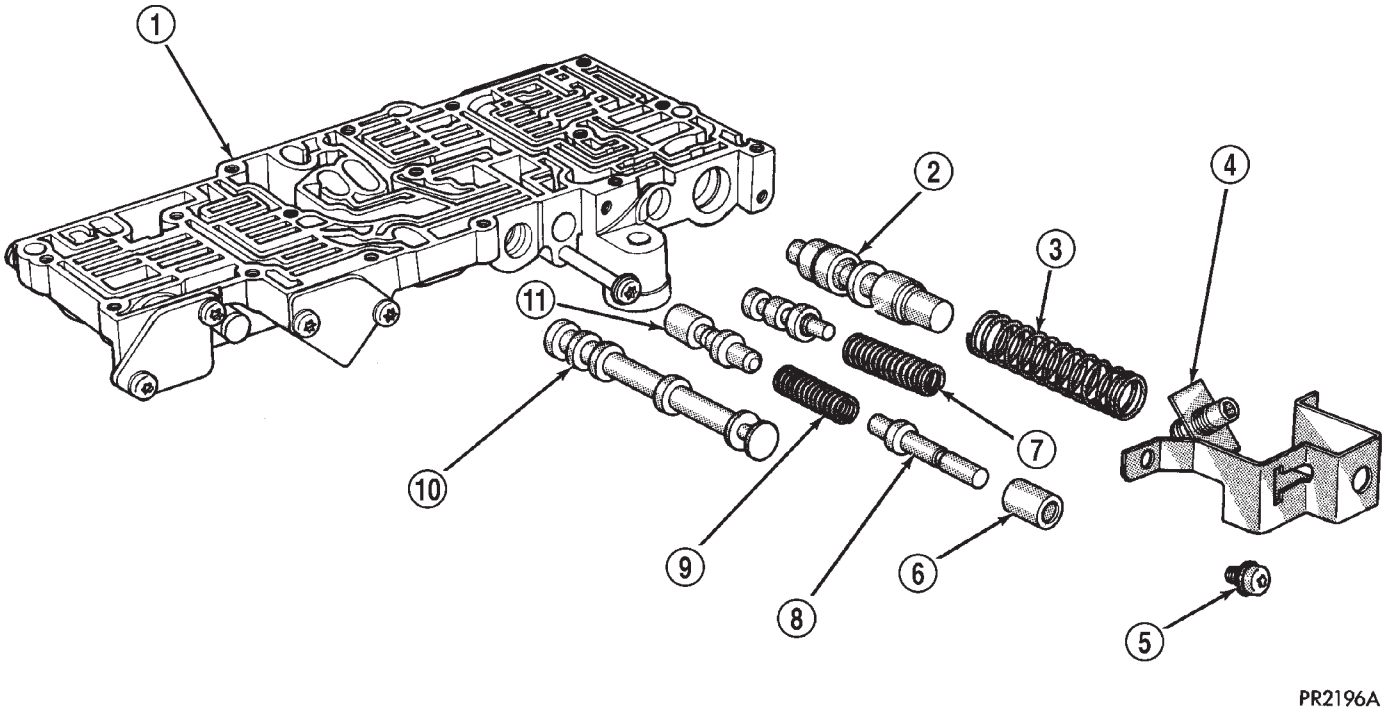

Fig. 317 Pressure Regulators and Manual Controls

1 - VALVE BODY
2 - LINE PRESSURE VALVE
3 - SPRING
4 - ADJUSTING SCREW
5 - SCREW
6 - GUIDE
7 - SPRING
8 - KICKDOWN VALVE
9 - SPRING
10 - MANUAL VALVE
11 - THROTTLE VALVE

VALVE BODY (Continued)

(10) Remove governor plugs as shown in (Fig. 318).

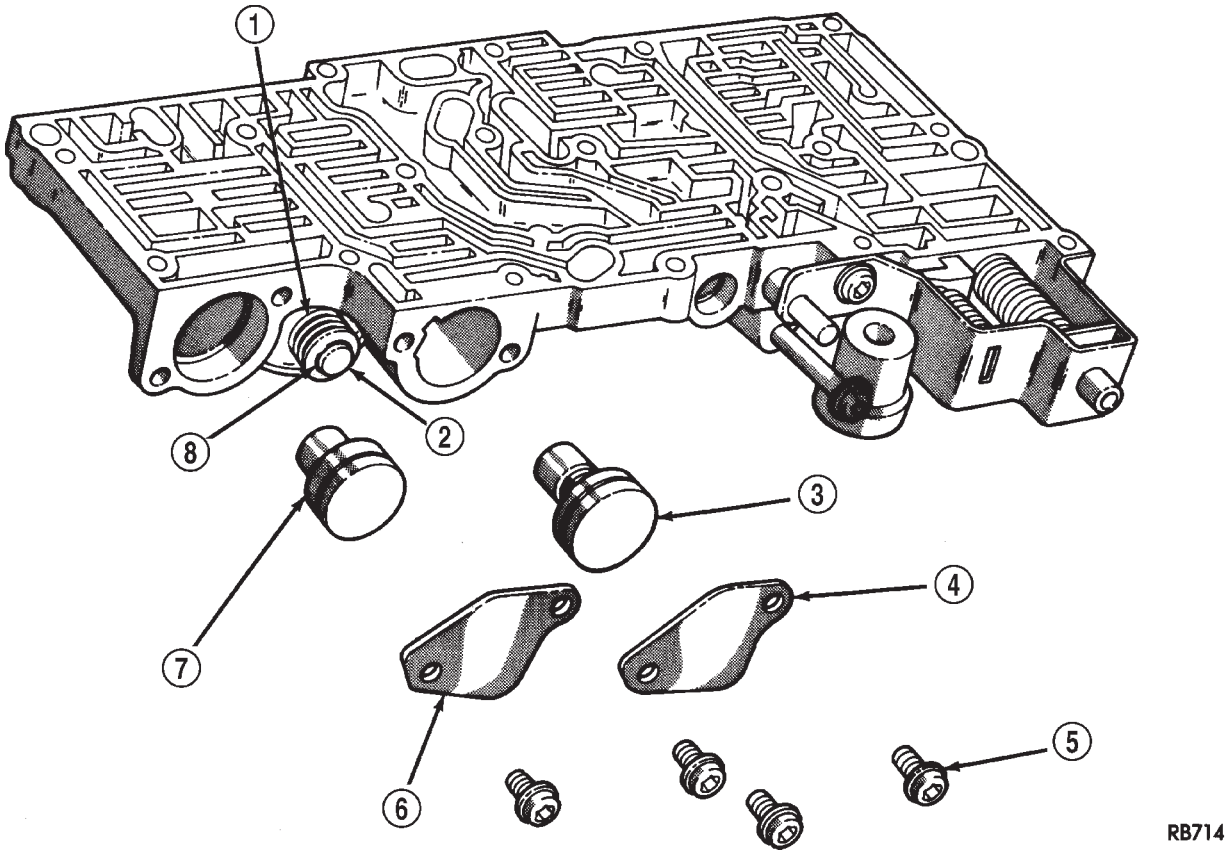

Fig. 318 Governor Plugs

1 - SHUTTLE VALVE SECONDARY SPRING
2 - SHUTTLE VALVE
3 - 1-2 SHIFT VALVE GOVERNOR PLUG
4 - END COVER
5 - SCREW (4)
6 - END COVER
7 - 2-3 SHIFT VALVE GOVERNOR PLUG
8 - E-CLIP

VALVE BODY (Continued)

(11) Remove torque converter clutch solenoid, spring, and plug as shown in (Fig. 319).

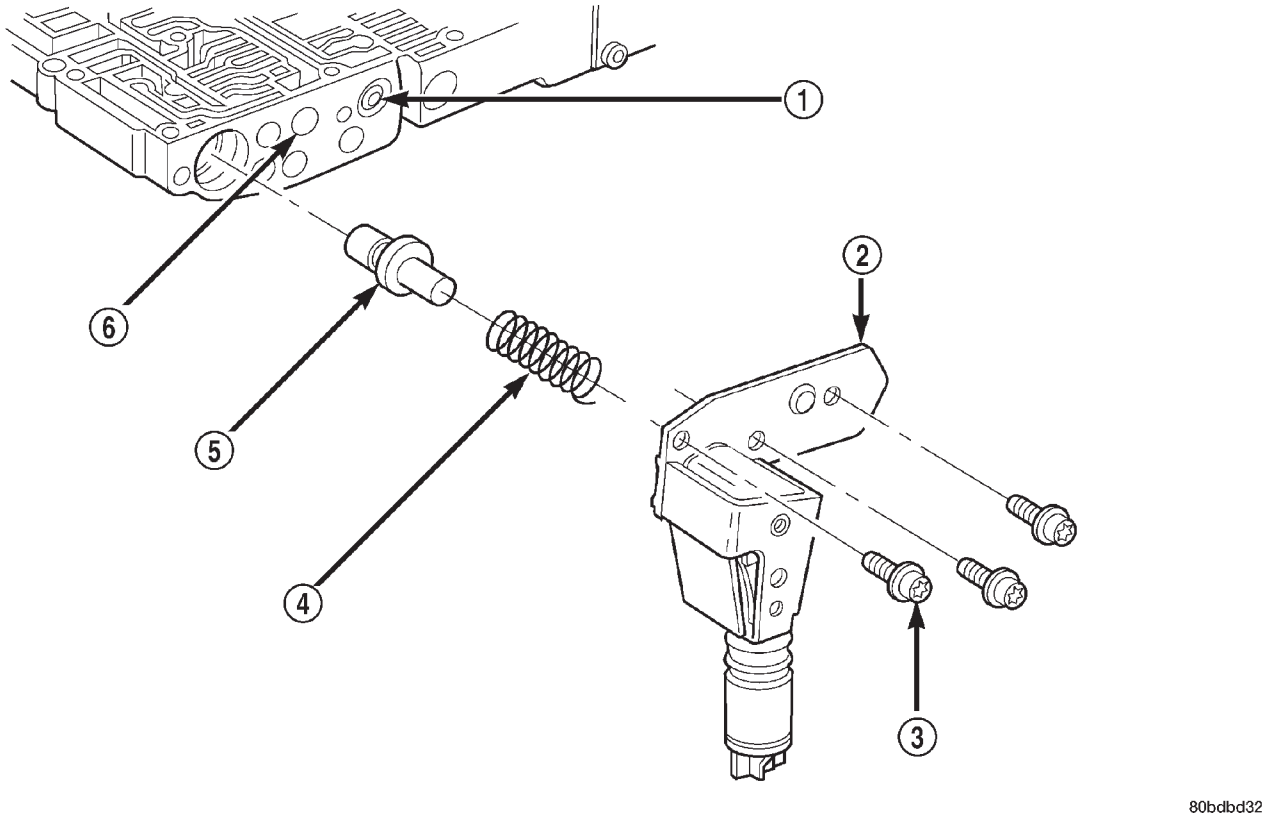

Fig. 319 Torque Converter Clutch Solenoid and Regulator/Control Valves

1 - CONVERTER PRESSURE CONTROL VALVE
2 - END COVER
3 - SCREW (3)
4 - REGULATOR VALVE THROTTLE PRESSURE PLUG SPRING
5 - REGULATOR VALVE THROTTLE PRESSURE PLUG
6 - SWITCH VALVE

VALVE BODY (Continued)

(12) Remove shift/shuttle valves and springs as shown in (Fig. 320).

CLEANING

Clean the valve body components in a parts cleaning solution only. Do not use gasoline, kerosene, or any type of caustic solution. Dry the parts with compressed air. Make sure all passages are clean and free from obstructions.

NOTE: Do not use rags or shop towels to wipe off valve body components. Lint from these materials will adhere to the valve body components. Lint will interfere with valve operation and may clog filters and fluid passages.

Minor distortion of a valve body mating surface may be corrected by smoothing the surface with crocus cloth. The cloth should be in sheet form and be positioned on a surface plate, sheet of plate glass, or equally flat surface. However, if distortion is severe or any surfaces are heavily scored, the valve body will have to be replaced.

CAUTION: Many of the valve body valves and plugs are made of coated aluminum. Aluminum components can be identified by the dark color of the special coating applied to the surface (or by testing with a magnet). DO NOT polish or sand aluminum valves or plugs with any type of material, or under any circumstances. This practice might damage the special coating and cause the valves and plugs to stick and bind.

Aluminum valves and plugs should not be sanded or polished under any circumstances. However, minor burrs or scratches on steel valves and plugs can be removed with crocus cloth but do not round off the

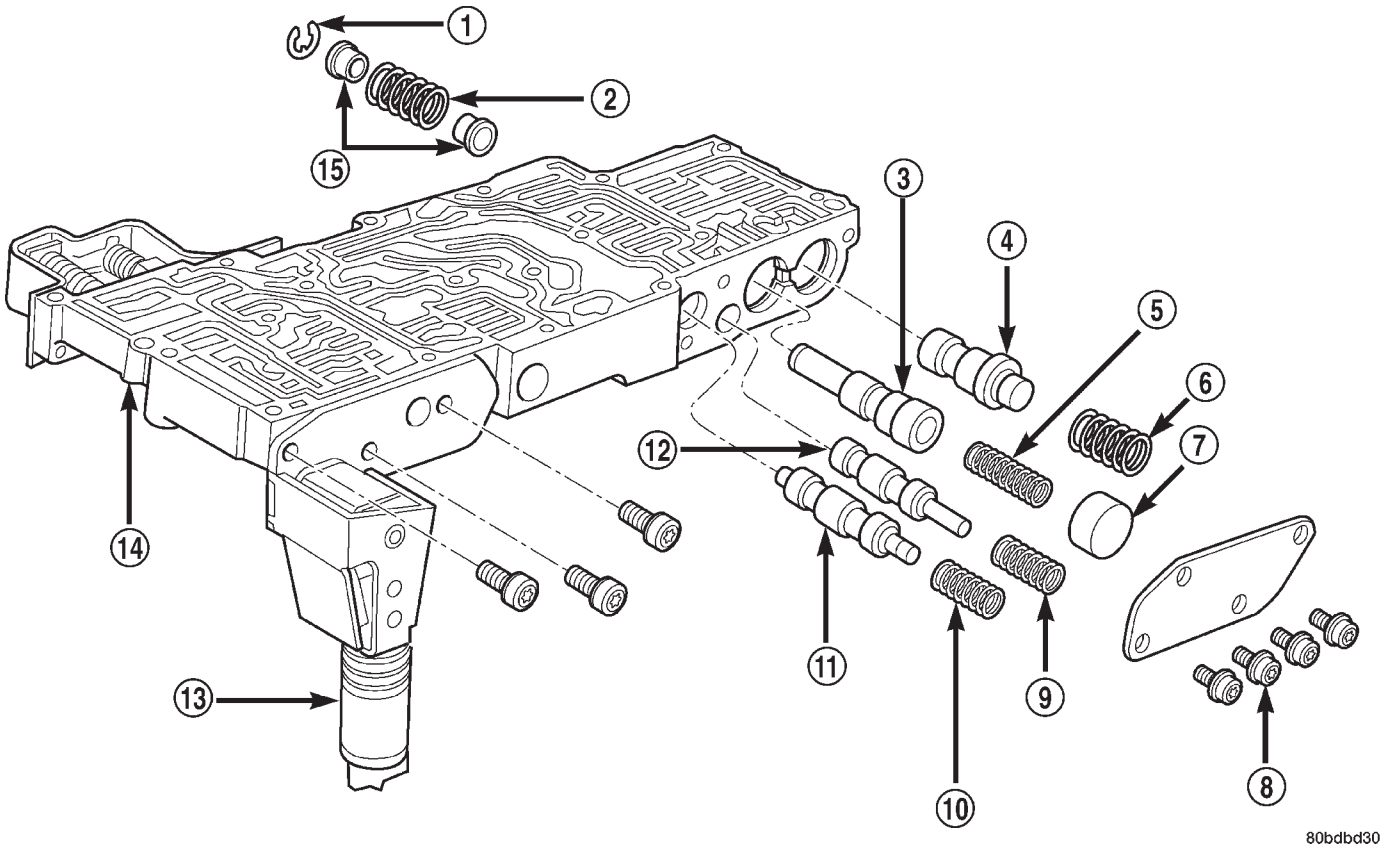

Fig. 320 Shift Valves and Shuttle Valve

1 - SHUTTLE VALVE E-CLIP
2 - SHUTTLE VALVE SECONDARY SPRING
3 - SHUTTLE VALVE
4 - 2–3 SHIFT VALVE
5 - SHUTTLE VALVE PRIMARY SPRING
6 - 2–3 SHIFT VALVE SPRING
7 - SHUTTLE VALVE PLUG
8 - SCREWS
9 - BY-PASS VALVE SPRING
10 - 1–2 SHIFT VALVE SPRING
11 - 1–2 SHIFT VALVE
12 - BY-PASS VALVE
13 - TORQUE CONVERTER CLUTCH SOLENOID
14 - VALVE BODY
15 - SPRING GUIDES (2)

VALVE BODY (Continued)

valve or plug edges. Squareness of these edges is vitally important. These edges prevent foreign matter from lodging between the valves, plugs and bore.

INSPECTION

Inspect the throttle and manual valve levers and shafts. Do not attempt to straighten a bent shaft or correct a loose lever. Replace these components if worn, bent, loose or damaged in any way.

Inspect all of the valve body mating surfaces for scratches, nicks, burrs, or distortion. Use a straightedge to check surface flatness. Minor scratches may be removed with crocus cloth using only very light pressure.

Inspect the valves and plugs for scratches, burrs, nicks, or scores. Also inspect the coating on the aluminum valves and plugs. If the coating is damaged or worn through, the valve (or valve body) should be replaced.

Inspect all the valve and plug bores in the valve body. Use a penlight to view the bore interiors. Replace the valve body if any bores are distorted or scored. Inspect all of the valve body springs. The springs must be free of distortion, warpage or broken coils.

Trial fit each valve and plug in its bore to check freedom of operation. When clean and dry, the valves and plugs should drop freely into the bores. Valve body bores do not change dimensionally with use. If the valve body functioned correctly when new, it will continue to operate properly after cleaning and inspection. It should not be necessary to replace a valve body assembly unless it is damaged in handling.

ASSEMBLY

(1) Install shift/shuttle valves and springs as shown in (Fig. 320).

(2) Install torque converter clutch solenoid, spring, and plug as shown in (Fig. 319).

(3) Install governor plugs as shown in (Fig. 318).

(4) Install pressure regulator and manual control springs and valves as shown in (Fig. 317).

(5) Install pressure regulator spring retainer/adjusting screw bracket (Fig. 321).

(6) Install manual valve from valve body (Fig. 322).

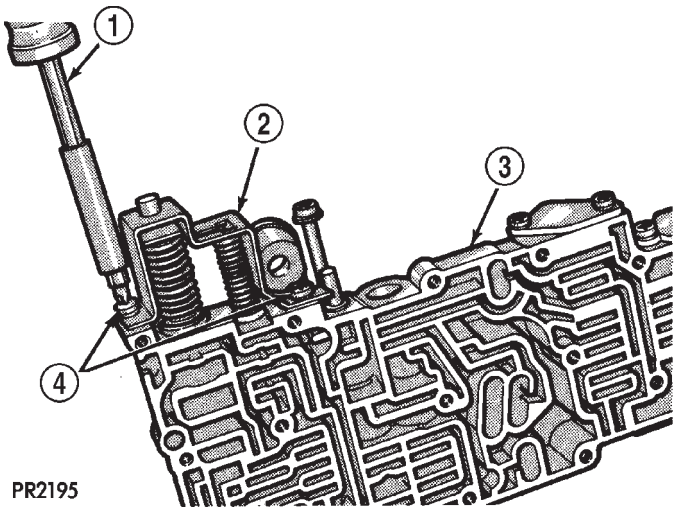

Fig. 321 Pressure Regulator and Adjusting Screw Bracket

1 - SCREWDRIVER HANDLE
2 - PRESSURE REGULATOR SPRING RETAINER AND ADJUSTING SCREW BRACKET
3 - VALVE BODY
4 - SCREWS

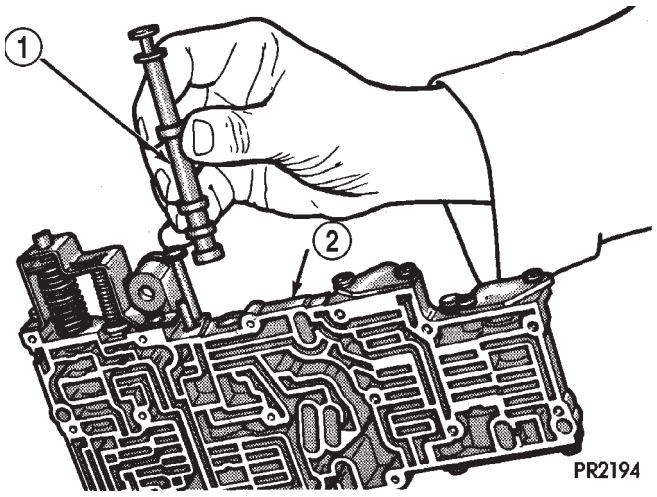

Fig. 322 Install Manual Valve

1 - MANUAL VALVE
2 - VALVE BODY

VALVE BODY (Continued)

(7) Install throttle valve lever/shaft (Fig. 323).

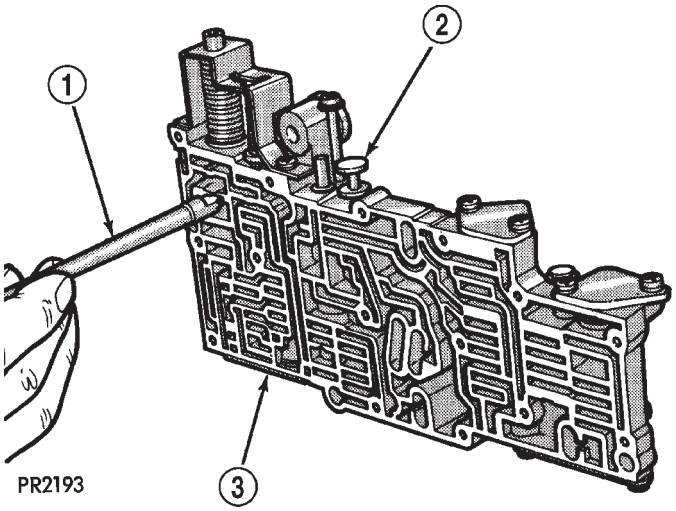

Fig. 323 Install Throttle Valve Lever Assembly

1 - THROTTLE VALVE LEVER ASSEMBLY
2 - MANUAL VALVE
3 - VALVE BODY

(8) Install manual valve shaft/lever to throttle valve shaft (Fig. 324). Align manual valve lever to manual valve.

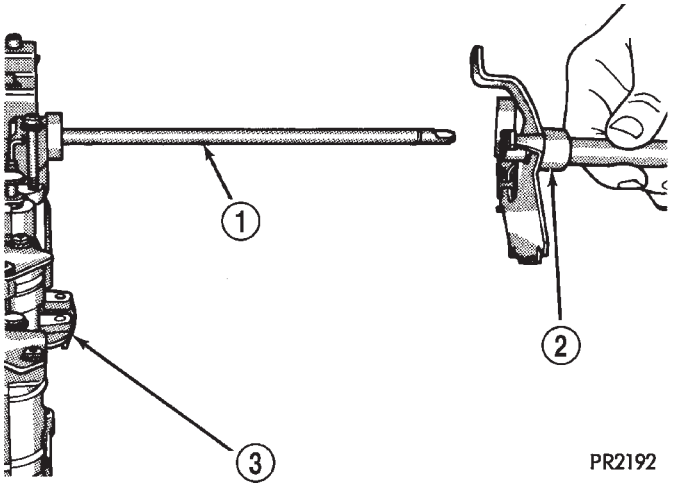

Fig. 324 Install Manual Valve Lever

1 - THROTTLE VALVE LEVER ASSEMBLY
2 - MANUAL VALVE LEVER ASSEMBLY
3 - VALVE BODY

(9) Remove throttle valve shaft-to-manual valve shaft seal, washer, and e-clip (Fig. 325). Verify that manual valve lever is engaged with manual valve.

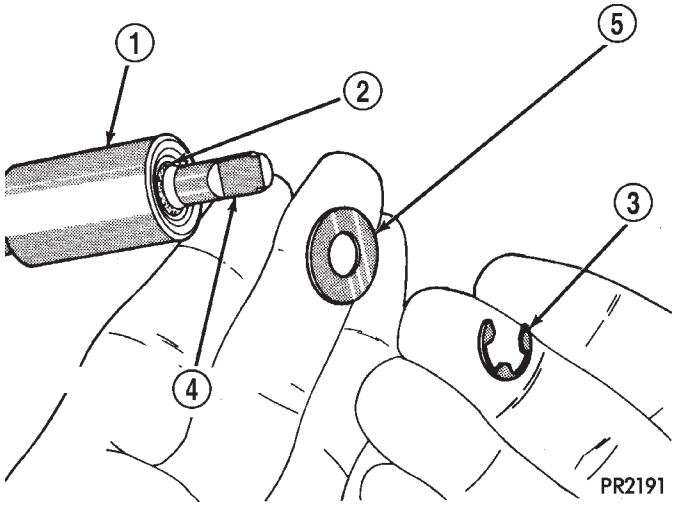

Fig. 325 Throttle Shaft E-Clip, Washer, and Seal

1 - MANUAL VALVE LEVER ASSEMBLY
2 - OIL SEAL
3 - "E" CLIP
4 - THROTTLE VALVE LEVER ASSEMBLY
5 - WASHER

(10) Install and verify proper location of check balls (Fig. 326).

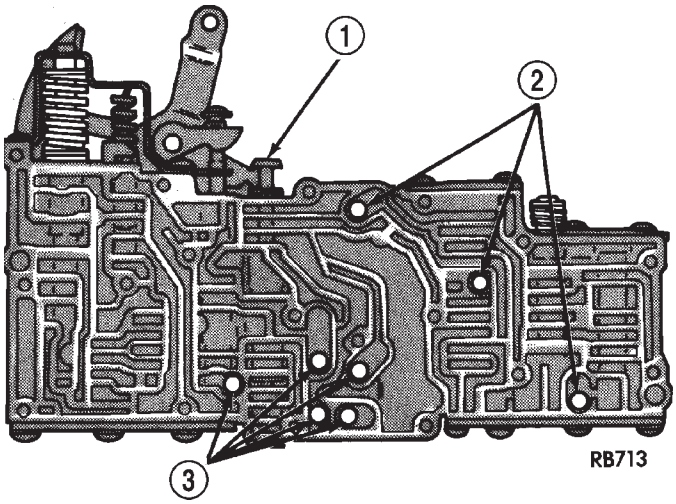

Fig. 326 Steel Ball Locations

1 - MANUAL VALVE
2 - STEEL BALLS (8)
3 - STEEL BALLS

VALVE BODY (Continued)

(11) Install transfer and separator plate to valve body assembly (Fig. 327).

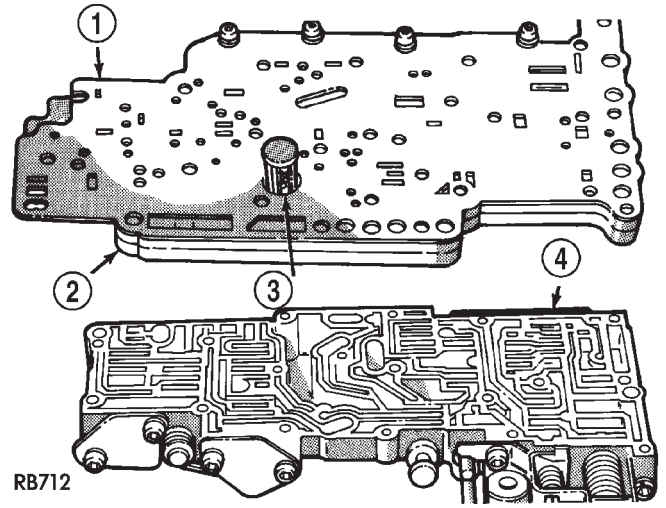

Fig. 327 Install Transfer Plate and Separator Plate to Valve Body

1 - SEPARATOR PLATE
2 - TRANSFER PLATE
3 - OIL SCREEN
4 - VALVE BODY

(12) Using Tool L-4553 or equivalent (Fig. 328), install and torque valve body-to-transfer plate screws (Fig. 329) to 5 N·m (40 in. lbs.) torque.

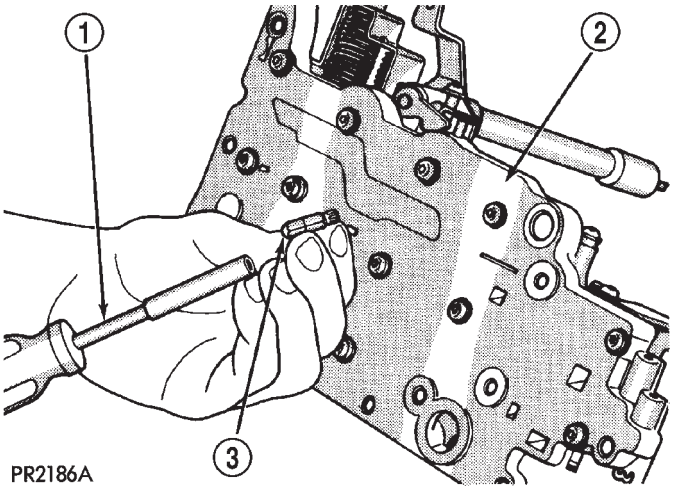

Fig. 328 Using Tool L-4553 on Valve Body Screw

1 - SCREWDRIVER HANDLE
2 - VALVE BODY ASSEMBLY
3 - SPECIAL TOOL L-4553

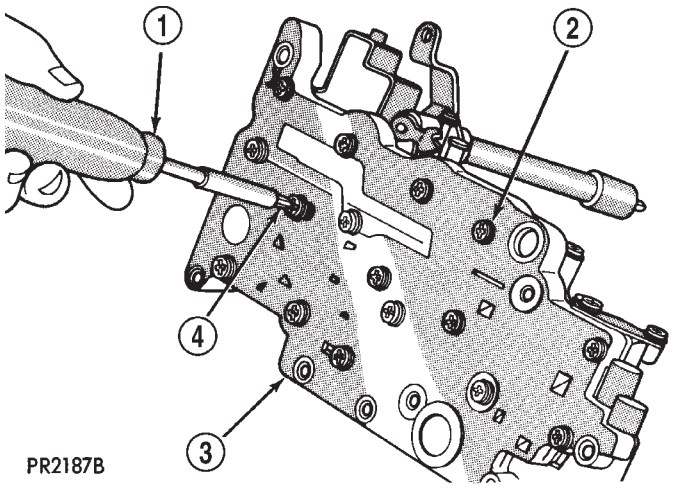

Fig. 329 Install Valve Body-to-Transfer Plate Screws

1 - SCREWDRIVER HANDLE
2 - VALVE BODY SCREWS (16)
3 - VALVE BODY
4 - SPECIAL TOOL L-4553

(13) Install detent spring into position. Install and torque detent spring-to-valve body screws to 5 N·m (40 in. lbs.) torque (Fig. 330).

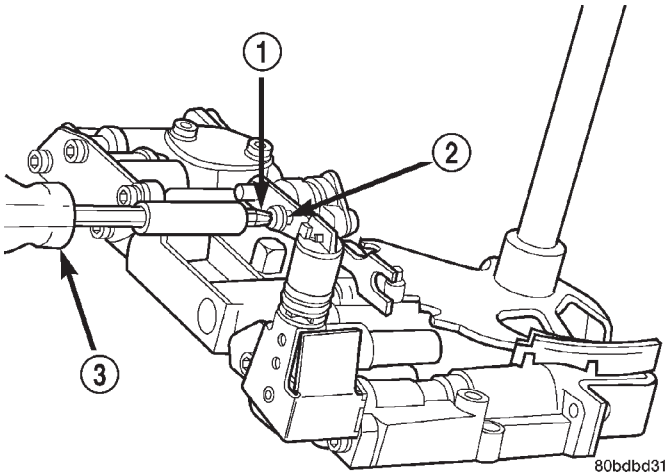

Fig. 330 Detent Spring Attaching Screw and Spring

1 - SPECIAL TOOL L-4553
2 - DETENT SPRING SCREW
3 - SCREWDRIVER HANDLE

VALVE BODY (Continued)

INSTALLATION

(1) Install valve body to transaxle. Position governor tubes into case (Fig. 331).

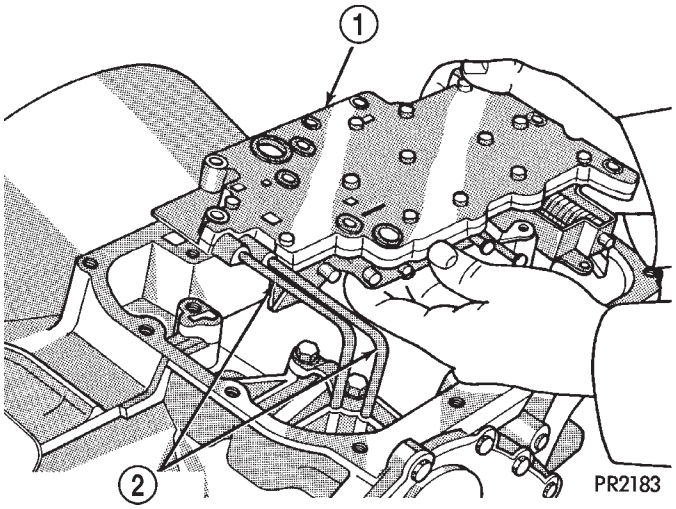

Fig. 331 Valve Body and Governor Tubes

1 - VALVE BODY ASSEMBLY
2 - GOVERNOR TUBES

(2) Install valve body-to-case bolts (Fig. 332) and torque to 12 N·m (105 in. lbs.).

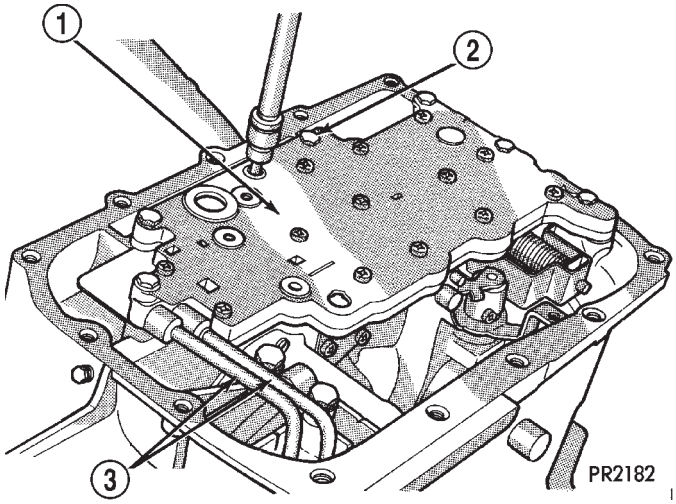

Fig. 332 Valve Body Attaching Bolts

1 - VALVE BODY
2 - VALVE BODY ATTACHING BOLTS (7)
3 - GOVERNOR TUBES

(3) Install cooler bypass valve and seal (Fig. 333).

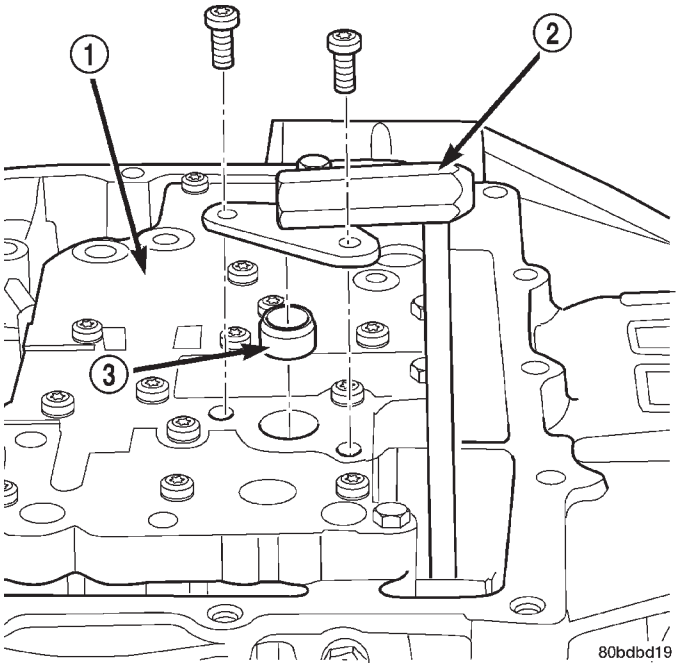

Fig. 333 Cooler Bypass Valve and Seal

1 - TRANSFER PLATE
2 - BYPASS VALVE
3 - SEAL

(4) Install park rod to valve body and install e-clip (Fig. 334) (Fig. 335).

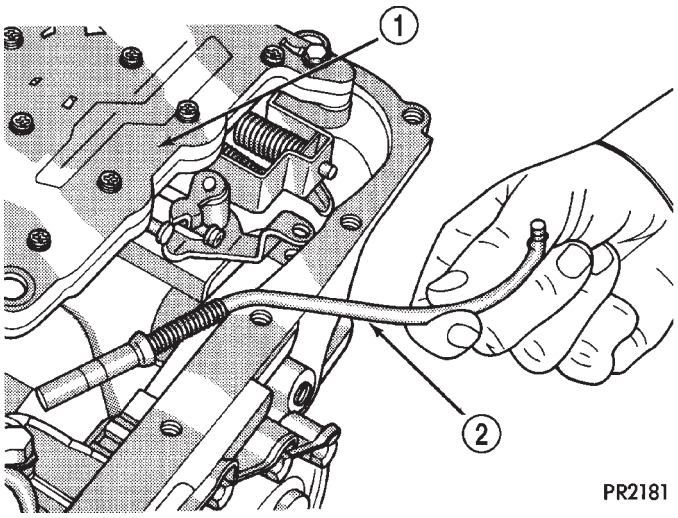

Fig. 334 Parking Rod

1 - VALVE BODY
2 - PARKING ROD

VALVE BODY (Continued)

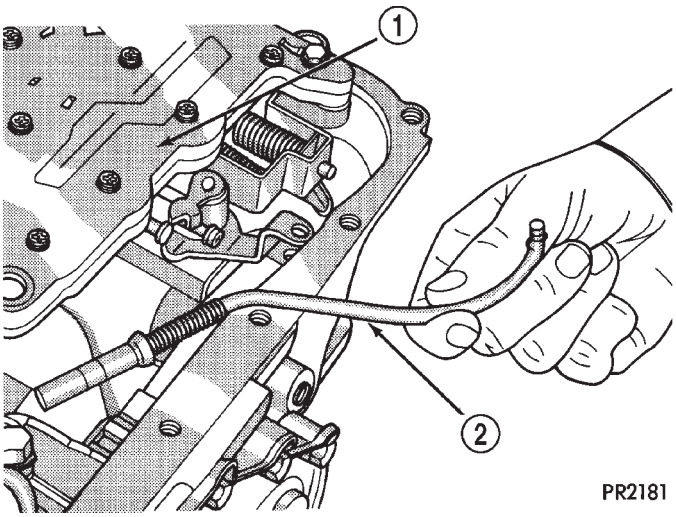

Fig. 335 Parking Rod

1 - VALVE BODY
2 - PARKING ROD

(5) Install oil filter and gasket (Fig. 336).

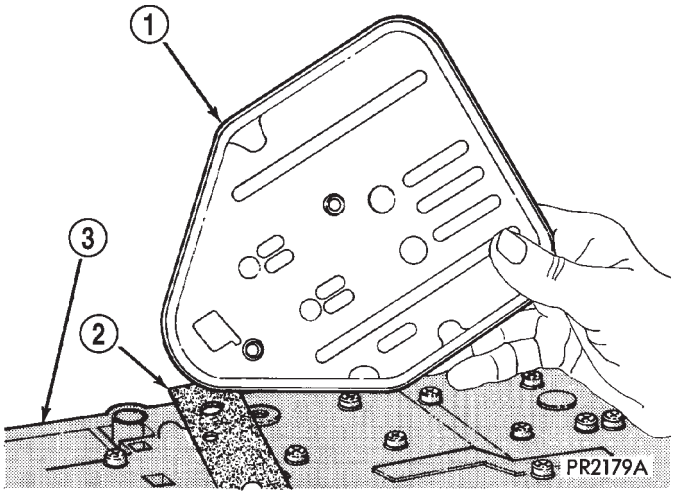

Fig. 336 Oil Filter and Gasket

1 - OIL FILTER
2 - GASKET
3 - VALVE BODY

(6) Install oil filter-to-valve body screws (Fig. 337) to 5 N·m (45 in. lbs.).

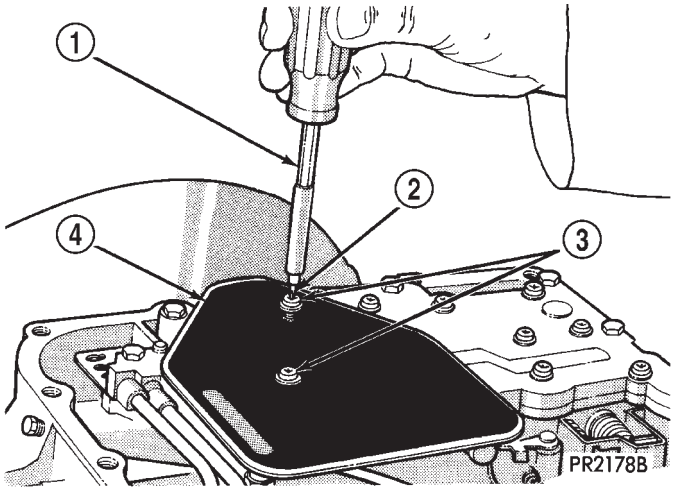

Fig. 337 Oil Filter Screws

1 - SCREWDRIVER HANDLE
2 - SPECIAL TOOL L-4553
3 - OIL FILTER SCREWS (2)
4 - OIL FILTER

(7) Install a bead of Mopar® Silicone Rubber Adhesive Sealant to oil pan (Fig. 338) and immediately install to case.

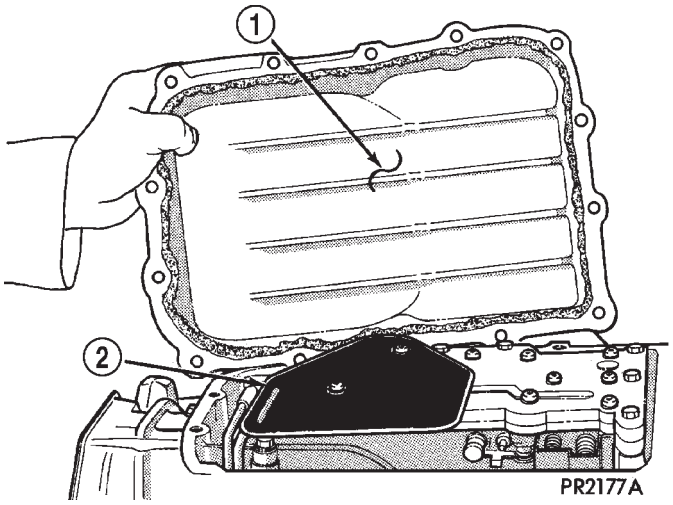

Fig. 338 Transaxle Oil Pan

1 - TRANSAXLE OIL PAN
2 - OIL FILTER

VALVE BODY (Continued)

(8) Install and torque oil pan-to-transaxle bolts (Fig. 339) to 19 N·m (165 in. lbs.).

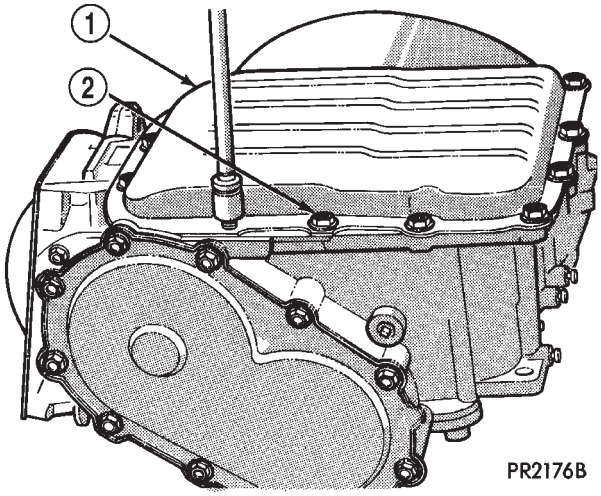

Fig. 339 Transaxle Oil Pan Bolts

1 - TRANSAXLE OIL PAN
2 - OIL PAN BOLTS

(9) Lower vehicle.
(10) Connect torque converter clutch solenoid.
(11) Connect gearshift cable to manual valve lever.
(12) Connect throttle valve cable to throttle valve lever at transaxle.
(13) Connect battery negative cable.

ADJUSTMENTS

HYDRAULIC CONTROL PRESSURE ADJUSTMENTS

LINE PRESSURE

An incorrect throttle pressure setting will cause incorrect line pressure readings even though line pressure adjustment is correct. Always inspect and correct throttle pressure adjustment before adjusting the line pressure.

The approximate adjustment for line pressure is 1-5/16 inches, measured from valve body to inner edge of adjusting nut. However, due to manufacturing tolerances, the adjustment can be varied to obtain specified line pressure.

The adjusting screw may be turned with an Allen wrench. One complete turn of adjusting screw changes closed throttle line pressure approximately 1-2/3 psi. Turning adjusting screw counterclockwise increases pressure, and clockwise decreases pressure.

THROTTLE PRESSURE

Throttle pressures cannot be tested accurately; therefore, the adjustment should be measured if a malfunction is evident.

(1) Insert gauge pin of Tool C-3763 between the throttle lever cam and kickdown valve.

(2) By pushing in on tool, compress kickdown valve against its spring so throttle valve is completely bottomed inside the valve body.

(3) While compressing spring, turn throttle lever stop screw with adapter C-4553. Turn until head of screw touches throttle lever tang, with throttle lever cam touching tool and throttle valve bottomed. Be sure adjustment is made with spring fully compressed and valve bottomed in the valve body.

VEHICLE SPEED SENSOR/ PINION GEAR

REMOVAL

(1) Remove harness connector from sensor (Fig. 340). Be sure weather seal stays on harness connector.

(2) Remove bolt securing the sensor in the extension housing (Fig. 340) .

(3) Carefully pull sensor and pinion gear assembly out of extension housing.

(4) Remove pinion gear from sensor (Fig. 340) .

(5) Inspect pinion gear for damage (missing teeth, etc.) and replace as necessary.

NOTE: When removing vehicle speed sensor for any reason, a new o-ring MUST be used.

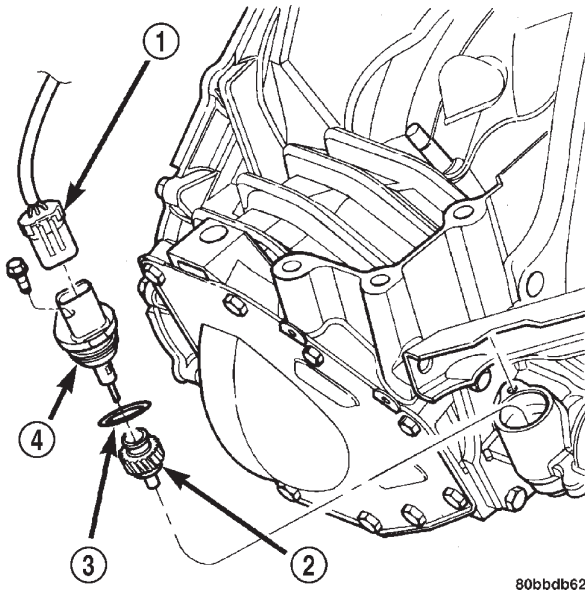

Fig. 340 Vehicle Speed Sensor Removal/Installation

1 - CONNECTOR
2 - SPEEDO PINION
3 - O-RING
4 - SENSOR

INSTALLATION

(1) Install vehicle speed sensor and pinion gear to extension housing with new o-ring (Fig. 340).
(2) Install bolt and torque to 7 N·m (60 in. lbs.).
(3) Connect connector.
(4) Lower vehicle.

41TE AUTOMATIC TRANSAXLE

TABLE OF CONTENTS

page

41TE AUTOMATIC TRANSAXLE
DESCRIPTION 162
OPERATION 164
DIAGNOSIS AND TESTING
DIAGNOSIS AND TESTING - 41TE TRANSAXLE GENERAL DIAGNOSIS 164
DIAGNOSIS AND TESTING - ROAD TEST . . 165
DIAGNOSIS AND TESTING - HYDRAULIC PRESSURE TESTS 165
DIAGNOSIS AND TESTING - CLUTCH AIR PRESSURE TESTS 168
DIAGNOSIS AND TESTING - TORQUE CONVERTER HOUSING FLUID LEAKAGE . . 168
REMOVAL 169
DISASSEMBLY 171
ASSEMBLY 190
INSTALLATION 213
SCHEMATICS AND DIAGRAMS
41TE TRANSAXLE HYDRAULIC SCHEMATICS 216
SPECIFICATIONS - 41TE TRANSAXLE 228
SPECIAL TOOLS
41TE AUTOMATIC TRANSAXLE 230
ACCUMULATOR
DESCRIPTION 236
OPERATION 236
AUTOSTICK SWITCH
DESCRIPTION 237
OPERATION 237
DRIVING CLUTCHES
DESCRIPTION 237
OPERATION 238
FINAL DRIVE
DISASSEMBLY 238
ASSEMBLY 243
ADJUSTMENTS
ADJUSTMENT - DIFFERENTIAL BEARING PRELOAD 246
FLUID
STANDARD PROCEDURE
FLUID LEVEL AND CONDITION CHECK . . . 249
STANDARD PROCEDURE - FLUID AND FILTER SERVICE 250
GEAR SHIFT CABLE
REMOVAL 251
INSTALLATION 253
ADJUSTMENTS
GEARSHIFT CABLE ADJUSTMENT 254
HOLDING CLUTCHES
DESCRIPTION 255
OPERATION 255
INPUT CLUTCH ASSEMBLY
DISASSEMBLY 255
ASSEMBLY 263
OIL PUMP
DESCRIPTION 272
OPERATION 272
STANDARD PROCEDURE - OIL PUMP VOLUME CHECK 272
DISASSEMBLY 273
ASSEMBLY 274
PLANETARY GEARTRAIN
DESCRIPTION 274
OPERATION 274
SEAL - OIL PUMP
REMOVAL 275
INSTALLATION 275
SHIFT INTERLOCK SOLENOID
DESCRIPTION 275
OPERATION 276
DIAGNOSIS AND TESTING - BRAKE/ TRANSMISSION SHIFT INTERLOCK SOLENOID 277
REMOVAL 277
INSTALLATION 278
SOLENOID/PRESSURE SWITCH ASSY
DESCRIPTION 279
OPERATION 280
REMOVAL 280
INSTALLATION 281
SPEED SENSOR - INPUT
DESCRIPTION 281
OPERATION 282
REMOVAL 282
INSTALLATION 283
SPEED SENSOR - OUTPUT
DESCRIPTION 283
OPERATION 283
REMOVAL 284
INSTALLATION 284
TORQUE CONVERTER
DESCRIPTION 285
OPERATION 289
REMOVAL 290
INSTALLATION 290
TRANSMISSION CONTROL RELAY
DESCRIPTION 291
OPERATION 291
TRANSMISSION RANGE SENSOR
DESCRIPTION 291

OPERATION 292
REMOVAL 292
INSTALLATION 292
TRD LINK
DESCRIPTION 292
OPERATION 292
VALVE BODY
DESCRIPTION 293
OPERATION 293
REMOVAL
REMOVAL 294
REMOVAL 296
DISASSEMBLY 297
ASSEMBLY 301
INSTALLATION 306

41TE AUTOMATIC TRANSAXLE

DESCRIPTION

The 41TE (Fig. 1) is a four-speed transaxle that is a conventional hydraulic/mechanical assembly with an integral differential, and is controlled with adaptive electronic controls and monitors. The hydraulic system of the transaxle consists of the transaxle fluid, fluid passages, hydraulic valves, and various line pressure control components. An input clutch assembly which houses the underdrive, overdrive, and reverse clutches is used. It also utilizes separate holding clutches: 2nd/4th gear and Low/Reverse. The primary mechanical components of the transaxle consist of the following:

- Three multiple disc input clutches
- Two multiple disc holding clutches
- Four hydraulic accumulators
- Two planetary gear sets
- Hydraulic oil pump
- Valve body
- Solenoid/Pressure switch assembly
- Integral differential assembly

Control of the transaxle is accomplished by fully adaptive electronics. Optimum shift scheduling is accomplished through continuous real-time sensor feedback information provided to the Transmission Control Module (TCM).

The TCM is the heart of the electronic control system and relies on information from various direct and indirect inputs (sensors, switches, etc.) to determine driver demand and vehicle operating conditions. With this information, the TCM can calculate and perform timely and quality shifts through various output or control devices (solenoid pack, transmission control relay, etc.).

The TCM also performs certain self-diagnostic functions and provides comprehensive information (sensor data, DTC's, etc.) which is helpful in proper diagnosis and repair. This information can be viewed with the DRB scan tool.

41TE AUTOMATIC TRANSAXLE (Continued)

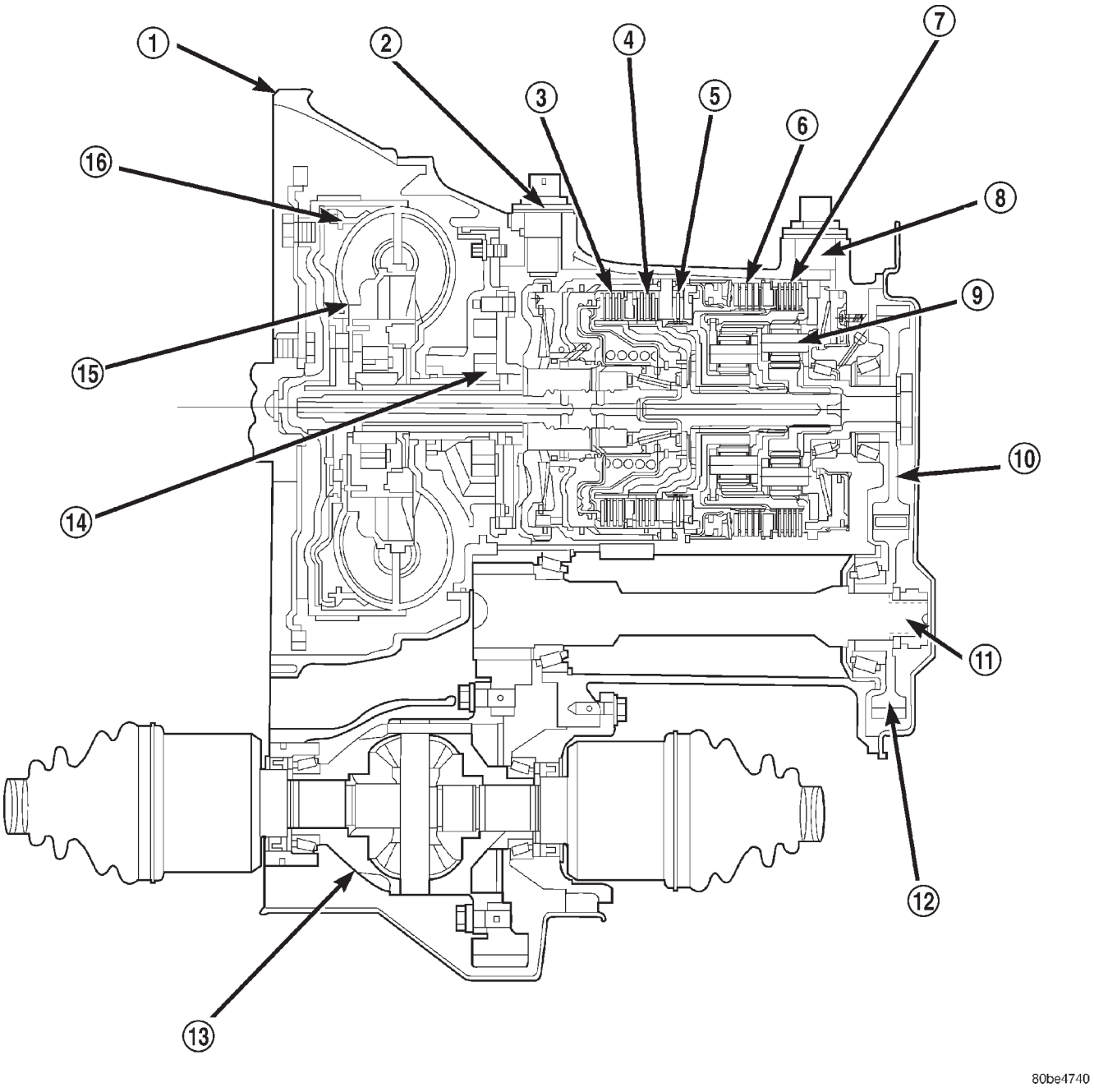

Fig. 1 41TE Transaxle

1 - CASE
2 - INPUT SPEED SENSOR
3 - UNDERDRIVE CLUTCH
4 - OVERDRIVE CLUTCH
5 - REVERSE CLUTCH
6 - 2/4 CLUTCH
7 - LOW/REVERSE CLUTCH
8 - OUTPUT SPEED SENSOR
9 - PLANETARY GEAR SET
10 - OUTPUT SHAFT GEAR
11 - TRANSFER SHAFT
12 - TRANSFER SHAFT GEAR
13 - DIFFERENTIAL
14 - OIL PUMP
15 - TORQUE CONVERTER
16 - TORQUE CONVERTER CLUTCH

TRANSAXLE IDENTIFICATION

The 41TE transaxle is identified by a barcode label that is fixed to the transaxle case as shown in (Fig. 2).

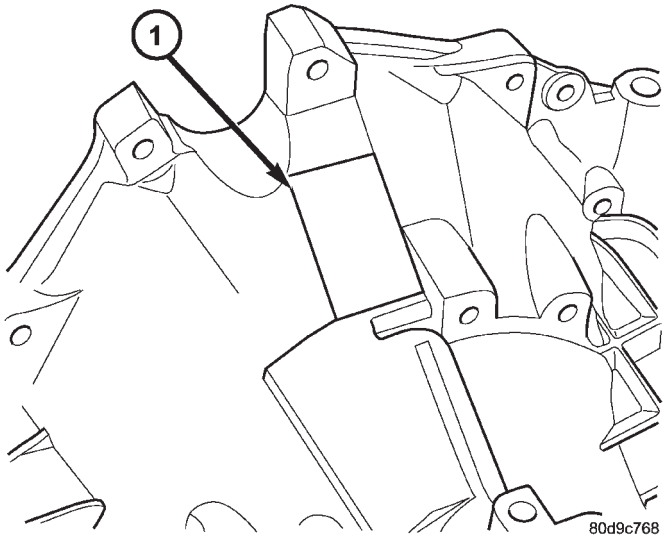

Fig. 2 Transaxle Identification Label

1 - IDENTIFICATION LABEL

The label contains a series of digits that can be translated into useful information such as transaxle part number, date of manufacture, manufacturing origin, plant shift number, build sequence number, etc. Refer to (Fig. 3) for identification label breakdown.

If the tag is not legible or missing, the “PK” number, which is stamped into the transaxle case behind the transfer gear cover, can be referred to for identification. This number differs slightly in that it contains the entire transaxle part number, rather than the last three digits.

OPERATION

Transmission output is directed to an integral differential by a transfer gear system in the following input-to-output ratios:

First	2.84 : 1
Second	1.57 : 1
Third	1.00 : 1
Overdrive	0.69 : 1
Reverse	2.21 : 1

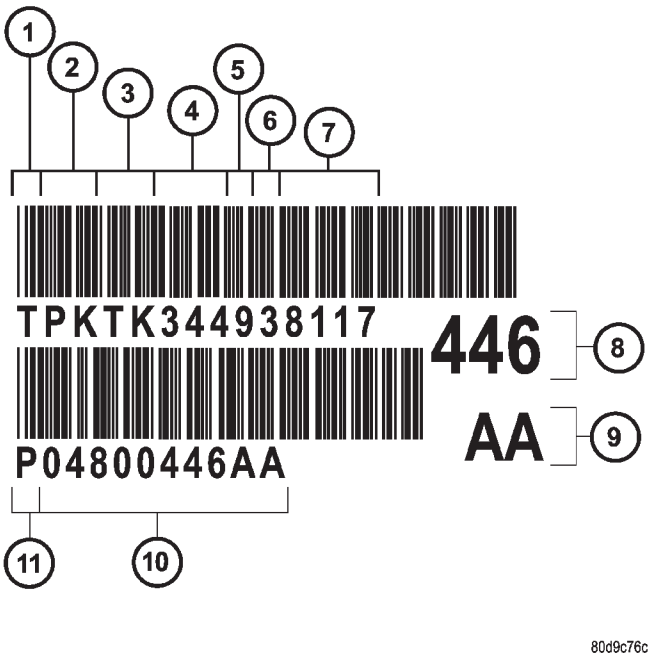

Fig. 3 Identification Label Breakdown

1 - T=TRACEABILITY
2 - SUPPLIER CODE (PK=KOKOMO)
3 - COMPONENT CODE (TK=KOKOMO TRANSMISSION)
4 - BUILD DAY (344=DEC. 9)
5 - BUILD YEAR (9=1999)
6 - LINE/SHIFT CODE (3=3RD SHIFT)
7 - BUILD SEQUENCE NUMBER
8 - LAST THREE OF P/N
9 - NIK
10 - TRANSAXLE PART NUMBER
11 - P=PART NUMBER

DIAGNOSIS AND TESTING

DIAGNOSIS AND TESTING - 41TE TRANSAXLE GENERAL DIAGNOSIS

NOTE: Before attempting any repair on a 41TE four-speed automatic transaxle, check for diagnostic trouble codes (DTC’s) using the DRB scan tool. Refer to the Transmission Diagnostic Procedures Manual.

Transaxle malfunctions may be caused by these general conditions:

- Poor engine performance
- Improper adjustments
- Hydraulic malfunctions
- Mechanical malfunctions
- Electronic malfunctions

Diagnosis of these problems should always begin by checking the easily accessible variables: fluid level and condition, gearshift cable adjustment. Then per-

form a road test to determine if the problem has been corrected or that more diagnosis is necessary. If the problem persists after the preliminary tests and corrections are completed, hydraulic pressure checks should be performed.

DIAGNOSIS AND TESTING - ROAD TEST

Prior to performing a road test, verify that the fluid level, fluid condition, and linkage adjustment have been approved.

During the road test, the transaxle should be operated in each position to check for slipping and any variation in shifting.

If the vehicle operates properly at highway speeds, but has poor acceleration, the converter stator overrunning clutch may be slipping. If acceleration is normal, but high throttle opening is needed to maintain highway speeds, the converter stator clutch may have seized. Both of these stator defects require replacement of the torque converter and thorough transaxle cleaning.

Slipping clutches can be isolated by comparing the "Elements in Use" chart with clutch operation encountered on a road test. This chart identifies which clutches are applied at each position of the selector lever.

A slipping clutch may also set a DTC and can be determined by operating the transaxle in all selector positions.

ELEMENTS IN USE AT EACH POSITION OF SELECTOR LEVER

Shift Lever Position	INPUT CLUTCHES			HOLDING CLUTCHES	
	Underdrive	Overdrive	Reverse	2/4	Low/Reverse
P - PARK					X
R - REVERSE			X		X
N - NEUTRAL					X
OD - OVERDRIVE					
First	X				X
Second	X			X	
Direct	X	X			
Overdrive		X		X	
D - DRIVE*					
First	X				X
Second	X			X	
Direct	X	X			
L - LOW*					
First	X				X
Second	X			X	
Direct	X	X			
* Vehicle upshift and downshift speeds are increased when in these selector positions.					

The process of elimination can be used to detect any unit which slips and to confirm proper operation of good units. Road test analysis can diagnose slipping units, but the cause of the malfunction cannot be determined. Practically any condition can be caused by leaking hydraulic circuits or sticking valves.

DIAGNOSIS AND TESTING - HYDRAULIC PRESSURE TESTS

Pressure testing is a very important step in the diagnostic procedure. These tests usually reveal the cause of most hydraulic transaxle problems.

Before performing pressure tests, be certain that fluid level and condition, and shift cable adjustments have been checked and approved. Fluid must be at operating temperature (150 to 200 degrees F.).

Install an engine tachometer, raise vehicle on hoist which allows front wheels to turn, and position tachometer so it can be read.

Attach 300 psi gauge (C-3293SP) to port(s) required for test(s) being conducted. Use adapter set L-4559 to adapt gauge(s) to transaxle.

Test port locations are shown in (Fig. 4).

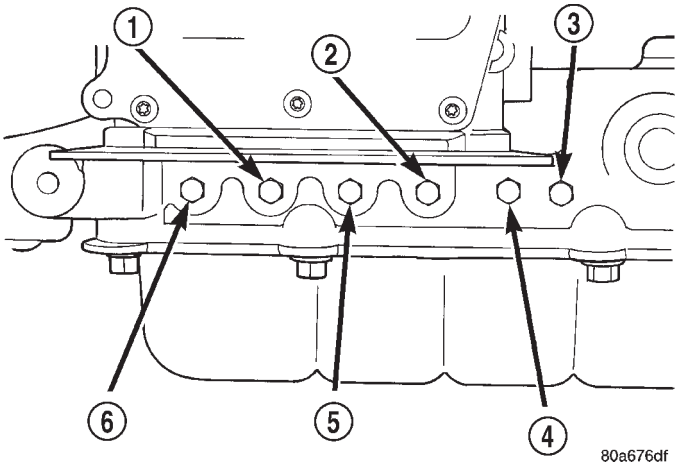

Fig. 4 Pressure Taps

1 - OVERDRIVE CLUTCH
2 - TORQUE CONVERTER OFF
3 - LOW/REVERSE CLUTCH
4 - 2/4 CLUTCH
5 - REVERSE CLUTCH
6 - UNDERDRIVE CLUTCH

TEST ONE-SELECTOR IN LOW (1st GEAR)

(1) Attach pressure gauge to the low/reverse clutch tap.

(2) Move selector lever to the (L) position.

(3) Allow vehicle wheels to turn and increase throttle opening to achieve an indicated vehicle speed to 20 mph.

(4) Low/reverse clutch pressure should read 115 to 145 psi.

(5) This test checks pump output, pressure regulation and condition of the low/reverse clutch hydraulic circuit and shift schedule.

TEST TWO-SELECTOR IN DRIVE (2nd GEAR)

NOTE: This test checks the underdrive clutch hydraulic circuit as well as the shift schedule.

(1) Attach gauge to the underdrive clutch tap.

(2) Move selector lever to the 3 position.

(3) Allow vehicle wheels to turn and increase throttle opening to achieve an indicated vehicle speed of 30 mph.

(4) In second gear the underdrive clutch pressure should read 110 to 145 psi.

TEST TWO A–SELECTOR IN OD (4th Gear)

NOTE: This test checks the underdrive clutch hydraulic circuit as well as the shift schedule.

(1) Attach gauge to the underdrive clutch tap.

(2) Move selector lever to the (OD) position.

(3) Allow wheels to rotate freely and increase throttle opening to achieve an indicated speed of 40 mph.

(4) Underdrive clutch pressure should read below 5 psi. If not, then either the solenoid assembly or TCM is at fault.

TEST THREE-OVERDRIVE CLUTCH CHECK (3rd and 2nd Gear)

(1) Attach gauge to the overdrive clutch tap.

(2) Move selector lever to the (OD) position.

(3) Allow vehicle wheels to turn and increase throttle opening to achieve an indicated vehicle speed of 20 mph. Vehicle should be in 3rd gear.

(4) Overdrive clutch pressure should read 74 to 95 psi.

(5) Move selector lever to the (3) position and increase indicated vehicle speed to 30 mph.

(6) The vehicle should be in second gear and overdrive clutch pressure should be less than 5 psi.

(7) This test checks the overdrive clutch hydraulic circuit as well as the shift schedule.

TEST FOUR-SELECTOR IN OVERDRIVE (4th Gear)

(1) Attach gauge to the 2/4 clutch tap.

(2) Move selector lever to the (OD) position.

(3) Allow vehicle front wheels to turn and increase throttle opening to achieve an indicated vehicle speed of 30 mph. Vehicle should be in 4th gear.

(4) The 2/4 clutch pressure should read 75 to 95 psi.

(5) This test checks the 2/4 clutch hydraulic circuit.

TEST FIVE-SELECTOR IN OVERDRIVE (4th Gear-CC on)

(1) Attach gauge to the torque converter clutch off pressure tap.

(2) Move selector lever to the (OD) position.

(3) Allow vehicle wheels to turn and increase throttle opening to achieve an indicated vehicle speed of 50 mph. Vehicle should be in 4th gear, CC on.

CAUTION: Both wheels must turn at the same speed.

(4) Torque converter clutch off pressure should be less than 5 psi.

(5) This test checks the torque converter clutch hydraulic circuit.

41TE AUTOMATIC TRANSAXLE (Continued)

TEST SIX-SELECTOR IN REVERSE

(1) Attach gauges to the reverse and LR clutch tap.

(2) Move selector lever to the (R) position.

(3) Read reverse clutch pressure with output stationary (foot on brake) and throttle opened to achieve 1500 rpm.

(4) Reverse and LR clutch pressure should read 165 to 235 psi.

(5) This test checks the reverse clutch hydraulic circuit.

TEST RESULT INDICATIONS

(1) If proper line pressure is found in any one test, the pump and pressure regulator are working properly.

(2) Low pressure in all positions indicates a defective pump, a clogged filter, or a stuck pressure regulator valve.

(3) Clutch circuit leaks are indicated if pressures do not fall within the specified pressure range.

(4) If the overdrive clutch pressure is greater than 5 psi in Step 4 of Test Three, a worn reaction shaft seal ring or a defective solenoid assembly is indicated.

(5) If the underdrive clutch pressure is greater than 5 psi in Step 4 of Test Two A, a defective solenoid assembly or TCM is the cause.

PRESSURE CHECK SPECIFICATIONS

Gear Selector Position	Actual Gear	Pressure Taps					
		Underdrive Clutch	Overdrive Clutch	Reverse Clutch	Torque Converter Clutch Off	2/4 Clutch	Low/ Reverse Clutch
Park * 0 mph	PARK	0-2	0-5	0-2	60-110	0-2	115-145
REVERSE * 0 mph	REVERSE	0-2	0-7	165-235	50-100	0-2	165-235
NEUTRAL * 0 mph	NEUTRAL	0-2	0-5	0-2	60-110	0-2	115-145
L # 20 mph	FIRST	110-145	0-5	0-2	60-110	0-2	115-145
3 # 30 mph	SECOND	110-145	0-5	0-2	60-110	115-145	0-2
3 # 45 mph	DIRECT	75-95	75-95	0-2	60-90	0-2	0-2
OD # 30 mph	OVERDRIVE	0-2	75-95	0-2	60-90	75-95	0-2
OD # 50 mph	OVERDRIVE WITH TCC	0-2	75-95	0-2	0-5	75-95	0-2

*** Engine speed at 1500 rpm**

 # CAUTION: Both front wheels must be turning at the same speed.

DIAGNOSIS AND TESTING - CLUTCH AIR PRESSURE TESTS

Inoperative clutches can be located using a series of tests by substituting air pressure for fluid pressure (Fig. 5) (Fig. 6). The clutches may be tested by applying air pressure to their respective passages. The valve body must be removed and Tool 6056 installed. To make air pressure tests, proceed as follows:

NOTE: The compressed air supply must be free of all dirt and moisture. Use a pressure of 30 psi.

Remove oil pan and valve body. See Valve body removal.

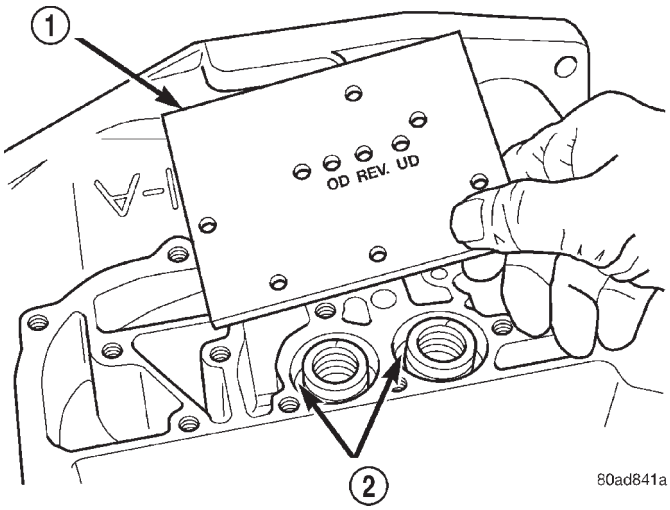

Fig. 5 Air Pressure Test Plate

1 - TOOL 6056
2 - ACCUMULATORS

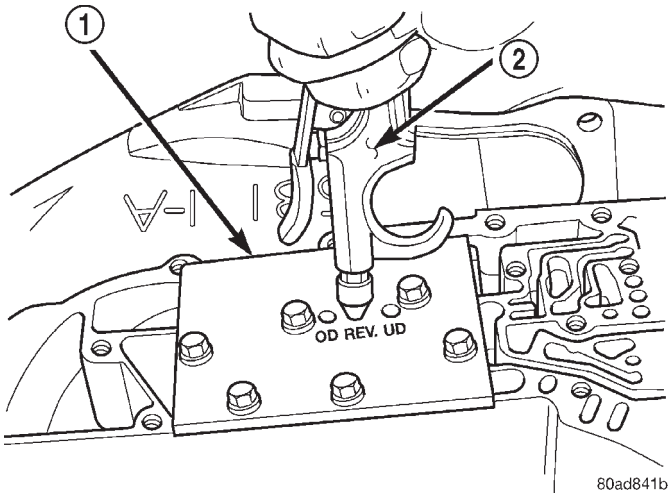

Fig. 6 Testing Reverse Clutch

1 - TOOL 6056
2 - AIR NOZZLE

OVERDRIVE CLUTCH

Apply air pressure to the overdrive clutch apply passage and watch for the push/pull piston to move forward. The piston should return to its starting position when the air pressure is removed.

REVERSE CLUTCH

Apply air pressure to the reverse clutch apply passage and watch for the push/pull piston to move rearward. The piston should return to its starting position when the air pressure is removed.

2/4 CLUTCH

Apply air pressure to the feed hole located on the 2/4 clutch retainer. Look in the area where the 2/4 piston contacts the first separator plate and watch carefully for the 2/4 piston to move rearward. The piston should return to its original position after the air pressure is removed.

LOW/REVERSE CLUTCH

Apply air pressure to the low/reverse clutch feed hole (rear of case, between 2 bolt holes). Then, look in the area where the low/reverse piston contacts the first separator plate. Watch carefully for the piston to move forward. The piston should return to its original position after the air pressure is removed.

UNDERDRIVE CLUTCH

Because this clutch piston cannot be seen, its operation is checked by function. Air pressure is applied to the low/reverse and the 2/4 clutches. This locks the output shaft. Use a piece of rubber hose wrapped around the input shaft and a pair of clamp-on pliers to turn the input shaft. Next apply air pressure to the underdrive clutch. The input shaft should not rotate with hand torque. Release the air pressure and confirm that the input shaft will rotate.

DIAGNOSIS AND TESTING - TORQUE CONVERTER HOUSING FLUID LEAKAGE

When diagnosing converter housing fluid leaks, three actions must be taken before repair:

(1) Verify proper transmission fluid level.

(2) Verify that the leak originates from the converter housing area and is transmission fluid.

(3) Determine the true source of the leak.

Fluid leakage at or around the torque converter area may originate from an engine oil leak (Fig. 7). The area should be examined closely. Factory fill fluid is red and, therefore, can be distinguished from engine oil.

Some suspected converter housing fluid leaks may not be leaks at all. They may only be the result of residual fluid in the converter housing, or excess fluid spilled during factory fill, or fill after repair.

41TE AUTOMATIC TRANSAXLE (Continued)

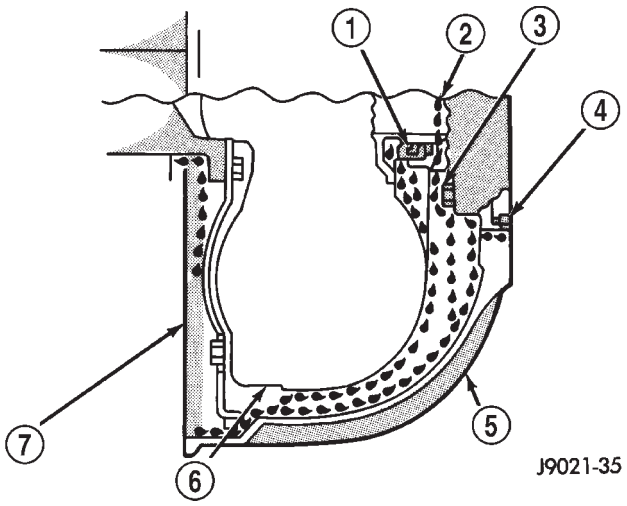

Fig. 7 Converter Housing Leak Paths

1 - PUMP SEAL
2 - PUMP VENT
3 - PUMP BOLT
4 - PUMP GASKET
5 - CONVERTER HOUSING
6 - CONVERTER
7 - REAR MAIN SEAL LEAK

Converter housing leaks have several potential sources. Through careful observation, a leak source can be identified before removing the transmission for repair.

Pump seal leaks tend to move along the drive hub and onto the rear of the converter (Fig. 7). Pump o-ring or pump body leaks follow the same path as a seal leak. Pump attaching bolt leaks are generally deposited on the inside of the converter housing and not on the converter itself. Pump seal or gasket leaks usually travel down the inside of the converter housing (Fig. 7).

TORQUE CONVERTER LEAKAGE

Possible sources of torque converter leakage are:

- Torque converter weld leaks at the outside diameter weld (Fig. 8).
- Torque converter hub weld (Fig. 8).

REMOVAL

NOTE: If transaxle assembly is being replaced or overhauled (clutch and/or seal replacement), it is necessary to perform the TCM Quick Learn Procedure. (Refer to 8 - ELECTRICAL/ELECTRONIC CONTROL MODULES/TRANSMISSION CONTROL MODULE - STANDARD PROCEDURE)

(1) Disconnect battery cables.
(2) Remove battery shield (Fig. 9).

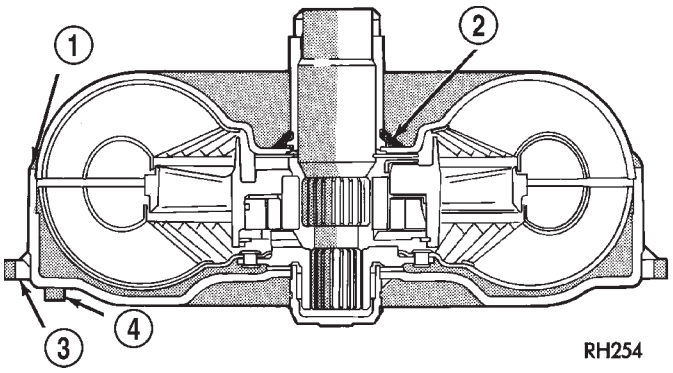

Fig. 8 Converter Leak Points - Typical

1 - OUTSIDE DIAMETER WELD
2 - TORQUE CONVERTER HUB WELD
3 - STARTER RING GEAR
4 - LUG

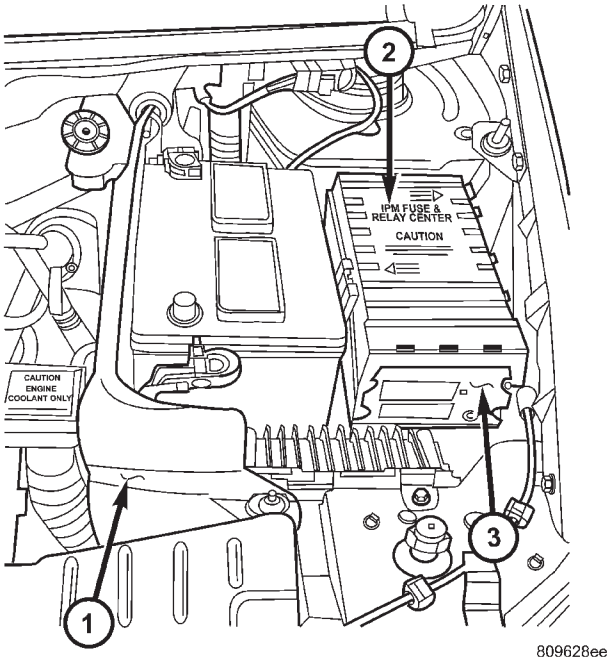

Fig. 9 Battery Thermal Guard

1 - BATTERY THERMOWRAP (IF EQUIPPED)
2 - INTEGRATED POWER MODULE
3 - FRONT CONTROL MODULE

41TE AUTOMATIC TRANSAXLE (Continued)

(3) Remove coolant recovery bottle (Fig. 10).

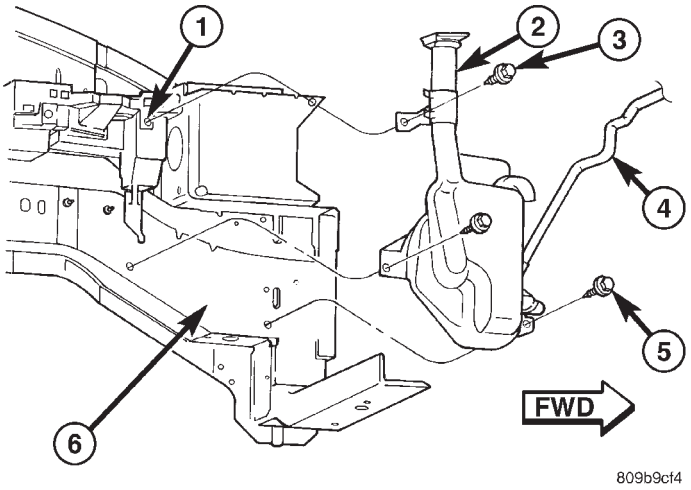

Fig. 10 Coolant Recovery Bottle

1 - UPPER BOLT ATTACHING TO BATTERY TRAY
2 - COOLANT RECOVERY CONTAINER
3 - UPPER BOLT
4 - HOSE
5 - LOWER BOLT (QTY. 2)
6 - LEFT SIDE FRAME RAIL

(4) Remove fluid level indicator/tube assembly. Plug opening to prevent debris from entering transaxle.

(5) Using a blade or suitable hose cutter, cut transaxle oil cooler lines off flush with fittings. Plug lines and fittings to prevent debris from entering transaxle or cooler circuit. A service splice kit will be installed upon reassembly.

(6) Disconnect input and output shaft speed sensor connectors (Fig. 11).

(7) Disconnect transmission range sensor (TRS) connector (Fig. 11).

(8) Disconnect solenoid/pressure switch assembly connector (Fig. 11).

(9) Disconnect gear shift cable from manual valve lever and upper mount bracket (Fig. 12).

(10) Disconnect crankshaft position sensor (if equipped). Remove sensor from bellhousing.

(11) Reposition leak detection pump harness and hoses.

(12) Remove rear mount bracket-to-transaxle case bolts (Fig. 13).

(13) Remove transaxle upper bellhousing-to-block bolts.

(14) Raise vehicle on hoist.

(15) Remove transaxle oil pan and drain fluid into suitable container.

(16) Remove front wheel/tire assemblies.

(17) Remove left and right halfshaft assemblies. (Refer to 3 - DIFFERENTIAL & DRIVELINE/HALF SHAFT - REMOVAL)

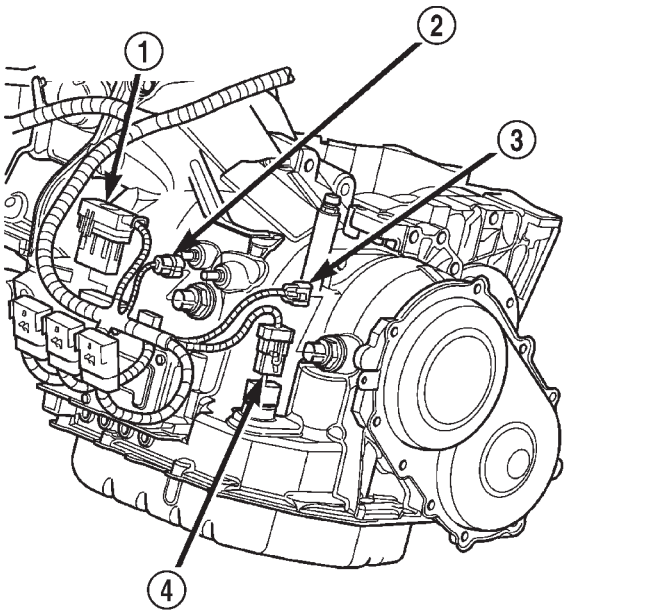

Fig. 11 Component Connector Location—Typical

1 - SOLENOID/PRESSURE SWITCH ASSY. CONNECTOR
2 - INPUT SPEED SENSOR CONNECTOR
3 - OUTPUT SPEED SENSOR CONNECTOR
4 - TRANSMISSION RANGE SENSOR CONNECTOR

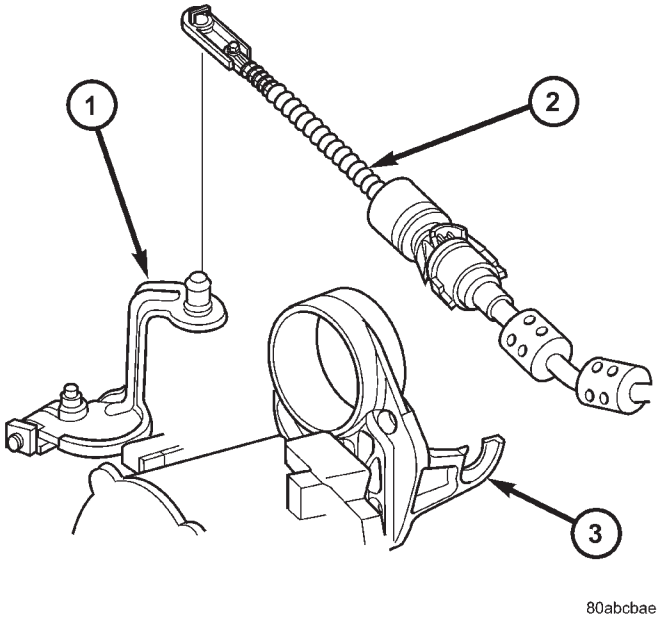

Fig. 12 Gearshift Cable at Transaxle - Typical

1 - MANUAL VALVE LEVER
2 - GEAR SHIFT CABLE
3 - UPPER MOUNT BRACKET

41TE AUTOMATIC TRANSAXLE (Continued)

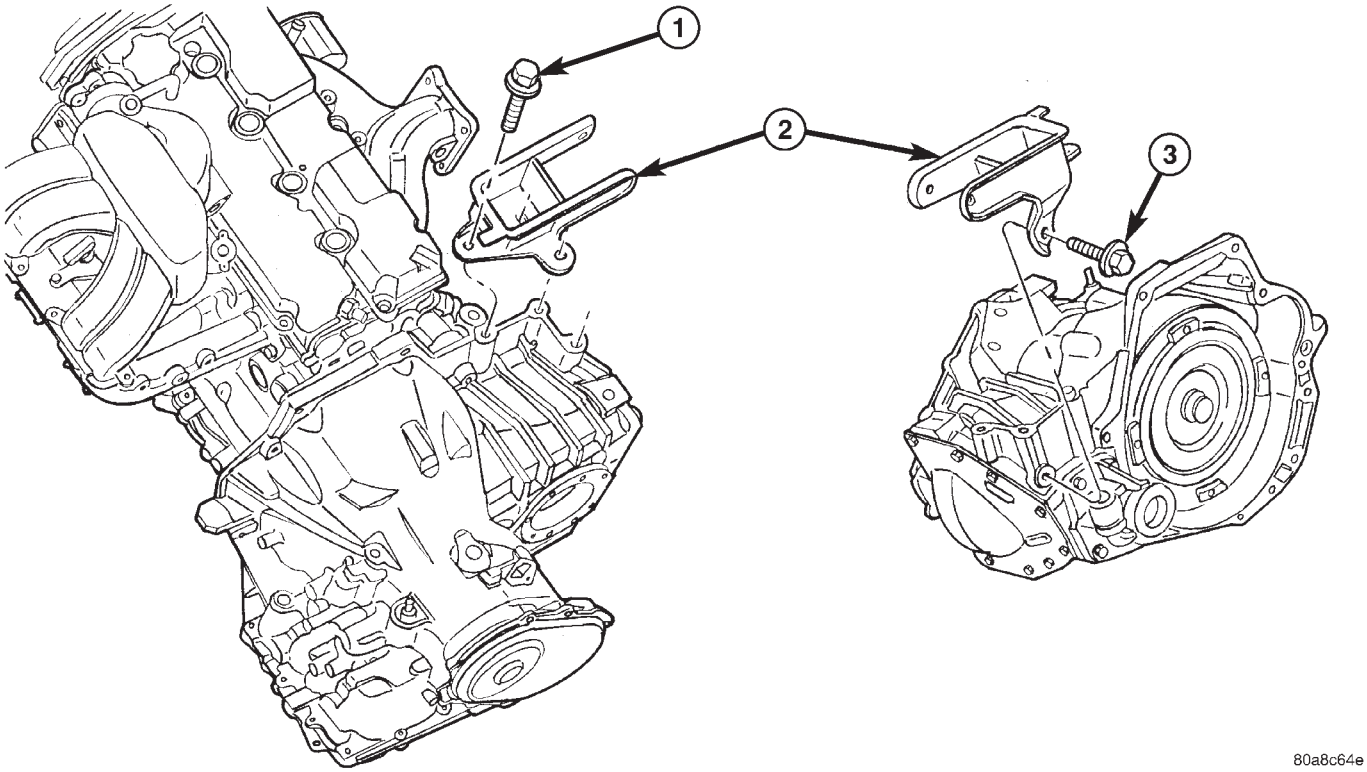

Fig. 13 Rear Mount Bracket - Typical

1 - BOLT - VERTICAL
2 - BRACKET - REAR MOUNT
3 - BOLT - HORIZONTAL

(18) AWD models: Remove power transfer unit. (Refer to 21 - TRANSMISSION/TRANSAXLE/ POWER TRANSFER UNIT - REMOVAL)

(19) Remove rear mount bracket-to-transaxle case lower (horizontal) bolt (Fig. 13).

(20) Remove front mount/bracket assembly.

(21) Remove starter motor.

(22) Remove lateral bending brace.

(23) Remove inspection cover.

(24) Remove torque converter-to-drive plate bolts.

(25) Support engine/transaxle assembly at engine oil pan with screw jack and wood block.

(26) Partially remove left wheelhouse splash shield to gain access to and remove upper mount thru-bolt (Fig. 14).

(27) Lower engine/transaxle assembly with screw jack.

(28) Obtain helper and/or transmission jack. Secure transmission jack to transaxle assembly.

(29) Remove upper mount bracket from transaxle (Fig. 14).

(30) Remove remaining transaxle bellhousing-to-engine bolts.

(31) Remove transaxle assembly from vehicle.

DISASSEMBLY

CAUTION: If transaxle failure has occurred, it is necessary to flush the transaxle oil cooler and lines to remove debris and particles that could contaminate and/or fail a new or rebuilt unit. (Refer to 7 - COOLING/TRANSMISSION - STANDARD PROCEDURE)

NOTE: If transaxle is being overhauled (clutch and/or seal replacement) or replaced, it is necessary to perform the TCM Quick Learn Procedure. (Refer to 8 - ELECTRICAL/ELECTRONIC CONTROL MODULES/TRANSMISSION CONTROL MODULE - STANDARD PROCEDURE)

NOTE: This procedure does not include final drive (differential) disassembly.

(1) Remove input and output speed sensors.

(2) Remove three (3) solenoid/pressure switch assembly-to-case bolts.

41TE AUTOMATIC TRANSAXLE (Continued)

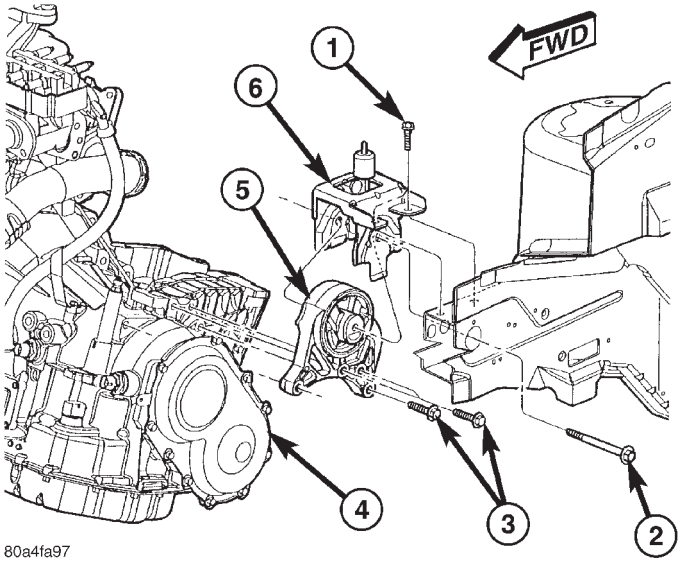

Fig. 14 Left Mount-to-Bracket

1 - BOLT - BRACKET TO FRAME RAIL
2 - BOLT - MOUNT TO RAIL THROUGH
3 - BOLT - LEFT MOUNT TO TRANSAXLE
4 - TRANSAXLE
5 - MOUNT - LEFT
6 - BRACKET - LEFT MOUNT

(3) Remove solenoid/pressure switch assembly and gasket (Fig. 15).

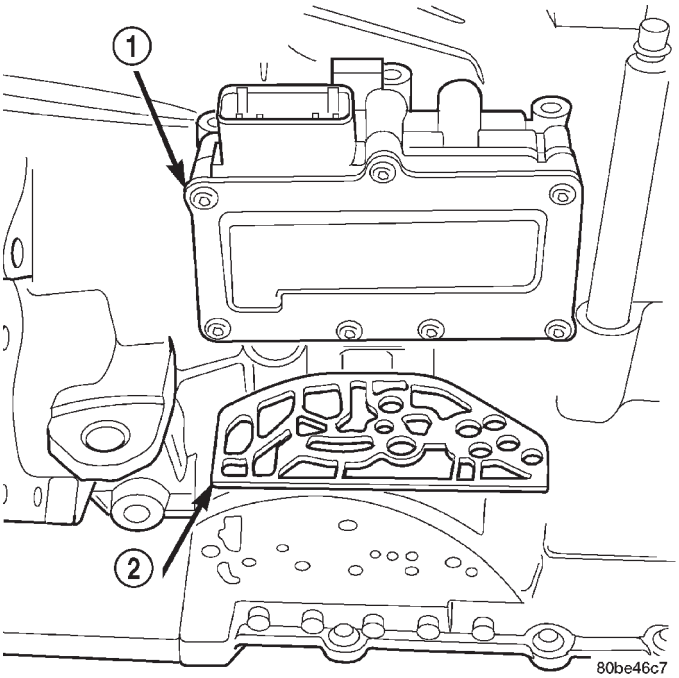

Fig. 15 Solenoid/Pressure Switch Assembly and Gasket

1 - SOLENOID/PRESSURE SWITCH ASSEMBLY
2 - GASKET

(4) Remove oil pan-to-case bolts (Fig. 16).

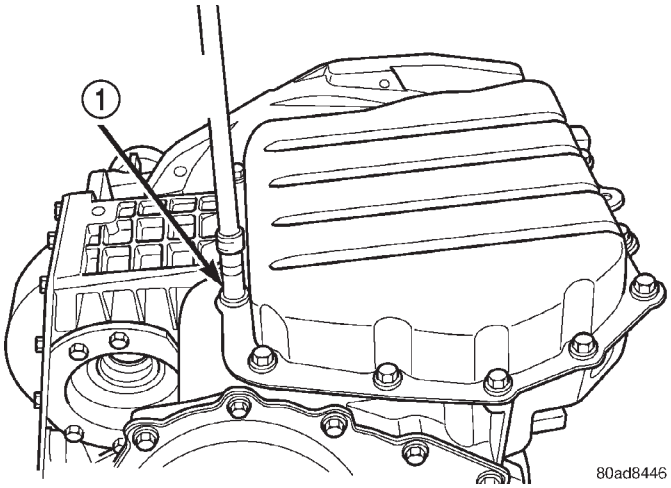

Fig. 16 Remove Oil Pan Bolts

1 - OIL PAN BOLTS (USE RTV UNDER BOLT HEADS)

(5) Remove oil pan (Fig. 17).

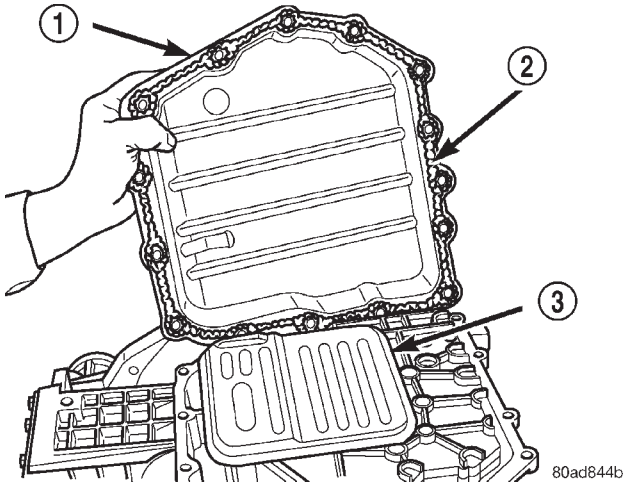

Fig. 17 Remove Oil Pan

1 - OIL PAN
2 - 1/8 INCH BEAD OF MOPAR® ATF RTV (MS-GF41)
3 - OIL FILTER

41TE AUTOMATIC TRANSAXLE (Continued)

(6) Remove oil filter (Fig. 18).

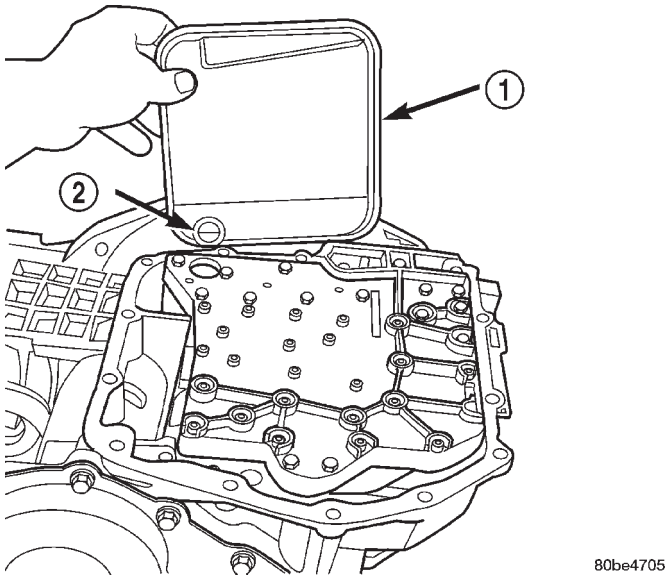

Fig. 18 Remove Oil Filter

1 - OIL FILTER
2 - O-RING

(7) Turn manual valve fully clock-wise to get park rod into position for removal.

(8) Remove valve body-to-case bolts (Fig. 19).

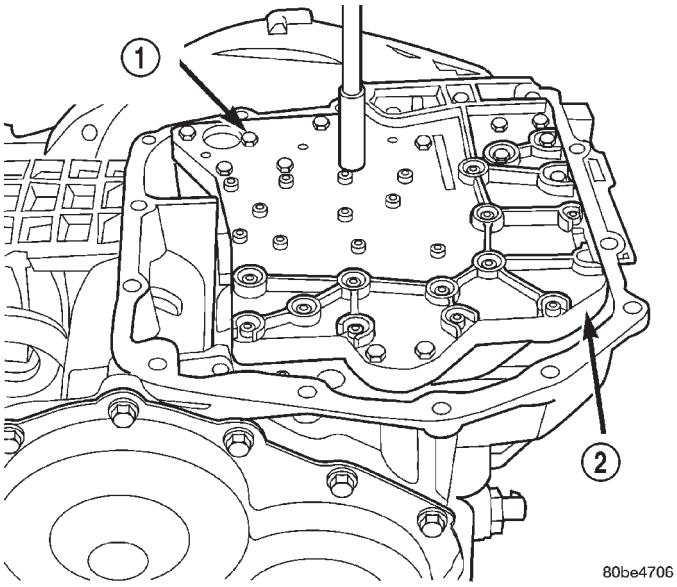

Fig. 19 Remove Valve Body Attaching Bolts

1 - VALVE BODY ATTACHING BOLTS (18)
2 - VALVE BODY

CAUTION: Do not handle the valve body assembly from the manual valve. Damage can result.

(9) Using a screwdriver, push park rod rollers away from guide bracket (Fig. 20) and remove valve body assembly (Fig. 21).

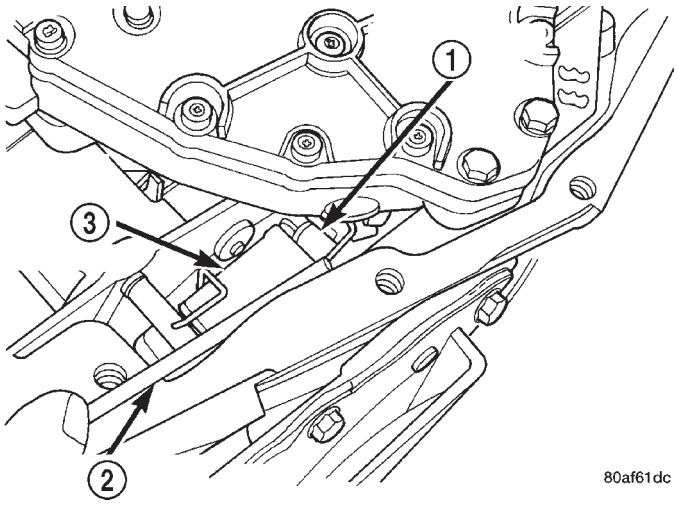

Fig. 20 Push Park Rod Rollers from Guide Bracket

1 - PARK SPRAG ROLLERS
2 - SCREWDRIVER
3 - PARK SPRAG GUIDE BRACKET

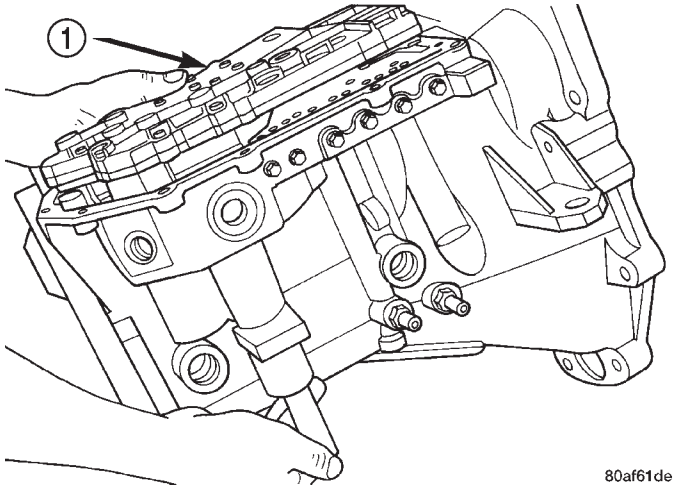

Fig. 21 Remove Valve Body

1 - VALVE BODY

NOTE: Depending on engine application, some accumulators will have two springs and others will have one spring. The springs are color-coded according to application and year. When disassembling, mark accumulator spring location to ease assembly.

41TE AUTOMATIC TRANSAXLE (Continued)

(10) Remove underdrive and overdrive accumulators (Fig. 22) (Fig. 23) (Fig. 24).

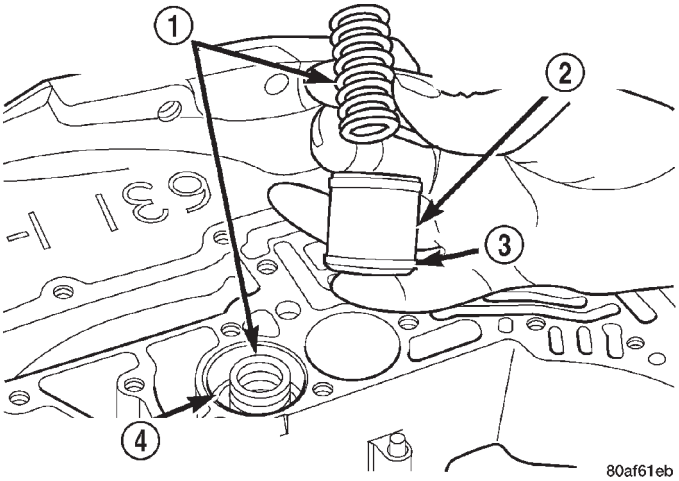

Fig. 22 Remove Underdrive and Overdrive Accumulators

1 - RETURN SPRING
2 - UNDERDRIVE CLUTCH ACCUMULATOR
3 - SEAL RING (2)
4 - OVERDRIVE CLUTCH ACCUMULATOR

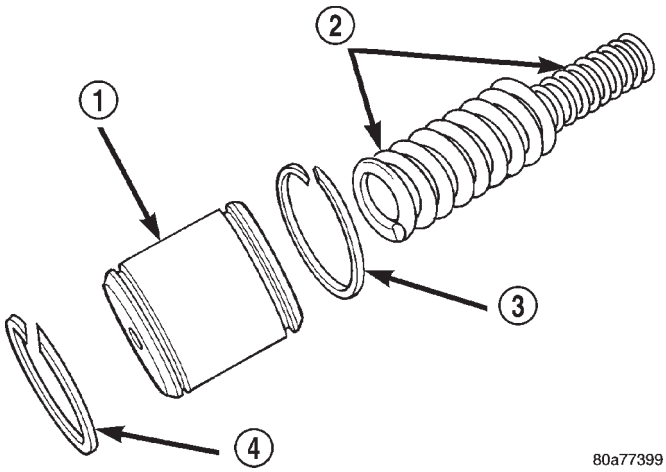

Fig. 23 Accumulator (Underdrive)

1 - ACCUMULATOR PISTON (UNDERDRIVE)
2 - RETURN SPRINGS
3 - SEAL RING
4 - SEAL RING

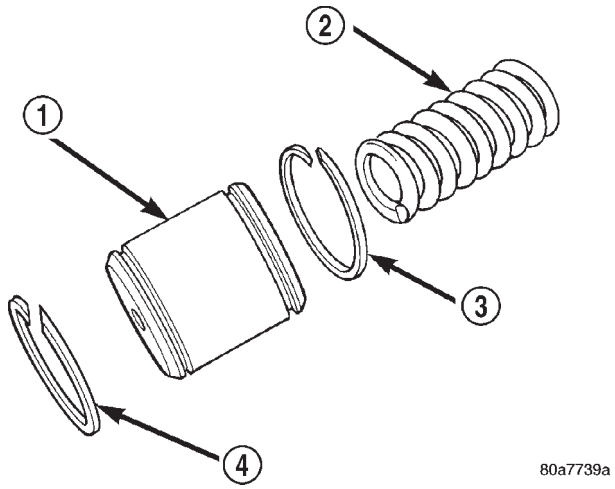

Fig. 24 Accumulator (Overdrive)

1 - ACCUMULATOR PISTON (OVERDRIVE)
2 - RETURN SPRING
3 - SEAL RING
4 - SEAL RING

(11) Remove low/reverse accumulator snap ring (Fig. 25).

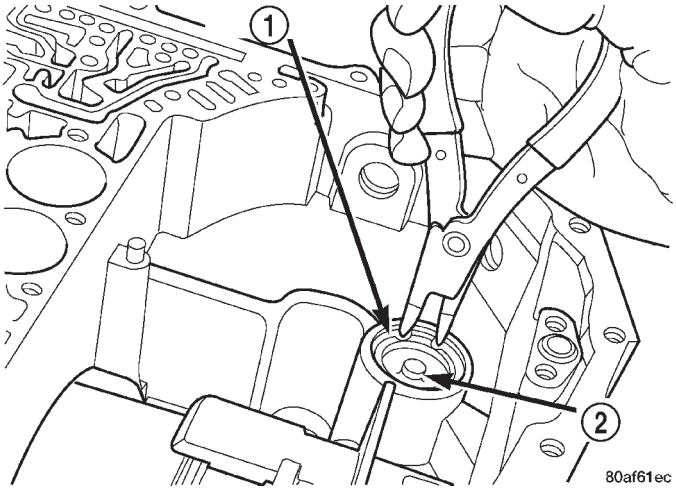

Fig. 25 Remove Low/Reverse Accumulator Snap Ring

1 - SNAP RING
2 - PLUG

41TE AUTOMATIC TRANSAXLE (Continued)

(12) Remove low/reverse accumulator plug (Fig. 26).

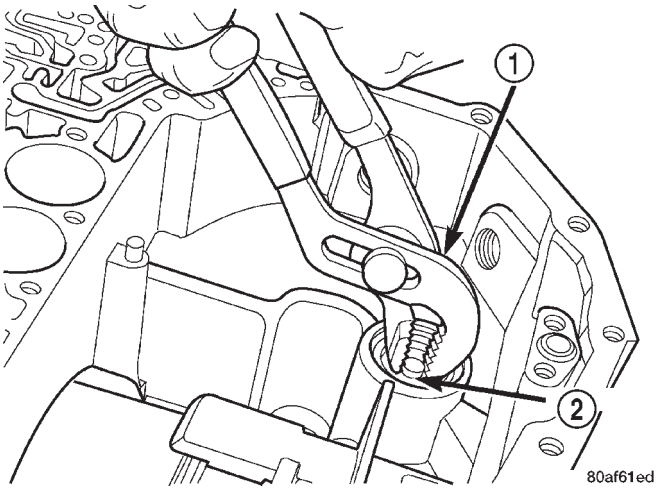

Fig. 26 Remove Low/Reverse Accumulator Plug (Cover)

1 - ADJUSTABLE PLIERS
2 - PLUG

(13) Remove low/reverse accumulator piston using petrolatum and a suitable tool (Fig. 27).

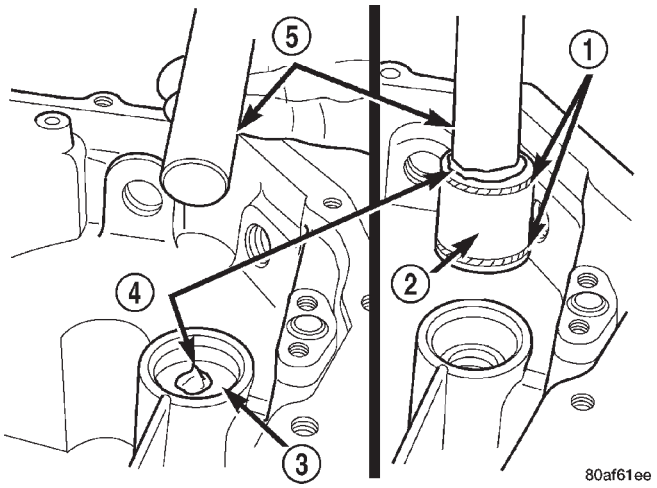

Fig. 27 Remove Low/Reverse Accumulator Piston

1 - SEAL RINGS
2 - PISTON
3 - PISTON
4 - PETROLATUM
5 - SUITABLE TOOL

(14) Remove low/reverse accumulator (Fig. 28).

(15) Measure input shaft end play. Place transaxle so input shaft is vertical. Set up end play set and dial indicator as shown in (Fig. 29). **Input shaft end play should be within 0.13-0.64 mm (0.005-0.025 in.)** If outside of this range, a #4 thrust plate change is required. Record indicator reading for reference upon reassembly.

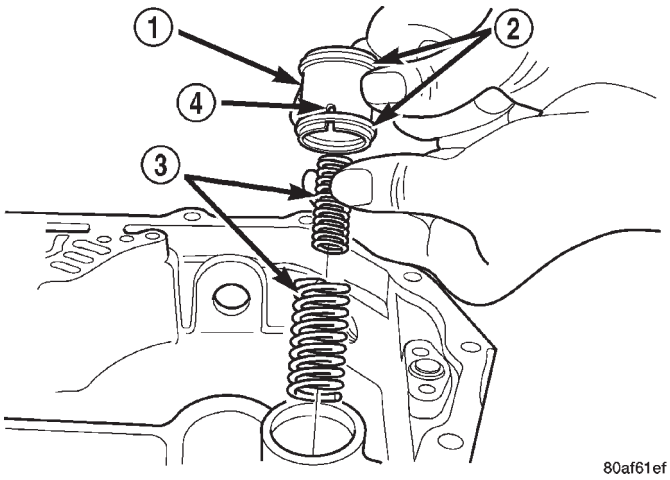

Fig. 28 Remove Low/Reverse Accumulator

1 - ACCUMULATOR PISTON
2 - SEAL RINGS
3 - RETURN SPRINGS
4 - (NOTE NOTCH)

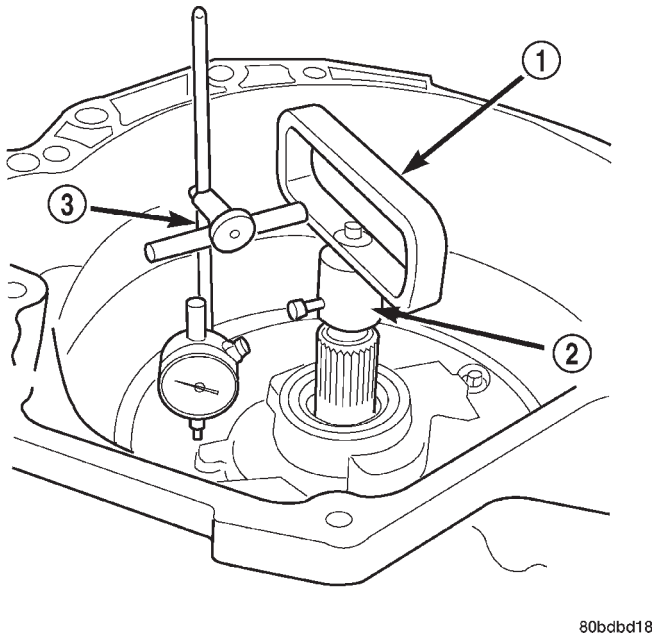

Fig. 29 Measure Input Shaft End Play Using End Play Set 8266

1 - TOOL 8266–8
2 - TOOL 8266–2
3 - TOOL C-3339

41TE AUTOMATIC TRANSAXLE (Continued)

(16) Remove oil pump-to-case bolts (Fig. 30).

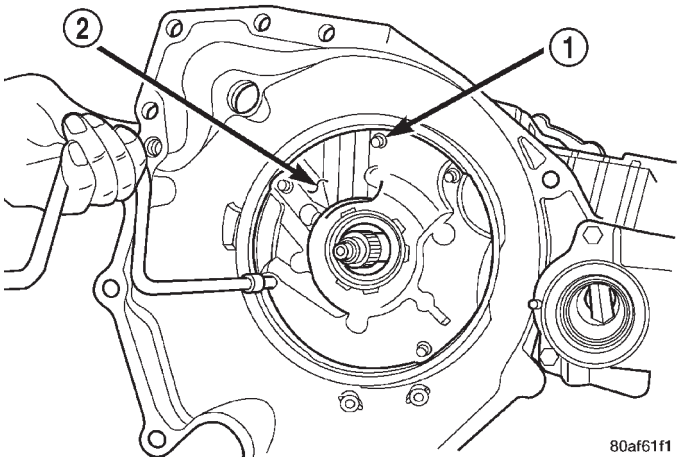

Fig. 30 Remove Pump Attaching Bolts

1 - PUMP ATTACHING BOLTS
2 - PUMP HOUSING

CAUTION: Be sure input speed sensor is removed before removing oil pump.

(17) Install pullers Tool C-3752 as shown in (Fig. 31).

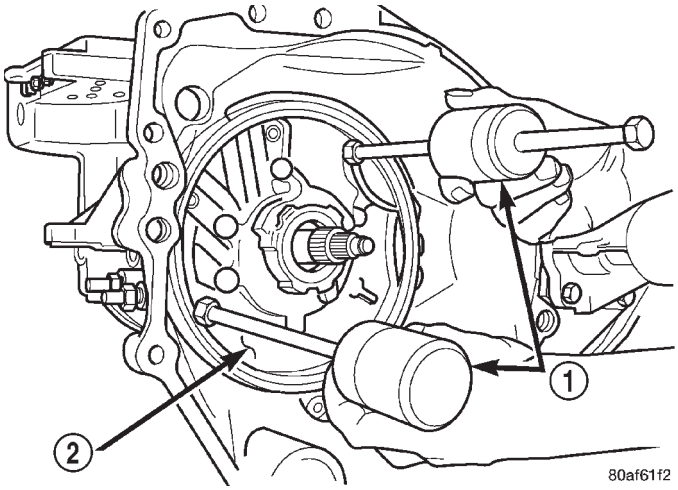

Fig. 31 Install Tool C-3752

1 - PULLERS TOOL C-3752
2 - PUMP

(18) Remove oil pump assembly (Fig. 32) (Fig. 33).

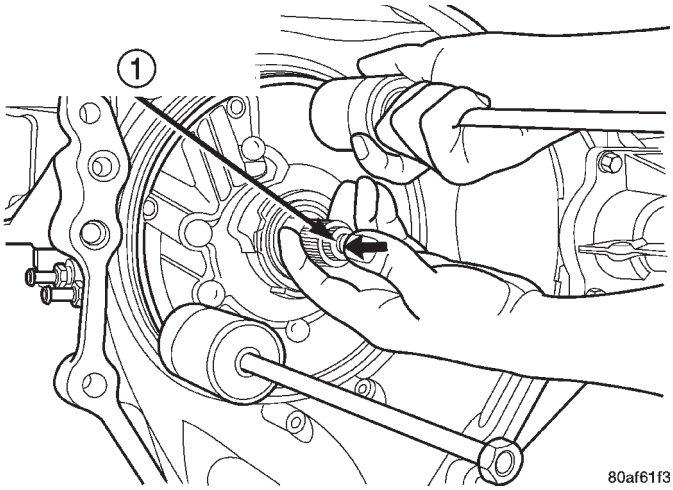

Fig. 32 Remove Oil Pump

1 - "PUSH IN" ON INPUT SHAFT WHILE REMOVING PUMP

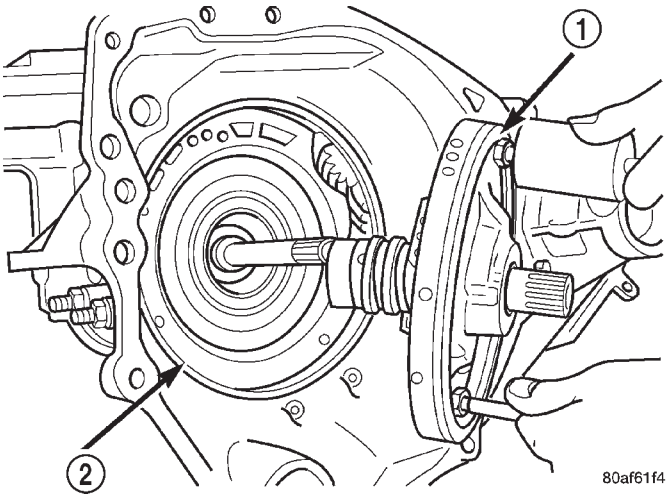

Fig. 33 Oil Pump Removed

1 - OIL PUMP
2 - GASKET

41TE AUTOMATIC TRANSAXLE (Continued)

(19) Remove oil pump gasket (Fig. 34).

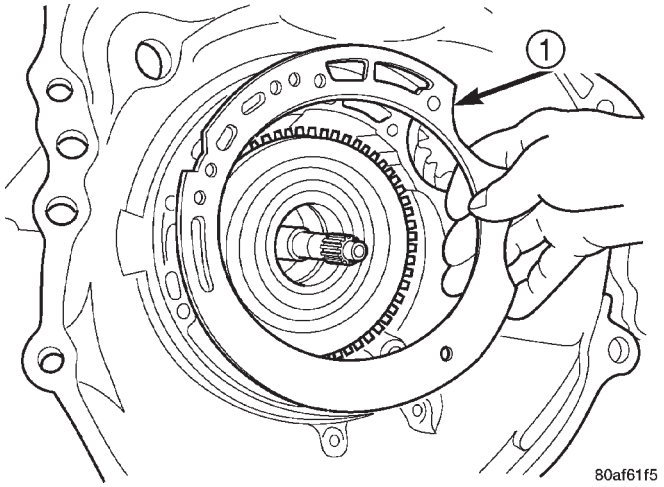

Fig. 34 Remove Oil Pump Gasket

1 - PUMP GASKET

CAUTION: If transaxle failure has occurred, the cooler bypass valve must be replaced. Do not re-use or attempt to clean valve.

(20) Remove cooler bypass valve (Fig. 35).

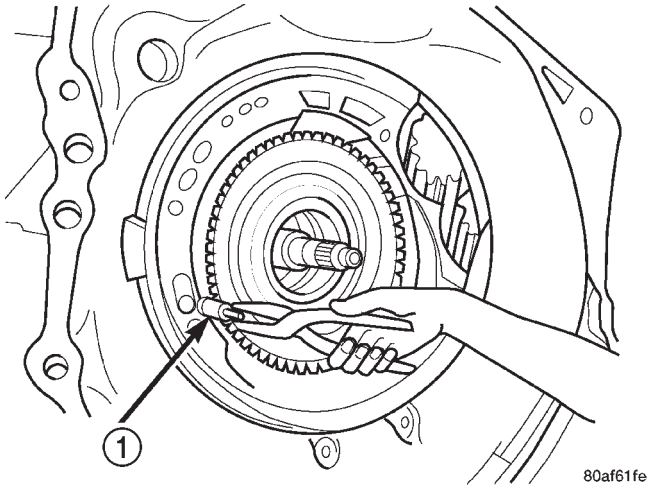

Fig. 35 Remove Bypass Valve

1 - COOLER BYPASS VALVE

(21) Remove #1 needle bearing (Fig. 36).

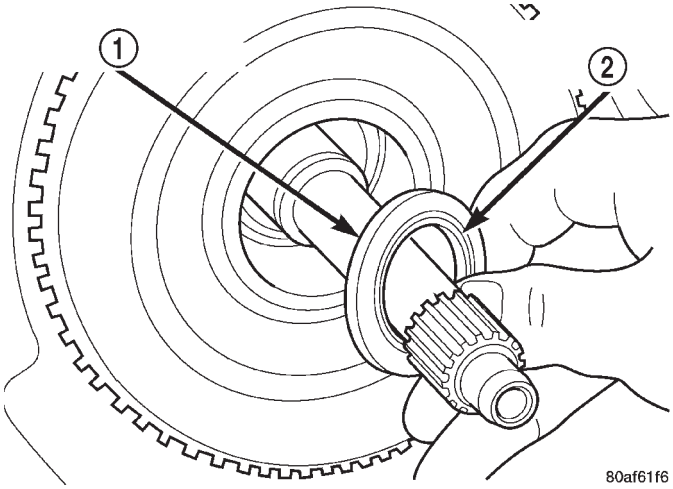

Fig. 36 Remove Caged Needle Bearing

1 - #1 CAGED NEEDLE BEARING
2 - NOTE: TANGED SIDE OUT

(22) Remove input clutch assembly (Fig. 37).

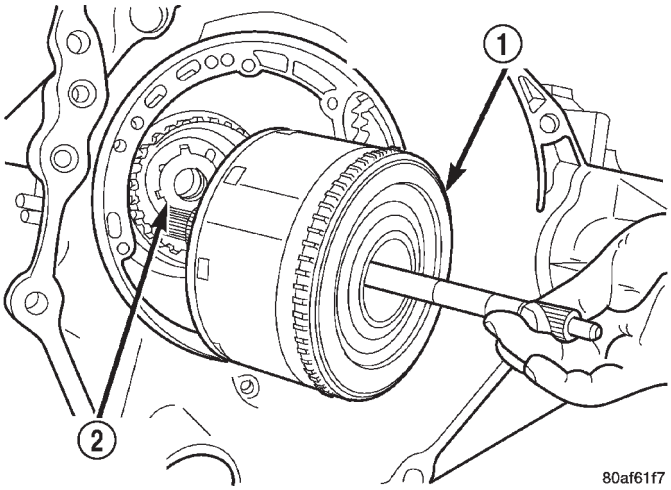

Fig. 37 Remove Input Clutch Assembly

1 - INPUT CLUTCH ASSEMBLY
2 - #4 THRUST WASHER

41TE AUTOMATIC TRANSAXLE (Continued)

(23) Remove #4 thrust plate (Fig. 38).

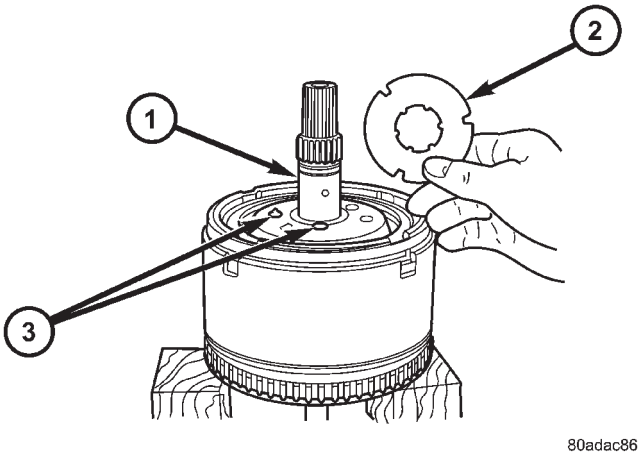

Fig. 38 No. 4 Thrust Plate

1 - OVERDRIVE SHAFT ASSEMBLY
2 - #4 THRUST PLATE (SELECT)
3 - 3 DABS OF PETROLATUM FOR RETENTION

(24) Remove front sun gear assembly and #4 thrust washer (Fig. 39).

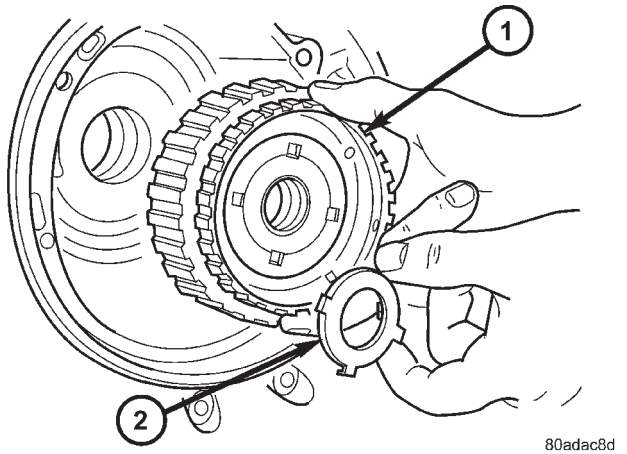

Fig. 39 Remove Front Sun Gear Assembly

1 - FRONT SUN GEAR ASSEMBLY
2 - #4 THRUST WASHER (FOUR TABS)

(25) Remove front carrier/rear annulus assembly and #6 needle bearing (Fig. 40).

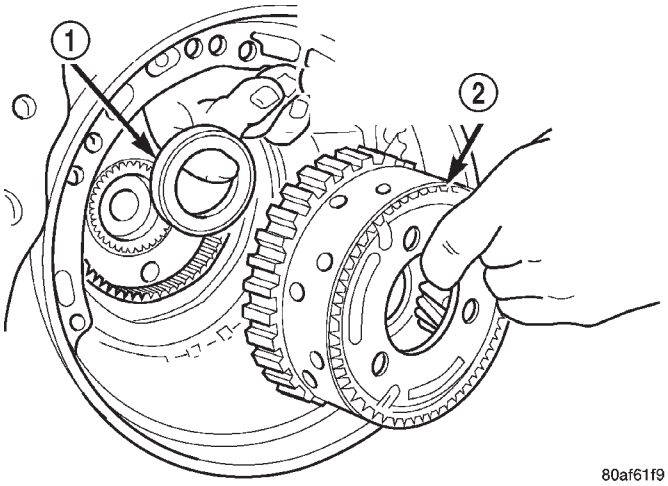

Fig. 40 Remove Front Carrier and Rear Annulus Assembly

1 - #6 NEEDLE BEARING
2 - FRONT CARRIER AND REAR ANNULUS ASSEMBLY (TWIST AND PULL OR PUSH TO REMOVE OR INSTALL).

(26) Remove rear sun gear and #7 needle bearing (Fig. 41).

NOTE: The number 7 needle bearing has three anti-reversal tabs and is common with the number five and number two position. The orientation should allow the bearing to seat flat against the rear sun gear (Fig. 42). A small amount of petrolatum can be used to hold the bearing to the rear sun gear.

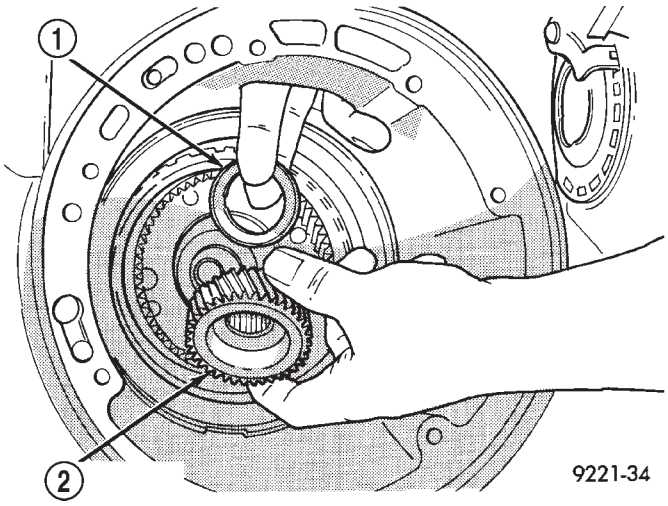

Fig. 41 Remove Rear Sun Gear

1 - #7 NEEDLE BEARING
2 - REAR SUN GEAR

41TE AUTOMATIC TRANSAXLE (Continued)

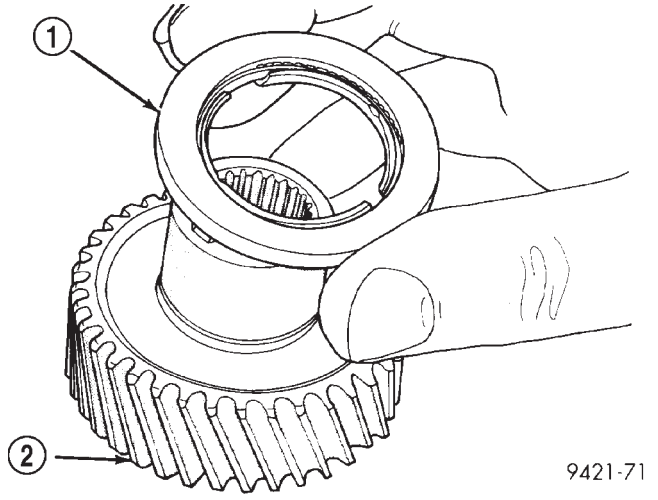

Fig. 42 Number 7 Bearing

1 - #7 NEEDLE BEARING
2 - REAR SUN GEAR

(27) Setup tool 5058 as shown in (Fig. 43). Compress 2/4 clutch return spring (just enough to remove snap ring) and remove snap ring.

NOTE: Verify that Tool 5058 is centered properly over the 2/4 clutch retainer before compressing. If necessary, fasten the 5058 bar to the bellhousing flange with any combination of locking pliers and bolts to center the tool properly.

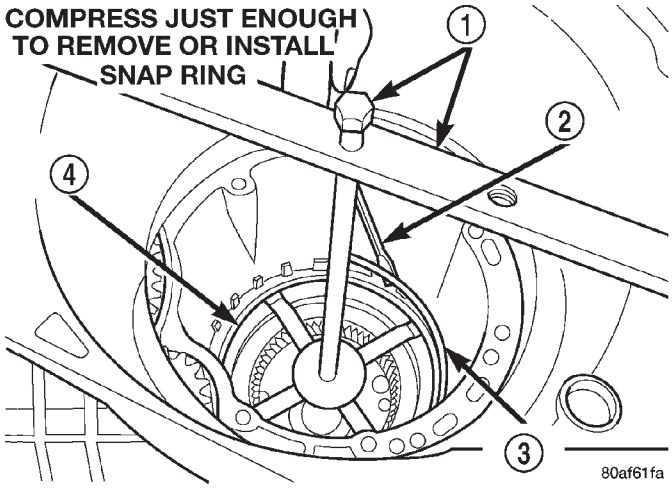

Fig. 43 Remove 2/4 Clutch Retainer Snap Ring

1 - TOOL 5058
2 - SCREWDRIVER
3 - SNAP RING
4 - 2/4 CLUTCH RETAINER

(28) Remove 2/4 clutch retainer (Fig. 44).

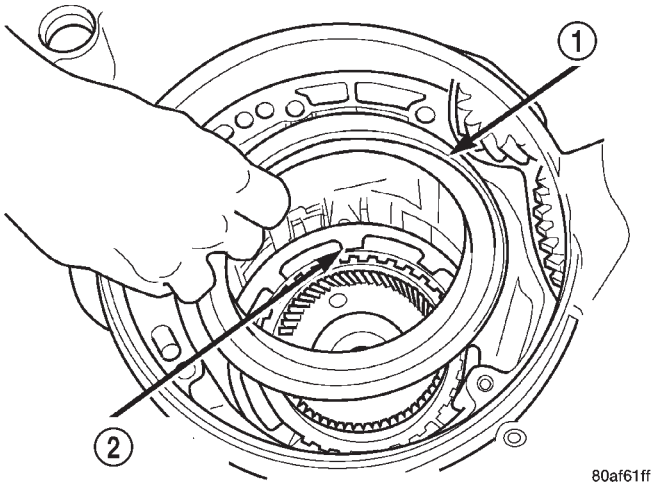

Fig. 44 2/4 Clutch Retainer

1 - 2/4 CLUTCH RETAINER
2 - 2/4 CLUTCH RETURN SPRING

(29) Remove 2/4 clutch return spring (Fig. 45).

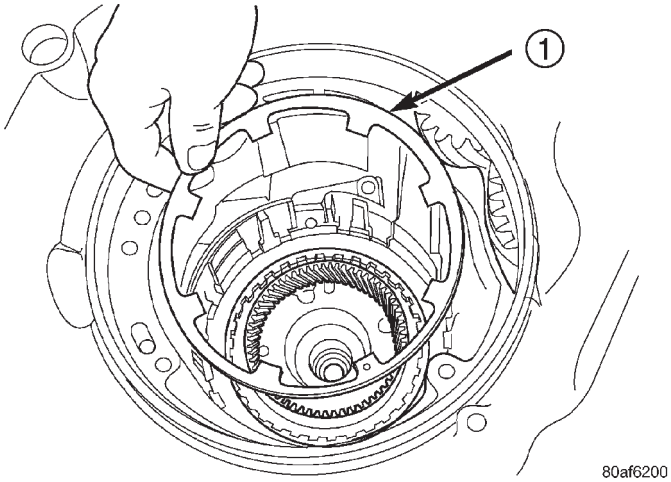

Fig. 45 Remove 2/4 Clutch Return Spring

1 - 2/4 CLUTCH RETURN SPRING

41TE AUTOMATIC TRANSAXLE (Continued)

(30) Remove 2/4 clutch pack (Fig. 46). **Tag 2/4 clutch pack for reassembly identification.**

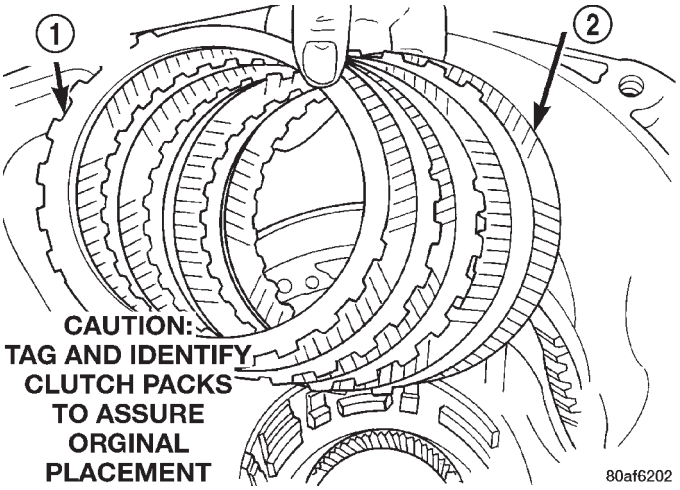

Fig. 46 Remove 2/4 Clutch Pack

1 - CLUTCH PLATE (4)
2 - CLUTCH DISC (4)

(31) Remove tapered snap ring (Fig. 47).

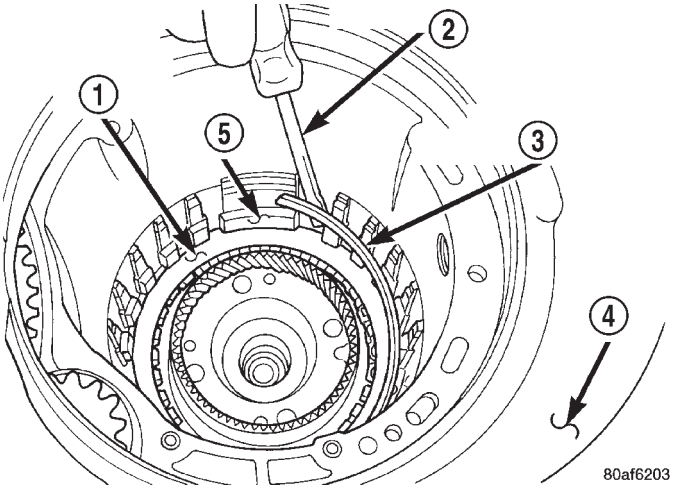

Fig. 47 Remove Tapered Snap Ring

1 - LOW/REVERSE CLUTCH REACTION PLATE
2 - SCREWDRIVER
3 - LOW/REVERSE TAPERED SNAP RING (TAPERED SIDE UP)
4 - OIL PAN FACE
5 - LONG TAB

(32) Remove low/reverse reaction plate (Fig. 48).

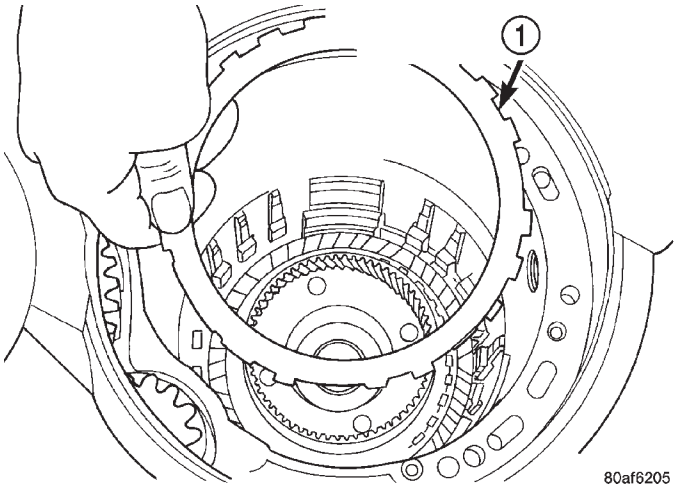

Fig. 48 Remove Low/Reverse Reaction Plate

1 - LOW/REVERSE REACTION PLATE (FLAT SIDE UP)

(33) Remove one low/reverse clutch disc (Fig. 49).

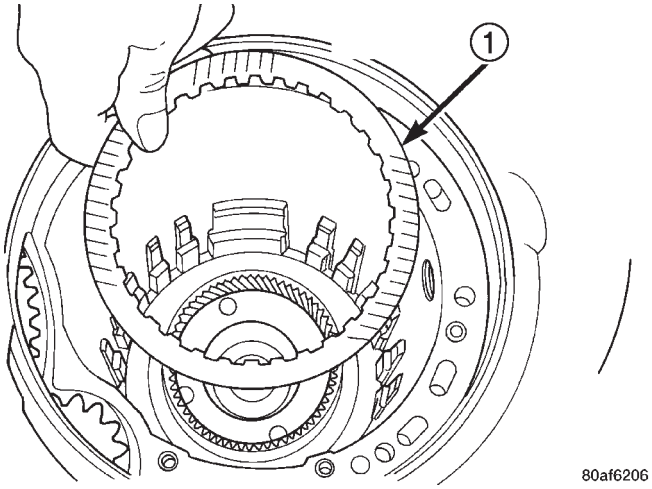

Fig. 49 Remove One Disc

1 - ONE DISC FROM LOW/REVERSE CLUTCH

41TE AUTOMATIC TRANSAXLE (Continued)

(34) Remove low/reverse reaction plate snap ring (Fig. 50).

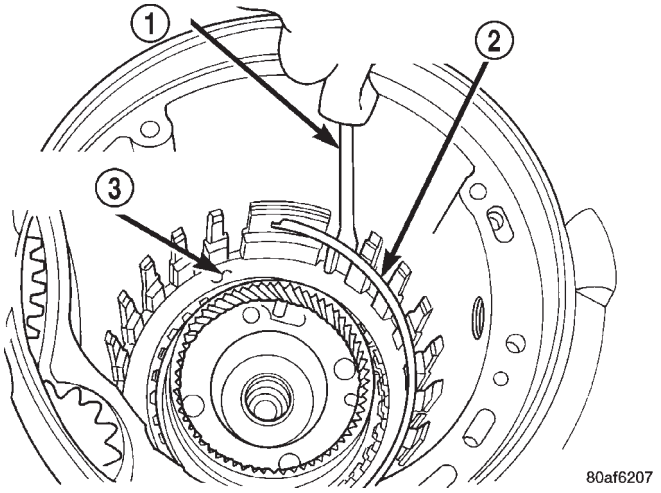

Fig. 50 Remove Low/Reverse Reaction Plate Snap Ring

1 - SCREWDRIVER
2 - LOW/REVERSE REACTION PLATE FLAT SNAP RING
3 - DO NOT SCRATCH CLUTCH PLATE

(35) Remove low/reverse clutch pack (Fig. 51).

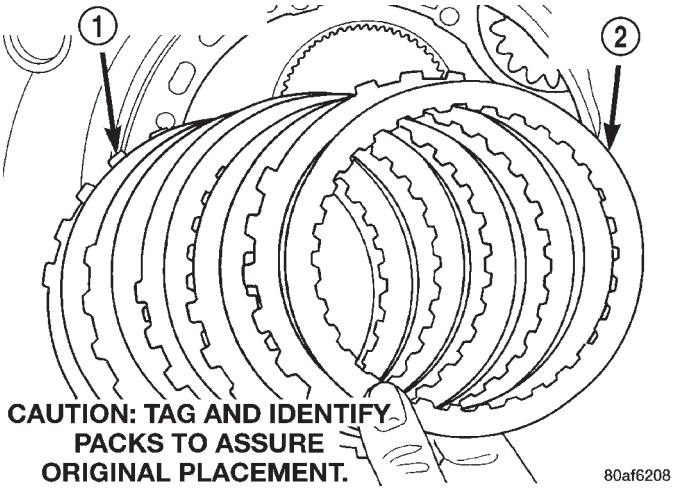

Fig. 51 Remove Low/Reverse Clutch Pack

1 - CLUTCH PLATES (5)
2 - CLUTCH DISCS (5)

(36) Remove transfer gear cover-to-case bolts (Fig. 52).

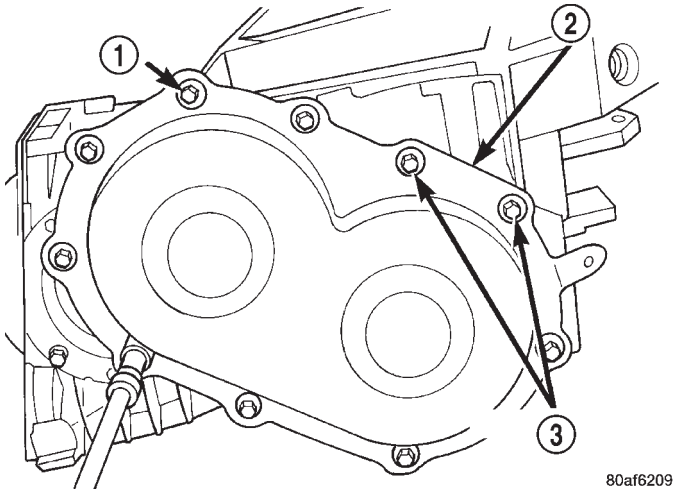

Fig. 52 Remove Rear Cover Bolts

1 - REAR COVER BOLTS
2 - REAR COVER
3 - USE SEALANT ON BOLTS

(37) Remove transfer gear cover (Fig. 53).

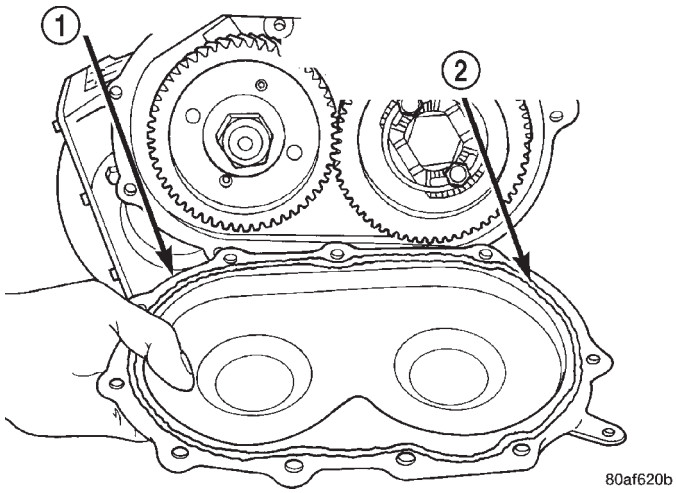

Fig. 53 Remove Rear Cover

1 - REAR COVER
2 - 1/8 INCH BEAD OF MOPAR® ATF RTV (MS-GF41) AS SHOWN

41TE AUTOMATIC TRANSAXLE (Continued)

(38) Using Tool 6259, remove transfer shaft gear-to-shaft nut and coned washer (Fig. 54) (Fig. 55).

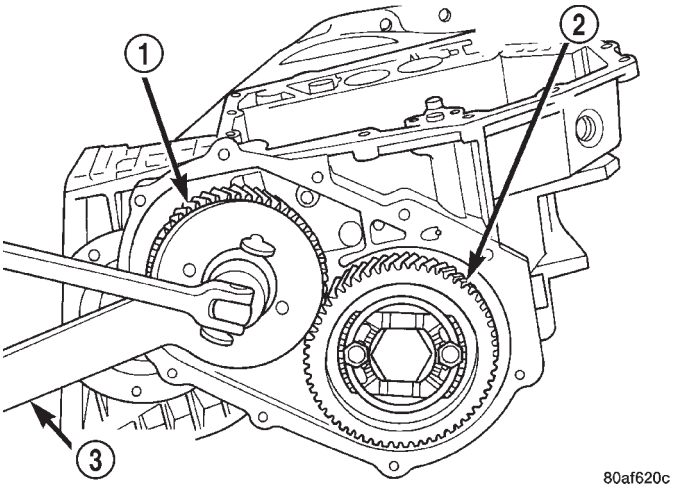

Fig. 54 Remove Transfer Shaft Gear Nut

1 - TRANSFER SHAFT GEAR
2 - OUTPUT GEAR
3 - SPECIAL TOOL 6259

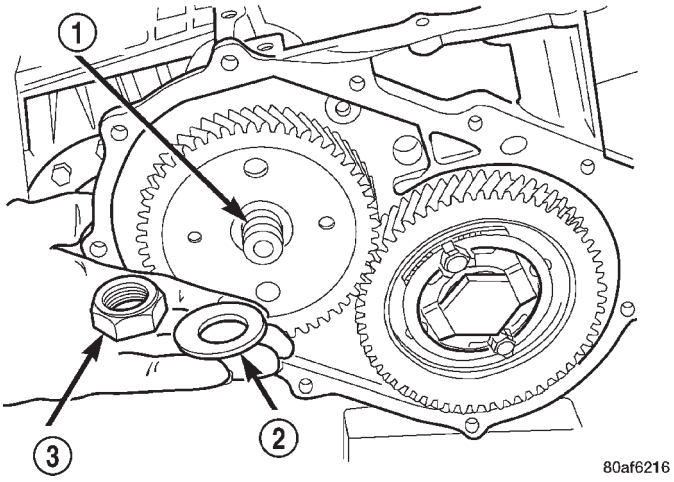

Fig. 55 Transfer Shaft Gear Nut and Coned Washer

1 - TRANSFER SHAFT
2 - LOCK WASHER
3 - NUT

(39) Using tool L-4407A, remove transfer shaft gear (Fig. 56).

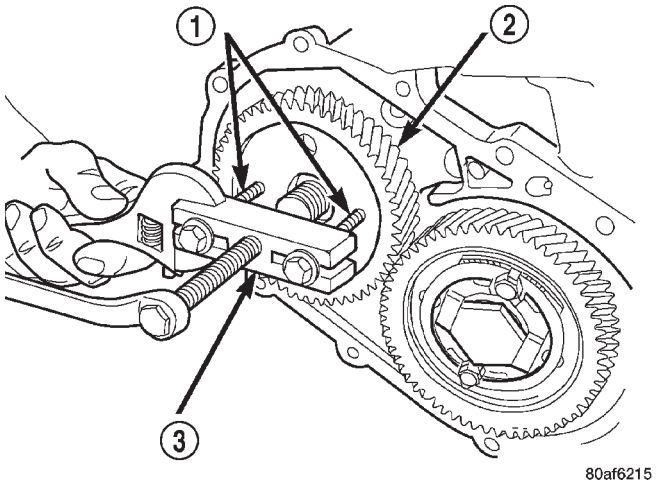

Fig. 56 Remove Transfer Shaft Gear

1 - SPECIAL TOOL L4407-6
2 - TRANSFER SHAFT GEAR
3 - SPECIAL TOOL L4407A

(40) Remove transfer gear shim (select) (Fig. 57).

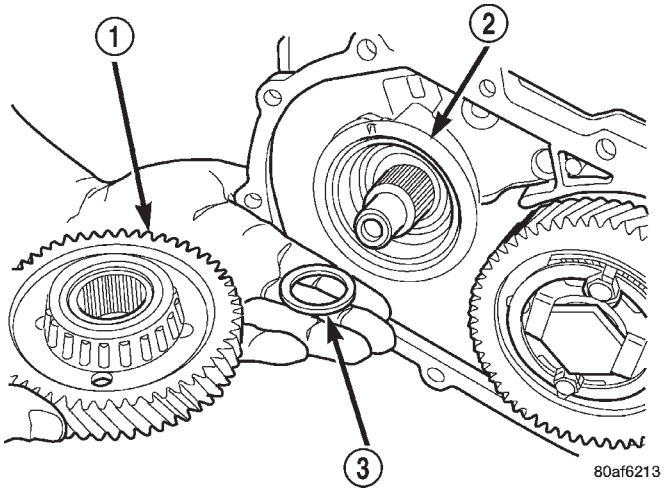

Fig. 57 Remove Transfer Shaft Gear and (Select) Shim

1 - TRANSFER SHAFT GEAR
2 - BEARING CUP RETAINER
3 - SHIM (SELECT)

41TE AUTOMATIC TRANSAXLE (Continued)

(41) Remove bearing cup retainer (Fig. 58).

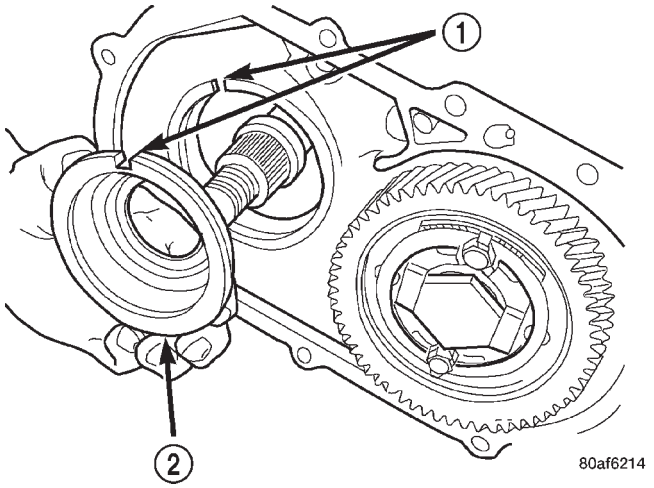

Fig. 58 Remove Bearing Cup Retainer

1 - ALIGN INDEXING TAB TO SLOT
2 - BEARING CUP RETAINER

(42) Remove transfer gear bearing cone using setup shown in (Fig. 59).

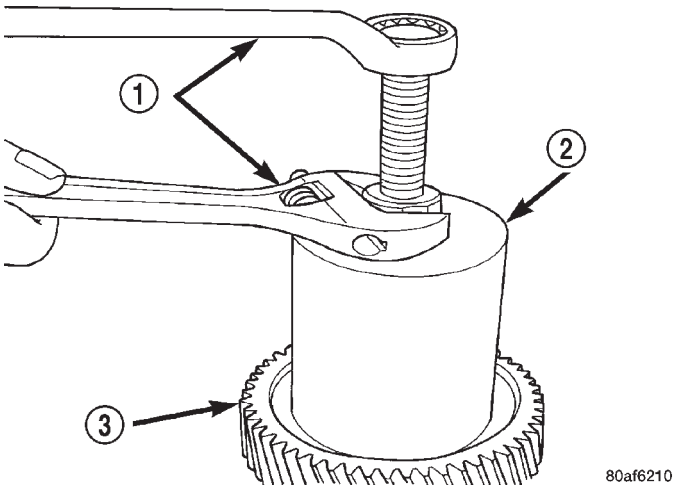

Fig. 59 Remove Transfer Gear Bearing Cone

1 - WRENCHES
2 - TOOL 5048 WITH JAWS TOOL 5048–4 AND BUTTON TOOL L-4539–2
3 - TRANSFER SHAFT GEAR

(43) Remove transfer shaft bearing cup from retainer using Tool 6062 (Fig. 60).

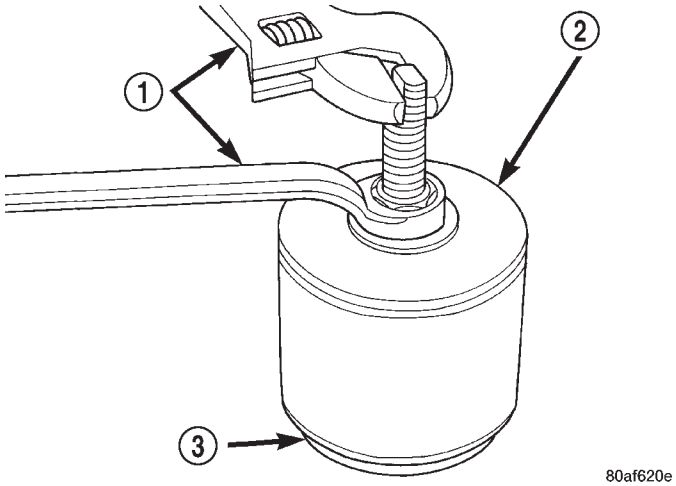

Fig. 60 Remove Transfer Shaft Bearing Cup

1 - WRENCHES
2 - TOOL 6062
3 - TRANSFER SHAFT BEARING CUP RETAINER

(44) Using Tool 6051, remove transfer shaft bearing snap ring (Fig. 61).

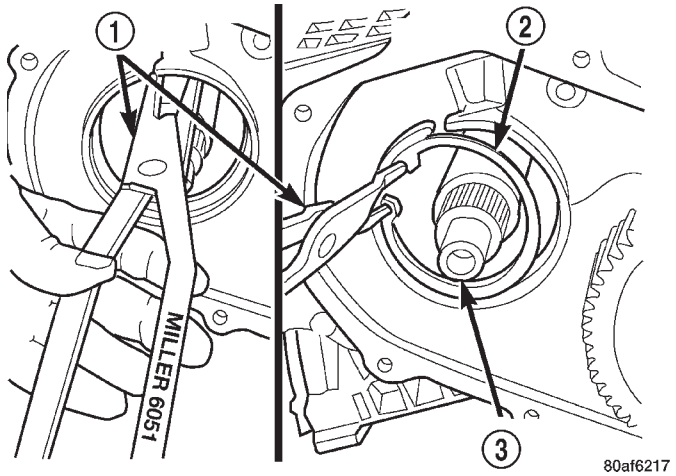

Fig. 61 Remove Transfer Shaft Bearing Snap Ring

1 - SNAP RING PLIERS TOOL 6051
2 - TRANSFER SHAFT BEARING SNAP RING
3 - TRANSFER SHAFT

41TE AUTOMATIC TRANSAXLE (Continued)

(45) Using tool 5049A, remove transfer shaft from transaxle (Fig. 62).

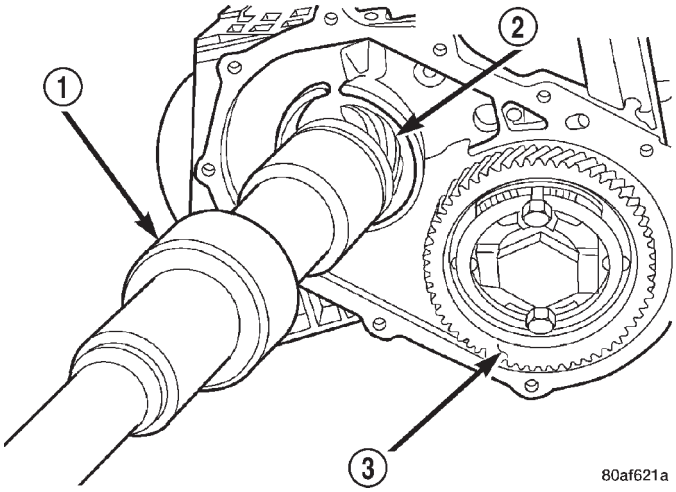

Fig. 62 Remove Transfer Shaft

1 - SPECIAL TOOL 5049–A
2 - TRANSFER SHAFT
3 - OUTPUT GEAR

(46) Slip bearing cup retainer and oil baffle off of shaft (Fig. 63).

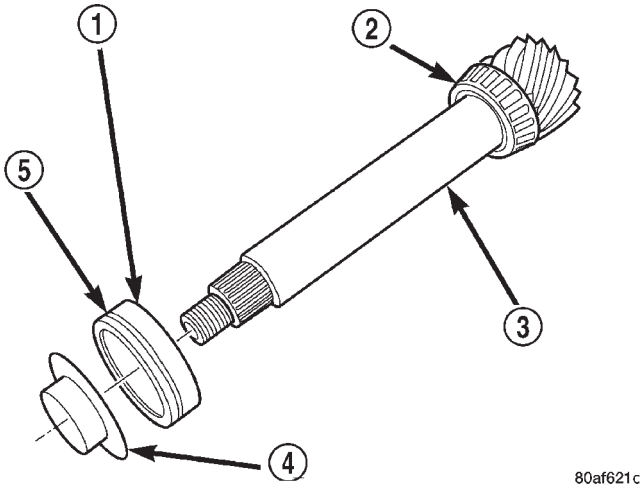

Fig. 63 Bearing Cup Removed

1 - BEARING CUP
2 - BEARING CONE
3 - TRANSFER SHAFT
4 - OIL BAFFLE
5 - O-RING

(47) Using tool P-334, press transfer shaft bearing cone off of shaft (Fig. 64).

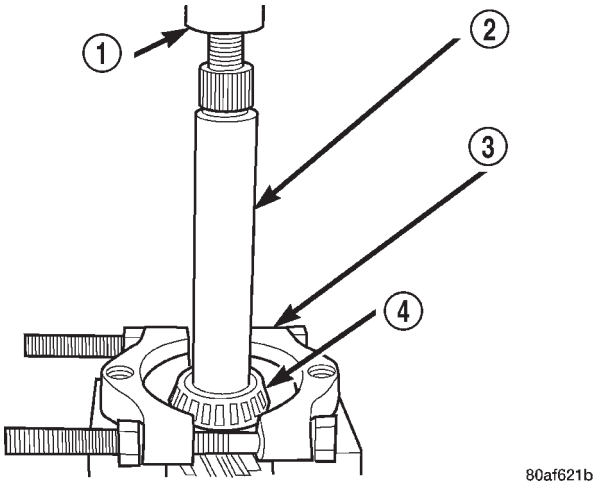

Fig. 64 Remove Transfer Shaft Bearing Cone

1 - ARBOR PRESS RAM
2 - TRANSFER SHAFT
3 - TOOL P-334
4 - BEARING CONE

(48) Bend output gear retaining strap ears flat to allow bolt removal.

(49) Remove output shaft stirrup strap bolts (Fig. 65).

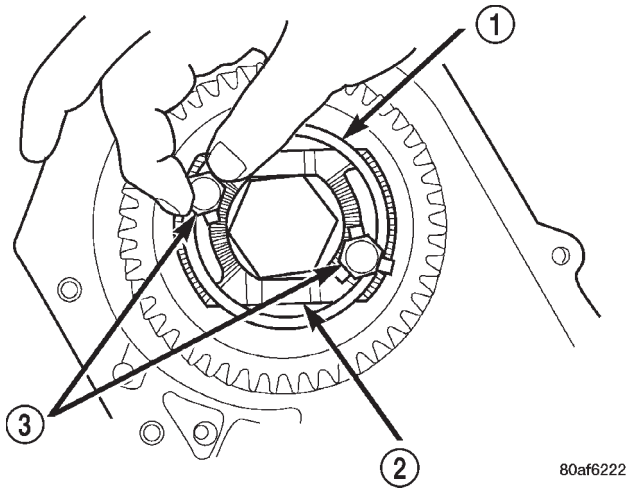

Fig. 65 Remove Strap Bolts

1 - RETAINING STRAP
2 - STIRRUP
3 - RETAINING STRAP BOLTS

41TE AUTOMATIC TRANSAXLE (Continued)

(50) Remove stirrup and strap (Fig. 66).

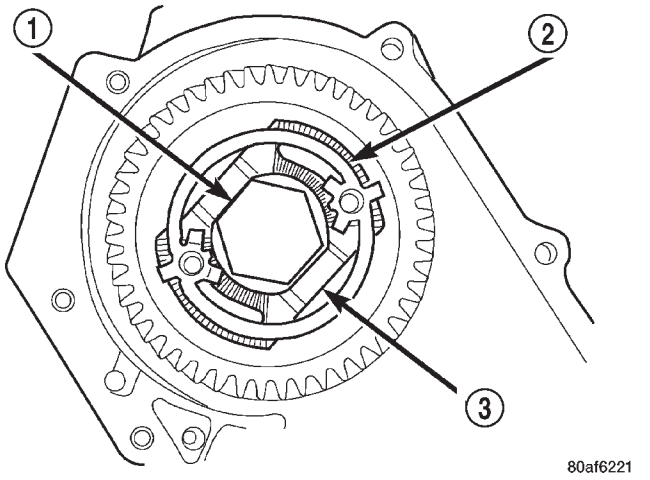

Fig. 66 Remove Stirrup Strap

1 - OUTPUT GEARBOLT
2 - RETAINING STRAP
3 - STIRRUP

(51) Using Tool 6259 (Fig. 67), remove output shaft gear-to-shaft bolt and washer (Fig. 68).

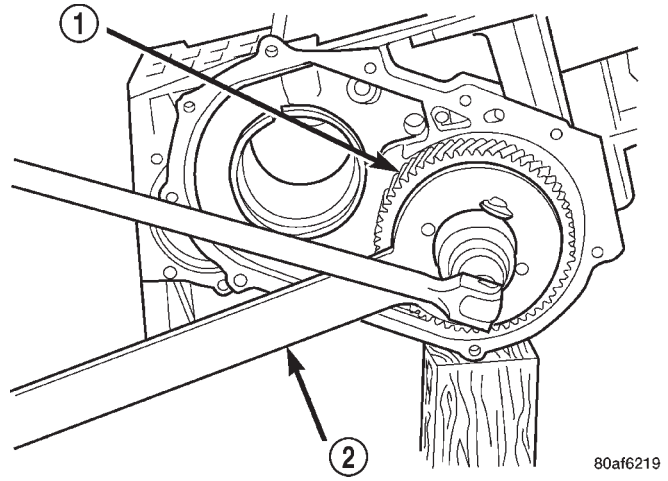

Fig. 67 Remove Output Gear Bolt

1 - OUTPUT GEAR
2 - TOOL 6259

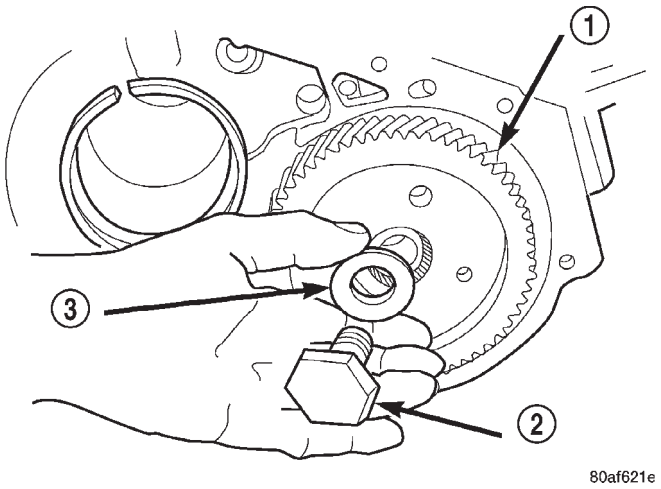

Fig. 68 Output Gear Bolt and Washer

1 - OUTPUT GEAR
2 - BOLT
3 - CONED LOCK WASHER

(52) Using Tool L4407A, and button 6055, remove output gear from shaft (Fig. 69).

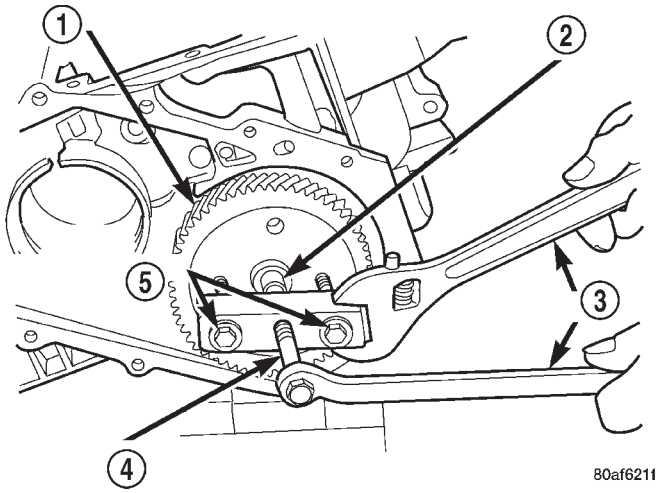

Fig. 69 Remove Output Gear

1 - OUTPUT GEAR
2 - BUTTON TOOL 6055
3 - WRENCHES
4 - TOOL L4407A
5 - BOLTS TOOL L4407–6

41TE AUTOMATIC TRANSAXLE (Continued)

(53) Remove output gear bearing shim (select) (Fig. 70).

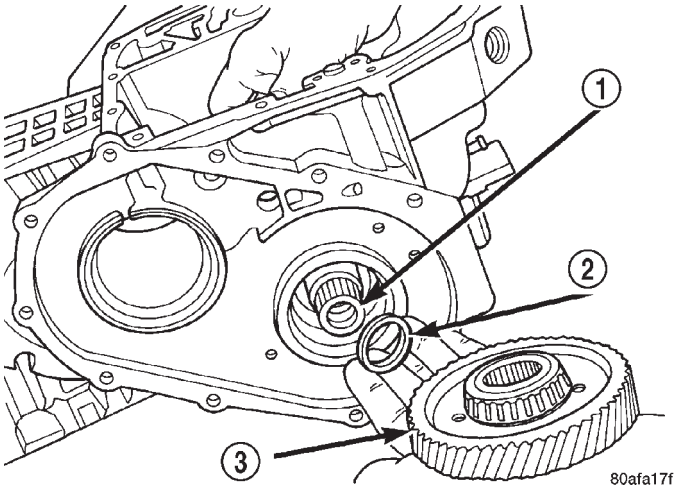

Fig. 70 Output Gear and (Select) Shim

1 - REAR CARRIER ASSEMBLY
2 - SHIM (SELECT)
3 - OUTPUT GEAR

(54) Using setup as shown in (Fig. 71), remove output gear bearing cone.

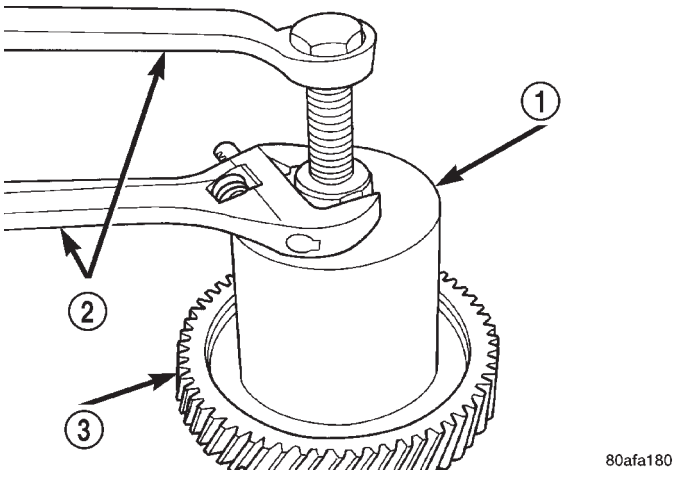

Fig. 71 Remove Bearing Cone

1 - TOOL 5048 WITH JAWS 5048–5 AND BUTTON L-4539–2
2 - WRENCHES
3 - OUTPUT GEAR

(55) Remove rear carrier assembly from transaxle (Fig. 72).

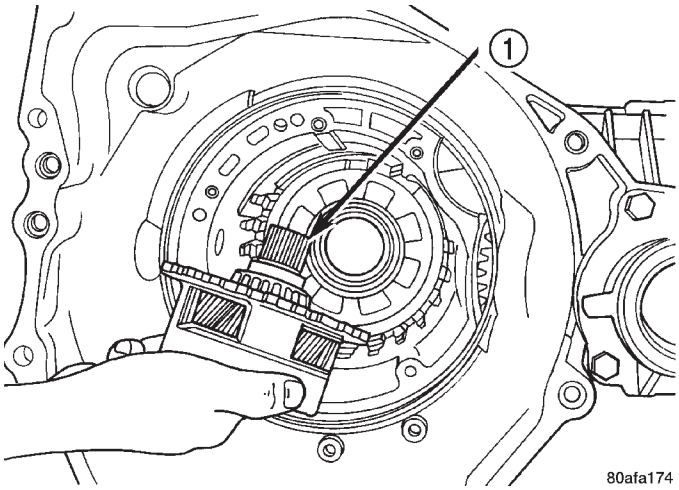

Fig. 72 Remove Rear Carrier Assembly

1 - REAR CARRIER ASSEMBLY

(56) Remove rear carrier assembly bearing cone using setup shown in (Fig. 73).

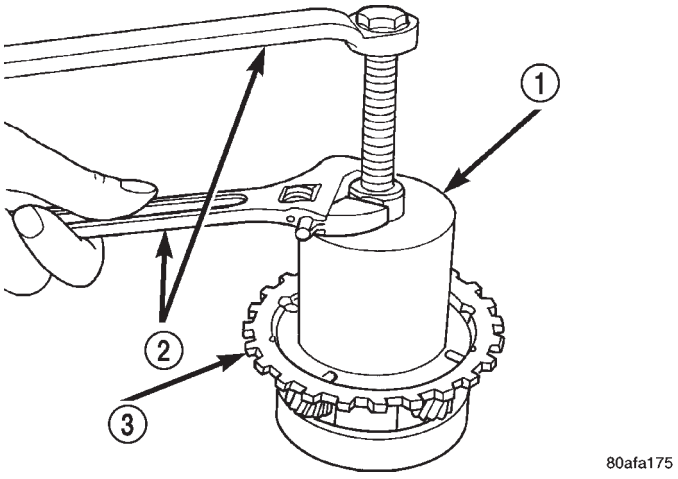

Fig. 73 Remove Rear Carrier Bearing Cone

1 - TOOL 5048 WITH JAWS 5048–3 AND BUTTON 6055
2 - WRENCHES
3 - REAR CARRIER ASSEMBLY

41TE AUTOMATIC TRANSAXLE (Continued)

(57) Install low/reverse spring compressor tool as shown in (Fig. 74) (Fig. 75).

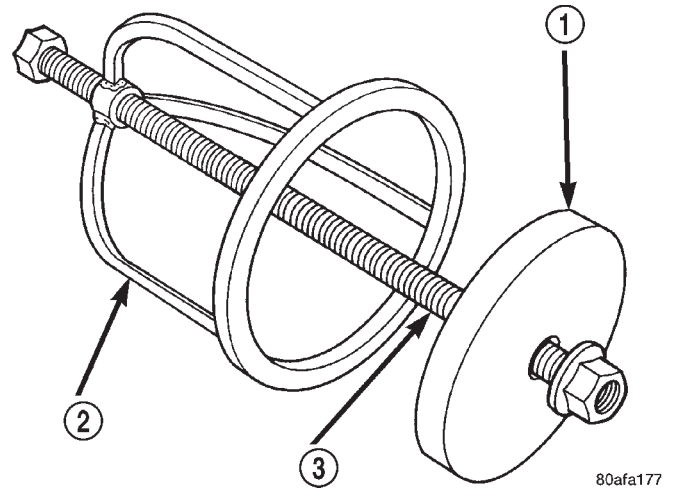

Fig. 74 Low/Reverse Spring Compressor Tool

1 - TOOL 6057
2 - TOOL 5059
3 - TOOL 5058–3

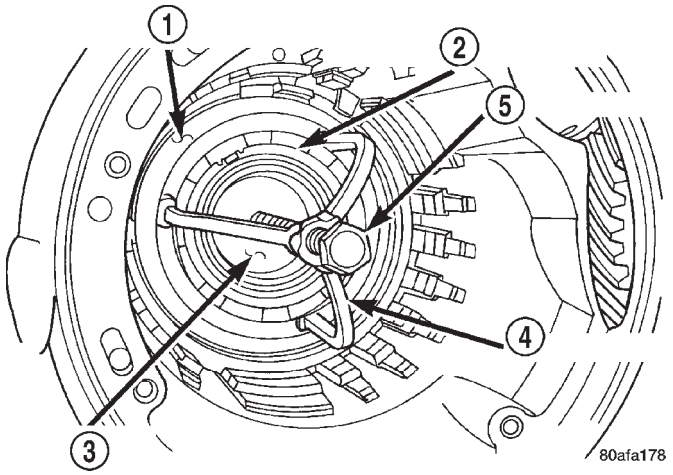

Fig. 75 Compressor Tool in Use

1 - LOW/REVERSE CLUTCH RETURN SPRING
2 - SNAP RING (INSTALL AS SHOWN)
3 - TOOL 6057
4 - TOOL 5059
5 - TOOL 5058–3

(58) Compress low/reverse piston return spring and remove snap ring (Fig. 76).

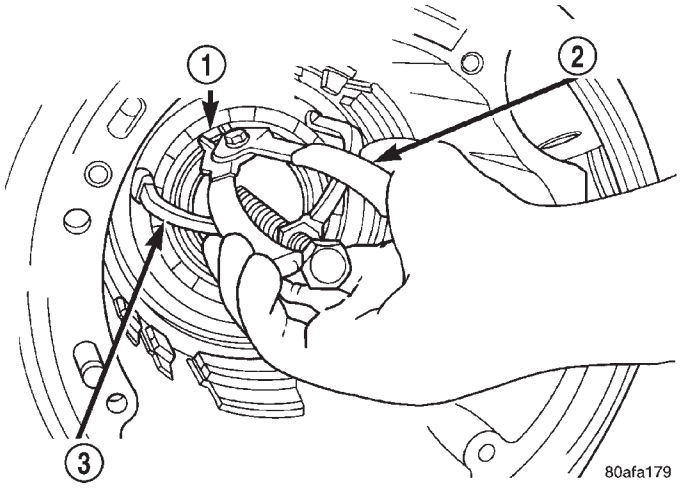

Fig. 76 Remove Snap Ring

1 - SNAP RING OPENING MUST BE BETWEEN SPRING LEVERS (AS SHOWN)
2 - SNAP RING PLIERS
3 - TOOL 6057

(59) Remove low/reverse spring compressor tool and low reverse piston return spring (Fig. 77).

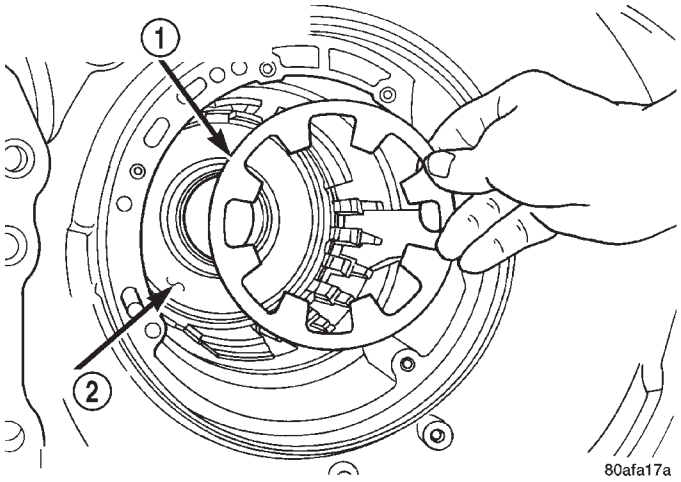

Fig. 77 Low/Reverse Piston Return Spring

1 - LOW/REVERSE PISTON RETURN SPRING
2 - PISTON

41TE AUTOMATIC TRANSAXLE (Continued)

(60) Using a suitable punch , drive out park guide bracket pivot shaft plug (Fig. 78).

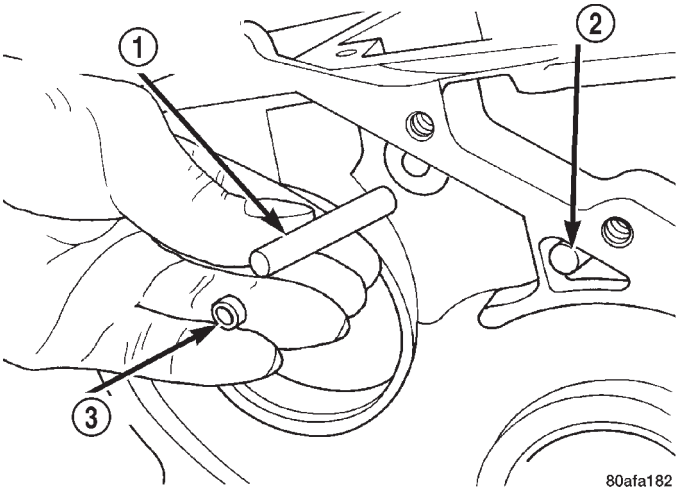

Fig. 78 Remove Anchor Shaft and Plug

1 - GUIDE BRACKET ANCHOR SHAFT
2 - PIVOT SHAFT
3 - ANCHOR SHAFT PLUG

(61) Using ordinary pliers, remove pivot shaft and guide bracket assembly (Fig. 79).

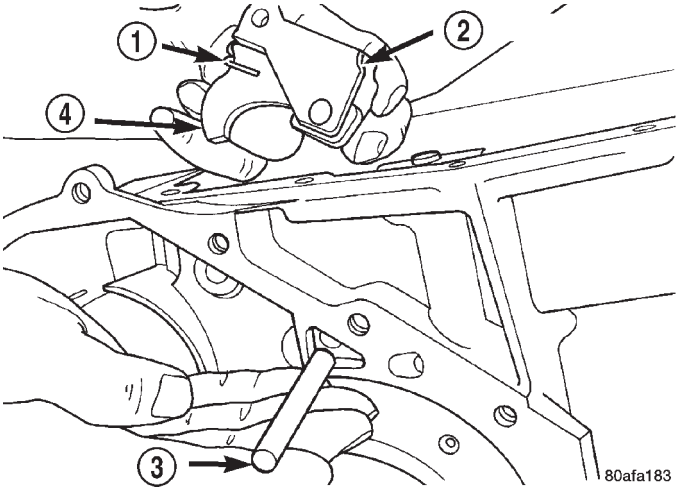

Fig. 79 Pivot Shaft and Guide Bracket

1 - ANTIRACHET SPRING
2 - GUIDE BRACKET
3 - PIVOT SHAFT
4 - PAWL

(62) Inspect guide bracket components for excessive wear and replace if necessary (Fig. 80).

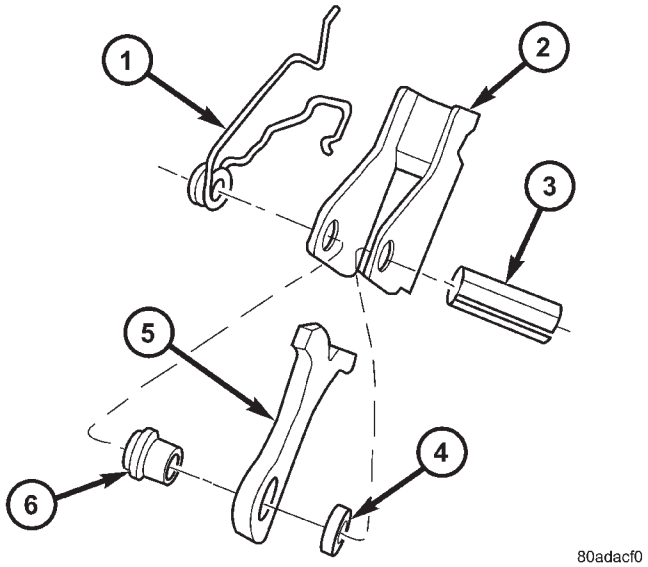

Fig. 80 Guide Bracket Disassembled

1 - ANTIRATCHET SPRING
2 - GUIDE BRACKET
3 - SPLIT SLEEVE
4 - SPACER
5 - PAWL
6 - STEPPED SPACER

(63) Remove low/reverse clutch piston (Fig. 81).

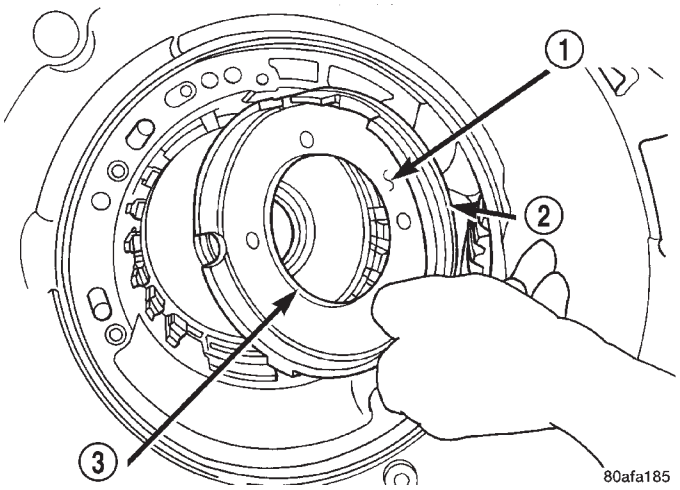

Fig. 81 Remove Low/Reverse Clutch Piston

1 - LOW/REVERSE CLUTCH PISTON
2 - D-RING SEAL
3 - D-RING SEAL

41TE AUTOMATIC TRANSAXLE (Continued)

(64) Remove low/reverse piston retainer-to-case screws (Fig. 82).

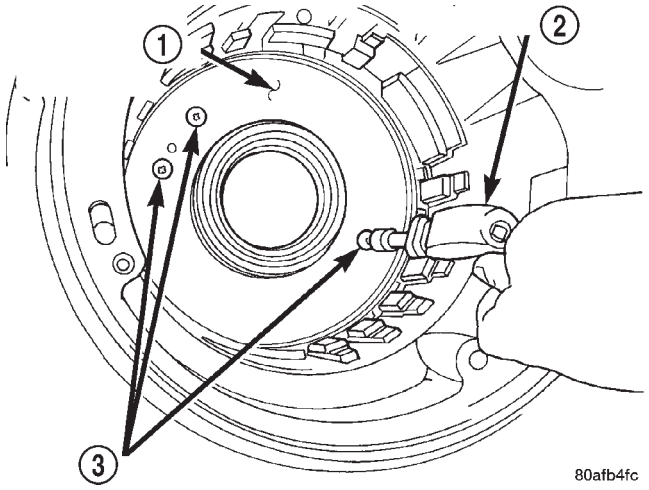

Fig. 82 Remove Piston Retainer Attaching Screws

1 - LOW/REVERSE CLUTCH PISTON RETAINER
2 - SCREWDRIVER
3 - TORX-LOC SCREWS

(65) Remove low/reverse piston retainer (Fig. 83).

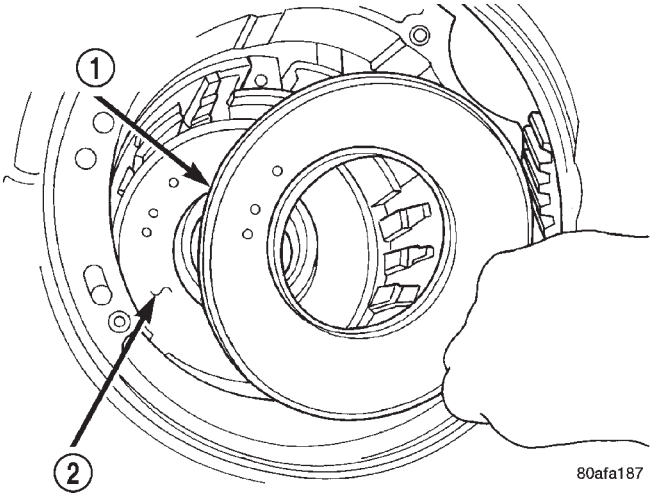

Fig. 83 Remove Piston Retainer

1 - LOW/REVERSE CLUTCH PISTON RETAINER
2 - GASKET

(66) Remove low/reverse piston retainer-to-case gasket (Fig. 84).

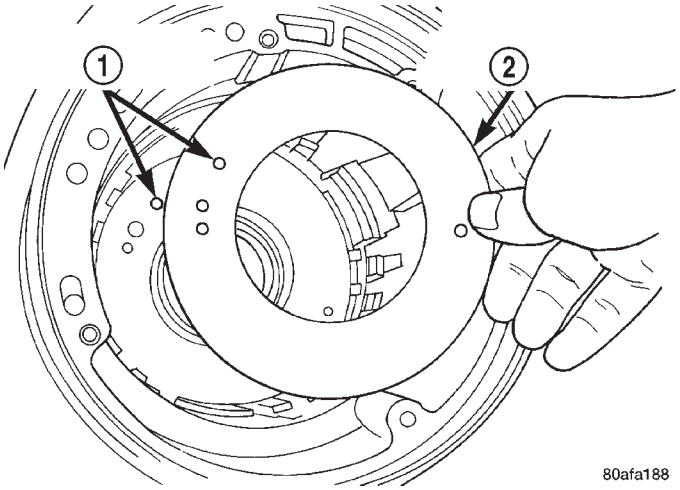

Fig. 84 Remove Piston Retainer Gasket

1 - GASKET HOLES MUST LINE UP
2 - LOW/REVERSE CLUTCH PISTON RETAINER GASKET

(67) Using a hammer and suitable drift, drive out inner output bearing cup (Fig. 85).

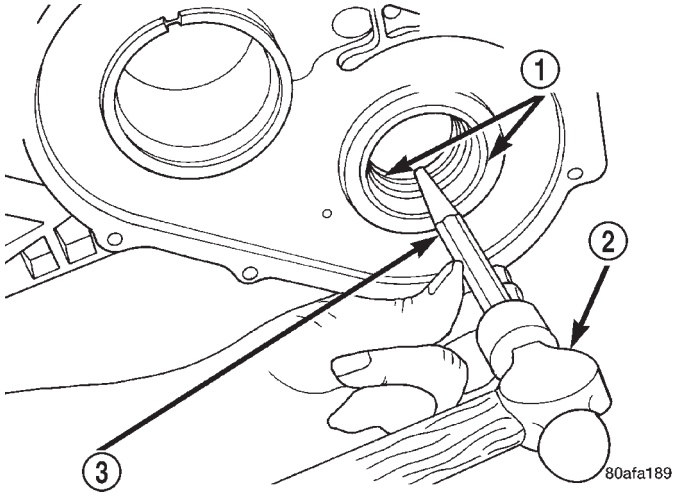

Fig. 85 Remove Output Bearing Inner Cup

1 - OUTPUT BEARING CUPS (REPLACE IN PAIRS)
2 - HAMMER
3 - BRASS DRIFT

41TE AUTOMATIC TRANSAXLE (Continued)

(68) Using tool 6062, remove outer output bearing cup (Fig. 86).

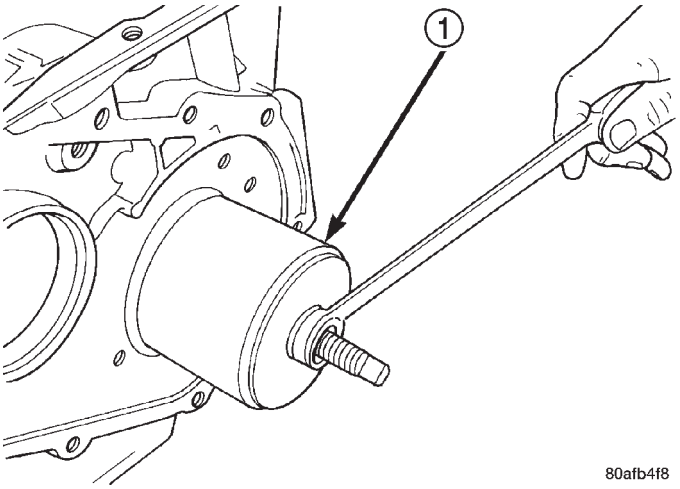

Fig. 86 Remove Output Bearing Outer Cup

1 - TOOL 6062

ASSEMBLY

CAUTION: If transaxle failure has occurred, it is necessary to flush the transaxle oil cooler and lines to remove debris and particles that could contaminate and/or fail a new or rebuilt unit. (Refer to 7 - COOLING/TRANSMISSION - STANDARD PROCEDURE)

CAUTION: The cooler bypass valve must be replaced if transaxle failure has occurred. Do not attempt to reuse or clean old valve.

NOTE: If transaxle is being overhauled (clutch and/or seal replacement), the TCM Quick Learn procedure must be performed. (Refer to 8 - ELECTRICAL/ELECTRONIC CONTROL MODULES/ TRANSMISSION CONTROL MODULE - STANDARD PROCEDURE)

(1) Install both output bearing cups using Tool 5050 (Fig. 87).

(2) Install low/reverse piston retainer gasket (Fig. 88). Make sure gasket holes line up with case.

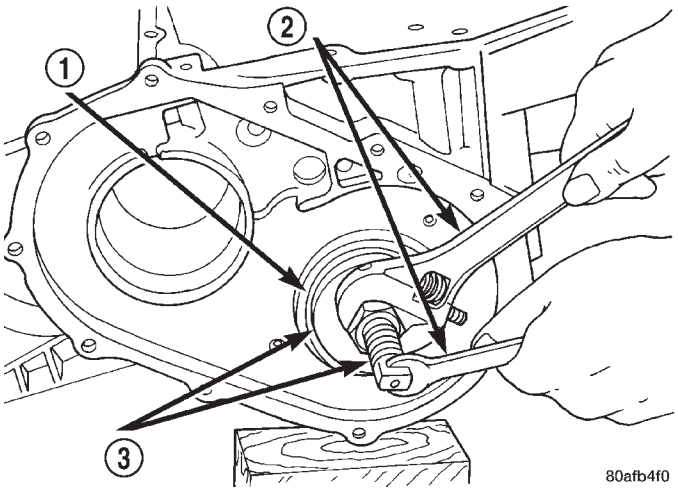

Fig. 87 Install Both Output Bearing Cups

1 - OUTPUT BEARING CUPS
2 - WRENCHES
3 - TOOL 5050

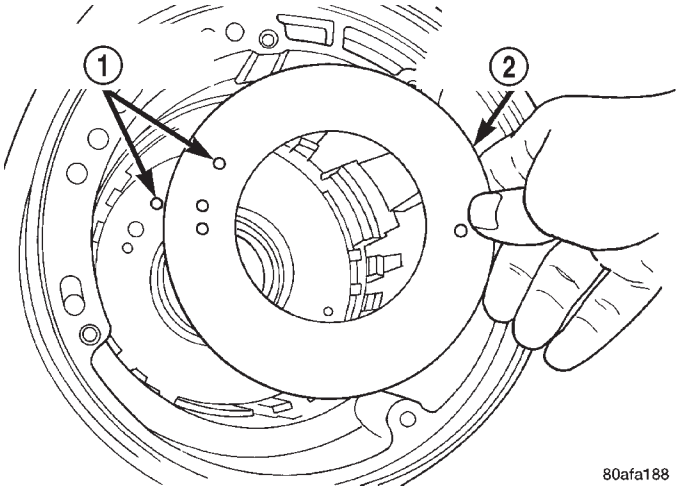

Fig. 88 Install Piston Retainer Gasket

1 - GASKET HOLES MUST LINE UP
2 - LOW/REVERSE CLUTCH PISTON RETAINER GASKET

41TE AUTOMATIC TRANSAXLE (Continued)

(3) Install low/reverse piston retainer (Fig. 89).

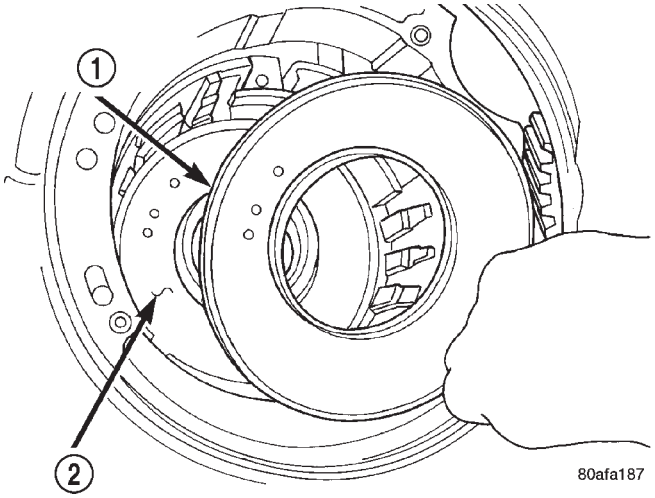

Fig. 89 Install Piston Retainer

1 - LOW/REVERSE CLUTCH PISTON RETAINER
2 - GASKET

(4) Install low/reverse piston retainer-to-case bolts (Fig. 90) and torque to 5 N·m (45 in. lbs.).

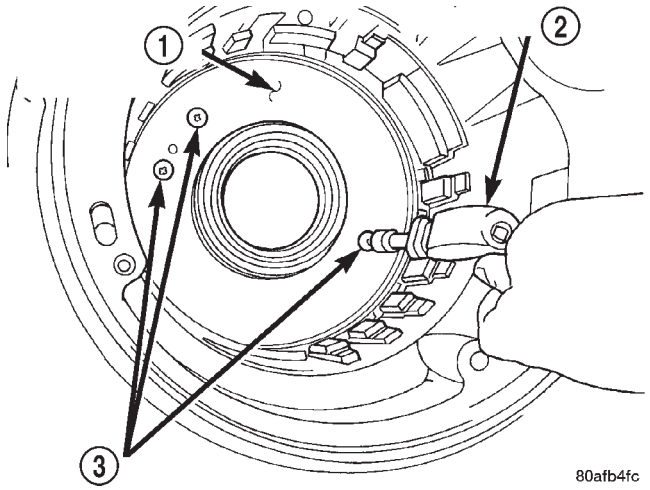

Fig. 90 Install Piston Retainer Attaching Screws

1 - LOW/REVERSE CLUTCH PISTON RETAINER
2 - SCREWDRIVER
3 - TORX-LOC SCREWS

(5) Install low/reverse clutch piston (Fig. 91).

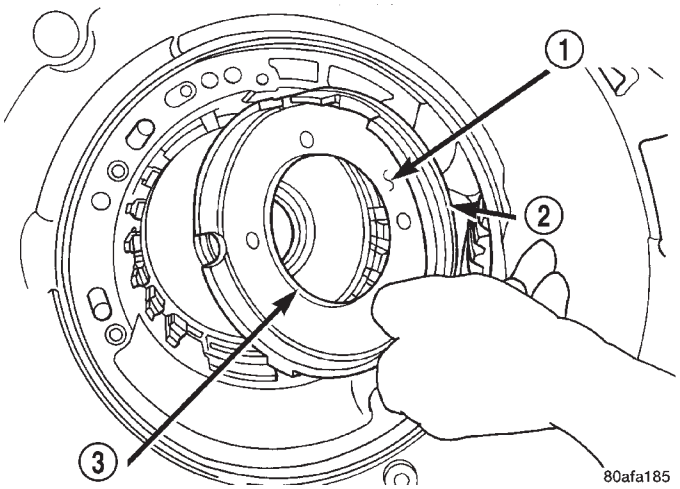

Fig. 91 Install Low/Reverse Clutch Piston

1 - LOW/REVERSE CLUTCH PISTON
2 - D-RING SEAL
3 - D-RING SEAL

(6) Assemble park guide bracket assembly (Fig. 93) (Fig. 92).

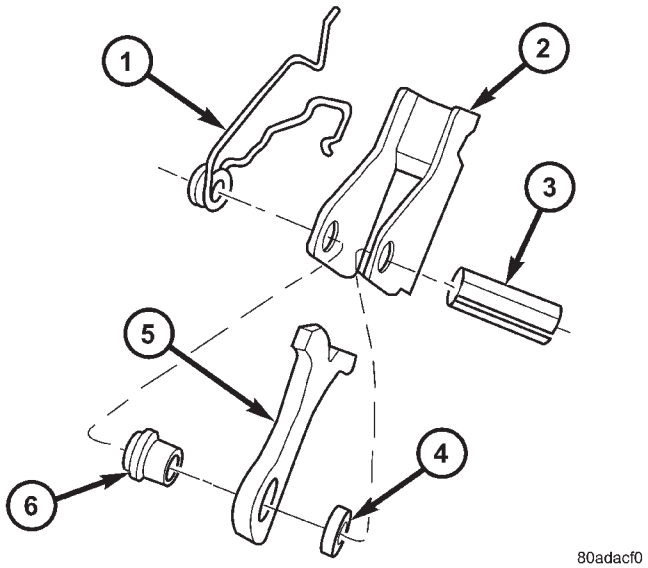

Fig. 92 Guide Bracket Disassembled

1 - ANTIRATCHET SPRING
2 - GUIDE BRACKET
3 - SPLIT SLEEVE
4 - SPACER
5 - PAWL
6 - STEPPED SPACER

41TE AUTOMATIC TRANSAXLE (Continued)

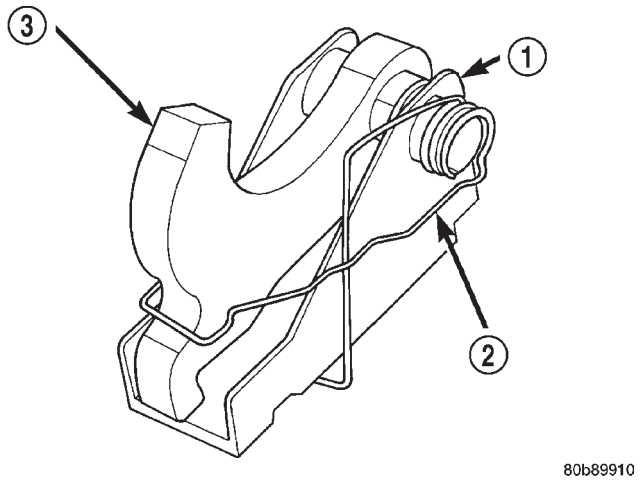

Fig. 93 Guide Bracket

1 - GUIDE BRACKET
2 - ANTIRATCHET SPRING (MUST BE ASSEMBLED AS SHOWN)
3 - PAWL

(7) Install guide bracket into position and insert pivot shaft (Fig. 94).

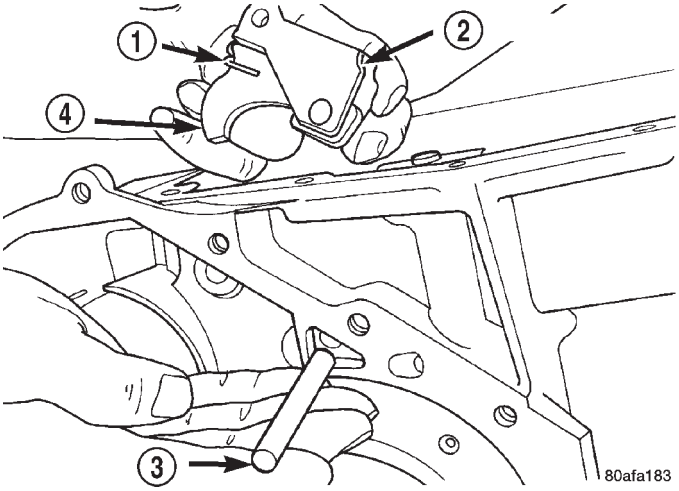

Fig. 94 Pivot Shaft and Guide Bracket

1 - ANTIRACHET SPRING
2 - GUIDE BRACKET
3 - PIVOT SHAFT
4 - PAWL

(8) Install anchor shaft and plug (Fig. 95). Make sure guide bracket and split sleeve are in contact with the rear of the transaxle case.

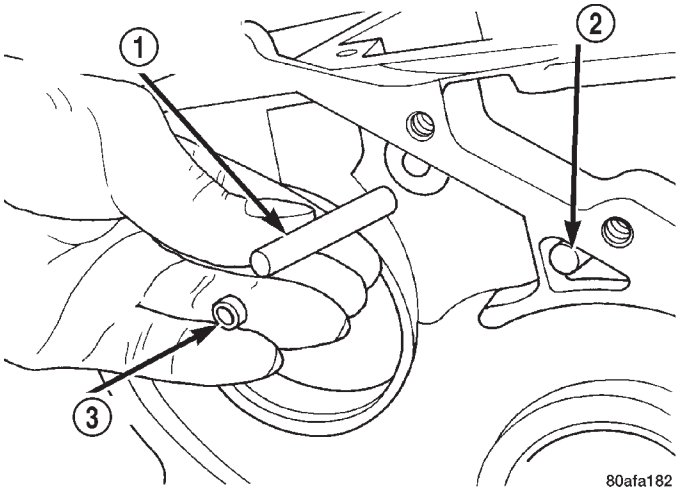

Fig. 95 Install Anchor Shaft and Plug

1 - GUIDE BRACKET ANCHOR SHAFT
2 - PIVOT SHAFT
3 - ANCHOR SHAFT PLUG

(9) Install low/reverse piston return spring (Fig. 96).

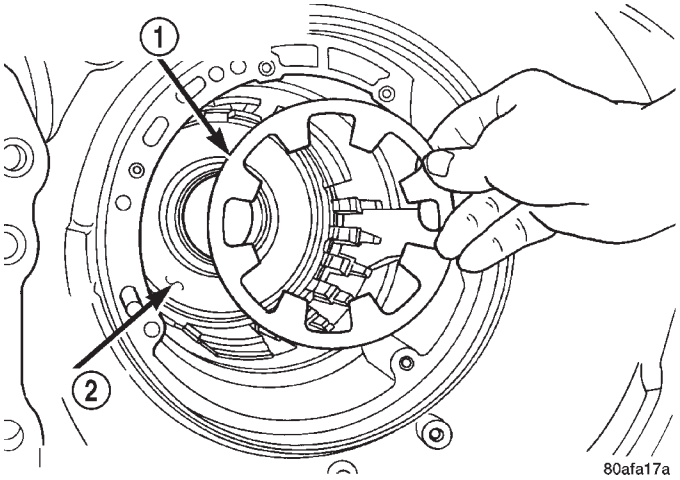

Fig. 96 Low/Reverse Piston Return Spring

1 - LOW/REVERSE PISTON RETURN SPRING
2 - PISTON

41TE AUTOMATIC TRANSAXLE (Continued)

(10) Install low/reverse spring compressor into position (Fig. 97). Compress low/reverse piston and install snap ring as shown in (Fig. 98).

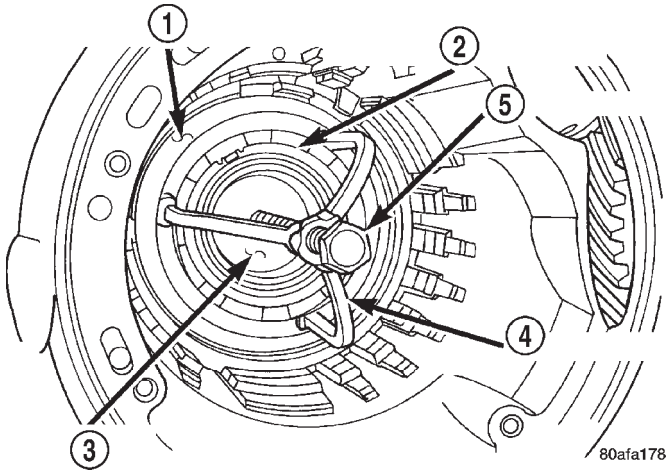

Fig. 97 Compressor Tool in Use

1 - LOW/REVERSE CLUTCH RETURN SPRING
2 - SNAP RING (INSTALL AS SHOWN)
3 - TOOL 6057
4 - TOOL 5059
5 - TOOL 5058–3

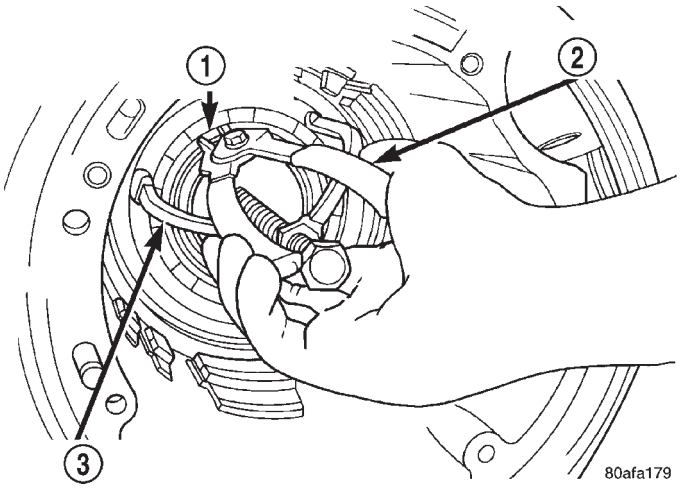

Fig. 98 Install Snap Ring

1 - SNAP RING OPENING MUST BE BETWEEN SPRING LEVERS (AS SHOWN)
2 - SNAP RING PLIERS
3 - TOOL 6057

(11) Install rear carrier bearing cone using Tool 6053 (Fig. 99).

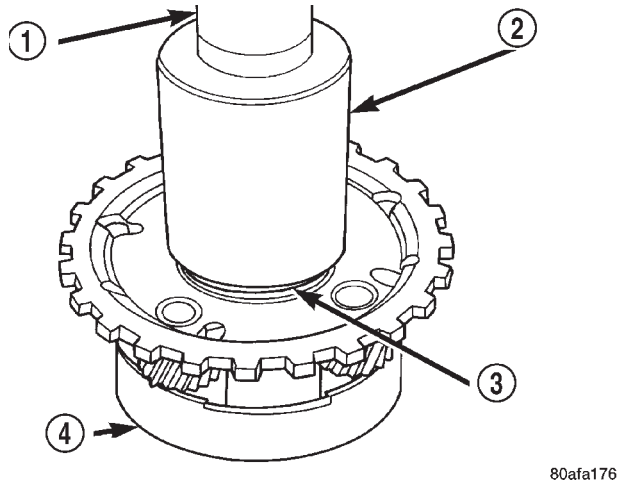

Fig. 99 Install Rear Carrier Bearing Cone

1 - ARBOR PRESS RAM
2 - TOOL 6053
3 - NEW BEARING CONE
4 - REAR CARRIER ASSEMBLY

(12) Install rear carrier assembly to transaxle case (Fig. 100).

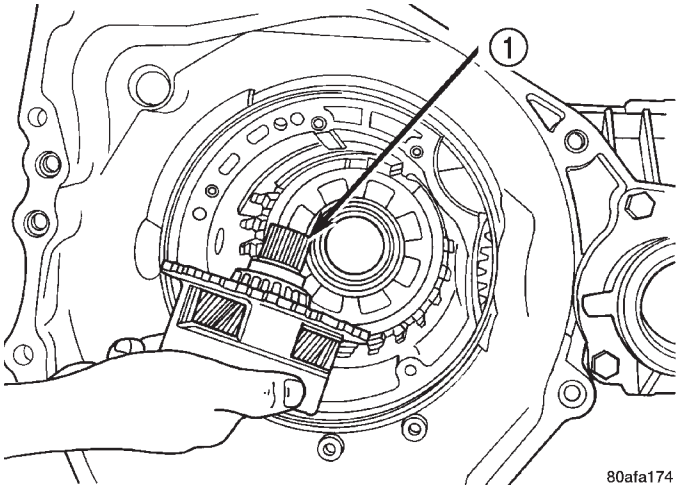

Fig. 100 Install Rear Carrier Assembly

1 - REAR CARRIER ASSEMBLY

41TE AUTOMATIC TRANSAXLE (Continued)

(13) Install output gear bearing cone using Tool 5052 (Fig. 101).

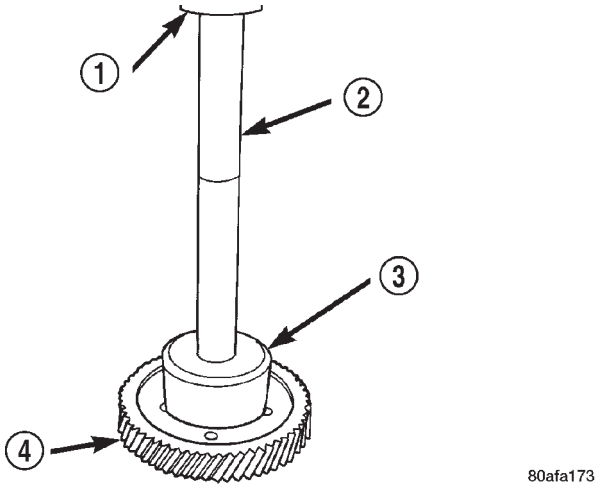

Fig. 101 Install Output Gear Bearing Cone

1 - ARBOR PRESS RAM
2 - HANDLE C-4171
3 - TOOL 5052
4 - OUTPUT GEAR

(14) **OUTPUT GEAR BEARING ADJUSTMENT:**

(a) With output gear removed, install a 4.50 mm (0.177 in.) gauging shim (Fig. 103) on the rear carrier assembly hub, using grease to hold the shim in place.

(b) Using Tool 6259, install output gear and bearing assembly. Torque to 271 N·m (200 ft. lbs.).

(c) Measure bearing end play. Attach Tool L-4432 to the gear (Fig. 102).

(d) Push and pull the gear while rotating back and forth to ensure seating of bearing rollers.

(e) Using a dial indicator mounted to the transaxle case, measure output gear end play as shown in (Fig. 102).

(f) Refer to the output gear bearing shim chart for the required shim to obtain proper bearing setting.

(g) Use Tool 6259 to remove the output gear retaining bolt and washer. To remove the output gear, use Tool L4407A.

(h) Remove the gauging shim and install the proper shim determined by the chart. Use grease to hold the shim in place.

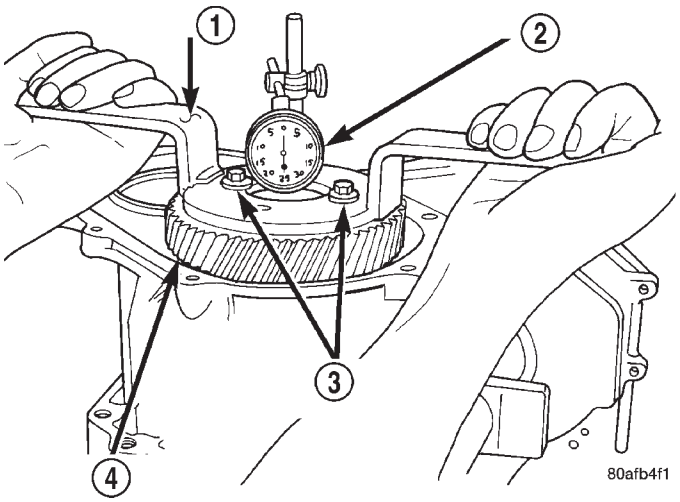

Fig. 102 Checking Output Gear Bearings End Play

1 - TOOL L-4432
2 - DIAL INDICATOR
3 - SPECIAL SCREWS TOOL 6260
4 - OUTPUT GEAR

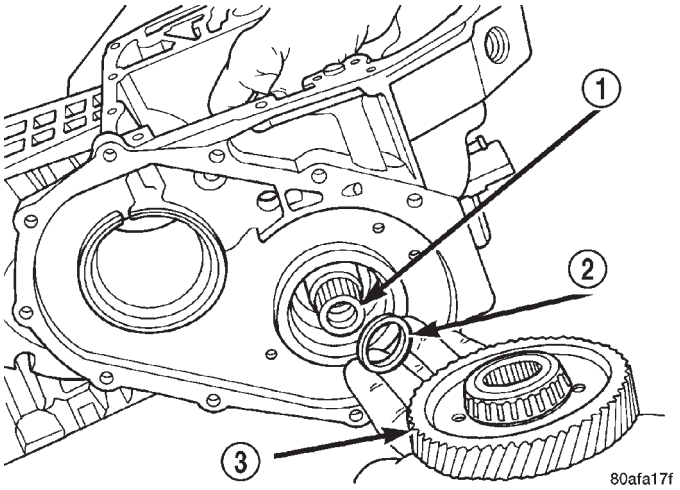

Fig. 103 Output Gear and (Select) Shim

1 - REAR CARRIER ASSEMBLY
2 - SHIM (SELECT)
3 - OUTPUT GEAR

41TE AUTOMATIC TRANSAXLE (Continued)

OUTPUT GEAR BEARING SHIM CHART

End Play	Shim Needed	Part Number	End Play	Shim Needed	Part Number
0.05mm (0.002 in.)	4.42mm (0.174 in.)	4412830AB	0.53mm (0.021 in.)	3.94mm (0.155 in.)	4412818AB
0.08mm (0.003 in.)	4.38mm (0.172 in.)	4412829AB	0.56mm (0.022 in.)	3.90mm (0.154 in.)	4412817AB
0.10mm (0.004 in.)	4.38mm (0.172 in.)	4412829AB	0.58mm (0.023 in.)	3.90mm (0.154 in.)	4412817AB
0.13mm (0.005 in.)	4.34mm (0.171 in.)	4412828AB	0.61mm (0.024 in.)	3.86mm (0.152 in.)	4412816AB
0.15mm (0.006 in.)	4.30mm (0.169 in.)	4412827AB	0.64mm (0.025 in.)	3.82mm (0.150 in.)	4412815AB
0.18mm (0.007 in.)	4.30mm (0.169 in.)	4412827AB	0.66mm (0.026 in.)	3.82mm (0.150 in.)	4412815AB
0.20mm (0.008 in.)	4.26mm (0.168 in.)	4412826AB	0.69mm (0.027 in.)	3.78mm (0.149 in.)	4412814AB
0.23mm (0.009 in.)	4.22mm (0.166 in.)	4412825AB	0.71mm (0.028 in.)	3.74mm (0.147 in.)	4412813AB
0.25mm (0.010 in.)	4.22mm (0.166 in.)	4412825AB	0.74mm (0.029 in.)	3.74mm (0.147 in.)	4412813AB
0.28mm (0.011 in.)	4.18mm (0.165 in.)	4412824AB	0.76mm (0.030 in.)	3.70mm (0.146 in.)	4412812AB
0.30mm (0.012 in.)	4.14mm (0.163 in.)	4412823AB	0.79mm (0.031 in.)	3.66mm (0.144 in.)	4412811AB
0.33mm (0.013 in.)	4.14mm (0.163 in.)	4412823AB	0.81mm (0.032 in.)	3.66mm (0.144 in.)	4412811AB
0.36mm (0.014 in.)	4.10mm (0.161 in.)	4412822AB	0.84mm (0.033 in.)	3.62mm (0.143 in.)	4412810AB
0.38mm (0.015 in.)	4.10mm (0.161 in.)	4412822AB	0.86mm (0.034 in.)	3.62mm (0.143 in.)	4412810AB
0.41mm (0.016 in.)	4.06mm (0.160 in.)	4412821AB	0.89mm (0.035 in.)	3.58mm (0.141)	4412809AB
0.43mm (0.017 in.)	4.02mm (0.158 in.)	4412820AB	0.91mm (0.036in.)	3.54mm (0.139 in.)	4412808AB
0.46mm (0.018 in.)	4.02mm (0.158 in.)	4412820AB	0.94mm (0.037 in.)	3.54mm (0.139 in.)	4412808AB
0.48mm (0.019 in.)	3.98mm (0.157 in.)	4412819AB	0.97mm (0.038 in.)	3.50mm (0.138 in.)	4412807AB
0.51mm (0.020 in.)	3.94mm (0.155 in.)	4412818AB			

41TE AUTOMATIC TRANSAXLE (Continued)

(15) Install the output gear and bearing assembly using Tool 6261 (Fig. 104).

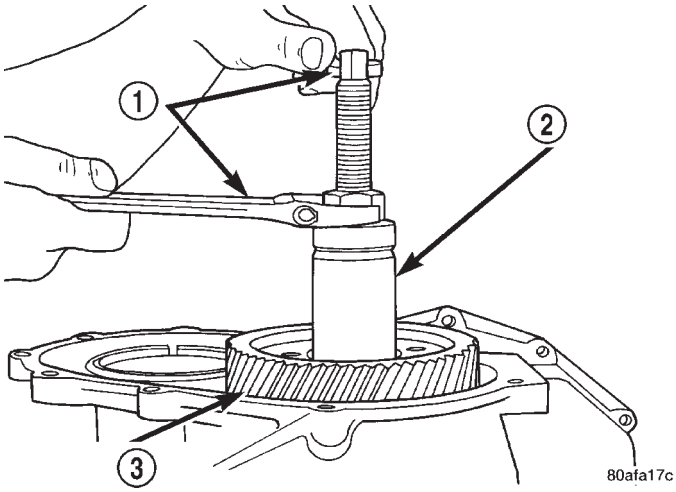

Fig. 104 Install Output Gear

1 - WRENCHES
2 - TOOL 6261 WITH STUD
3 - OUTPUT GEAR

(16) Install NEW output gear retaining bolt and washer (Fig. 105). Using Tool 6259, torque output gear retaining bolt to 271 N·m (200 ft. lbs.) (Fig. 106).

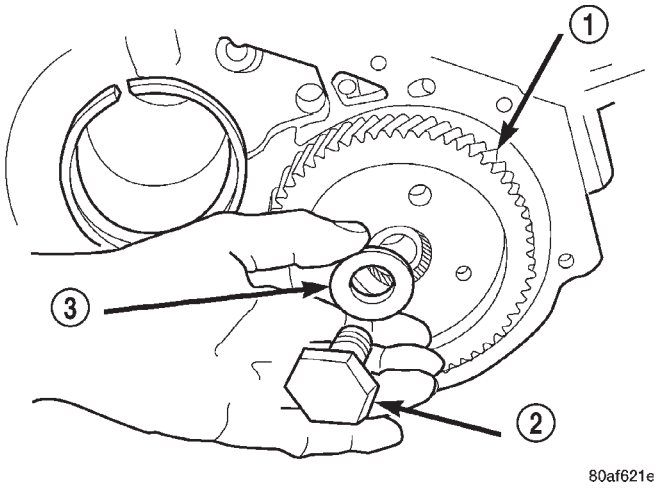

Fig. 105 Output Gear Bolt and Washer

1 - OUTPUT GEAR
2 - BOLT
3 - CONED LOCK WASHER

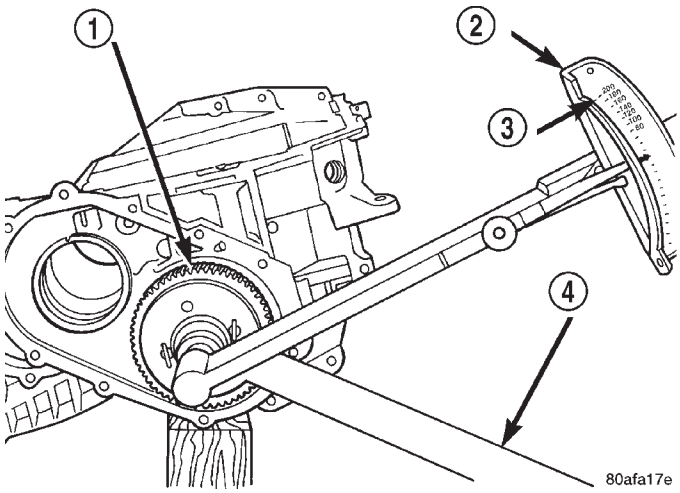

Fig. 106 Tighten Output Gear to 271 N•m (200 ft. lbs.)

1 - OUTPUT GEAR
2 - TORQUE WRENCH
3 - 200 FT. LBS.
4 - TOOL 6259

(17) Using an inch pound torque wrench (Fig. 107), check output shaft turning torque. **Output shaft turning torque should be within 3-8 in. lbs.** If the turning torque is too high, install a 0.04 mm (0.0016 in.) thicker shim. If the turning torque is too low, install a 0.04 mm (0.0016 in.) thinner shim. Repeat until the proper turning torque of 3-8 in. lbs. is obtained.

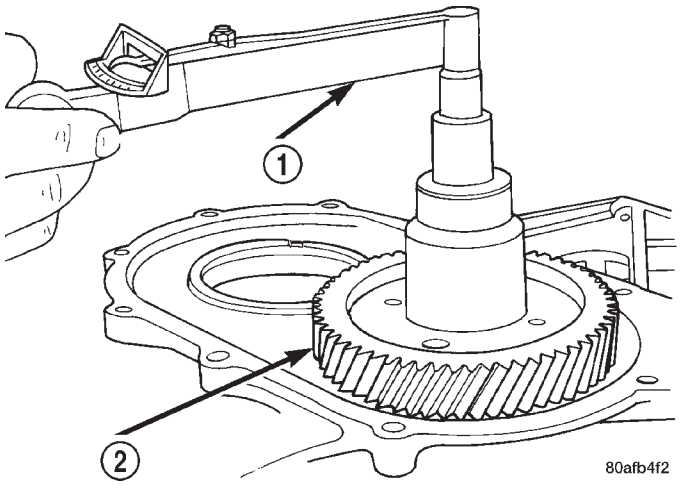

Fig. 107 Check Output Gear Bearings Turning Torque

1 - INCH-POUND TORQUE WRENCH
2 - OUTPUT GEAR

41TE AUTOMATIC TRANSAXLE (Continued)

(18) Install output gear stirrup with serrated side out (Fig. 108).

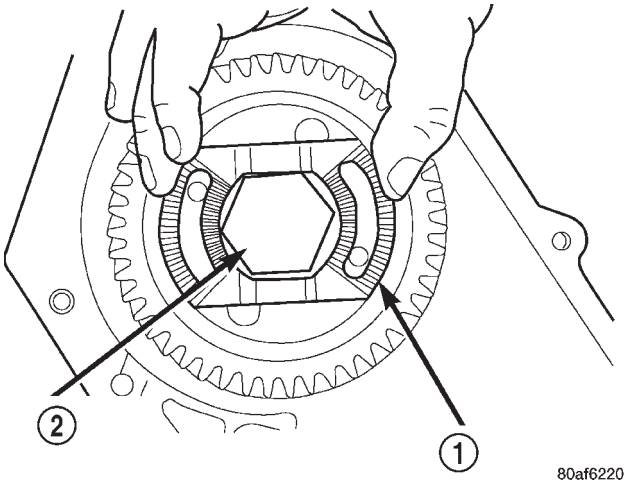

Fig. 108 Install Stirrup

1 - STIRRUP
2 - OUTPUT GEAR RETAINING BOLT

(19) Install retaining strap.

(20) Install strap bolts but do not tighten at this time (Fig. 109).

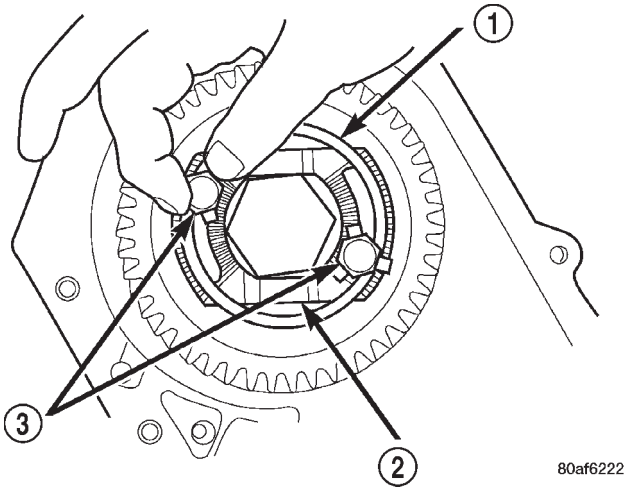

Fig. 109 Install Strap Bolts

1 - RETAINING STRAP
2 - STIRRUP
3 - RETAINING STRAP BOLTS

(21) Rotate stirrup clockwise against flats of retaining bolt (Fig. 110).

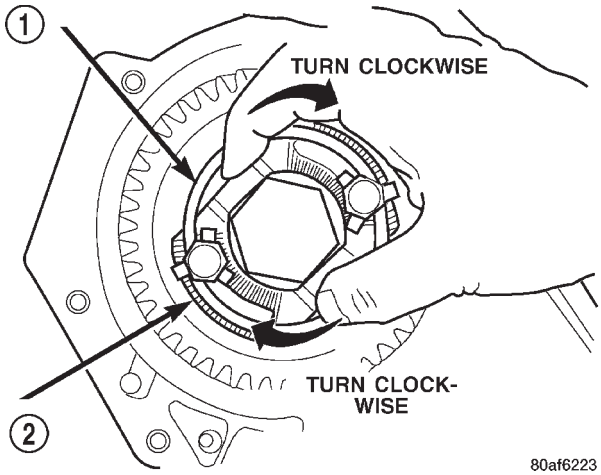

Fig. 110 Turn Stirrup Clockwise Against Bolt Flats

1 - RETAINING STRAP
2 - STIRRUP

(22) Torque stirrup strap bolts to 23 N·m (200 in. lbs.) (Fig. 111).

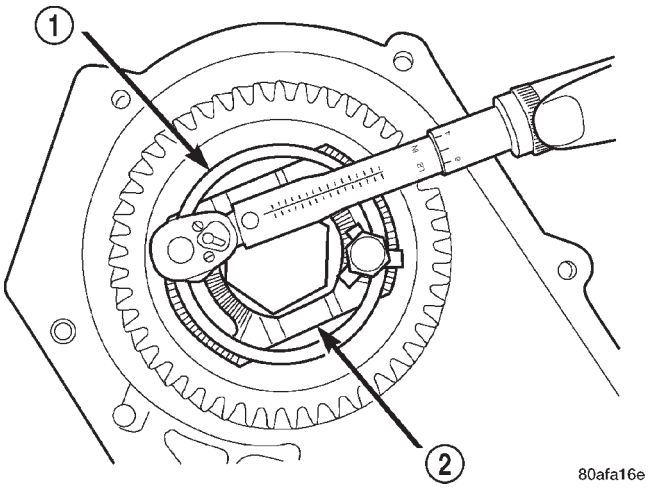

Fig. 111 Tighten Stirrup Strap Bolts To 23 N·m (200 in.) lbs.)

1 - RETAINING STRAP
2 - STIRRUP

41TE AUTOMATIC TRANSAXLE (Continued)

(23) Bend tabs on strap up against flats of bolts (Fig. 112).

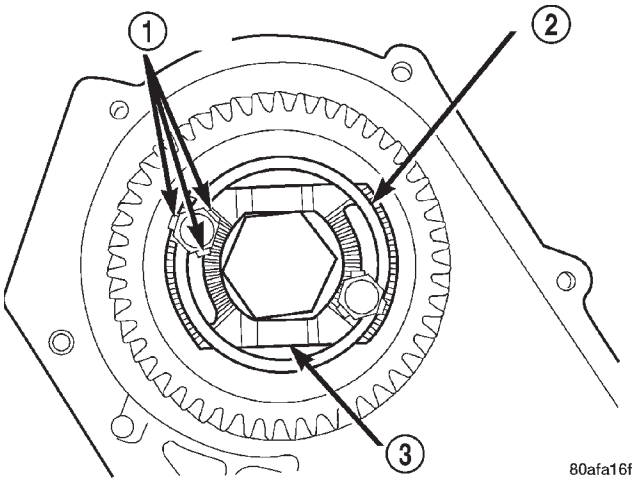

Fig. 112 Bend Tabs On Strap Up Against Flats Of Bolts

1 - RETAINING STRAP TABS
2 - RETAINING STRAP
3 - STIRRUP

(24) Install transfer shaft bearing cone using Tool 6052 (Fig. 113).

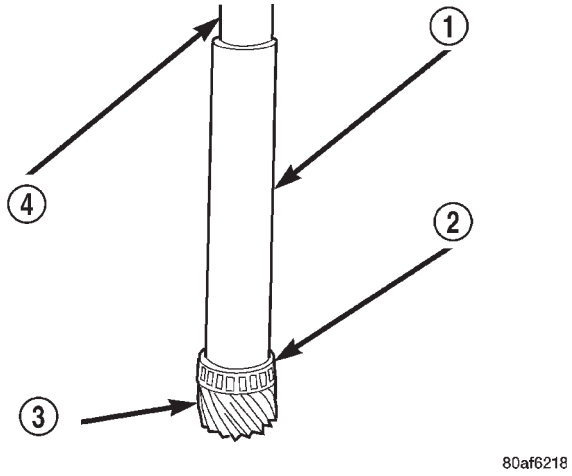

Fig. 113 Install Transfer Shaft Bearing Cone

1 - TOOL 6052
2 - NEW BEARING CONE
3 - TRANSFER SHAFT
4 - ARBOR PRESS RAM

(25) Install bearing cup and oil baffle to transfer shaft (Fig. 114).

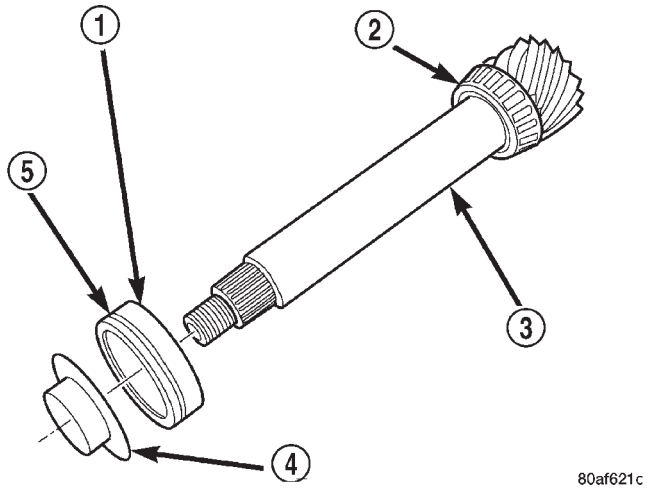

Fig. 114 Install Bearing Cup to Shaft

1 - BEARING CUP
2 - BEARING CONE
3 - TRANSFER SHAFT
4 - OIL BAFFLE
5 - O-RING

(26) Using Tool 5049A, install transfer shaft (Fig. 115).

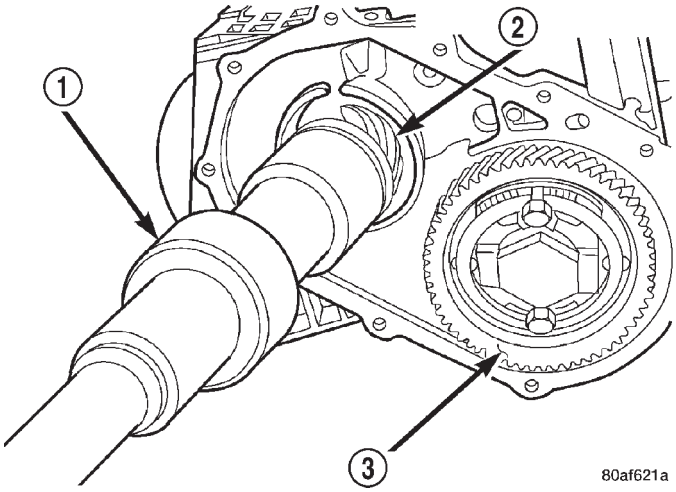

Fig. 115 Install Transfer Shaft

1 - SPECIAL TOOL 5049–A
2 - TRANSFER SHAFT
3 - OUTPUT GEAR

41TE AUTOMATIC TRANSAXLE (Continued)

(27) Using Tool 6051, install transfer shaft bearing snap ring (Fig. 116).

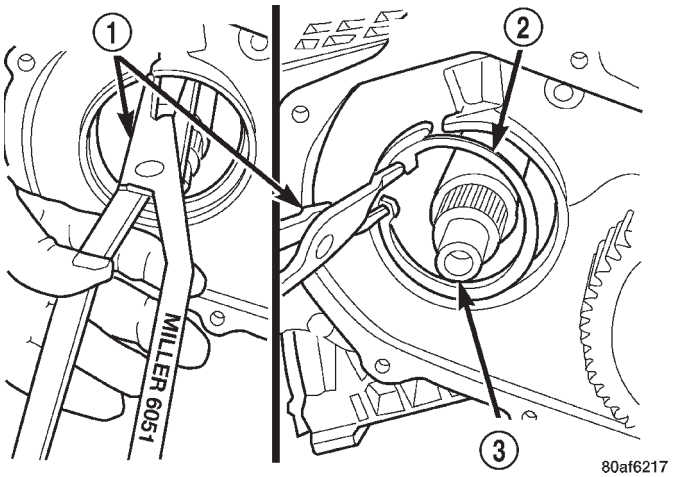

Fig. 116 Install Transfer Shaft Bearing Snap Ring

1 - SNAP RING PLIERS TOOL 6051
2 - TRANSFER SHAFT BEARING SNAP RING
3 - TRANSFER SHAFT

(28) Install transfer shaft bearing cup into retainer using Tool 6061 (Fig. 117).

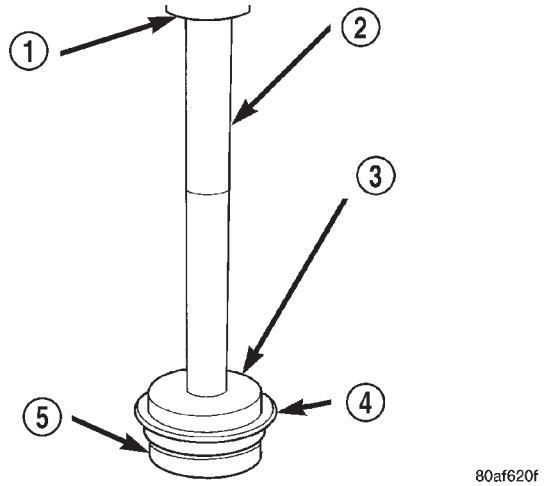

Fig. 117 Install Transfer Shaft Bearing Cup Into Retainer

1 - ARBOR PRESS RAM
2 - HANDLE C-4171
3 - TOOL 6061
4 - TRANSFER SHAFT BEARING CUP RETAINER
5 - USE REMOVED BEARING CUP TO SUPPORT RETAINER

(29) Install bearing cup retainer to transaxle (Fig. 118).

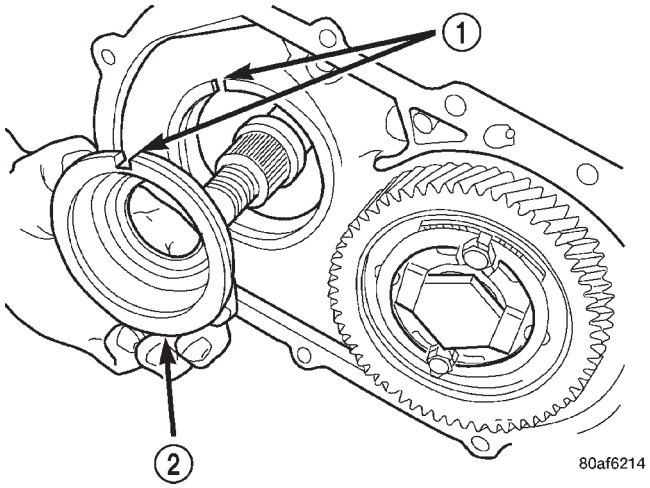

Fig. 118 Remove Bearing Cup Retainer

1 - ALIGN INDEXING TAB TO SLOT
2 - BEARING CUP RETAINER

(30) Install transfer gear bearing cone to transfer gear using Tool 5052 (Fig. 119).

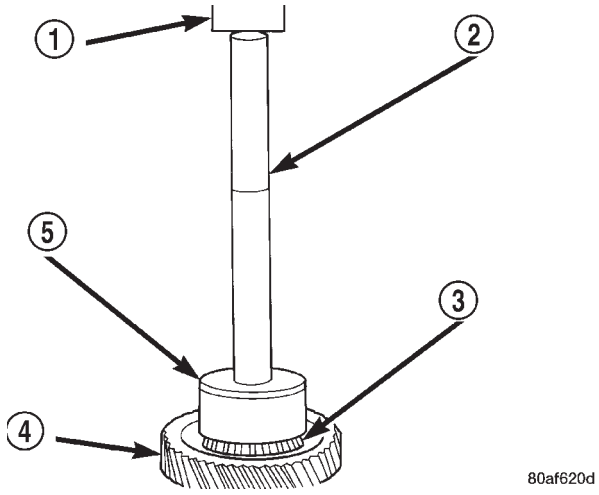

Fig. 119 Install Transfer Gear Bearing Cone

1 - ARBOR PRESS RAM
2 - HANDLE C-4171
3 - NEW BEARING CONE
4 - TRANSFER SHAFT GEAR
5 - TOOL 5052

41TE AUTOMATIC TRANSAXLE (Continued)

(31) **TRANSFER GEAR BEARING ADJUSTMENT:**

(a) Install a 4.66 mm (0.184 in.) gauging shim on the transfer shaft (Fig. 120).

(b) Install transfer shaft gear using Tool 6261. Using Tool 6259, install transfer shaft gear retaining nut to 271 N·m (200 ft. lbs.).

(c) Measure end play. Attach Tool L4432 to the transfer gear.

(d) Mount a steel ball with grease into the end of the transfer shaft.

(e) Push and pull the gear while rotating back and forth to ensure seating of the bearing rollers.

(f) Using a dial indicator, measure transfer shaft end play.

(g) Refer to the transfer shaft bearing shim chart for the required shim combination to obtain the proper bearing setting.

(h) Use Tool 6259 to remove the retaining nut and washer. Remove the transfer shaft gear using Tool L4407A.

(i) Remove the gauging shim (Fig. 120) and install the proper shim indicated by the chart.

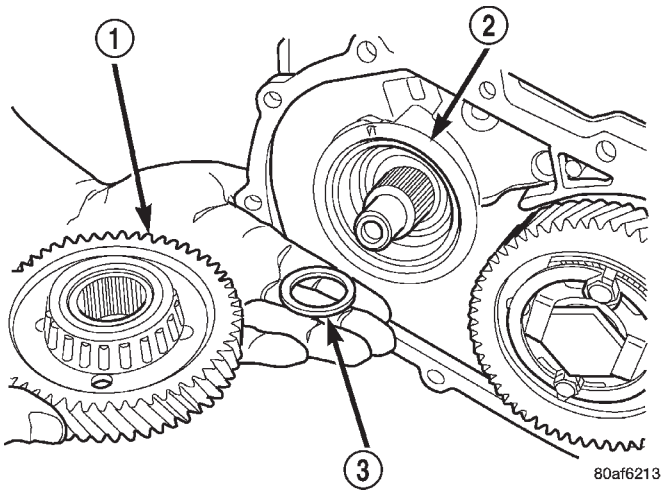

Fig. 120 Install Transfer Shaft Gear and (Select) Shim

1 - TRANSFER SHAFT GEAR
2 - BEARING CUP RETAINER
3 - SHIM (SELECT)

TRANSFER SHAFT BEARING SHIM CHART

End Play	Shim Needed	Part Number	End Play	Shim Needed	Part Number
0.05mm (0.002 in.)	4.66mm (0.183 in.)	4505588AB	0.76mm (0.030 in.)	3.94mm (0.155 in.)	4412818AB
0.08mm (0.003 in.)	4.62mm (0.182 in.)	4412835AB	0.79mm (0.031 in.)	3.90mm (0.154 in.)	4412817AB
0.10mm (0.004 in.)	4.58mm (0.180 in.)	4412834AB	0.81mm (0.032 in.)	3.90mm (0.154 in.)	4412817AB
0.13mm (0.005 in.)	4.58mm (0.180 in.)	4412834AB	0.84mm (0.033 in.)	3.86mm (0.152 in.)	4412816AB
0.15mm (0.006 in.)	4.54mm (0.178 in.)	4412833AB	0.86mm (0.034 in.)	3.82mm (0.150 in.)	4412815AB
0.18mm (0.007 in.)	4.50mm (0.177 in.)	4412832AB	0.89mm (0.035 in.)	3.82mm (0.150 in.)	4412815AB
0.20mm (0.008 in.)	4.50mm (0.177 in.)	4412832AB	0.91mm (0.036 in.)	3.78mm (0.149 in.)	4412814AB
0.23mm (0.009 in.)	4.46mm (0.175 in.)	4412831AB	0.94mm (0.037 in.)	3.74mm (0.147 in.)	4412813AB
0.25mm (0.010 in.)	4.46mm (0.175 in.)	4412831AB	0.97mm (0.038 in.)	3.74mm (0.147 in.)	4412813AB
0.28mm (0.011 in.)	4.42mm (0.174 in.)	4412830AB	0.99mm (0.039 in.)	3.70mm (0.146 in.)	4412812AB
0.30mm (0.012 in.)	4.38mm (0.172 in.)	4412829AB	1.02mm (0.040 in.)	3.66mm (0.144 in.)	4412811AB
0.33mm (0.013 in.)	4.38mm (0.172 in.)	4412829AB	1.04mm (0.041 in.)	3.66mm (0.144 in.)	4412811AB

41TE AUTOMATIC TRANSAXLE (Continued)

End Play	Shim Needed	Part Number	End Play	Shim Needed	Part Number
0.36mm (0.014 in.)	4.34mm (0.171 in.)	4412828AB	1.07mm (0.042 in.)	3.62mm (0.143 in.)	4412810AB
0.38mm (0.015 in.)	4.30mm (0.169 in.)	4412827AB	1.08mm (0.043 in.)	3.62mm (0.143 in.)	4412810AB
0.41mm (0.016 in.)	4.30mm (0.169 in.)	4412827AB	1.12mm (0.044 in.)	3.58mm (0.141)	4412809AB
0.43mm (0.017 in.)	4.26mm (0.168 in.)	4412826AB	1.14mm (0.045 in.)	3.54mm (0.139 in.)	4412808AB
0.46mm (0.018 in.)	4.22mm (0.166 in.)	4412825AB	1.17mm (0.046 in.)	3.54mm (0.139 in.)	4412808AB
0.48mm (0.019 in.)	4.22mm (0.166 in.)	4412825AB	1.19mm (0.047 in.)	3.50mm (0.138 in.)	4412807AB
0.50mm (0.020 in.)	4.18mm (0.165 in.)	4412824AB	1.22mm (0.048 in.)	3.46mm (0.136 in.)	4412806AB
0.53mm (0.021 in.)	4.18mm (0.165 in.)	4412824AB	1.24mm (0.049 in.)	3.46mm (0.136 in.)	4412806AB
0.56mm (0.022 in.)	4.14mm (0.163 in.)	4412823AB	1.27mm (0.050 in.)	3.42mm (0.135 in.)	4412805AB
0.58mm (0.023 in.)	4.10mm (0.161 in.)	4412822AB	1.30mm (0.051 in.)	3.38mm (0.133 in.)	4412804AB
0.61mm (0.024 in.)	4.10mm (0.161 in.)	4412822AB	1.32mm (0.052 in.)	3.38mm (0.133 in.)	4412804AB
0.64mm (0.025 in.)	4.06mm (0.160 in.)	4412821AB	1.35mm (0.053 in.)	3.34mm (0.132 in.)	4412803AB
0.66mm (0.026 in.)	4.02mm (0.158 in.)	4412820AB	1.37mm (0.054 in.)	3.34mm (0.132 in.)	4412803AB
0.69mm (0.027 in.)	4.02mm (0.158 in.)	4412820AB	1.40mm (0.055 in.)	3.30mm (0.130 in.)	4412802AB
0.71mm (0.028 in.)	3.98mm (0.157 in.)	4412819AB	1.45mm (0.057 in	3.26mm (0.128 in.)	4412801AB
0.74mm (0.029 in.)	3.94mm (0.155 in.)	4412818AB	1.47mm (0.058 in.)	2.22mm (0.127 in.)	4505570AB

41TE AUTOMATIC TRANSAXLE (Continued)

(32) Install the transfer shaft gear using Tool 6261 (Fig. 121).

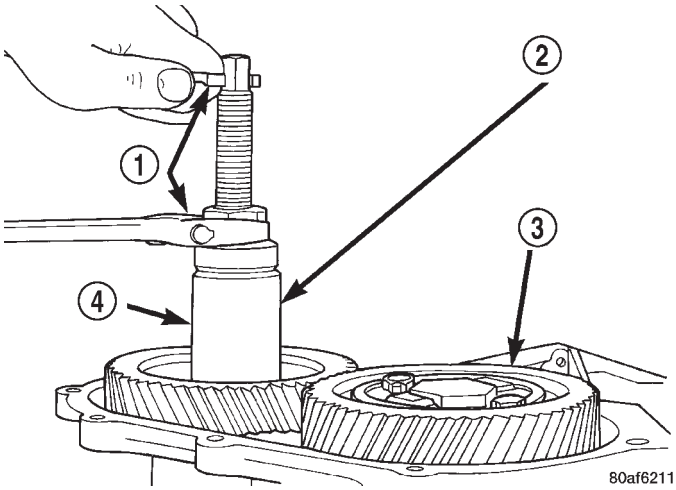

Fig. 121 Install Transfer Shaft Gear

1 - WRENCHES
2 - SPECIAL TOOL 6261
3 - OUTPUT GEAR
4 - TRANSFER SHAFT GEAR

CAUTION: Install a NEW retaining nut, as the original nut MUST NOT be reused.

(33) Install the new retaining nut and washer.

(34) Using Tool 6259, torque transfer gear retaining nut to 271 N·m 200 ft. lbs.) (Fig. 122).

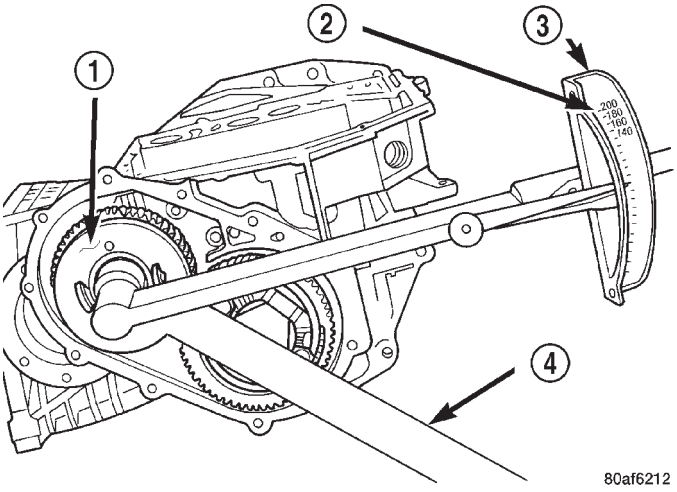

Fig. 122 Tighten Transfer Gear Nut to 271 N•m (200 ft. lbs.)

1 - TRANSFER SHAFT GEAR
2 - 200 FT. LBS.
3 - TORQUE WRENCH
4 - SPECIAL TOOL 6259

(35) Measure transfer shaft end play. **Transfer shaft end play should be within 0.05-0.10 mm (0.002-0.004 in.).** If the end play is too high, install a 0.04 mm (0.0016 in.) thicker shim. If the end play is too low, install a 0.04 mm (0.0016 in.) thinner shim. Repeat until 0.05-0.10 mm (0.002-0.004 in.) end play is obtained.

(36) Install a bead of Mopar® ATF RTV (MS-GF41) to transfer gear cover (Fig. 123).

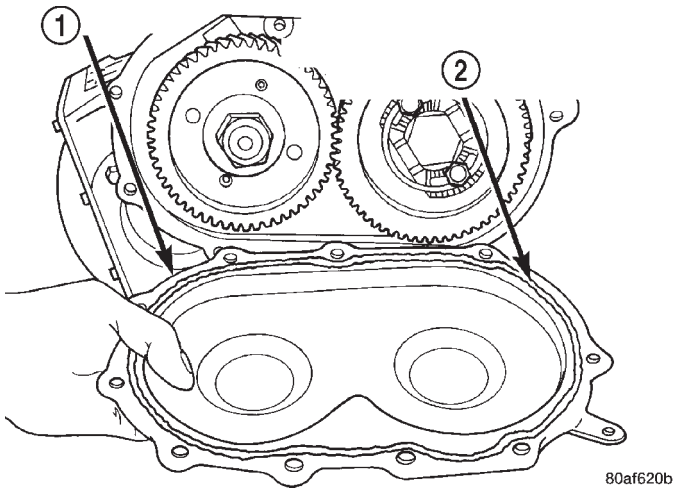

Fig. 123 Install Rear Cover

1 - REAR COVER
2 - 1/8 INCH BEAD OF MOPAR® ATF RTV (MS-GF41) AS SHOWN

(37) Install transfer gear cover-to-case bolts and torque to 20 N·m (175 in. lbs.) torque (Fig. 124).

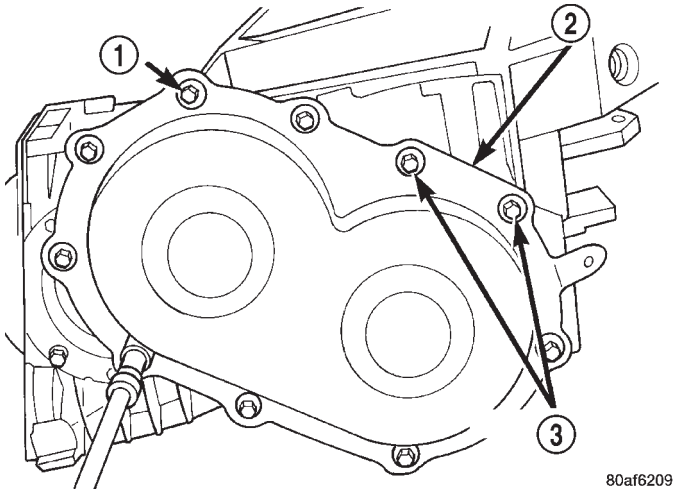

Fig. 124 Install Rear Cover Bolts

1 - REAR COVER BOLTS
2 - REAR COVER
3 - USE SEALANT ON BOLTS

41TE AUTOMATIC TRANSAXLE (Continued)

(38) Install low/reverse clutch pack (Fig. 125). Leave uppermost disc out until snap ring is installed.

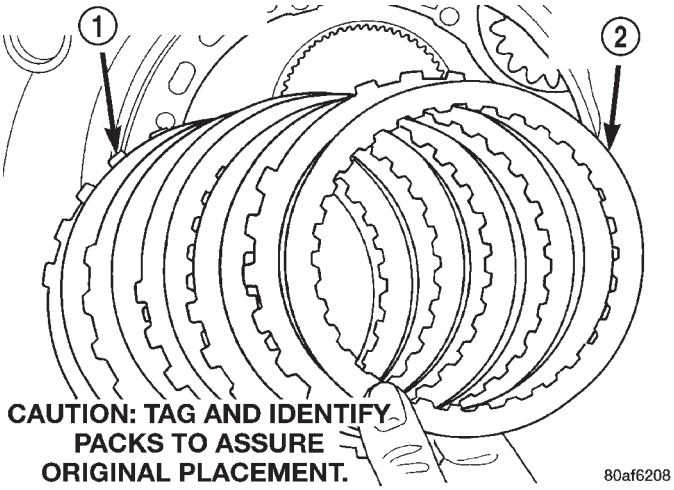

Fig. 125 Install Low/Reverse Clutch Pack

1 - CLUTCH PLATES (5)
2 - CLUTCH DISCS (5)

(39) Install low/reverse reaction plate flat snap ring (Fig. 126).

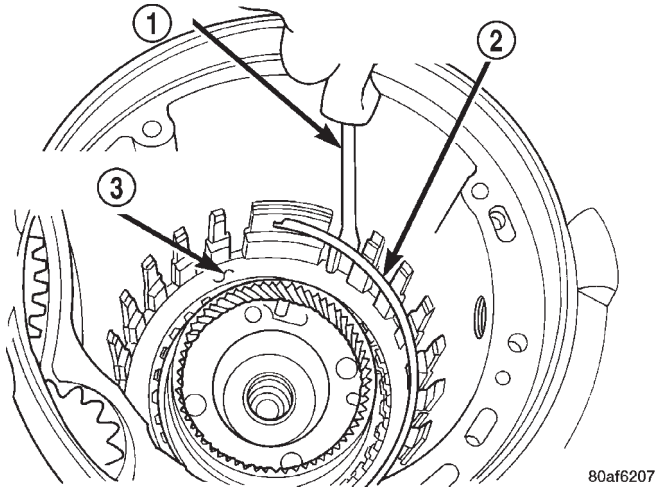

Fig. 126 Install Low/Reverse Reaction Plate Snap Ring

1 - SCREWDRIVER
2 - LOW/REVERSE REACTION PLATE FLAT SNAP RING
3 - DO NOT SCRATCH CLUTCH PLATE

(40) Install remaining low/reverse clutch disc (Fig. 127).

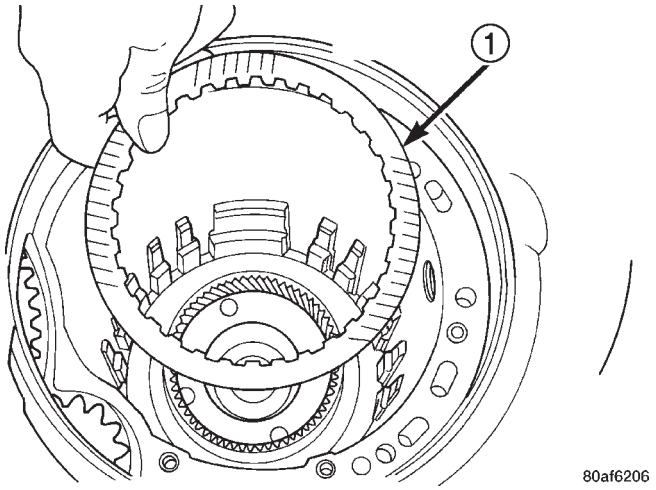

Fig. 127 Install One Disc

1 - ONE DISC FROM LOW/REVERSE CLUTCH

(41) Install low/reverse reaction plate with flat side up (Fig. 128).

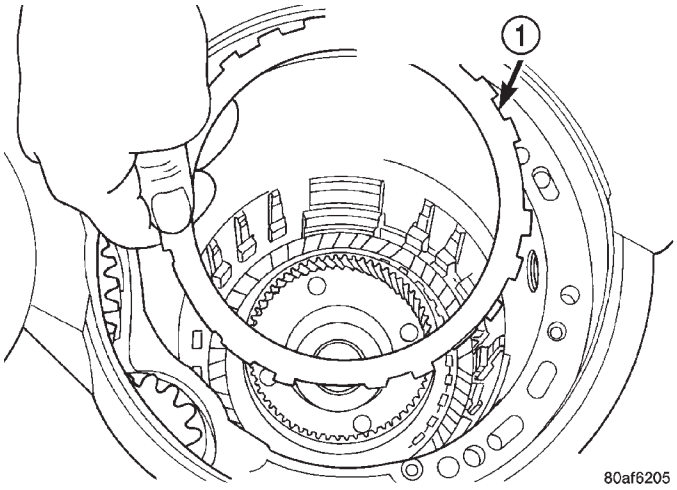

Fig. 128 Install Low/Reverse Reaction Plate

1 - LOW/REVERSE REACTION PLATE (FLAT SIDE UP)

41TE AUTOMATIC TRANSAXLE (Continued)

(42) Install tapered snap ring (with tapered side up) as shown in (Fig. 129) (Fig. 130).

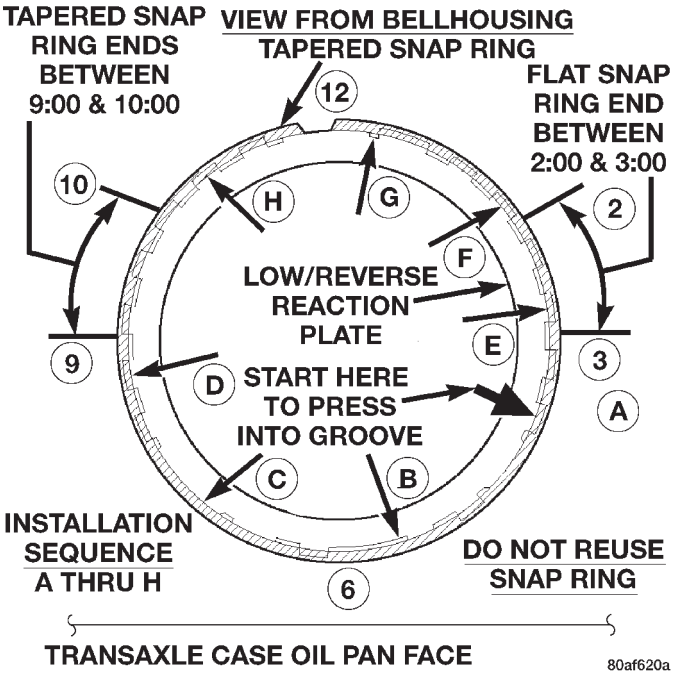

Fig. 129 Tapered Snap Ring Instructions

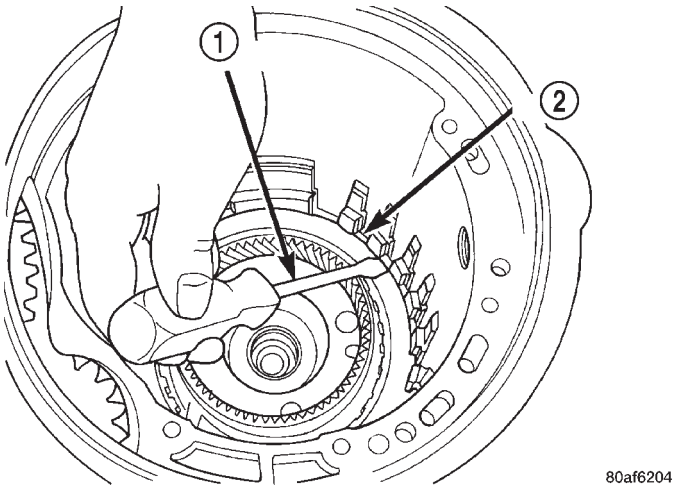

Fig. 130 Snap Ring Installed

1 - SCREWDRIVER
2 - TAPERED SNAP RING (INSTALL AS SHOWN)

(43) Set up dial indicator as shown in (Fig. 131) to measure low/reverse clutch clearance. Press down on clutch pack with finger and zero dial indicator. **Low/Reverse clutch pack clearance is 0.89-1.47 mm (0.035-0.058 in.)**. Set up indicator and record measurement in four (4) places. Take average of readings and select the proper low/reverse reaction plate to achieve specifications.

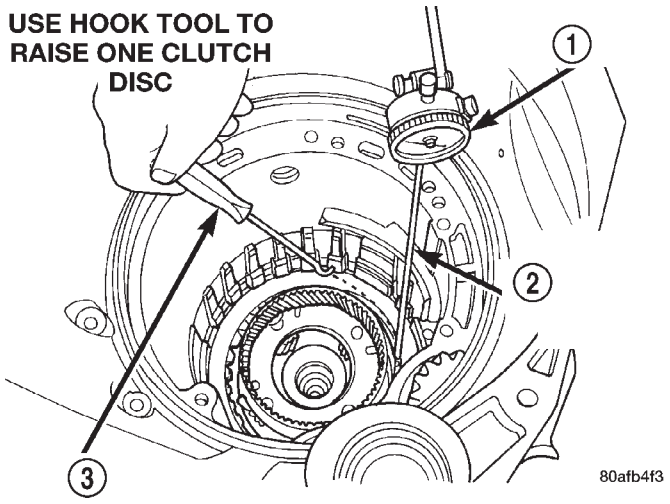

Fig. 131 Check Low/Reverse Clutch Clearance

1 - DIAL INDICATOR
2 - DIAL INDICATOR TIP TOOL 6268
3 - HOOK TOOL

LOW/REVERSE REACTION PLATE CHART

PART NUMBER	THICKNESS
4799846AA	5.88 mm (0.232 in.)
4799847AA	6.14 mm (0.242 in.)
4799848AA	6.40 mm (0.252 in.)
4799849AA	6.66 mm (0.262 in.)
4799855AA	6.92 mm (0.273 in.)

(44) Install 2/4 clutch pack (Fig. 132), staggering clutch plate pads as shown in (Fig. 133).

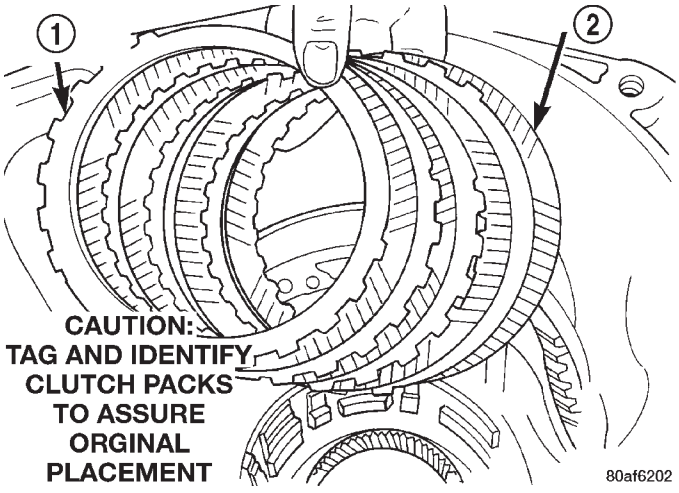

Fig. 132 Install 2/4 Clutch Pack

1 - CLUTCH PLATE (4)
2 - CLUTCH DISC (4)

41TE AUTOMATIC TRANSAXLE (Continued)

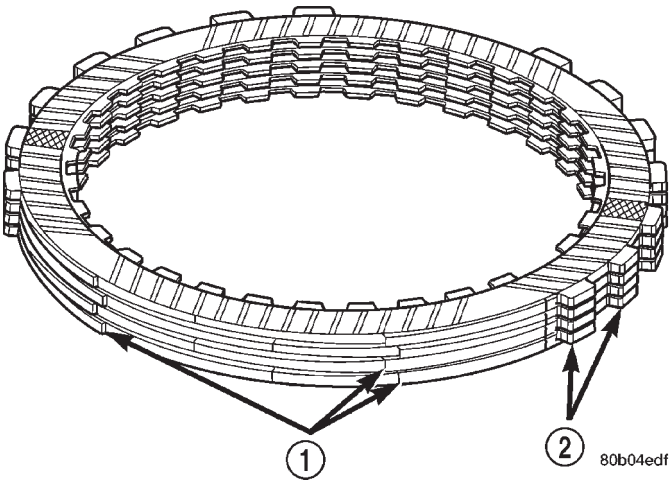

Fig. 133 Stagger 2/4 Clutch Plate Pads

1 - PILOT PADS
2 - LUGS

(45) Orient 2/4 clutch return spring to retainer as shown in (Fig. 134), and install to transaxle (Fig. 135).

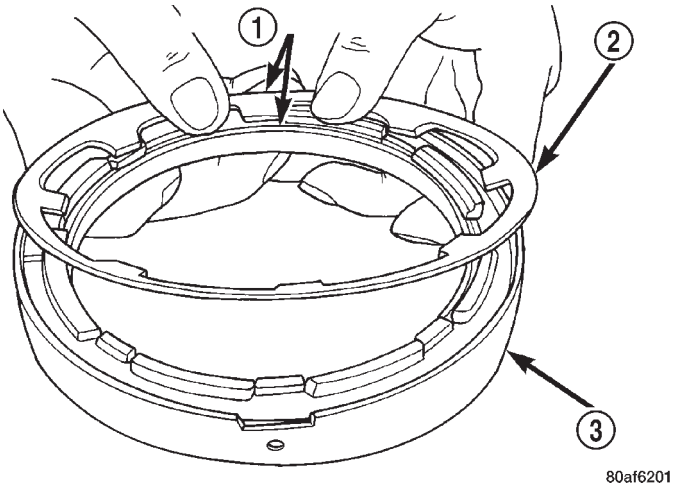

Fig. 134 Proper Orientation of 2/4 Clutch Retainer and Spring

1 - NOTE POSITION
2 - RETURN SPRING
3 - 2/4 CLUTCH RETAINER

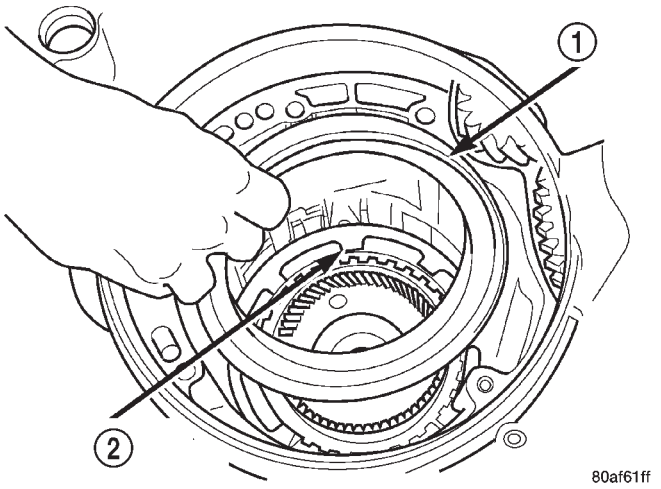

Fig. 135 2/4 Clutch Retainer

1 - 2/4 CLUTCH RETAINER
2 - 2/4 CLUTCH RETURN SPRING

(46) Using tool 5058, compress 2/4 clutch return spring just enough to install snap ring (Fig. 136).

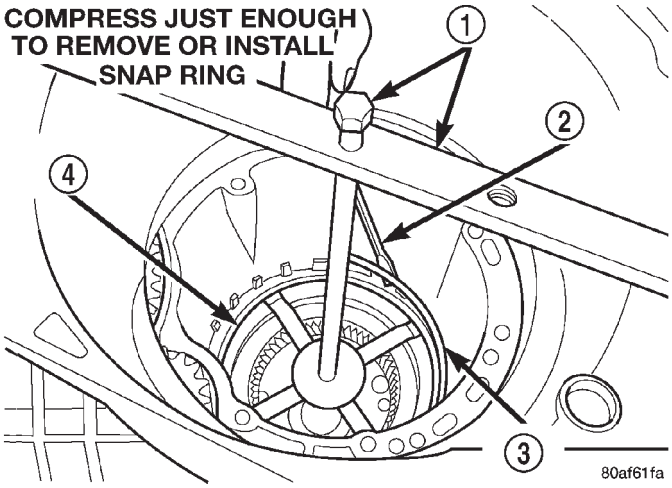

Fig. 136 Install 2/4 Clutch Retainer Snap Ring

1 - TOOL 5058
2 - SCREWDRIVER
3 - SNAP RING
4 - 2/4 CLUTCH RETAINER

41TE AUTOMATIC TRANSAXLE (Continued)

(47) Install snap ring.

(48) Set up dial indicator as shown in (Fig. 137) and measure 2/4 clutch clearance. Press down on clutch pack with finger and zero dial indicator. **2/4 clutch pack clearance is 0.76-2.64 mm (0.030-0.104 in.).** Set up indicator and record measurement in four (4) places. Take average of readings. If clearance is outside this range, the clutch is assembled improperly. **There is no adjustment for 2/4 clutch clearance.**

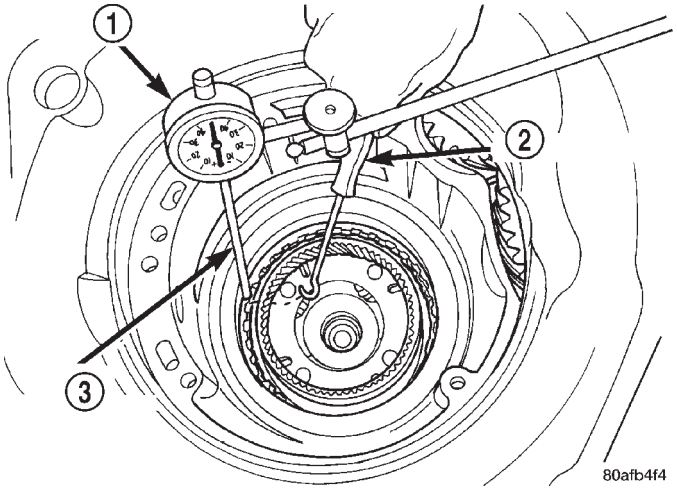

Fig. 137 Check 2/4 Clutch Clearance

1 - DIAL INDICATOR
2 - HOOK TOOL
3 - DIAL INDICATOR TIP TOOL 6268

(49) Install rear sun gear and #7 needle bearing (Fig. 139).

NOTE: The number seven needle bearing has three anti-reversal tabs and is common with the number five and number two position. The orientation should allow the bearing to seat flat against the rear sun gear (Fig. 138). A small amount of petrolatum can be used to hold the bearing to the rear sun gear.

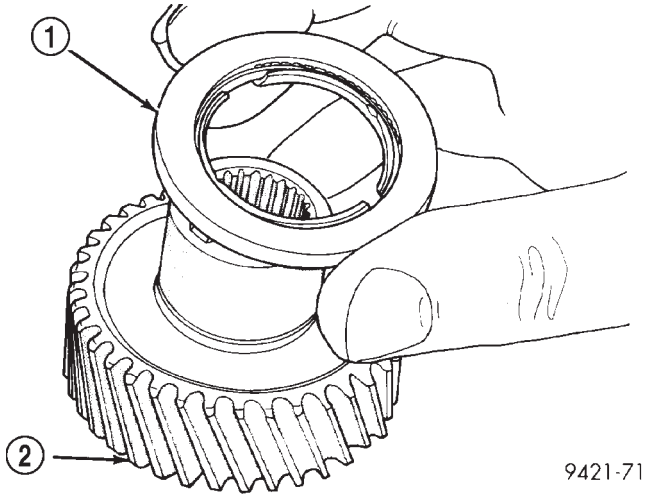

Fig. 138 Number 7 Bearing

1 - #7 NEEDLE BEARING
2 - REAR SUN GEAR

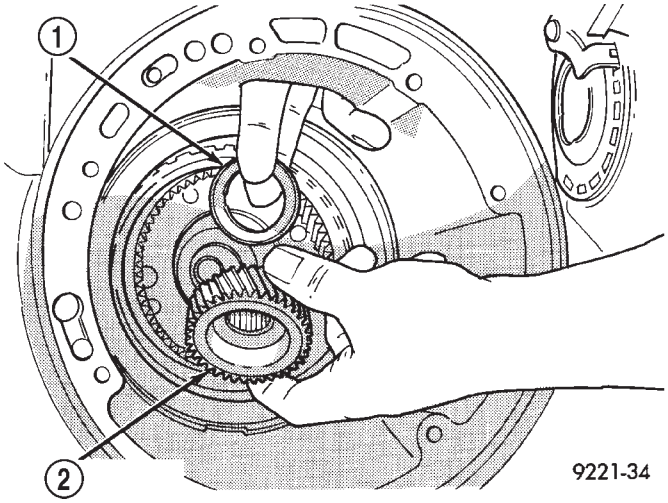

Fig. 139 Install Rear Sun Gear and #7 Needle Bearing

1 - #7 NEEDLE BEARING
2 - REAR SUN GEAR

41TE AUTOMATIC TRANSAXLE (Continued)

(50) Install front carrier/rear annulus assembly and #6 needle bearing (Fig. 140).

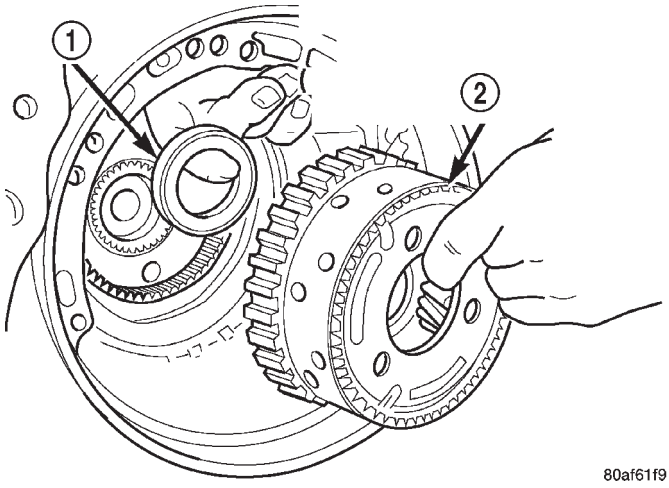

Fig. 140 Install Front Carrier and Rear Annulus Assembly

1 - #6 NEEDLE BEARING
2 - FRONT CARRIER AND REAR ANNULUS ASSEMBLY (TWIST AND PULL OR PUSH TO REMOVE OR INSTALL).

(51) Install front sun gear assembly and #4 thrust washer (Fig. 141).

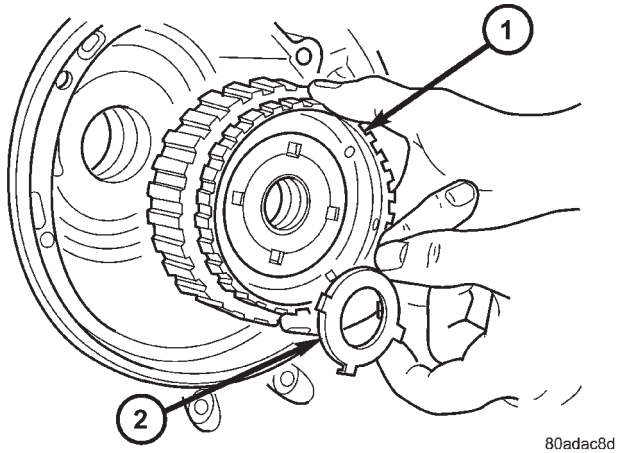

Fig. 141 Install Front Sun Gear Assembly

1 - FRONT SUN GEAR ASSEMBLY
2 - #4 THRUST WASHER (FOUR TABS)

(52) **DETERMINING #4 THRUST PLATE THICKNESS / INPUT SHAFT END PLAY:**

(a) Select the thinnest #4 thrust plate thickness and install to input clutch assembly (Fig. 142). Use petrolatum to retain.

(b) Install input clutch assembly into position and verify that it is completely seated by viewing through input speed sensor hole. If view through input speed sensor hole is not as shown in (Fig. 143), the input clutch assembly is not seated properly.

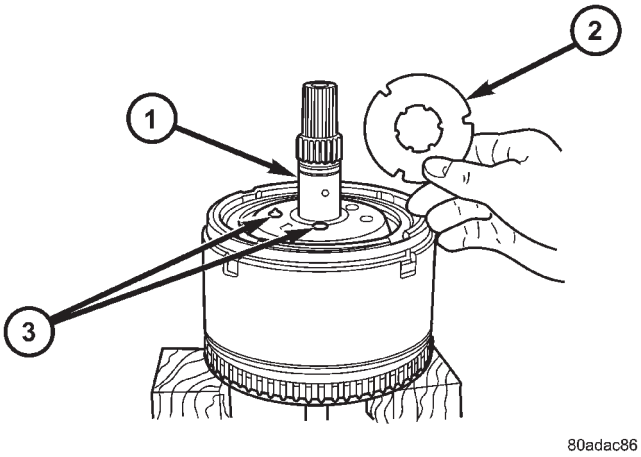

Fig. 142 Select Thinnest No. 4 Thrust Plate

1 - OVERDRIVE SHAFT ASSEMBLY
2 - #4 THRUST PLATE (SELECT)
3 - 3 DABS OF PETROLATUM FOR RETENTION

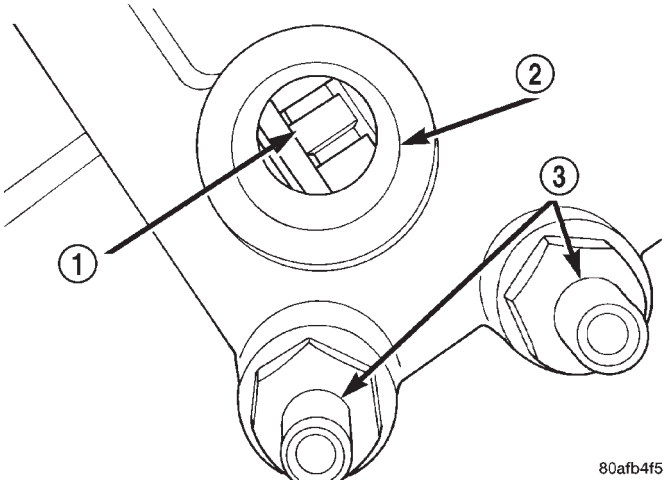

Fig. 143 View Through Input Speed Sensor Hole

1 - INPUT CLUTCH RETAINER
2 - INPUT SPEED SENSOR HOLE
3 - OIL COOLER FITTINGS

41TE AUTOMATIC TRANSAXLE (Continued)

(c) Remove oil pump o-ring (Fig. 144). **Be sure to reinstall oil pump o-ring after selecting the proper #4 thrust plate.**

(d) Set up input shaft for measurement with Indicator Set C3339 and End Play Set 8266 as shown in (Fig. 145).

(e) Measure the input shaft end play with the transaxle in the vertical position. **Input shaft end play must be within 0.005 to 0.025 inch.** For example, if end play reading is 0.055 inch, select No. 4 Thrust Plate which is 0.071 to 0.074 thick. This should provide an input shaft end play reading of 0.020 inch which is within specifications.

(f) Refer to the No. 4 thrust plate chart to select the proper No. 4 thrust plate:

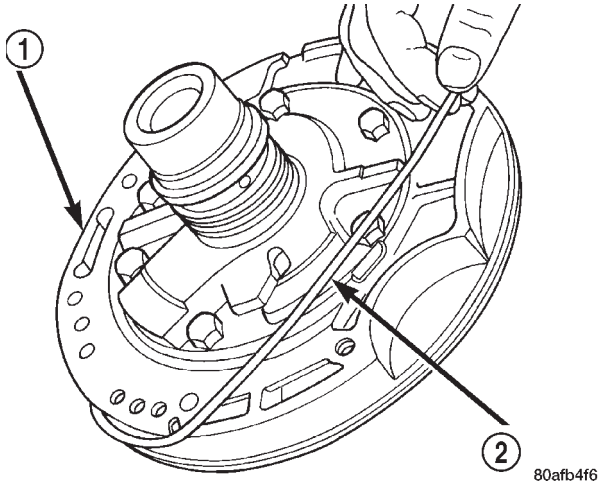

Fig. 144 Remove Oil Pump O-Ring

1 - OIL PUMP ASSEMBLY
2 - O-RING

NO. 4 THRUST PLATE CHART

PART NUMBER	THICKNESS
4431665AB	1.60mm (0.063 in.)
3836237AB	1.73mm (0.068 in.)
4431666AB	1.80mm (0.071 in.)
3836238AB	1.96mm (0.077 in.)
4431667AB	2.03mm (0.080 in.)
3836239AB	2.16mm (0.085 in.)
4431668AB	2.24mm (0.088 in.)
3836240AB	2.39mm (0.094 in.)
4431669AB	2.46mm (0.097 in.)
3836241AB	2.62mm (0.103 in.)
4446670AB	2.67mm (0.105 in.)
4446671AB	2.90mm (0.114 in.)

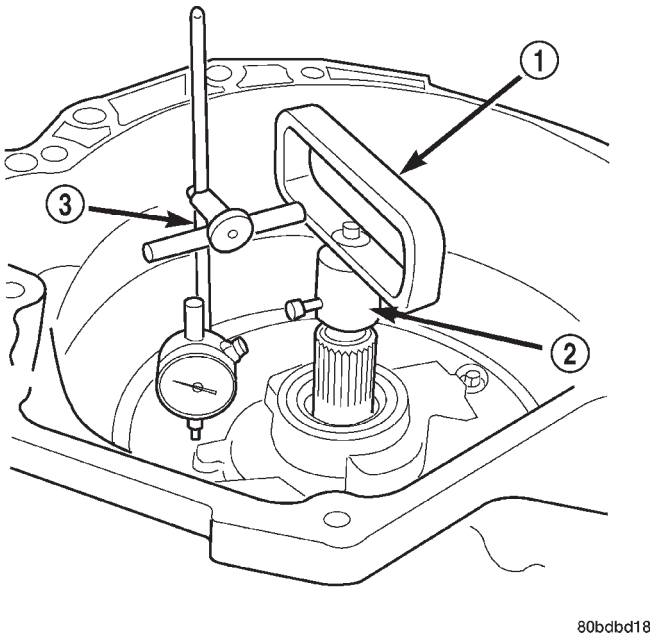

Fig. 145 Measure Input Shaft End Play Using End Play Set 8266

1 - TOOL 8266–8
2 - TOOL 8266–2
3 - TOOL C-3339

(53) Install input clutch assembly (Fig. 146).

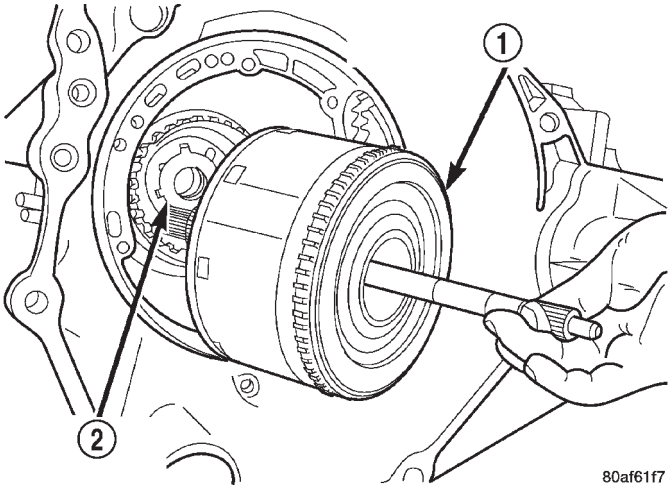

Fig. 146 Install Input Clutch Assembly

1 - INPUT CLUTCH ASSEMBLY
2 - #4 THRUST WASHER

41TE AUTOMATIC TRANSAXLE (Continued)

(54) Install #1 caged needle bearing (Fig. 147).

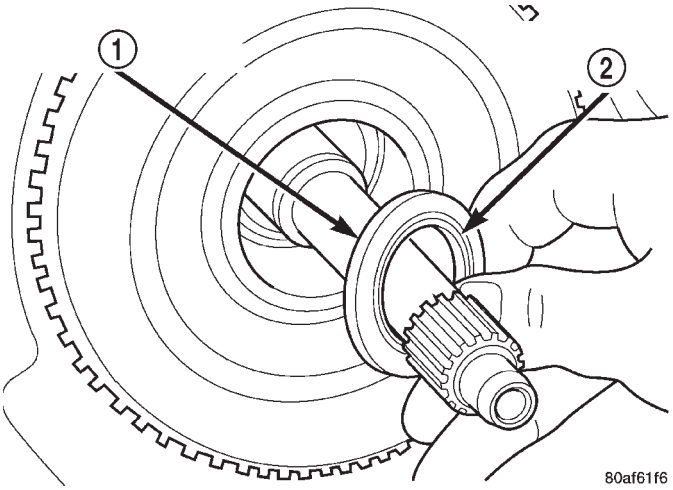

Fig. 147 Install Caged Needle Bearing

1 - #1 CAGED NEEDLE BEARING
2 - NOTE: TANGED SIDE OUT

CAUTION: The cooler bypass valve must be replaced if transaxle failure has occurred. Do not attempt to reuse or clean old valve.

(55) Install cooler bypass valve with o-ring end towards rear of case (Fig. 148).

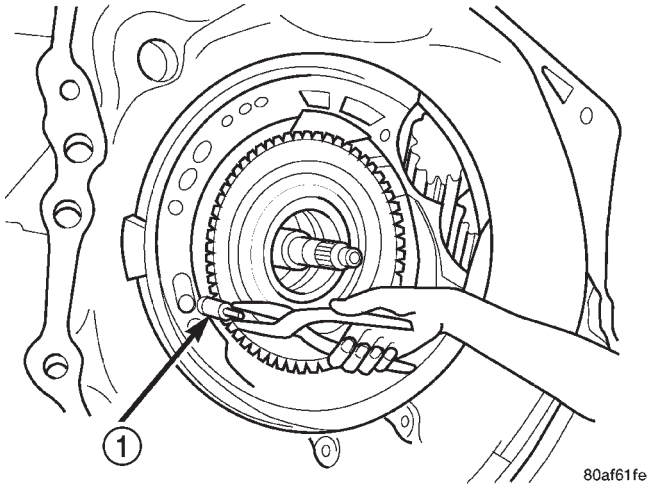

Fig. 148 Install Cooler Bypass Valve

1 - COOLER BYPASS VALVE

(56) Install oil pump gasket (Fig. 149).

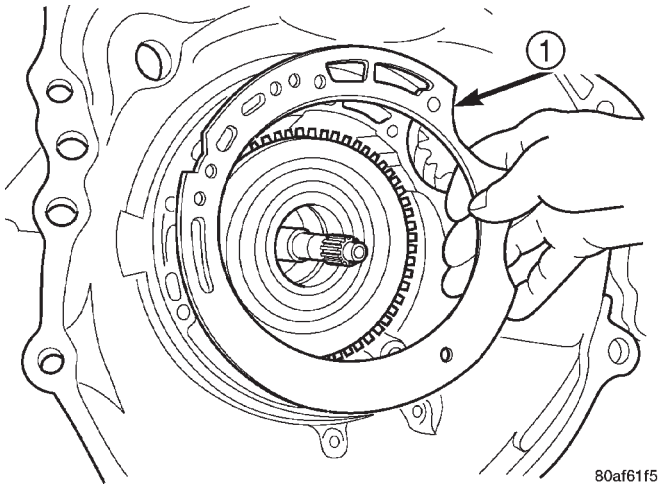

Fig. 149 Install Oil Pump Gasket

1 - PUMP GASKET

(57) Install oil pump assembly (Fig. 150).

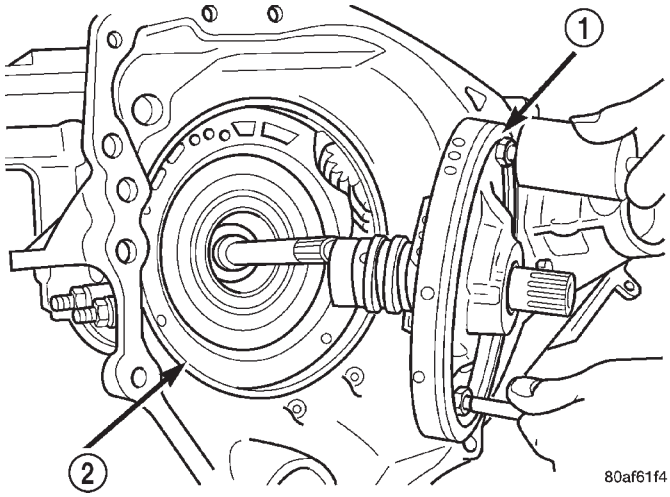

Fig. 150 Install Oil Pump

1 - OIL PUMP
2 - GASKET

41TE AUTOMATIC TRANSAXLE (Continued)

(58) Install oil pump-to-case bolts and torque to 27 N·m (20 ft. lbs.) (Fig. 151).

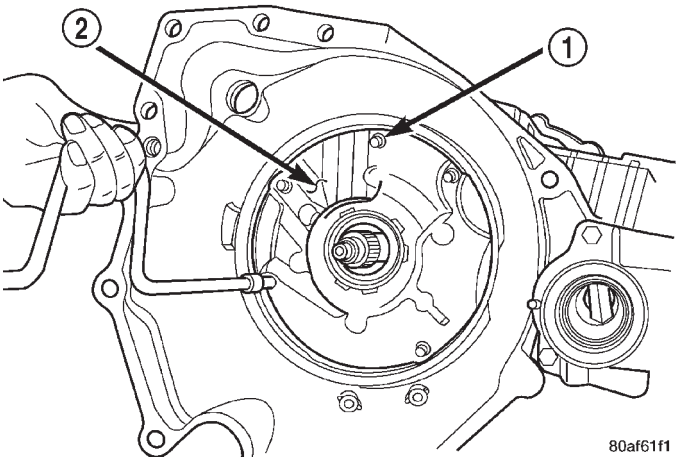

Fig. 151 Install Pump-to-Case Bolts

1 - PUMP ATTACHING BOLTS
2 - PUMP HOUSING

(59) Install low/reverse accumulator (Fig. 152).

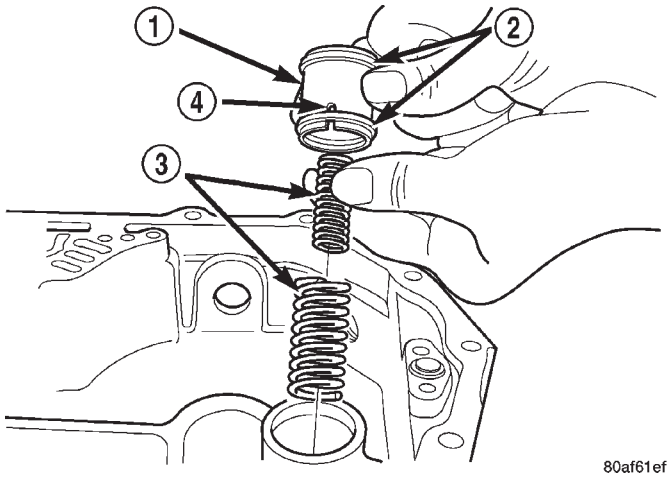

Fig. 152 Install Low/Reverse Accumulator

1 - ACCUMULATOR PISTON
2 - SEAL RINGS
3 - RETURN SPRINGS
4 - (NOTE NOTCH)

(60) Install low/reverse accumulator plug (Fig. 153).

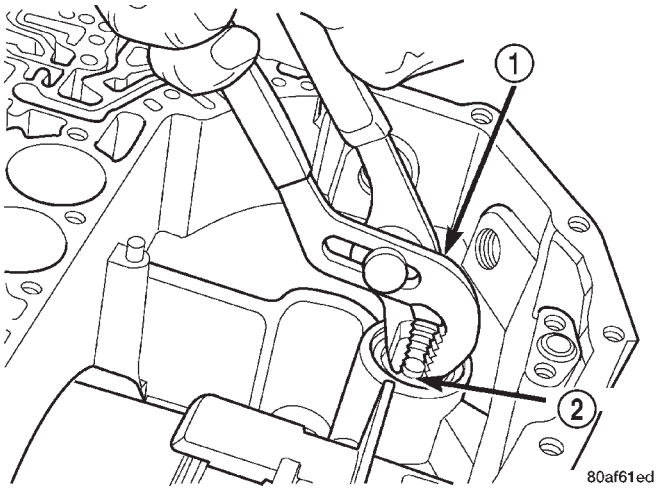

Fig. 153 Install Low/Reverse Accumulator Plug (Cover)

1 - ADJUSTABLE PLIERS
2 - PLUG

(61) Install low/reverse accumulator snap ring (Fig. 154).

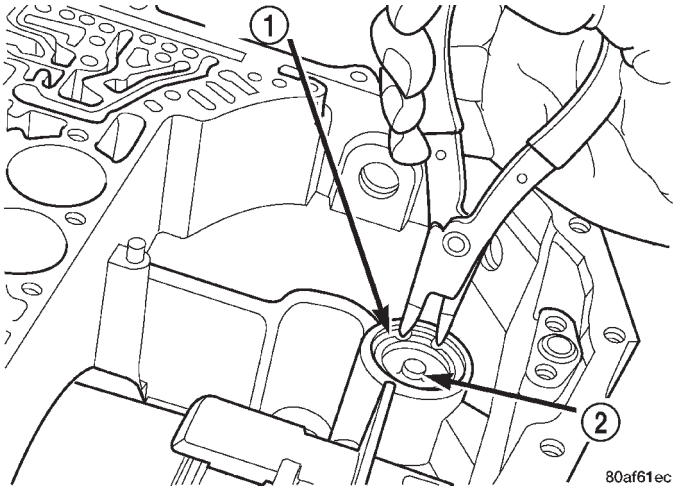

Fig. 154 Install Low/Reverse Accumulator Snap Ring

1 - SNAP RING
2 - PLUG

41TE AUTOMATIC TRANSAXLE (Continued)

NOTE: Depending on engine application, some accumulators will have two springs, and others will have one spring. The springs are color-coded for application and year.

(62) Install underdrive and overdrive accumulators (Fig. 155) (Fig. 156) (Fig. 157).

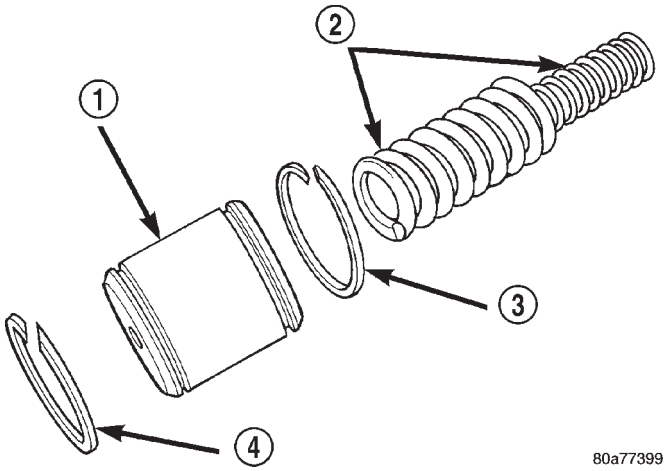

Fig. 155 Accumulator (Underdrive)

1 - ACCUMULATOR PISTON (UNDERDRIVE)
2 - RETURN SPRINGS
3 - SEAL RING
4 - SEAL RING

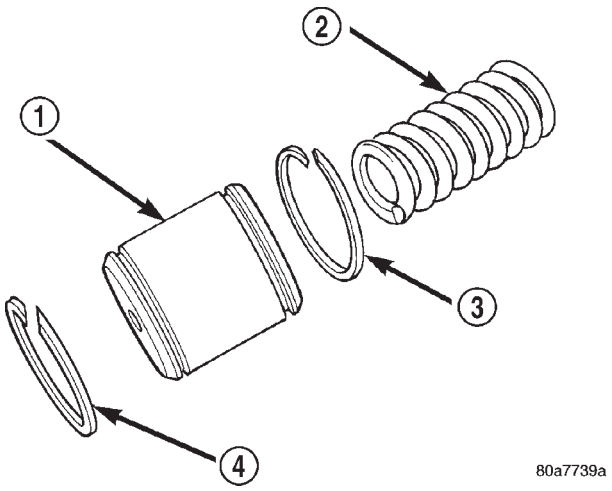

Fig. 156 Accumulator (Overdrive)

1 - ACCUMULATOR PISTON (OVERDRIVE)
2 - RETURN SPRING
3 - SEAL RING
4 - SEAL RING

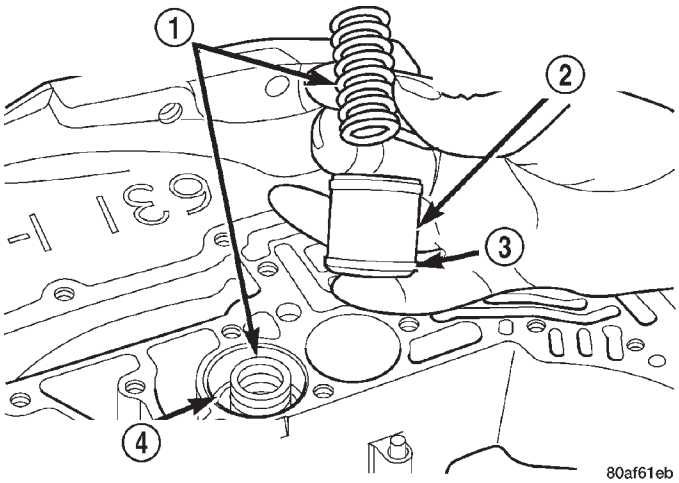

Fig. 157 Install Underdrive and Overdrive Accumulators

1 - RETURN SPRING
2 - UNDERDRIVE CLUTCH ACCUMULATOR
3 - SEAL RING (2)
4 - OVERDRIVE CLUTCH ACCUMULATOR

(63) Install valve body to transaxle (Fig. 158). Rotate manual valve shaft fully clockwise to ease installation. Make sure park rod rollers are positioned within park guide bracket.

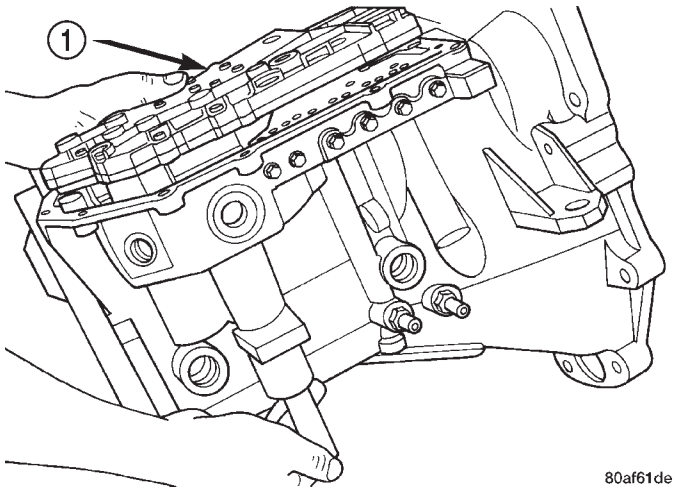

Fig. 158 Install Valve Body

1 - VALVE BODY

41TE AUTOMATIC TRANSAXLE (Continued)

(64) Install and torque valve body-to-case bolts to 12 N·m (105 in. lbs.) (Fig. 159).

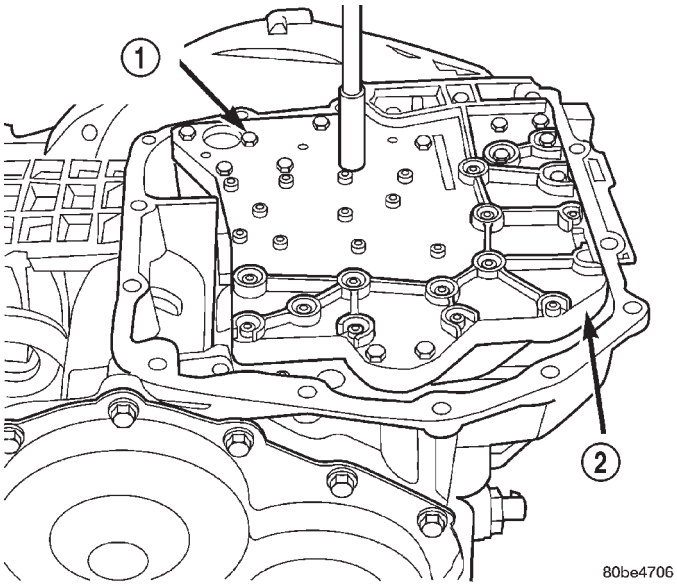

Fig. 159 Install Valve Body-to-Case Bolts

1 - VALVE BODY ATTACHING BOLTS (18)
2 - VALVE BODY

(65) Install oil filter and new o-ring (Fig. 160).

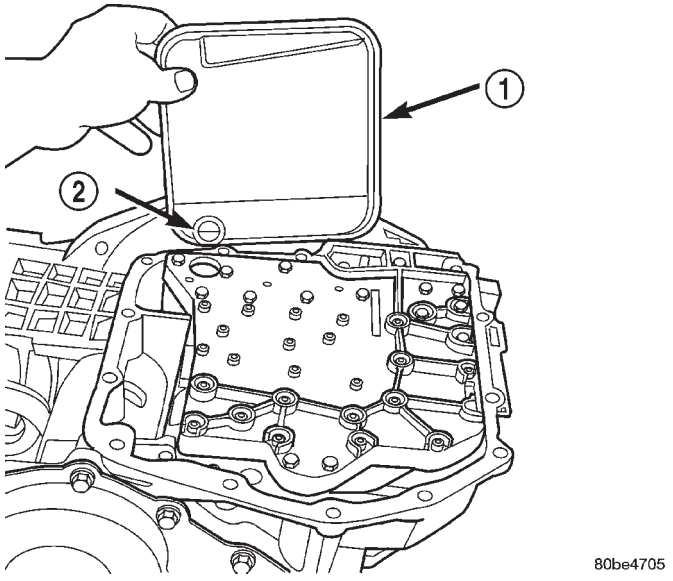

Fig. 160 Install Oil Filter

1 - OIL FILTER
2 - O-RING

(66) Apply an 1/8" bead of Mopar® ATF RTV (MS-GF41) to oil pan and immediately install to case (Fig. 161).

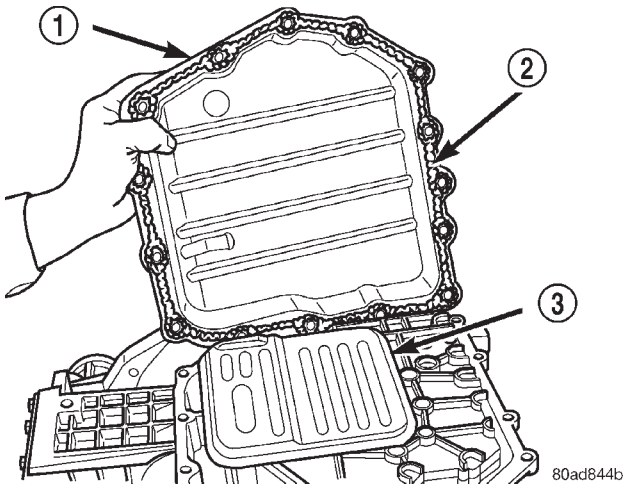

Fig. 161 Install Oil Pan

1 - OIL PAN
2 - 1/8 INCH BEAD OF MOPAR® ATF RTV (MS-GF41)
3 - OIL FILTER

(67) Install oil pan-to-case bolts and torque to 19 N·m (165 in. lbs.).

(68) Install solenoid/pressure switch assembly and gasket to case (Fig. 162).

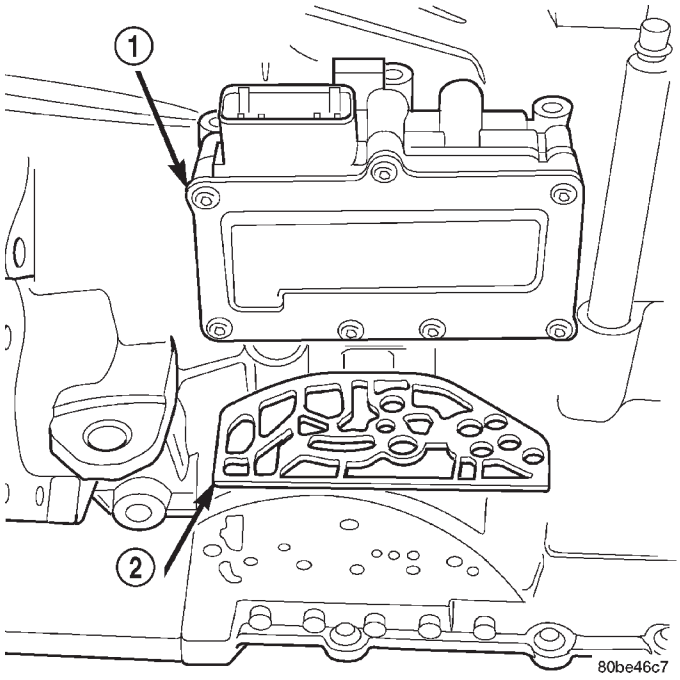

Fig. 162 Solenoid/Pressure Switch Assembly and Gasket

1 - SOLENOID/PRESSURE SWITCH ASSEMBLY
2 - GASKET

41TE AUTOMATIC TRANSAXLE (Continued)

(69) Install and tighten solenoid/pressure switch assembly-to-transaxle case bolts to 12 N·m (110 in. lbs.) (Fig. 163).

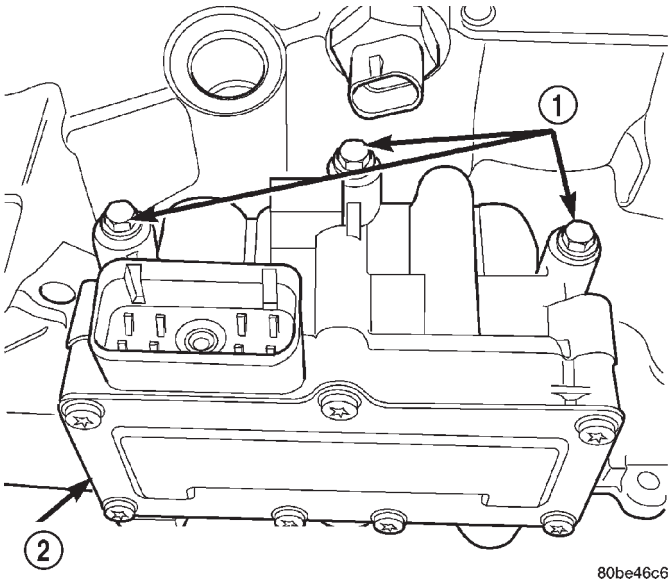

Fig. 163 Attaching Bolts

1 - BOLTS
2 - SOLENOID AND PRESSURE SWITCH ASSEMBLY

(70) Install and torque input and output speed sensors to case to 27 N·m (20 ft. lbs.).

INSTALLATION

NOTE: If transaxle assembly has been replaced or overhauled (clutch and/or seal replacement), it is necessary to perfrom the TCM Quick Learn procedure. (Refer to 8 - ELECTRICAL/ELECTRONIC CONTROL MODULES/TRANSMISSION CONTROL MODULE - STANDARD PROCEDURE)

(1) Using a transmission jack and a helper, position transaxle assembly to engine. Install and torque bellhousing bolts to 95 N·m (70 ft. lbs.).

(2) Install upper mount assembly to transaxle and torque bolts to 54 N·m (40 ft. lbs.) (Fig. 164).

(3) Raise engine/transaxle assembly into position. Install and torque upper mount-to-bracket thru-bolt to 75 N·m (55 ft. lbs.) (Fig. 164).

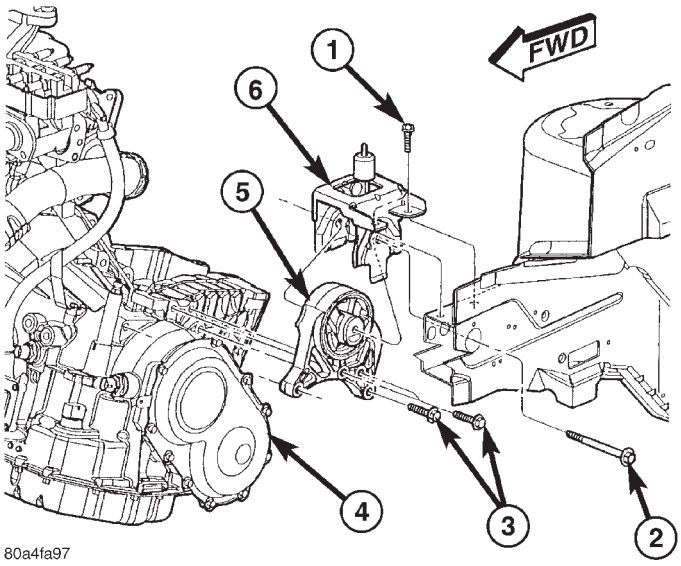

Fig. 164 Left Mount to Bracket and Transaxle

1 - BOLT - BRACKET TO FRAME RAIL 68 N·m (50 ft. lbs.)
2 - BOLT - MOUNT TO RAIL THRU 75 N·m (55 ft. lbs.)
3 - BOLT - LEFT MOUNT TO TRANSAXLE 54 N·m (40 ft. lbs.)
4 - TRANSAXLE
5 - MOUNT - LEFT
6 - BRACKET - LEFT MOUNT

(4) Remove transmission jack and screw jack.

(5) Secure left wheelhouse splash shield.

(6) Install torque converter-to-drive plate bolts and torque to 88 N·m (65 ft. lbs.)

(7) Install inspection cover.

(8) Install lateral bending brace.

(9) Install starter motor.

(10) Install front mount/bracket assembly.

41TE AUTOMATIC TRANSAXLE (Continued)

(11) Align and install rear mount bracket-to-case bolts by hand (Fig. 165). Torque horizontal bolt to 102 N·m (75 ft. lbs.).

(12) AWD models: Install power transfer unit. (Refer to 21 - TRANSMISSION/TRANSAXLE/ POWER TRANSFER UNIT - INSTALLATION)

(13) Install left and right halfshaft assemblies. (Refer to 3 - DIFFERENTIAL & DRIVELINE/HALF SHAFT - INSTALLATION)

(14) Install front wheel/tire assemblies.

(15) Lower vehicle.

(16) Torque remaining rear mount bracket-to-transaxle vertical bolts (Fig. 165) to 102 N·m (75 ft. lbs.).

(17) Install transaxle upper bellhousing-to-block bolts and torque to 95 N·m (70 ft. lbs.).

(18) Install and connect crank position sensor (if equipped).

(19) Connect gearshift cable to upper mount bracket and transaxle manual valve lever (Fig. 166).

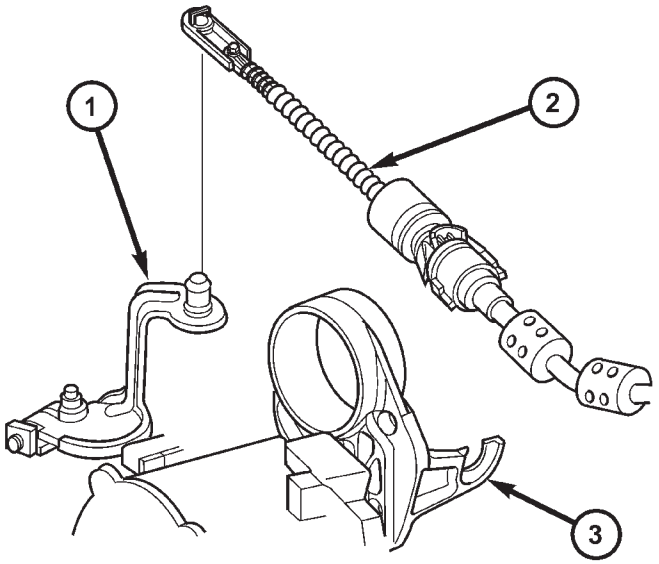

Fig. 166 Gearshift Cable at Transaxle - Typical

1 - MANUAL VALVE LEVER
2 - GEAR SHIFT CABLE
3 - UPPER MOUNT BRACKET

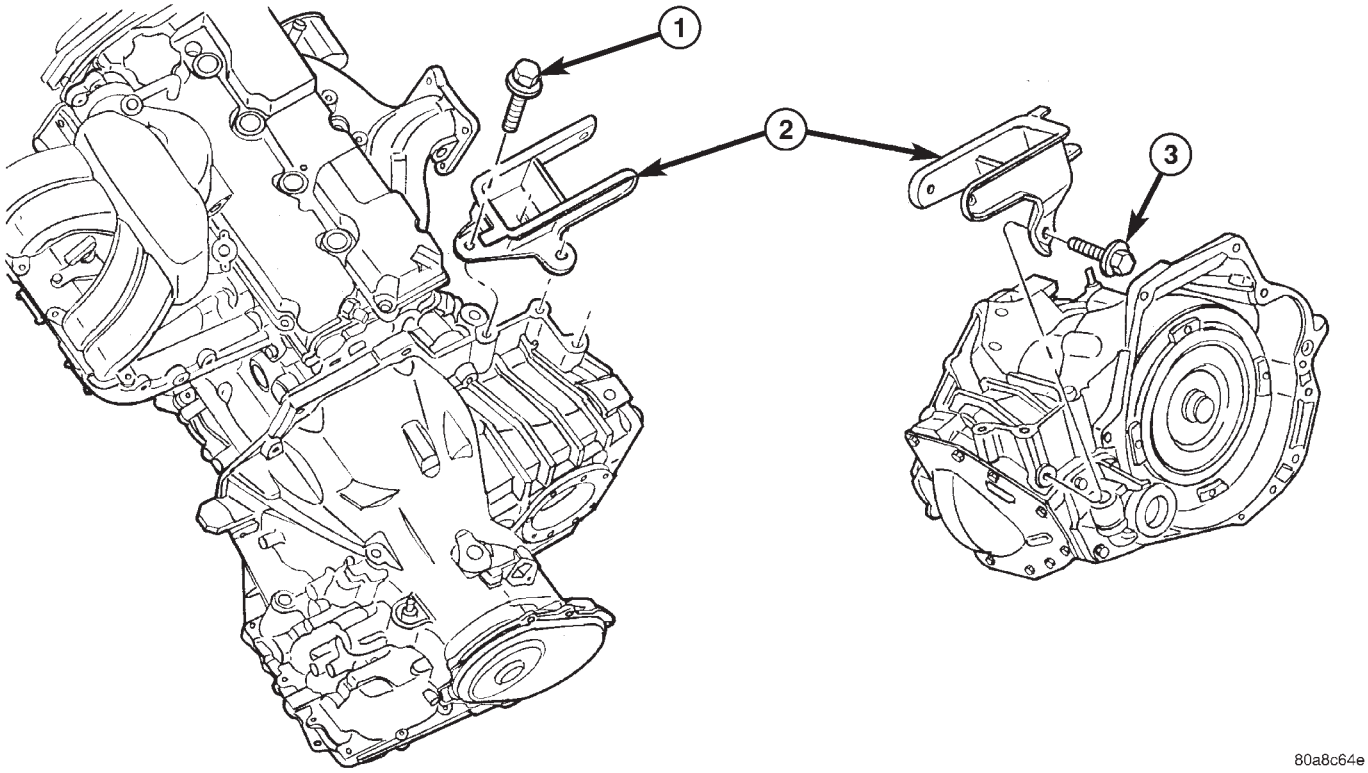

Fig. 165 Rear Mount Bracket - Typical

1 - BOLT - VERTICAL 102 N·m (75 ft. lbs.)
2 - BRACKET - REAR MOUNT
3 - BOLT - HORIZONTAL 102 N·m (75 ft. lbs.)

41TE AUTOMATIC TRANSAXLE (Continued)

(20) Connect solenoid/pressure switch assembly (Fig. 167).

(21) Connect transmission range sensor connector (Fig. 167).

(22) Connect input and output speed sensor connectors (Fig. 167).

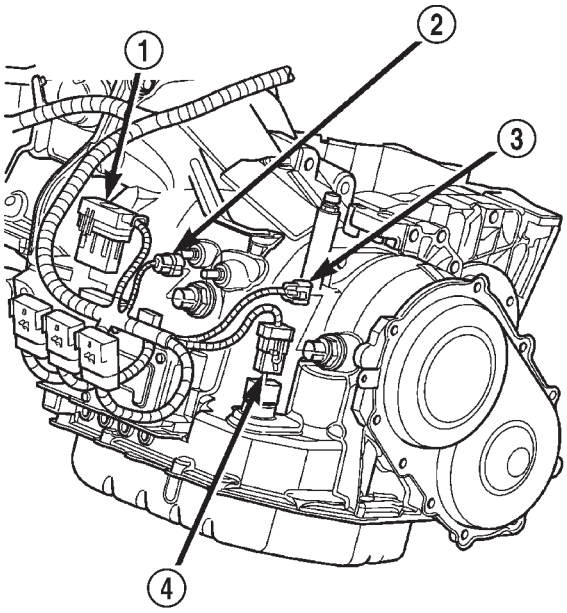

80c4f434

Fig. 167 Component Connector Location - Typical

1 - SOLENOID/PRESSURE SWITCH ASSY. CONNECTOR
2 - INPUT SPEED SENSOR CONNECTOR
3 - OUTPUT SPEED SENSOR CONNECTOR
4 - TRANSMISSION RANGE SENSOR CONNECTOR

(23) Remove plugs and install transaxle oil cooler line service splice kit. Refer to instructions included with kit.

(24) Remove plug and Install fluid level indicator/tube assembly.

(25) Install coolant recovery bottle (Fig. 168).

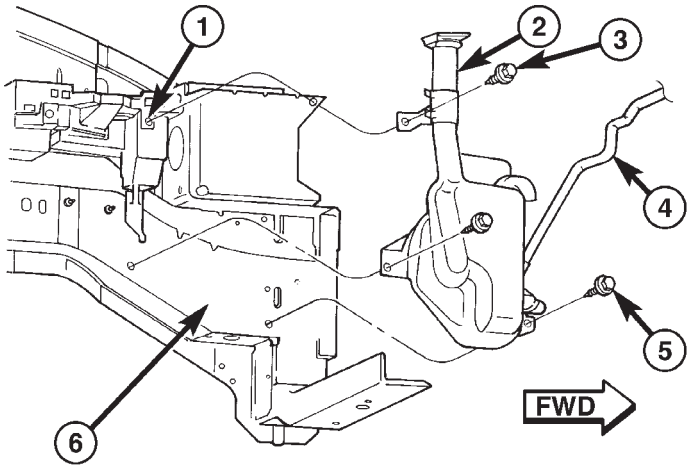

809b9cf4

Fig. 168 Coolant Recovery Bottle

1 - UPPER BOLT ATTACHING TO BATTERY TRAY
2 - COOLANT RECOVERY CONTAINER
3 - UPPER BOLT
4 - HOSE
5 - LOWER BOLT (QTY. 2)
6 - LEFT SIDE FRAME RAIL

(26) Install battery shield.

(27) Connect battery cables.

(28) Fill transaxle with suitable amount of ATF+4 (Automatic Transmission Fluid—Type 9602). (Refer to 21 - TRANSMISSION/TRANSAXLE/AUTOMATIC - 41TE/FLUID - STANDARD PROCEDURE)

41TE AUTOMATIC TRANSAXLE (Continued)

SCHEMATICS AND DIAGRAMS

41TE TRANSAXLE HYDRAULIC SCHEMATICS

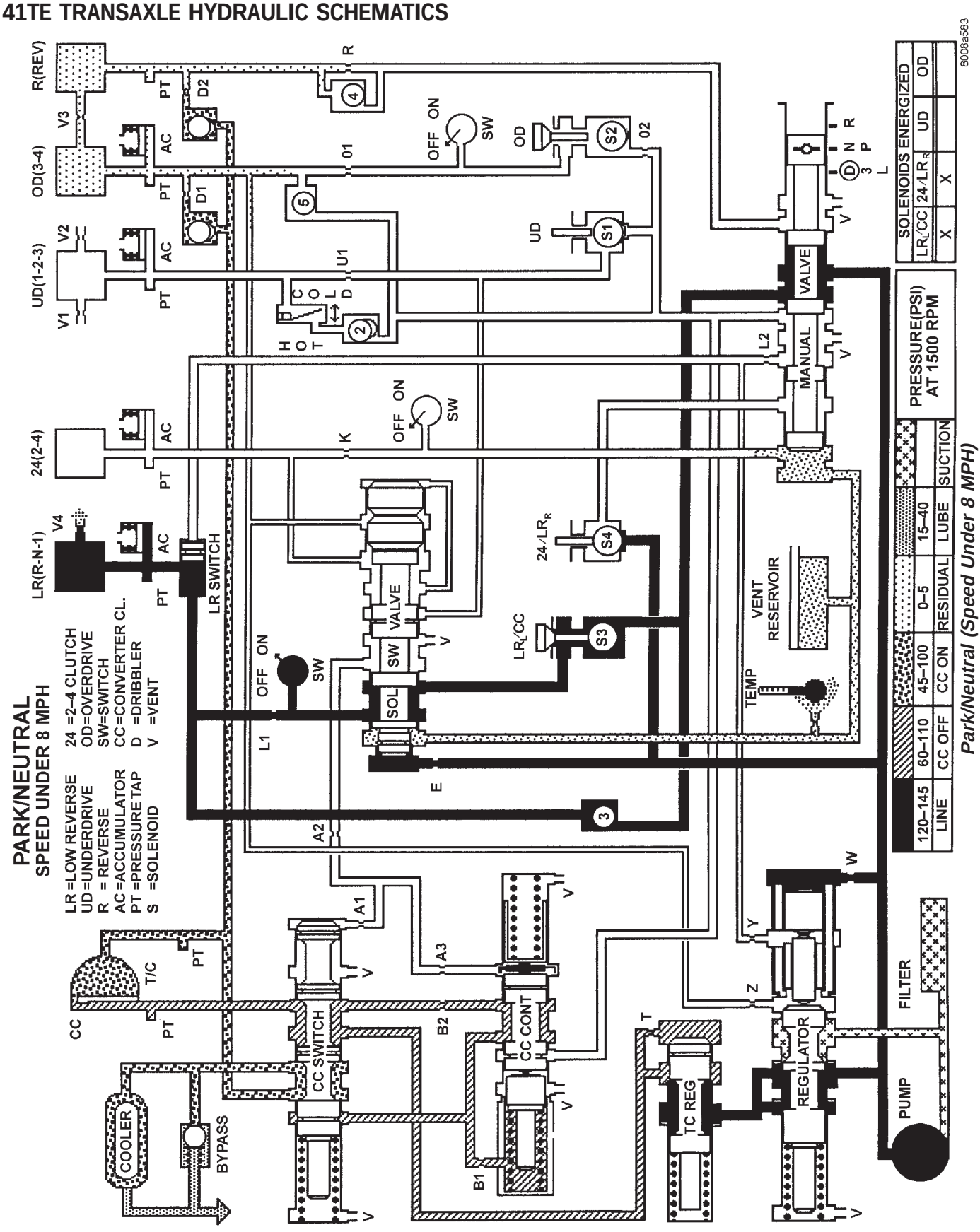

41TE AUTOMATIC TRANSAXLE (Continued)

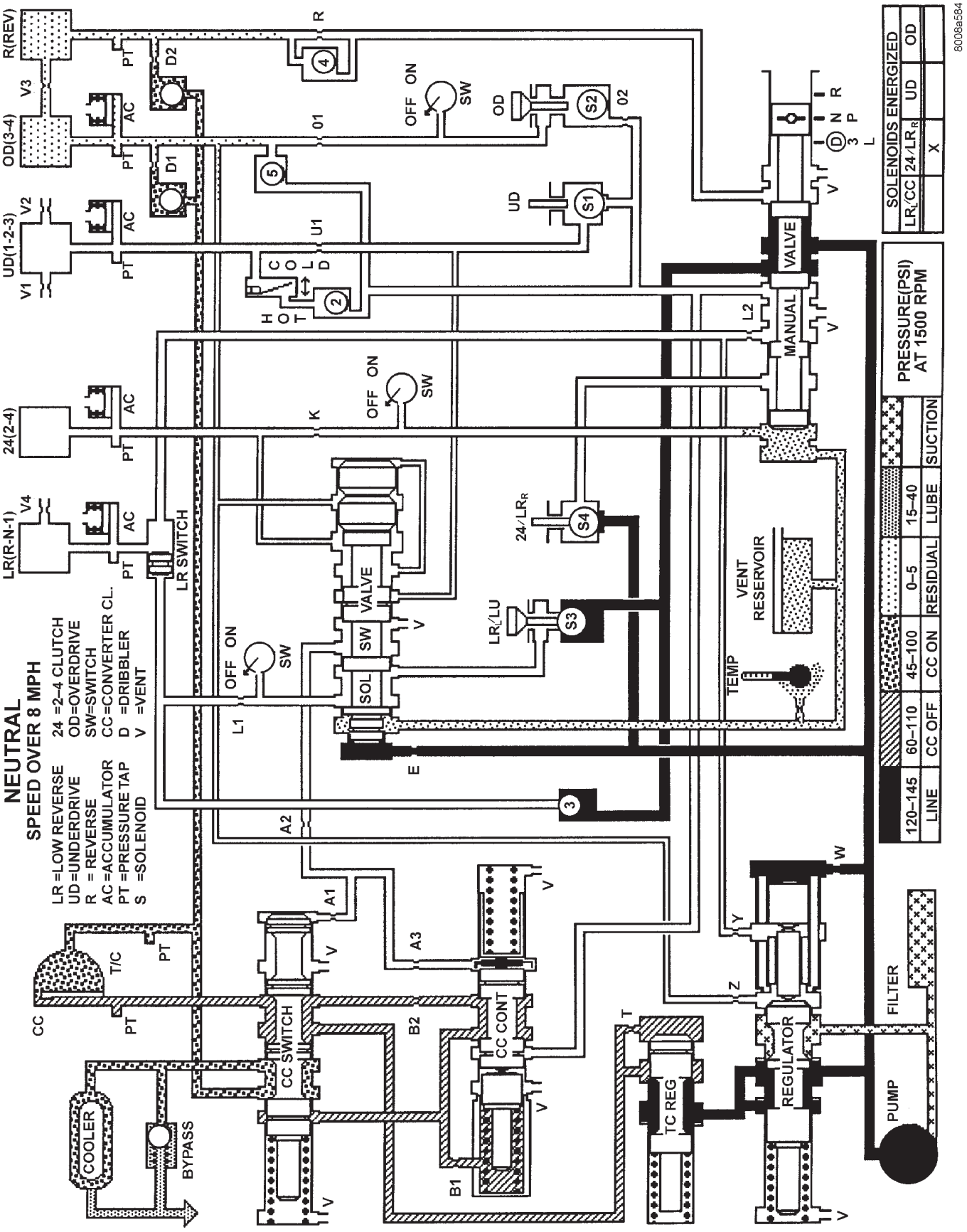

41TE AUTOMATIC TRANSAXLE (Continued)

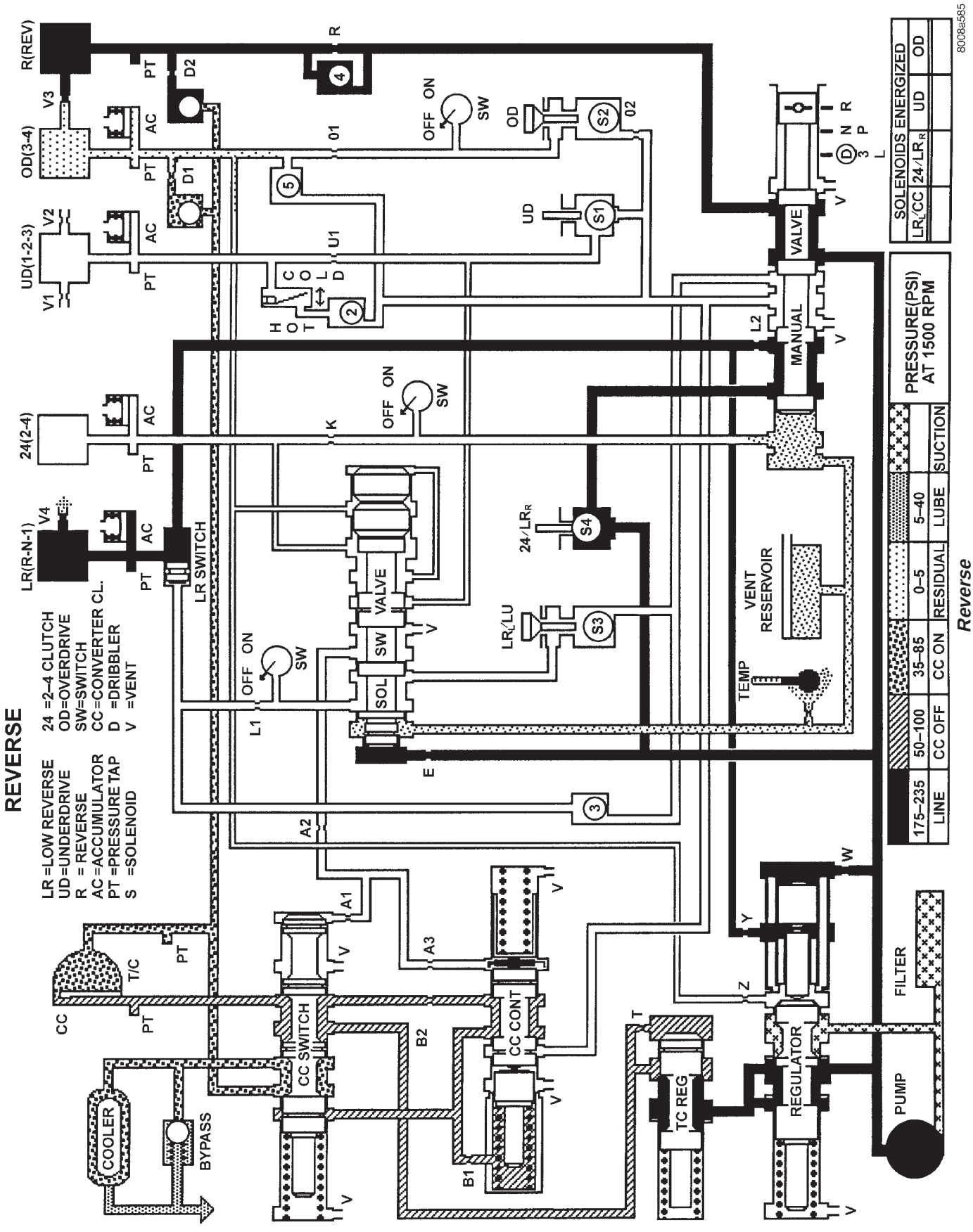

41TE AUTOMATIC TRANSAXLE (Continued)

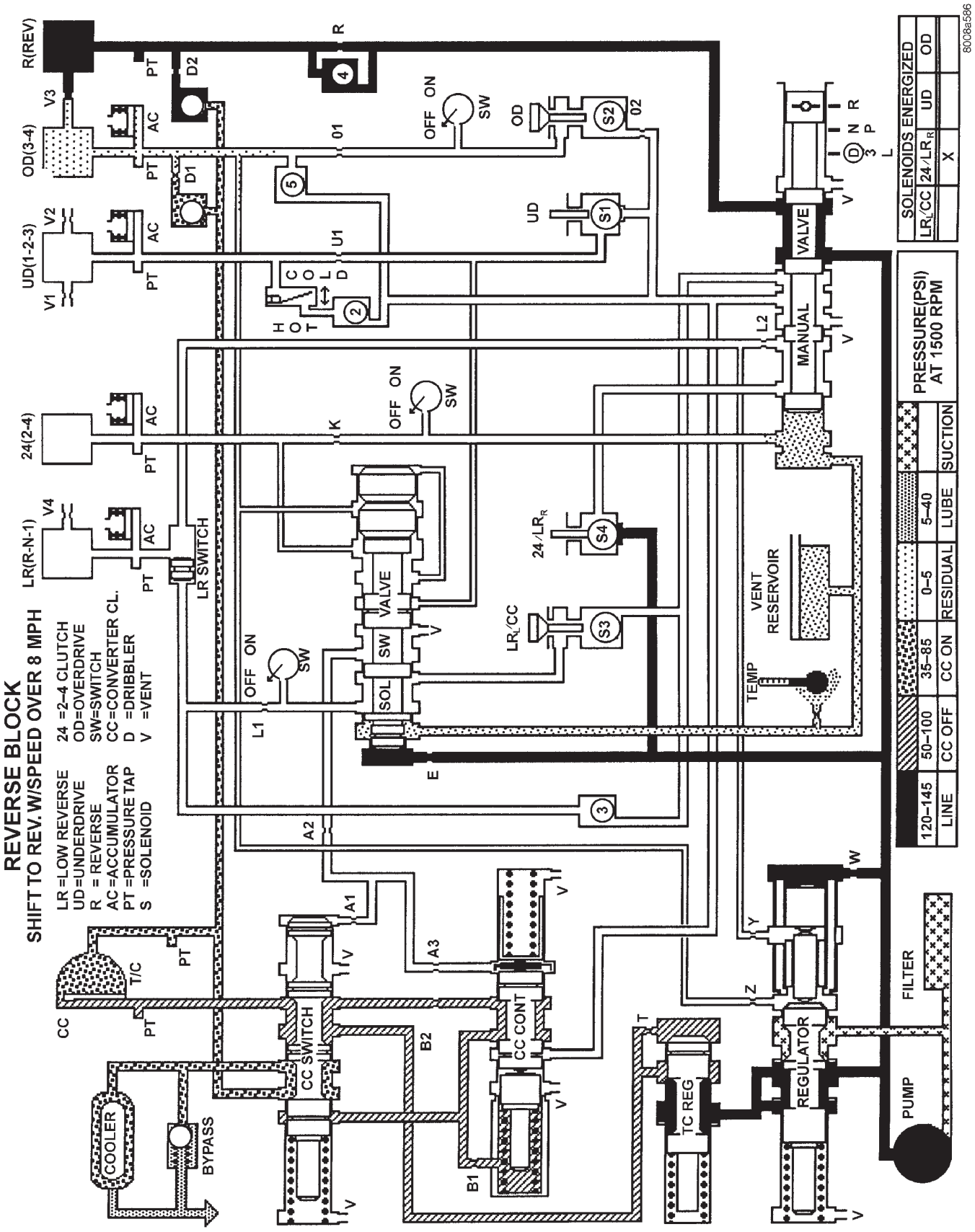

Reverse Block (Shift to Reverse W/Speed Over 8 mph)

41TE AUTOMATIC TRANSAXLE (Continued)

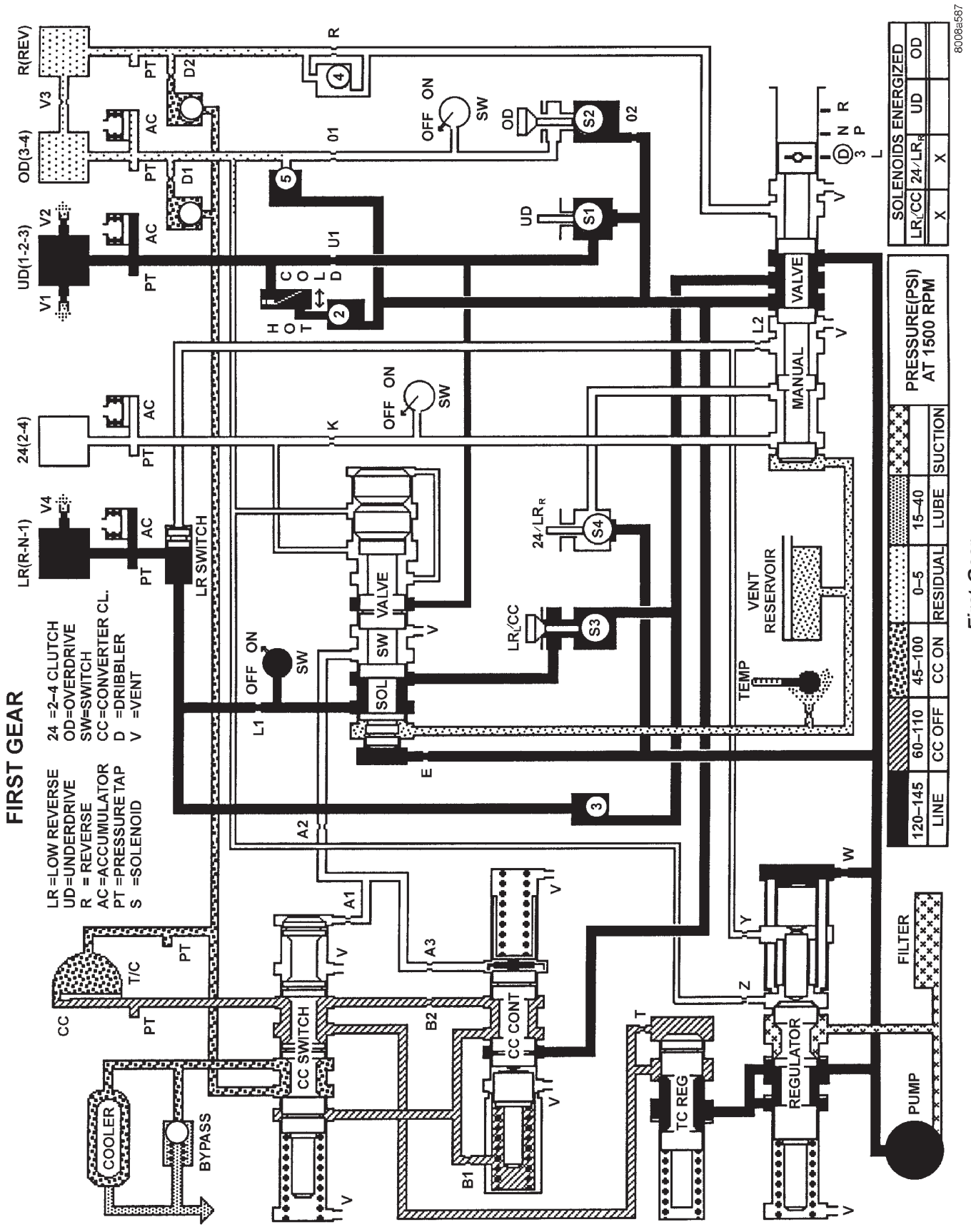

41TE AUTOMATIC TRANSAXLE (Continued)

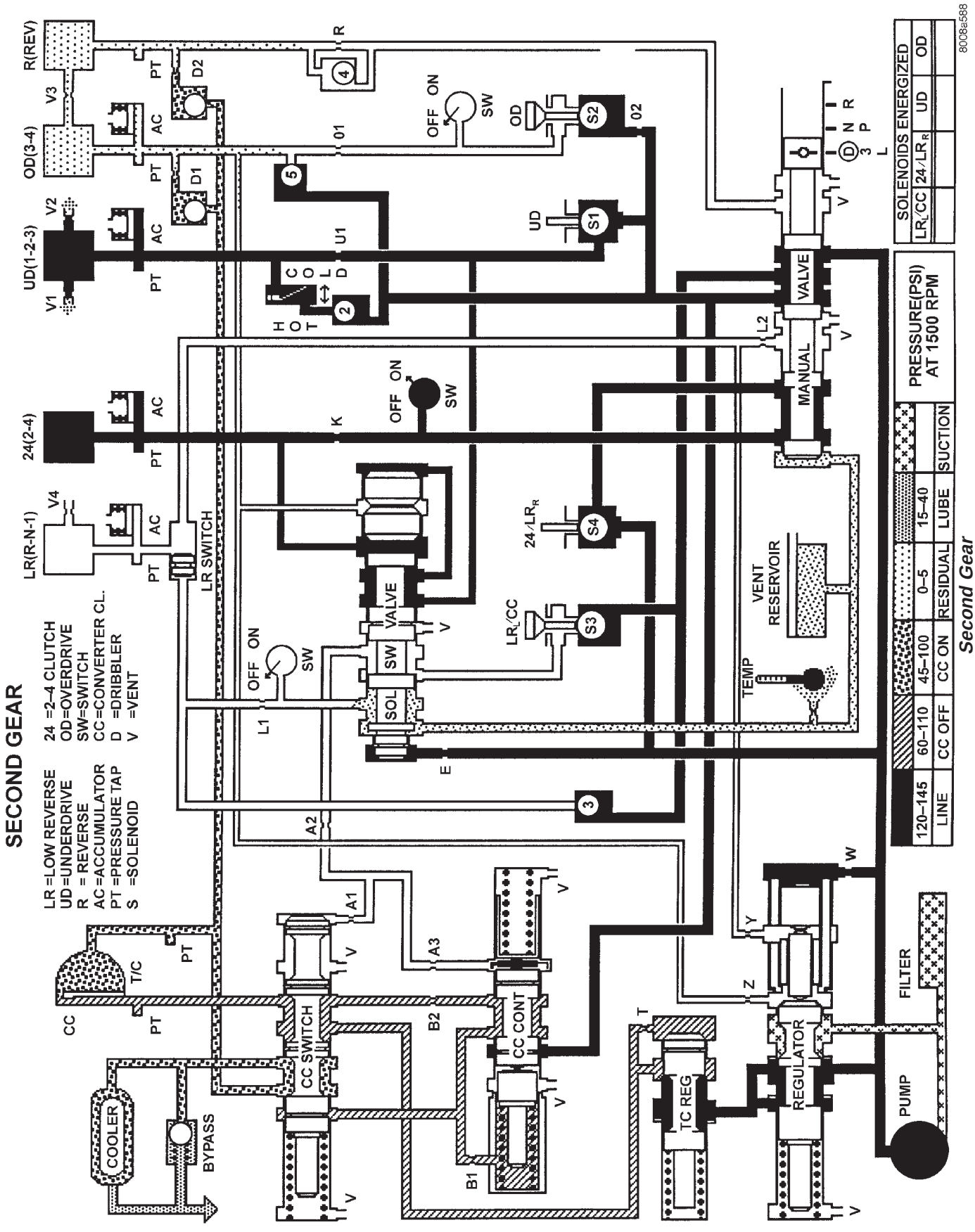

41TE AUTOMATIC TRANSAXLE (Continued)

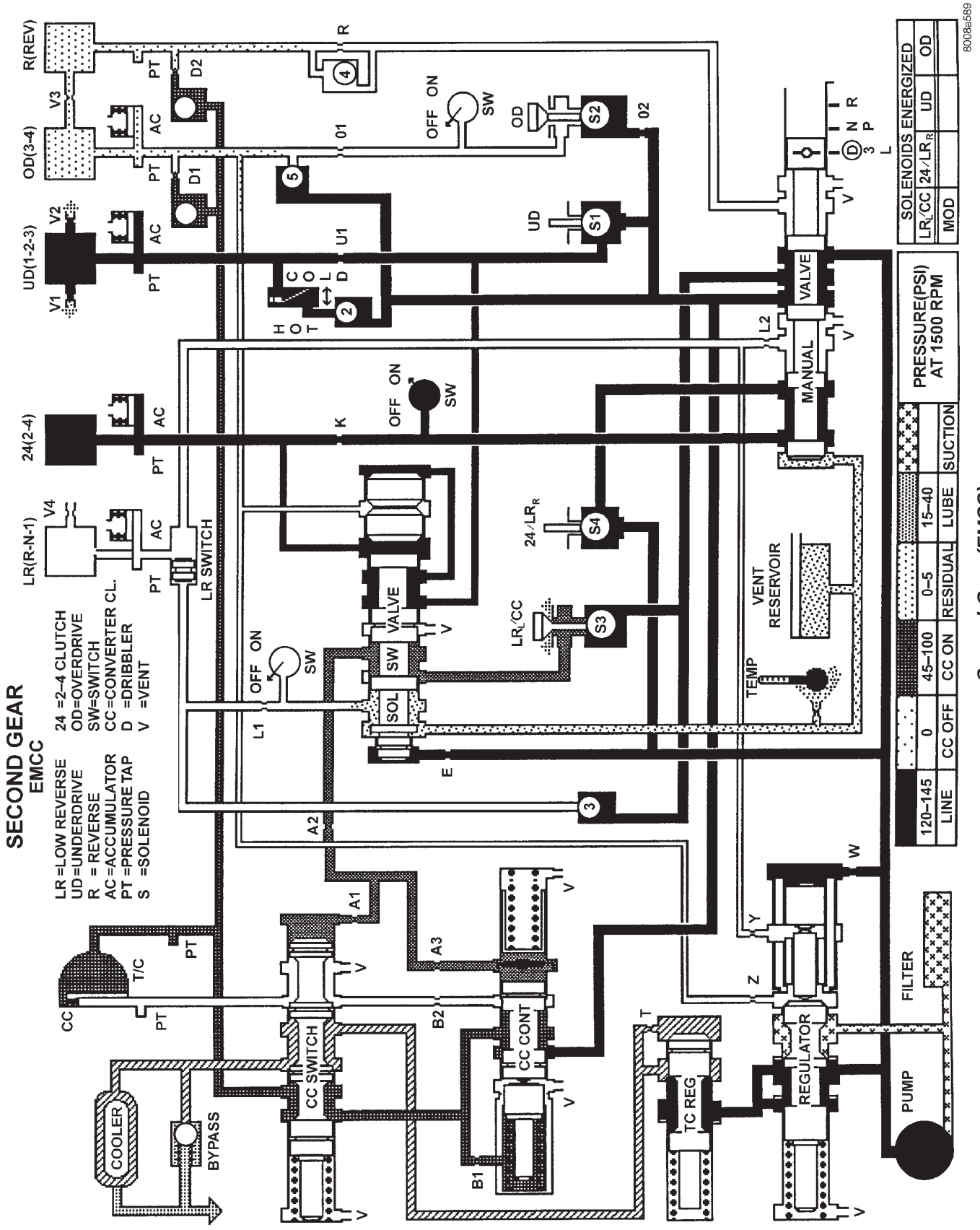

41TE AUTOMATIC TRANSAXLE (Continued)

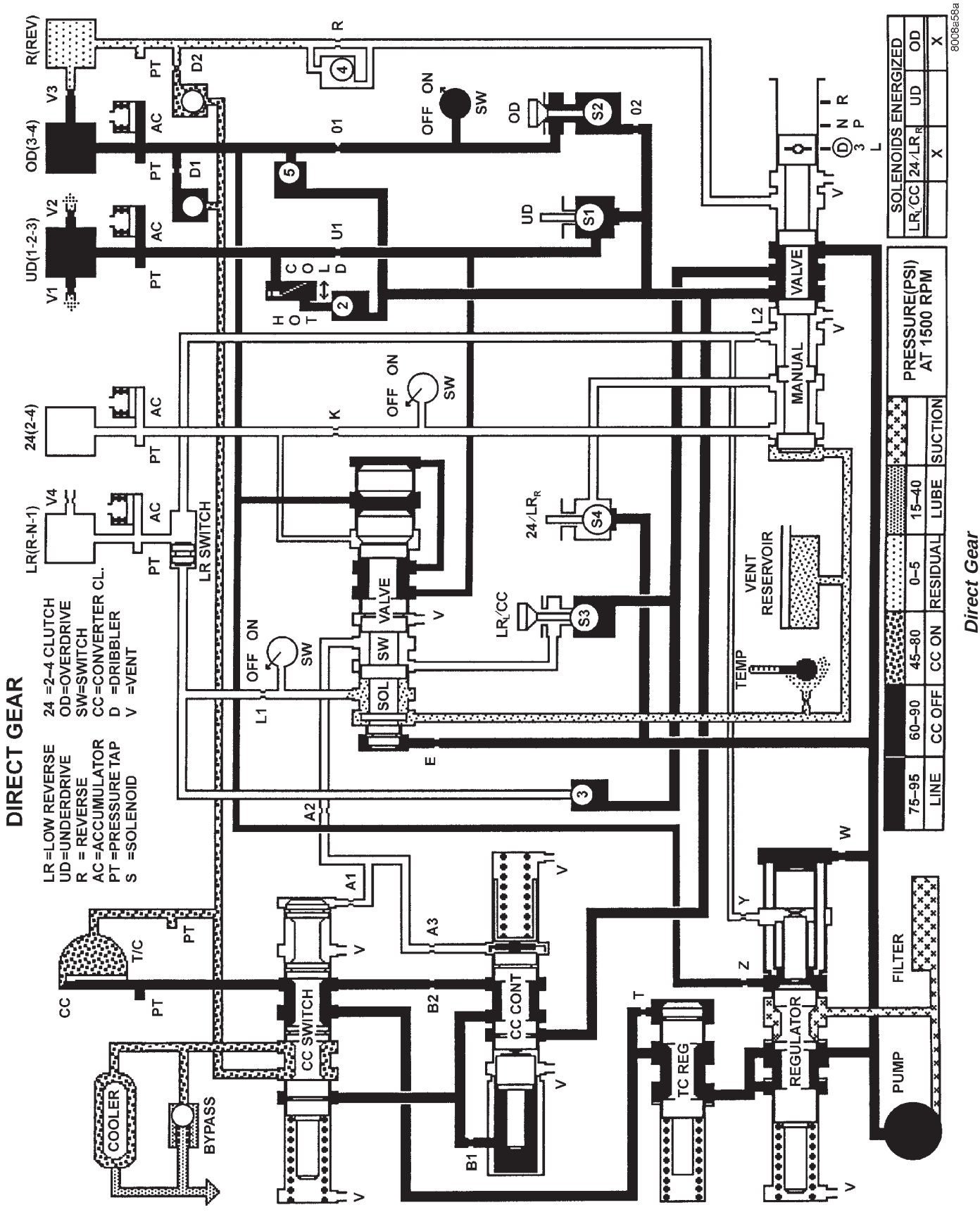

41TE AUTOMATIC TRANSAXLE (Continued)

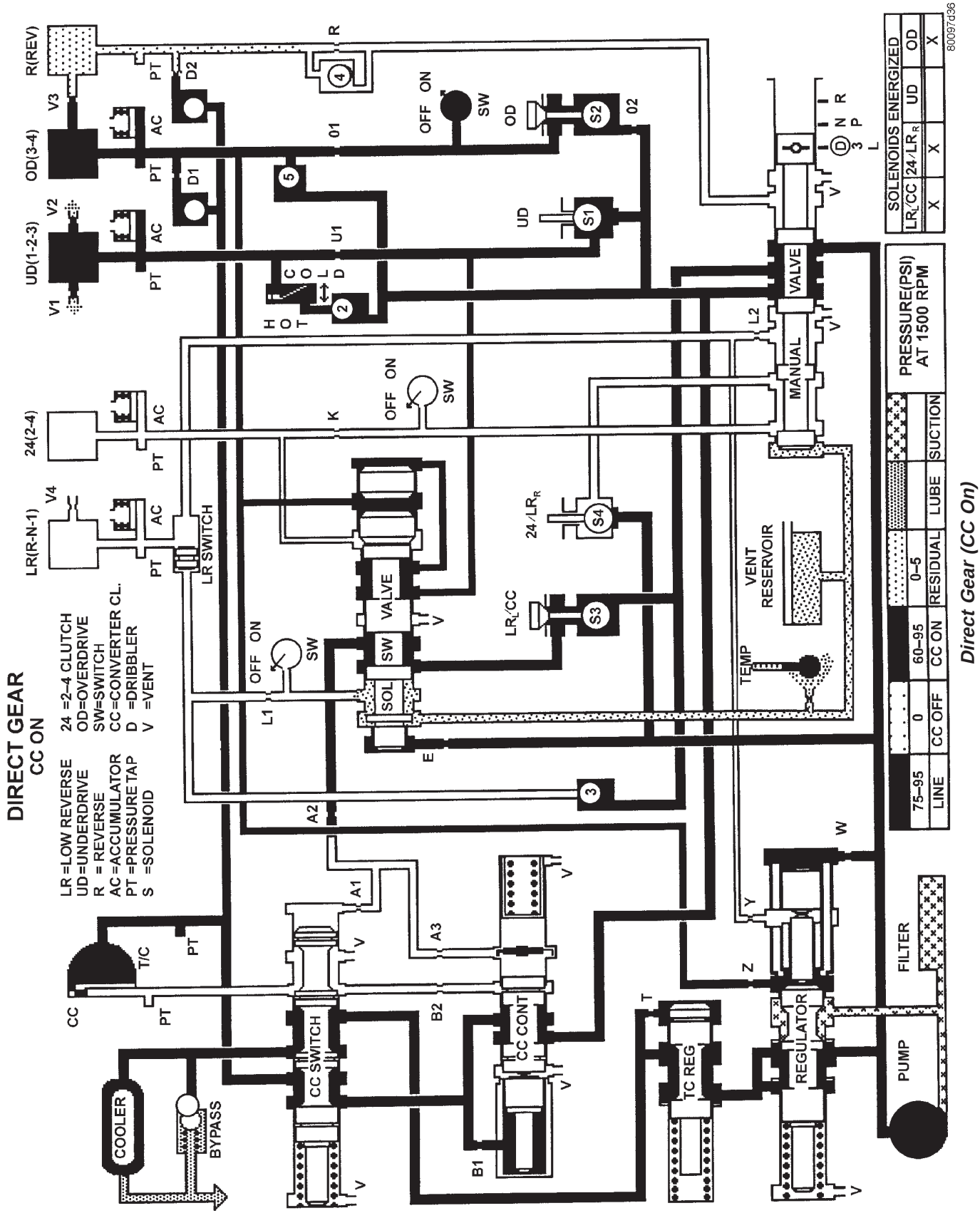

41TE AUTOMATIC TRANSAXLE (Continued)

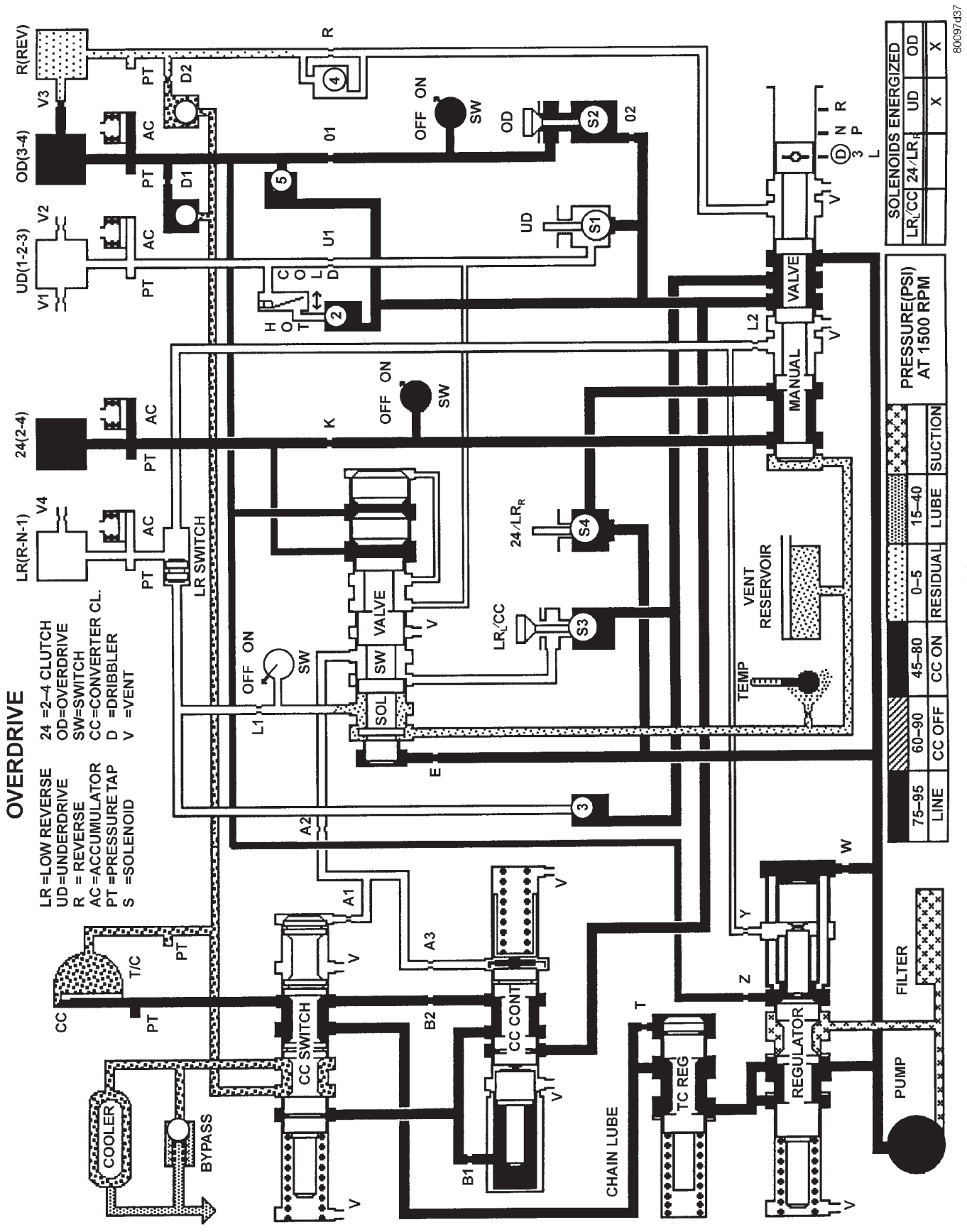

41TE AUTOMATIC TRANSAXLE (Continued)

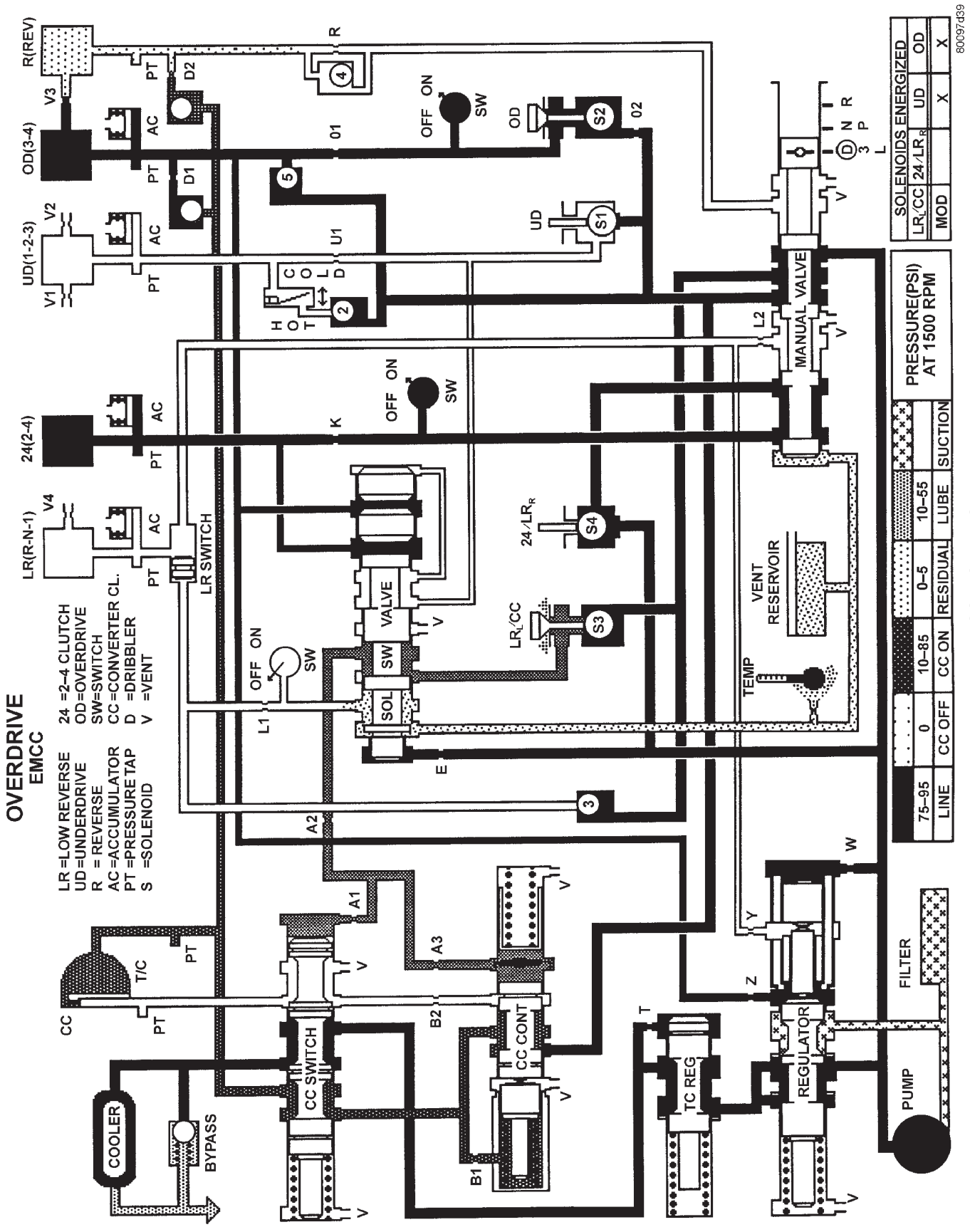

41TE AUTOMATIC TRANSAXLE (Continued)

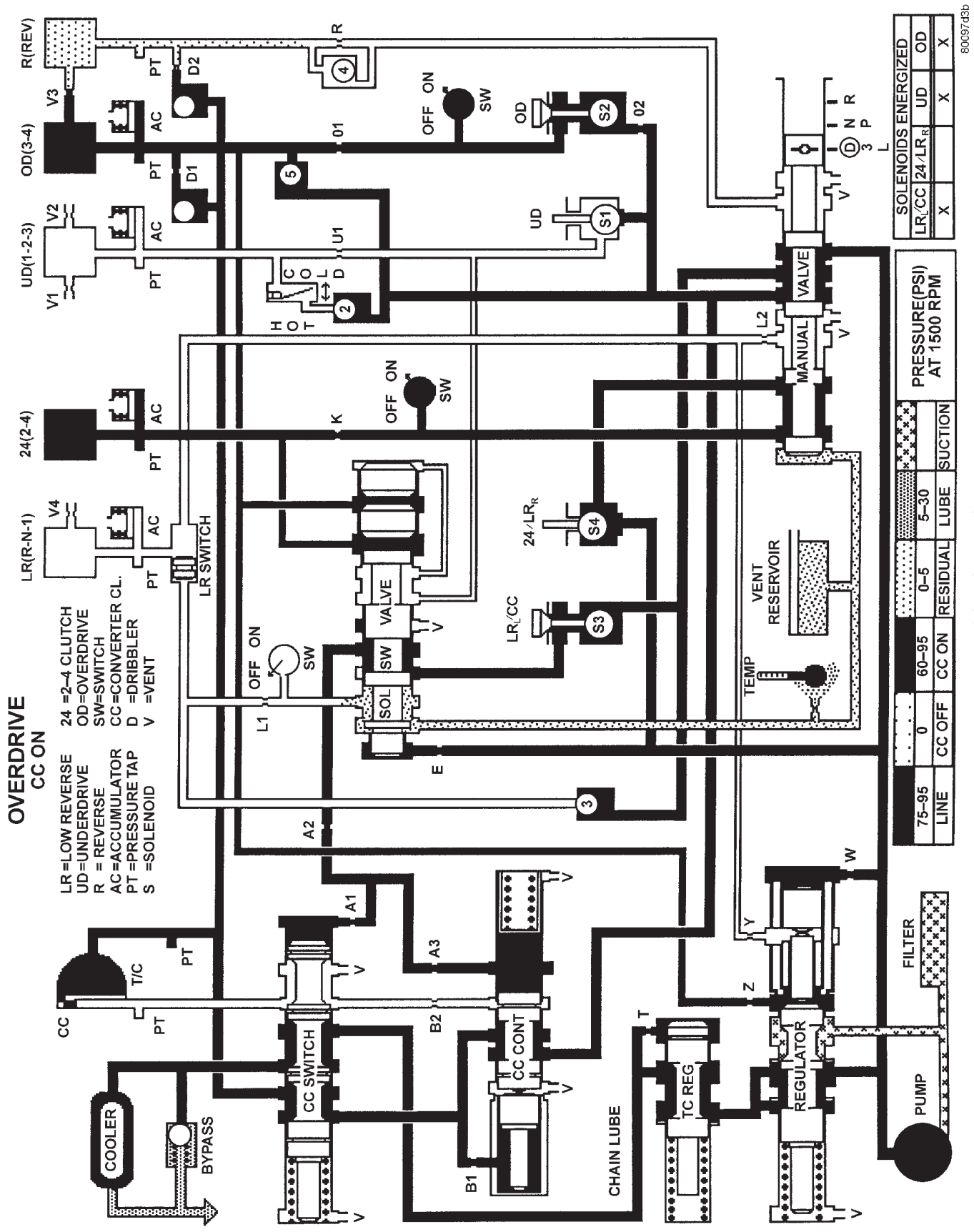

SPECIFICATIONS - 41TE TRANSAXLE

GENERAL SPECIFICATIONS

DESCRIPTION	SPECIFICATION
Transaxle Type	Fully adaptive, electronically controlled, four speed automatic with torque converter and integral differential
Cooling Method	Air-to-oil heat exchanger
Lubrication	Pump (internal-external gear-type

GEAR RATIOS

DESCRIPTION	SPECIFICATION
First Gear	2.84
Second Gear	1.57
Direct Gear	1.00
Overdrive Gear	0.69
Reverse Gear	2.21

BEARING SETTINGS (END PLAY & TURNING TORQUE)

DESCRIPTION	METRIC	STANDARD
Differential Assembly	0.6-2 N·m	5-18 in. lbs.
Output Hub	0.3-2 N·m	3-8 in. lbs.
Transfer Shaft (End Play)	0.051-0.102 mm	0.002-0.004 in.
Overall Drag At Output Hub	0.3-1.9 N·m	3-16 in. lbs.

CLUTCH CLEARANCES

DESCRIPTION	METRIC	STANDARD
Low/Rev Clutch (Select Reaction Plate)	0.89-1.47 mm	0.035-0.058 in.
Two/Four Clutch (No Selection)	0.76-2.64 mm	0.030-0.104 in.
Reverse Clutch (Select Snap Ring)	0.89-1.37 mm	0.035-0.054 in.
Overdrive Clutch (No Selection)	1.07-3.25 mm	0.042-0.128 in.
Underdrive Clutch (Select Pressure Plate)	0.94-1.50 mm	0.037-0.059 in.

OIL PUMP CLEARANCES

DESCRIPTION	METRIC	STANDARD
Outer Gear-to-Crescent	0.060-0.298 mm	0.0023-0.0117 in.
Inner Gear-to-Crescent	0.093-0.385 mm	0.0036-0.0151 in.
Outer Gear-to-Pocket	0.089-0.202 mm	0.0035-0.0079 in.
Outer Gear Side Clearance	0.020-0.046 mm	0.0008-0.0018 in.
Inner Gear Side Clearance	0.020-0.046 mm	0.0008-0.0018 in.

41TE AUTOMATIC TRANSAXLE (Continued)

INPUT SHAFT

DESCRIPTION	METRIC	SPECIFICATION
End Play	0.127-0.635mm	0.005-0.025 in.

TORQUE SPECIFICATIONS

DESCRIPTION	N·m	Ft. Lbs.	In. Lbs.
Bolt, Differential Cover-to-Case	19	—	165
Bolt, Differential Ring Gear-to-Case	95	70	—
Bolt, Differential Bearing Retainer-to-Case	28	21	—
Bolt, Driveplate-to-Crankshaft	95	70	—
Bolt, Extension Housing/ Plate-to-Case	28	21	—
Bolt, Oil Pan-to-Case	19	—	165
Bolt, Output Gear	271	200	—
Bolt, Output Gear Stirrup/Strap	23	17	—
Bolt, Oil Pump-to-Case	27	20	—
Bolt, Reaction Support-to-Case	27	20	—
Bolt, Solenoid/Pressure Switch Assy.-to-Case	12	—	110
Bolt, Torque Converter-to-Driveplate	75	55	—
Bolt, Transfer Gear Cover	20	—	175
Bolt, Valve Body-to-Case	12	—	105
Fitting, Oil Cooler Line	12	—	105
Nut, Tranfer Gear	271	200	—
Tap, Transaxle Pressure	5	—	45
Screw, L/R Clutch Retainer	5	—	45
Screw, Solenoid/Pressure Switch Assy. Connector	4	—	35
Screw, Valve Body-to-Transfer Plate	5	—	45
Sensor, Input Speed	27	20	—
Sensor, Output Speed	27	20	—
Sensor, Transmission Range Sensor	5	—	45

41TE AUTOMATIC TRANSAXLE (Continued)

SPECIAL TOOLS

41TE AUTOMATIC TRANSAXLE

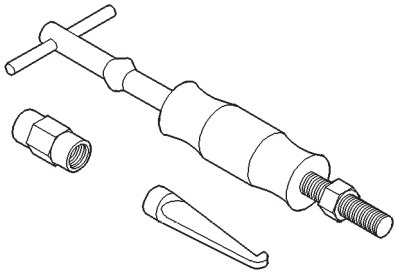

Puller C-637

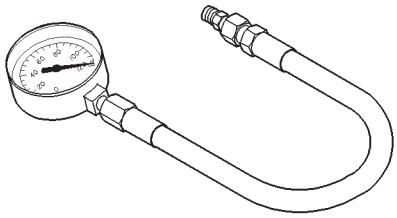

Pressure Gauge (High) C-3293SP

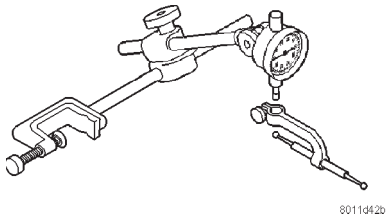

Dial Indicator C-3339

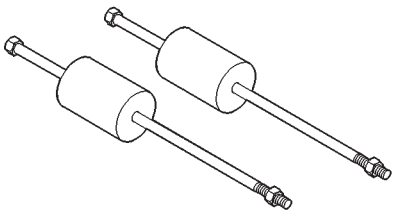

Oil Pump Puller C-3752

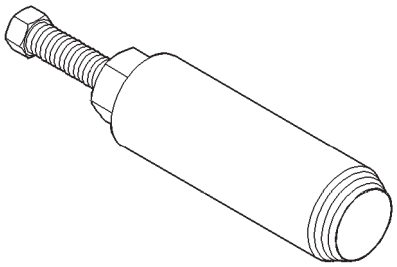

Seal Puller C-3981B

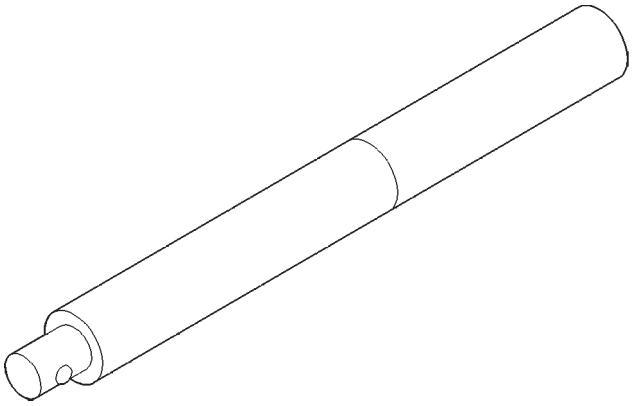

Universal Handle C-4171

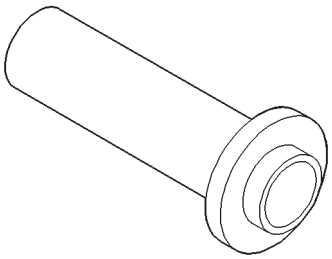

Seal Installer C-4193A

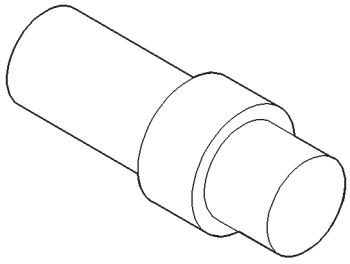

Adapter C-4996

41TE AUTOMATIC TRANSAXLE (Continued)

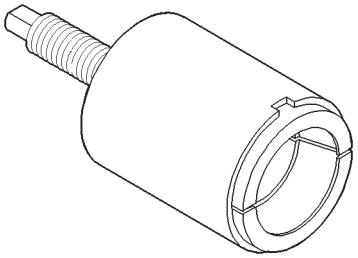

Remover Kit L-4406

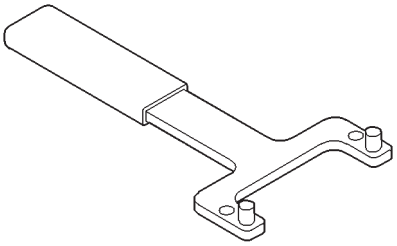

Bearing Puller L-4435

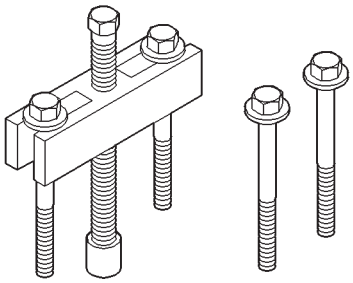

Gear Puller L-4407A

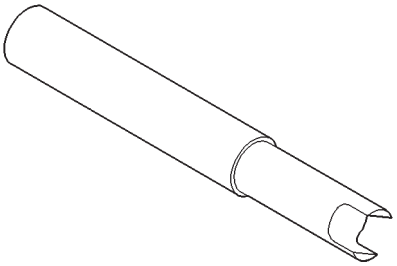

Differential Tool L-4436A

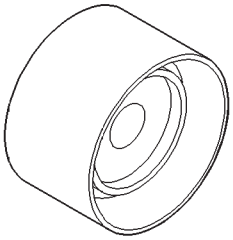

Bearing Installer L-4410

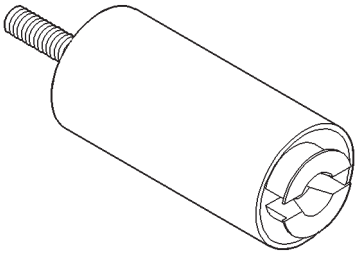

Special Jaw Set L-4518

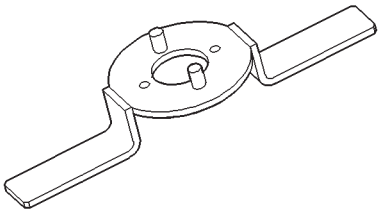

Gear Checking Plate L-4432

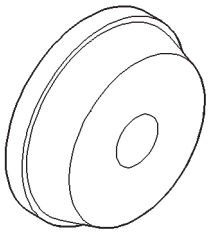

Installer L-4520

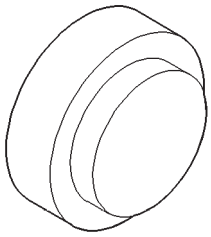

Thrust Button L-4539-2

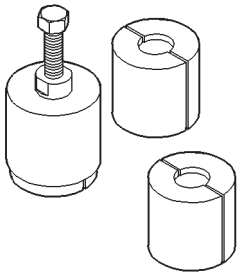

Puller Set 5048

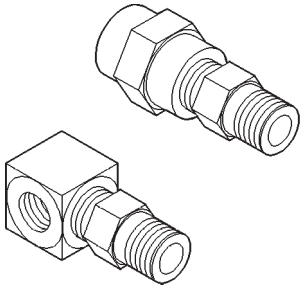

Adapter L-4559

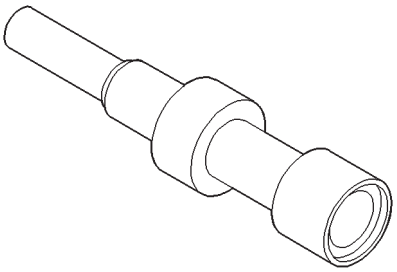

Remover/Installer 5049-A

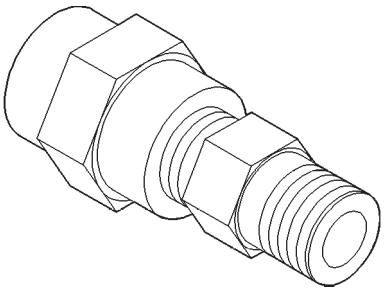

Adapter L-4559-2

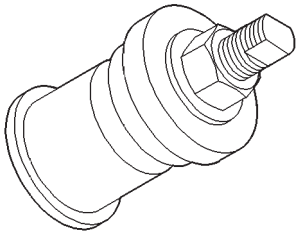

Installer 5050A

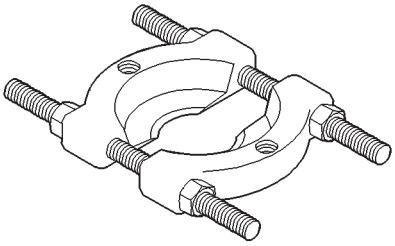

Bearing Splitter P-334

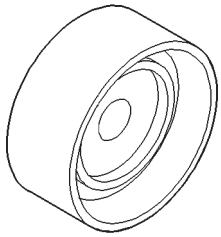

Installer 5052

41TE AUTOMATIC TRANSAXLE (Continued)

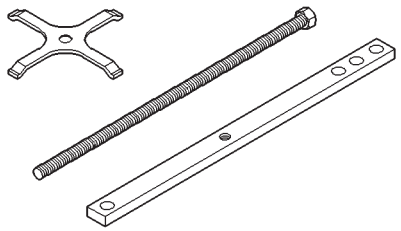

Compressor 5058A

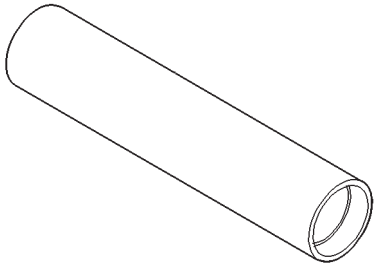

Installer 6052

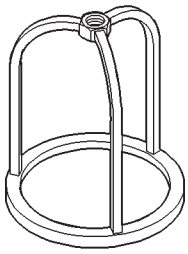

Compressor 5059-A

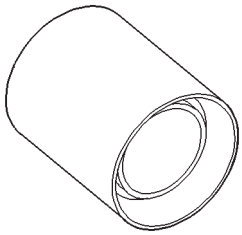

Installer 6053

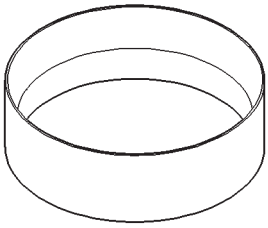

Installer 5067

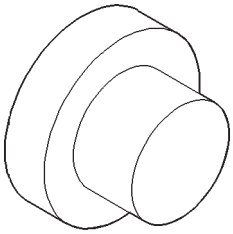

Button 6055

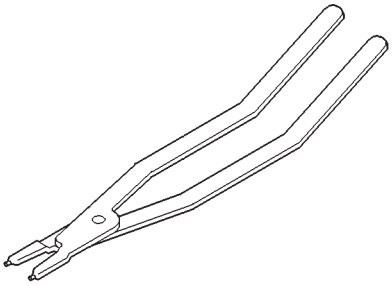

Pliers 6051

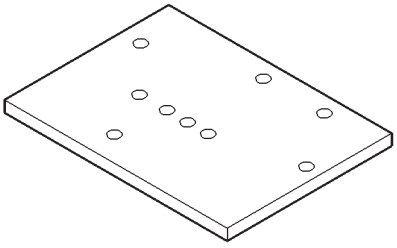

Plate 6056

41TE AUTOMATIC TRANSAXLE (Continued)

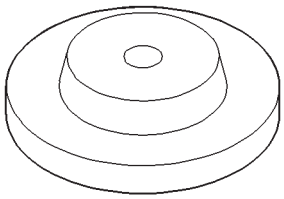

Disk 6057

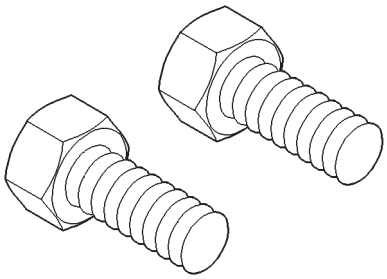

Bolt 6260

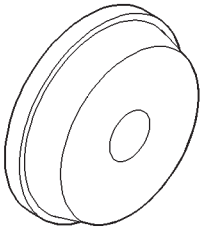

Installer 6061

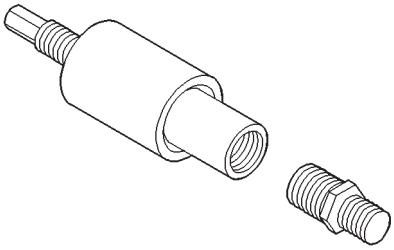

Installer 6261

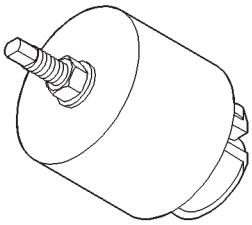

Remover 6062-A

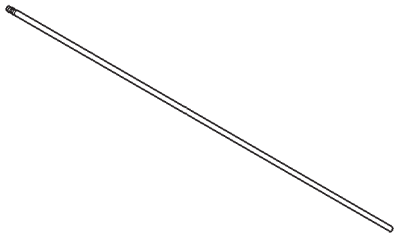

Tip 6268

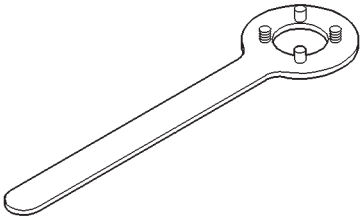

Holder 6259

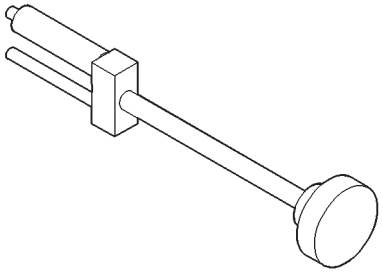

Remover/Installer 6301

41TE AUTOMATIC TRANSAXLE (Continued)

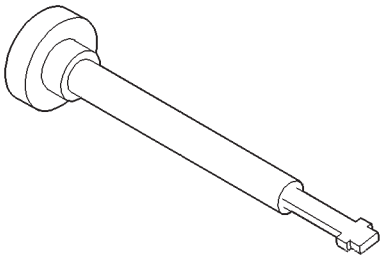

Remover/Installer 6302

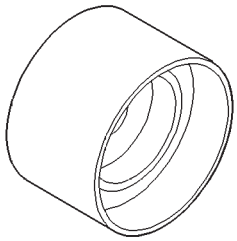

Installer 6536-A

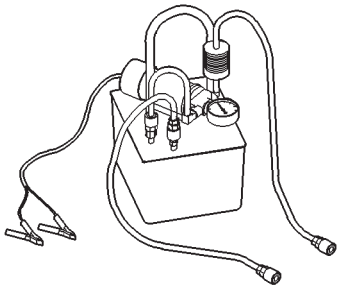

Cooler Flusher 6906A

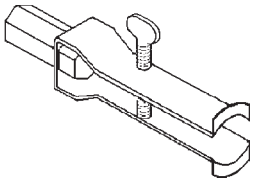

Puller 7794-A

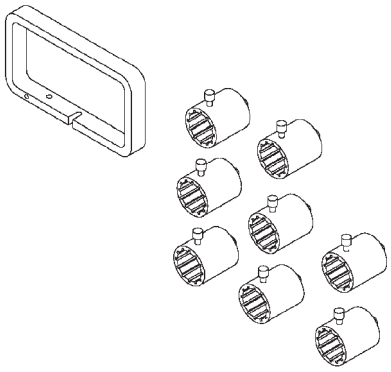

End Play Socket Set 8266

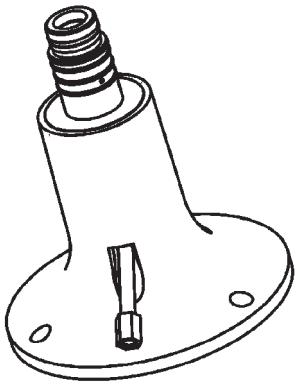

Input Clutch Pressure Fixture 8391

ACCUMULATOR

DESCRIPTION

The 41te underdrive, overdrive, low/reverse, and 2/4 clutch hydraulic circuits each contain an accumulator. An accumulator typically consists of a piston, seals, return spring(s), and a cover or plug. The overdrive and underdrive accumulators are located within the transaxle case, and are retained by the valve body (Fig. 169) .

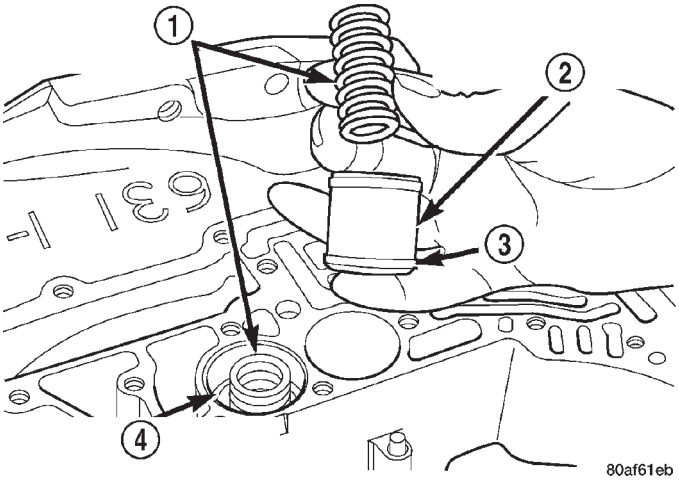

Fig. 169 Underdrive and Overdrive Accumulators

1 - RETURN SPRING
2 - UNDERDRIVE CLUTCH ACCUMULATOR
3 - SEAL RING (2)
4 - OVERDRIVE CLUTCH ACCUMULATOR

The low reverse accumulator (Fig. 170) is also located within the transaxle case, but the assembly is retained by a cover and a snap-ring.

The 2/4 accumulator is located in the valve body. It is retained by a cover and retaining screws (Fig. 171) .

OPERATION

The function of an accumulator is to cushion the application of a frictional clutch element. When pressurized fluid is applied to a clutch circuit, the application force is dampened by fluid collecting in the respective accumulator chamber against the piston and spring(s). The intended result is a smooth, firm clutch application.

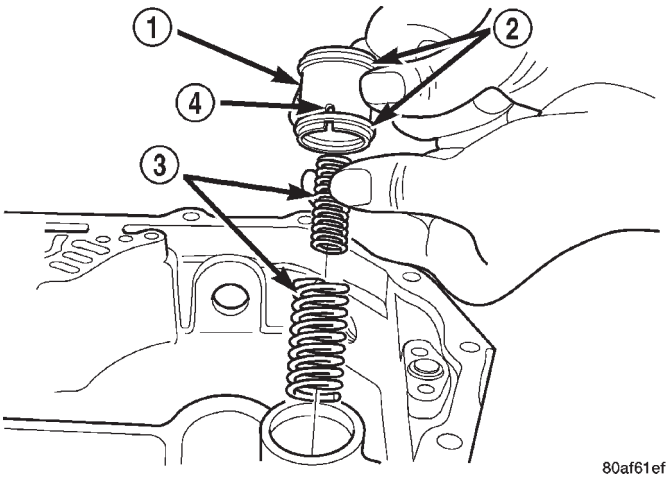

Fig. 170 Low/Reverse Accumulator Assembly

1 - ACCUMULATOR PISTON
2 - SEAL RINGS
3 - RETURN SPRINGS
4 - (NOTE NOTCH)

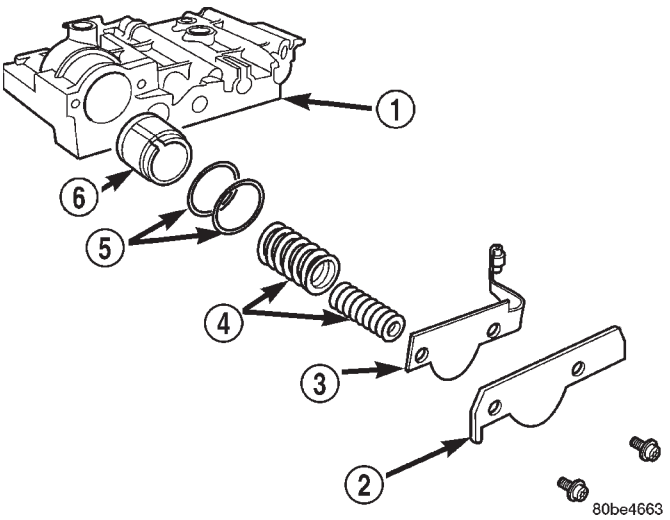

Fig. 171 2/4 Accumulator Assembly

1 - VALVE BODY
2 - RETAINER PLATE
3 - DETENT SPRING
4 - SPRINGS
5 - SEALS
6 - PISTON

AUTOSTICK SWITCH

DESCRIPTION

Autostick is a driver-interactive transaxle feature that offers manual gear shifting capability. The control switch is part of the transaxle gear shift lever as shown in (Fig. 172). It can only be serviced by replacing the gearshift lever assembly. (Refer to 19 - STEERING/COLUMN/GEAR SHIFT LEVER - REMOVAL)

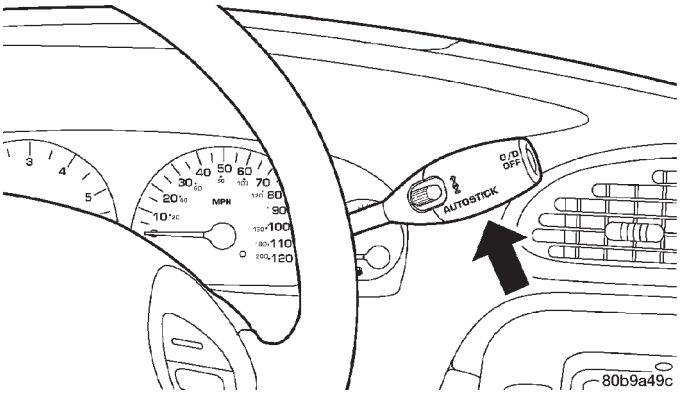

Fig. 172 Autostick Switch Location (if equipped)

OPERATION

When the shift lever is moved into the Autostick position (as indicated by the Shift Lever Position Indicator in the cluster), the transaxle remains in whatever gear it was using before Autostick was activated. The TCM sends a 5 volt signal through the switch and then monitors the signal for voltage drop. Each switch state (driver command) results in a specific voltage reading sensed by the TCM. The TCM then determines transaxle operation (upshift/downshift/OD Lockout) based on their corresponding voltage. Refer to the following chart for corresponding switch states and voltage readings:

Switch State	Voltage Reading
Autostick DOWN depressed	0.3V-1.6V
Autostick UP depressed	1.6V-2.8V
Overdrive OFF ″Lockout″ depressed	2.8V-3.8V
All switches open	3.8V-4.8V
-Voltage values <.3V and >4.8V are considered INVALID and will result in a DTC	

Moving the switch up causes an upshift and moving the switch down causes a downshift. The instrument cluster will illuminate the selected gear. The vehicle can be launched in 1st, 2nd, or 3rd gear while in the Autostick mode. The speed control is operable in 3rd and 4th gear Autostick mode. Speed control will be deactivated if the transaxle is shifted to 2nd gear. Shifting into OD position cancels the Autostick mode, and the transaxle resumes the OD shift schedule.

DRIVING CLUTCHES

DESCRIPTION

Three hydraulically applied input clutches are used to drive planetary components. The underdrive, overdrive, and reverse clutches are considered input clutches and are contained within the input clutch assembly (Fig. 173). The input clutch assembly also contains:

- Input shaft
- Input hub
- Clutch retainer
- Underdrive piston
- Overdrive/reverse piston
- Overdrive hub
- Underdrive hub

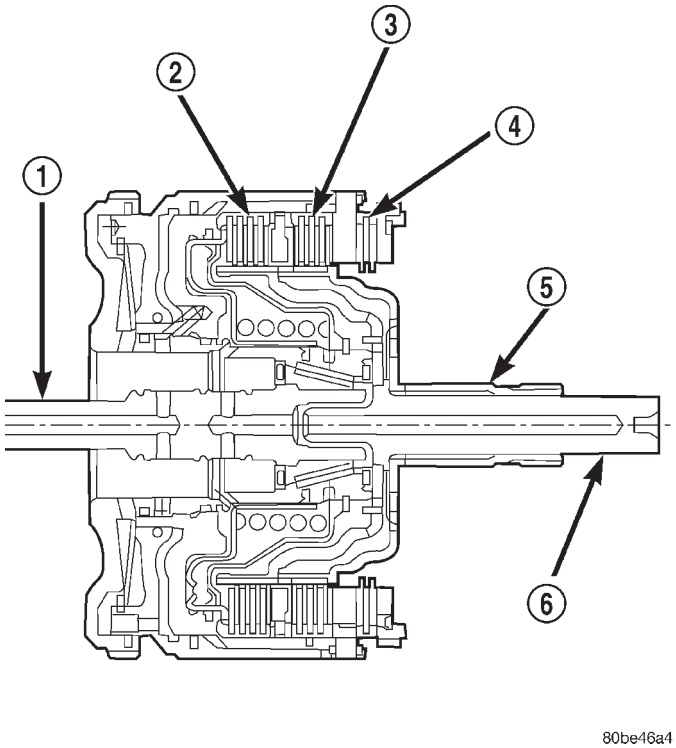

Fig. 173 Input Clutch Assembly

1 - INPUT SHAFT
2 - UNDERDRIVE CLUTCH
3 - OVERDRIVE CLUTCH
4 - REVERSE CLUTCH
5 - OVERDRIVE SHAFT
6 - UNDERDRIVE SHAFT

DRIVING CLUTCHES (Continued)

OPERATION

The three input clutches are responsible for driving different components of the planetary geartrain.

NOTE: Refer to the "Elements In Use" chart in Diagnosis and Testing for a collective view of which clutch elements are applied at each position of the selector lever.

UNDERDRIVE CLUTCH

The underdrive clutch is hydraulically applied in first, second, and third (direct) gears by pressurized fluid against the underdrive piston. When the underdrive clutch is applied, the underdrive hub drives the rear sun gear.

OVERDRIVE CLUTCH

The overdrive clutch is hydraulically applied in third (direct) and overdrive gears by pressurized fluid against the overdrive/reverse piston. When the overdrive clutch is applied, the overdrive hub drives the front planet carrier.

REVERSE CLUTCH

The reverse clutch is hydraulically applied in reverse gear only by pressurized fluid against the overdrive/reverse piston. When the reverse clutch is applied, the front sun gear assembly is driven.

FINAL DRIVE

DISASSEMBLY

NOTE: The differential is serviced as an assembly. Differential service is limited to bearing cups and cones. Any other differential component failure must be remedied by differential assembly and transfer shaft replacement.

The transfer shaft should be removed for differential repair and bearing turning torque checking.

(1) Remove the differential cover and bolts (Fig. 174) (Fig. 175).

(2) Remove the differential bearing retainer and bolts (Fig. 176) (Fig. 177).

(3) Using a plastic hammer, remove extension housing/adapter plate on the right side of the transaxle.

WARNING: HOLD ONTO DIFFERENTIAL ASSEMBLY TO PREVENT IT FROM ROLLING OUT OF HOUSING.

(4) Use Miller Special Tool 5048, 5048-3 Collets, and L-4539-2 Button to remove the differential bearing cone on the extension housing side.

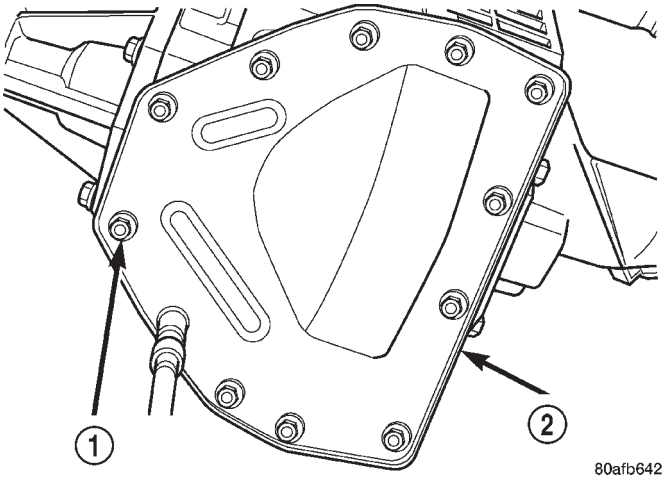

Fig. 174 Differential Cover Bolts

1 - DIFFERENTIAL COVER BOLTS
2 - DIFFERENTIAL COVER

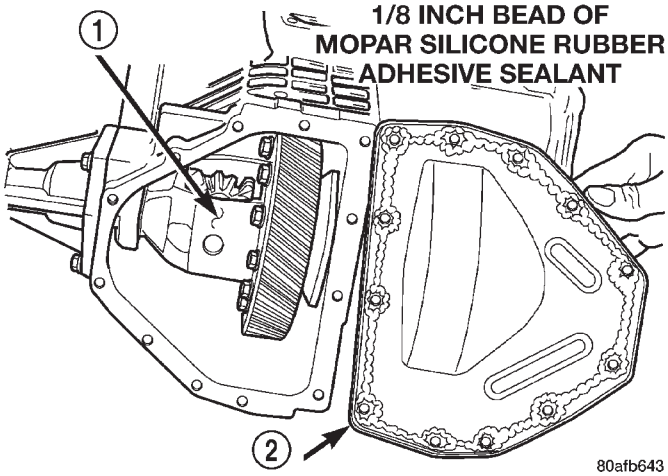

Fig. 175 Remove Differential Cover

1 - DIFFERENTIAL ASSEMBLY
2 - DIFFERENTIAL COVER

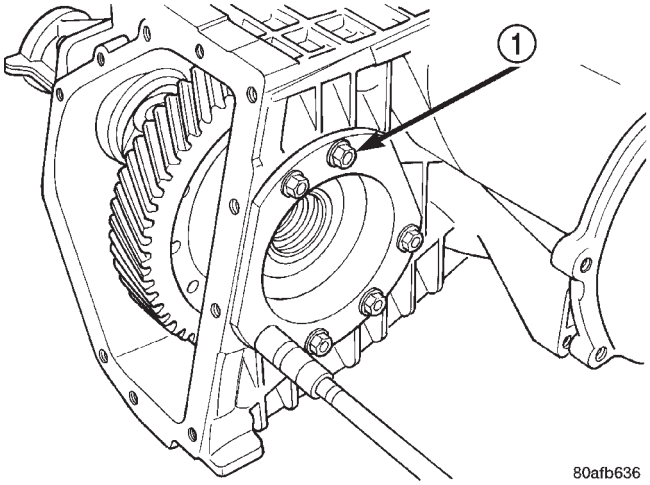

Fig. 176 Differential Retainer Bolts

1 - DIFFERENTIAL RETAINER BOLTS

FINAL DRIVE (Continued)

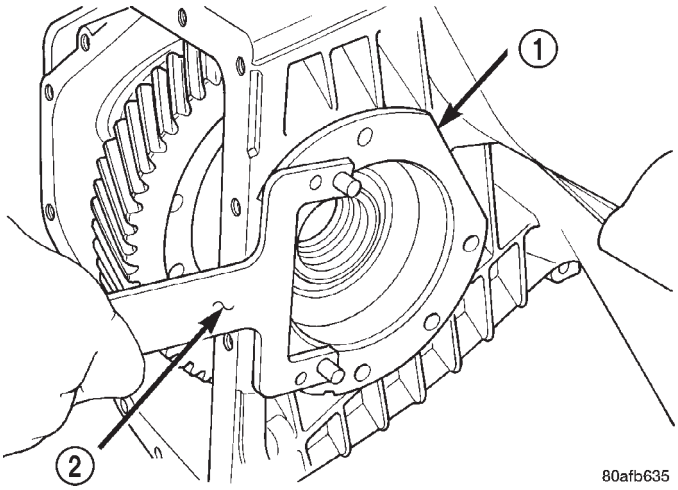

Fig. 177 Remove Bearing Retainer

1 - DIFFERENTIAL BEARING RETAINER
2 - TOOL L-4435

(5) Use Miller Special Tool 5048, 5048-4 Collets, and L-4539-2 Button to remove the differential bearing cone on the bearing retainer side (Fig. 178) (Fig. 179) (Fig. 180).

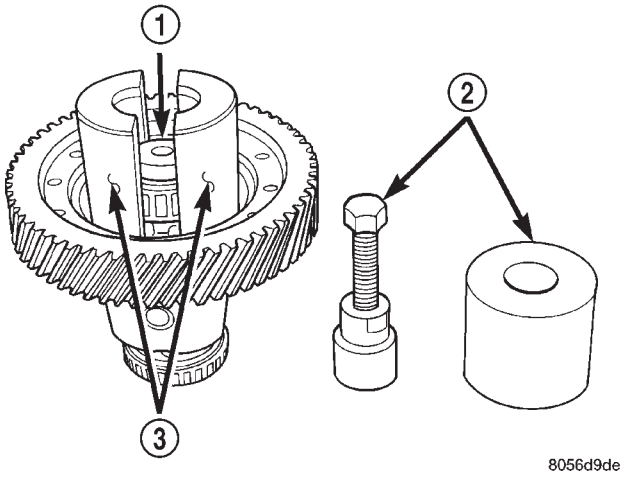

Fig. 178 Position Button and Collets Onto Differential and Bearing (Ring Gear Side)

1 - SPECIAL TOOL L-4539-2
2 - SPECIAL TOOL 5048
3 - SPECIAL TOOL 5048-4

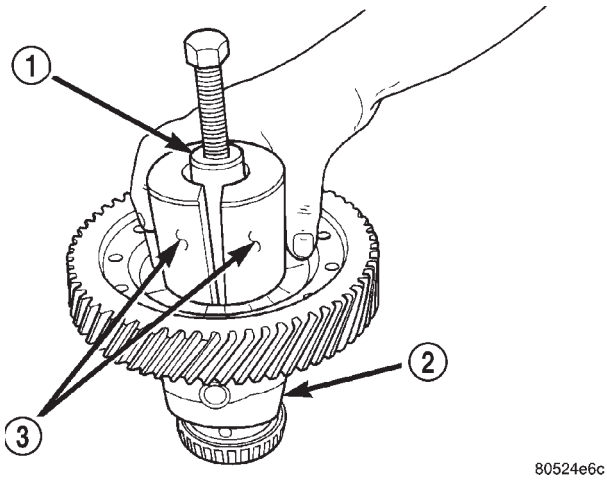

Fig. 179 Position Tool 5048 Over Button and Collets at Differential Bearing (Ring Gear Side)

1 - SPECIAL TOOL 5048
2 - DIFFERENTIAL
3 - SPECIAL TOOL 5048-4

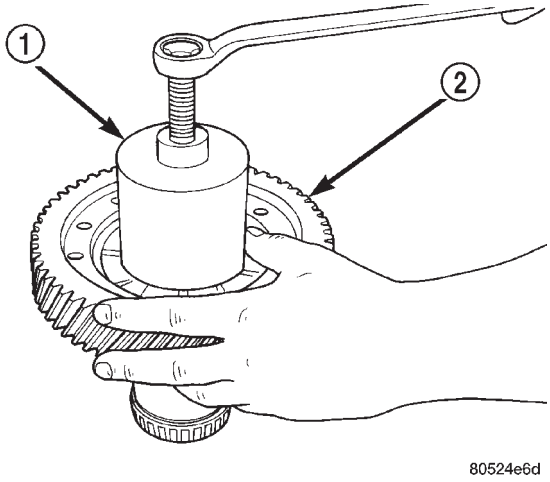

Fig. 180 Remove Differential Bearing Cone (Ring Gear Side)

1 - SPECIAL TOOL 5048
2 - RING GEAR

FINAL DRIVE (Continued)

(6) Using Miller Special Tool L-4518, remove the differential bearing race from the extension housing.

(7) Using Miller Special Tool 6062A, remove the differential bearing race from the bearing retainer (Fig. 181) (Fig. 182).

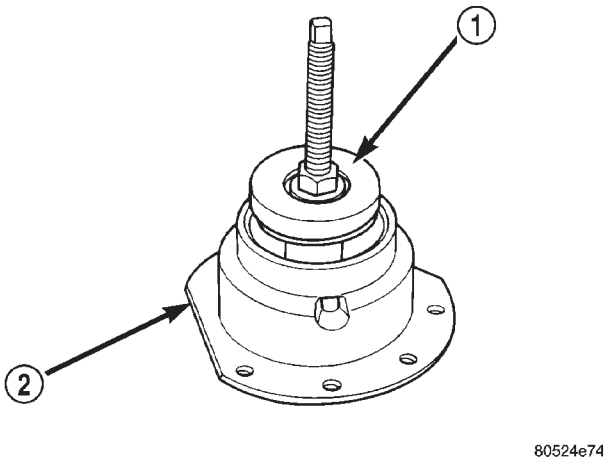

Fig. 181 Position Bearing Cup Remover Tool in Retainer

1 - SPECIAL TOOL 6062A
2 - DIFFERENTIAL BEARING RETAINER

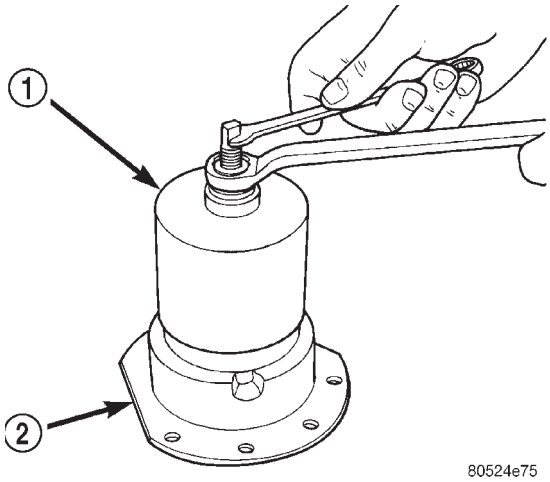

Fig. 182 Remove Bearing Cup

1 - SPECIAL TOOL 6062A
2 - DIFFERENTIAL BEARING RETAINER

(8) Remove ring gear-to-differential case bolts and floating pinion shaft retainers (Fig. 183).

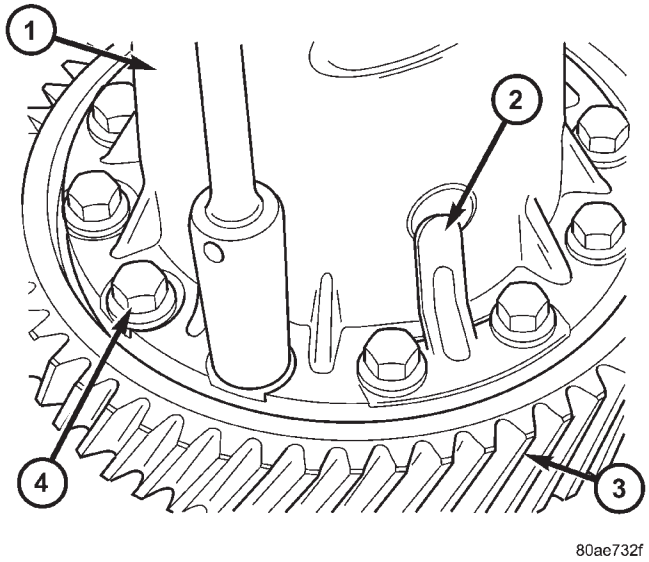

Fig. 183 Ring Gear-to-Case Bolts

1 - DIFFERENTIAL CASE
2 - PINION SHAFT RETAINER
3 - RING GEAR
4 - RING GEAR-TO-CASE BOLT

(9) Separate ring gear from differential case (Fig. 184).

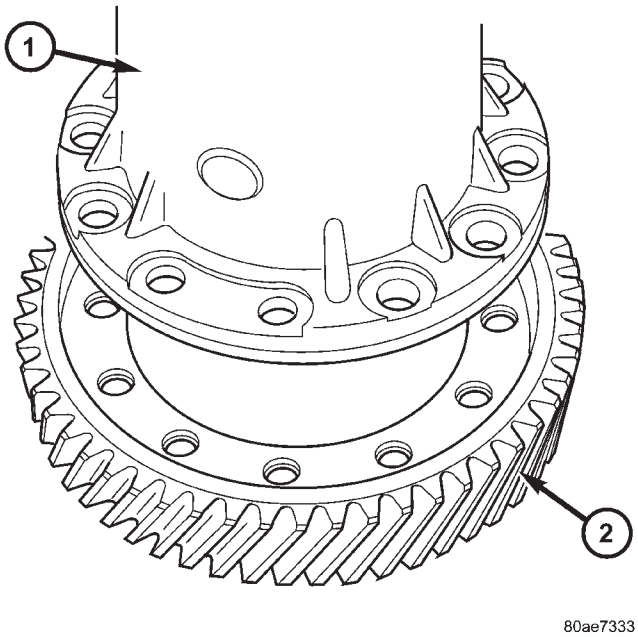

Fig. 184 Ring Gear Removal

1 - DIFFERENTIAL CASE
2 - RING GEAR

FINAL DRIVE (Continued)

(10) Separate differential cover from case using suitable screwdrivers at position shown in (Fig. 185)

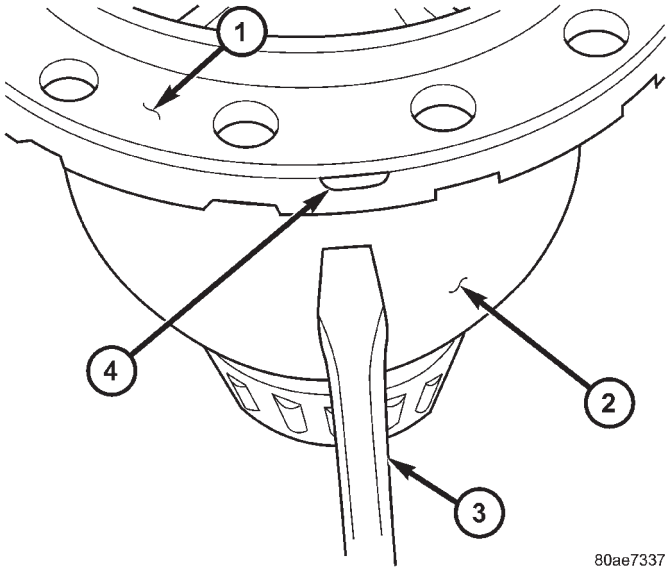

Fig. 185 Separating Differential Support with Screwdrivers

1 - DIFFERENTIAL SUPPORT
2 - DIFFERENTIAL CASE
3 - SCREWDRIVER
4 - RELIEF (2 @ 180° APART)

(11) Lift support from case (Fig. 186).

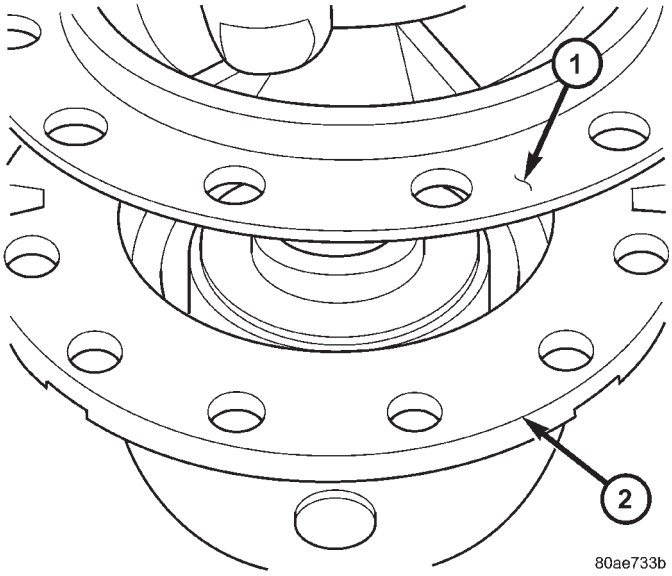

Fig. 186 Differential Support Removal

1 - DIFFERENTIAL SUPPORT
2 - DIFFERENTIAL CASE

(12) Remove side gear thrust washer (Fig. 187).

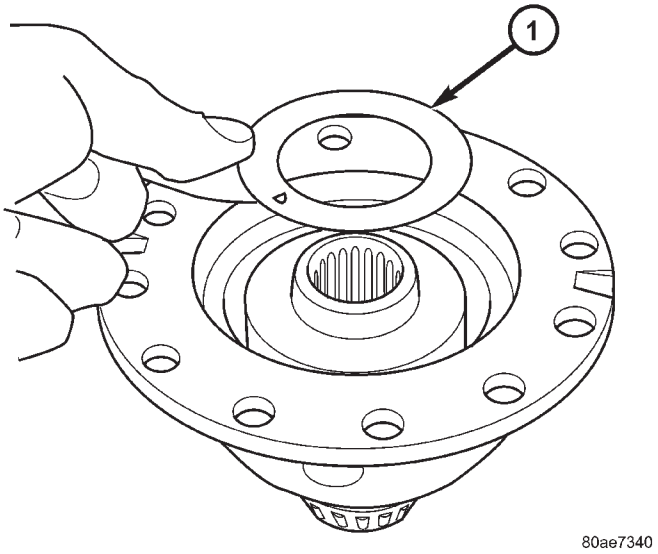

Fig. 187 Side Gear Thrust Washer Removal

1 - SIDE GEAR THRUST WASHER

(13) Remove side gear (Fig. 188).

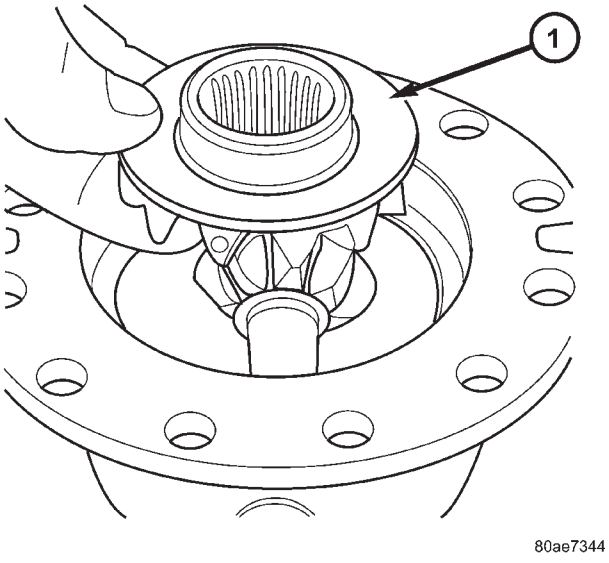

Fig. 188 Side Gear Removal

1 - DIFFERENTIAL SIDE GEAR

FINAL DRIVE (Continued)

(14) Remove pinion shaft (Fig. 189).

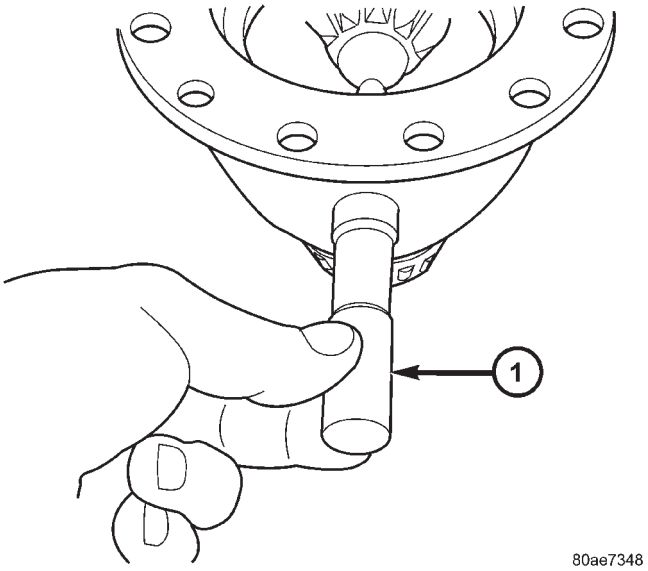

Fig. 189 Pinion Shaft Removal

1 - PINION SHAFT

(15) Remove pinion gears and tabbed washers (Fig. 190).

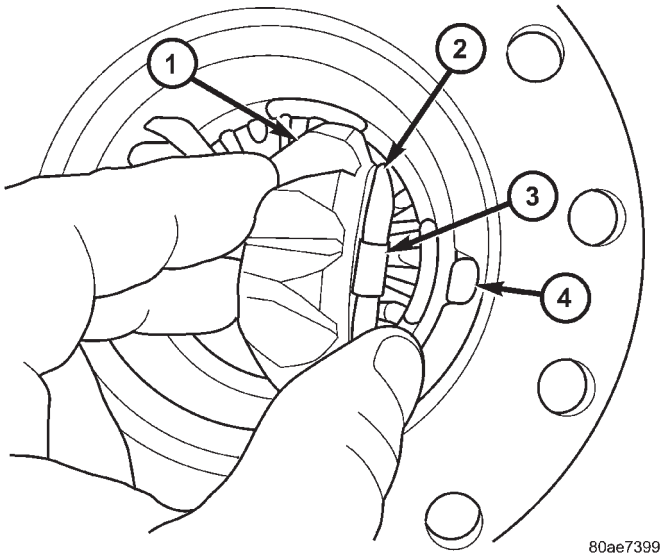

Fig. 190 Pinion Gear and Washer Removal

1 - PINION GEAR
2 - TABBED WASHER
3 - LOCATING TAB
4 - NOTCH

(16) Remove differential side gear (Fig. 191).

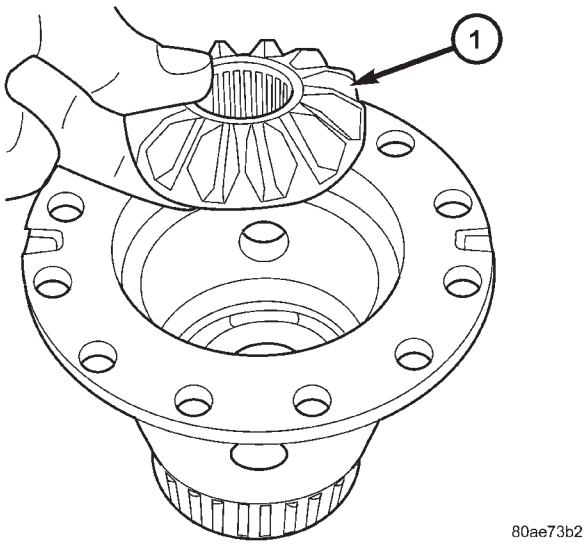

Fig. 191 Side Gear Removal

1 - DIFFERENTIAL SIDE GEAR

(17) Remove side gear thrust washer (Fig. 192).

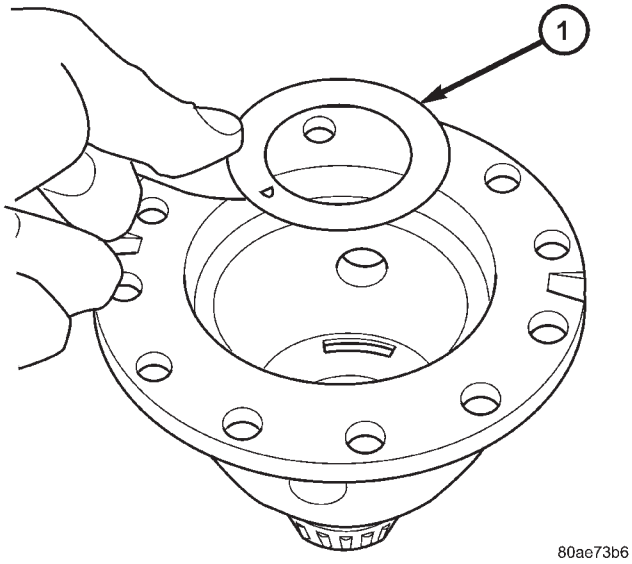

Fig. 192 Side Gear Thrust Washer Removal

1 - THRUST WASHER

(18) Inspect all components for excessive wear.

FINAL DRIVE (Continued)

ASSEMBLY

NOTE: The differential is serviced as an assembly. Differential service is limited to bearing cups and cones. Any other differential component failure must be remedied by differential assembly and transfer shaft replacement.

(1) Install side gear thrust washer to differential case (Fig. 193).

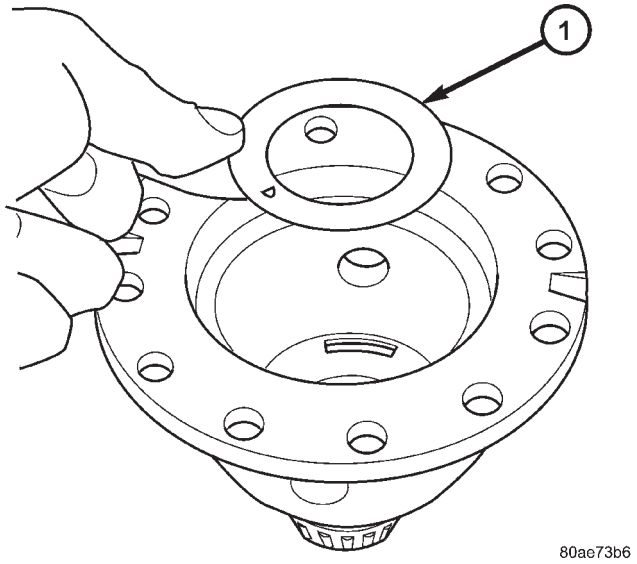

Fig. 193 Thrust Washer Installation

1 - THRUST WASHER

(2) Install side gear to differential case (Fig. 194).

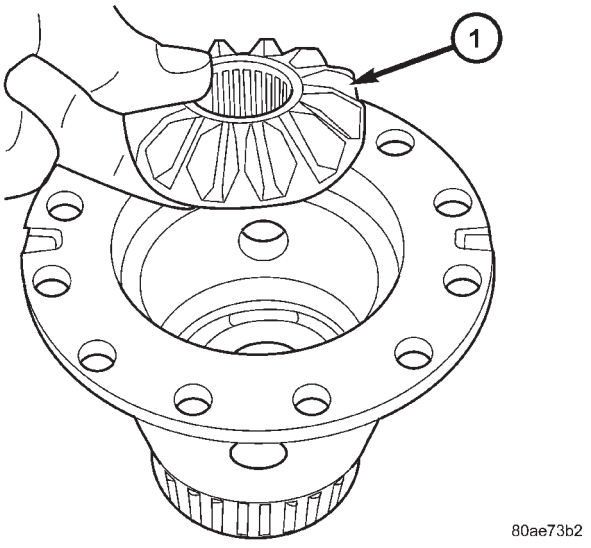

Fig. 194 Side Gear Installation

1 - DIFFERENTIAL SIDE GEAR

(3) Install both pinion gears and washers to case, while orientating washer tabs to notch in case (Fig. 195).

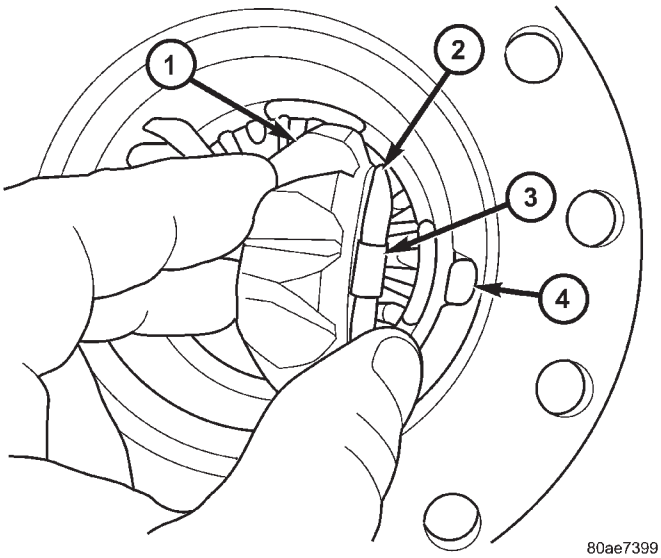

Fig. 195 Pinion Gear and Washer Installation

1 - PINION GEAR
2 - TABBED WASHER
3 - LOCATING TAB
4 - NOTCH

(4) Install pinion shaft (Fig. 196).

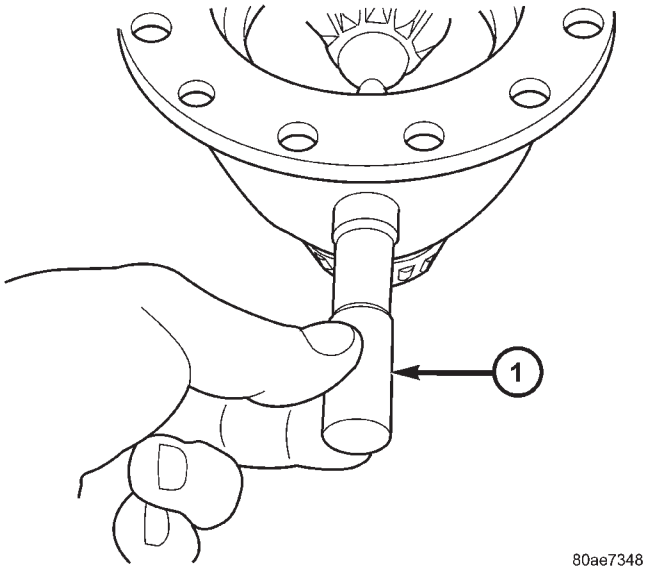

Fig. 196 Pinion Shaft Installation

1 - PINION SHAFT

FINAL DRIVE (Continued)

(5) Install side gear to case (Fig. 197).

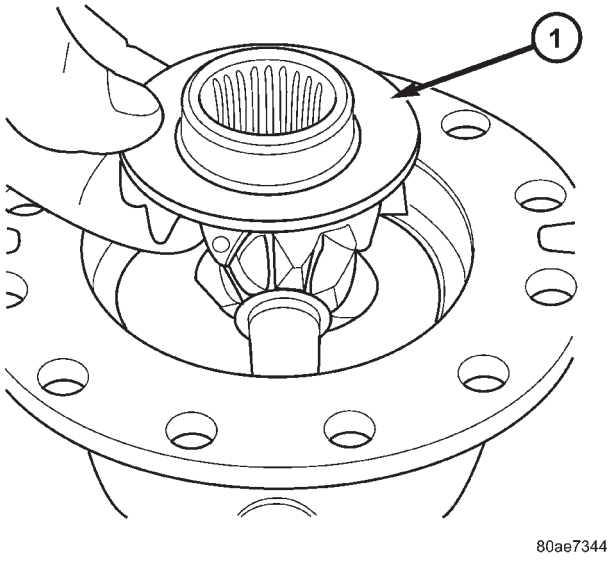

Fig. 197 Side Gear Installation

1 - DIFFERENTIAL SIDE GEAR

(6) Install side gear thrust washer to case (Fig. 198).

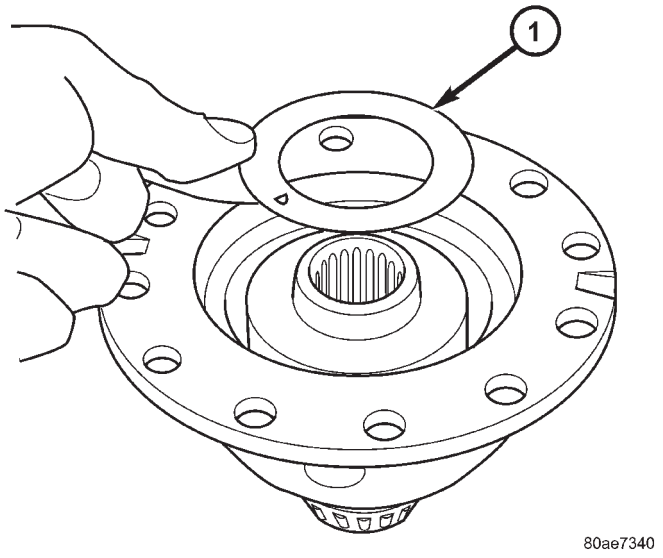

Fig. 198 Side Gear Thrust Washer

1 - SIDE GEAR THRUST WASHER

(7) Install differential support into position, while aligning through-holes (Fig. 199).

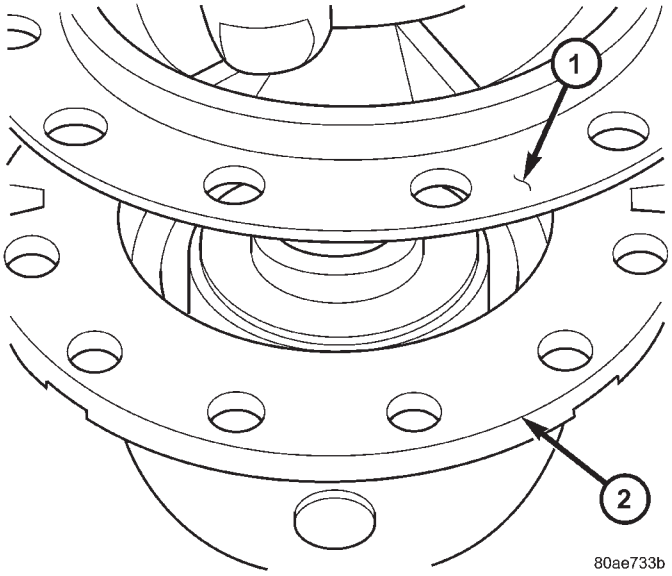

Fig. 199 Diff Support Installation

1 - DIFFERENTIAL SUPPORT
2 - DIFFERENTIAL CASE

(8) Install differential ring gear to case (Fig. 200).

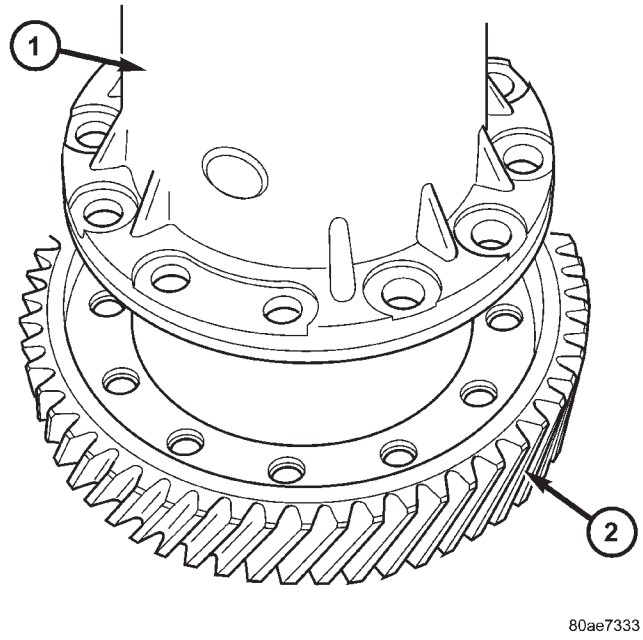

Fig. 200 Ring Gear Installation

1 - DIFFERENTIAL CASE
2 - RING GEAR

FINAL DRIVE (Continued)

(9) Install ring gear-to-case bolts, with pinion shaft retainers (Fig. 201), and torque bolts to 95 N·m (70 ft. lbs.).

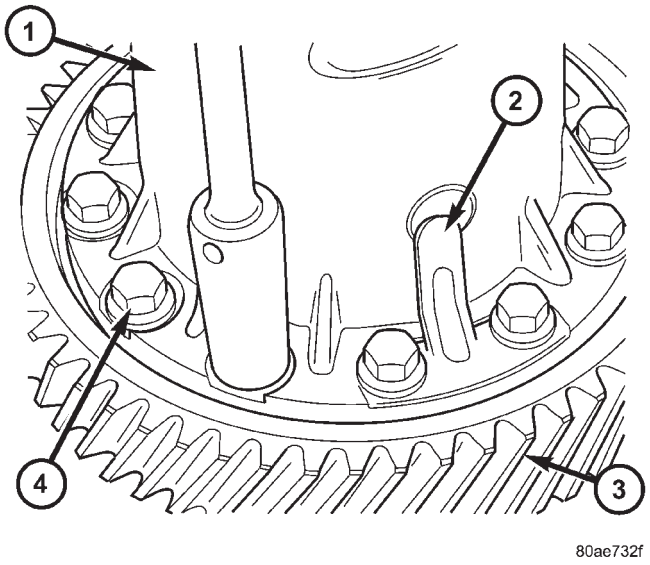

Fig. 201 Ring Gear-to-Case Bolts

1 - DIFFERENTIAL CASE
2 - PINION SHAFT RETAINER
3 - RING GEAR
4 - RING GEAR-TO-CASE BOLT

(10) Using Miller Special Tool L-4410, and C-4171, install differential bearing to differential (extension housing side) (Fig. 202).

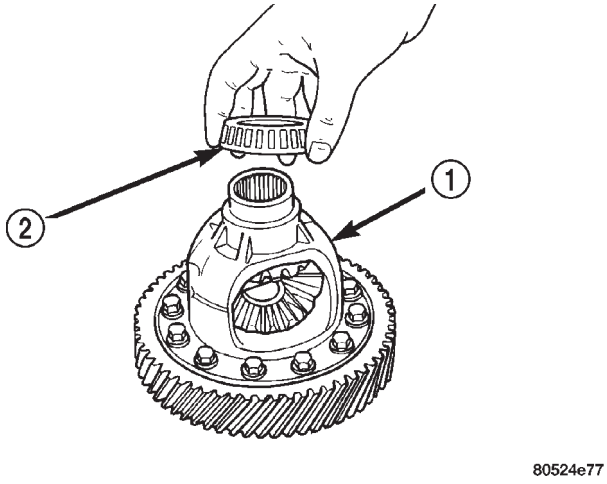

Fig. 202 Position Bearing Cone Onto Differential—Typical

1 - DIFFERENTIAL ASSEMBLY
2 - DIFFERENTIAL BEARING

(11) Using Miller Special Tool 5052 and C-4171, install differential bearing to differential (bearing retainer side).

(12) Using Miller Special Tool 6061 and C-4171, install differential bearing race to bearing retainer (Fig. 203).

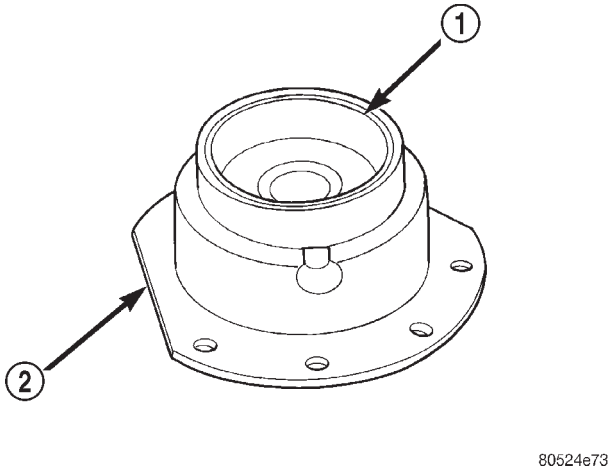

Fig. 203 Differential Bearing Retainer

1 - DIFFERENTIAL BEARING CUP
2 - DIFFERENTIAL BEARING RETAINER

(13) Using Miller Special Tool L–4520 and C-4171, install differential bearing to extension housing.

NOTE: Use Mopar® Silicone Rubber Adhesive Sealant, or equivalent, on retainer and extension housing/adapter plate to seal to case.

(14) Install differential assembly into transaxle case. Install differential bearing retainer (Fig. 204)and torque retainer-to-case bolts (Fig. 205)to 28 N·m (21 ft. lbs.).

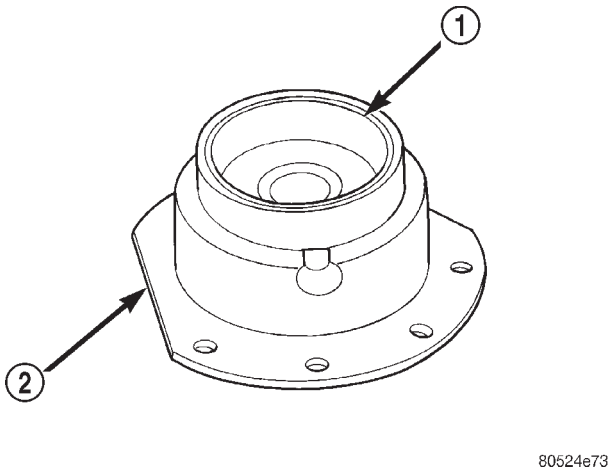

Fig. 204 Differential Bearing Retainer

1 - DIFFERENTIAL BEARING CUP
2 - DIFFERENTIAL BEARING RETAINER

FINAL DRIVE (Continued)

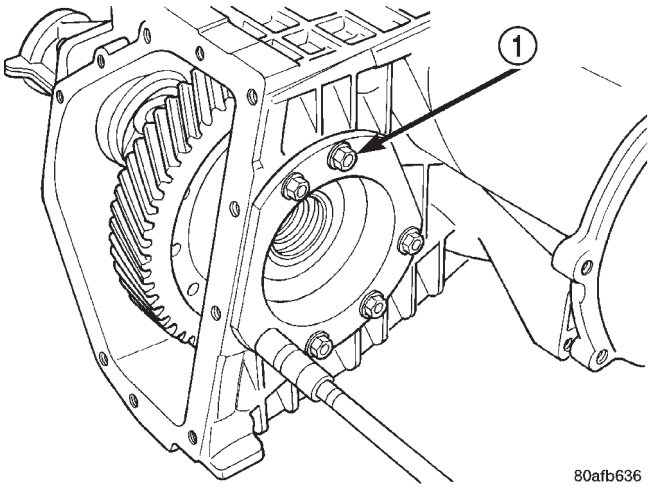

Fig. 205 Differential Retainer Bolts

1 - DIFFERENTIAL RETAINER BOLTS

(15) Apply a bead of Mopar® Silicone Rubber Adhesive Sealant to extension housing/adapter plate and install into position. Install and torque bolts to 28 N·m (21 ft. lbs.).

(16) Measure and adjust differential bearing preload. (Refer to 21 - TRANSMISSION/TRANSAXLE/AUTOMATIC - 41TE/FINAL DRIVE - ADJUSTMENTS)

(17) Apply a bead of Mopar® Silicone Rubber Adhesive Sealant to differential cover and install to case (Fig. 206).

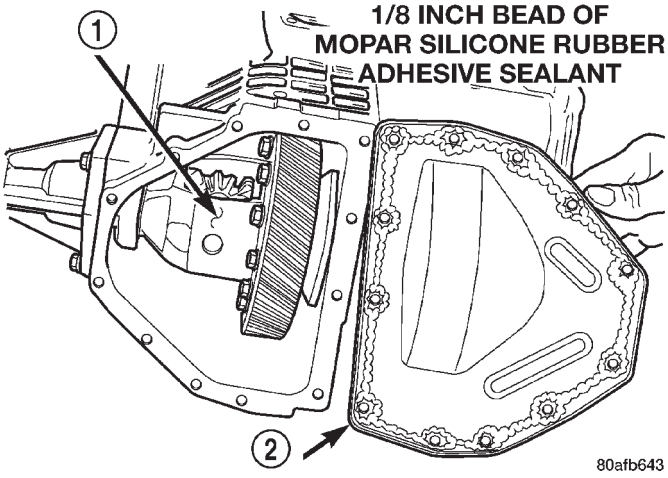

Fig. 206 Install Differential Cover

1 - DIFFERENTIAL ASSEMBLY
2 - DIFFERENTIAL COVER

(18) Install and torque cover-to-case bolts to 19 N·m (165 in. lbs.) (Fig. 207).

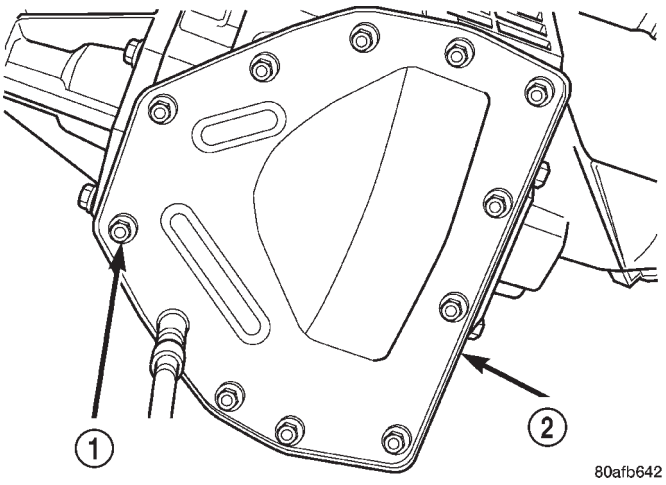

Fig. 207 Differential Cover Bolts

1 - DIFFERENTIAL COVER BOLTS
2 - DIFFERENTIAL COVER

ADJUSTMENTS

ADJUSTMENT - DIFFERENTIAL BEARING PRELOAD

NOTE: Perform all differential bearing preload measurements with the transfer shaft and gear removed.

DIFFERENTIAL BEARING PRELOAD ADJUSTMENT USING EXISTING SHIM

(1) Position the transaxle assembly vertically on the support stand, differential bearing retainer side up.

(2) Install Tool L-4436A into the differential and onto the pinion mate shaft (Fig. 208).

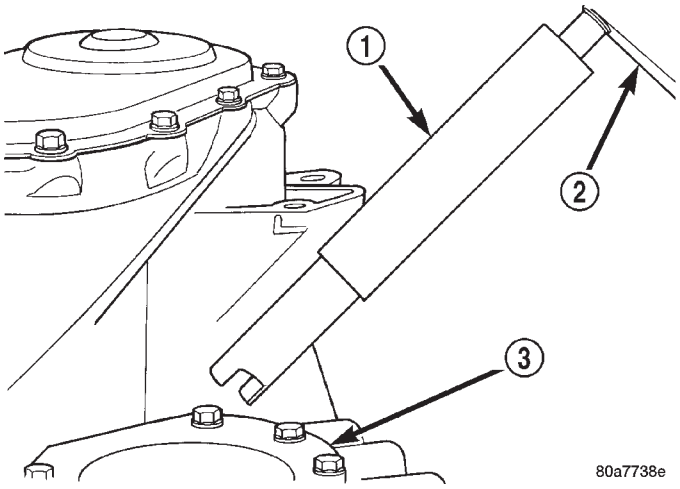

Fig. 208 Tool L-4436 and Torque Wrench

1 - SPECIAL TOOL L-4436–A
2 - TORQUE WRENCH
3 - DIFFERENTIAL BEARING RETAINER

FINAL DRIVE (Continued)

(3) Rotate the differential at least one full revolution to ensure the tapered roller bearings are fully seated.

(4) Using Tool L-4436A and an inch-pound torque wrench, check the turning torque of the differential (Fig. 209). **The turning torque should be between 5 and 18 inch-pounds.**

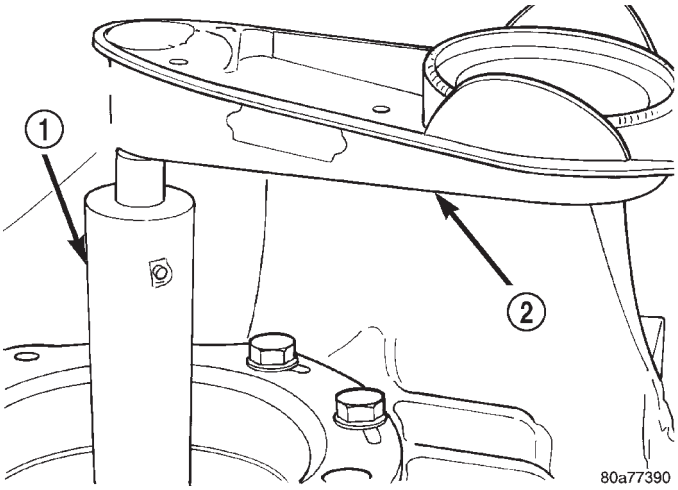

Fig. 209 Checking Differential Bearings Turning Torque

1 - SPECIAL TOOL L-4436–A
2 - TORQUE WRENCH

(5) If the turning torque is within specifications, remove tools. Setup is complete.

(6) If turning torque is not within specifications proceed with the following steps.

(a) Remove differential bearing retainer from the transaxle case.

(b) Remove the bearing cup from the differential bearing retainer using Tool 6062A.

(c) Remove the existing shim from under the cup.

(d) Measure the existing shim.

(e) If the turning torque was too high when measured, install a 0.05 mm (0.002 inch) thinner shim. If the turning torque is was too low, install a 0.05 mm (0.002 inch) thicker shim. Repeat until 5-18 inch-pounds turning torque is obtained. Oil Baffle is not required to be installed when making shim selection.

(f) Install the proper shim under the bearing cup. Make sure the oil baffle is installed properly in the bearing retainer, below the bearing shim and cup.

(g) Install the differential bearing retainer using Tool 5052 and C-4171. Seal the retainer to the housing with MOPAR® Silicone Rubber Adhesive Sealant and torque bolts to 28 N·m (250 in. lbs.).

(7) Using Tool L-4436A and an inch-pound torque wrench, recheck the turning torque of the differential (Fig. 209). **The turning torque should be within 5-18 inch-pounds.**

Shim thickness need be determined only if any of the following parts are replaced:

- Transaxle case
- Differential carrier
- Differential bearing retainer
- Extension housing
- Differential bearing cups and cones

FINAL DRIVE (Continued)

DIFFERENTIAL BEARING SHIM CHART

PART NUMBER	SHIM THICKNESS	
	MM	INCH
4659257	.980	0.0386
4659258	1.02	0.0402
4659259	1.06	0.0418
4659260	1.10	0.0434
4659261	1.14	0.0449
4659262	1.18	0.0465
4659263	1.22	0.0481
4659264	1.26	0.0497
4659265	1.30	0.0512
4659266	1.34	0.0528
4659267	1.38	0.0544
4659268	1.42	0.0560
4659269	1.46	0.0575
4659270	1.50	0.0591
4659271	1.54	0.0607
4659272	1.58	0.0623
4659273	1.62	0.0638
4659274	1.66	0.0654
4659275	1.70	0.0670
4659283	2.02	0.0796
4659284	2.06	0.0812

PRELOAD ADJUSTMENT W/O SHIM

(1) Remove the bearing cup from the differential bearing retainer using Miller special Tool 6062A.

(2) Remove existing shim from under bearing cup.

(3) Reinstall the bearing cup into the retainer using Miller Special Tool 6061, and C-4171.

NOTE: Oil baffle is not required when making the shim calculation.

(4) Install the bearing retainer into the case. Torque bolts to 28 N·m (250 in. lbs.).

(5) Position the transaxle assembly vertically on the support stand and install Miller Special Tool L-4436-A into the bearing retainer.

(6) Rotate the differential at least one full revolution to ensure the tapered roller bearings are fully seated.

(7) Attach a dial indicator to the case and zero the dial. Place the tip on the end of Special Tool L-4436-A.

(8) Place a large screwdriver to each side of the ring gear and lift. Check the dial indicator for the amount of end play.

CAUTION: Do not damage the transaxle case and/or differential retainer sealing surface.

(9) Using the end play measurement that was determined, add 0.18mm (0.007 inch). This should give you between 5-18 inch pounds of bearing preload. Refer to the Differential Bearing Shim Chart to determine which shim to use.

(10) Remove the differential bearing retainer. Remove the bearing cup.

(11) Install the oil baffle. Install the proper shim combination under the bearing cup.

(12) Install the differential bearing retainer. Seal the retainer to the housing with Mopar® Silicone Rubber Adhesive Sealant. Torque bolts to 28 N·m (250 in. lbs.).

(13) Using Miller Special Tool L-4436-A and an inch-pound torque wrench, check the turning torque of the differential (Fig. 209). The turning torque should be between 5-18 inch-pounds.

NOTE: If turning torque is too high install a 0.05mm (0.002 inch) thicker shim. If the turning torque is too low, install a 0.05mm (0.002 inch) thinner shim. Repeat until 5-18 inch-pounds of turning torque is obtained.

FLUID

STANDARD PROCEDURE

FLUID LEVEL AND CONDITION CHECK

NOTE: Only transmission fluid of the type labeled Mopar ATF+4 (Automatic Transmission Fluid–Type 9602) should be used in this transaxle.

FLUID LEVEL CHECK

The transmission sump has a fluid level indicator (dipstick) to check oil similar to most automatic transmissions. It is located on the left side of the engine. Be sure to wipe all dirt from dipstick handle before removing.

The torque converter fills in both the P Park and N Neutral positions. Place the selector lever in P Park to be sure that the fluid level check is accurate. **The engine should be running at idle speed for at least one minute, with the vehicle on level ground.** At normal operating temperature 82° C (180° F), the fluid level is correct if it is in the HOT region on the oil level indicator (Fig. 210). The fluid level should be within the COLD region of the dipstick at 27° C (80° F) fluid temperature.

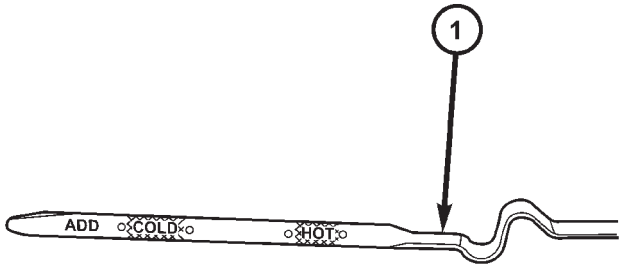

80d64ee0

Fig. 210 Fluid Level Indicator

1 - FLUID LEVEL INDICATOR

FLUID LEVEL CHECK USING DRB

NOTE: Engine and Transaxle should be at normal operating temperature before performing this procedure.

(1) Start engine and apply parking brake.
(2) Hook up DRB scan tool and select transmission.
(3) Select sensors.
(4) Read the transmission temperature value.
(5) Compare the fluid temperature value with the fluid temperature chart (Fig. 211).

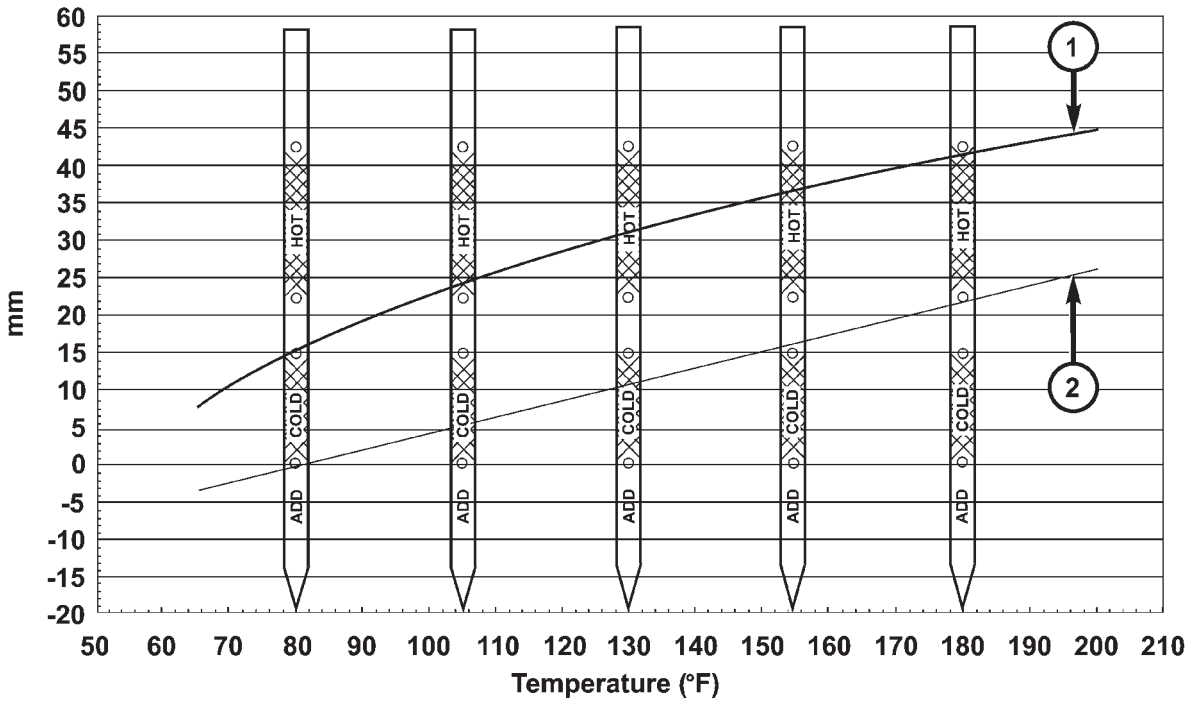

80d64e6e

Fig. 211 Transmission Fluid Temperature Chart

1 - MAX. LEVEL
2 - MIN. LEVEL

FLUID (Continued)

(6) Adjust transmission fluid level shown on the indicator according to the chart.

(7) Check transmission for leaks.

Low fluid level can cause a variety of conditions because it allows the pump to take in air along with the fluid. As in any hydraulic system, air bubbles make the fluid spongy, therefore, pressures will be low and build up slowly.

Improper filling can also raise the fluid level too high. When the transaxle has too much fluid, the gears churn up foam and cause the same conditions which occur with a low fluid level.

In either case, air bubbles can cause overheating and/or fluid oxidation, and varnishing. This can interfere with normal valve, clutch, and accumulator operation. Foaming can also result in fluid escaping from the transaxle vent where it may be mistaken for a leak.

FLUID CONDITION

Along with fluid level, it is important to check the condition of the fluid. When the fluid smells burned, and is contaminated with metal or friction material particles, a complete transaxle recondition is probably required. Be sure to examine the fluid on the dipstick closely. If there is any doubt about its condition, drain out a sample for a double check.

Mopar® ATF+4 (Automatic Transmission Fluid-Type 9602) when new is red in color. The ATF is dyed red so it can be identified from other fluids used in the vehicle such as engine oil or antifreeze. The red color is not permanent and is not an indicator of fluid condition. As the vehicle is driven, the ATF will begin to look darker in color and may eventually become brown. **This is normal.** ATF+4 also has a unique odor that may change with age. Consequently, **odor and color cannot be used to indicate the fluid condition or the need for a fluid change.**

After the fluid has been checked, seat the dipstick fully to seal out water and dirt.

STANDARD PROCEDURE - FLUID AND FILTER SERVICE

NOTE: Refer to the maintenance schedules in LUBRICATION and MAINTENANCE, or the vehicle owner's manual, for the recommended maintenance (fluid/filter change) intervals for this transaxle.

NOTE: Only fluids of the type labeled Mopar® ATF+4 (Automatic Transmission Fluid) Type 9602 should be used. A filter change should be made at the time of the transmission oil change. The magnet (on the inside of the oil pan) should also be cleaned with a clean, dry cloth.

NOTE: If the transaxle is disassembled for any reason, the fluid and filter should be changed.

FLUID/FILTER SERVICE (RECOMMENDED)

(1) Raise vehicle on a hoist. Refer to LUBRICATION and MAINTENANCE for proper procedures. Place a drain container with a large opening, under transaxle oil pan.

(2) Loosen pan bolts and tap the pan at one corner to break it loose allowing fluid to drain, then remove the oil pan.

(3) Install a new filter and o-ring on bottom of the valve body (Fig. 212).

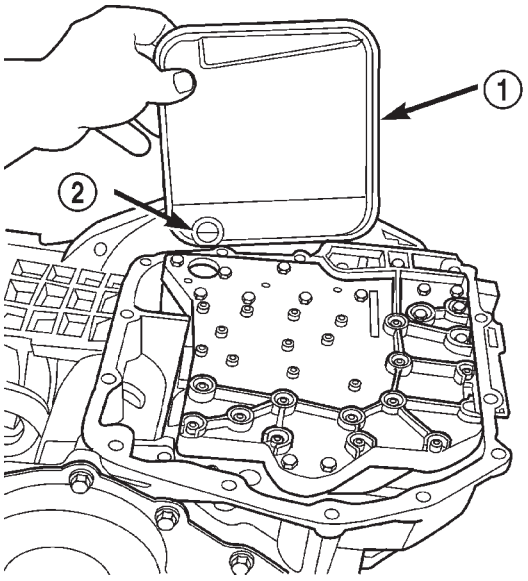

Fig. 212 Filter and O-Ring

1 - OIL FILTER
2 - O-RING

(4) Clean the oil pan and magnet. Reinstall pan using new Mopar Silicone Adhesive sealant. Tighten oil pan bolts to 19 N·m (165 in. lbs.).

(5) Pour four quarts of Mopar® ATF+4 (Automatic Transmission Fluid) Type 9602 through the dipstick opening.

(6) Start engine and allow to idle for at least one minute. Then, with parking and service brakes applied, move selector lever momentarily to each position, ending in the park or neutral position.

FLUID (Continued)

(7) Check the transaxle fluid level and add an appropriate amount to bring the transaxle fluid level to 3mm (1/8 in.) below the lowest mark on the dipstick (Fig. 213).

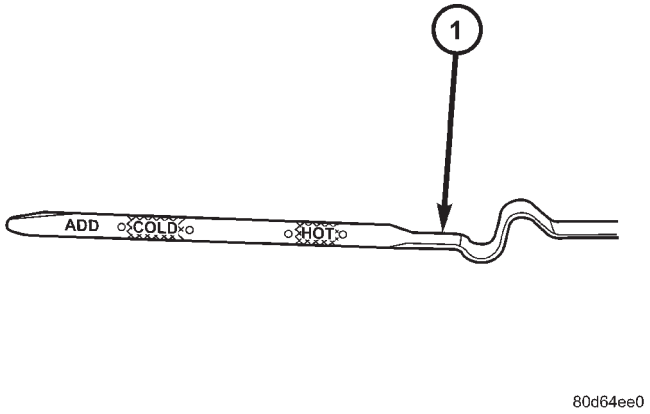

Fig. 213 Fluid Level Indicator

1 - FLUID LEVEL INDICATOR

(8) Recheck the fluid level after the transaxle has reached normal operating temperature (180°F.). Refer to Fluid Level and Condition Check for the proper fluid fill procedure.

(9) To prevent dirt from entering transaxle, make certain that dipstick is fully seated into the dipstick opening.

DIPSTICK TUBE FLUID SUCTION METHOD (ALTERNATIVE)

(1) When performing the fluid suction method, make sure the transaxle is at full operating temperature.

(2) To perform the dipstick tube fluid suction method, use a suitable fluid suction device (Vacula™ or equivalent).

(3) Insert the fluid suction line into the dipstick tube.

NOTE: Verify that the suction line is inserted to the lowest point of the transaxle oil pan. This will ensure complete evacuation of the fluid in the pan.

(4) Follow the manufacturers recommended procedure and evacuate the fluid from the transaxle.

(5) Remove the suction line from the dipstick tube.

(6) Pour four quarts of Mopar® ATF+4 (Automatic Transmission Fluid) Type 9602 through the dipstick opening.

(7) Start engine and allow to idle for at least one minute. Then, with parking and service brakes applied, move selector lever momentarily to each position, ending in the park or neutral position.

(8) Check the transaxle fluid level and add an appropriate amount to bring the transaxle fluid level to 3mm (1/8 in.) below the lowest mark on the dipstick (Fig. 213).

(9) Recheck the fluid level after the transaxle has reached normal operating temperature (180°F.). (Refer to 21 - TRANSMISSION/TRANSAXLE/AUTOMATIC - 41TE/FLUID - STANDARD PROCEDURE)

(10) To prevent dirt from entering transaxle, make certain that dipstick is fully seated into the dipstick opening.

GEAR SHIFT CABLE

REMOVAL

(1) Disconnect battery cables.

(2) Remove battery shield.

(3) Remove battery.

(4) Remove speed control servo and position out of way.

(5) Disconnect gear shift cable at manual valve lever (Fig. 214).

(6) Disconnect gear shift cable from upper mount bracket (Fig. 214).

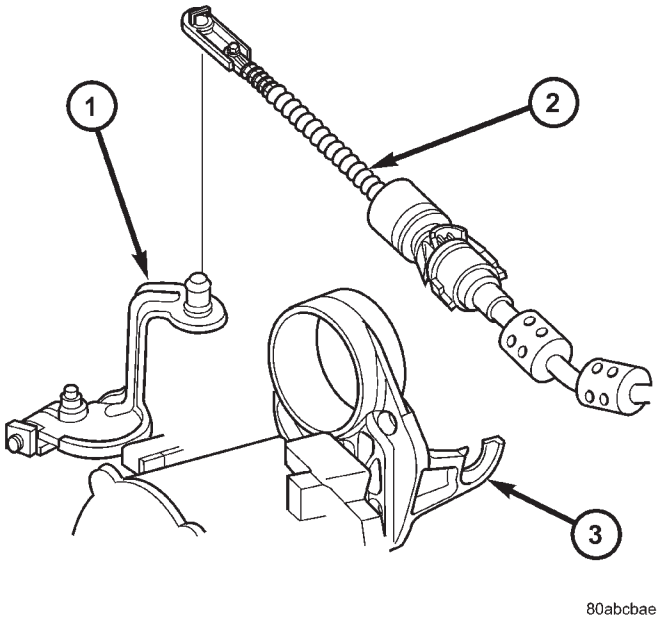

Fig. 214 Gearshift Cable at Transaxle - Typical

1 - MANUAL VALVE LEVER
2 - GEAR SHIFT CABLE
3 - UPPER MOUNT BRACKET

GEAR SHIFT CABLE (Continued)

(7) Remove instrument panel lower silencer (Fig. 215).

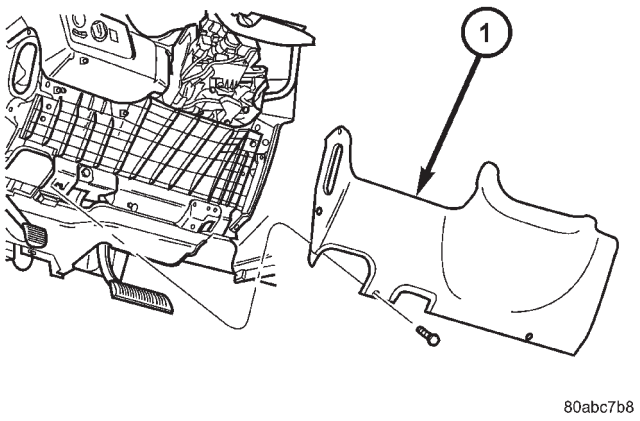

Fig. 215 Instrument Panel Lower Silencer

1 - INSTRUMENT PANEL LOWER SILENCER

(8) Remove knee bolster (Fig. 216).

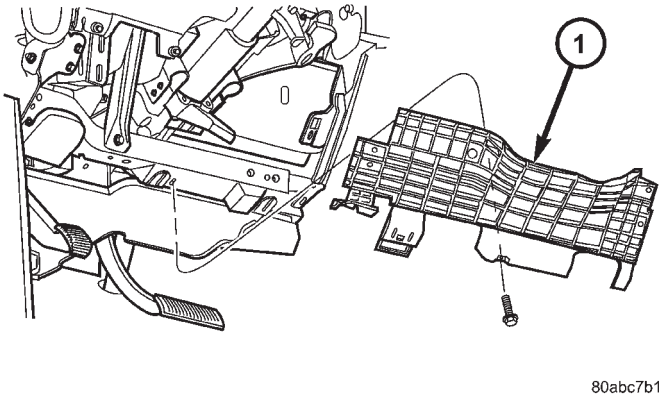

Fig. 216 Knee Bolster

1 - KNEE BOLSTER

(9) Disconnect gear shift cable from gear shift lever (Fig. 217).

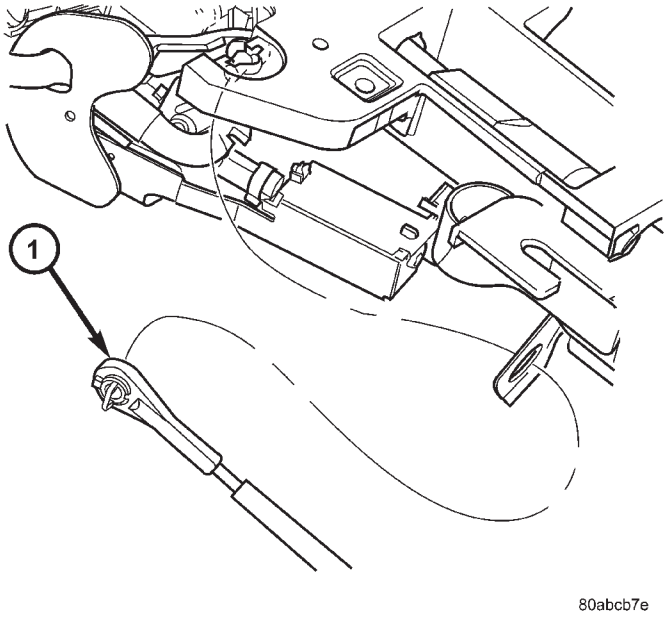

Fig. 217 Gearshift Cable at Column

1 - GEAR SHIFT CABLE

(10) Remove gear shift cable from column bracket (Fig. 217).

(11) Disengage grommet from dash panel (Fig. 218) and remove gear shift cable from inside vehicle.

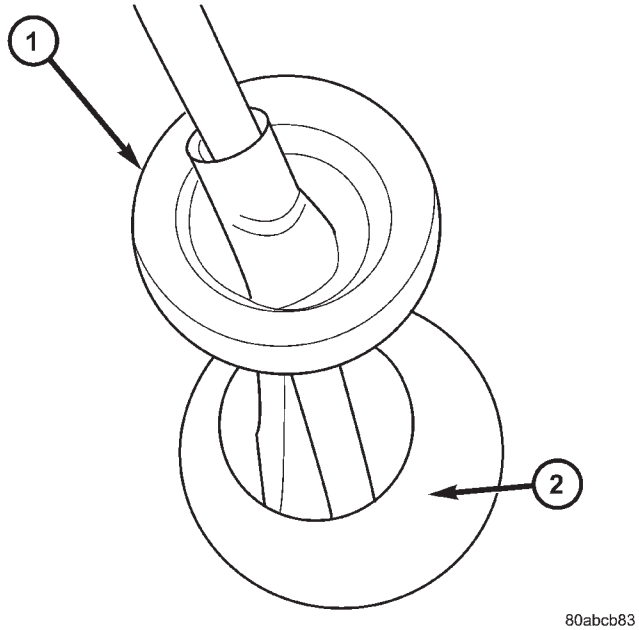

Fig. 218 Gearshift Cable/Grommet at Dash Panel

1 - CABLE GROMMET
2 - DASH PANEL

GEAR SHIFT CABLE (Continued)

INSTALLATION

(1) Fish gear shift cable dash panel opening into engine compartment and secure grommet (Fig. 219).

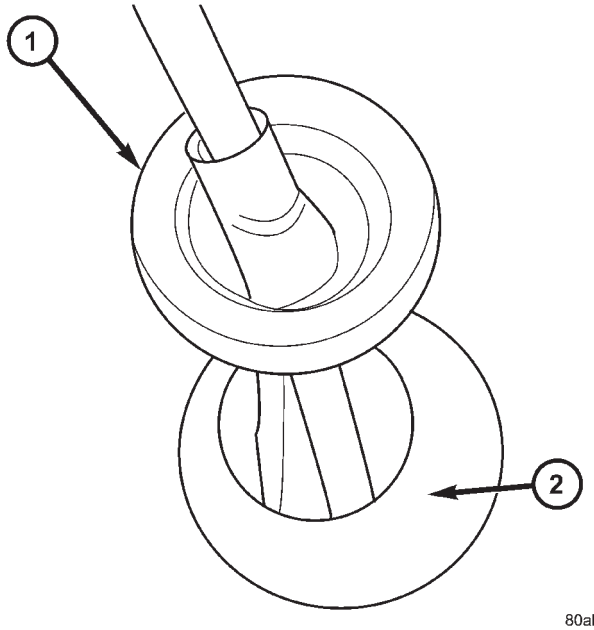

80abcb83

Fig. 219 Gearshift Cable/Grommet at Dash Panel

1 - CABLE GROMMET
2 - DASH PANEL

(2) Install gear shift cable through column bracket (Fig. 220) until audible “click” is heard.

(3) Connect gear shift cable to gear shift lever (Fig. 220).

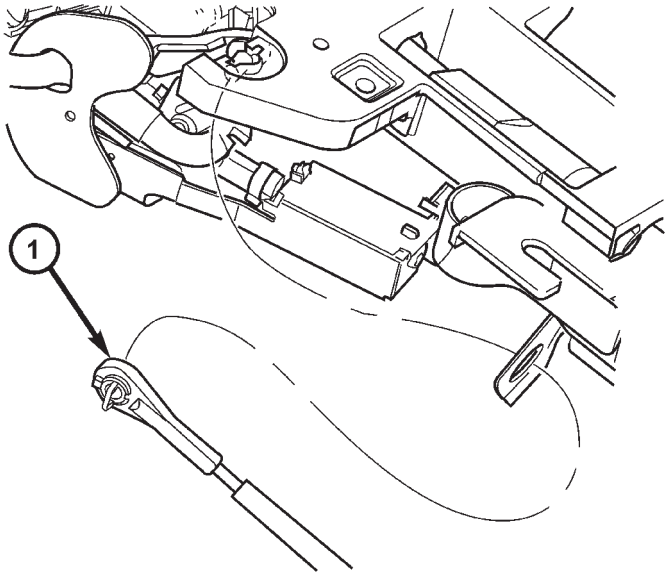

80abcb7e

Fig. 220 Gearshift Cable at Column

1 - GEAR SHIFT CABLE

(4) Install knee bolster (Fig. 221).

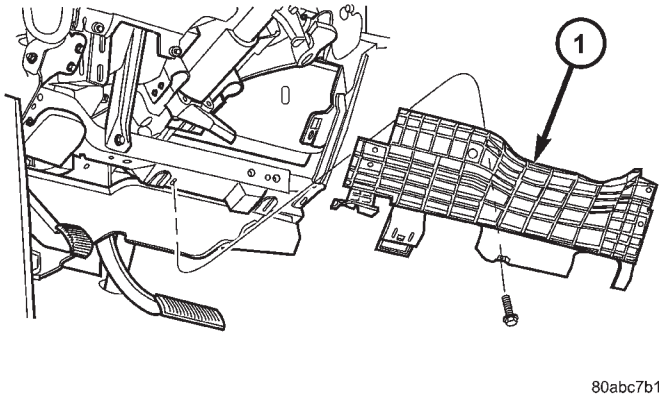

80abc7b1

Fig. 221 Knee Bolster

1 - KNEE BOLSTER

(5) Install instrument panel lower silencer (Fig. 222).

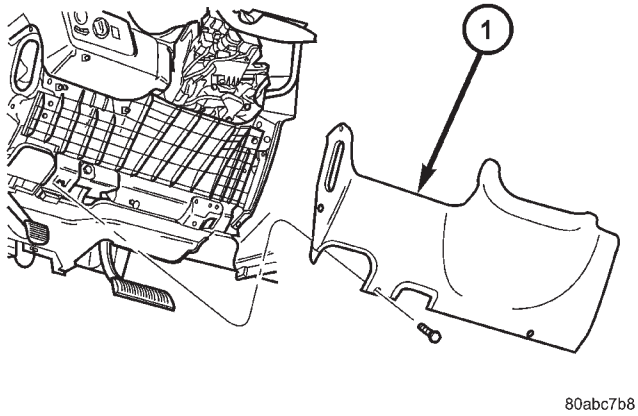

80abc7b8

Fig. 222 Instrument Panel Lower Silencer

1 - INSTRUMENT PANEL LOWER SILENCER

GEAR SHIFT CABLE (Continued)

(6) Install gear shift cable to transaxle upper mount bracket (Fig. 223). An audible “click” should be heard.

(7) Connect gear shift cable end to transaxle manual valve lever (Fig. 223).

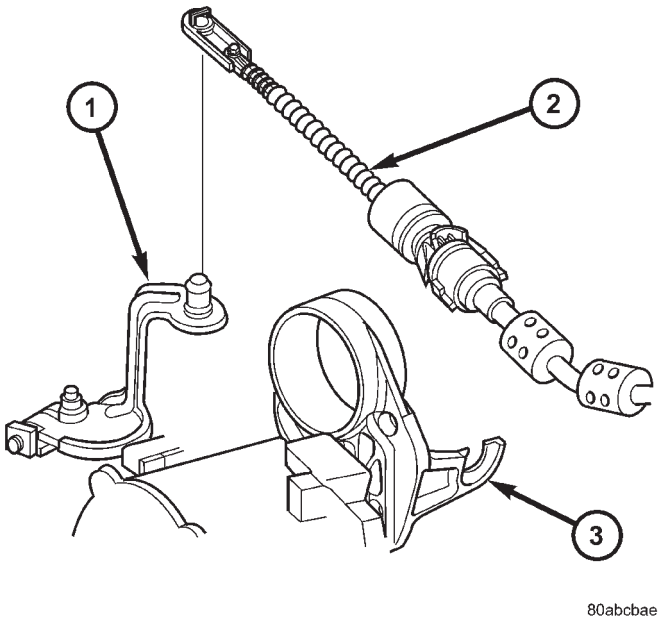

Fig. 223 Gearshift Cable at Transaxle

1 - MANUAL VALVE LEVER
2 - GEAR SHIFT CABLE
3 - UPPER MOUNT BRACKET

(8) Adjust gearshift cable. (Refer to 21 - TRANSMISSION/TRANSAXLE/AUTOMATIC - 41TE/GEAR SHIFT CABLE - ADJUSTMENTS)

(9) Install speed control servo into position.

(10) Install battery.

(11) Install battery shield.

(12) Connect battery cables.

ADJUSTMENTS

GEARSHIFT CABLE ADJUSTMENT

VERIFICATION

(1) Place gearshift lever in gated park (P).

(2) Attempt to move vehicle by rocking back and forth on level ground. If vehicle does not move, attempt to start engine. If engine starts, the park position is correct.

(3) Set parking brake.

(4) Turn key to on/run and depress brake pedal. Place gearshift lever in neutral (N).

(5) Attempt to start engine. If engine starts in both neutral (N) or park (P), gearshift cable is adjusted properly. No adjustment is required.

(6) If engine does not start in either park (P) or neutral (N), perform adjustment procedure.

ADJUSTMENT

(1) Park the vehicle on level ground and set the parking brake.

(2) Place the gearshift lever in gated park (P) and remove ignition key.

(3) Loosen the cable adjustment screw at the transaxle manual valve lever (Fig. 224).

(4) Pull the gearshift lever fully forward to the park detent position.

(5) Release the park brake, then rock the vehicle to assure it is in park. Reset the park brake.

(6) Tighten the cable adjustment screw to 8 N·m (70 in. lbs.). Gearshift cable should now be properly adjusted.

(7) Verify adjustment by using the verification procedure.

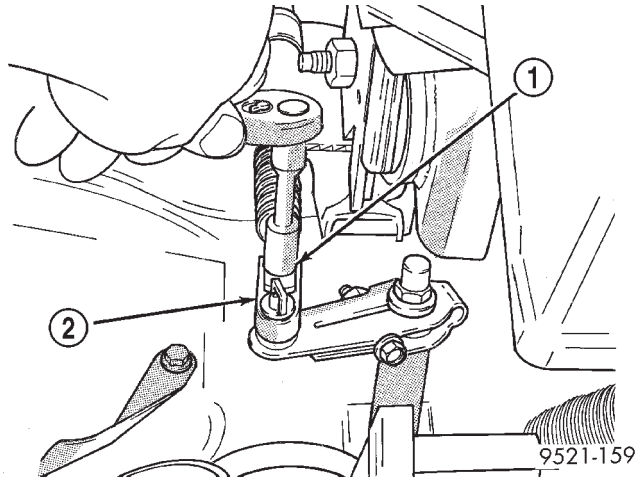

Fig. 224 Gearshift Cable Adjustment

1 - GEARSHIFT CABLE ADJUSTMENT SCREW
2 - GEARSHIFT CABLE

HOLDING CLUTCHES

DESCRIPTION

Two hydraulically applied multi-disc clutches are used to hold planetary geartrain components stationary while the input clutches drive others. The 2/4 and Low/Reverse clutches are considered holding clutches and are contained at the rear of the transaxle case. (Fig. 225) .

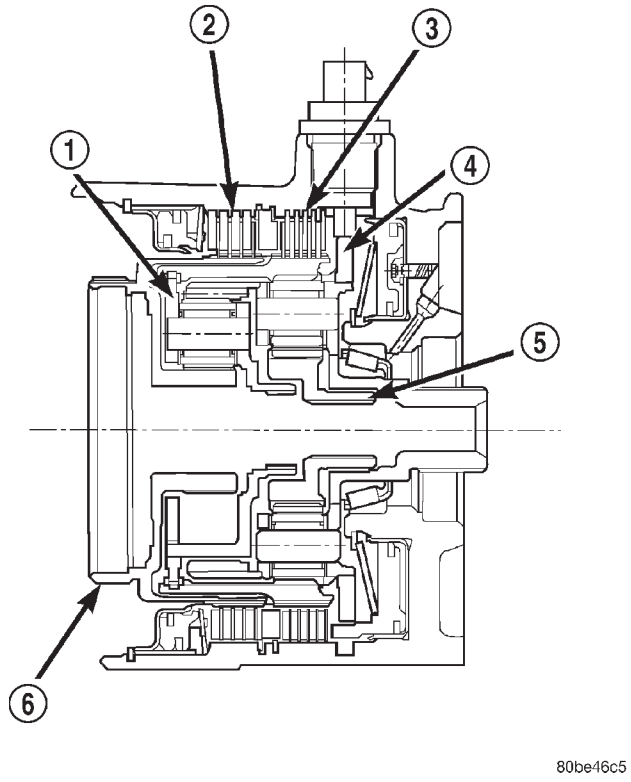

Fig. 225 2/4 and Low/Reverse Clutches

1 - FRONT PLANET CARRIER/REAR ANNULUS
2 - 2/4 CLUTCH
3 - L/R CLUTCH
4 - REAR PLANET CARRIER/FRONT ANNULUS
5 - REAR SUN GEAR
6 - FRONT SUN GEAR ASSEMBLY

OPERATION

NOTE: Refer to the "Elements In Use" chart in Diagnosis and Testing for a collective view of which clutch elements are applied at each position of the selector lever.

2/4 CLUTCH

The 2/4 clutch is hydraulically applied in second and fourth gears by pressurized fluid against the 2/4 clutch piston. When the 2/4 clutch is applied, the front sun gear assembly is held or grounded to the transaxle case.

LOW/REVERSE CLUTCH

The Low/Reverse clutch is hydraulically applied in park, reverse, neutral, and first gears by pressurized fluid against the Low/Reverse clutch piston. When the Low/Reverse clutch is applied, the front planet carrier/rear annulus assembly is held or grounded to the transaxle case.

INPUT CLUTCH ASSEMBLY

DISASSEMBLY

(1) Mount input clutch assembly to Input Clutch Pressure Fixture (Tool 8391).

(2) Tap down reverse clutch reaction plate to release pressure from snap ring (Fig. 226).

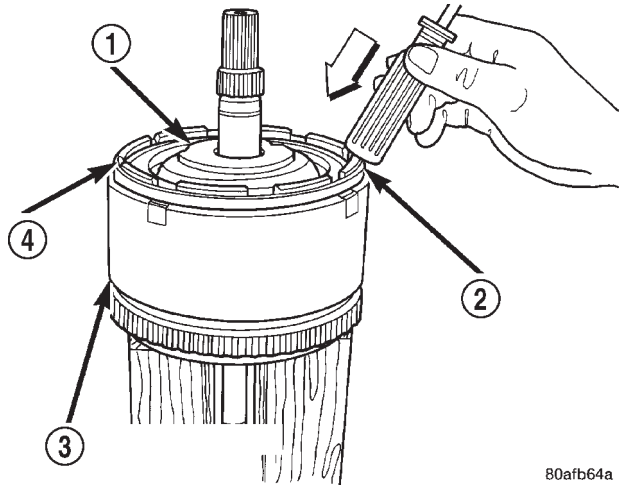

Fig. 226 Tapping Reaction Plate

1 - #4 THRUST PLATE (SELECT)
2 - TAP DOWN REVERSE CLUTCH REACTION PLATE TO REMOVE OR INSTALL SNAP RING
3 - INPUT SHAFT CLUTCHES RETAINER ASSEMBLY
4 - REVERSE CLUTCH REACTION PLATE

INPUT CLUTCH ASSEMBLY (Continued)

(3) Remove reverse clutch snap ring (Fig. 227).

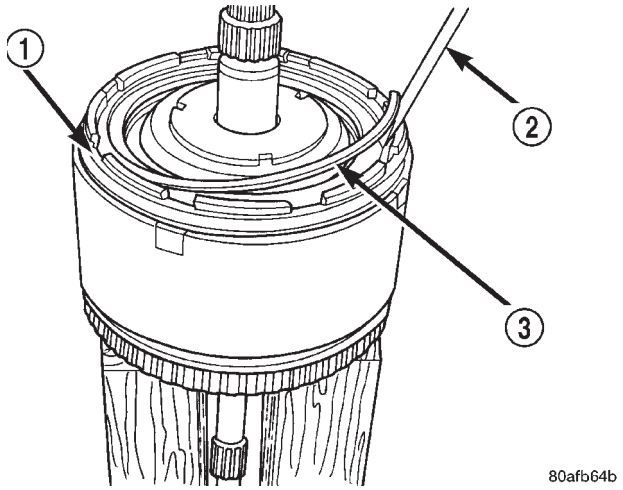

Fig. 227 Reverse Clutch Snap Ring

1 - REACTION PLATE
2 - SCREWDRIVER
3 - REVERSE CLUTCH SNAP RING (SELECT)

(4) Pry up and remove reverse clutch reaction plate (Fig. 228) (Fig. 229).

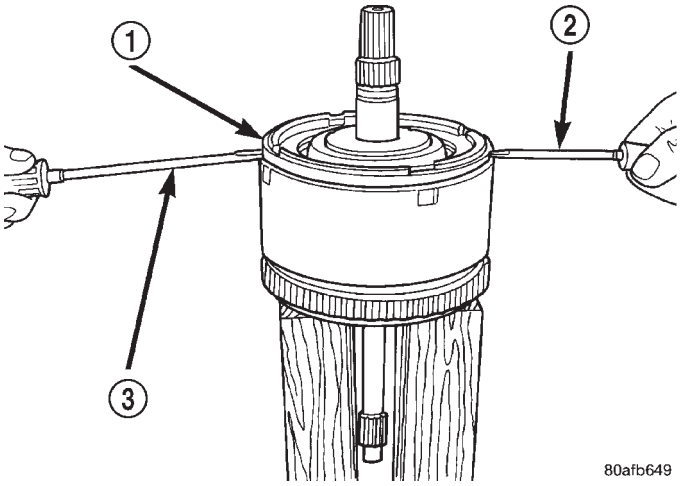

Fig. 228 Pry Reverse Clutch Reaction Plate

1 - REVERSE CLUTCH REACTION PLATE
2 - SCREWDRIVER
3 - SCREWDRIVER

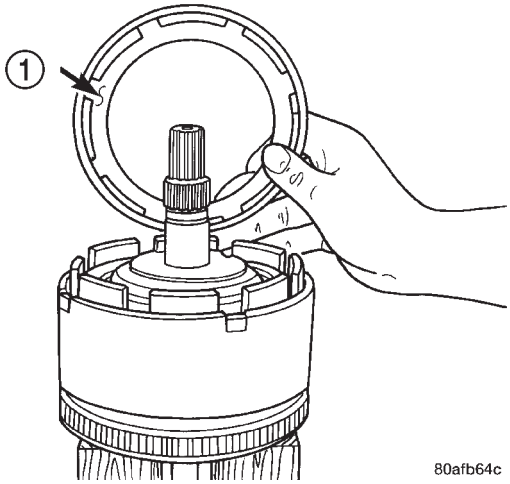

Fig. 229 Reverse Clutch Reaction Plate

1 - REVERSE CLUTCH REACTION PLATE (INSTALL FLAT SIDE DOWN)

(5) Remove the reverse clutch pack (two frictions/ one steel) (Fig. 230).

NOTE: Tag reverse clutch pack for reassembly identification.

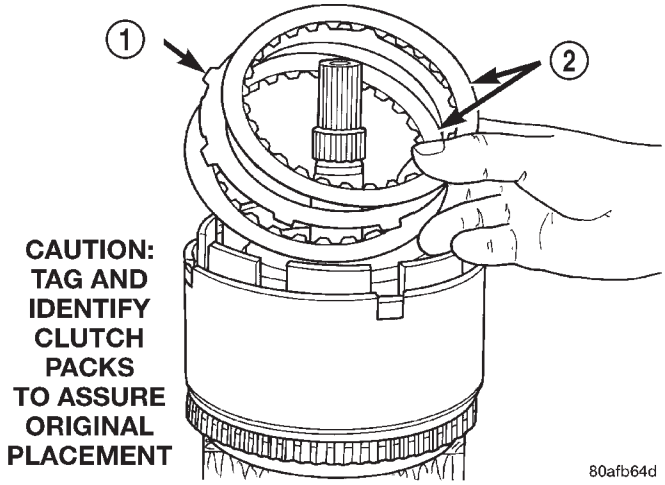

Fig. 230 Reverse Clutch Pack

1 - REVERSE CLUTCH PLATE
2 - REVERSE CLUTCH DISC

INPUT CLUTCH ASSEMBLY (Continued)

(6) Remove the OD/Reverse pressure plate snap ring (Fig. 231).

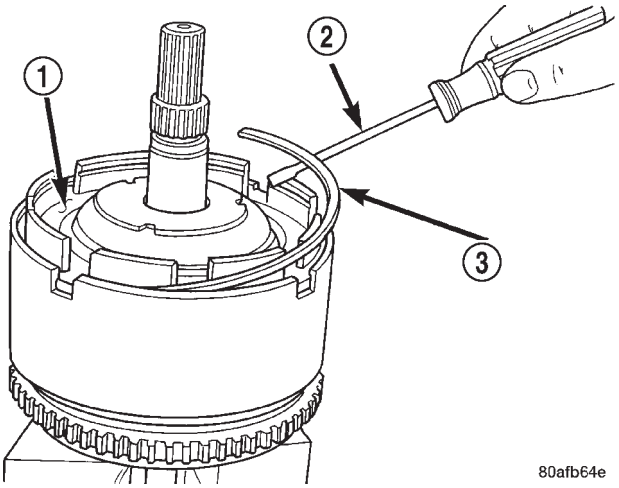

Fig. 231 OD/Reverse Pressure Plate Snap Ring

1 - OD/REVERSE PRESSURE PLATE
2 - SCREWDRIVER
3 - OD/REVERSE PRESSURE PLATE SNAP RING

(7) Remove OD/Reverse pressure plate (Fig. 232).

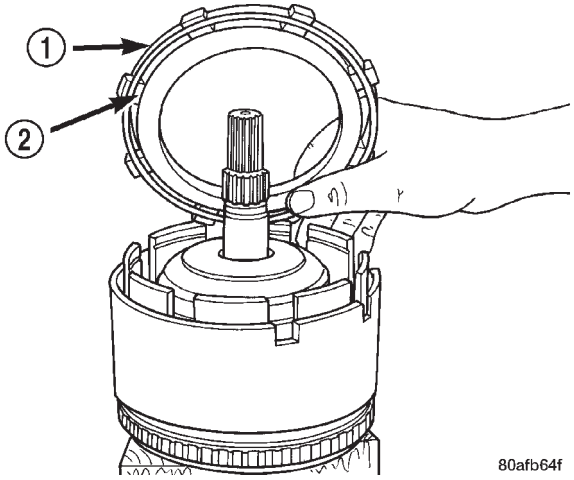

Fig. 232 OD/Reverse Pressure Plate

1 - OD/REVERSE PRESSURE PLATE (STEP SIDE DOWN)
2 - (STEP SIDE DOWN)

(8) Remove OD/Reverse pressure plate wave snap ring (Fig. 233).

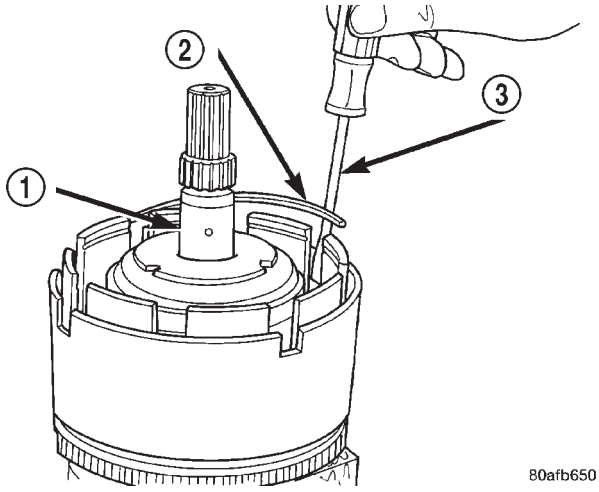

Fig. 233 Waved Snap Ring

1 - OVERDRIVE SHAFT ASSEMBLY
2 - OD/REVERSE CLUTCH WAVED SNAP RING
3 - SCREWDRIVER

(9) Remove OD shaft/hub and OD clutch pack (Fig. 234) (Fig. 235).

NOTE: Tag overdrive clutch pack for reassembly identification.

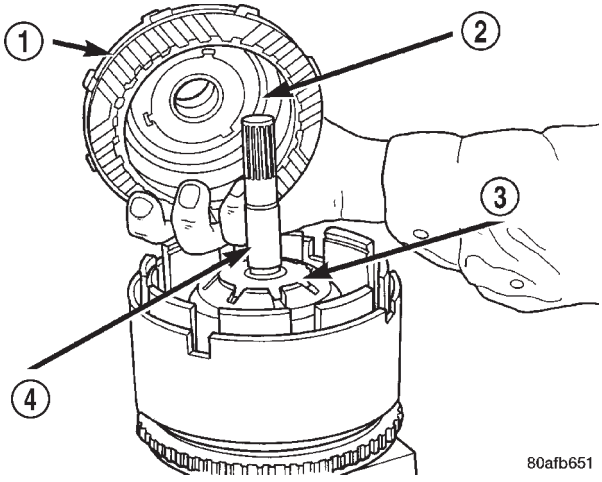

Fig. 234 Remove OD Clutch Pack

1 - OVERDRIVE SHAFT ASSEMBLY AND OD CLUTCH PACK
2 - #3 THRUST PLATE
3 - #3 THRUST WASHER
4 - UNDERDRIVE SHAFT ASSEMBLY

INPUT CLUTCH ASSEMBLY (Continued)

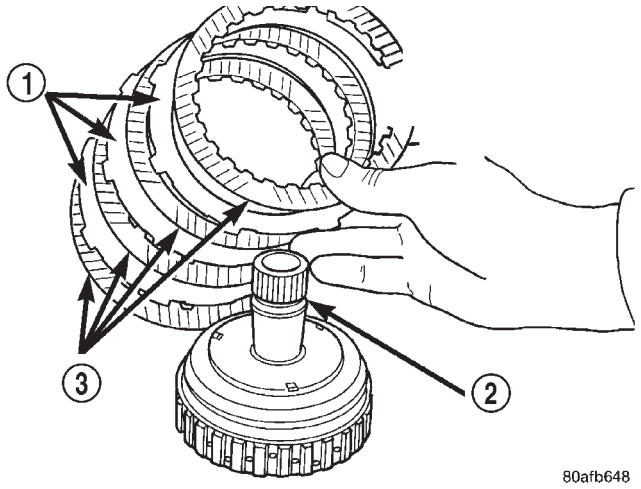

Fig. 235 Overdrive Clutch Pack

1 - OVERDRIVE CLUTCH PLATE
2 - OVERDRIVE SHAFT ASSEMBLY
3 - OVERDRIVE CLUTCH DISC

(10) Remove and inspect #3 & #4 thrust washers (Fig. 236).

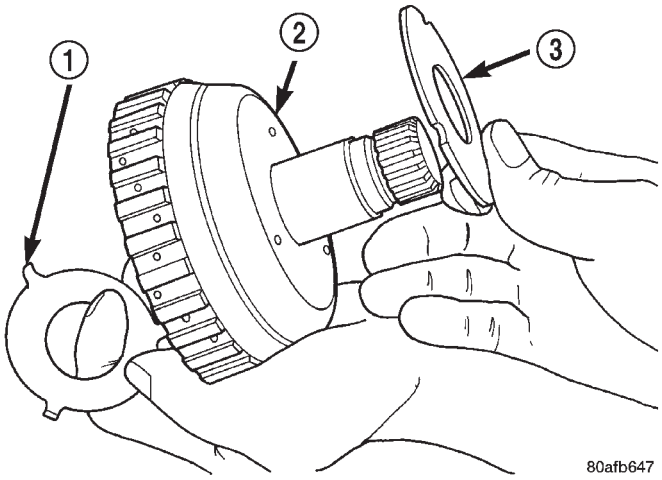

Fig. 236 #3&4 Thrust Washers

1 - #3 THRUST PLATE (3 TABS)
2 - OD SHAFT ASSEMBLY
3 - #4 THRUST PLATE (3 SLOTS)

(11) Remove the underdrive shaft assembly (Fig. 237).

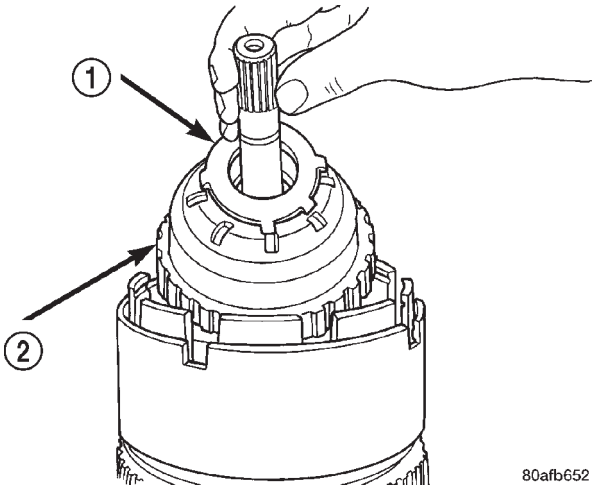

Fig. 237 Underdrive Shaft Assembly

1 - #3 THRUST WASHER (5 TABS)
2 - UNDERDRIVE SHAFT ASSEMBLY

(12) Remove the #2 needle bearing (Fig. 238).

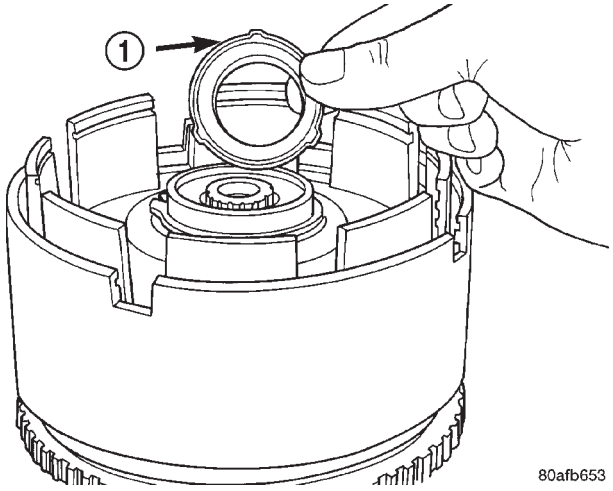

Fig. 238 No. 2 Needle Bearing

1 - #2 NEEDLE BEARING (NOTE 3 TABS)

INPUT CLUTCH ASSEMBLY (Continued)

(13) Remove the OD/UD reaction plate tapered snap ring (Fig. 239).

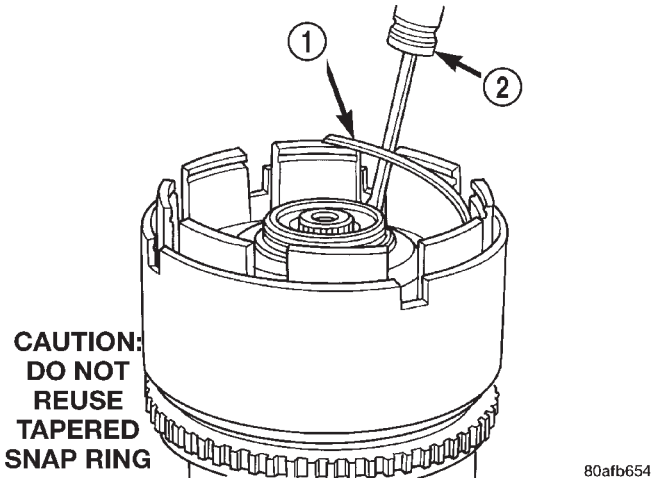

Fig. 239 OD/UD Reaction Plate Tapered Snap Ring

1 - OVERDRIVE/UNDERDRIVE CLUTCHES REACTION PLATE TAPERED SNAP RING
2 - SCREWDRIVER (DO NOT SCRATCH REACTION PLATE)

NOTE: The OD/UD clutch reaction plate has a step on both sides. Install the OD/UD clutches reaction plate tapered step side up.

(14) Remove the OD/UD reaction plate (Fig. 240).

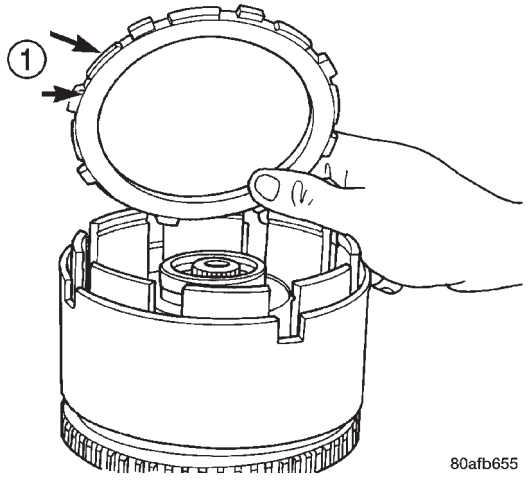

Fig. 240 OD/UD Reaction Plate

1 - OD/UD CLUTCH REACTION PLATE (TAPERED STEP SIDE UP)

(15) Remove the first UD clutch disc (Fig. 241).

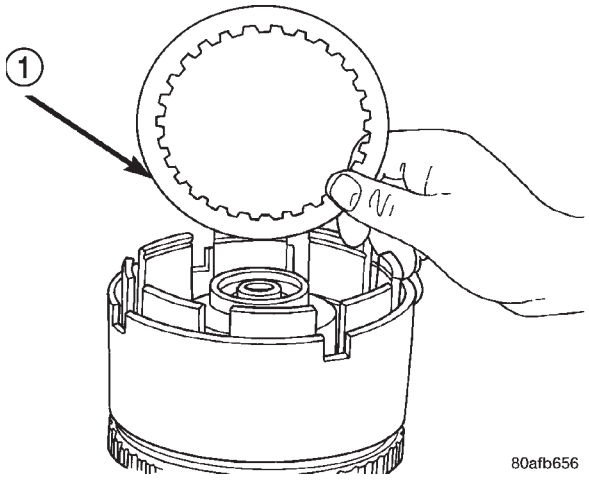

Fig. 241 Remove One UD Clutch Disc

1 - ONE UNDERDRIVE CLUTCH DISC

(16) Remove the UD clutch flat snap ring (Fig. 242).

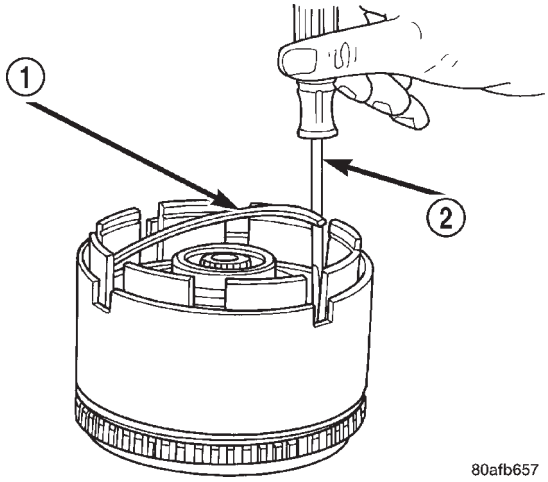

Fig. 242 UD Clutch Flat Snap Ring

1 - UNDERDRIVE CLUTCH REACTION PLATE FLAT SNAP RING
2 - SCREWDRIVER

INPUT CLUTCH ASSEMBLY (Continued)

NOTE: Tag underdrive clutch pack for reassembly identification.

(17) Remove the UD clutch pack (Fig. 243).

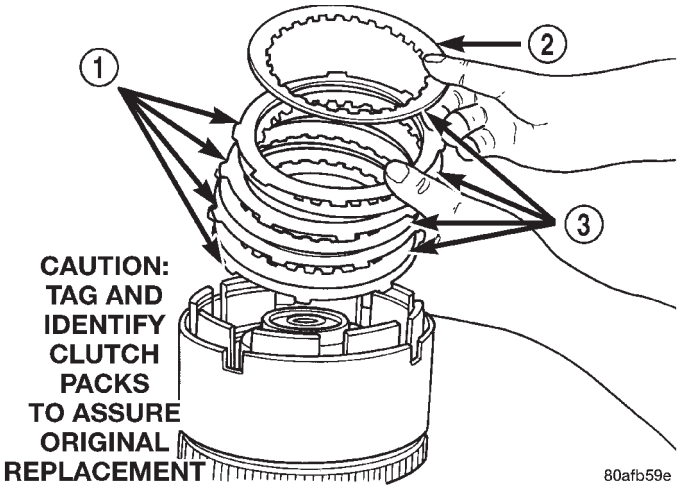

Fig. 243 Underdrive Clutch Pack

1 - CLUTCH PLATE
2 - ONE UD CLUTCH DISC
3 - CLUTCH DISC

CAUTION: Compress return spring just enough to remove or install snap ring.

(18) Using Tool 5059A and an arbor press, compress UD clutch piston enough to remove snap ring (Fig. 244) (Fig. 245).

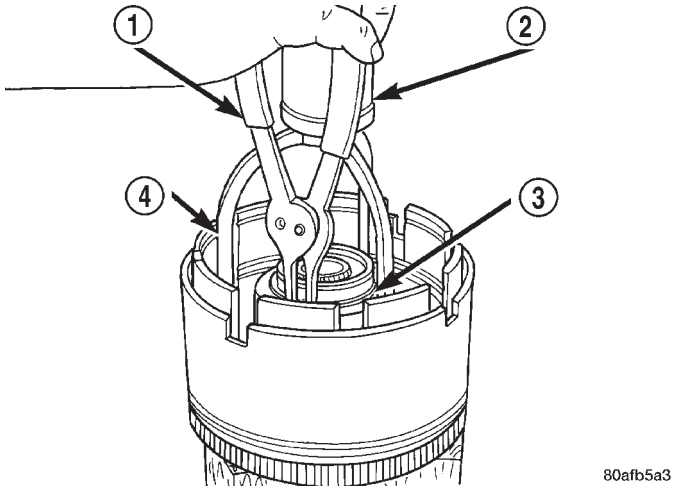

Fig. 244 UD Spring Retainer Snap Ring

1 - SNAP RING PLIERS
2 - ARBOR PRESS RAM
3 - SNAP RING
4 - SPECIAL TOOL 5059A

(19) Remove spring retainer (Fig. 245).

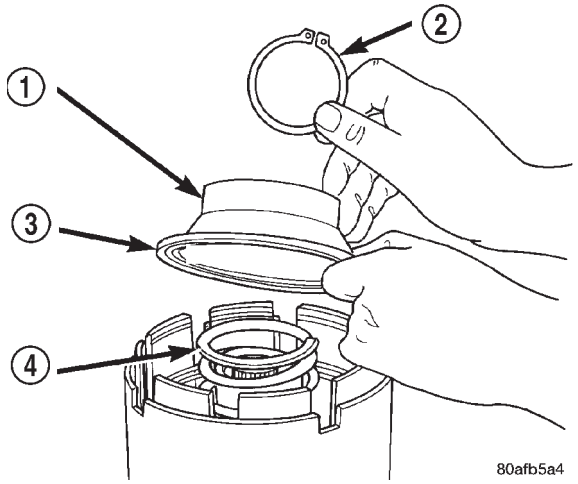

Fig. 245 UD Return Spring and Retainer

1 - UNDERDRIVE SPRING RETAINER
2 - SNAP RING
3 - SEAL
4 - PISTON RETURN SPRING

(20) Remove UD clutch piston (Fig. 246).

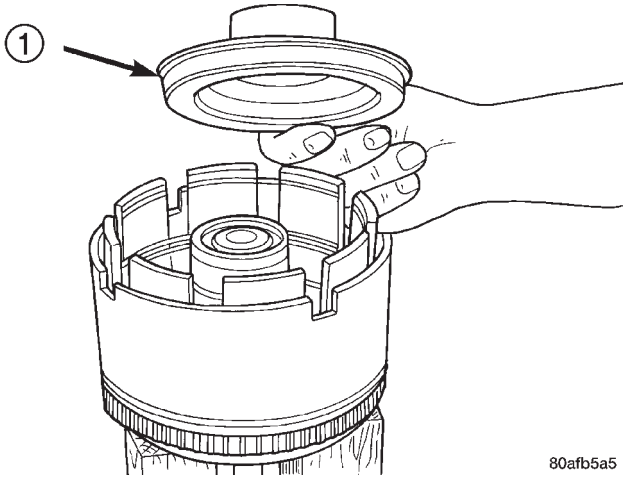

Fig. 246 Underdrive Clutch Piston

1 - PISTON

INPUT CLUTCH ASSEMBLY (Continued)

(21) Remove input hub tapered snap ring (Fig. 247).

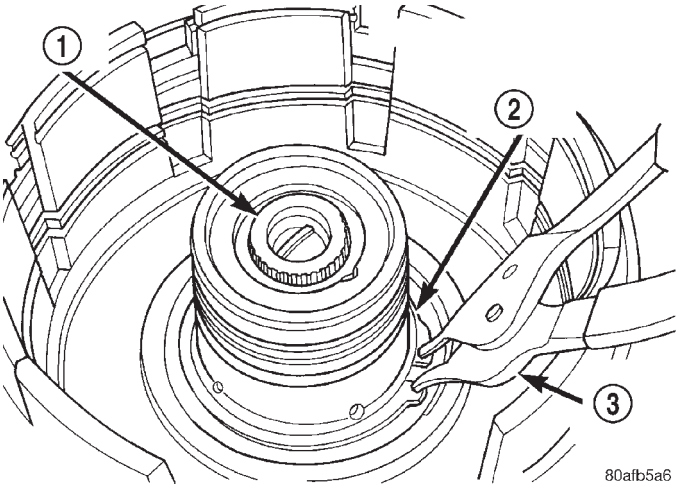

Fig. 247 Input Hub Tapered Snap Ring

1 - INPUT SHAFT
2 - INPUT HUB SNAP RING (TAPERED SIDE UP WITH TABS IN CAVITY)
3 - SNAP RING PLIERS

(22) Tap on input hub with soft faced hammer and separate input hub from OD/Reverse piston and clutch retainer (Fig. 248) (Fig. 249).

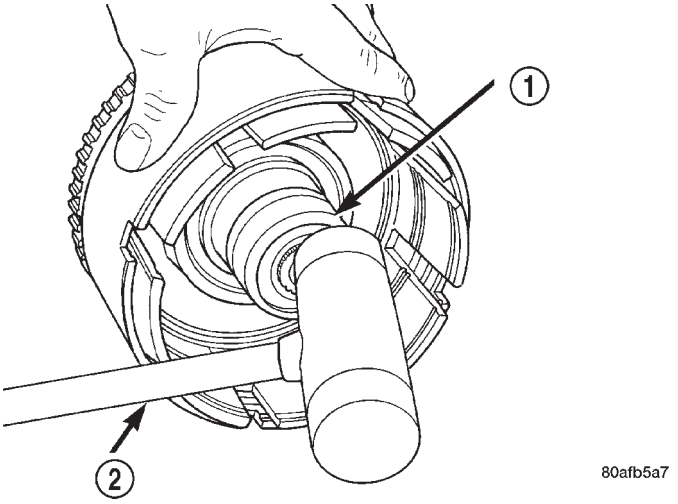

Fig. 248 Tap on Input Hub

1 - INPUT SHAFT AND HUB ASSEMBLY
2 - PLASTIC HAMMER

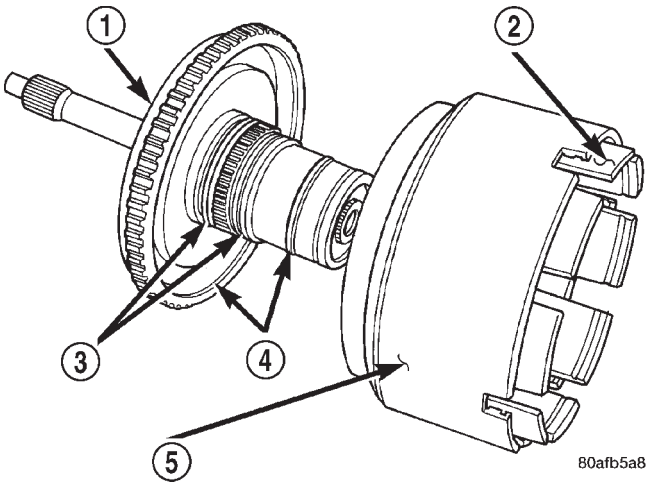

Fig. 249 Input Hub Removed

1 - INPUT SHAFT AND HUB ASSEMBLY
2 - INPUT CLUTCHES RETAINER
3 - O-RING
4 - SEAL
5 - OVERDRIVE/REVERSE PISTON

(23) Separate clutch retainer from OD/Reverse piston (Fig. 250).

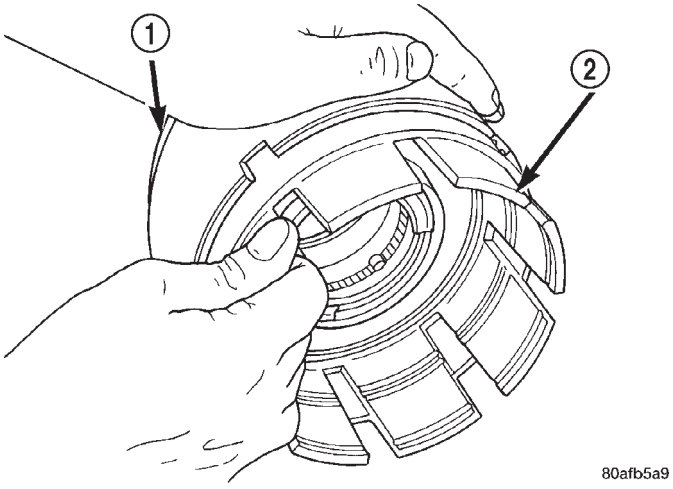

Fig. 250 Pull Retainer from Piston

1 - OVERDRIVE/REVERSE PISTON
2 - INPUT CLUTCHES RETAINER

INPUT CLUTCH ASSEMBLY (Continued)

(24) Using Tool 6057 and an arbor press, compress return OD/Reverse piston return spring just enough to remove snap ring (Fig. 251) (Fig. 252).

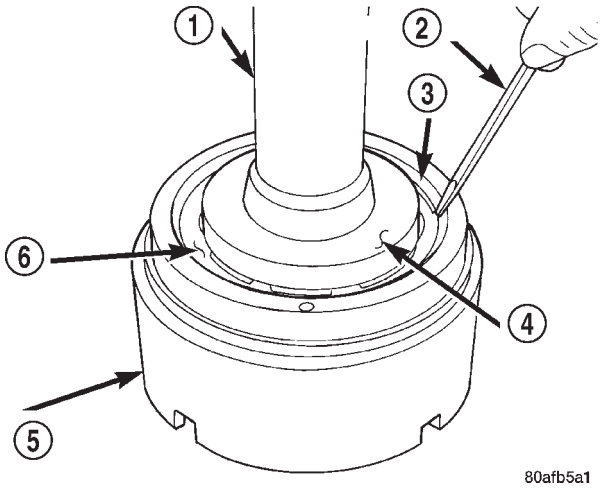

Fig. 251 Remove Snap Ring

1 - ARBOR PRESS RAM (COMPRESS RETURN SPRING JUST ENOUGH TO REMOVE OR INSTALL SNAP RING)
2 - SCREWDRIVER
3 - SNAP RING
4 - SPECIAL TOOL 6057
5 - OD/REVERSE PISTON
6 - RETURN SPRING

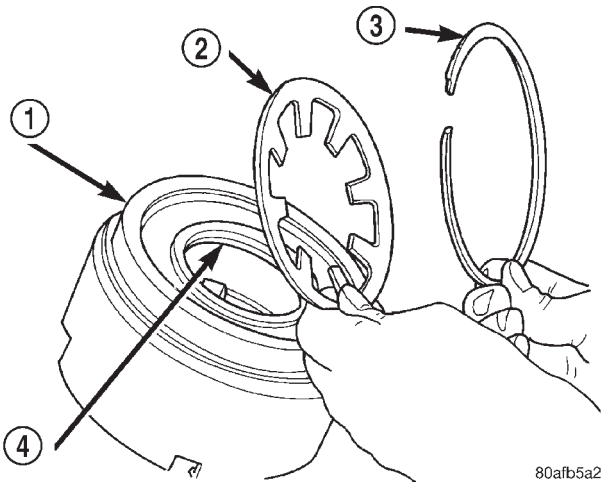

Fig. 252 Snap Ring and Return Spring

1 - OD/REVERSE PISTON
2 - RETURN SPRING
3 - SNAP RING
4 - O-RING

(25) Remove input shaft to input clutch hub snap ring (Fig. 253).

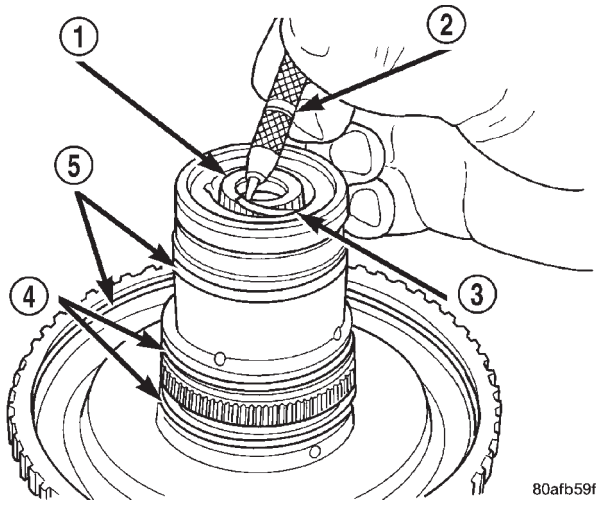

Fig. 253 Remove Input Shaft Snap Ring

1 - INPUT SHAFT
2 - SHARP-POINTED TOOL
3 - SNAP RING
4 - O-RINGS
5 - SEALS

(26) Using a suitably sized socket and an arbor press, remove input shaft from input shaft hub (Fig. 254).

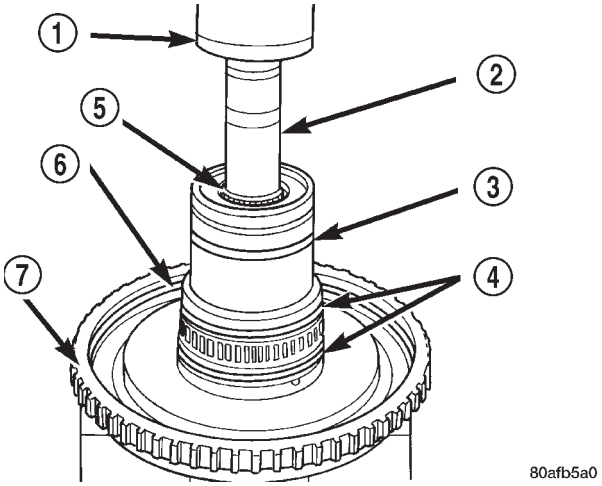

Fig. 254 Remove Input Shaft

1 - ARBOR PRESS RAM
2 - SOCKET
3 - SEAL
4 - O-RINGS
5 - INPUT SHAFT
6 - SEAL
7 - INPUT SHAFT HUB ASSEMBLY

INPUT CLUTCH ASSEMBLY (Continued)

ASSEMBLY

Use petrolatum on all seals to ease assembly of components.

(1) Using an arbor press, install input shaft to input shaft hub (Fig. 255).

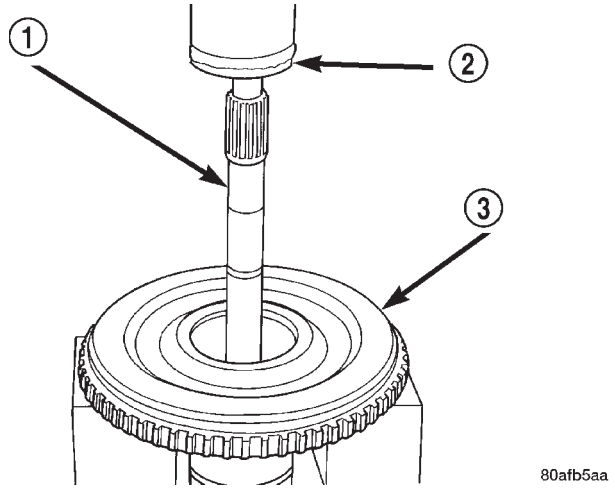

Fig. 255 Install Input Shaft

1 - INPUT SHAFT
2 - ARBOR PRESS RAM
3 - INPUT SHAFT HUB ASSEMBLY

(2) Install input shaft snap ring (Fig. 256).

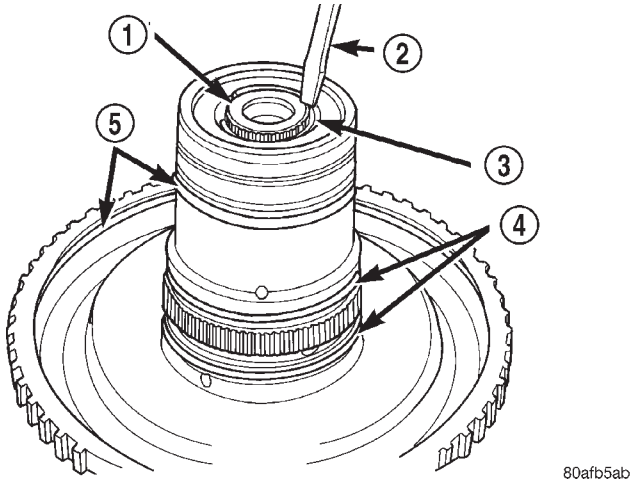

Fig. 256 Install Input Shaft Snap Ring

1 - INPUT SHAFT
2 - SCREWDRIVER (DO NOT SCRATCH BEARING SURFACE)
3 - SNAP RING
4 - O-RINGS
5 - SEALS

(3) Using an arbor press and Tool 6057, Install OD/Reverse piston return spring and snap ring (Fig. 257) (Fig. 258).

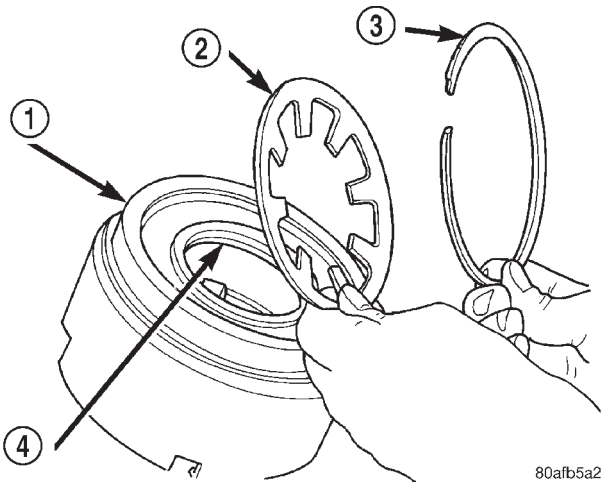

Fig. 257 Return Spring and Snap Ring

1 - OD/REVERSE PISTON
2 - RETURN SPRING
3 - SNAP RING
4 - O-RING

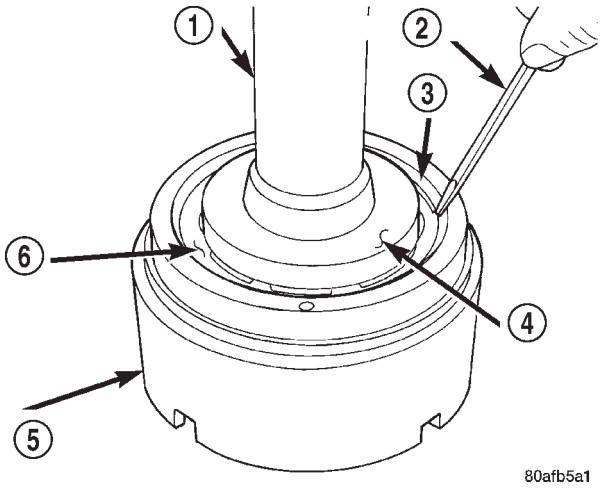

Fig. 258 Install Snap Ring

1 - ARBOR PRESS RAM (COMPRESS RETURN SPRING JUST ENOUGH TO REMOVE OR INSTALL SNAP RING)
2 - SCREWDRIVER
3 - SNAP RING
4 - SPECIAL TOOL 6057
5 - OD/REVERSE PISTON
6 - RETURN SPRING

INPUT CLUTCH ASSEMBLY (Continued)

(4) Install the OD/Reverse piston assembly to the input clutch retainer as shown in (Fig. 259).

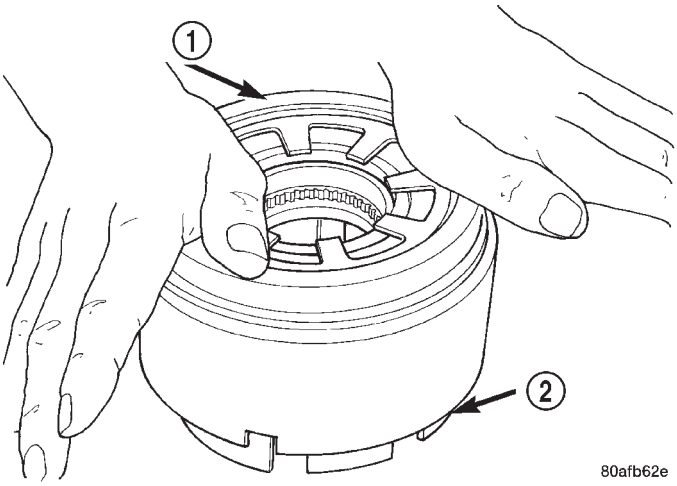

Fig. 259 Install OD/Reverse Piston

1 - PUSH DOWN TO INSTALL OVERDRIVE/REVERSE PISTON
2 - INPUT CLUTCHES RETAINER

(5) Install the input hub/shaft assy. to the OD/Reverse piston/clutch retainer assy. (Fig. 260).

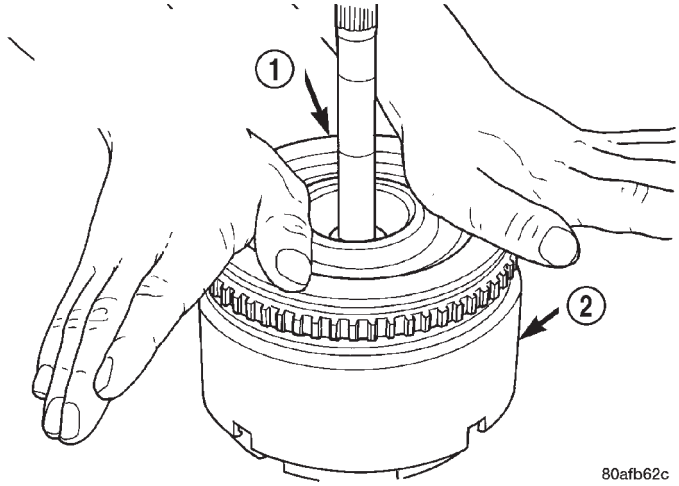

Fig. 260 Install Input Shaft Hub Assembly

1 - PUSH DOWN TO INSTALL INPUT SHAFT HUB ASSEMBLY (ROTATE TO ALIGN SPLINES)
2 - OD/REV. PISTON

(6) Install input hub tapered snap ring (Fig. 261).

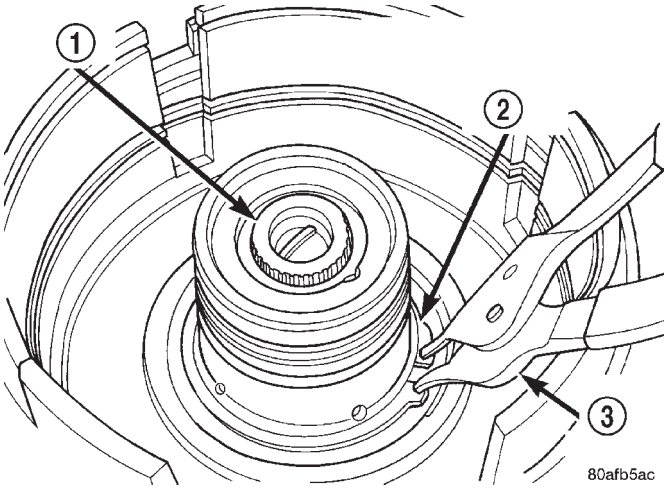

Fig. 261 Install Input Hub Tapered Snap Ring

1 - INPUT SHAFT
2 - INPUT HUB SNAP RING (TAPERED SIDE UP WITH TABS IN CAVITY)
3 - SNAP RING PLIERS

(7) Install UD clutch piston (Fig. 262).

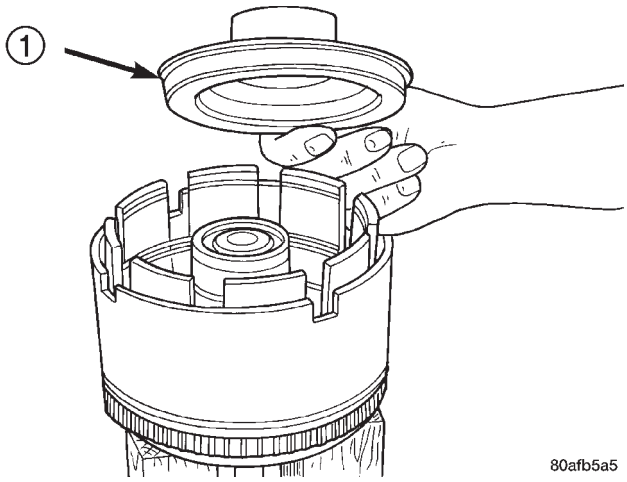

Fig. 262 Underdrive Clutch Piston

1 - PISTON

INPUT CLUTCH ASSEMBLY (Continued)

(8) Install UD piston return spring and Tool 5067 as shown in (Fig. 263).

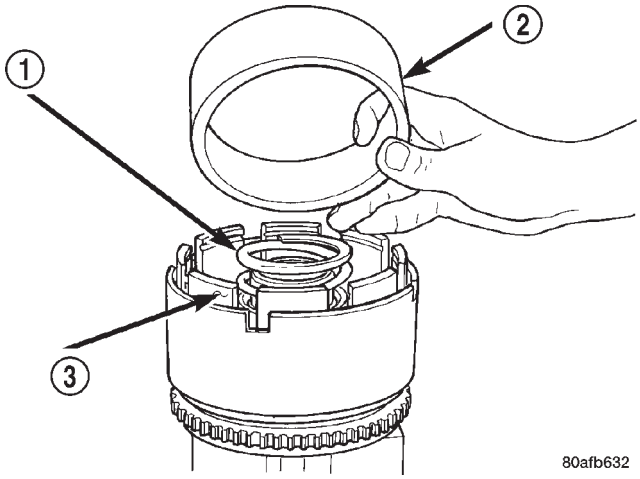

Fig. 263 Seal Compressor Special Tool 5067

1 - PISTON RETURN SPRING
2 - SPECIAL TOOL 5067
3 - INPUT SHAFT CLUTCHES RETAINER ASSEMBLY

(9) Using Tool 5059A and an arbor press, Install the UD spring retainer and snap ring. (Fig. 264) (Fig. 265) Compress just enough to install snap ring.

CAUTION: Compress return spring just enough to install snap ring.

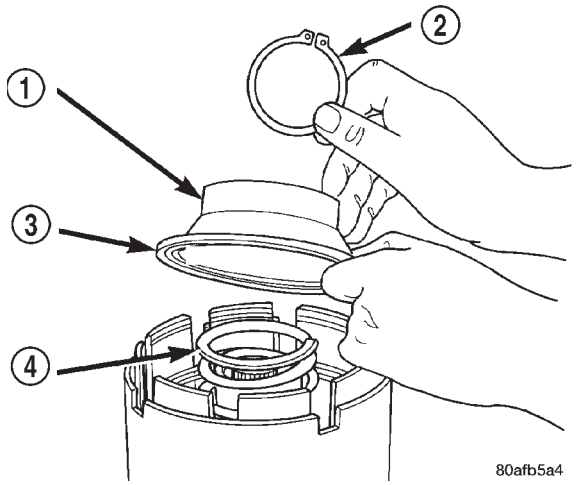

Fig. 264 UD Return Spring and Retainer

1 - UNDERDRIVE SPRING RETAINER
2 - SNAP RING
3 - SEAL
4 - PISTON RETURN SPRING

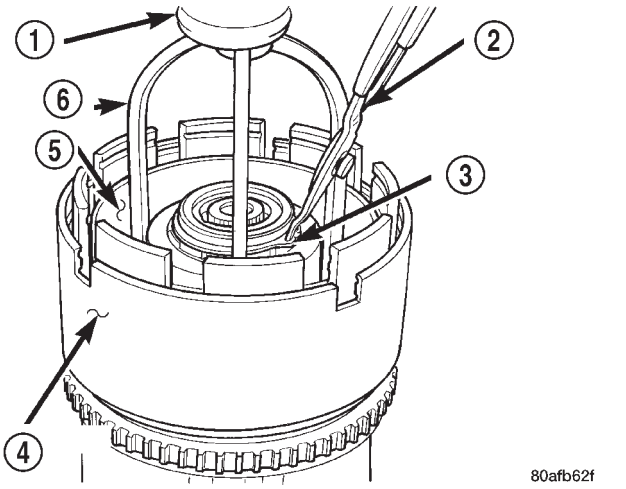

Fig. 265 Install UD Spring Retainer and Snap Ring

1 - ARBOR PRESS RAM
2 - SNAP RING PLIERS
3 - SNAP RING
4 - OD/REVERSE PISTON
5 - TOOL 5067
6 - TOOL 5059A

(10) Install the UD clutch pack. Leave out upper disc, until snap ring is installed (Fig. 266).

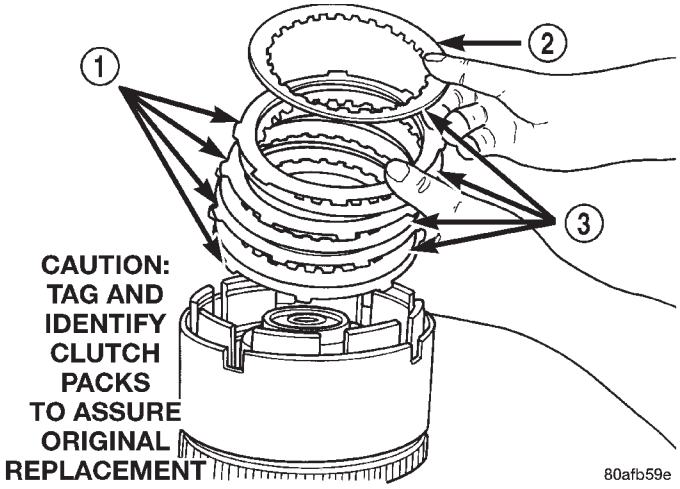

Fig. 266 Underdrive Clutch Pack

1 - CLUTCH PLATE
2 - ONE UD CLUTCH DISC
3 - CLUTCH DISC

INPUT CLUTCH ASSEMBLY (Continued)

(11) Install the UD clutch flat snap ring (Fig. 267).

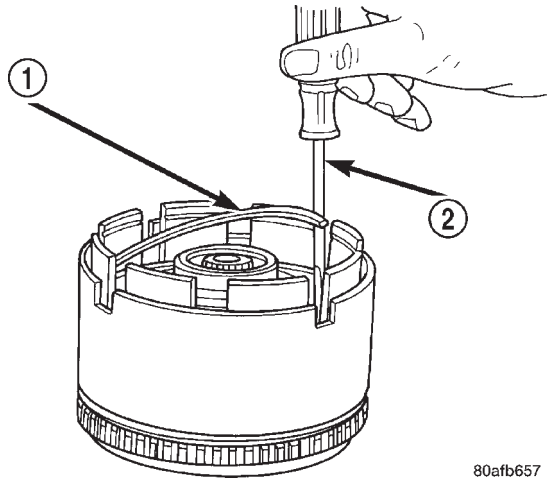

Fig. 267 UD Clutch Flat Snap Ring

1 - UNDERDRIVE CLUTCH REACTION PLATE FLAT SNAP RING
2 - SCREWDRIVER

(12) Install the last UD clutch disc (Fig. 268).

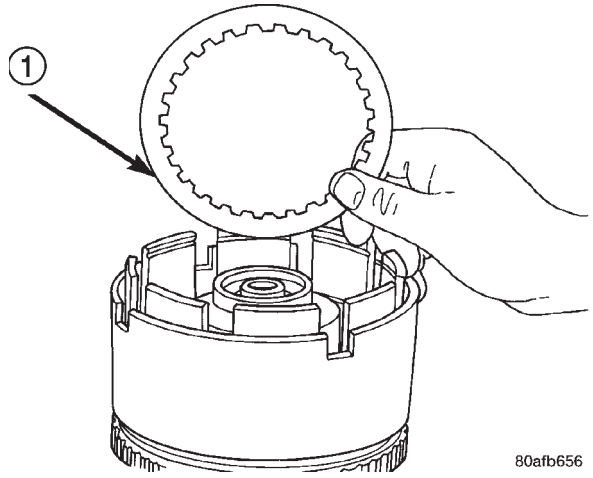

Fig. 268 Install Last UD Clutch Disc

1 - ONE UNDERDRIVE CLUTCH DISC

(13) Install the OD/UD clutch reaction plate and snap ring (Fig. 269) (Fig. 270). The OD/UD clutches reaction plate has a step on both sides. Install the OD/UD clutches reaction plate tapered step side up.

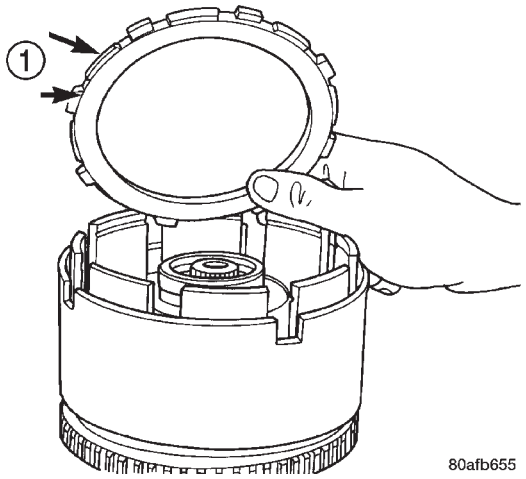

Fig. 269 OD/UD Reaction Plate

1 - OD/UD CLUTCH REACTION PLATE (TAPERED STEP SIDE UP)

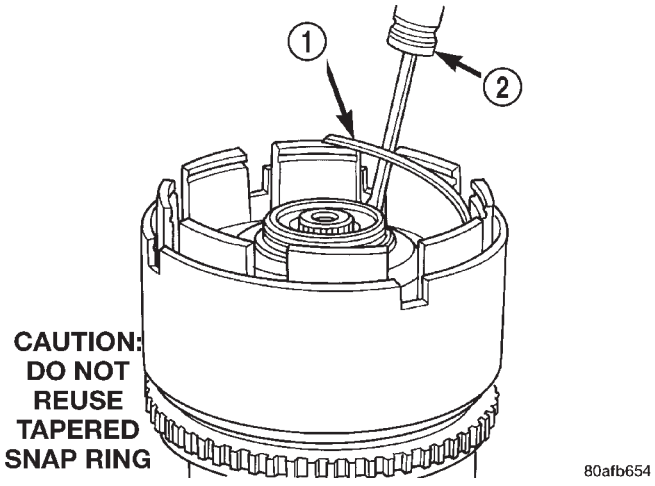

Fig. 270 Tapered Snap Ring

1 - OVERDRIVE/UNDERDRIVE CLUTCHES REACTION PLATE TAPERED SNAP RING
2 - SCREWDRIVER (DO NOT SCRATCH REACTION PLATE)

INPUT CLUTCH ASSEMBLY (Continued)

NOTE: Snap ring ends must be located within one finger of the input clutch hub. Be sure that snap ring is fully seated, by pushing with screwdriver, into snap ring groove all the way around.

(14) Seat tapered snap ring to ensure proper installation (Fig. 271).

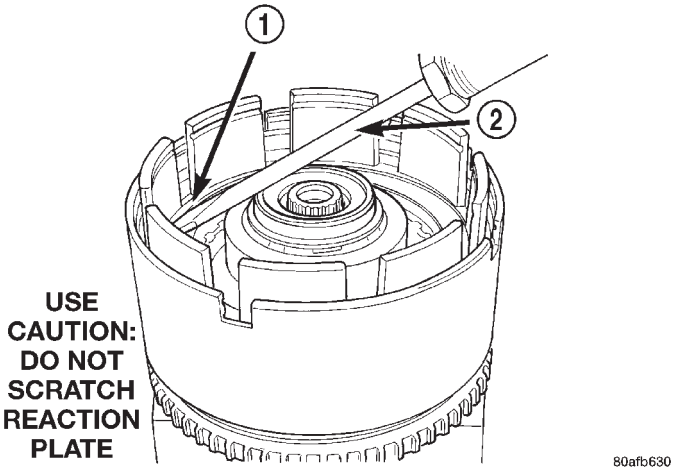

Fig. 271 Seating Tapered Snap Ring

1 - OVERDRIVE/UNDERDRIVE CLUTCHES REACTION PLATE TAPERED SNAP RING
2 - SCREWDRIVER

(15) Install input clutch assembly to the Input Clutch Pressure Fixture–Tool 8391 (Fig. 272).

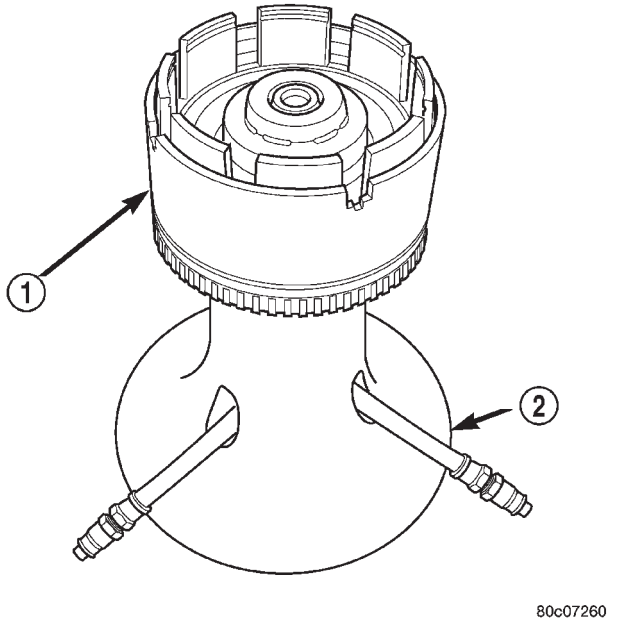

Fig. 272 Input Clutch Assembly on Pressure Fixture Tool 8391

1 - INPUT CLUTCH ASSEMBLY
2 - INPUT CLUTCH PRESSURE FIXTURE 8391

(16) Set up dial indicator on the UD clutch pack as shown in (Fig. 273).

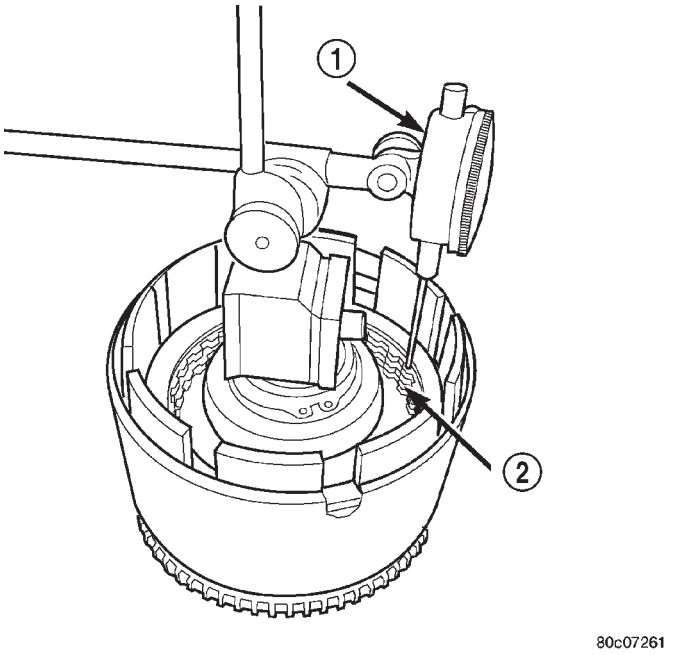

Fig. 273 Set Up Dial Indicator to Measure UD Clutch Clearance

1 - DIAL INDICATOR
2 - UNDERDRIVE CLUTCH

(17) Using moderate pressure, press down and hold (near indicator) the UD clutch pack with screwdriver or suitable tool and zero dial indicator (Fig. 274). When releasing pressure on clutch pack, indicator reading should advance 0.005–0.010.

CAUTION: Do not apply more than 30 psi (206 kPa) to the underdrive clutch pack.

(18) Apply 30 psi (206 kPa) to the underdrive hose on Tool 8391 and measure UD clutch clearance. Measure and record UD clutch pack measurement in four (4) places, 90° apart.

INPUT CLUTCH ASSEMBLY (Continued)

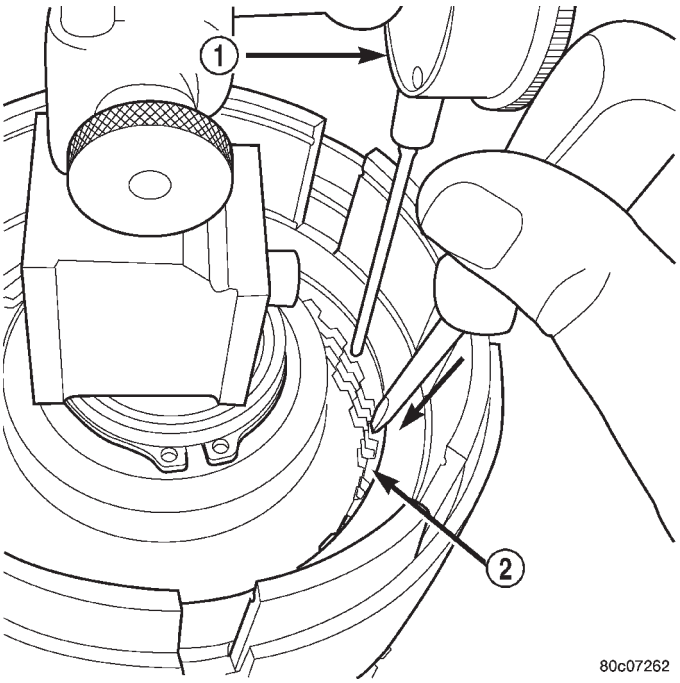

Fig. 274 Press Down on UD Clutch Pack and Zero Dial Indicator

1 - DIAL INDICATOR
2 - UNDERDRIVE CLUTCH

(19) Take average of four measurements and compare with UD clutch pack clearance specification. **Underdrive clutch pack clearance must be 0.94-1.50 mm (0.037-0.059 in.).**

(20) If necessary, select the proper reaction plate to achieve specifications:

UNDERDRIVE REACTION PLATE THICKNESS	
4659939AB	5.837-5.937 mm (0.230-0.234 in.)
4659940AB	6.147-6.248 mm (0.242-0.246 in.)
4659941AB	6.457-6.557 mm (0.254-0.258 in.)

(21) Install the OD clutch pack (four frictions/three steels) (Fig. 275).

(22) Install OD pressure plate waved snap ring (Fig. 276).

(23) Install the OD/Reverse pressure plate with large step down (towards OD clutch pack) (Fig. 277).

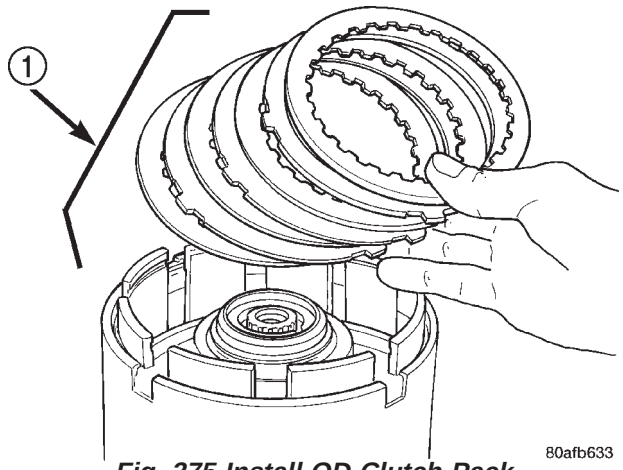

Fig. 275 Install OD Clutch Pack

1 - OVERDRIVE CLUTCH PACK

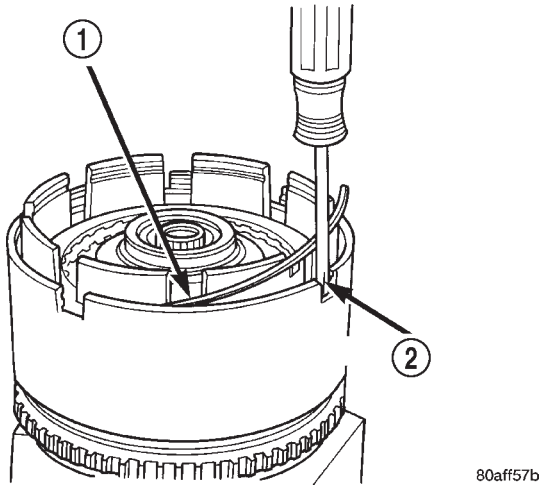

Fig. 276 Install Waved Snap Ring

1 - OVERDRIVE PRESSURE PLATE WAVED SNAP RING
2 - SCREWDRIVER

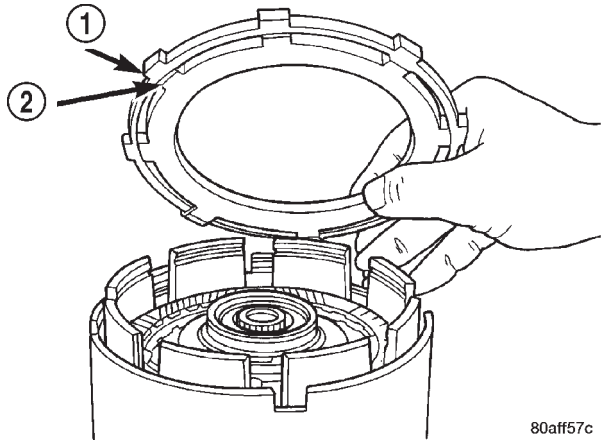

Fig. 277 OD/Reverse Pressure Plate

1 - OVERDRIVE/REVERSE PRESSURE PLATE
2 - (STEP SIDE DOWN)

INPUT CLUTCH ASSEMBLY (Continued)

(24) Install OD pressure plate flat snap ring (Fig. 278).

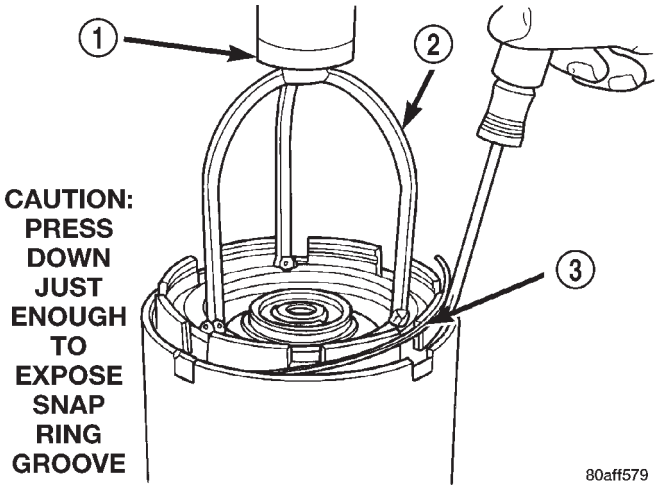

Fig. 278 Install Flat Snap Ring

1 - ARBOR PRESS RAM
2 - TOOL 5059A
3 - FLAT SNAP RING

(25) Measure OD clutch pack clearance. Set up dial indicator on top of the OD/Reverse pressure plate as shown in (Fig. 279).

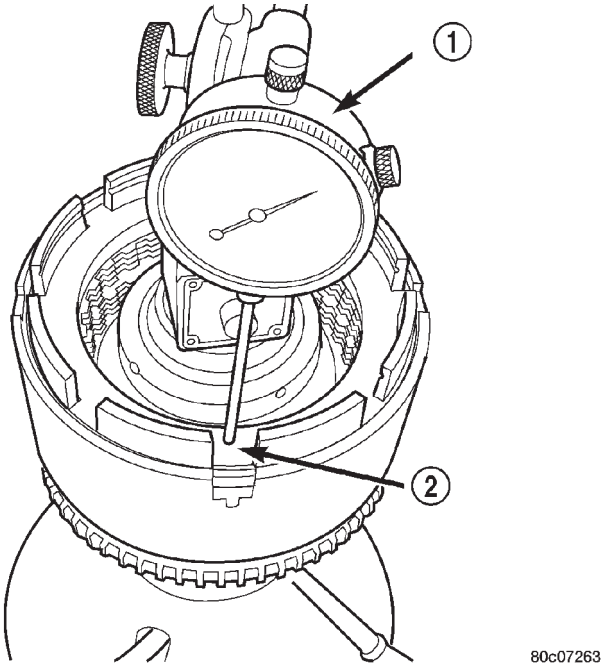

Fig. 279 Measure OD Clutch Pack Clearance

1 - DIAL INDICATOR
2 - OD/REVERSE REACTION PLATE

(26) Zero dial indicator and apply 30 psi (206 kPa) air pressure to the overdrive clutch hose on Tool 8391. Measure and record OD clutch pack measurement in four (4) places, 90° apart.

(27) Take average of four measurements and compare with OD clutch pack clearance specification. **The overdrive (OD) clutch pack clearance is 1.07-3.25 mm (0.042-0.128 in.).**

If not within specifications, the clutch is not assembled properly. There is no adjustment for the OD clutch clearance.

(28) Install reverse clutch pack (two frictions/one steel) (Fig. 280).

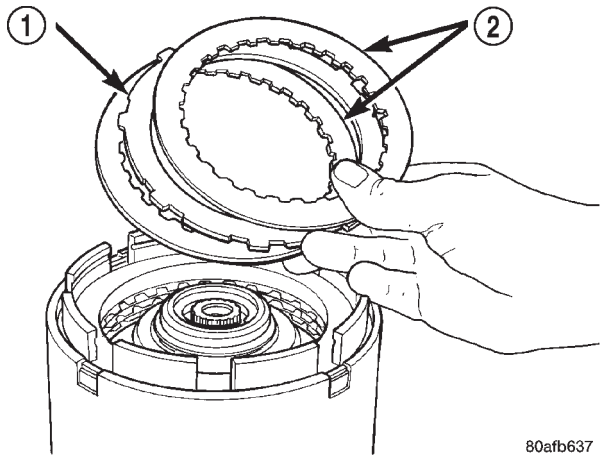

Fig. 280 Install Reverse Clutch Pack

1 - REVERSE CLUTCH PLATE
2 - REVERSE CLUTCH DISCS

(29) Install reverse clutch reaction plate with the flat side down towards reverse clutch (Fig. 281).

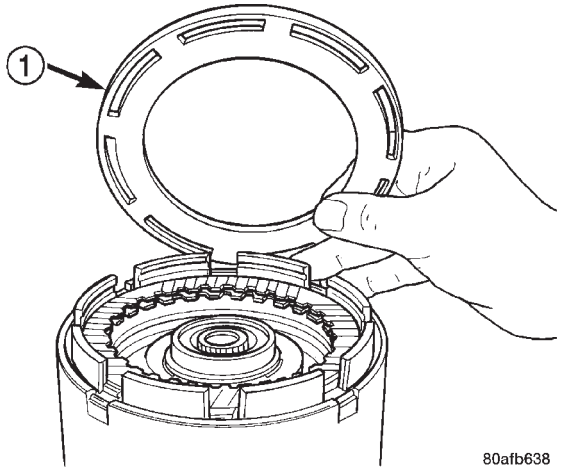

Fig. 281 Install Reaction Plate

1 - REVERSE CLUTCH REACTION PLATE (FLAT SIDE DOWN)

INPUT CLUTCH ASSEMBLY (Continued)

(30) Tap reaction plate down to allow installation of the reverse clutch snap ring. Install reverse clutch snap ring (Fig. 282).

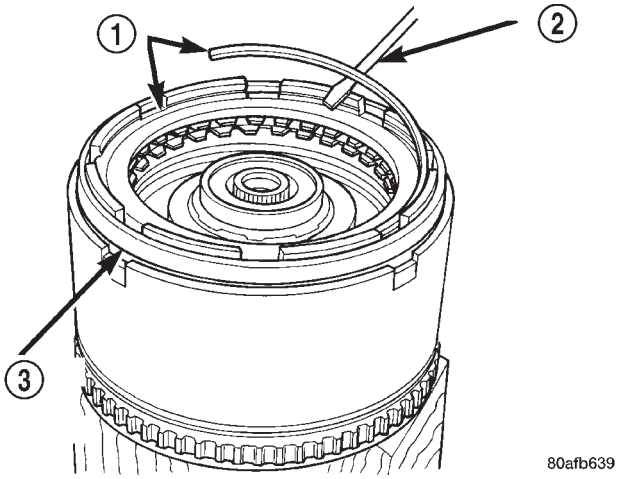

Fig. 282 Install Reverse Clutch Snap Ring

1 - REVERSE CLUTCH SNAP RING (SELECT)
2 - SCREWDRIVER
3 - REVERSE CLUTCH REACTION PLATE

(31) Pry up reverse reaction plate to seat against snap ring (Fig. 283).

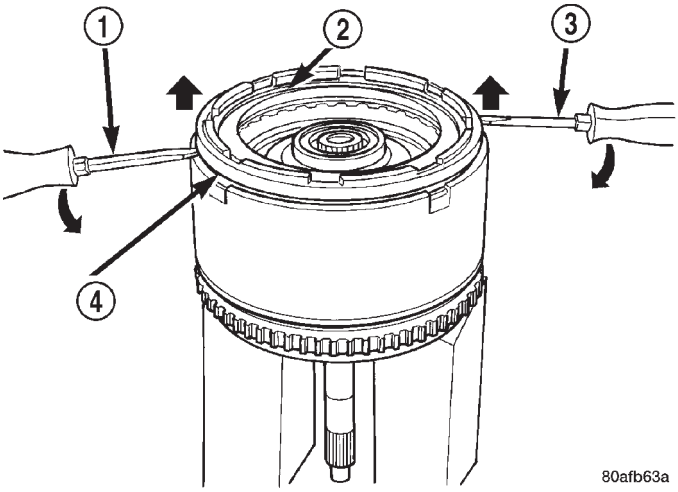

Fig. 283 Pry Up Reaction Plate to Seat Against Snap Ring

1 - SCREWDRIVER
2 - SNAP RING
3 - SCREWDRIVER
4 - MUST RAISE REVERSE REACTION PLATE TO RAISE SNAP RING

(32) Set up a dial indicator on the reverse clutch pack as shown in (Fig. 284).

(33) Using moderate pressure, press down and hold (near indicator) reverse clutch disc with screwdriver or suitable tool and zero dial indicator (Fig. 285). When releasing pressure, indicator should advance 0.005-0.010. as clutch pack relaxes.

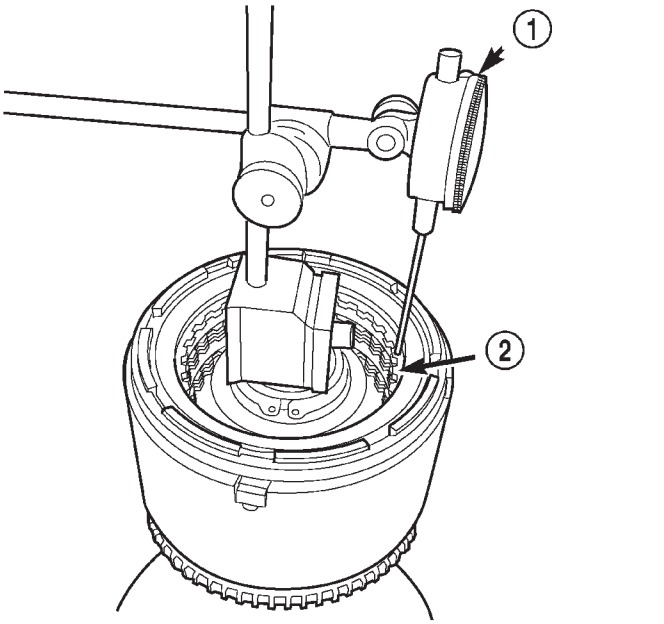

Fig. 284 Measure Reverse Clutch Pack Clearance

1 - DIAL INDICATOR
2 - REVERSE CLUTCH

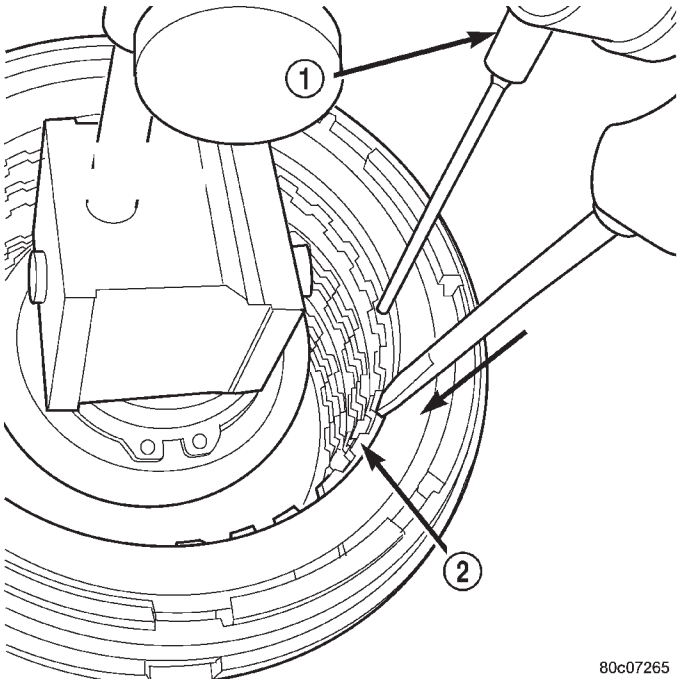

Fig. 285 Press Down on Reverse Clutch and Zero Indicator

1 - DIAL INDICATOR
2 - REVERSE CLUTCH

INPUT CLUTCH ASSEMBLY (Continued)

(34) Apply 30 psi (206 kPa) air pressure to the reverse clutch hose on Tool 8391. Measure and record reverse clutch pack measurement in four (4) places, 90° apart.

(35) Take average of four measurements and compare with reverse clutch pack clearance specification. **The reverse clutch pack clearance is 0.89-1.37 mm (0.035-0.054 in.).** Select the proper reverse clutch snap ring to achieve specifications:

REVERSE CLUTCH SNAP RING THICKNESS	
4377195	1.53-1.58 mm (0.060-0.062 in.)
4412871	1.77-1.83 mm (0.070-0.072 in.)
4412872	2.02-2.07 mm (0.080-0.082 in.)
4412873	2.27-2.32 mm (0.090-0.091 in.)

(36) To complete the assembly, reverse clutch and overdrive clutch must be removed.

(37) Install the #2 needle bearing (Fig. 286).

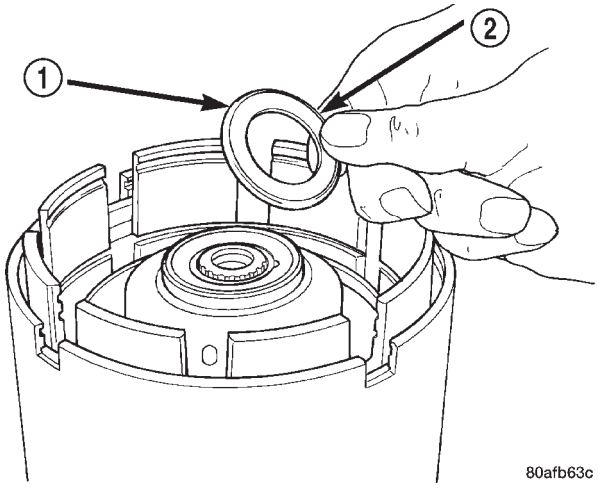

Fig. 286 Install No. 2 Needle Bearing

1 - #2 NEEDLE BEARING (NOTE 3 SMALL TABS)
2 - TABS UP

(38) Install the underdrive shaft assembly (Fig. 287).

(39) Install the #3 thrust washer to the underdrive shaft assembly. Be sure five tabs are seated properly (Fig. 288).

(40) Install the #3 thrust plate to the bottom of the overdrive shaft assembly. Retain with petrolatum or transmission assembly gel (Fig. 289).

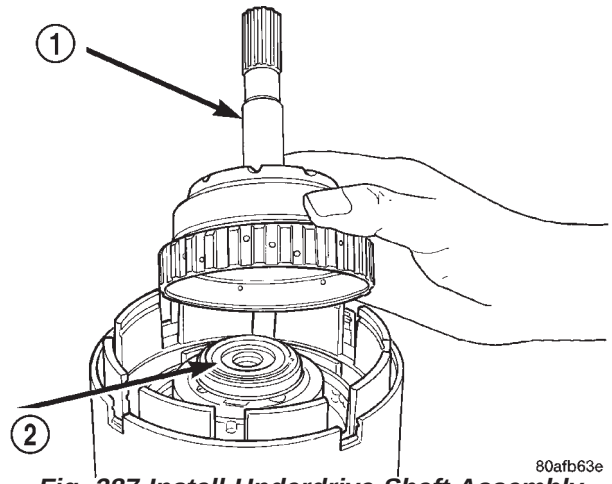

Fig. 287 Install Underdrive Shaft Assembly

1 - UNDERDRIVE SHAFT ASSEMBLY
2 - #2 NEEDLE BEARING

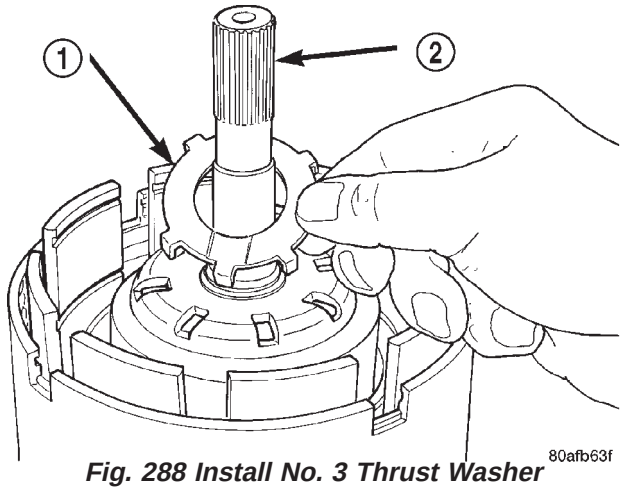

Fig. 288 Install No. 3 Thrust Washer

1 - #3 THRUST WASHER (NOTE 5 TABS)
2 - UNDERDRIVE SHAFT ASSEMBLY

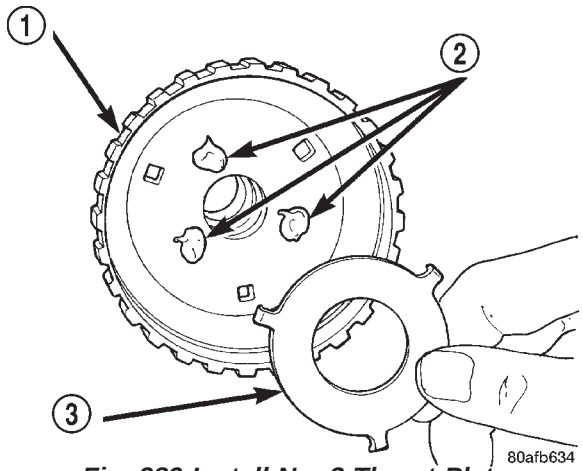

Fig. 289 Install No. 3 Thrust Plate

1 - OVERDRIVE SHAFT ASSEMBLY
2 - DABS OF PETROLATUM (FOR RETENTION)
3 - #3 THRUST PLATE (NOTE 3 TABS)

INPUT CLUTCH ASSEMBLY (Continued)

(41) Install the overdrive shaft assembly (Fig. 290).

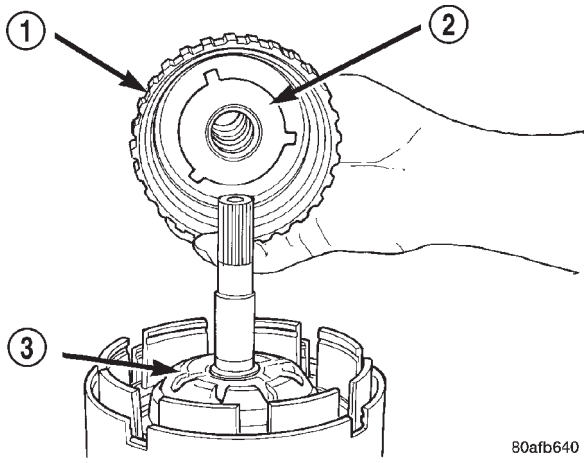

Fig. 290 Install Overdrive Shaft Assembly

1 - OVERDRIVE SHAFT ASSEMBLY
2 - #3 THRUST PLATE
3 - #3 THRUST WASHER

(42) Reinstall overdrive and reverse clutch as shown. **Rechecking these clutch clearances is not necessary.**

OIL PUMP

DESCRIPTION

The oil pump is located in the pump housing inside the bell housing of the transaxle case (Fig. 291). The oil pump consists of an inner and outer gear, a housing, and a cover that also serves as the reaction shaft support.

OPERATION

As the torque converter rotates, the converter hub rotates the inner and outer gears. As the gears rotate, the clearance between the gear teeth increases in the crescent area, and creates a suction at the inlet side of the pump. This suction draws fluid through the pump inlet from the oil pan. As the clearance between the gear teeth in the crescent area decreases, it forces pressurized fluid into the pump outlet and to the valve body.

STANDARD PROCEDURE - OIL PUMP VOLUME CHECK

Measuring oil pump output volume will determine if sufficient flow to the transmission oil cooler exists, and whether or not an internal transmission failure is present.

Verify that transmission fluid is at the proper level. If adding fluid is necessary, fill to the proper level with Mopar® ATF+4 (Automatic Transmission Fluid–Type 9602). The following procedure is to check oil pump output volume:

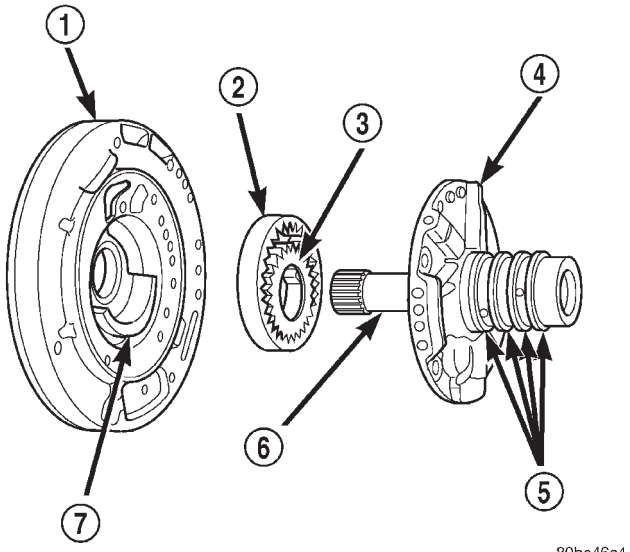

Fig. 291 Oil Pump Assembly

1 - PUMP HOUSING
2 - OUTER PUMP GEAR
3 - INNER PUMP GEAR
4 - REACTION SHAFT SUPPORT
5 - SEAL RINGS (4)
6 - REACTION SHAFT
7 - CRESCENT

(1) Using hose cutters or a suitable blade, cut the “to cooler” (Fig. 292) line off flush with the cooler inlet fitting and place a collection container under the open line.

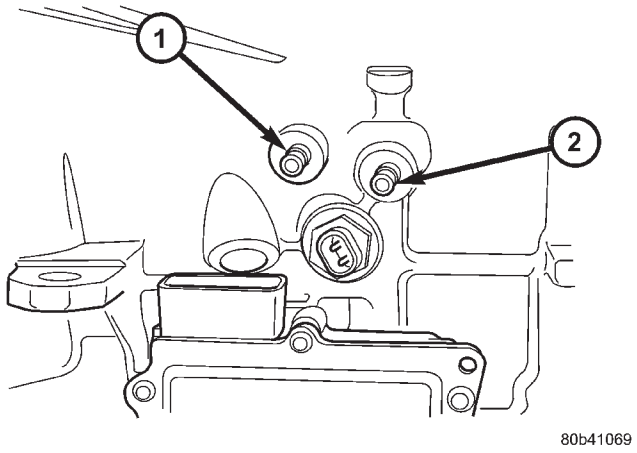

Fig. 292 Transaxle Oil Cooler Fittings

1 - FROM COOLER
2 - TO COOLER

OIL PUMP (Continued)

CAUTION: With the fluid set at the proper level, fluid collection should not exceed (1) quart or internal damage to the transmission may occur.

(2) Start engine and run **at curb idle speed**, with the shift selector in neutral.

(3) If one quart of ATF is collected in 20 seconds or less, flow is within acceptable limits. If fluid flow is intermittent or it takes more than 20 seconds to collect one quart of ATF, (Refer to 21 - TRANSMISSION/TRANSAXLE/AUTOMATIC - 41TE - DIAGNOSIS AND TESTING).

(4) Inspect the cooler hose for damage. Replace if necessary.

(5) Re-connect the to cooler line to the transmission using a service splice kit. Refer to instructions inclued with the kit.

(6) Refill the transaxle to proper level with Mopar® ATF+4 (Automatic Transmission Fluid–Type 9602).

DISASSEMBLY

When disassembling the transaxle it is necessary to inspect the oil pump for wear and damage.

(1) Remove the reaction shaft support bolts.

(2) Remove reaction shaft support from pump housing (Fig. 293).

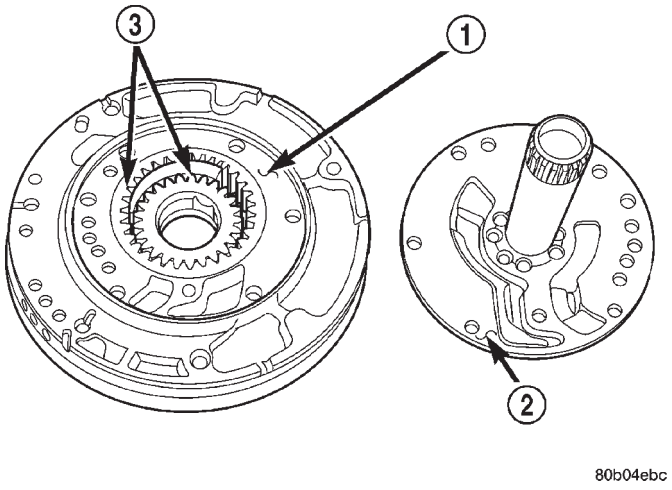

Fig. 293 Reaction Shaft Support

1 - PUMP HOUSING
2 - REACTION SHAFT SUPPORT
3 - PUMP GEARS

(3) Remove the pump gears (Fig. 294) and check for wear and damage on pump housing and gears.

(4) Re-install the gears and check clearances.

(5) Measure the clearance between the outer gear and the pump pocket (Fig. 295). Clearance should be 0.089–0.202 mm (0.0035-0.0079 in.).

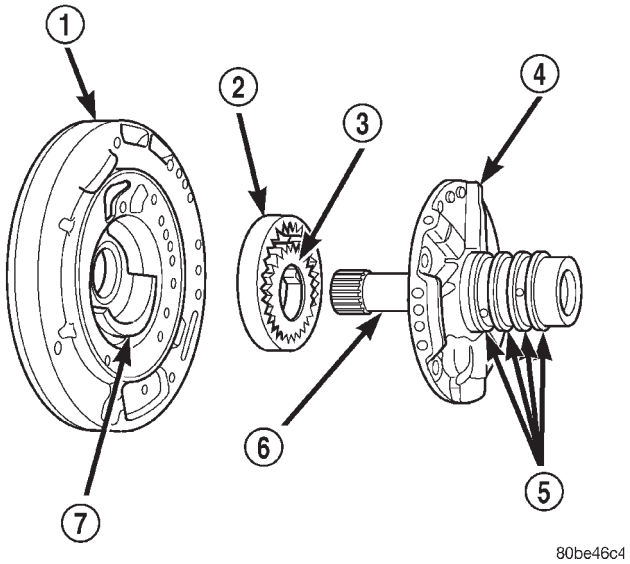

Fig. 294 Oil Pump Assembly

1 - PUMP HOUSING
2 - OUTER PUMP GEAR
3 - INNER PUMP GEAR
4 - REACTION SHAFT SUPPORT
5 - SEAL RINGS (4)
6 - REACTION SHAFT
7 - CRESCENT

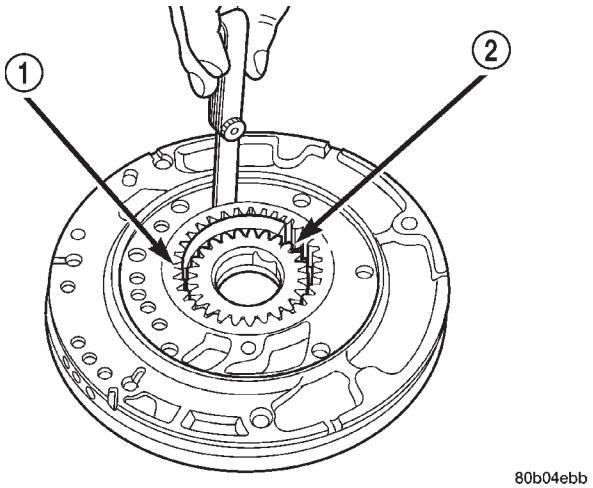

Fig. 295 Measure Outer Gear to Pocket

1 - OUTER GEAR
2 - POCKET

(6) Measure clearance between outer gear and crescent. Clearance should be 0.060-0.298 mm (0.0023-0.0117 in.).

(7) Measure clearance between inner gear and crescent. Clearance should be 0.093-0.385 mm (0.0036-0.0151 in.).

OIL PUMP (Continued)

(8) Position an appropriate piece of Plastigage across both pump gears.

(9) Align the Plastigage to a flat area on the reaction shaft support housing.

(10) Install the reaction shaft to the pump housing. Tighten the bolts to 27 N·m (20 ft. lbs.).

(11) Remove bolts and carefully separate the housings. Measure the Plastigage following the instructions supplied.

(12) Clearance between outer gear side and the reaction shaft support should be 0.020-0.046 mm (0.0008-0.0018 in.). Clearance between inner gear side and the reaction shaft support should be 0.020-0.046 mm (0.0008-0.0018 in.).

ASSEMBLY

(1) Assemble oil pump as shown in (Fig. 296)

(2) Install and torque reaction shaft support-to-oil pump housing bolts to 28 N·m (20 ft. lbs.) torque.

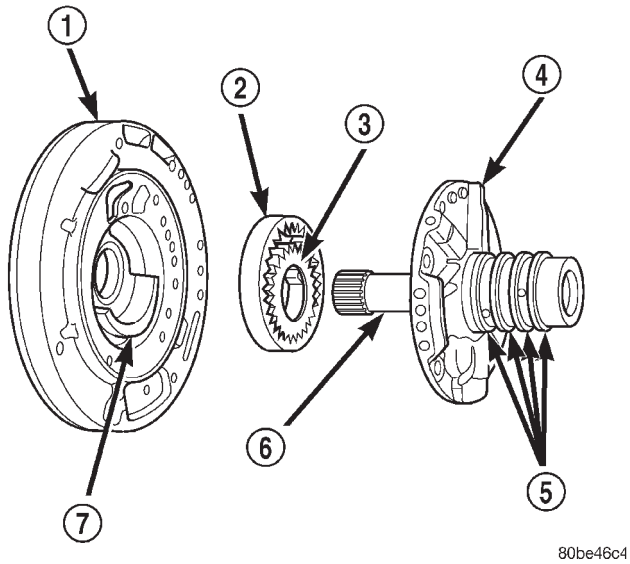

Fig. 296 Oil Pump Assembly

1 - PUMP HOUSING
2 - OUTER PUMP GEAR
3 - INNER PUMP GEAR
4 - REACTION SHAFT SUPPORT
5 - SEAL RINGS (4)
6 - REACTION SHAFT
7 - CRESCENT

PLANETARY GEARTRAIN

DESCRIPTION

The planetary geartrain is located between the input clutch assembly and the rear of the transaxle case. The planetary geartrain consists of two sun gears, two planetary carriers, two annulus (ring) gears, and one output shaft (Fig. 297).

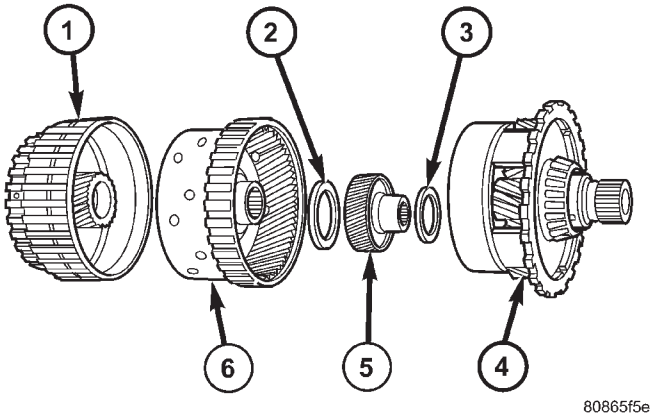

Fig. 297 Planetary Geartrain

1 - FRONT SUN GEAR ASSEMBLY
2 - #6 THRUST BEARING
3 - #7 THRUST BEARING
4 - REAR CARRIER/FRONT ANNULUS ASSEMBLY
5 - REAR SUN GEAR
6 - FRONT CARRIER/REAR ANNULUS ASSEMBLY

OPERATION

The planetary geartrain utilizes two planetary gear sets that connect the transmission input shaft to the output shaft. Input and holding clutches drive or lock different planetary members to change output ratio or direction.

SEAL - OIL PUMP

REMOVAL

(1) Remove transaxle from vehicle (Refer to 21 - TRANSMISSION/TRANSAXLE/AUTOMATIC - 41TE - REMOVAL).

(2) Using Tool C-3981-B, remove oil pump seal (Fig. 298).

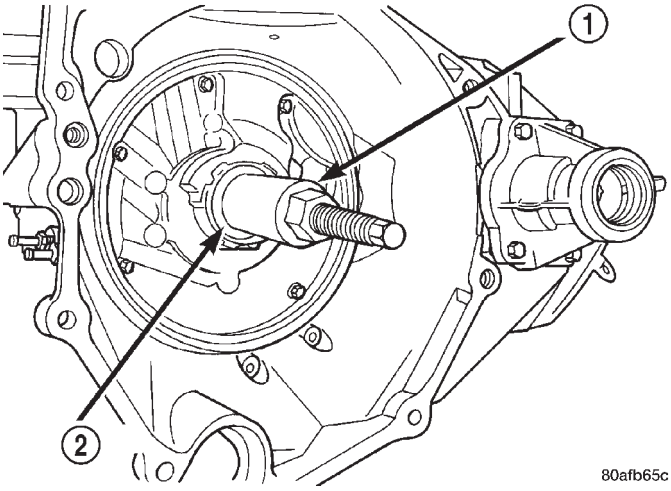

Fig. 298 Remove Oil Pump Seal

1 - TOOL C-3981–B
2 - OIL PUMP SEAL

INSTALLATION

(1) Using Tool C-4193, install oil pump seal (Fig. 299).

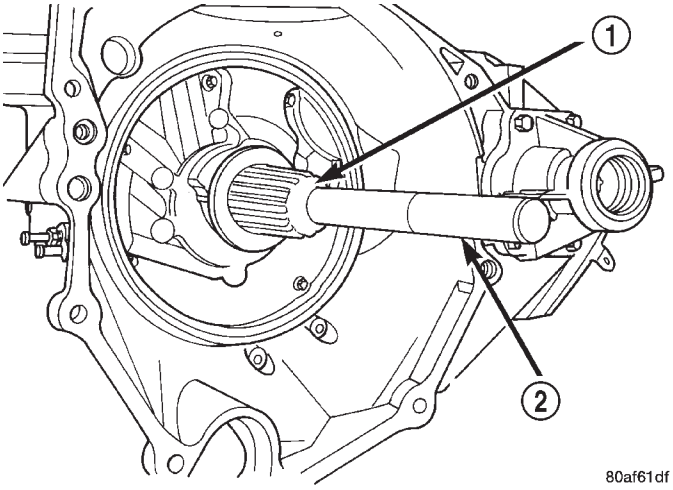

Fig. 299 Install Oil Pump Seal

1 - TOOL C-4193
2 - HANDLE TOOL C-4171

(2) Install transaxle to vehicle (Refer to 21 - TRANSMISSION/TRANSAXLE/AUTOMATIC - 41TE - INSTALLATION).

SHIFT INTERLOCK SOLENOID

DESCRIPTION

The Brake/Transmission Shift Interlock system consists of an electro-magnetic solenoid mounted to the steering column (Fig. 300). The solenoid's plunger consists of an integrated hook, which operates the shift lever pawl (part of shift lever assembly), and a plunger return spring (Fig. 301). The solenoid also has an integrated bracket, which facilitates fastening to the steering column.

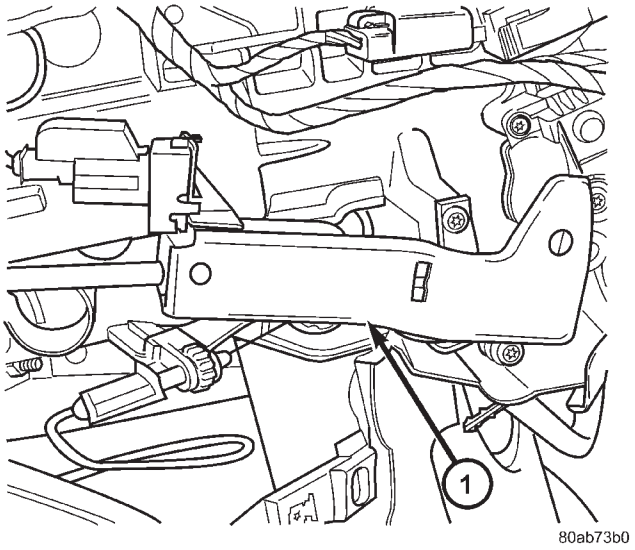

Fig. 300 Brake/Transmission Shift Interlock (BTSI) Solenoid Location

1 - BTSI SOLENOID

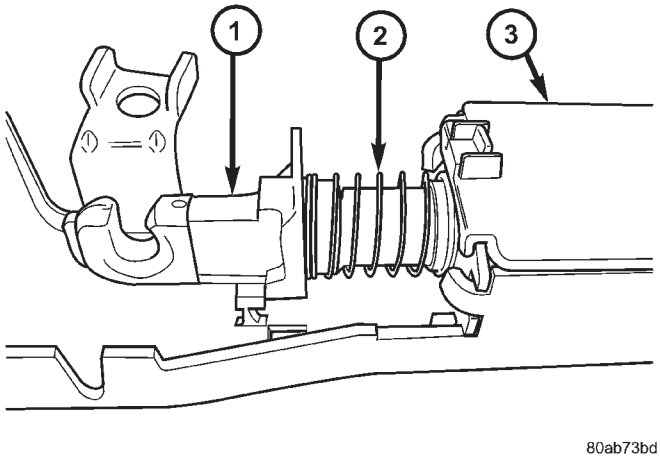

Fig. 301 Solenoid Plunger and Return Spring

1 - PLUNGER
2 - RETURN SPRING
3 - BTSI SOLENOID

SHIFT INTERLOCK SOLENOID (Continued)

OPERATION

The Brake/Transmission Shift Interlock (BTSI) Solenoid prevents the transmission shift lever from being moved out of PARK (P) unless the brake pedal is applied. The BTSI solenoid is hardwired to and controlled by the Intelligent Power Module (IPM). Battery voltage is applied to one side of the solenoid with the ignition key is in either the OFF, ON/RUN, or START positions (Fig. 302). The ground side of the solenoid is controlled by a driver within the IPM. It relies on voltage supplied from the stop lamp switch to the stop lamp sense circuit within the IPM to tell when the brake pedal is depressed. When the brake pedal is depressed, the ground circuit opens, de-energizing the solenoid. When the brake pedal is released, the ground circuit is closed, energizing the solenoid.

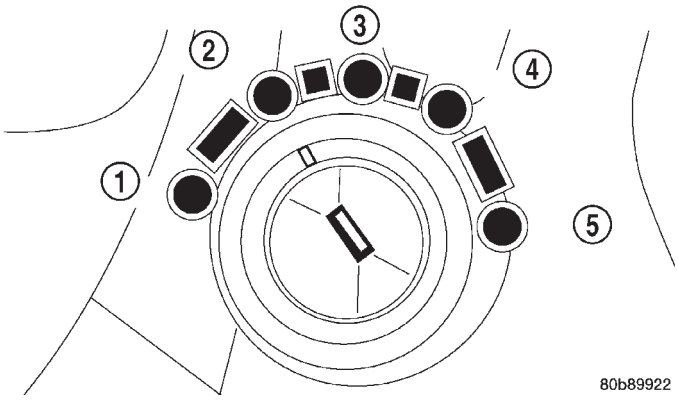

Fig. 302 Ignition Key/Switch Positions

1 - ACC
2 - LOCK
3 - OFF
4 - ON/RUN
5 - START

When the ignition key is in either the OFF, ON/RUN, or START positions, the BTSI solenoid is energized, and the solenoid plunger hook pulls the shift lever pawl into position, prohibiting the shift lever from moving out of PARK (P) (Fig. 303). When the brake pedal is depressed, the ground circuit opens, de-energizing the solenoid. This moves the gearshift lever pawl out of the way (Fig. 304), allowing the shift lever to be moved into any gear position.

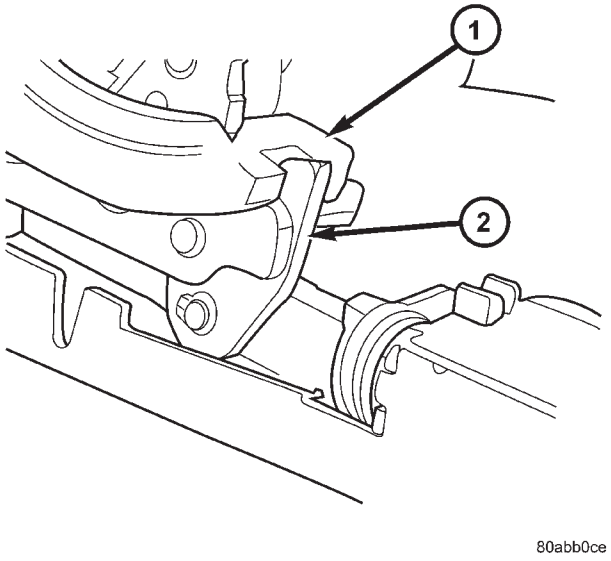

Fig. 303 Pawl Engaged to Shift Lever

1 - GEAR SHIFT LEVER
2 - GEAR SHIFT LEVER PAWL

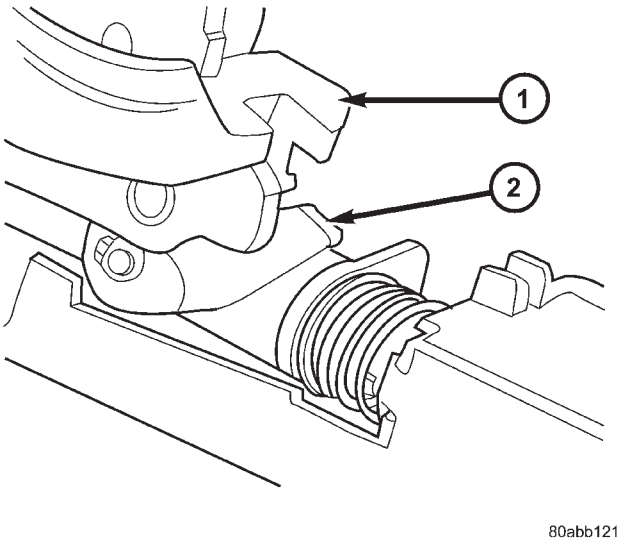

Fig. 304 Pawl Disengaged From Shift Lever

1 - GEAR SHIFT LEVER
2 - GEAR SHIFT LEVER PAWL

SHIFT INTERLOCK SOLENOID (Continued)

A conventional mechanical interlock system is also used. This system manually prohibits shifter movement when the ignition switch is in the LOCK or ACC positions. Solenoid operation is not required in these key positions.

For intended BTSI system operation, refer to the following chart:

ACTION	EXPECTED RESPONSE
1. Turn key to the ″OFF″ position.	1. Shifter CAN be shifted out of park with brake pedal applied.
2. Turn key to the ″ON/RUN″ position.	2. Shifter CANNOT be shifted out of park.
3. Turn key to the ″ON/RUN″ position and depress the brake pedal.	3. Shifter CAN be shifted out of park.
4. Leave shifter in any gear and try to return key to the ″LOCK″ or ″ACC″ position.	4. Key cannot be returned to the ″LOCK″ or ″ACC″ position.
5. Return shifter to ″PARK″ and try to remove the key.	5. Key can be removed (after returning to ″LOCK″ position).
6. With the key removed, try to shift out of ″PARK″.	6. Shifter cannot be shifted out of ″PARK″.
NOTE: Any failure to meet these expected responses requires system adjustment or repair.	

DIAGNOSIS AND TESTING - BRAKE/ TRANSMISSION SHIFT INTERLOCK SOLENOID

For intended BTSI system operation, refer to the following chart:

ACTION	EXPECTED RESPONSE
1. Turn key to the ″OFF″ position.	1. Shifter CAN be shifted out of park with brake pedal applied.
2. Turn key to the ″ON/RUN″ position.	2. Shifter CANNOT be shifted out of park.
3. Turn key to the ″ON/RUN″ position and depress the brake pedal.	3. Shifter CAN be shifted out of park.
4. Leave shifter in any gear and try to return key to the ″LOCK″ or ″ACC″ position.	4. Key cannot be returned to the ″LOCK″ or ″ACC″ position.
5. Return shifter to ″PARK″ and try to remove the key.	5. Key can be removed (after returning to ″LOCK″ position).
6. With the key removed, try to shift out of ″PARK″.	6. Shifter cannot be shifted out of ″PARK″.
NOTE: Any failure to meet these expected responses requires system repair. Refer to the appropriate Diagnostic Information.	

REMOVAL

(1) Disconnect battery negative cable.

(2) Remove instrument panel lower shroud (Fig. 305).

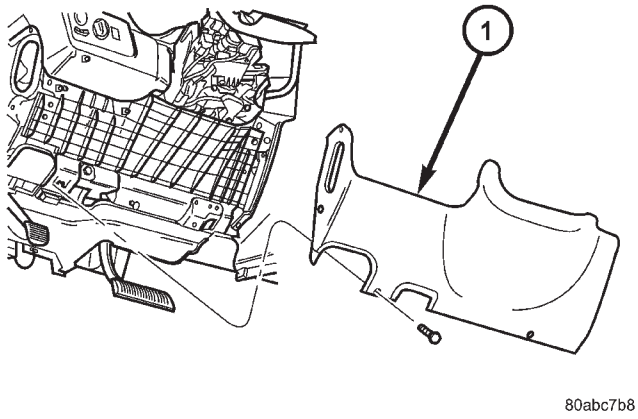

Fig. 305 Instrument Panel Lower Silencer

1 - INSTRUMENT PANEL LOWER SILENCER

(3) Remove knee bolster (Fig. 306).

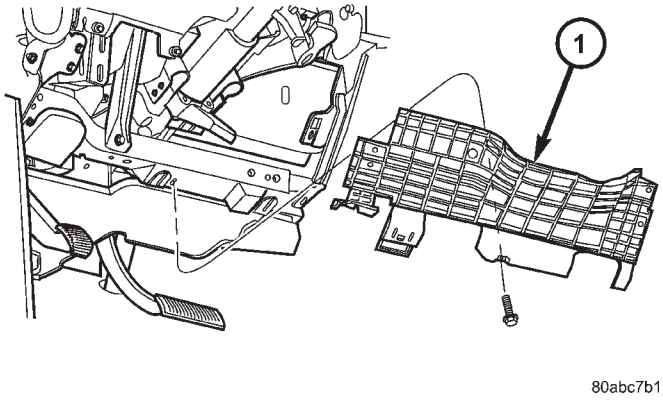

Fig. 306 Knee Bolster

1 - KNEE BOLSTER

SHIFT INTERLOCK SOLENOID (Continued)

(4) Remove steering column lower shroud.

(5) Disconnect brake/transmission shift interlock (BTSI) solenoid connector (Fig. 307).

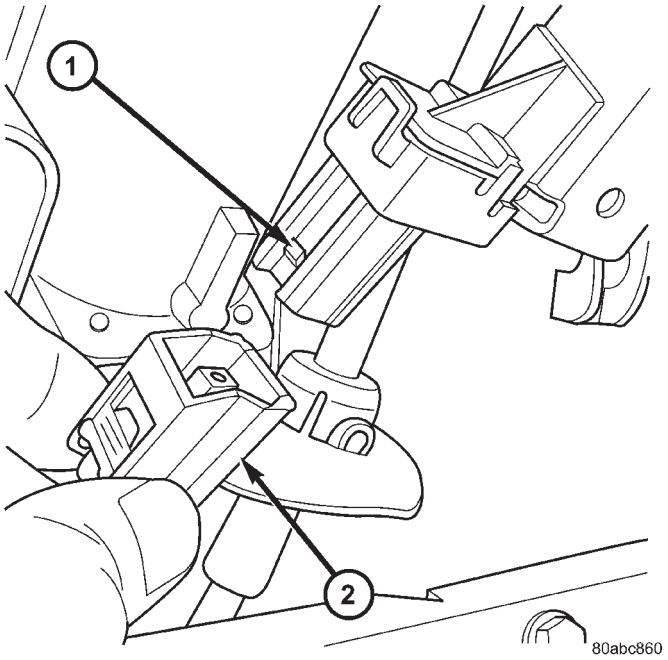

Fig. 307 BTSI Solenoid Connector

1 - BTSI SOLENOID
2 - SOLENOID CONNECTOR

(6) Remove two (2) solenoid-to-column screws (Fig. 308).

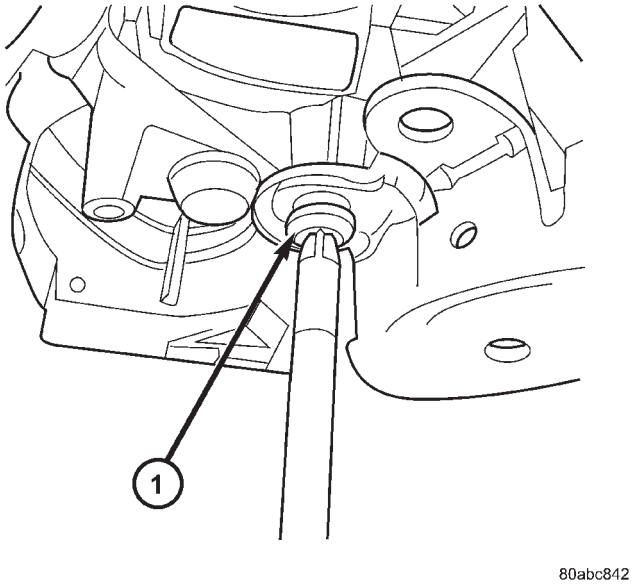

Fig. 308 Solenoid Retaining Screw

1 - SOLENOID RETAINING SCREW (2)

(7) Remove solenoid.

INSTALLATION

(1) Place interlock solenoid into position ensuring hook on end of solenoid plunger engages gearshift lever pawl pin. Install and tighten screws (Fig. 309).

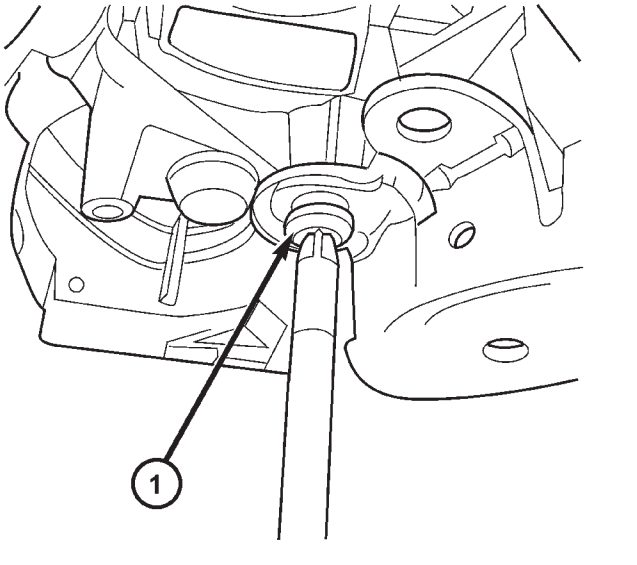

Fig. 309 Solenoid Retaining Screw

1 - SOLENOID RETAINING SCREW (2)

(2) Verify gearshift lever is in PARK (P) and connect solenoid connector (Fig. 310).

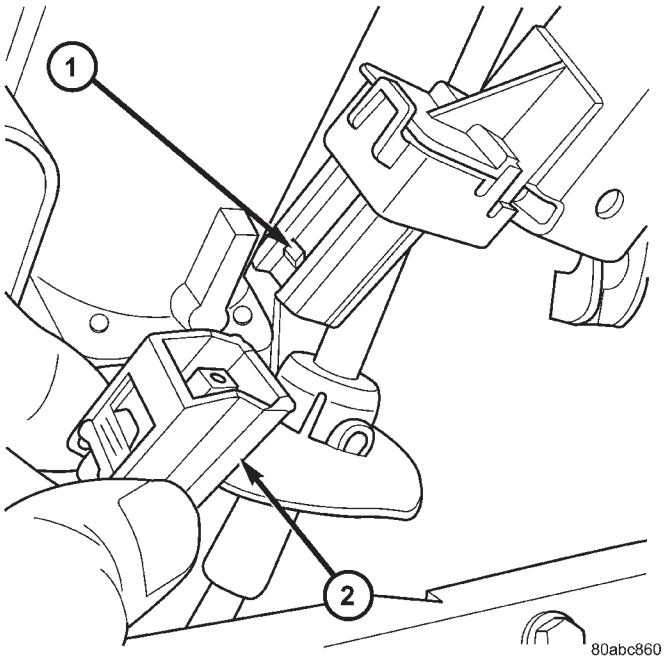

Fig. 310 BTSI Solenoid Connector

1 - BTSI SOLENOID
2 - SOLENOID CONNECTOR

SHIFT INTERLOCK SOLENOID (Continued)

(3) Install steering column lower shroud.
(4) Install knee bolster (Fig. 311).

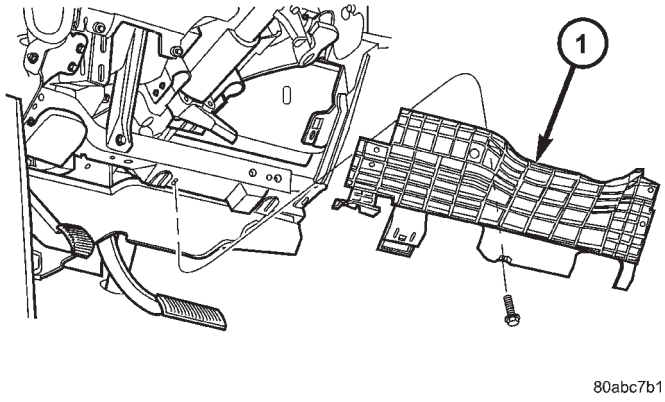

Fig. 311 Knee Bolster

1 - KNEE BOLSTER

(5) Install instrument panel lower silencer (Fig. 312).

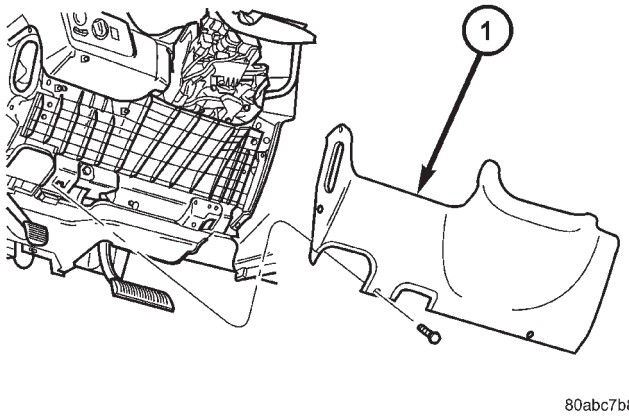

Fig. 312 Instrument Panel Lower Silencer

1 - INSTRUMENT PANEL LOWER SILENCER

(6) Connect battery negative cable.
(7) Verify proper shift interlock system operation. (Refer to 21 - TRANSMISSION/TRANSAXLE/AUTOMATIC - 31TH/SHIFT INTERLOCK SOLENOID - OPERATION)

SOLENOID/PRESSURE SWITCH ASSY

DESCRIPTION

The Solenoid/Pressure Switch Assembly (Fig. 313) is external to the transaxle and mounted to the transaxle case. The assembly consists of four solenoids that control hydraulic pressure to the LR/CC, 2/4, OD, and UD friction elements. The reverse clutch is controlled by line pressure from the manual valve in the valve body. The solenoids are contained within the Solenoid/Pressure Switch Assembly, and can only be serviced by replacing the assembly.

The solenoid assembly also contains pressure switches that monitor and send hydraulic circuit information to the TCM. Likewise, the pressure switches can only be service by replacing the assembly.

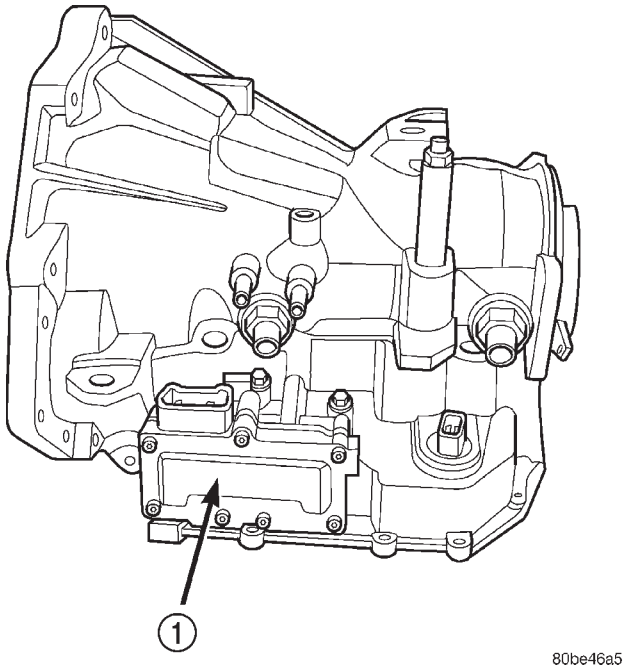

Fig. 313 Solenoid/Pressure Switch Assembly

1 - SOLENOID AND PRESSURE SWITCH ASSEMBLY

SOLENOID/PRESSURE SWITCH ASSY (Continued)

OPERATION

SOLENOIDS

The solenoids receive electrical power from the Transmission Control Relay through a single wire. The TCM energizes or operates the solenoids individually by grounding the return wire of the solenoid needed. When a solenoid is energized, the solenoid valve shifts, and a fluid passage is opened or closed (vented or applied), depending on its default operating state. The result is an apply or release of a frictional element.

The 2/4 and UD solenoids are normally applied, which by design allow fluid to pass through in their relaxed or "off" state. This allows transaxle limp-in (P,R,N,2) in the event of an electrical failure.

The continuity of the solenoids and circuits are periodically tested. Each solenoid is turned on or off depending on its current state. An inductive spike should be detected by the TCM during this test. It no spike is detected, the circuit is tested again to verify the failure. In addition to the periodic testing, the solenoid circuits are tested if a speed ratio or pressure switch error occurs.

PRESSURE SWITCHES

The TCM relies on three pressure switches to monitor fluid pressure in the L/R, 2/4, and OD hydraulic circuits. The primary purpose of these switches is to help the TCM detect when clutch circuit hydraulic failures occur. The range for the pressure switch closing and opening points is 11-23 psi. Typically the switch opening point will be approximately one psi lower than the closing point. For example, a switch may close at 18 psi and open at 17 psi. The switches are continuously monitored by the TCM for the correct states (open or closed) in each gear as shown in the following chart:

PRESSURE SWITCH STATES

GEAR	L/R	2/4	OD
R	OP	OP	OP
P/N	CL	OP	OP
1st	CL	OP	OP
2nd	OP	CL	OP
D	OP	OP	CL
OD	OP	CL	CL

OP = OPEN

CL = CLOSED

A Diagnostic Trouble Code (DTC) will set if the TCM senses any switch open or closed at the wrong time in a given gear.

The TCM also tests the 2/4 and OD pressure switches when they are normally off (OD and 2/4 are tested in 1st gear, OD in 2nd gear, and 2/4 in 3rd gear). The test simply verifies that they are operational, by looking for a closed state when the corresponding element is applied. Immediately after a shift into 1st, 2nd, or 3rd gear with the engine speed above 1000 rpm, the TCM momentarily turns on element pressure to the 2/4 and/or OD clutch circuits to identify that the appropriate switch has closed. If it doesn't close, it is tested again. If the switch fails to close the second time, the appropriate Diagnostic Trouble Code (DTC) will set.

REMOVAL

NOTE: If solenoid/pressure switch assembly is being replaced, it is necessary to perform the TCM Quick Learn Procedure. (Refer to 8 - ELECTRICAL/ ELECTRONIC CONTROL MODULES/TRANSMISSION CONTROL MODULE - STANDARD PROCEDURE)

(1) Disconnect battery negative cable.
(2) Remove air cleaner assembly.
(3) Disconnect solenoid/pressure switch assembly connector.
(4) Disconnect input speed sensor connector.
(5) Remove input speed sensor (Fig. 314).

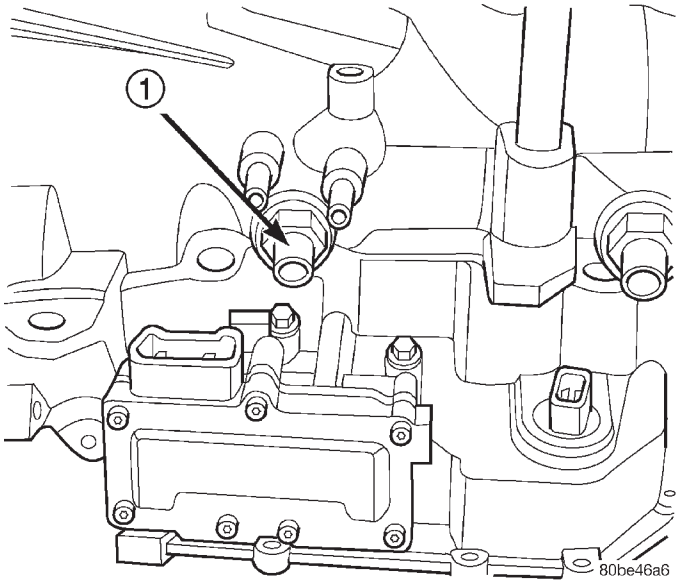

Fig. 314 Input Speed Sensor

1 - INPUT SPEED SENSOR

SOLENOID/PRESSURE SWITCH ASSY (Continued)

(6) Remove three (3) solenoid/pressure switch assembly-to-transaxle case bolts (Fig. 315).

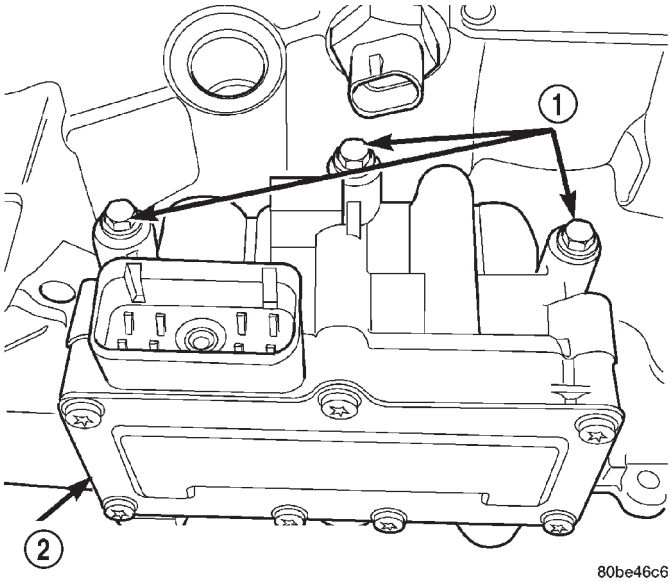

Fig. 315 Solenoid/Pressure Switch Assembly-to-Case Bolts

1 - BOLTS
2 - SOLENOID AND PRESSURE SWITCH ASSEMBLY

(7) Remove solenoid/pressure switch assembly and gasket (Fig. 316). Use care to prevent gasket material and foreign objects from become lodged in the transaxle case ports.

INSTALLATION

NOTE: If solenoid/pressure switch assembly is being replaced, it is necessary to perform the TCM Quick Learn Procedure. (Refer to 8 - ELECTRICAL/ ELECTRONIC CONTROL MODULES/TRANSMISSION CONTROL MODULE - STANDARD PROCEDURE)

(1) Install solenoid/pressure switch assembly and new gasket to transaxle (Fig. 316).
(2) Install and torque three (3) bolts (Fig. 315) to 13 N·m (110 in. lbs.).
(3) Install input speed sensor (Fig. 314) and torque to 27 N·m (20 ft. lbs.).
(4) Connect input speed sensor connector.
(5) Install solenoid/pressure switch 8-way connector and torque to 4 N·m (35 in. lbs.).
(6) Install air cleaner assembly.
(7) Connect battery negative cable.
(8) If solenoid/pressure switch assembly was replaced, perform TCM Quick Learn procedure. (Refer to 8 - ELECTRICAL/ELECTRONIC CONTROL MODULES/TRANSMISSION CONTROL MODULE - STANDARD PROCEDURE)

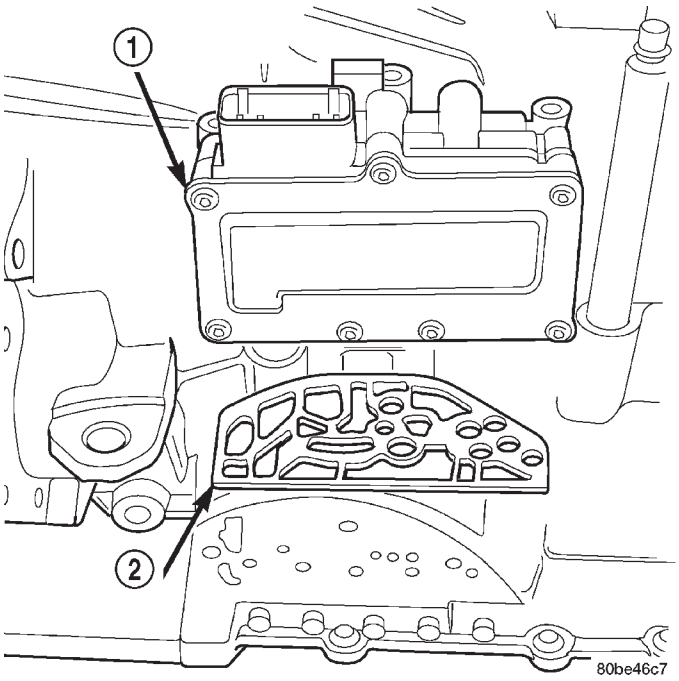

Fig. 316 Solenoid/Pressure Switch Assembly and Gasket

1 - SOLENOID/PRESSURE SWITCH ASSEMBLY
2 - GASKET

SPEED SENSOR - INPUT

DESCRIPTION

The Input Speed Sensor is a two-wire magnetic pickup device that generates AC signals as rotation occurs. It is threaded into the transaxle case (Fig. 317) , sealed with an o-ring (Fig. 318), and is considered a primary input to the Transmission Control Module (TCM).

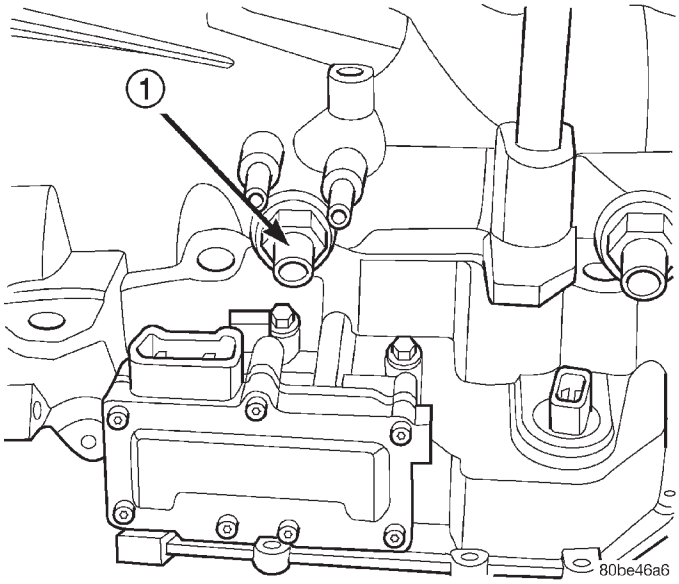

Fig. 317 Input Speed Sensor Location

1 - INPUT SPEED SENSOR

SPEED SENSOR - INPUT (Continued)

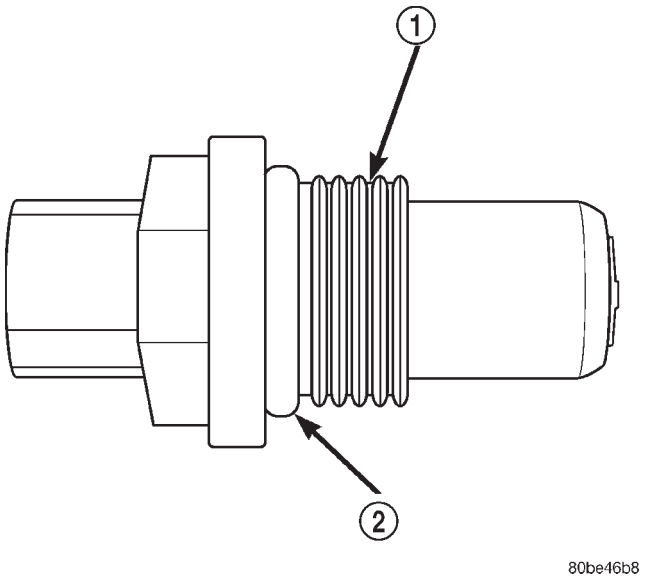

Fig. 318 O-Ring Location

1 - INPUT SPEED SENSOR
2 - O-RING

OPERATION

The Input Speed Sensor provides information on how fast the input shaft is rotating. As the teeth of the input clutch hub pass by the sensor coil (Fig. 319), an AC voltage is generated and sent to the TCM. The TCM interprets this information as input shaft rpm.

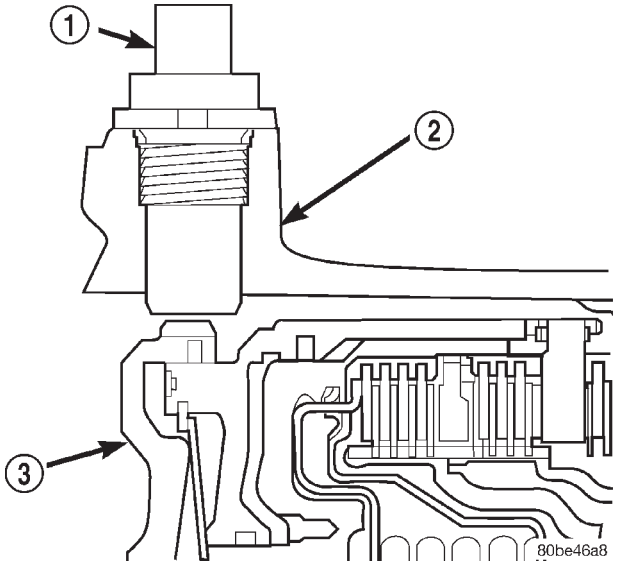

Fig. 319 Sensor Relation to Input Clutch Hub

1 - INPUT SPEED SENSOR
2 - TRANSAXLE CASE
3 - INPUT CLUTCH HUB

The TCM compares the input speed signal with output speed signal to determine the following:

- Transmission gear ratio
- Speed ratio error detection
- CVI calculation

The TCM also compares the input speed signal and the engine speed signal to determine the following:

- Torque converter clutch slippage
- Torque converter element speed ratio

REMOVAL

(1) Disconnect battery negative cable.

(2) If necessary, disconnect and cap off transmission oil cooler lines.

(3) Disconnect input speed sensor connector.

(4) Unscrew and remove input speed sensor (Fig. 320).

(5) Inspect speed sensor o-ring (Fig. 321) and replace if necessary.

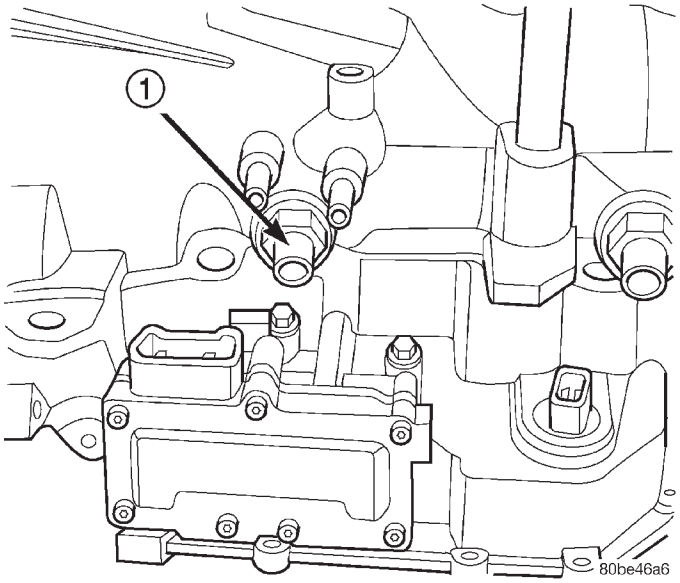

Fig. 320 Input (Turbine) Speed Sensor

1 - INPUT SPEED SENSOR

SPEED SENSOR - INPUT (Continued)

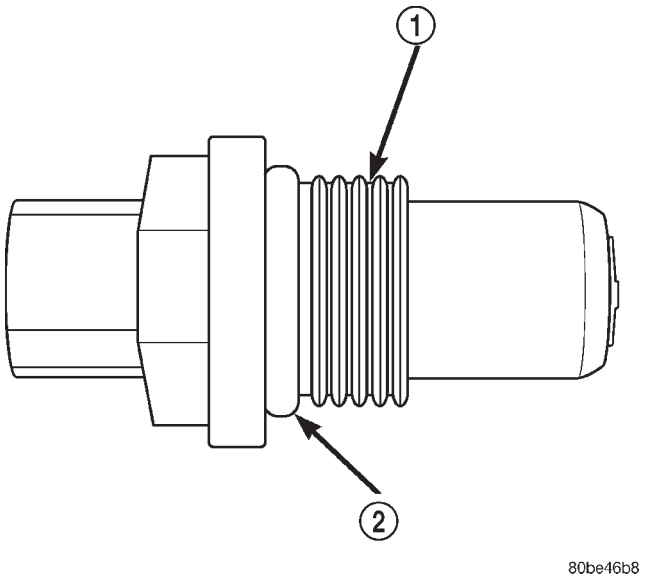

Fig. 321 O-ring Location

1 - INPUT SPEED SENSOR
2 - O-RING

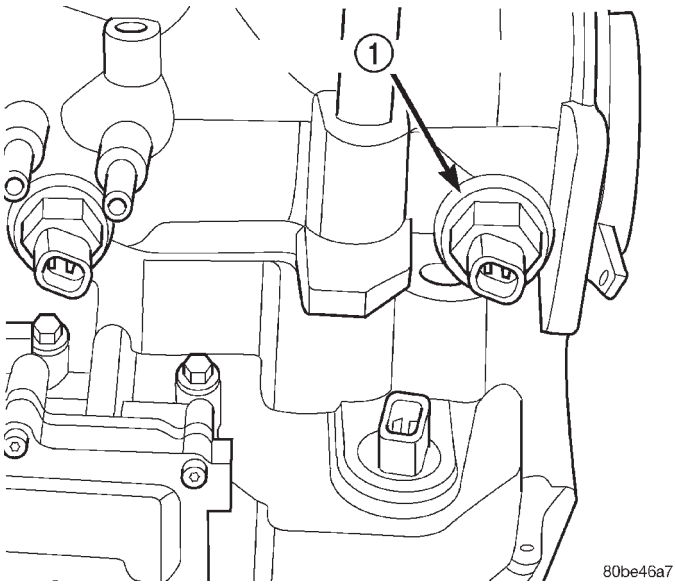

Fig. 322 Output Speed Sensor

1 - OUTPUT SPEED SENSOR

INSTALLATION

(1) Verify o-ring is installed into position.
(2) Install and tighten input speed sensor to 27 N·m (20 ft. lbs.).
(3) Connect speed sensor connector.
(4) Connect battery negative cable.

SPEED SENSOR - OUTPUT

DESCRIPTION

The Output Speed Sensor is a two-wire magnetic pickup device that generates an AC signal as rotation occurs. It is threaded into the transaxle case (Fig. 322) , sealed with an o-ring (Fig. 323), and is considered a primary input to the Transmission Control Module (TCM).

OPERATION

The Output Speed Sensor provides information on how fast the output shaft is rotating. As the rear planetary carrier park pawl lugs pass by the sensor coil (Fig. 324), an AC voltage is generated and sent to the TCM. The TCM interprets this information as output shaft rpm.

The TCM compares the input and output speed signals to determine the following:

- Transmission gear ratio
- Speed ratio error detection
- CVI calculation

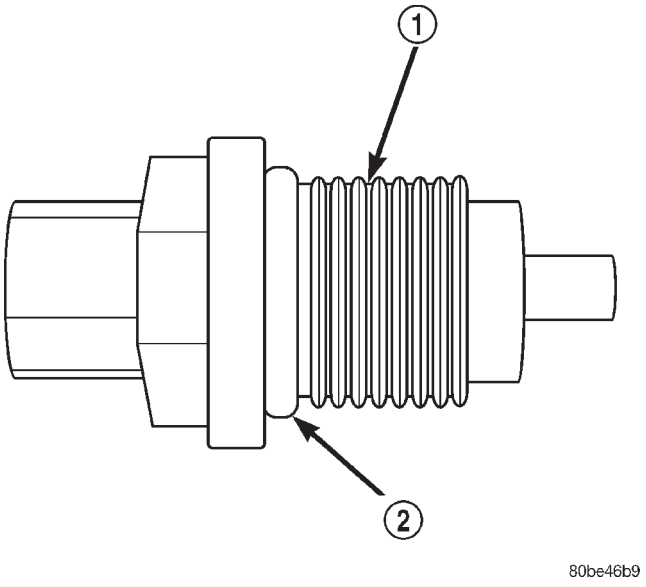

Fig. 323 O-Ring Location

1 - OUTPUT SPEED SENSOR
2 - O-RING

SPEED SENSOR - OUTPUT (Continued)

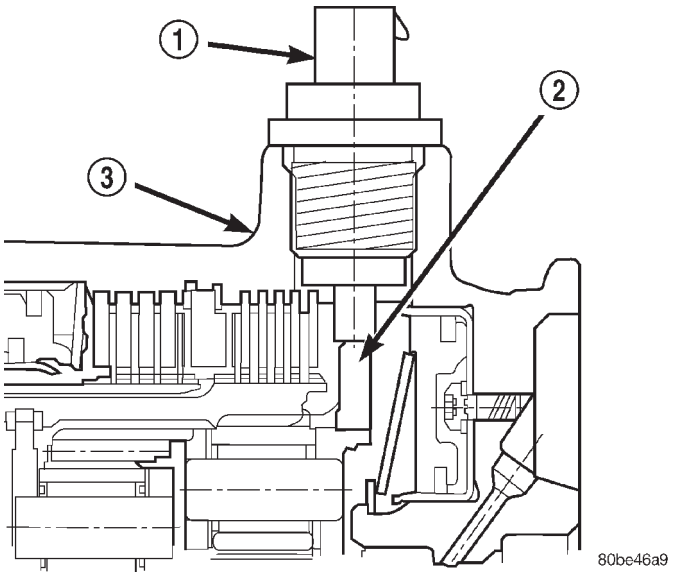

Fig. 324 Sensor Relation to Planet Carrier Park Pawl

1 - OUTPUT SPEED SENSOR
2 - REAR PLANET CARRIER/OUTPUT SHAFT ASSEMBLY
3 - TRANSAXLE CASE

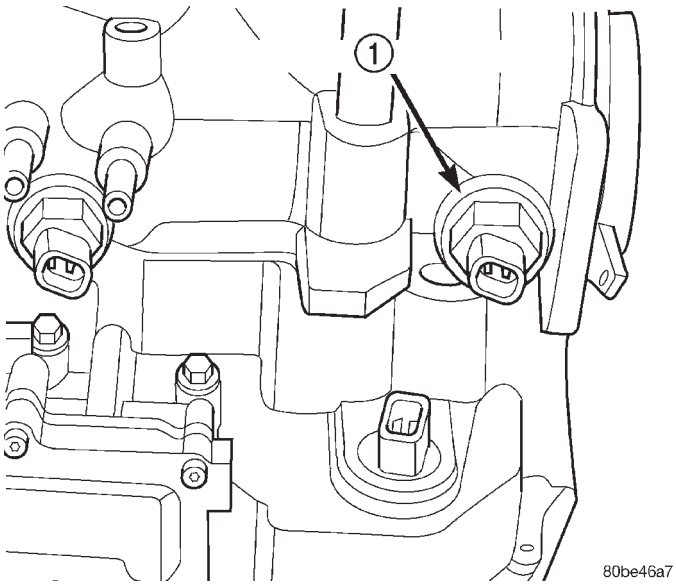

Fig. 325 Output Speed Sensor

1 - OUTPUT SPEED SENSOR

VEHICLE SPEED SIGNAL

The vehicle speed signal is taken from the Output Speed Sensor. The TCM converts this signal into a pulse per mile signal and sends it to the PCM. The PCM, in turn, sends the vehicle speed message across the communication bus to the BCM. The BCM sends this signal to the Instrument Cluster to display vehicle speed to the driver. The vehicle speed signal pulse is roughly 8000 pulses per mile.

REMOVAL

(1) Disconnect battery negative cable.
(2) Raise vehicle on hoist.
(3) Disconnect output speed sensor connector.
(4) Unscrew and remove output speed sensor (Fig. 325).
(5) Inspect speed sensor o-ring (Fig. 326) and replace if necessary.

INSTALLATION

(1) Verify o-ring is installed into position (Fig. 326).
(2) Install and tighten input speed sensor to 27 N·m (20 ft. lbs.).
(3) Connect speed sensor connector.
(4) Connect battery negative cable.

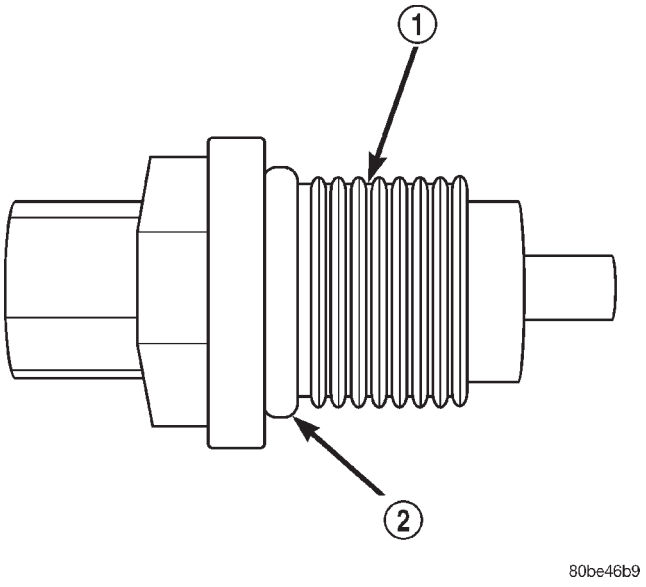

Fig. 326 O-ring Location

1 - OUTPUT SPEED SENSOR
2 - O-RING

TORQUE CONVERTER

DESCRIPTION

The torque converter (Fig. 327) is a hydraulic device that couples the engine crankshaft to the transmission. The torque converter consists of an outer shell with an internal turbine, a stator, an overrunning clutch, an impeller and an electronically applied converter clutch. The converter clutch provides reduced engine speed and greater fuel economy when engaged. Clutch engagement also provides reduced transmission fluid temperatures. The converter clutch engages in third gear. The torque converter hub drives the transmission oil (fluid) pump.

The torque converter is a sealed, welded unit that is not repairable and is serviced as an assembly.

CAUTION: The torque converter must be replaced if a transmission failure resulted in large amounts of metal or fiber contamination in the fluid. If the fluid is contaminated, flush the fluid cooler and lines.

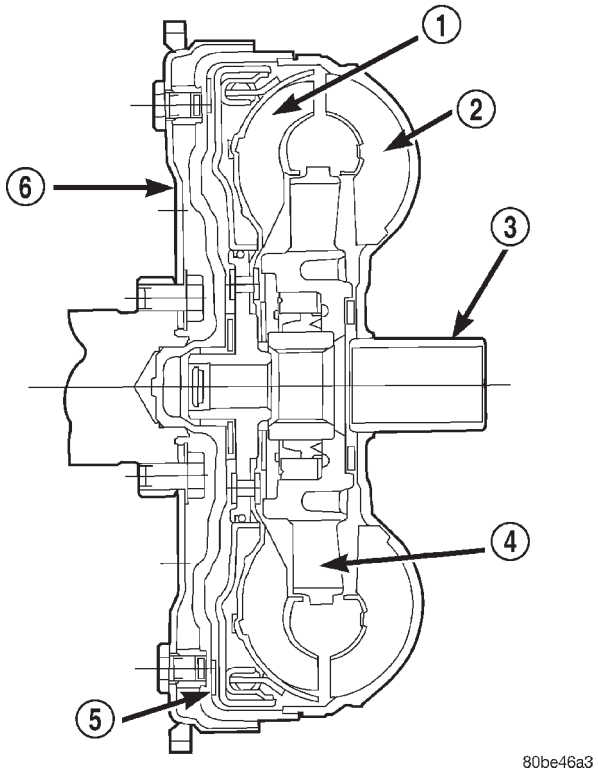

Fig. 327 Torque Converter Assembly

1 - TURBINE
2 - IMPELLER
3 - HUB
4 - STATOR
5 - CONVERTER CLUTCH DISC
6 - DRIVE PLATE

TORQUE CONVERTER (Continued)

IMPELLER

The impeller (Fig. 328) is an integral part of the converter housing. The impeller consists of curved blades placed radially along the inside of the housing on the transmission side of the converter. As the converter housing is rotated by the engine, so is the impeller, because they are one and the same and are the driving member of the system.

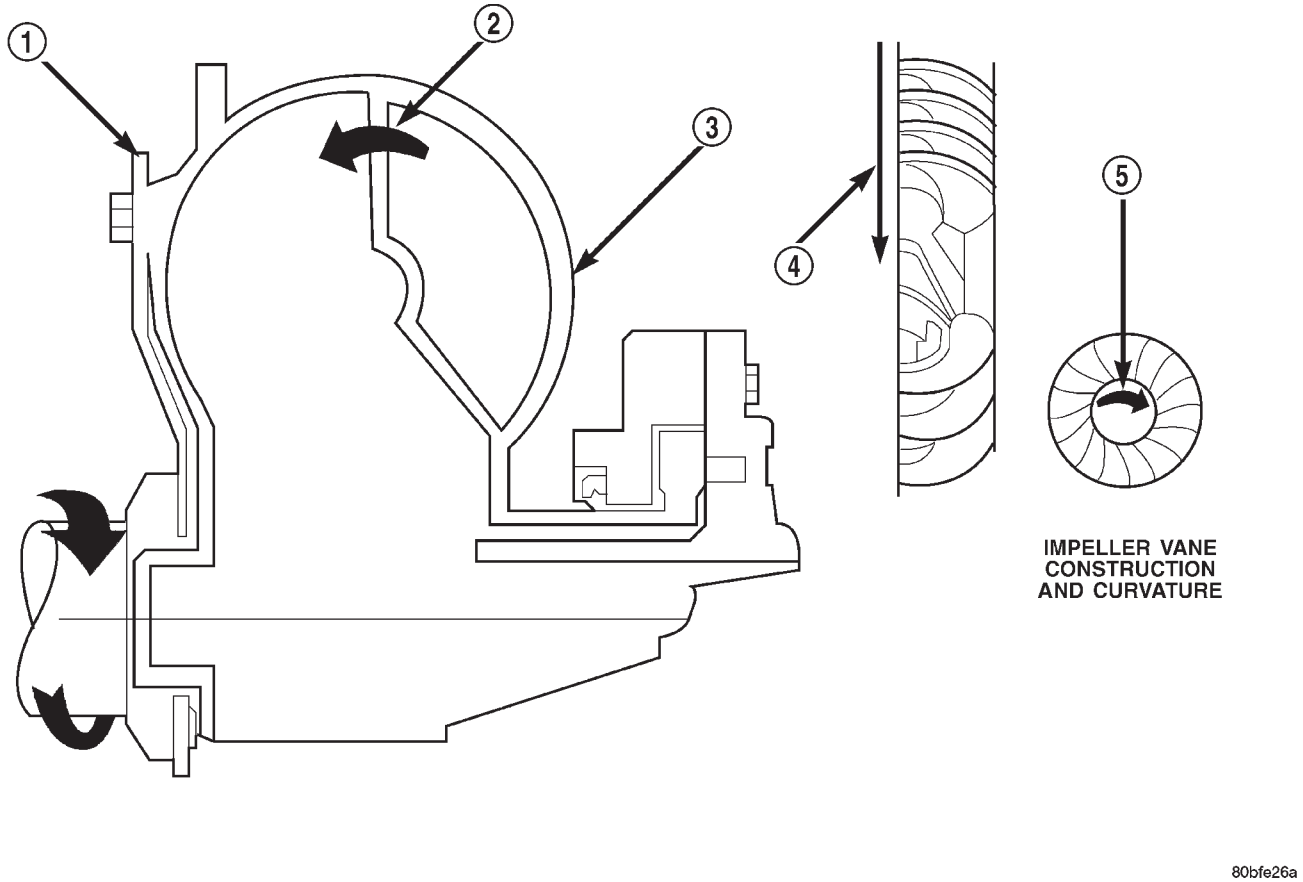

Fig. 328 Impeller

1 - ENGINE FLEXPLATE
2 - OIL FLOW FROM IMPELLER SECTION INTO TURBINE SECTION
3 - IMPELLER VANES AND COVER ARE INTEGRAL
4 - ENGINE ROTATION
5 - ENGINE ROTATION

TORQUE CONVERTER (Continued)

TURBINE

The turbine (Fig. 329) is the output, or driven, member of the converter. The turbine is mounted within the housing opposite the impeller, but is not attached to the housing. The input shaft is inserted through the center of the impeller and splined into the turbine. The design of the turbine is similar to the impeller, except the blades of the turbine are curved in the opposite direction.

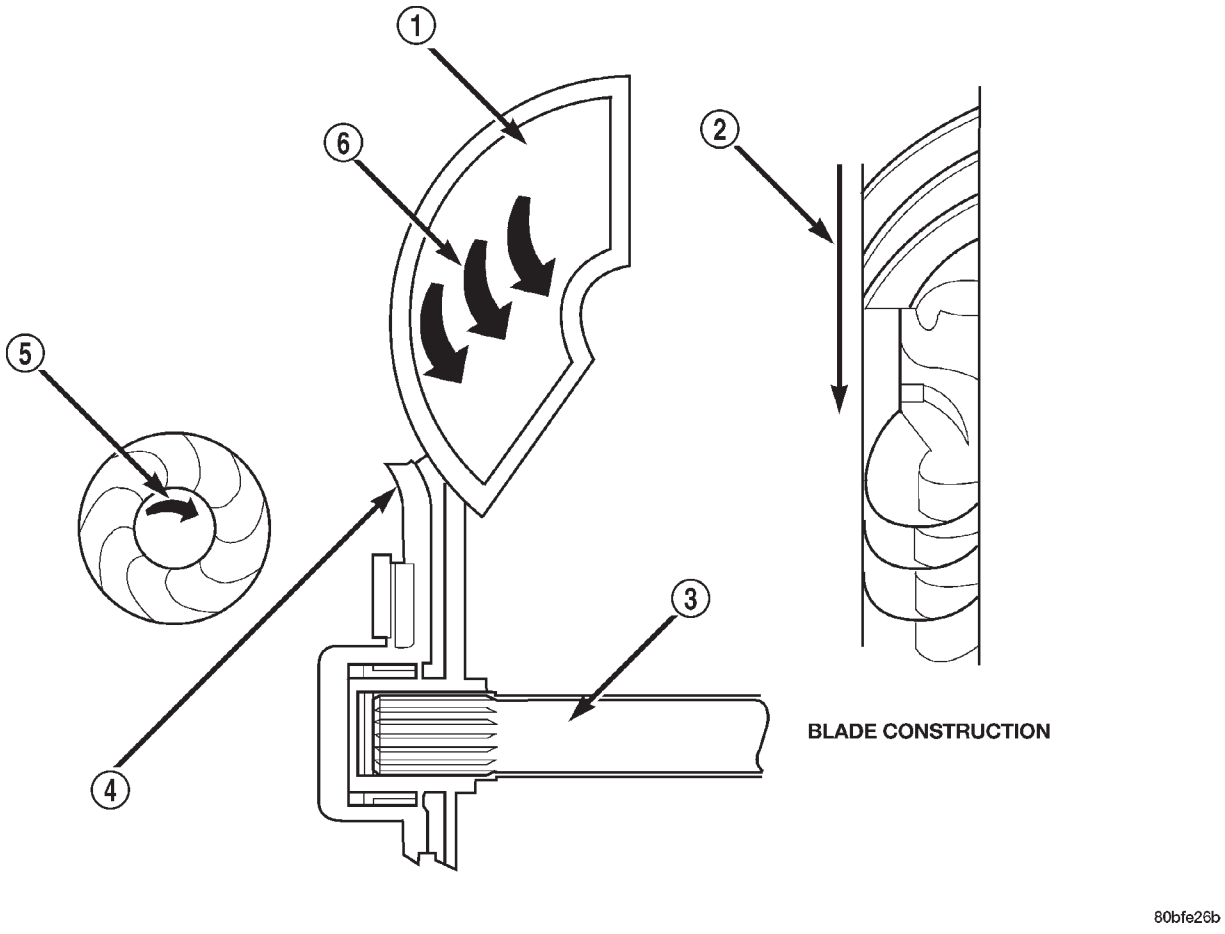

Fig. 329 Turbine

1 - TURBINE VANE
2 - ENGINE ROTATION
3 - INPUT SHAFT
4 - PORTION OF TORQUE CONVERTER COVER
5 - ENGINE ROTATION
6 - OIL FLOW WITHIN TURBINE SECTION

TORQUE CONVERTER (Continued)

STATOR

The stator assembly (Fig. 330) is mounted on a stationary shaft which is an integral part of the oil pump. The stator is located between the impeller and turbine within the torque converter case (Fig. 331). The stator contains an over-running clutch, which allows the stator to rotate only in a clockwise direction. When the stator is locked against the over-running clutch, the torque multiplication feature of the torque converter is operational.

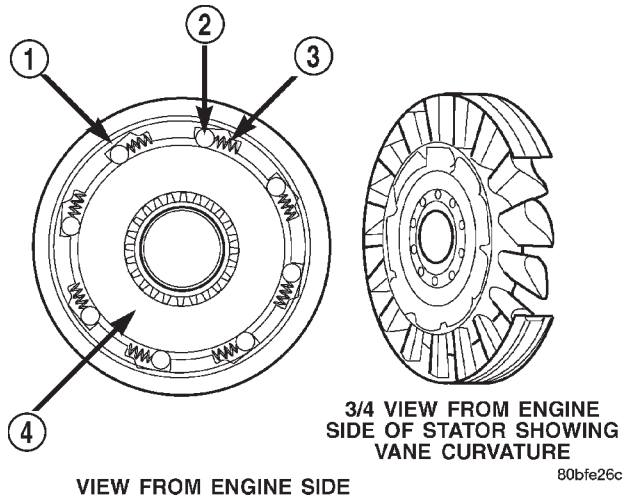

Fig. 330 Stator Components

1 - CAM (OUTER RACE)
2 - ROLLER
3 - SPRING
4 - INNER RACE

TORQUE CONVERTER CLUTCH (TCC)

The TCC (Fig. 332) was installed to improve the efficiency of the torque converter that is lost to the slippage of the fluid coupling. Although the fluid coupling provides smooth, shock–free power transfer, it is natural for all fluid couplings to slip. If the impeller and turbine were mechanically locked together, a zero slippage condition could be obtained. A hydraulic piston was added to the turbine, and a friction material was added to the inside of the front cover to provide this mechanical lock-up.

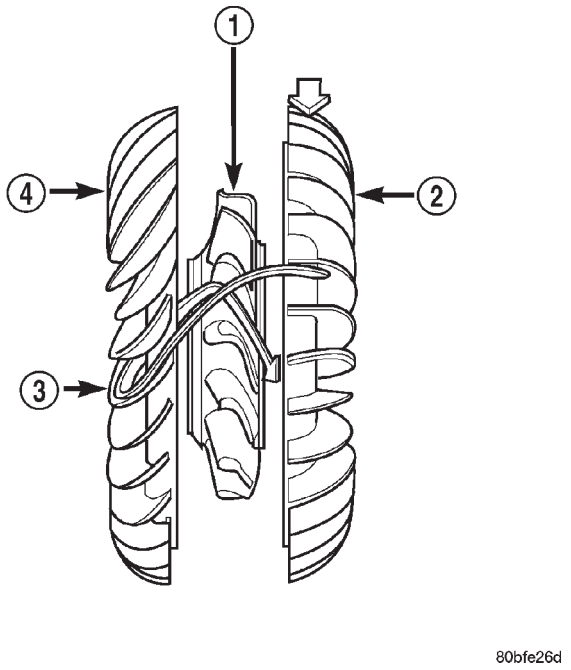

Fig. 331 Stator Location

1 - STATOR
2 - IMPELLER
3 - FLUID FLOW
4 - TURBINE

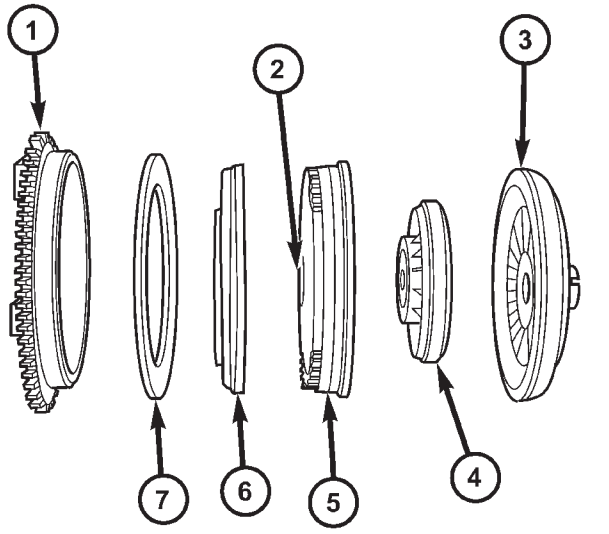

Fig. 332 Torque Converter Clutch (TCC)

1 - IMPELLER FRONT COVER
2 - THRUST WASHER ASSEMBLY
3 - IMPELLER
4 - STATOR
5 - TURBINE
6 - PISTON
7 - FRICTION DISC

TORQUE CONVERTER (Continued)

OPERATION

The converter impeller (Fig. 333) (driving member), which is integral to the converter housing and bolted to the engine drive plate, rotates at engine speed. The converter turbine (driven member), which reacts from fluid pressure generated by the impeller, rotates and turns the transmission input shaft.

TURBINE

As the fluid that was put into motion by the impeller blades strikes the blades of the turbine, some of the energy and rotational force is transferred into the turbine and the input shaft. This causes both of them (turbine and input shaft) to rotate in a clockwise direction following the impeller. As the fluid is leaving the trailing edges of the turbine's blades it continues in a "hindering" direction back toward the impeller. If the fluid is not redirected before it strikes the impeller, it will strike the impeller in such a direction that it would tend to slow it down.

STATOR

Torque multiplication is achieved by locking the stator's over-running clutch to its shaft (Fig. 334). Under stall conditions (the turbine is stationary), the oil leaving the turbine blades strikes the face of the stator blades and tries to rotate them in a counterclockwise direction. When this happens the over–running clutch of the stator locks and holds the stator from rotating. With the stator locked, the oil strikes the stator blades and is redirected into a "helping" direction before it enters the impeller. This circulation of oil from impeller to turbine, turbine to stator, and stator to impeller, can produce a maximum torque multiplication of about 2.4:1. As the turbine begins to match the speed of the impeller, the fluid that was hitting the stator in such as way as to cause it to lock–up is no longer doing so. In this condition of operation, the stator begins to free wheel and the converter acts as a fluid coupling.

TORQUE CONVERTER CLUTCH (TCC)

In a standard torque converter, the impeller and turbine are rotating at about the same speed and the stator is freewheeling, providing no torque multiplication. By applying the turbine's piston to the front cover's friction material, a total converter engagement can be obtained. The result of this engagement is a direct 1:1 mechanical link between the engine and the transmission.

The engagement and disengagement of the TCC are automatic and controlled by the Powertrain Control Module (PCM). The engagement cannot be activated in the lower gears because it eliminates the torque multiplication effect of the torque converter necessary for acceleration. Inputs that determine clutch engagement are: coolant temperature, vehicle speed and throttle position. The torque converter

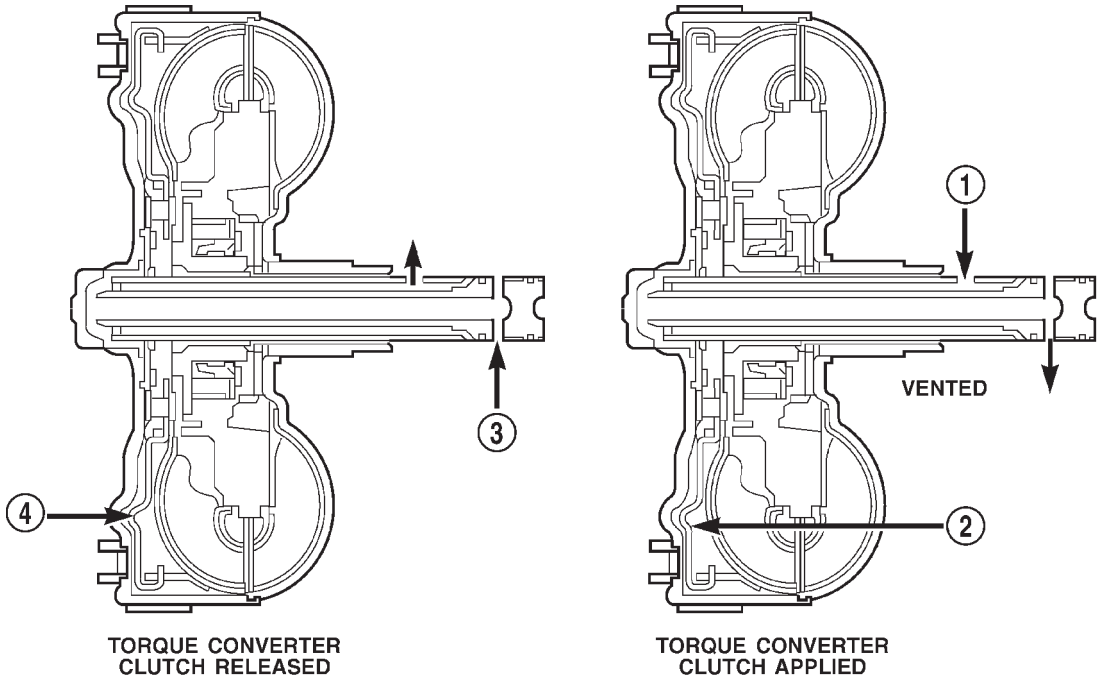

Fig. 333 Torque Converter Fluid Operation

1 - APPLY PRESSURE
2 - THE PISTON MOVES SLIGHTLY FORWARD
3 - RELEASE PRESSURE
4 - THE PISTON MOVES SLIGHTLY REARWARD

TORQUE CONVERTER (Continued)

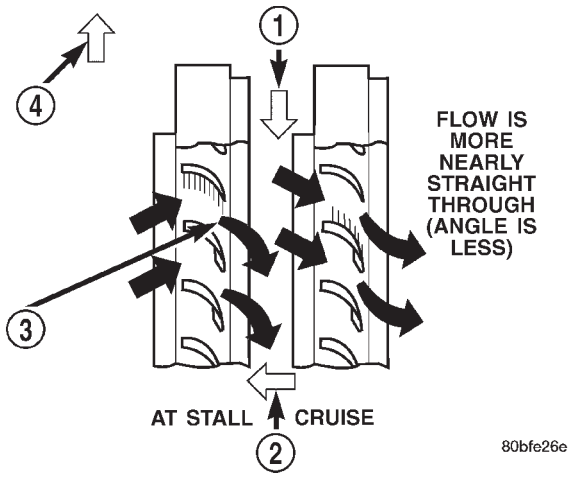

Fig. 334 Stator Operation

1 - DIRECTION STATOR WILL FREE WHEEL DUE TO OIL PUSHING ON BACKSIDE OF VANES
2 - FRONT OF ENGINE
3 - INCREASED ANGLE AS OIL STRIKES VANES
4 - DIRECTION STATOR IS LOCKED UP DUE TO OIL PUSHING AGAINST STATOR VANES

clutch is engaged by the clutch solenoid on the valve body. The clutch will engage at approximately 56 km/h (35 mph) with light throttle, after the shift to third gear.

REMOVAL

(1) Remove transmission and torque converter from vehicle. (Refer to 21 - TRANSMISSION/TRANSAXLE/AUTOMATIC - 41TE - REMOVAL)

(2) Place a suitable drain pan under the converter housing end of the transmission.

CAUTION: Verify that transmission is secure on the lifting device or work surface, the center of gravity of the transmission will shift when the torque converter is removed creating an unstable condition. The torque converter is a heavy unit. Use caution when separating the torque converter from the transmission.

(3) Pull the torque converter forward until the center hub clears the oil pump seal.

(4) Separate the torque converter from the transmission.

INSTALLATION

Check converter hub and drive notches for sharp edges, burrs, scratches, or nicks. Polish the hub and notches with 320/400 grit paper or crocus cloth if necessary. The hub must be smooth to avoid damaging the pump seal at installation.

(1) Lubricate converter hub and oil pump seal lip with transmission fluid.

(2) Place torque converter in position on transmission.

CAUTION: Do not damage oil pump seal or bushing while inserting torque converter into the front of the transmission.

(3) Align torque converter to oil pump seal opening.

(4) Insert torque converter hub into oil pump.

(5) While pushing torque converter inward, rotate converter until converter is fully seated in the oil pump gears.

(6) Check converter seating with a scale and straightedge (Fig. 335). Surface of converter lugs should be 1/2 in. to rear of straightedge when converter is fully seated.

(7) If necessary, temporarily secure converter with C-clamp attached to the converter housing.

(8) Install the transmission in the vehicle. (Refer to 21 - TRANSMISSION/TRANSAXLE/AUTOMATIC - 41TE - INSTALLATION)

(9) Fill the transmission with the recommended fluid. (Refer to 21 - TRANSMISSION/TRANSAXLE/AUTOMATIC - 41TE/FLUID - STANDARD PROCEDURE)

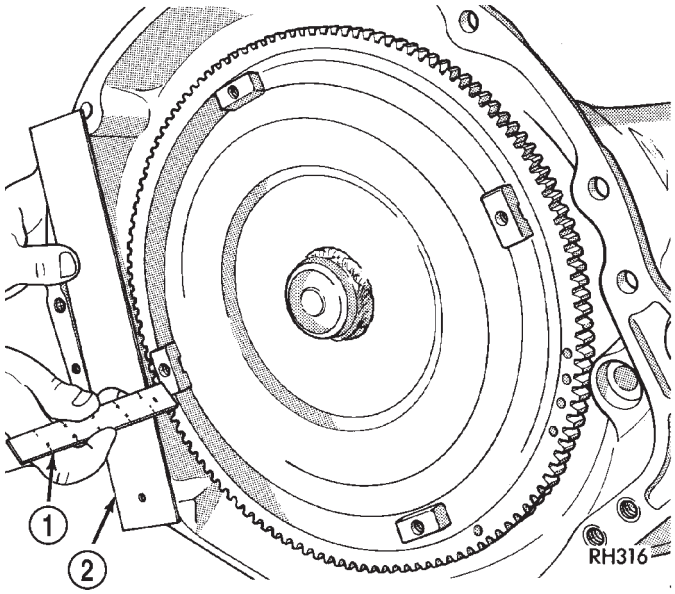

Fig. 335 Checking Torque Converter Seating

1 - SCALE
2 - STRAIGHTEDGE

TRANSMISSION CONTROL RELAY

DESCRIPTION

The transmission control relay (Fig. 336) is located in the Intelligent Power Module (IPM), which is located on the left side of the engine compartment between the battery and left fender.

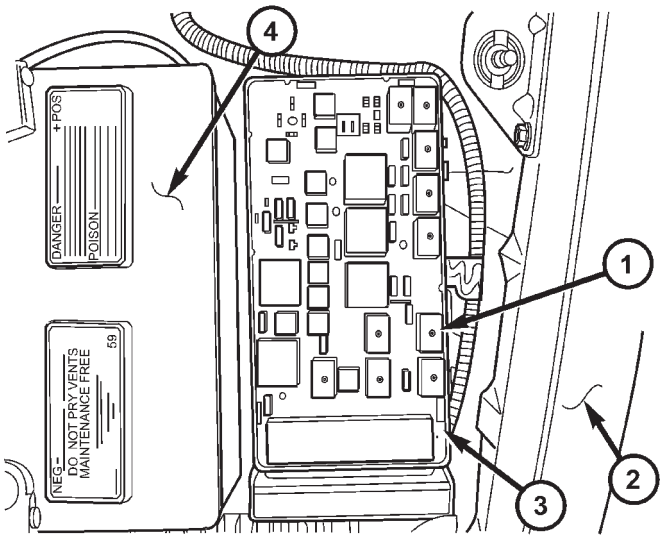

Fig. 336 Transmission Control Relay Location

1 - TRANSMISSION CONTROL RELAY
2 - LEFT FENDER
3 - INTELLIGENT POWER MODULE (IPM)
4 - BATTERY

OPERATION

The relay is supplied fused B+ voltage, energized by the TCM, and is used to supply power to the solenoid pack when the transmission is in normal operating mode. When the relay is “off”, no power is supplied to the solenoid pack and the transmission is in “limp-in” mode. After a controller reset (ignition key turned to the “run” position or after cranking engine), the TCM energizes the relay. Prior to this, the TCM verifies that the contacts are open by checking for no voltage at the switched battery terminals. After this is verified, the voltage at the solenoid pack pressure switches is checked. After the relay is energized, the TCM monitors the terminals to verify that the voltage is greater than 3 volts.

TRANSMISSION RANGE SENSOR

DESCRIPTION

The Transmission Range Sensor (TRS) is mounted to the top of the valve body inside the transaxle and can only be serviced by removing the valve body. The electrical connector extends through the transaxle case (Fig. 337) .

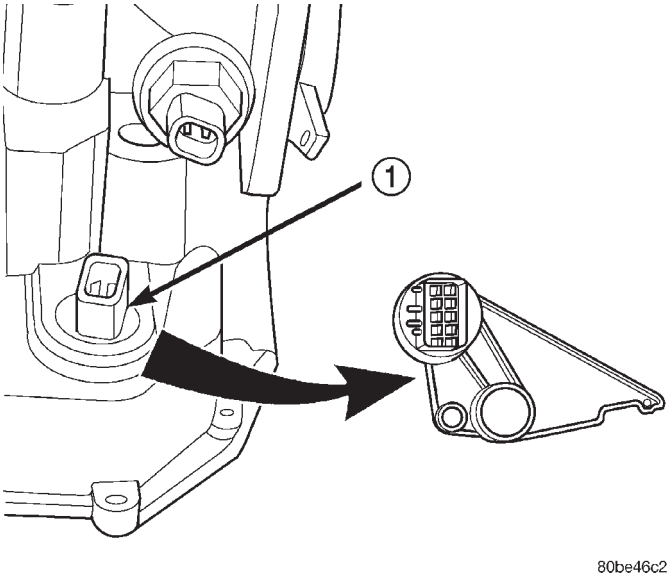

Fig. 337 Transmission Range Sensor (TRS) Location

1 - TRANSMISSION RANGE SENSOR

The Transmission Range Sensor (TRS) has four switch contacts that monitor shift lever position and send the information to the TCM.

The TRS also has an integrated temperature sensor (thermistor) that communicates transaxle temperature to the TCM and PCM (Fig. 338) .

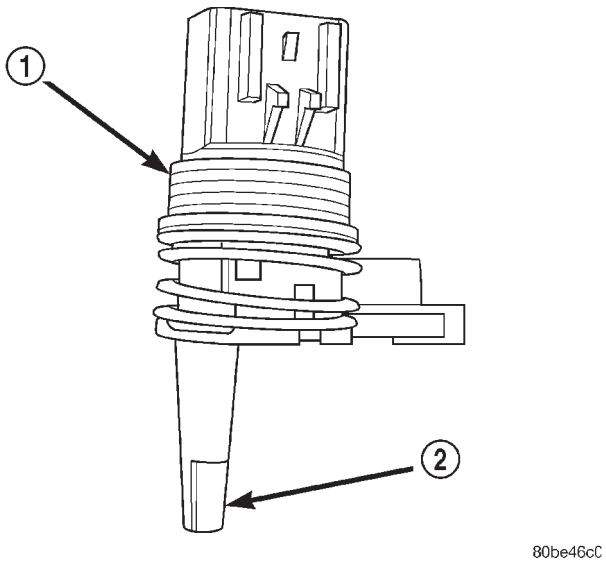

Fig. 338 Transmission Temperature Sensor

1 - TRANSMISSION RANGE SENSOR
2 - TEMPERATURE SENSOR

TRANSMISSION RANGE SENSOR (Continued)

OPERATION

The Transmission Range Sensor (TRS) (Fig. 337) communicates shift lever position (SLP) to the TCM as a combination of open and closed switches. Each shift lever position has an assigned combination of switch states (open/closed) that the TCM receives from four sense circuits. The TCM interprets this information and determines the appropriate transaxle gear position and shift schedule.

Since there are four switches, there are 16 possible combinations of open and closed switches (codes). Seven of these codes are related to gear position and three are recognized as “between gear” codes. This results in six codes which should never occur. These are called “invalid” codes. An invalid code will result in a DTC, and the TCM will then determine the shift lever position based on pressure switch data. This allows reasonably normal transmission operation with a TRS failure.

TRS SWITCH STATES

SLP	T42	T41	T3	T1
P	CL	CL	CL	OP
R	CL	OP	OP	OP
N	CL	CL	OP	CL
OD	OP	OP	OP	CL
3	OP	OP	CL	OP
L	CL	OP	CL	CL

TRANSMISSION TEMPERATURE SENSOR

The TRS has an integrated thermistor (Fig. 338) that the TCM uses to monitor the transmission’s sump temperature. Since fluid temperature can affect transmission shift quality and convertor lock up, the TCM requires this information to determine which shift schedule to operate in. The PCM also monitors this temperature data so it can energize the vehicle cooling fan(s) when a transmission “overheat” condition exists. If the thermistor circuit fails, the TCM will revert to calculated oil temperature usage.

CALCULATED TEMPERATURE

A failure in the temperature sensor or circuit will result in calculated temperature being substituted for actual temperature. Calculated temperature is a predicted fluid temperature which is calculated from a combination of inputs:

- Battery (ambient) temperature
- Engine coolant temperature
- In-gear run time since start-up

REMOVAL

(1) Remove valve body assembly from transaxle. (Refer to 21 - TRANSMISSION/TRANSAXLE/AUTOMATIC - 41TE/VALVE BODY - REMOVAL)

(2) Remove transmission range sensor retaining screw and remove sensor from valve body (Fig. 339).

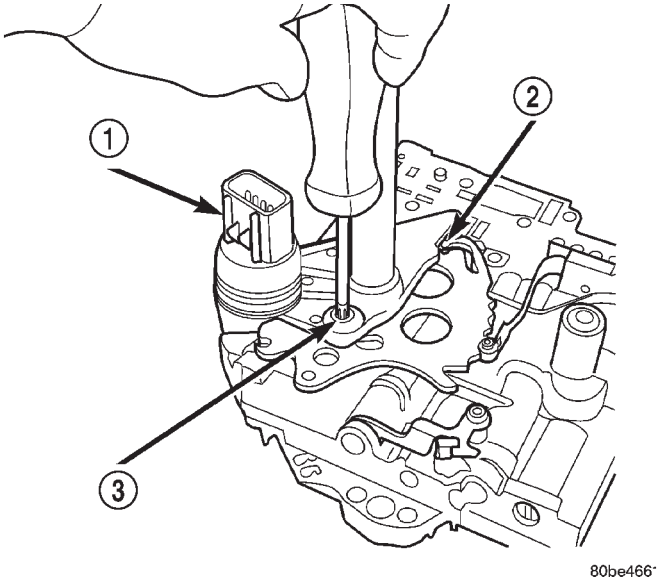

Fig. 339 Remove Transmission Range Sensor

1 - TRANSMISSION RANGE SENSOR
2 - MANUAL VALVE CONTROL PIN
3 - RETAINING SCREW

(3) Remove TRS from manual shaft.

INSTALLATION

(1) Install transmission range sensor (TRS) to the valve body and torque retaining screw (Fig. 339) to 5 N·m (45 in. lbs.).

(2) Install valve body to transaxle. (Refer to 21 - TRANSMISSION/TRANSAXLE/AUTOMATIC - 41TE/VALVE BODY - INSTALLATION)

TRD LINK

DESCRIPTION

The Torque Reduction Link (TRD) is a wire between the PCM and TCM that is used by the TCM to request torque management. Torque management controls or reduces torque output of the engine during certain shift sequences, reducing torque applied to the transaxle clutches.

OPERATION

The torque management signal is basically a 12-volt pull-up supplied by the PCM to the TCM over the torque reduction link (TRD). Torque management

TRD LINK (Continued)

is requested when the TCM pulses this signal to ground. The PCM recognizes this request and responds by retarding ignition timing, killing fuel injectors, etc. The PCM sends a confirmation of the request to the TCM via the communication bus. Torque reduction is not noticable by the driver, and usually lasts for a very short period of time.

If the confirmation signal is not received by the TCM after two sequential request messages, a diagnostic trouble code will be set.

VALVE BODY

DESCRIPTION

The valve body assembly consists of a cast aluminum valve body, a separator plate, and transfer plate. The valve body contains valves and check balls that control fluid delivery to the torque converter clutch, solenoid/pressure switch assembly, and frictional clutches. The valve body contains the following components (Fig. 340):

- Regulator valve
- Solenoid switch valve
- Manual valve
- Converter clutch switch valve
- Converter clutch control valve
- Torque converter regulator valve
- Low/Reverse switch valve

In addition, the valve body also contains the thermal valve, #2,3&4 check balls, the #5 (overdrive) check valve and the 2/4 accumulator assembly. (Refer to 21 - TRANSMISSION/TRANSAXLE/AUTOMATIC - 41TE/VALVE BODY - DISASSEMBLY)

OPERATION

NOTE: Refer to the Hydraulic Schematics for a visual aid in determining valve location, operation and design.

REGULATOR VALVE

The regulator valve controls hydraulic pressure in the transaxle. It receives unregulated pressure from the pump, which works against spring tension to maintain oil at specific pressures. A system of sleeves and ports allows the regulator valve to work at one of three predetermined pressure levels. Regulated oil pressure is also referred to as “line pressure.”

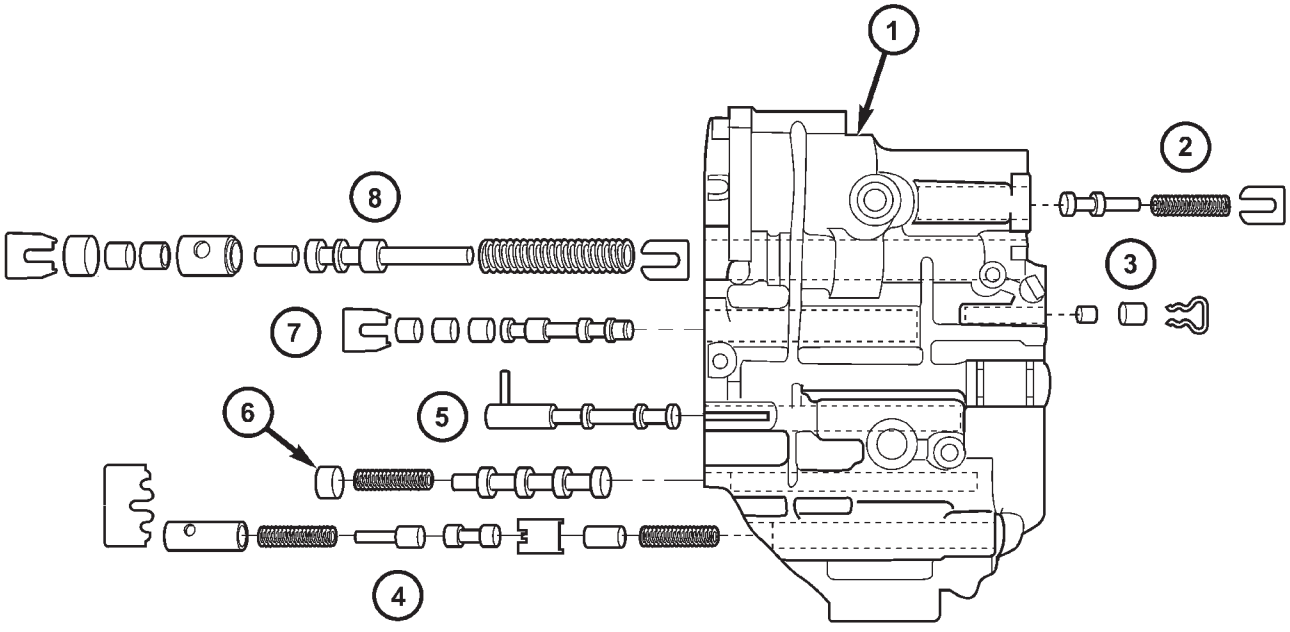

80865f21

Fig. 340 Valve Body Assembly

1 - VALVE BODY
2 - T/C REGULATOR VALVE
3 - L/R SWITCH VALVE
4 - CONVERTER CLUTCH CONTROL VALVE
5 - MANUAL VALVE
6 - CONVERTER CLUTCH SWITCH VALVE
7 - SOLENOID SWITCH VALVE
8 - REGULATOR VALVE

VALVE BODY (Continued)

SOLENOID SWITCH VALVE

The solenoid switch valve controls line pressure from the LR/CC solenoid. In one position, it allows the low/reverse clutch to be pressurized. In the other, it directs line pressure to the converter control and converter clutch valves.

MANUAL VALVE

The manual valve is operated by the mechanical shift linkage. Its primary responsibility is to send line pressure to the appropriate hydraulic circuits and solenoids. The valve has three operating ranges or positions.

CONVERTER CLUTCH SWITCH VALVE

The main responsibility of the converter clutch switch valve is to control hydraulic pressure applied to the front (off) side of the converter clutch piston. Line pressure from the regulator valve is fed to the torque converter regulator valve, where it passes through the valve, and is slightly regulated. The pressure is then directed to the converter clutch switch valve and to the front side of the converter clutch piston. This pressure pushes the piston back and disengages the converter clutch.

CONVERTER CLUTCH CONTROL VALVE

The converter clutch control valve controls the back (on) side of the torque converter clutch. When the TCM energizes or modulates the LR/CC solenoid to apply the converter clutch piston, both the converter clutch control valve and the converter control valve move, allowing pressure to be applied to the back side of the clutch.

T/C REGULATOR VALVE

The torque converter regulator valve slightly regulates the flow of fluid to the torque converter.

LOW/REVERSE SWITCH VALVE

The low/reverse clutch is applied from different sources, depending on whether low (1st) gear or reverse is selected. The low/reverse switch valve alternates positions depending on from which direction fluid pressure is applied. By design, when the valve is shifted by fluid pressure from one channel, the opposing channel is blocked. The switch valve alienates the possibility of a sticking ball check, thus providing consistent application of the low/reverse clutch under all operating conditions.

REMOVAL

REMOVAL

NOTE: If valve body is replaced or reconditioned, the TCM Quick Learn Procedure must be performed. (Refer to 8 - ELECTRICAL/ELECTRONIC CONTROL MODULES/TRANSMISSION CONTROL MODULE - STANDARD PROCEDURE)

(1) Disconnect battery negative cable.
(2) Disconnect gearshift cable from manual valve lever.
(3) Remove manual valve lever from manual shaft.
(4) Raise vehicle on hoist.
(5) Remove oil pan bolts (Fig. 341).

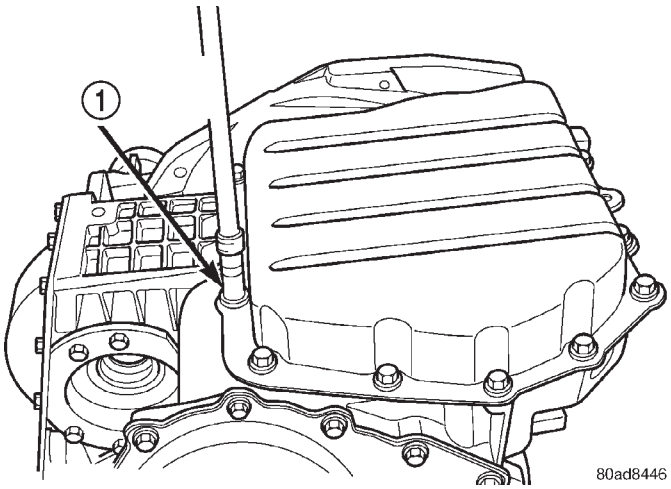

Fig. 341 Oil Pan Bolts

1 - OIL PAN BOLTS (USE RTV UNDER BOLT HEADS)

(6) Remove oil pan (Fig. 342).

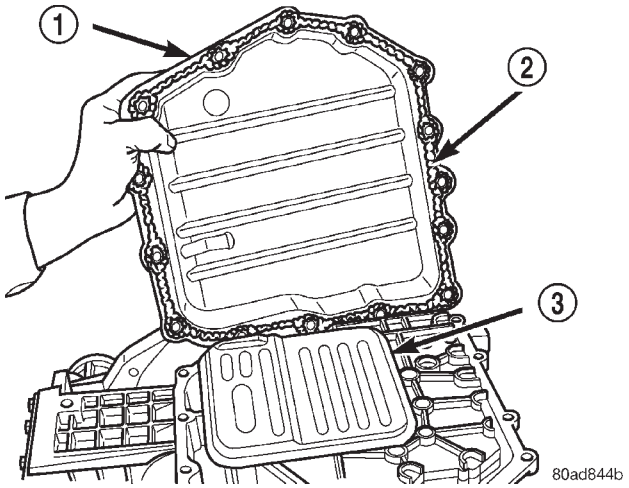

Fig. 342 Oil Pan

1 - OIL PAN
2 - 1/8 INCH BEAD OF RTV SEALANT
3 - OIL FILTER

VALVE BODY (Continued)

(7) Remove oil filter (Fig. 343).

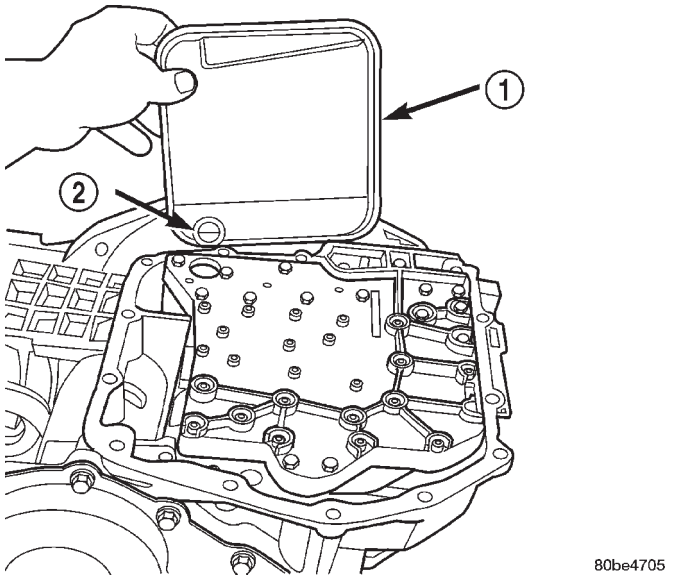

Fig. 343 Oil Filter

1 - OIL FILTER
2 - O-RING

(8) Remove the valve body-to-transaxle case bolts (Fig. 344).

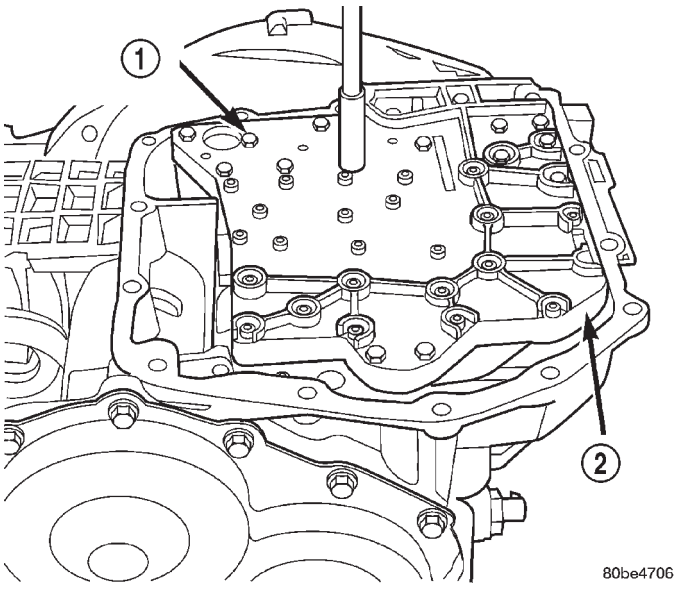

Fig. 344 Valve Body Attaching Bolts

1 - VALVE BODY ATTACHING BOLTS (18)
2 - VALVE BODY

NOTE: To ease removal of the valve body, turn the manual valve lever fully clockwise to low or first gear.

(9) Remove park rod rollers from guide bracket and remove valve body from transaxle (Fig. 345) (Fig. 346).

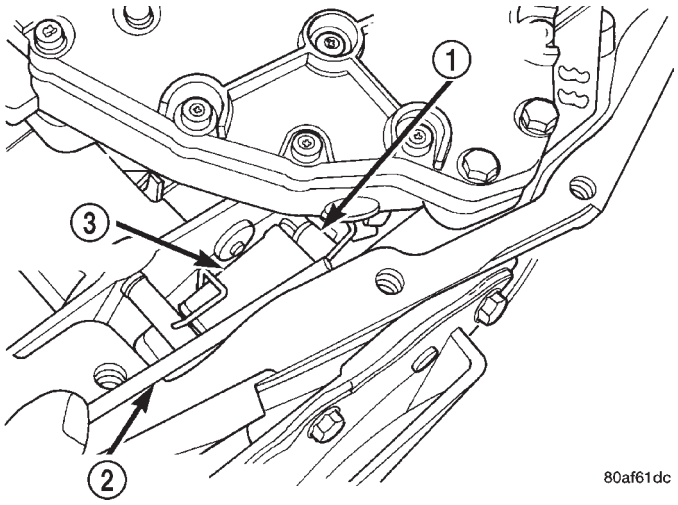

Fig. 345 Push Park Rod Rollers from Guide Bracket

1 - PARK SPRAG ROLLERS
2 - SCREWDRIVER
3 - PARK SPRAG GUIDE BRACKET

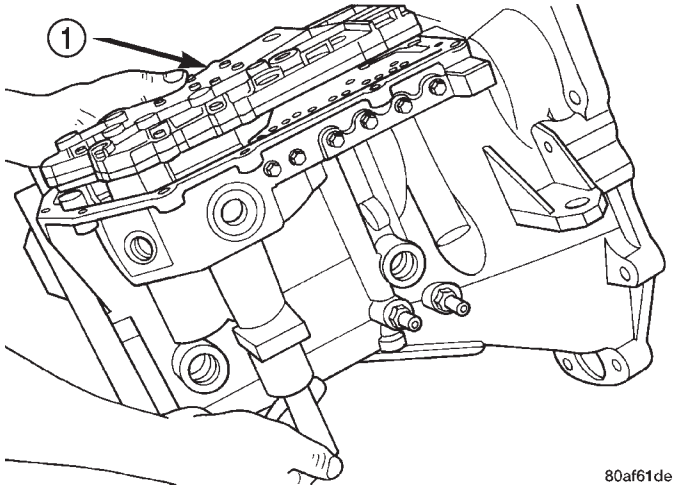

Fig. 346 Valve Body Removal/Installation

1 - VALVE BODY

CAUTION: The valve body manual shaft pilot may distort and bind the manual valve if the valve body is mishandled or dropped.

VALVE BODY (Continued)

REMOVAL

NOTE: If valve body is replaced or reconditioned, the TCM Quick Learn Procedure must be performed. (Refer to 8 - ELECTRICAL/ELECTRONIC CONTROL MODULES/TRANSMISSION CONTROL MODULE - STANDARD PROCEDURE)

(1) Disconnect battery negative cable.
(2) Disconnect gearshift cable from manual valve lever.
(3) Remove manual valve lever from manual shaft.
(4) Raise vehicle on hoist.
(5) Remove oil pan bolts (Fig. 347).

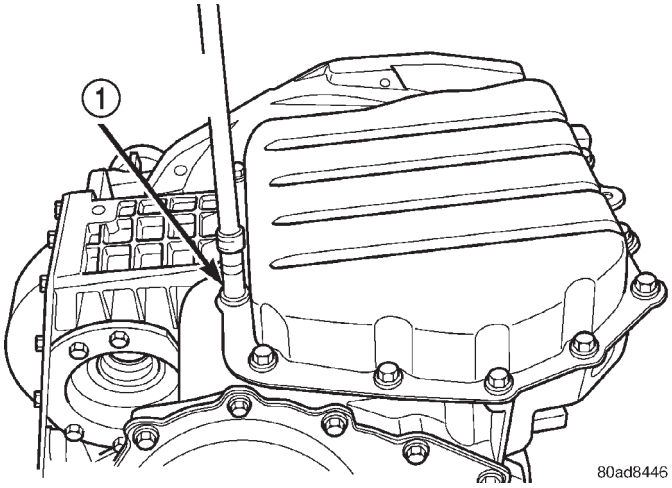

Fig. 347 Oil Pan Bolts

1 - OIL PAN BOLTS (USE RTV UNDER BOLT HEADS)

(6) Remove oil pan (Fig. 348).

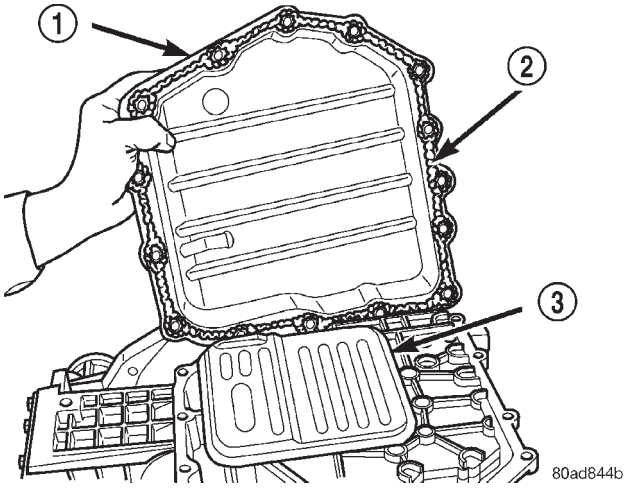

Fig. 348 Oil Pan

1 - OIL PAN
2 - 1/8 INCH BEAD OF RTV SEALANT
3 - OIL FILTER

(7) Remove oil filter (Fig. 349).

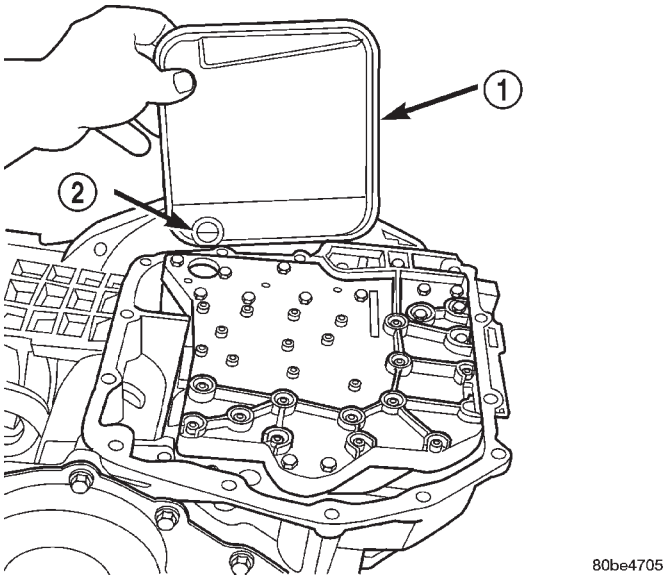

Fig. 349 Oil Filter

1 - OIL FILTER
2 - O-RING

(8) Remove the valve body-to-transaxle case bolts (Fig. 350).

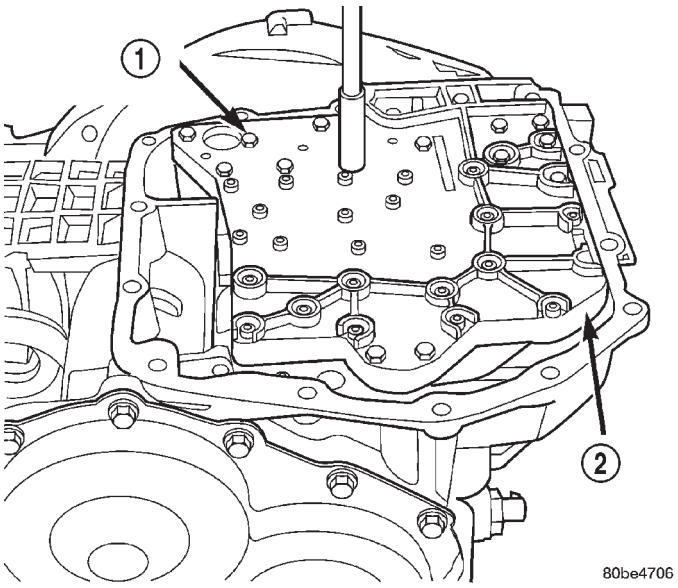

Fig. 350 Valve Body Attaching Bolts

1 - VALVE BODY ATTACHING BOLTS (18)
2 - VALVE BODY

NOTE: To ease removal of the valve body, turn the manual valve lever fully clockwise to low or first gear.

VALVE BODY (Continued)

(9) Remove park rod rollers from guide bracket and remove valve body from transaxle (Fig. 351) (Fig. 352).

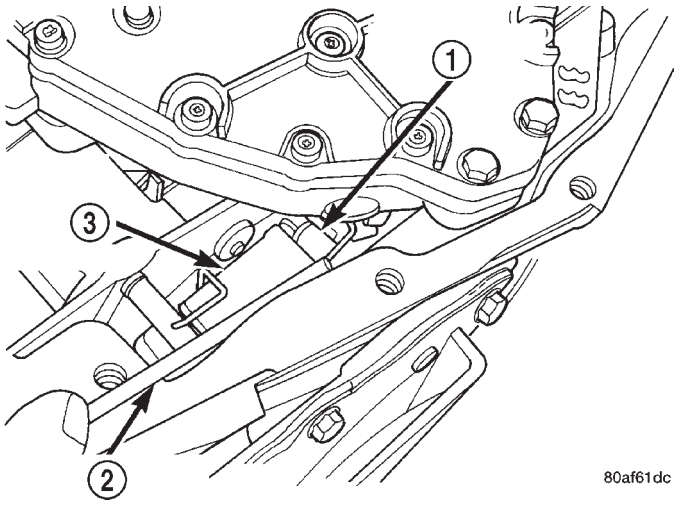

Fig. 351 Push Park Rod Rollers from Guide Bracket

1 - PARK SPRAG ROLLERS
2 - SCREWDRIVER
3 - PARK SPRAG GUIDE BRACKET

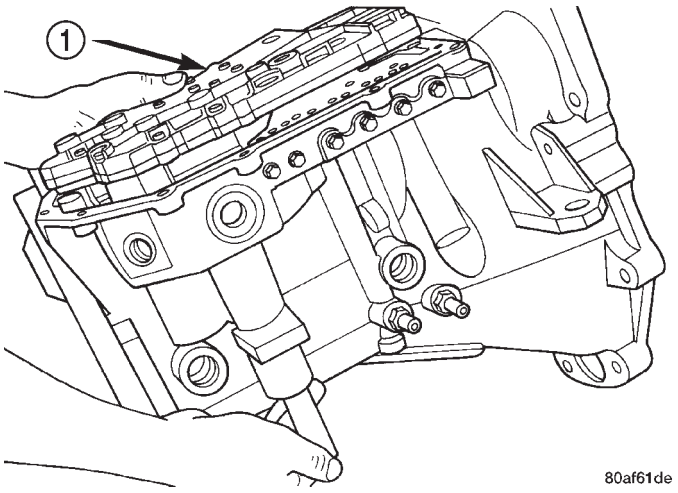

Fig. 352 Valve Body Removal/Installation

1 - VALVE BODY

CAUTION: The valve body manual shaft pilot may distort and bind the manual valve if the valve body is mishandled or dropped.

DISASSEMBLY

NOTE: If valve body assembly is being reconditioned, the TCM Quick Learn Procedure must be performed. (Refer to 8 - ELECTRICAL/ELECTRONIC CONTROL MODULES/TRANSMISSION CONTROL MODULE - STANDARD PROCEDURE)

(1) Remove manual shaft seal (Fig. 353).

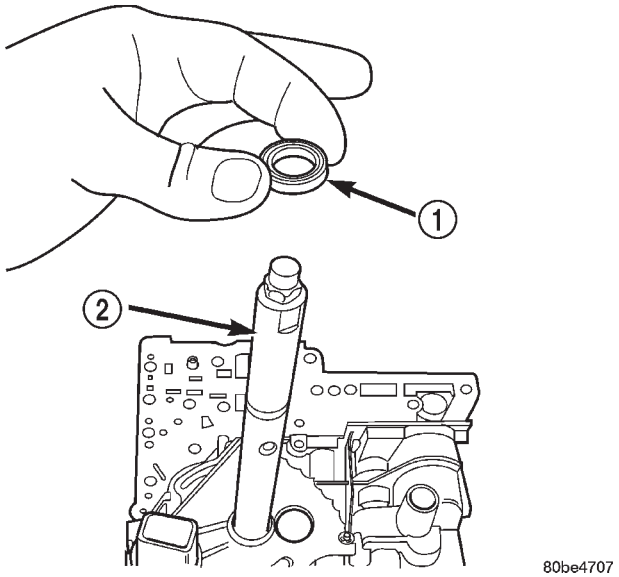

Fig. 353 Manual Shaft Seal

1 - SEAL
2 - MANUAL SHAFT

(2) Remove Transmission Range Sensor retaining screw (Fig. 354).

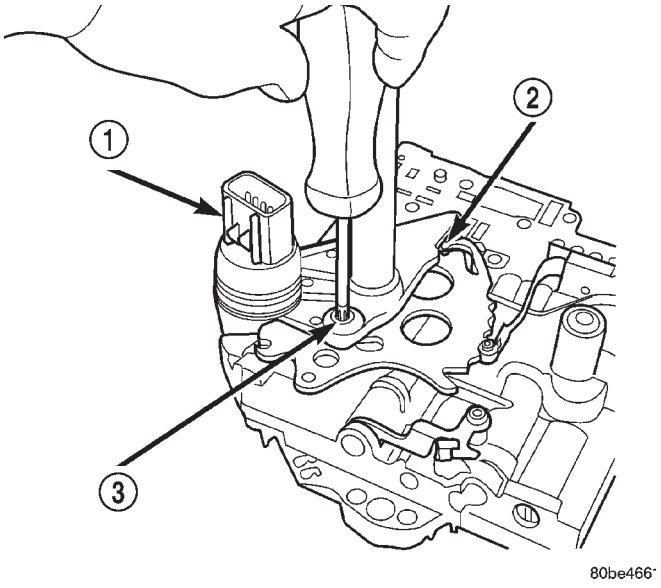

Fig. 354 Remove Transmission Range Sensor

1 - TRANSMISSION RANGE SENSOR
2 - MANUAL VALVE CONTROL PIN
3 - RETAINING SCREW

VALVE BODY (Continued)

(3) Remove Manual Shaft/Rooster Comb and Transmission Range Sensor (Fig. 355).

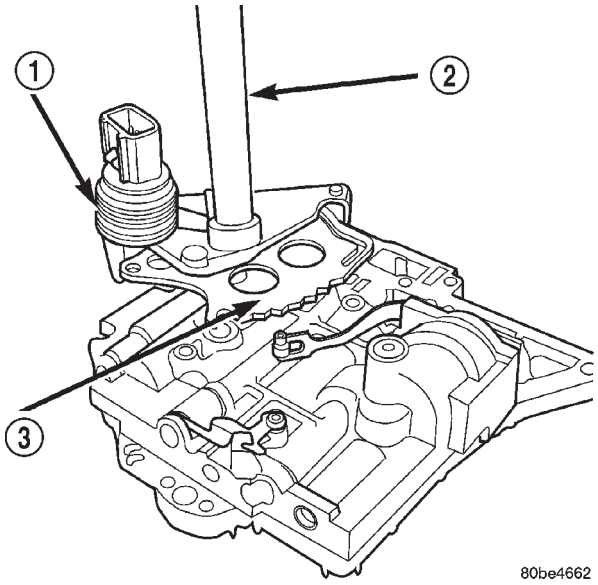

Fig. 355 Manual Shaft/Rooster Comb and Transmission Range Sensor

1 - TRANSMISSION RANGE SENSOR
2 - MANUAL SHAFT
3 - ROOSTER COMB

(4) Remove 2/4 Accumulator Retaining Plate (Fig. 356).

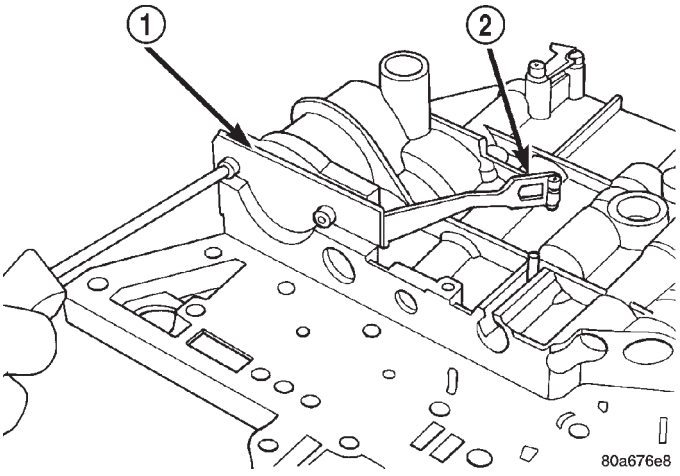

Fig. 356 2/4 Accumulator Retaining Plate

1 - 2–4 ACCUMULATOR RETAINING PLATE
2 - DETENT SPRING

(5) Remove 2/4 Accumulator components as shown in (Fig. 357).

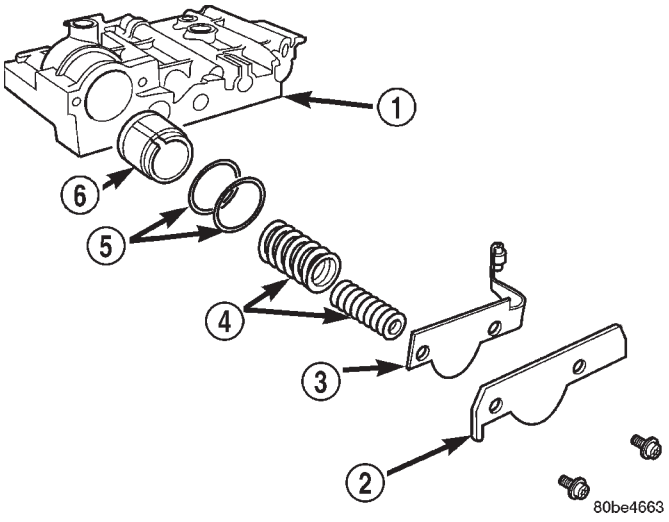

Fig. 357 2/4 Accumulator Assembly

1 - VALVE BODY
2 - RETAINER PLATE
3 - DETENT SPRING
4 - SPRINGS
5 - SEALS
6 - PISTON

(6) Remove Valve Body to Transfer Plate screws (Fig. 358).

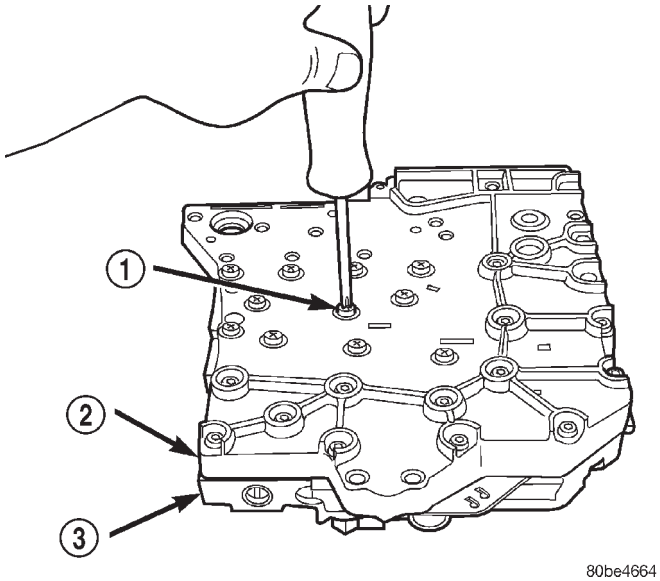

Fig. 358 Remove Valve Body to Transfer Plate Screws

1 - SCREW (24)
2 - TRANSFER PLATE
3 - VALVE BODY

VALVE BODY (Continued)

(7) Invert assembly and remove Transfer Plate (Fig. 359). Beware of loose check balls.

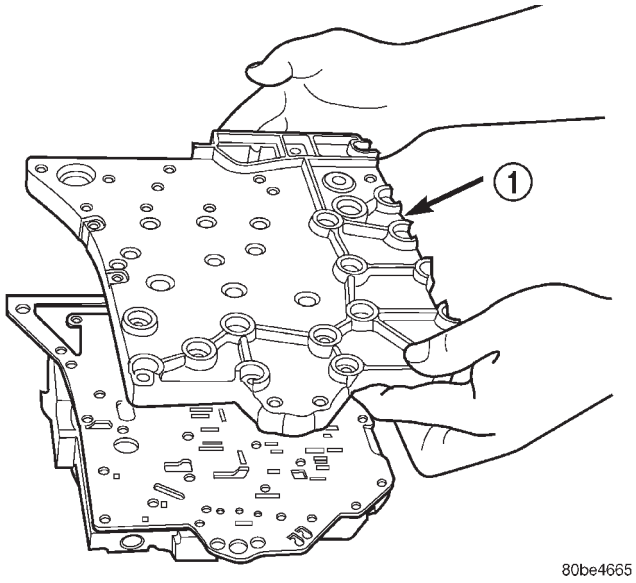

Fig. 359 Remove Transfer Plate

1 - TRANSFER PLATE

(8) Remove oil screen (Fig. 360).

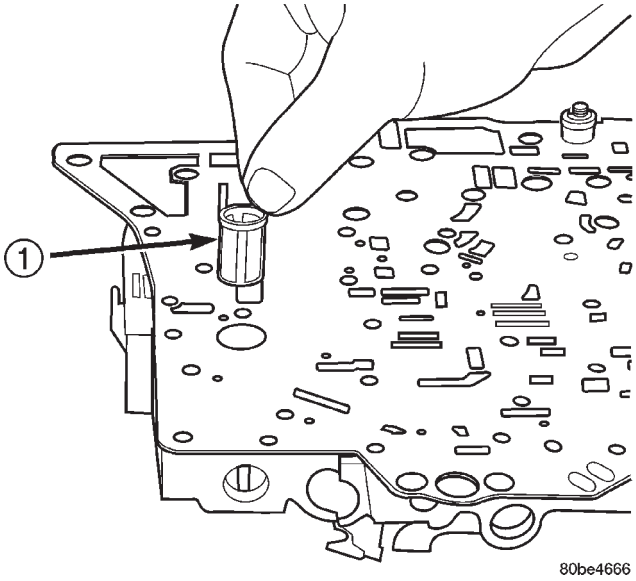

Fig. 360 Remove Oil Screen

1 - OIL SCREEN

(9) Remove the overdrive clutch (#5) check valve (Fig. 361)

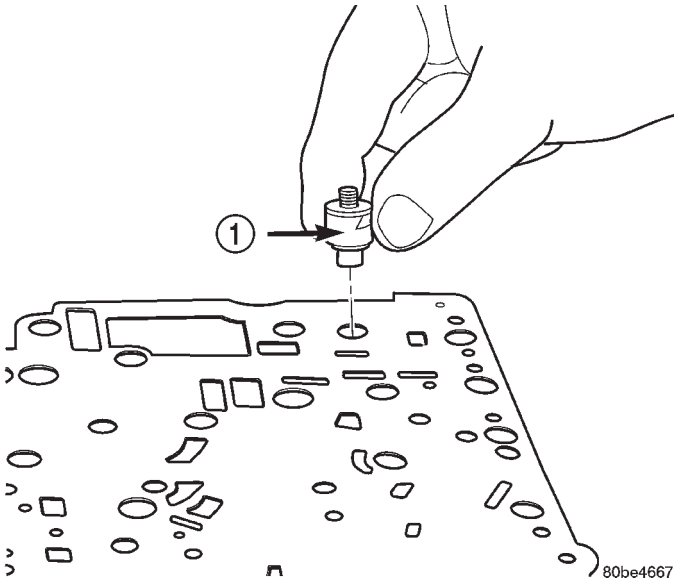

Fig. 361 Remove Overdrive Clutch (#5) Check Valve

1 - OVERDRIVE CLUTCH (#5) CHECK VALVE

(10) Remove separator plate (Fig. 362).

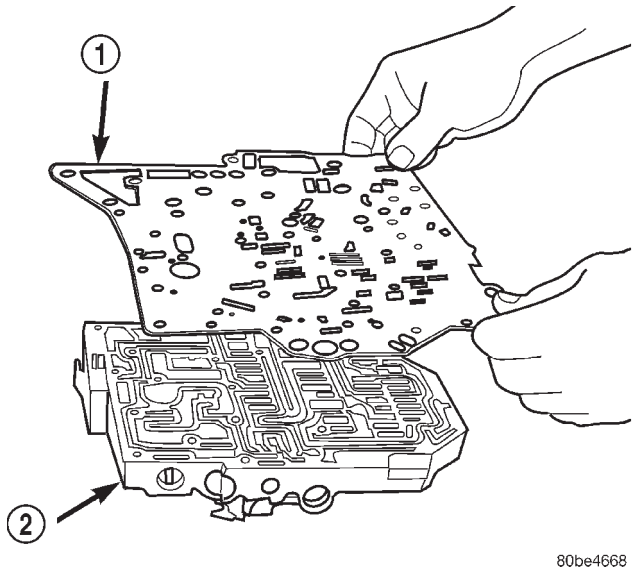

Fig. 362 Remove Separator Plate

1 - SEPARATOR PLATE
2 - VALVE BODY

VALVE BODY (Continued)

(11) Remove thermal valve (Fig. 363).
(12) Remove check balls (Fig. 364).

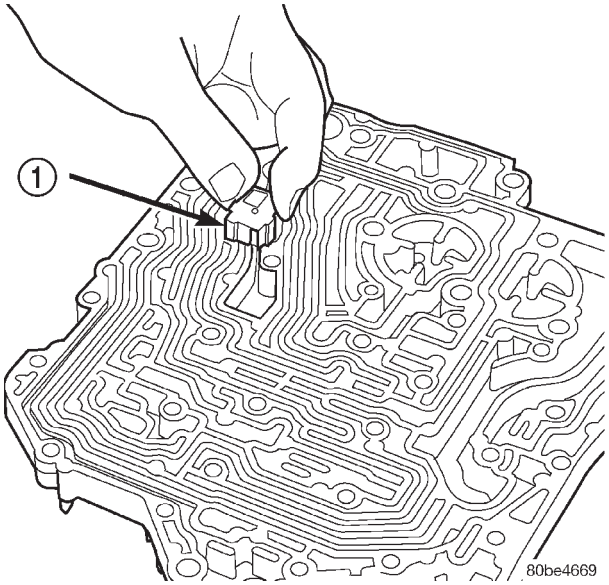

Fig. 363 Remove Thermal Valve

1 - THERMAL VALVE

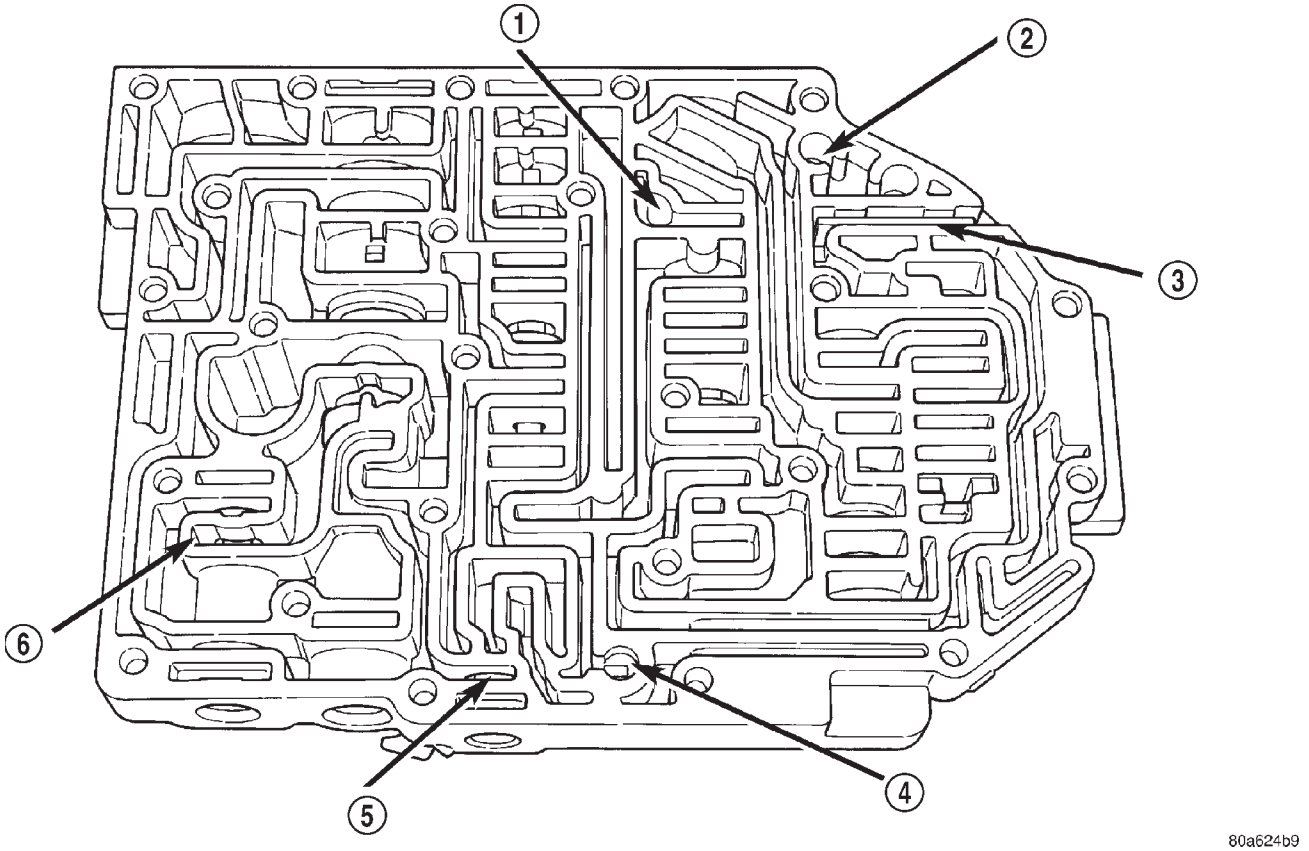

Fig. 364 Ball Check Location

1 - (#4) BALL CHECK LOCATION
2 - (#2) BALL CHECK LOCATION
3 - RETAINER
4 - (#3) BALL CHECK LOCATION
5 - LOW/REVERSE SWITCH VALVE
6 - T/C LIMIT VALVE

VALVE BODY (Continued)

NOTE: Tag all valve/spring assemblies for reassembly identification.

(13) Remove dual retainer plate using Tool 6301 (Fig. 365).

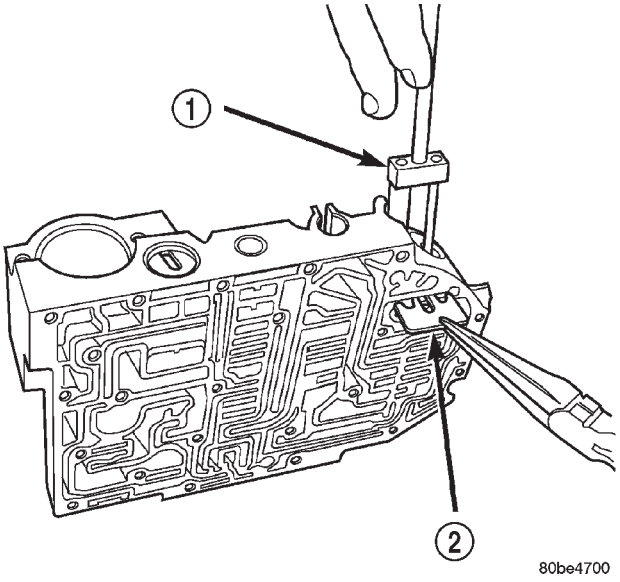

Fig. 365 Remove Dual Retainer Plate using Tool 6301

1 - TOOL 6301
2 - RETAINER

(14) Remove regulator valve spring retainer (Fig. 366).

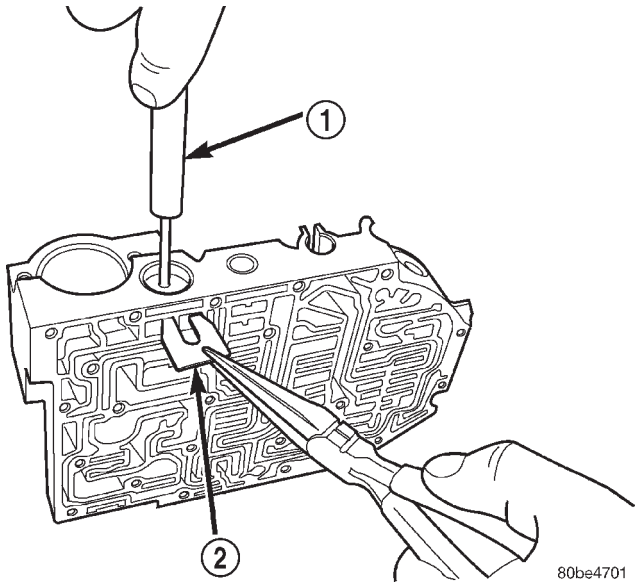

Fig. 366 Remove Regulator Valve Spring Retainer using Tool 6302

1 - TOOL 6302
2 - RETAINER

(15) Remove remaining retainers as shown in (Fig. 367).

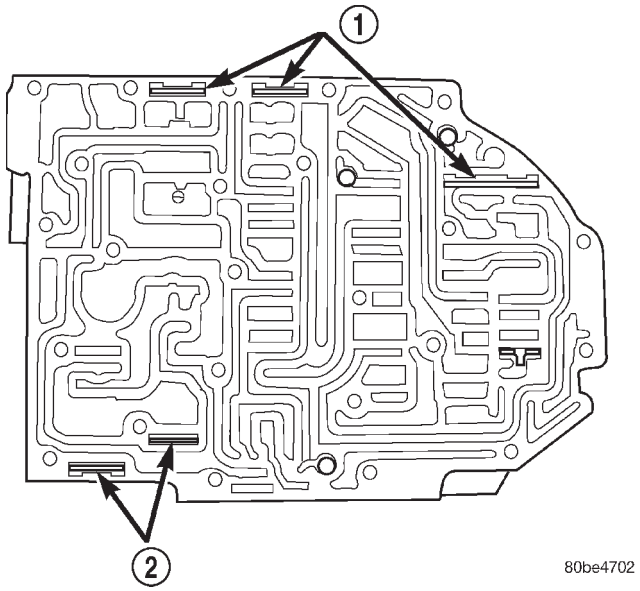

Fig. 367 Valve Retainer Location

1 - RETAINER
2 - RETAINER

(16) Remove valves and springs as shown in (Fig. 368).

NOTE: Refer to Valve Body Cleaning and Inspection for cleaning procedures.

ASSEMBLY

NOTE: If valve body assembly is reconditioned, the TCM Quick Learn Procedure must be performed. (Refer to 8 - ELECTRICAL/ELECTRONIC CONTROL MODULES/TRANSMISSION CONTROL MODULE - STANDARD PROCEDURE)

(1) Install valves and springs as shown in (Fig. 368).
(2) Install regulator valve spring retainer (Fig. 369).
(3) Install dual retainer plate using Tool 6301 (Fig. 370).

VALVE BODY (Continued)

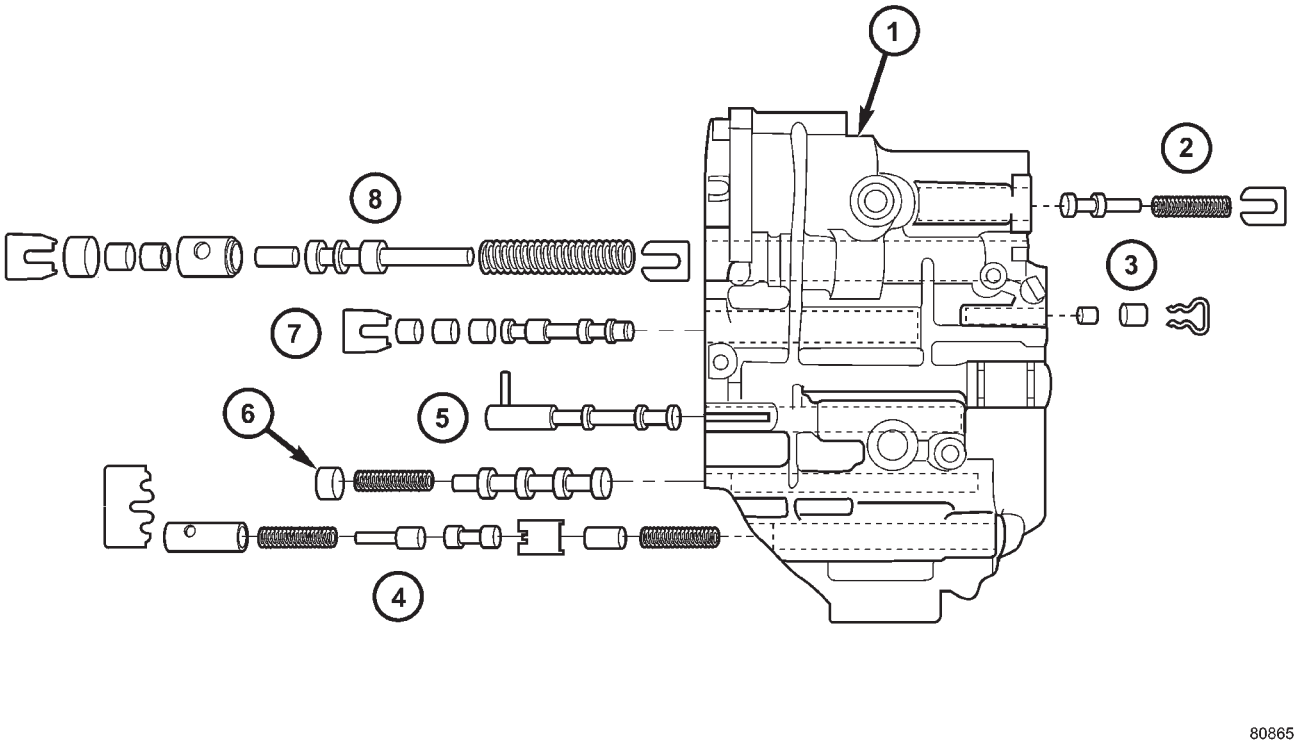

Fig. 368 Springs and Valves Location

1 - VALVE BODY
2 - T/C REGULATOR VALVE
3 - L/R SWITCH VALVE
4 - CONVERTER CLUTCH CONTROL VALVE
5 - MANUAL VALVE
6 - CONVERTER CLUTCH SWITCH VALVE
7 - SOLENOID SWITCH VALVE
8 - REGULATOR VALVE

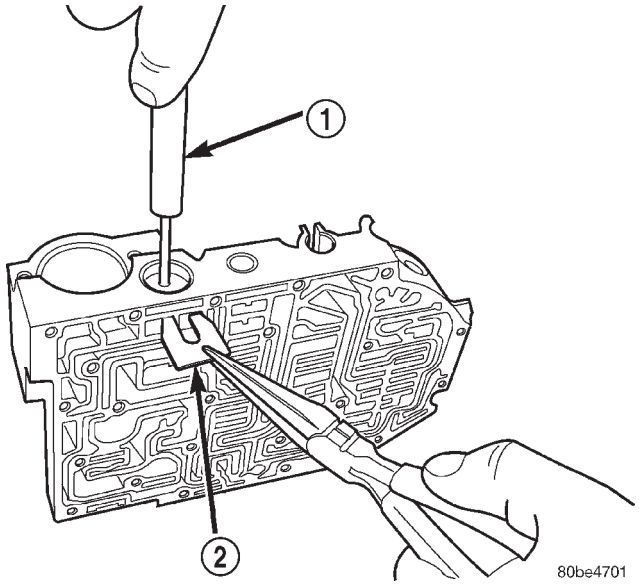

Fig. 369 Install Regulator Valve Spring Retainer using Tool 6302

1 - TOOL 6302
2 - RETAINER

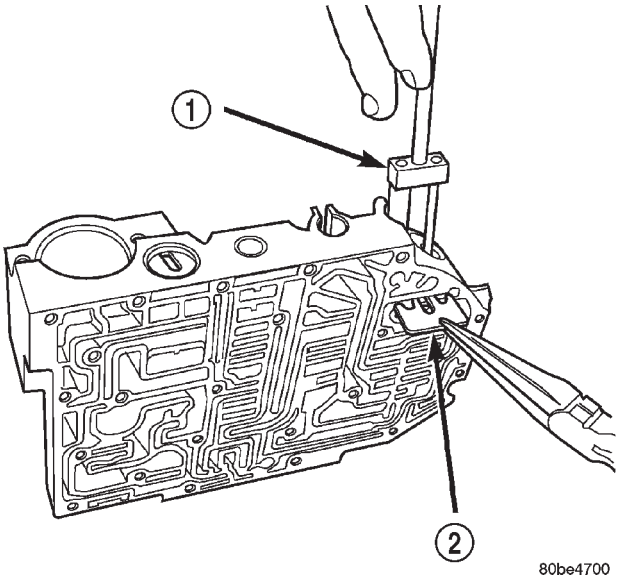

Fig. 370 Install Dual Retainer Plate using Tool 6301

1 - TOOL 6301
2 - RETAINER

VALVE BODY (Continued)

(4) Verify that all retainers are installed as shown in (Fig. 371). Retainers should be flush or below valve body surface.

(5) Install check balls into position as shown in (Fig. 372). If necessary, secure them with petrolatum or transmission assembly gel for assembly ease.

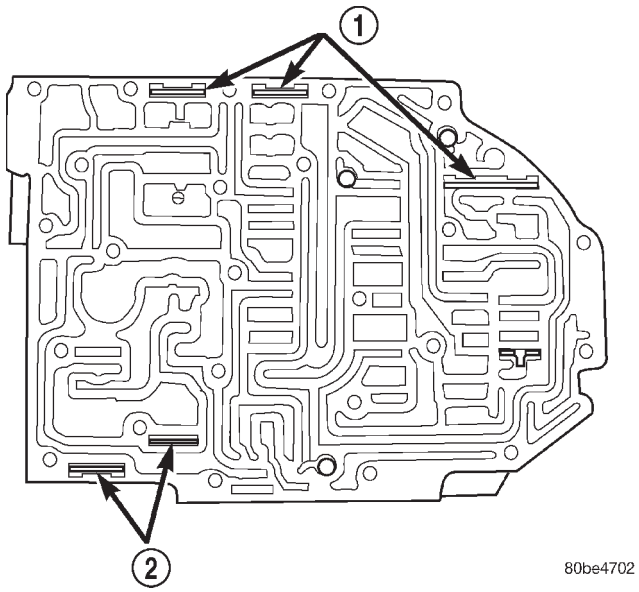

Fig. 371 Valve Retainer Location

1 - RETAINER
2 - RETAINER

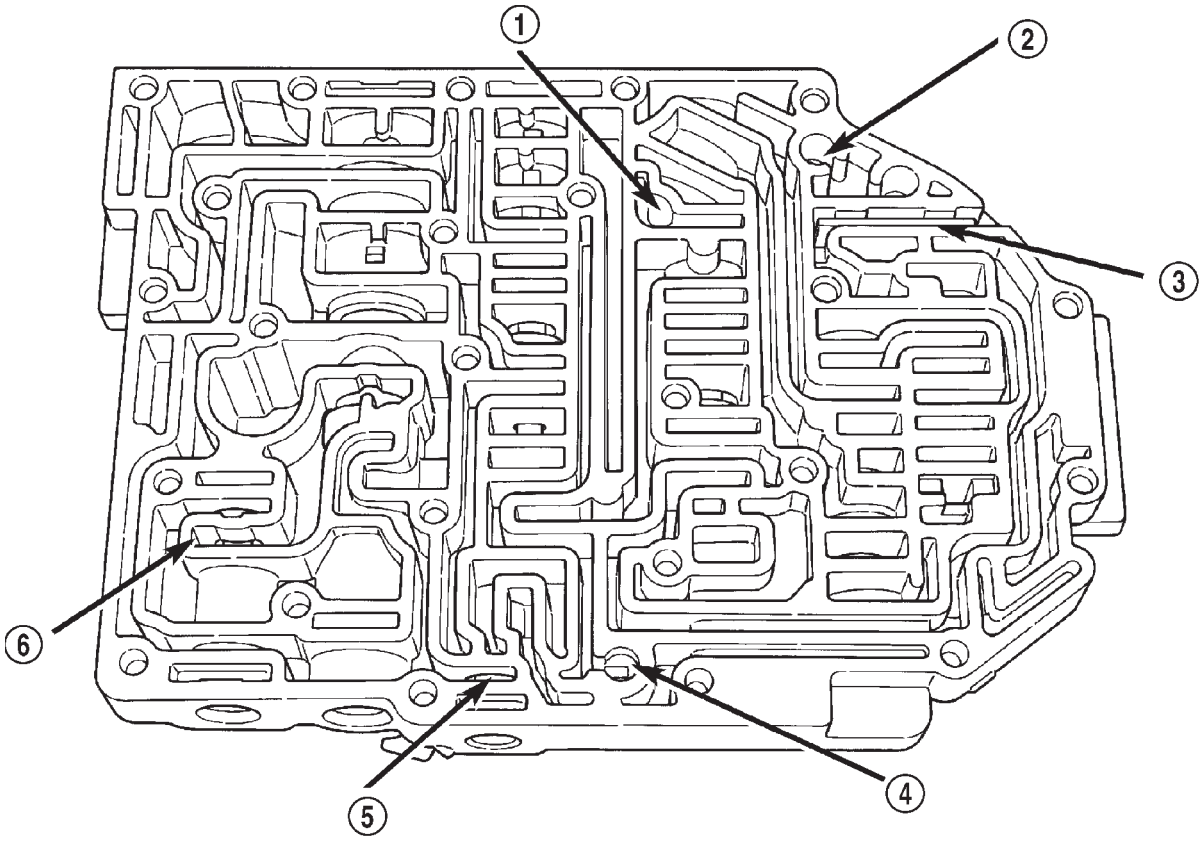

Fig. 372 Ball Check Location

1 - (#4) BALL CHECK LOCATION
2 - (#2) BALL CHECK LOCATION
3 - RETAINER
4 - (#3) BALL CHECK LOCATION
5 - LOW/REVERSE SWITCH VALVE
6 - T/C LIMIT VALVE

VALVE BODY (Continued)

(6) Install thermal valve into transfer plate (Fig. 373).

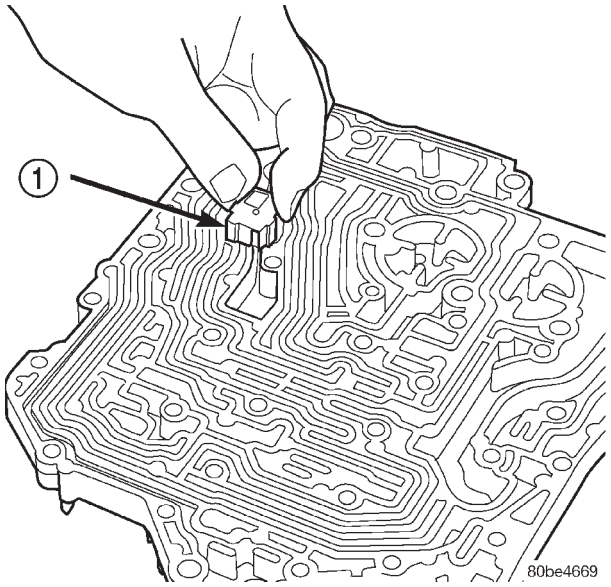

Fig. 373 Install Thermal Valve

1 - THERMAL VALVE

(7) Install separator plate to valve body (Fig. 374).

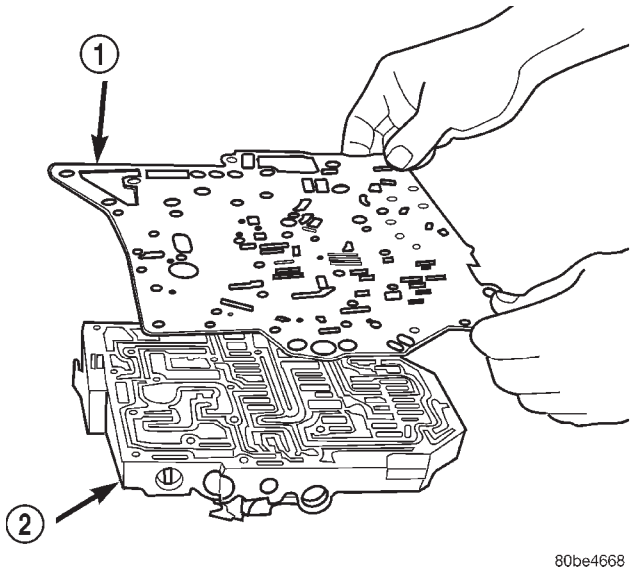

Fig. 374 Install Separator Plate

1 - SEPARATOR PLATE
2 - VALVE BODY

(8) Install the overdrive clutch (#5) check valve to separator plate (Fig. 375)

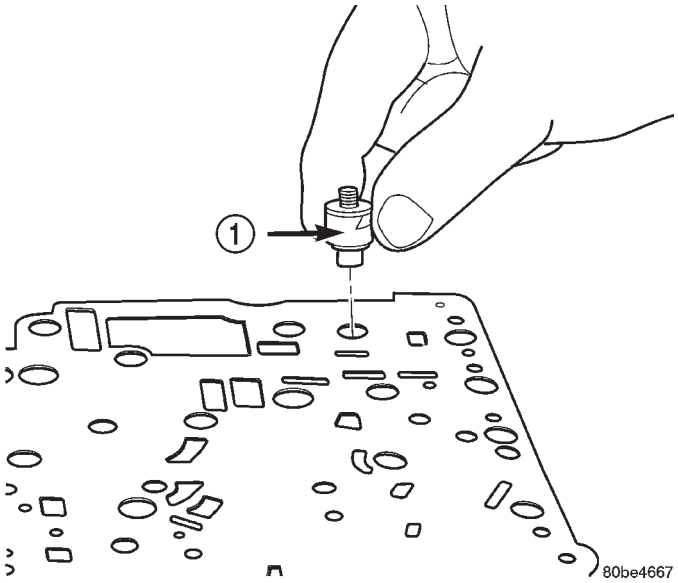

Fig. 375 Install Overdrive Clutch (#5) Check Valve

1 - OVERDRIVE CLUTCH (#5) CHECK VALVE

(9) Install oil screen to separator plate (Fig. 376).

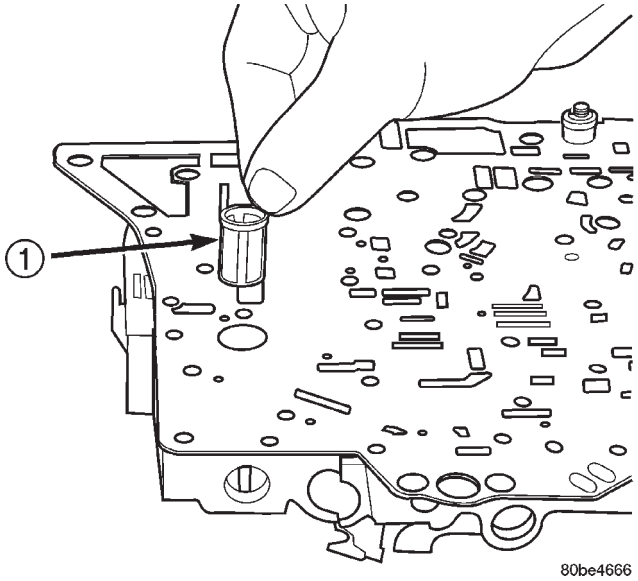

Fig. 376 Install Oil Screen

1 - OIL SCREEN

VALVE BODY (Continued)

(10) Install transfer plate to valve body and separator plate. Make sure oil screen and #5 check valve do not bind (Fig. 377).

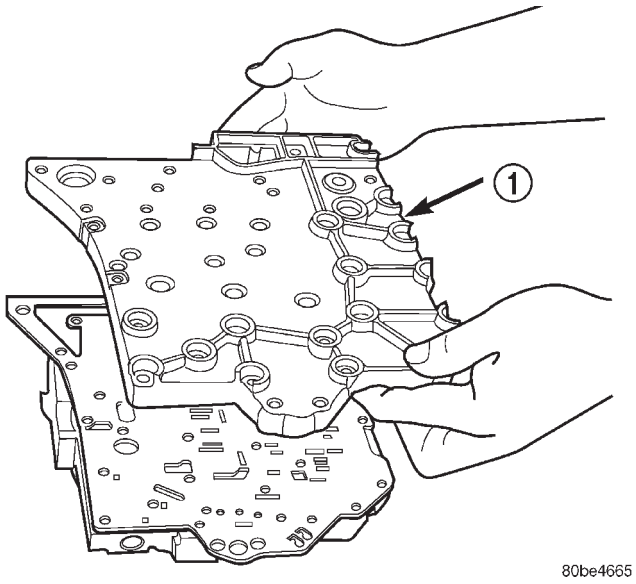

Fig. 377 Install Transfer Plate

1 - TRANSFER PLATE

(11) Install twenty-four transfer plate to valve body screws (Fig. 378) and torque to 5 N·m (45 in. lbs.).

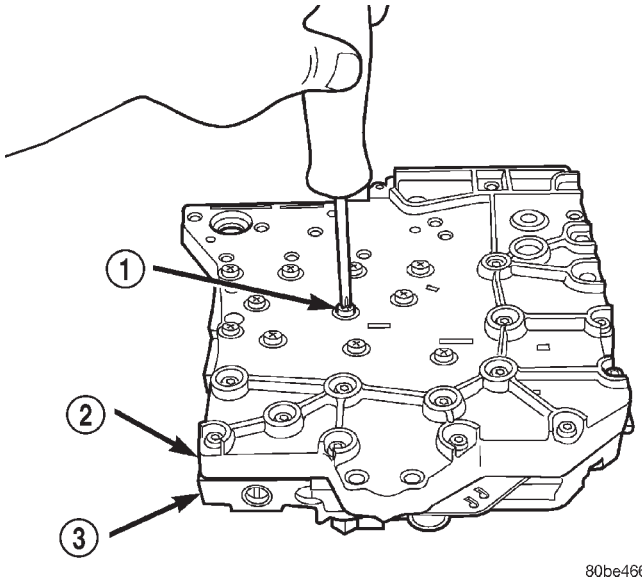

Fig. 378 Install Valve Body to Transfer Plate Screws

1 - SCREW (24)
2 - TRANSFER PLATE
3 - VALVE BODY

(12) Install 2/4 Accumulator components as shown in (Fig. 379).

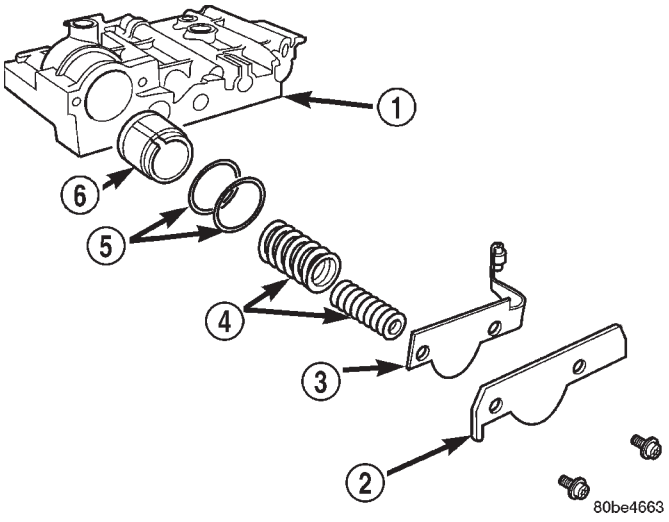

Fig. 379 2/4 Accumulator Assembly

1 - VALVE BODY
2 - RETAINER PLATE
3 - DETENT SPRING
4 - SPRINGS
5 - SEALS
6 - PISTON

(13) Torque 2/4 Accumulator retainer to 5 N·m (45 in. lbs.) (Fig. 380).

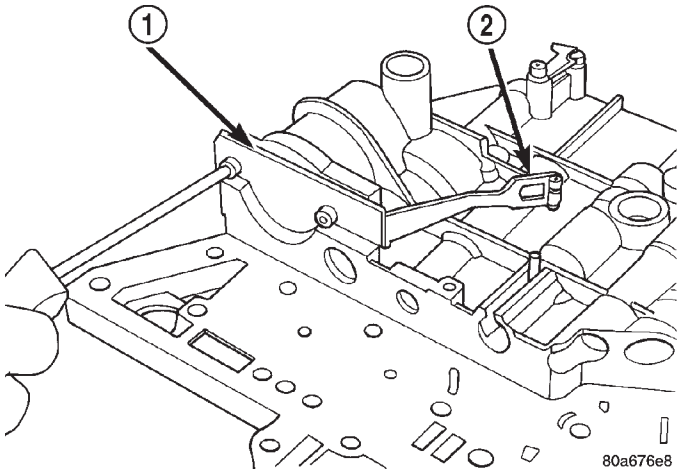

Fig. 380 2/4 Accumulator Retaining Plate

1 - 2–4 ACCUMULATOR RETAINING PLATE
2 - DETENT SPRING

VALVE BODY (Continued)

(14) Install Manual Shaft/Rooster Comb and Transmission Range Sensor (Fig. 381).

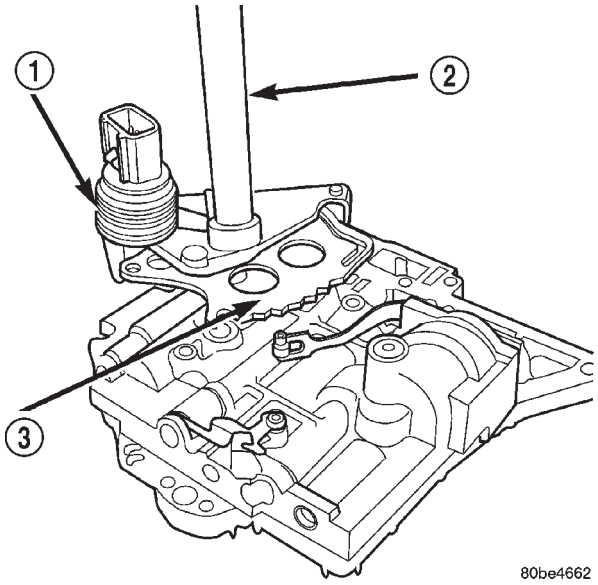

Fig. 381 Install Manual Shaft/Rooster Comb and Transmission Range Sensor

1 - TRANSMISSION RANGE SENSOR
2 - MANUAL SHAFT
3 - ROOSTER COMB

(15) Make sure Manual Valve control pin is contained within the rooster comb slot (Fig. 382). Install Transmission Range Sensor retaining screw (Fig. 382) and torque to 5 N·m (45 in. lbs.).

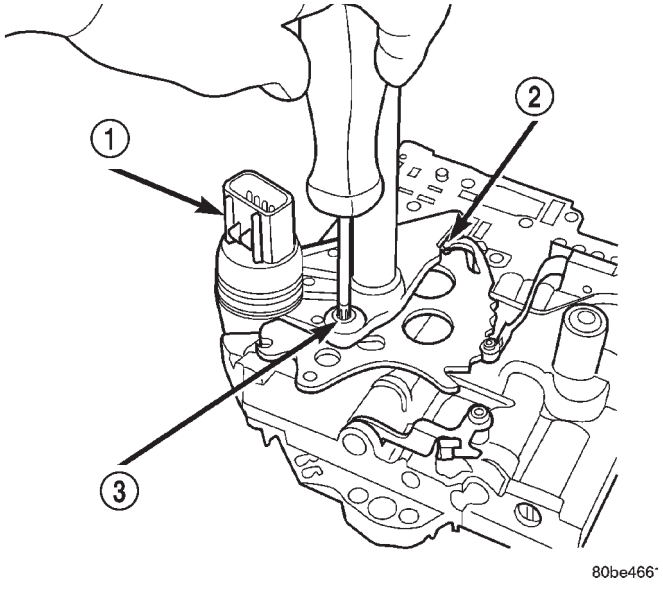

Fig. 382 Install Transmission Range Sensor Retaining Screw

1 - TRANSMISSION RANGE SENSOR
2 - MANUAL VALVE CONTROL PIN
3 - RETAINING SCREW

(16) Install manual shaft seal (Fig. 383).

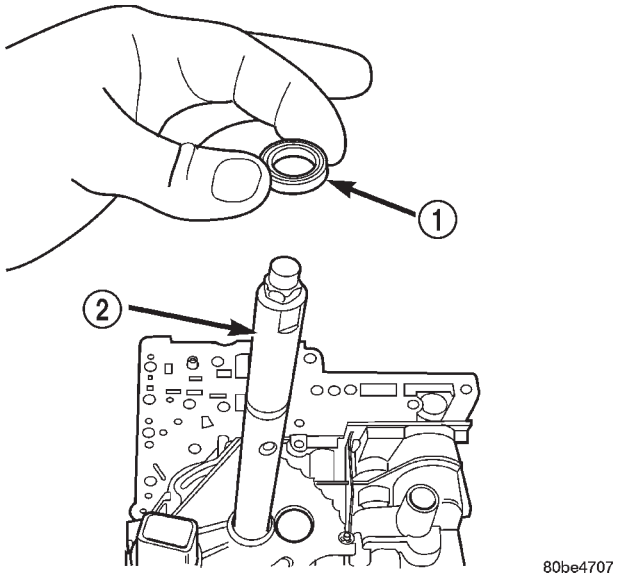

Fig. 383 Manual Shaft Seal

1 - SEAL
2 - MANUAL SHAFT

INSTALLATION

NOTE: If valve body assembly is being replaced or reconditioned, it is necessary to perform the TCM Quick Learn Procedure. (Refer to 8 - ELECTRICAL/ ELECTRONIC CONTROL MODULES/TRANSMISSION CONTROL MODULE - STANDARD PROCEDURE)

(1) Install valve body assembly to transaxle (Fig. 384). Install and torque valve body-to-transaxle case bolts (Fig. 385) to 12 N·m (105 in. lbs.).

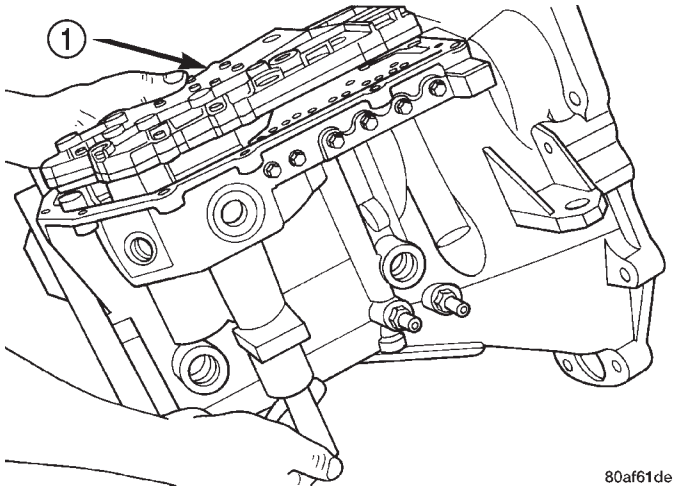

Fig. 384 Valve Body Removal/Installation

1 - VALVE BODY

VALVE BODY (Continued)

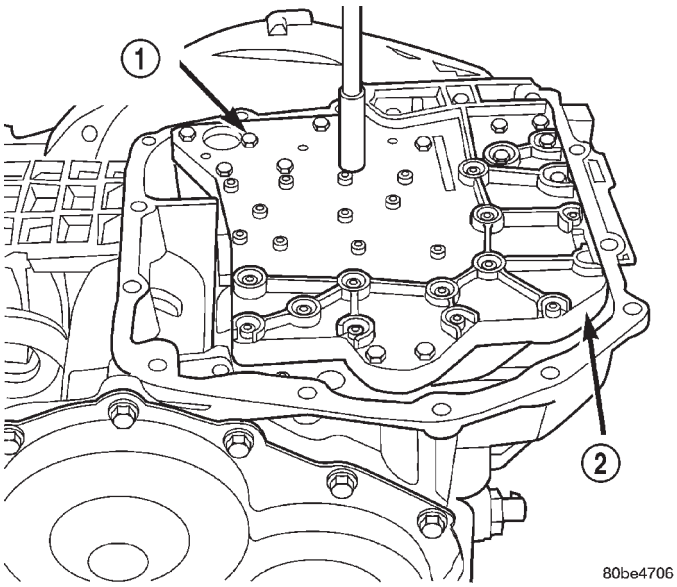

Fig. 385 Valve Body Attaching Bolts

1 - VALVE BODY ATTACHING BOLTS (18)
2 - VALVE BODY

(2) Install transaxle oil filter (Fig. 386). Inspect the o-ring and replace if necessary.

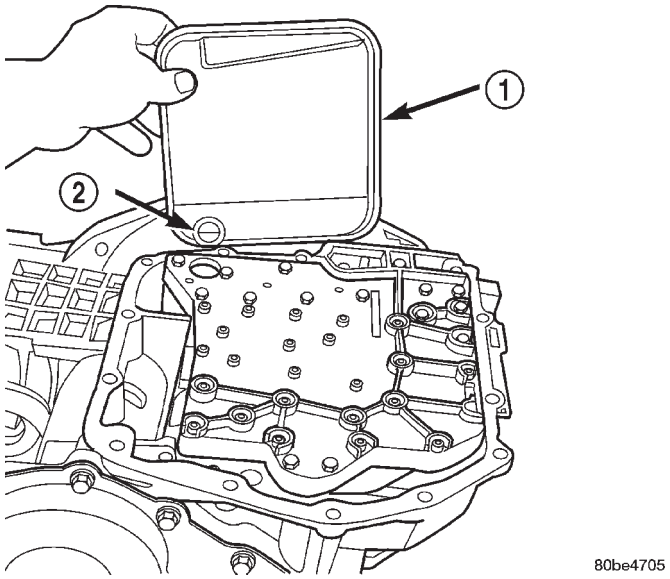

Fig. 386 Oil Filter

1 - OIL FILTER
2 - O-RING

(3) Ensure the transaxle oil pan and transaxle case sealing surfaces are clean and dry. Install an 1/8” bead of Mopar® Silicone Rubber Adhesive Sealant to the oil pan and install (Fig. 387). Torque oil pan-to-transaxle case bolts (Fig. 388) to 19 N·m (165 in. lbs.).

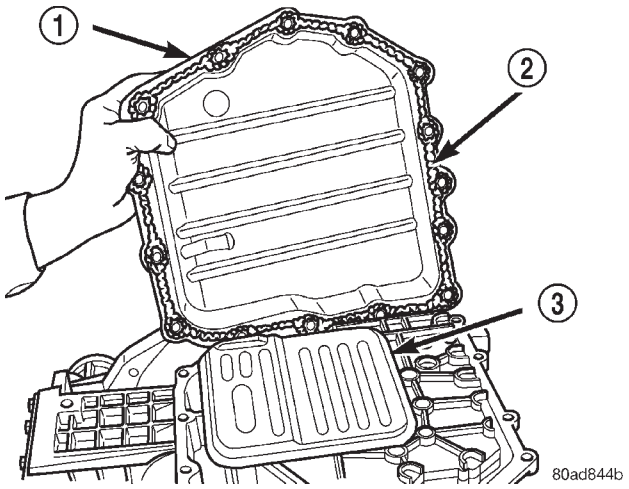

Fig. 387 Oil Pan

1 - OIL PAN
2 - 1/8 INCH BEAD OF RTV SEALANT
3 - OIL FILTER

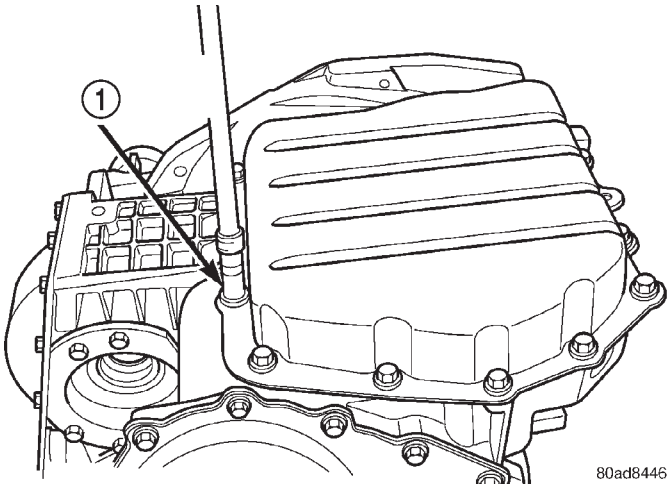

Fig. 388 Oil Pan Bolts

1 - OIL PAN BOLTS (USE RTV UNDER BOLT HEADS)

(4) Lower vehicle.
(5) Connect transmission range sensor connector.
(6) Install manual valve lever to manual shaft.
(7) Install gearshift cable to manual valve lever.
(8) Connect battery negative cable.
(9) Fill transaxle with Mopar® ATF +4 Transmission fluid. (Refer to 21 - TRANSMISSION/TRANSAXLE/AUTOMATIC - 41TE/FLUID - STANDARD PROCEDURE)

T850 MANUAL TRANSAXLE

TABLE OF CONTENTS

page

T850 MANUAL TRANSAXLE
DESCRIPTION 308
OPERATION 311
DIAGNOSIS AND TESTING - COMMON PROBLEM CAUSES 318
REMOVAL 318
DISASSEMBLY 323
ASSEMBLY 329
INSTALLATION 338
SPECIFICATIONS - T850 MANUAL TRANSAXLE 343
SPECIAL TOOLS - T850 TRANSAXLE 345
AXLE SEALS
REMOVAL 348
INSTALLATION 348
BACK-UP LAMP SWITCH
REMOVAL 349
INSTALLATION 349
DIFFERENTIAL
DESCRIPTION 349
OPERATION 349
DISASSEMBLY 350
ASSEMBLY 353
ADJUSTMENTS
ADJUSTMENT - DIFFERENTIAL TURNING TORQUE 356
ADJUSTMENT - DIFFERENTIAL SIDE GEAR END PLAY 358
FLUID
STANDARD PROCEDURE
STANDARD PROCEDURE - FLUID LEVEL CHECK 358
STANDARD PROCEDURE - FLUID DRAIN AND FILL 359
GEARSHIFT BOOT
REMOVAL 359
INSTALLATION 360

page

GEARSHIFT CABLE - CROSSOVER
REMOVAL 360
INSTALLATION 363
ADJUSTMENTS
ADJUSTMENT 366
GEARSHIFT CABLE - SELECTOR
REMOVAL 368
INSTALLATION 371
GEARSHIFT KNOB
REMOVAL 374
INSTALLATION 374
GEARSHIFT MECHANISM
REMOVAL 375
INSTALLATION 377
INPUT SHAFT
DESCRIPTION 380
DISASSEMBLY 380
ASSEMBLY 383
INTERMEDIATE SHAFT
DESCRIPTION 387
DISASSEMBLY 388
ASSEMBLY 395
SHIFT COVER
DESCRIPTION 401
SHIFT FORK AND SHAFT
DESCRIPTION 402
SYNCHRONIZER
DESCRIPTION 402
DISASSEMBLY 402
CLEANING
CLEAN 402
INSPECTION
INSPECT 402
ASSEMBLY 403
VEHICLE SPEED SENSOR
REMOVAL 403
INSTALLATION 403

T850 MANUAL TRANSAXLE

DESCRIPTION

The NV T850 5-speed transaxle (Fig. 1) is a constant-mesh manual transaxle that is synchronized in all gear ranges, including reverse.

The transaxle consists of three major sub-assemblies: the input shaft, intermediate shaft, and differential assembly. The transaxle shift system consists of a mechanical shift cover, rails, forks, and cables. The unique design of this shift system provides a higher mechanical advantage, resulting in less friction and lower shift cable loads for smoother, more positive operation.

T850 MANUAL TRANSAXLE (Continued)

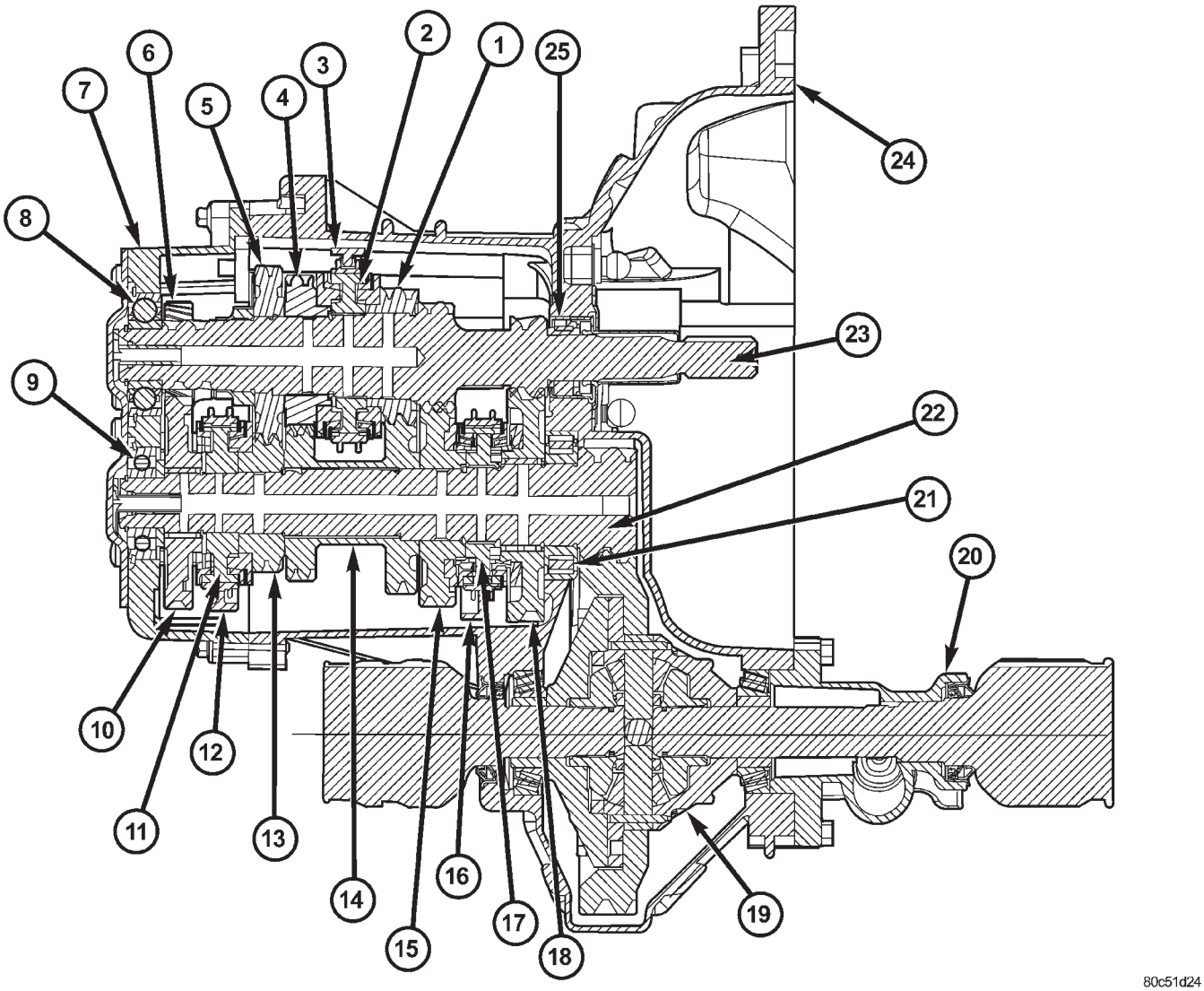

Fig. 1 NV T850 Transaxle

1 - 3RD GEAR (SPEED)
2 - 3/4 SYNCHRONIZER
3 - 3/4 SHIFT FORK
4 - 4TH GEAR (SPEED)
5 - 5TH GEAR (INPUT)
6 - REVERSE IDLER GEAR
7 - END COVER, REAR
8 - INPUT SHAFT BEARING (SEALED BALL)
9 - INTERMEDIATE SHAFT BEARING (SEALED BALL)
10 - REVERSE GEAR
11 - 5/R SYNCHRONIZER
12 - 5/R SHIFT FORK
13 - 5TH GEAR (SPEED)
14 - 3/4 CLUSTER GEAR
15 - 2ND GEAR (SPEED)
16 - 1/2 SHIFT FORK
17 - 1/2 SYNCHRONIZER
18 - 1ST GEAR (SPEED)
19 - DIFFERENTIAL ASSEMBLY
20 - EXTENSION HOUSING
21 - INTERMEDIATE SHAFT BEARING (CAGED ROLLER)
22 - INTERMEDIATE SHAFT
23 - INPUT SHAFT
24 - CASE
25 - INPUT SHAFT BEARING (ROLLER)

T850 MANUAL TRANSAXLE (Continued)

The NV T850 transaxle is available with the 2.4L Gas and 2.5L Turbo Diesel engine options. Unique gearing tailored to the performance characteristics of each engine provides optimum driveability, gradability, and acceleration. The gear ratios are as follows:

GEAR	RATIO (2.4L Gas)	RATIO (2.5L TD)
1st	3.65	3.46
2nd	2.07	2.05
3rd	1.39	1.37
4th	1.03	0.97
5th	0.83	0.76
Reverse	3.47	3.47
Final Drive Ratio	3.77	3.53
Overall Top Gear	3.12	2.66

TRANSAXLE IDENTIFICATION

NOTE: Since transaxles use unique gear ratios for each of the two engine applications, it is imperative that the transaxle is properly identified, and the correct transaxle assembly number is used when ordering service parts.

The transaxle model, assembly part number, build date, and final drive ratio (FDR) can be found on a metal tag fastened to the transaxle case on the bellhousing (Fig. 2). A barcode label is also glued to the transaxle bellhousing, and it too includes the transaxle part number.

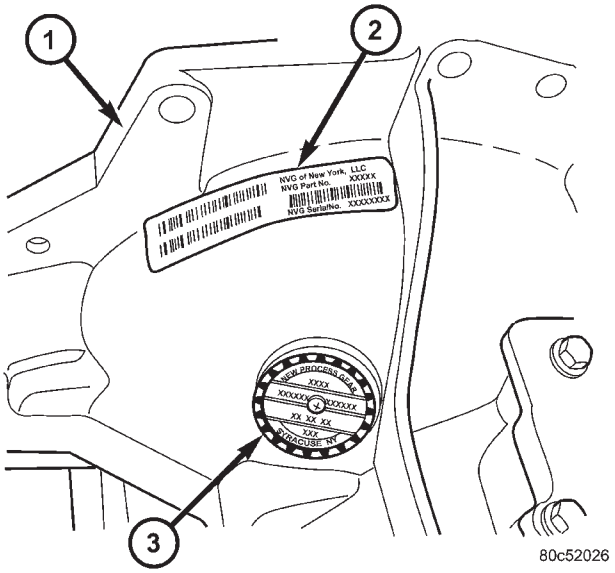

Fig. 2 T850 Transaxle Identification

1 - TRANSAXLE BELLHOUSING
2 - BARCODE LABEL
3 - I.D. TAG

T850 MANUAL TRANSAXLE (Continued)

OPERATION

NEUTRAL

Engine power is transmitted to the input shaft via the clutch assembly and the input shaft turns. Since no synchronizers are engaged on either the input or intermediate shafts, power is not transmitted to the intermediate shaft and the differential does not turn (Fig. 3).

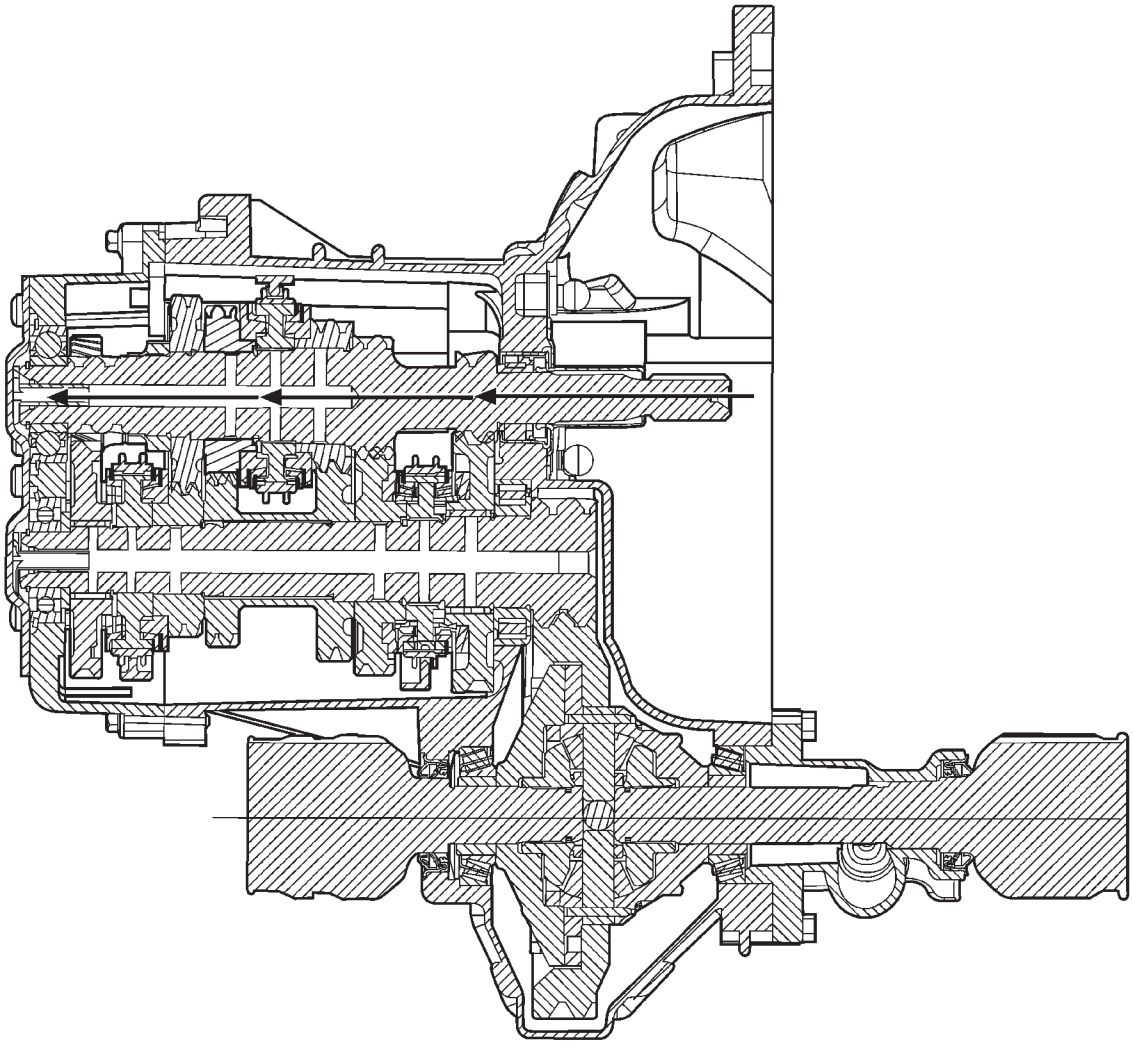

80c52005

Fig. 3 Neutral Gear Operation

T850 MANUAL TRANSAXLE (Continued)

1ST GEAR

Engine power is transmitted to the input shaft via the clutch assembly and the input shaft turns. The input shaft first gear is integral to the input shaft, and is in constant mesh with the intermediate shaft first speed gear. Because of this constant mesh, the intermediate shaft first speed gear freewheels until first gear is selected. As the gearshift lever is moved to the first gear position, the 1-2 fork moves the 1-2 synchronizer sleeve towards first gear on the intermediate shaft. The synchronizer sleeve engages the first gear clutch teeth, fixing the gear to the intermediate shaft, and allowing power to transmit through the intermediate shaft to the differential (Fig. 4).

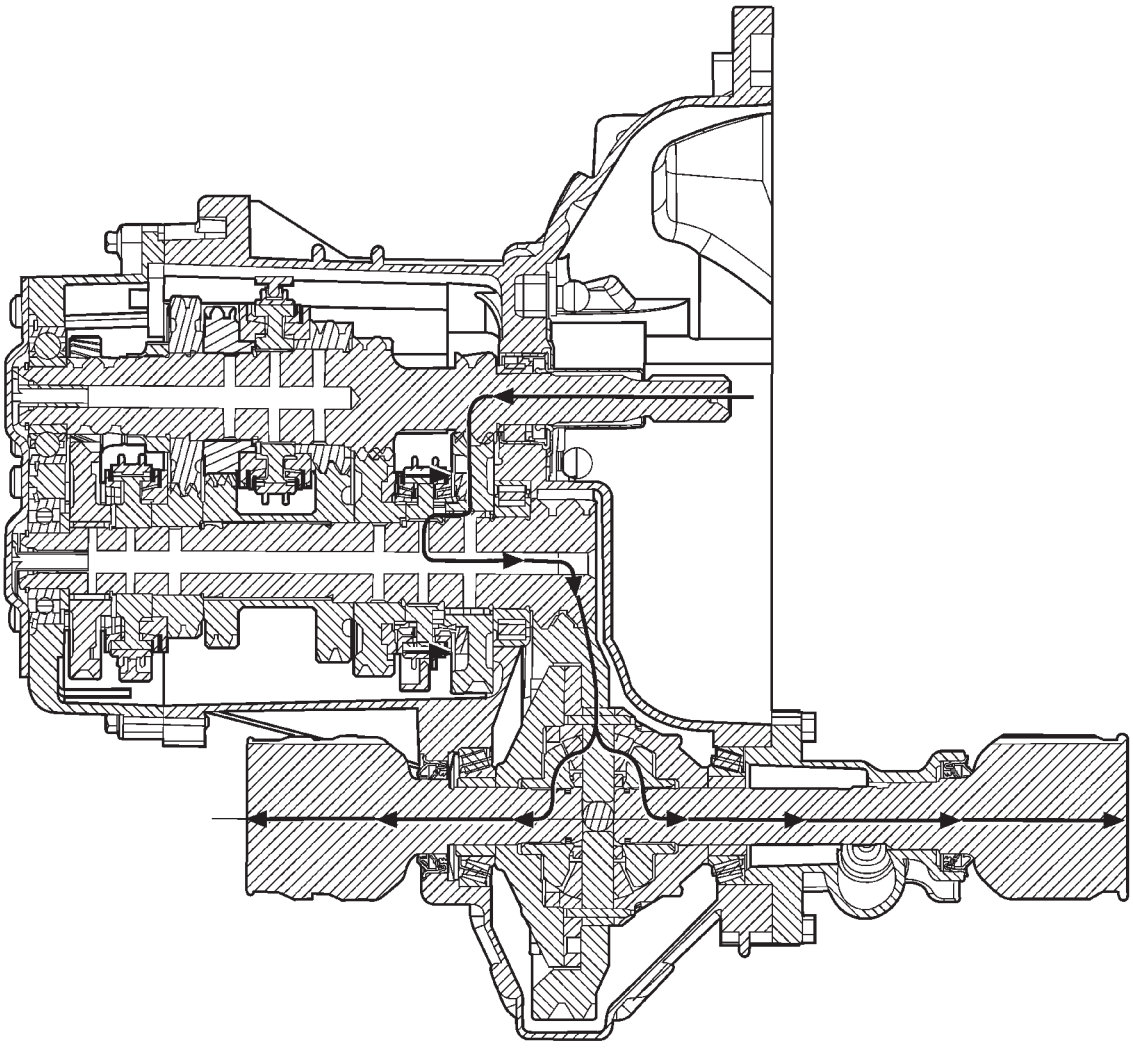

80c51d2f

Fig. 4 1st Gear Operation

T850 MANUAL TRANSAXLE (Continued)

2ND GEAR

Engine power is transmitted to the input shaft via the clutch assembly and the input shaft turns. The input shaft second gear is integral to the input shaft, and is in constant mesh with the intermediate shaft second speed gear. Because of this constant mesh, the intermediate shaft second speed gear freewheels until second gear is selected. As the gearshift lever is moved to the second gear position, the 1-2 fork moves the 1-2 synchronizer sleeve towards second gear on the intermediate shaft. The synchronizer sleeve engages the second gear clutch teeth, fixing the gear to the intermediate shaft, and allowing power to transmit through the intermediate shaft to the differential (Fig. 5).

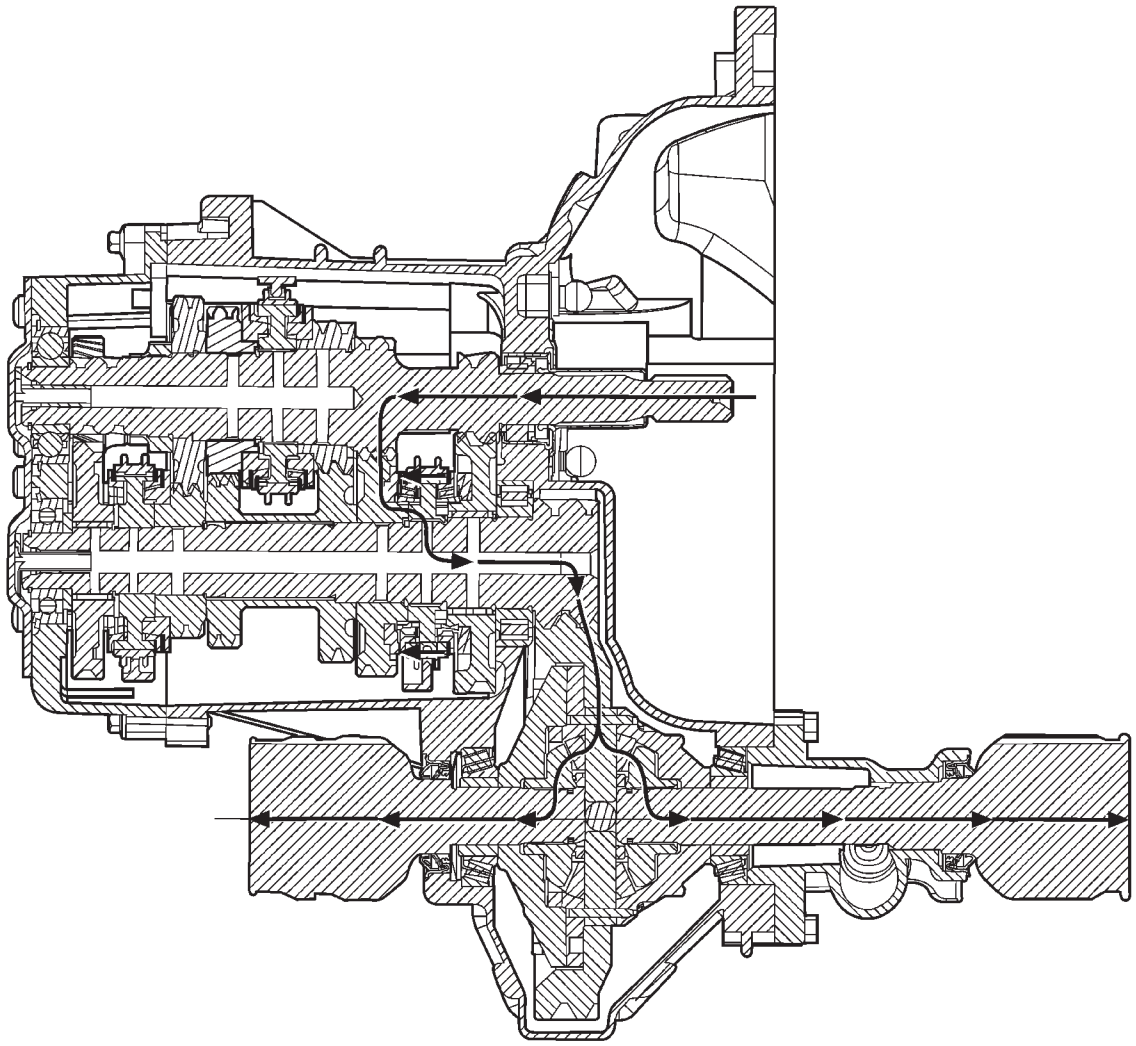

80c51d36

Fig. 5 2nd Gear Operation

T850 MANUAL TRANSAXLE (Continued)

3RD GEAR

Engine power is transmitted to the input shaft via the clutch assembly and the input shaft turns. The input shaft third speed gear is in constant mesh with the intermediate shaft 3-4 cluster gear, which is fixed to the intermediate shaft. Because of this constant mesh, the input shaft third speed gear freewheels until third gear is selected. As the gearshift lever is moved to the third gear position, the 3-4 fork moves the 3-4 synchronizer sleeve towards third gear on the input shaft. The synchronizer sleeve engages the third gear clutch teeth, fixing the gear to the input shaft, and allowing power to transmit through the intermediate shaft to the differential (Fig. 6).

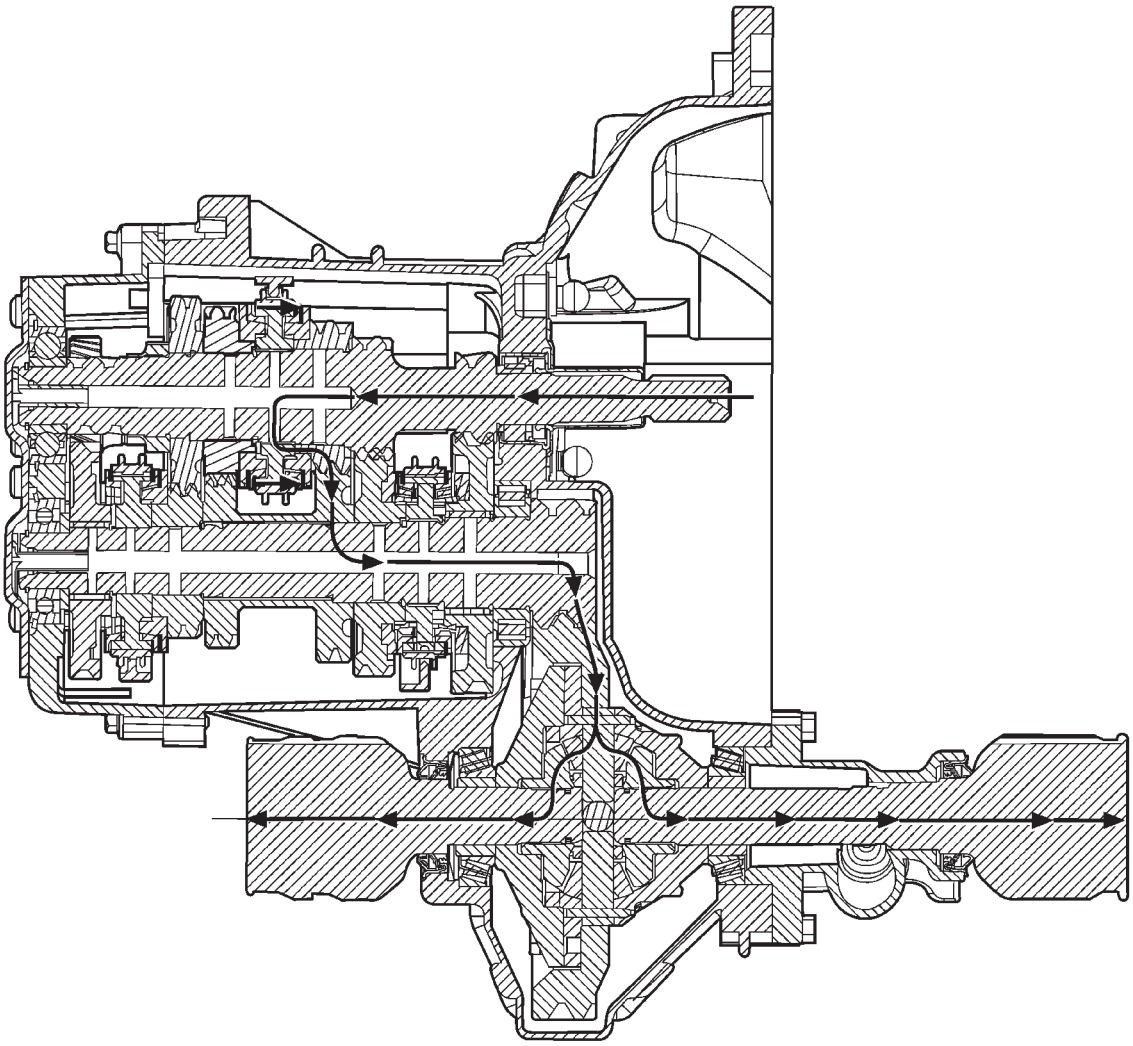

80c51d3a

Fig. 6 3rd Gear Operation

T850 MANUAL TRANSAXLE (Continued)

4TH GEAR

Engine power is transmitted to the input shaft via the clutch assembly and the input shaft turns. The input shaft fourth speed gear is in constant mesh with the intermediate shaft 3-4 cluster gear, which is fixed to the intermediate shaft. Because of this constant mesh, the input shaft fourth speed gear freewheels until fourth gear is selected. As the gearshift lever is moved to the fourth gear position, the 3-4 fork moves the 3-4 synchronizer sleeve towards fourth gear on the input shaft. The synchronizer sleeve engages the fourth gear clutch teeth, fixing the gear to the input shaft, and allowing power to transmit through the intermediate shaft to the differential (Fig. 7).

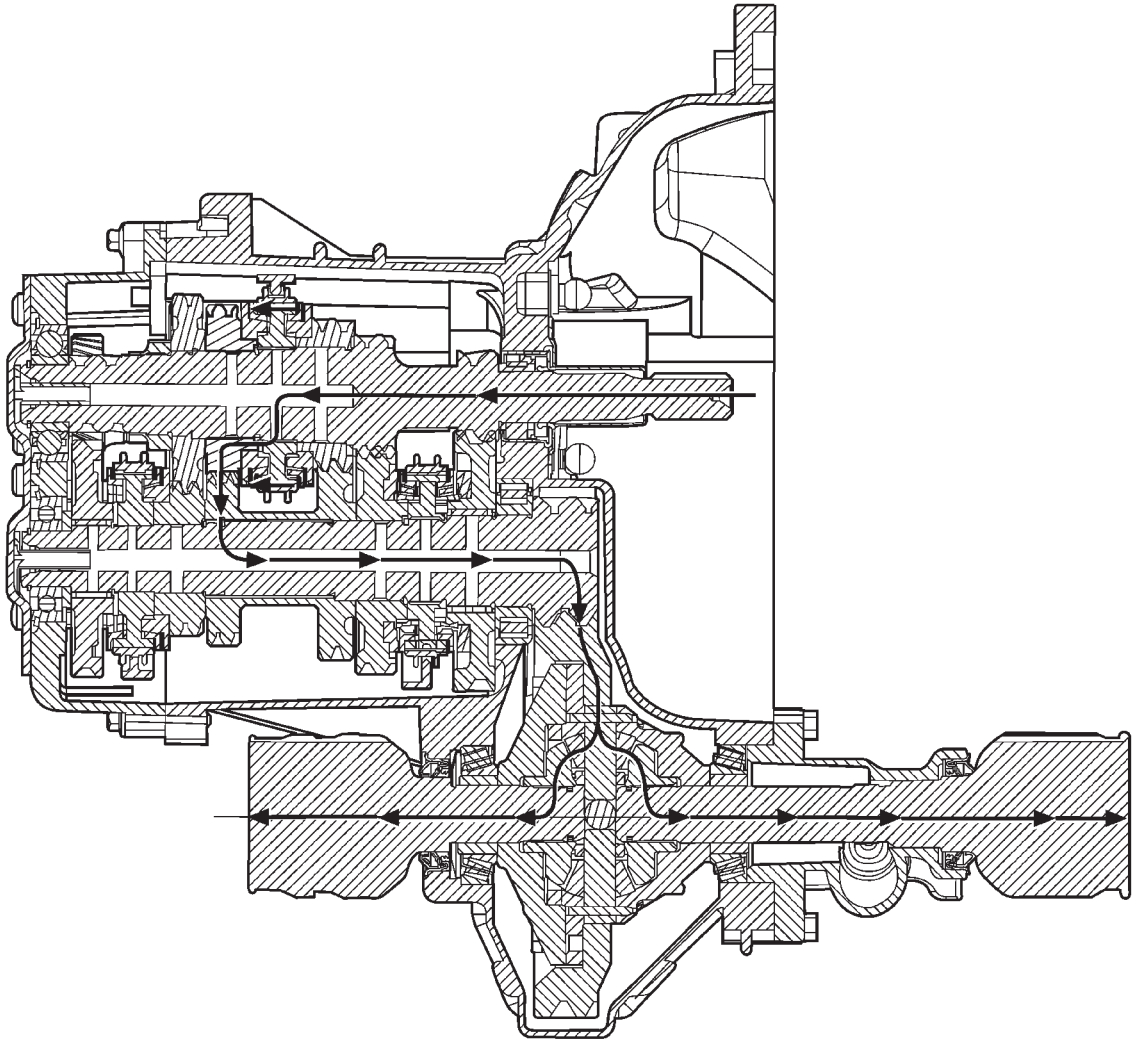

80c51d3e

Fig. 7 4th Gear Operation

T850 MANUAL TRANSAXLE (Continued)

5TH GEAR

Engine power is transmitted to the input shaft via the clutch assembly and the input shaft turns. The input shaft fifth gear is pressed on to the input shaft, and is in constant mesh with the intermediate shaft fifth speed gear. Because of this constant mesh, the intermediate shaft fifth speed gear freewheels until fifth gear is selected. As the gearshift lever is moved to the fifth gear position, the 5-R fork moves the 5-R synchronizer sleeve towards the intermediate shaft fifth speed gear. The synchronizer sleeve engages the fifth gear clutch teeth, fixing the gear to the input shaft, and allowing power to transmit through the intermediate shaft to the differential (Fig. 8).

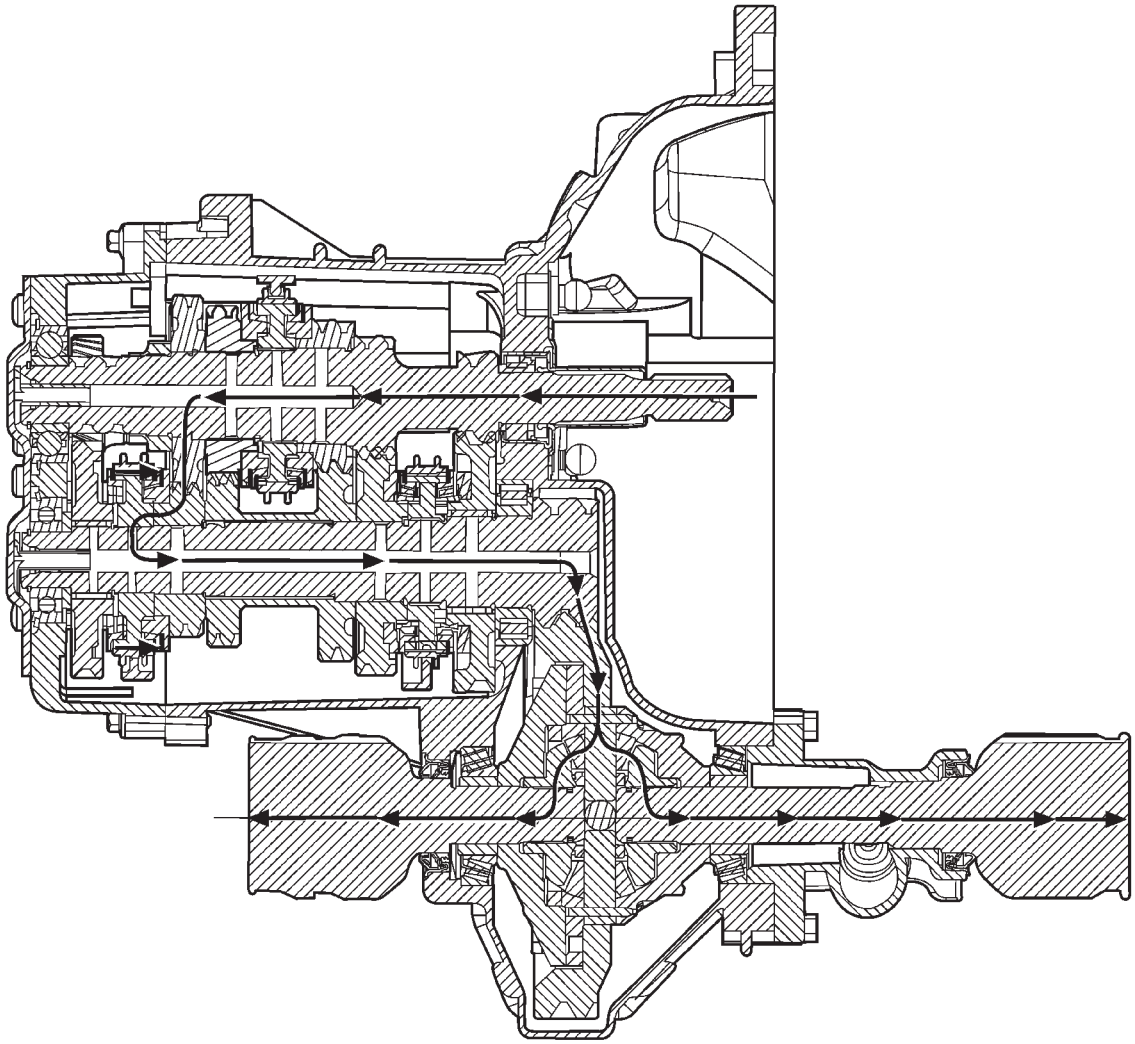

80c51d49

Fig. 8 5th Gear Operation

T850 MANUAL TRANSAXLE (Continued)

REVERSE GEAR

Engine power is transmitted to the input shaft via the clutch assembly and the input shaft turns. The input shaft reverse gear is integral to the input shaft, and is in constant mesh with the reverse idler gear. The reverse idler gear, which reverses the rotation of the intermediate shaft, is in constant mesh with the intermediate shaft reverse gear. Because of this constant mesh, the intermediate shaft reverse gear freewheels until reverse gear is selected. As the gearshift lever is moved to the reverse gear position, the 5-R fork moves the 5-R synchronizer sleeve towards the intermediate shaft reverse gear. The synchronizer sleeve engages the reverse gear clutch teeth, fixing the gear to the intermediate shaft, and allowing power to transmit through the intermediate shaft to the differential (in reverse) (Fig. 9).

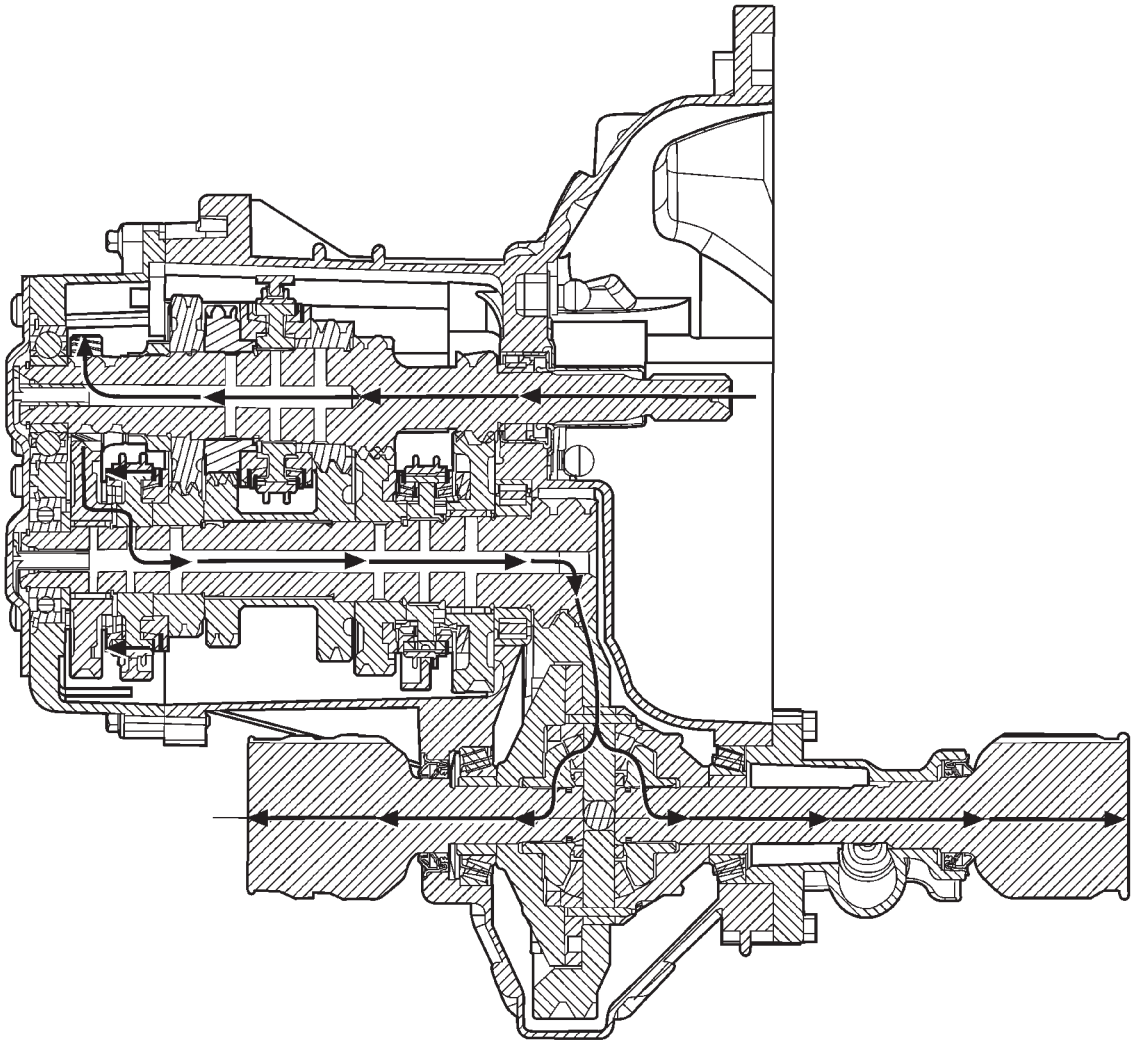

80c51d4d

Fig. 9 Reverse Gear Operation

T850 MANUAL TRANSAXLE (Continued)

DIAGNOSIS AND TESTING - COMMON PROBLEM CAUSES

The majority of transaxle malfunctions are a result of:

- Insufficient lubrication
- Incorrect lubricant
- Misassembled or damaged internal components
- Improper operation

HARD SHIFTING

Hard shifting may be caused by a misadjusted crossover cable. If hard shifting is accompanied by gear clash, synchronizer clutch and stop rings or gear teeth may be worn or damaged.

Hard shifting may also be caused by a binding or broken shift cover mechanism. Remove shift cover and verify smooth operation. Replace as necessary.

Misassembled synchronizer components also cause shifting problems. Incorrectly installed synchronizer sleeves, keys, balls, or springs can cause shift problems.

NOISY OPERATION

Transaxle noise is most often a result of worn or damaged components. Chipped, broken gear or synchronizer teeth, and brinnelled, spalled bearings all cause noise.

Abnormal wear and damage to the internal components is frequently the end result of insufficient lubricant.

SLIPS OUT OF GEAR

Transaxle disengagement may be caused by misaligned or damaged shift components, or worn teeth on the drive gears or synchronizer components. Incorrect assembly also causes gear disengagement. Check for missing snap rings.

LOW LUBRICANT LEVEL

Insufficient transaxle lubricant is usually the result of leaks, or inaccurate fluid level check or refill method. Leakage is evident by the presence of oil around the leak point. If leakage is not evident, the condition is probably the result of an underfill.

If air–powered lubrication equipment is used to fill a transaxle, be sure the equipment is properly calibrated. Equipment out of calibration can lead to an underfill condition.

CLUTCH PROBLEMS

Worn, damaged, or misaligned clutch components can cause difficult shifting, gear clash, and noise.

A worn or damaged clutch disc, pressure plate, or release bearing can cause hard shifting and gear clash.

REMOVAL

REMOVAL - 2.4L GAS

(1) Raise hood.

(2) Disconnect gearshift cables from shift levers/cover assembly (Fig. 10).

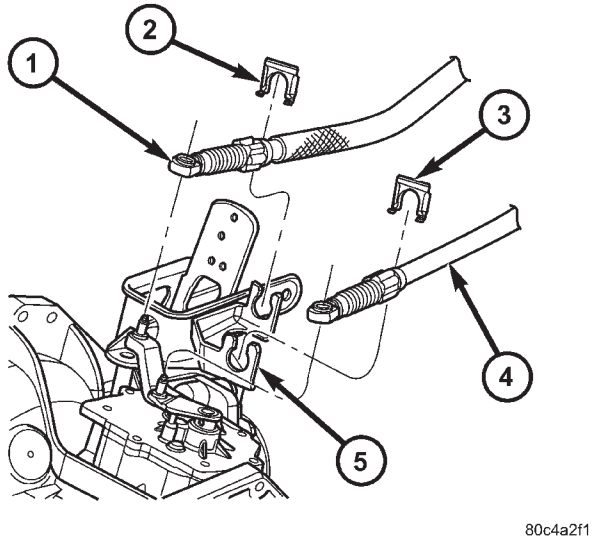

Fig. 10 Gearshift Cables at Transaxle

1 - SELECTOR CABLE
2 - CABLE RETAINER
3 - CABLE RETAINER
4 - CROSSOVER CABLE
5 - MOUNT BRACKET

(3) Remove gearshift cable retaining clips from mounting bracket (Fig. 10). Remove cables and secure out of way.

(4) Remove three (3) right engine mount bracket-to-transaxle bolts (Fig. 11).

(5) Raise vehicle on hoist.

(6) Remove front wheel/tires and halfshafts.

(7) Drain transaxle fluid into suitable container.

(8) Remove front harness retainer and secure harness out of way.

T850 MANUAL TRANSAXLE (Continued)

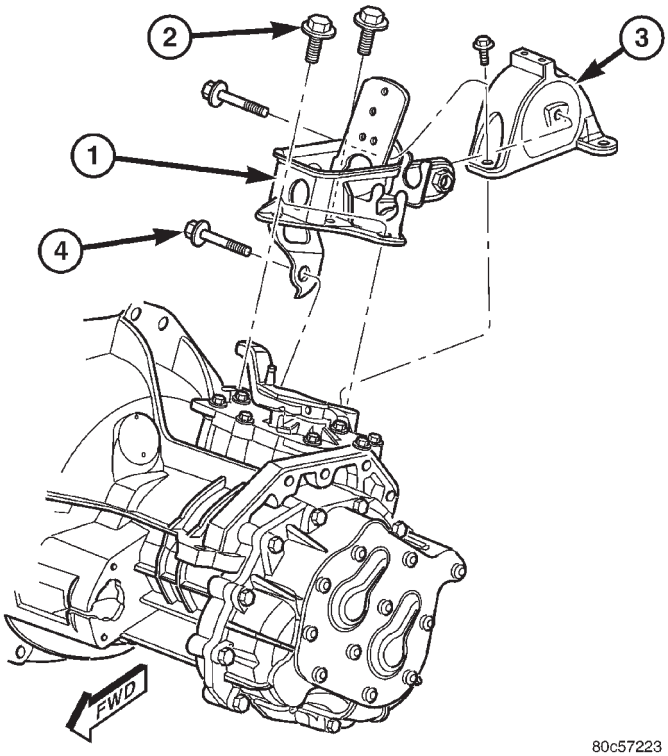

Fig. 11 Transaxle Right Mount and Bracket

1 - MOUNT BRACKET
2 - BOLT (3)
3 - MOUNT
4 - BOLT (1)

(9) Using Tool 6638A, disconnect clutch hydraulic circuit quick connect (located on slave cylinder tube). Remove clutch slave cylinder by depressing towards case and rotating counter-clockwise 60°, while lifting anti-rotation tab out of case slot with screwdriver (Fig. 12).

(10) Remove engine left mount bracket.

(11) Remove starter motor (Fig. 13).

(12) Disconnect back-up lamp switch connector.

(13) Remove structural collar.

(14) Remove modular clutch assembly-to-drive plate bolts.

(15) Position screw jack and wood block to engine oil pan.

(16) Remove transmission upper mount through-bolt from left frame rail.

(17) Lower engine/transaxle assembly on screw jack.

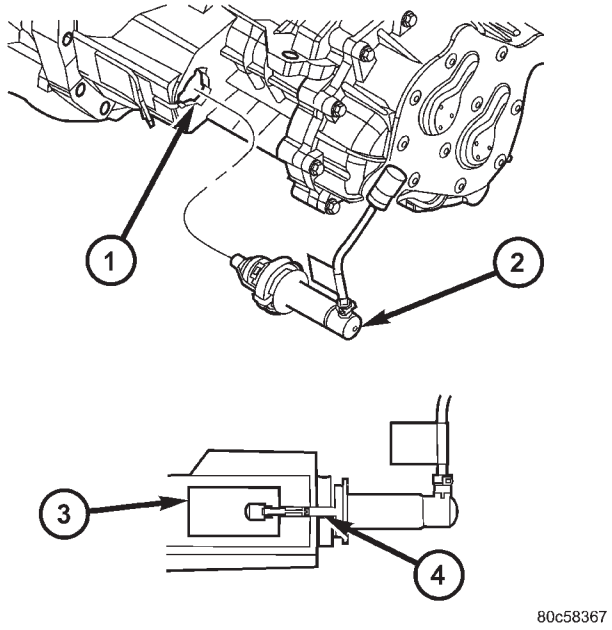

Fig. 12 Slave Cylinder Removal/Installation

1 - MOUNTING HOLE
2 - SLAVE CYLINDER
3 - ACCESS HOLE
4 - NYLON ANTI-ROTATION TAB
5 - QUICK CONNECT

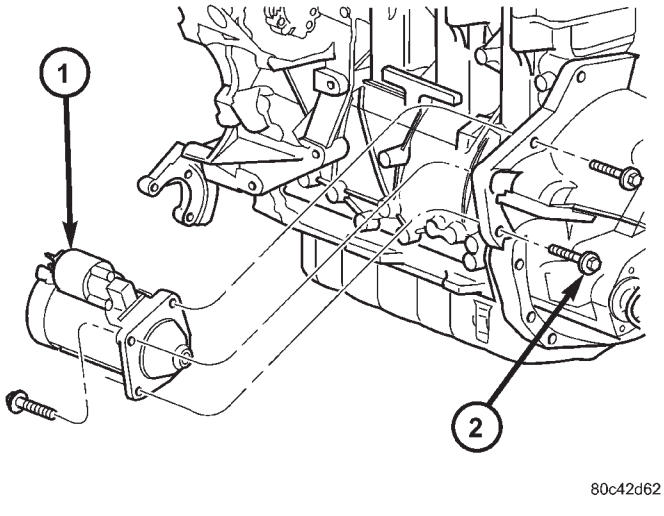

Fig. 13 Starter Motor Removal/Installation

1 - STARTER MOTOR
2 - BOLT (3)

T850 MANUAL TRANSAXLE (Continued)

(18) Remove four (4) upper mount-to-transaxle bolts and remove mount (Fig. 14).

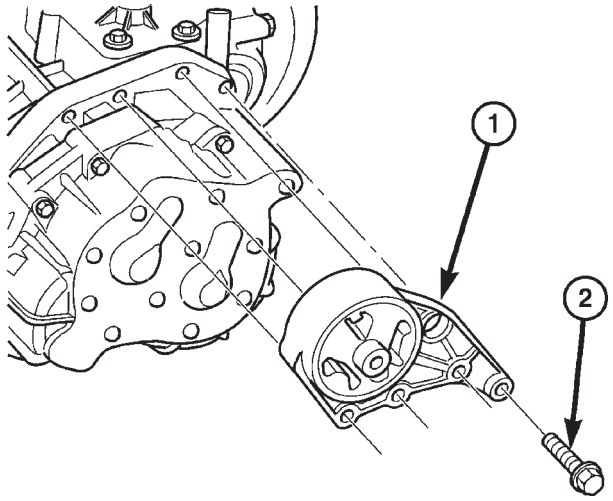

Fig. 14 Transaxle Upper Mount

1 - MOUNT
2 - BOLT (4)

(19) Obtain helper and transmission jack. Secure transaxle to transmission jack and remove transaxle-to-engine bolts.

(20) Remove transaxle from engine.

(21) Inspect modular clutch assembly, clutch release components, and engine drive plate.

REMOVAL - 2.5L TD

(1) Raise hood.

(2) Disconnect both battery cables.

(3) Remove battery thermal shield (Fig. 15).

(4) Remove battery hold down bolt, clamp, and battery (Fig. 16).

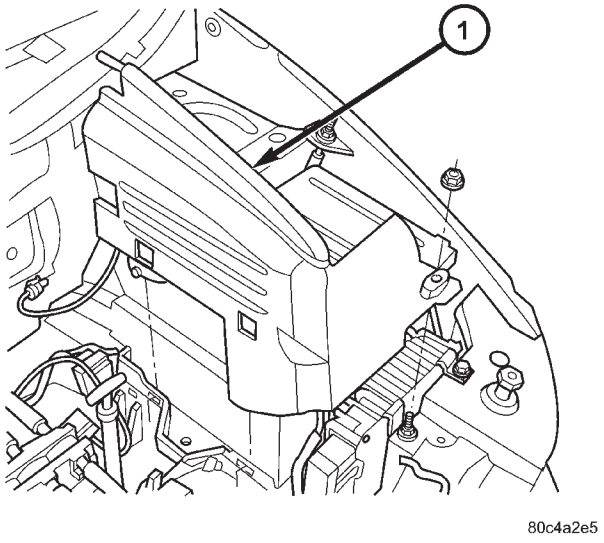

Fig. 15 Battery Thermal Shield

1 - BATTERY THERMAL SHIELD

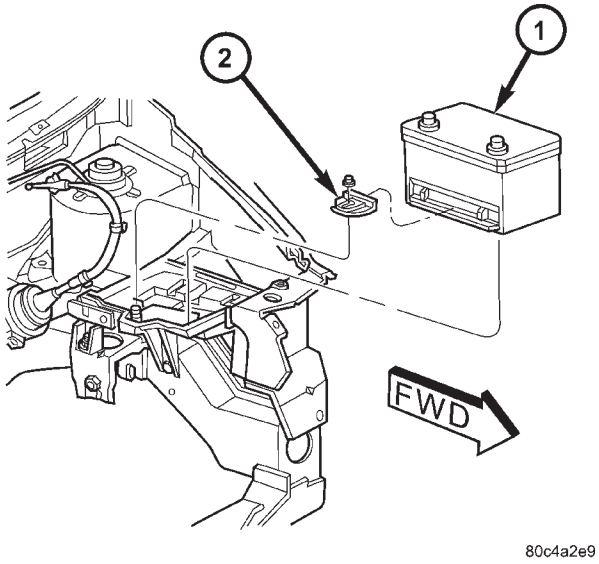

Fig. 16 Battery and Hold-Down Clamp

1 - BATTERY
2 - HOLD-DOWN CLAMP

T850 MANUAL TRANSAXLE (Continued)

(5) Remove battery tray (Fig. 17). Disconnect battery temperature sensor.

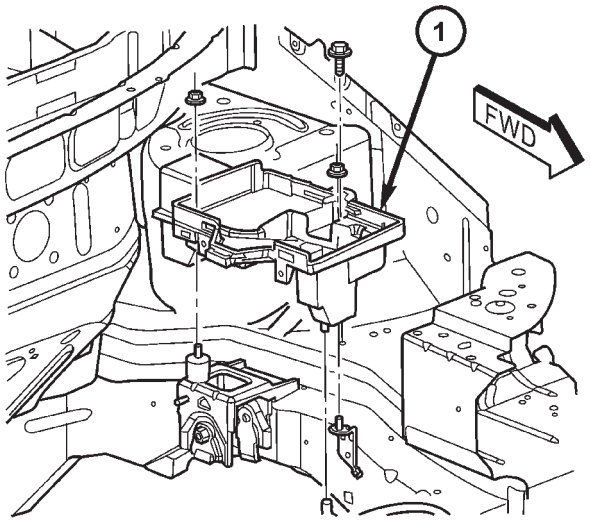

80c4a2f5

Fig. 17 Battery Tray

1 - BATTERY TRAY

(6) Remove coolant recovery bottle from bracket.

(7) Remove coolant recovery bottle mounting bracket (Fig. 18).

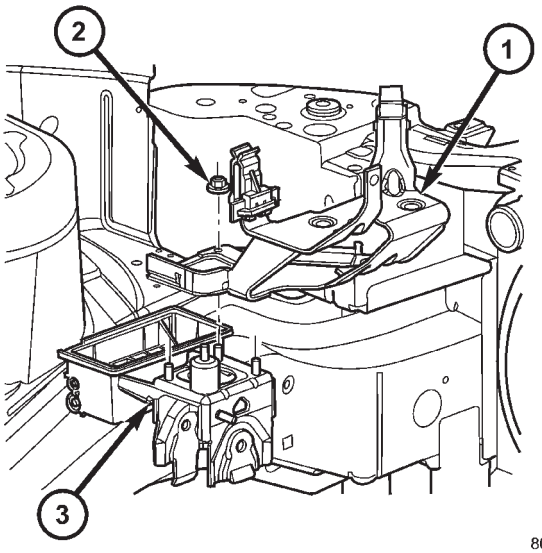

80c4a2ed

Fig. 18 Coolant Recovery Bottle Bracket

1 - COOLANT RECOVERY BOTTLE BRACKET
2 - NUT
3 - MOUNT BRACKET

(8) Disconnect gearshift cables from shift levers/cover assembly (Fig. 19).

(9) Remove gearshift cable retaining clips from mounting bracket (Fig. 19). Remove cables and secure out of way.

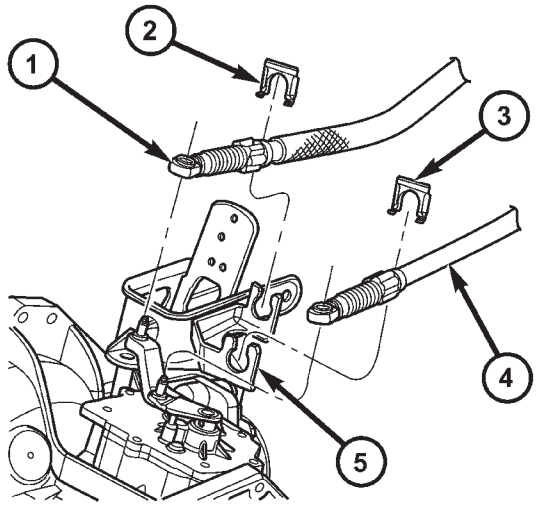

80c4a2f1

Fig. 19 Gearshift Cables at Transaxle

1 - SELECTOR CABLE
2 - CABLE RETAINER
3 - CABLE RETAINER
4 - CROSSOVER CABLE
5 - MOUNT BRACKET

(10) Remove three (3) right engine mount bracket-to-transaxle bolts (Fig. 20).

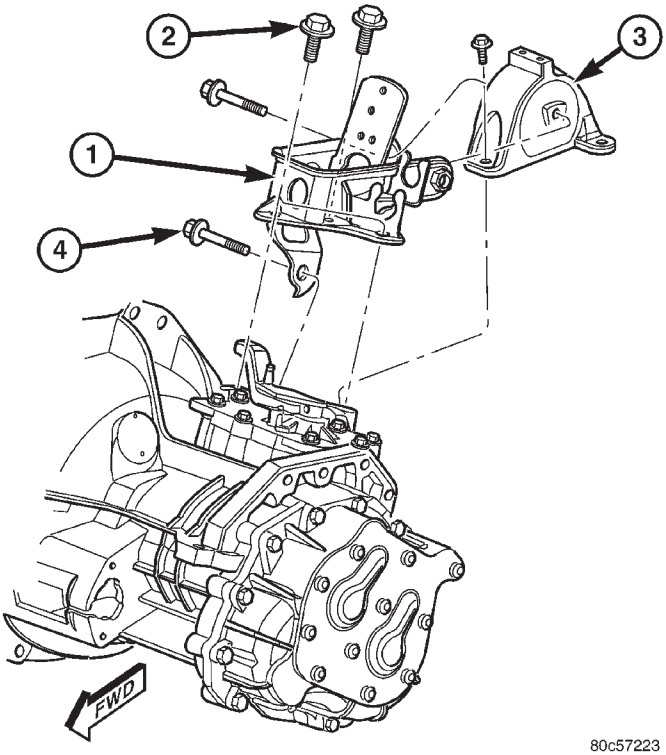

80c57223

Fig. 20 Transaxle Right Mount and Bracket

1 - MOUNT BRACKET
2 - BOLT (3)
3 - MOUNT
4 - BOLT (1)

T850 MANUAL TRANSAXLE (Continued)

(11) Raise vehicle on hoist.
(12) Remove front wheel/tires and halfshafts.
(13) Remove underbody splash shield.
(14) Drain transaxle fluid into suitable container.
(15) Remove front harness retainer and secure harness out of way.
(16) Using Tool 6638A, disconnect clutch hydraulic circuit quick connect (located on slave cylinder tube). Remove clutch slave cylinder by depressing towards case and rotating counter-clockwise 60°, while lifting anti-rotation tab out of case slot with screwdriver (Fig. 21).

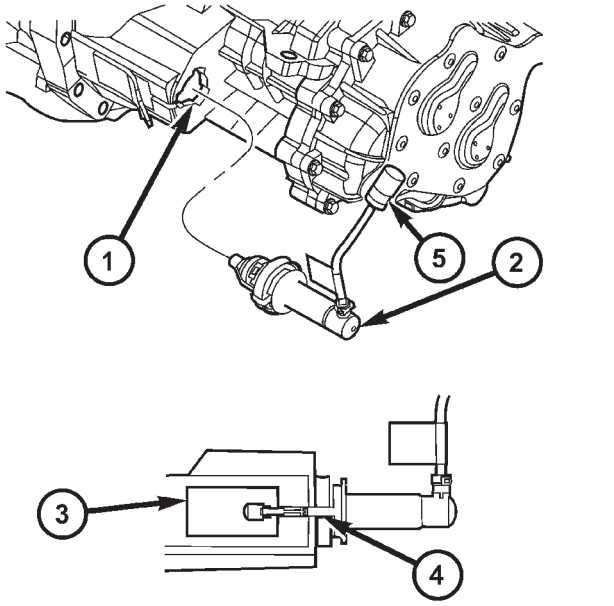

Fig. 21 Slave Cylinder Removal/Installation

1 - MOUNTING HOLE
2 - SLAVE CYLINDER
3 - ACCESS HOLE
4 - NYLON ANTI-ROTATION TAB
5 - QUICK CONNECT

(17) Remove engine left mount bracket (Fig. 22).
(18) Remove starter motor (Fig. 23).
(19) Disconnect back-up lamp switch connector.
(20) Position screw jack and wood block to engine oil pan.
(21) Remove transmission upper mount through-bolt from left frame rail.
(22) Lower engine/transaxle assembly on screw jack.

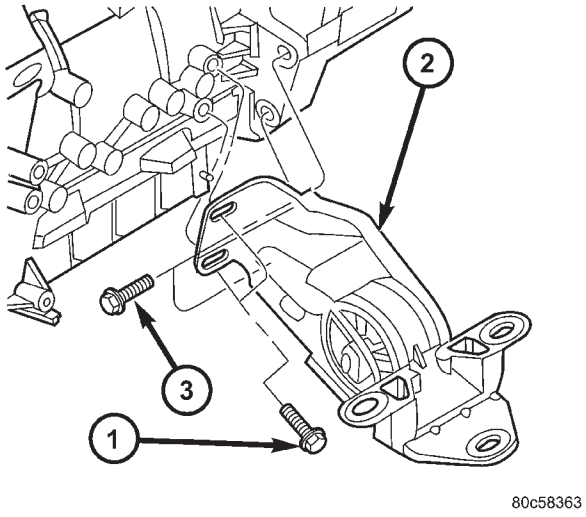

Fig. 22 Left Mount Bracket Removal/Installation

1 - BOLT (2)
2 - MOUNT BRACKET
3 - BOLT (2)

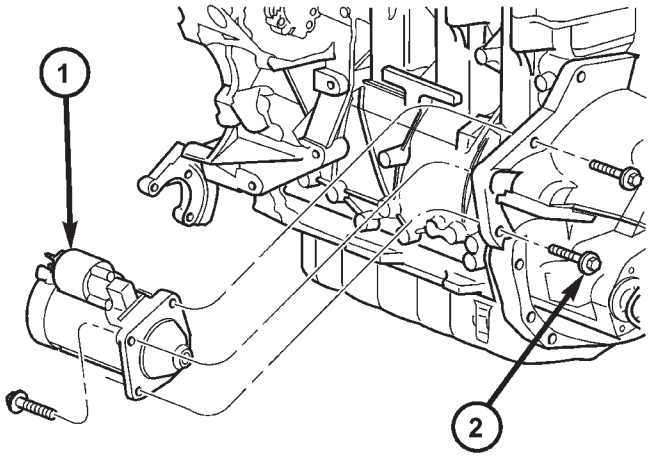

Fig. 23 Starter Motor Removal/Installation

1 - STARTER MOTOR
2 - BOLT (3)

T850 MANUAL TRANSAXLE (Continued)

(23) Remove four (4) upper mount-to-transaxle bolts and remove mount (Fig. 24).

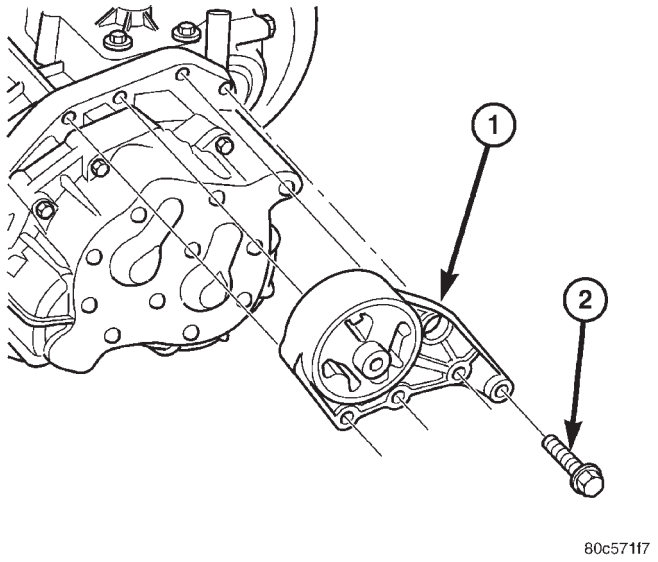

Fig. 24 Transaxle Upper Mount

1 - MOUNT
2 - BOLT (4)

(24) Obtain helper and transmission jack. Secure transaxle to transmission jack and remove transaxle-to-engine bolts.

(25) Remove transaxle from engine (Fig. 25).

(26) Inspect clutch, clutch release components, and flywheel.

DISASSEMBLY

(1) Remove clutch release lever and bearing (Fig. 26). Inspect release lever pivot balls and replace if necessary (Fig. 27). Use slide hammer C-3752 and remover/installer 6891 (Fig. 28) if pivot ball replacement is necessary.

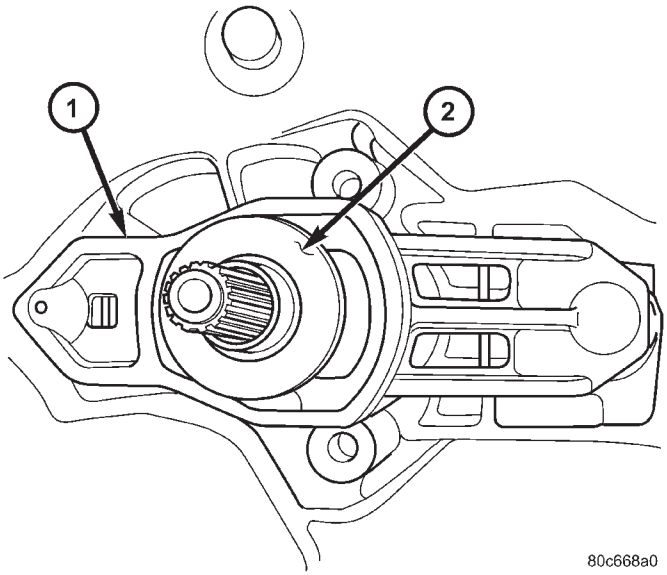

Fig. 26 Release Bearing and Lever

1 - RELEASE LEVER
2 - RELEASE BEARING

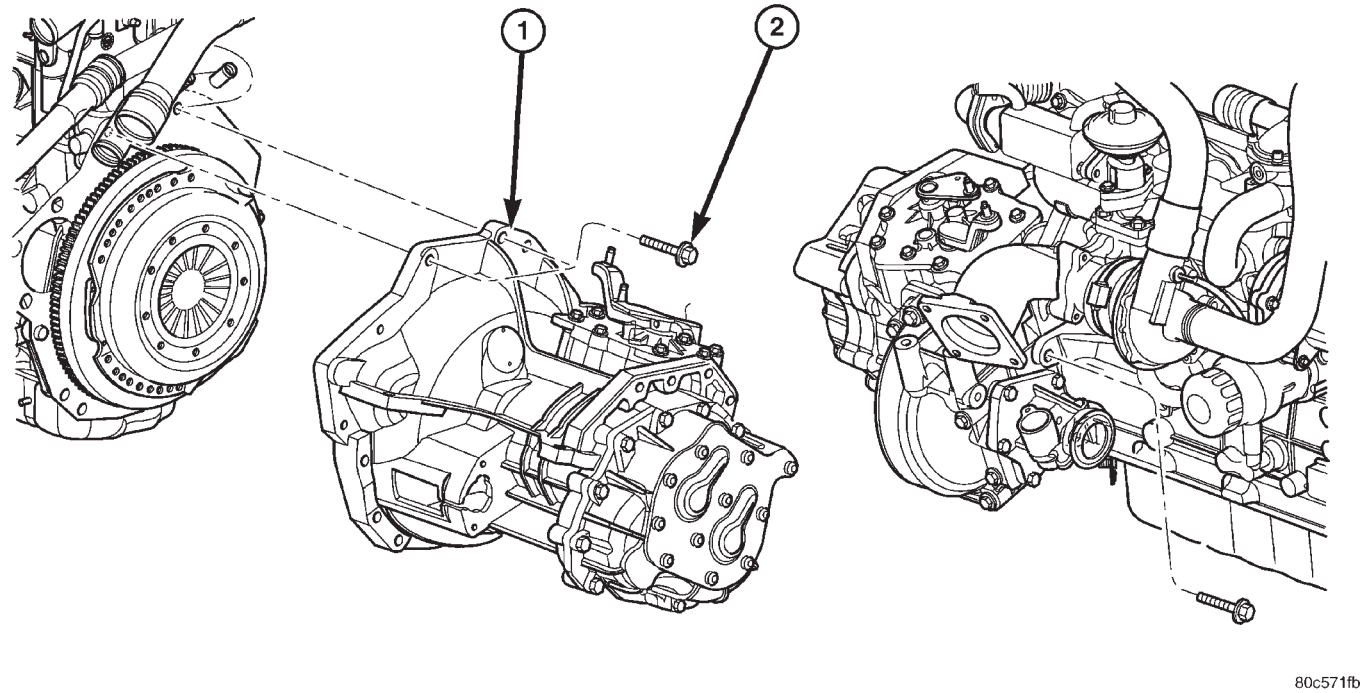

Fig. 25 Transaxle Removal/Installation

1 - TRANSAXLE
2 - BOLT

T850 MANUAL TRANSAXLE (Continued)

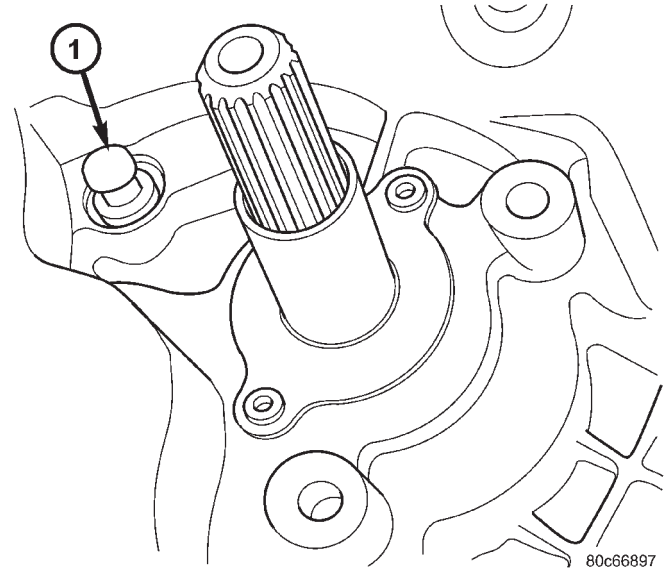

Fig. 27 Pivot Ball Orientation

1 - PIVOT BALL (1)

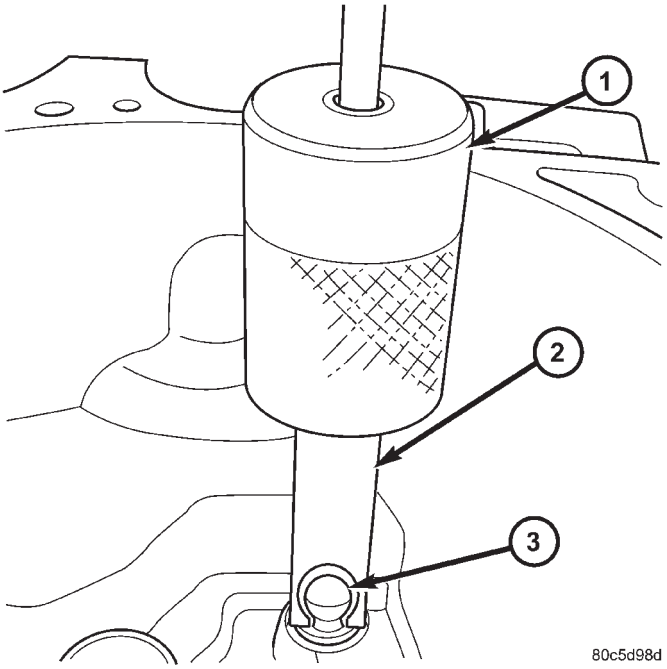

Fig. 28 Pivot Ball Removal/Installation

1 - C-3752 SLIDE HAMMER
2 - REMOVER/INSTALLER 6891
3 - PIVOT BALL

(2) Remove input shaft bearing retainer (Fig. 29).

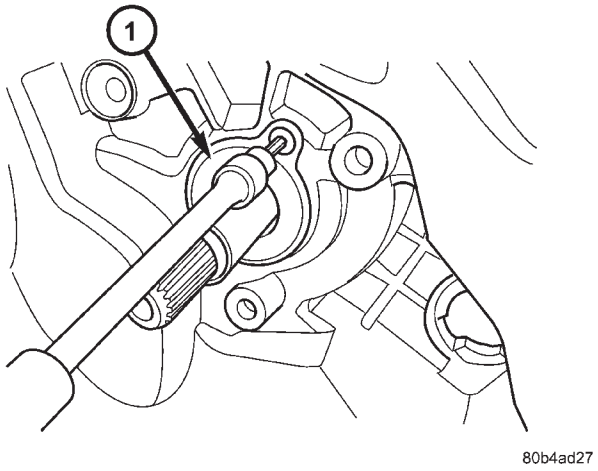

Fig. 29 Input Bearing Retainer

1 - INPUT BEARING RETAINER

NOTE: Place transaxle in neutral before shift cover removal.

(3) Remove shift cover-to-case bolts and remove shift cover assembly (Fig. 30).

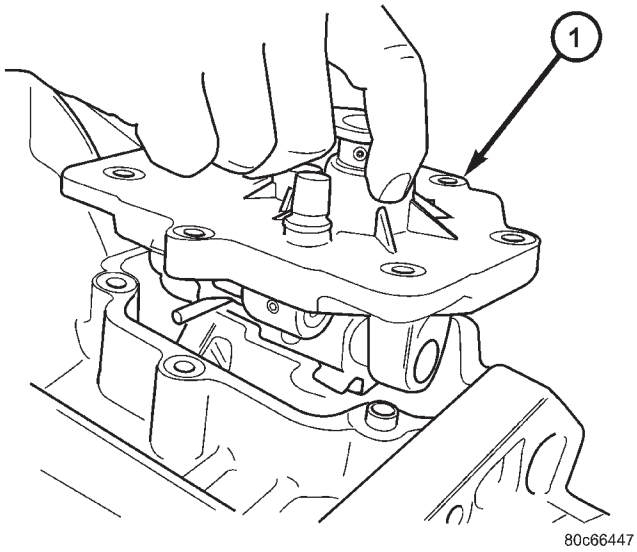

Fig. 30 Shift Cover Removal/Installation

1 - SHIFT COVER ASSEMBLY

T850 MANUAL TRANSAXLE (Continued)

(4) Using a suitable screwdriver, remove extension housing axle oil seal (Fig. 31).

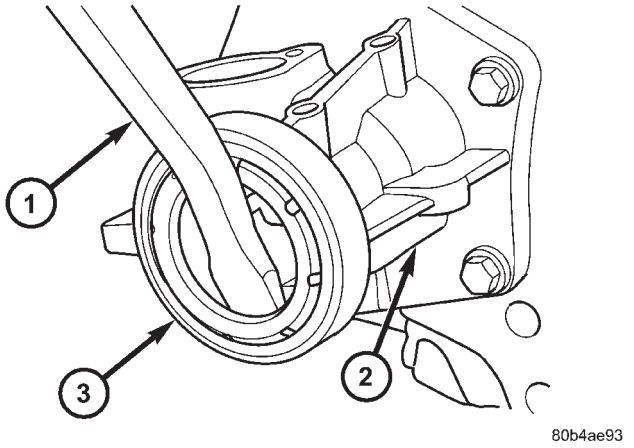

Fig. 31 Extension Housing Seal

1 - SCREWDRIVER
2 - EXTENSION HOUSING
3 - SEAL

(5) Remove extension housing-to-case and differential cover bolts (Fig. 32).

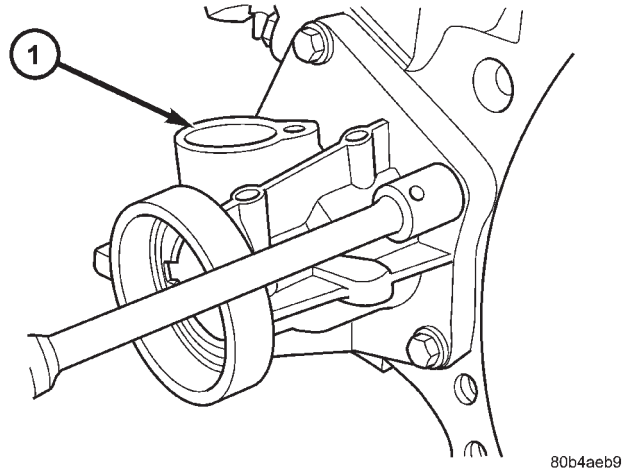

Fig. 32 Extension Housing-to-Case Bolts

1 - EXTENSION HOUSING

(6) Place transaxle with bellhousing surface down.
(7) Remove backup lamp switch (Fig. 33).

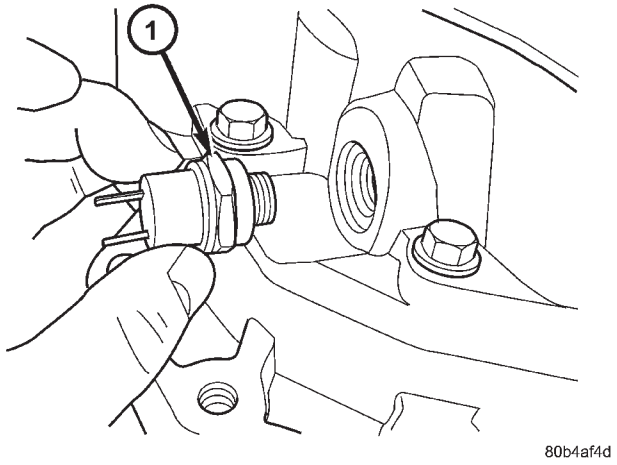

Fig. 33 Back-Up Lamp Switch

1 - BACK-UP LAMP SWITCH

(8) Remove end plate (Fig. 34).

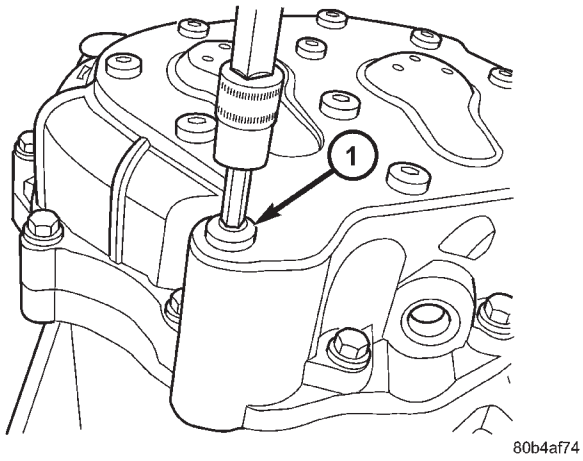

Fig. 34 End Plate Bolts

1 - BOLT (11)

T850 MANUAL TRANSAXLE (Continued)

(9) Set up lifting bar (tool 8489) as shown in (Fig. 35).

(10) Lift up on bar (input shaft bearing side) and remove input shaft bearing snap ring.

(11) Lift up on bar (intermediate shaft side) and remove intermediate shaft bearing snap ring.

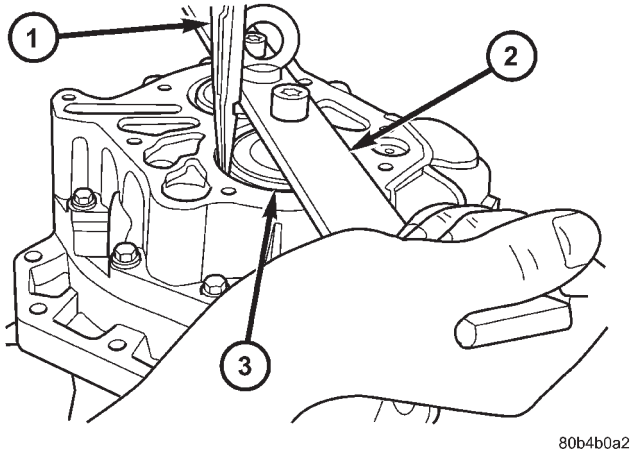

Fig. 35 Input Bearing Snap Ring

1 - SNAP RING PLIERS
2 - LIFTING BAR 8489
3 - SNAP RING

(12) Remove lifting bar 8489.

(13) Remove end cover-to-case bolts (12) (Fig. 36).

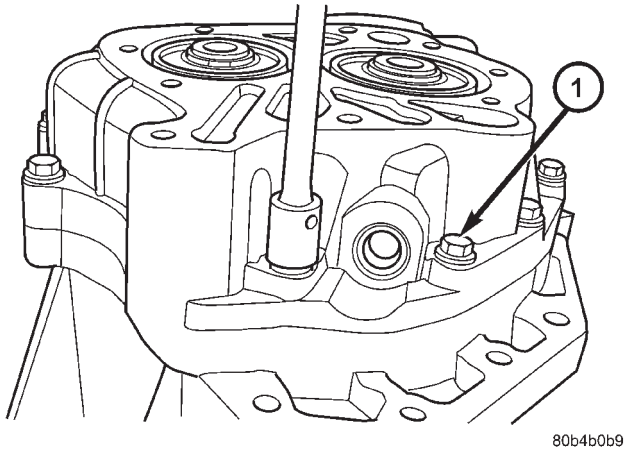

Fig. 36 End Cover Bolts

1 - BOLT (12)

(14) Remove end cover from transaxle (Fig. 37).

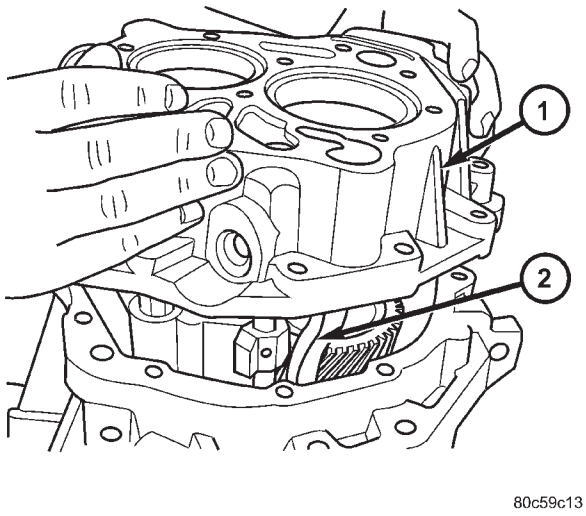

Fig. 37 End Cover Removal/Installation

1 - END COVER
2 - OIL TROUGH

(15) Remove 3/4 shift rail bushing from end cover using slide hammer C-3752 and remover 6786 (Fig. 38).

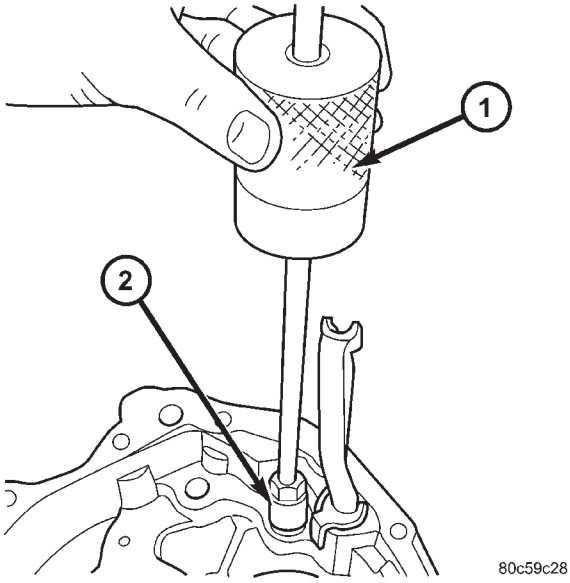

Fig. 38 3/4 Shift Rail Bushing Removal

1 - SLIDE HAMMER C-3752
2 - REMOVER 6786

T850 MANUAL TRANSAXLE (Continued)

(16) Remove reverse idler bolt (Fig. 39). Remove reverse idler gear, washers, and shaft upon geartrain removal.

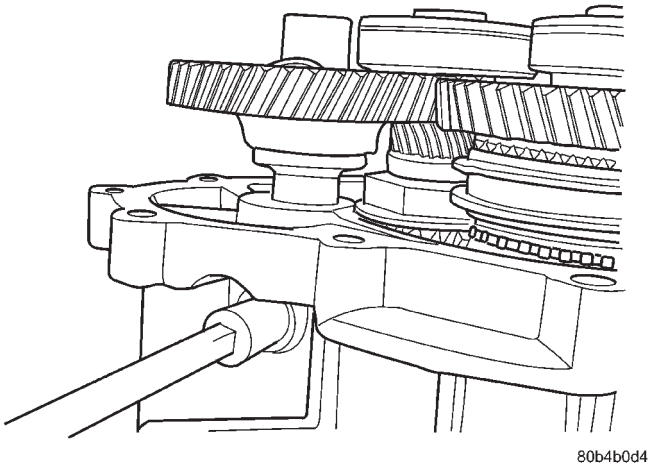

Fig. 39 Reverse Idler Shaft Bolt

(17) Remove 1-2/5-R shift rail (Fig. 40).

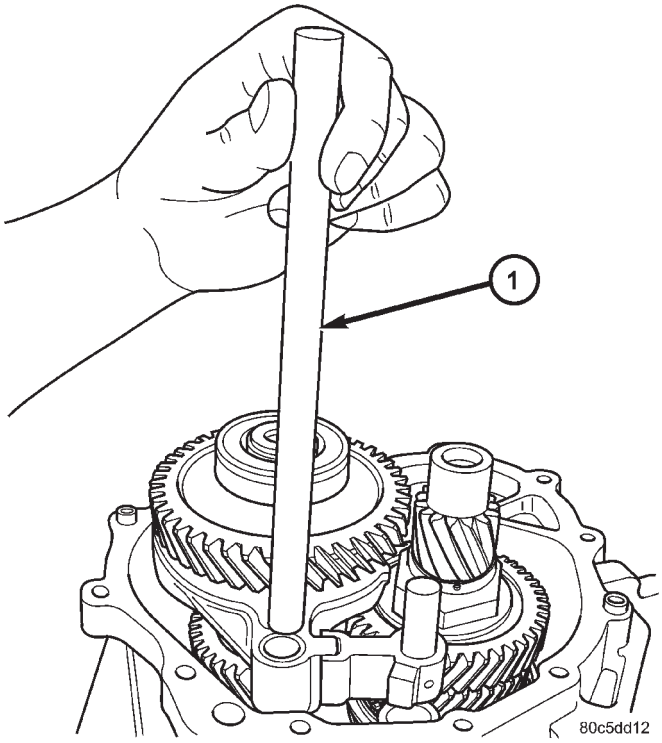

Fig. 40 1/2-5/R Shift Rail Removal/Installation

1 - 1/2-5/R SHIFT RAIL

(18) Install lifting bar 8489.

(19) Lift geartrain (w/reverse idler gear assy.) out of transaxle and install on fixture 8487 (Fig. 41).

(20) Remove remaining shift rail and forks from geartrain (Fig. 41).

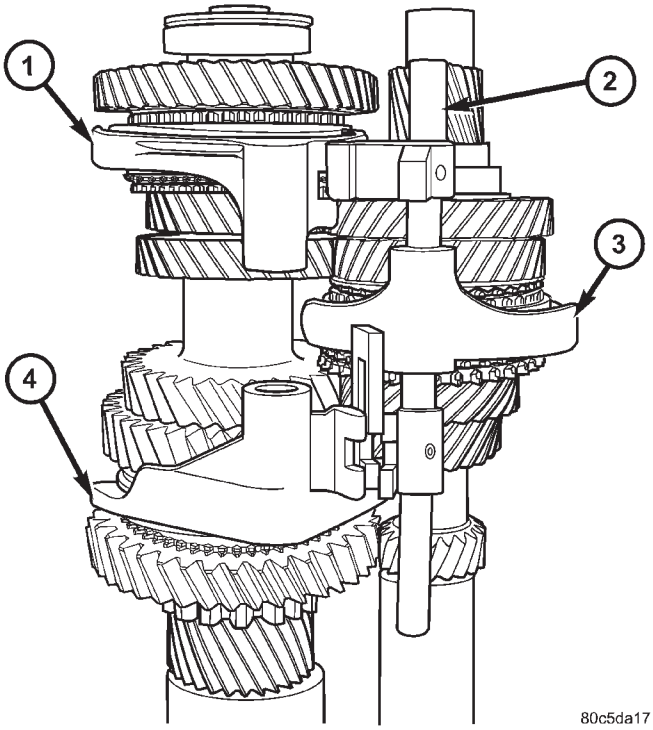

Fig. 41 Shift Fork/Rail Orientation

1 - 5/R FORK
2 - 3/4 RAIL ASSEMBLY
3 - 3/4 FORK
4 - 1/2 FORK

(21) Remove lifting bar from geartrain.

NOTE: At this point, differential bearing turning torque should be measured to ensure proper shim selection upon reassembly.

(22) Reinstall and torque extension housing and measure differential turning torque. (Refer to 21 - TRANSMISSION/TRANSAXLE/MANUAL/DIFFERENTIAL - ADJUSTMENTS)

(23) Remove differential cover bolts.

(24) Remove differential cover. If necessary, use a soft tipped hammer to aid in removal.

(25) Remove extension housing.

T850 MANUAL TRANSAXLE (Continued)

(26) Remove differential assembly. Note orientation of shim, oil slinger, and differential side bearing races (Fig. 42).

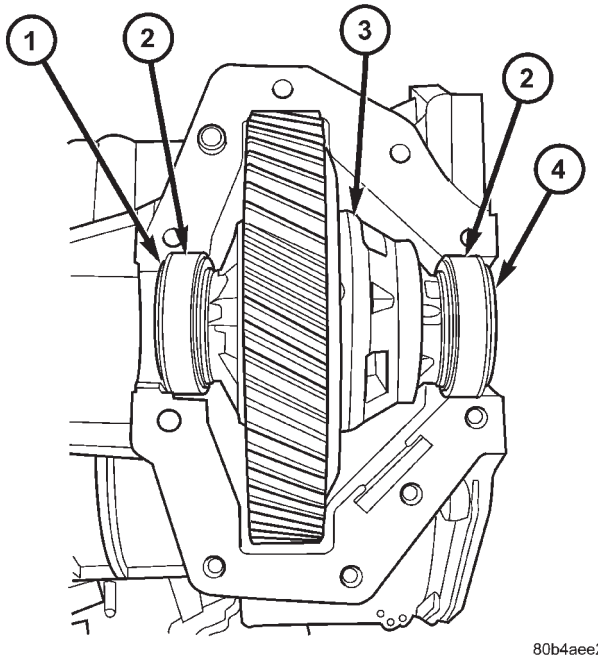

Fig. 42 Differential Shim/Slinger Orientation

1 - SLINGER
2 - BEARING RACE
3 - DIFFERENTIAL ASSEMBLY
4 - SHIM (SELECT)

(27) Remove differential chip collector magnet and clean (Fig. 43). **Magnet is adhered with RTV, and may require force to remove.**

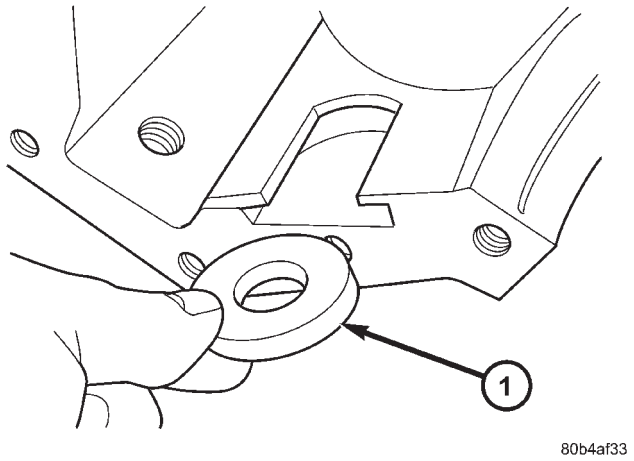

Fig. 43 Differential Magnet

1 - MAGNET

(28) Remove intermediate shaft bearing race with puller 8472 (Fig. 44).

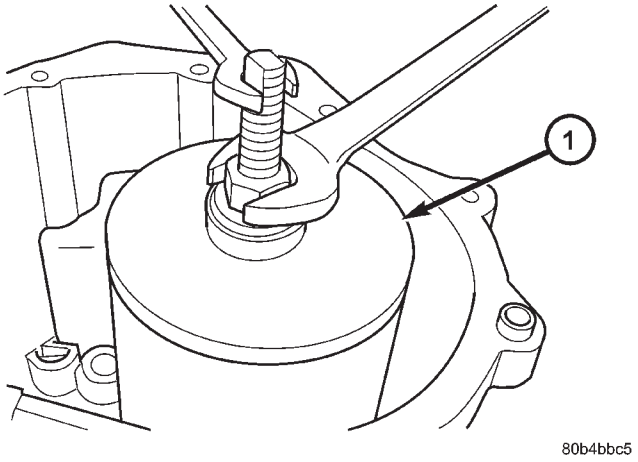

Fig. 44 Intermediate Shaft Bearing Race Removal

1 - REMOVER 8472

(29) Remove shift rail bushing from case with remover 6786 and slide hammer C-3752 (Fig. 45).

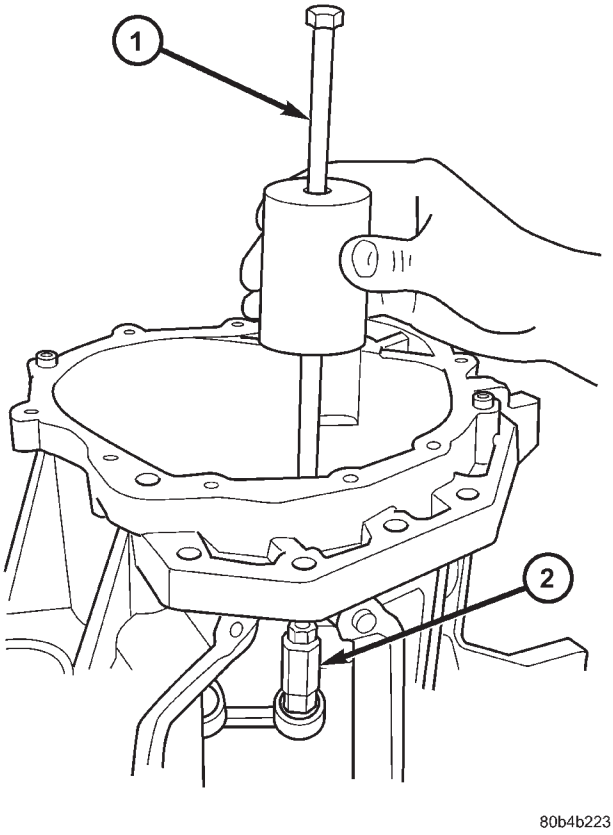

Fig. 45 Shift Rail Bushing Removal

1 - SLIDE HAMMER C-3752
2 - REMOVER 6786

T850 MANUAL TRANSAXLE (Continued)

(30) Remove input shaft bearing using an arbor press and tool 8474 (Fig. 46).

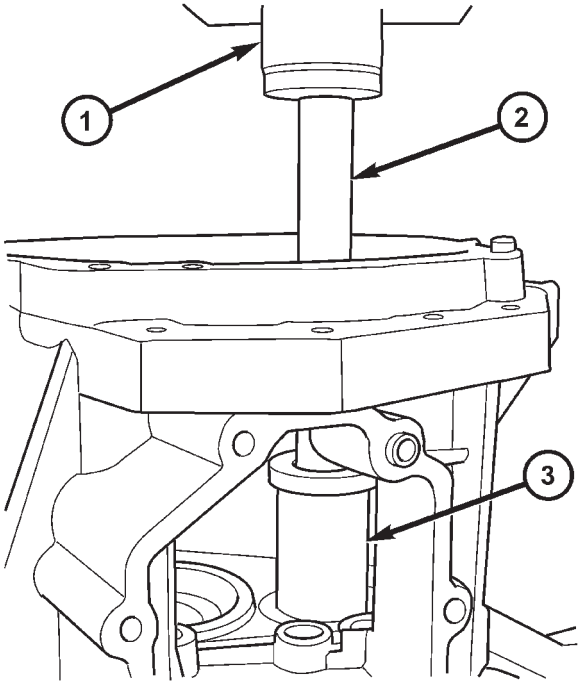

Fig. 46 Input Shaft Bearing Removal

1 - ARBOR PRESS
2 - DRIVER HANDLE C-4171
3 - REMOVER/INSTALLER 8474

ASSEMBLY

NOTE: When assembling this transaxle, always use NEW snap rings.

NOTE: Before assembling transaxle, differential turning torque must be measured and adjusted. (Refer to 21 - TRANSMISSION/TRANSAXLE/MANUAL/DIFFERENTIAL - ADJUSTMENTS). Differential turning torque must be measured with geartrain out of case.

(1) Install input shaft bearing using an arbor press and remover/installer 8474 (Fig. 47).

(2) Install shift shaft bushing to case using installer 8475 (Fig. 48).

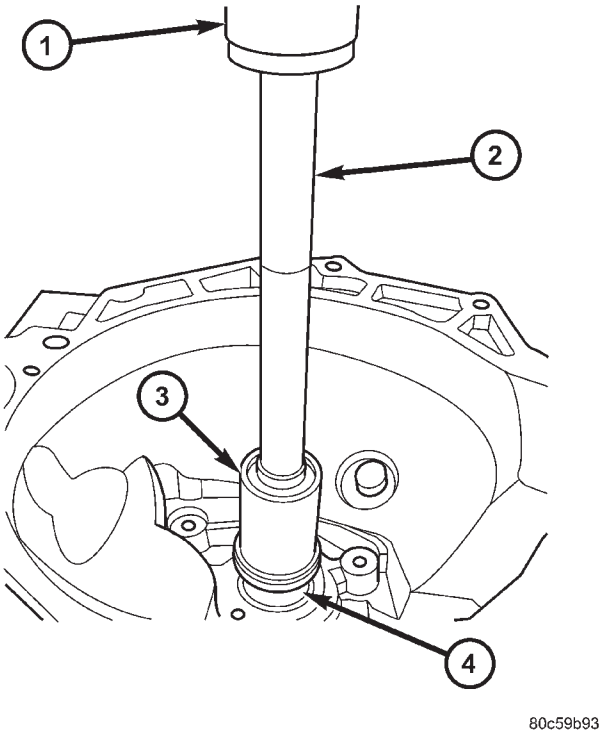

Fig. 47 Input Shaft Bearing Installation

1 - ARBOR PRESS
2 - C-4171 DRIVER HANDLE
3 - REMOVER/INSTALLER 8474
4 - INPUT SHAFT BEARING

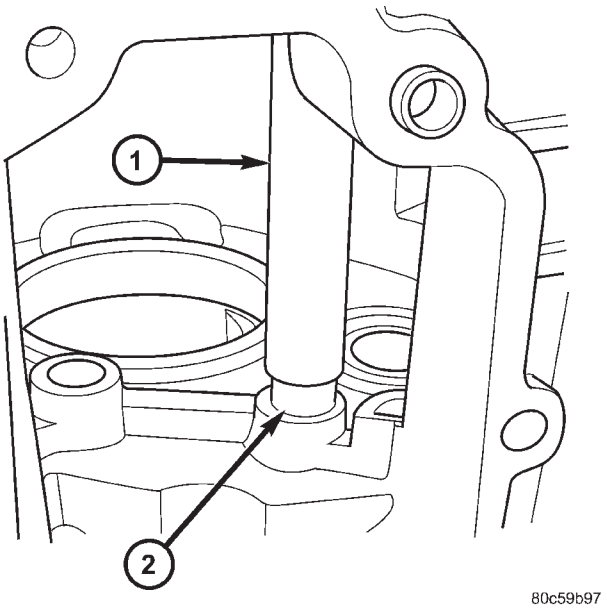

Fig. 48 Shift Shaft Bushing Installation

1 - INSTALLER 8475
2 - SHIFT SHAFT BUSHING

T850 MANUAL TRANSAXLE (Continued)

(3) Install intermediate shaft bearing race to case with an arbor press, driver handle C-4171, and installer 8471 (Fig. 49). Press until installer 8471 bottoms on transaxle case.

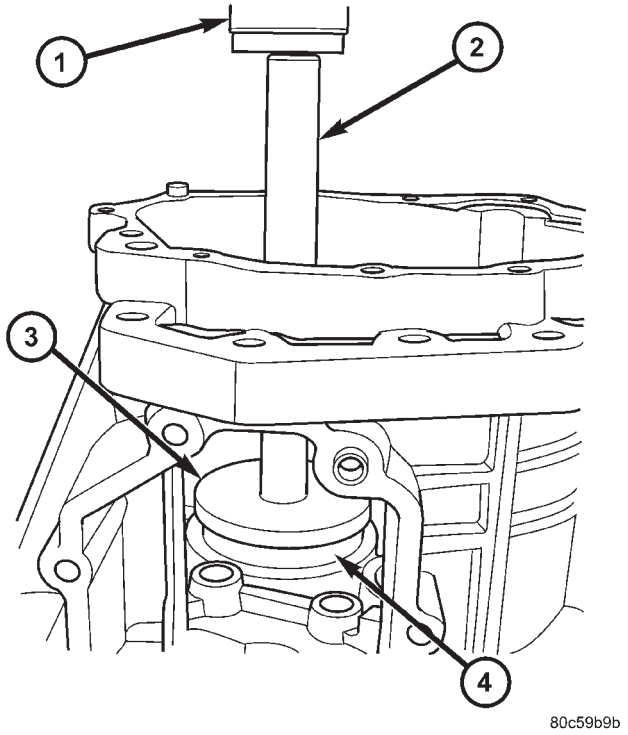

Fig. 49 Install Intermediate Shaft Bearing Race

1 - ARBOR PRESS
2 - DRIVER HANDLE C-4171
3 - INSTALLER 8471
4 - INTERMEDIATE SHAFT BEARING RACE

NOTE: If input shaft assembly was not disassembled, it is necessary to remove input shaft sealed ball bearing before assembling transaxle. (Refer to 21 - TRANSMISSION/TRANSAXLE/MANUAL/INPUT SHAFT - DISASSEMBLY)

(4) Install assembled input and intermediate shafts to fixture 8487 (Fig. 50).

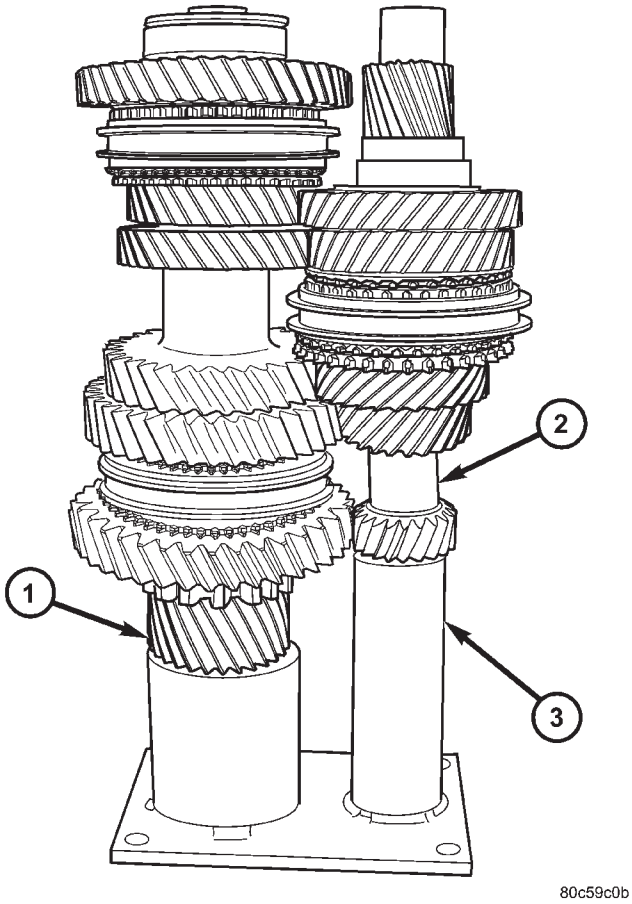

Fig. 50 Install Geartrain to Fixture 8487

1 - INTERMEDIATE SHAFT
2 - INPUT SHAFT
2 - FIXTURE 8487

T850 MANUAL TRANSAXLE (Continued)

(5) Install shift forks and 3/4 rail assembly to geartrain as shown in (Fig. 51).

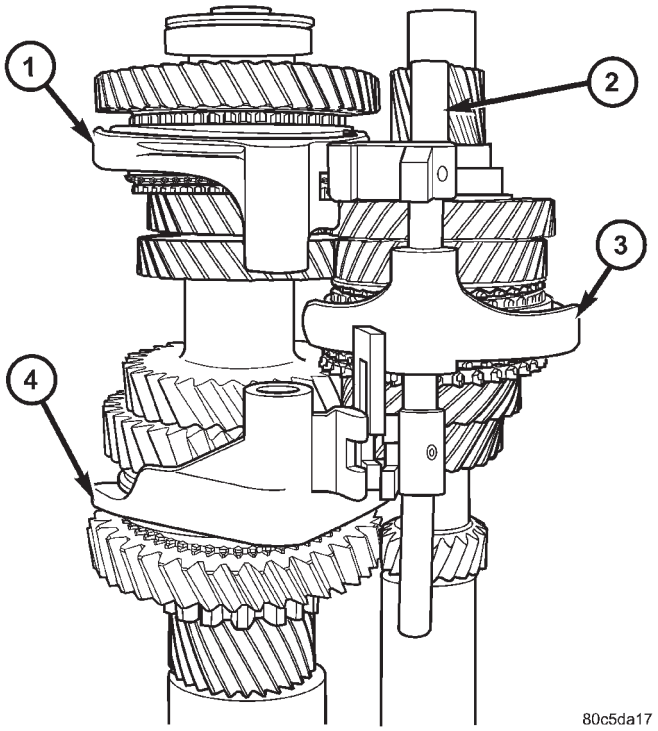

Fig. 51 Shift Fork/Rail Orientation

1 - 5/R FORK
2 - 3/4 RAIL ASSEMBLY
3 - 3/4 FORK
4 - 1/2 FORK

NOTE: Before installing geartrain, make sure that input shaft sealed roller bearing is not installed, otherwise reverse idler assembly installation will be difficult. (Refer to 21 - TRANSMISSION/TRANSAXLE/ MANUAL/INPUT SHAFT - DISASSEMBLY)

(6) Install lifting bar 8489 to geartrain. Install geartrain to case. **When installing geartrain to case, use care not to damage bearing surfaces.**

(7) Remove lifting bar 8489 from geartrain.

(8) Install shift 1/2-5/R rail as shown in (Fig. 52).

(9) Install reverse idler shaft into position (Fig. 53). Install and torque shaft-to-case bolt to 54 N·m (40 ft. lbs.).

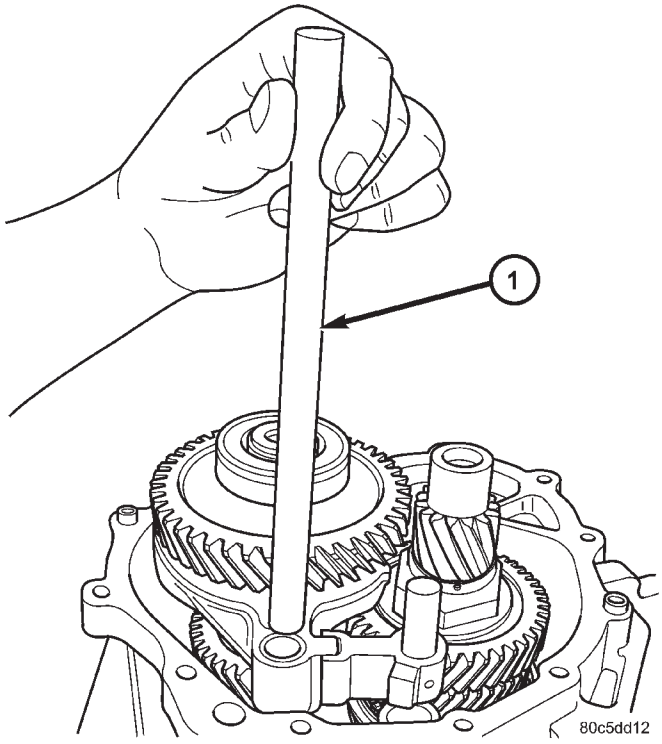

Fig. 52 Shift Rail Installation

1 - 1/2-5/R SHIFT RAIL

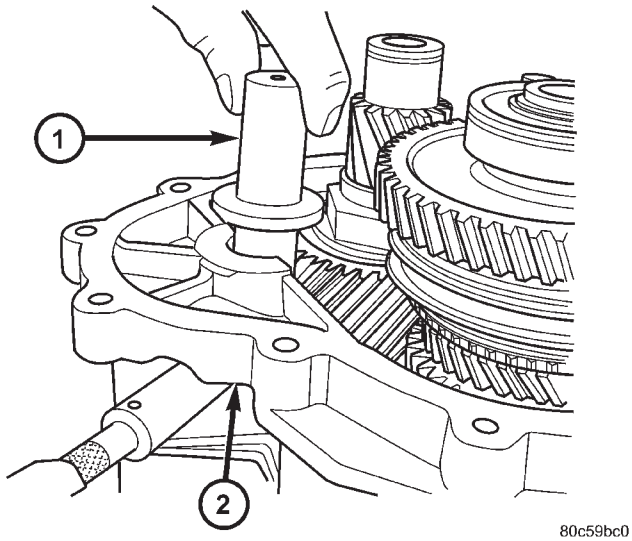

Fig. 53 Install Reverse Idler Shaft

1 - REVERSE IDLER SHAFT
2 - BOLT

T850 MANUAL TRANSAXLE (Continued)

(10) Install reverse idler gear bearing (Fig. 54).

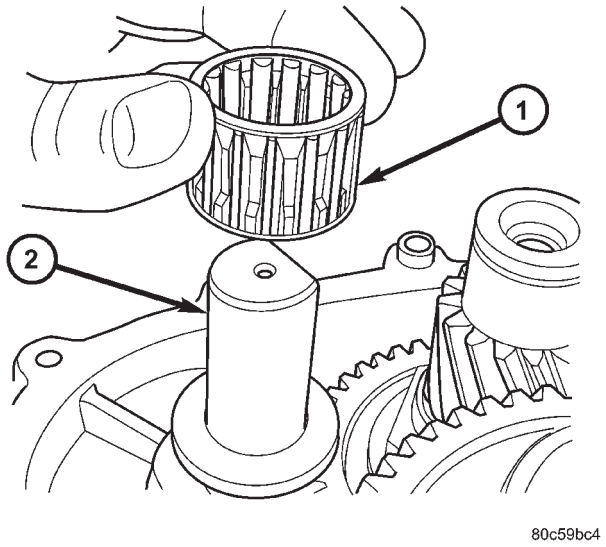

Fig. 54 Install Reverse Idler Gear Bearing

1 - NEEDLE BEARING
2 - REVERSE IDLER SHAFT

(11) Install reverse idler gear with hub down as shown in (Fig. 55).

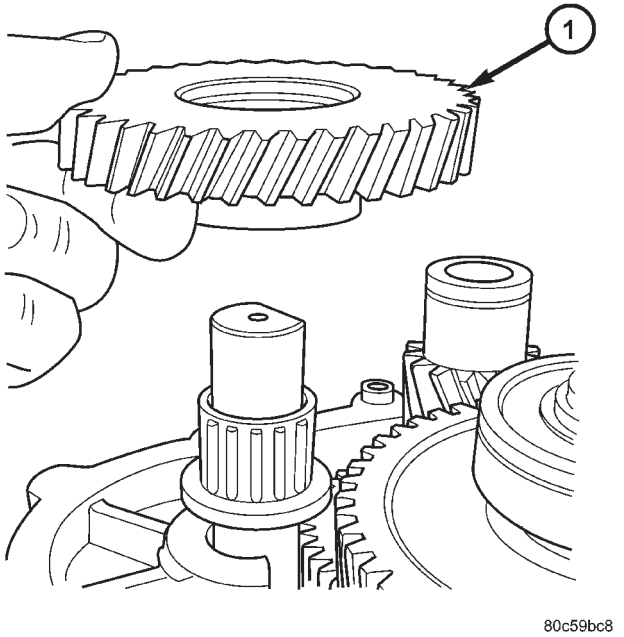

Fig. 55 Install Reverse Idler Gear

1 - REVERSE IDLER GEAR

(12) Install flat washer (Fig. 56).

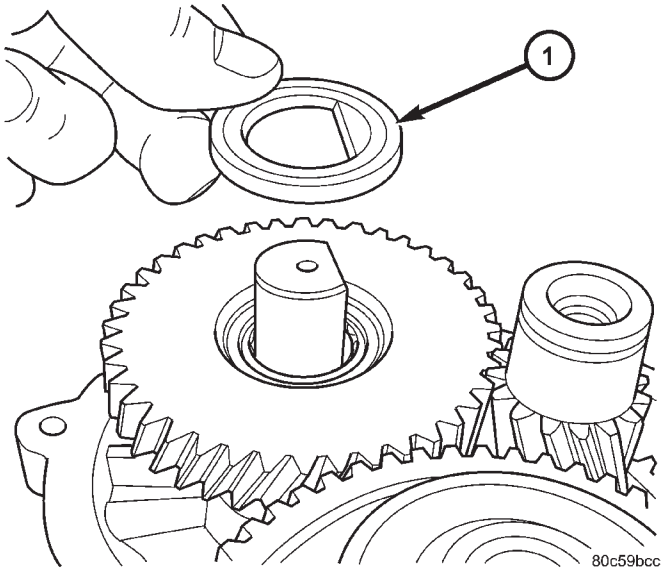

Fig. 56 Install Flat Washer

1 - FLAT WASHER

(13) Install wave washer (Fig. 57).

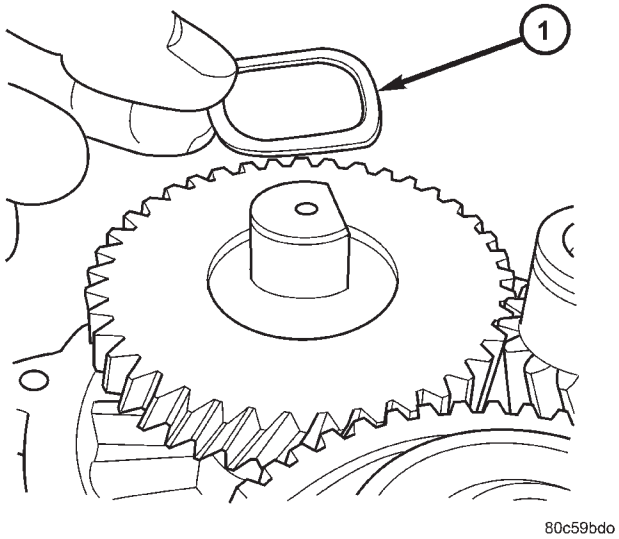

Fig. 57 Install Wave Washer

1 - WAVE WASHER

T850 MANUAL TRANSAXLE (Continued)

(14) Install input shaft sealed roller bearing using installer 8482 (Fig. 58).

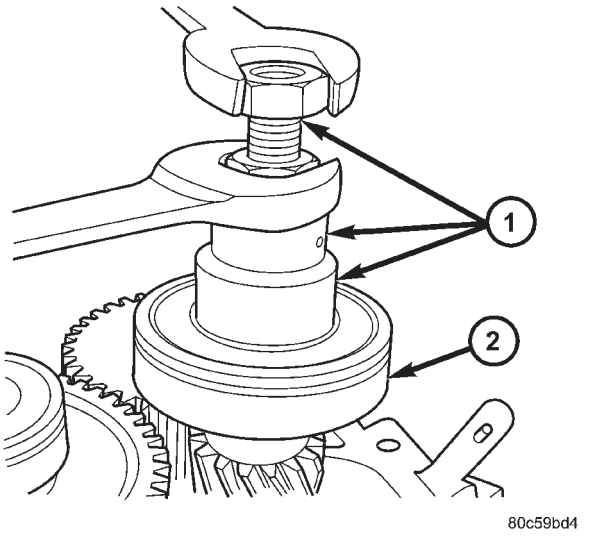

Fig. 58 Install Input Shaft Sealed Roller Bearing

1 - INSTALLER 8482
2 - SEALED ROLLER BEARING

(15) Install **new** input shaft bearing snap ring (Fig. 59).

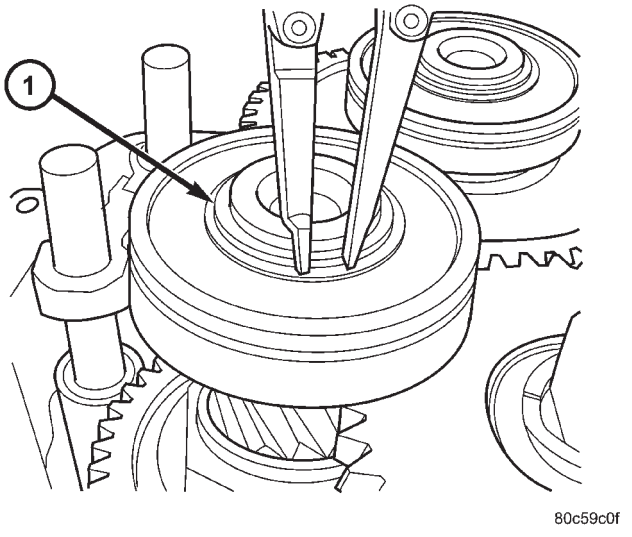

Fig. 59 Input Shaft Bearing Snap Ring

1 - SNAP RING

(16) Install shift rail bushing to end cover using installer 8475 (Fig. 60).

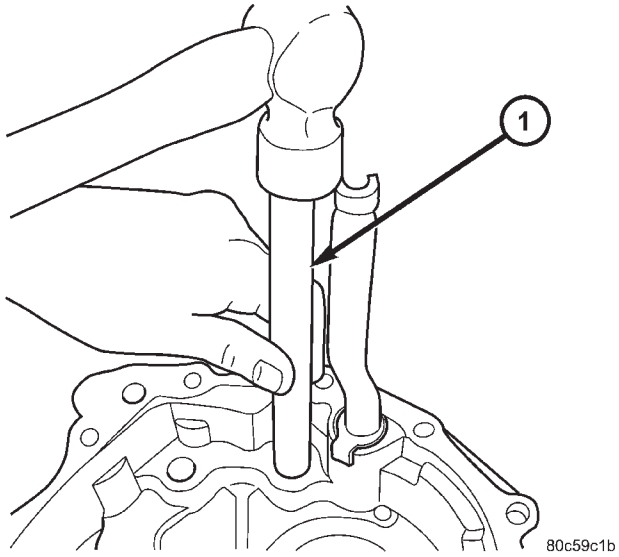

Fig. 60 Shift Rail Bushing Installation

1 - INSTALLER 8475

(17) Apply a 1 mm (0.04 in.) bead of Mopar® Gasket Maker to transaxle end cover and install to transaxle case (Fig. 61). **While installing end cover, be sure to guide oil trough into pocket (Fig. 62).** Torque end cover-to-case bolts to 28 N·m (250 in. lbs.) (Fig. 63).

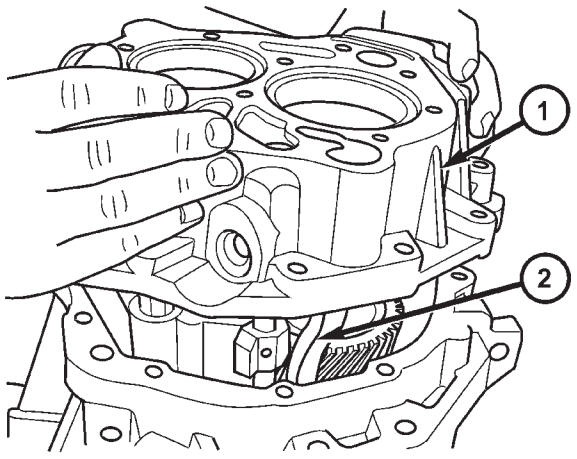

Fig. 61 End Cover Removal/Installation

1 - END COVER
2 - OIL TROUGH

T850 MANUAL TRANSAXLE (Continued)

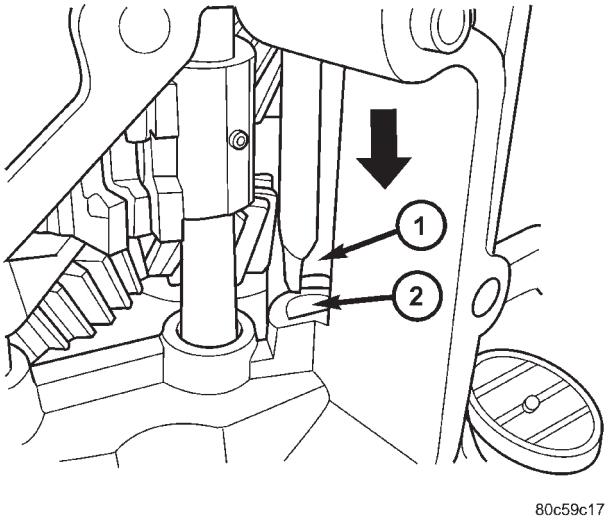

Fig. 62 Oil Trough Pocket

1 - OIL TROUGH
2 - POCKET

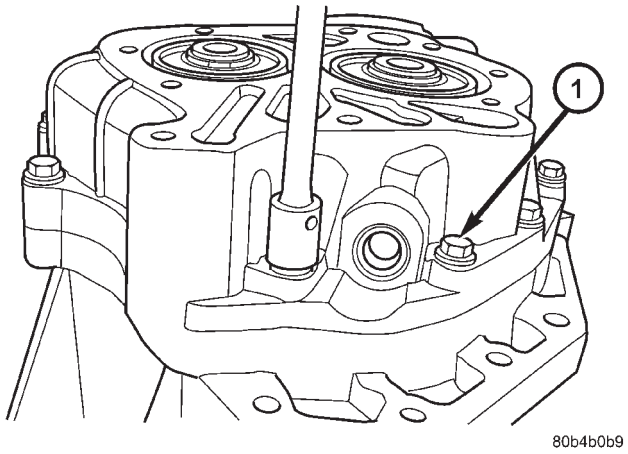

Fig. 63 End Cover Bolts

1 - BOLT (12)

(18) Install lifting bar 8489 to geartrain.

(19) Lift up on bar (input shaft side) and install input shaft bearing snap ring (Fig. 64).

(20) Lift up on bar (intermediate shaft side) and install intermediate shaft bearing snap ring.

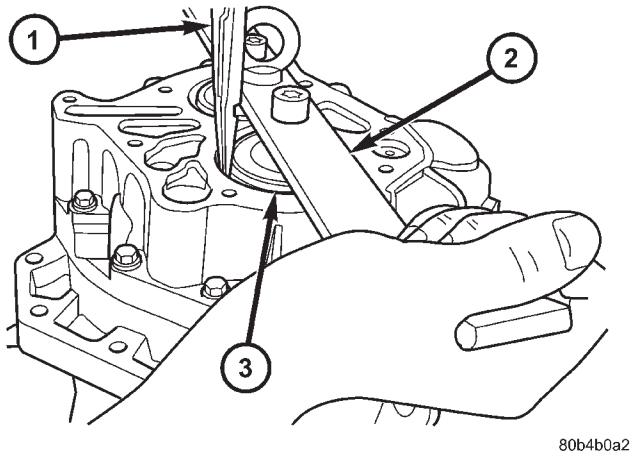

Fig. 64 Input Bearing Snap Ring

1 - SNAP RING PLIERS
2 - LIFTING BAR 8489
3 - SNAP RING

(21) Remove lifting bar 8489.

(22) Install a bead of Mopar® Gear Lube RTV to end plate and immediately install to case. Install and torque bolts to 28 N·m (250 in. lbs.) (Fig. 65).

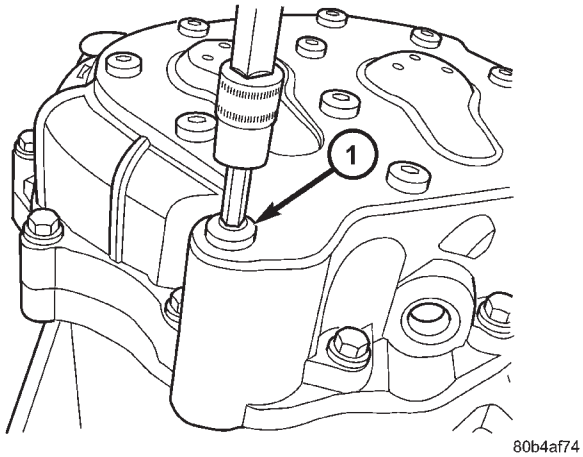

Fig. 65 End Cover Bolts

1 - BOLT (11)

T850 MANUAL TRANSAXLE (Continued)

(23) Install back up lamp switch and torque to 23 N·m (17 ft. lbs.) (Fig. 66).

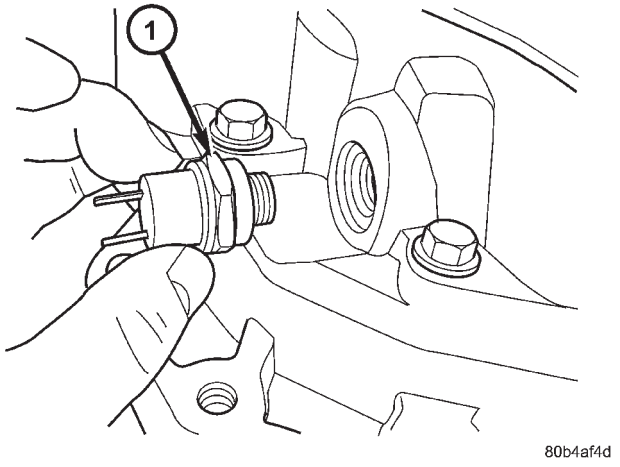

Fig. 66 Back-Up Lamp Switch

1 - BACK-UP LAMP SWITCH

(24) Roll transaxle assembly on side.

(25) Install differential chip collector magnet (Fig. 67). Retain to case with a dab of Mopar® Gear Lube RTV.

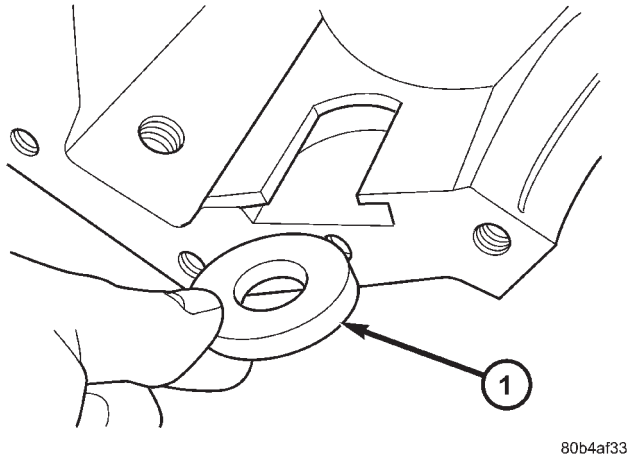

Fig. 67 Differential Magnet

1 - MAGNET

(26) Install differential assembly with bearing races and select shim (Fig. 68). Shim selection was determined before transaxle assembly (Refer to 21 - TRANSMISSION/TRANSAXLE/MANUAL/DIFFERENTIAL - ADJUSTMENTS).

(27) Install a 1 mm (0.04 in.) bead of Mopar® Gasket Maker to differential cover and install to case. Torque differential cover-to-case bolts to 54 N·m (40 ft. lbs.).

(28) Install a 1 mm (0.04 in.) bead of Mopar® Gasket Maker to extension housing. Install extension

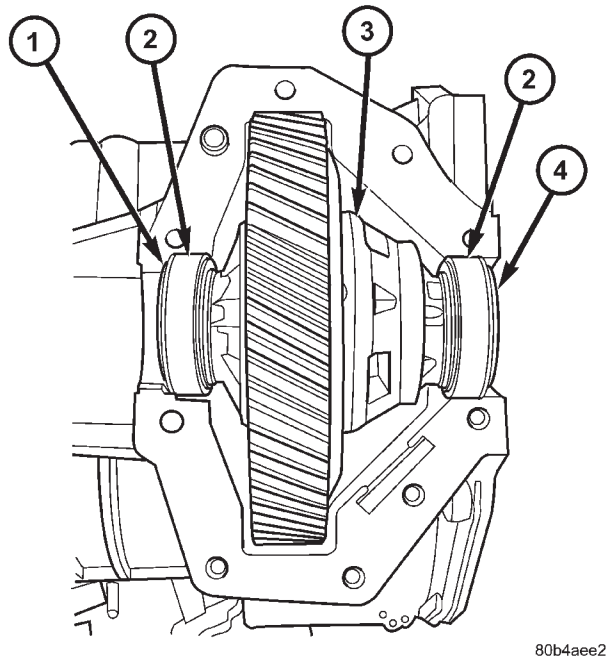

Fig. 68 Differential Shim/Slinger Orientation

1 - SLINGER
2 - BEARING RACE
3 - DIFFERENTIAL ASSEMBLY
4 - SHIM (SELECT)

housing to differential cover and case and torque bolts to 28 N·m (250 in. lbs.) (Fig. 69).

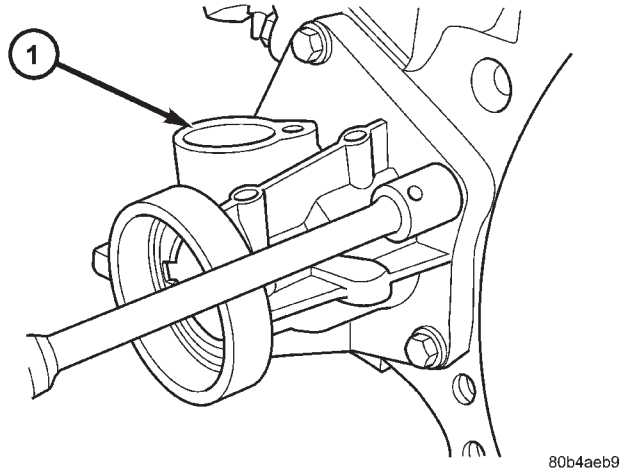

Fig. 69 Extension Housing-to-Case Bolts

1 - EXTENSION HOUSING

T850 MANUAL TRANSAXLE (Continued)

(29) Install both axle output shaft seals using driver handle C-4171 and installer 8473 (Fig. 70) (Fig. 71).

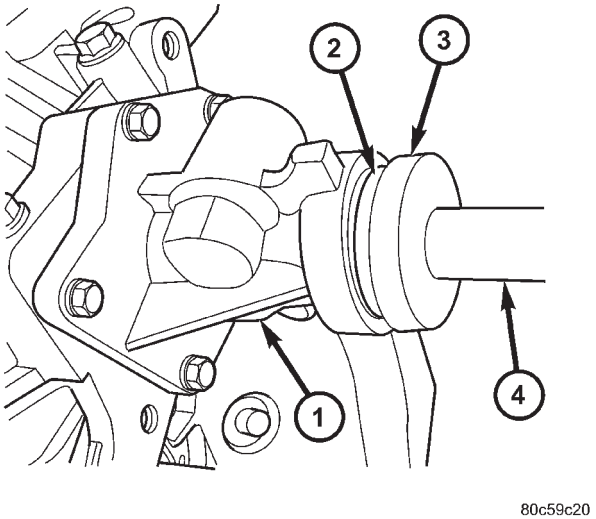

Fig. 70 Axle Seal Installation (Extension Housing Side)

1 - EXTENSION HOUSING
2 - SEAL
3 - INSTALLER 8476
4 - DRIVER HANDLE C-4171

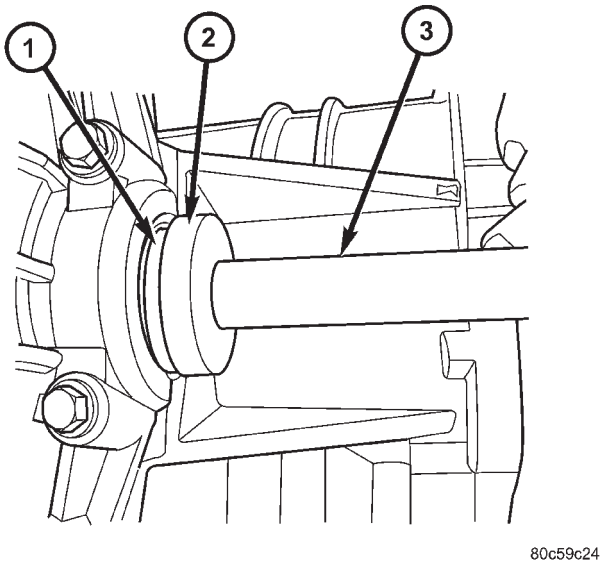

Fig. 71 Axle Seal Installation—Typical

1 - SEAL
2 - INSTALLER 8476
3 - DRIVER HANDLE C-4171

(30) Apply a 1 mm (0.04 in.) bead of Mopar® Gasket Maker to shift cover assembly. Place shift cover and transaxle geartrain into neutral and install shift cover (Fig. 72) and torque bolts to 28 N·m (250 in. lbs.).

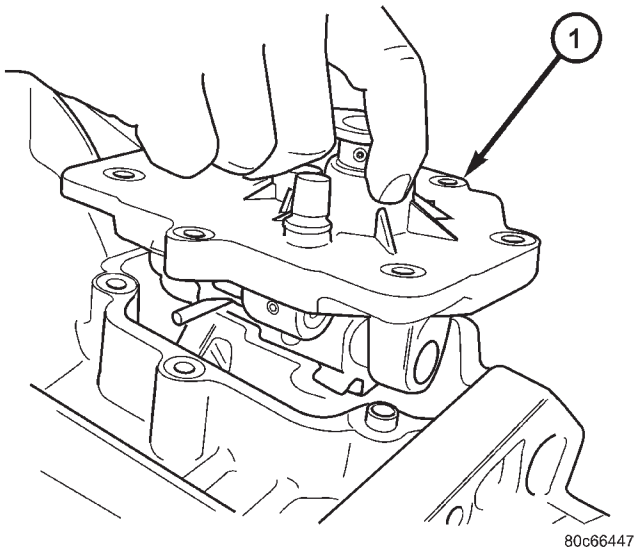

Fig. 72 Shift Cover Removal/Installation

1 - SHIFT COVER ASSEMBLY

(31) Install input shaft bearing retainer (Fig. 73). Torque bolts to 12 N·m (105 in. lbs.).

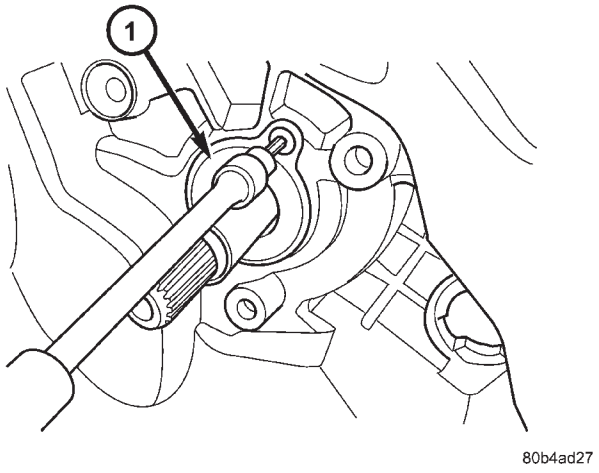

Fig. 73 Input Bearing Retainer

1 - INPUT BEARING RETAINER

T850 MANUAL TRANSAXLE (Continued)

(32) If previously removed, install clutch release lever pivot ball(s) using slide hammer C-3752 and remover/installer 6891 (Fig. 74) (Fig. 75).

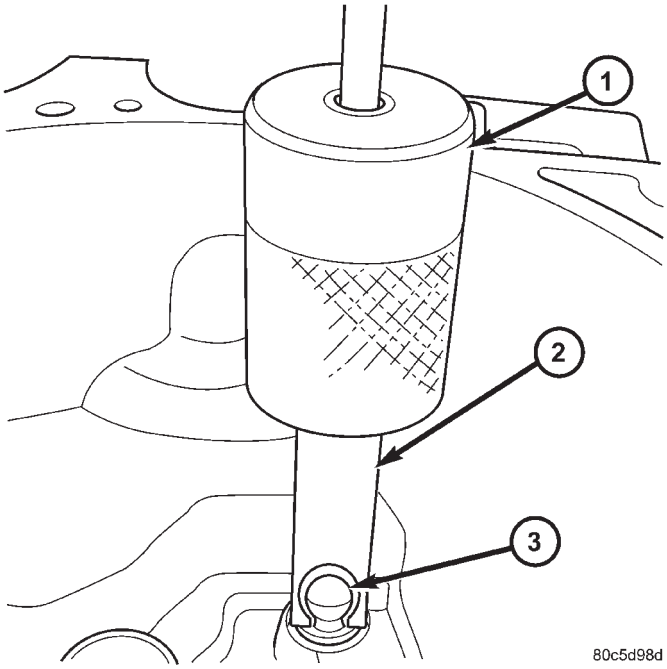

Fig. 74 Pivot Ball Removal/Installation

1 - C-3752 SLIDE HAMMER
2 - REMOVER/INSTALLER 6891
3 - PIVOT BALL

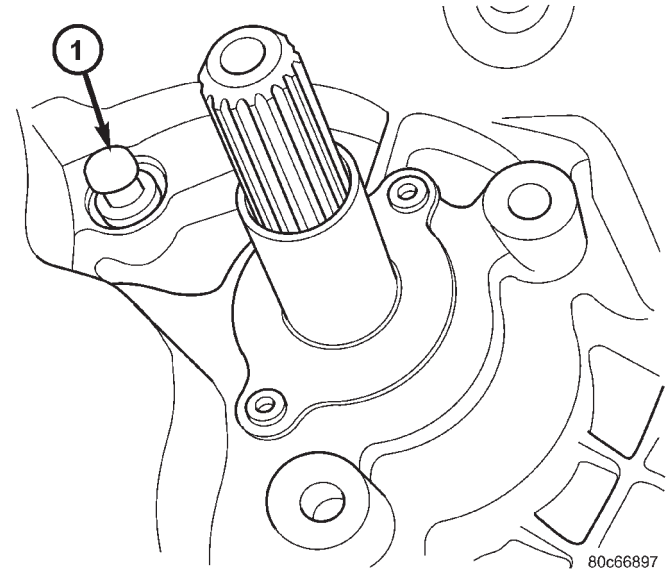

Fig. 75 Pivot Ball Position

1 - PIVOT BALL (1)

(33) Install clutch release bearing to lever. Apply grease to interface (contact) points. Make sure release bearing retainers engage lever pocket as shown in (Fig. 76).

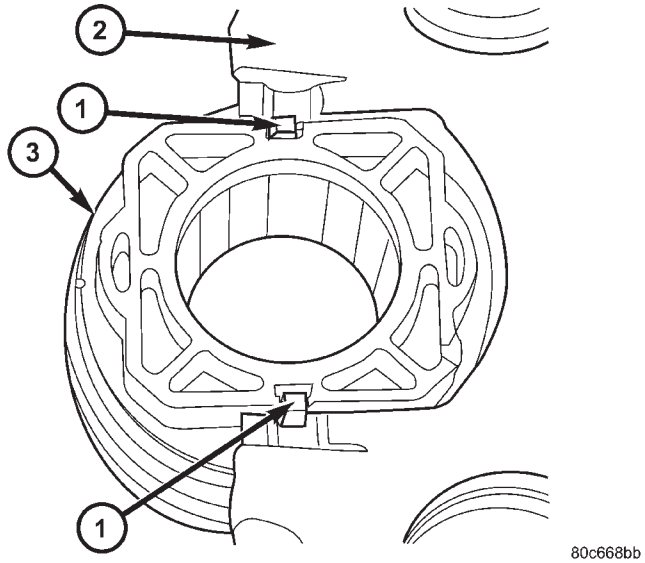

Fig. 76 Release Bearing-to-Lever

1 - RETAINER (2)
2 - RELEASE LEVER
3 - RELEASE BEARING

(34) Apply grease to pivot ball(s), and on release lever at slave cylinder contact point.

(35) Install clutch release bearing/lever assembly into position by sliding bearing onto input bearing retainer, and using moderate hand pressure to seat release lever to pivot ball (Fig. 77). A “pop” sound should be heard. Verify proper engagement by lightly pulling outward on lever at pivot ball location, and then actuating lever and bearing to ensure proper operation.

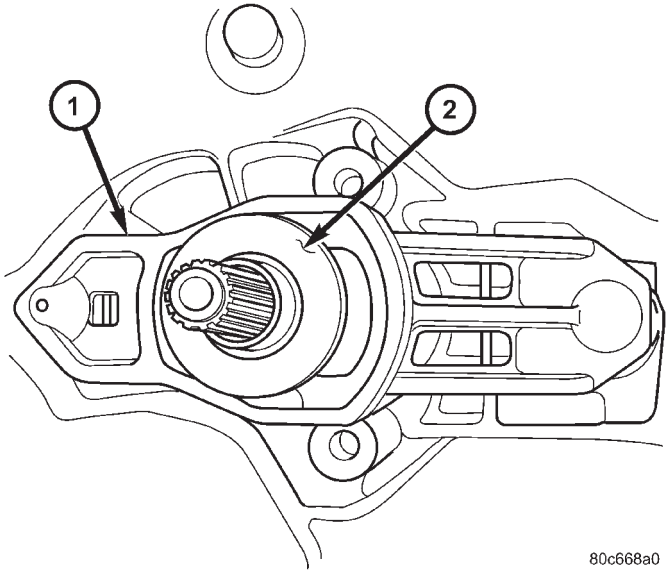

Fig. 77 Release Bearing and Lever

1 - RELEASE LEVER
2 - RELEASE BEARING

INSTALLATION

INSTALLATION - 2.4L GAS

(1) Install modular clutch assembly to transaxle. Assemble transaxle to engine.

(2) Install and torque transaxle-to-engine bolts to 95 N·m (70 ft. lbs.).

(3) Raise transaxle/engine assembly into position and install upper mount through-bolt. Torque through-bolt to 75 N·m (55 ft. lbs.).

(4) Remove screw jack.

(5) Install and torque modular clutch assembly-to-drive plate bolts to 88 N·m (65 ft. lbs.)

(6) Install structural collar.

(7) Connect back-up lamp switch connector.

(8) Install starter motor into position (Fig. 78). Install and torque bolts to 54 N·m (40 ft. lbs.).

(9) Install engine front mount bracket. Install and torque bracket-to-transaxle bolts to 102 N·m (75 ft. lbs.). Install and torque bracket-to-engine bolts to 68 N·m (50 ft. lbs.). Torque through-bolt and nut to 68 N·m (50 ft. lbs.).

(10) Install clutch slave cylinder into position, noting orientation of different sized lugs (Fig. 79). While depressing inward, rotate slave cylinder clockwise 60®° into position until nylon locating tab rests within transaxle case cutout, and hydraulic tube is vertical. Connect “quick-connect” connection until an audible “click” is heard. Verify connection by pulling outward on connection.

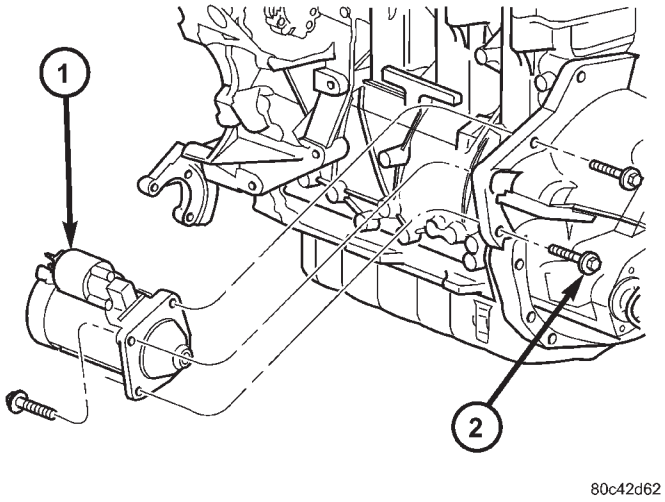

Fig. 78 Starter Motor Removal/Installation

1 - STARTER MOTOR
2 - BOLT (3)

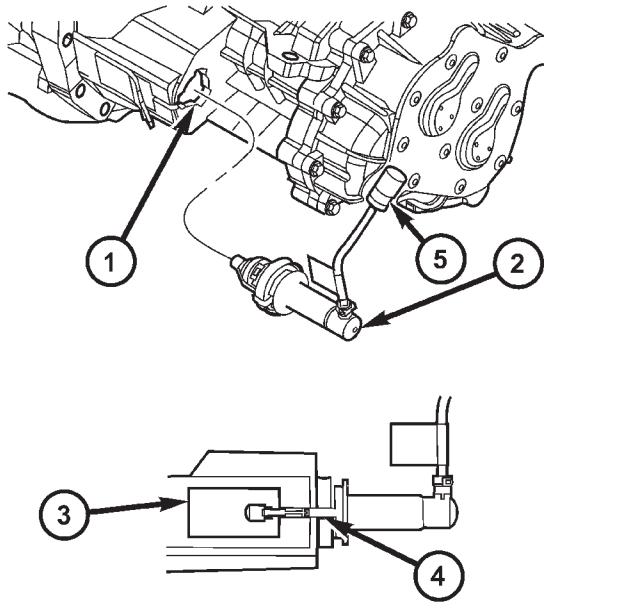

Fig. 79 Slave Cylinder Removal/Installation

1 - MOUNTING HOLE
2 - SLAVE CYLINDER
3 - ACCESS HOLE
4 - NYLON ANTI-ROTATION TAB
5 - QUICK CONNECT

T850 MANUAL TRANSAXLE (Continued)

(11) Install halfshafts and front wheel/tire assemblies. (Refer to 3 - DIFFERENTIAL & DRIVELINE/ HALF SHAFT - INSTALLATION)

(12) Lower vehicle.

(13) Install right mount bracket to transaxle (Fig. 80).

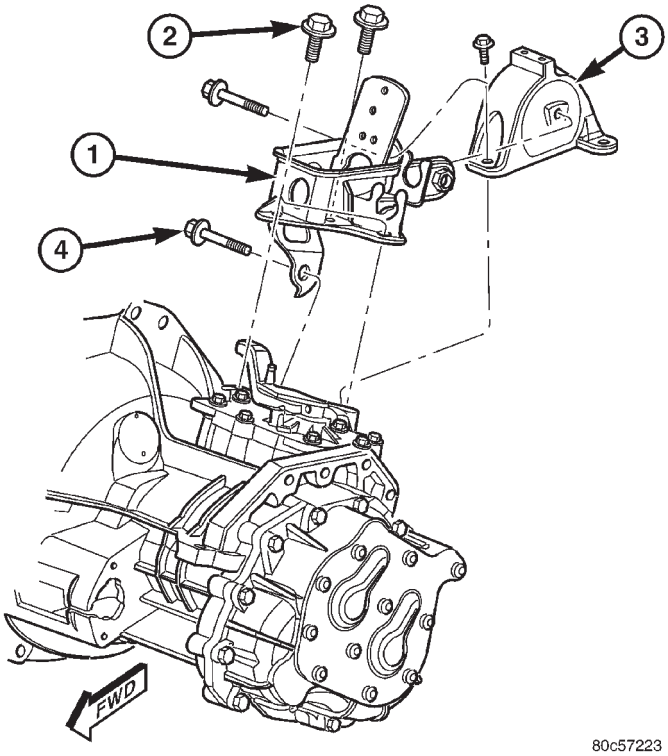

Fig. 80 Transaxle Right Mount and Bracket

1 - MOUNT BRACKET
2 - BOLT (3)
3 - MOUNT
4 - BOLT (1)

(14) Connect gearshift cables to shift levers/cover assembly (Fig. 81). Install cables into position at mount bracket and secure with retaining clips.

(15) Connect battery cables.

(16) Check transaxle fluid and engine coolant levels. Adjust if necessary. (Refer to 21 - TRANSMISSION/TRANSAXLE/MANUAL/FLUID - STANDARD PROCEDURE)

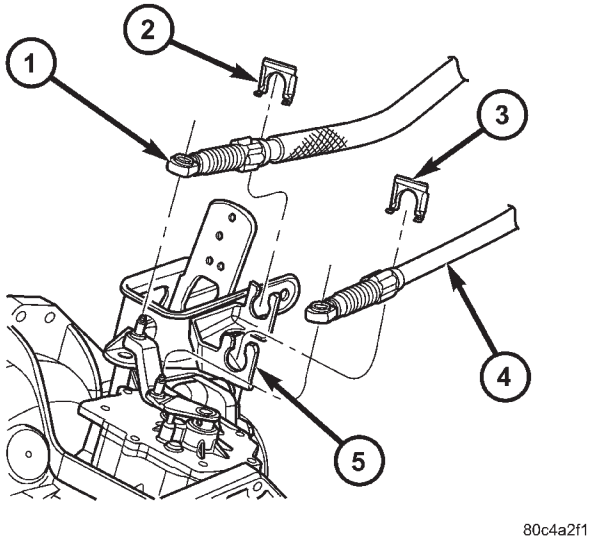

Fig. 81 Gearshift Cables at Transaxle

1 - SELECTOR CABLE
2 - CABLE RETAINER
3 - CABLE RETAINER
4 - CROSSOVER CABLE
5 - MOUNT BRACKET

T850 MANUAL TRANSAXLE (Continued)

INSTALLATION - 2.5L TD

(1) Assemble transaxle to engine, while aligning transaxle input shaft to clutch disc splines.

(2) Install and torque transaxle-to-engine bolts to 95 N·m (70 ft. lbs.) (Fig. 82).

(3) Install transaxle upper mount (Fig. 83). Install and torque four (4) mount-to-transaxle bolts to 54 N·m (40 ft. lbs.).

(4) Raise transaxle/engine assembly into position and install upper mount through-bolt. Torque through-bolt to 75 N·m (55 ft. lbs.).

(5) Remove screw jack.

(6) Connect back-up lamp switch connector.

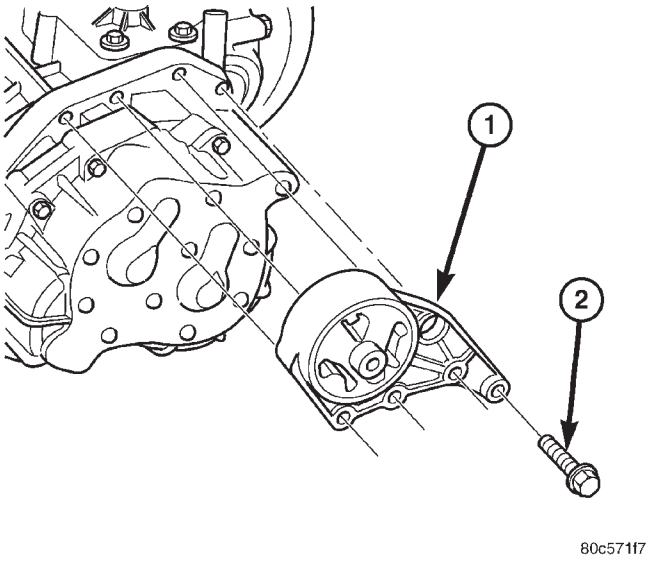

Fig. 83 Transaxle Upper Mount

1 - MOUNT
2 - BOLT (4)

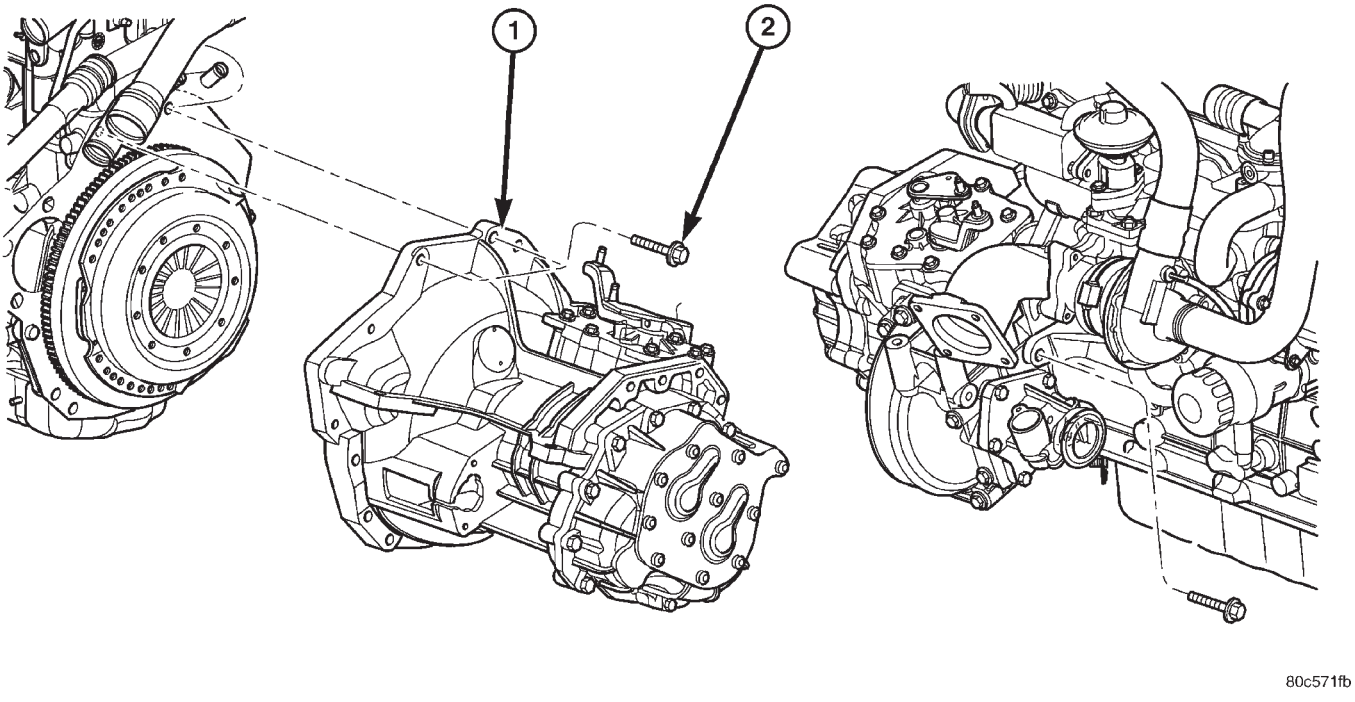

Fig. 82 Transaxle Removal/Installation

1 - TRANSAXLE
2 - BOLT

T850 MANUAL TRANSAXLE (Continued)

(7) Install starter motor into position (Fig. 84). Install and torque bolts to 54 N·m (40 ft. lbs.).

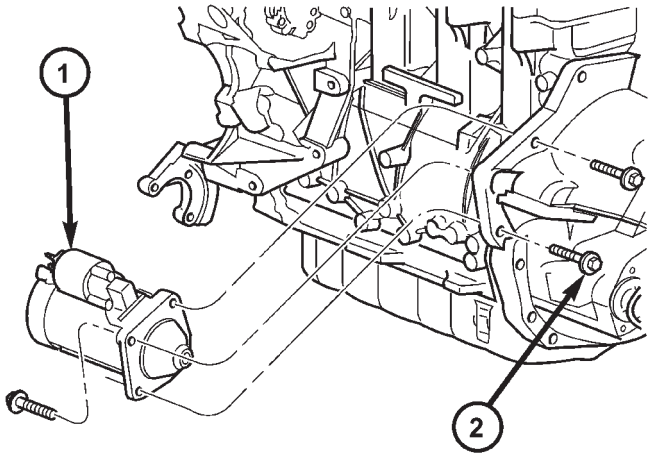

80c42d62

Fig. 84 Starter Motor Removal/Installation

1 - STARTER MOTOR
2 - BOLT (3)

(8) Install engine front mount bracket. Install and torque bracket-to-transaxle bolts to 102 N·m (75 ft. lbs.). Install and torque bracket-to-engine bolts to 68 N·m (50 ft. lbs.). Torque through-bolt and nut to 68 N·m (50 ft. lbs.).

(9) Install clutch slave cylinder into position, noting orientation of different sized lugs (Fig. 85). While depressing inward, rotate slave cylinder clockwise 60° into position until nylon locating tab rests within transaxle case cutout, and hydraulic tube is vertical. Connect “quick-connect” connection until an audible “click” is heard. Verify connection by pulling outward on connection.

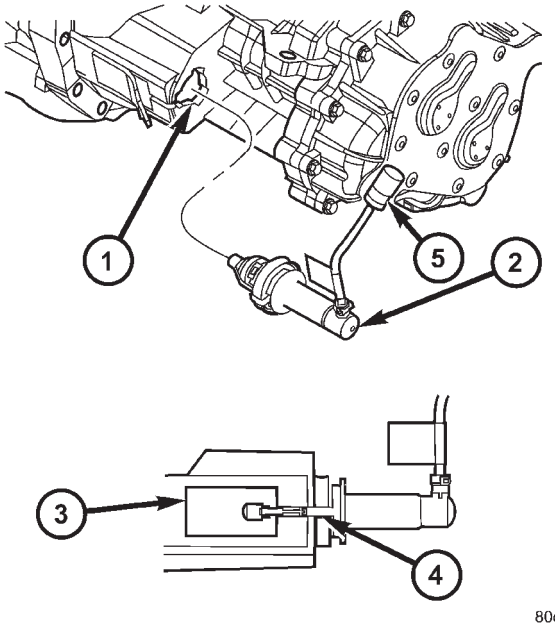

80c58367

Fig. 85 Slave Cylinder Removal/Installation

1 - MOUNTING HOLE
2 - SLAVE CYLINDER
3 - ACCESS HOLE
4 - NYLON ANTI-ROTATION TAB
5 - QUICK CONNECT

(10) Install underbody splash panel.

(11) Install halfshafts and front wheel/tire assemblies. (Refer to 3 - DIFFERENTIAL & DRIVELINE/ HALF SHAFT - INSTALLATION)

(12) Lower vehicle.

(13) Install right mount bracket to transaxle (Fig. 86).

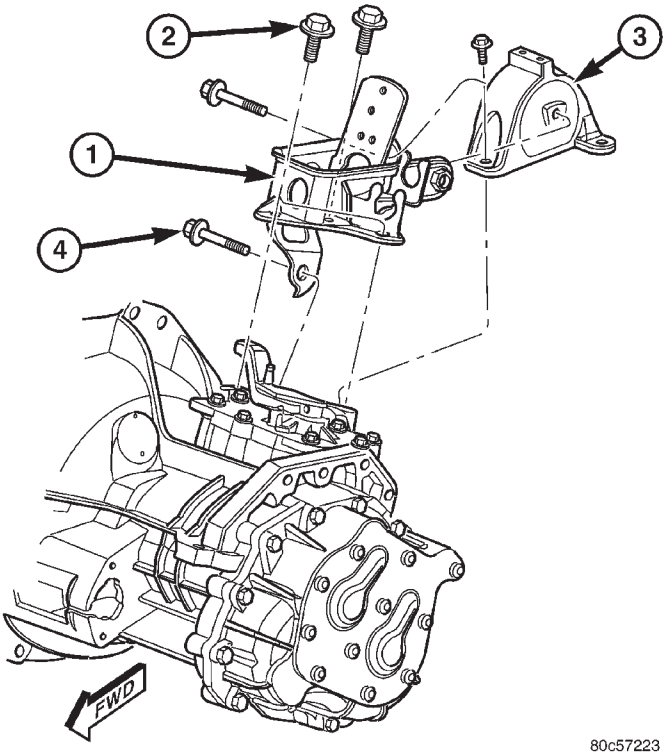

80c57223

Fig. 86 Transaxle Right Mount and Bracket

1 - MOUNT BRACKET
2 - BOLT (3)
3 - MOUNT
4 - BOLT (1)

T850 MANUAL TRANSAXLE (Continued)

(14) Connect gearshift cables to shift levers/cover assembly (Fig. 87). Install cables into position at mount bracket and secure with retaining clips.

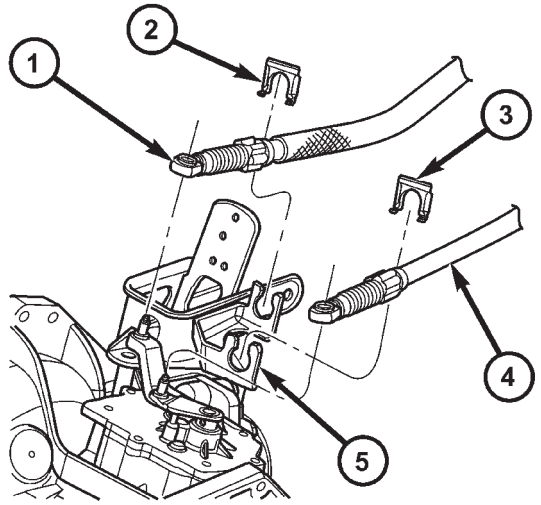

80c4a2f1

Fig. 87 Gearshift Cables at Transaxle

1 - SELECTOR CABLE
2 - CABLE RETAINER
3 - CABLE RETAINER
4 - CROSSOVER CABLE
5 - MOUNT BRACKET

(15) Install coolant recovery bottle bracket (Fig. 88).

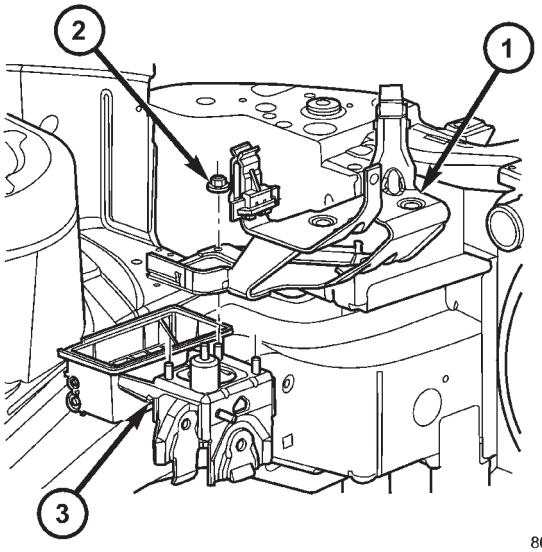

80c4a2ed

Fig. 88 Coolant Recovery Bottle Bracket

1 - COOLANT RECOVERY BOTTLE BRACKET
2 - NUT
3 - MOUNT BRACKET

(16) Install coolant recovery bottle to bracket.

(17) Connect battery temperature sensor and install battery tray (Fig. 89).

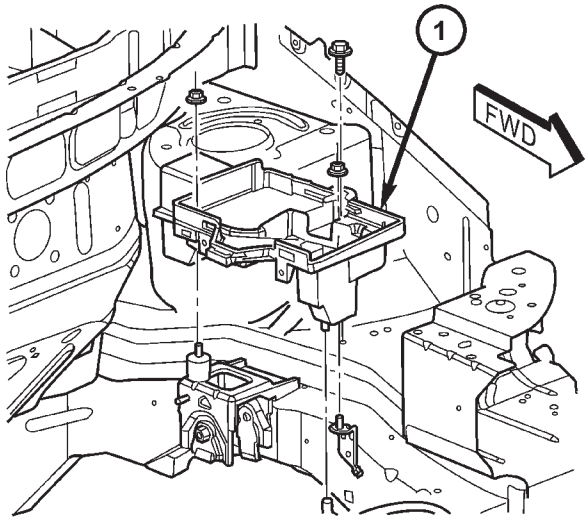

80c4a2f5

Fig. 89 Battery Tray

1 - BATTERY TRAY

(18) Install battery, hold-down clamp and nut (Fig. 90).

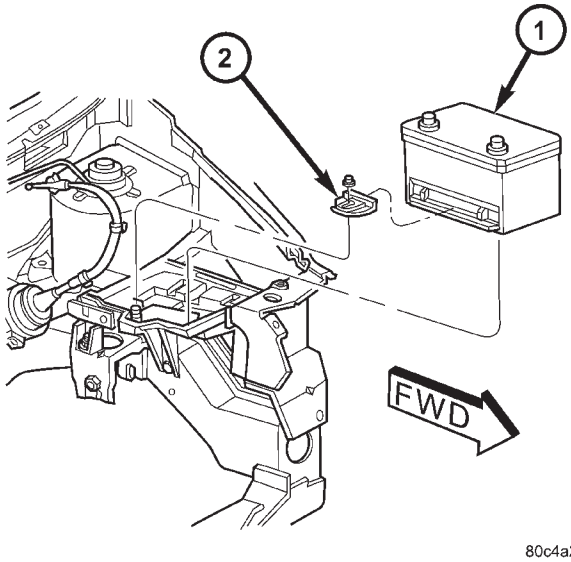

80c4a2e9

Fig. 90 Battery and Hold-Down Clamp

1 - BATTERY
2 - HOLD-DOWN CLAMP

T850 MANUAL TRANSAXLE (Continued)

(19) Install battery thermal shield and clutch cable eyelet (Fig. 91).

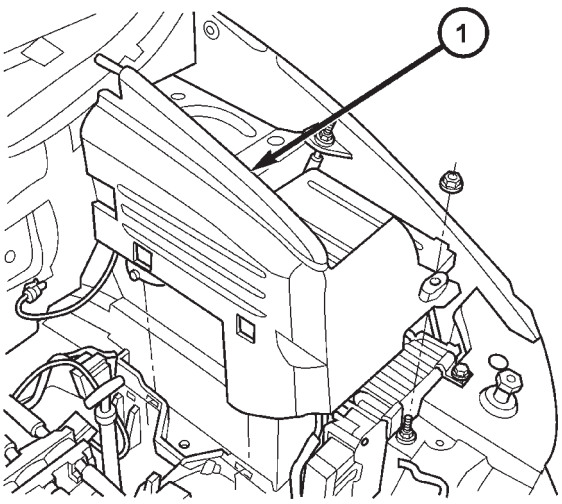

Fig. 91 Battery Thermal Shield

1 - BATTERY THERMAL SHIELD

(20) Connect battery cables.

(21) Check transaxle fluid and engine coolant levels. Adjust if necessary. (Refer to 21 - TRANSMISSION/TRANSAXLE/MANUAL/FLUID - STANDARD PROCEDURE)

SPECIFICATIONS - T850 MANUAL TRANSAXLE

GENERAL SPECIFICATIONS

DESCRIPTION	SPECIFICATION
Transaxle Type	Constant-mesh, fully synchronized 5-speed with integral differential
Lubrication Method	Splash oil collected in case passage and oil trough and distributed to mainshafts via gravity
Fluid Type	ATF+4 (Automatic Transmission Fluid—Type 9602)

GEAR RATIOS

GEAR	RATIO (2.4L Gas)	RATIO (2.5L TD)
1st	3.65	3.46
2nd	2.07	2.05
3rd	1.39	1.37
4th	1.03	0.97
5th	0.83	0.76
Reverse	3.47	3.47
Final Drive Ratio	3.77	3.53
Overall Top Gear	3.12	2.66

T850 MANUAL TRANSAXLE (Continued)

INPUT SHAFT

BLOCKER RING WEAR GAP	
3rd Gear	0.856-1.539 mm (0.0338-0.0606 in.)
4th Gear	0.762-1.631 mm (0.030-0.064 in.)
GEAR END PLAY	
3rd Gear	0.099-0.505 mm (0.004-0.020 in.)
4th Gear	0.048-0.457 mm (0.002-0.018 in.)

INTERMEDIATE SHAFT

BLOCKER RING WEAR GAP	
1st Gear	0.66-1.84 mm (0.026-0.072 in.)
2nd Gear	0.66-1.84 mm (0.026-0.072 in.)
5th Gear	0.86-1.54 mm (0.034-0.061 in.)
Reverse	0.77-1.63 mm (0.030-0.064 in.)
GEAR END PLAY	
1st Gear	0.091-0.828 mm (0.004-0.033 in.)
2nd Gear	0.051-0.787 mm (0.002-0.031 in.)
5th Gear	0.102-0.762 mm (0.004-0.030 in.)
Reverse	0.066-0.805 mm (0.003-0.0317 in.)

DIFFERENTIAL

DESCRIPTION	METRIC	STANDARD
Differential Turning Torque	2.3-3.4 N·m	20-30 in. lbs.
Side Gear End Play (each side)	0.025-0.152 mm	0.001-0.006 in.

TORQUE SPECIFICATIONS

DESCRIPTION	N·m	Ft. Lbs.	In. Lbs.
Bolt, Differential Cover-to-Case	54	40	—
Bolt, End Cover-to-Case	28	—	250
Bolt, End Cover Plate-to-Cover	28	—	250
Bolt, Extension Housing-to-Case	28	—	250
Bolt, Reverse Idler Shaft-to-Case	54	40	—
Bolt, Ring Gear-to-Differential Case	95	70	—
Bolt, Shift Cover-to-Case	28	—	250
Nut, 5th Gear-to-Input Shaft	200	148	—
Plug, Drain	23	17	—
Screw, Input Bearing Retainer	12	—	105
Switch, Back-Up Lamp	23	17	—
Vent	7	—	60

T850 MANUAL TRANSAXLE (Continued)

SPECIAL TOOLS - T850 TRANSAXLE

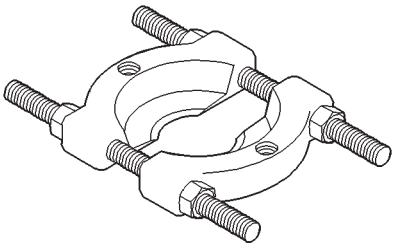

Bearing Splitter, P-334

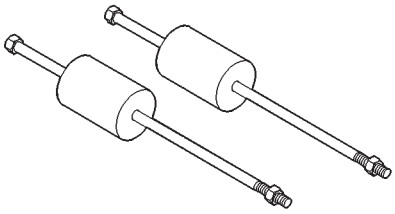

Slide Hammer, C-3752

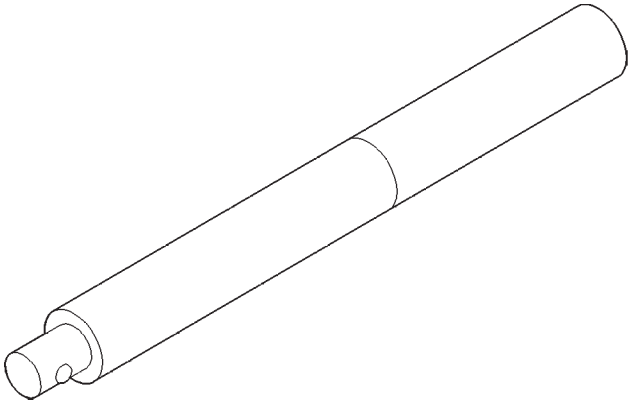

Universal Handle, C-4171

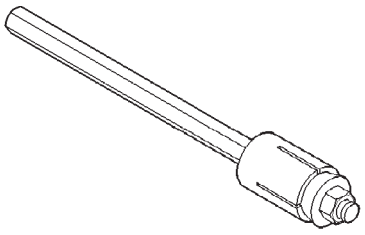

Torque Tool, C-4995

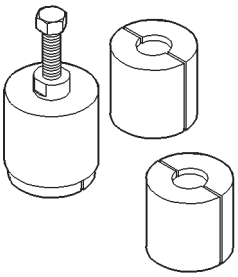

Puller Set, 5048

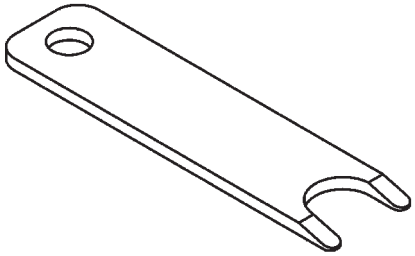

Disconnect Tool, 6638A

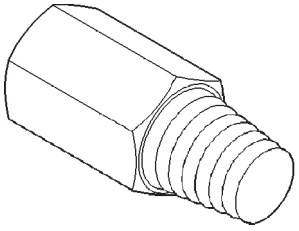

Remover, 6786

T850 MANUAL TRANSAXLE (Continued)

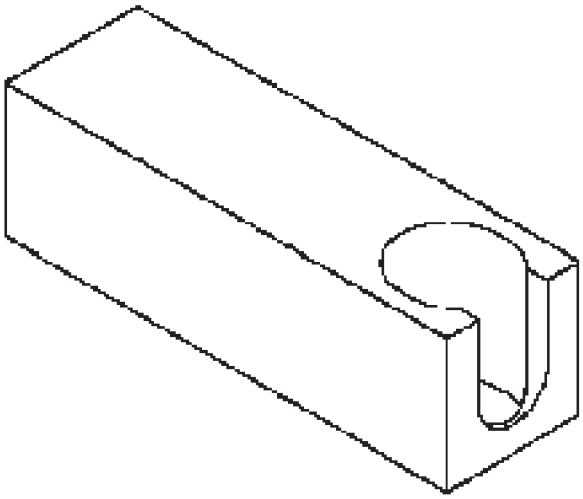

Remover/Installer, 6891

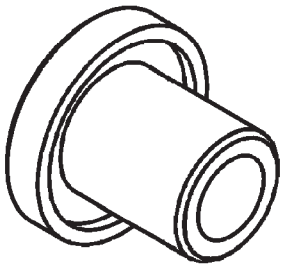

Bearing Installer, 8473

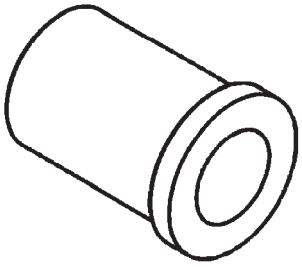

Remover/Installer, 8474

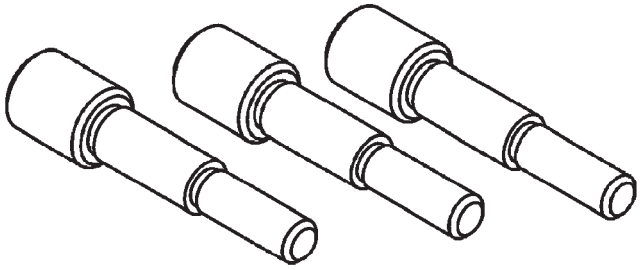

Alignment Pins, 8470

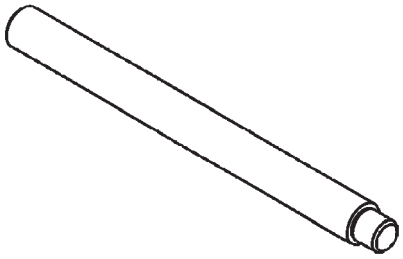

Installer, 8475

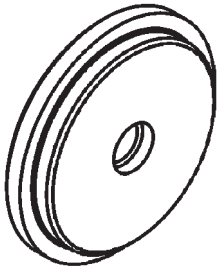

Installer, 8471

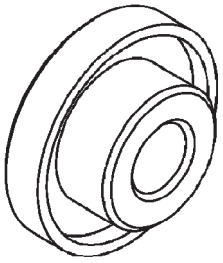

Installer, 8476

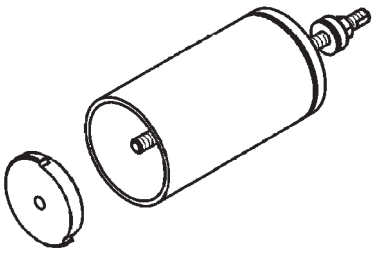

Race Remover, 8472

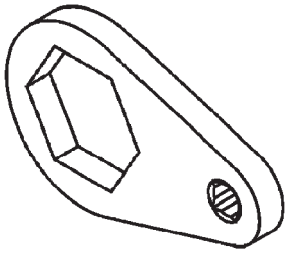

Wrench, 8478

T850 MANUAL TRANSAXLE (Continued)

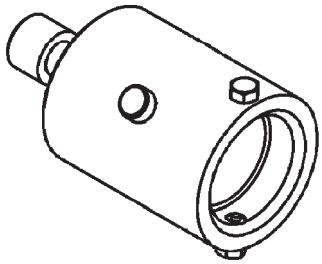

Stake Tool, 8479

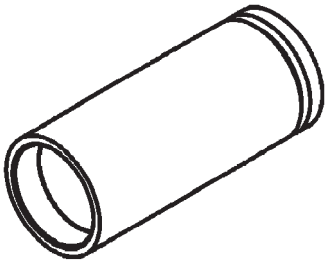

Installer, 8481

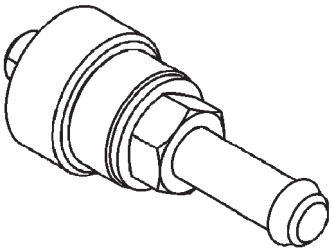

Bearing Installer, 8482

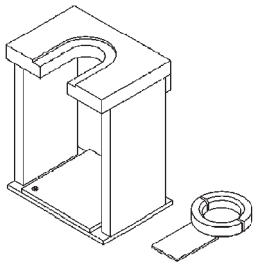

Fixture, 8483

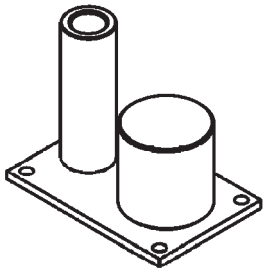

Fixture, 8487

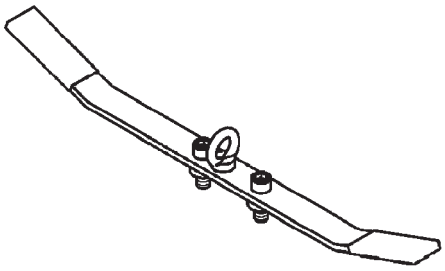

Lifting Bar, 8489

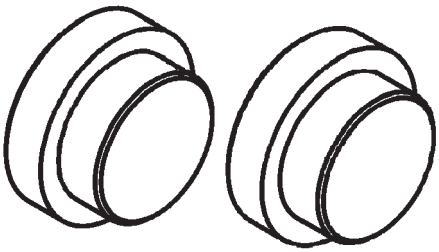

Thrust Buttons, 8491

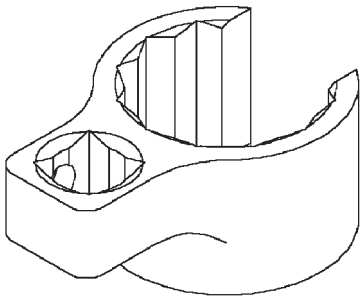

Wrench, 8827

AXLE SEALS

REMOVAL

(1) Raise vehicle on hoist.

(2) Remove one or both front halfshaft assemblies. (Refer to 3 - DIFFERENTIAL & DRIVELINE/HALF SHAFT - REMOVAL)

(3) Using a suitable screwdriver, remove one or both axle seals (Fig. 92).

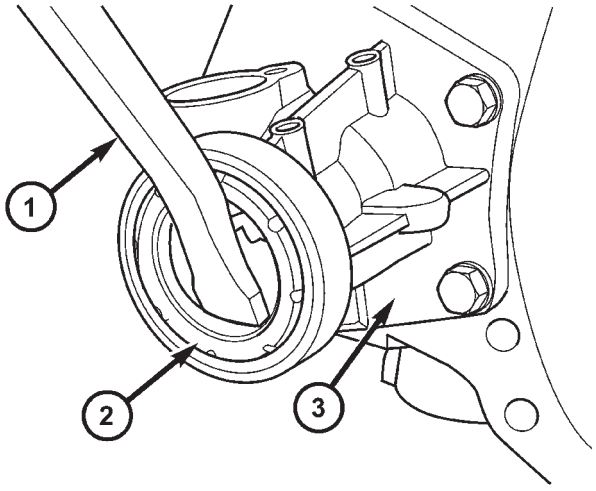

80c5f657

Fig. 92 Axle Seal Removal (Extension Housing Side Shown)

1 - SCREWDRIVER
2 - AXLE SEAL
3 - EXTENSION HOUSING

INSTALLATION

(1) Using driver handle C-4171 and installer 8476, install axle seals into position (Fig. 93) (Fig. 94).

(2) Install one or both front halfshaft assemblies. (Refer to 3 - DIFFERENTIAL & DRIVELINE/HALF SHAFT - INSTALLATION)

(3) Check transaxle fluid level and adjust if necessary. (Refer to 21 - TRANSMISSION/TRANSAXLE/ MANUAL/FLUID - STANDARD PROCEDURE)

(4) Lower vehicle.

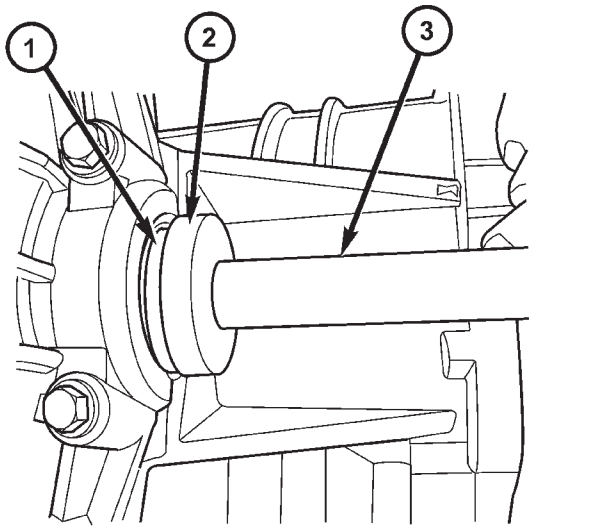

80c59c24

Fig. 93 Axle Seal Installation—Typical

1 - SEAL
2 - INSTALLER 8476
3 - DRIVER HANDLE C-4171

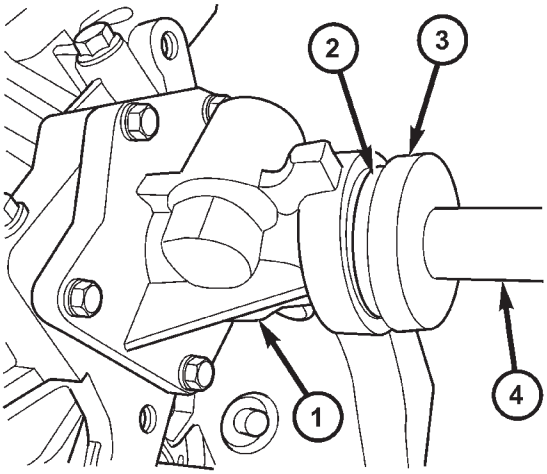

80c59c20

Fig. 94 Axle Seal Installation (Extension Housing Side)

1 - EXTENSION HOUSING
2 - SEAL
3 - INSTALLER 8476
4 - DRIVER HANDLE C-4171

BACK-UP LAMP SWITCH

REMOVAL

(1) Raise vehicle on hoist.
(2) Disconnect back-up lamp switch connector.
(3) Remove back-up lamp switch (Fig. 95).

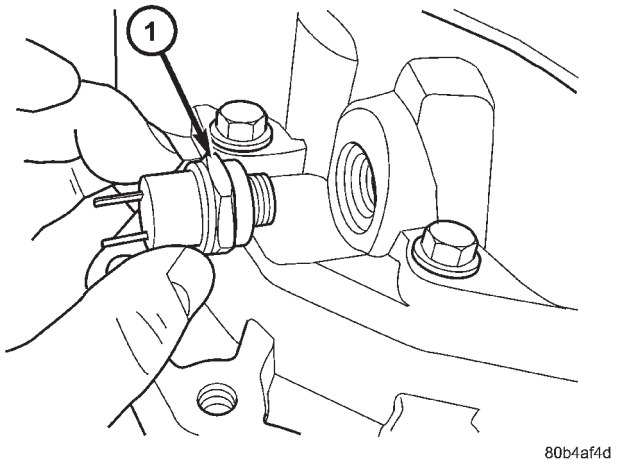

Fig. 95 Back-Up Lamp Switch

1 - BACK-UP LAMP SWITCH

INSTALLATION

(1) Install back-up lamp switch (Fig. 95) and torque to 23 N·m (17 ft. lbs.) using Tool 8827.
(2) Connect back-up lamp switch connector.
(3) Lower vehicle.

DIFFERENTIAL

DESCRIPTION

The T850 differential is a conventional open design. It consists of a ring gear and a two-piece differential case. The differential case contains the pinion and side gears, three floating pinion shafts, and a pinion shaft retaining ring (Fig. 96). The differential case is supported in the transaxle by tapered roller bearings.

OPERATION

The differential assembly is driven by the intermediate shaft via the ring gear. The ring gear drives the differential case, and the case drives the halfshafts through the differential gears. The differential pinion and side gears are supported in the case by pinion shafts and thrust washers. Differential pinion and side gears make it possible for front wheels to rotate at different speeds while cornering.

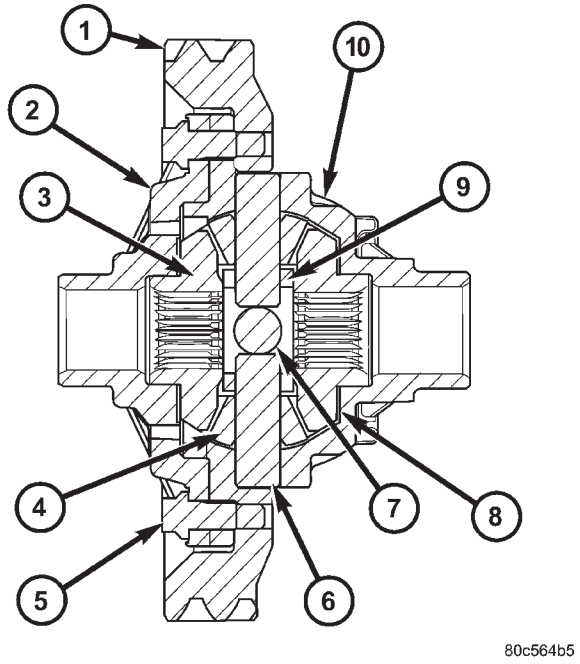

Fig. 96 Differential Assembly

1 - RING GEAR
2 - SUPPORT PLATE
3 - SIDE GEAR (2)
4 - PINION GEAR (4)
5 - BOLT (12)
6 - PINION SHAFT (2-SHORT)
7 - PINION SHAFT (1-LONG)
8 - THRUST WASHER (2)
9 - RETAINING RING
10 - DIFFERENTIAL CASE

DIFFERENTIAL (Continued)

DISASSEMBLY

(1) Remove differential side bearings:

(a) Install button 8491-1 to differential case (Fig. 97).

(b) Set up Tool 5048 (5048-1, -4, -6) as shown in (Fig. 98).

(c) Remove differential side bearing (Fig. 99). Same procedure/tools work for both sides.

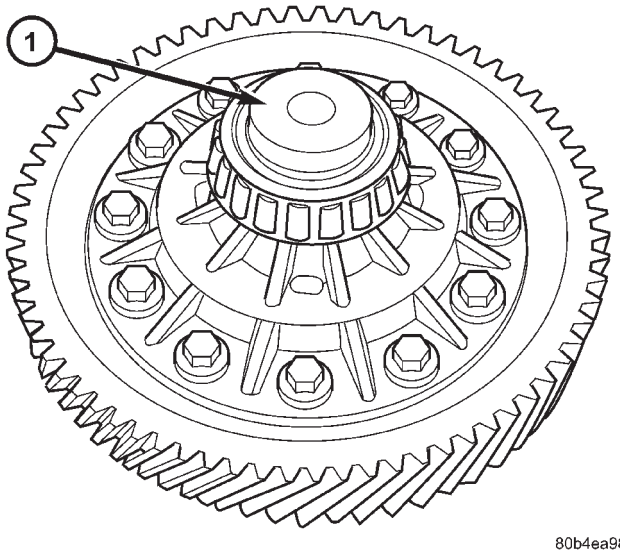

Fig. 97 Tool 8491

1 - TOOL 8491

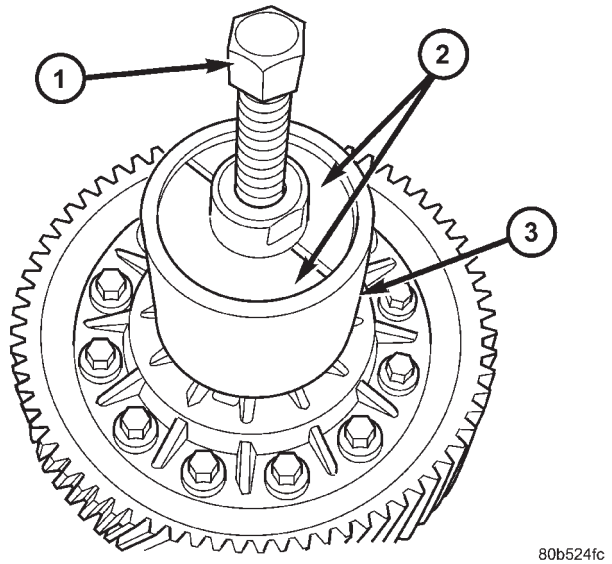

Fig. 98 Puller 5048

1 - 5048-1 FORCING SCREW
2 - 5048-4 COLLETS
3 - 5048-6 SLEEVE

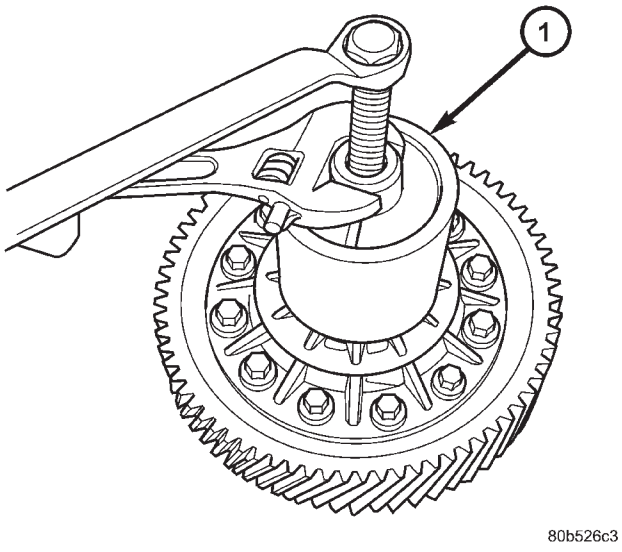

Fig. 99 Differential Side Bearing Removal

1 - TOOL 5048

(2) Remove ring gear-to-case bolts (Fig. 100) and remove ring gear.

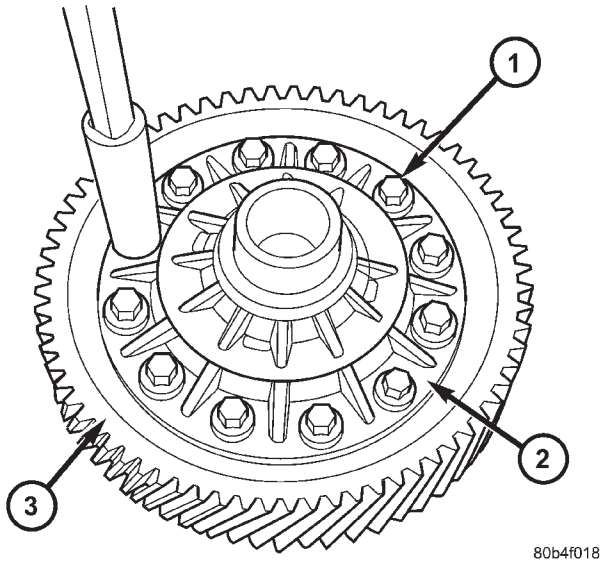

Fig. 100 Ring Gear-to-Differential Case Bolts

1 - BOLT (12)
2 - DIFFERENTIAL SUPPORT
3 - RING GEAR

DIFFERENTIAL (Continued)

(3) Using three ring gear bolts as forcing screws (Fig. 101), separate differential support from case (Fig. 102).

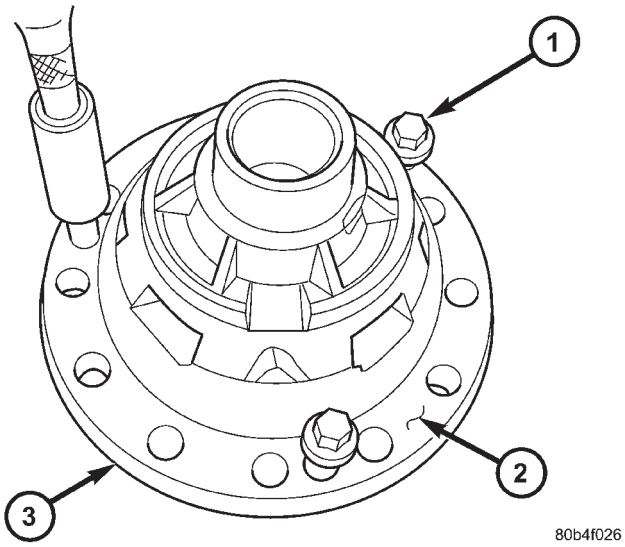

Fig. 101 Separate Differential Case Halves

1 - BOLT (3)
2 - DIFFERENTIAL CASE
3 - DIFFERENTIAL SUPPORT

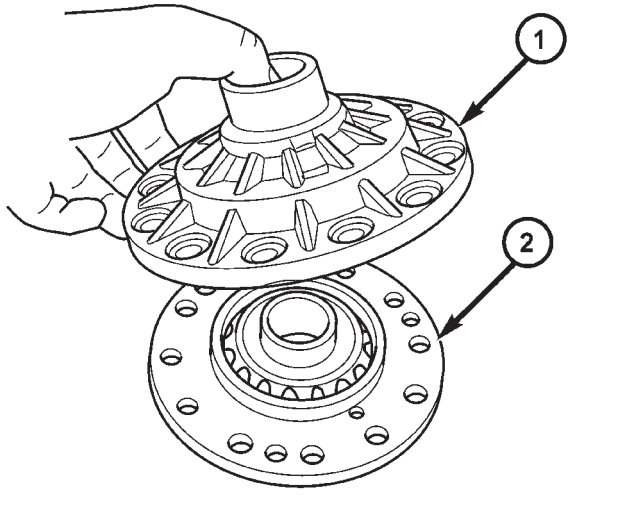

Fig. 102 Differential Support Plate

1 - DIFFERENTIAL SUPPORT PLATE
2 - DIFFERENTIAL CASE

(4) Remove side gear thrust washer (Fig. 103).

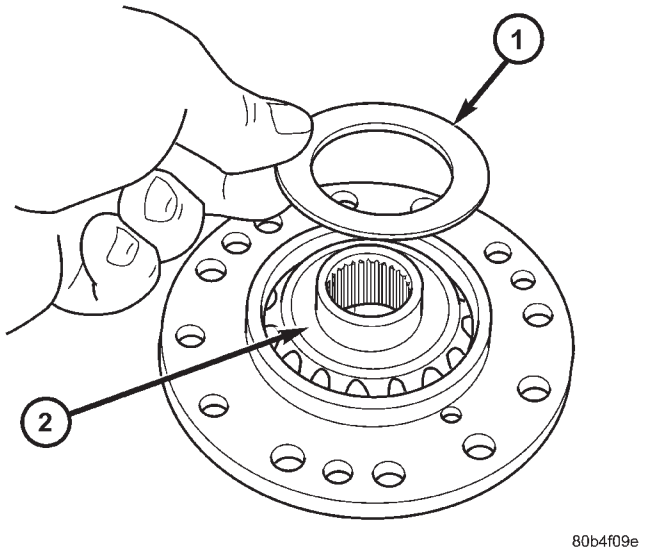

Fig. 103 Side Gear Thrust Washer

1 - SIDE GEAR THRUST WASHER
2 - DIFFERENTIAL SIDE GEAR

(5) Remove side gear (Fig. 104).

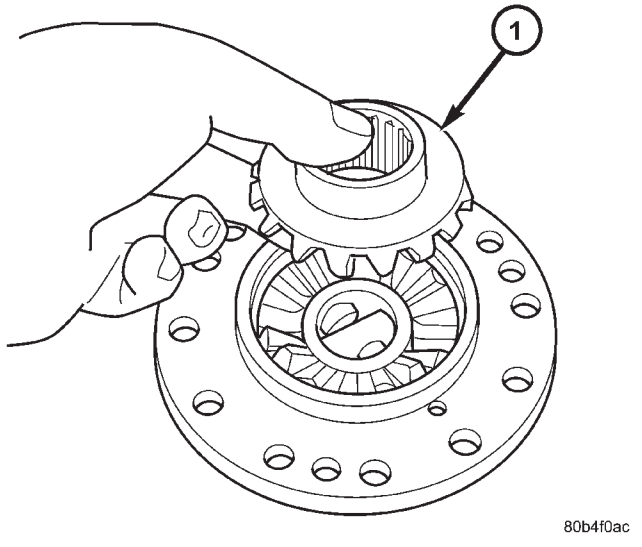

Fig. 104 Differential Side Gear

1 - DIFFERENTIAL SIDE GEAR

DIFFERENTIAL (Continued)

(6) Remove long pinion shaft (Fig. 105).

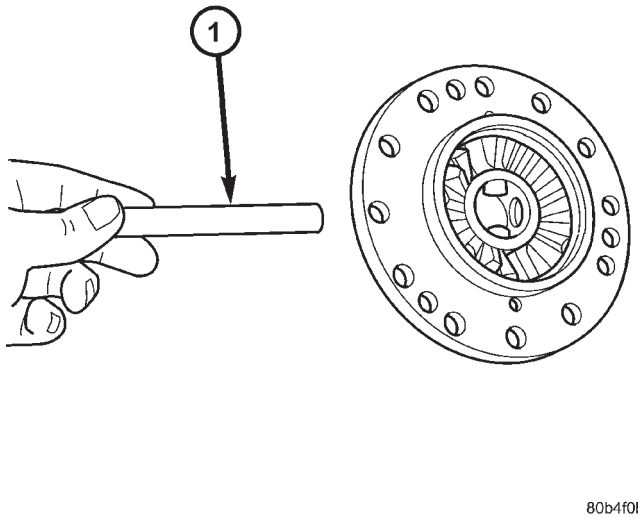

Fig. 105 Long Pinion Shaft

1 - PINION SHAFT (LONG)

(7) Remove both short pinion shafts (Fig. 106).

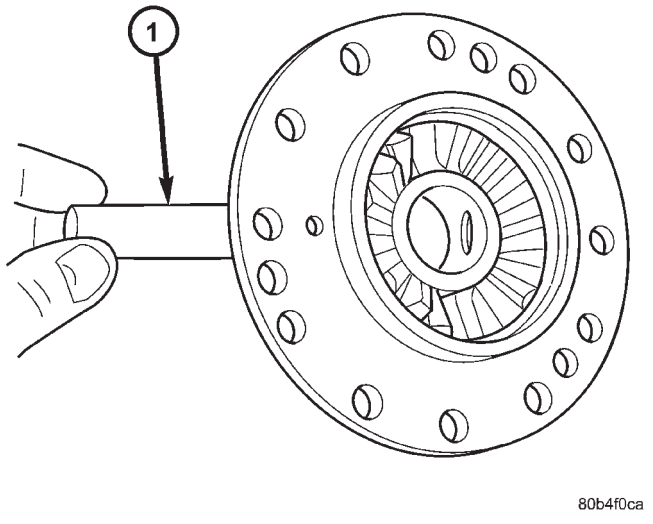

Fig. 106 Short Pinion Shaft (2)

1 - PINION SHAFT (SHORT (2))

(8) Remove pinion shaft retainer (Fig. 107).

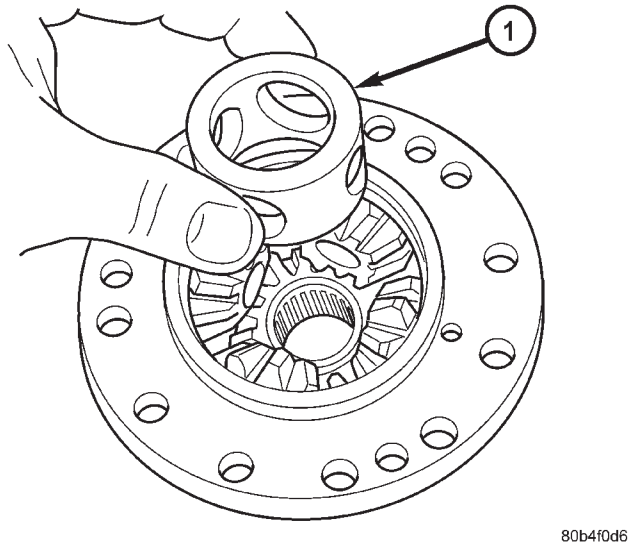

Fig. 107 Pinion Shaft Retaining Ring

1 - RETAINING RING

(9) Remove four pinion gears and thrust washers (Fig. 108).

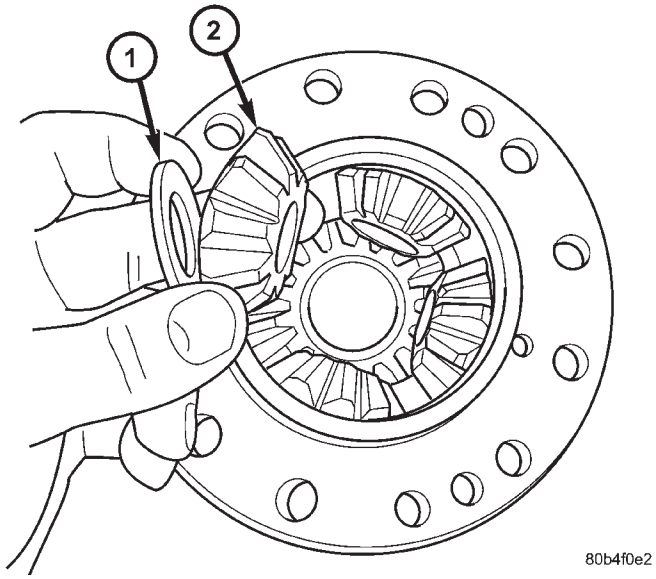

Fig. 108 Pinion Gear and Thrust Washer

1 - THRUST WASHER (4)
2 - PINION GEAR (4)

DIFFERENTIAL (Continued)

(10) Remove side gear (Fig. 109).

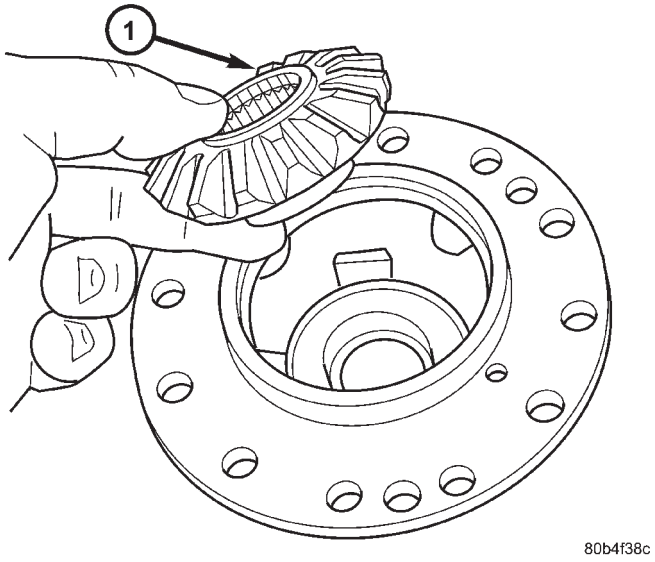

Fig. 109 Differential Side Gear

1 - DIFFERENTIAL SIDE GEAR

(11) Remove side gear thrust washer (Fig. 110).

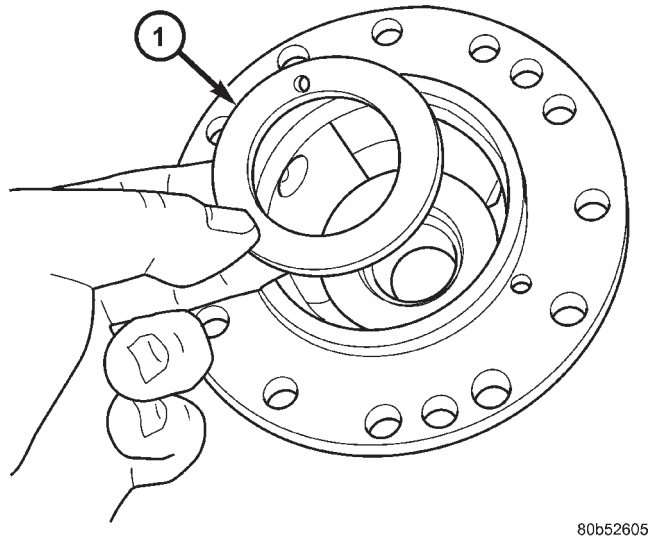

Fig. 110 Side Gear Thrust Washer

1 - SIDE GEAR THRUST WASHER

ASSEMBLY

(1) Install side gear thrust washer (Fig. 111).

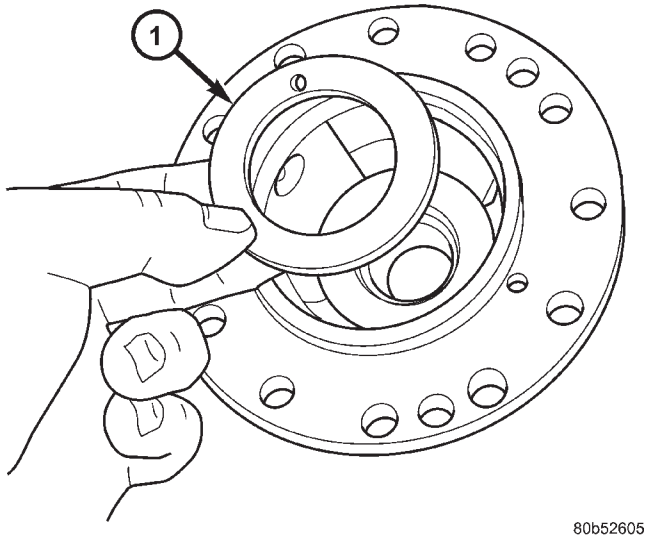

Fig. 111 Side Gear Thrust Washer

1 - SIDE GEAR THRUST WASHER

(2) Install differential side gear (Fig. 112).

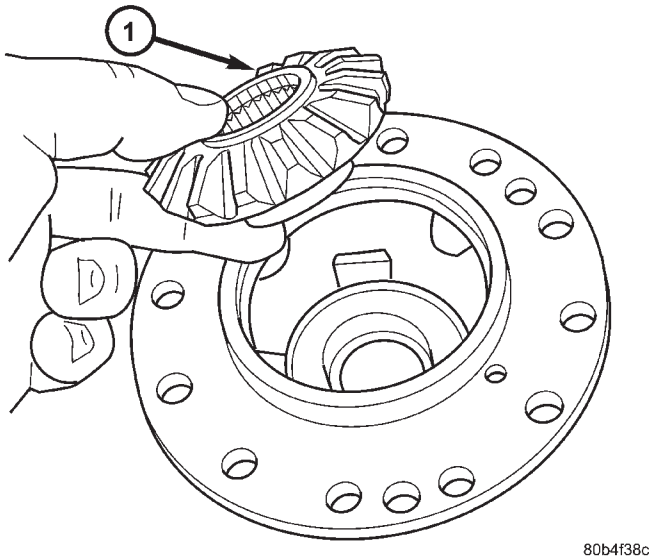

Fig. 112 Differential Side Gear

1 - DIFFERENTIAL SIDE GEAR

DIFFERENTIAL (Continued)

(3) Install four (4) pinion gears and thrust washers (Fig. 113).

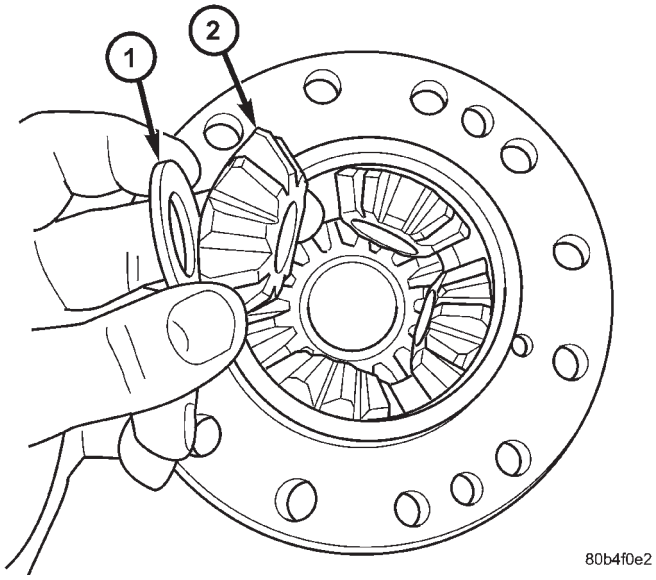

Fig. 113 Pinion Gear and Thrust Washer

1 - THRUST WASHER (4)
2 - PINION GEAR (4)

(4) Install pinion shaft retaining ring (Fig. 114).

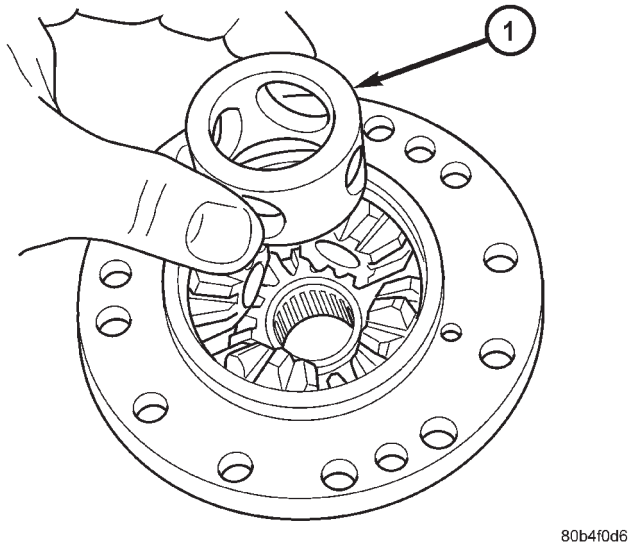

Fig. 114 Pinion Shaft Retaining Ring

1 - RETAINING RING

(5) Install two (2) short pinion shafts (Fig. 115).

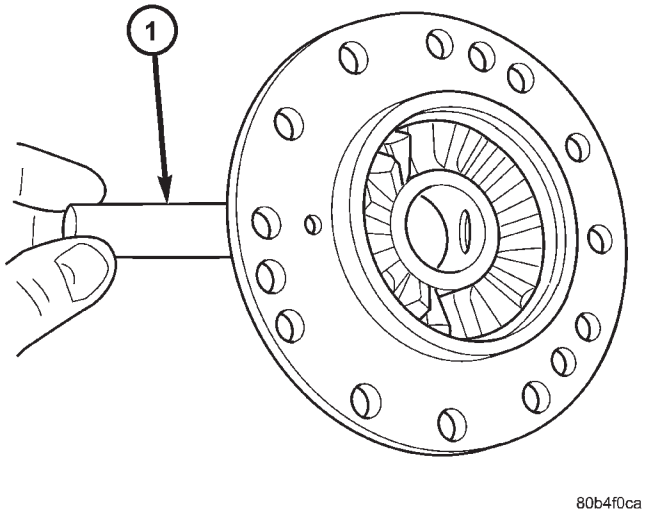

Fig. 115 Short Pinion Shaft (2)

1 - PINION SHAFT (SHORT (2))

(6) Install one (1) long pinion shaft (Fig. 116).

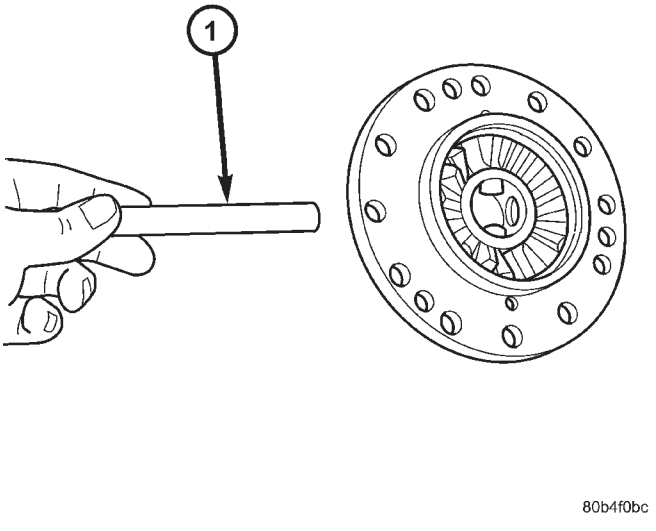

Fig. 116 Long Pinion Shaft

1 - PINION SHAFT (LONG)

(7) Install differential side gear.

DIFFERENTIAL (Continued)

(8) Install side gear thrust washer (Fig. 117).

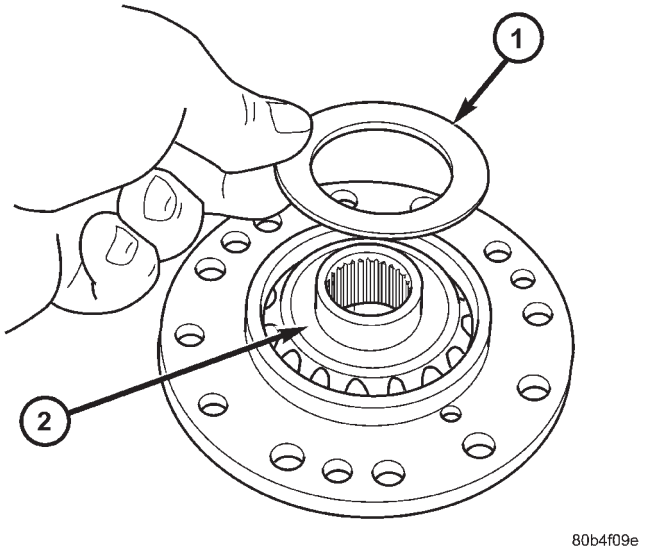

Fig. 117 Side Gear Thrust Washer

1 - SIDE GEAR THRUST WASHER
2 - DIFFERENTIAL SIDE GEAR

(9) Install differential support plate. Align support plate to differential case with alignment pins 8470 (Fig. 118).

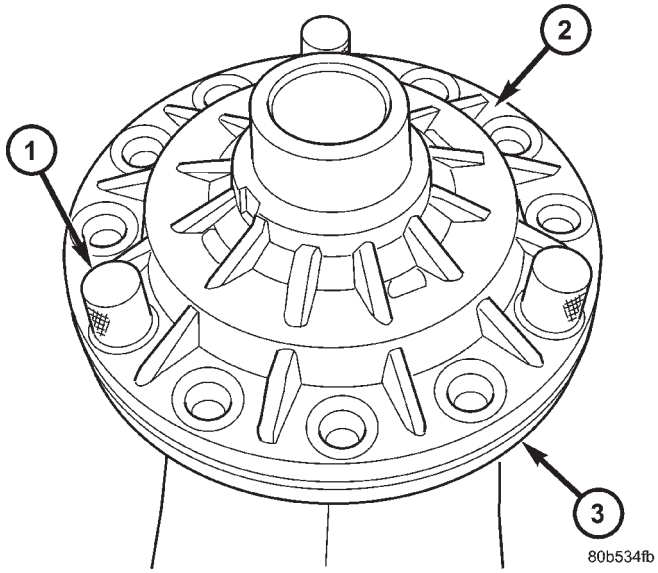

Fig. 118 Align Differential Support to Case

1 - ALIGNMENT PIN 8470
2 - DIFFERENTIAL SUPPORT PLATE
3 - DIFFERENTIAL CASE

(10) Install thrust buttons 8491 to both bearing journals and press halves together using an arbor press (Fig. 119).

(11) Install ring gear into position, start three ring gear-to-differential case bolts by hand (120° apart), and install alignment pins 8470 (Fig. 120).

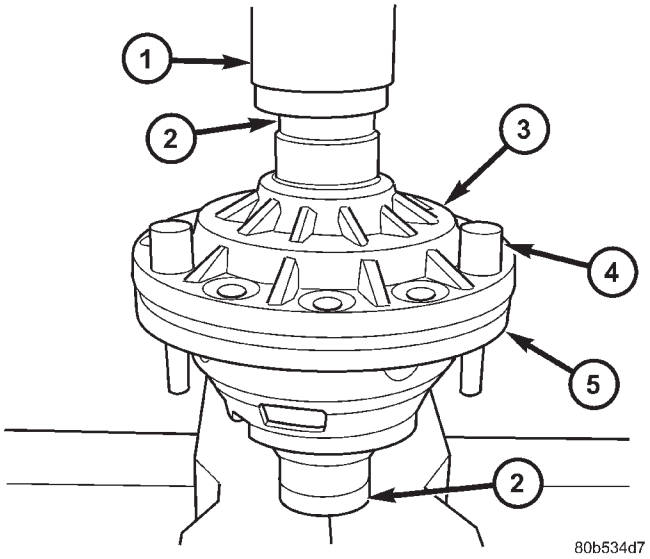

Fig. 119 Installing Differential Support

1 - ARBOR PRESS
2 - BUTTON 8491
3 - DIFFERENTIAL SUPPORT PLATE
4 - ALIGNMENT PIN 8470
5 - DIFFERENTIAL CASE

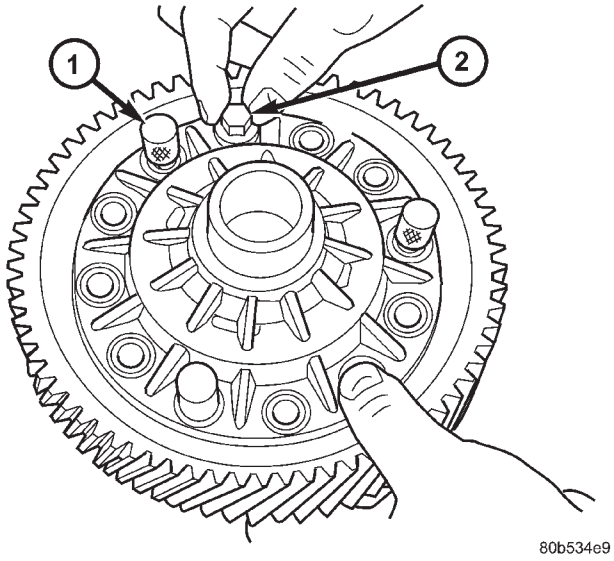

Fig. 120 Ring Gear Alignment/Installation

1 - ALIGNMENT PIN 8470
2 - BOLT

(12) Torque three ring gear bolts to draw ring gear into position. Remove alignment pins, install remaining ring gear-to-differential case bolts and torque to 95 N·m (70 ft. lbs.) (Fig. 121).

(13) Install tapered roller bearings using installer 8473 and an arbor press (Fig. 122). Insert button 8491 on opposite journal to protect journal and/or

DIFFERENTIAL (Continued)

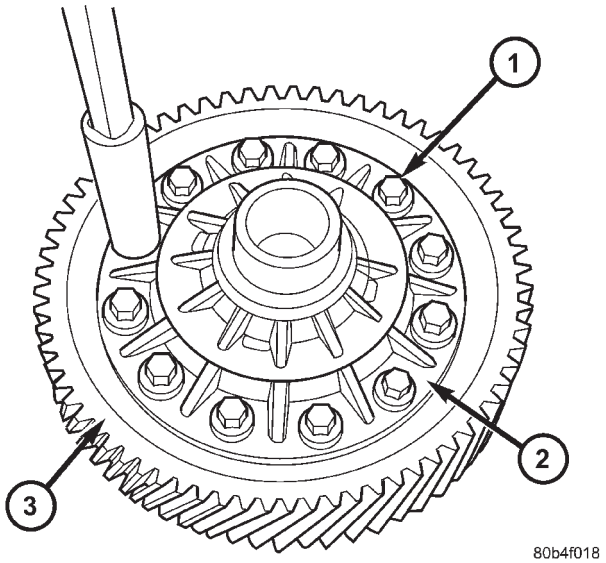

Fig. 121 Ring Gear-to-Differential Case Bolts

1 - BOLT (12)
2 - DIFFERENTIAL SUPPORT
3 - RING GEAR

bearing during press operation. Repeat the same operation on opposite side.

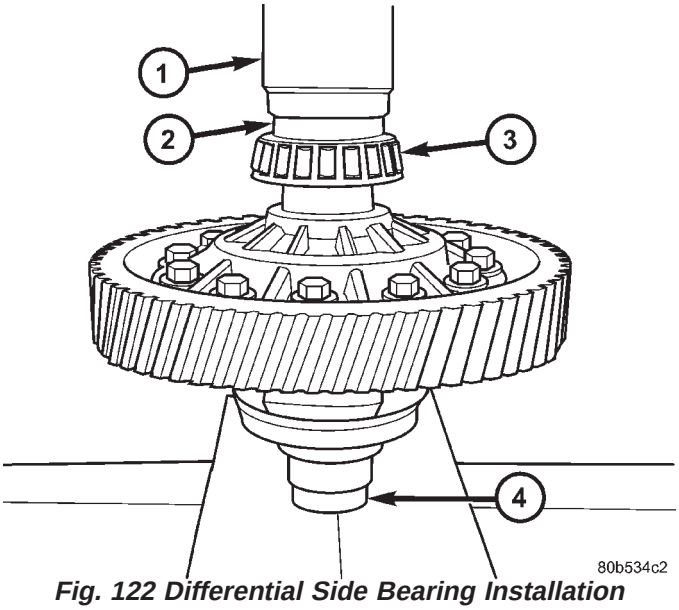

Fig. 122 Differential Side Bearing Installation

1 - ARBOR PRESS
2 - INSTALLER 8473
3 - BEARING
4 - BUTTON 8491

(14) Measure and verify differential side gear end play. (Refer to 21 - TRANSMISSION/TRANSAXLE/MANUAL/DIFFERENTIAL - ADJUSTMENTS).

ADJUSTMENTS

ADJUSTMENT - DIFFERENTIAL TURNING TORQUE

NOTE: Differential turning torque should only be measured with the geartrain out of the transaxle. If measurement is taken with transaxle assembled, an inaccurate measurement will result.

NOTE: All differential cover-to-case bolts and extension housing-to-case bolts must be installed and torqued to obtain accurate measurement.

(1) If transaxle is assembled, remove geartrain and leave differential in place. (Refer to 21 - TRANSMISSION/TRANSAXLE/MANUAL - DISASSEMBLY)

(2) Install differential cover and torque differential cover-to-case bolts to 54 N·m (40 ft. lbs.).

(3) Install extension housing and torque extension housing-to-case bolts to 28 N·m (250 in. lbs.).

(4) Place transaxle on work bench so axle centerline is parallel to the ground.

(5) Install turning torque tool C-4995 to differential at side opposite extension housing.

(6) Using in. lb./N·m dial indicator, rotate differential case multiple times and record measurement (Fig. 123). Differential turning torque should be within 2.3-3.4 N·m (20-30 in. lbs.). Refer to shim chart for proper shim selection. If turning torque measured is less than 2.3 N·m (20 in. lbs.), install a thicker shim. If turning torque measured is greater than 3.4 N·m (30 in. lbs.), install a thinner shim.

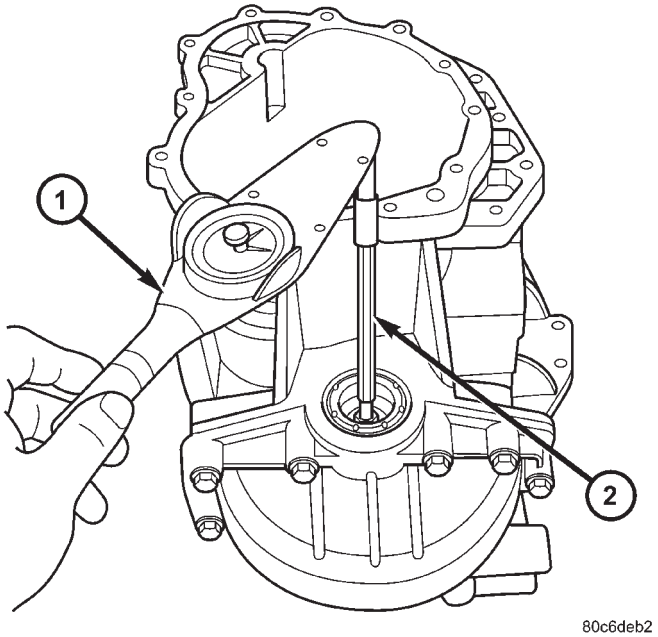

Fig. 123 Differential Turning Torque Measurement

1 - DIAL TORQUE WRENCH
2 - TOOL C-4995

DIFFERENTIAL (Continued)

DIFFERENTIAL BEARING SHIM CHART

PART NUMBER	SHIM THICKNESS	
	METRIC (MM)	STANDARD (STD)
4659242	0.50	0.0197
4659243	0.54	0.0213
4659247	0.58	0.0228
4659248	0.62	0.0244
4659249	0.66	0.0260
4659250	0.70	0.0276
4659251	0.74	0.0291
4659252	0.78	0.0307
4659253	0.82	0.0322
4659254	0.86	0.0339
4659255	0.90	0.0354
4659256	0.94	0.0370
4659257	0.98	0.0386
4659258	1.02	0.0402
4659259	1.06	0.0418
4659260	1.10	0.0434
4659261	1.14	0.0449
4659262	1.18	0.0465
4659263	1.22	0.0481
4659264	1.26	0.0497
4659265	1.30	0.0512
4659266	1.34	0.0528
4659267	1.38	0.0544
4659268	1.42	0.0560
4659269	1.46	0.0575
4659270	1.50	0.0591
4659271	1.54	0.0607
4659272	1.58	0.0623
4659273	1.62	0.0638
4659274	1.66	0.0654
4659275	1.70	0.0670
4659283	2.02	0.0796
4659284	2.06	0.0812

DIFFERENTIAL (Continued)

ADJUSTMENT - DIFFERENTIAL SIDE GEAR END PLAY

Measure side gear end play: Insert feeler gauges 180° apart between differential side gear and thrust washer as shown in (Fig. 124). Measurement taken here applies to both sides. Side gear end play should be between 0.025-0.152 mm (0.001-0.006 in.). If clearance is greater than 0.152 mm (0.006 in.), install a thicker thrust washer (both sides). If clearance is less than 0.025 mm (0.001), install a thinner thrust washer (both sides). Refer to (Fig. 125) for available side gear shim thicknesses.

If end play measurement indicates a thrust washer change is necessary, the differential must be disassembled. (Refer to 21 - TRANSMISSION/TRANSAXLE/MANUAL/DIFFERENTIAL - DISASSEMBLY)

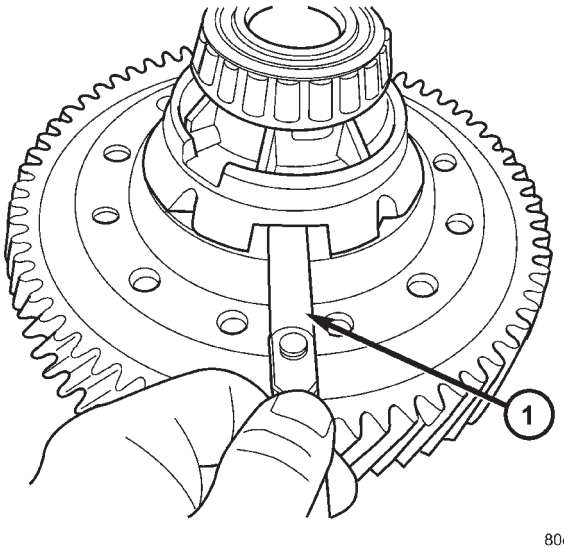

Fig. 124 Side Gear End Play Measurement

1 - FEELER GAUGE

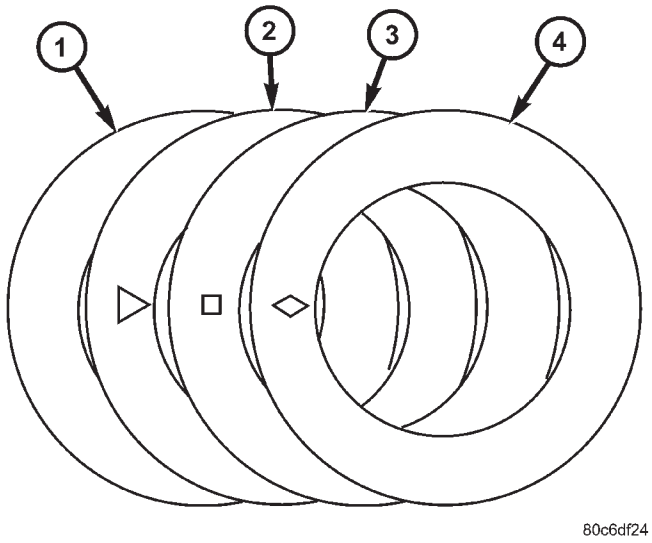

Fig. 125 Available Side Gear Thrust Washers

1 - (PLAIN) 0.79-0.84 mm (0.031-0.033 in.)
2 - (TRIANGLE) 0.91-0.97 mm (0.036-0.038 in.)
3 - (SQUARE) 1.04-1.10 mm (0.041-0.043 in.)
4 - (DIAMOND) 1.17-1.22 mm (0.046-0.048 in.)

FLUID

STANDARD PROCEDURE

STANDARD PROCEDURE - FLUID LEVEL CHECK

NOTE: For proper fluid level check intervals, (Refer to LUBRICATION & MAINTENANCE/MAINTENANCE SCHEDULES - DESCRIPTION)

The fluid required in this transaxle is Mopar® ATF+4 (Automatic Transmission Fluid—Type 9602). Use of substitute fluids may result in improper transaxle operation and/or failure.

(1) Raise vehicle on hoist.

(2) Remove transaxle fill plug (Fig. 126).

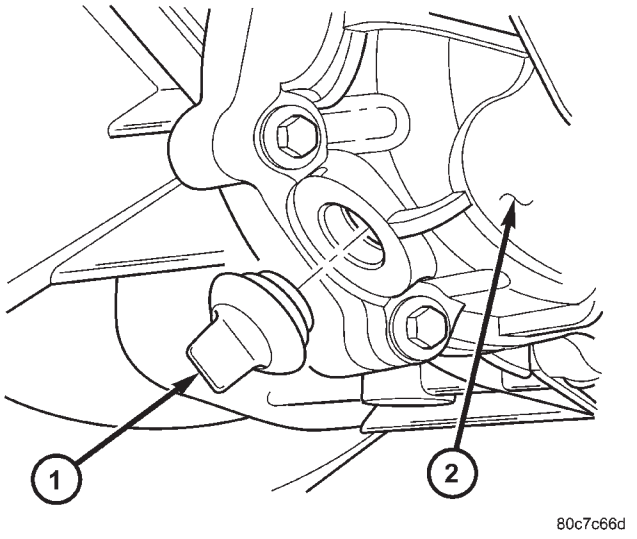

Fig. 126 Transaxle Fill Plug

1 - FILL PLUG
2 - END COVER

(3) Inspect fluid level. Fluid should be within 1/8” below fill hole. Add Mopar® ATF+4 (Automatic Transmission Fluid—Type 9602) as neccessary.

(4) Install fill plug, ensuring it is properly seated.

(5) Lower vehicle.

FLUID (Continued)

STANDARD PROCEDURE - FLUID DRAIN AND FILL

NOTE: For proper fluid change intervals, (Refer to LUBRICATION & MAINTENANCE/MAINTENANCE SCHEDULES - DESCRIPTION)

The fluid required in this transaxle is Mopar® ATF+4 (Automatic Transmission Fluid—Type 9602). Use of substitute fluids may result in improper transaxle operation and/or failure.

FLUID DRAIN

(1) Raise vehicle on hoist.
(2) Remove transaxle drain plug (Fig. 127) and drain fluid into suitable container.
(3) Install drain plug and torque to 23 N·m (17 ft. lbs.).

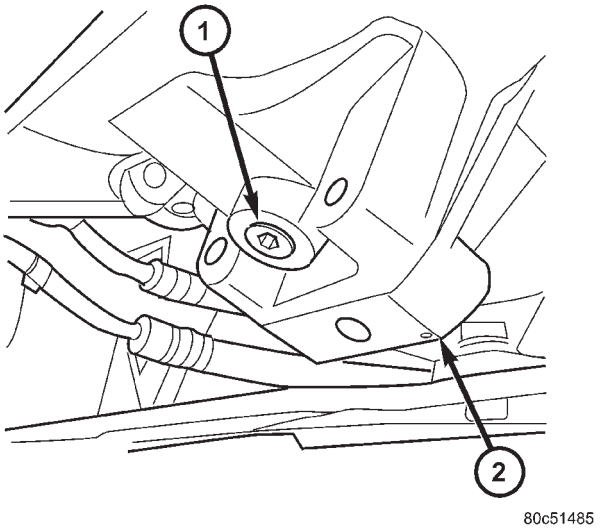

Fig. 127 Transaxle Drain Plug

1 - TRANSAXLE DRAIN PLUG
2 - DIFFERENTIAL COVER

FLUID FILL

(1) Remove transaxle fill plug (Fig. 128).
(2) Add 2.4-2.7L (2.5-2.9 qts.) of Mopar® ATF+4 (Automatic Transmission Fluid—Type 9602) until fluid is within 1/8" below fill hole.
(3) Install fill plug, ensuring it is properly seated.
(4) Lower vehicle.

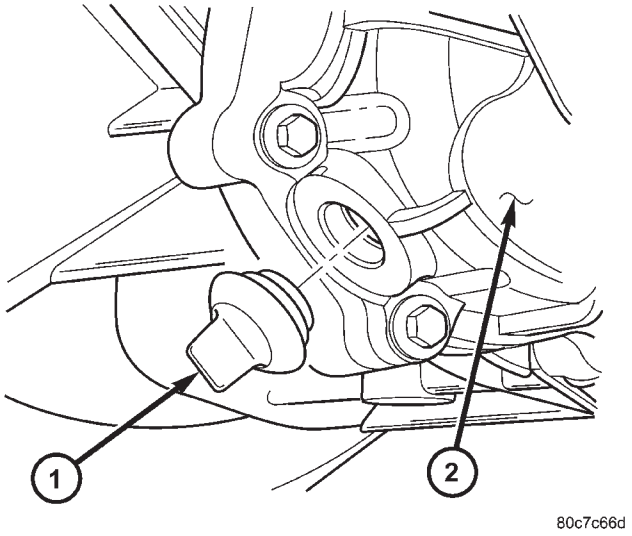

Fig. 128 Transaxle Fill Plug

1 - FILL PLUG
2 - END COVER

GEARSHIFT BOOT

REMOVAL

(1) Remove gearshift knob by pushing down and rotating ¼-turn clockwise (Fig. 129).

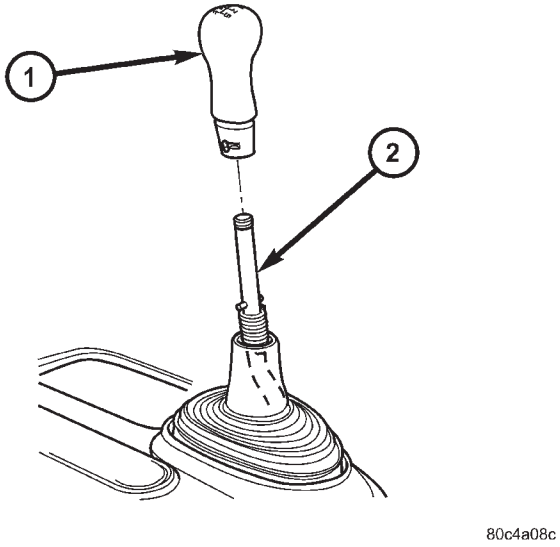

Fig. 129 Gearshift Knob Removal/Installation

1 - GEARSHIFT KNOB
2 - GEARSHIFT LEVER

GEARSHIFT BOOT (Continued)

(2) Remove gearshift boot from center console by disengaging three (3) retaining clips (Fig. 130).

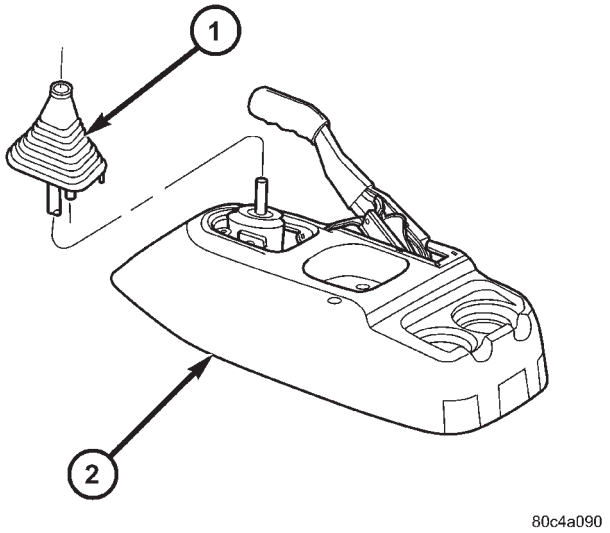

Fig. 130 Gearshift Boot Removal/Installation

1 - GEARSHIFT BOOT
2 - CENTER CONSOLE

INSTALLATION

(1) Install gearshift boot to console and secure with three (3) retaining clips (Fig. 130).

(2) Install gearshift knob (Fig. 129). Orient shift pattern ¼-turn clockwise, press down, and rotate ¼-turn counter-clockwise.

(3) Secure gearshift boot to base of knob.

GEARSHIFT CABLE - CROSSOVER

REMOVAL

(1) Disconnect battery negative cable.

(2) Remove gearshift knob by pushing down and rotating ¼-turn clock-wise (Fig. 131).

(3) Remove gearshift boot from center console by disengaging at three (3) retaining clips (Fig. 132).

(4) Apply park brake to allow park brake handle to clear center console upon removal.

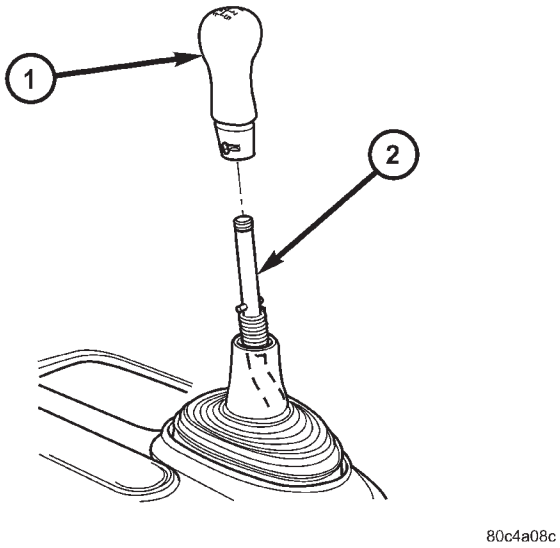

Fig. 131 Gearshift Knob Removal/Installation

1 - GEARSHIFT KNOB
2 - GEARSHIFT LEVER

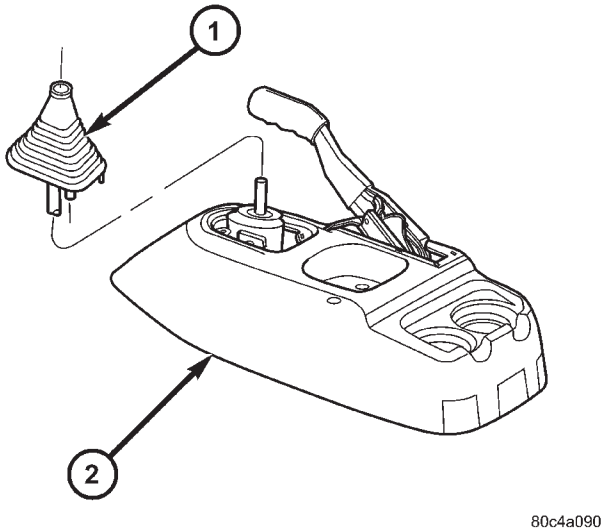

Fig. 132 Gearshift Boot Removal/Installation

1 - GEARSHIFT BOOT
2 - CENTER CONSOLE

GEARSHIFT CABLE - CROSSOVER (Continued)

(5) Remove two (2) cupholder bottom plugs (Fig. 133).

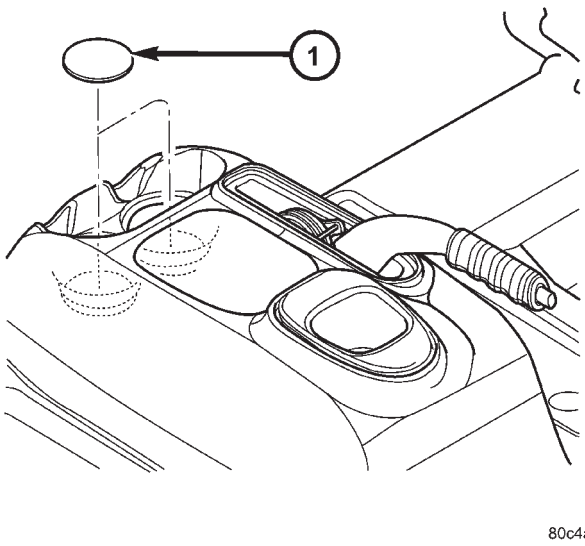

Fig. 133 Cup Holder Plugs

1 - CUPHOLDER PLUG (2)

(6) Remove four (4) center console-to-gearshift mechanism screws. Remove console assembly (Fig. 134).

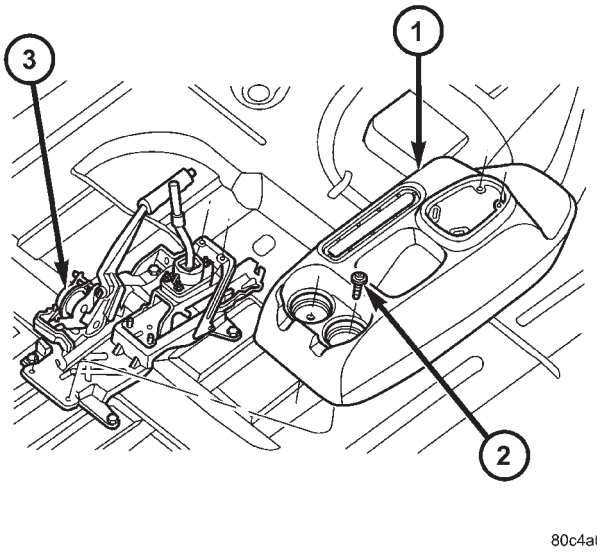

Fig. 134 Center Console Removal/Installation (LHD Shown — RHD Typical)

1 - CENTER CONSOLE
2 - SCREW (4)
3 - GEARSHIFT MECHANISM

(7) Remove center console support bracket (Fig. 135).

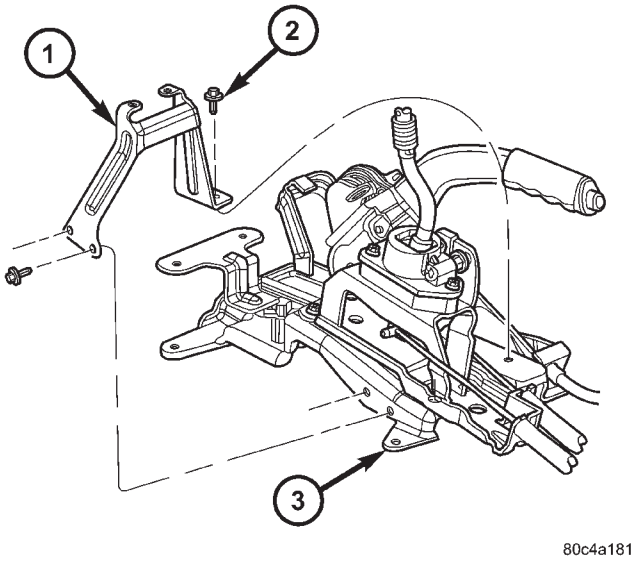

Fig. 135 Center Console Support Bracket

1 - BRACKET
2 - SCREW
3 - GEARSHIFT MECHANISM

(8) Remove crossover cable retainer clip (Fig. 136).

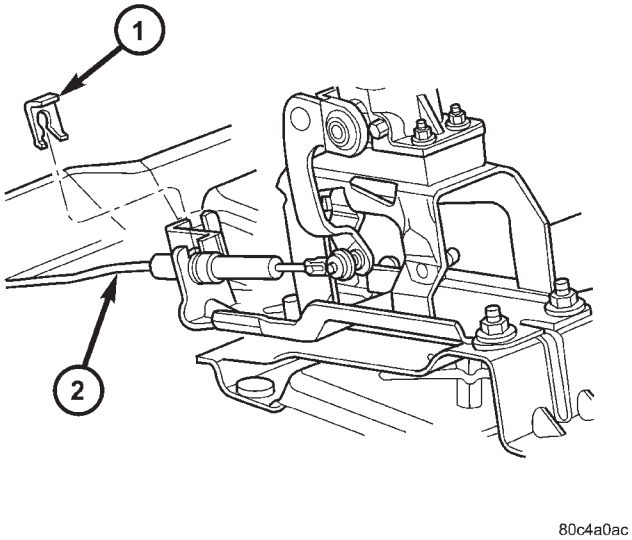

Fig. 136 Crossover Cable Retainer Clip

1 - RETAINER CLIP
2 - CROSSOVER CABLE

GEARSHIFT CABLE - CROSSOVER (Continued)

(9) Remove crossover cable from gearshift mechanism (Fig. 137).

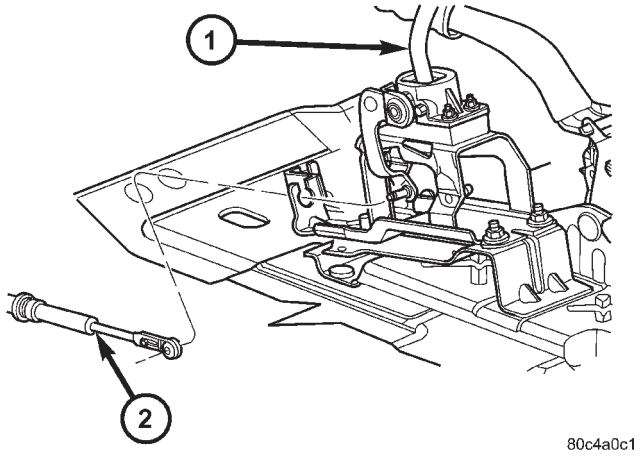

Fig. 137 Crossover Cable at Gearshift Mechanism

1 - GEARSHIFT MECHANISM
2 - CROSSOVER CABLE

(10) **2.4L Gas equipped models goto Step 15. 2.5L TD models:** Remove battery thermal shield (Fig. 138).

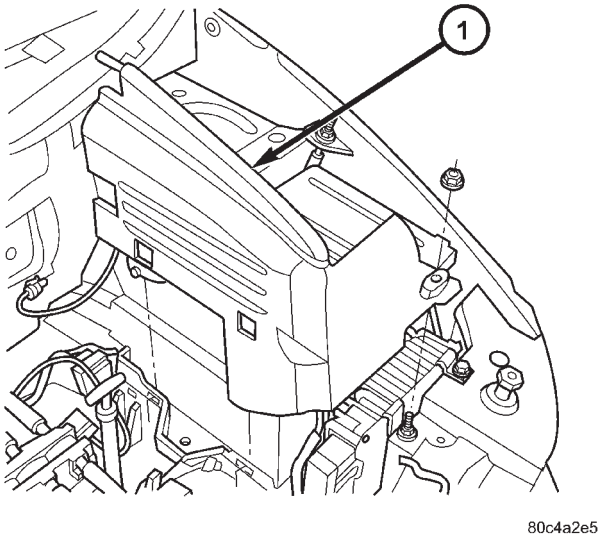

Fig. 138 Battery Thermal Shield

1 - BATTERY THERMAL SHIELD

(11) Remove battery hold down nut, clamp, and battery (Fig. 139).

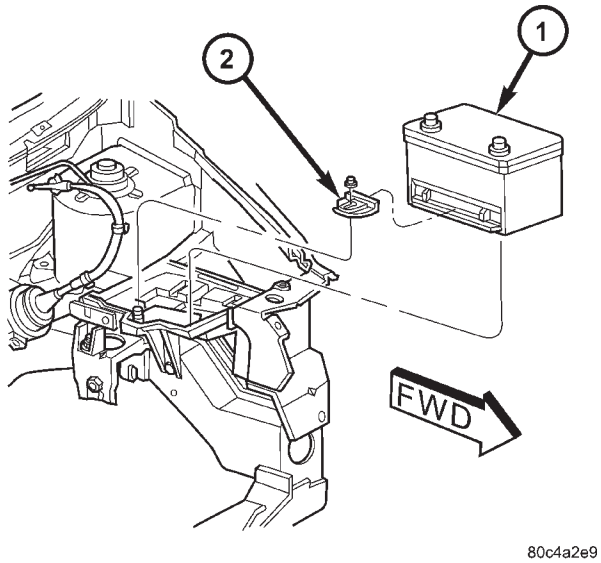

Fig. 139 Battery and Hold-Down Clamp

1 - BATTERY
2 - HOLD-DOWN CLAMP

(12) Remove battery tray (Fig. 140). Disconnect battery temperature sensor.

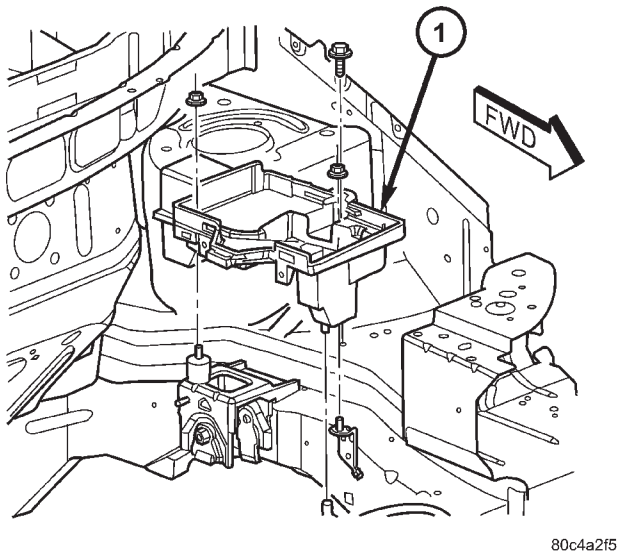

Fig. 140 Battery Tray

1 - BATTERY TRAY

GEARSHIFT CABLE - CROSSOVER (Continued)

(13) Remove coolant recovery bottle from bracket.
(14) Remove coolant recovery bottle mounting bracket (Fig. 141).

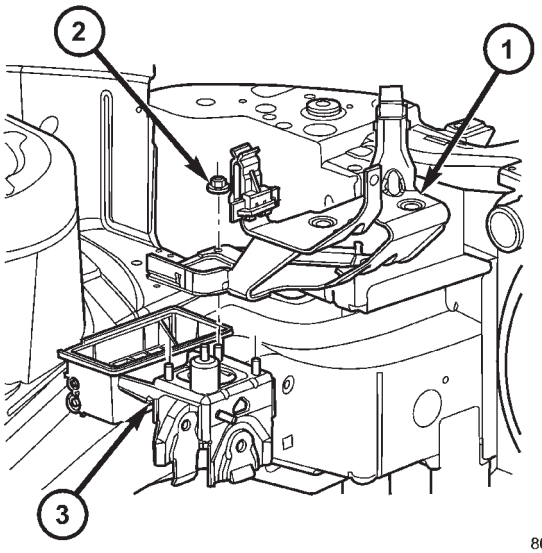

80c4a2ed

Fig. 141 Coolant Recovery Bottle Bracket

1 - COOLANT RECOVERY BOTTLE BRACKET
2 - NUT
3 - MOUNT BRACKET

(15) Disconnect crossover cable from transaxle crossover lever (Fig. 142).
(16) Remove crossover cable retainer clip and disengage cable from mount bracket (Fig. 142).

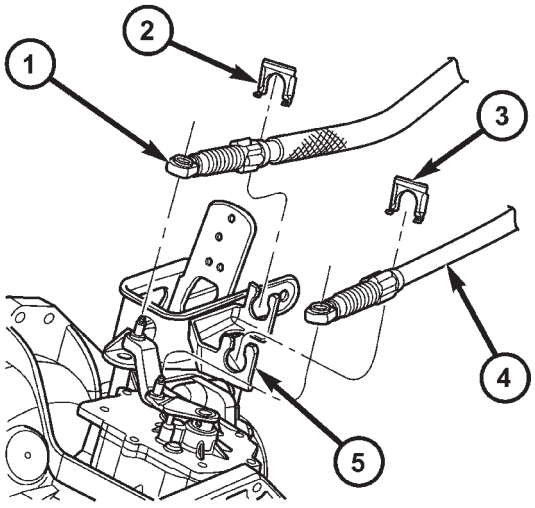

80c4a2f1

Fig. 142 Gearshift Cables at Transaxle

1 - SELECTOR CABLE
2 - CABLE RETAINER
3 - CABLE RETAINER
4 - CROSSOVER CABLE
5 - MOUNT BRACKET

(17) Raise vehicle on hoist.
(18) Remove crossover cable from engine compartment, then remove cable from passenger compartment through opening in floor pan.

INSTALLATION

(1) From underneath vehicle, install gearshift crossover cable into passenger compartment through floor pan hole. Install remainder of cable into position in engine compartment.
(2) Lower vehicle.
(3) Install crossover cable to mount bracket and secure with retainer clip (Fig. 143).

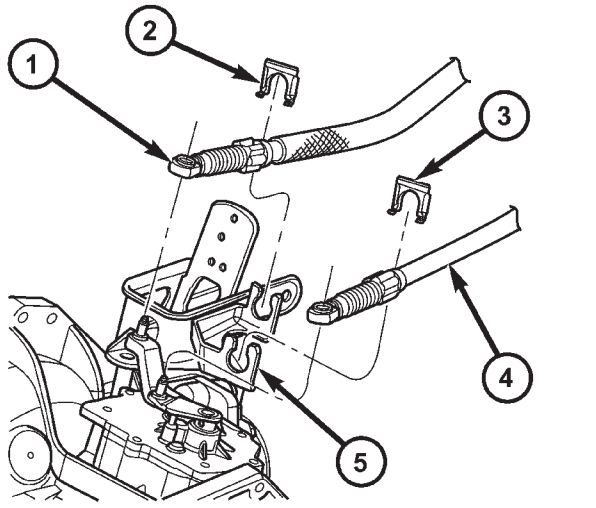

80c4a2f1

Fig. 143 Gearshift Cables at Transaxle

1 - SELECTOR CABLE
2 - CABLE RETAINER
3 - CABLE RETAINER
4 - CROSSOVER CABLE
5 - MOUNT BRACKET

(4) Install cable to transaxle crossover lever (Fig. 143).

GEARSHIFT CABLE - CROSSOVER (Continued)

(5) **2.4L Gas models goto Step 10. 2.5L TD Models:** Install coolant recovery bottle bracket (Fig. 144).

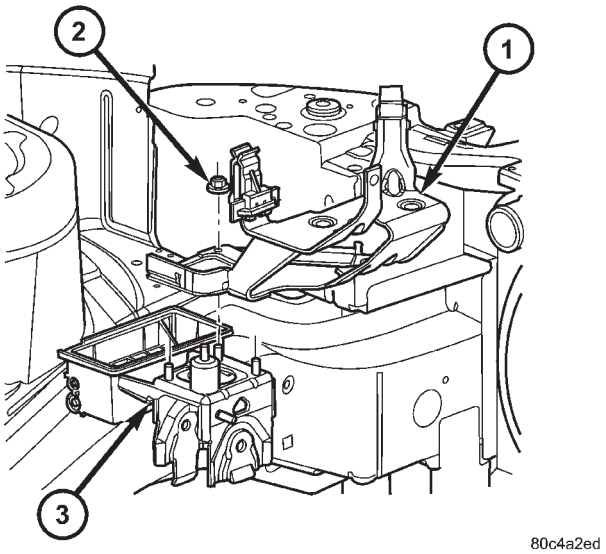

Fig. 144 Coolant Recovery Bottle Bracket

1 - COOLANT RECOVERY BOTTLE BRACKET
2 - NUT
3 - MOUNT BRACKET

(6) Install coolant recovery bottle to bracket.

(7) Connect battery temperature sensor to battery tray. Install battery tray into position (Fig. 145).

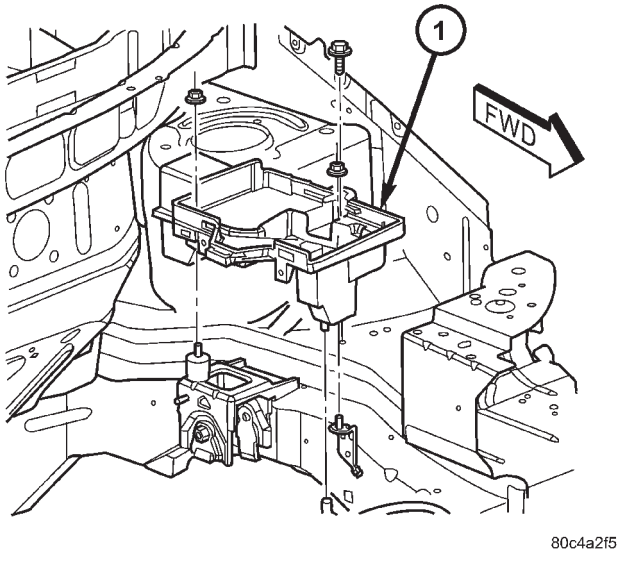

Fig. 145 Battery Tray

1 - BATTERY TRAY

(8) Install battery, hold-down clamp, and nut (Fig. 146).

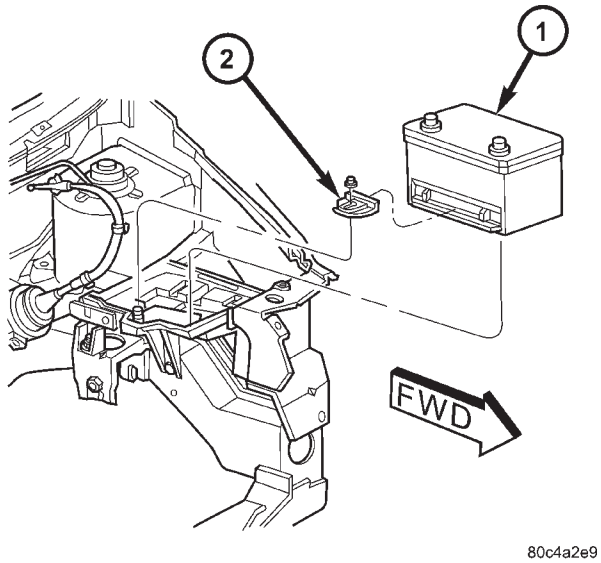

Fig. 146 Battery and Hold-Down Clamp

1 - BATTERY
2 - HOLD-DOWN CLAMP

(9) Install battery thermal shield (Fig. 147).

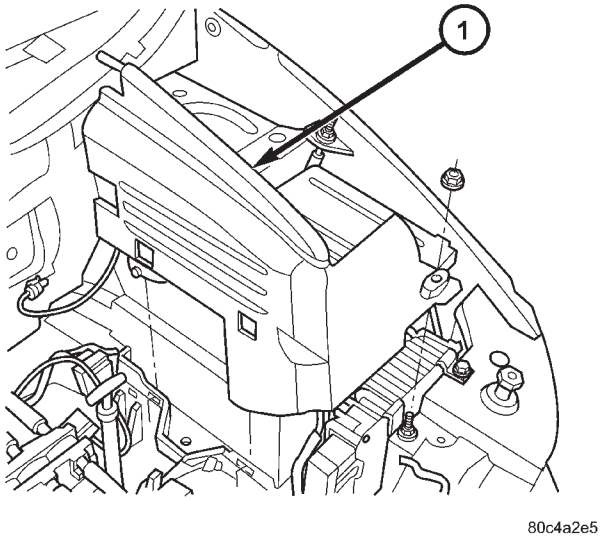

Fig. 147 Battery Thermal Shield

1 - BATTERY THERMAL SHIELD

GEARSHIFT CABLE - CROSSOVER (Continued)

(10) Install crossover cable to gearshift mechanism (Fig. 148). Install retainer clip (Fig. 149).

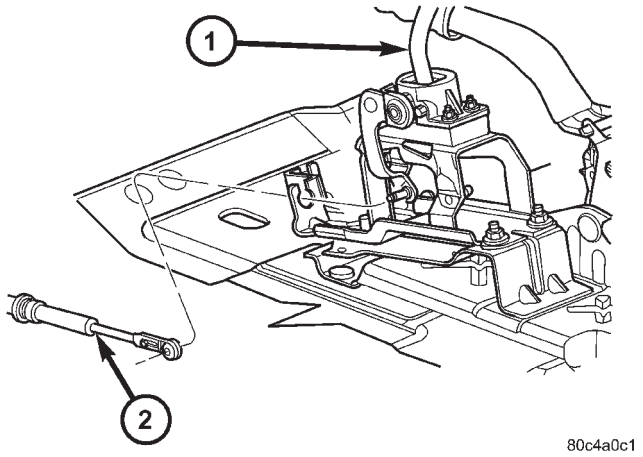

Fig. 148 Crossover Cable at Gearshift Mechanism

1 - GEARSHIFT MECHANISM
2 - CROSSOVER CABLE

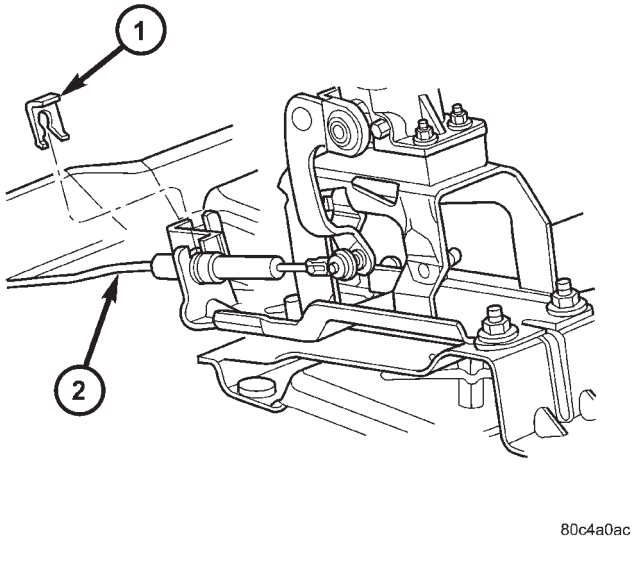

Fig. 149 Crossover Cable Retainer Clip

1 - RETAINER CLIP
2 - CROSSOVER CABLE

(11) Adjust crossover cable (Refer to 21 - TRANSMISSION/TRANSAXLE/MANUAL/GEAR SHIFT CABLE - ADJUSTMENTS).

(12) Install center console support bracket (Fig. 150). Torque support bracket-to-gearshift mechanism screws to 12 N·m (108 in. lbs.).

(13) Install center console assembly (Fig. 151). Install and torque center console-to-gearshift mechanism screws to 5 N·m (45 in. lbs.).

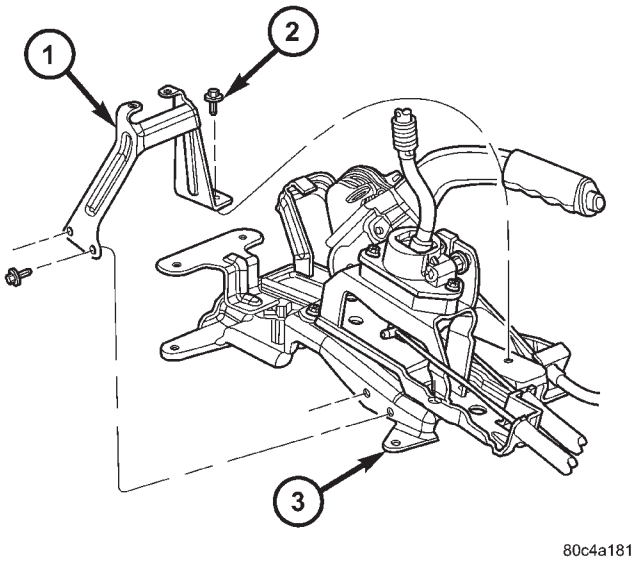

Fig. 150 Center Console Support Bracket

1 - BRACKET
2 - SCREW
3 - GEARSHIFT MECHANISM

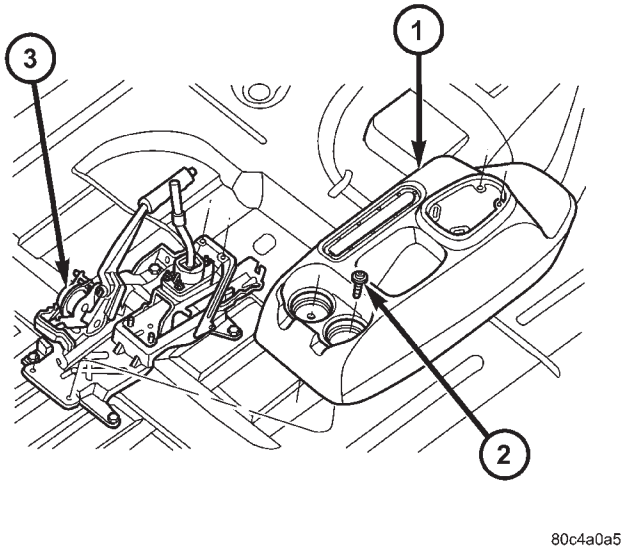

Fig. 151 Center Console Removal/Installation (LHD Shown — RHD Typical)

1 - CENTER CONSOLE
2 - SCREW (4)
3 - GEARSHIFT MECHANISM

GEARSHIFT CABLE - CROSSOVER (Continued)

(14) Install cupholder plugs (Fig. 152).

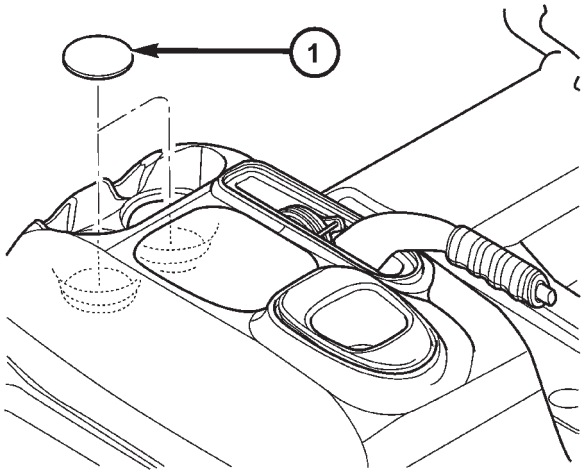

Fig. 152 Cup Holder Plugs

1 - CUPHOLDER PLUG (2)

(15) Install gearshift boot to console (Fig. 153). Secure with three (3) retainer clips.

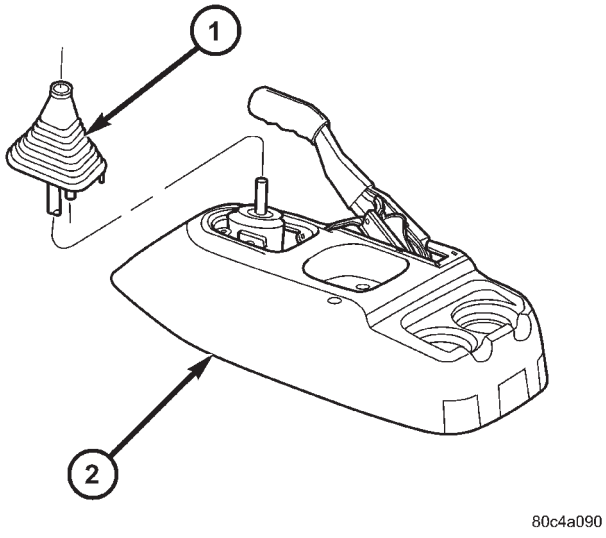

Fig. 153 Gearshift Boot Removal/Installation

1 - GEARSHIFT BOOT
2 - CENTER CONSOLE

(16) Install gearshift knob to gearshift lever (Fig. 154). Orient shift pattern ¼-turn clockwise, push down and rotate ¼-turn counter-clockwise and release. Secure boot to knob.

(17) Connect battery negative cable.

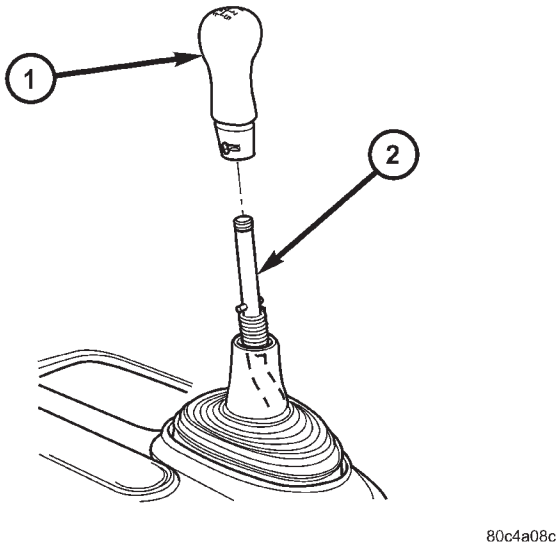

Fig. 154 Gearshift Knob Removal/Installation

1 - GEARSHIFT KNOB
2 - GEARSHIFT LEVER

ADJUSTMENTS

ADJUSTMENT

(1) Disconnect battery negative cable.

(2) Remove gearshift knob by pushing down and rotating ¼-turn clock-wise (Fig. 155).

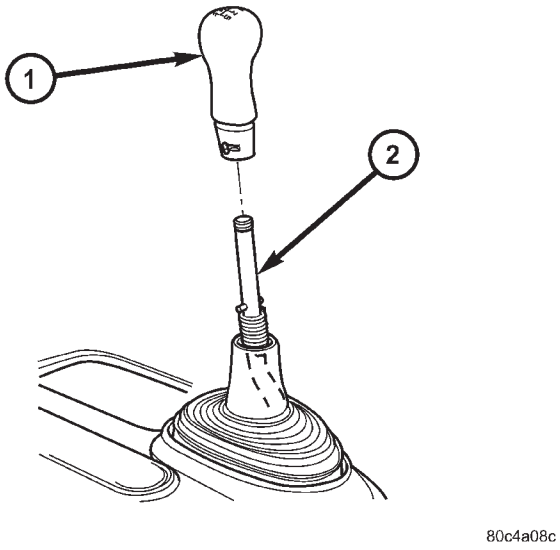

Fig. 155 Gearshift Knob Removal/Installation

1 - GEARSHIFT KNOB
2 - GEARSHIFT LEVER

GEARSHIFT CABLE - CROSSOVER (Continued)

(3) Remove gearshift boot from center console by disengaging at three (3) retaining clips (Fig. 156).

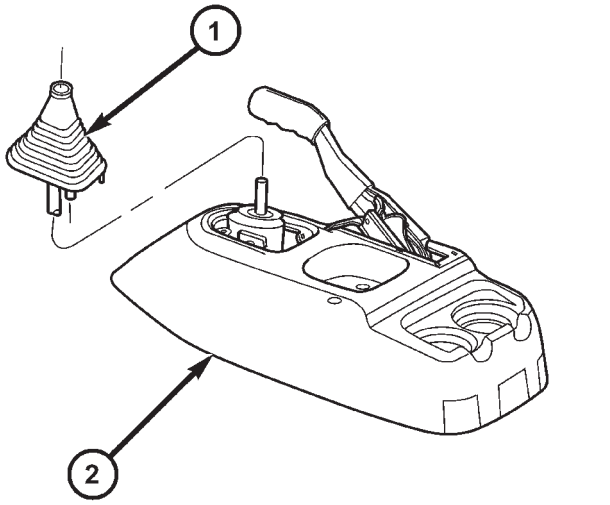

Fig. 156 Gearshift Boot Removal/Installation

1 - GEARSHIFT BOOT
2 - CENTER CONSOLE

(4) Apply park brake to allow park brake handle to clear center console upon removal.

(5) Remove two (2) cupholder bottom plugs (Fig. 157).

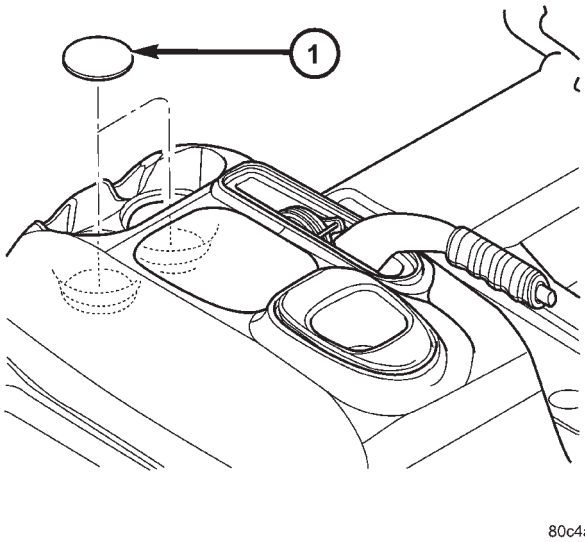

Fig. 157 Cup Holder Plugs

1 - CUPHOLDER PLUG (2)

(6) Remove four (4) center console-to-gearshift mechanism screws. Remove console assembly (Fig. 158).

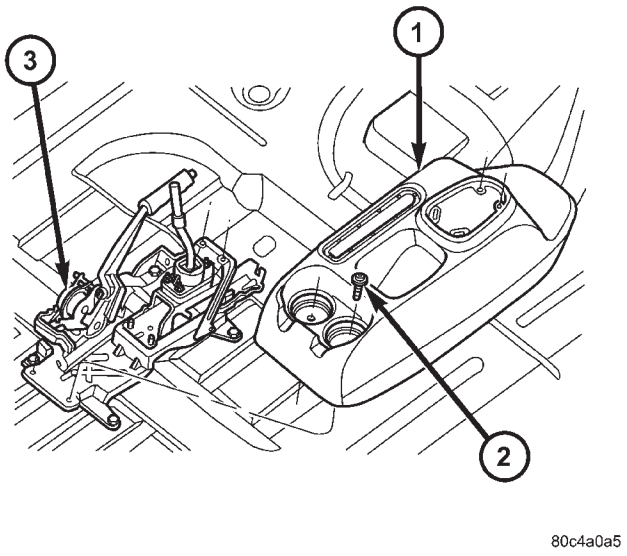

Fig. 158 Center Console Removal/Installation (LHD Shown — RHD Typical)

1 - CENTER CONSOLE
2 - SCREW (4)
3 - GEARSHIFT MECHANISM

(7) Loosen crossover cable adjustment screw (Fig. 159).

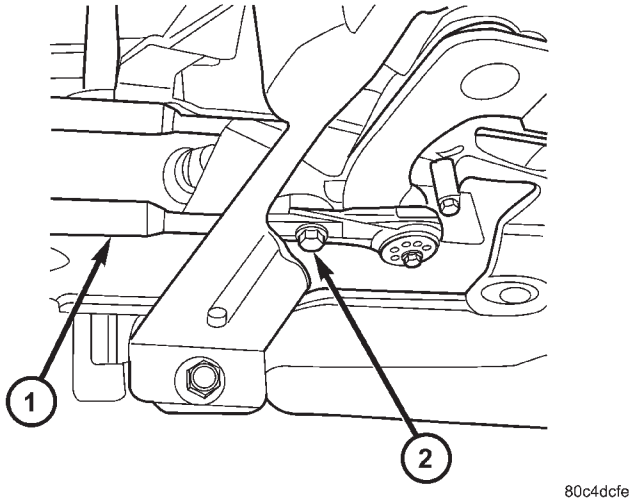

Fig. 159 Crossover Cable Adjustment Screw

1 - CROSSOVER CABLE
2 - ADJUSTMENT SCREW

(8) Rock gearshift lever back and forth between 1–2 and 5–R planes. Release lever, allowing shifter spring to return lever to the neutral position in the 3–4 plane. Place gearshift lever in the 3rd gear position.

GEARSHIFT CABLE - CROSSOVER (Continued)

(9) Torque crossover lever adjustment screw to 8 N·m (70 in. lbs.). **No load should be applied to the shifter lever in any direction (hands off) while tightening screw.**

(10) Verify gearshift lever travel through all gear ranges with engine off (not running).

(11) Install center console assembly (Fig. 158). Install and torque center console-to-gearshift mechanism screws to 5 N·m (45 in. lbs.).

(12) Install cupholder plugs (Fig. 157).

(13) Install gearshift boot to console (Fig. 156). Secure boot to console with three (3) retainer clips.

(14) Install gearshift knob to gearshift lever (Fig. 155). Orient shift pattern on knob ¼-turn clockwise, push down and rotate ¼-turn counter-clockwise and release. Secure boot to knob.

(15) Connect battery negative cable.

GEARSHIFT CABLE - SELECTOR

REMOVAL

(1) Disconnect battery negative cable.

(2) Remove gearshift knob by pushing down and rotating ¼-turn clock-wise (Fig. 160).

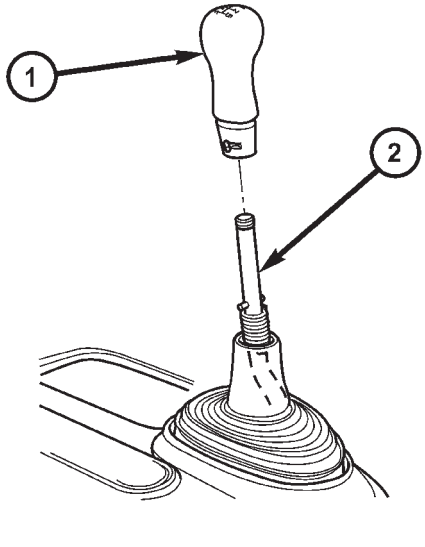

Fig. 160 Gearshift Knob Removal/Installation

1 - GEARSHIFT KNOB
2 - GEARSHIFT LEVER

(3) Remove gearshift boot from center console by disengaging at three (3) retaining clips (Fig. 161).

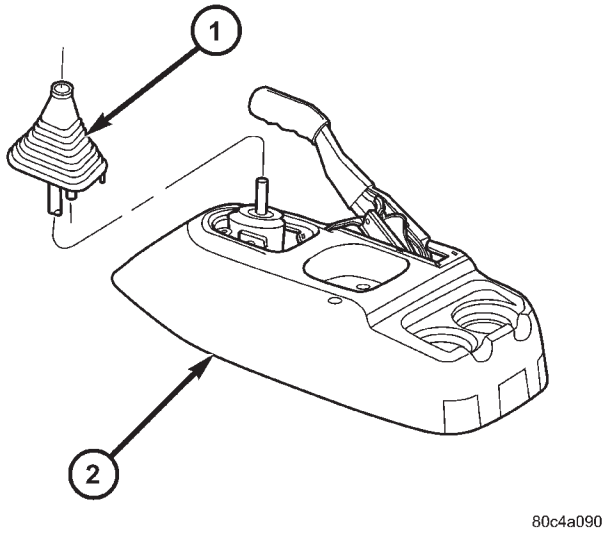

Fig. 161 Gearshift Boot Removal/Installation

1 - GEARSHIFT BOOT
2 - CENTER CONSOLE

(4) Apply park brake to allow park brake handle to clear center console upon removal.

(5) Remove two (2) cupholder bottom plugs (Fig. 162).

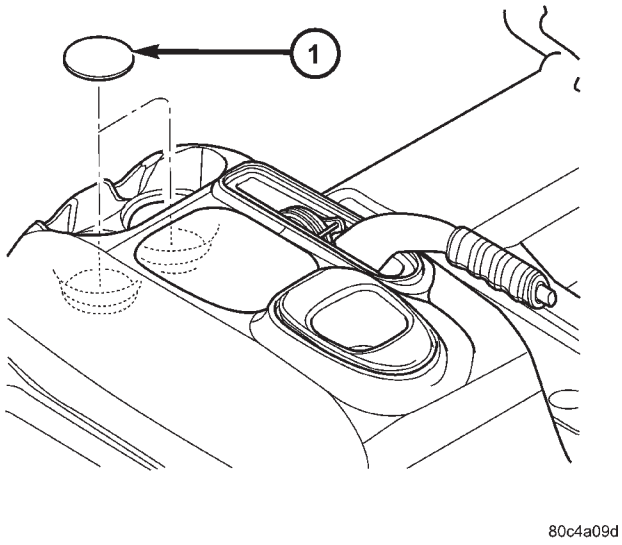

Fig. 162 Cup Holder Plugs

1 - CUPHOLDER PLUG (2)

GEARSHIFT CABLE - SELECTOR (Continued)

(6) Remove four (4) center console-to-gearshift mechanism screws. Remove console assembly (Fig. 163).

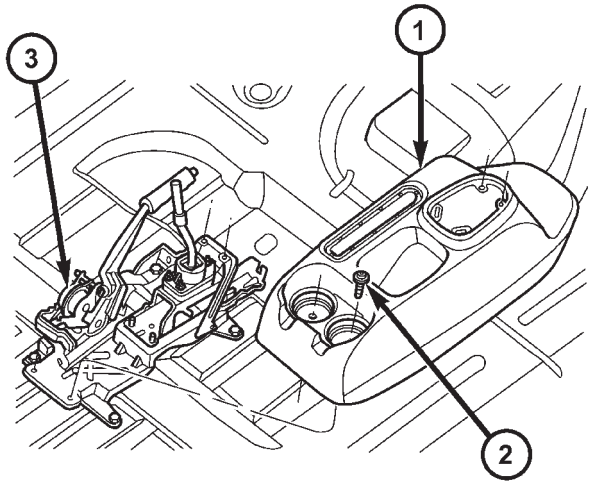

Fig. 163 Center Console Removal/Installation (LHD Shown — RHD Typical)

1 - CENTER CONSOLE
2 - SCREW (4)
3 - GEARSHIFT MECHANISM

(7) Remove center console support bracket (Fig. 164).

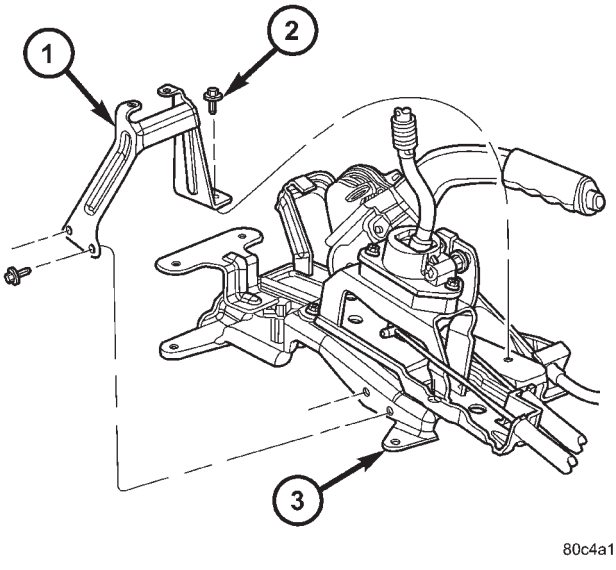

Fig. 164 Center Console Support Bracket

1 - BRACKET
2 - SCREW
3 - GEARSHIFT MECHANISM

(8) Remove selector cable retainer clip (Fig. 165).

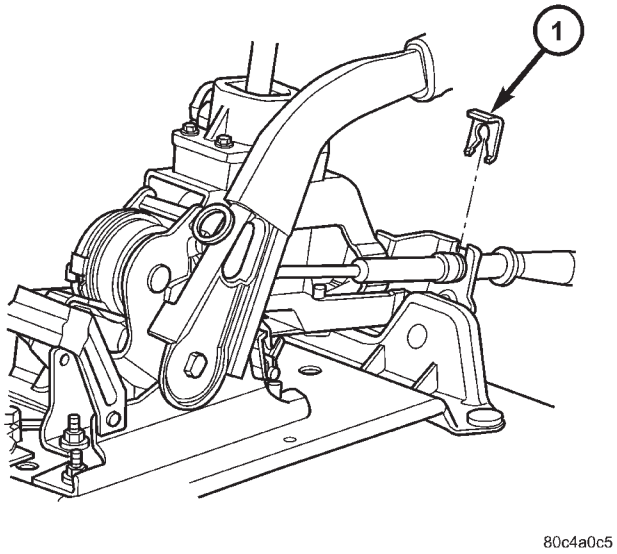

Fig. 165 Selector Cable Retainer Clip

1 - RETAINER CLIP

(9) Remove selector cable from gearshift mechanism (Fig. 166).

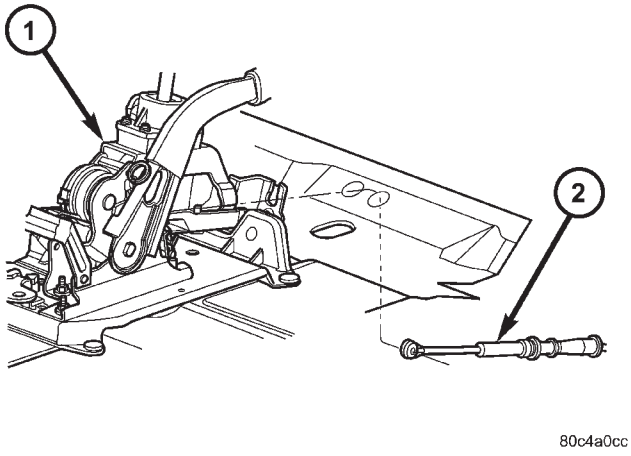

Fig. 166 Selector Cable at Gearshift Mechanism

1 - GEARSHIFT MECHANISM
2 - SELECTOR CABLE

GEARSHIFT CABLE - SELECTOR (Continued)

(10) **2.4L Gas models goto Step 15. 2.5L TD Models:** Remove battery thermal shield (Fig. 167).

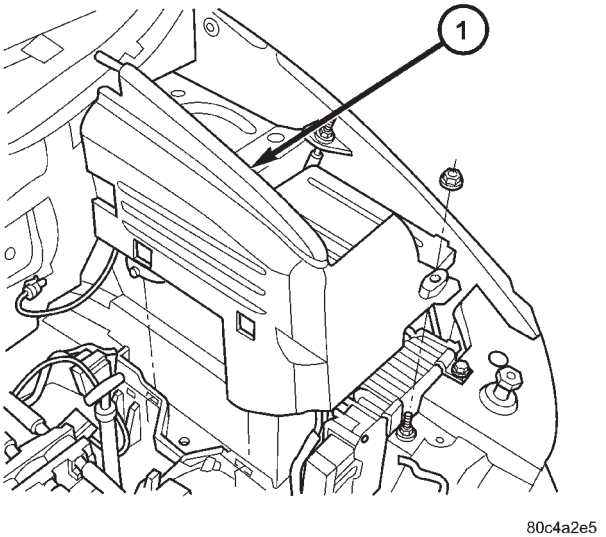

Fig. 167 Battery Thermal Shield

1 - BATTERY THERMAL SHIELD

(11) Remove battery hold down nut, clamp, and battery (Fig. 168).

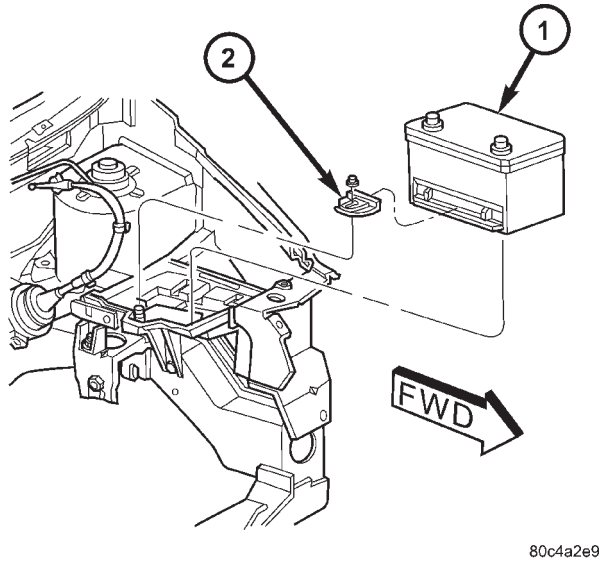

Fig. 168 Battery and Hold-Down Clamp

1 - BATTERY
2 - HOLD-DOWN CLAMP

(12) Remove battery tray (Fig. 169). Disconnect battery temperature sensor.

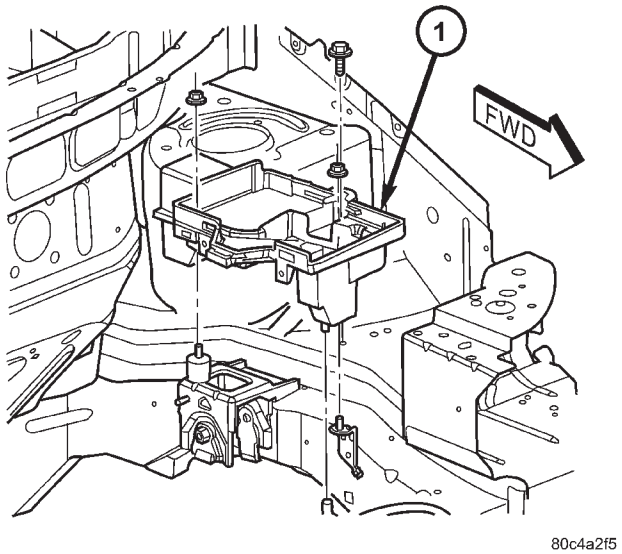

Fig. 169 Battery Tray

1 - BATTERY TRAY

(13) Remove coolant recovery bottle from bracket.

(14) Remove coolant recovery bottle mounting bracket (Fig. 170).

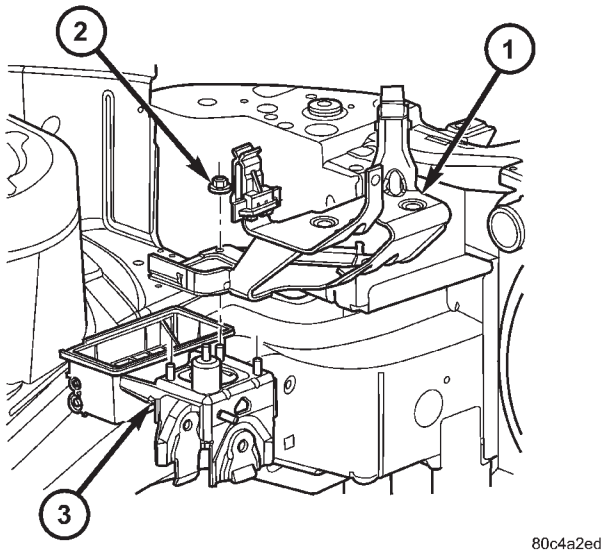

Fig. 170 Coolant Recovery Bottle Bracket

1 - COOLANT RECOVERY BOTTLE BRACKET
2 - NUT
3 - MOUNT BRACKET

GEARSHIFT CABLE - SELECTOR (Continued)

(15) Disconnect crossover cable from transaxle crossover lever (Fig. 171).

(16) Remove crossover cable retainer clip and disengage cable from mount bracket (Fig. 171).

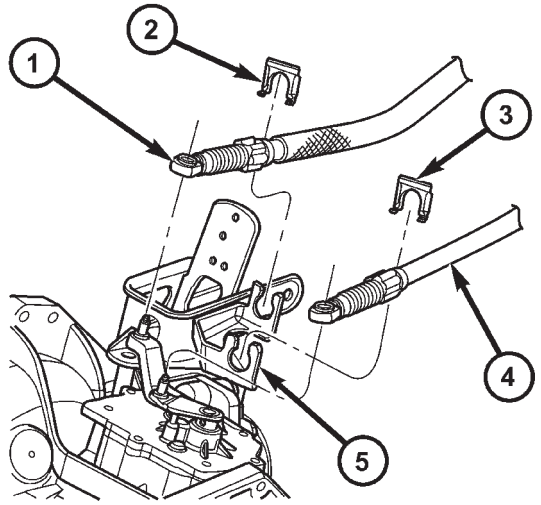

80c4a2f1

Fig. 171 Gearshift Cables at Transaxle

1 - SELECTOR CABLE
2 - CABLE RETAINER
3 - CABLE RETAINER
4 - CROSSOVER CABLE
5 - MOUNT BRACKET

(17) Raise vehicle on hoist.

(18) Remove selector cable from engine compartment, then remove cable from passenger compartment through opening in floor pan.

INSTALLATION

(1) From underneath vehicle, install gearshift selector cable into passenger compartment through floor pan hole. Install remainder of cable into position in engine compartment.

(2) Lower vehicle.

(3) Install selector cable to mount bracket and secure with retainer clip (Fig. 172).

(4) Install cable to transaxle selector lever (Fig. 172).

(5) **2.4L Gas models goto Step 10. 2.5L TD models:** Install coolant recovery bottle bracket (Fig. 173).

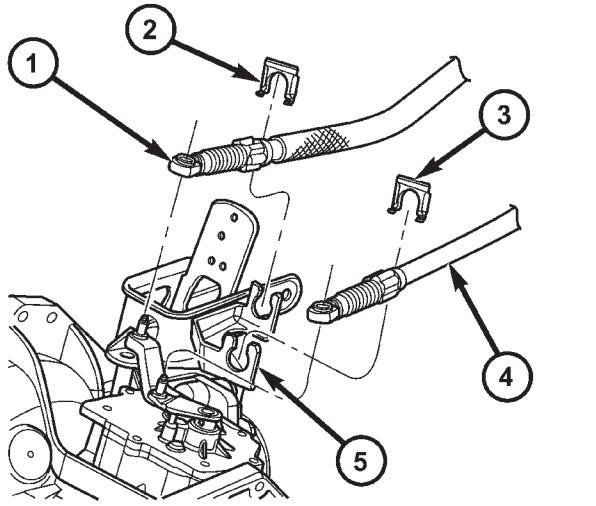

80c4a2f1

Fig. 172 Gearshift Cables at Transaxle

1 - SELECTOR CABLE
2 - CABLE RETAINER
3 - CABLE RETAINER
4 - CROSSOVER CABLE
5 - MOUNT BRACKET

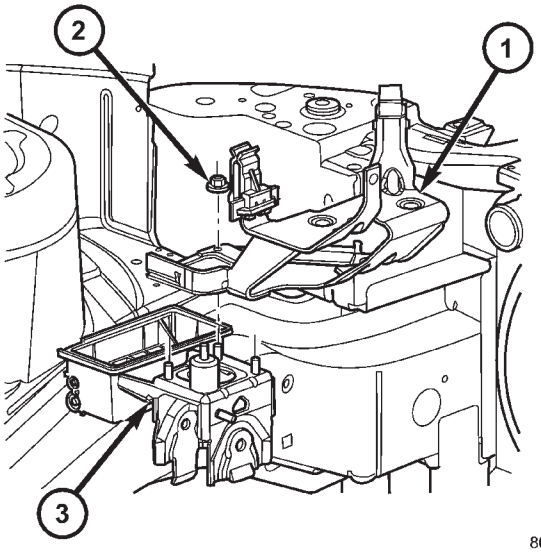

80c4a2ed

Fig. 173 Coolant Recovery Bottle Bracket

1 - COOLANT RECOVERY BOTTLE BRACKET
2 - NUT
3 - MOUNT BRACKET

GEARSHIFT CABLE - SELECTOR (Continued)

(6) Install coolant recovery bottle to bracket.

(7) Connect battery temperature sensor to battery tray. Install battery tray into position (Fig. 174).

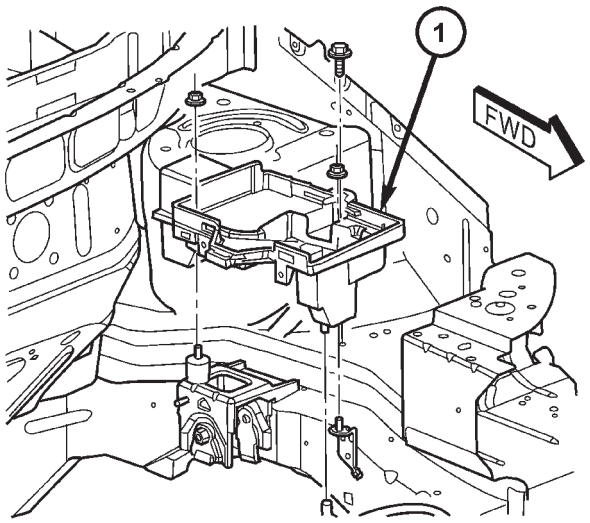

Fig. 174 Battery Tray

1 - BATTERY TRAY

(8) Install battery, hold-down clamp, and nut (Fig. 175).

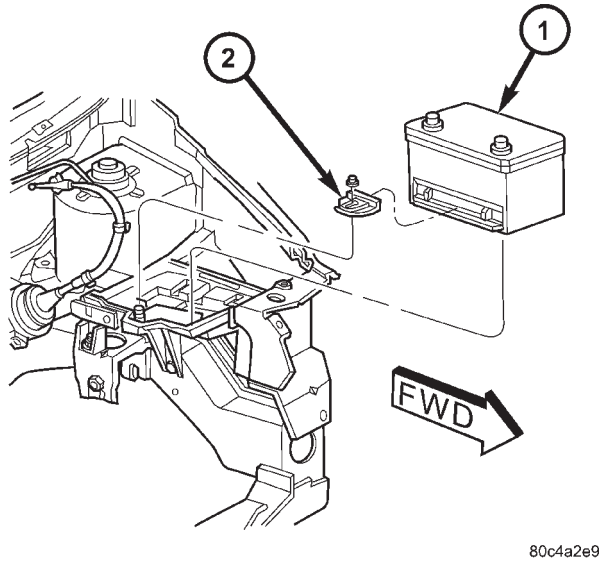

Fig. 175 Battery and Hold-Down Clamp

1 - BATTERY
2 - HOLD-DOWN CLAMP

(9) Install battery thermal shield (Fig. 176).

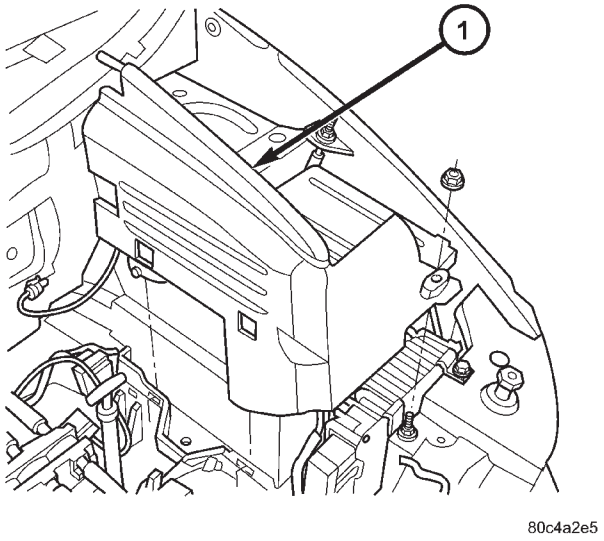

Fig. 176 Battery Thermal Shield

1 - BATTERY THERMAL SHIELD

(10) Install selector cable to gearshift mechanism (Fig. 177). Install retainer clip (Fig. 178).

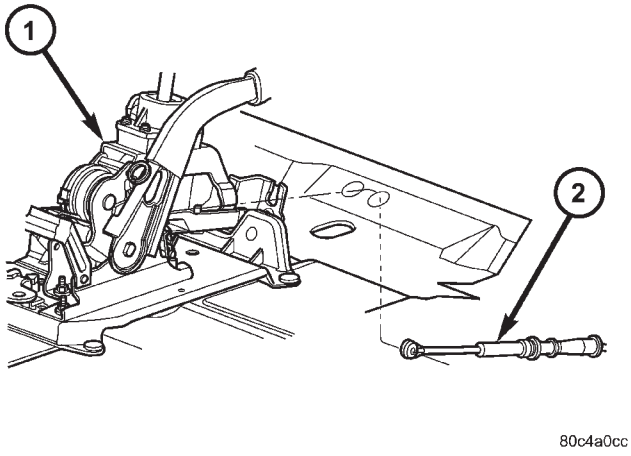

Fig. 177 Selector Cable at Gearshift Mechanism

1 - GEARSHIFT MECHANISM
2 - SELECTOR CABLE

GEARSHIFT CABLE - SELECTOR (Continued)

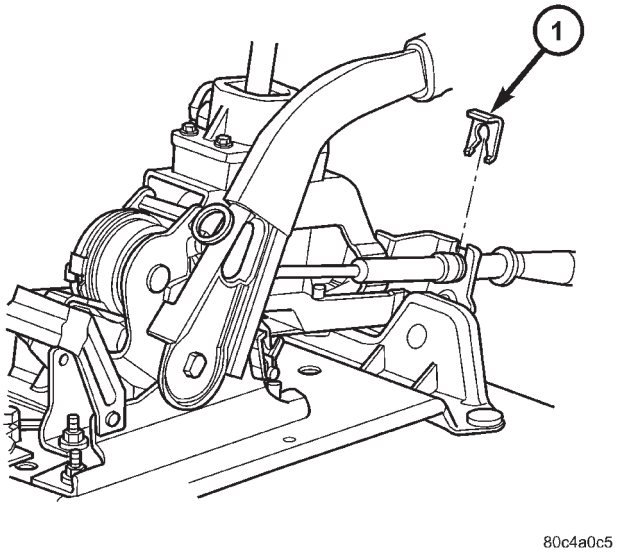

Fig. 178 Selector Cable Retainer Clip

1 - RETAINER CLIP

(11) Install center console support bracket (Fig. 179). Torque support bracket-to-gearshift mechanism screws to 12 N·m (108 in. lbs.).

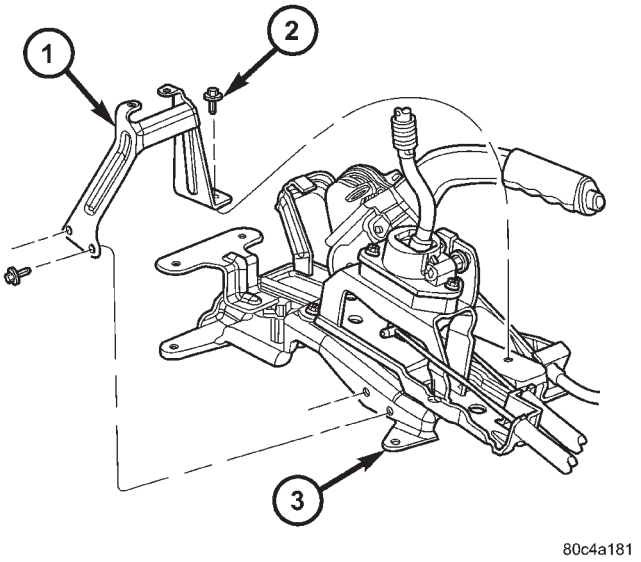

Fig. 179 Center Console Support Bracket

1 - BRACKET
2 - SCREW
3 - GEARSHIFT MECHANISM

(12) Install center console assembly (Fig. 180). Install and torque center console-to-gearshift mechanism screws to 5 N·m (45 in. lbs.).

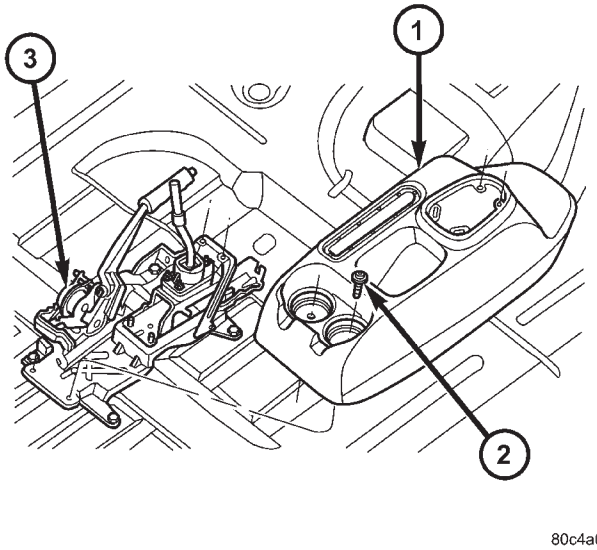

Fig. 180 Center Console Removal/Installation (LHD Shown — RHD Typical)

1 - CENTER CONSOLE
2 - SCREW (4)
3 - GEARSHIFT MECHANISM

(13) Install cupholder plugs (Fig. 181).

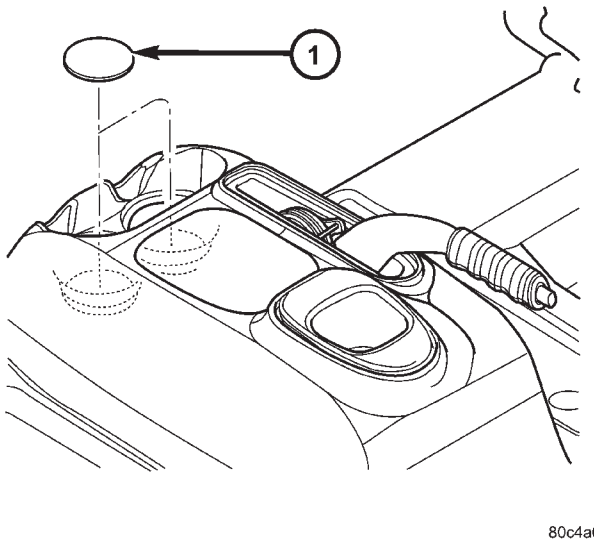

Fig. 181 Cup Holder Plugs

1 - CUPHOLDER PLUG (2)

GEARSHIFT CABLE - SELECTOR (Continued)

(14) Install gearshift boot to console (Fig. 182). Secure with three (3) retainer clips.

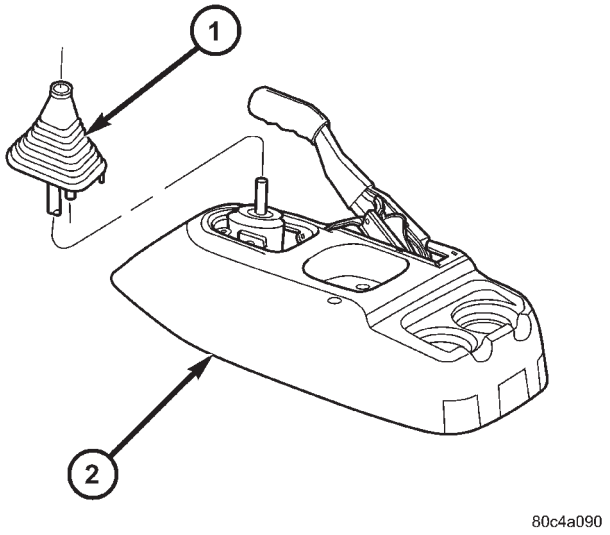

Fig. 182 Gearshift Boot Removal/Installation

1 - GEARSHIFT BOOT
2 - CENTER CONSOLE

(15) Install gearshift knob to gearshift lever (Fig. 183). Orient shift pattern ¼-turn clockwise, push down and rotate ¼-turn counter-clockwise and release. Secure boot to knob.

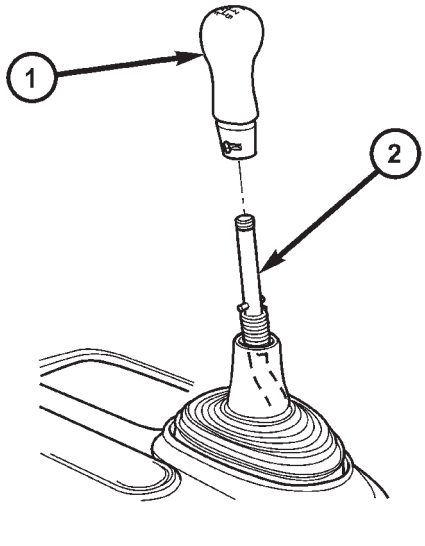

Fig. 183 Gearshift Knob Removal/Installation

1 - GEARSHIFT KNOB
2 - GEARSHIFT LEVER

(16) Connect battery negative cable.

GEARSHIFT KNOB

REMOVAL

(1) Separate gearshift boot from base of knob.
(2) Remove gearshift knob by pushing down and rotating ¼-turn clockwise (Fig. 184).

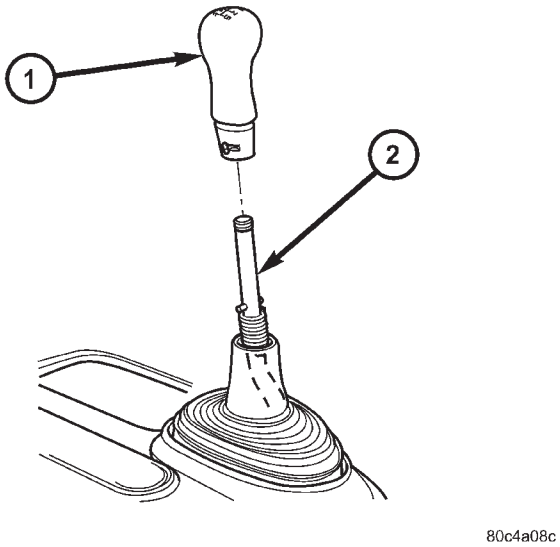

Fig. 184 Gearshift Knob Removal/Installation

1 - GEARSHIFT KNOB
2 - GEARSHIFT LEVER

INSTALLATION

(1) Install gearshift knob pattern ¼-turn clockwise, press down, and rotate ¼-turn counter clockwise (Fig. 184).
(2) Secure gearshift boot to base of knob.

GEARSHIFT MECHANISM

REMOVAL

(1) Disconnect battery negative cable.
(2) Remove gearshift knob by pushing down and rotating ¼ turn clock-wise (Fig. 185).

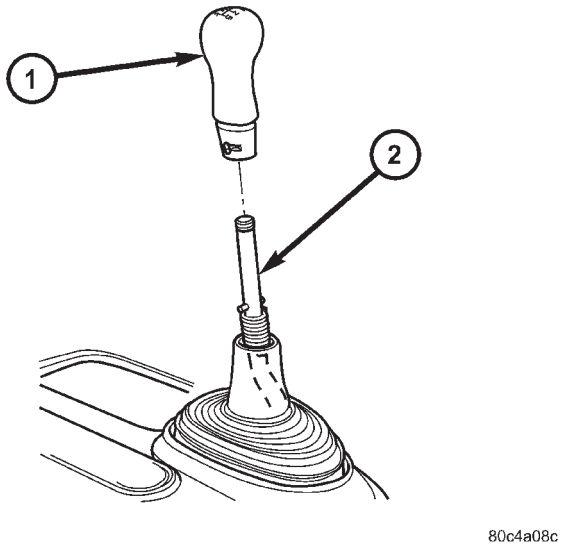

Fig. 185 Gearshift Knob Removal/Installation

1 - GEARSHIFT KNOB
2 - GEARSHIFT LEVER

(3) Remove gearshift boot from center console by disengaging at three (3) retaining clips (Fig. 186).

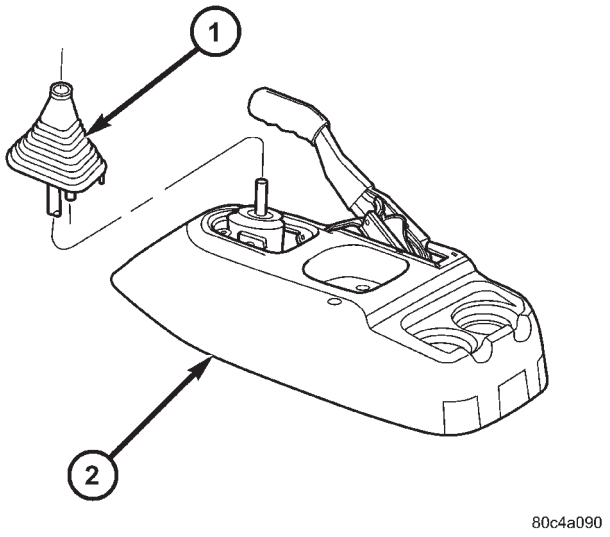

Fig. 186 Gearshift Boot Removal/Installation

1 - GEARSHIFT BOOT
2 - CENTER CONSOLE

(4) Apply park brake to allow park brake handle to clear center console upon removal.
(5) Remove two (2) cupholder bottom plugs (Fig. 187).

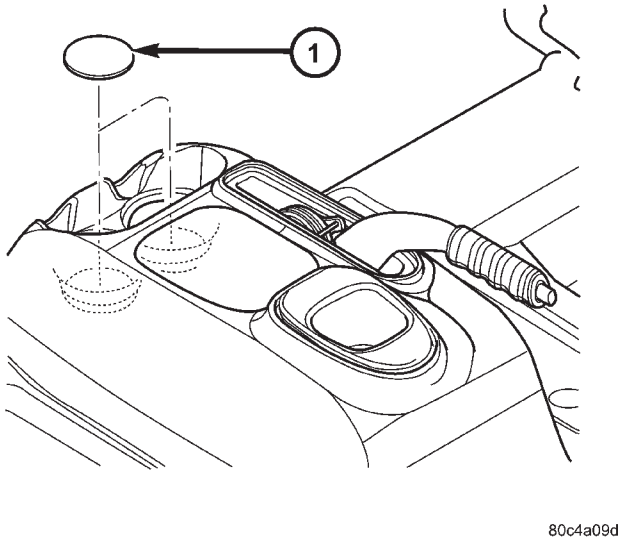

Fig. 187 Cup Holder Plugs

1 - CUPHOLDER PLUG (2)

(6) Remove four (4) center console-to-gearshift mechanism screws. Remove console assembly (Fig. 188).

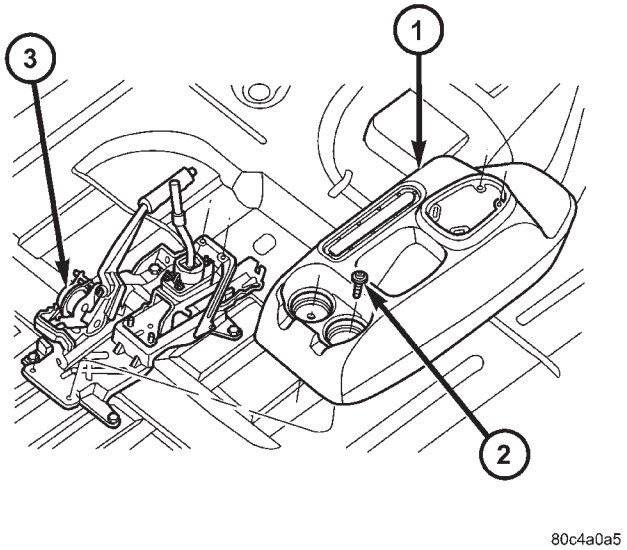

Fig. 188 Center Console Removal/Installation (LHD Shown — RHD Typical)

1 - CENTER CONSOLE
2 - SCREW (4)
3 - GEARSHIFT MECHANISM

GEARSHIFT MECHANISM (Continued)

(7) Remove center console support bracket (Fig. 189).

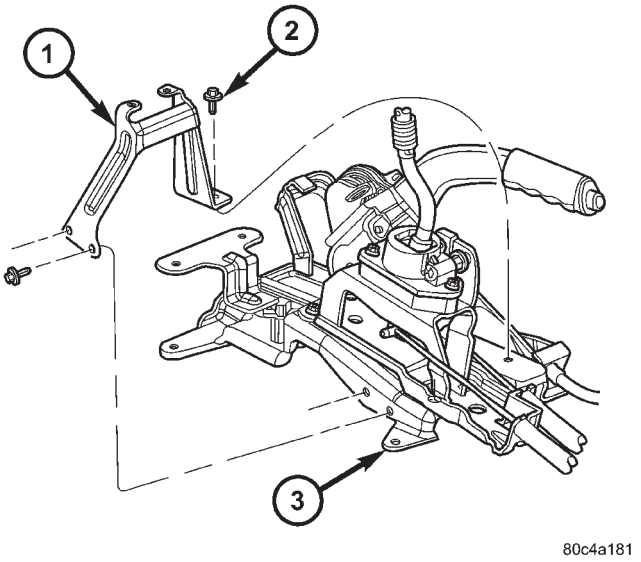

Fig. 189 Center Console Support Bracket

1 - BRACKET
2 - SCREW
3 - GEARSHIFT MECHANISM

(8) Remove crossover cable retainer clip (Fig. 190).

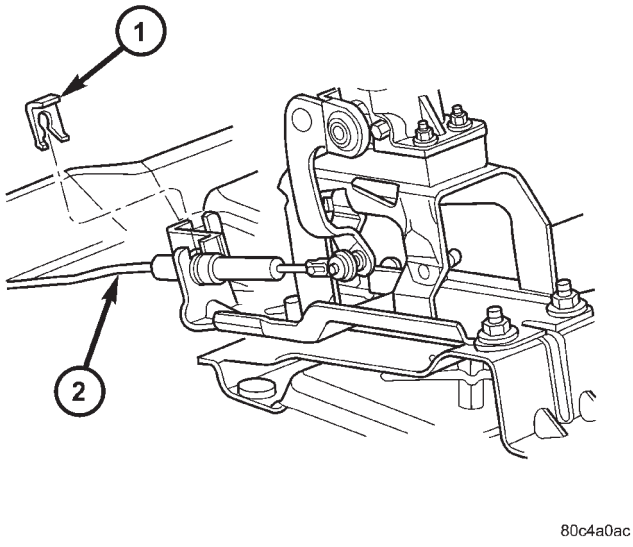

Fig. 190 Crossover Cable Retainer Clip

1 - RETAINER CLIP
2 - CROSSOVER CABLE

(9) Remove crossover cable from gearshift mechanism (Fig. 191).

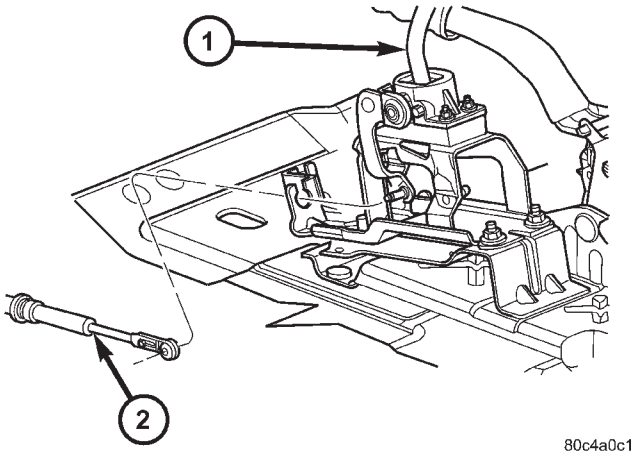

Fig. 191 Crossover Cable at Gearshift Mechanism

1 - GEARSHIFT MECHANISM
2 - CROSSOVER CABLE

(10) Remove selector cable retainer clip (Fig. 192).

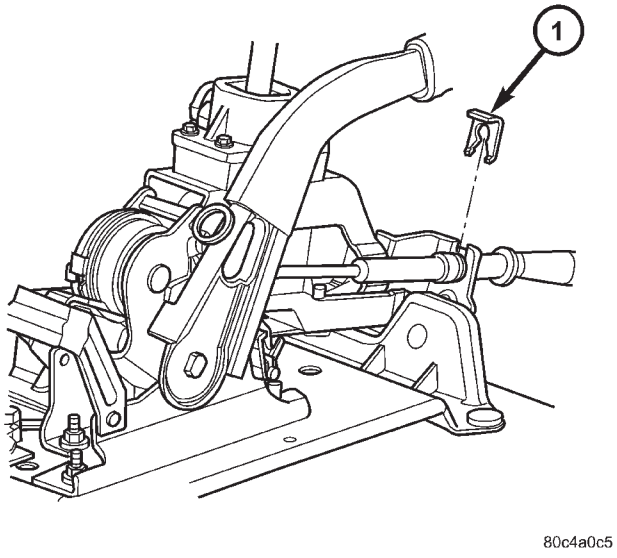

Fig. 192 Selector Cable Retainer Clip

1 - RETAINER CLIP

GEARSHIFT MECHANISM (Continued)

(11) Remove selector cable from gearshift mechanism (Fig. 193).

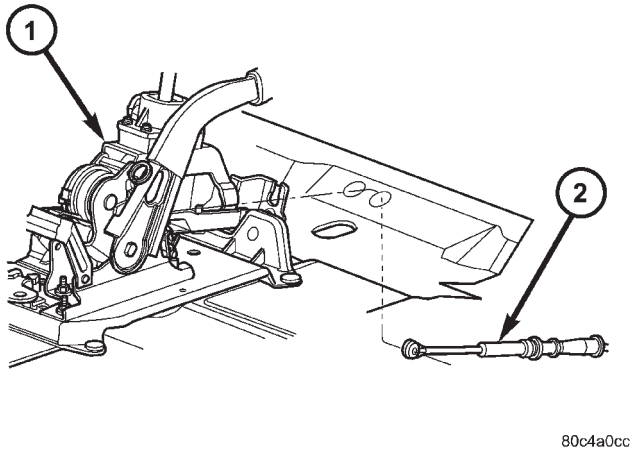

Fig. 193 Selector Cable at Gearshift Mechanism

1 - GEARSHIFT MECHANISM
2 - SELECTOR CABLE

(12) Remove four (4) gearshift mechanism-to-park brake bracket nuts. Remove gearshift mechanism from bracket (Fig. 194).

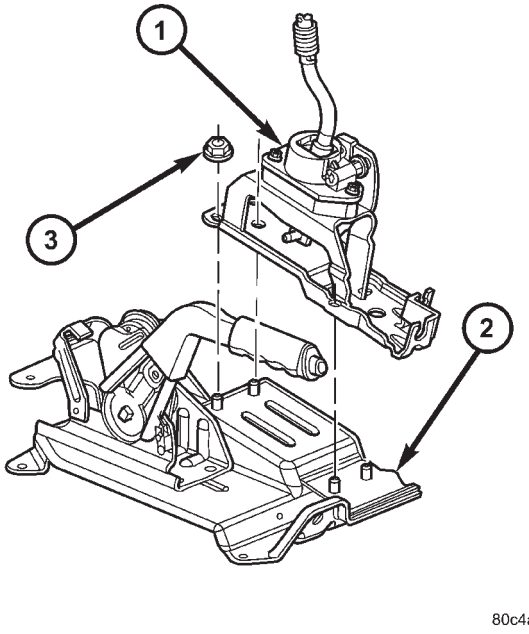

Fig. 194 Gearshift Mechanism Removal/Installation (RHD Shown — LHD Typical)

1 - GEARSHIFT MECHANISM
2 - PARK BRAKE BRACKET
3 - NUT (4)

INSTALLATION

(1) Install gearshift mechanism to park brake bracket (Fig. 195). Install and torque nuts to 12 N·m (108 in. lbs.).

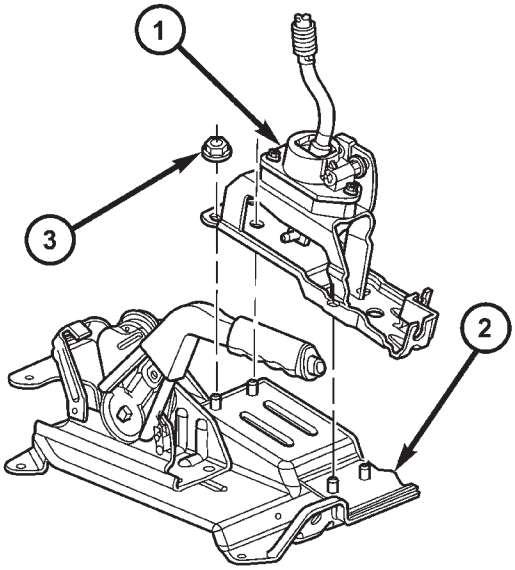

Fig. 195 Gearshift Mechanism Removal/Installation (RHD Shown — LHD Typical)

1 - GEARSHIFT MECHANISM
2 - PARK BRAKE BRACKET
3 - NUT (4)

(2) Install selector cable to gearshift mechanism (Fig. 196). Install retainer clip (Fig. 197).

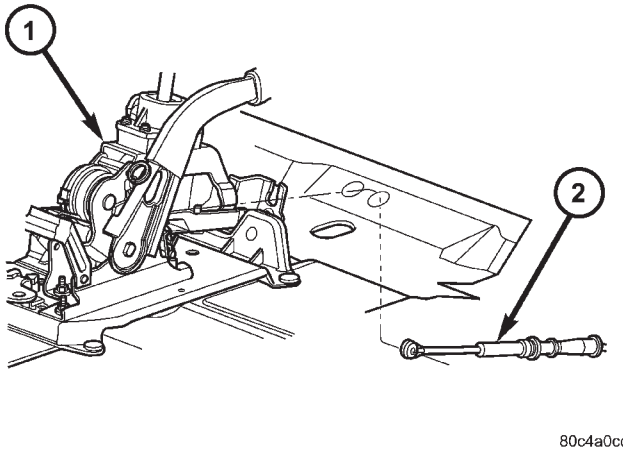

Fig. 196 Selector Cable at Gearshift Mechanism

1 - GEARSHIFT MECHANISM
2 - SELECTOR CABLE

GEARSHIFT MECHANISM (Continued)

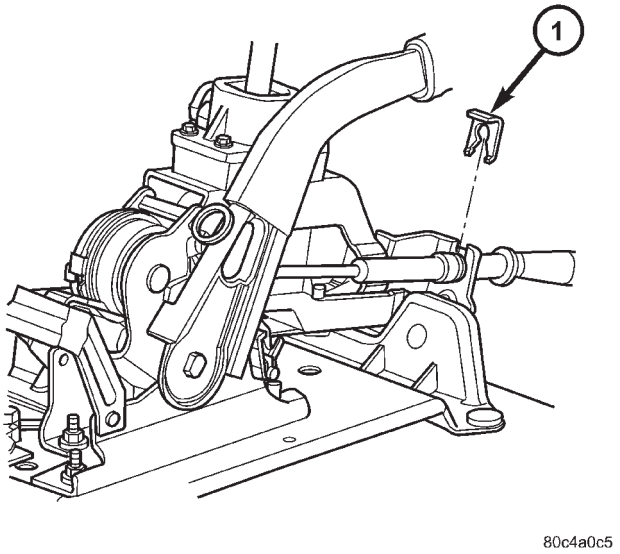

Fig. 197 Selector Cable Retainer Clip

1 - RETAINER CLIP

(3) Install crossover cable to gearshift mechanism (Fig. 198). Install retainer clip (Fig. 199).

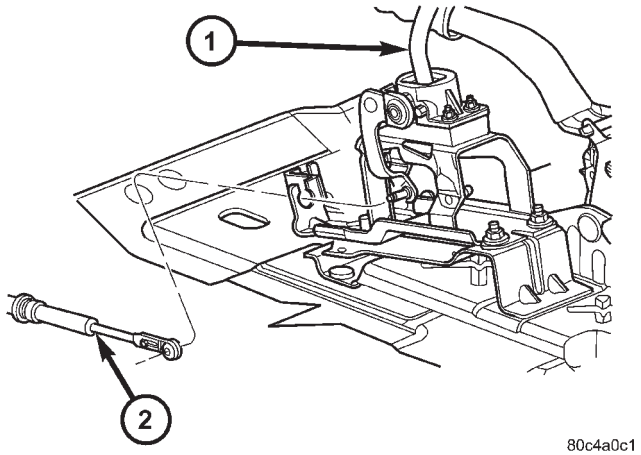

Fig. 198 Crossover Cable at Gearshift Mechanism

1 - GEARSHIFT MECHANISM
2 - CROSSOVER CABLE

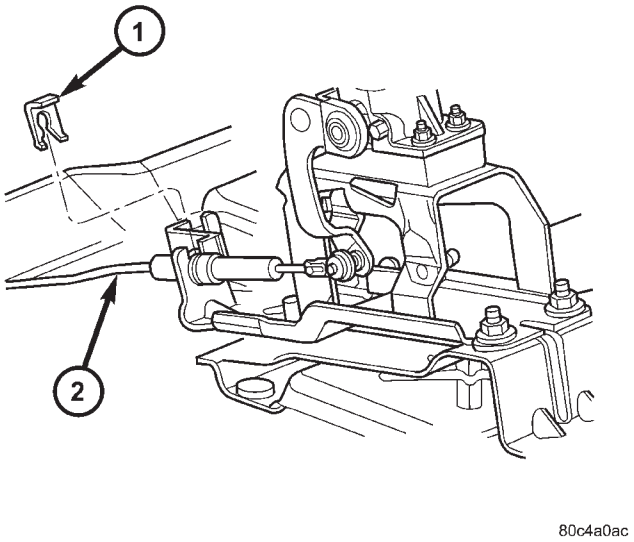

Fig. 199 Crossover Cable Retainer Clip

1 - RETAINER CLIP
2 - CROSSOVER CABLE

(4) Adjust crossover cable.

(5) Install center console support bracket (Fig. 200). Torque support bracket-to-gearshift mechanism screws to 12 N·m (108 in. lbs.).

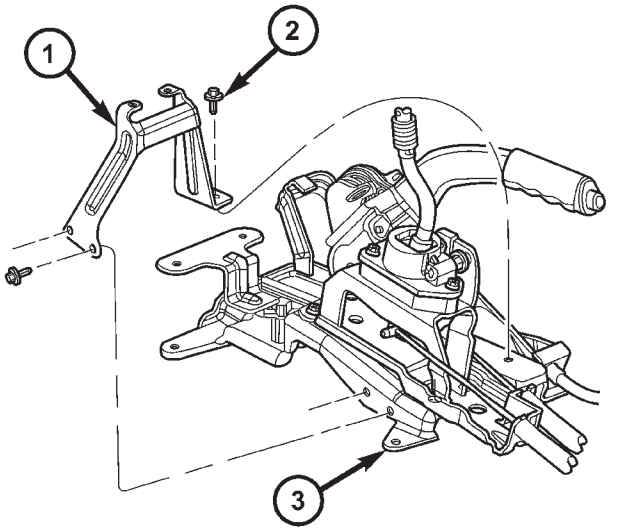

Fig. 200 Center Console Support Bracket

1 - BRACKET
2 - SCREW
3 - GEARSHIFT MECHANISM

GEARSHIFT MECHANISM (Continued)

(6) Install center console assembly (Fig. 201). Install and torque center console-to-gearshift mechanism screws to 5 N·m (45 in. lbs.).

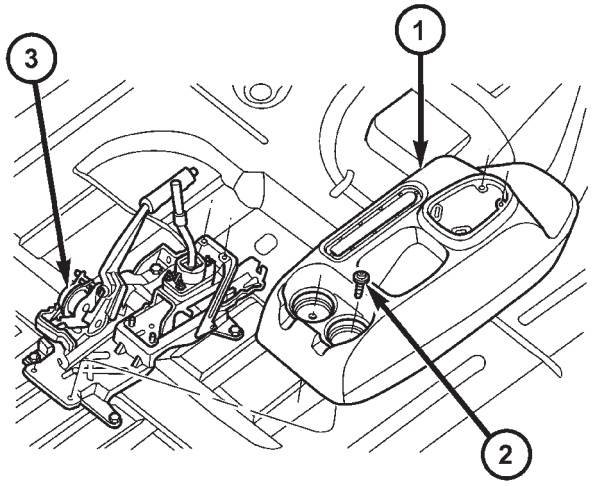

80c4a0a5

Fig. 201 Center Console Removal/Installation (LHD Shown — RHD Typical)

1 - CENTER CONSOLE
2 - SCREW (4)
3 - GEARSHIFT MECHANISM

(7) Install cupholder plugs (Fig. 202).

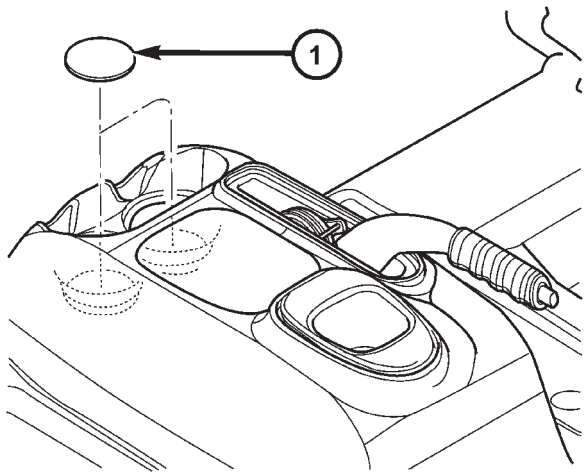

80c4a09d

Fig. 202 Cup Holder Plugs

1 - CUPHOLDER PLUG (2)

(8) Install gearshift boot to console (Fig. 203). Secure with three (3) retainer clips.

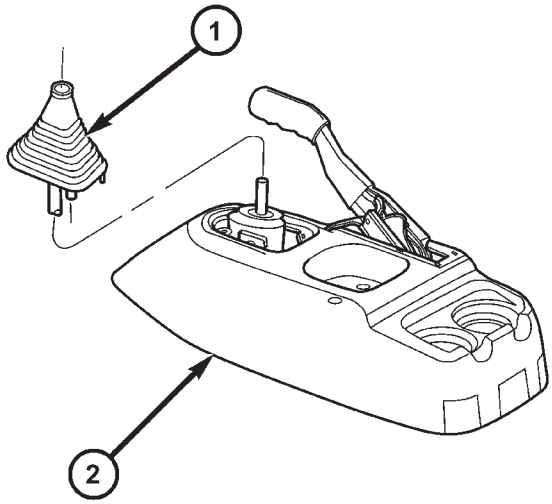

80c4a090

Fig. 203 Gearshift Boot Removal/Installation

1 - GEARSHIFT BOOT
2 - CENTER CONSOLE

(9) Install gearshift knob to gearshift lever (Fig. 204). Orient shift pattern ¼-turn clockwise, push down and rotate ¼-turn counter-clockwise and release. Secure boot to knob.

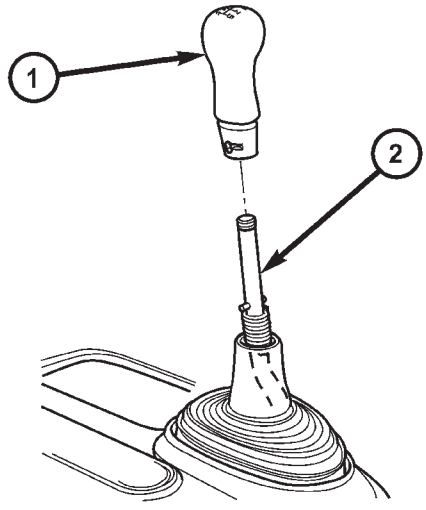

80c4a08c

Fig. 204 Gearshift Knob Removal/Installation

1 - GEARSHIFT KNOB
2 - GEARSHIFT LEVER

(10) Connect battery negative cable.

INPUT SHAFT

DESCRIPTION

The input shaft assembly (Fig. 205) is part of the transaxle geartrain, is driven by the clutch assembly, and consists of the following components:

- Input Mainshaft
- 3rd Speed Gear
- 4th Speed Gear
- 3/4 Synchronizer
- 5th Input Gear

The input shaft meshes with the intermediate shaft, and is supported by a needle bearing at the front of the transaxle, and a sealed roller bearing at the rear of the transaxle.

DISASSEMBLY

NOTE: When servicing the input shaft assembly, all snap rings which are removed MUST be replaced with new snap rings upon reassembly. The 5th gear nut must be replaced also.

(1) Invert input shaft assembly and place in fixture 8487.

(2) Remove input bearing snap ring (Fig. 206).

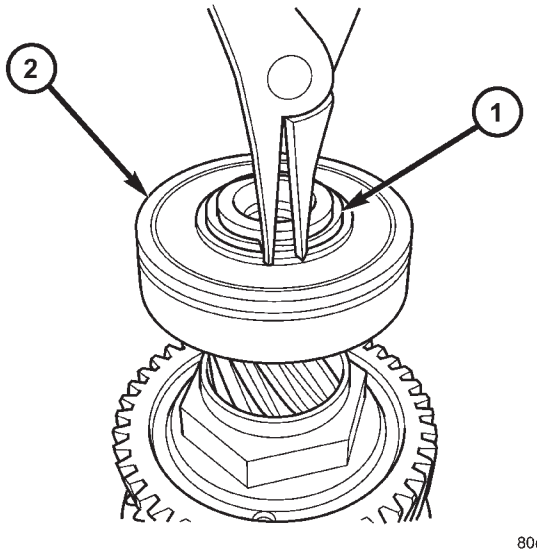

Fig. 206 Input Bearing Snap Ring Removal

1 - SNAP RING
2 - INPUT BEARING

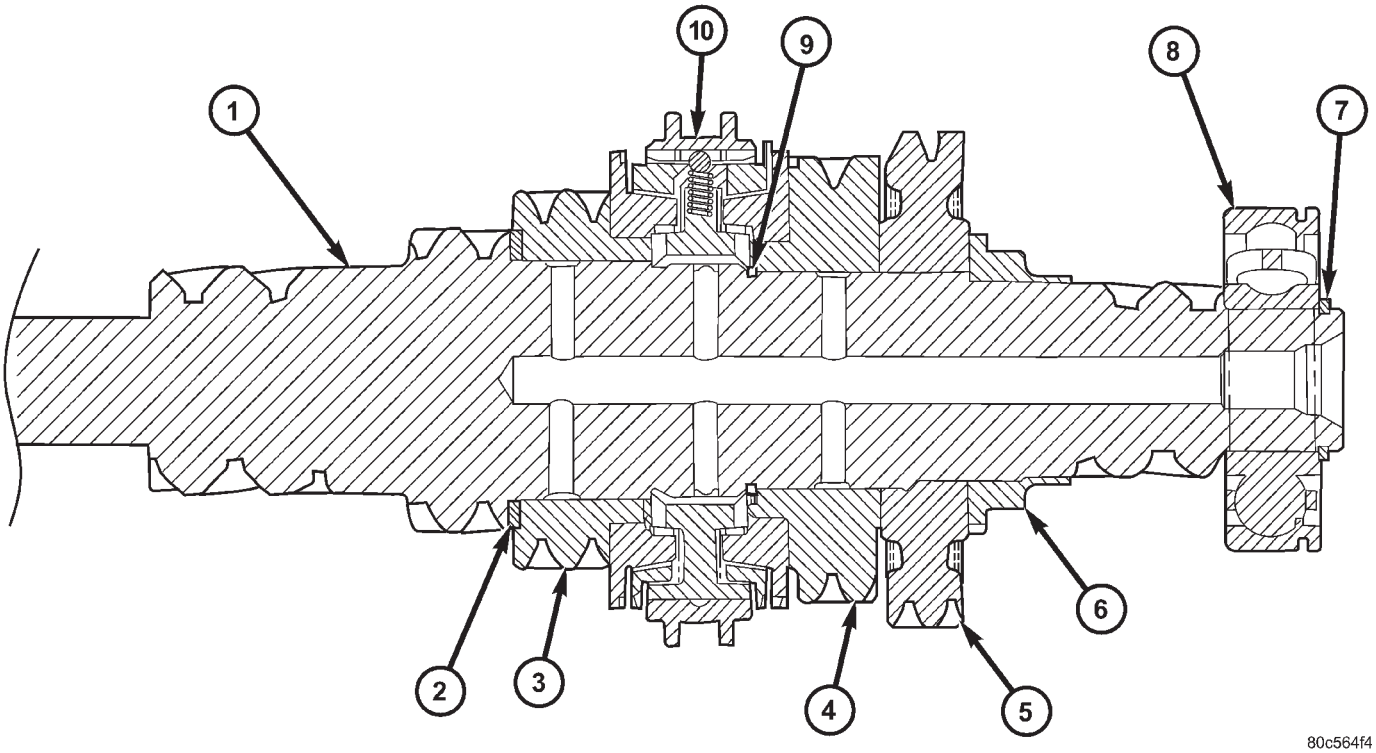

Fig. 205 Input Shaft Assembly

1 - INPUT SHAFT
2 - THRUST WASHER
3 - 3RD GEAR
4 - 4TH GEAR
5 - 5TH GEAR
6 - 5TH GEAR NUT
7 - SNAP RING
8 - INPUT BEARING (SEALED)
9 - SNAP RING
10 - 3/4 SYNCHRONIZER

INPUT SHAFT (Continued)

(3) Remove input bearing. Place input shaft assembly onto arbor press table, with the input bearing supported by bearing splitter (Fig. 207). Using adapter 8486-4, press bearing off of shaft, while helper supports shaft to prevent dropping.

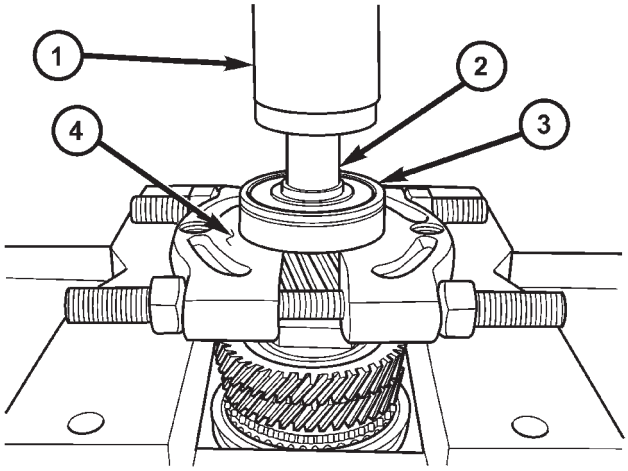

Fig. 207 Input Bearing Removal

1 - ARBOR PRESS RAM
2 - ADAPTER 8486-4
3 - INPUT BEARING
4 - BEARING SPLITTER

(4) Place input shaft assembly back into fixture 8487. Secure fixture to bench with fasteners, or secure to bench vise.

NOTE: 5th gear nut is staked to the shaft. If necessary, grind stake area to ease removal, but use care not to contact gear.

(5) Remove 5th gear nut with wrench 8478 (Fig. 208). Discard nut and use a new one upon assembly.

(6) Remove 5th gear with arbor press and bearing splitter.

(7) Remove 4th gear (Fig. 209).

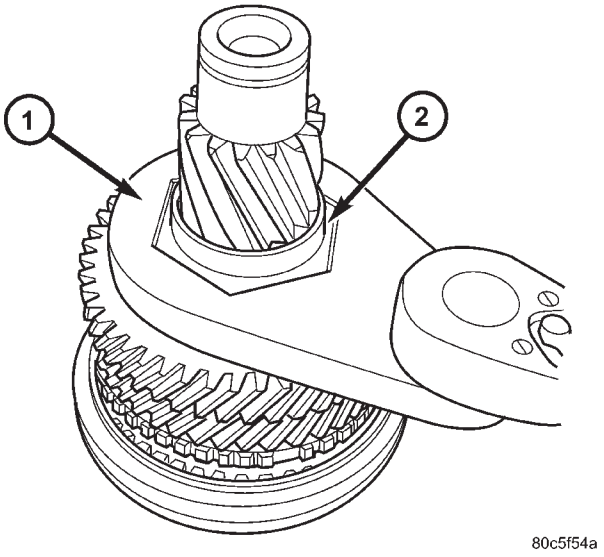

Fig. 208 5th Gear Nut Removal/Installation

1 - WRENCH 8478
2 - 5TH GEAR NUT

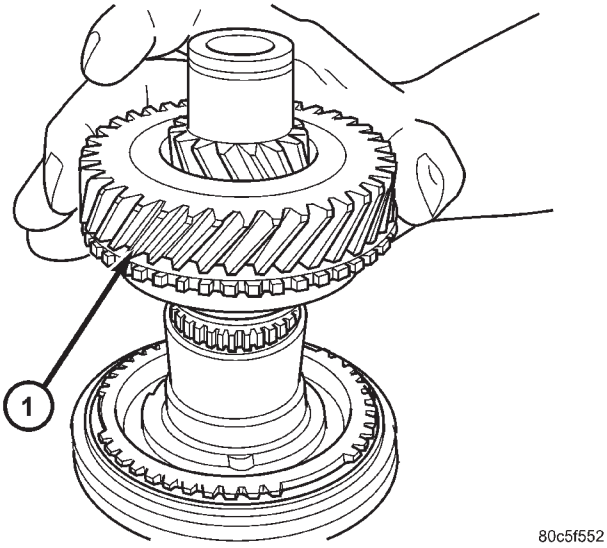

Fig. 209 4th Gear Removal/Installation

1 - 4th GEAR

INPUT SHAFT (Continued)

(8) Remove 4th gear blocker ring (Fig. 210).

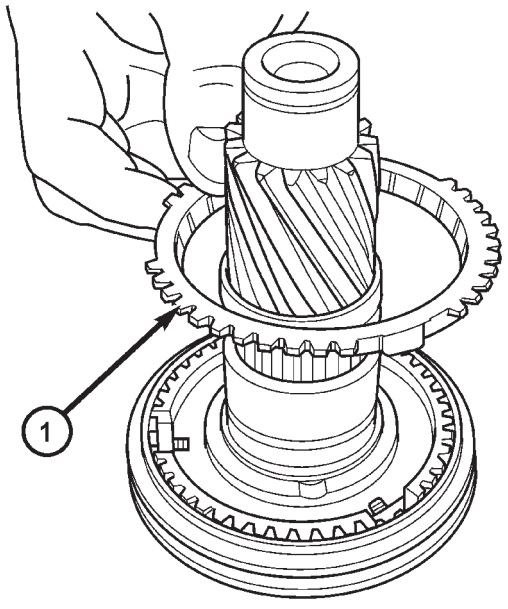

Fig. 210 4th Gear Blocker Ring

1 - 4th GEAR BLOCKER RING

(9) Remove 3/4 synchronizer snap ring (Fig. 211). Discard and replace with new snap ring upon assembly.

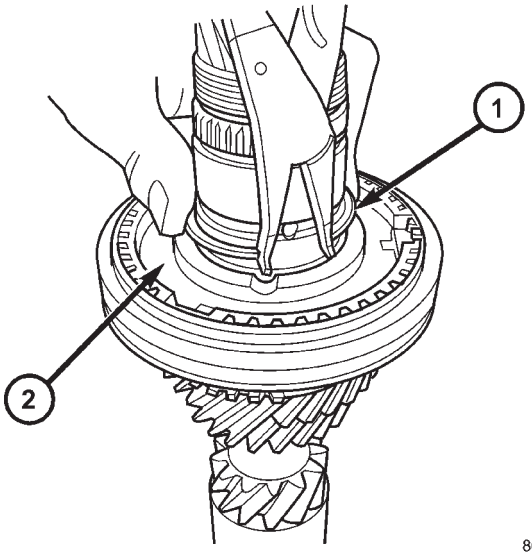

Fig. 211 3/4 Synchro Snap Ring

1 - SNAP RING
2 - 3/4 SYNCHRONIZER

(10) Remove 3/4 synchronizer (Fig. 212).

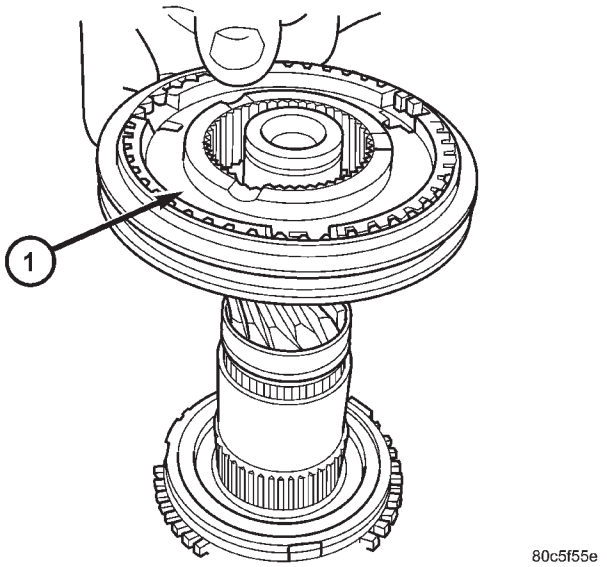

Fig. 212 3/4 Synchro Assembly

1 - 3/4 SYNCHRONIZER

(11) Remove 3rd gear blocker ring (Fig. 213).

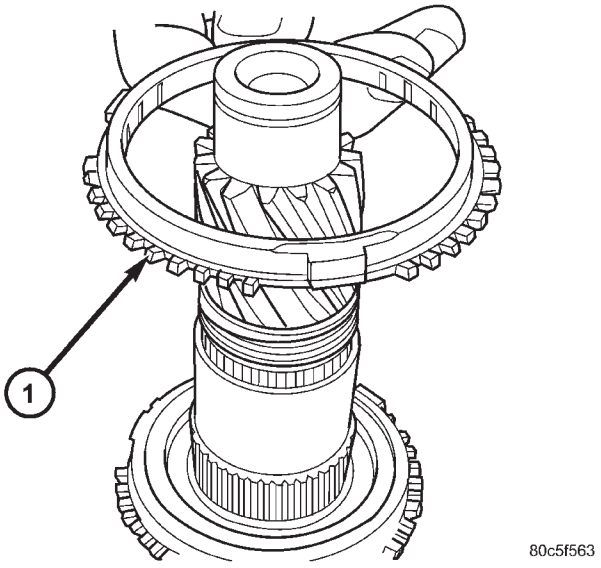

Fig. 213 3rd Gear Blocker Ring

1 - 3RD GEAR BLOCKER RING

INPUT SHAFT (Continued)

(12) Remove 3rd gear (Fig. 214).

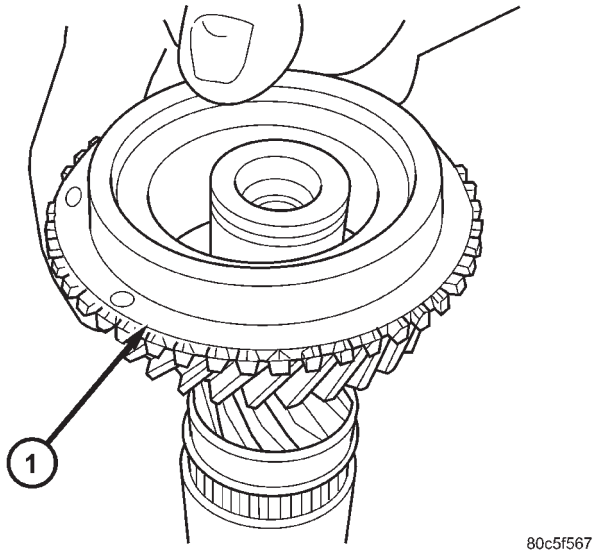

Fig. 214 3rd Gear Removal/Installation

1 - 3RD GEAR

(13) Inspect third gear thrust washer for signs of excessive wear. To replace, drive off of input shaft with suitable drift and hammer.

ASSEMBLY

NOTE: When servicing the input shaft assembly, all snap rings MUST be replaced with new ones upon assembly. 5th gear nut must also be replaced.

NOTE: When installing 3/4 synchronizer hub to shaft, make sure to align oil slots on synchronizer hub face with oil hole in the shaft splined hub journal.

NOTE: Refer to (Fig. 215) for input shaft assembly reference.

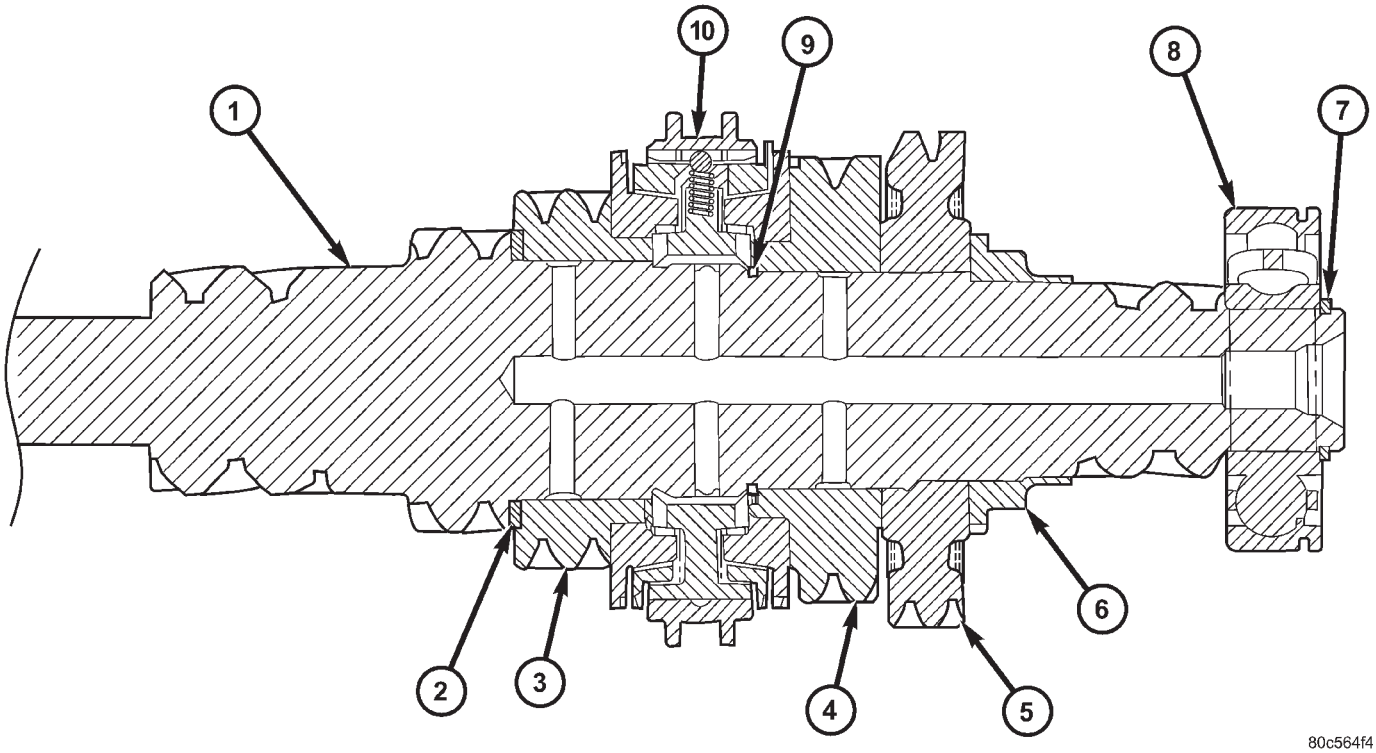

Fig. 215 Input Shaft Assembly

1 - INPUT SHAFT
2 - THRUST WASHER
3 - 3RD GEAR
4 - 4TH GEAR
5 - 5TH GEAR
6 - 5TH GEAR NUT
7 - SNAP RING
8 - INPUT BEARING (SEALED)
9 - SNAP RING
10 - 3/4 SYNCHRONIZER

INPUT SHAFT (Continued)

(1) Install input shaft into fixture 8487.
(2) Install thrust washer if removed upon disassembly.
(3) Install 3rd gear (Fig. 216).

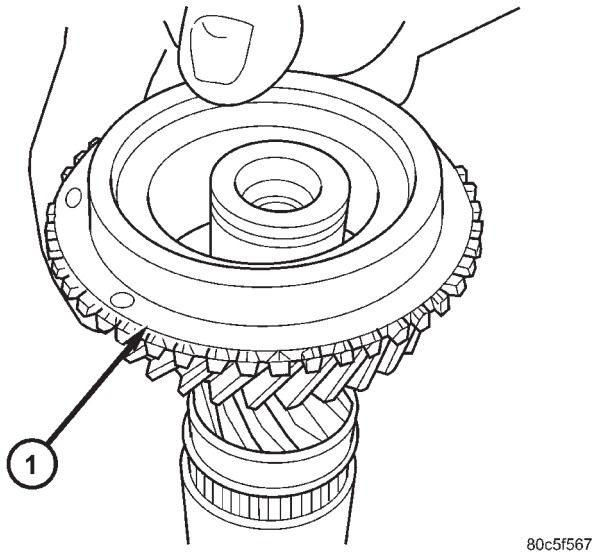

Fig. 216 3rd Gear Removal/Installation

1 - 3RD GEAR

(4) Install 3rd gear blocker ring (Fig. 217).

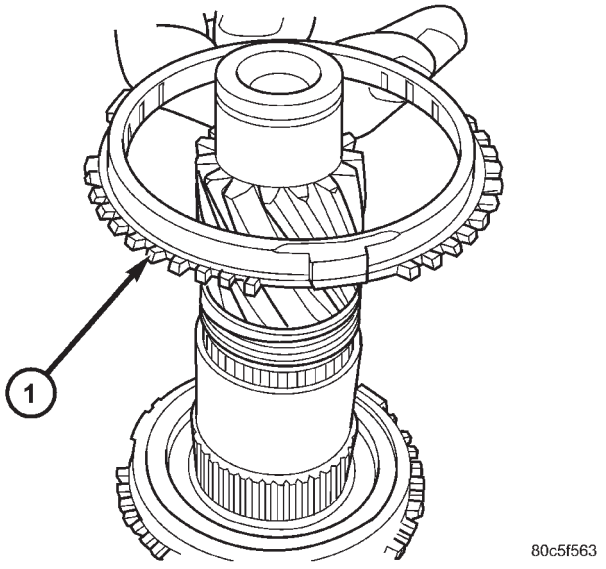

Fig. 217 3rd Gear Blocker Ring

1 - 3RD GEAR BLOCKER RING

(5) Install 3/4 synchronizer (Fig. 218). **When installing 3/4 synchronizer hub to shaft, make sure to align oil slots on synchronizer hub face with oil hole in the shaft splined hub journal.**

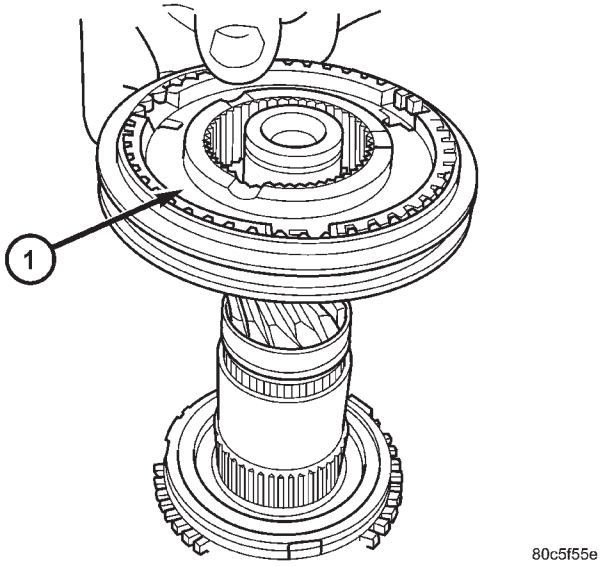

Fig. 218 3/4 Synchro Assembly

1 - 3/4 SYNCHRONIZER

(6) Install **NEW** 3/4 synchronizer snap ring (Fig. 219).

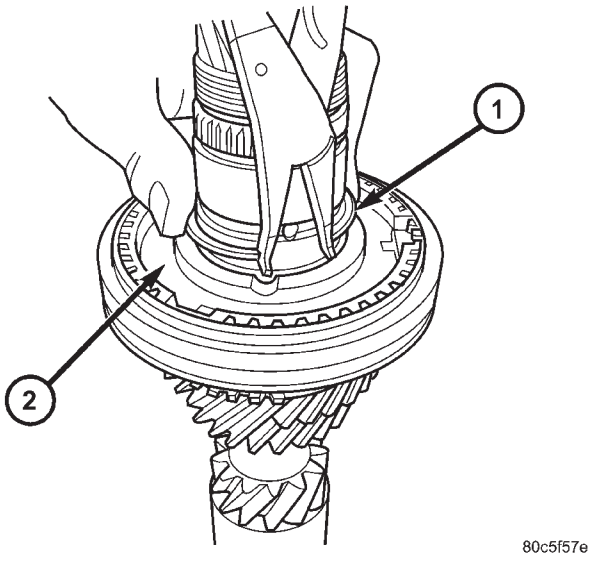

Fig. 219 3/4 Synchro Snap Ring

1 - SNAP RING
2 - 3/4 SYNCHRONIZER

INPUT SHAFT (Continued)

(7) Install 4th gear blocker ring (Fig. 220).

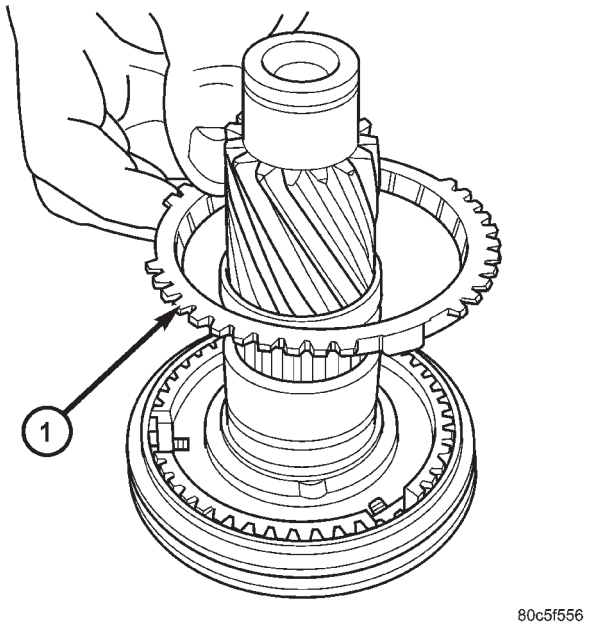

Fig. 220 4th Gear Blocker Ring

1 - 4th GEAR BLOCKER RING

(8) Install 4th gear (Fig. 221).

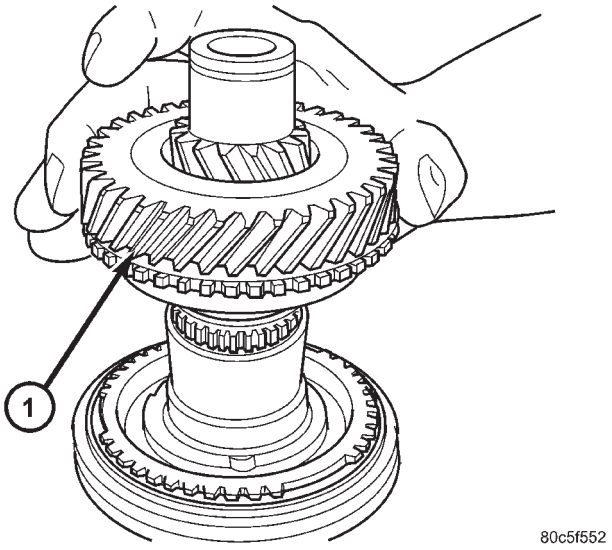

Fig. 221 4th Gear Removal/Installation

1 - 4th GEAR

(9) Install 5th gear and press into position using installer 8481 (Fig. 222).

(10) Install **NEW** 5th gear nut and torque to 200 N·m (148 ft. lbs.) using wrench 8478 (Fig. 223).

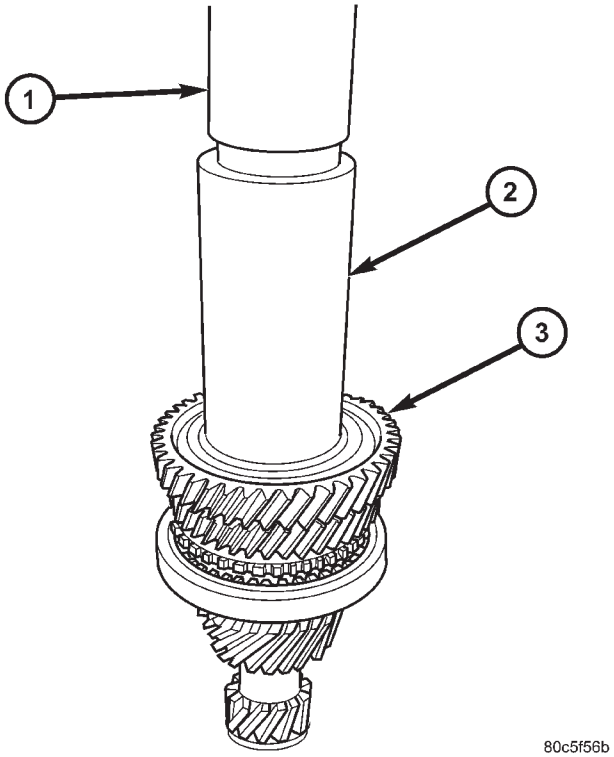

Fig. 222 5th Gear Installation

1 - ARBOR PRESS RAM
2 - INSTALLER 8481
3 - 5TH GEAR

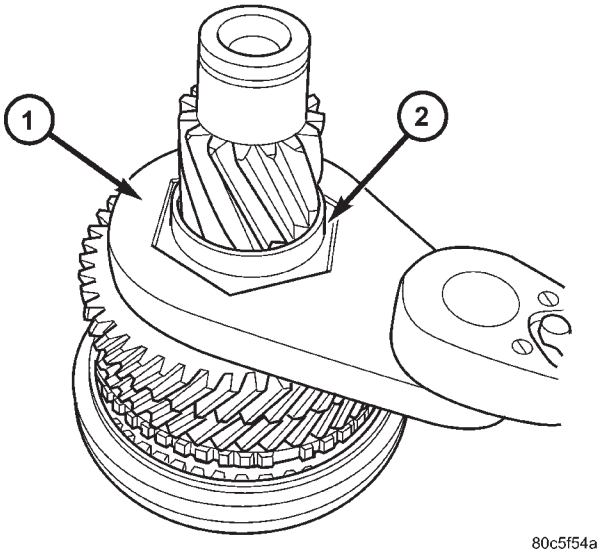

Fig. 223 5th Gear Nut Removal/Installation

1 - WRENCH 8478
2 - 5TH GEAR NUT

INPUT SHAFT (Continued)

(11) Stake 5th Gear nut as follows:

(a) Install staking tool 8479 to 5th gear nut.

(b) Tighten upper thumb screw by hand (Fig. 224).

(c) Tighten two (2) side thumb screws by hand.

(d) Tighten both staking screws until they bottom on tool body (Fig. 225).

(e) Loosen staking screws and thumb screws. Remove tool and visually inspect stake (Fig. 226).

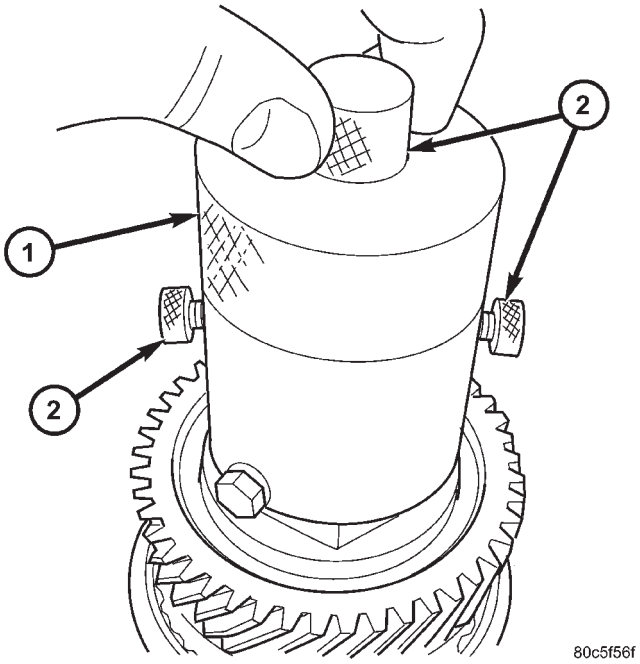

Fig. 224 Staking Tool Set-Up

1 - STAKING TOOL 8479
2 - THUMB SCREWS (3)

NOTE: The input shaft sealed roller bearing and snap ring do not get installed until transaxle assembly to facilitate installation of the reverse idler gear mechanism.

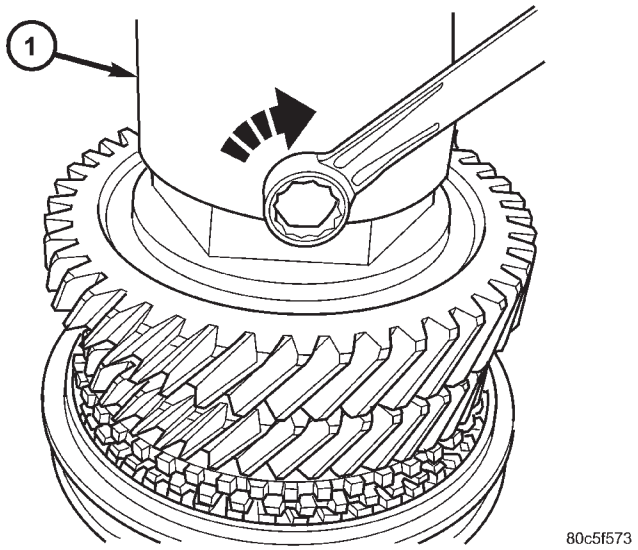

Fig. 225 Tighten Stake Screws

1 - STAKING TOOL 8479

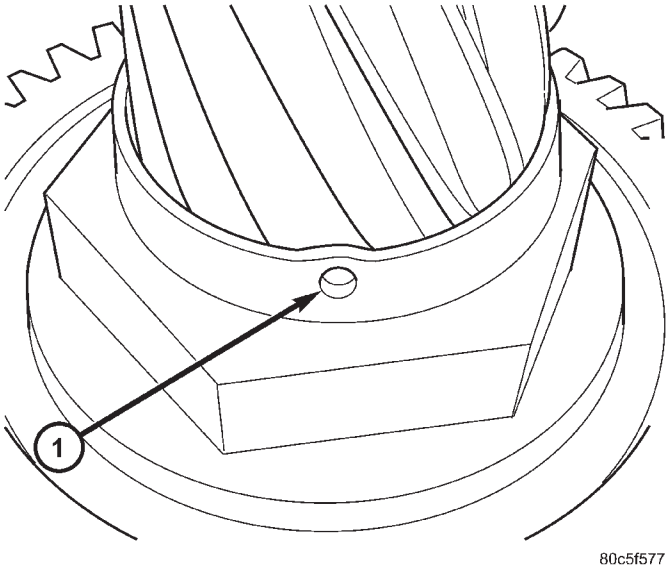

Fig. 226 5th Gear Nut Stake

1 - STAKE
2 - 5TH GEAR NUT

INTERMEDIATE SHAFT

DESCRIPTION

The intermediate shaft assembly (Fig. 227) is part of the transaxle geartrain, meshes with and is driven by the input shaft, drives the differential via an integrated pinion gear, and consists of the following components:

- Intermediate Mainshaft
- 1st Speed Gear
- 2nd Speed Gear
- 3/4 Cluster Gear
- 5th Speed Gear
- Reverse Gear
- 1/2 Synchronizer
- 5/R Synchronizer

The intermediate shaft is supported by a caged roller bearing at the front of the transaxle, and a sealed roller bearing at the rear of the transaxle.

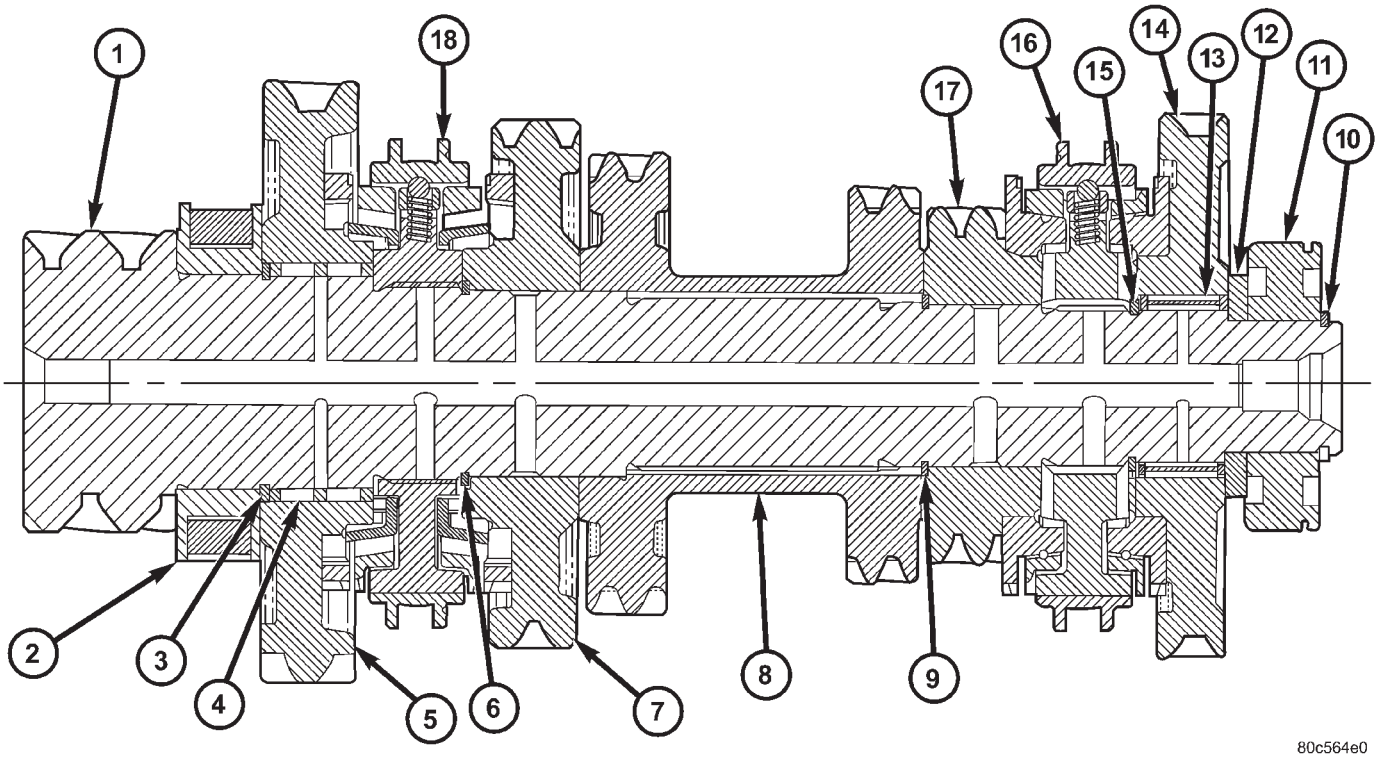

Fig. 227 Intermediate Shaft Assembly

1 - INTERMEDIATE SHAFT
2 - ROLLER BEARING
3 - SNAP RING
4 - NEEDLE BEARING
5 - 1ST SPEED GEAR
6 - SNAP RING
7 - 2ND SPEED GEAR
8 - 3/4 CLUSTER GEAR
9 - SNAP RING
10 - SNAP RING
11 - SEALED ROLLER BEARING
12 - THRUST WASHER
13 - NEEDLE BEARING
14 - REVERSE GEAR
15 - SNAP RING
16 - 5/R SYNCHRO
17 - 5TH SPEED GEAR
18 - 1/2 SYNCHRO

INTERMEDIATE SHAFT (Continued)

DISASSEMBLY

CAUTION: Do not re-use snap rings when servicing the intermediate shaft assembly. Discard upon disassembly and install new ones provided with available snap ring service kit.

(1) Install intermediate shaft assembly to arbor press table with bearing splitter P-334 under the reverse gear.

(2) Install 8486-4 button to intermediate shaft. Using arbor press ram, press reverse gear and intermediate roller bearing off of shaft, while holding remaining assembly with hand (Fig. 228).

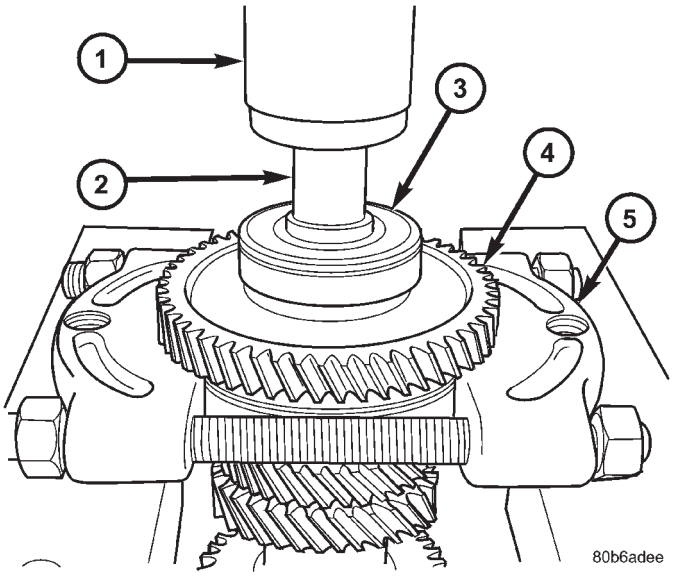

Fig. 228 Bearing and Reverse Gear Removal

1 - ARBOR PRESS RAM
2 - ADAPTER 8486-4
3 - SEALED ROLLER BEARING
4 - REVERSE GEAR
5 - BEARING SPLITTER P-334

(3) Remove reverse gear blocker ring.

(4) Remove reverse gear needle bearing (Fig. 229).

(5) Remove 5/R synchro snap ring (Fig. 230).

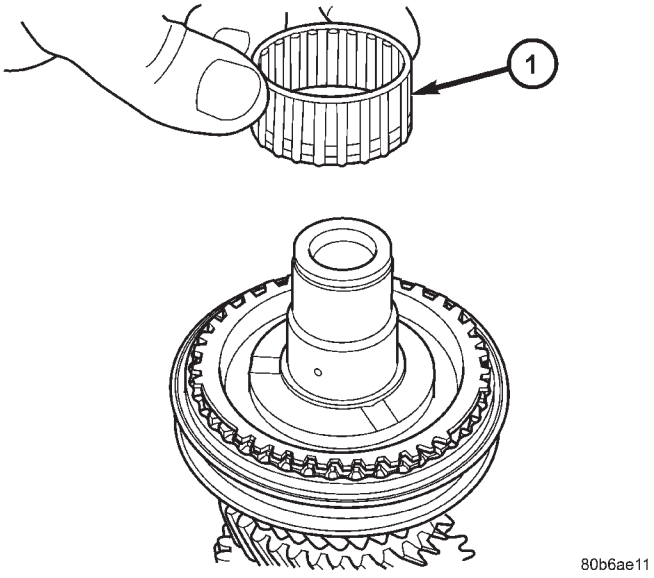

Fig. 229 Reverse Gear Needle Bearing

1 - NEEDLE BEARING

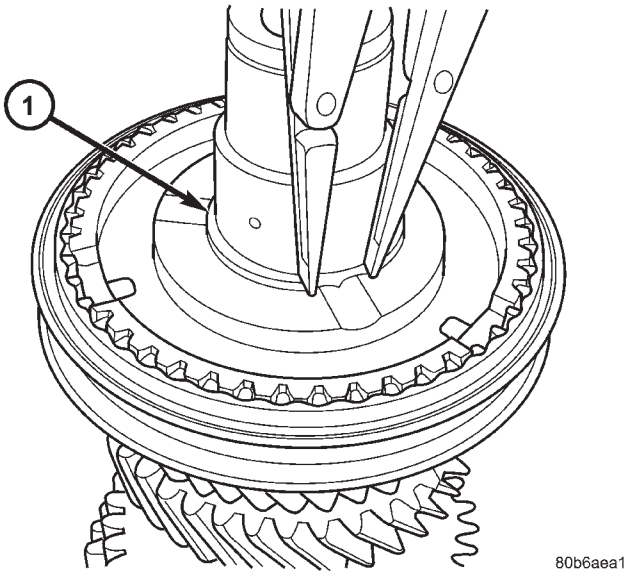

Fig. 230 5/R Synchro Snap Ring

1 - SNAP RING

INTERMEDIATE SHAFT (Continued)

(6) Remove 5/R synchro (Fig. 231).

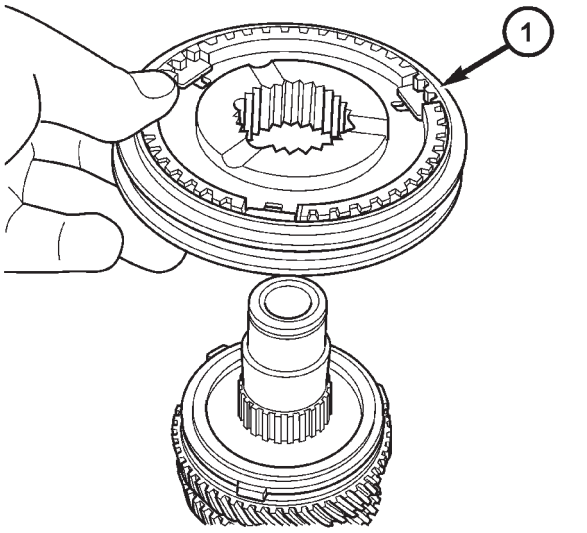

Fig. 231 5/R Synchronizer

1 - 5/R SYNCHRO ASSEMBLY

(7) Remove 5th gear blocker ring (Fig. 232).

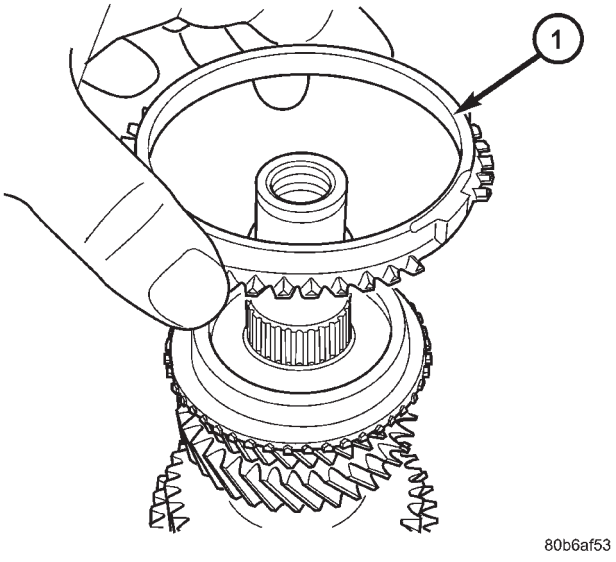

Fig. 232 5th Gear Blocker Ring

1 - 5th GEAR BLOCKER RING

(8) Remove 5th gear (Fig. 233).

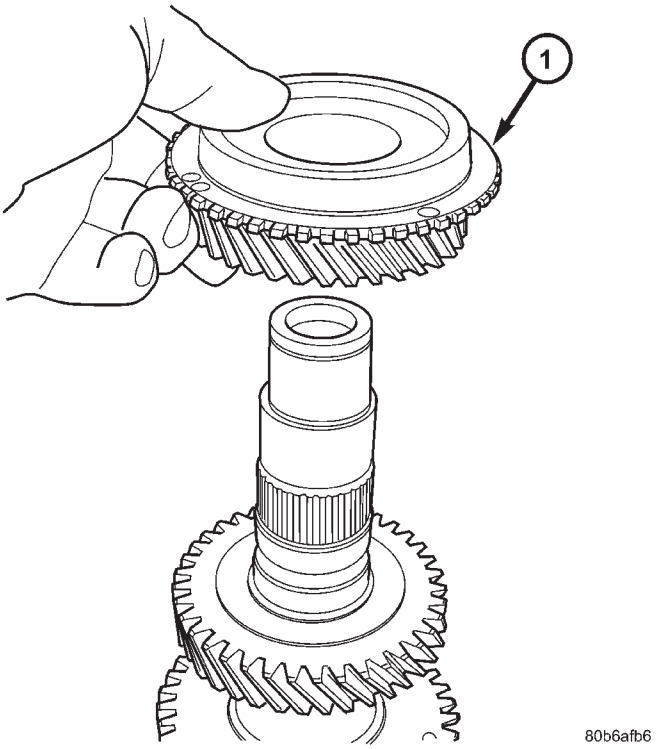

Fig. 233 5th Gear

1 - 5th GEAR

(9) Remove 3/4 cluster gear snap ring (Fig. 234).

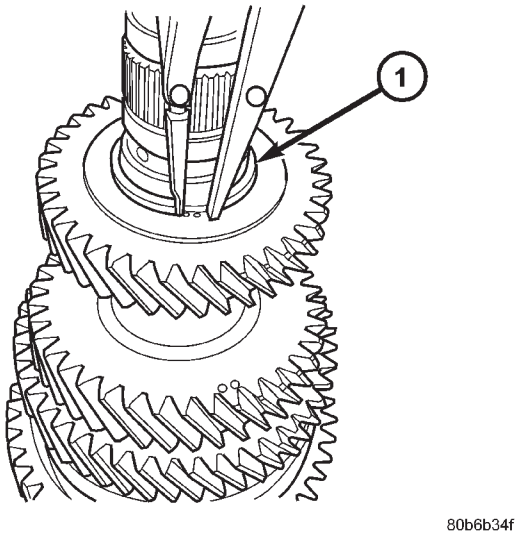

Fig. 234 3/4 Cluster Gear Snap Ring

1 - SNAP RING

INTERMEDIATE SHAFT (Continued)

(10) Install shaft assembly into fixture 8483, with split collar 8483-3 oriented chamfer side up (Fig. 235). Place 8483-2 into position with chamfer side up (Fig. 236).

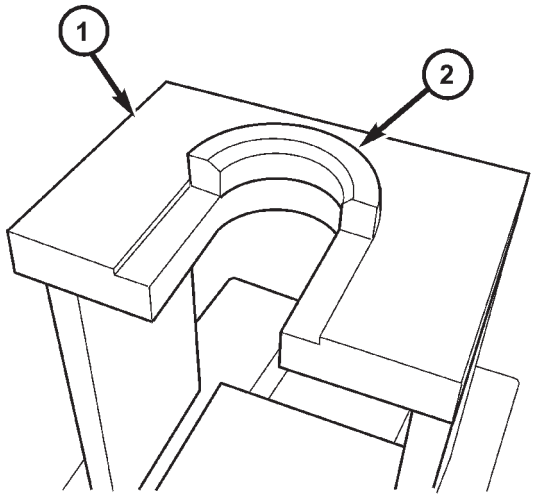

80b6b3b0

Fig. 235 Fixture 8483

1 - FIXTURE 8483
2 - COLLAR 8483-3

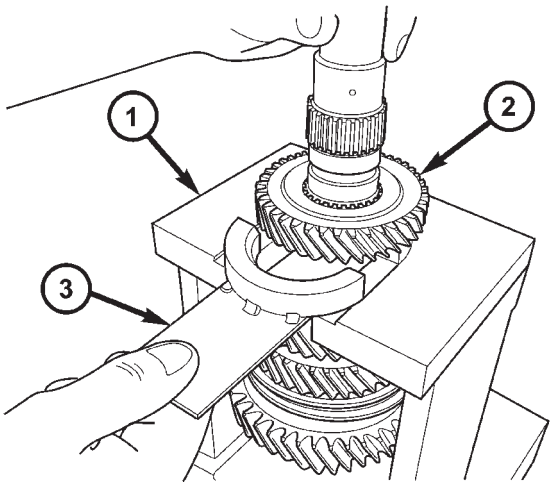

80b6b3f5

Fig. 236 Loading Intermediate Shaft

1 - FIXTURE 8483
1 - 3/4 CLUSTER GEAR
2 - COLLAR 8483-2

(11) Using an arbor press, press intermediate shaft out of 3/4 cluster gear (Fig. 237).

(12) Remove intermediate shaft from fixture and remove 3/4 cluster gear from shaft (Fig. 238).

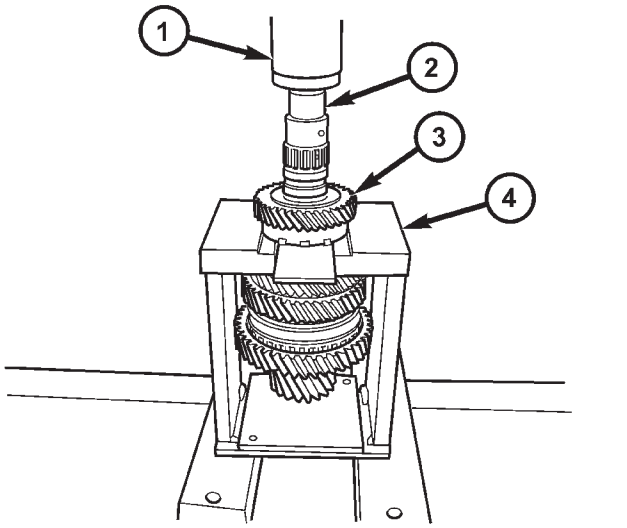

80b6b407

Fig. 237 Press Intermediate Shaft Out of 3/4 Cluster Gear

1 - ARBOR PRESS RAM
2 - INTERMEDIATE SHAFT
3 - 3/4 CLUSTER GEAR
4 - FIXTURE 8483

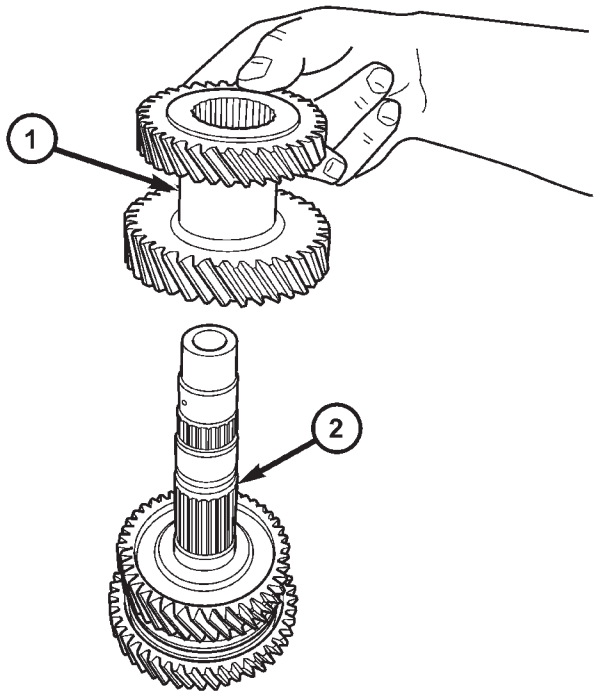

80b6b440

Fig. 238 3/4 Cluster Gear

1 - 3/4 CLUSTER GEAR
2 - INTERMEDIATE SHAFT

INTERMEDIATE SHAFT (Continued)

(13) Remove 2nd gear from shaft (Fig. 239).

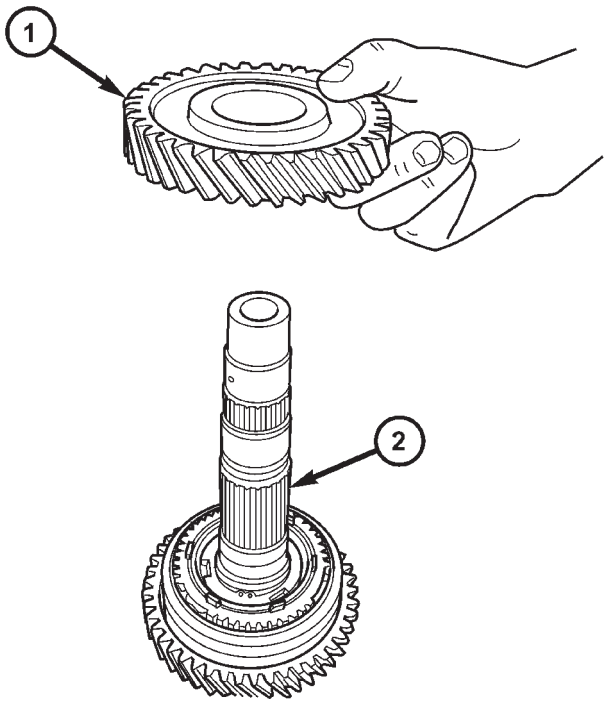

Fig. 239 2nd Gear Removal

1 - 2ND GEAR
2 - INTERMEDIATE SHAFT

(14) Remove 2nd gear reactor ring (Fig. 240).

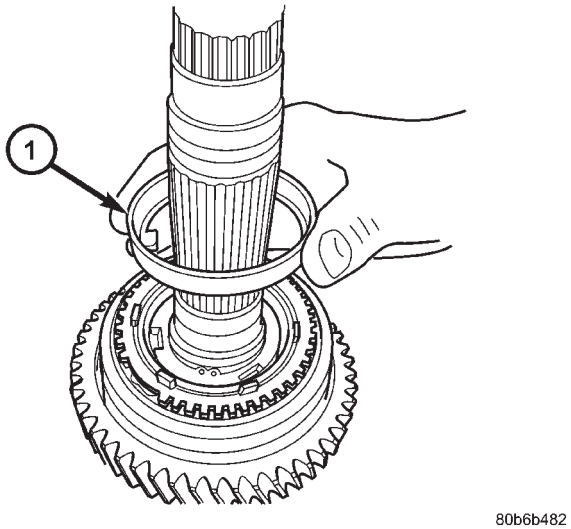

Fig. 240 2nd Gear Reactor Ring

1 - 2ND GEAR REACTOR RING

(15) Remove 2nd gear friction cone (Fig. 241).

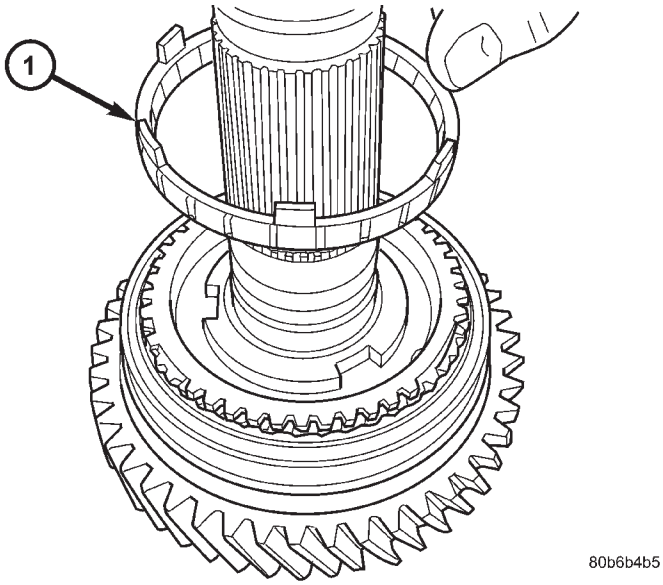

Fig. 241 2nd Gear Friction Cone

1 - 2ND GEAR FRICTION CONE

(16) Remove 2nd Gear outer blocker ring (Fig. 242).

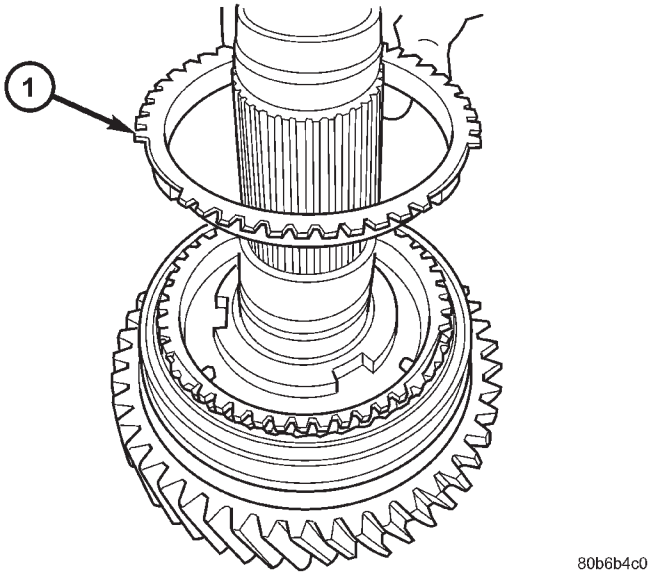

Fig. 242 2nd Gear Outer Blocker Ring

1 - 2ND GEAR BLOCKER RING

INTERMEDIATE SHAFT (Continued)

(17) Remove 1/2 synchro snap ring (Fig. 243).

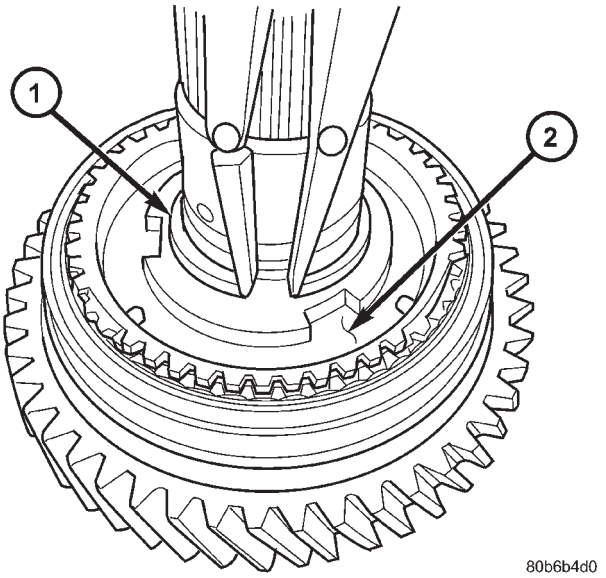

Fig. 243 1/2 Synchro Snap Ring

1 - SNAP RING
2 - 1/2 SYNCHRO HUB

(18) Remove 1/2 synchro from shaft (Fig. 244).

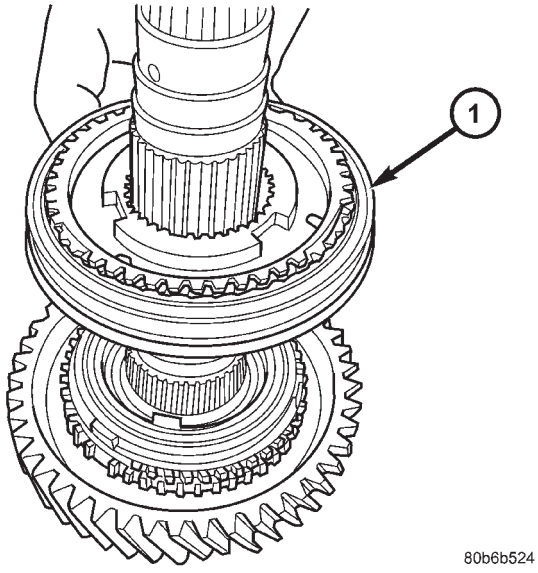

Fig. 244 1/2 Synchronizer

1 - 1/2 SYNCHRONIZER

(19) Remove 1st gear blocker ring (Fig. 245).

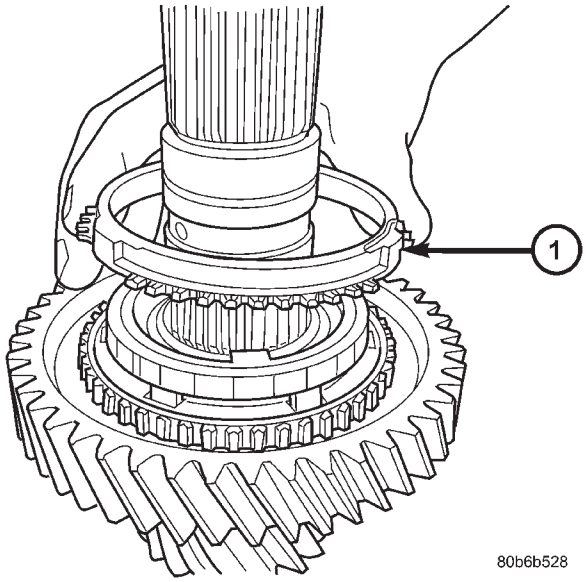

Fig. 245 1st Gear Blocker Ring

1 - 1ST GEAR BLOCKER RING

(20) Remove 1st gear friction cone (Fig. 246).

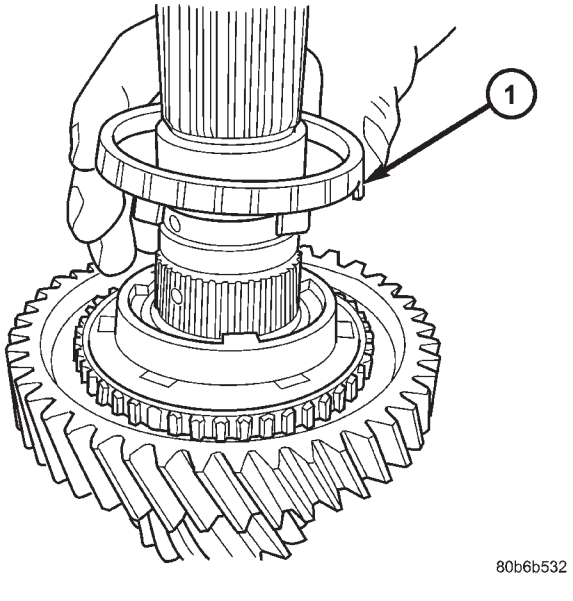

Fig. 246 1st Gear Friction Cone

1 - 1ST GEAR FRICTION CONE

INTERMEDIATE SHAFT (Continued)

(21) Remove 1st gear reactor ring (Fig. 247).

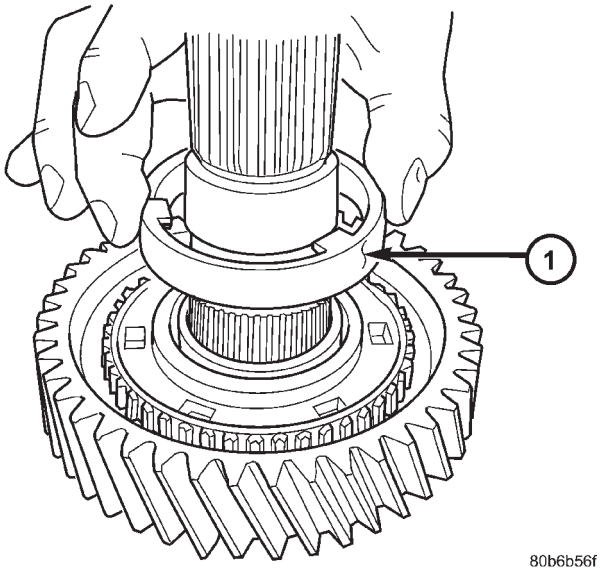

Fig. 247 1st Gear Reactor Ring

1 - 1ST GEAR REACTOR RING

(22) Remove 1st gear from shaft (Fig. 248).

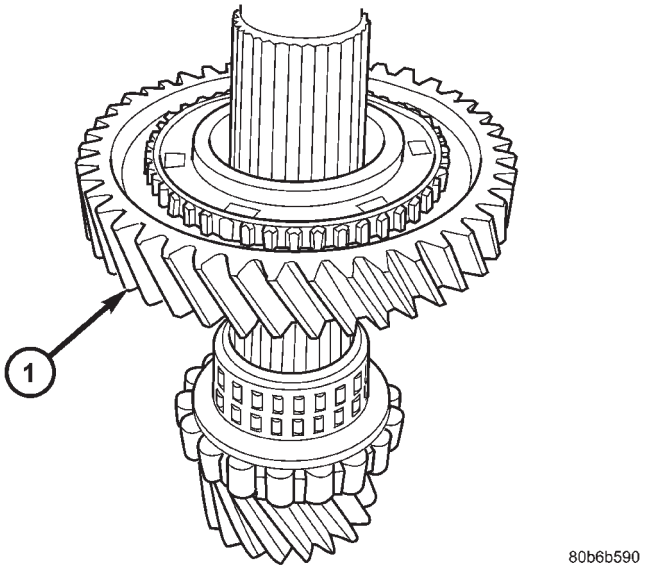

Fig. 248 1st Gear Removal

1 - 1ST GEAR

(23) Remove 1st gear needle bearing (Fig. 249).

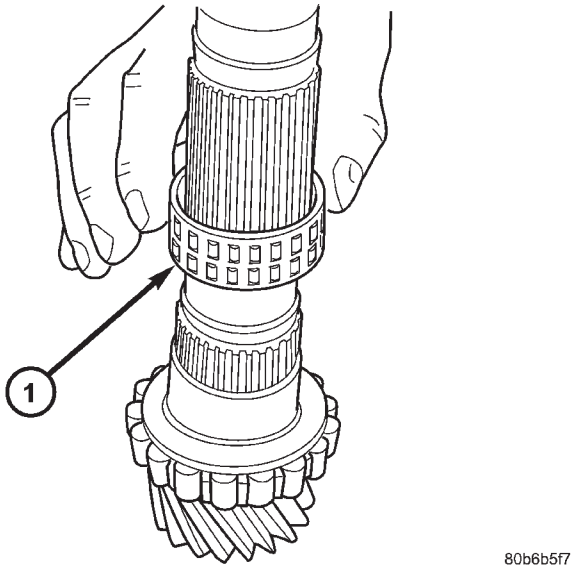

Fig. 249 1st Gear Needle Bearing

1 - 1ST GEAR NEEDLE BEARING

(24) Remove intermediate shaft roller bearing snap ring (Fig. 250).

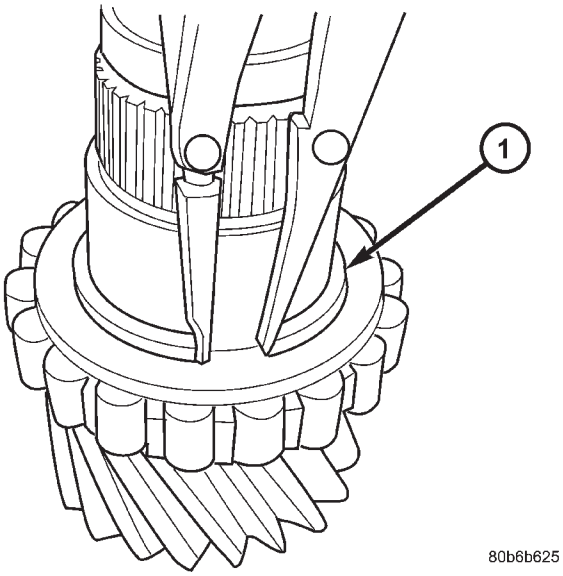

Fig. 250 Intermediate Shaft Roller Bearing Snap Ring

1 - SNAP RING

INTERMEDIATE SHAFT (Continued)

(25) Press intermediate shaft out of roller bearing supported by bearing splitter P-334 (Fig. 251). **Roller bearing is not re-usable once removed. It is necessary to install a new roller bearing upon re-assembly.**

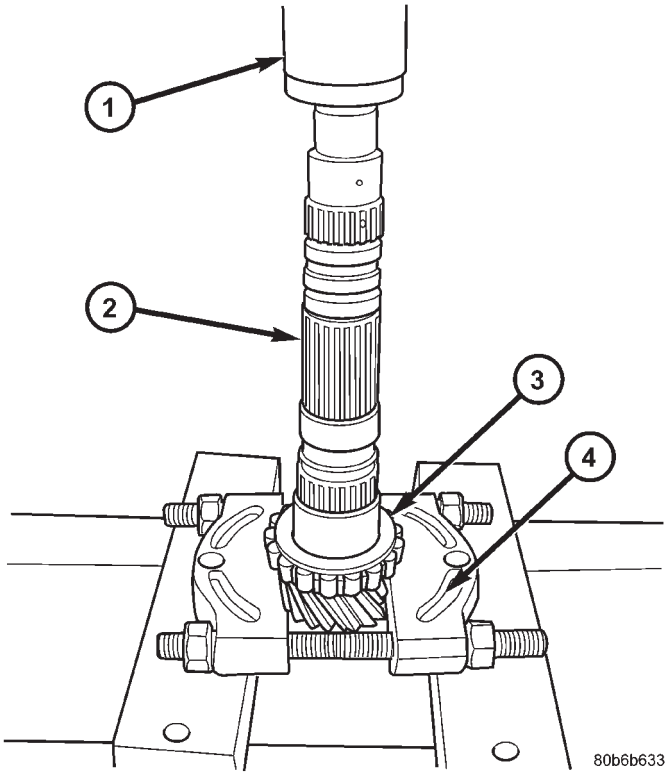

Fig. 251 Intermediate Shaft Roller Bearing Removal

1 - ARBOR PRESS RAM
2 - INTERMEDIATE SHAFT
3 - ROLLER BEARING
4 - BEARING SPLITTER P-334

INTERMEDIATE SHAFT (Continued)

ASSEMBLY

NOTE: Do not re-use snap rings when servicing the intermediate shaft assembly. Discard snap rings and install new ones provided with available snap ring service kit.

NOTE: When installing 1/2 & 5/R synchronizers, make sure to align oil slots on synchronizer hub face with oil hold in the shaft splined hub journal.

NOTE: Refer to (Fig. 252) for intermediate shaft assembly reference.

(1) Press intermediate shaft into NEW roller bearing with arbor press (Fig. 253).

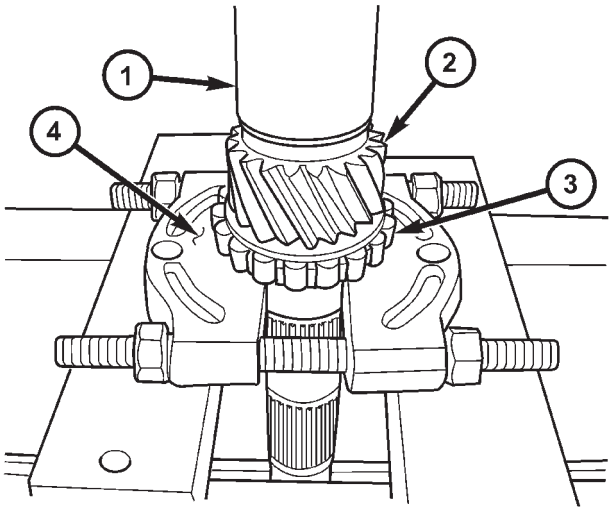

80b6bad0

Fig. 253 Intermediate Shaft Bearing Installation

1 - ARBOR PRESS
2 - INTERMEDIATE SHAFT
3 - CAGED ROLLER BEARING
4 - BEARING SPLITTER

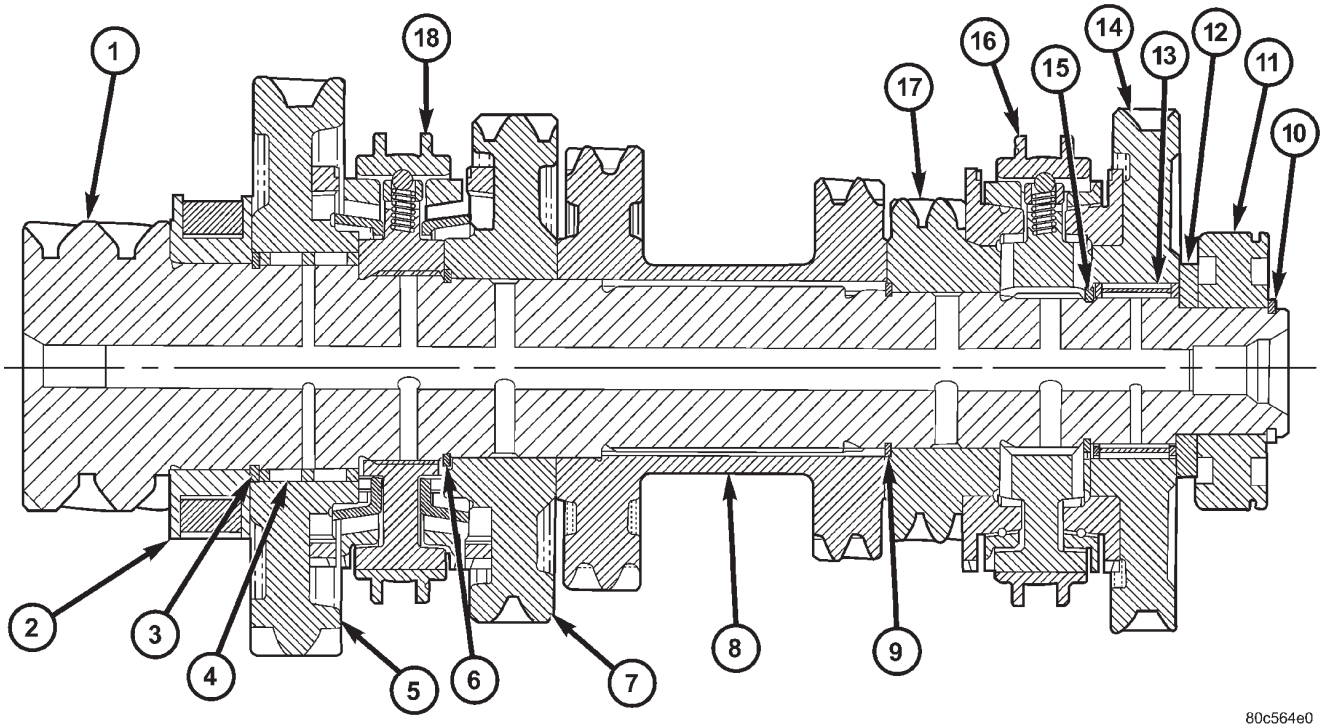

80c564e0

Fig. 252 Intermediate Shaft Assembly

1 - INTERMEDIATE SHAFT
2 - ROLLER BEARING
3 - SNAP RING
4 - NEEDLE BEARING
5 - 1ST SPEED GEAR
6 - SNAP RING
7 - 2ND SPEED GEAR
8 - 3/4 CLUSTER GEAR
9 - SNAP RING
10 - SNAP RING
11 - SEALED ROLLER BEARING
12 - THRUST WASHER
13 - NEEDLE BEARING
14 - REVERSE GEAR
15 - SNAP RING
16 - 5/R SYNCHRO
17 - 5TH SPEED GEAR
18 - 1/2 SYNCHRO

INTERMEDIATE SHAFT (Continued)

(2) Install intermediate shaft roller bearing snap ring (Fig. 254).

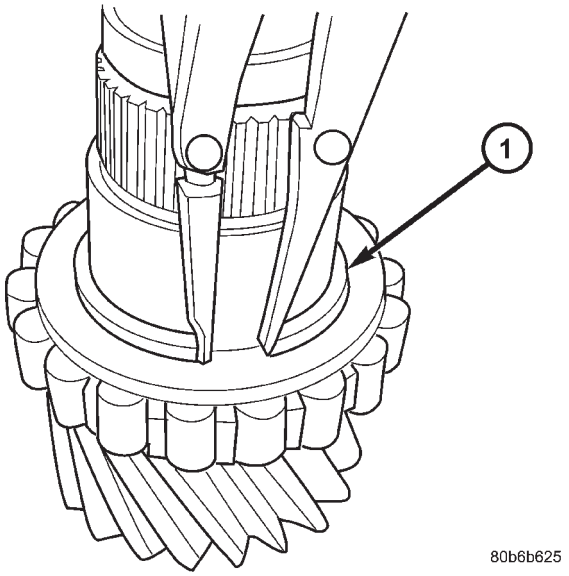

Fig. 254 Intermediate Shaft Roller Bearing Snap Ring

1 - SNAP RING

(3) Install 1st gear roller bearing to intermediate shaft (Fig. 255).

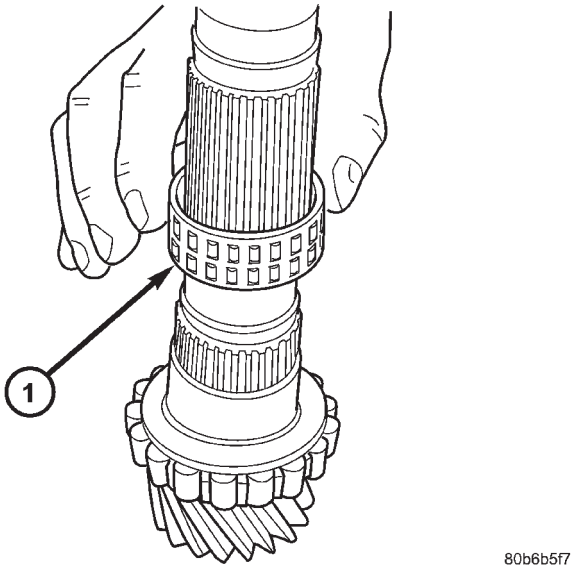

Fig. 255 1st Gear Needle Bearing

1 - 1ST GEAR NEEDLE BEARING

(4) Install 1st gear to intermediate shaft (Fig. 256).

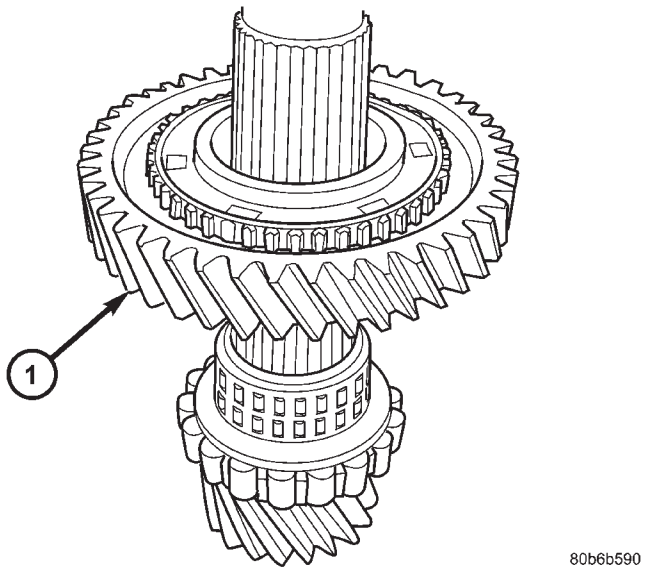

Fig. 256 1st Gear Installation

1 - 1ST GEAR

(5) Install 1/2 synchro to fixture 8483. Insert 1st gear blocker ring, friction cone, and reactor ring as shown in (Fig. 257).

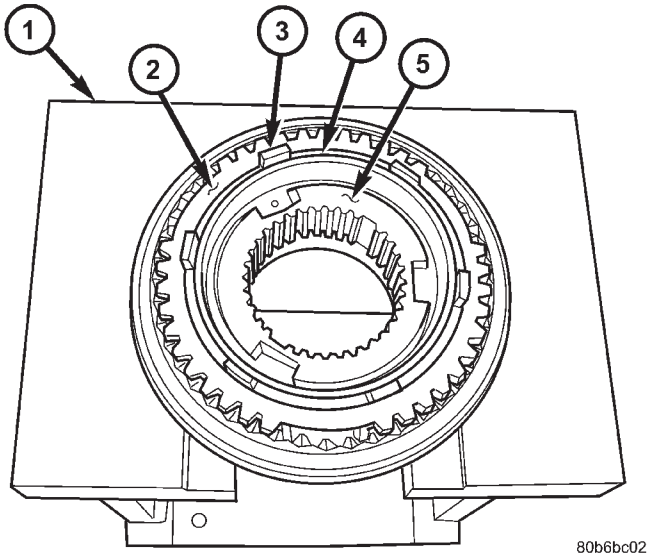

Fig. 257 1/2 Synchro on Fixture 8483

1 - FIXTURE 8483
2 - 1ST GEAR BLOCKER RING
3 - 1ST GEAR FRICTION CONE
4 - 1ST GEAR REACTOR RING
5 - 1/2 SYNCHRONIZER

INTERMEDIATE SHAFT (Continued)

(6) Install intermediate shaft to synchro assembly on fixture (Fig. 258). **When installing 1/2 synchronizer, make sure to align oil slots on synchronizer hub face with oil hole in the shaft splined hub journal.** Line up friction cone and reactor ring tabs to gear slots. Remove shaft assembly from fixture.

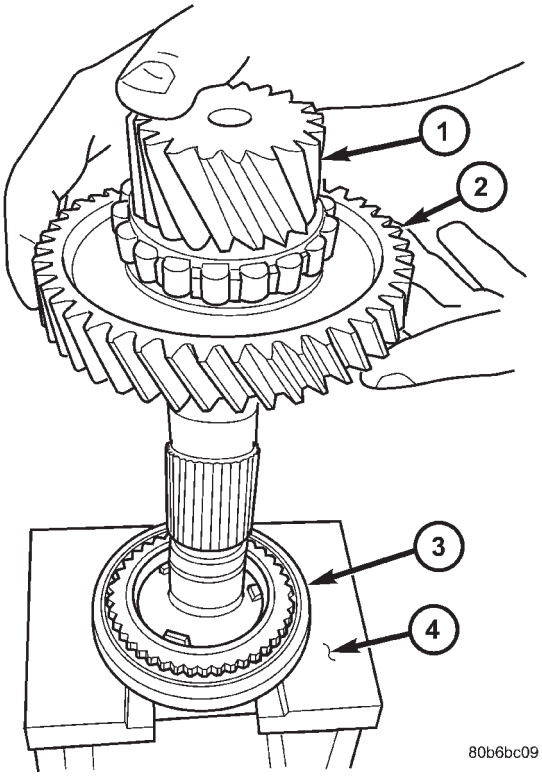

Fig. 258 Install 1/2 Synchro to Intermediate Shaft

1 - INTERMEDIATE SHAFT
2 - 1ST GEAR
3 - 1/2 SYNCHRO ASSEMBLY
4 - FIXTURE 8483

(7) Install **NEW** 1/2 synchro snap ring (Fig. 259).
(8) Install 2nd gear blocker ring (Fig. 260).

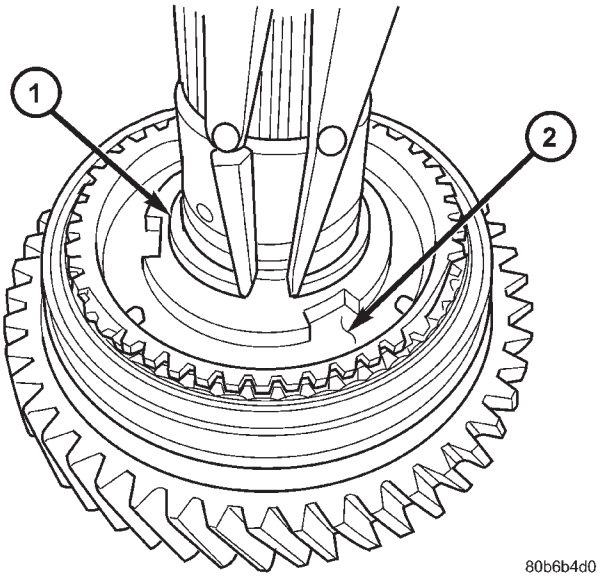

Fig. 259 1/2 Synchro Snap Ring

1 - SNAP RING
2 - 1/2 SYNCHRO HUB

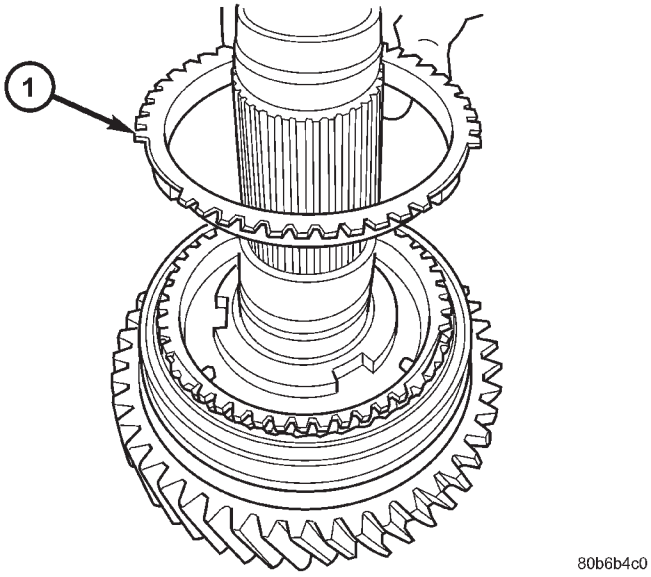

Fig. 260 2nd Gear Blocker Ring

1 - 2ND GEAR BLOCKER RING

INTERMEDIATE SHAFT (Continued)

(9) Install 2nd gear friction cone (Fig. 261).

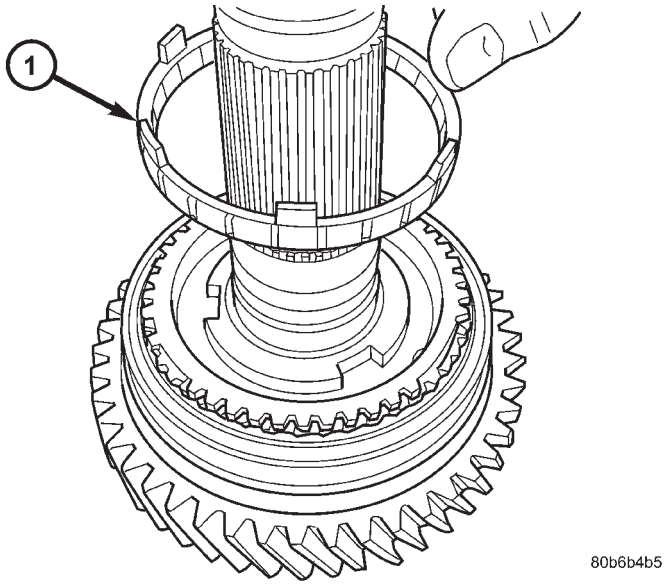

Fig. 261 2nd Gear Friction Cone

1 - 2ND GEAR FRICTION CONE

(10) Install 2nd gear reactor ring (Fig. 262).

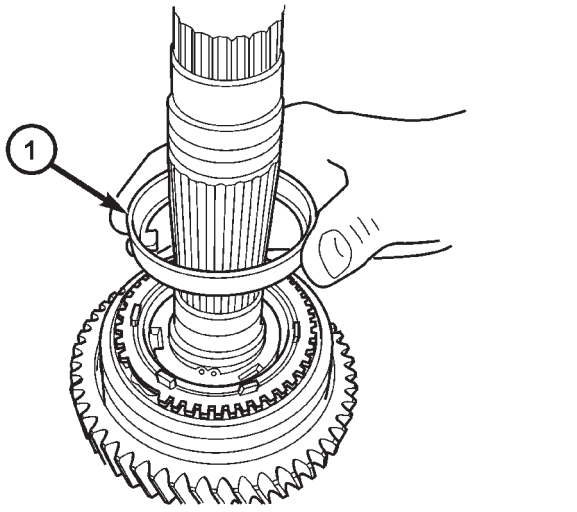

Fig. 262 2nd Gear Reactor Ring

1 - 2ND GEAR REACTOR RING

(11) Install 2nd gear to intermediate shaft (Fig. 263).

(12) Press 3/4 cluster gear onto intermediate shaft using cup 8481 (Fig. 264).

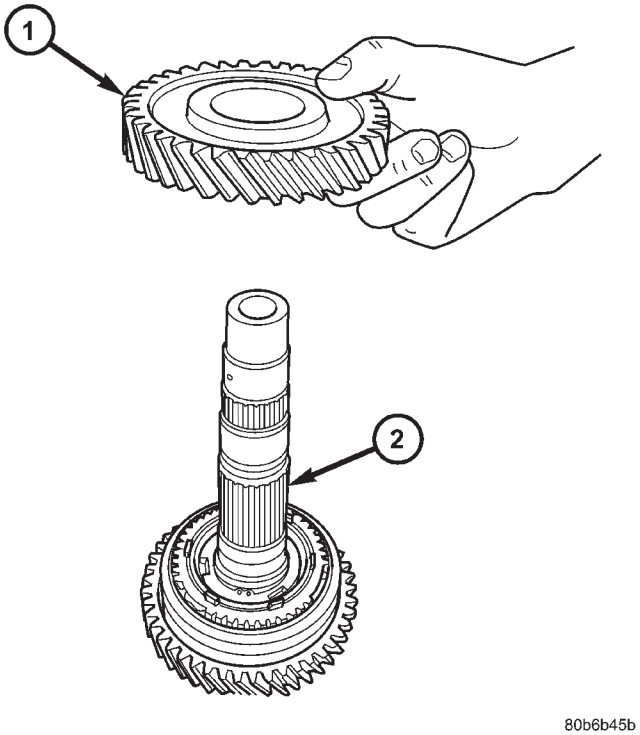

Fig. 263 2nd Gear

1 - 2ND GEAR
2 - INTERMEDIATE SHAFT

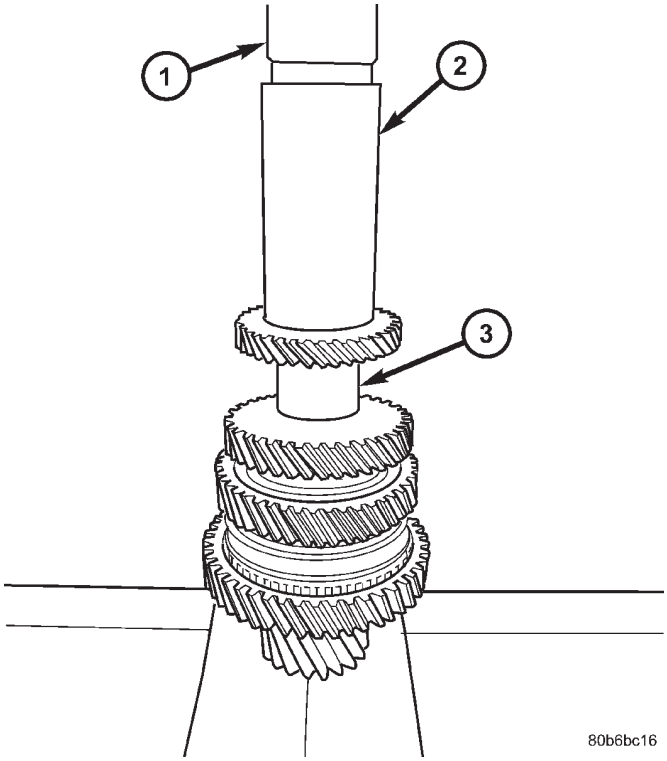

Fig. 264 Install 3/4 Cluster Gear using Tool 8481

1 - ARBOR PRESS
2 - INSTALLER 8481
3 - 3/4 CLUSTER GEAR

INTERMEDIATE SHAFT (Continued)

(13) Install **NEW** 3/4 cluster gear snap ring (Fig. 265).

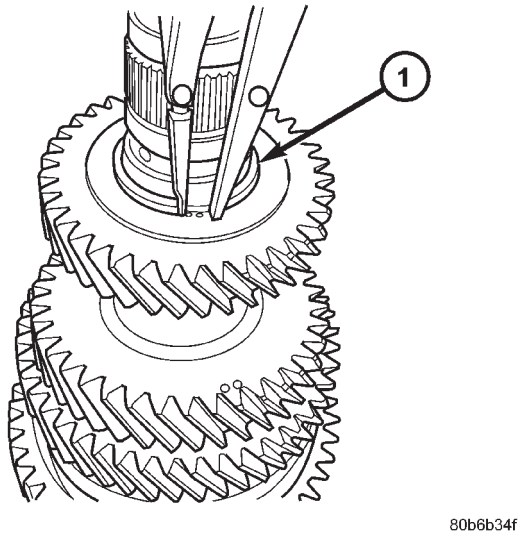

Fig. 265 3/4 Cluster Gear Snap Ring

1 - SNAP RING

(14) Install 5th gear to intermediate shaft (Fig. 266).

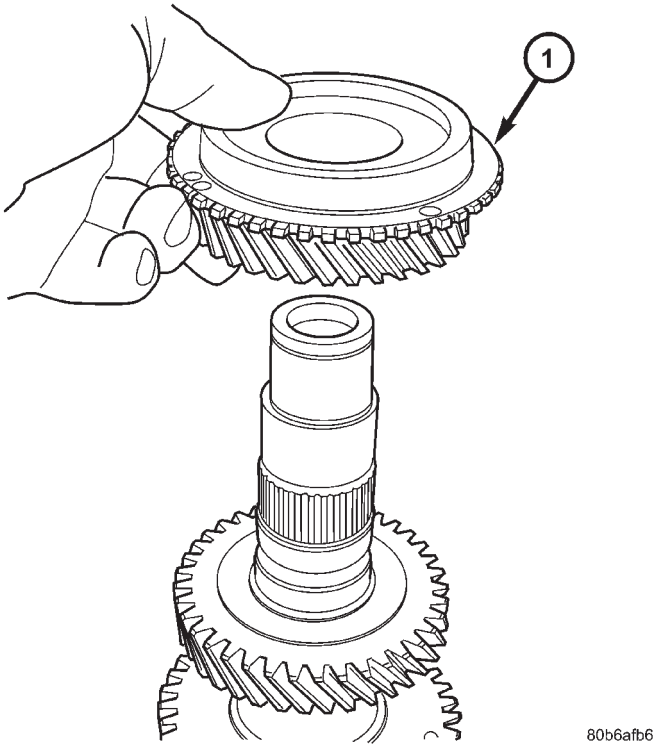

Fig. 266 5th Gear Installation

1 - 5th GEAR

(15) Install 5th gear blocker ring to synchronizer (Fig. 267).

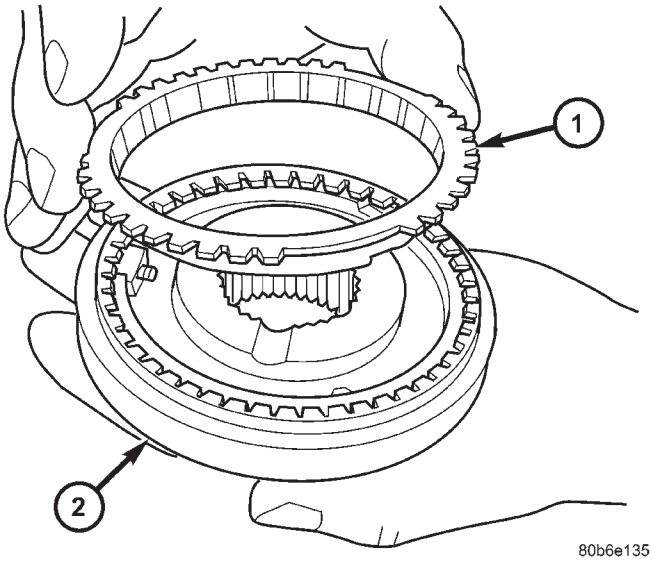

Fig. 267 5th Gear Blocker Ring to Synchro

1 - 5th GEAR BLOCKER RING
2 - 5/R SYNCHRONIZER

(16) Install 5th gear synchronizer assembly to intermediate shaft (Fig. 268). **When installing 5/R synchronizer, make sure to align oil slots on synchronizer hub face with oil hole in the shaft splined hub journal.**

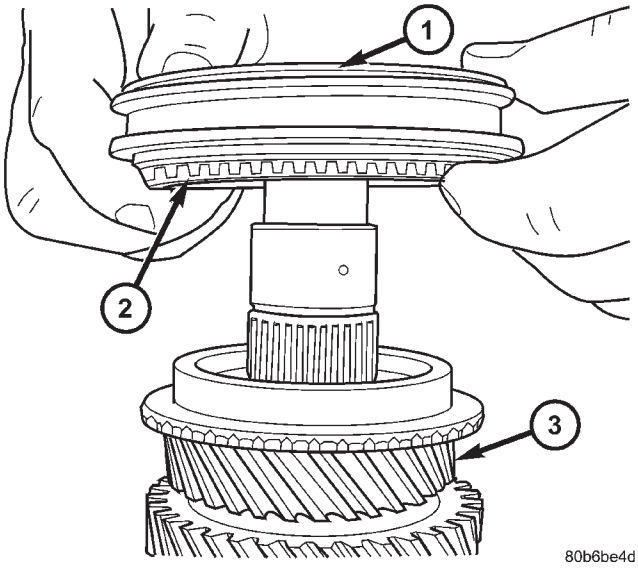

Fig. 268 Install 5/R Synchro and 5th Blocker Ring to 5th Gear

1 - 5/R SYNCHRONIZER
2 - 5TH GEAR BLOCKER RING
3 - 5TH GEAR

INTERMEDIATE SHAFT (Continued)

(17) Install **NEW** 5/R synchro snap ring (Fig. 269).

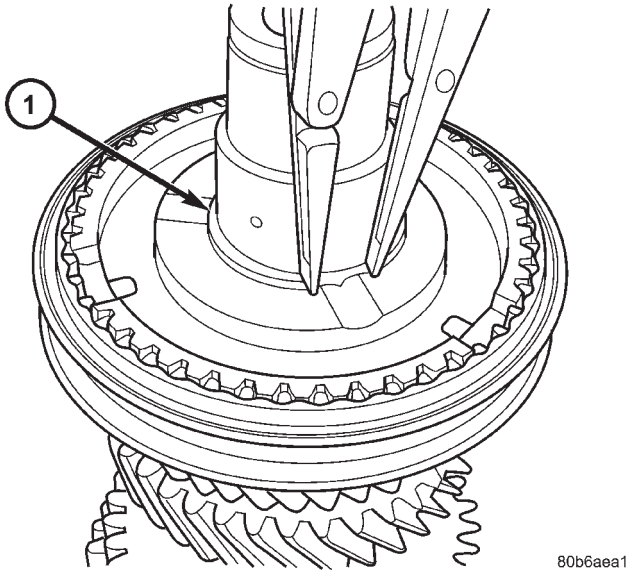

Fig. 269 5/R Synchro Snap Ring

1 - SNAP RING

(18) Install reverse gear blocker ring (Fig. 270).

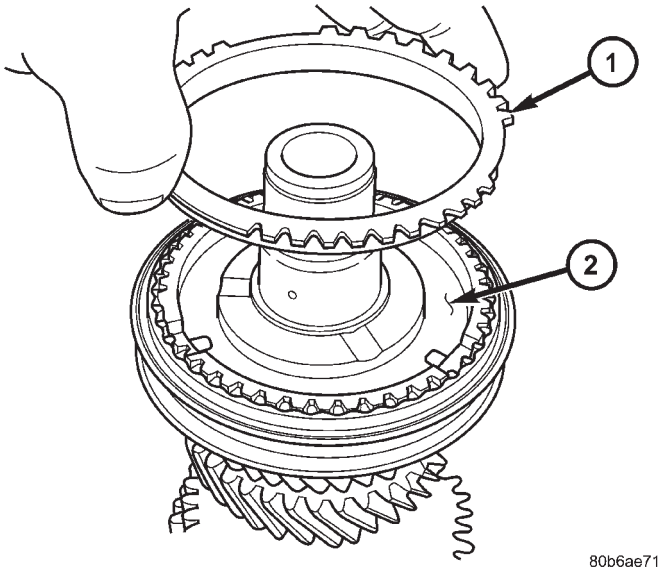

Fig. 270 Reverse Gear Blocker Ring

1 - REVERSE BLOCKER RING
2 - 5/R SYNCHRONIZER

(19) Install reverse gear needle bearing (Fig. 271).

(20) Install reverse gear to intermediate shaft.

(21) Install intermediate shaft sealed roller bearing and thrust washer using installer 8482 (Fig. 272).

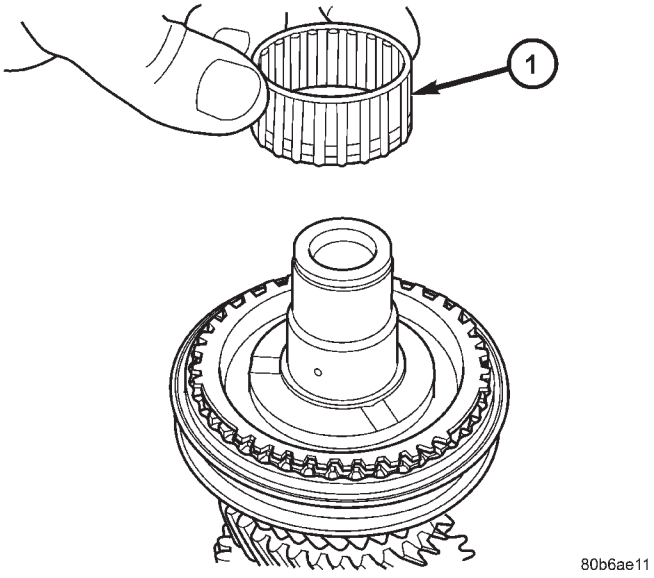

Fig. 271 Reverse Gear Needle Bearing

1 - NEEDLE BEARING

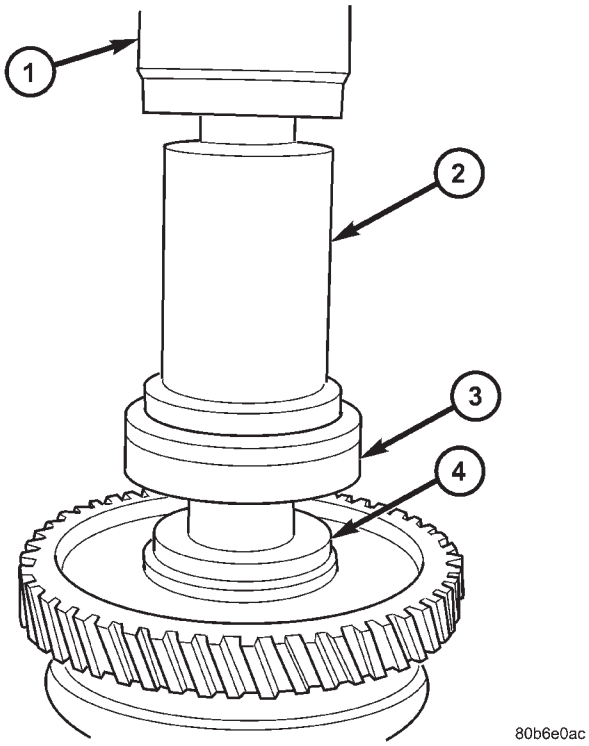

Fig. 272 Sealed Roller Bearing Installatiion

1 - ARBOR PRESS
2 - REMOVER/INSTALLER 8482
3 - SEALED ROLLER BEARING
4 - THRUST WASHER

INTERMEDIATE SHAFT (Continued)

(22) Install **NEW** intermediate shaft sealed bearing snap ring (Fig. 273).

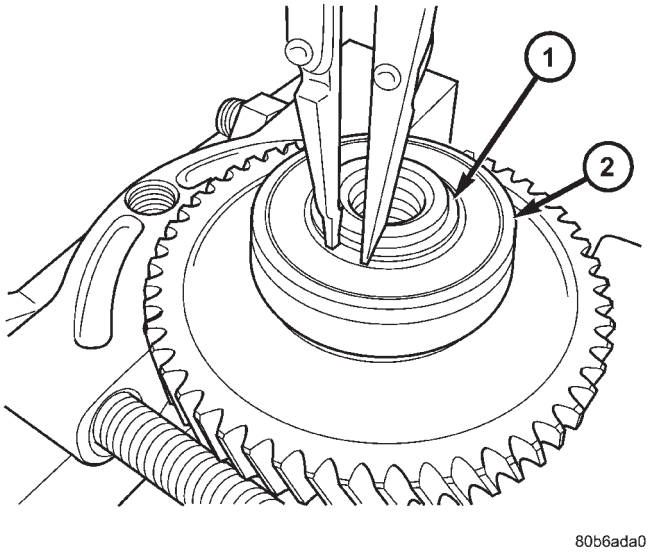

Fig. 273 Intermediate Shaft Bearing Snap Ring

1 - SNAP RING
2 - BEARING

SHIFT COVER

DESCRIPTION

The shift cover assembly (Fig. 274) (Fig. 275) is operated by the gearshift crossover and selector cables, and operates the shift fork/shaft system. It consists of crossover and selector lever mechanisms, transaxle vent, a main shift selector shaft, and the 5-R blockout mechanism. The shift cover is only serviced as an assembly.

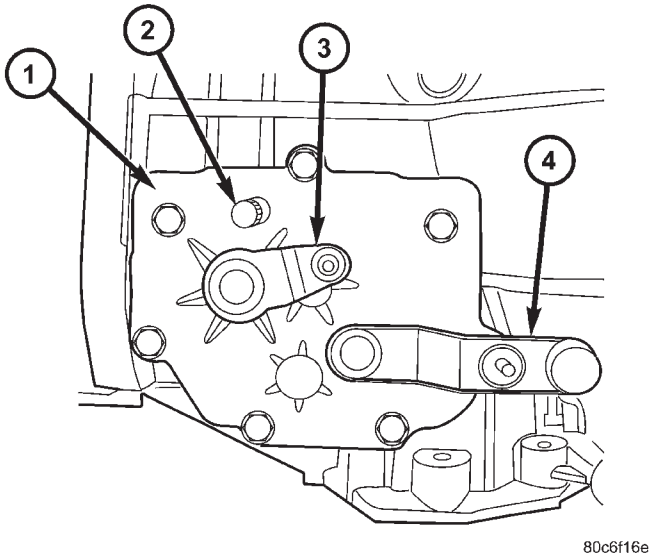

Fig. 274 Shift Lever Identification

1 - SHIFT COVER ASSEMBLY
2 - VENT
3 - CROSSOVER LEVER
4 - SELECTOR LEVER

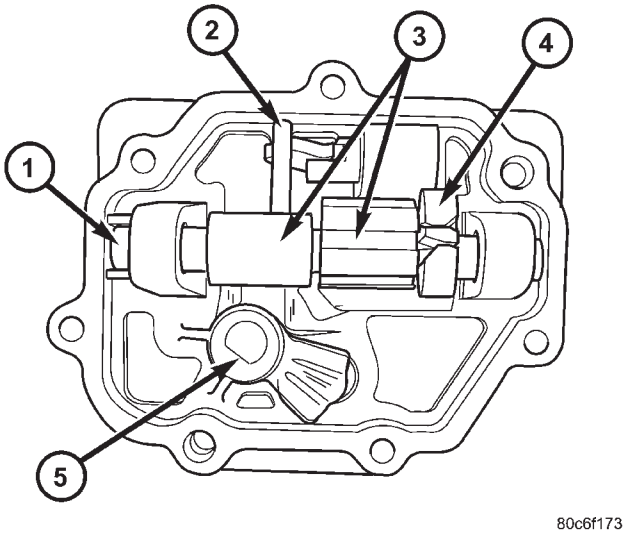

Fig. 275 Shift Cover Assembly Components

1 - SHAFT
2 - 5-R BLOCKOUT PIN/CAM
3 - SHIFT SELECTOR
4 - SHIFT BLOCKER
5 - SELECTOR LEVER/DETENT

SHIFT FORK AND SHAFT

DESCRIPTION

The T850 utilizes a unique shift fork and shaft arrangement consisting of three shift forks and two shafts as shown in (Fig. 276). This system is operated by the shift cover assembly, which combined with a unique gearshift cable design, offers a higher mechanical advantage over traditional shift systems. This arrangement results in less friction and lower shift cable loads for smoother, more positive operation. The shift fork assemblies are constructed of brass, float about the shafts with the aid of needle bearings, and are serviced only as fork/bearing assemblies.

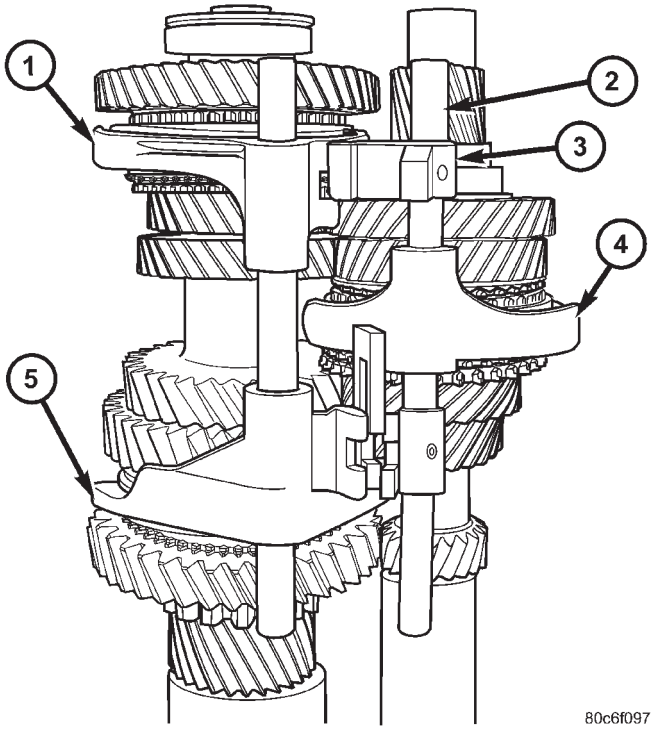

Fig. 276 Shift Fork/Shaft Components

1 - 5/R FORK
2 - SHAFT/LINK ASSEMBLY
3 - LINK
4 - 3/4 FORK
5 - 1/2 FORK

SYNCHRONIZER

DESCRIPTION

The T850 transaxle uses two styles of synchronizer assemblies; a conventional single-cone style is used for the 5th/Reverse and 3rd/4th applications (Fig. 277), and a dual-cone style for the 1st/2nd gear application (Fig. 278).

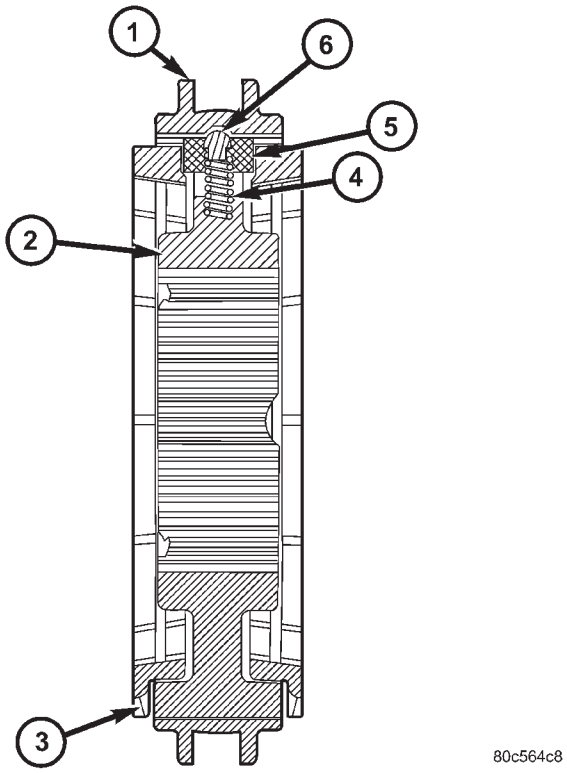

Fig. 277 3/4-5/R Synchronizer Assembly

1 - SLEEVE
2 - HUB
3 - BLOCKER RING (2)
4 - SPRING (3)
5 - KEY (3)
6 - BALL (3)

DISASSEMBLY

Place synchronizer in a clean shop towel and wrap. Press on inner hub. Carefully open up shop towel and remove springs, balls, keys, hub, and sleeve.

CLEANING

CLEAN

Do not attempt to clean the blocking rings in solvent. The friction material will become contaminated. Place synchronizer components in a suitable holder and clean with solvent. Air dry.

INSPECTION

INSPECT

Proper inspection of components involve:

- Teeth, for wear, scuffed, nicked, burred, or broken teeth
- Keys, for wear or distortion
- Balls and springs, for distortion, cracks, or wear

SYNCHRONIZER (Continued)

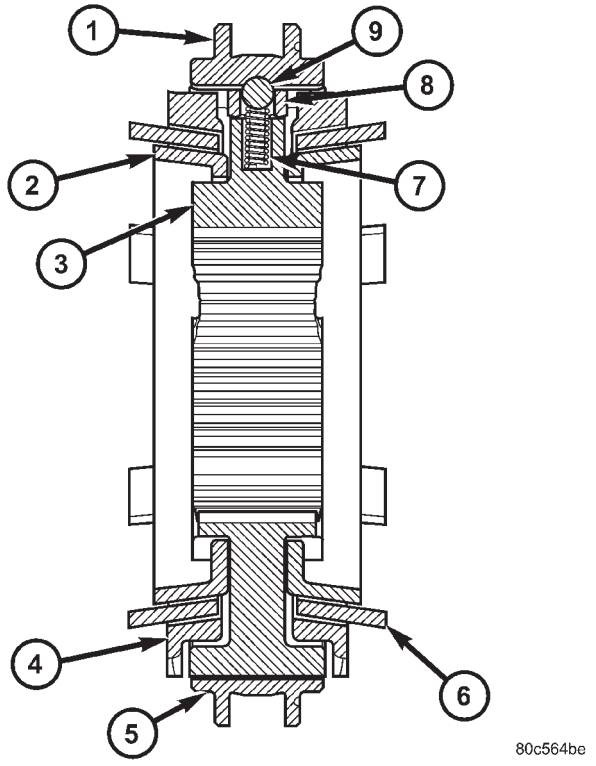

Fig. 278 1/2 Synchronizer Assembly

1 - SLEEVE
2 - REACTOR RING (2)
3 - HUB
4 - BLOCKER RING (2)
5 - SLEEVE
6 - FRICTION CONE (2)
7 - SPRING (3)
8 - KEY (3)
9 - BALL (3)

If any of these conditions exist in these components, replace as necessary.

ASSEMBLY

(1) Position synchronizer hub onto work bench. Hub is non-directional.
(2) Install springs into hub slot.
(3) Insert key into hub and spring.
(4) Apply petroleum jelly to the hole in the key. Insert balls into each key.
(5) Slide sleeve over the hub and depress balls as you carefully slip the sleeve into position.

VEHICLE SPEED SENSOR

REMOVAL

(1) Raise vehicle on hoist.
(2) Disconnect the speed sensor connector (Fig. 279).

CAUTION: Clean area around speed sensor before removing to prevent dirt from entering the transaxle during speed sensor removal.

(3) Remove speed sensor retaining bolt (Fig. 279).

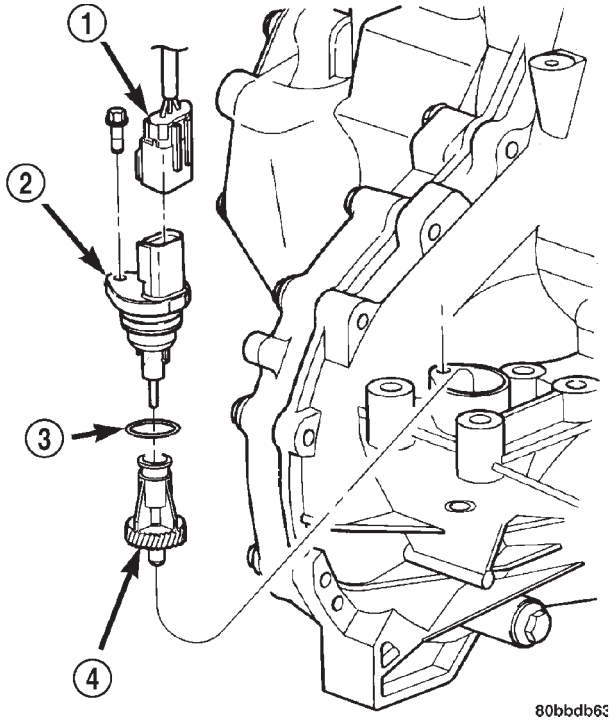

Fig. 279 Speed Sensor and Pinion Removal/ Installation—Typical

1 - CONNECTOR
2 - SENSOR
3 - O-RING
4 - GEAR

(4) Remove speed sensor from transaxle.

CAUTION: Carefully remove vehicle speed sensor so that sensor drive gear does not fall into transaxle. Should sensor drive gear fall into the transaxle during sensor removal, drive gear must be reattached to sensor.

(5) Remove speed sensor drive gear from speed sensor.

INSTALLATION

(1) Install pinion gear to speed sensor (Fig. 279) .
(2) Using a NEW o-ring, install the speed sensor to the transaxle (Fig. 279) .
(3) Install the bolt and torque to 7 N·m (60 in. lbs.).
(4) Connect speed sensor connector (Fig. 279) .
(5) Lower vehicle and road test to verify proper speedometer operation.

TIRES/WHEELS

TABLE OF CONTENTS

page

TIRES/WHEELS
DIAGNOSIS AND TESTING - TIRE AND WHEEL VIBRATION 1
STANDARD PROCEDURE
STANDARD PROCEDURE - TIRE AND WHEEL BALANCE 5
STANDARD PROCEDURE - TIRE AND WHEEL MATCH MOUNTING 5
STANDARD PROCEDURE - TIRE AND WHEEL ROTATION 7
REMOVAL
REMOVAL - TIRE AND WHEEL ASSEMBLY (ALUMINUM WHEEL) 7
REMOVAL - TIRE AND WHEEL ASSEMBLY (STEEL WHEEL) 7
INSTALLATION
INSTALLATION - TIRE AND WHEEL ASSEMBLY (ALUMINUM WHEEL) 8
INSTALLATION - TIRE AND WHEEL ASSEMBLY (STEEL WHEEL) 8
TIRE PRESSURE MONITORING (TPM)
DESCRIPTION 9
OPERATION 9
SENSOR - TPM
DESCRIPTION 10
OPERATION 10
CAUTION 10
DIAGNOSIS AND TESTING - TIRE PRESSURE SENSOR 10
STANDARD PROCEDURE - TIRE PRESSURE SENSOR RETRAIN 10
REMOVAL 11
INSTALLATION 11
TIRES
DESCRIPTION
DESCRIPTION - TIRE 13
DESCRIPTION - RADIAL-PLY TIRES 13
DESCRIPTION - REPLACEMENT TIRES 14
DESCRIPTION - SPARE TIRE (TEMPORARY) 14
DIAGNOSIS AND TESTING
DIAGNOSIS AND TESTING - TIRE NOISE . . . 14
DIAGNOSIS AND TESTING - TIRE/VEHICLE LEAD 14
DIAGNOSIS AND TESTING - TIRE WEAR PATTERNS 14
DIAGNOSIS AND TESTING - TREAD WEAR INDICATORS 14
STANDARD PROCEDURE
STANDARD PROCEDURE - TIRE INFLATION PRESSURES 14
STANDARD PROCEDURE - TIRE PRESSURE FOR HIGH SPEED OPERATION 17
STANDARD PROCEDURE - TIRE LEAK REPAIRING 17
CLEANING - TIRES 17
WHEELS
DESCRIPTION - WHEEL 17
DIAGNOSIS AND TESTING - WHEEL INSPECTION 18
CLEANING - ALUMINUM WHEEL CARE 18
SPECIFICATIONS
WHEEL 19
WHEEL COVER
DESCRIPTION 19
REMOVAL 19
INSTALLATION 19
WHEEL MOUNTING STUDS - FRONT
REMOVAL 20
INSTALLATION 21
WHEEL MOUNTING STUDS - REAR
REMOVAL 21
INSTALLATION 22

TIRES/WHEELS

DIAGNOSIS AND TESTING - TIRE AND WHEEL VIBRATION

Tire and wheel imbalance, runout and force variation can cause vehicles to exhibit steering wheel vibration.

VISUAL INSPECTION

Visual inspection of the vehicle is recommended prior to road testing or performing any other procedure. Raise vehicle on a suitable hoist. (Refer to LUBRICATION & MAINTENANCE/HOISTING - STANDARD PROCEDURE)

TIRES/WHEELS (Continued)

Inspect for the following:

- Verify correct (OEM) wheel and tire, as well as correct wheel weights. Aluminum wheels require unique wheel weights. They are designed to fit the contour of the wheel (Fig. 1).
- Inspect tires and wheels for damage, mud packing and unusual wear; correct as necessary.
- Check and adjust tire air pressure to the pressure listed on the label attached to the rear face of the driver's door.

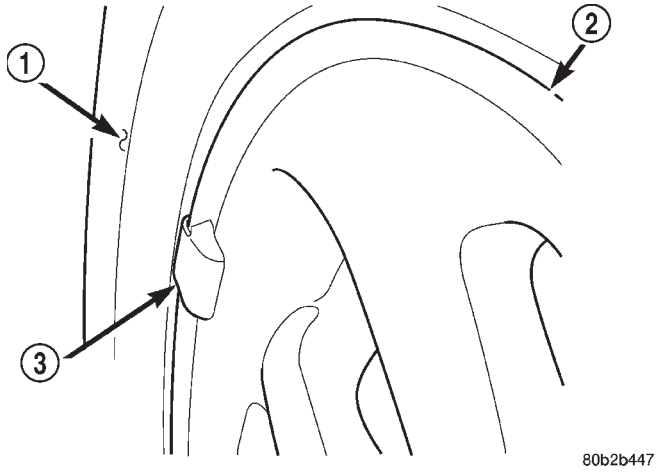

Fig. 1 Aluminum Wheel Weight

1 - TIRE
2 - WHEEL
3 - WHEEL WEIGHT

ROAD TEST

Road test vehicle on a smooth road for a least five miles to warm tires (remove any flat spots). Lightly place hands on steering wheel at the 10:00 and 2:00 positions while slowly sweeping up and down from 90 to 110 km/h (55 to 70 mph) where legal speed limits allow.

Observe the steering wheel for:

- Visual Nibble (oscillation: clockwise/counterclockwise, usually due to tire imbalance)
- Visual Buzziness (high frequency, rapid vibration up and down)

To rule out vibrations due to brakes or powertrain:

- Lightly apply brakes at speed; if vibration occurs or is enhanced, vibration is likely due to causes other than tire and wheel assemblies.
- Shift transmission into neutral while vibration is occurring; if vibration is eliminated, vibration is likely due to causes other than tire and wheel assemblies.

For brake vibrations, (Refer to 5 - BRAKES - BASE/HYDRAULIC/MECHANICAL/ROTORS - DIAGNOSIS AND TESTING).

For powertrain vibrations, (Refer to 3 - DIFFERENTIAL & DRIVELINE - DIAGNOSIS AND TESTING).

For tire and wheel assembly vibrations, continue with this diagnosis and testing procedure.

TIRE AND WHEEL BALANCE

(1) Balance the tire and wheel assemblies as necessary following the wheel balancer manufacturer's instructions and using the information listed in Standard Procedure - Tire And Wheel Balance. (Refer to 22 - TIRES/WHEELS - STANDARD PROCEDURE)

(2) Road test the vehicle for at least 5 miles, following the format described in Road Test.

(3) If the vibration persists, continue with this diagnosis and testing procedure.

TIRE AND WHEEL RUNOUT/MATCH MOUNTING

(1) **System Radial Runout.** This on-the-vehicle system check will measure the radial runout including the hub, wheel and tire.

(a) Raise vehicle so tires clear floor. (Refer to LUBRICATION & MAINTENANCE/HOISTING - STANDARD PROCEDURE)

(b) Apply masking tape around the circumference of the tire in the locations to be measured (Fig. 2). Do not overlap the tape.

(c) Check system runout using Dial Indicator Set, Special Tool C-3339A with 25-W wheel, or equivalent. Place the end of the indicator against each taped area (one at a time) (Fig. 2) and rotate the tire and wheel. System radial runout should not exceed 0.76 mm (0.030 inch) with no tread “dips” or “steps.” Tread “dips” and “steps” can be identified by spikes of the dial indicator gauge.

- Tread ″dips″; Rapid decrease then increase in dial indicator reading over 101.6 mm (4.0 inch) of tread circumference.
- Tread ″steps″; Rapid decrease or increase in dial indicator reading over 101.6 mm (4.0 inch) of tread circumference.

(d) If system runout is excessive, re-index the tire and wheel assembly on the hub. Remove assembly from vehicle and install it back on the hub two studs over from original mounting position. If re-indexing the tire and wheel assembly corrects or reduces system runout, check hub runout and repair as necessary (Refer to 5 - BRAKES - BASE/HYDRAULIC/MECHANICAL/ROTORS - DIAGNOSIS AND TESTING).

(e) If system runout is still excessive, continue with this diagnosis and testing procedure.

(2) **Tire and Wheel Assembly Radial Runout.** This radial runout check is performed with the tire and wheel assembly off the vehicle.

(a) Remove tire and wheel assembly from vehicle and install it on a suitable wheel balancer.

(b) Check system runout using Dial Indicator Set, Special Tool C-3339A with 25-W wheel, or equivalent. Place the end of the indicator against each taped area (one at a time) (Fig. 2) and rotate the tire and wheel. Radial runout should not

TIRES/WHEELS (Continued)

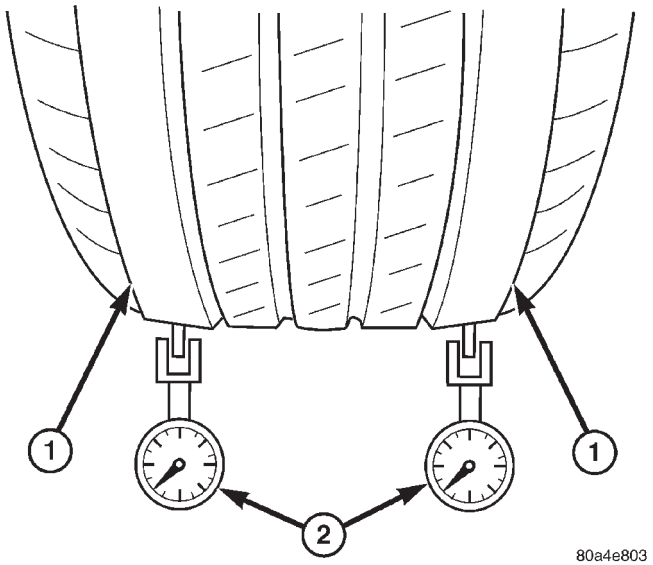

Fig. 2 Radial Runout Measurement

1 - MASKING TAPE
2 - DIAL INDICATOR

exceed 0.76 mm (0.030 inch) with no tread “dips” or “steps.” Tread “dips” and “steps” can be identified by spikes of the dial indicator gauge.

(c) If runout exceeds limits, mark the original location of the tire on the wheel at the valve stem (Fig. 3). Also, mark the tire and wheel to indicate the original high spot of the assembly and record the runout measurement.

(d) If runout exceeds limits, the tire will need to be dismounted from the wheel to verify wheel vs. tire contribution. Refer to Wheel Runout below.

(3) **Lateral Runout.** Lateral runout for the vehicle system as well as the tire and wheel assembly should be less than 0.76 mm (0.030 inch). The same procedure and theory described for radial runout can also be applied to identify and reduce lateral runout.

(4) **Wheel Runout.** This runout check is performed as follows:

(a) Dismount the tire from the wheel.

(b) Mount the wheel back on the wheel balancer.

(c) Measure radial runout of the wheel at the tire bead seat (Fig. 4). Runout should not exceed 0.254 mm (0.010 inch) for aluminum wheels and 0.508 mm (.020 inch) for steel wheels. Replace the wheel if it exceeds the limit.

(d) Measure lateral runout of the wheel at the tire bead seat (Fig. 5). Runout should not exceed 0.762 mm (0.030 inch) for all wheels. Replace the wheel if it exceeds the limit.

(5) **Match Mounting.** If the wheel runout is within specifications, tire and wheel assembly runout can be improved by re-indexing (match mounting) the tire to the wheel as described below.

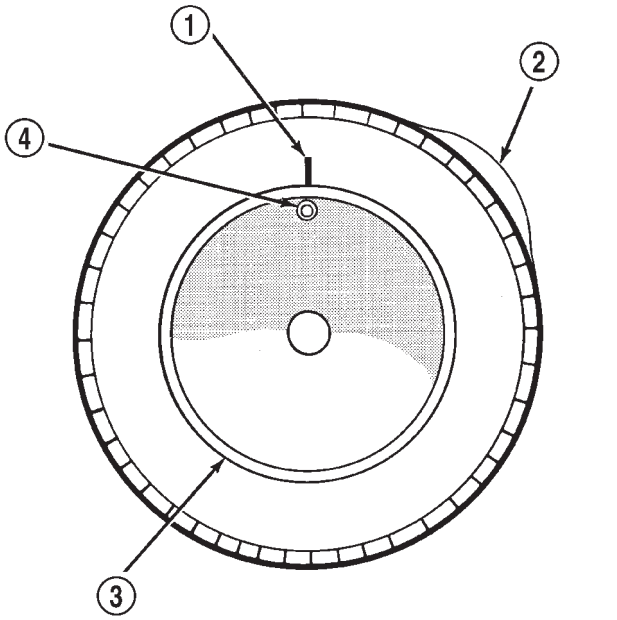

Fig. 3 Marking Tire

1 - REFERENCE MARK
2 - EXAMPLE HIGH SPOT ON TIRE
3 - WHEEL
4 - VALVE STEM

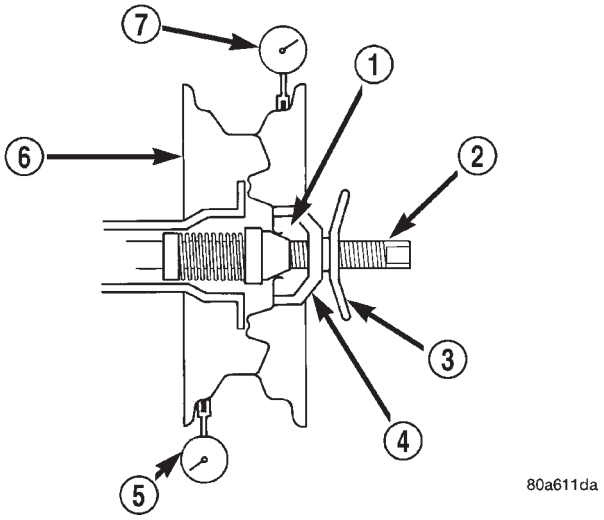

Fig. 4 Checking Radial Runout Of Wheel

1 - MOUNTING CONE
2 - SPINDLE SHAFT
3 - WING NUT
4 - PLASTIC CUP
5 - DIAL INDICATOR
6 - WHEEL
7 - DIAL INDICATOR

TIRES/WHEELS (Continued)

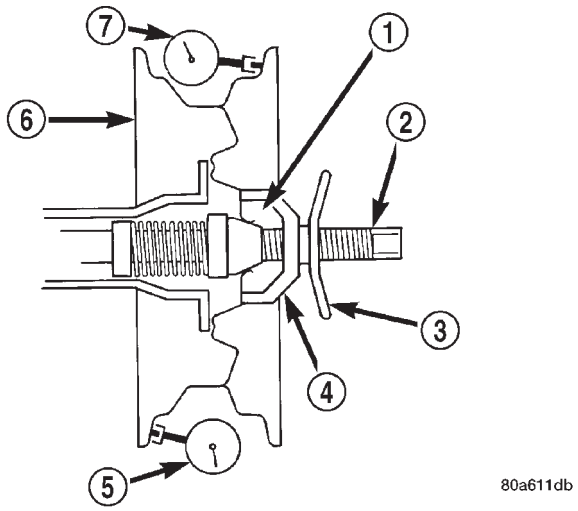

Fig. 5 Checking Lateral Runout Of Wheel

1 - MOUNTING CONE
2 - SPINDLE SHAFT
3 - WING NUT
4 - PLASTIC CUP
5 - DIAL INDICATOR
6 - WHEEL
7 - DIAL INDICATOR

(a) Remount the tire on the rim 180 degrees from its original location (Fig. 6). Ensure the tire bead is properly seated.

(b) Re-measure the total runout. Mark the tire at the high spot and record the measurement.

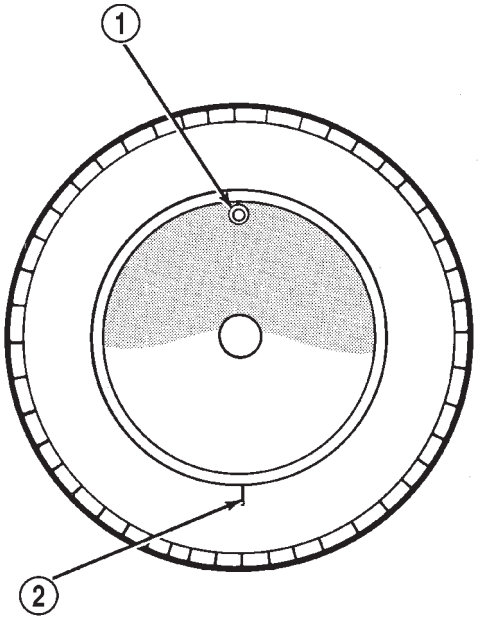

Fig. 6 Remount Tire 180 Degrees

1 - VALVE STEM
2 - REFERENCE MARK

If runout is still excessive, perform the following:

- If the new high spot is within 102 mm (4.0 inch) of the first high spot on the tire, replace the tire.
- If the new high spot is within 102 mm (4.0 inch) of the first high spot on the wheel, the wheel may be out of specification. Refer to Wheel Runout above.
- If the new high spot is NOT within 102 mm (4.0 inch) of either high spot, draw an arrow on the tread from new high spot toward the original (Fig. 7). Break down the tire and remount it 90 degrees on rim in that direction, then re-measure runout. This will normally reduce the runout to an acceptable amount.

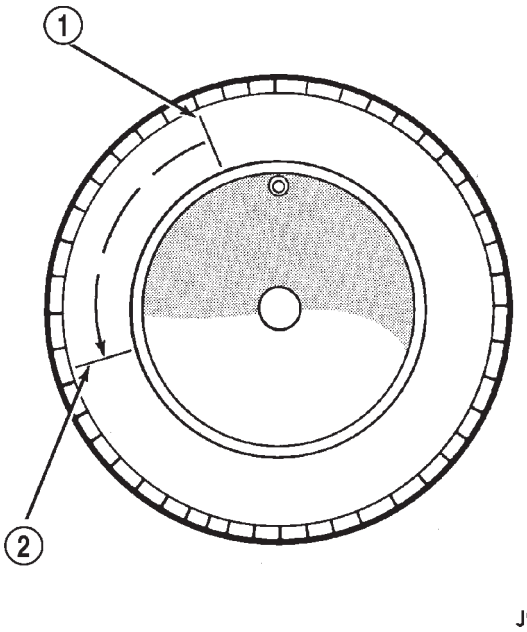

Fig. 7 Remount Tire 90 Degrees In Direction of Arrow

1 - 2ND HIGH SPOT ON TIRE
2 - 1ST HIGH SPOT ON TIRE

(6) Once back together, road test the vehicle for at least 5 miles, following the format described in Road Test. If vibration persists, and all components tested are within specification, the tires may have an excessive radial force condition. Radial force variation can only be checked as indicated below. If this equipment is not available, consult with the tire manufacturer.

RADIAL FORCE VARIATION

Radial Force Variation can be checked using the Hunter GSP 9700 Vibration Control System (Wheel Balancer) or equivalent, if available. This type of equipment helps to correct ride disturbances by reducing the radial force variation of an assembly through re-indexing of the tire to wheel.

The equipment manufacturer or DaimlerChrysler Corporation may supply reference values as guide-

lines. Radial force measurements above the reference value may not always result in a ride disturbance, nor do they automatically mean the assembly components are out of specification. Do not replace components based on radial force values alone. Balancing, runout diagnosis, re-indexing, and subjective road testing must be performed as outlined in previous sections of this diagnosis and testing procedure.

Use the Radial Force equipment to identify suspect assemblies and minimize the radial forces. After all suspect assemblies are optimized, reinstall the assemblies and road test the vehicle. If a disturbance still exists and all other vibration diagnostic procedures have been completed, replace one tire or one wheel at a time, starting with the assembly having the highest force variation. Be sure to minimize each new assembly. Road test the vehicle following each replacement. Continue this process until the disturbance is resolved.

NOTE: When using Radial Force equipment, it is critically important to set proper tire inflation pressure and ensure centering of the wheel on the equipment spindle.

RADIAL FORCE VARIATION REFERENCE VALUES

DESCRIPTION	SPECIFICATION
Total Radial Force Variation (RFV)	Less Than 22 Lbs. ± 2 Lbs.
Radial First Harmonic (R1H)	Less Than 16 Lbs. ± 2 Lbs.
Radial Second Harmonic (R2H)	Less Than 12 Lbs. ± 2 Lbs.

STANDARD PROCEDURE

STANDARD PROCEDURE - TIRE AND WHEEL BALANCE

NOTE: Balance equipment must be calibrated and maintained per equipment manufacturer's specifications.

Wheel balancing can be accomplished with either on-vehicle or off-vehicle equipment.

NOTE: If using on-vehicle balancing equipment, on the driving axle, remove the opposite wheel and tire assembly.

It is recommended that a two-plane dynamic balancer be used when a wheel and tire assembly requires balancing. A static balancer should only be used when a two-plane balancer is not available.

Balance wheel and tire assemblies dynamically and statically to less than 0.25 (¼) ounce.

For static balancing, find location of heavy spot causing imbalance. Counter balance wheel directly opposite the heavy spot. Determine weight required to counterbalance the area of imbalance. Place half of this weight on the **inner** rim flange and the other half on the **outer** rim flange (Fig. 8).

For dynamic balancing, the balance equipment is designed to indicate the location and amount of weight to be applied to both the inner and outer rim flanges (Fig. 9).

The aluminum wheels on this vehicle use a unique wheel weight (Fig. 10). This wheel weight is designed to fit the contoured surface of the wheel (Fig. 10). When balancing an aluminum wheel, this wheel weight must be used. Do not use any other type of wheel weight. It will not properly fit the contour of the wheel.

Always verify the Balance. When using off-vehicle equipment, rotate assembly 180 degrees on balance equipment to verify balance. Variation should not be more than 0.125 (⅛) ounce. If variation is more than 0.125 ounce, balancing equipment could be malfunctioning.

If difficult to balance, break down the wheel and tire assembly and check for loose debris inside tire. Prior to disassembly, mark (index) the tire at the valve stem. Use this mark in order to remount the tire in its original orientation with respect to the wheel.

STANDARD PROCEDURE - TIRE AND WHEEL MATCH MOUNTING

Wheels and tires are match mounted at the factory. This means that the high spot of the tire is matched to the low spot on the wheel rim. This technique is used to reduce runout in the wheel and tire assembly. The high spot on the tire is marked with a paint mark or a bright colored adhesive label on the outboard sidewall. The low spot on the wheel is identified with a label on the outside of the rim and a dot or line in the drop well area of the rim (inside where the tire mounts). If the outside label has been removed, the tire will have to be removed to locate the dot or line on the inside of the rim. The tire can then be match mounted to the tire.

Information on match mounting the tire to the wheel can be found in Tire and Wheel Runout/Match Mounting, items (2) through (5), within Diagnosis And Testing - Tire And Wheel Vibration. (Refer to 22 - TIRES/WHEELS - DIAGNOSIS AND TESTING)

TIRES/WHEELS (Continued)

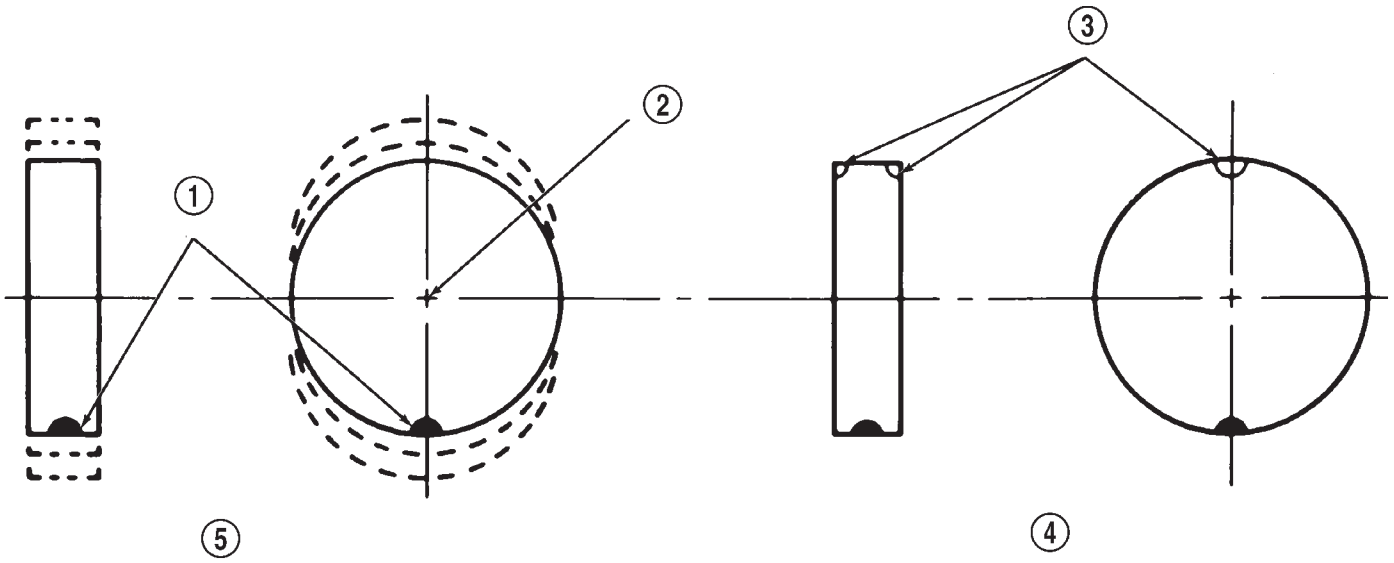

Fig. 8 Static Unbalance & Balance

1 - HEAVY SPOT
2 - CENTER LINE OF SPINDLE
3 - ADD BALANCE WEIGHTS HERE
4 - CORRECTIVE WEIGHT LOCATION
5 - TIRE OR WHEEL TRAMP, OR WHEEL HOP

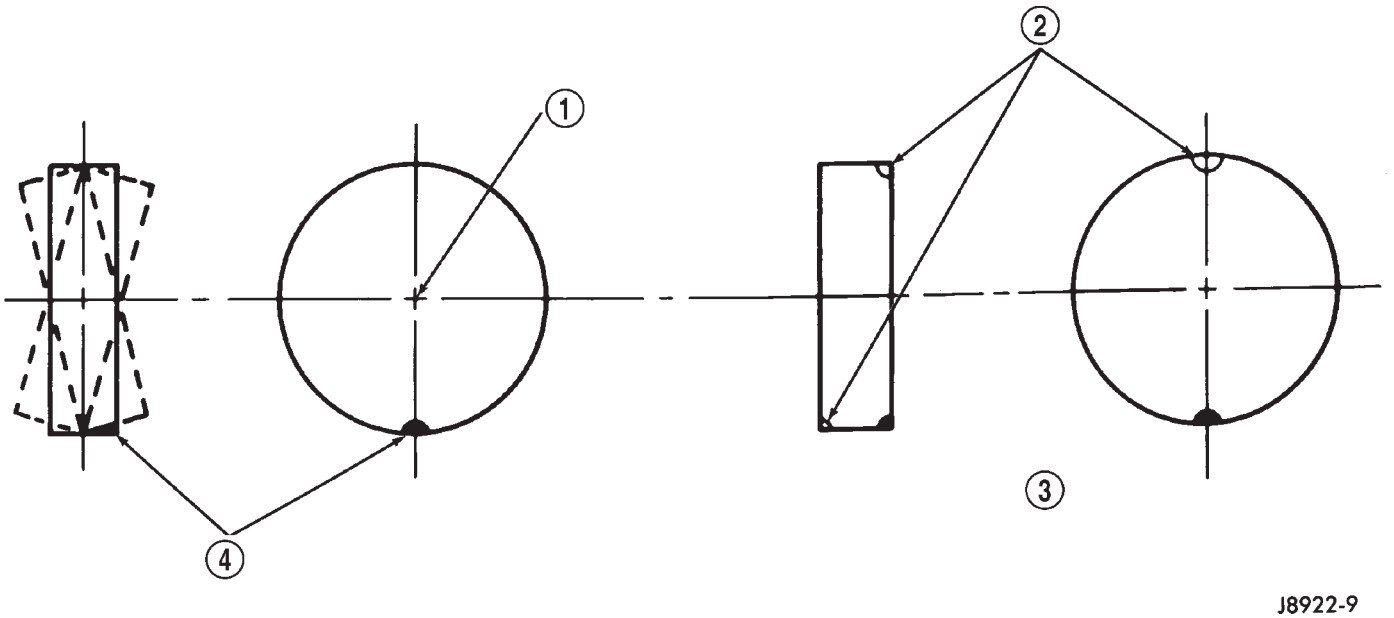

Fig. 9 Dynamic Unbalance & Balance

1 - CENTER LINE OF SPINDLE
2 - ADD BALANCE WEIGHTS HERE
3 - CORRECTIVE WEIGHT LOCATION
4 - HEAVY SPOT WHEEL SHIMMY AND VIBRATION

TIRES/WHEELS (Continued)

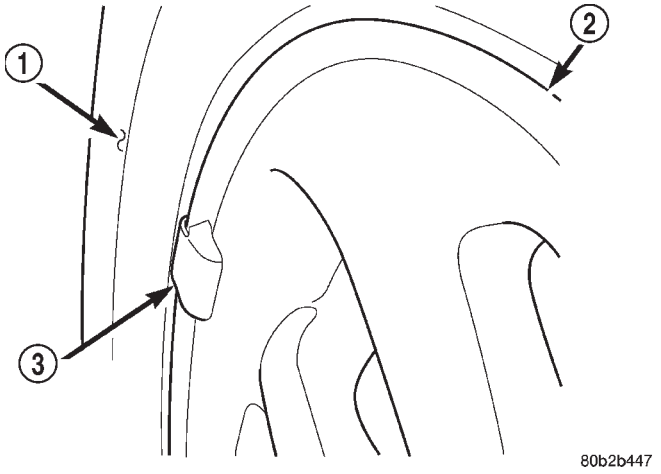

Fig. 10 Aluminum Wheel Weight

1 - TIRE
2 - WHEEL
3 - WHEEL WEIGHT

STANDARD PROCEDURE - TIRE AND WHEEL ROTATION

NON-DIRECTIONAL TREAD PATTERN TIRES

Tires on the front and rear axles operate at different loads and perform different functions. For these reasons, they wear at unequal rates, and tend to develop irregular wear patterns. These effects can be reduced by timely rotation of tires. The benefits of rotation are especially worthwhile. Rotation will increase tread life, help to maintain mud, snow, and wet traction levels, and contribute to a smooth, quiet ride.

The suggested rotation method is the forward-cross tire rotation method (Fig. 11). This method takes advantage of current tire industry practice which allows rotation of radial-ply tires. Other rotation methods may be used, but may not have all the benefits of the recommended method.

NOTE: Only the 4 tire rotation method may be used if the vehicle is equipped with a low mileage or temporary spare tire.

DIRECTIONAL TREAD PATTERN TIRES

Some vehicles are fitted with special high-performance tires having a directional tread pattern. These tires are designed to improve traction on wet pavement. To obtain the full benefits of this design, the tires must be installed so that they rotate in the correct direction. This is indicated by arrows on the tire sidewalls.

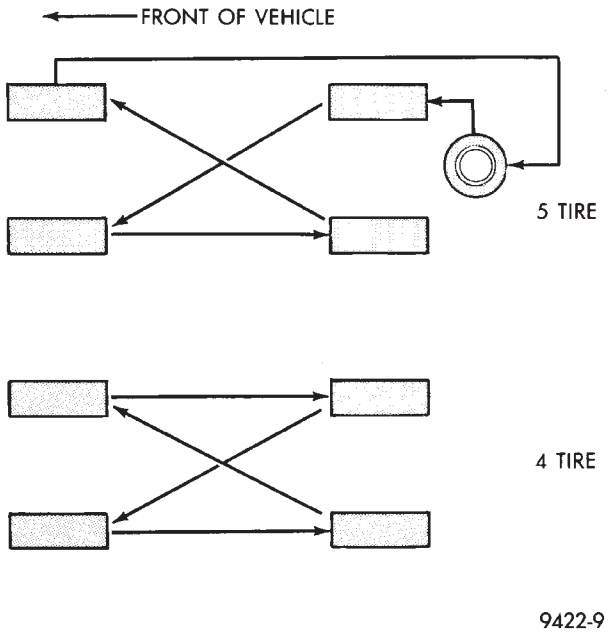

Fig. 11 Forward-Cross Tire Rotation Method

When wheels and tires are being installed, extra care is needed to ensure that this direction of rotation is maintained.

Refer to Owner's Manual for rotation schedule.

REMOVAL

REMOVAL - TIRE AND WHEEL ASSEMBLY (ALUMINUM WHEEL)

(1) Raise the vehicle so the tire and wheel assembly clears ground level.

(2) Remove the 5 wheel mounting nuts from the studs.

(3) Remove the tire and wheel from the hub.

REMOVAL - TIRE AND WHEEL ASSEMBLY (STEEL WHEEL)

(1) Raise the vehicle so the tire and wheel assembly clears ground level.

(2) Noting the location of the valve stem in relationship to the wheel mounting nuts, remove the three wheel mounting nuts securing the wheel cover to the wheel and hub (Fig. 12).

CAUTION: When removing the wheel cover, do not pry the wheel cover from the wheel. This can result in damage to the wheel cover. The wheel cover is removed by pulling it off the wheel by hand.

TIRES/WHEELS (Continued)

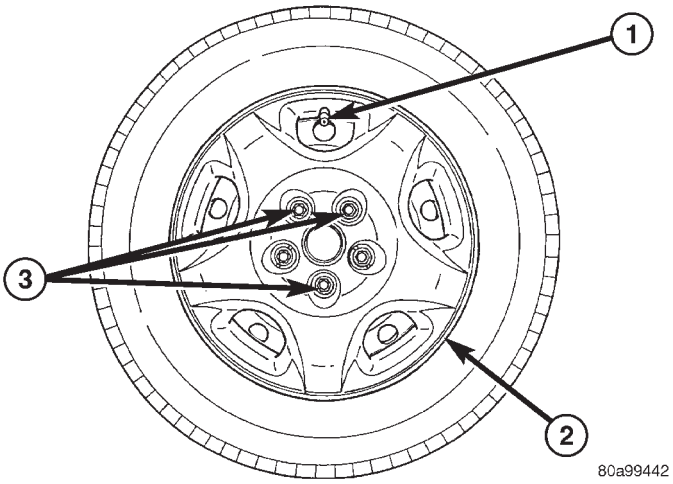

Fig. 12 NUTS SECURING WHEEL COVER

1 - VALVE STEM
2 - BOLT-ON WHEEL COVER
3 - NUTS SECURING WHEEL COVER

(3) Grasp the wheel cover at the edges in line with the remaining installed wheel mounting nuts and pull straight outward from the wheel. This will pop the wheel cover retaining tabs over the two remaining wheel nuts, removing the wheel cover from the vehicle.

(4) Remove the two remaining wheel mounting nuts from the hub's studs.

(5) Remove the wheel and tire from the hub.

INSTALLATION

INSTALLATION - TIRE AND WHEEL ASSEMBLY (ALUMINUM WHEEL)

NOTE: Never use oil or grease on studs or wheel mounting nuts.

(1) Position the tire and wheel assembly on the wheel mounting studs using the hub pilot as a guide. Place and hold the wheel flush up against the mounting surface.

(2) Loosely install all 5 wheel mounting nuts. Lightly snug the wheel nuts, then progressively tighten them in the proper sequence (Fig. 13). Tighten wheel mounting nuts to 135 N·m (100 ft. lbs.).

(3) Lower the vehicle.

INSTALLATION - TIRE AND WHEEL ASSEMBLY (STEEL WHEEL)

NOTE: Never use oil or grease on studs or wheel mounting nuts.

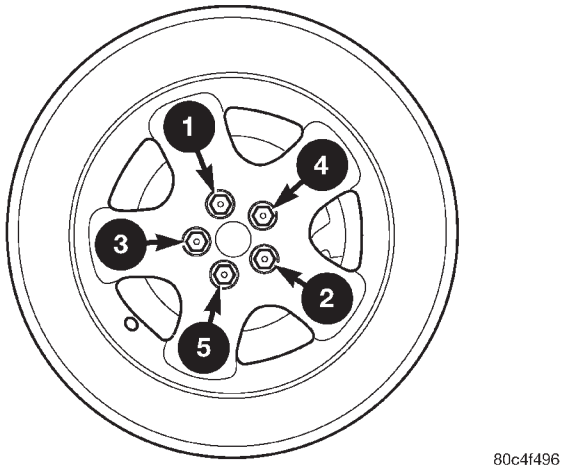

Fig. 13 Tightening Sequence

(1) Position the tire and wheel assembly on the wheel mounting studs using the hub pilot as a guide. Place and hold the wheel flush up against the mounting surface.

NOTE: Wheel mounting nuts must be installed on the studs as shown (Fig. 14) to allow proper installation of the wheel cover.

(2) Using the valve stem as an index placed at the 12 O'clock position, install and **lightly tighten** two wheel mounting nuts on the studs located at the 4 O'clock and 8 O'clock positions as shown (Fig. 14).

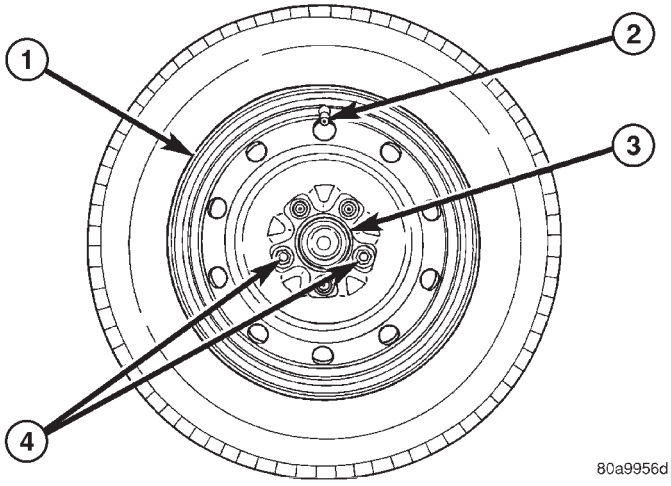

Fig. 14 TWO WHEEL MOUNTING NUTS INSTALLED

1 - WHEEL
2 - VALVE STEM
3 - HUB PILOT
4 - NUTS

(3) Place the wheel cover on the wheel in the following fashion:

(a) Align the valve notch in the wheel cover with the valve stem on the wheel.

(b) At the same time, align the two holes in the wheel cover having the retaining tabs with the two installed wheel nuts (Fig. 15).

(c) Press in on center of wheel cover until wheel cover retaining tabs push past and engage rear of previously installed wheel mounting nuts (Fig. 15). This will hold the wheel cover in place.

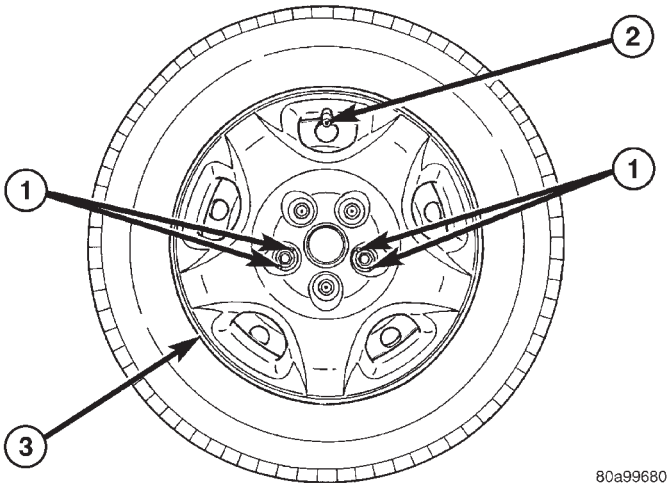

Fig. 15 WHEEL COVER INSTALLATION OVER TWO NUTS

1 - RETAINING TABS
2 - VALVE STEM
3 - BOLT-ON WHEEL COVER

(4) Install and **lightly tighten** the three remaining wheel mounting nuts, securing the wheel cover in place (Fig. 12).

(5) Progressively tighten all five wheel mounting nuts in the proper sequence (Fig. 16). Tighten wheel nuts to a torque of 135 N·m (100 ft. lbs.).

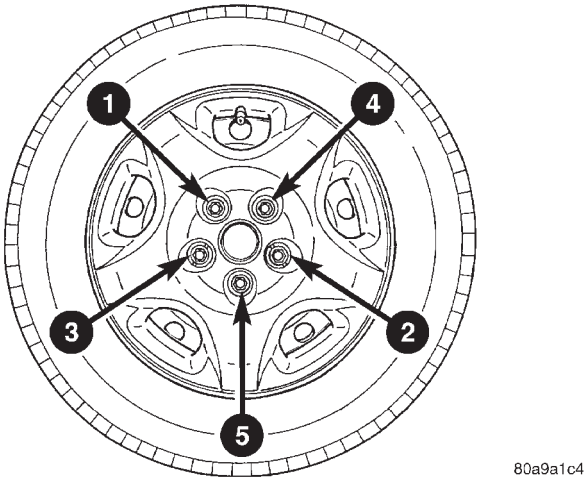

Fig. 16 NUT TIGHTENING SEQUENCE

(6) Lower the vehicle.

TIRE PRESSURE MONITORING (TPM)

DESCRIPTION

Some versions of this vehicle are equipped with a Tire Pressure Monitoring (TPM) system. It monitors air pressure in the four road tires (excludes spare). Pressure in the spare tire is not monitored.

There is a sensor (transmitter) in each of the vehicle's four road wheels. The system alerts the driver when tire pressure falls outside predetermined thresholds (pressure too low or too high). A message is then displayed on the Electronic Vehicle Information Center (EVIC) located in the overhead console.

For further information, refer to the Owners Manual or the appropriate diagnostic information.

OPERATION

The Tire Pressure Monitoring (TPM) system uses radio and sensor technology to monitor tire air pressure levels. Sensors, mounted to each road wheel as part of the valve stem, transmit tire pressure readings to a receiver located in the overhead console. These transmissions occur once every minute at speeds over 20 mph (32 km/h). The Tire Pressure Monitoring system remains active even if no tire pressure related message is displayed in the EVIC.

If any road tire pressure has exceeded the low or high pressure threshold (refer to chart below), the TPM system will display a message in the EVIC and sound a chime. This message will be displayed for the rest of the ignition cycle, or until either the Low/High Tire pressure condition has been corrected. If the C/T, MENU, STEP or RESET button is pressed, the message is replaced by the new message requested; however, if the Low/High Tire condition has not been corrected, the Low/High Tire pressure message will again be displayed.

If a road tire is replaced by the spare, the TPM system will detect the swap and the message ″SPARE TIRE IN USE? Y/N″ (along with a chime) will be displayed.

For further information, refer to the Owners Manual or the Appropriate Diagnostic Information.

TPM THRESHOLD PRESSURES

High Pressure ON Threshold	48 PSI (331 kPa)
High Pressure OFF Threshold	43 PSI (296 kPa)
Placard Pressure (Cold)	36 PSI (248 kPa)
Low Pressure OFF Threshold	33 PSI (228 kPa)
Low Pressure ON Threshold	28 PSI (193 kPa)

SENSOR - TPM

DESCRIPTION

On vehicles equipped with Tire Pressure Monitoring, one tire pressure sensor is mounted to each wheel (Fig. 19). Each sensor has an internal battery that lasts up to 10 years. The battery is not serviceable. At the time of battery failure, the sensor must be replaced. The serviceable components of the tire pressure sensor are:

- Sensor-To-Wheel Grommet
- Valve Stem Cap
- Valve Stem Core

Valve stem caps and cores are specifically designed for the tire pressure monitoring sensors. Although similar to standard valve stem caps and cores, they are different.

CAUTION: Do not use a standard valve stem cap or core in a tire pressure sensor. Always use the original equipment style sensor cap and core.

CAUTION: Do not reuse the Sensor-To Wheel Grommet. Always use a new grommet when installing a pressure sensor and properly torque the sensor nut.

CAUTION: Do not try to install a tire pressure sensor in a steel wheel or aftermarket wheel. Use only in original style factory wheels.

OPERATION

Tire pressure sensors are battery operated. They transmit tire pressure data once every minute at speeds above 20 mph (32 km/h) or up to once every hour when stationary (parked). For additional information, refer to Appropriate Diagnostic Information.

CAUTION

CAUTION: The use of tire sealants is strictly prohibited for vehicles equipped with the Tire Pressure Monitoring system. Tire sealants can clog tire pressure sensors.

CAUTION: Tire pressure sensor valve stem caps and cores are specially designed for the sensors. Due to risk of corrosion, do not use a standard valve stem cap or core in a tire pressure sensor in place of the original equipment style sensor cap and core.

CAUTION: Do not attempt to install a tire pressure sensor in a steel wheel or aftermarket wheel. Use tire pressure sensors in original style factory wheels only.

NOTE: TPM thresholds have been established for the original tire size equipped on the vehicle. Use original size tires only to maintain system accuracy.

DIAGNOSIS AND TESTING - TIRE PRESSURE SENSOR

NOTE: Tire pressure may increase from 2 to 6 psi (14 to 41 kPa) during normal driving conditions. Do NOT reduce this normal pressure build up.

If a fault in the system is detected, always check air pressure in the tires first with a known accurate air gauge and correct the inflation pressure. If any tire is low, inspect **all** tires.

If gauge-read pressure in the tires does not reflect the reading on the EVIC, retrain the sensors, then reevaluate (Refer to 22 - TIRES/WHEELS/TIRE PRESSURE MONITORING/SENSOR - STANDARD PROCEDURE). Refer to the appropriate diagnostic information for complete diagnosis of the Tire Pressure Monitoring System.

STANDARD PROCEDURE - TIRE PRESSURE SENSOR RETRAIN

WARNING: DEATH OR SERIOUS INJURY CAN OCCUR IF MAGNETICALLY SENSITIVE DEVICES ARE EXPOSED TO THE RELEARN MAGNET. MAGNETS CAN AFFECT PACEMAKERS.

CAUTION: Never attempt to train more than one vehicle at a time. System is capable of reading tire pressure sensor transmissions from other near-by vehicles.

Each time a wheel rotation or tire pressure sensor replacement occurs the tire pressure sensors must be retrained. This is necessary to inform the Electronic Vehicle Information Center (EVIC) that a sensor change was made and where. Retraining is accomplished through the EVIC used in conjunction with a Re-learn Magnet, Special Tool 8821.

SENSOR - TPM (Continued)

NOTE: Use the following procedure to retrain all four (4) road wheel tire pressure sensors. No attempt should be made to retrain individual sensors.

(1) Retrieve Re-learn Magnet, Special Tool 8821.
(2) Press MENU Button on EVIC until ″RETRAIN TIRE SENSORS - NO″ is displayed.
(3) Press STEP button to select ″YES″.

NOTE: There is a 60 second timer for training the first sensor and a 30 second timer between training the remaining sensors. If either of these timers expire, the EVIC will abort the training procedure.

NOTE: If at any time the EVIC display reads ″TRAINING ABORTED″, move the vehicle ahead at least one foot and repeat the entire retraining procedure.

(4) Press MENU button to start retraining. Display will read ″TRAIN LEFT FRONT TIRE″

NOTE: The order for retraining all five sensors is:
- **Left Front**
- **Right Front**
- **Right Rear**
- **Left Rear**

(5) Starting at left front tire, place Re-learn Magnet over valve stem (Fig. 17). Within approximately 5 seconds, vehicle horn will chirp indicating training complete at that particular sensor. Remove the magnet.

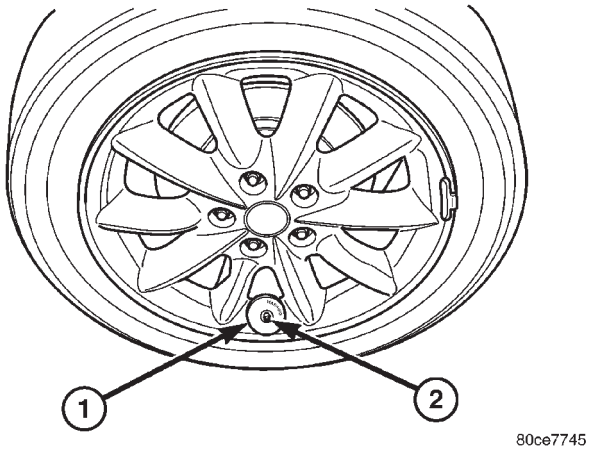

Fig. 17 Magnet Placement Over Valve Stem

1 - RE-LEARN MAGNET
2 - VALVE STEM

(6) Repeat step (6) on remaining sensors as indicated by EVIC until all four TPM sensors positions are trained.

(7) Once EVIC displays ″TRAINING COMPLETE″, pressing either STEP, C/T, RESET or MENU button will exit training routine.

REMOVAL

(1) Remove tire and wheel assembly from vehicle. (Refer to 22 - TIRES/WHEELS - REMOVAL)

CAUTION: The cap used on this valve stem contains an O-ring seal to prevent contamination and moisture from entering the valve stem. Retain this valve stem cap for reuse. Do not substitute a regular valve stem cap in its place.

CAUTION: The valve stem used on this vehicle is made of aluminum and the core is nickel plated brass. The original valve stem core must be reinstalled and not substituted with a valve stem core made of a different material. This is required to prevent corrosion in the valve stem caused by the different metals.

(2) Dismount tire from wheel following tire changer manufacturers instructions while paying special attention to the following to avoid damaging the pressure sensor:
(a) When breaking the tire bead loose from the wheel rim, avoid using the Bead Breaker in the area of the sensor. That includes both front and rear beads of the tire.
(b) When preparing to dismount the tire from the wheel, carefully insert the mounting/dimounting tool at the valve stem ± 10° (Fig. 18), then proceed to dismount the tire from the wheel. Use this process on both the upper an lower tire beads.
(3) Using a thin wall socket, remove special nut retaining sensor to wheel (Fig. 19).
(4) Remove sensor from wheel (Fig. 19).

INSTALLATION

NOTE: Before reinstalling a tire pressure sensor, replace sealing grommet at base of valve stem.

(1) Wipe area clean where sensor sealing grommet contacts wheel. Make sure surface of wheel is not damaged.
(2) Install sensor in wheel as shown (Fig. 19). Do not attempt to mount sensor otherwise, damage may occur.
(3) Using a thin wall socket, install special sensor nut (Fig. 19). Tighten nut to 4 N·m (35 in. lbs.) torque.

SENSOR - TPM (Continued)

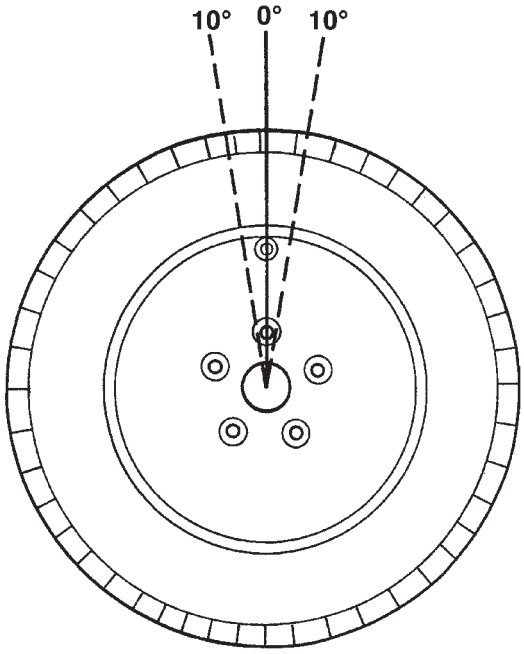

Fig. 18 Start Mount/Dismount Tool Within 10 Degrees Of Valve Stem

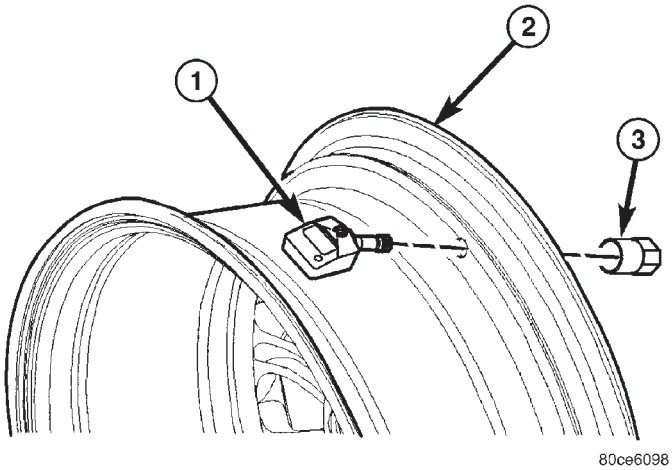

Fig. 19 Sensor Mounting To Wheel

1 - TIRE PRESSURE SENSOR
2 - WHEEL
3 - NUT

CAUTION: Over-torquing the sensor nut by as little as 12 N·m (106 in. lbs.) may result in sensor separation from the valve stem. Under this condition, the sensor may still function, however, the condition should be corrected immediately.

(4) Mount tire on wheel following tire changer manufacturers instructions, paying special attention to the following to avoid damaging tire pressure sensor:

(a) Rotating Wheel Tire Changers - Once the wheel is mounted to the changer, position the sensor valve stem approximately 210° from the head of the changer in a clockwise direction before rotating the wheel (also in a clockwise direction) to mount the tire (Fig. 20). Use this procedure on both the upper and lower tire beads.

(b) Rotating Tool Tire Changers - Position the wheel on the changer so that the sensor valve stem is approximately 210° from the head of the changer in a clockwise direction from the mounting end of the tool (Fig. 21) Make sure the sensor is clear of the lower bead breaker area to avoid damaging the sensor when the breaker rises (Fig. 21). Rotate the tool in a counterclockwise direction to mount the tire. Use this procedure on both the upper and lower tire beads.

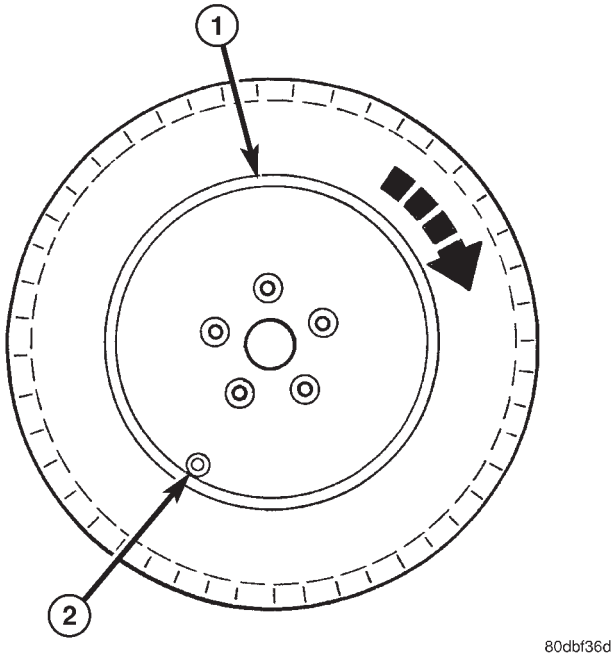

Fig. 20 Mounting Tire Using Rotating Wheel Machine

1 - HEAD OF CHANGER LOCATED HERE
2 - VALVE STEM

(5) Install wheel and tire assembly on vehicle. (Refer to 22 - TIRES/WHEELS - INSTALLATION)

SENSOR - TPM (Continued)

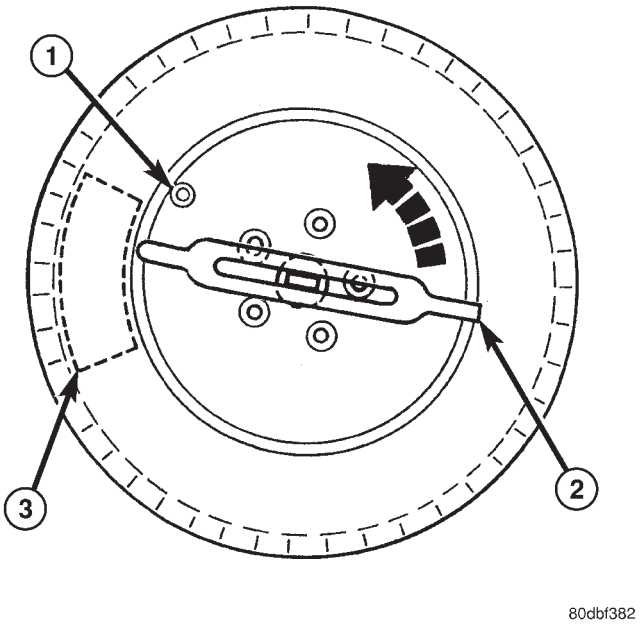

Fig. 21 Mounting Tire Using Rotating Tool Machine

1 - VALVE STEM
2 - MOUNTING END OF TOOL
3 - BEAD BREAKER (KEEP CLEAR OF SENSOR)

(6) Retrain tire pressure sensors. (Refer to 22 - TIRES/WHEELS/TIRE PRESSURE MONITORING/ SENSOR - STANDARD PROCEDURE)

TIRES

DESCRIPTION

DESCRIPTION - TIRE

Tires are designed and engineered for each specific vehicle. They provide the best overall performance for normal operation. The ride and handling characteristics match the vehicle's requirements. With proper care they will give excellent reliability, traction, skid resistance, and tread life.

Driving habits have more effect on tire life than any other factor. Careful drivers will obtain, in most cases, much greater mileage than severe use or careless drivers. A few of the driving habits which will shorten the life of any tire are:

- Rapid acceleration
- Severe application of brakes
- High-speed driving
- Taking turns at excessive speeds
- Striking curbs and other obstacles
- Operating vehicle with over or under inflated tire pressures

Radial ply tires are more prone to irregular tread wear. It is important to follow the tire rotation interval shown in the section on Tire Rotation. This will help to achieve a greater tread-life potential.

TIRE IDENTIFICATION

Tire type, size, load index and speed rating are encoded in the letters and numbers imprinted on the side wall of the tire. Refer to the chart to decipher the tire identification code (Fig. 22). An All Season type tire will have either M + S, M & S or M - S (indicating mud and snow traction) imprinted on the side wall. An Extra or Light Load marking “XL” or “LL” may also be listed on the sidewall. The absence of an “XL” or “LL” marking infers a standard load tire.

Consult the tire manufacturer regarding any questions on tire specifications or capabilities.

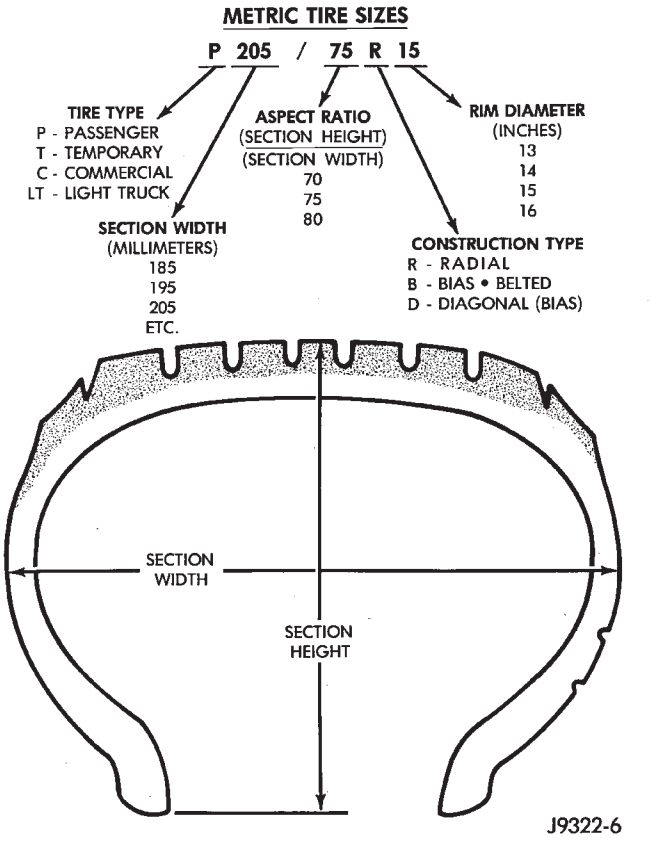

Fig. 22 Tire Identification (Typical)

TIRE CHAINS

Refer to the owners manual supplied with the vehicle to determine whether the use of tire chains is permitted on this vehicle.

DESCRIPTION - RADIAL-PLY TIRES

Radial-ply tires improve handling, tread life, ride quality and decrease rolling resistance.

TIRES (Continued)

Radial-ply tires must always be used in sets of four and under no circumstances should they be used on the front only. It is recommended that tires from different manufacturers NOT be mixed. They may be mixed with a temporary spare tire when necessary. A maximum speed of 80 km/h (50 mph) is recommended while a temporary spare is in use.

Radial-ply tires have the same load-carrying capacity as other types of tires of the same size. They also use the same recommended inflation pressures.

DESCRIPTION - REPLACEMENT TIRES

WARNING: FAILURE TO EQUIP THE VEHICLE WITH TIRES HAVING ADEQUATE SPEED CAPABILITY CAN RESULT IN SUDDEN TIRE FAILURE.

It is recommended that tires equivalent to the original equipment tires be used when replacement is needed.

Failure to use equivalent replacement tires may adversely affect the safety and handling of the vehicle.

The original equipment tires provide a proper combination of many characteristics such as:

- Ride
- Noise
- Handling
- Durability
- Tread life
- Traction
- Rolling resistance
- Speed capability

The use of tires smaller than the minimum tire size approved for the vehicle can result in tire overloading and failure.

Use tires that have the approved load rating for the vehicle and never overload them. Failure to equip the vehicle with tires having adequate speed capability can result in sudden tire failure and loss of vehicle control.

The use of oversize tires may cause interference with vehicle components. Under extremes of suspension and steering travel, interference with vehicle components may cause tire damage.

DESCRIPTION - SPARE TIRE (TEMPORARY)

The temporary (convenience) spare tire is designed for emergency use only. The original tire should be repaired and reinstalled, or replaced with a new, at the first opportunity.

The temporary (convenience) spare tire should be inflated to the pressure listed on its sidewall. Do not exceed speeds of 80 km/h (50 mph) when the temporary spare tire is in use on the vehicle. Refer to the Owner's Manual for more details.

DIAGNOSIS AND TESTING

DIAGNOSIS AND TESTING - TIRE NOISE

Unusual tire noise can be associated with tire and wheel vibration or irregular tire wear. For vibration, (Refer to 22 - TIRES/WHEELS - DIAGNOSIS AND TESTING). For irregular tire wear, (Refer to 22 - TIRES/WHEELS/TIRES - DIAGNOSIS AND TESTING).

DIAGNOSIS AND TESTING - TIRE/VEHICLE LEAD

Use the following Vehicle Lead Diagnosis And Correction Chart to diagnose and correct a vehicle lead or drift problem.

DIAGNOSIS AND TESTING - TIRE WEAR PATTERNS

Under inflation will cause wear on the shoulders of tire. Over inflation will cause wear at the center of tire.

Excessive camber causes the tire to run at an angle to the road. One side of tread is then worn more than the other (Fig. 23).

Excessive toe-in or toe-out causes wear on the tread edges and a feathered effect across the tread (Fig. 23).

DIAGNOSIS AND TESTING - TREAD WEAR INDICATORS

Tread wear indicators are molded into the bottom of the tread grooves. When tread depth is 1.6 mm (1/16 in.), the tread wear indicators will appear as a 13 mm (1/2 in.) band (Fig. 24).

Tire replacement is necessary when indicators appear in two or more grooves or if localized balding occurs.

STANDARD PROCEDURE

STANDARD PROCEDURE - TIRE INFLATION PRESSURES

The specified tire pressures have been chosen to provide safe operation, vehicle stability, and a smooth ride. The proper tire pressure specification can be found on the Tire Inflation Pressure Label provided with the vehicle (usually on the rear face of the driver's door).

A quality air pressure gauge is recommended to check tire air pressure. Tire pressure should be checked cold once per month. Check tire pressure more frequently when the weather temperature varies widely. Tire pressure will decrease when the out-

TIRES (Continued)

VEHICLE LEAD DIAGNOSIS AND CORRECTION CHART

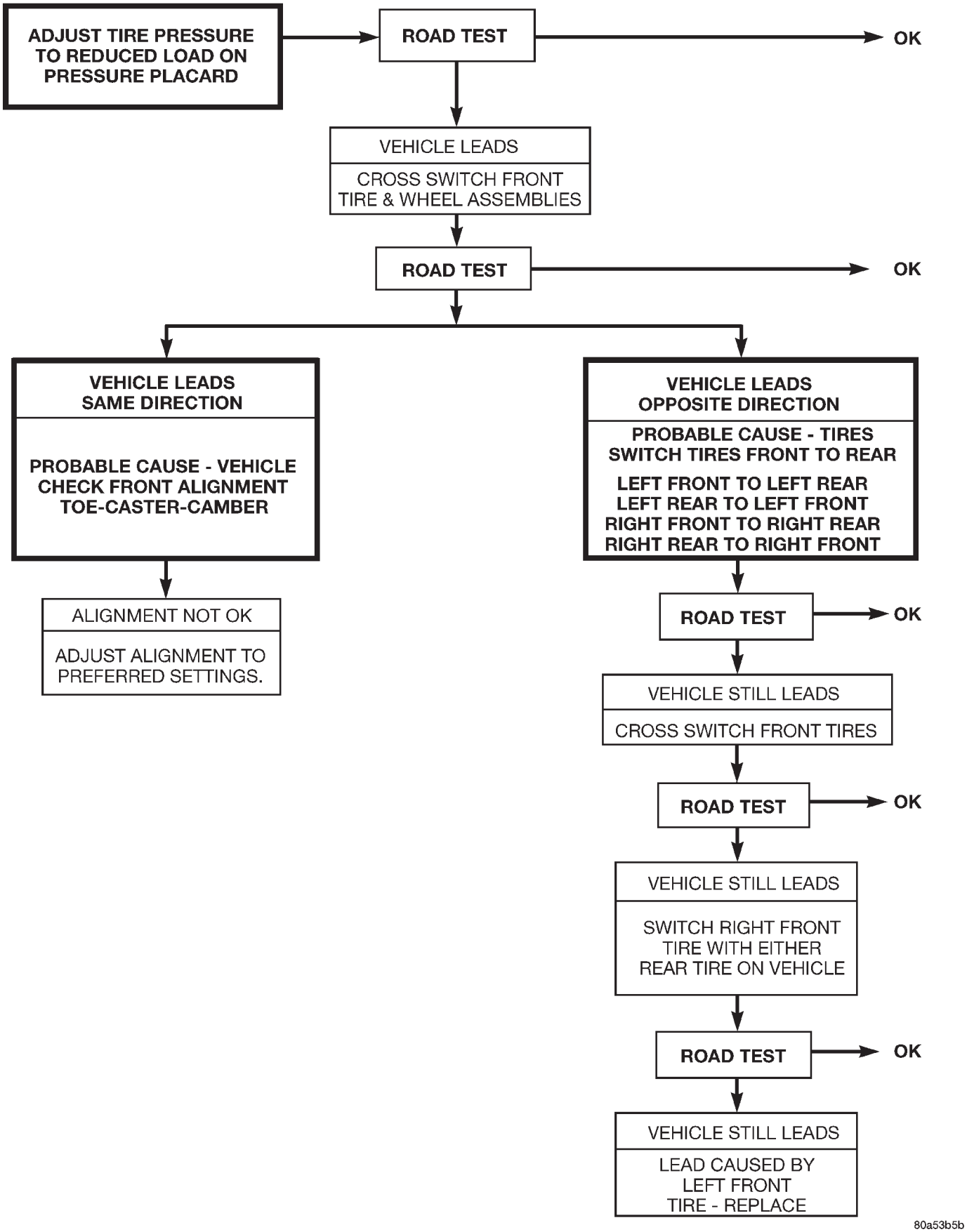

TIRES (Continued)

CONDITION	RAPID WEAR AT SHOULDERS	RAPID WEAR AT CENTER	CRACKED TREADS	WEAR ON ONE SIDE	FEATHERED EDGE	BALD SPOTS	SCALLOPED WEAR
EFFECT	1. 2.						
CAUSE	UNDER-INFLATION OR LACK OF ROTATION	OVER-INFLATION OR LACK OF ROTATION	UNDER-INFLATION OR EXCESSIVE SPEED*	EXCESSIVE CAMBER	INCORRECT TOE	UNBALANCED WHEEL OR TIRE DEFECT *	LACK OF ROTATION OF TIRES OR WORN OR OUT-OF-ALIGNMENT SUSPENSION.
CORRECTION	ADJUST PRESSURE TO SPECIFICATIONS WHEN TIRES ARE COOL ROTATE TIRES			ADJUST CAMBER TO SPECIFICATIONS	ADJUST TOE-IN TO SPECIFICATIONS	DYNAMIC OR STATIC BALANCE WHEELS	ROTATE TIRES AND INSPECT SUSPENSION SEE GROUP 2

*HAVE TIRE INSPECTED FOR FURTHER USE.

RN797

Fig. 23 Tire Wear Patterns

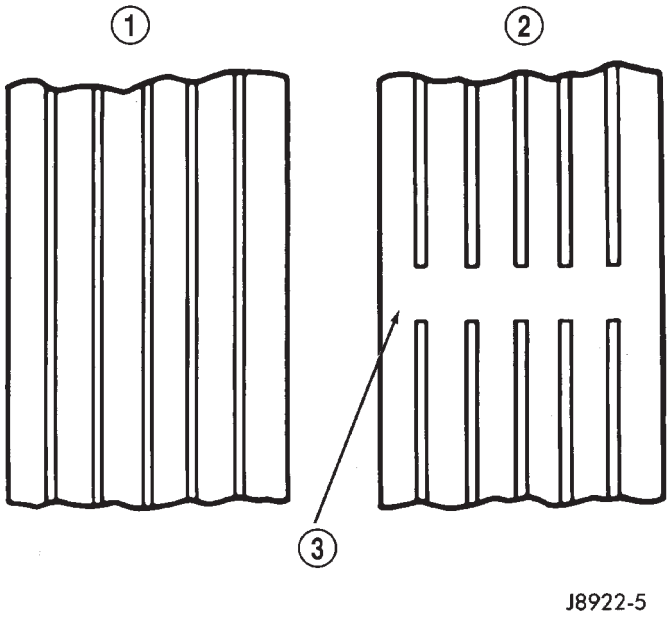

Fig. 24 Tread Wear Indicators

1 - TREAD ACCEPTABLE
2 - TREAD UNACCEPTABLE
3 - WEAR INDICATOR

door temperature drops. After checking the air pressure, replace valve cap finger tight.

Inflation pressures specified on the Tire Inflation Pressure Label are always the cold inflation pressure of the tire. Cold inflation pressure is obtained after the vehicle has not been operated for at least 3 hours, or the vehicle is driven less than one mile after being inoperative for 3 hours. Tire inflation pressures may increase from 2 to 6 pounds per square inch (psi) (14 to 41 kPa) during operation. Do not reduce this normal pressure buildup.

Improper inflation can cause:

- Uneven wear patterns
- Reduced tread life
- Reduced fuel economy
- Unsatisfactory ride
- The vehicle to drift.

WARNING: OVER OR UNDER INFLATED TIRES CAN AFFECT VEHICLE HANDLING. THE TIRE CAN FAIL SUDDENLY, RESULTING IN LOSS OF VEHICLE CONTROL.

Under inflation causes rapid shoulder wear, tire flexing, and can result in tire failure (Fig. 25).

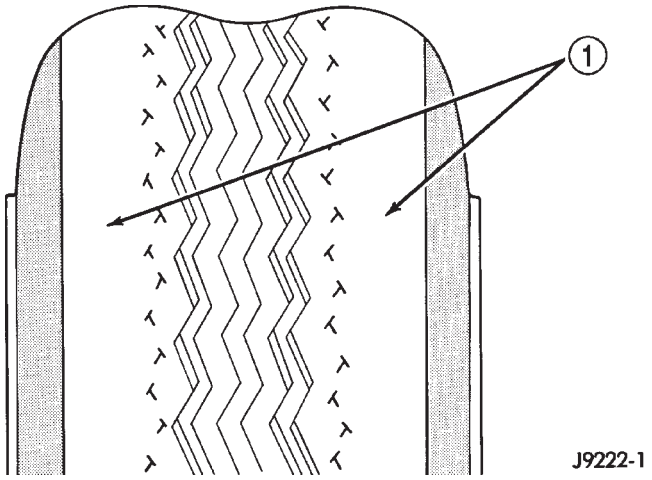

Fig. 25 Under Inflation Wear

1 - THIN TIRE TREAD AREAS

TIRES (Continued)

Over inflation causes rapid center wear and loss of the tire's ability to cushion shocks (Fig. 26).

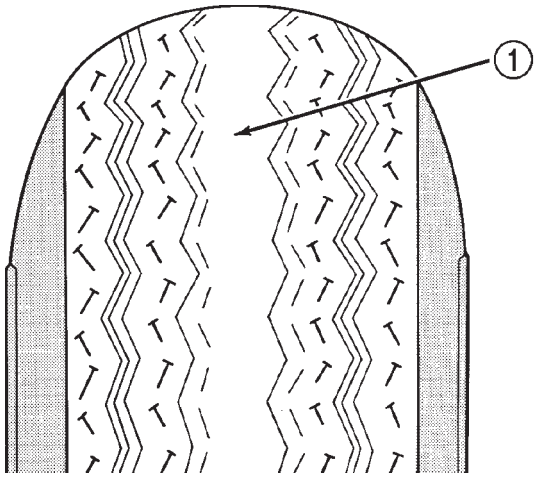

Fig. 26 Over Inflation Wear

1 - THIN TIRE TREAD AREA

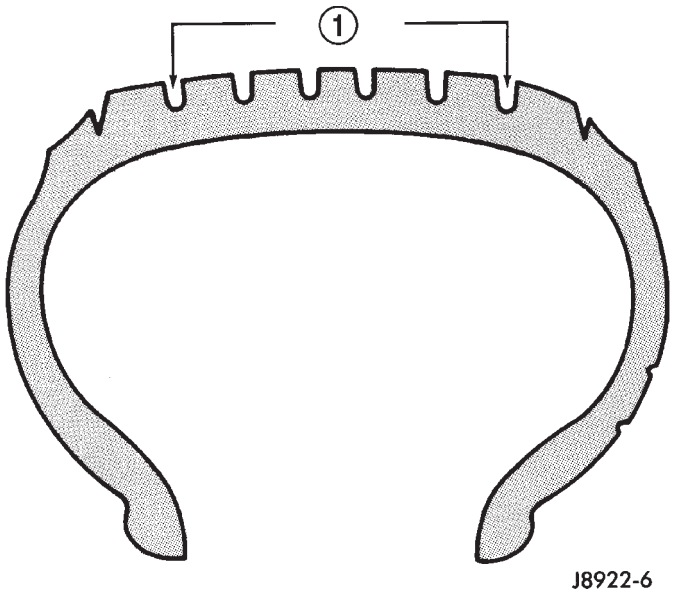

Fig. 27 Tire Repair Area

1 - REPAIRABLE AREA

STANDARD PROCEDURE - TIRE PRESSURE FOR HIGH SPEED OPERATION

DaimlerChrysler Corporation advocates driving at safe speeds within posted speed limits. Where speed limits allow the vehicle to be driven at high speeds, correct tire inflation pressure is very important. Vehicles loaded to maximum capacity should not be driven at continuous speeds over 120 km/h (75 mph). Never exceed the maximum speed capacity of the tire. For information on tire identification and speed ratings, (Refer to 22 - TIRES/WHEELS/TIRES - DESCRIPTION).

STANDARD PROCEDURE - TIRE LEAK REPAIRING

For proper repairing, a radial tire must be removed from the wheel. Repairs should only be made if the defect, or puncture, is in the tread area (Fig. 27). The tire should be replaced if the puncture is located in the sidewall.

Deflate tire completely before attempting to dismount the tire from the wheel. **Use a lubricant such as a mild soap solution when dismounting or mounting tire.** Use tools free of burrs or sharp edges which could damage the tire or wheel rim.

Before mounting tire on wheel, make sure all rust is removed from the rim bead and repaint if necessary.

Install wheel on vehicle, and progressively tighten the 5 wheel nuts to a torque of 135 N·m (100 ft. lbs.).

CLEANING - TIRES

Before delivery of a vehicle, remove the protective coating on the tires with white sidewalls or raised white letters. To remove the protective coating, apply warm water and let it soak for a few minutes. Afterwards, scrub the coating away with a soft bristle brush. Steam cleaning may also be used to remove the coating.

CAUTION: DO NOT use gasoline, mineral oil, oil-based solvent or a wire brush for cleaning.

WHEELS

DESCRIPTION - WHEEL

Original equipment wheels are designed for proper operation at all loads up to the specified maximum vehicle capacity.

All models use either steel or aluminum drop-center wheels. Every wheel has raised sections between the rim flanges and rim drop well called safety humps (Fig. 28). Initial inflation of the tires forces the bead over these raised sections. In case of air loss, the safety humps hold the tire in position on the wheel until the vehicle can be brought to a safe stop.

Cast aluminum wheels require special balance weights to fit on the flange of the rim (Fig. 29).

When wheel alignment is necessary on a vehicle with cast aluminum wheels, special wheel clamps are required to avoid damage to the wheel's finish.

The wheel studs and nuts are designed for specific wheel applications and must be replaced with equivalent parts.

WHEELS (Continued)

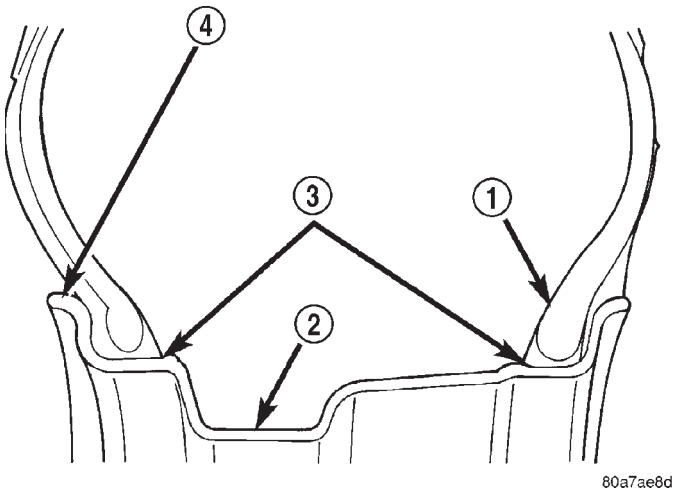

Fig. 28 Safety Rim

1 - TIRE
2 - WELL
3 - SAFETY HUMPS
4 - FLANGE

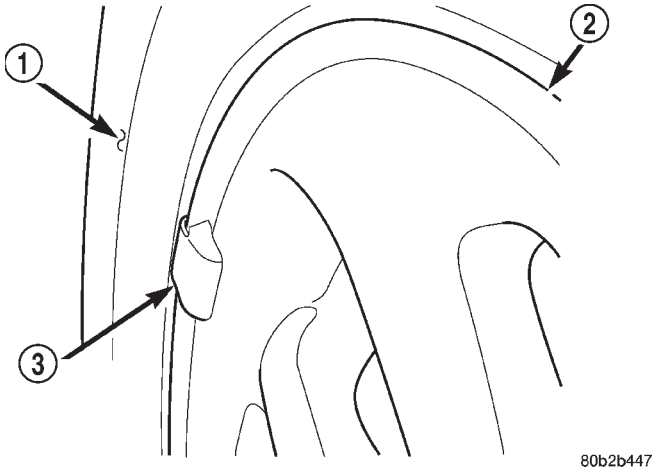

Fig. 29 Styled Aluminum Wheel Weight

1 - TIRE
2 - WHEEL
3 - STYLED WHEEL WEIGHT

All aluminum wheels have wheel mounting (lug) nuts with an enlarged nose. This enlarged nose is necessary to ensure proper retention of the wheels.

DIAGNOSIS AND TESTING - WHEEL INSPECTION

Inspect wheels for:

- Excessive runout
- Dents, cracks or irregular bends
- Damaged wheel stud (lug) holes
- Air Leaks

NOTE: Do not attempt to repair a wheel by hammering, heating or welding.

If a wheel is damaged, an original equipment replacement wheel should be used. When obtaining replacement wheels, they must be equivalent in load carrying capacity. The diameter, width, offset, pilot hole and bolt circle of the wheel should be the same as the original wheel.

WARNING: FAILURE TO USE EQUIVALENT REPLACEMENT WHEELS MAY ADVERSELY AFFECT THE SAFETY AND HANDLING OF THE VEHICLE.

WARNING: REPLACEMENT WITH USED WHEELS IS NOT RECOMMENDED. THE SERVICE HISTORY OF THE WHEEL MAY HAVE INCLUDED SEVERE TREATMENT OR VERY HIGH MILEAGE. THE RIM COULD FAIL WITHOUT WARNING.

CLEANING - ALUMINUM WHEEL CARE

Chrome plated and painted aluminum wheels should be cleaned regularly using mild soap and water to maintain their luster and to prevent corrosion.

Care must be taken in the selection of tire and wheel cleaning chemicals and equipment to prevent damage to the wheels. Any of the “DO NOT USE” items listed below WILL damage chrome plated and painted aluminum wheels.

DO NOT USE:

- any abrasive metal cleaner
- any abrasive cleaning pad or brush
- any cleaner that contains an acid (this will immediately react with and discolor the chromium surface)
- chrome polish (unless it is buffed off immediately after application)
- oven cleaner
- a car wash that uses carbide-tipped wheel cleaning brushes

WHEELS (Continued)

SPECIFICATIONS

WHEEL

SPECIFICATIONS

DESCRIPTION	SPECIFICATION
Wheel Mounting (Lug) Nut Hex Size	19 mm
Wheel Mounting Stud Size	M12 x 1.5 mm

TORQUE SPECIFICATIONS

DESCRIPTION	N·m	Ft. Lbs.	In. Lbs.
Wheel Mounting (Lug) Nut	135	100	—

WHEEL COVER

DESCRIPTION

This vehicle uses a bolt-on type wheel cover (Fig. 30).

This bolt-on wheel cover cannot be removed from the wheel until three of the five wheel mounting nuts shown are removed (Fig. 30). The bolt-on wheel cover can then be removed with the remaining two wheel nuts tightened in place.

REMOVAL

(1) Noting the location of the valve stem in relationship to the wheel mounting nuts, remove the three wheel mounting nuts securing the wheel cover to the wheel and hub (Fig. 30).

CAUTION: When removing the wheel cover, do not pry the wheel cover from the wheel. This can result in damage to the wheel cover. The wheel cover is removed by pulling it off the wheel by hand.

(2) Grasp the wheel cover at the edges in line with the remaining installed wheel nuts and pull straight outward from the wheel. This will pop the wheel cover retaining tabs over the two remaining wheel nuts, removing the wheel cover from the wheel.

INSTALLATION

NOTE: Wheel mounting nuts must be installed on the studs as shown to allow installation of the wheel cover (Fig. 31).

(1) Place the wheel cover on the wheel in the following fashion:

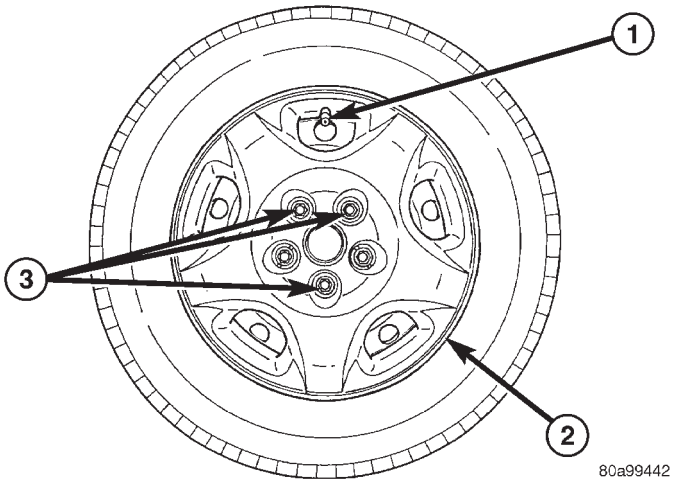

Fig. 30 Nuts Securing Wheel Cover

1 - VALVE STEM
2 - BOLT-ON WHEEL COVER
3 - NUTS SECURING WHEEL COVER

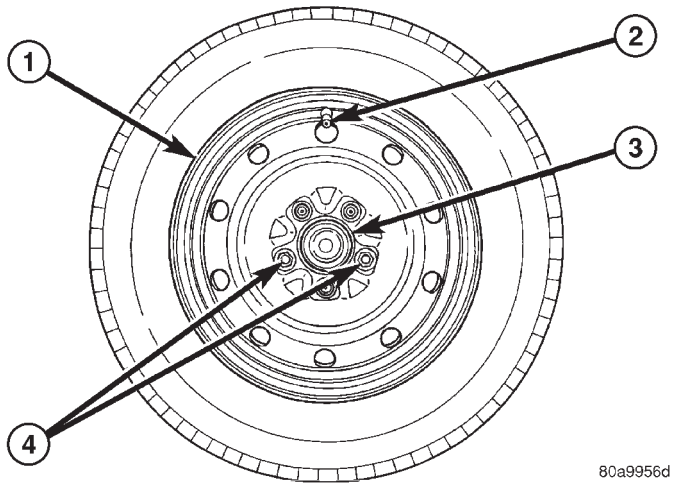

Fig. 31 Two Wheel Mounting Nuts Installed

1 - WHEEL
2 - VALVE STEM
3 - HUB PILOT
4 - NUTS

(a) Align the valve notch in the wheel cover with the valve stem on the wheel.

(b) At the same time, align the two holes in the wheel cover having the retaining tabs with the two installed wheel nuts (Fig. 32).

(c) Press in on center of wheel cover until wheel cover retaining tabs push past and engage rear of previously installed wheel mounting nuts (Fig. 32). This will hold the wheel cover in place.

(2) Install and **lightly tighten** the three remaining wheel mounting nuts, securing the wheel cover in place (Fig. 30).

WHEEL COVER (Continued)

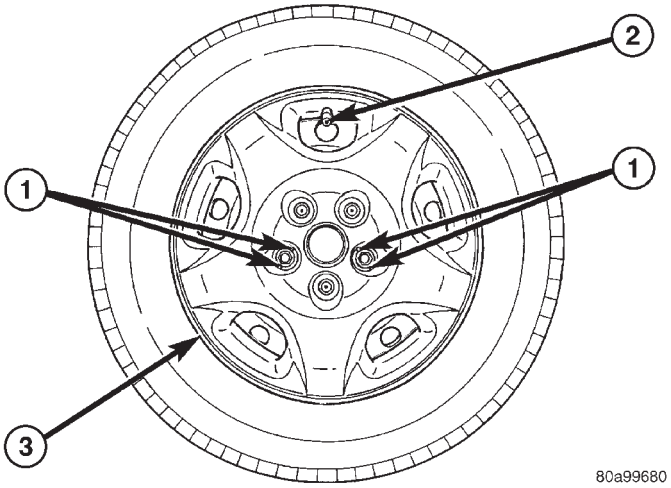

Fig. 32 Wheel Cover Installation Over Two Nuts

1 - RETAINING TABS
2 - VALVE STEM
3 - BOLT-ON WHEEL COVER

(3) Tighten all five wheel mounting nuts in the proper sequence (Fig. 33). Tighten wheel nuts to a torque of 135 N·m (100 ft. lbs.).

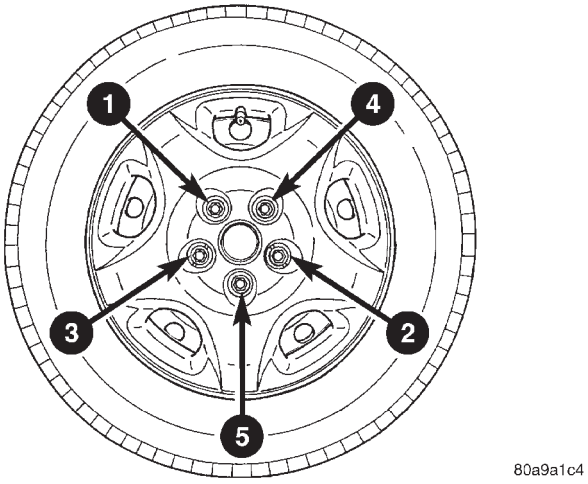

Fig. 33 Nut Tightening Sequence

WHEEL MOUNTING STUDS - FRONT

REMOVAL

CAUTION: If a wheel mounting stud needs to be replaced in the hub and bearing assembly, the studs MUST NOT be hammered out of the hub flange. If a stud is removed by hammering it out of the bearing flange, damage to the hub and bearing assembly will occur leading to premature bearing failure.

(1) Raise vehicle on jackstands or centered on a frame contact type hoist. See Hoisting in Lubrication and Maintenance.

(2) Remove the front wheel and tire assembly from the vehicle.

(3) Remove the two adapter mounting bolts securing both the disc brake caliper adapter to the steering knuckle (Fig. 34).

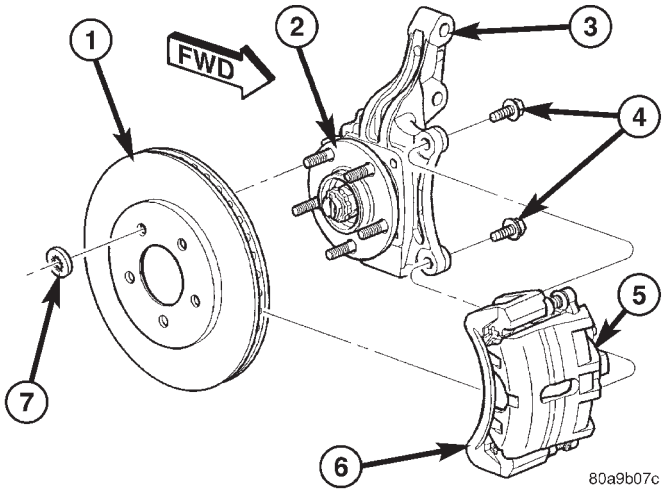

Fig. 34 Front Brake Mounting

1 - BRAKE ROTOR
2 - HUB AND BEARING
3 - STEERING KNUCKLE
4 - ADAPTER MOUNTING BOLTS
5 - BRAKE CALIPER
6 - ADAPTER
7 - CLIP

(4) Remove the disc brake caliper and adapter as an assembly from the steering knuckle (Fig. 34). Hang the assembly out of the way using wire or a bungee cord. Use care not to overextend the brake hose when doing this.

(5) Remove brake rotor from hub by pulling it straight off wheel mounting studs (Fig. 34).

(6) On the wheel mounting stud to be removed, install a wheel mounting (lug) nut far enough so the threads on the stud are even with end of nut. Install Remover, Special Tool C-4150A on hub and bearing assembly flange and wheel stud (Fig. 35).

(7) Tighten down on special tool, pushing wheel stud out of the hub flange. When shoulder of wheel stud is past flange, remove special tool from hub and bearing. Remove nut from stud and remove stud from hub flange.

WHEEL MOUNTING STUDS - FRONT (Continued)

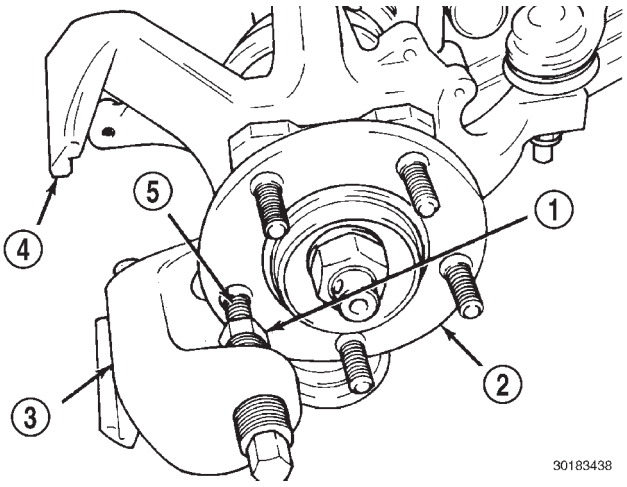

Fig. 35 Wheel Stud Removal (Typical)

1 - WHEEL MOUNTING (LUG) NUT
2 - HUB AND BEARING ASSEMBLY
3 - SPECIAL TOOL C-4150A
4 - STEERING KNUCKLE
5 - WHEEL STUD

INSTALLATION

(1) Install replacement wheel stud into flange of hub and bearing assembly. Install washers on wheel stud, then install a wheel mounting (lug) nut on stud with flat side of lug nut against washers as shown (Fig. 36).

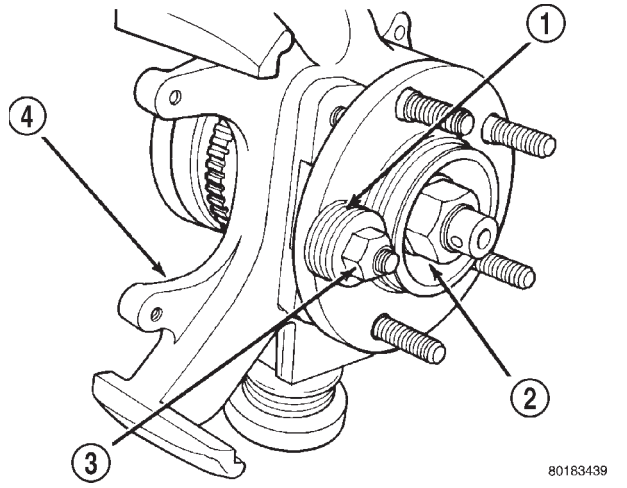

Fig. 36 Installing Wheel Stud (Typical)

1 - WASHERS
2 - HUB AND BEARING ASSEMBLY
3 - WHEEL MOUNTING (LUG) NUT
4 - STEERING KNUCKLE

(2) Tighten the nut, pulling the wheel stud into the flange of the hub and bearing. When the head of the stud is fully seated against the rear of the hub flange, remove nut and washers from stud.

(3) Install the brake rotor back on the hub and bearing (Fig. 34).

(4) Install brake caliper and adapter back over brake rotor aligning adapter with mounting holes on steering knuckle (Fig. 34).

(5) Install the two adapter mounting bolts securing the adapter to the steering knuckle. Tighten the mounting bolts to 169 N·m (125 ft. lbs.) torque.

(6) Install wheel and tire assembly on vehicle. Tighten the wheel mounting lug nuts in proper sequence until all nuts are torqued to half specification, then repeat the tightening sequence to the full specified torque of 135 N·m (100 ft. lbs.).

(7) Lower vehicle to the ground.

WHEEL MOUNTING STUDS - REAR

REMOVAL

CAUTION: If a wheel attaching stud needs to be replaced in the hub and bearing assembly the studs MUST NOT be hammered out of the hub flange. If a stud is removed by hammering it out of the bearing flange, damage to the hub and bearing assembly will occur leading to premature hub and bearing failure.

(1) Raise vehicle on jackstands or centered on a frame contact type hoist. See Hoisting in Lubrication and Maintenance.

(2) Remove the rear wheel and tire assembly.

(3) Remove the brake drum or disc brake caliper and rotor. Refer to Brakes.

(4) Install a lug nut on the wheel stud to be removed from the hub and bearing assembly (Fig. 37) so the threads on stud are even with end of lug nut. Install Remover, Special Tool C-4150A on hub and bearing assembly flange and wheel stud (Fig. 37).

(5) Tightening down on special tool will push wheel stud out of the hub and bearing assembly flange.

(6) Remove lug nut from stud and remove wheel stud from flange.

WHEEL MOUNTING STUDS - REAR (Continued)

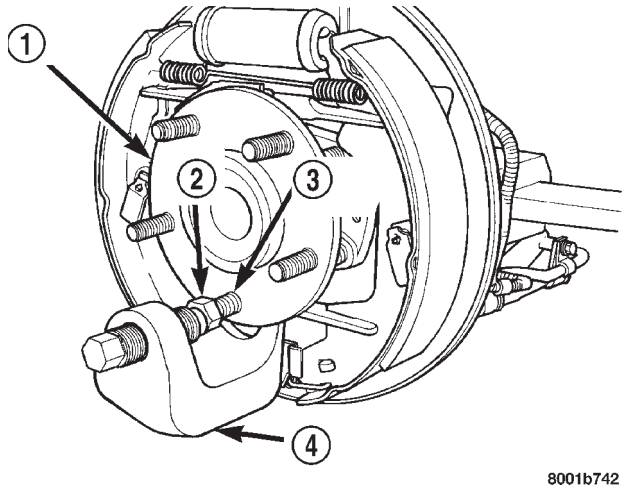

Fig. 37 Wheel Stud Removal From Hub And Bearing

1 - HUB AND BEARING ASSEMBLY
2 - WHEEL MOUNTING (LUG) NUT
3 - WHEEL STUD
4 - SPECIAL TOOL C-4150A

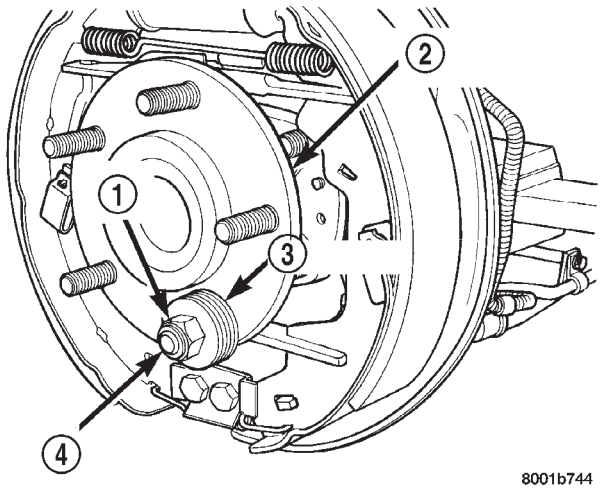

Fig. 38 Wheel Stud Installation

1 - WHEEL MOUNTING (LUG) NUT
2 - HUB AND BEARING ASSEMBLY
3 - WASHERS
4 - WHEEL STUD

INSTALLATION

(1) Install replacement wheel stud into flange of hub and bearing assembly. Install washers on wheel stud, then install a wheel lug nut on stud with flat side of lug nut against washers (Fig. 38).

(2) Tighten the wheel lug nut, pulling the wheel stud into the flange of the hub and bearing assembly. When the head of the stud is fully seated against the bearing flange, remove lug nut and washers from wheel stud.

(3) Install the brake drum or disc brake rotor and caliper on the hub and bearing assembly.

(4) Install wheel and tire assembly on vehicle. Tighten the wheel mounting stud nuts in proper sequence until all nuts are torqued to half specification. Then repeat the tightening sequence to the full specified torque of 135 N·m (100 ft. lbs.).

(5) Lower vehicle to the ground.

BODY

TABLE OF CONTENTS

	page
BODY	
DESCRIPTION - VEHICLE IDENTIFICATION	1
WARNING	
SAFETY PRECAUTIONS AND WARNINGS	1
DIAGNOSIS AND TESTING	
DIAGNOSIS AND TESTING - WATER LEAKS	1
DIAGNOSIS AND TESTING - WIND NOISE	2
STANDARD PROCEDURE	
STANDARD PROCEDURE - PLASTIC BODY PANEL REPAIR	3
STANDARD PROCEDURE - HEAT STAKING	10
SPECIFICATIONS	
TORQUE	11
BODY LUBRICATION	12
SPECIAL TOOLS	
BODY	13
DOOR - FRONT	14
DOORS - SLIDING	24
DECKLID/HATCH/LIFTGATE/TAILGATE	39
EXTERIOR	44
HOOD	60
INSTRUMENT PANEL	63
INTERIOR	72
PAINT	83
SEATS	85
STATIONARY GLASS	107
WEATHERSTRIP/SEALS	112
BODY STRUCTURE	115

BODY

DESCRIPTION - VEHICLE IDENTIFICATION

Throughout this group, references to the DaimlerChrysler Corporation vehicle family identification code are used when describing a procedure that is unique to that vehicle. Refer to Introduction Group of this manual for detailed information on vehicle identification. If a procedure is common to all vehicles covered in this manual, no reference will be made to a vehicle family code.

WARNING

SAFETY PRECAUTIONS AND WARNINGS

WARNING: USE A OSHA APPROVED BREATHING FILTER WHEN SPRAYING PAINT OR SOLVENTS IN A CONFINED AREA. PERSONAL INJURY CAN RESULT.
AVOID PROLONGED SKIN CONTACT WITH PETROLEUM OR ALCOHOL – BASED CLEANING SOLVENTS. PERSONAL INJURY CAN RESULT.
DO NOT STAND UNDER A HOISTED VEHICLE THAT IS NOT PROPERLY SUPPORTED ON SAFETY STANDS. PERSONAL INJURY CAN RESULT.

CAUTION: When holes must be drilled or punched in an inner body panel, verify depth of space to the outer body panel, electrical wiring, or other components. Damage to vehicle can result.
Do not weld exterior panels unless combustible material on the interior of vehicle is removed from the repair area. Fire or hazardous conditions, can result.
Always have a fire extinguisher ready for use when welding.
Disconnect the negative (-) cable clamp from the battery when servicing electrical components that are live when the ignition is OFF. Damage to electrical system can result.
Do not use abrasive chemicals or compounds on painted surfaces. Damage to finish can result.
Do not use harsh alkaline based cleaning solvents on painted or upholstered surfaces. Damage to finish or color can result.
Do not hammer or pound on plastic trim panel when servicing interior trim. Plastic panels can break.

DIAGNOSIS AND TESTING

DIAGNOSIS AND TESTING - WATER LEAKS

Water leaks can be caused by poor sealing, improper body component alignment, body seam porosity, missing plugs, or blocked drain holes. Centrifugal and gravitational force can cause water to drip from a location away from the actual leak point, making leak detection difficult. All body sealing points should be water tight in normal wet-driving conditions. Water flowing downward from the front of the vehicle should not enter the passenger or luggage compartment. Moving sealing surfaces will not always seal water tight under all conditions. At times, side glass or door seals will allow water to

enter the passenger compartment during high pressure washing or hard driving rain (severe) conditions. Overcompensating on door or glass adjustments to stop a water leak that occurs under severe conditions can cause premature seal wear and excessive closing or latching effort. After completing a repair, water test vehicle to verify leak has stopped before returning vehicle to use.

VISUAL INSPECTION BEFORE WATER LEAK TESTS

Verify that floor and body plugs are in place, body drains are clear, and body components are properly aligned and sealed. If component alignment or sealing is necessary, refer to the appropriate section of this group for proper procedures.

WATER LEAK TESTS

WARNING: DO NOT USE ELECTRIC SHOP LIGHTS OR TOOLS IN WATER TEST AREA. PERSONAL INJURY CAN RESULT.

When the conditions causing a water leak have been determined, simulate the conditions as closely as possible.

- If a leak occurs with the vehicle parked in a steady light rain, flood the leak area with an open-ended garden hose.
- If a leak occurs while driving at highway speeds in a steady rain, test the leak area with a reasonable velocity stream or fan spray of water. Direct the spray in a direction comparable to actual conditions.
- If a leak occurs when the vehicle is parked on an incline, hoist the end or side of the vehicle to simulate this condition. This method can be used when the leak occurs when the vehicle accelerates, stops or turns. If the leak occurs on acceleration, hoist the front of the vehicle. If the leak occurs when braking, hoist the back of the vehicle. If the leak occurs on left turns, hoist the left side of the vehicle. If the leak occurs on right turns, hoist the right side of the vehicle. For hoisting recommendations (Refer to LUBRICATION & MAINTENANCE/HOISTING - STANDARD PROCEDURE).

WATER LEAK DETECTION

To detect a water leak point-of-entry, do a water test and watch for water tracks or droplets forming on the inside of the vehicle. If necessary, remove interior trim covers or panels to gain visual access to the leak area. If the hose cannot be positioned without being held, have someone help do the water test.

Some water leaks must be tested for a considerable length of time to become apparent. When a leak appears, find the highest point of the water track or drop. The highest point usually will show the point of entry. After leak point has been found, repair the leak and water test to verify that the leak has stopped.

Locating the entry point of water that is leaking into a cavity between panels can be difficult. The trapped water may splash or run from the cavity, often at a distance from the entry point. Most water leaks of this type become apparent after accelerating, stopping, turning, or when on an incline.

MIRROR INSPECTION METHOD

When a leak point area is visually obstructed, use a suitable mirror to gain visual access. A mirror can also be used to deflect light to a limited-access area to assist in locating a leak point.

BRIGHT LIGHT LEAK TEST METHOD

Some water leaks in the luggage compartment can be detected without water testing. Position the vehicle in a brightly lit area. From inside the darkened luggage compartment inspect around seals and body seams. If necessary, have a helper direct a drop light over the suspected leak areas around the luggage compartment. If light is visible through a normally sealed location, water could enter through the opening.

PRESSURIZED LEAK TEST METHOD

When a water leak into the passenger compartment cannot be detected by water testing, pressurize the passenger compartment and soap test exterior of the vehicle. To pressurize the passenger compartment, close all doors and windows, start engine, and set heater control to high blower in HEAT position. If engine can not be started, connect a charger to the battery to ensure adequate voltage to the blower. With interior pressurized, apply dish detergent solution to suspected leak area on the exterior of the vehicle. Apply detergent solution with spray device or soft bristle brush. If soap bubbles occur at a body seam, joint, seal or gasket, the leak entry point could be at that location.

DIAGNOSIS AND TESTING - WIND NOISE

Wind noise is the result of most air leaks. Air leaks can be caused by poor sealing, improper body component alignment, body seam porosity, or missing plugs in the engine compartment or door hinge pillar areas. All body sealing points should be airtight in normal driving conditions. Moving sealing surfaces will not always seal airtight under all conditions. At times, side glass or door seals will allow wind noise to be noticed in the passenger compartment during high cross winds. Over compensating on door or glass adjustments to stop wind noise that occurs under severe conditions can cause premature seal wear and excessive closing or latching effort. After a repair pro-

cedure has been performed, test vehicle to verify noise has stopped before returning vehicle to use.

VISUAL INSPECTION BEFORE TESTS

Verify that floor and body plugs are in place and body components are aligned and sealed. If component alignment or sealing is necessary, refer to the appropriate section of this group for proper procedures.

ROAD TESTING WIND NOISE

(1) Drive the vehicle to verify the general location of the wind noise.

(2) Apply 50 mm (2 in.) masking tape in 150 mm (6 in.) lengths along weatherstrips, weld seams or moldings. After each length is applied, drive the vehicle. If noise goes away after a piece of tape is applied, remove tape, locate, and repair defect.

POSSIBLE CAUSE OF WIND NOISE

- Moldings standing away from body surface can catch wind and whistle.
- Gaps in sealed areas behind overhanging body flanges can cause wind-rushing sounds.
- Misaligned movable components.
- Missing or improperly installed plugs in pillars.
- Weld burn through holes.

STANDARD PROCEDURE

STANDARD PROCEDURE - PLASTIC BODY PANEL REPAIR

There are many different types of plastics used in today's automotive environment. We group plastics in three different categories: Rigid, Semi-Rigid, and Flexible. Any of these plastics may require the use of an adhesion promoter for repair. These types of plastic are used extensively on DaimlerChrysler Motors vehicles. Always follow repair material manufacturer's plastic identification and repair procedures.

Rigid Plastics:

Examples of rigid plastic use: Fascias, Hoods, Doors, and other Body Panels, which include SMC, ABS, and Polycarbonates.

Semi-Rigid Plastics:

Examples of semi-rigid plastic use: Interior Panels, Under Hood Panels, and other Body Trim Panels.

Flexible Plastics:

Examples of flexible plastic use: Fascias, Body Moldings, and upper and lower Fascia Covers.

Repair Procedure:

The repair procedure for all three categories of plastics is basically the same. The one difference is the material used for the repair. The materials must be specific for each substrate, rigid repair material for rigid plastic repair, semi-rigid repair material for semi-rigid plastic repair and flexible repair material for flexible plastic repair.

Adhesion Promoter/Surface Modifier:

Adhesion Promoters/Surface Modifiers are required for certain plastics. All three categories may have plastics that require the use of adhesion promoter/surface modifiers. Always follow repair material manufacturer's plastic identification and repair procedures.

SAFETY PRECAUTION AND WARNINGS

WARNING:

- **EYE PROTECTION SHOULD BE USED WHEN SERVICING COMPONENTS. PERSONAL INJURY CAN RESULT.**
- **USE AN OSHA APPROVED BREATHING MASK WHEN MIXING EPOXY, GRINDING, AND SPRAYING PAINT OR SOLVENTS IN A CONFINED AREA. PERSONAL INJURY CAN RESULT.**
- **AVOID PROLONGED SKIN CONTACT WITH RESIN, PETROLEUM, OR ALCOHOL BASED SOLVENTS. PERSONAL INJURY CAN RESULT.**
- **DO NOT VENTURE UNDER A HOISTED VEHICLE THAT IS NOT PROPERLY SUPPORTED ON SAFETY STANDS. PERSONAL INJURY CAN RESULT.**

NOTE:

- **When holes must be drilled or cut in body panels, verify locations of internal body components and electrical wiring. Damage to vehicle can result.**
- **Do not use abrasive chemicals or compounds on undamaged painted surfaces around repair areas. Damage to finish can result.**

BODY (Continued)

RIGID, SEMI-RIGID, AND FLEXIBLE PLASTIC PARTS TYPES

CODE	FAMILY NAME	COMMON TRADE NAME	TYPICAL APPLICATION
ASA	ACRYLONITRILE STYRENE ACRYLITE	LURAN S	CONSOLES, GRILLES
ABS	ACRYLONITRILE BUTADIENE STYRENE	TERLURAN	″A″ PILLARS, CONSOLES, GRILLES
ABS/PC	ABS/PC ALLOY	PULSE, PROLOY, BAYBLEND	DOORS, INSTRUMENT PANELS
ABS/PVC	ABS/PV ALLOY	PROLOY, PULSE, LUSTRAN, CYCLOVIN	DOOR PANELS, GRILLES, TRIM
BMC	BULK MOLDING COMPOUND	BMC	FENDER EXTENSIONS
EMA	EHTYLENE METHYL ACRYLATE/IONOMER	SURLYN, EMA, IONOMER	BUMPER GUARDS, PADS
METTON	METTON	METTON	GRILLES, KICK PANELS, RUNNING BOARDS
MPPO	MODIFIED POLYPHENYLENE OXIDE	MPPO	SPOILER ASSEMBLY
PA	POLYAMID	ZYTEL, VYDYNE, PA, MINLON	FENDERS, QUARTER PANELS
PET	THERMOPLASTIC POLYESTER	RYNITE	TRIM
PBT/PPO	PBT/PPO ALLOY	GERMAX	CLADDINGS
PBTP	POLYBUTYLENE THEREPTHALATE	PBT, PBTP, POCAN, VALOX	WHEEL COVERS, FENDERS, GRILLES
PBTP/EEBC	POLYBUTYLENE THEREPTHALATE/EEBC ALLOY	BEXLOY, ″M″, PBTP/EEBC	FASCIAS, ROCKER PANEL, MOLDINGS
PC	POLYCARBONATE	LEXAN, MERLON, CALIBRE, MAKROLON PC	TAIL LIGHT LENSES, IP TRIM, VALANCE PANELS
PC/ABS	PC/ABS ALLOY	GERMAX, BAY BLENDS, PULSE	DOORS, INSTRUMENT PANELS
PPO	POLYPHENYLENE OXIDE	AZDEL, HOSTALEN, MARLEX, PRFAX, NORYL, GTX, PPO	INTERIOR TRIM, DOOR PANELS, SPLASH SHIELDS, STEERING COLUMN SHROUD
PPO/PA	POLYPHENYLENE/ POLYAMID	PPO/PA, GTX 910	FENDERS, QUARTER PANELS
PR/FV	FIBERGLASS REINFORCED PLASTIC	FIBERGLASS, FV, PR/FV	BODY PANELS
PS	POLYSTYRENE	LUSTREX, STYRON, PS	DOOR PANELS, DASH PANELS
RTM	RESIN TRANSFER MOLDING COMPOUND	RTM	BODY PANELS
SMC	SHEET MOLDED COMPOUND	SMC	BODY PANELS
TMC	TRANSFER MOLDING COMPOUND	TMC	GRILLES

BODY (Continued)

CODE	FAMILY NAME	COMMON TRADE NAME	TYPICAL APPLICATION
UP	UNSATURATED POLYESTER (THERMOSETTING)	SMC, BMC, TMC, ZMC, IMC, XSMC, UP	GRILLE OPENING PANEL, LIFTGATES, FLARESIDE FENDERS, FENDER EXTENSIONS
EEBC	ETHER/ESTER BLOCKED CO-POLYMER	EEBC	BUMPERS
EEBC/PBTP	EEBC/POLYBUTYLENE TEREPTHALATE	EEBC, PBTP, BEXLOY	BUMPER, ROCKER PANELS
EMPP	ETHYLENE MODIFIED POLYPROPYLENE	EMPP	BUMPER COVERS
EPDM	ETHYLENE/ PROPROPYLENE DIENE MONOMER	EPDM, NORDEL, VISTALON	BUMPERS
EPM	ETHYLENE/ PROPROPYLENE CO-POLYMER	EPM	FENDERS
MPU	FOAM POLYURETHANE	MPU	SPOILERS
PE	POLYETHYLENE	ALATHON, DYLAN, LUPOLEN, MARLEX	-
PP	POLYPROPYLENE (BLENDS)	NORYL, AZDEL, MARLOX, DYLON, PRAVEX	INNER FENDER, SPOILERS, KICK PANELS
PP/EPDM	PP/EPDM ALLOY	PP/EPDM	SPOILERS, GRILLES
PUR	POLYURETHANE	COLONELS, PUR, PU	FASCIAS, BUMPERS
PUR/PC	PUR/PC ALLOY	TEXIN	BUMPERS
PVC	POLYVINYL CHLORIDE	APEX, GEON, VINYLITE	BODY MOLDINGS, WIRE INSULATION, STEERING WHEELS
RIM	REACTION INJECTED MOLDED POLYURETHANE	RIM, BAYFLEX	FRONT FASCIAS, MODULAR WINDOWS
RRIM	REINFORCED REACTION INJECTED MOLDED	PUR, RRIM	FASCIAS, BODY PANELS, BODY TRIMS
TPE	THERMO POLYETHYLENE	TPE, HYTREL, BEXLOY-V	FASCIAS, BUMPERS, CLADDINGS
TPO	THERMOPOLYOLEFIN	POLYTROPE, RENFLEX, SANTOPRENE, VISAFLEX, ETA, APEX, TPO, SHIELDS, CLADDINGS	BUMPERS, END CAPS, TELCAR, RUBBER, STRIPS, SIGHT, INTERIOR B POST
TPP	THERMO-POLYPROPYLENE	TPP	BUMPERS
TPU	THERMOPOLYURETHANE, POLYESTER	TPU, HYTREL, TEXIN, ESTANE	BUMPERS, BODY SIDE, MOLDINGS, FENDERS, FASCIAS

BODY (Continued)

PANEL SECTIONING

If it is required to section a large panel for a plastic repair, it will be necessary to reinforce the panel (Fig. 1). To bond two plastic panels together, a reinforcement must overlap both panels. The panels must be "V'd" at a 20 degree angle. The area to be reinforced should be washed, then sanded. Be sure to wipe off any excess soap and water when finished. Lightly sand or abrade the plastic with an abrasive pad or sandpaper. Blow off any dust with compressed air or wipe with a clean dry rag.

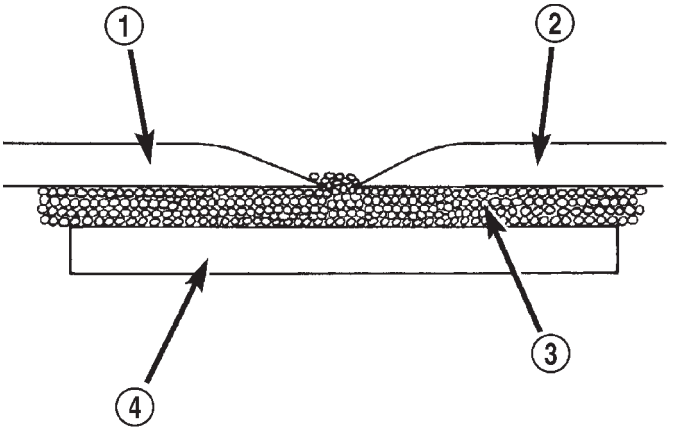

Fig. 1 PANEL SECTIONING

1 - EXISTING PANEL
2 - NEW PANEL
3 - PANEL ADHESIVE
4 - BONDING STRIP

When bonding plastic panels, Follow repair material manufacturers recommendations. Be sure that enough adhesive has been applied to allow squeeze out and to fill the full bond line. Once the pieces have been brought together, do not move them until the adhesive is cured. The assembly can be held together with clamps, rivets, etc. A faster cure can be obtained by heating with a heat lamp or heat gun. After the parts have been bonded and have had time to cure, rough sand the seam and apply the final adhesive filler to the area being repaired. Smooth the filler with a spreader, wooden tongue depressor, or squeegee. For fine texturing, a small amount of water can be applied to the filler surface while smoothing. The cured filler can be sanded as necessary and, as a final step, cleanup can be done with soapy water. Wipe the surface clean with a dry cloth allowing time for the panel to dry before moving on with the repair.

PANEL REINFORCEMENT

Structural repair procedures for rigid panels with large cracks and holes will require a reinforcement backing. Reinforcements can be made with several applications of glass cloth saturated with structural adhesive. Semi-rigid or flexible repair materials should be used for semi-rigid or flexible backing reinforcement (Fig. 2) and (Fig. 3). Open meshed fiberglass dry wall tape can be used to form a reinforcement. The dry wall tape allows the resin to penetrate through and make a good bond between the panel and the adhesive. Structurally, the more dry wall tape used, the stronger the repair.

Another kind of repair that can be done to repair large cracks and holes is to use a scrap piece of similar plastic and bond with structural adhesive. The reinforcement should cover the entire break and should have a generous amount of overlap on either side of the cracked or broken area.

When repairing plastic, the damaged area is first "V'd" out, or beveled. Large bonding areas are desirable when repairing plastic because small repairs are less likely to hold permanently. Beveling the area around a crack at a 20 degree angle will increase the bonding surface for a repair (Fig. 4). It is recommended that sharp edges be avoided because the joint may show through after the panel is refinished.

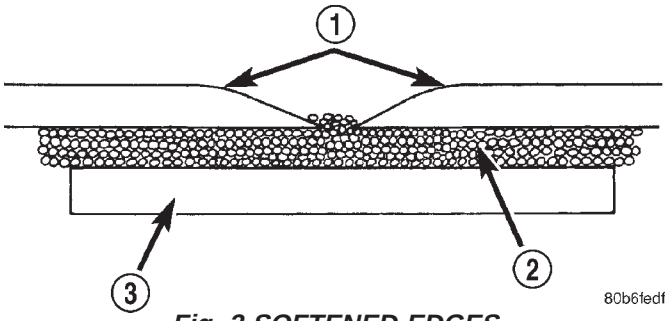

Fig. 2 SOFTENED EDGES

1 - SOFTENED EDGES
2 - PANEL ADHESIVE
3 - BONDING STRIP

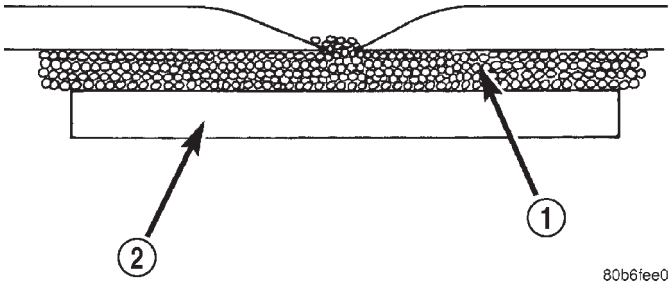

Fig. 3 PANEL REINFORCEMENT

1 - PANEL ADHESIVE
2 - REINFORCEMENT

BODY (Continued)

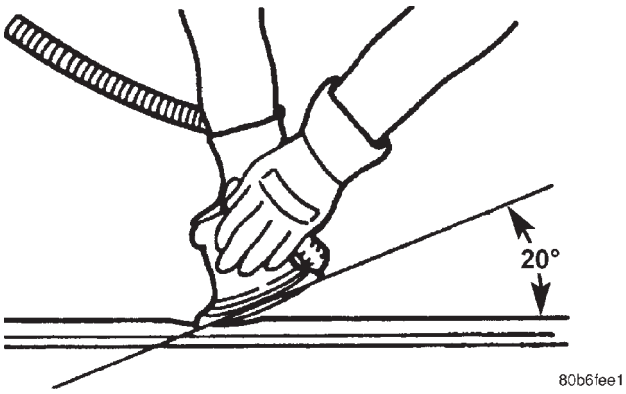

Fig. 4 BEVELING ANGLE - 20 DEGREE

- Panel repair for both flexible and rigid panels are basically the same. The primary difference between flexible panel repair and rigid panel repair is in the adhesive materials used (Fig. 5).
- The technician should first decide what needs to be done when working on any type of body panel. One should determine if it is possible to return the damage part to its original strength and appearance without exceeding the value of the replacement part.
- When plastic repairs are required, it is recommended that the part be left on the vehicle when every possible. That will save time, and the panel will remain stationary during the repair. Misalignment can cause stress in the repair areas and can result in future failure.

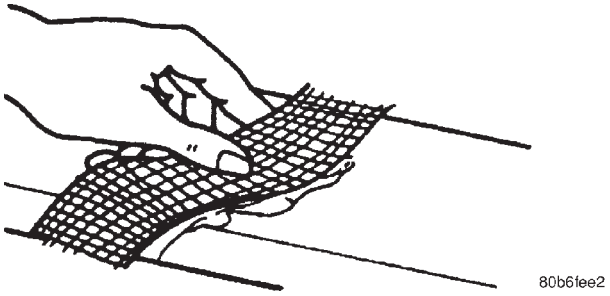

Fig. 5 FIBERGLASS TAPE

VISUAL INSPECTION

Composite materials can mask the severity of an accident. Adhesive bond lines, interior structure of the doors, and steel structures need to be inspected carefully to get a true damage assessment. Close inspection may require partial removal of interior trim or inner panels.

Identify the type of repair: Puncture or Crack - Damage that has penetrated completely through the panel. Damage is confined to one general area; a panel section is not required. However, a backer panel, open fiberglass tape, or matted material must be bonded from behind (Fig. 7) (Fig. 6).

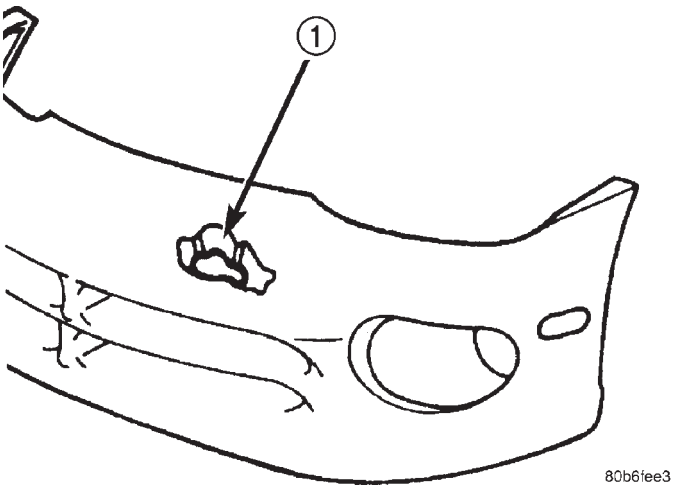

Fig. 6 DAMAGE COMPONENT

1 - PUNCTURE

PANEL SURFACE PREPARATION

If a body panel has been punctured, cracked, or crushed, the damaged area must be removed from the panel to achieve a successful repair. All spider web cracks leading away from a damaged area must be stopped or removed. To stop a running crack in a panel, drill a 6 mm (0.250 in.) hole at the end of the crack farthest away from the damage. If spider web cracks can not be stopped, the panel would require replacement. The surfaces around the damaged area should be stripped of paint and freed from wax and oil. Scuff surfaces around repair area with 360 grit wet/dry sandpaper, or equivalent, to assure adhesion of repair materials.

PATCHING PANELS

An panel that has extensive puncture type damage can be repaired by cutting out the damaged material (Fig. 7). Use a suitable reciprocating saw or cut off wheel to remove the section of the panel that is damaged. The piece cut out can be used as a template to shape the new patch. It is not necessary to have access to the back of the panel to install a patch. Bevel edges of cutout at 20 degrees to expose a larger bonding area on the outer side. This will allow for an increased reinforcement areas.

BODY (Continued)

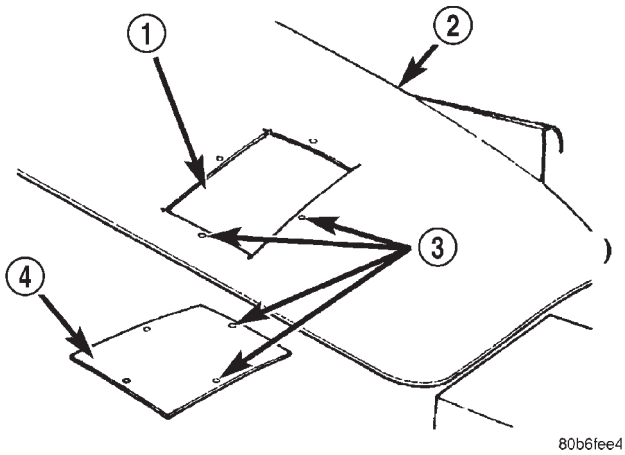

Fig. 7 DAMAGED PANEL CUTOUT AND PATCH

1 - CUTOUT
2 - DAMAGED BODY PANEL
3 - 4 MM (0.160 IN.) HOLES
4 - PATCH CUT TO SIZE

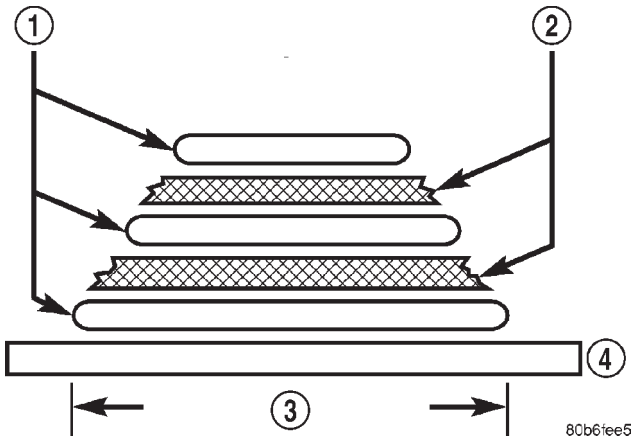

Fig. 8 FABRICATED PANEL

1 - STRUCTURAL ADHESIVE
2 - FIBERGLASS CLOTH OR FIBERGLASS MESH TAPE
3 - WIDTH OF V-GROOVE
4 - WAXED PAPER

PANEL PATCH FABRICATIONS

A patch can be fabricated from any rigid fiberglass panel that has comparable contour with the repair area. Lift gates and fenders can be used to supply patch material. If existing material is not available or compatible, a patch can be constructed with adhesive and reinforcement mesh (dry wall tape). Perform the following operation if required:

(1) Cover waxed paper or plastic with adhesive backed nylon mesh (dry wall tape) larger than the patch required (Fig. 8).

(2) Tape waxed paper or plastic sheet with mesh to a surface that has a compatible contour to the repair area.

(3) Apply a liberal coat of adhesive over the reinforcement mesh (Fig. 8). If necessary apply a second or third coat of adhesive and mesh after firs coat has cured. The thickness of the patch should be the same as the repair area.

(4) After patch has cured, peel waxed paper or plastic from the back of the patch.

(5) If desired, a thin film coat of adhesive can be applied to the back of the patch to cover mesh for added strength.

PANEL PATCH INSTALLATION

(1) Make a paper or cardboard pattern the size and shape of the cutout hole in the panel.

(2) Trim 3 mm (0.125 in.) from edges of pattern so patch will have a gap between connecting surfaces.

(3) Using the pattern as a guide, cut the patch to size.

(4) Cut scrap pieces of patch material into 50 mm (2 in.) squares to use as patch supports to sustain the patch in the cutout.

(5) Drill 4 mm (0.160 in.) holes 13 mm (0.5 in.) in from edge of cutout hole (Fig. 7).

(6) Drill 4 mm (0.160 in.) holes 13 mm (0.5 in.) away from edge of patch across from holes drilled around cutout.

(7) Drill 3 mm (0.125 in.) holes in the support squares 13 mm (0.5 in.) from the edge in the center of one side.

(8) Scuff the backside of the body panel around the cutout hole with a scuff pad or sandpaper.

(9) Mix enough adhesive to cover one side of all support squares.

(10) Apply adhesive to cover one side of all support squares.

(11) Using number 8 sheet metal screws, secure support squares to back side of body panel with adhesive sandwiched between the panel and squares (Fig. 9).

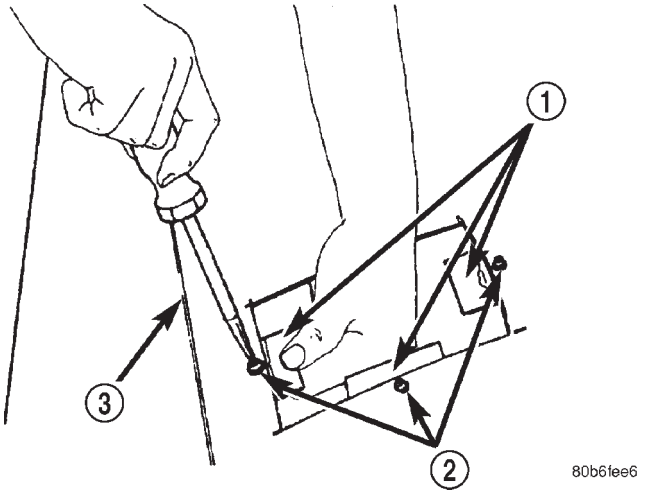

Fig. 9 SECURE SUPPORT SQUARES TO BODY PANEL

1 - SUPPORT SQUARES
2 - SCREWS
3 - DAMAGED BODY PANEL

BODY (Continued)

(12) Position patch in cutout against support squares and adjust patch until the gap is equal along all sides (Fig. 10).

(13) Drill 3 mm (0.125 in.) holes in the support squares through the pre-drilled holes in the patch.

(14) Apply a coat of adhesive to the exposed ends of the support squares (Fig. 11).

(15) Install screws to hold the patch to support squares (Fig. 12). Tighten screws until patch surface is flush with panel surface.

(16) Allow adhesive to cure, and remove all screws.

(17) Using a 125 mm (5 in.) 24 grit disc grinder, grind a 50 mm (2 in.) to 75 mm (3 in.) wide and 2 mm (0.080 in.) deep path across the gaps around the patch (Fig. 13). With compressed air, blow dust from around patch.

(18) Apply adhesive backed nylon mesh (dry wall tape) over gaps around patch (Fig. 14).

(19) Mix enough adhesive to cover the entire patch area.

(20) Apply adhesive over the mesh around patch, and smooth epoxy with a wide spreader to reduce finish grinding. Use two to three layers of mesh and adhesive to create a stronger repair (Fig. 15).

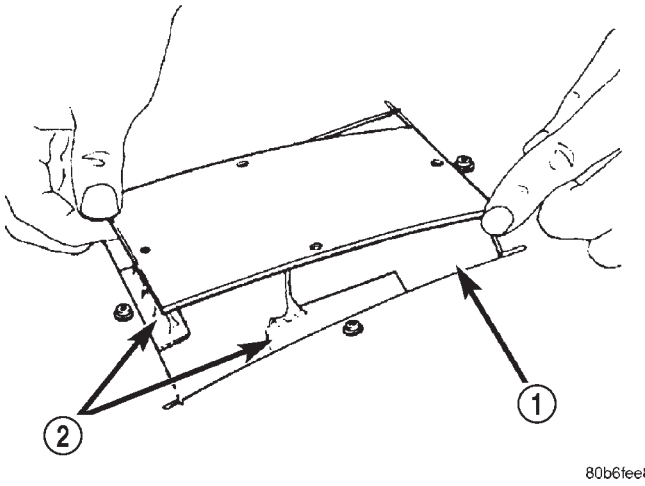

Fig. 10 POSITION PATCH IN CUTOUT AND ALIGN

1 - CUTOUT
2 - SUPPORT SQUARES

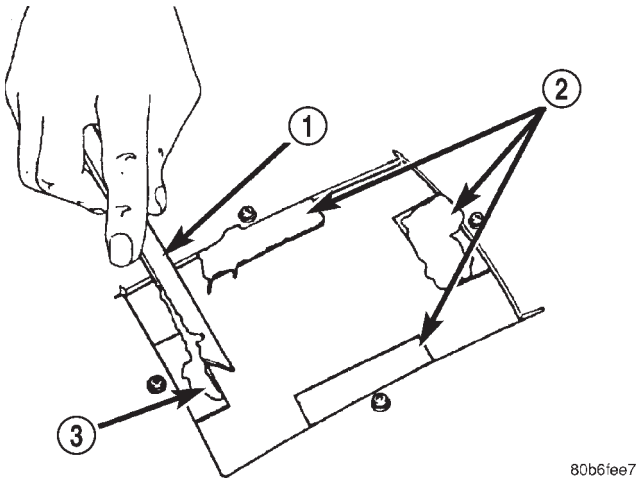

Fig. 11 APPLY ADHESIVE TO SUPPORT SQUARES

1 - APPLICATOR
2 - SUPPORT SQUARES
3 - ADHESIVE

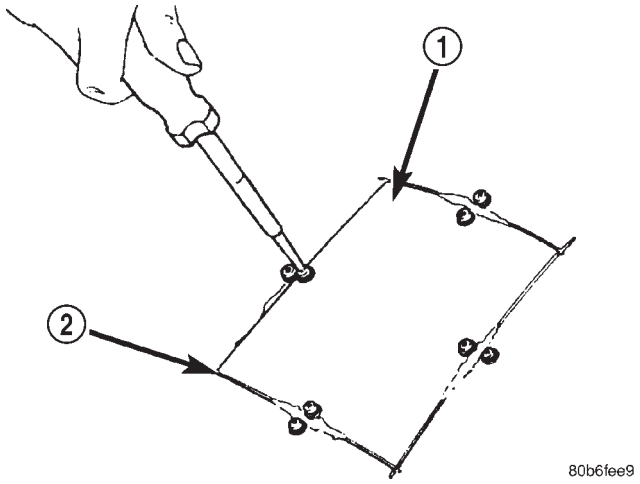

Fig. 12 INSTALL SCREWS

1 - PATCH
2 - GAP

BODY (Continued)

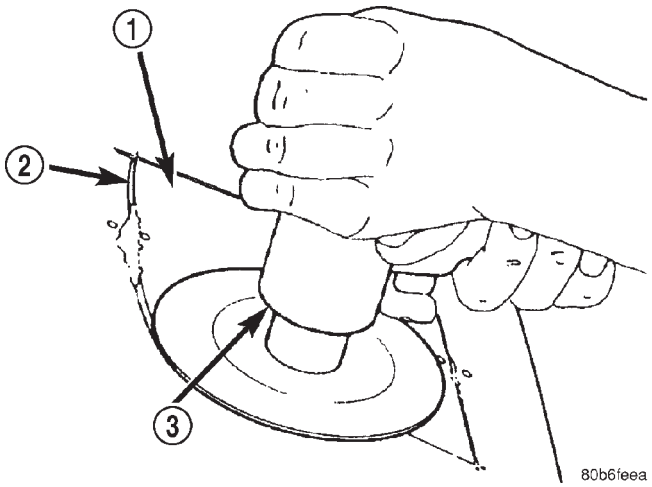

Fig. 13 GRIND SURFACE

1 - PATCH
2 - GAP
3 - DISC GRINDER

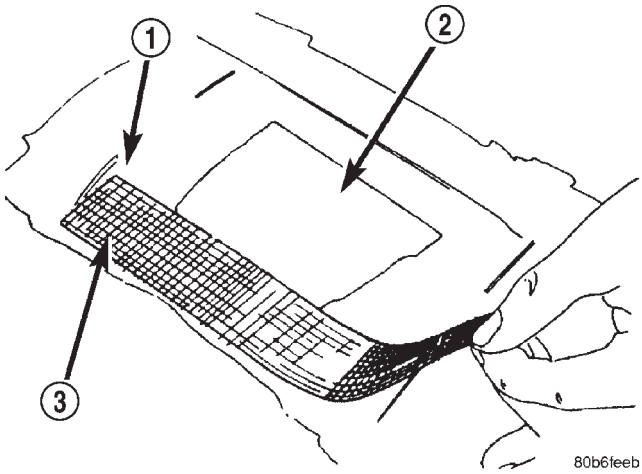

Fig. 14 COVER GAPS WITH MESH

1 - GROUND DOWN AREA
2 - PATCH
3 - MESH

PATCHED PANEL SURFACING

After patch panel is installed, the patch area can be finished using the same methods as finishing other types of body panels. If mesh material is exposed in the patched area, grind surface down, and apply a coat of high quality rigid plastic body filler. Prime, block sand, and paint as required.

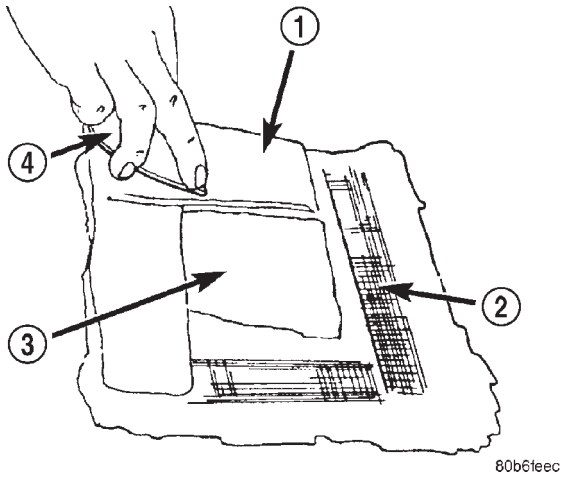

Fig. 15 COVER MESH WITH ADHESIVE

1 - ADHESIVE
2 - MESH
3 - PATCH
4 - SPREADER

STANDARD PROCEDURE - HEAT STAKING

(1) Remove trim panel.

(2) Bend or move the trim panel components at the heat staked joints. Observe the heat staked locations and/or component seams for looseness.

(3) Heat stake the components.

(a) If the heat staked or component seam location is loose, hold the two components tightly together and using a soldering gun with a flat tip, melt the material securing the components together. Do not over heat the affected area, damage to the exterior of the trim panel may occur.

(b) If the heat staked material is broken or missing, use a hot glue gun to apply new material to the area to be repaired. The panels that are being heat staked must be held together while the applying the glue. Once the new material is in place, it may be necessary to use a soldering gun to melt the newly applied material. Do not over heat the affected area, damage to the exterior of the trim panel may occur.

(4) Allow the repaired area to cool and verify the repair.

(5) Install trim panel.

BODY (Continued)

SPECIFICATIONS

TORQUE

TORQUE SPECIFICATIONS

DESCRIPTION	N·m	Ft. Lbs.	In. Lbs.
All seat belt anchor bolts	39	29	—
Armrest shoulder bolt	29	21	—
Bench seat riser bolts	48	35	—
Bench seat track nuts	48	35	—
Quad bucket seat track to cushion frame bolts	40	30	—
Bucket seat back pivot bolts	33	24	—
Center seat to seat track bolts	24	17	—
Child seat module screws (bench seats)	7	—	62
Child seat module screws (quad seats)	13.5	10	—
Crossmember to radiator closure panel bolts	28	21	—
Door check strap to door end frame	12	—	105
Door latch to door end frame bolts	10	—	89
Floor latch to seat cushion frame bolts	27	19	—
Front cover to seat track screws	4	—	32
Front door hinge to hinge pillar bolts	34	25	—
Front door hinge to door nuts and bolts	34	25	—
Front door latch striker bolts	28	21	—
Front/quad seat cushion bolts	28.5	21	—
Front seat belt retractor bolts	38	28	—
Front seat riser to floor nuts	60	44	—
Front seat track cover screws	4	—	35
Front seat riser to seat track nuts	81	60	—
Front seatback pivot bolts	54	40	—
Front seatback recliner nut	12	—	105
Front seatback assist strap screws	2.5	—	22
Grocery bag holder screws	2	—	17
Hinge to liftgate bolts	33	24	—
Hood latch to bolts	13.5	10	—
Hood latch striker bolts	13.5	10	—
Hood hinge to hood bolts	13.5	10	—
Liftgate exterior handle outer screws	20	15	—
Liftgate exterior handle inner bolts	40	30	—
Lifgate hinge to roof header bolts	33	24	—
Liftgate latch bolts	16	12	—
Liftgate latch striker bolts	28	21	—
Liftgate lift motor link to liftgate	28	21	—
Liftgate spoiler bolts	9	—	80

BODY (Continued)

DESCRIPTION	N·m	Ft. Lbs.	In. Lbs.
Lifgate stabalizer wedge striker to D-pillar bolts	3	—	30
Luggage rack crossbar fasteners	4	—	35
Lumbar support handle screw	1	—	9
Pivot bolt to the body half of hood hinge	28	21	—
Prop assembly to lifgate bolts	28	21	—
Rear door glass to regulator bolt	11	8	—
Rear door hinge to B-pillar bolt	28	20	—
Rear door hinge to door bolt	28	20	—
Rear door latch striker	28	20	—
Rear latch to sliding door end frame	28	20	—
Rear seat back to seat cushion bolt	27	19	—
Recliner to seat back frame	12	9	—
Seatback frame upper rail	8	—	71
Seatback hinge bolt	48	35	—
Seatback hinge cover screws	2.3	—	20
Shoulder belt turning loop onto height adjuster	39	29	—
Sliding door center hinge adjusting bolt	15	—	130
Sliding door glass nuts	3.4	—	30
Sliding door latch striker	28	21	—
Sliding door to roller arm bracket	12	9	—
Storage bin track quide to seat riser	3.5	—	31
Support cylinders to liftgate	28	21	—

BODY LUBRICATION

LUBRICATION REQUIREMENTS

Body mechanisms and linkages should be inspected, cleaned, and lubricated, as required, to maintain ease of operation and to provide protection against rust and wear. When performing other under hood services, the hood latch release mechanism and safety catch should be inspected, cleaned, and lubricated. During the winter season, external door lock cylinders should be lubricated to assure proper operation when exposed to water and ice.

Prior to the application of any lubricant, the parts concerned should be wiped clean to remove dust and grit. If necessary, a suitable solvent can be used to clean the item to be lubricated. After lubricating a component, any excess oil or grease should be removed.

LUBRICANT APPLICATION

DOOR LOCK CYLINDERS

(1) Apply a small amount of lubricant directly into the lock cylinder.

(2) Apply a small amount of lubricant to the key.

(3) Insert key into lock cylinder and cycle the mechanism from the locked to the unlocked position.

NOTE: Do not add more lubricant.

(4) Cycle the lock cylinder mechanism several times to allow the lubricant to flow throughout the cylinder.

(5) Wipe all lubricant from exterior of lock cylinder and key.

ALL OTHER BODY MECHANISMS

(1) Clean component as described above.

(2) Apply specified lubricant to all pivoting and sliding contact areas of component.

LUBRICANT USAGE

ENGINE OIL

- Door Hinges – Hinge Pin and Pivot Contact Areas
- Hood Hinges – Pivot Points
- Liftgate Hinges

BODY (Continued)

MOPAR® SPRAY WHITE LUBE OR EQUIVALENT

- Door Check Straps
- Liftgate Latches
- Liftgate Prop Pivots
- Ash Receiver
- Fuel Filler Door Remote Control Latch Mechanism
- Parking Brake Mechanism
- Sliding Seat Tracks
- Liftgate Latch

MOPAR® Multipurpose GREASE OR EQUIVALENT

- All Other Hood Mechanisms

MOPAR® LOCK CYLINDER LUBRICANT OR EQUIVALENT

- Door Lock Cylinders
- Liftgate Lock Cylinder

SPECIAL TOOLS

BODY

INDEX

DESCRIPTION	FIGURE
STICK, TRIM C 4755	16
REMOVER, MOLDINGS C-4829	17
PLIERS, HEADLINER CLIP 6967	18

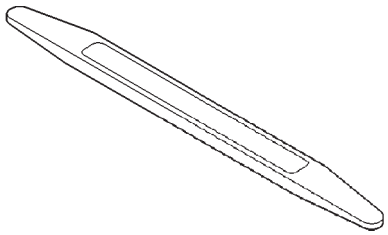

Fig. 16 STICK, TRIM C 4755

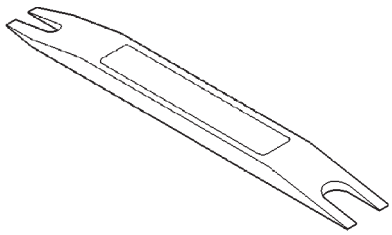

Fig. 17 REMOVER, MOLDINGS C-4829

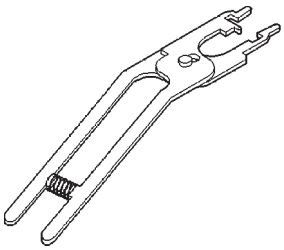

Fig. 18 PLIERS, HEADLINER CLIP 6967

DOOR - FRONT

TABLE OF CONTENTS

page

APPLIQUE
REMOVAL 14
INSTALLATION 14
CHECK STRAP
REMOVAL 14
INSTALLATION 14
DOOR
REMOVAL 15
INSTALLATION 16
DOOR GLASS
REMOVAL 16
INSTALLATION 17
FRAME CLOSEOUT MOLDING
REMOVAL – A-PILLAR, HEADER, OR B-PILLAR 17
INSTALLATION – A-PILLAR, HEADER, OR B-PILLAR 17
HINGE
REMOVAL 18
INSTALLATION 18
LATCH
REMOVAL 18
INSTALLATION 18
LATCH STRIKER
REMOVAL 19
INSTALLATION 19
LOCK CYLINDER
REMOVAL 19
INSTALLATION 20
TRIM PANEL
REMOVAL 20
INSTALLATION 21
WATERSHIELD
REMOVAL 21
INSTALLATION 21
WINDOW CRANK
REMOVAL 21
INSTALLATION 21
WINDOW REGULATOR
REMOVAL 22
INSTALLATION 22
EXTERIOR HANDLE
REMOVAL 23
INSTALLATION 23

APPLIQUE

REMOVAL

(1) Roll door glass down.
(2) Remove outer door belt molding.
(3) Disengage clips holding front edge of applique to door frame.
(4) Remove applique from vehicle (Fig. 1).

INSTALLATION

(1) Position applique on vehicle.
(2) Hook rear edge of applique over rear edge of door frame and seat applique bottom edge on sheet metal.
(3) Engage clips to hold front edge of applique to door frame.
(4) Install outer door belt molding.

CHECK STRAP

REMOVAL

(1) Remove front door trim panel.
(2) Remove front door watershield (Refer to 23 - BODY/DOOR - FRONT/WATERSHIELD - REMOVAL).
(3) Remove front door speaker, if equipped.
(4) Remove bolts attaching door check strap to A-pillar.
(5) Remove nuts attaching check strap to door end frame (Fig. 2).
(6) Remove check strap from door through speaker hole.

INSTALLATION

(1) Position check strap on door through speaker hole.
(2) Install nuts to attach check strap to door end frame. Tighten nuts to 11 N·m (90 in. lbs.) torque.
(3) Install bolts to attach check strap to A-pillar. Tighten bolts to 12 N·m (105 in. lbs.) torque.
(4) Install door speaker, if equipped.
(5) Install front door trim panel.

CHECK STRAP (Continued)

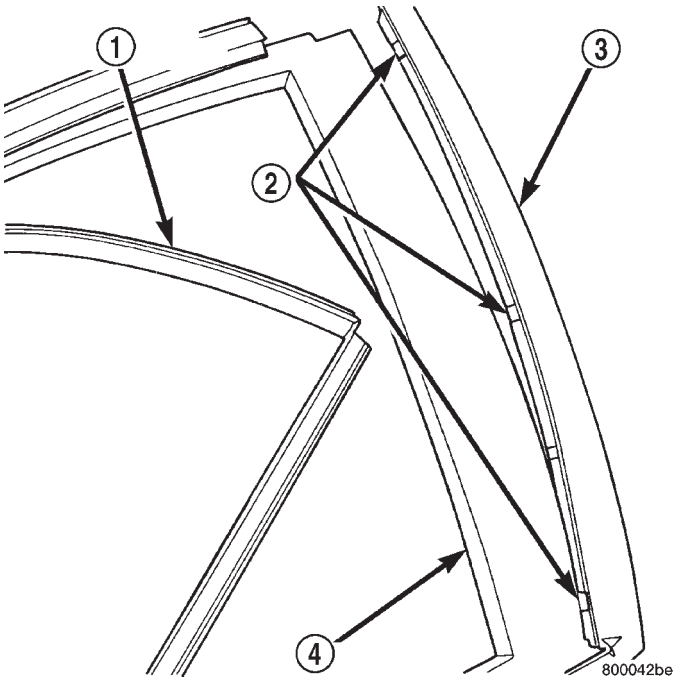

Fig. 1 FRONT DOOR APPLIQUE

1 - GLASS RUN WEATHERSTRIP
2 - CLIPS
3 - APPLIQUE
4 - FRONT DOOR

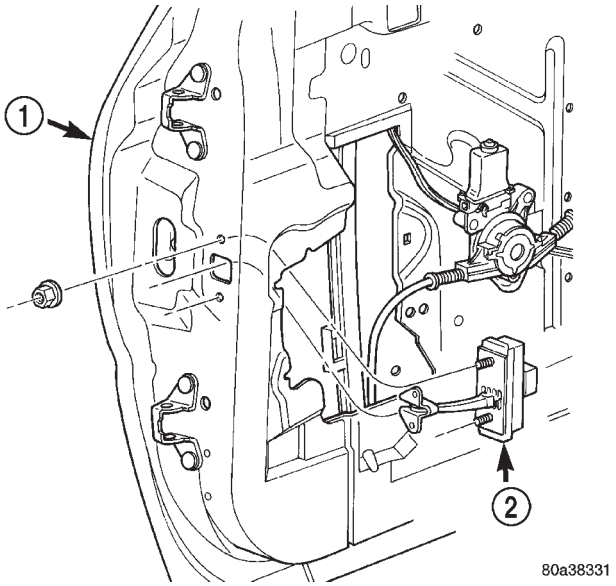

Fig. 2 FRONT DOOR CHECK STRAP

1 - FRONT DOOR
2 - DOOR CHECK STRAP

DOOR

REMOVAL

(1) Remove front wheelhouse splash shield. (Refer to 23 - BODY/EXTERIOR/LF WHEELHOUSE SPLASH SHIELD - REMOVAL)

(2) Disengage clips attaching door harness wire connector to inner fender brace.

(3) Disconnect positive lock slide on the side of the wire connectors (Fig. 3).

(4) Depress lock tab attaching wire connector halves together.

(5) Disconnect door harness from body wiring harness.

(6) Remove bolts attaching door check strap to A-pillar (Fig. 4).

(7) Support door on suitable lifting device.

(8) Remove bolts attaching lower hinge to door end frame (Fig. 5).

(9) Steady door on lifting device and remove bolts attaching upper hinge to door end frame.

(10) Remove door from vehicle.

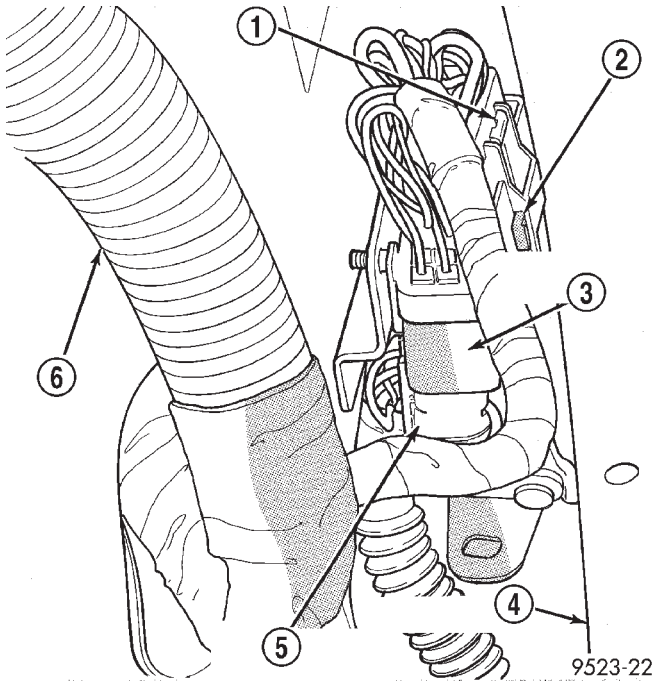

Fig. 3 FRONT DOOR WIRE CONNECTORS

1 - LOCK TAB
2 - POSITIVE LOCK
3 - BODY HARNESS CONNECTOR
4 - FRONT FENDER
5 - DOOR HARNESS CONNECTOR
6 - BODY HARNESS

DOOR (Continued)

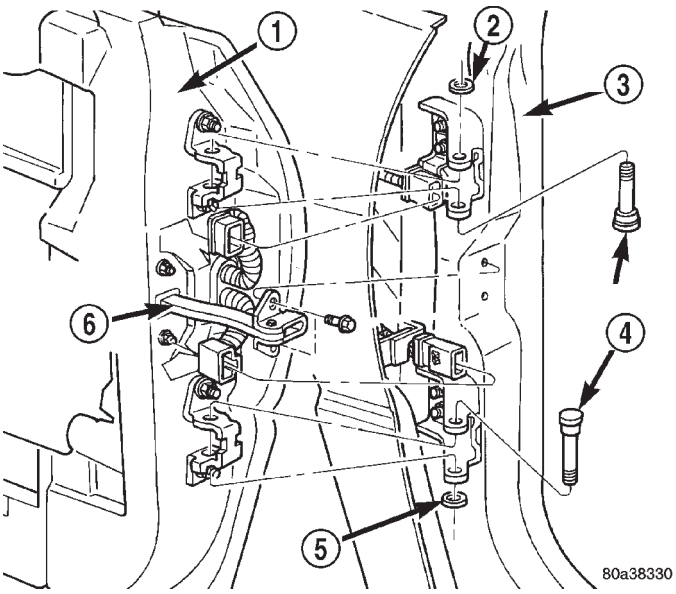

Fig. 4 FRONT DOOR - HINGE PIN REMOVAL

1 - FRONT DOOR
2 - CLIP
3 - A-PILLAR
4 - HINGE PIN
5 - CLIP
6 - DOOR CHECK STRAP

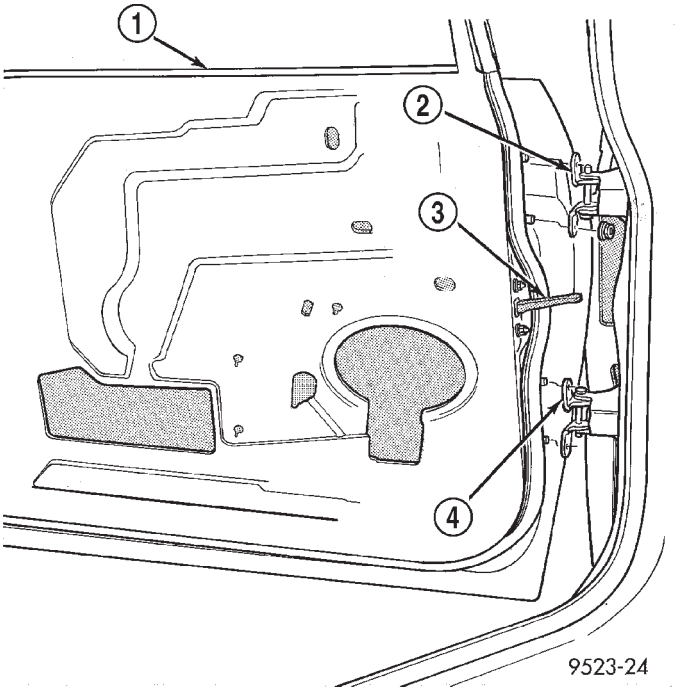

Fig. 5 FRONT DOOR - HINGE BOLT REMOVAL

1 - FRONT DOOR
2 - UPPER HINGE
3 - CHECK STRAP
4 - LOWER HINGE

INSTALLATION

NOTE: If new hinge pins are to be used, verify that the knurling on the hinge pin is aligned with the knurling on in the door hinge prior to driving in the pin. Also, verify that the hinge pin is fully seated to the door hinge and a new retaining clip is installed.

(1) Support door on suitable lifting device.
(2) Position door to vehicle. Verify net pierce nubbin is engaged if reusing original hinges.
(3) Steady door on lifting device and install bolts attaching upper hinge to door end frame. Tighten bolts to 34 N·m (25 ft. lbs.) torque.
(4) Install bolts attaching door check strap to A-pillar. Tighten bolts to 12 N·m (105 in. lbs.) torque.
(5) Install bolts attaching lower hinge to door end frame. Tighten bolts to 34 N·m (25 ft. lbs.) torque. Align door to achieve equal spacing to surrounding body panels. Panels should be flush across all gaps.
(6) Connect door harness into body wiring harness.
(7) Connect positive lock slide on the side of the wire connectors.
(8) Connect clips attaching door harness wire connector to inner fender brace.
(9) Install front wheelhouse splash shield.
(10) Verify door operation and alignment. Adjust as necessary.

DOOR GLASS

REMOVAL

(1) Remove watershield. (Refer to 23 - BODY/DOOR - FRONT/WATERSHIELD - REMOVAL)
(2) Remove inner belt molding.(Refer to 23 - BODY/WEATHERSTRIP/SEALS/FDR INNER BELT WEATHERSTRIP - REMOVAL)
(3) Remove outer belt molding.(Refer to 23 - BODY/WEATHERSTRIP/SEALS/FDR OUTER BELT MOLDING - REMOVAL)
(4) Position glass to gain access to front and rear regulator lift plates through front and rear access holes in door panel.
(5) Remove clips attaching door glass to regulator lift plates (Fig. 6).
(6) Remove glass from regulator lift plates.
(7) Disengage glass from glass run weatherstrip.
(8) Insert front of glass between glass run channel and outer door panel.
(9) Lift glass upward and out of exterior side of the opening at top of door (Fig. 7).
(10) Remove glass from vehicle.

DOOR GLASS (Continued)

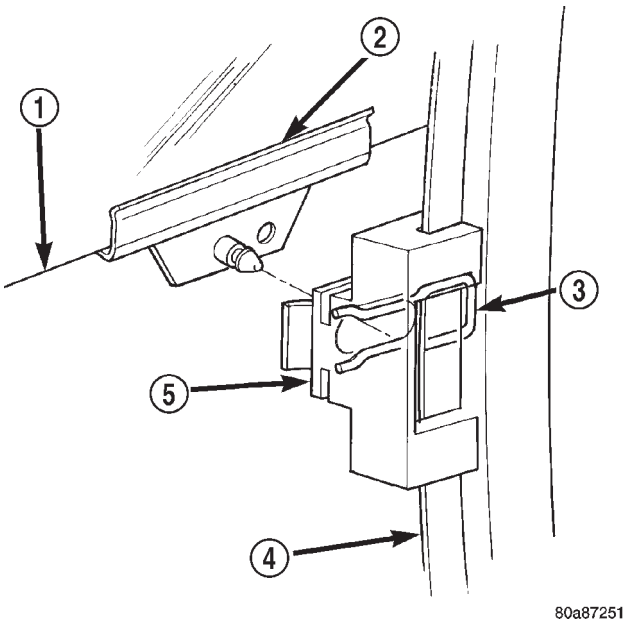

Fig. 6 FRONT DOOR GLASS CLIPS

1 - DOOR GLASS
2 - GLASS LIFT PLATE
3 - CLIP
4 - GUIDE RAIL
5 - REGULATOR LIFT PLATE

INSTALLATION

(1) Install clips that attach door glass to regulator lift plates (Fig. 6).

(2) Place glass in window opening with front inserted between run channel and outer door panel (Fig. 7).

(3) Lower glass downward into door.

(4) Insert ends of glass into glass run weatherstrip channels at front and rear of door.

(5) Place glass in position on regulator lift plates.

(6) Snap glass mounting studs into clips on regulator lift plates.

(7) Install radio speaker, if equipped.

(8) Install outer belt molding. (Refer to 23 - BODY/ WEATHERSTRIP/SEALS/FRONT DOOR OUTER BELT MOLDING - INSTALLATION)

(9) Install inner belt molding.(Refer to 23 - BODY/ WEATHERSTRIP/SEALS/FRONT DOOR INNER BELT MOLDING - INSTALLATION)

(10) Verify door glass operation and fit.

(11) Install watershield. (Refer to 23 - BODY/ DOOR - FRONT/WATERSHIELD - INSTALLATION)

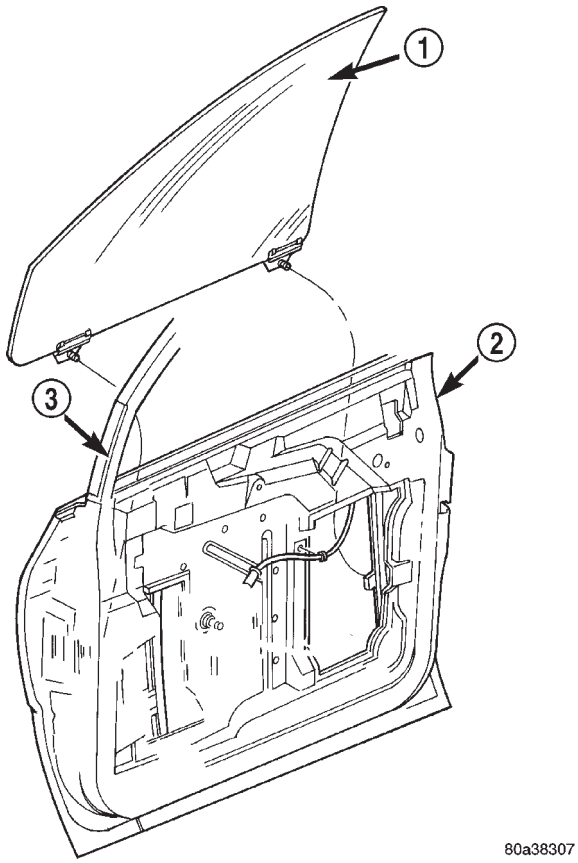

Fig. 7 FRONT DOOR GLASS

1 - DOOR GLASS
2 - FRONT DOOR
3 - GLASS RUN CHANNEL

FRAME CLOSEOUT MOLDING

REMOVAL – A-PILLAR, HEADER, OR B-PILLAR

(1) Roll door glass down.

(2) Using a hook tool, pull front door frame closeout molding from window frame channel (Fig. 8).

(3) Remove closeout molding from vehicle.

INSTALLATION – A-PILLAR, HEADER, OR B-PILLAR

(1) Position closeout molding in window frame.

(2) Insert closeout molding into window frame channel starting at the corners and working inward.

(3) Verify door glass operation.

FRAME CLOSEOUT MOLDING (Continued)

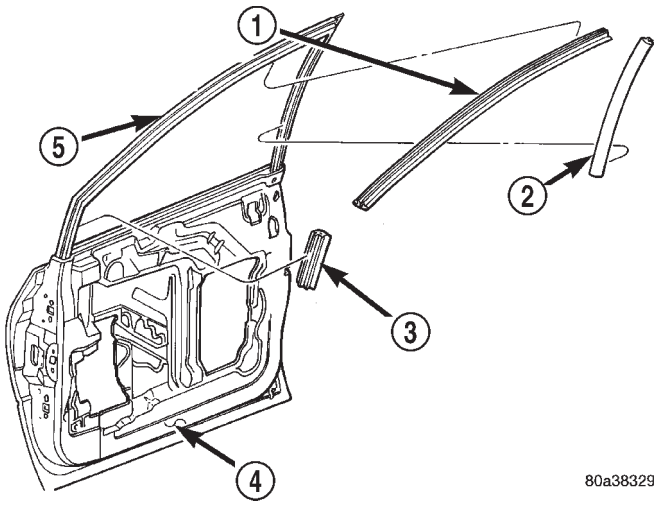

Fig. 8 FRONT DOOR FRAME CLOSEOUT MOLDINGS

1 - FRONT DOOR FRAME HEADER CLOSEOUT MOLDING
2 - FRONT DOOR FRAME B-PILLAR CLOSEOUT MOLDING
3 - FRONT DOOR FRAME A-PILLAR CLOSEOUT MOLDING
4 - FRONT DOOR
5 - FRONT DOOR FRAME

HINGE

REMOVAL

(1) Release front door latch and open door.
(2) Mark hinge foot print on both door and pillar to aid when installing door.
(3) Support door on suitable lifting device.
(4) Remove bolts attaching front door to door hinge.
(5) Remove bolts attaching hinge to pillar.
(6) Remove door hinge from vehicle.

INSTALLATION

CAUTION: When installing a new hinge, make sure that the head of each hinge pin is fully seated into the door hinge. Also, remove the plastic shipping clip and replace it with the correct metal retaining clip once the hinge pin is seated.

(1) Paint hinge prior to installation, if necessary.
(2) Position door hinge on vehicle.
(3) Install bolts attaching hinge to pillar. Tighten bolts to 34 N·m (25 ft. lbs.).
(4) Install bolts attaching front door to door hinge. Tighten bolts to 34 N·m (25 ft. lbs.).
(5) Align door to achieve equal spacing to surrounding body panels. Panels should be flush across all gaps.
(6) Verify door alignment and operation. Adjust as necessary.

LATCH

REMOVAL

(1) Roll door glass up.
(2) Remove front door trim panel. (Refer to 23 - BODY/DOOR - FRONT/TRIM PANEL - REMOVAL)
(3) Remove watershield as necessary to gain access to the outside door handle.
(4) Through access hole at rear of inner door panel, disconnect wire connector from power door lock motor, if equipped.
(5) Disengage clips holding linkage to door latch (Fig. 9).
(6) Remove linkages from door latch.
(7) Remove screws attaching door latch to door end frame (Fig. 10).
(8) Remove door latch from door.

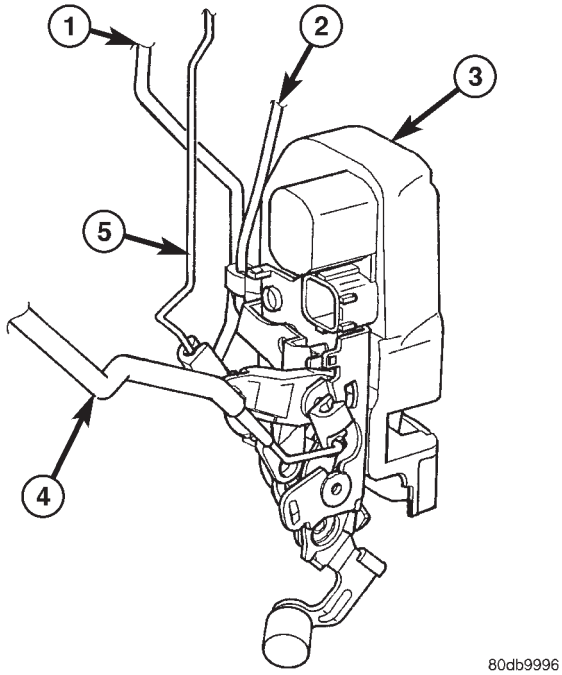

Fig. 9 LATCH ASSEMBLY

1 - OUTSIDE HANDLE TO LATCH LINK
2 - KEY CYLINDER TO LATCH LINK
3 - LATCH ASSEMBLY
4 - INSIDE HANDLE LINK AND SLEEVE
5 - LOCK KNOB LINK

INSTALLATION

NOTE: The screws attaching the door latch to the door end frame have nylon patches on the threads. All screws must be replaced when the latch has been removed.

(1) Insert inside handle latch link to door latch and engage clip (Fig. 9).

LATCH (Continued)

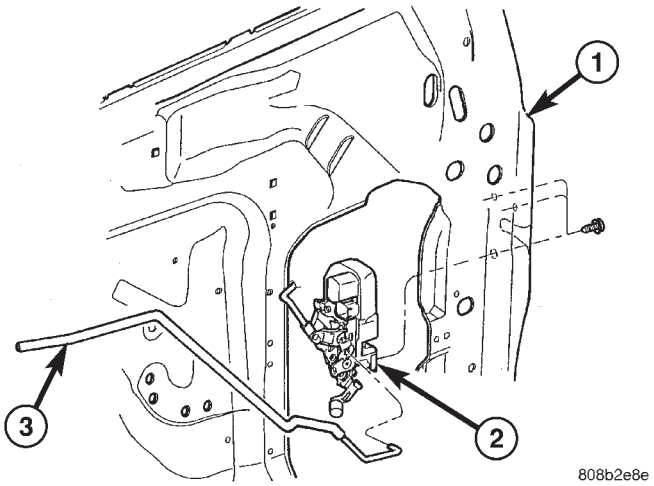

Fig. 10 FRONT DOOR LATCH

1 - FRONT DOOR
2 - LATCH ASSEMBLY
7 - INSIDE HANDLE LINK

(2) Place door latch in position on door end frame.
(3) Install screws attaching door latch to door end frame. Tighten screws to 10 N·m (90 in. lbs.) torque (Fig. 10).
(4) Insert other linkages to door latch and engage clips.
(5) Connect wire connector into power door lock motor, if equipped.
(6) Insert a hex wrench through the elongated hole located in the door shut face above the latch.
(7) Loosen allen head screw.
(8) Pull outward on the outside door handle and release.
(9) Tighten allen head screw.
(10) Verify door latch and power door lock operation.
(11) Install watershield and front door trim panel.

LATCH STRIKER

REMOVAL

(1) Mark outline of door striker on B-pillar to aid in installation.
(2) Remove screws attaching door latch striker to B-pillar (Fig. 11).
(3) Remove door latch striker from vehicle.
(4) Retrieve any shims found between latch striker and B-pillar.

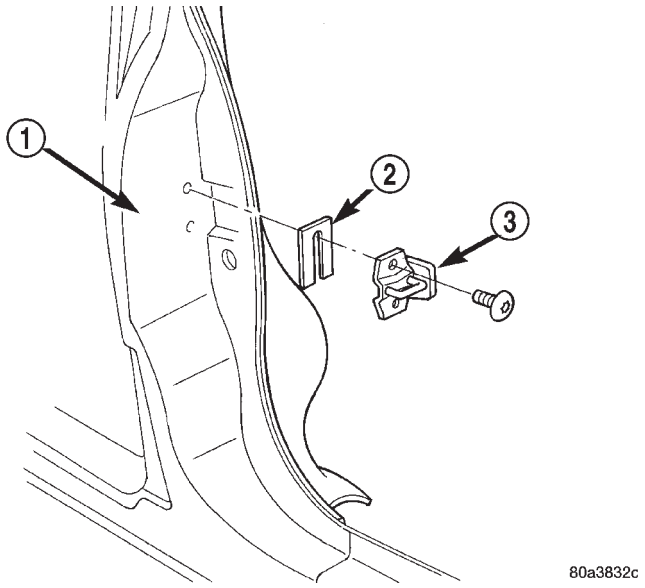

Fig. 11 DOOR LATCH STRIKER

1 - B-PILLAR
2 - SHIM
3 - DOOR LATCH STRIKER

INSTALLATION

(1) Position latch striker and any shims retrieved on vehicle.
(2) Loosely install screws attaching latch striker to B-pillar.
(3) Align latch striker to outline on B-pillar made previously.
(4) Tighten fasteners to 28 N·m (21 ft. lbs.) torque.
(5) Verify door fit and operation. Adjust latch striker as necessary.

LOCK CYLINDER

REMOVAL

(1) Roll door glass up.
(2) Remove front door watershield as necessary to gain access to the outside door handle. (Refer to 23 - BODY/DOOR - FRONT/WATERSHIELD - REMOVAL)
(3) Through access hole at rear of inner door panel, disconnect Vehicle Theft Security System (VTSS) switch connector from door harness, if equipped.
(4) Disengage push in fasteners attaching VTSS switch harness to inner door reinforcement bar, if equipped.

LOCK CYLINDER (Continued)

(5) Disengage clip holding door latch linkage to door latch (Fig. 12).
(6) Remove latch linkage from latch.
(7) Disengage clip holding door lock linkage to door latch.
(8) Remove lock linkage from latch.
(9) Remove nuts attaching outside door handle to door outer panel.
(10) Remove outside door handle from vehicle.
(11) Disengage clip holding lock cylinder into outside handle.
(12) Pull lock cylinder from door handle.

INSTALLATION

(1) Engage clip into outside handle to hold lock cylinder (Fig. 12).
(2) With link arm toward rear of vehicle, push lock cylinder into door handle until clip snaps into place.
(3) Insert lock linkage into door latch.
(4) Engage clip to hold door lock linkage to latch.
(5) Insert latch linkage into door latch.
(6) Engage clip to hold door latch linkage to latch.
(7) Install push in fasteners attaching VTSS switch harness to inner door reinforcement bar, if equipped.
(8) Connect VTSS switch connector into door harness, if equipped.
(9) Verify door latch operation.
(10) Install watershield and door trim panel.

TRIM PANEL

REMOVAL

(1) Remove the plug and remove screw attaching door pull cup to inner door panel.
(2) Remove switch bezel and disconnect power window/memory switch.
(3) Remove screws attaching trim panel to door from below map pocket.
(4) If equipped, remove window crank. (Refer to 23 - BODY/DOOR - FRONT/WINDOW CRANK - REMOVAL)
(5) Remove screw holding door trim to door panel from behind inside latch release handle.
(6) Disengage clips attaching door trim to door frame around perimeter of panel.
(7) Lift trim panel upward to disengage flange from inner belt molding at top of door.
(8) Tilt top of trim panel away from door to gain access to latch linkage.
(9) Disengage clip attaching linkage rod to inside latch release handle (Fig. 13).
(10) Separate linkage rod from latch handle.
(11) Disconnect the power door switch, courtesy lamp electrical connectors.

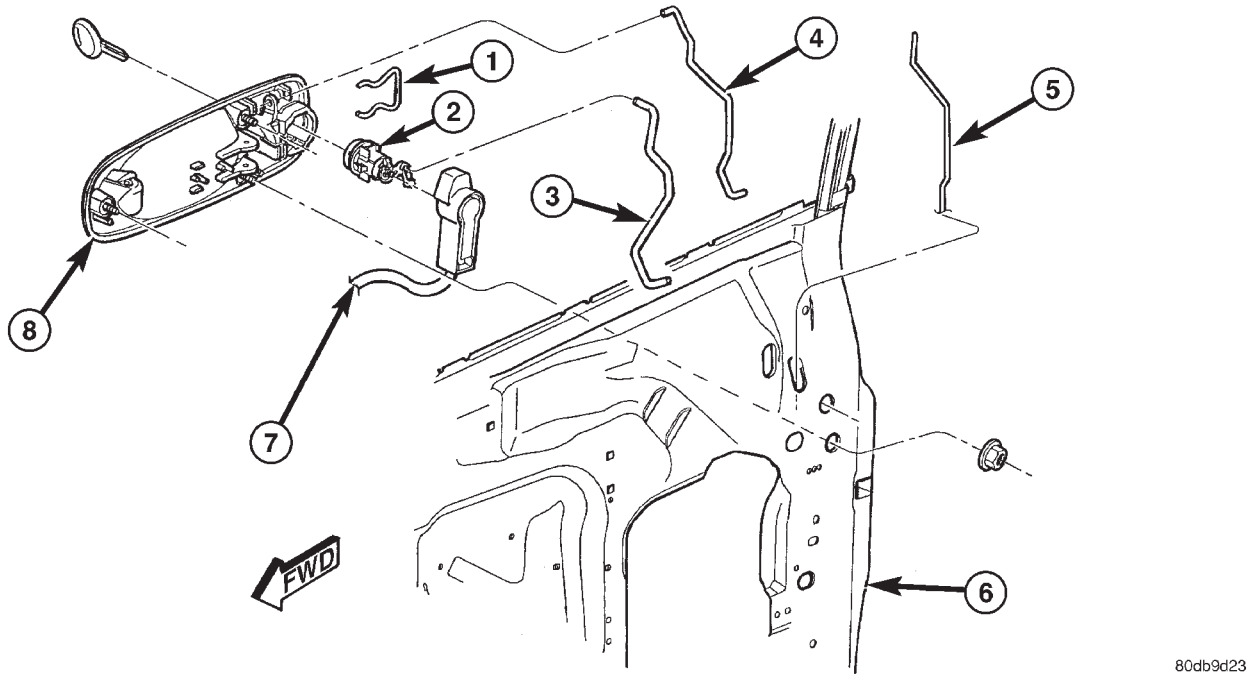

Fig. 12 OUTSIDE DOOR HANDLE

1 - CLIP
2 - LOCK CYLINDER
3 - KEY CYLINDER TO LATCH LINK
4 - OUTSIDE HANDLE TO LATCH LINK
5 - LOCK KNOB LINK
6 - FRONT DOOR
7 - KEY POSITION SWITCH
8 - OUTSIDE HANDLE

TRIM PANEL (Continued)

(12) Remove front door trim panel from vehicle.

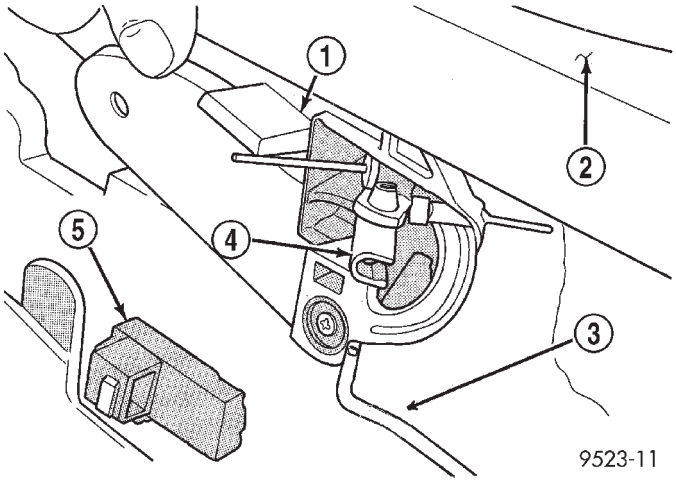

Fig. 13 INSIDE DOOR HANDLE LINKAGE

1 - DOOR LATCH HANDLE
2 - DOOR TRIM
3 - LATCH LINKAGE
4 - CLIP
5 - MEMORY SEAT SWITCH

INSTALLATION

(1) Hold top of trim panel away from door to gain access to latch linkage.
(2) Place linkage rod in position on latch handle.
(3) Engage clip to hold linkage rod to inside latch release handle.
(4) Place front door trim panel in position on door.
(5) Install trim panel into inner belt molding at top of door.
(6) Install clips to attach door trim to door frame around perimeter of panel.
(7) If equipped, install screw to attach door trim to door panel behind inside latch release handle.
(8) If equipped, connect power switch into wire connector.
(9) Place power accessary switch in position on door trim.
(10) Connect wire connector into memory seat/mirror switch and install switch into trim panel.
(11) Install screws to attach accessary switch panel to door trim.
(12) Install screw cover into switch panel.
(13) If equipped, install window crank.
(14) If equipped, install screws to attach trim panel to door inside map pocket.
(15) If equipped, install screw to attach door pull cup to inner door panel.
(16) If equipped, install screws to attach door assist handle to inner door panel.
(17) Connect wire connector into courtesy lamp.
(18) Install lamp in door trim.
(19) Install switch bezel.

WATERSHIELD

REMOVAL

(1) Remove door trim panel.
(2) Remove the front door speaker.
(3) Peel watershield away from adhesive around perimeter of inner door panel.

INSTALLATION

(1) Insure that enough adhesive remains to securely retain the water dam. Replace as necessary.
(2) Place the sound shield into position and press securely to adhesive making sure to properly route wiring and linkages.
(3) Install door trim panel.

WINDOW CRANK

REMOVAL

(1) Using a window crank removal tool, disengage clip attaching window crank to regulator shaft (Fig. 14).

NOTE: Wrap a shop towel around the window crank to catch the clip when it springs out.

(2) Pull window crank from regulator shaft.

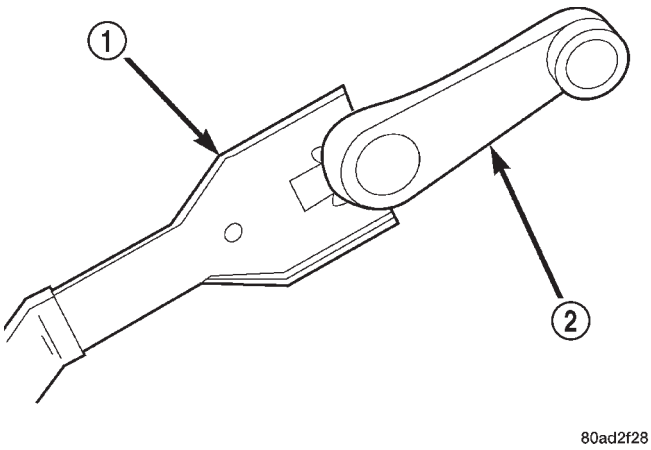

Fig. 14 WINDOW CRANK - TYPICAL

1 - WINDOW CRANK REMOVAL TOOL
2 - WINDOW CRANK

INSTALLATION

(1) Place the clip on to the window crank handle.
(2) Position window crank to regulator shaft.
(3) Push window crank onto regulator shaft to engage retaining clip.

WINDOW REGULATOR

REMOVAL

(1) Remove the watershield. (Refer to 23 - BODY/ DOOR - FRONT/WATERSHIELD - REMOVAL)

(2) Remove door glass retaining clips and secure the window in the up position using masking tape or equivalent (Fig. 15).

(3) Disconnect wire connector from power window motor, if equipped.

(4) Loosen screws attaching front and rear window guide rails to inner door panel (Fig. 16).

(5) Remove screw heads on guide rails from key hole slots in inner door panel.

(6) Loosen screws attaching regulator to inner door panel.

(7) Remove regulator from inner door panel.

(8) Extract rear guide rail through inner door panel rear access hole (Fig. 17).

(9) Extract front guide rail through front access hole.

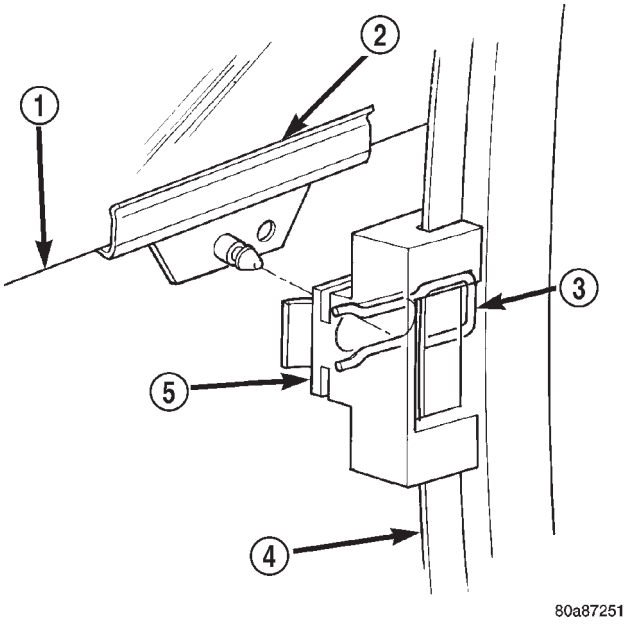

Fig. 15 FRONT DOOR GLASS CLIPS

1 - DOOR GLASS
2 - GLASS LIFT PLATE
3 - CLIP
4 - GUIDE RAIL
5 - REGULATOR LIFT PLATE

INSTALLATION

(1) Insert front guide rail through front access hole.

(2) Insert rear guide rail through rear access hole.

(3) Place window regulator in position on inner door panel.

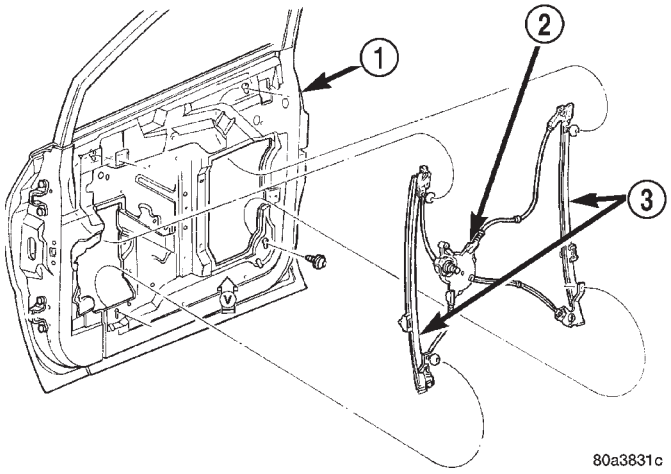

Fig. 16 FRONT DOOR MANUAL WINDOW REGULATOR - TYPICAL

1 - FRONT DOOR
2 - MANUAL WINDOW REGULATOR
3 - GUIDE RAILS

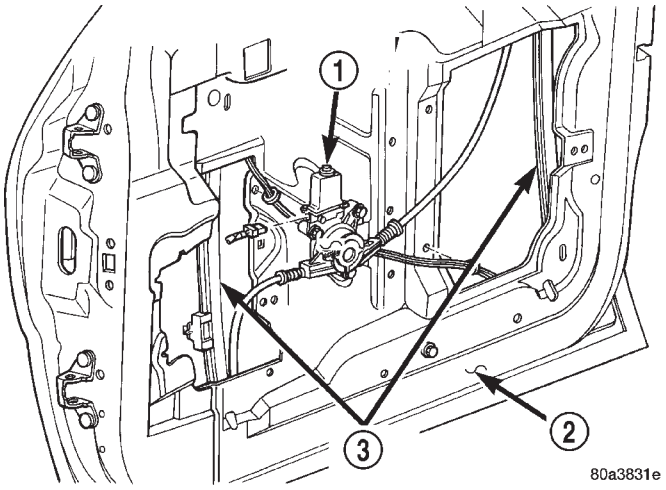

Fig. 17 FRONT DOOR POWER WINDOW - TYPICAL

1 - POWER WINDOW MOTOR
2 - FRONT DOOR
3 - GUIDE RAILS

(4) Place screw heads on guide rails in position through key hole slots in inner door panel.

(5) Tighten screws to attach front and rear guide rails to inner door panel.

(6) Connect wire connector into power window motor, if equipped.

(7) Install door glass.

(8) Verify door glass alignment and operation.

(9) Install sound shield and door trim panel.

EXTERIOR HANDLE

REMOVAL

(1) Roll door glass up.
(2) Remove the watershield. (Refer to 23 - BODY/ DOOR - FRONT/WATERSHIELD - REMOVAL)
(3) Through access hole at rear of inner door panel, disconnect Vehicle Theft Security System (VTSS) switch connector from door harness, if equipped.
(4) Disengage push in fasteners attaching VTSS switch harness to inner door reinforcement bar, if equipped.
(5) Disengage clip holding door latch linkage to door latch (Fig. 12).
(6) Remove latch linkage from latch.
(7) Disengage clip holding door lock linkage to door latch.
(8) Remove lock linkage from latch.
(9) Remove nuts holding outside door handle to door outer panel.
(10) Remove outside door handle from vehicle.

INSTALLATION

If outside door handle replacement is necessary, transfer lock cylinder from the original handle to the new one.
(1) Place outside door handle in position on vehicle.
(2) Install nuts attaching outside door handle to door outer panel (Fig. 12). Tighten nuts to 6 N·m (50 in. lbs.).
(3) Insert lock linkage into door latch.
(4) Engage clip to hold door lock linkage to latch.
(5) Insert latch linkage into door latch.
(6) Engage clip to hold door latch linkage to latch.
(7) Install push-in fasteners to hold VTSS switch harness to inner door reinforcement bar, if equipped.
(8) Connect VTSS switch connector into door harness, if equipped.
(9) Verify door latch operation.
(10) Install sound shield and door trim panel.

DOORS - SLIDING

TABLE OF CONTENTS

page

CENTER HINGE
REMOVAL 24
INSTALLATION 24
SLIDING DOOR STOP BUMPER BEZEL
REMOVAL 25
INSTALLATION 25
STOP BUMPER
REMOVAL 25
INSTALLATION 25
HOLD OPEN LATCH
REMOVAL 25
INSTALLATION 25
HOLD OPEN LATCH STRIKER
REMOVAL 26
INSTALLATION 26
LATCH / LOCK ASSEMBLY
REMOVAL 26
INSTALLATION 26
CENTER STRIKER
REMOVAL 27
INSTALLATION 27
LOWER HINGE
REMOVAL 28
INSTALLATION 28
REAR LATCH STRIKER
REMOVAL 28
INSTALLATION 28
SLIDING DOOR
REMOVAL 29
INSTALLATION 29
ADJUSTMENTS
SLIDING DOOR ADJUSTMENTS 30

page

STABILIZER
REMOVAL 32
INSTALLATION 32
STABILIZER SOCKET
REMOVAL 33
INSTALLATION 33
TRIM PANEL
REMOVAL 33
INSTALLATION 33
INSIDE LATCH HANDLE
REMOVAL 33
INSTALLATION 34
BELLCRANK
REMOVAL 34
INSTALLATION 34
OUTSIDE HANDLE
REMOVAL 35
INSTALLATION 35
UPPER HINGE
REMOVAL 36
INSTALLATION 36
OUTSIDE HANDLE CABLE
REMOVAL 36
INSTALLATION 37
INSIDE HANDLE CABLE
REMOVAL 37
INSTALLATION 37
HOLD OPEN LATCH CABLE
REMOVAL 38
INSTALLATION 38

CENTER HINGE

REMOVAL

NOTE: For power sliding door procedures refer to POWER SLIDING DOOR SYSTEM in the ELECTRICAL section.

(1) Open sliding door to the mid point of its travel.
(2) Support sliding door on a suitable lifting device.
(3) Mark outline of center hinge of inner door panel to aid installation.
(4) Remove bolts attaching center hinge to sliding door.
(5) Remove center hinge from sliding door.
(6) Roll center hinge to rear of roller channel.
(7) Remove center hinge from vehicle.

INSTALLATION

NOTE: For power sliding door procedures refer to POWER SLIDING DOOR SYSTEM in the ELECTRICAL section.

NOTE: Center hinge has an adjustable bolt for up/down alignment. (Refer to 23 - BODY/DOORS - SLIDING/SLIDING DOOR - ADJUSTMENTS)

(1) Place center hinge in position on vehicle.

CENTER HINGE (Continued)

(2) Roll center hinge forward in roller channel.
(3) Place center hinge in position on sliding door and align marks.
(4) Install bolts attaching center hinge to sliding door.
(5) Verify sliding door alignment and operation.

SLIDING DOOR STOP BUMPER BEZEL

REMOVAL

(1) Using a trim stick (C-4755), disengage clips attaching door stop bumper bezel to the door trim panel.
(2) Remove bezel from vehicle (Fig. 1).

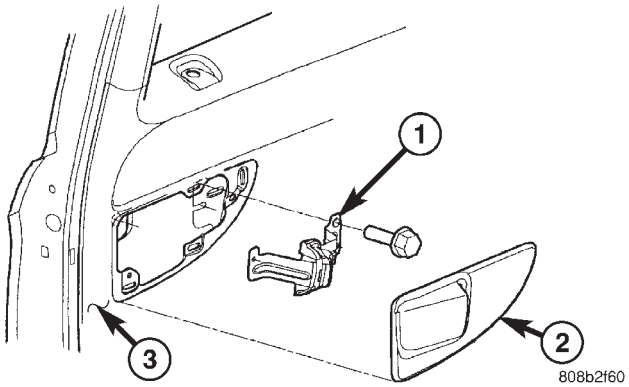

Fig. 1 SLIDING DOOR STOP BUMPER

1 - DOOR STOP BUMPER
2 - DOOR STOP BUMPER BEZEL
3 - SLIDING DOOR

INSTALLATION

(1) Place door stop bumper bezel into position (Fig. 1).
(2) Engage clips attaching door stop bumper bezel to the door trim panel.

STOP BUMPER

REMOVAL

(1) Remove door stop bumper bezel.
(2) Loosen screws attaching rear of stop bumper to door inner panel (Fig. 1).
(3) Remove screw attaching front of door stop bumper to door inner panel.
(4) Remove door stop bumper from vehicle.

INSTALLATION

(1) Place stop bumper in position on vehicle.
(2) Install screw attaching front of stop bumper to door inner panel (Fig. 1).
(3) Tighten screws attaching rear of stop bumper to door inner panel.
(4) Install door stop bumper bezel.

HOLD OPEN LATCH

REMOVAL

(1) Open sliding door.
(2) Remove sliding door sill plate. (Refer to 23 - BODY/INTERIOR/SLIDING DOOR SILL PLATE - REMOVAL)
(3) Remove nuts attaching hold open latch to lower roller arm (Fig. 2).
(4) Remove hold open latch from lower arm.
(5) Disconnect cable from hold open latch.
(6) Remove hold open latch from vehicle.

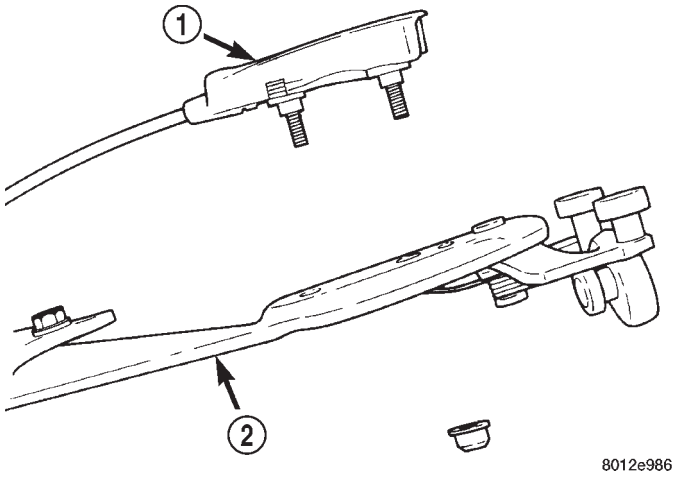

Fig. 2 SLIDING DOOR HOLD OPEN LATCH

1 - SLIDING DOOR HOLD OPEN LATCH - MANUAL DOOR
2 - LOWER ROLLER ARM

INSTALLATION

(1) Place hold open latch in position on vehicle.
(2) Connect cable to hold open latch.
(3) Place hold open latch in position on lower arm.
(4) Install nuts attaching the hold open latch to lower roller arm. Tighten nuts to 5 N·m (45 in. lbs.) torque.
(5) Install sliding door sill plate. (Refer to 23 - BODY/INTERIOR/SLIDING DOOR SILL PLATE - INSTALLATION)
(6) Verify sliding door operation.

HOLD OPEN LATCH STRIKER

REMOVAL

NOTE: For power sliding door procedures refer to POWER SLIDING DOOR SYSTEM in the ELECTRICAL section.

(1) Open sliding door, do not latch open.
(2) Remove sliding door sill plate. (Refer to 23 - BODY/INTERIOR/SLIDING DOOR SILL PLATE - REMOVAL)
(3) Remove two bolts attaching sliding door hold open latch striker to door sill (Fig. 3).
(4) Remove hold open latch striker from vehicle.

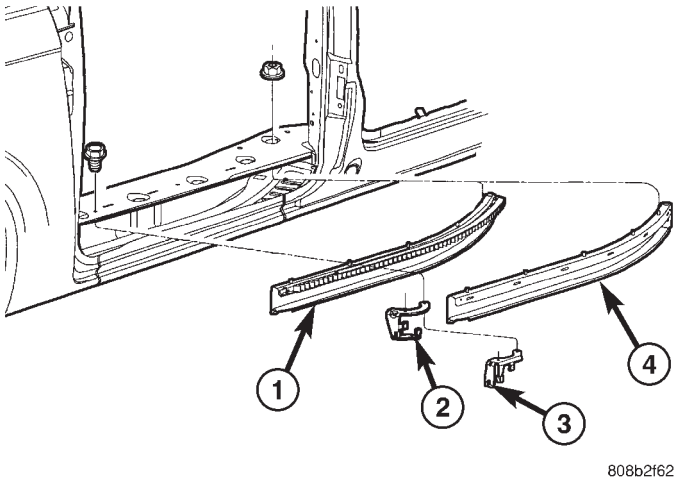

Fig. 3 SLIDING DOOR HOLD OPEN LATCH STRIKER

1 - POWER DOOR LOWER TRACK
2 - POWER DOOR HOLDING STRIKER
3 - MANUAL DOOR HOLDING STRIKER
4 - MANUAL DOOR LOWER TRACK

INSTALLATION

NOTE: For power sliding door procedures refer to POWER SLIDING DOOR SYSTEM in the ELECTRICAL section.

(1) Place hold open latch striker in position on vehicle.
(2) Install two bolts attaching sliding door hold open latch striker to door sill.
(3) Install sliding door sill plate. (Refer to 23 - BODY/INTERIOR/SLIDING DOOR SILL PLATE - INSTALLATION)
(4) Verify sliding door operation.

LATCH / LOCK ASSEMBLY

REMOVAL

NOTE: For power sliding door procedures refer to POWER SLIDING DOOR SYSTEM in the ELECTRICAL section.

(1) Remove sliding door trim panel. (Refer to 23 - BODY/DOORS - SLIDING/TRIM PANEL - REMOVAL)
(2) Remove sliding door stop bumper. (Refer to 23 - BODY/DOORS - SLIDING/STOP BUMPER - REMOVAL)
(3) Peel watershield away from adhesive around perimeter of inner door panel.

CAUTION: Replace the latch/lock control if any of the metal clips on the latch/lock control are bent or broken. DO NOT attempt to repair the clips to retain the links.

(4) Disengage external cable from latch/lock assembly (Fig. 4).
(5) Remove foam block.
(6) Remove inside door handle assembly (Refer to 23 - BODY/DOORS - SLIDING/INSIDE LATCH HANDLE - REMOVAL).
(7) Disengage inside cable from latch/lock assembly.
(8) Disengage link from bellcrank.
(9) Disengage hold open latch cable from lower hinge.
(10) Remove bolts attaching latch/lock control to sliding door (Fig. 5).
(11) If equipped, lower latch and disconnect wire connector from power door lock motor.
(12) Remove latch/lock from door.

INSTALLATION

NOTE: For power sliding door procedures refer to POWER SLIDING DOOR SYSTEM in the ELECTRICAL section.

(1) Position latch/lock locking lever in unlocked position.
(2) Place latch/lock in position on door (Fig. 5).
(3) If equipped, engage wire connector into power door lock motor (Fig. 4).
(4) Insert bolt into slots in sliding door inner panel.
(5) Tighten bolts attaching latch/lock assembly to sliding door.
(6) Engage inside cable into latch/lock assembly.

LATCH / LOCK ASSEMBLY (Continued)

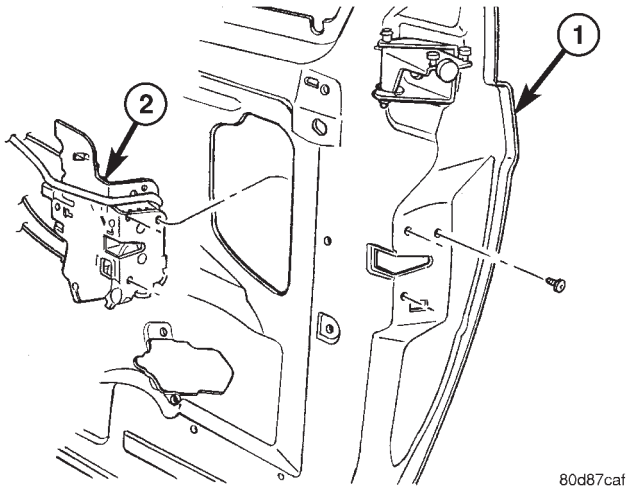

Fig. 4 SLIDING DOOR LATCH/LOCK ASSEMBLY

1 - SLIDING DOOR
2 - LATCH LOCK ASSEMBLY

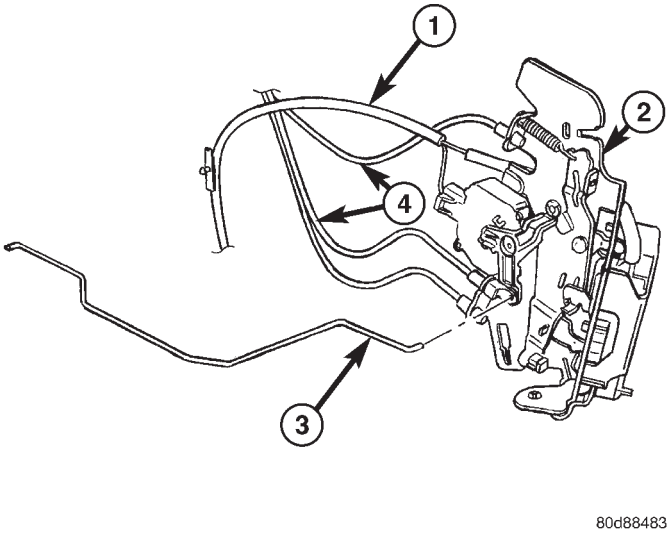

Fig. 5 REMOVING SLIDING DOOR LATCH/LOCK ASSEMBLY

1 - WIRE HARNESS
2 - LATCH/LOCK ASSEMBLY
3 - BELLCRANK LINK ROD
4 - LINK AND SLEEVE ASSEMBLY

(7) Install inside door handle assembly (Refer to 23 - BODY/DOORS - SLIDING/INSIDE LATCH HANDLE - INSTALLATION).

(8) Install foam block.

(9) Engage external cable to latch/lock assembly.

(10) Engage link rod to bellcrank.

(11) Engage hold open latch cable from lower hinge.

(12) Engage clip to hold bellcrank link to latch/lock control.

(13) Verify sliding door operation.

(14) Install latch/lock cover.

(15) Insure that enough adhesive remains to securely retain the watershield. Replace as necessary.

(16) Place the watershield into position and press securely to adhesive making sure to properly route wiring and linkages.

(17) Install sliding door stop bumper.(Refer to 23 - BODY/DOORS - SLIDING/STOP BUMPER - INSTALLATION)

(18) Install sliding door trim panel.(Refer to 23 - BODY/DOORS - SLIDING/TRIM PANEL - INSTALLATION)

CENTER STRIKER

REMOVAL

(1) Remove sliding door trim panel. (Refer to 23 - BODY/DOORS - SLIDING/TRIM PANEL - REMOVAL)

(2) Remove bolts attaching stop bumper. Remove stop bumper from door.

(3) Remove screws attaching center striker assembly to door end frame (Fig. 6).

(4) Remove center striker assembly from door through access hole.

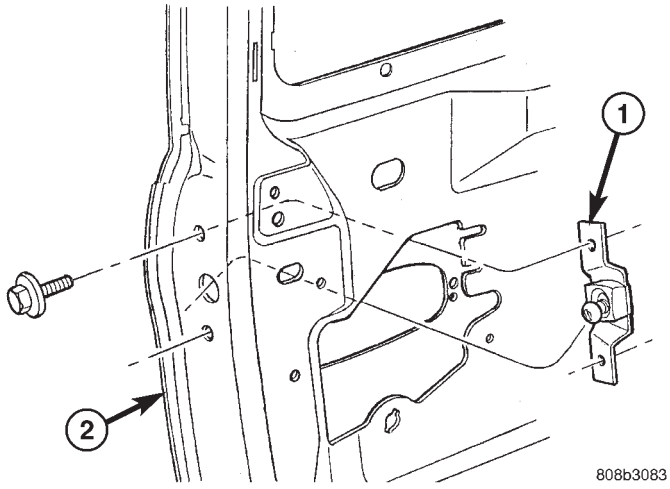

Fig. 6 SLIDING DOOR CENTER STRIKER ASSEMBLY

1 - STRIKER BOLT ASSEMBLY
2 - SLIDING DOOR

INSTALLATION

(1) Place center striker in position on door through access hole (Fig. 6).

(2) Install screws to attach center striker to door end frame.

CENTER STRIKER (Continued)

(3) Install bolts attaching stop bumper.
(4) Install sliding door trim panel (Refer to 23 - BODY/DOORS - SLIDING/TRIM PANEL - INSTALLATION).

LOWER HINGE

REMOVAL

NOTE: For power sliding door procedures refer to POWER SLIDING DOOR SYSTEM in the ELECTRICAL section.

(1) Open sliding door.
(2) Mark outline of roller arm on sliding door to aid installation (Fig. 7).
(3) Remove sliding door sill plate. (Refer to 23 - BODY/INTERIOR/SLIDING DOOR SILL PLATE - REMOVAL)
(4) Remove screws attaching open latch to lower roller arm.
(5) Remove open latch from lower arm.
(6) Support sliding door on a suitable lifting device with a padded upper surface. The door must be moveable with lifting device in place.
(7) Remove hold open latch striker.
(8) Remove bolts attaching lower roller arm to sliding door.
(9) Remove roller arm from sliding door.
(10) Disengage roller arm from lower channel.
(11) Remove roller arm from vehicle.

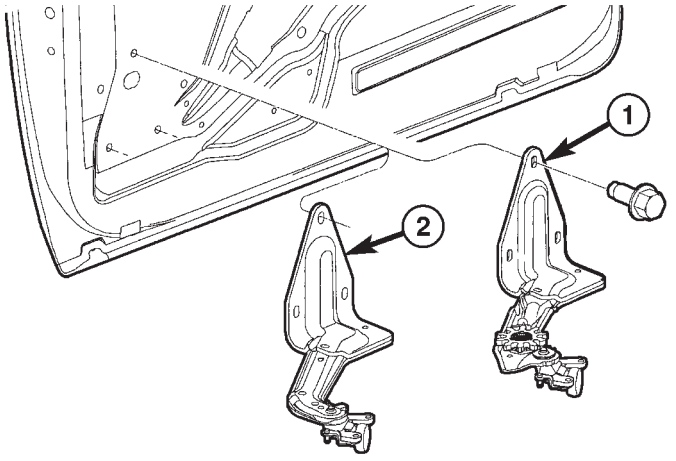

Fig. 7 SLIDING DOOR LOWER ROLLER ARM

1 - POWER LOWER ROLLER ARM
2 - MANUAL LOWER ROLLER ARM

INSTALLATION

NOTE: For power sliding door procedures refer to POWER SLIDING DOOR SYSTEM in the ELECTRICAL section.

(1) Place roller arm into position (Fig. 7).
(2) Engage roller arm to lower channel.
(3) Install roller arm to sliding door.
(4) Install bolts attaching lower roller arm to sliding door.
(5) Install hold open latch striker.
(6) Install screws attaching open latch to lower roller arm.
(7) Install sliding door sill plate. (Refer to 23 - BODY/INTERIOR/SLIDING DOOR SILL PLATE - INSTALLATION)
(8) Check sliding door for proper operation.

REAR LATCH STRIKER

REMOVAL

(1) Open sliding door.
(2) Mark outline of striker on C-pillar door jamb face to aid installation.
(3) Remove screws attaching striker to C-pillar (Fig. 8).
(4) Remove striker from vehicle.

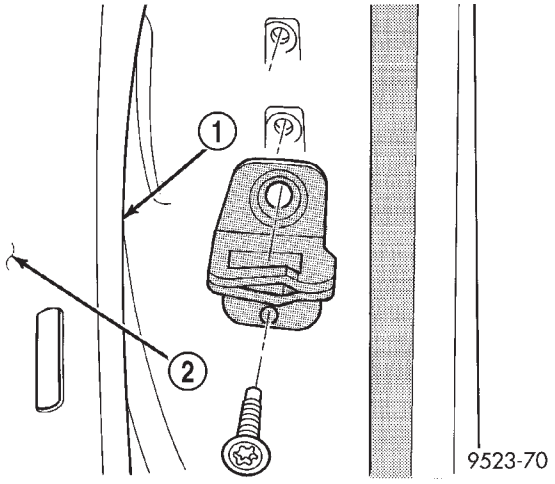

Fig. 8 SLIDING DOOR LATCH STRIKER

1 - LATCH STRIKER
2 - SLIDING DOOR

INSTALLATION

(1) Place striker in position on vehicle.
(2) Align striker to outline marks on C-pillar.
(3) Install screws attaching striker to C-pillar. Tighten screws to 28 N·m (21 ft. lbs.) torque.
(4) Verify sliding door alignment and operation.

SLIDING DOOR

REMOVAL

NOTE: For power sliding door procedures refer to POWER SLIDING DOOR SYSTEM in the ELECTRICAL section.

(1) Apply masking tape to outside surface of quarter panel below the center roller channel, rearward of the door opening.
(2) Release sliding door latch and open door.
(3) Apply masking tape to door jamb area, rearward of the upper roller channel.
(4) Remove screw attaching upper stop bumper to upper roller arm (Fig. 9).
(5) Remove upper stop from upper roller arm.
(6) Remove center stop from sliding door. (Refer to 23 - BODY/DOORS - SLIDING/STOP BUMPER - REMOVAL)
(7) Remove sliding door sill plate. (Refer to 23 - BODY/INTERIOR/SLIDING DOOR SILL PLATE - REMOVAL)
(8) Remove hold open latch striker (Refer to 23 - BODY/DOORS - SLIDING/HOLD OPEN LATCH STRIKER - REMOVAL).
(9) Open quarter glass.
(10) Remove center roller channel end cover (Fig. 10).
(11) Support sliding door on a suitable lifting device with a padded upper surface. The door must be moveable with lifting device in place.

CAUTION: Do not allow the center hinge roller to contact the quarter glass. Glass can break.

(12) Slide door rearward until the upper sliding door hinge roller disengages from the upper channel (Fig. 11).
(13) Continue moving the door rearward until the lower rollers exit the lower track.
(14) Continue moving door rearward till center hinge roller exits the channel (Fig. 12)
(15) Remove sliding door from vehicle.

INSTALLATION

NOTE: For power sliding door procedures refer to POWER SLIDING DOOR SYSTEM in the ELECTRICAL section.

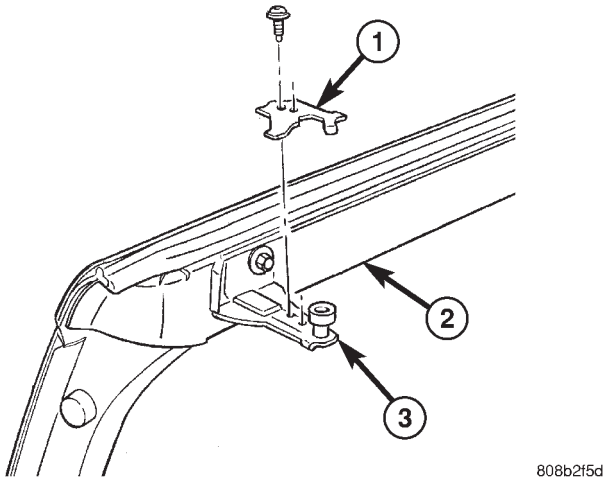

Fig. 9 SLIDING DOOR UPPER STOP

1 - UPPER STOP PLATE
2 - SLIDING DOOR
3 - UPPER SLIDING DOOR HINGE

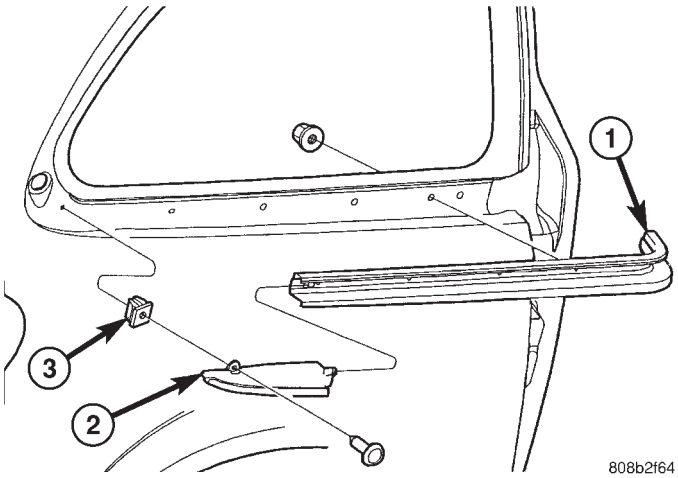

Fig. 10 CENTER CHANNEL END COVER

1 - CENTER CHANNEL
2 - CENTER CHANNEL END COVER
3 - PLASTIC NUT

(1) Place sliding door in position on lifting device.
(2) Engage center hinge roller into channel and move door forward (Fig. 12).
(3) Position door rearward of the sliding door opening.

CAUTION: Do not allow the center hinge roller to contact the quarter glass. Glass can break.

SLIDING DOOR (Continued)

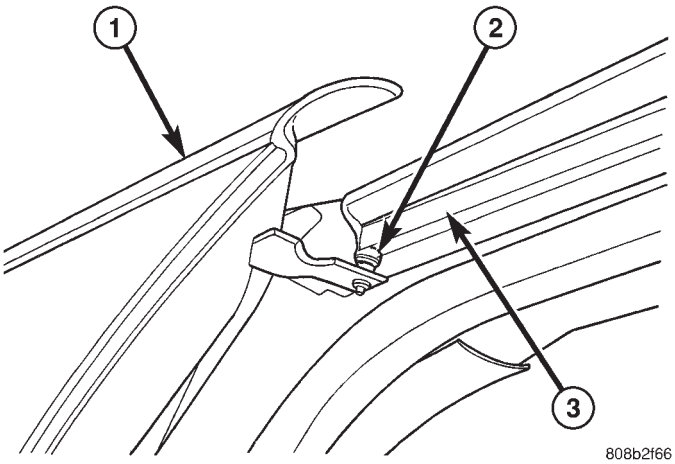

Fig. 11 SLIDING DOOR UPPER ROLLER

1 - SLIDING DOOR
2 - UPPER HINGE
3 - UPPER CHANNEL

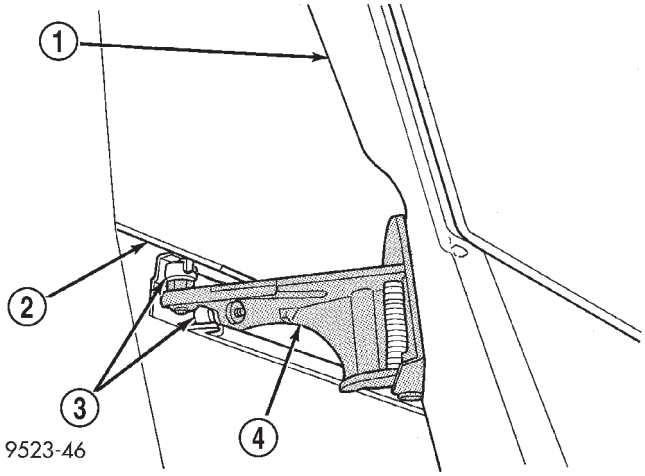

Fig. 12 SLIDING DOOR CENTER ROLLER

1 - SLIDING DOOR
2 - QUARTER GLASS
3 - CENTER HINGE ROLLERS
4 - CENTER HINGE

(4) Engage the center hinge roller into the channel (Fig. 12).

(5) Roll door forward until lower roller engage into rear of the track.

(6) Engage the upper sliding door hinge into the upper channels (Fig. 11).

(7) Install hold open latch striker(Refer to 23 - BODY/DOORS - SLIDING/HOLD OPEN LATCH STRIKER - INSTALLATION).

(8) Install sliding door sill plate.

(9) Install center roller channel end cover (Fig. 10).

(10) Install center stop on sliding door. (Refer to 23 - BODY/DOORS - SLIDING/STOP BUMPER - INSTALLATION)

(11) Place upper roller stop bumper in position on upper roller arm.

(12) Install screw attaching upper roller arm stop bumper to upper roller arm (Fig. 9).

(13) Remove masking tape from body surfaces.

(14) Verify door operation and fit. Adjust as necessary. (Refer to 23 - BODY/DOORS - SLIDING/SLIDING DOOR - ADJUSTMENTS)

ADJUSTMENTS

SLIDING DOOR ADJUSTMENTS

NOTE: For power sliding door procedures refer to POWER SLIDING DOOR SYSTEM in the ELECTRICAL section.

PRELIMINARY CHECKS

(1) Close the sliding door, visually checking C-post striker alignment entry into latch. Striker at this point must not affect alignment. Striker should go straight into the latching mechanism.

(2) On vehicles with left sliding doors, check the fuel door blocker striker entry into latch. Striker at this point must not affect alignment.

(3) Check C-post and B-post for door to aperture gaps and door to door gaps. All gaps should be 5 mm ± 1 mm.

(4) Check door for height using character lines as a reference. Also check roof contour as a controlling factor.

Using the procedures noted below, adjust the side door in the order the individual steps are called out.

DOOR FLUSHNESS ADJUSTMENT

(1) Check sliding door flushness at the C-pillar striker.

(2) Adjust the C-pillar striker in or out until the door is flush.

(3) Check upper B-pillar flushness to A-pillar cover.

(4) Loosen one nut on upper hinge and adjust door in or out until the door is flush.

(5) Check flushness at upper C-pillar.

(6) If upper C-pillar flushness is out of specification use a heavy rubber mallet on the door assembly until door is in specifications.

DOOR GAP ADJUSTMENT - UP/DOWN

(1) Visually inspect the sliding door for fitting low at the top of the door by checking the alignment of the top contour of the door to the quarter panel.

SLIDING DOOR (Continued)

(2) Fully open the sliding door.
(3) Verify that all center hinge bolts are tight.
(4) Adjust the rear of the sliding door up by turning the center hinge bolt clockwise (Fig. 13).
(5) Close the door and check the sliding door alignment.
(6) Adjust the front of the sliding door up by adjusting lower hinge bolts.
(7) Open door half way and remove lower hinge bolt access plug.
(8) Loosen bolts as necessary to move the front of door up or down.
(9) Check the upper hinge for possible bind, adjust as necessary.
(10) Close the door and check the sliding door alignment.
(11) Fully open door and apply thread lock nut onto the center hinge bolt. Tighten nut until till it butts up against the welded nut on the center hinge. Tighten nut to 15 N·m (130 in. lbs.). It may be necessary to hold the center hinge bolt to prevent it from turning while tightening nut.
(12) Verify alignment, adjust as necessary.

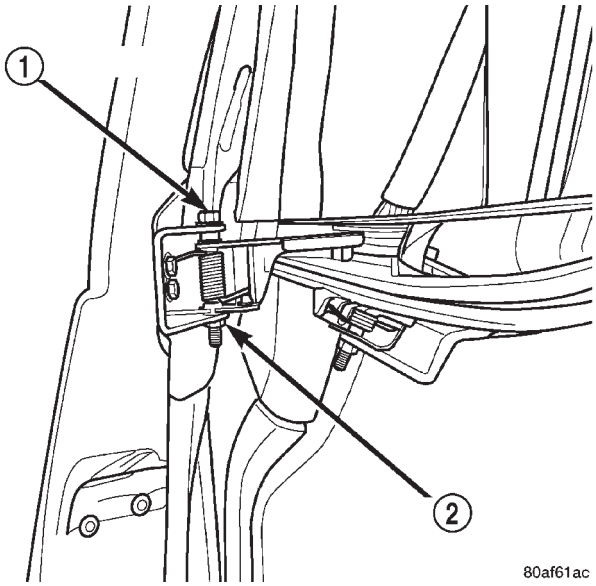

Fig. 13 SLIDING DOOR CENTER HINGE

1 - ADJUSTING BOLT
2 - WELD NUT

DOOR GAP ADJUSTMENT - FORE/AFT

(1) Check height of sliding door at the B-post and C-post to determine which area is contributing the greatest to the incorrect gaps.
(2) If the sliding door is high at the C-post;
(a) Open the door to mid-point of travel.
(b) Mark outline of center hinge on sliding door to assist in making adjustments.
(c) Loosen center hinge bolts (Fig. 13).
(d) Move hinge fore or aft to position the sliding door into the correct location.
(e) Tighten center hinge bolts.
(f) Verify alignmen, adjust as necessary.
(3) If the sliding door is low at the B-post;
(a) Remove access plug in the sliding door trim panel.
(b) Open the door to mid-point of travel.
(c) Mark outline of lower roller arm bracket on sliding door to assist in making adjustments.
(d) Loosen lower roller arm bracket bolts (Fig. 14).
(e) Move hinge downward to raise the door.
(f) Tighten lower roller arm bracket bolts.
(g) Verify alignment, adjust as necessary.

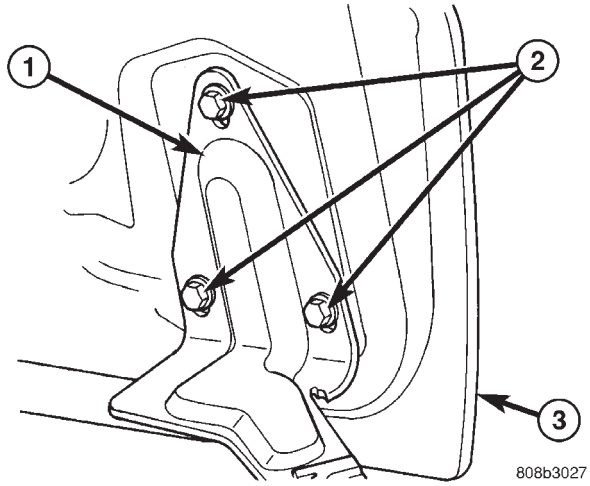

Fig. 14 SLIDING DOOR LOWER ROLLER ARM

1 - LOWER ROLLER ARM BRACKET
2 - BOLTS
2 - SLIDING DOOR

(4) If the sliding door is low at the C-post;
(a) Open the door to mid-point of travel.
(b) Mark outline of center hinge on sliding door to assist in making adjustments.
(c) Adjust the adjustment bolt up or down to move the door position. (Fig. 13).
(d) Move hinge downward to raise the door.
(e) Tighten center hinge bolts.
(f) Verify alignment adjust as necessary.
(5) If the sliding door is high at the B-post;
(a) Remove access plug in the sliding door trim panel.
(b) Open the door to mid-point of travel.
(c) Mark outline of lower roller arm bracket on sliding door to assist in making adjustments.
(d) Loosen lower roller arm bracket bolts (Fig. 14).
(e) Move hinge upward to raise the door.
(f) Tighten lower roller arm bracket bolts.
(g) Verify alignment, adjust as necessary.

SLIDING DOOR (Continued)

DOOR SEAL COMPRESSION

(1) First check Gap & Flush (Refer to 23 - BODY/ BODY STRUCTURE/GAP AND FLUSH - SPECIFICATIONS). Check seal compression near the middle of the door even with the latch assembly. Using a piece of paper, place it across door seal and close door. Pull paper out of door opening. If paper tears setting is to tight, if paper slides thought to easily the compression is insufficient and needs to be adjusted.

(2) Adjust seal compression at the top of the B-post seal;

(a) Open door to mid-point of travel.

(b) Mark outline of upper roller arm on door to assist in making adjustments.

(c) Loosen bolts attaching upper roller arm to door (Fig. 9).

(d) Decrease the length of the upper roller arm to increase seal compression.

(e) Increase the length of the upper roller arm to decrease seal compression.

(f) Tighten all upper roller arm bolts.

(g) Verify door alignment, adjust as necessary.

(3) Adjust seal compression at the bottom of B-post seal.

(a) Open door to mid-point of travel.

(b) Mark outline of lower roller arm on lower roller arm bracket to assist in making adjustments (Fig. 15).

(c) Loosen bolts holding lower roller arm to lower roller arm bracket.

(d) Pivot lower roller arm toward center of vehicle to decrease seal compression.

(e) Pivot lower roller arm outward to increase seal compression.

(f) Tighten lower roller arm bolts.

(g) Verify alignment, adjust as necessary.

NOTE: Adjusting seal compression at the B-post can affect door flushness the C-post.

STABILIZER ADJUSTMENT - UPPER/LOWER

(1) Open sliding door.

(2) Loosen the bolts holding the male stabilizers to the sliding door enough that the stabilizers can move with some effort.

(3) Close and then reopen sliding door.

(4) Tighten all stabilizers bolts.

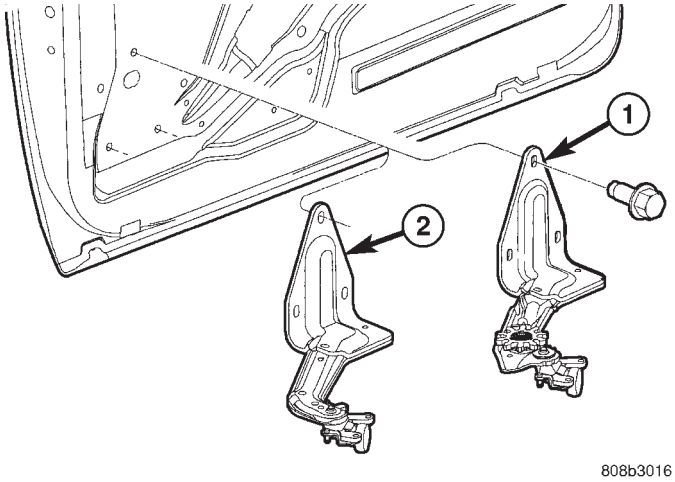

Fig. 15 Sliding Door Lower Roller Arm

1 - POWER LOWER ROLLER ARM
2 - MANUAL LOWER ROLLER ARM

STABILIZER

REMOVAL

(1) Open sliding door.

(2) Remove screws attaching stabilizer to door end frame (Fig. 16).

(3) Remove stabilizer from vehicle.

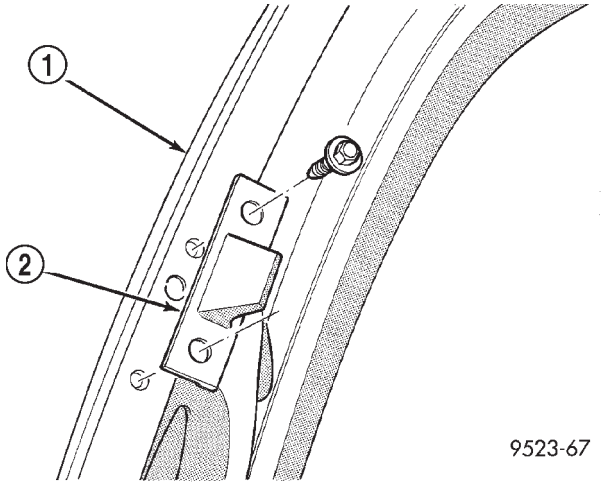

Fig. 16 SLIDING DOOR STABILIZER

1 - SLIDING DOOR
2 - STABILIZER

INSTALLATION

(1) Place stabilizer in position on vehicle.

NOTE: Loose install screws first. Fit should be snug but free to move when closing door to align to body half stabilizer.

STABILIZER (Continued)

(2) Install screws attaching stabilizer to door end frame.
(3) Open door and final tighten screws.
(4) Verify sliding door operation.

STABILIZER SOCKET

REMOVAL

(1) Open sliding door.
(2) Remove screws holding stabilizer socket to B-pillar (Fig. 17).
(3) Remove stabilizer socket from vehicle.

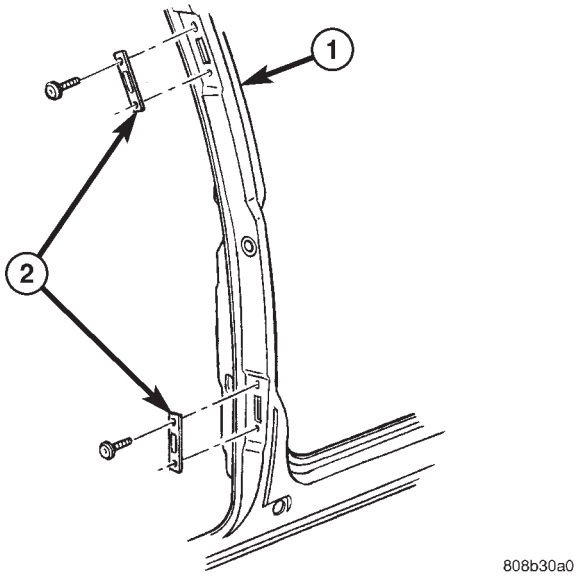

Fig. 17 SLIDING DOOR STABILIZER SOCKET

1 - B-PILLAR
2 - STABILIZER SOCKET

INSTALLATION

(1) Place stabilizer socket in position on vehicle.
(2) Install screws to hold stabilizer socket to B-pillar. Tighten nuts to 5 N·m (45 in. lbs.) torque.
(3) Close sliding door and verify operation.

TRIM PANEL

REMOVAL

(1) Remove sliding door upper frame molding.
(2) If removing the left sliding door trim panel, remove screw from inside ash receiver bezel.
(3) Remove screw from pull cup.
(4) Disengage push-in fasteners holding trim to door panel around perimeter and upper edge of door (Fig. 18).
(5) Remove sliding door trim panel from vehicle.

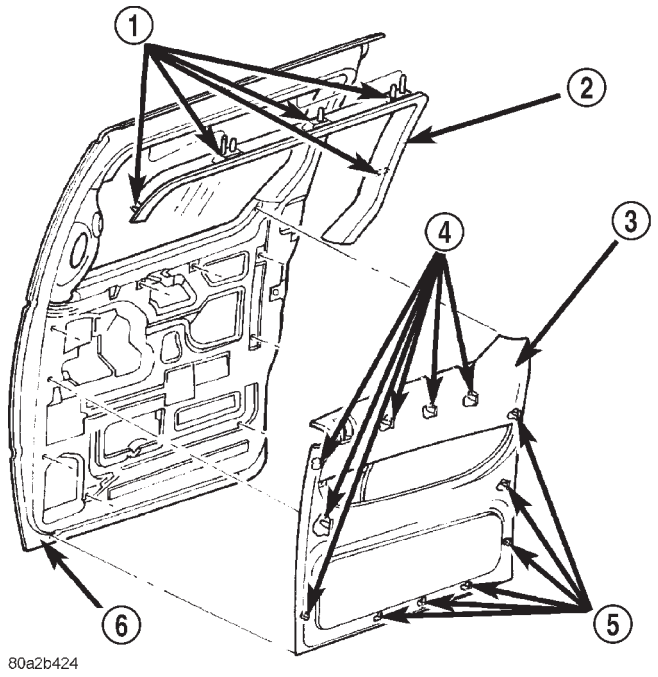

Fig. 18 SLIDING DOOR TRIM PANEL

1 - PUSH-IN FASTENERS
2 - SLIDING DOOR UPPER FRAME MOLDING
3 - SLIDING DOOR TRIM PANEL
4 - PUSH-IN FASTENERS
5 - PUSH-IN FASTENERS
6 - SLIDING DOOR

INSTALLATION

(1) Place sliding door trim panel in position on vehicle.
(2) Align locating pins on backside of trim panel to mating holes in the inner door panel.
(3) Engage push-in fasteners to hold trim to door panel around perimeter and upper edge of door (Fig. 18).
(4) Install pull cup screw.
(5) If necessary, install screw from inside ash receiver bezel on left sliding door trim panel.
(6) Install sliding door upper frame molding.

INSIDE LATCH HANDLE

REMOVAL

(1) Remove sliding door trim panel. (Refer to 23 - BODY/DOORS - SLIDING/TRIM PANEL - REMOVAL)
(2) Remove screws attaching bottom of inside latch handle to sliding door (Fig. 19).
(3) Remove two screw attaching top of inside latch handle to sliding door.
(4) Remove latch handle from sliding door.

INSIDE LATCH HANDLE (Continued)

(5) Disengage cable end from clip on release handle mechanism.
(6) Disengage cable end from release handle mechanism.
(7) Remove push pin fastener attaching cable end to release handle.
(8) Disengage cable casing end from release handle (Fig. 20).
(9) Disengage cable end from latch handle.
(10) Remove handle from vehicle.

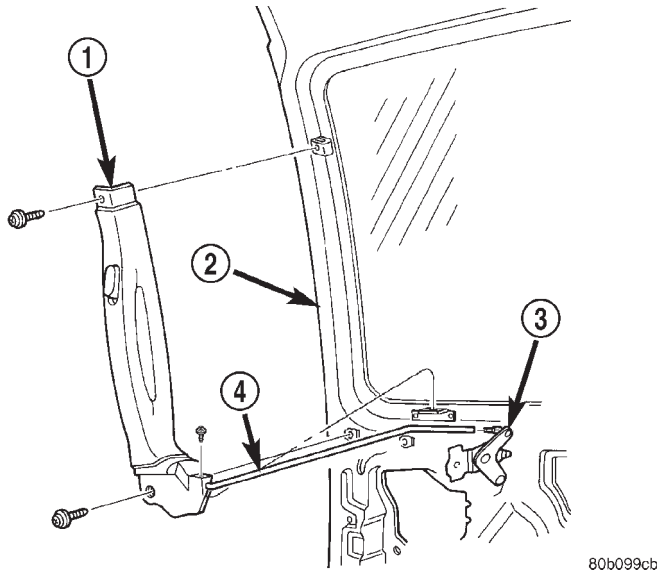

Fig. 19 SLIDING DOOR INSIDE HANDLE

1 - INSIDE ASSIST HANDLE
2 - SLIDING DOOR
3 - LATCH BELLCRANK
4 - INSIDE RELEASE HANDLE CABLE

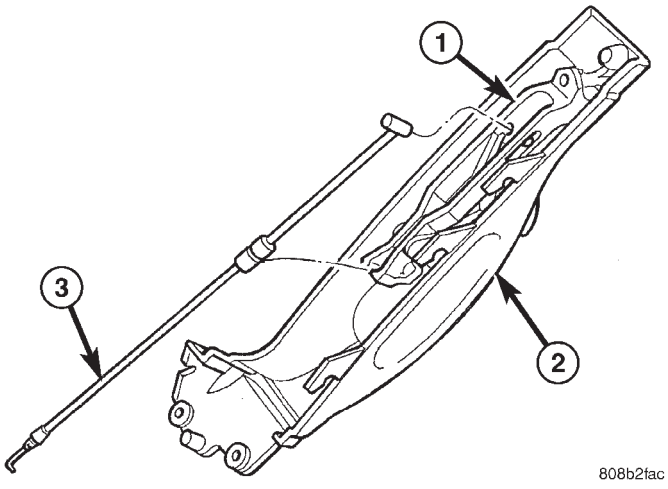

Fig. 20 RELEASE HANDLE CABLE

1 - ASSIST HANDLE MECHANISM
2 - SLIDING DOOR INSIDE ASSIST HANDLE
3 - RELEASE HANDLE CABLE

INSTALLATION

(1) Place inside latch handle in position on vehicle.
(2) Engage cable end into latch handle.
(3) Engage cable casing end into release handle.
(4) Install push pin fastener to hold cable into release handle.
(5) Engage cable end into release handle mechanism.
(6) Engage clip to hold cable end into release handle mechanism.
(7) Place latch handle in position on sliding door.
(8) Install screw to hold top of inside release handle to sliding door.
(9) Install screws to hold bottom of inside latch handle to sliding door.
(10) Verify sliding door operation. Adjust as necessary. (Refer to 23 - BODY/DOORS - SLIDING/SLIDING DOOR - ADJUSTMENTS)
(11) Install sliding door trim panel.(Refer to 23 - BODY/DOORS - SLIDING/TRIM PANEL - INSTALLATION)

BELLCRANK

REMOVAL

(1) Remove stop bumper (Refer to 23 - BODY/DOORS - SLIDING/STOP BUMPER - REMOVAL).
(2) Remove sliding door trim panel. (Refer to 23 - BODY/DOORS - SLIDING/TRIM PANEL - REMOVAL)
(3) Peel watershield away from adhesive around perimeter of inner door panel as necessary to gain access to latch bellcrank.
(4) Disengage key cylinder link (Fig. 21).
(5) Disengage lock link.
(6) Disengage link and sleeve
(7) Remove bellcrank by rotating bellcrank to release it from door.
(8) Remove bellcrank from vehicle.

INSTALLATION

(1) Position bellcrank on vehicle.
(2) Rotate bellcrank into position.
(3) Place lock link into position and engage clip (Fig. 21).
(4) Place link and sleeve into position and engage clip.
(5) Place key cylinder link into position and engage clip.
(6) Place the watershield into position and press securely to adhesive making sure to properly route wiring and linkages.
(7) Install sliding door trim panel (Refer to 23 - BODY/DOORS - SLIDING/TRIM PANEL - INSTALLATION).

BELLCRANK (Continued)

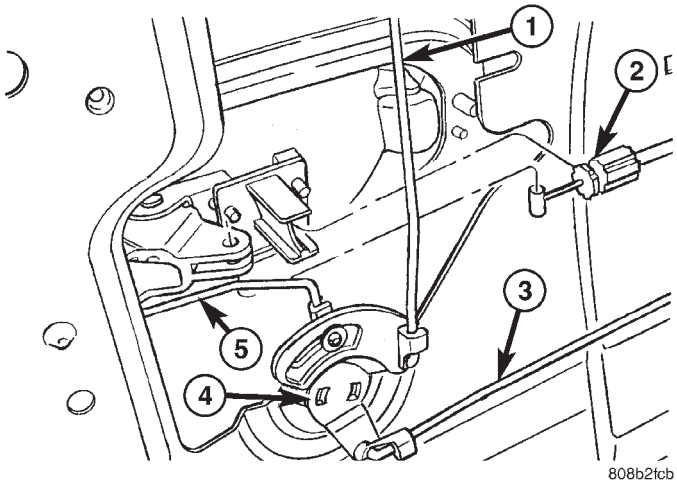

Fig. 21 BELLCRANK

1 - LOCK LINK
2 - LATCH LINK
3 - LINK AND SLEEVE - OUTSIDE HANDLE
4 - BELLCRANK
5 - KEY CYLINDER LINK

(8) Install stop bumper (Refer to 23 - BODY/ DOORS - SLIDING/STOP BUMPER - INSTALLATION).

OUTSIDE HANDLE

REMOVAL

(1) Remove sliding door trim panel. (Refer to 23 - BODY/DOORS - SLIDING/TRIM PANEL - REMOVAL)

(2) Remove sliding door stop bumper. (Refer to 23 - BODY/DOORS - SLIDING/STOP BUMPER - REMOVAL)

(3) Peel watershield away from adhesive around perimeter of inner door panel as necessary to access outside release handle fasteners.

(4) Disengage clip attaching outside door handle linkage to door cable.

(5) Remove linkage from outside door handle.

(6) Remove three nuts attaching outside door handle to outer door panel (Fig. 22).

(7) Remove outside door handle from vehicle.

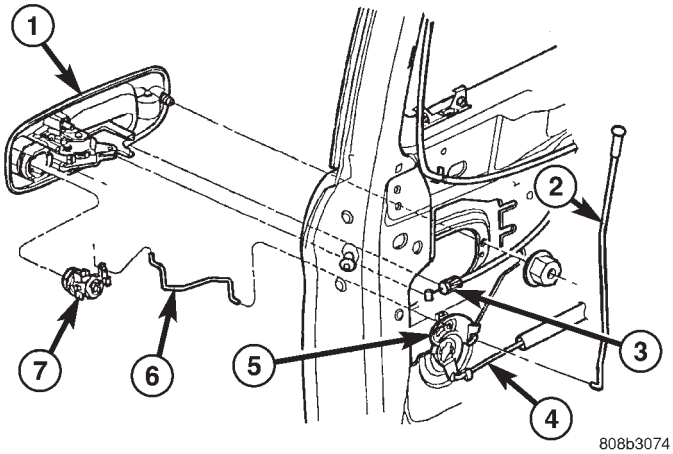

Fig. 22 SLIDING DOOR OUTSIDE LATCH RELEASE HANDLE

1 - OUTSIDE DOOR PANEL
2 - LOCK LINK
3 - LATCH LINK
4 - LOCKING LINK AND SLEEVE LINK
5 - BELLCRANK
6 - KEY CYLINDER LOCK LINK
7 - KEY CYLINDER

INSTALLATION

(1) Position outside door handle on vehicle.

(2) Install nuts attaching outside door handle to outer door panel.

(3) Engage clip attaching linkage to outside door handle.

(4) Engage rigging cam to latch/lock control mechanism.

(5) Move clip on latch/lock control to bottom of slot and engage linkage to latch/lock control.

(6) Verify sliding door operation. Adjust as necessary.

(7) Place the watershield into position and press securely to adhesive making sure to properly route wiring and linkages.

(8) Install sliding door stop bumper. (Refer to 23 - BODY/DOORS - SLIDING/STOP BUMPER - INSTALLATION)

(9) Install sliding door trim panel. (Refer to 23 - BODY/DOORS - SLIDING/TRIM PANEL - INSTALLATION)

UPPER HINGE

REMOVAL

(1) Open sliding door, do not latch open.
(2) Remove screw attaching upper stop bracket to upper roller bracket (Fig. 23).
(3) Remove stop bracket from vehicle.
(4) Place a padded block between the open sliding door and the roof rail.
(5) Mark outline of upper hinge bracket on sliding door.
(6) Remove bolts attaching upper roller to sliding door (Fig. 24).
(7) Remove upper hinge from door.
(8) Slide roller out of rear end of roof upper channel.
(9) Remove upper hinge from vehicle.

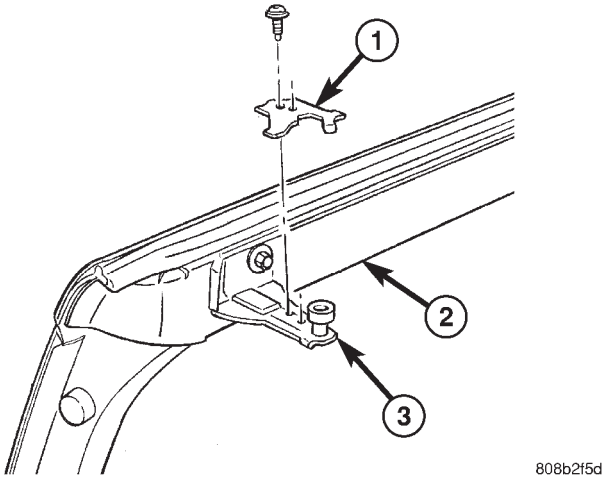

Fig. 23 SLIDING DOOR UPPER STOP

1 - UPPER STOP PLATE
2 - SLIDING DOOR
3 - UPPER SLIDING DOOR HINGE

INSTALLATION

(1) Place upper hinge in position on vehicle (Fig. 24).
(2) Slide roller into rear end of roof upper channel.
(3) Place upper hinge in position on door.
(4) Align outline marks on sliding door to upper roller bracket
(5) Install bolts attaching upper hinge to sliding door.
(6) Remove padded block from between sliding door and roof rail.
(7) Place stop bracket in position on vehicle.
(8) Install screw attaching upper stop bracket to upper roller bracket (Fig. 23).
(9) Verify sliding door alignment and operation. Adjust as necessary. (Refer to 23 - BODY/DOORS - SLIDING/SLIDING DOOR - ADJUSTMENTS)

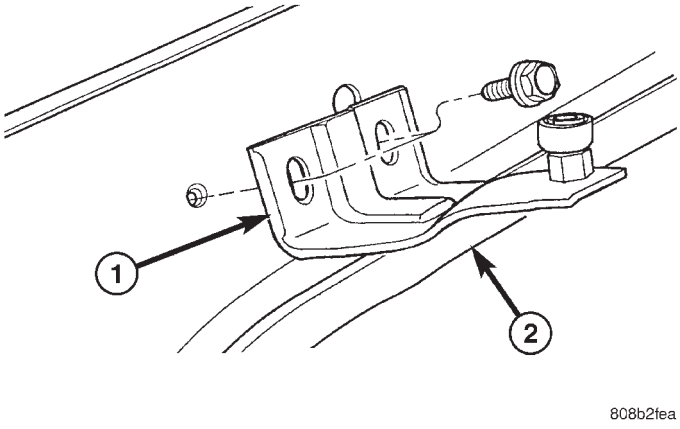

Fig. 24 SLIDING DOOR UPPER HINGE

1 - SLIDING DOOR UPPER HINGE
2 - SLIDING DOOR

OUTSIDE HANDLE CABLE

REMOVAL

NOTE: For power sliding door procedures refer to POWER SLIDING DOOR SYSTEM in the ELECTRICAL section.

(1) Disconnect and isolate the negative battery cable.
(2) Remove stop bumper (Refer to 23 - BODY/DOORS - SLIDING/STOP BUMPER - REMOVAL).
(3) Remove the appropriate side door trim panel. (Refer to 23 - BODY/DOORS - SLIDING/TRIM PANEL - REMOVAL)
(4) Peel watershield away from adhesive around perimeter of inner door panel.

CAUTION: Make note of cable routing and foam insulator placement. This will prove helpful when reinstalling replacement cable. Be certain replacement cable is routed and retained correctly.

(5) Trace the outside handle cable along its routing path and disconnect from its retaining clips.
(6) Disconnect the outside handle cable from the latch assembly. Gently pry cable sleeve retainer out of the latch mounting bracket and then unhook swedged cable end from the latch link.
(7) Disconnect the outside handle cable from the handle assembly. Gently pry cable sleeve retainer out of the handle bracket and then unhook swedged cable end from the handle link.
(8) Remove the outside handle cable from the side door.

OUTSIDE HANDLE CABLE (Continued)

INSTALLATION

NOTE: For power sliding door procedures refer to POWER SLIDING DOOR SYSTEM in the ELECTRICAL section.

(1) Match the replacement cable up against the old cable to verify the correct part.
(2) Position the outside handle cable on the side door.
(3) Connect the outside handle cable on the handle assembly. Hook the swedged cable end on the handle link and gently push the cable sleeve retainer in the handle bracket.

NOTE: The outside handle cable is marked with red tape. It must be attached to the latch at the lowest point. This is marked with a "R" on the latch.

(4) Connect the outside handle cable on the latch assembly. Hook the swedged cable end on the latch link and gently push the cable sleeve retainer in the latch bracket.
(5) Trace the outside handle cable along its routing path and install on its retaining clips and position foam insulators. Use previously made schematic as a guide or remove the opposite side door trim panel and use that door as a guide.

CAUTION: Be certain replacement cable is routed and retained correctly and foam insulators are properly positioned.

(6) Place the watershield into position and press securely to adhesive making sure to properly route wiring and linkages.
(7) Install the appropriate side door trim panel on the vehicle. (Refer to 23 - BODY/DOORS - SLIDING/TRIM PANEL - INSTALLATION)
(8) Install stop bumper (Refer to 23 - BODY/DOORS - SLIDING/STOP BUMPER - INSTALLATION).
(9) Connect the negative battery cable.

INSIDE HANDLE CABLE

REMOVAL

NOTE: For power sliding door procedures refer to POWER SLIDING DOOR SYSTEM in the ELECTRICAL section.

(1) Disconnect and isolate the negative battery cable.
(2) Remove the appropriate side door trim panel from the vehicle. (Refer to 23 - BODY/DOORS - SLIDING/TRIM PANEL - REMOVAL)
(3) Peel watershield away from adhesive around perimeter of inner door panel.
(4) Remove the inside handle assembly from the side door. (Refer to 23 - BODY/DOORS - SLIDING/INSIDE LATCH HANDLE - REMOVAL)
(5) Disconnect the inside handle cable from the handle assembly. Gently pry cable sleeve retainer out of the handle bracket and then unhook swedged cable end from the handle link.
(6) Open the side door and remove the latch assembly. Refer to the Power Side Doors section for the procedure.

CAUTION: Make note of cable routing and foam insulator placement. This will prove helpful when reinstalling replacement cable. Be certain replacement cable is routed and retained correctly.

(7) Trace the inside handle cable along its routing path and disconnect from its retaining clips.
(8) Disconnect the inside handle cable from the latch assembly. Gently pry cable sleeve retainer out of the latch mounting bracket and then unhook swedged cable end from the latch link.
(9) Remove the inside handle cable from the side door.

INSTALLATION

NOTE: For power sliding door procedures refer to POWER SLIDING DOOR SYSTEM in the ELECTRICAL section.

(1) Match the replacement cable up against the old cable to verify the correct part.
(2) Position the inside handle cable on the side door.
(3) Connect the inside handle cable on the handle assembly. Hook the swedged cable end on the handle link and gently push the cable sleeve retainer in the handle bracket.
(4) Install the inside handle assembly on the side door. (Refer to 23 - BODY/DOORS - SLIDING/INSIDE LATCH HANDLE - INSTALLATION)

NOTE: The inside handle cable is marked with blue tape and must be attached to the latch at the center (just above the lower cable). This position is marked with a "B" on the latch.

(5) Connect the inside handle cable on the latch assembly. Hook the swedged cable end on the latch link and gently push the cable sleeve retainer in the latch bracket.

INSIDE HANDLE CABLE (Continued)

(6) Trace the inside handle cable along its routing path and install on its retaining clips and position foam insulators. Use previously made schematic as a guide or remove the opposite side door trim panel and use that door as a guide.

CAUTION: Be certain replacement cable is routed and retained correctly and foam insulators are properly positioned.

(7) Install the latch assembly. Refer to the Power Side Doors section for the procedure.
(8) Place the watershield into position and press securely to adhesive making sure to properly route wiring and linkages.
(9) Install the appropriate side door trim panel on the vehicle. (Refer to 23 - BODY/DOORS - SLIDING/TRIM PANEL - INSTALLATION)
(10) Connect the negative battery cable.

HOLD OPEN LATCH CABLE

REMOVAL

NOTE: For power sliding door procedures refer to POWER SLIDING DOOR SYSTEM in the ELECTRICAL section.

(1) Disconnect and isolate the negative battery cable.
(2) Remove the appropriate side door trim panel from the vehicle. (Refer to 23 - BODY/DOORS - SLIDING/TRIM PANEL - REMOVAL)
(3) Peel watershield away from adhesive around perimeter of inner door panel.
(4) Open the side door and remove the latch assembly. (Refer to 8 - ELECTRICAL/POWER DOORS/LATCH - REMOVAL)

CAUTION: Make note of cable routing and foam insulator placement. This will prove helpful when reinstalling replacement cable. Be certain replacement cable is routed and retained correctly.

(5) Trace the hold open latch cable along its routing path and disconnect from its retaining clips.
(6) Disconnect the hold open latch cable from the latch assembly. Gently pry cable sleeve retainer out of the latch mounting bracket and then unhook swedged cable end from the latch link.
(7) Remove the hold open latch from the side door. (Refer to 23 - BODY/DOORS - SLIDING/HOLD OPEN LATCH - REMOVAL)
(8) Disconnect the hold open latch cable from the hold open latch. Gently pry cable sleeve retainer out of the handle bracket and then unhook swedged cable end from the latch link.
(9) Remove the hold open latch cable from the side door.

INSTALLATION

NOTE: For power sliding door procedures refer to POWER SLIDING DOOR SYSTEM in the ELECTRICAL section.

(1) Match the replacement cable up against the old cable to verify the correct part.
(2) Position the hold open latch cable on the side door.

NOTE: The hold open latch cable is marked with white tape. It must be attached to the upper most cable attachment at the latch. This position is marked with a “W” on the latch.

(3) Connect the hold open latch cable on the hold open latch assembly. Hook the swedged cable end on the latch link and gently push the cable sleeve retainer in the latch bracket.
(4) Install the hold open latch on the side door.(Refer to 23 - BODY/DOORS - SLIDING/HOLD OPEN LATCH - INSTALLATION)
(5) Connect the hold open latch cable on the latch assembly. Hook the swedged cable end on the latch link and gently push the cable sleeve retainer in the latch bracket.
(6) Trace the outside handle cable along its routing path and install on its retaining clips and position foam insulators. Use previously made schematic as a guide or remove the opposite side door trim panel and use that door as a guide.

CAUTION: Be certain replacement cable is routed and retained correctly and foam insulators are properly positioned.

(7) Install the latch assembly. (Refer to 8 - ELECTRICAL/POWER DOORS/LATCH - INSTALLATION)
(8) Place the watershield into position and press securely to adhesive making sure to properly route wiring and linkages.
(9) Install the appropriate side door trim panel on the vehicle. (Refer to 23 - BODY/DOORS - SLIDING/TRIM PANEL - INSTALLATION)
(10) Connect the negative battery cable.

DECKLID/HATCH/LIFTGATE/TAILGATE

TABLE OF CONTENTS

page

EXTERIOR HANDLE
REMOVAL 39
INSTALLATION 39
HINGE
REMOVAL 39
INSTALLATION 39
LATCH
REMOVAL 40
INSTALLATION 40
LATCH STRIKER
REMOVAL 40
INSTALLATION 40
LIFTGATE
REMOVAL 40
INSTALLATION 41
LIFTGATE SPOILER
REMOVAL 41
INSTALLATION 41
LOCK CYLINDER
REMOVAL 42
INSTALLATION 42
SUPPORT CYLINDER
REMOVAL 42
INSTALLATION 42
TRIM PANEL
REMOVAL 42
INSTALLATION 43
SLAM BUMPER
REMOVAL
REMOVAL 43
REMOVAL - LIFTGATE SIDE 43
INSTALLATION
INSTALLATION 43
INSTALLATION - LIFTGATE SIDE 43

EXTERIOR HANDLE

REMOVAL

(1) Remove liftgate trim panel. (Refer to 23 - BODY/DECKLID/HATCH/LIFTGATE/TAILGATE/ TRIM PANEL - REMOVAL)

(2) Disconnect the exterior handle electrical connectors.

(3) Remove the two outer screws and the two inner screws.

(4) Remove the exterior handle/license plate light assembly.

INSTALLATION

(1) Route the exterior handle electrical connector through the door and position handle.

(2) Install the two out screws and tighten to 20 N·m (15 ft. lbs.).

(3) Install the two inner bolts and tighten to 40 N·m (30 ft. lbs.).

(4) Connect the electrical connector.

(5) Install the trim panel. (Refer to 23 - BODY/ DECKLID/HATCH/LIFTGATE/TAILGATE/TRIM PANEL - INSTALLATION)

HINGE

REMOVAL

(1) Release liftgate latch and open liftgate.

(2) Support liftgate on a suitable lifting device in the full open position.

(3) Apply several layers of duct tape on the outside of to roof across the gap to the lift gate to hold the liftgate in position.

(4) Remove bolts attaching liftgate hinge to roof header.

(5) Disconnect VTSS switch from the body harness.

(6) Remove bolts attaching hinge to liftgate (Fig. 1).

(7) Remove hinge from vehicle.

INSTALLATION

(1) If necessary, paint replacement hinge before installation.

(2) Place hinge in position on vehicle.

(3) Align hinge to marks on liftgate.

(4) Install bolts attaching hinge to liftgate (Fig. 1) . Tighten bolts to 33 N·m (24 ft. lbs.) torque.

HINGE (Continued)

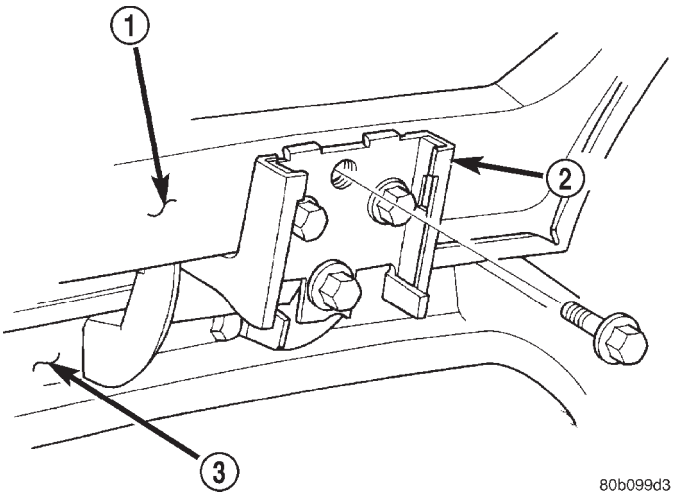

Fig. 1 LIFTGATE HINGE

1 - LIFTGATE
2 - HINGE
3 - REAR ROOF HEADER

(5) Align hinge to marks on roof header.

(6) Install bolts attaching liftgate hinge to roof header. Tighten outer two bolts to 33 N·m (24 ft. lbs.) torque. The sheet medal screw at center 12 N·m (105 in. lbs.)

(7) Remove duct tape from roof and liftgate.

(8) Verify liftgate alignment. Refer to Liftgate Remove and Installation for proper gap measurements.

LATCH

REMOVAL

(1) Remove liftgate trim panel.

(2) Disengage outside handle link from clip on latch.

(3) Disconnect wire connector from liftgate latch (Fig. 2).

(4) Remove screws attaching latch to liftgate.

(5) Remove latch from vehicle.

INSTALLATION

(1) Engage link and place latch in position on vehicle.

(2) Install screws attaching latch to liftgate. Tighten to 10 N·m (95 lb.in.) torque.

(3) Connect wire connector to liftgate latch.

(4) Verify liftgate fit and operation. Adjust as necessary.

(5) Install liftgate trim panel.

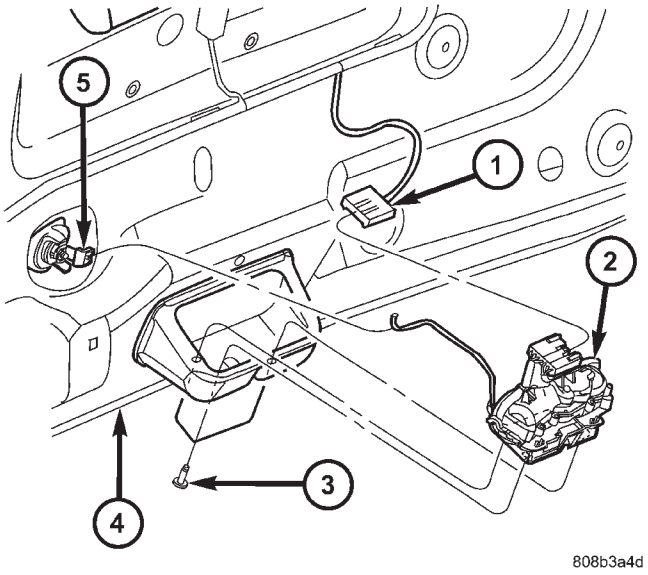

Fig. 2 LIFTGATE LATCH

1 - ELECTRICAL CONNECTOR
2 - LIFTGATE LATCH
3 - SCREW
4 - LIFTGATE
5 - LIFTGATE LOCK CYLINDER

LATCH STRIKER

REMOVAL

(1) Open liftgate.

(2) Mark outline of striker on sill to aid installation.

(3) Remove screws attaching striker to sill (Fig. 3).

(4) Remove striker from vehicle.

INSTALLATION

(1) Place striker in position on vehicle.

(2) Align striker to outline mark on sill.

(3) Install screws attaching striker to sill. Tighten screws to 28 N·m (21 ft. lbs.) torque.

(4) Verify liftgate alignment and operation.

LIFTGATE

REMOVAL

(1) Release liftgate latch and open liftgate.

(2) Remove screws attaching liftgate wire connector to rear header.

(3) Disconnect liftgate wire harness from body wire harness.

(4) Remove liftgate upper frame molding.

LIFTGATE (Continued)

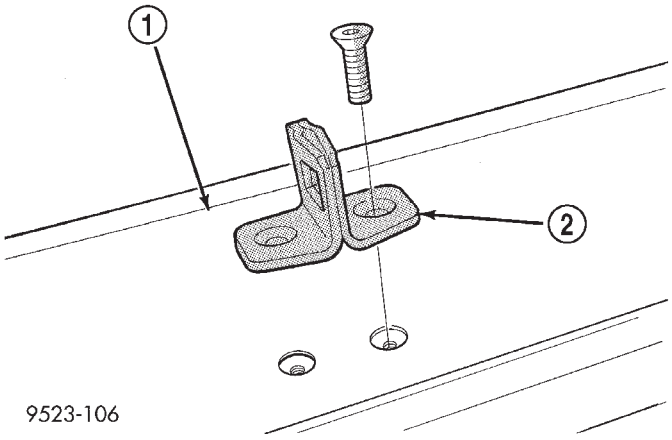

Fig. 3 LIFTGATE LATCH STRIKER

1 - LIFTGATE SILL
2 - LIFTGATE STRIKER

(5) Disconnect rear window washer hose from spray nozzle.
(6) Support liftgate on a suitable lifting device.
(7) Remove screws attaching support cylinders to liftgate.
(8) Remove bolts attaching liftgate hinge to roof header (Fig. 4).
(9) With assistance, remove liftgate from vehicle.

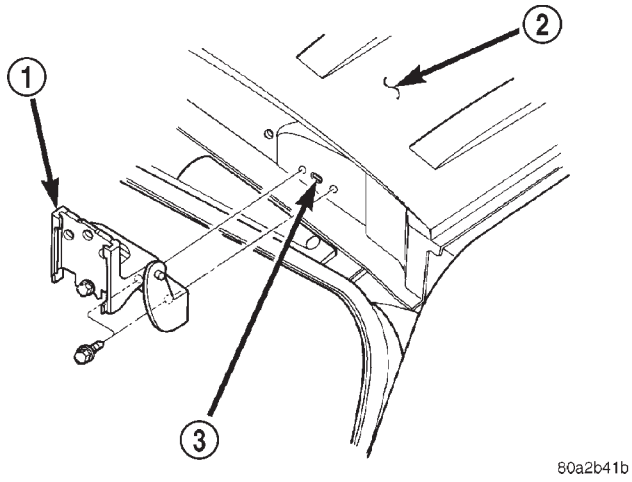

Fig. 4 LIFTGATE

1 - HINGE
2 - ROOF
3 - NET HOLE OR SLOT

INSTALLATION

(1) With assistance, place liftgate in position on vehicle.
(2) Install bolts attaching liftgate hinge to roof header. Tighten bolts to 33 N·m (24 ft. lbs.) torque.
(3) Install screws attaching support cylinders to liftgate. Tighten bolts to 28 N·m (21 ft. lbs.) torque.
(4) Remove lifting device from under liftgate.
(5) Connect liftgate wire harness into body wire harness.
(6) Install screws attaching wire connector to rear header.
(7) Connect rear window washer hose onto spray nozzle.
(8) Install liftgate upper frame molding.
(9) Verify liftgate alignment. The liftgate should have a gap to adjacent panels and fit flush across the gaps. The gap is;

- 7 mm (0.280 in.) to the fascia,
- 6 mm (0.240 in.) to the roof,
- 4 mm (0.160 in.) to the aperture.

LIFTGATE SPOILER

REMOVAL

(1) Remove nuts (Fig. 5).
(2) Remove spoiler from vehicle.

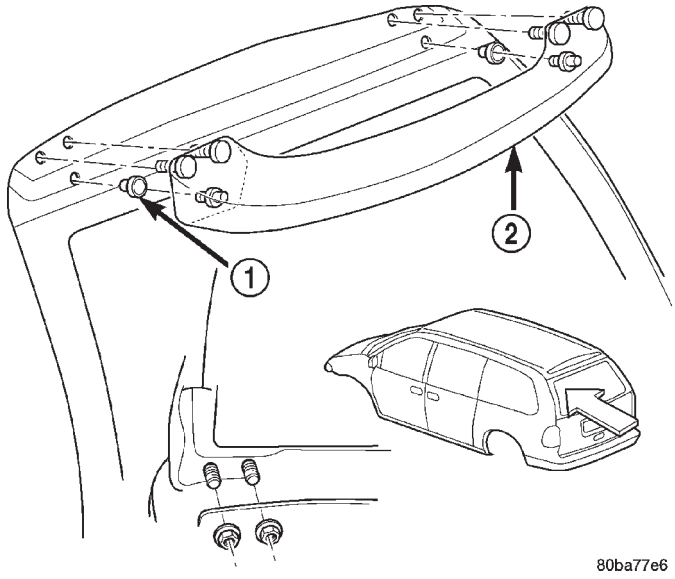

Fig. 5 LIFTGATE SPOILER

1 - RETAINER SEALER WASHER
2 - LIFT GATE SPOILER

INSTALLATION

(1) Place liftgate spoiler in position and install nuts.
(2) Tighten nuts to 9 N·m (80 in. lbs.) torque.

LOCK CYLINDER

REMOVAL

(1) Remove the liftgate trim panel. (Refer to 23 - BODY/DECKLID/HATCH/LIFTGATE/TAILGATE/ TRIM PANEL - REMOVAL)
(2) Disconnect the electrical connector.
(3) Disconnect the latch rod.
(4) Rotate plastic lock cylinder nut one quarter turn and remove nut and spring washer.
(5) Remove the lock cylinder from the liftgate.

INSTALLATION

(1) Install lock cylinder into liftgate.
(2) Install the plastic lock cylinder lock nut, spring washer and rotate one quarter turn.
(3) Connect the electrical connector.
(4) Connect the latch rod.
(5) Install the trim panel. (Refer to 23 - BODY/ DECKLID/HATCH/LIFTGATE/TAILGATE/TRIM PANEL - INSTALLATION)
(6) Verify lock cylinder operation.

SUPPORT CYLINDER

REMOVAL

(1) Release liftgate latch and open liftgate.
(2) Support liftgate on a suitable lifting device in the full open position.
(3) Pull liftgate opening weatherstrip from D-pillar flange next to prop assembly end pivot.
(4) Remove bolt attaching end pivot to D-pillar (Fig. 6).
(5) Remove bolt attaching prop assembly to liftgate.
(6) Remove prop assembly from vehicle.

INSTALLATION

Ensure that the cylinder end is attached to the D-pillar and the shaft end is attached to the liftgate.
(1) Place prop assembly in position.
(2) Install bolt attaching prop assembly to liftgate.
(3) Install bolt attaching end pivot to D-pillar. Tighten bolts to 28 N·m (21 ft. lbs.) torque.
(4) Install liftgate opening weatherstrip to D-pillar flange next to prop assembly end pivot.
(5) Close liftgate. Check liftgate operation.

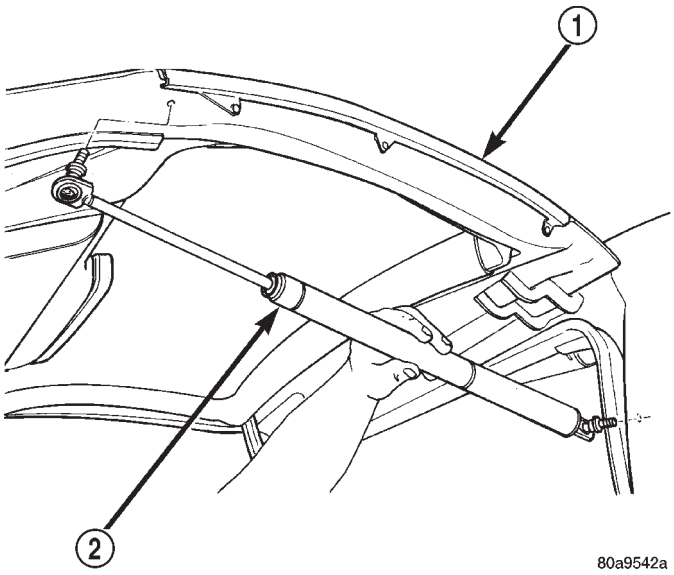

Fig. 6 LIFTGATE PROP ASSEMBLY

1 - LIFTGATE
2 - PROP ASSEMBLY

TRIM PANEL

REMOVAL

(1) Remove the bolt attaching the lift motor link, if equipped (Fig. 7).
(2) Remove liftgate upper frame molding (Fig. 8).
(3) Remove assist handle screws.
(4) Disengage hidden clips holding trim panel to liftgate from around perimeter or liftgate (Fig. 8).
(5) Disconnect wire connector from lamps.
(6) Remove liftgate trim panel from vehicle.

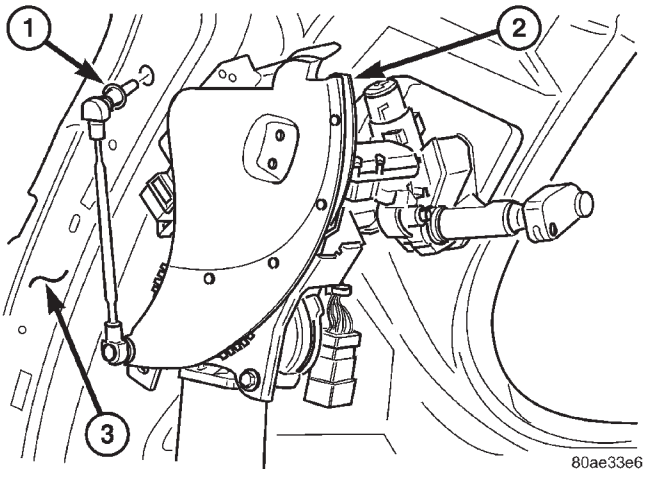

Fig. 7 LIFTGATE MOTOR

1 - LIFTGATE MOTOR LINK BOLT
2 - LIFTGATE MOTOR
3 - LIFTGATE

TRIM PANEL (Continued)

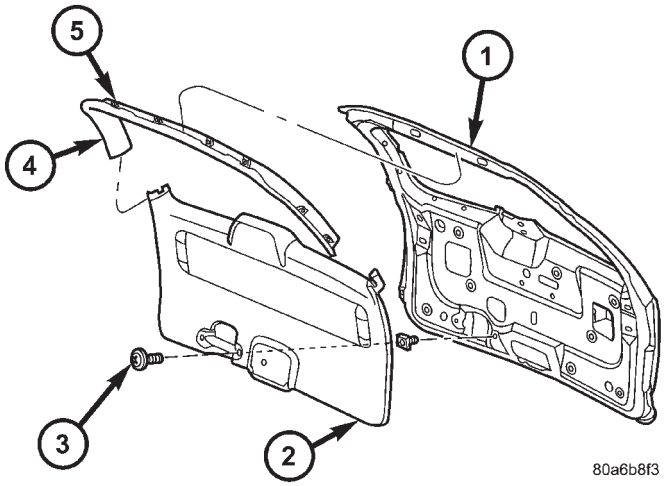

Fig. 8 LIFTGATE TRIM

1 - LIFTGATE
2 - LOWER TRIM PANEL
3 - ASSIST HANDLE SCREWS
4 - UPPER TRIM
5 - UPPER TRIM CLIPS

INSTALLATION

(1) Place liftgate trim panel in position on vehicle.
(2) Engage hidden clips to hold trim panel to liftgate and fasteners around perimeter of liftgate (Fig. 8).
(3) Connect wire connector into lamp.
(4) Install courtesy lamps into liftgate trim.
(5) Install screws to hold assist handle to liftgate.
(6) Install upper frame side moldings.
(7) Install liftgate upper frame molding.
(8) Install the bolt attaching the lifgate motor link and tighten to 28 N·m (21 ft. lbs.)

SLAM BUMPER

REMOVAL

REMOVAL

(1) Open liftgate.
(2) Remove liftgate stop bumper body side attaching bolts (Fig. 9).
(3) Remove liftgate stop bumper.

REMOVAL - LIFTGATE SIDE

(1) Open liftgate.
(2) Remove liftgate stop bumper liftgate side attaching bolts (Fig. 10).
(3) Remove liftgate stop bumper.

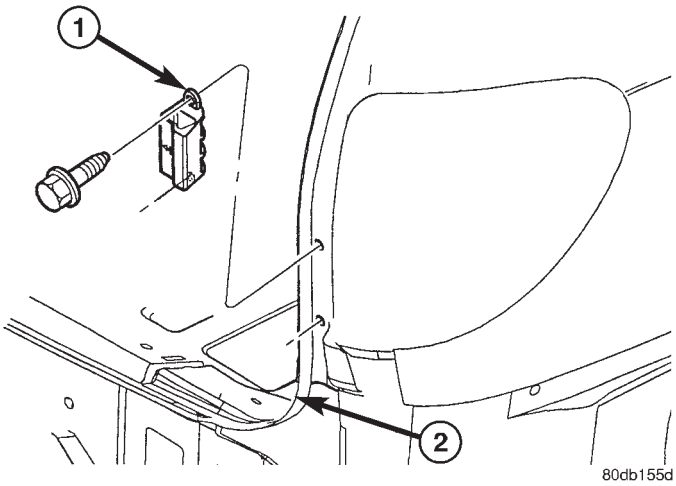

Fig. 9 LIFTGATE STOP BUMPER - BODY SIDE

1 - LIFTGATE STOP BUMPER
2 - LIFTGATE OPENING

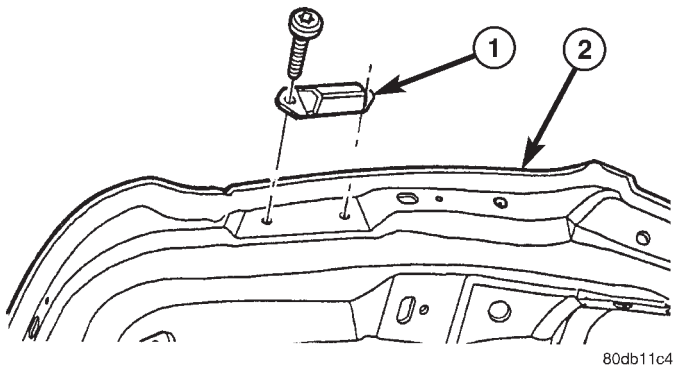

Fig. 10 LIFTGATE STOP BUMPER - LIFTGATE SIDE

1 - LIFTGATE STOP BUMPER
2 - LIFTGATE

INSTALLATION

INSTALLATION

(1) Place liftgate stop bumper into position.
(2) Install bolts attaching liftgate stop bumper to body side (Fig. 9).
(3) Close liftgate.

INSTALLATION - LIFTGATE SIDE

(1) Place liftgate stop bumper into position.
(2) Install bolts attaching liftgate stop bumper to liftgate (Fig. 10).
(3) Close liftgate.

EXTERIOR

TABLE OF CONTENTS

page

BODY SIDE MOLDINGS
REMOVAL 44
INSTALLATION 45
COWL GRILLE
REMOVAL 50
INSTALLATION 50
EXTERIOR NAME PLATES - TAPE ATTACHED
REMOVAL 50
INSTALLATION 51
EXTERIOR NAME PLATES - ADHESIVE ATTACHED
REMOVAL 51
INSTALLATION 51
FRONT FENDER
REMOVAL 51
INSTALLATION 51
FUEL FILL DOOR
REMOVAL 52
INSTALLATION 52
FUEL FILL DOOR BLOCKER LATCH
REMOVAL 52
INSTALLATION 52
FUEL FILL DOOR BLOCKER LATCH STRIKER
REMOVAL 53
INSTALLATION 53
FUEL FILL DOOR BLOCKER LOCKOUT LINK
REMOVAL 53

page

INSTALLATION 54
GRILLE OPENING REINFORCEMENT
REMOVAL 54
INSTALLATION 54
FRONT WHEELHOUSE SPLASH SHIELD
REMOVAL 55
INSTALLATION 55
LUGGAGE RACK RISER
REMOVAL 55
INSTALLATION 56
LUGGAGE RACK CROSSBAR
REMOVAL 56
INSTALLATION 57
REAR QUARTER PANEL/FENDER AIR EXHAUSTER
DESCRIPTION 57
REMOVAL 57
INSTALLATION 58
ROOF JOINT MOLDING
REMOVAL 58
INSTALLATION 58
SIDE VIEW MIRROR
REMOVAL 58
INSTALLATION 58
SIDE VIEW MIRROR GLASS
REMOVAL 59
INSTALLATION 59

BODY SIDE MOLDINGS

REMOVAL

Refer to (Fig. 1), (Fig. 2), (Fig. 3), (Fig. 4) or (Fig. 5)for proper location of fasteners holding the molding to the wheelhouse lip and rocker panels.

(1) Warm the affected stick on molding and body metal to approximately 38° C (100° F) using a suitable heat lamp or heat gun.

(2) If equipped, remove pop rivets holding molding edge to wheelhouse lip.

(3) Pull stick on molding from painted surface.

(4) Remove adhesive tape residue from painted surface of vehicle. Use a 3M Scotch-Brite™ Molding Adhesive and Stripe Removal Disc, or equivalent, to clean adhesive residue from painted surfaces. These products are available from automotive paint suppliers. Refer to instructions supplied with the specific product for proper usage.

BODY SIDE MOLDINGS (Continued)

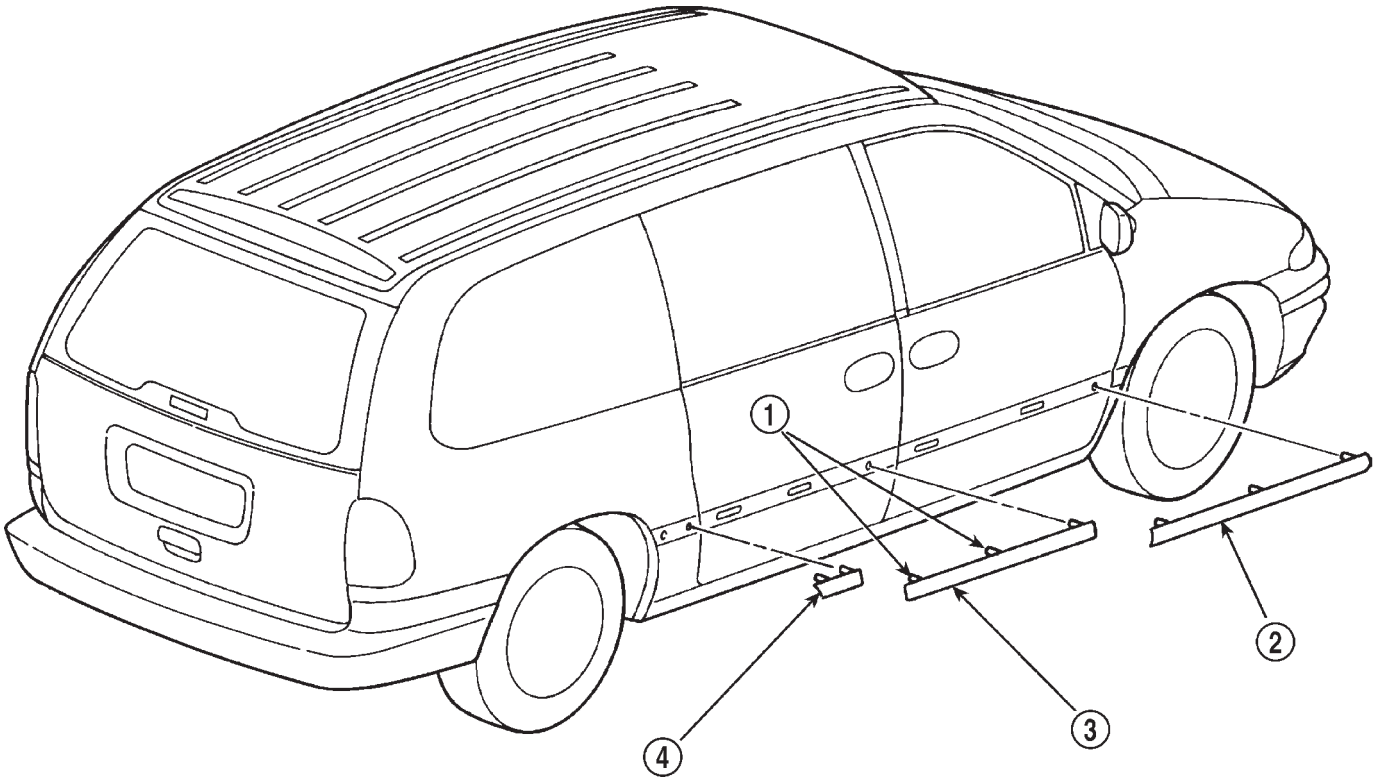

800dfaa1

Fig. 1 BODY SIDE MOLDINGS - BASE TYPICAL

1 - GUIDE PINS
2 - FRONT DOOR MOLDING
3 - SLIDING DOOR MOLDING
4 - QUARTER PANEL MOLDING

INSTALLATION

Refer to (Fig. 1), (Fig. 2), (Fig. 3), (Fig. 4) or (Fig. 5)for proper location of fasteners to hold the molding to the wheelhouse lip and rocker panels.

(1) If molding is to be reused;

(a) Remove tape residue from molding.

(b) Clean back of molding with Mopar® Super Kleen, or equivalent.

(c) Wipe molding dry with lint free cloth.

(d) Apply a single coat of Mopar® TPO Molding Prep to tape side of molding and allow to dry thoroughly.

(e) Apply new body side molding (two sided adhesive) tape to back of molding.

(2) Clean body surface with Mopar® Super Kleen, or equivalent. Wipe surface dry with lint free cloth.

(3) Remove protective cover from tape on back of molding.

(4) Apply molding to body from front to rear, inserting locator pins into hole in body panel.

(5) Using a roller tool, roll molding onto body panel with enough force to assure adhesion. Do not apply excessive force, or damage to body panels may result.

(6) Install pop rivets to hold molding edge to wheelhouse lip, if necessary.

BODY SIDE MOLDINGS (Continued)

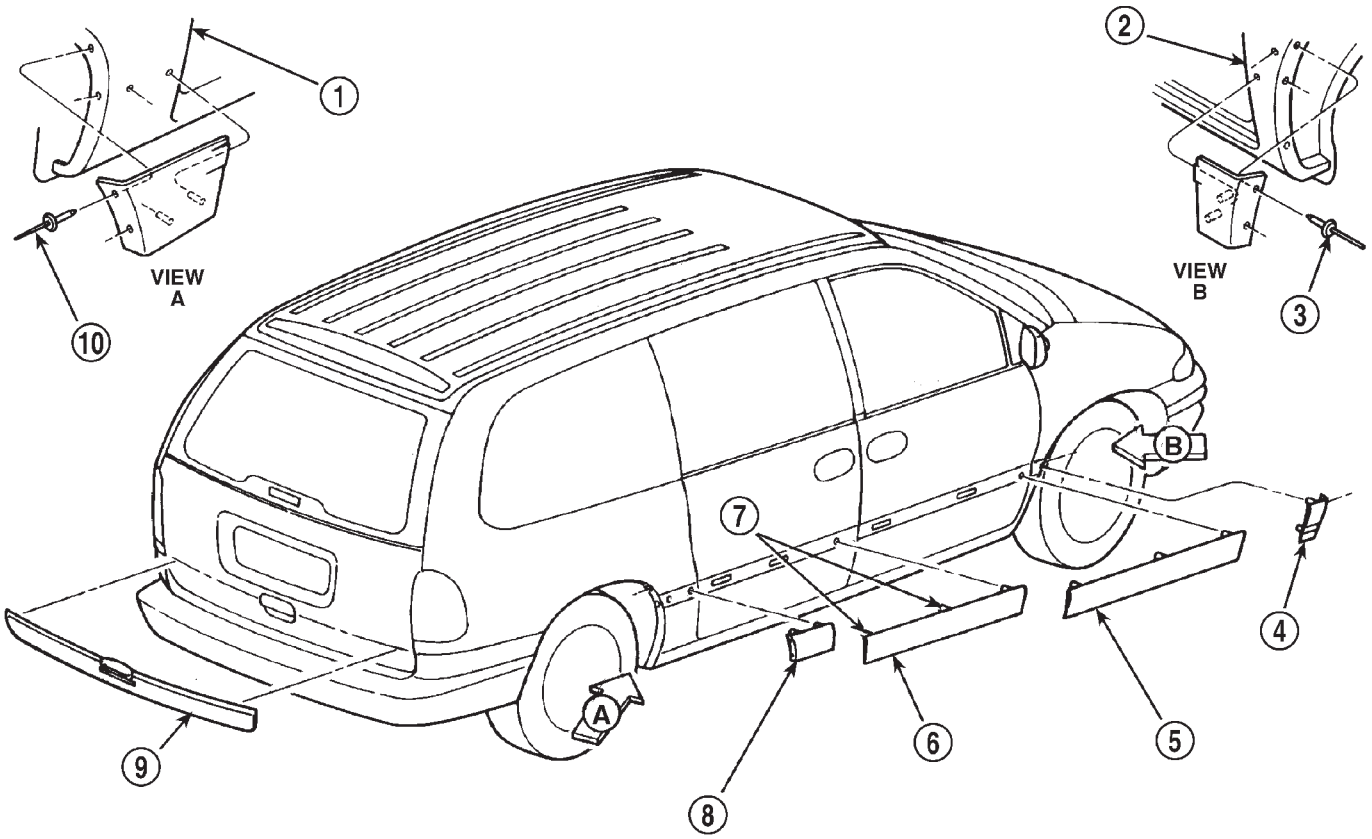

Fig. 2 BODY SIDE MOLDINGS - HIGHLINE TYPICAL

1 - QUARTER PANEL
2 - FRONT FENDER
3 - POP-RIVET
4 - FENDER MOLDING
5 - FRONT DOOR MOLDING
6 - SLIDING DOOR MOLDING
7 - GUIDE PINS
8 - QUARTER PANEL MOLDING
9 - LIFTGATE MOLDING
10 - POP-RIVET

BODY SIDE MOLDINGS (Continued)

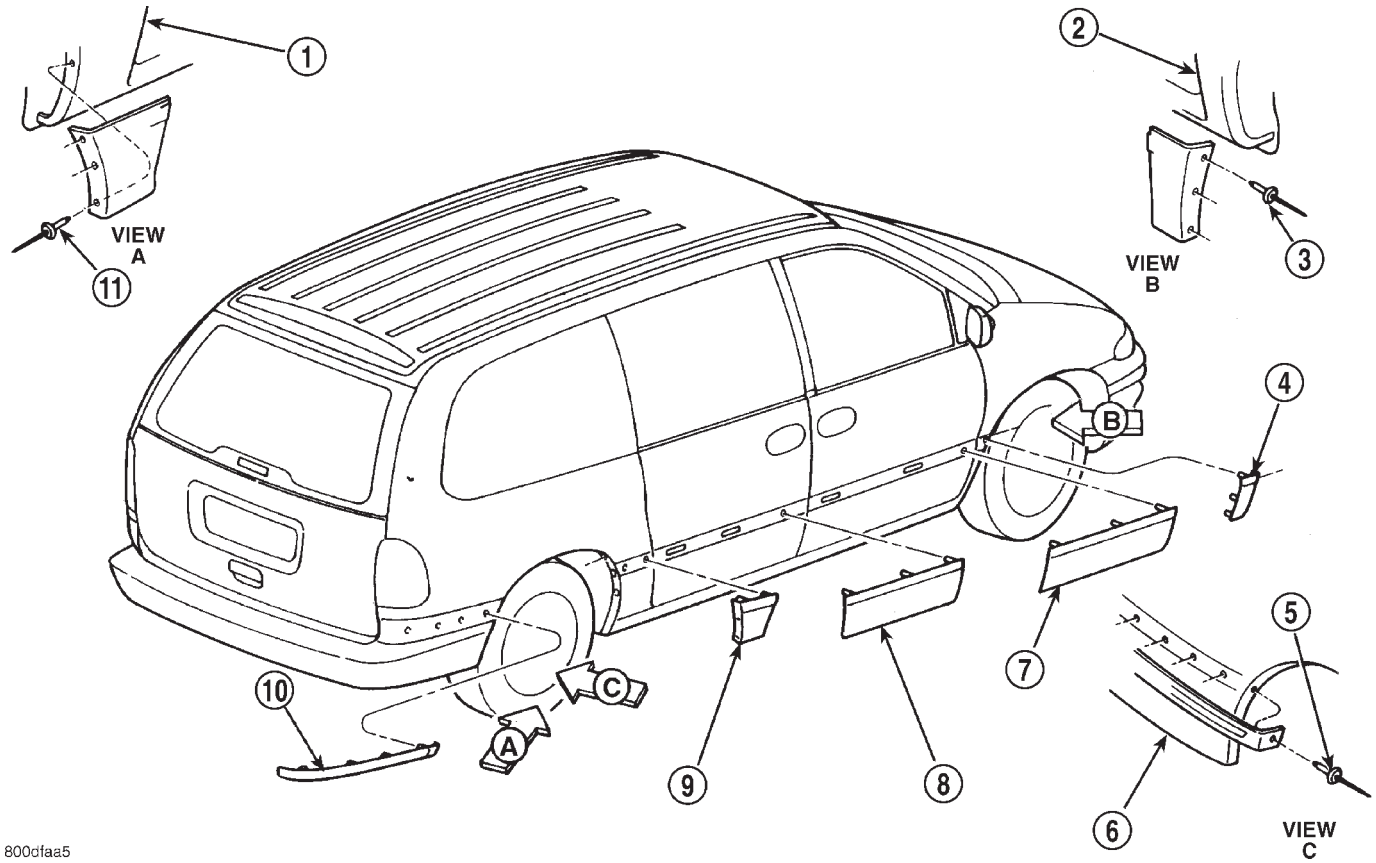

Fig. 3 BODY SIDE MOLDINGS - PREMIUM TYPICAL

1 - QUARTER PANEL
2 - FRONT FENDER
3 - POP-RIVET
4 - FENDER MOLDING
5 - POP-RIVET
6 - FASCIA
7 - FRONT DOOR MOLDING
8 - SLIDING DOOR MOLDING
9 - QUARTER PANEL MOLDING
10 - FASCIA MOLDING
11 - POP-RIVET

BODY SIDE MOLDINGS (Continued)

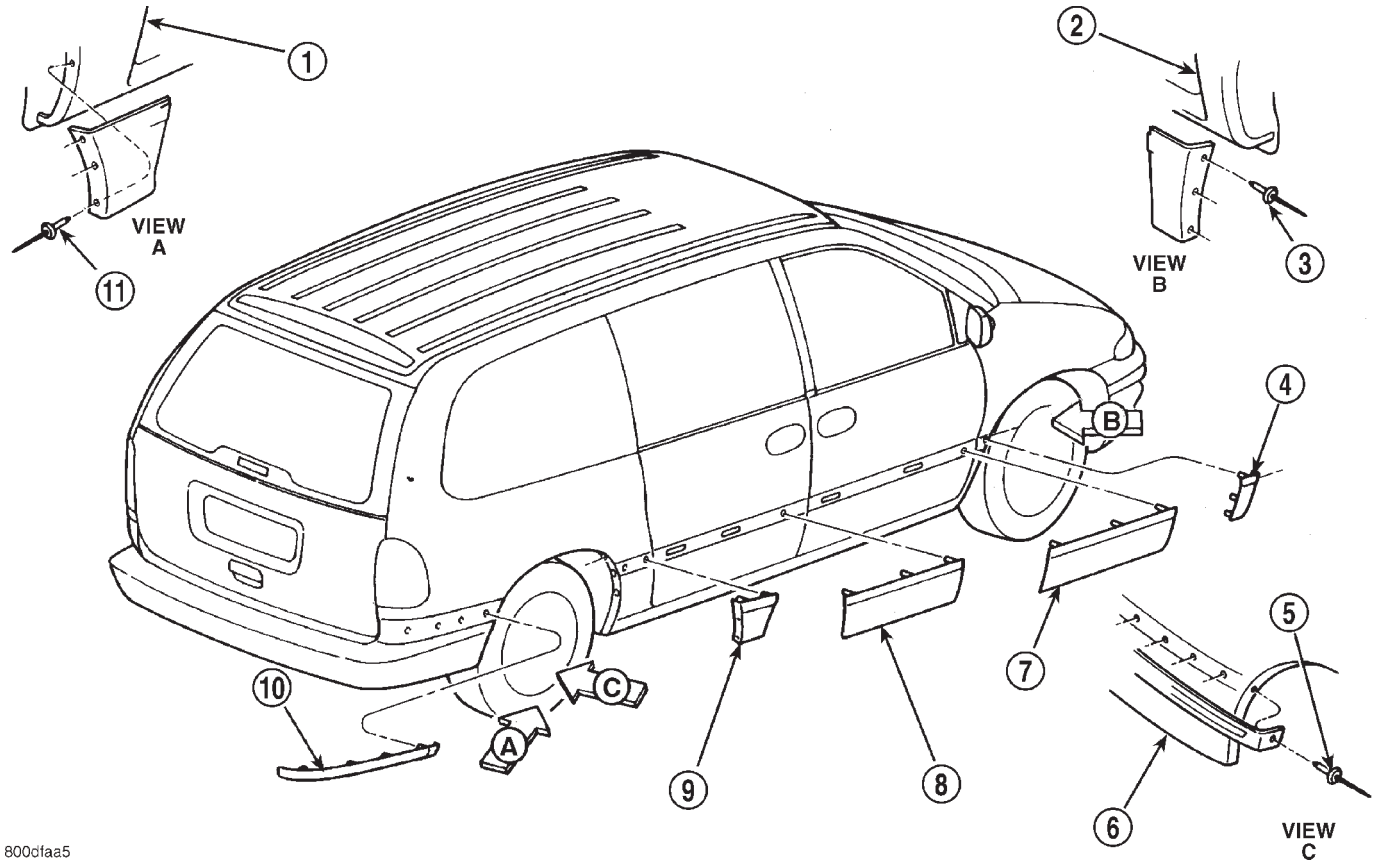

Fig. 4 BODY SIDE MOLDINGS - PREMIUM TYPICAL

1 - QUARTER PANEL
2 - FRONT FENDER
3 - POP-RIVET
4 - FENDER MOLDING
5 - POP-RIVET
6 - FASCIA
7 - FRONT DOOR MOLDING
8 - SLIDING DOOR MOLDING
9 - QUARTER PANEL MOLDING
10 - FASCIA MOLDING
11 - POP-RIVET

BODY SIDE MOLDINGS (Continued)

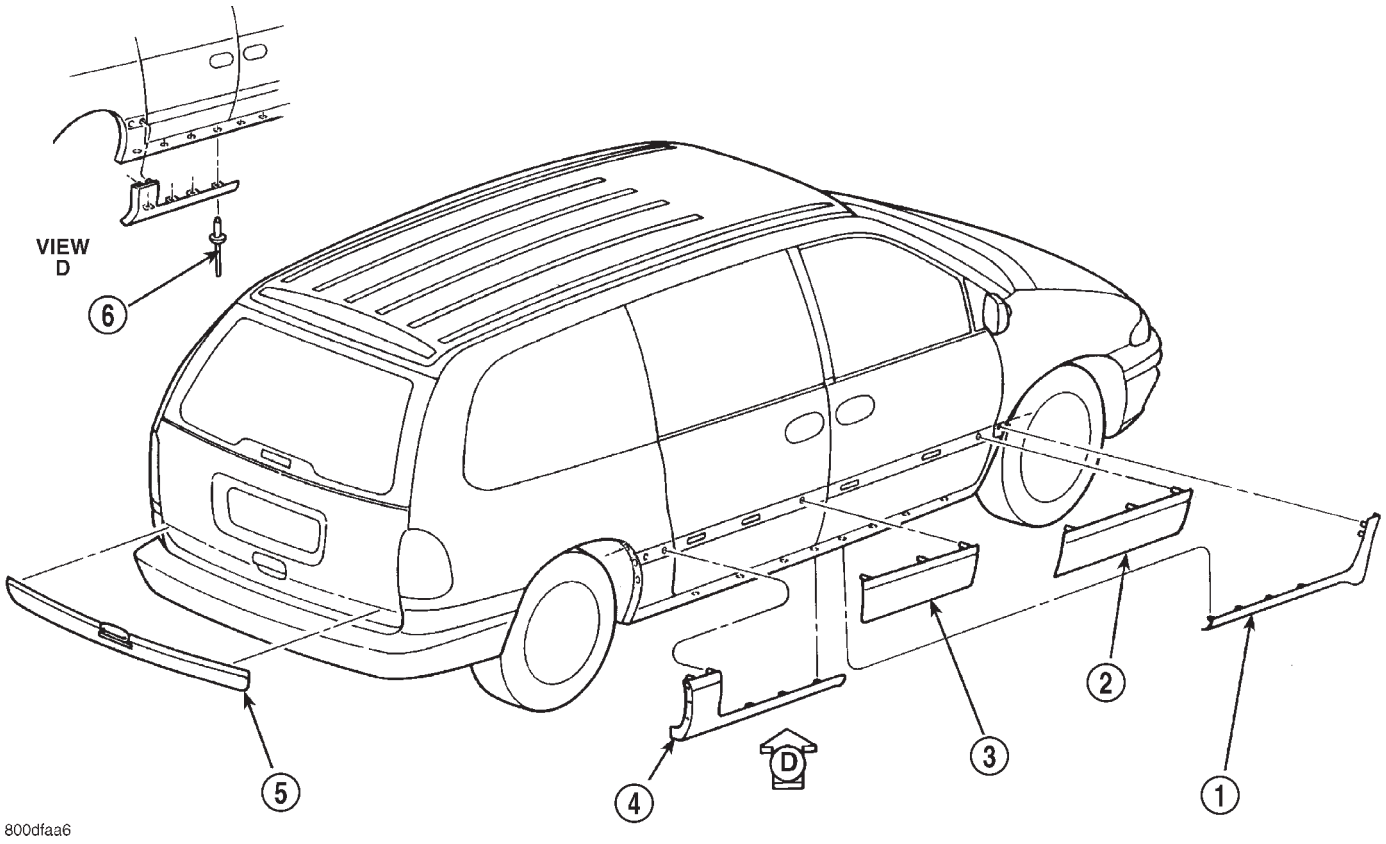

Fig. 5 BODY SIDE MOLDINGS WITH APPLIQUE - TYPICAL

1 - FRONT ROCKER PANEL APPLIQUE
2 - FRONT DOOR MOLDING
3 - SLIDING DOOR MOLDING
4 - REAR ROCKER PANEL APPLIQUE
5 - LIFTGATE MOLDING
6 - POP-RIVET

COWL GRILLE

REMOVAL

(1) Remove wiper arms. (Refer to 8 - ELECTRICAL/WIPERS/WASHERS/WIPER ARMS - REMOVAL)

(2) Remove four (4) screws securing cowl cover to wiper module (Fig. 6).

(3) Disengage quarter turn fasteners at outboard ends of cowl grill from body.

(4) Release hood latch and open hood.

CAUTION: To prevent hood scratching of cowl grille before removal, cover outboard exterior ends of cowl grille with masking tape or equivalent method.

NOTE: Do not over bend cowl grille during removal. Bend cowl grille just enough to clear top of wiper pivot shaft and bottom rear corner of hood.

(5) Remove cowl grill by raising above driver side wiper pivot shaft and swinging away towards engine compartment. The cowl grille will need to be bent on outboard end to clear simultaneously top of wiper pivot shaft and bottom corner of hood.

(6) Close hood. Do not latch. Remove outboard screws. (Fig. 7).

(7) Disconnect washer hose in line connector.

(8) Disconnect washer hose and grommet from hole in wiper module and pull out.

(9) Remove cowl grille by raising over opposite wiper pivot shaft and removing away from vehicle.

(10) Remove cowl cover from vehicle.

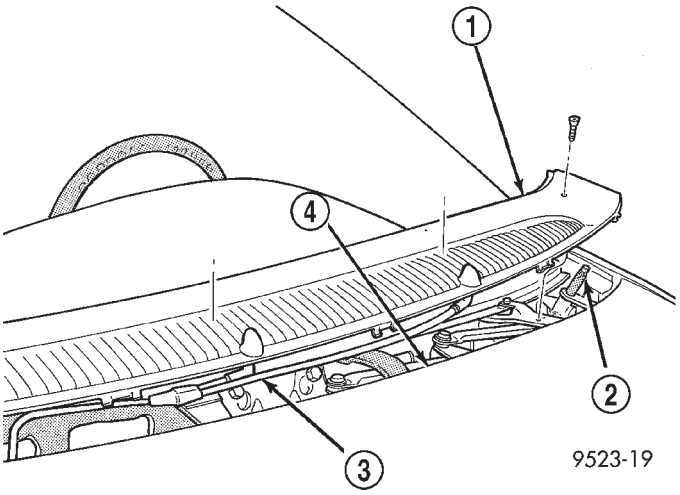

Fig. 6 COWL COVER

1 - COWL COVER
2 - WIPER PIVOT
3 - WASHER HOSES
4 - HOOD

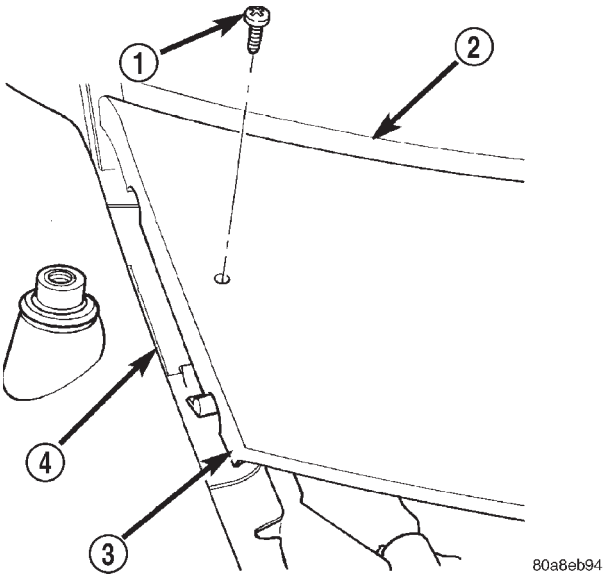

Fig. 7 COWL COVER RETAINERS

1 - SCREW
2 - WINDSHIELD
3 - COWL COVER
4 - FRONT FENDER

INSTALLATION

(1) Reverse removal procedure.

(2) When installing cowl cover over wiper module, make sure fore aft locator on the underside of cowl grill seat into the locator grooves on top of wiper module.

(3) Star all cowl grille mounting screws by hand before torquing to specifications.

(4) Assure washer hose is properly routed and not pinched.

(5) Center cowl grille to body and windshield.

(6) Assure “arrow” indicator head of quarter turn fasteners is pointing toward windshield.

(7) Tighten screw to 1.2 N·m (11 in. lbs.) torque.

(8) Install the wiper arms. (Refer to 8 - ELECTRICAL/WIPERS/WASHERS/WIPER ARMS - INSTALLATION)

(9) Check for proper spray pattern from washer nozzles.

EXTERIOR NAME PLATES - TAPE ATTACHED

REMOVAL

(1) Mark reference points before removing.

(2) Using a heat gun gently apply heat in a circular motion to loosen the adhesive bond.

(3) Using a nonmetallic prying device, such as a plastic or wood trim stick gently pry up at corners and remove.

EXTERIOR NAME PLATES - TAPE ATTACHED (Continued)

(4) Clean off all traces of adhesive or double sided tape from the panel with a general purpose adhesive remover.

INSTALLATION

(1) Clean panel surface with isopropy alcohol.
(2) Align badgeing to reference points.
(3) Install and press securely to full adhesive contact
(4) Clean away any reference points.

EXTERIOR NAME PLATES - ADHESIVE ATTACHED

REMOVAL

(1) Mark reference points before removing.
(2) Using a heat gun gently apply heat in a circular motion to loosen the adhesive bond.
(3) With your fingernail lift up and peel away badgeing/tape from panel, using a heat gun as you go.
(4) Clean off all traces of adhesive from the panel(s) with a general purpose adhesive remover.

INSTALLATION

(1) Clean panel surface with isopropy alcohol.
(2) Remove paper carrier and align badgeing/tape to reference points or adjacent panel.
(3) Install and press securely, using a plastic spreader to eliminate all air bubbles.
(4) Remove top protective carrier.
(5) Clean away any reference points.

FRONT FENDER

REMOVAL

(1) Remove headlamp housing. (Refer to 8 - ELECTRICAL/LAMPS/LIGHTING - EXTERIOR/HEADLAMP UNIT - REMOVAL)
(2) Remove mud guard.
(3) Remove inner splash shield.
(4) Remove fender to fascia nuts.
(5) Remove outboard cowl grille/fender bracket screw.
(6) Remove fender bolt to lower rocker panel.
(7) Remove fender bolt to lower cowl.
(8) Pull fascia away from fender.
(9) Remove bolts attaching fender to upper rail.
(10) Remove fender from vehicle (Fig. 8).

INSTALLATION

(1) Place fender in position on vehicle.
(2) From inside engine compartment, start the center upper rail bolt. install all the bolts attaching fender to upper rail and tighten.
(3) Install fender to lower cowl panel bolt.
(4) Install fender to rocker panel bolt.
(5) Place fascia into position.
(6) Install outboard cowl grille/fender bracket screw.
(7) Install fender to fascia nuts.
(8) Install inner splash shield.
(9) Install mud guard.
(10) Install headlamp assembly. (Refer to 8 - ELECTRICAL/LAMPS/LIGHTING - EXTERIOR/HEADLAMP UNIT - INSTALLATION)
(11) Check fender for flush and gap.

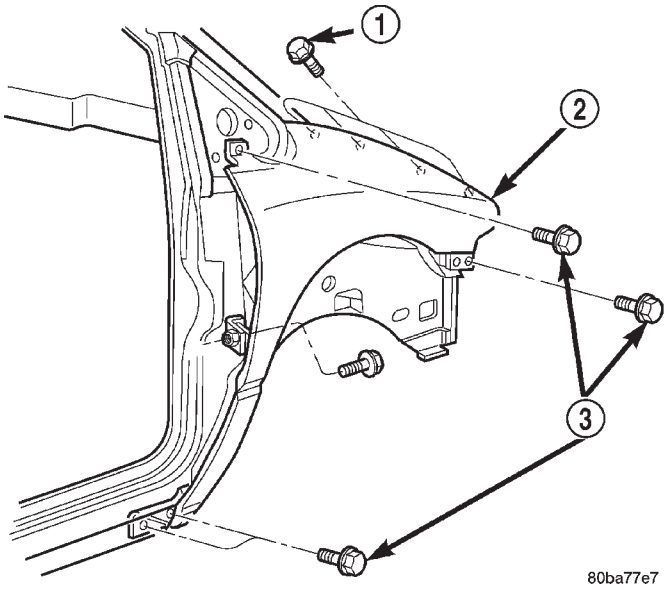

Fig. 8 FENDER

1 - FASTENERS
2 - FENDER
3 - FASTENERS

FUEL FILL DOOR

REMOVAL

(1) Remove left quarter trim panel.
(2) Remove water shield patch covering access hole in C-pillar.
(3) Disengage latch release link from clip on fuel fill blocker latch arm (Fig. 12).
(4) Open fuel fill door.
(5) Remove screws holding fuel fill neck to fuel filler housing.
(6) Position fuel fill neck out of the way.
(7) Reaching inside fuel filler housing, release clips holding housing to quarter panel (Fig. 9).
(8) Remove fuel fill door from vehicle.
(9) Disengage clip holding link to fuel fill door (Fig. 13).
(10) Remove link from fuel fill door.

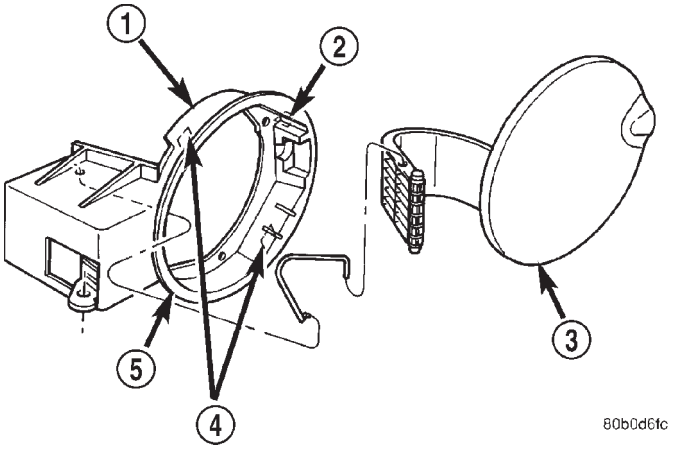

Fig. 9 FUEL FILLER HOUSING AND DOOR

1 - FUEL FILLER HOUSING W/LATCH
2 - CLIP
3 - FUEL FILLER HOUSING DOOR
4 - CLIPS
5 - FIX CLIP

INSTALLATION

(1) Install spring to housing and door
(2) Snap door into housing.
(3) Insert lockout link into clip on fuel fill door.
(4) Engage clip to hold link to fuel fill door.
(5) Insert lockout link through grommet in panel between inner and outer quarter panel.
(6) Close fuel fill door.
(7) Install fuel filler housing to outer quarter panel.
(8) Verify that all clips on fuel filler housing are fully engaged to outer quarter panel.
(9) Place fuel fill neck in position.
(10) Install screws to hold fuel fill neck to fuel filler housing.
(11) Engage latch release link into clip on fuel fill blocker latch arm.
(12) Verify fuel fill blocker latch operation.
(13) Install water shield patch to cover access hole in C-pillar.
(14) Install left quarter trim panel.

FUEL FILL DOOR BLOCKER LATCH

REMOVAL

(1) Remove left quarter trim panel.
(2) Remove water shield patch covering access hole in C-pillar.
(3) Disengage latch release link from clip on fuel fill blocker latch arm (Fig. 12).
(4) Remove screws holding fuel fill blocker latch to C-pillar (Fig. 10).
(5) Remove fuel fill blocker latch from vehicle.

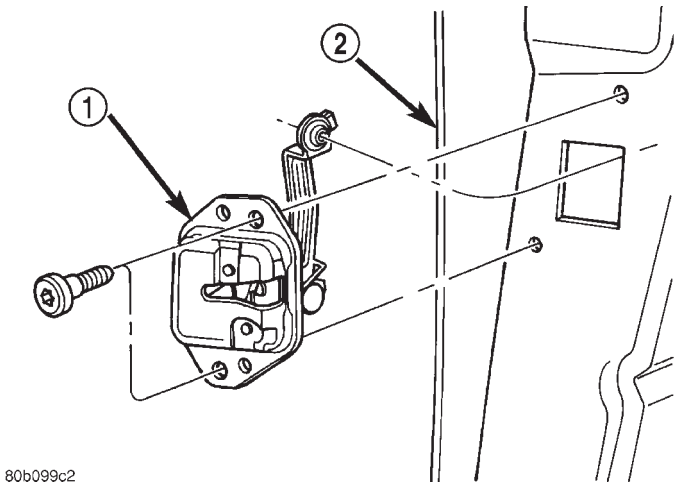

Fig. 10 FUEL FILL

1 - FUEL FILLER BLOCKER LATCH ARM
2 - C-PILLAR

INSTALLATION

(1) Position fuel fill blocker latch on vehicle.
(2) Install screws to hold fuel fill blocker latch to C-pillar.
(3) Engage latch release link into clip on fuel fill blocker latch arm with fuel door in the closed position.
(4) Install water shield patch to cover access hole in C-pillar.
(5) Verify fuel fill blocker latch operation.
(6) Install left quarter trim panel.

FUEL FILL DOOR BLOCKER LATCH STRIKER

REMOVAL

(1) Remove sliding door trim panel.
(2) Remove sound shield as necessary to access striker
(3) Remove screws attaching fuel fill door blocker latch striker to sliding door rear end frame (Fig. 11).
(4) Remove fuel fill door blocker latch striker from vehicle.

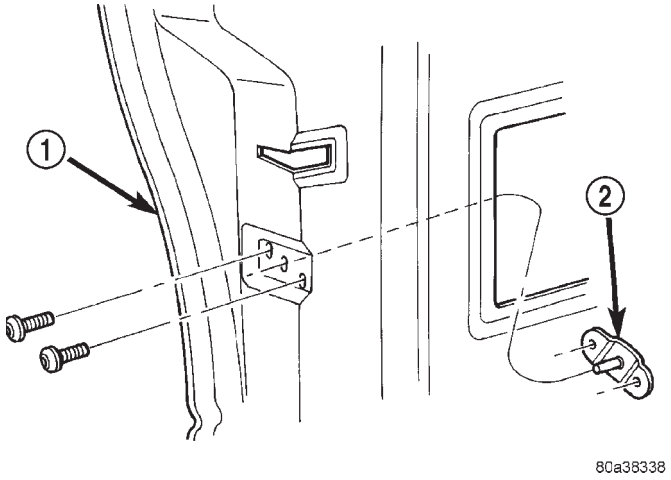

Fig. 11 FUEL FILL DOOR BLOCKER LATCH STRIKER

1 - LEFT SLIDING DOOR
2 - FUEL FILLER STOP STRIKER

INSTALLATION

(1) Position fuel fill door blocker latch striker on vehicle.
(2) Install screws attaching fuel fill door blocker latch striker to sliding door rear end frame.
(3) Install sliding door sound shield.
(4) Install sliding door trim panel.

FUEL FILL DOOR BLOCKER LOCKOUT LINK

REMOVAL

(1) Remove left quarter trim panel.
(2) Remove water shield patch covering access hole in C-pillar.
(3) Disengage fuel filler lockout link from clip on fuel fill blocker latch arm (Fig. 12).
(4) Open fuel fill door.
(5) Remove screws holding fuel filler housing to fuel filler tube neck.
(6) Reaching inside fuel filler housing, release clips holding housing to outer quarter panel.
(7) Remove fuel filler housing and lockout link from vehicle.
(8) Disengage clip holding link to fuel fill door (Fig. 13).
(9) Remove link from fuel fill door.

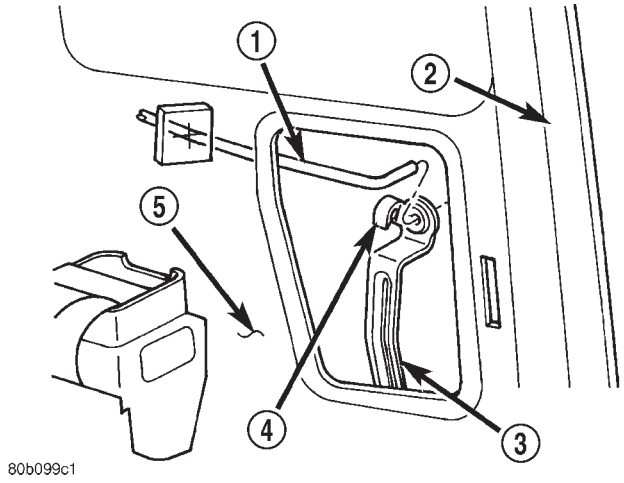

Fig. 12 FUEL FILLER LOCKOUT LINK AT LATCH ARM

1 - FUEL FILLER LOCKOUT LINK
2 - C-PILLAR
3 - FUEL FILLER BLOCKER LATCH ARM
4 - PLASTIC LINK CLIP
5 - INNER QUARTER PANEL

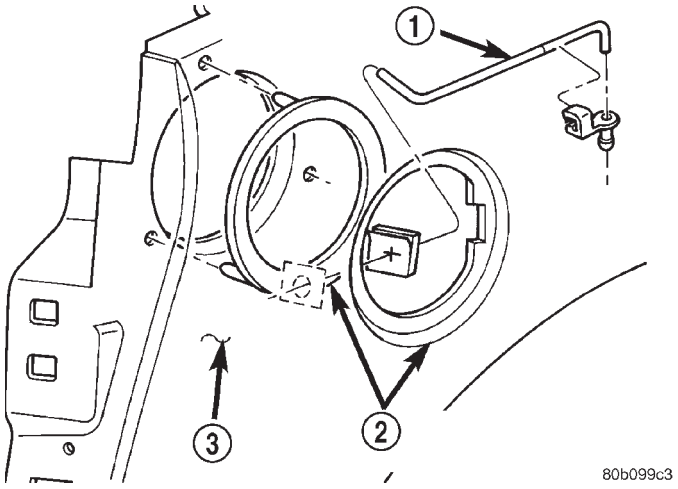

Fig. 13 FUEL FILLER LOCKOUT LINK

1 - FUEL FILLER LOCKOUT LINK
2 - FUEL FILLER OPENING
3 - QUARTER PANEL

FUEL FILL DOOR BLOCKER LOCKOUT LINK (Continued)

INSTALLATION

(1) Insert link into clip on fuel fill door.
(2) Engage clip to hold link to fuel fill door.
(3) Insert lockout link through grommet in panel between inner and outer quarter panel.
(4) Close fuel fill door.
(5) Install fuel filler housing to outer quarter panel.
(6) Verify that all clips on fuel filler housing are fully engaged to outer quarter panel.
(7) Engage fuel filler lockout link into clip on fuel fill blocker latch arm.
(8) Install water shield patch covering access hole in C-pillar.
(9) Install left quarter trim panel.

GRILLE OPENING REINFORCEMENT

REMOVAL

(1) Release hood latch and open hood.
(2) Remove bolts attaching hood latch to crossmember and position latch out of the way.
(3) Remove radiator sight shield.
(4) Remove engine air inlet resonator.
(5) Remove hood cable.
(6) Remove hood prop rod.
(7) Remove screw attaching coolant recovery bottle to crossmember.
(8) Remove bolts attaching radiator isolators to crossmember.
(9) Remove bolts attaching ends of crossmember to radiator closure panel (Fig. 14).
(10) Lift crossmember upward and away from radiator closure panel.
(11) Remove crossmember from vehicle.

INSTALLATION

(1) Place radiator closure panel crossmember in position on vehicle.
(2) Insert ends of crossmember between layered metal sections of radiator closure panel at each side of radiator.

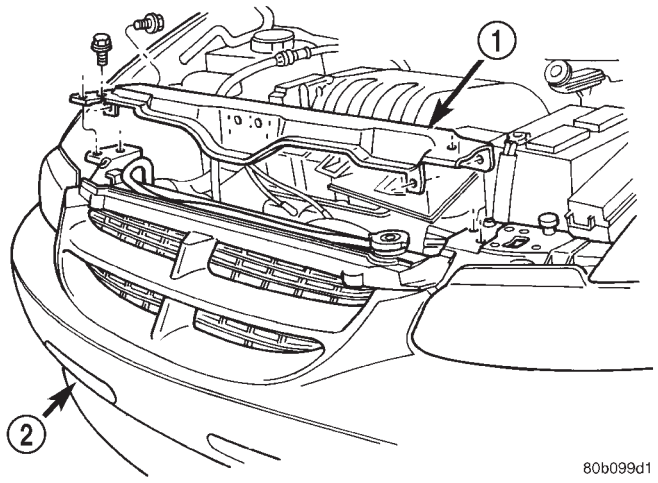

Fig. 14 RADIATOR CLOSURE PANEL CROSSMEMBER

1 - RADIATOR CLOSURE PANEL CROSSMEMBER
2 - FRONT FASCIA

(3) Align with paint breaks around bolt heads.
(4) Install bolts attaching ends of crossmember to radiator closure panel (Fig. 14) . Tighten bolts to 19 N·m (14 ft. lbs.) torque.
(5) Install bolts attaching radiator isolators to crossmember.
(6) Install screw attaching coolant recovery bottle to crossmember.
(7) Install bolt attaching air cleaner housing to crossmember.
(8) Install engine air inlet resonator.
(9) Install radiator sight shield.
(10) Install hood prop rod.
(11) Align hood latch by placing latch over net pierce tabs. If alignment is required, flatten tabs.
(12) Install bolts attaching hood latch to crossmember. Tighten bolts to 13.5 N·m (10 ft. lbs.) torque.
(13) Verify hood latch operation and hood alignment.

FRONT WHEELHOUSE SPLASH SHIELD

REMOVAL

(1) Hoist and support vehicle on safety stands. (Refer to LUBRICATION & MAINTENANCE/HOISTING - STANDARD PROCEDURE).

(2) Remove front wheel.

(3) Remove push pin fasteners attaching splash shield to frame rail forward of suspension.

(4) Remove push pin fasteners attaching splash shield to frame rail rearward of suspension.

(5) Remove screws attaching wheelhouse splash shield to front fender and front bumper fascia.

(6) Remove splash shield from vehicle (Fig. 15).

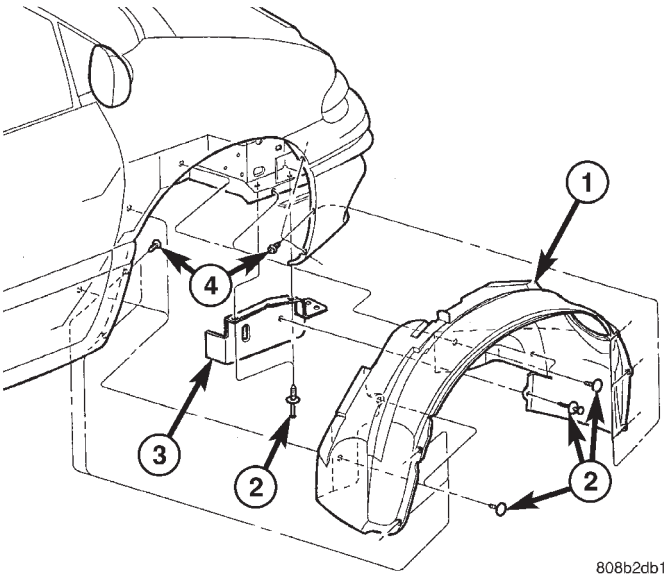

Fig. 15 FRONT WHEELHOUSE SPLASH SHIELD

1 - FRONT FENDER WHEELHOUSE SPLASH SHIELD
2 - PUSH PIN FASTENERS
3 - ACCESSORY DRIVE SPLASH SHIELD
4 - SCREWS

INSTALLATION

(1) Place splash shield in position on vehicle (Fig. 15).

(2) Install push pin fasteners attaching splash shield to frame rail forward of suspension.

(3) Install push pin fasteners attaching splash shield to frame rail rearward of suspension.

(4) Install screws attaching wheelhouse splash shield to front fender.

(5) Install front wheel.

(6) Lower vehicle.

LUGGAGE RACK RISER

REMOVAL

(1) Remove two fasteners from the front riser. Gently pull up on the luggage rack side rail and detach the riser snap to remove riser from the rail (Fig. 16).

(2) Repeat for the opposite side, if necessary.

(3) Remove front riser(s) from vehicle (Fig. 17).

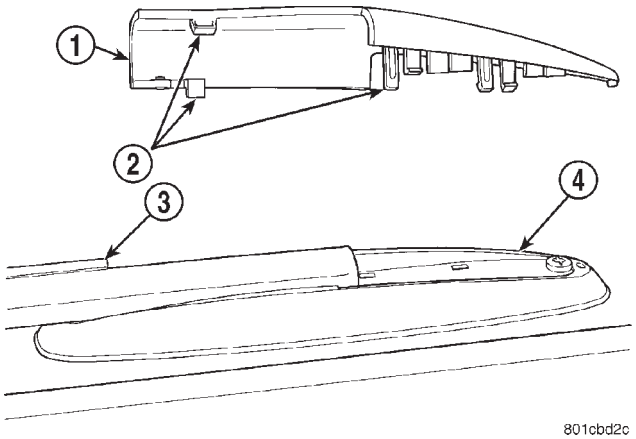

Fig. 16 LUGGAGE RACK RISER COVER

1 - FRONT RISER COVER
2 - LOCK TABS
3 - LUGGAGE RACK SIDE RAIL
4 - FRONT RISER

LUGGAGE RACK RISER (Continued)

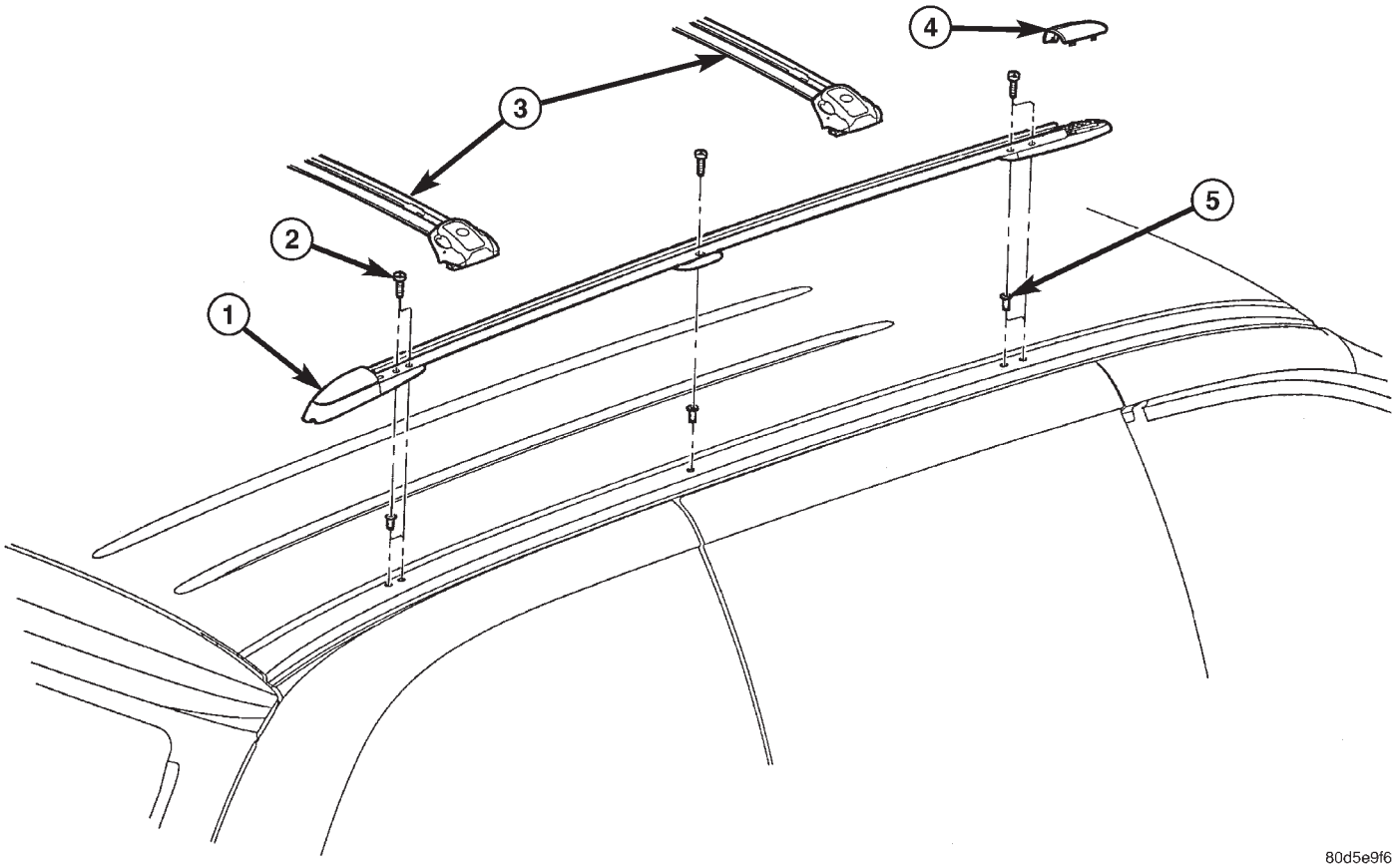

Fig. 17 LUGGAGE RACK, CROSSBARS AND RISER COVER

1 - LUGGAGE RACK SIDE RAILS
2 - SCREWS
3 - CROSSBARS
4 - FRONT RISER COVER
5 - RIV-NUTS

INSTALLATION

(1) Place front riser into position on luggage rack side rail.
(2) Install two fasteners into the riser.
(3) Repeat for the opposite side, if necessary.

LUGGAGE RACK CROSSBAR

REMOVAL

(1) Remove luggage rack front risers.
(2) Depress stanchion levers down until they click into the unlock position. (Fig. 18). Work from side to side sliding the crossbar assembly forward moving a little at a time to ensure it remains perpendicular to the side rails.
(3) Remove crossbar from vehicle.

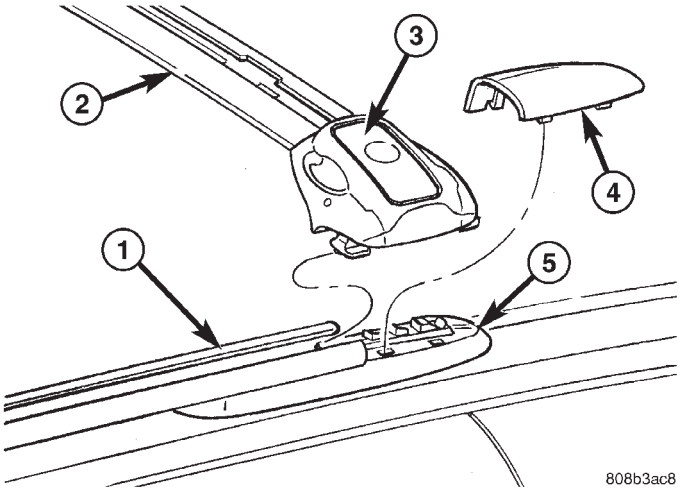

Fig. 18 LUGGAGE RACK CROSSBAR

1 - LUGGAGE RACK
2 - CROSSBAR
3 - SLIDE LOCK
4 - FRONT RISER COVER
5 - FRONT RISER

LUGGAGE RACK CROSSBAR (Continued)

INSTALLATION

NOTE: The crossbar assemblies are designed to be installed in only one way. Check top and bottom surfaces of the crossbar for the word FRONT and directional arrows. The directional arrows must point toward the front of the vehicle.

(1) Place crossbar in position on vehicle.
(2) Work from side to side sliding the crossbar assembly back a little at a time to ensure it remains perpendicular to the side rails.
(3) Position first crossbar assembly crossbar at the second most rearward locator holes. Press the top of the stanchion lever to lock it into position.
(4) Position the second crossbar assembly in the second hole from the front. Lock into place.
(5) Place luggage rack riser into position.
(6) Install two fasteners into riser. Tighten fasteners to 4 mm (35 in. lbs.) torque.

REAR QUARTER PANEL/ FENDER AIR EXHAUSTER

DESCRIPTION

Air exhausters, designed to conform to the body structure, allow air entering at the front of the vehicle to flow out the back. By reducing air pressure within the vehicle, the exhausters also reduce blower noise at any given air flow level compared to operating without them and help reduce door closing effort. They are located in the lower rear comers of the body.

REMOVAL

SHORT WHEELBASE

(1) Remove the rear fascia from the body. (Refer to 13 - FRAMES & BUMPERS/BUMPERS/REAR FASCIA - REMOVAL).
(2) Using a trim stick or another suitable wide flat bladed tool, carefully pry the air exhauster away from the opening in the lower aperture panel until the snap features release (Fig. 19).
(3) Remove the air exhauster from the hole in the lower aperture panel.

LONG WHEELBASE

NOTE: Models with the optional rear heater and air conditioner do not have an air exhauster on the right side of the vehicle, but have a plastic plug installed in the right lower aperture panel. This plug is removed using the same procedure used to remove the air exhauster from the short wheelbase model. Refer to SHORT WHEELBASE .

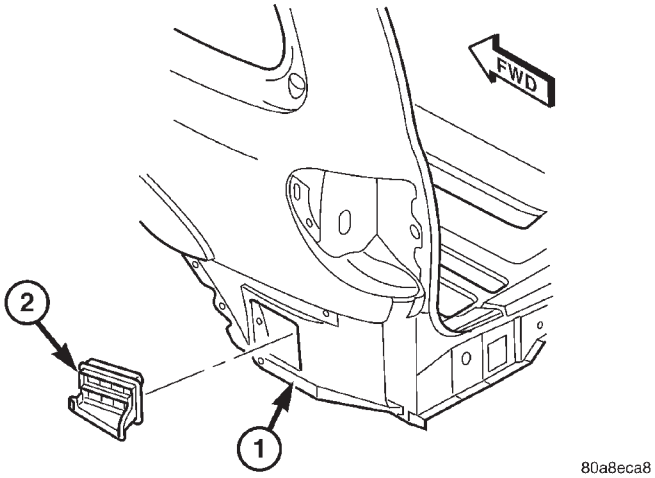

Fig. 19 AIR EXHAUSTER - SWB

1 - LOWER APERTURE PANEL
2 - AIR EXHAUSTER

(1) Remove the quarter trim panel from the inside of the left or right quarter inner panel (Refer to 23 - BODY/INTERIOR/RIGHT QUARTER TRIM PANEL - REMOVAL) or (Refer to 23 - BODY/INTERIOR/ LEFT QUARTER TRIM PANEL - REMOVAL).
(2) Using a trim stick or another suitable wide flat bladed tool, carefully pry the air exhauster away from the opening in the lower aperture panel until the snap features release (Fig. 20).

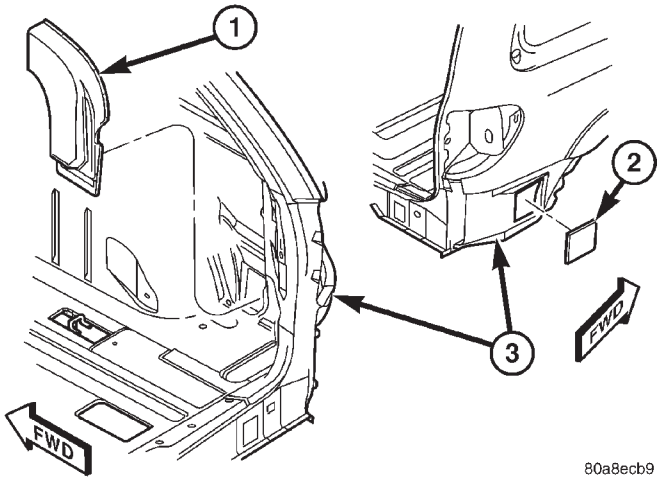

Fig. 20 AIR EXHAUSTER - LWB

1 - AIR EXHAUSTER
2 - PLUG
3 - LOWER APERTURE PANEL

(1) Remove the air exhauster from the hole in the lower aperture panel.

INSTALLATION

SHORT WHEELBASE

(1) Position the air exhauster to the hole in the lower aperture panel (Fig. 19).

(2) Using hand pressure, press the air exhauster into the opening in the lower aperture panel until the snap features are fully engaged.

(3) Reinstall the rear fascia onto the body. (Refer to 13 - FRAMES & BUMPERS/BUMPERS/REAR FASCIA - INSTALLATION).

LONG WHEELBASE

NOTE: Models with the optional rear heater and air conditioner do not have an air exhauster on the right side of the vehicle, but have a plastic plug installed in the right lower aperture panel. This plug is installed using the same procedure used to install the air exhauster onto the short wheelbase model. Refer to SHORT WHEELBASE .

(1) Position the air exhauster to the hole in the lower aperture panel (Fig. 20).

(2) Using hand pressure, press the air exhauster into the opening in the lower aperture panel until the snap features are fully engaged.

(3) Reinstall the quarter trim panel onto the inside of the left or right quarter inner panel. (Refer to 23 - BODY/INTERIOR/RIGHT QUARTER TRIM PANEL - INSTALLATION) or (Refer to 23 - BODY/INTERIOR/LEFT QUARTER TRIM PANEL - INSTALLATION).

ROOF JOINT MOLDING

REMOVAL

The RAP molding is set with body side molding tape. The temperature in the work area and the vehicle should be at least 21° C (70° F) to avoid damaging the RAP moldings.

(1) Warm the affected stick-on molding and body metal to approximately 38° C (100° F) using a suitable heat lamp or heat gun.

(2) Pull stick-on molding from painted surface.

(3) Remove adhesive tape residue from painted surface of vehicle. Use a 3M Scotch-Brite™ Molding Adhesive and Stripe Removal Discs, or equivalent, to clean adhesive residue from painted surfaces. The adhesive removal discs are available from automotive paint suppliers. Refer to instructions supplied with the discs for proper usage.

INSTALLATION

The RAP molding is set with body side molding tape. The temperature in the work area and the vehicle should be at least 21° C (70° F) to avoid damaging the RAP moldings.

(1) If molding is to be reused;

(a) Remove tape residue from molding.

(b) Clean back of molding with Mopar® Super Kleen solvent, or equivalent.

(c) Wipe molding dry with lint free cloth.

(d) Apply new body side molding (two sided adhesive) tape to back of molding.

(2) Clean body surface with Mopar® Super Kleen solvent, or equivalent. Wipe surface dry with lint free cloth.

(3) Remove protective cover from tape on back of molding.

(4) Apply molding to body from front of vehicle to rear.

(5) Using a roller tool, roll molding onto body panel with enough force to assure adhesion and not bend roof panels.

SIDE VIEW MIRROR

REMOVAL

(1) Using a trim stick or equivalent, remove the trim cover (Fig. 21).

(2) Remove the bolts.

(3) Remove the mirror from the pillar.

(4) Disconnect the electrical connector, if equipped.

INSTALLATION

(1) Connect the electrical connector, if equipped.

(2) Place side view mirror in position on vehicle (Fig. 21).

(3) Install the bolts.

(4) Install the trim cover.

SIDE VIEW MIRROR (Continued)

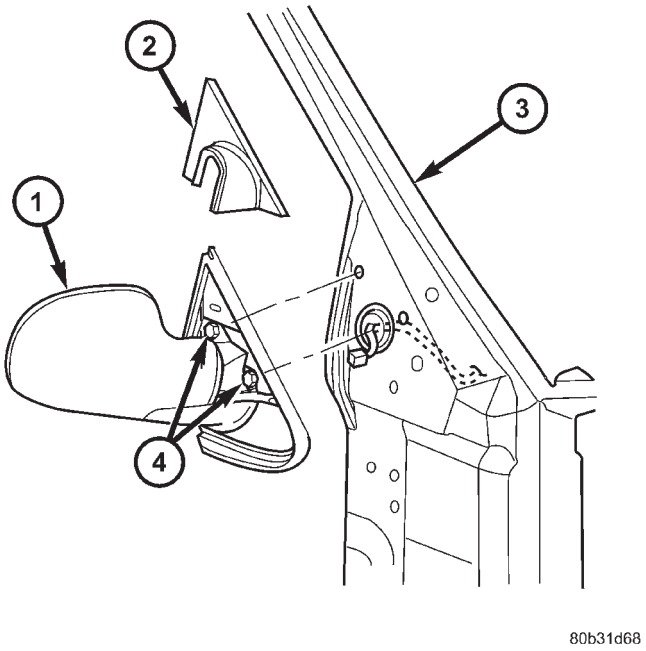

Fig. 21 SIDE VIEW MIRROR

1 - MIRROR
2 - MIRROR TRIM COVER
3 - A-PILLAR
4 - BOLTS

SIDE VIEW MIRROR GLASS

REMOVAL

WARNING: ALWAYS WEAR EYE AND HAND PROTECTION WHEN SERVICING THE MIRROR ASSEMBLY. FAILURE TO OBSERVE THESE WARNINGS MAY RESULT IN PERSONAL INJURY FROM BROKEN GLASS.

(1) Carefully pull/pry the broken glass holder from the mirror assembly.

(2) Disconnect the heated mirror electrical connectors from the terminals on the mirror glass holder, if equipped.

INSTALLATION

CAUTION: It is important to make sure the motor is square to the glass holder (attaching fingers) prior to glass holder attachment, otherwise the glass holder could be installed incorrectly causing poor retention and possible repeat failure.

(1) Position the new mirror glass holder to the mirror assembly.

NOTE: Position the mirror glass holder so that the moisture drain hole on the mirror glass holder assembly is facing downward.

(2) Align the mirror glass holder's attaching fingers to the mirror motor housing.

NOTE: Ensure that the protective rubber cover of the mirror motor housing is positioned correctly around the bottom of the fingers area.

(3) Using one hand, firmly press the mirror glass holder assembly into place while at the same time supporting the housing assembly from the backside with the other hand.

NOTE: Pressure must be applied equally over the center portion of the mirror to engage the mirror glass holder's attaching fingers to the corresponding fingers on the housing assembly. One or more clicks may be heard when finger engagement takes place.

(4) Verify retention of the mirror glass holder assembly by gently pulling outward on the mirror glass holder.

HOOD

TABLE OF CONTENTS

page

HINGE
REMOVAL 60
INSTALLATION 60
HOOD
REMOVAL 60
INSTALLATION 61
LATCH
REMOVAL 61
INSTALLATION 61
LATCH RELEASE CABLE
REMOVAL 61
INSTALLATION 62
LATCH STRIKER
REMOVAL 62
INSTALLATION 62

HINGE

REMOVAL

(1) Remove Front Wiper Unit (Refer to 8 - ELECTRICAL/WIPERS/WASHERS/WIPER MODULE - REMOVAL) for procedure.

(2) Raise hood.

(3) Mark all bolt and hinge attachment locations with a grease pencil or other suitable device to provide reference marks for installation.

(4) Remove pivot bolt from the body half of hood hinge and use suitable device to support the hood.

(5) Remove bolts attaching body half of hood hinge to front fender flange and remove hinge from vehicle (Fig. 1).

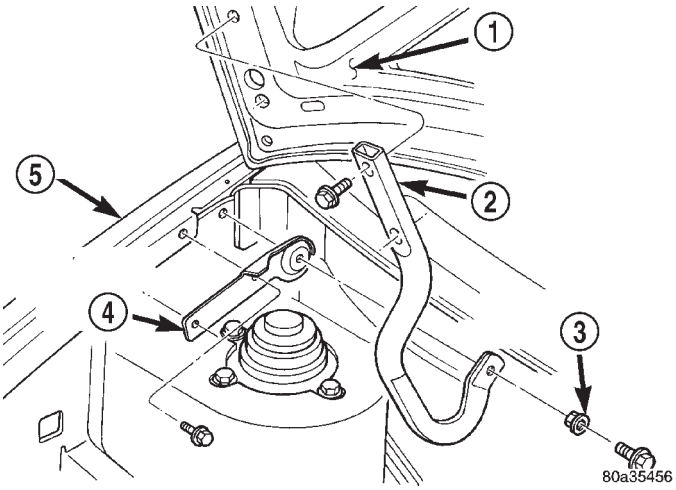

Fig. 1 HOOD HINGE

1 - HOOD
2 - HOOD HALF OF HOOD HINGE
3 - HOOD HINGE PIVOT BUSHING
4 - BODY HALF OF HOOD HINGE
5 - FENDER

INSTALLATION

(1) If necessary, paint new hinge before installation.

(2) Place body half of hood hinge in position on vehicle.

(3) Install bolts attaching hood hinge to front fender flange. Tighten bolts to 8 N·m (70 in. lbs.) torque.

(4) Install pivot bolt to the body half of hood hinge. Tighten bolts to 28 N·m (21 ft. lbs.) torque.

(5) Install Front Wiper Unit (Refer to 8 - ELECTRICAL/WIPERS/WASHERS/WIPER MODULE - INSTALLATION) for proper procedures.

(6) Align all marks and secure bolts. The hood should be aligned to 4 mm (0.160 in.) gap to the front fenders and flush across the top surfaces along fenders. Shims can be added or removed under hood hinge to achieve proper hood height. Tighten bolts to 13.5 N·m (10 ft. lbs.) torque.Close hood.

HOOD

REMOVAL

(1) Raise hood to full up position.

(2) Mark all bolt and hinge attachment locations with a grease pencil or other suitable device to provide reference marks for installation.

(3) Remove the top bolts attaching hood to hinge and loosen the bottom bolts until they can be removed by hand (Fig. 2).

(4) With assistance from a helper at the opposite side of the vehicle to support the hood, remove bottom bolts attaching hood to hinge.

(5) Remove the hood from the vehicle.

HOOD (Continued)

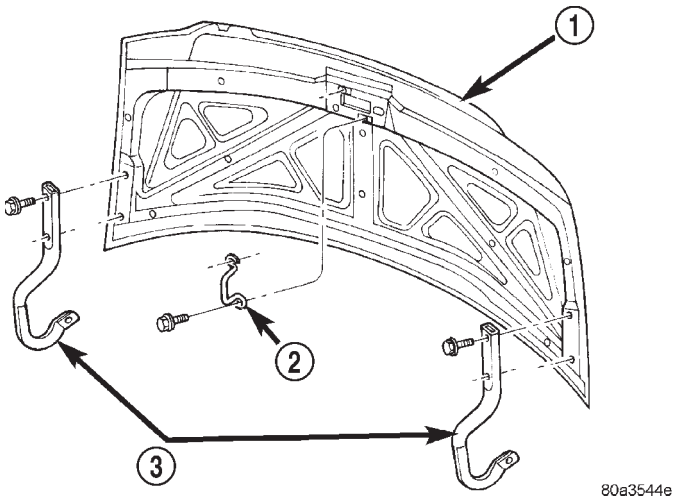

Fig. 2 HOOD

1 - HOOD
2 - HOOD LATCH STRIKER
3 - HOOD HALF OF HOOD HINGE

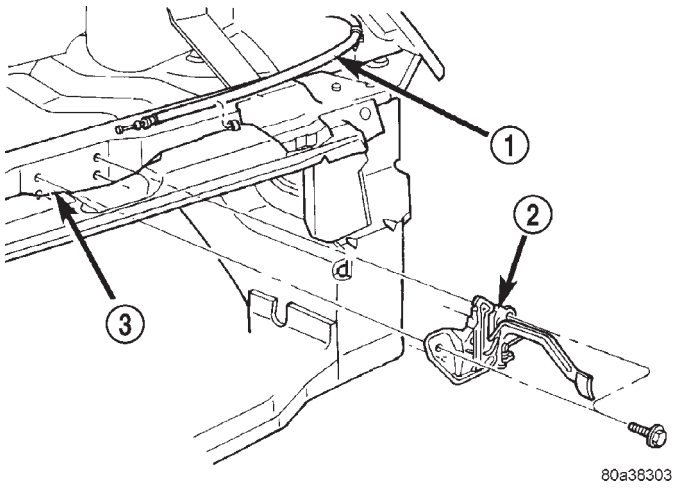

Fig. 3 HOOD LATCH

1 - HOOD RELEASE CABLE
2 - HOOD LATCH
3 - RADIATOR CLOSURE PANEL CROSSMEMBER

INSTALLATION

(1) Place hood in position on vehicle. With assistance from a helper at the opposite side of the vehicle to support the hood, install bottom bolts attaching hood to hinge finger tight.

(2) Install top bolts attaching hood to hinge finger tight.

(3) Position bolts at marks and tighten. Tighten bolts to 13.5 N·m (120 in. lbs.) torque. The hood should be aligned to 4 mm (0.160 in.) gap to the front fenders and flush across the top surfaces along fenders.

(4) Verify hood operation and alignment.

LATCH

REMOVAL

(1) Release hood latch and open hood.

(2) Remove bolts attaching hood latch to radiator closure panel crossmember (Fig. 3).

(3) Remove hood latch from crossmember.

(4) Disconnect hood release cable from hood latch (Fig. 4).

(5) Remove hood latch from vehicle.

INSTALLATION

(1) Position hood latch on vehicle.

(2) Connect hood release cable from hood latch.

(3) Position hood latch on crossmember.

(4) Align hood latch by placing latch over net pierced tabs. If alignment is required, flatten or grind tabs.

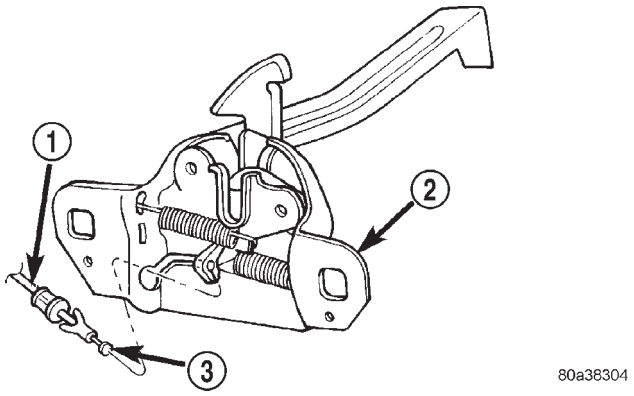

Fig. 4 HOOD

1 - RELEASE CABLE CASE
2 - HOOD LATCH
3 - RELEASE CABLE END

(5) Verify hood operation and alignment. Adjust as necessary.

(6) Tighten attaching bolts to 13.5 N·m (10 ft. lbs.) torque.

LATCH RELEASE CABLE

REMOVAL

(1) Remove hood latch.

(2) Disengage cable end from hood latch locking mechanism.

(3) Slide cable case end sideways in keyhole slot of hood latch while pinching barb on cable case closed.

(4) Remove cable from latch (Fig. 4).

(5) Remove hood release handle from instrument panel.

LATCH RELEASE CABLE (Continued)

(6) Disengage rubber grommet cable insulator from hole in dash panel.

(7) Attach a suitable length of mechanic's wire to latch end of cable to assist cable installation.

(8) Route cable back from latch through engine compartment toward dash panel near power brake booster (Fig. 5).

(9) Remove attaching clips from cable case.

(10) From inside vehicle, pull cable through dash panel until mechanic's wire is exposed.

(11) Disconnect cable from mechanic's wire.

(12) Remove hood release cable from vehicle.

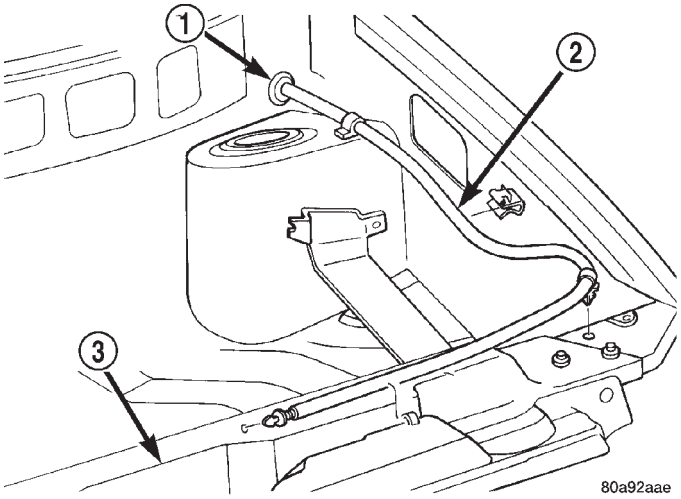

Fig. 5 HOOD RELEASE CABLE ROUTING

1 - GROMMET
2 - HOOD RELEASE CABLE
3 - RADIATOR CLOSURE PANEL CROSSMEMBER

INSTALLATION

(1) Place hood release cable in position under instrument panel.

(2) Attach latch end of hood release cable to mechanic's wire protruding through dash panel.

(3) Route cable forward through engine compartment toward latch by pulling on mechanic's wire (Fig. 5) .

(4) Disconnect mechanic's wire from cable.

(5) Engage rubber grommet cable insulator into hole in dash panel.

(6) Install hood release handle into instrument panel.

(7) Place cable in position on latch.

(8) Slide cable case end sideways into keyhole slot of hood latch.

(9) Engage cable end into hood latch locking mechanism.

(10) Install hood latch.

(11) Install attaching clips to cable case and install clips into original holes in strut tower, fender, headlamp area, and radiator closure panel crossmember.

LATCH STRIKER

REMOVAL

(1) Release hood latch and open hood.

(2) Remove bolts attaching striker to inside of hood.

(3) Remove hood latch striker from vehicle.

INSTALLATION

(1) Position hood latch striker on vehicle.

(2) Install bolts attaching hood latch striker to hood.

(3) Align hood latch striker to engage smoothly into hood latch.

(4) Verify hood operation and alignment. Adjust as necessary.

(5) Tighten attaching bolts to 13.5 N·m (10 ft. lbs.) torque.

INSTRUMENT PANEL

TABLE OF CONTENTS

page

CLUSTER BEZEL
REMOVAL 63
INSTALLATION 63
CUP HOLDER
REMOVAL 64
INSTALLATION 64
GLOVE BOX
REMOVAL 64
INSTALLATION 64
GLOVE BOX LATCH
REMOVAL 64
INSTALLATION 64
GLOVE BOX LATCH STRIKER
REMOVAL 64
INSTALLATION 65
INSTRUMENT PANEL ASSEMBLY
REMOVAL 65
INSTALLATION 67
INSTRUMENT PANEL CENTER BEZEL
REMOVAL 68
INSTALLATION 68

page

INSTRUMENT PANEL END CAP
REMOVAL 68
INSTALLATION 68
INSTRUMENT PANEL TOP COVER
REMOVAL 69
INSTALLATION 69
LOWER CONSOLE
REMOVAL 69
INSTALLATION 69
LOWER INSTRUMENT PANEL
REMOVAL 70
INSTALLATION 70
LOWER STEERING COLUMN COVER
REMOVAL 70
INSTALLATION 70
STEERING COLUMN COVER BACKING PLATE
REMOVAL 70
INSTALLATION 71
OVER STEERING COLUMN COVER
REMOVAL 71
INSTALLATION 71

CLUSTER BEZEL

REMOVAL

(1) Disconnect and isolate the battery negative cable.

(2) Remove Over Steering Column Bezel by lifting it straight up with a firm pull.

(3) Remove the four bezel attaching screws (Fig. 1).

(4) Tilt the steering column in the full down position.

(5) Pull rearward on the cluster bezel and remove.

INSTALLATION

(1) Maneuver cluster bezel over steering column and into position (Fig. 1).

(2) Install the four bezel attaching screws.

(3) Install the Over Steering Column Bezel by positioning it over the retaining slots and firmly snapping it into place.

(4) Connect the battery negative cable.

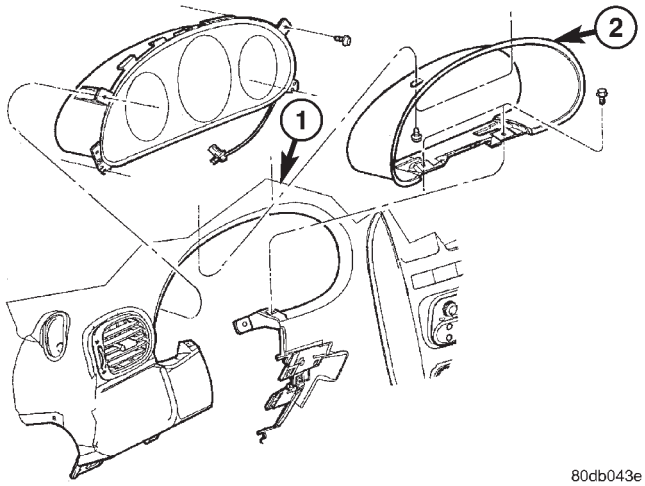

Fig. 1 CLUSTER BEZEL

1 - INSTRUMENT PANEL
2 - CLUSTER BEZEL

CUP HOLDER

REMOVAL

(1) Remove the screw access cover from the bottom of the center bezel.

(2) Remove the center bezel attaching screws.

(3) Using a trim stick (special tool #C-4755) or equivalent, gently pry out on the edge of the instrument panel center bezel. Hang off to the side leaving the accessory switches connected.

(4) Pull the cup holder assembly rearward to disengage the rear guide studs from instrument panel (Fig. 2).

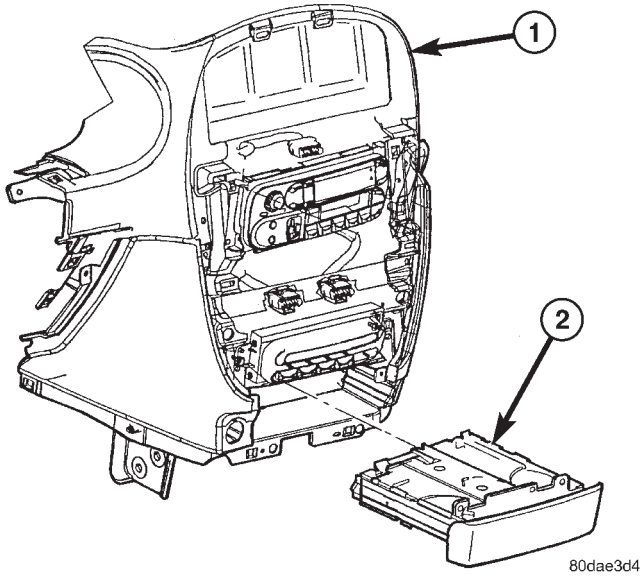

Fig. 2 CUP HOLDER

1 - LOWER INSTRUMENT PANEL
2 - CUPHOLDER AND TRACK

INSTALLATION

(1) Ensure the cup holder assembly is in the closed position. The cup holder assembly must be installed as an assembly to ensure proper track position.

(2) Place the cup holder assembly into position in the lower instrument panel and slide into opening until the rear guide struts snap into place (Fig. 2).

(3) Install the center bezel.

(4) Install the center bezel attaching screws

(5) Install the cup holder. Align the cup holder assembly with the track and firmly slide shut to engage retaining tang.

(6) Install the screw access cover to the bottom of the center bezel.

GLOVE BOX

REMOVAL

(1) Open glove box.

(2) Push in on sides of glove box bin and lower door.

(3) Pivot glove box downward and disengage hinge hooks from instrument panel.

(4) Remove glove box.

INSTALLATION

(1) Place glove box in position.

(2) Engage hinge hooks into instrument panel and pivot glove box upward.

(3) Push in sides of glove box bin and snap glove box assembly into instrument panel.

(4) Close glove box door.

GLOVE BOX LATCH

REMOVAL

(1) Open glove box.

(2) Push in on sides of glove box bin and lower door.

(3) Pivot glove box downward and disengage hinge hooks from instrument panel.

(4) Remove glove box.

(5) Remove the assembly screws.

(6) Disassemble the glove box.

(7) Separate the latch from the glove box assembly.

INSTALLATION

(1) Install the latch onto the glove box assembly.

(2) Assemble the glove box.

(3) Install the assembly screws.

(4) Engage hinge hooks into instrument panel and pivot glove box upward.

(5) Push in sides of glove box bin and snap glove box assembly into instrument panel.

(6) Close glove box door.

GLOVE BOX LATCH STRIKER

REMOVAL

(1) Open glove box door.

(2) Remove screws holding lock striker to instrument panel.

(3) Remove glove box latch striker.

GLOVE BOX LATCH STRIKER (Continued)

INSTALLATION

(1) Install the glove box latch striker.
(2) Install the screws holding latch striker to instrument panel.
(3) Close glove box door.

INSTRUMENT PANEL ASSEMBLY

REMOVAL

(1) Disconnect and isolate the battery negative cable.
(2) Remove the lower console:
(a) Remove six retaining screws.
(b) Pull rearward and disconnect the auxiliary power outlet.
(c) Remove lower console from vehicle.
(3) Remove the bolts attaching the lower supports to the instrument panel frame (Fig. 3).
(4) Remove the bolts attaching the lower supports to the floor pan.
(5) Disconnect the wire connectors from the Passenger Airbag.
(6) Remove the two screws to each right and left cowl trim covers.
(7) Remove the both left and right side A-pillar trim covers using a trim stick (special tool #C-4755) or equivalent gently pry out on the trim covers and remove.
(8) Remove the glove box:
(a) Push in on sides of glove box bin and lower door.
(b) Pivot glove box downward and disengage hinge hooks from instrument panel.
(c) Remove glove box from vehicle.
(9) Disconnect the antenna lead connector from behind the glove box.
(10) Remove the four screws to the lower steering column cover.
(11) Remove the eight screws to the steering column backing plate.
(12) Unclip the Data Link Connector (DLC) from the steering column backing plate.
(13) Remove two screws to the left side instrument panel silencer and remove (Fig. 4).
(14) Disconnect the left side wiring:
(a) Brake switch.
(b) Main bulkhead connector.
(c) Five harness connectors.
(d) Driver airbag connector.
(15) Remove the two screws to the hood release handle.
(16) Remove five screws to steering column backing plate and remove (Refer to 23 - BODY/INSTRUMENT PANEL/KNEE BLOCKER - REMOVAL).
(17) Remove the two steering column shroud retaining screws. Separate the shrouds and remove from vehicle.
(18) Remove the screws attaching the instrument panel reinforcement and remove (Fig. 5).
(19) Disconnect the steering column wiring. There are seven connectors and then unclip the harness from the column.
(20) Disconnect the Occupant Restraint Controller (ORC) harness connector.
(21) Remove the four nuts retaining the steering column to the dash panel steering column mounting bracket and lower column to the floor (Fig. 6).
(22) Remove the four nuts attaching the instrument panel to the brake pedal support bracket.
(23) Loosen the left side roll down bolt (Fig. 7).
(24) Remove the left side A-pillar retaining bolts. There are two 13 mm bolts and one 10 mm bolt.
(25) If equipped with a mechanical transmission range indicator:
(a) Remove the indicator cable loop.
(b) Remove the clip holding gear shift cable end to the gear selector adapter.
(c) Pull the cable end from gear selector.
(d) Disconnect the clip for the indicator cable and guide tube from the shift cable bracket and move out of the way.
(26) Remove the instrument panel top cover. Using a trim stick or equivalent, gently pry up on the front edge of the top cover, pull rearward and remove from vehicle.
(27) Disconnect the right side wire connectors from the HVAC behind the glove box area and the two antenna connectors behind the glove box hinge.
(28) Remove the right end cover by pulling outboard.
(29) Remove the right side A-pillar retaining bolts. There are two 13 mm bolts and one 10 mm bolt.
(30) Loosen the right side roll down bolt.
(31) Disconnect the two front window defroster grid wire connectors. One on each side of vehicle.
(32) Remove both the left and right power mirrors:
(a) Using a trim stick or equivalent, gently pry out on mirror trim cover.
(b) Open door and remove the three torx retaining screws.
(c) Disconnect the wire connector and remove mirror from the vehicle.
(33) Feed power mirror wire harness inboard through the A-pillar.
(34) Remove the bolts attaching the instrument panel frame to the dash panel below windshield opening.
(35) With the help of an assistant remove the instrument panel from vehicle. Lift the instrument

panel up off the HVAC so you won't damage the sealing surface of the distribution duct.

If the instrument panel is being replaced, transfer all parts to the new instrument panel assembly.

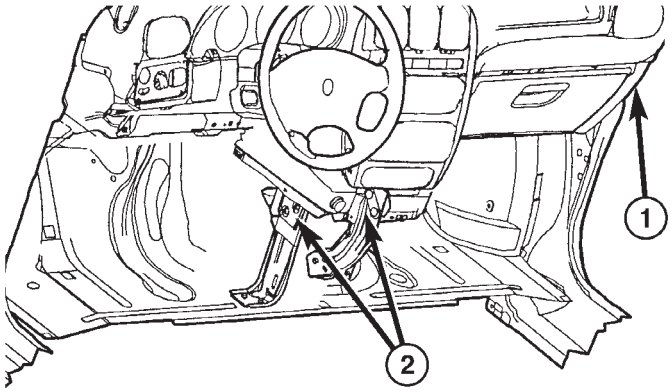

Fig. 3 INSTRUMENT PANEL CENTER STACK RIGHT & LEFT REINFORCEMENTS

1 - INSTRUMENT PANEL
2 - CENTER STACK RIGHT & LEFT REINFORCEMENT

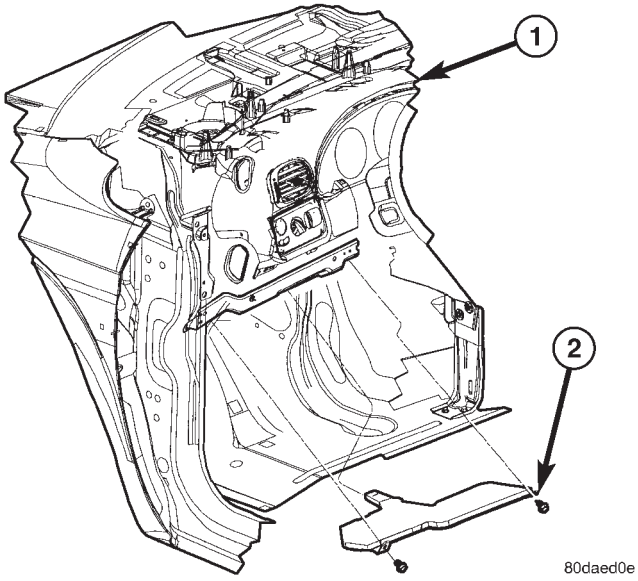

Fig. 4 INSTRUMENT PANEL LEFT SILENCER

1 - INSTRUMENT PANEL
2 - INSTRUMENT PANEL LEFT SILENCER

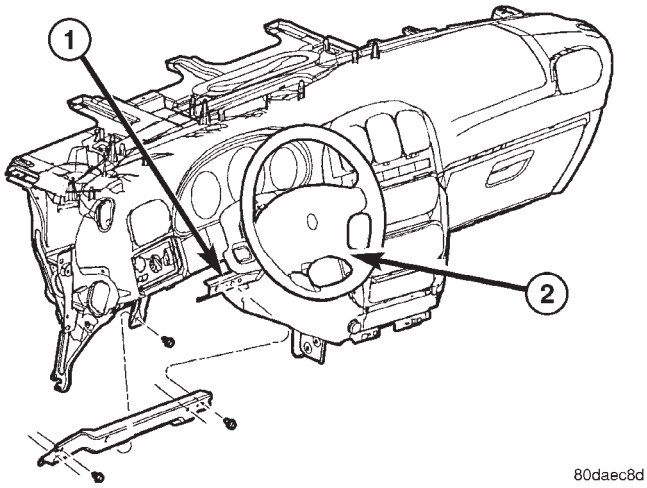

Fig. 5 INSTRUMENT PANEL LOWER REINFORCEMENT

1 - LOWER RIGHT REINFORCEMENT
2 - STEERING WHEEL ASSEMBLY
3 - INSTRUMENT PANEL LOWER REINFORCEMENT

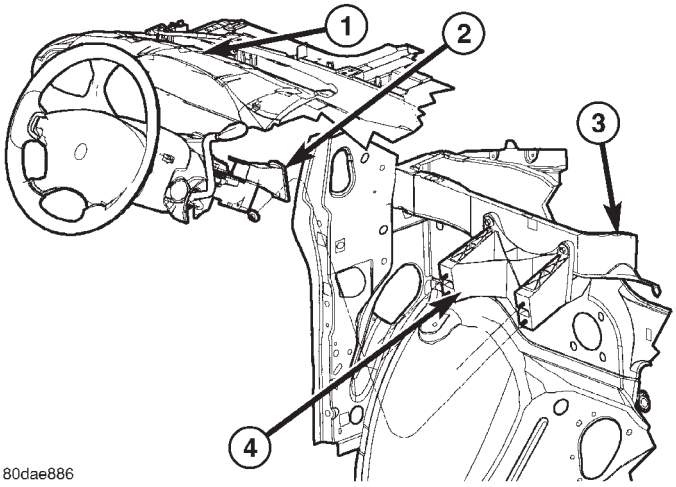

Fig. 6 STEERING COLUMN MOUNTING BRACKET

1 - INSTRUMENT PANEL
2 - INSTRUMENT PANEL STEERING BRACKET
3 - DASH PANEL REINFORCEMENT
4 - DASH PANEL STEERING COLUMN MOUNTING BRACKET

INSTRUMENT PANEL ASSEMBLY (Continued)

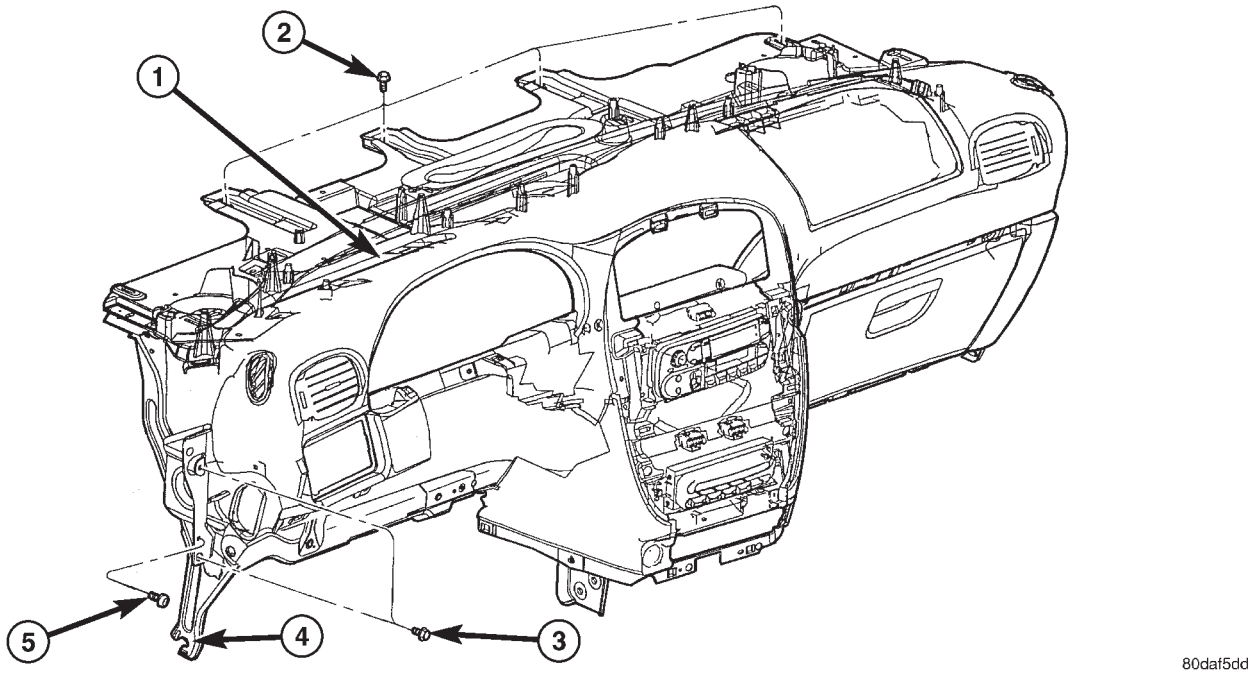

Fig. 7 INSTRUMENT PANEL REMOVAL

1 - INSTRUMENT PANEL
2 - FIVE ATTACHING SCREWS
3 - 13 mm BOLT - TWO ON EACH SIDE
4 - ROLL DOWN BRACKET
5 - 10 mm BOLT - STARTING BOLT ONE EACH SIDE

INSTALLATION

(1) With the help of an assistant place the instrument panel into vehicle on roll down bolts. As you roll the instrument panel up, lift the instrument panel up so the duct work does not bind or bend and you can set it down on the HVAC housing to get the proper seal at the distribution duct. Get one bolt started in the dash panel.

(2) Install the left and right side A-pillar retaining bolts. There are two 13 mm bolts and one 10 mm bolt. The 10 mm bolts need to be installed first to insure proper positioning of the Instrument panel in the vehicle. Start the right side 10 mm bolt first (Fig. 7).

(3) Feed power mirror wire harness outboard through the A-pillar.

(4) Install both the left and right power mirrors:

(a) Connect the wire connector and install the mirror onto the vehicle.

(b) Install the three torx retaining screws.

(c) Using a firm push, snap the mirror trim cover into place.

(5) Connect the two front window defroster grid wire connectors. One on each side of vehicle.

(6) Tighten the right side roll down bolt.

(7) Install the right end cover. Position over retaining slots and firmly snap into place.

(8) Connect the right side wire connectors to the HVAC behind the glove box area and the two antenna connectors behind the glove box hinge.

(9) Install the bolts attaching the instrument panel frame to the dash panel below windshield opening.

(10) Install the instrument panel top cover. Slide the front edge of the top cover toward dash panel, and firmly snap down the rear edge of the to cover to engage clips.

(11) If equipped with a mechanical transmission range indicator:

(a) Connect the clip for the indicator cable and guide tube to the shift cable bracket.

(b) Install the cable end to the gear selector.

(c) Install the clip holding the gear shift cable end to the gear selector adapter.

(d) Install the indicator cable loop.

(12) Tighten the left side roll down bolt.

(13) Install the four nuts attaching the instrument panel to the brake pedal support bracket.

(14) Install the four nuts retaining the steering column and lower to the floor (Fig. 6).

(15) Connect the Occupant Restraint Controller (ORC) harness connector.

(16) Connect the steering column wiring. There are seven connectors and then clip the harness to the column.

(17) Install the screws attaching the instrument panel reinforcement (Fig. 5).

(18) Connect the shrouds and install the two steering column shroud retaining screws.

(19) Install five screws to the left under column instrument panel reinforcement brace.

(20) Install the two screws to the hood release handle.

(21) Connect the left side wiring:

(a) Brake switch.

(b) Main bulkhead connector.

(c) Five harness connectors.

(d) Driver airbag connector.

(22) Install two screws to the left side instrument panel silencer (Fig. 4).

(23) Clip the Data Link Connector (DLC) to the steering column backing plate.

(24) Install the eight screws to the steering column backing plate.

(25) Install the four screws to the lower steering column cover.

(26) Install the glove box:

(a) Install glove box into the vehicle. Line up the hinges and firmly snap together.

(b) Push in on sides of glove box bin and raise door.

(27) Install the both left and right side A-pillar trim covers. Position trim cover over slots and firmly snap into place.

(28) Install the two screws to each right and left cowl trim covers.

(29) Connect the wire connectors to the Passenger Airbag.

(30) Install the bolts attaching the lower supports to the floor pan.

(31) Install the bolts attaching the lower supports to the instrument panel frame (Fig. 3).

(32) Install the lower console:

(a) Install lower console to vehicle.

(b) Connect the auxiliary power outlet.

(c) Install the six retaining screws.

(33) Connect the battery negative cable.

INSTRUMENT PANEL CENTER BEZEL

REMOVAL

(1) Disconnect and isolate the battery negative cable.

(2) Insert the trim stick (special tool #C-4755) or equivalent between access cover and center bezel gently pry outward.

(3) Carefully pry the access cover from the instrument panel (Fig. 8).

(4) Remove the two center bezel attaching screws.

(5) Using a trim stick or equivalent, gently pry out on the edge of the instrument panel center bezel and pull outward.

(6) Disconnect the wire connectors to the accessory switches and HVAC control.

(7) Remove the instrument panel center bezel from the vehicle.

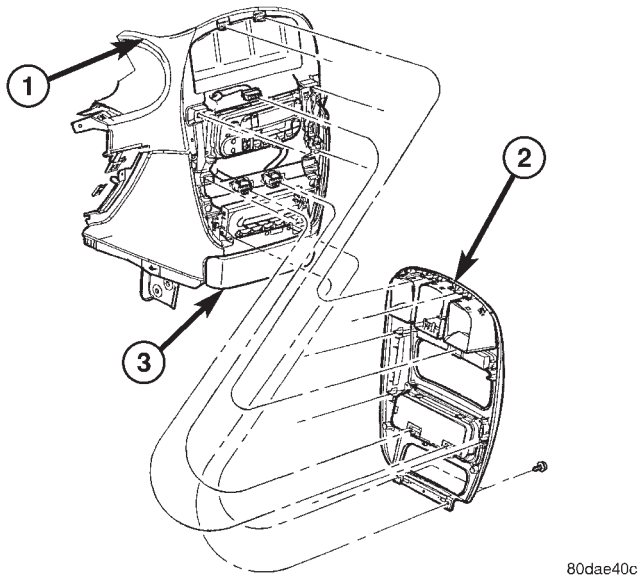

Fig. 8 INSTRUMENT PANEL CENTER BEZEL

1 - LOWER INSTRUMENT PANEL
2 - INSTRUMENT PANEL CENTER BEZEL
3 - CUPHOLDER

INSTALLATION

(1) Place center bezel near opening and connect the wire connectors to the accessory switches and HVAC control.

(2) Position the center bezel over the retaining slots and firmly snap the instrument panel center bezel into place (Fig. 8).

(3) Install the two center bezel attaching screws.

(4) Install the screw access cover to the bottom of the center bezel.

INSTRUMENT PANEL END CAP

REMOVAL

(1) Open passenger side front door.

(2) Using a trim stick, disengage clips holding end cover to instrument panel (Fig. 9).

INSTALLATION

(1) Position end cover over retaining slots and firmly snap into place (Fig. 9).

(2) Close passenger side front door.

INSTRUMENT PANEL END CAP (Continued)

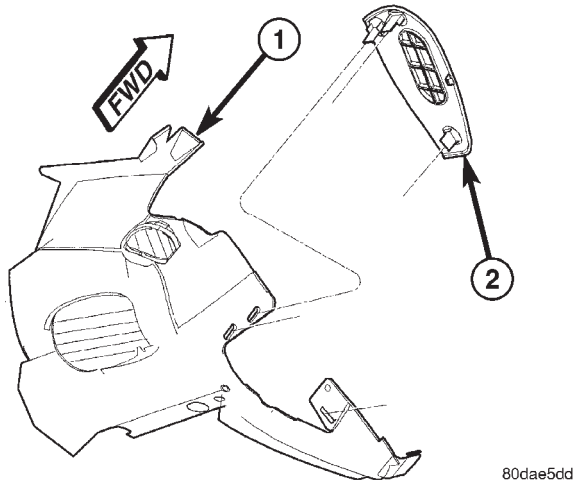

Fig. 9 INSTRUMENT PANEL END CAP

1 - INSTRUMENT PANEL
2 - INSTRUMENT PANEL END CAP

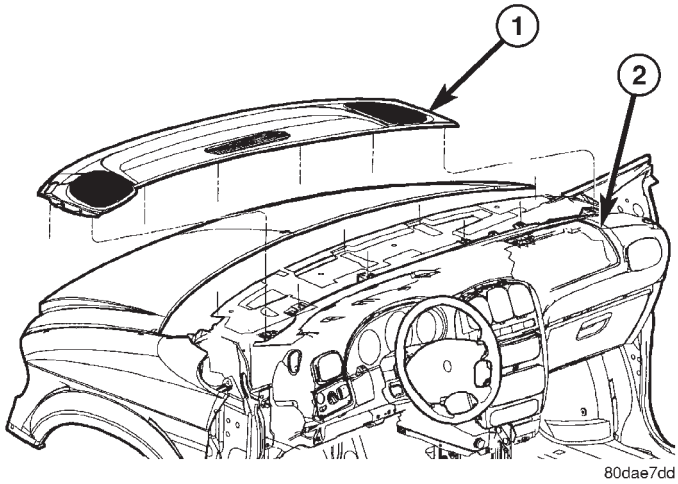

Fig. 10 INSTRUMENT PANEL TOP COVER

1 - INSTRUMENT PANEL TOP COVER
2 - INSTRUMENT PANEL

INSTRUMENT PANEL TOP COVER

REMOVAL

(1) Remove A-pillar trim. Using a trim stick (special tool #C-4755) or equivalent, gently pry out and remove.

(2) Using a trim stick, disengage clips attaching rear edge of top cover to instrument panel (Fig. 10).

NOTE: The Instrument Panel Top Cover may be hard to unsnap from the instrument panel. Be sure not to mar, scuff, or damage the instrument panel pad.

(3) Pull top cover rearward to disengage hooks attaching front of top cover to instrument panel.

(4) Remove top cover from vehicle.

INSTALLATION

(1) Place instrument panel top cover in position on vehicle (Fig. 10).

(2) Push top cover forward to engage hooks attaching front of top cover to instrument panel.

(3) Engage clips attaching rear edge of top cover to instrument panel.

(4) Pull top cover rearward.

(5) Install A-pillar trim.

LOWER CONSOLE

REMOVAL

(1) Remove screws attaching the lower console to floor bracket and instrument panel (Fig. 11).

(2) Slide lower console rearward from around instrument panel supports.

(3) Disconnect the auxiliary power outlet wire connector (if equipped).

(4) Remove lower console from vehicle.

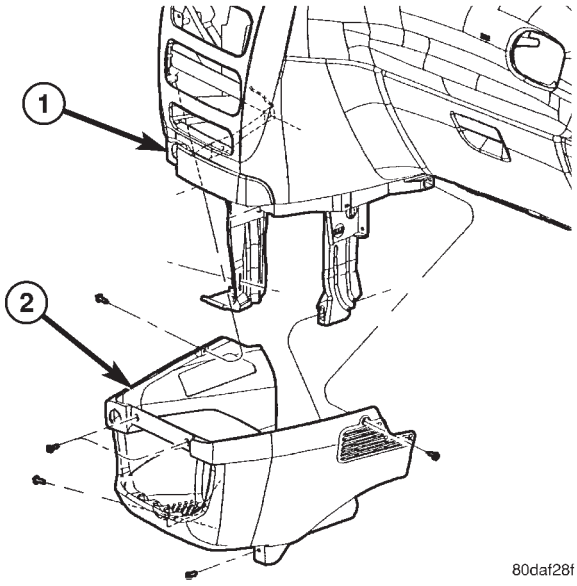

Fig. 11 INSTRUMENT PANEL FLOOR CONSOLE

1 - INSTRUMENT PANEL
2 - INSTRUMENT PANEL FLOOR CONSOLE

INSTALLATION

(1) Connect the auxiliary power outlet wire connector (if equipped).

(2) Install the lower console into the vehicle (Fig. 11).

(3) Slide console forward around instrument panel supports.

(4) Install the screws attaching lower console to floor bracket and instrument panel.

LOWER INSTRUMENT PANEL

REMOVAL

When servicing the lower instrument panel, refer to Body, Instrument Panel, and then the appropriate removal procedure.

(1) Remove the right end cover.
(2) Remove the lower steering column cover.
(3) Remove the center bezel.
(4) Remove the lower console.
(5) Remove the cup holder and track.
(6) Remove the glove box.
(7) Remove the glove box latch striker.
(8) Remove the glove box lamp.
(9) Remove the eighteen screws holding the lower instrument panel to the reinforcement frame (Fig. 12).
(10) Remove the lower instrument panel from vehicle.

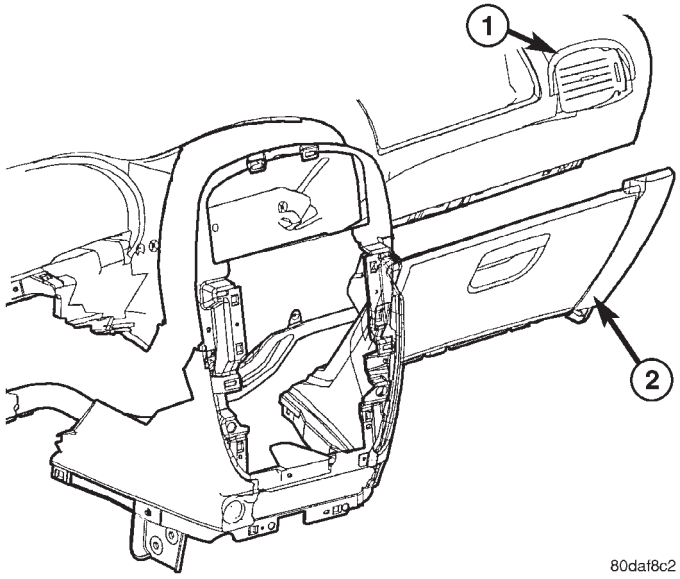

Fig. 12 LOWER INSTRUMENT PANEL

1 - INSTRUMENT PANEL
2 - LOWER INSTRUMENT PANEL

INSTALLATION

When servicing the lower instrument panel, refer to Body, Instrument Panel, and then the appropriate removal procedure.

(1) Install the lower instrument panel into the vehicle (Fig. 12).
(2) Install the eighteen screws holding the lower instrument panel to the reinforcement frame.
(3) Install the glove box lamp.
(4) Install the glove box latch striker.
(5) Install the glove box.
(6) Install the cup holder and track.
(7) Install the lower console.
(8) Install the center bezel.
(9) Install the lower steering column cover.
(10) Install the right end cover.

LOWER STEERING COLUMN COVER

REMOVAL

(1) Remove the four screws attaching the lower steering column cover to instrument panel (Fig. 13).
(2) Remove the lower steering column cover from the vehicle.

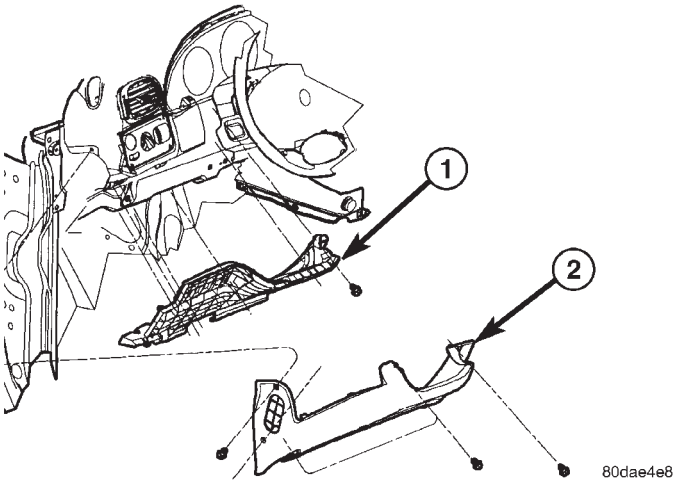

Fig. 13 LOWER STEERING COLUMN COVER

1 - STEERING COLUMN COVER BACKING PLATE
2 - STEERING COLUMN COVER

INSTALLATION

(1) Install the lower steering column cover into the vehicle (Fig. 13).
(2) Install the four screws attaching the lower steering column cover to instrument panel.

STEERING COLUMN COVER BACKING PLATE

REMOVAL

(1) Remove lower steering column cover (Refer to 23 - BODY/INSTRUMENT PANEL/STEERING COLUMN OPENING COVER - REMOVAL).
(2) Remove the park brake release handle link from the park brake release handle.
(3) Remove screws attaching lower steering column backing plate to instrument panel (Fig. 13).
(4) Unclip the Data Link Connector (DLC) from the lower steering column backing plate.

STEERING COLUMN COVER BACKING PLATE (Continued)

(5) Remove lower steering column backing plate from vehicle.

INSTALLATION

(1) Install the steering column cover backing plate into vehicle (Fig. 13).

(2) Clip the Data Link Connector (DLC) to the steering column cover backing plate

(3) Install the screws attaching steering column cover backing plate to instrument panel.

(4) Connect the park brake release handle link to the park release handle.

(5) Install the lower steering column cover (Refer to 23 - BODY/INSTRUMENT PANEL/STEERING COLUMN OPENING COVER - INSTALLATION).

OVER STEERING COLUMN COVER

REMOVAL

(1) Taking a firm grasp of the over steering column cover front edge, give a quick upward pulling motion to disengage the cover from the instrument panel (Fig. 14).

(2) Remove the over steering column cover from the vehicle.

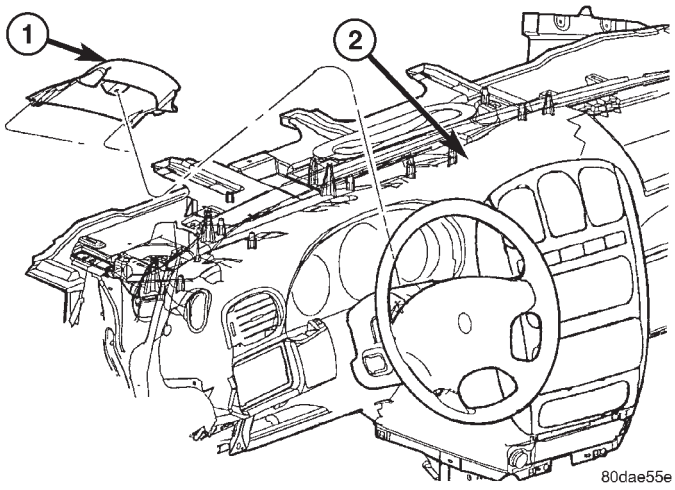

Fig. 14 OVER STEERING COLUMN COVER

1 - INSTRUMENT PANEL OVER STEERING COLUMN COVER
2 - INSTRUMENT PANEL

INSTALLATION

(1) Place the over steering column cover into position over the retaining slots and firmly snap into place (Fig. 14).

INTERIOR

TABLE OF CONTENTS

page

A-PILLAR LOWER EXTENSION TRIM
REMOVAL 73
INSTALLATION 73
A-PILLAR TRIM
REMOVAL 73
INSTALLATION 73
ASSIST HANDLE
REMOVAL 73
INSTALLATION 73
B-PILLAR LOWER TRIM
REMOVAL 73
INSTALLATION 74
B-PILLAR UPPER TRIM
REMOVAL 74
INSTALLATION 74
CARPETS AND FLOOR MATS
REMOVAL 74
INSTALLATION 75
COWL TRIM
REMOVAL 75
INSTALLATION 75
C-PILLAR TRIM
REMOVAL 75
INSTALLATION 76
DOOR SILL TRIM PLATE
REMOVAL 76
INSTALLATION 76
HEADLINER
REMOVAL 76
INSTALLATION 76
LEFT D-PILLAR TRIM PANEL
REMOVAL 77
INSTALLATION 77
LIFTGATE SILL PLATE
REMOVAL 77
INSTALLATION 77
QUARTER TRIM BOLSTER
REMOVAL 77

page

INSTALLATION 77
RIGHT QUARTER TRIM PANEL
REMOVAL 78
INSTALLATION 78
LEFT QUARTER TRIM PANEL
REMOVAL 78
INSTALLATION 78
REAR HEADER TRIM
REMOVAL 79
INSTALLATION 79
REAR HVAC LOUVER
REMOVAL 79
INSTALLATION 79
REAR VIEW MIRROR
REMOVAL 80
INSTALLATION 80
RIGHT D-PILLAR TRIM PANEL
REMOVAL 80
INSTALLATION 80
SLIDING DOOR SILL PLATE
REMOVAL 80
INSTALLATION 80
SUN VISOR
REMOVAL 81
INSTALLATION 81
SUN VISOR SUPPORT
REMOVAL 81
INSTALLATION 81
FLOOR CONSOLE TRAY
REMOVAL 82
INSTALLATION 82
FLOOR CONSOLE TRAY - BRACKET ASSEMBLY
REMOVAL 82
INSTALLATION 82

A-PILLAR LOWER EXTENSION TRIM

REMOVAL

(1) Remove instrument panel side cover.
(2) Remove A-pillar extension trim from vehicle by disengaging hidden clips (Fig. 1).

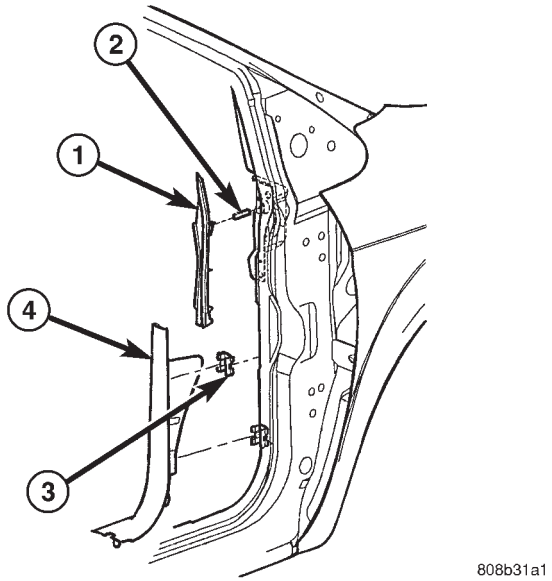

Fig. 1 A-PILLAR LOWER EXTENSION TRIM

1 - FRONT LOWER EXTENSION TRIM
2 - FRONT EXTENSION TRIM TO INSTRUMENT PANEL RETAINER
3 - CLIP
4 - COWL TRIM PANEL

INSTALLATION

(1) Place A-pillar extension trim in position on vehicle (Fig. 1).
(2) Install instrument panel side cover.

A-PILLAR TRIM

REMOVAL

(1) Remove the assist handle if equipped. (Refer to 23 - BODY/INTERIOR/ASSIST HANDLE - REMOVAL)
(2) Disengage hidden clips holding A-pillar trim panel to A-pillar (Fig. 2).
(3) Remove A-pillar trim from vehicle.

INSTALLATION

(1) Position foot on A-pillar trim panel into instrument panel top cover channel.
(2) Position A-pillar trim in vehicle.
(3) Align locator pins.
(4) Engage hidden clips.

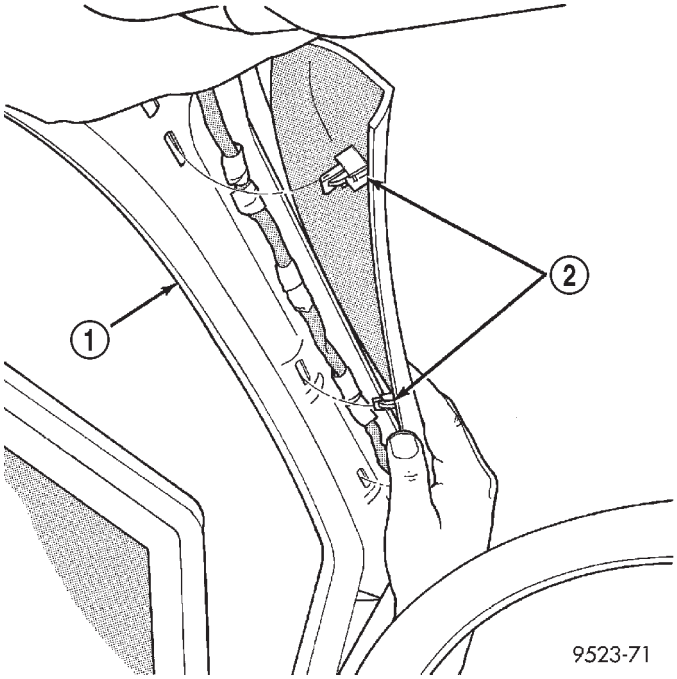

Fig. 2 A-PILLAR TRIM

1 - A-PILLAR
2 - CLIPS

(5) Install the assist handle, if equipped. (Refer to 23 - BODY/INTERIOR/ASSIST HANDLE - INSTALLATION)

ASSIST HANDLE

REMOVAL

(1) Using a trim stick (C-4755), remove screw access covers from grab-handle.
(2) Remove screws holding grab-handle to roof rail.
(3) Remove grab-handle from vehicle.

INSTALLATION

(1) Place grab-handle in position on vehicle.
(2) Install screws to hold grab-handle to roof rail.
(3) Install screw access covers into grab-handle.

B-PILLAR LOWER TRIM

REMOVAL

(1) Slide lower seat belt cover rearward to expose anchor bolt.
(2) Remove bolt attaching lower seat belt anchor to floor.
(3) Remove upper B-pillar trim cover.
(4) Remove access panel from B-pillar trim (Fig. 3).

B-PILLAR LOWER TRIM (Continued)

(5) Disengage hidden clips attaching lower trim cover to B-pillar.

(6) Remove lower B-pillar trim cover from vehicle.

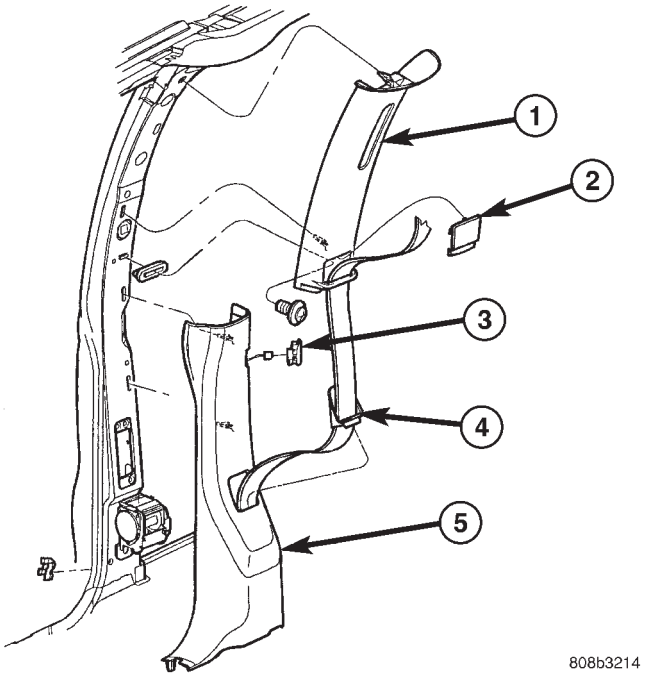

Fig. 3 LOWER B-PILLAR TRIM COVER

1 - B-PILLAR UPPER TRIM
2 - B-PILLAR UPPER PLUG
3 - POWER SLIDING DOOR SWITCH AND BEZEL
4 - BELT ASSEMBLY
5 - B-PILLAR LOWER TRIM

INSTALLATION

(1) Place lower B-pillar trim cover in position on vehicle (Fig. 3).

(2) Insert seat belt through hole in lower B-pillar trim.

(3) Engage hidden clips attaching lower trim cover to B-pillar.

(4) Install access cover.

(5) Install upper B-pillar trim cover.

(6) Place seat belt anchor in position on floor so webbing is pointed rearward and slightly outboard.

(7) Install bolt attaching lower seat belt anchor to floor. Tighten all seat belt bolts to 39 N·m (29 ft. lbs.) torque.

(8) Verify that seat belt anchor does not interfere with seat track travel.

B-PILLAR UPPER TRIM

REMOVAL

(1) Remove bolt attaching lower seat belt anchor to floor.

(2) Lower shoulder belt height adjuster to the bottom of travel.

(3) Remove shoulder belt turning loop from height adjuster.

(4) Use a Snap-on® Trim Pad Remover tool (A179A), or equivalent, and remove shoulder belt height adjuster knob.

(5) Remove shoulder belt bezel from trim cover (Fig. 3).

(6) Remove screw attaching trim cover to B-pillar from inside bezel cavity.

(7) Disengage hidden clips attaching trim cover to B-pillar.

(8) Remove B-pillar trim cover from vehicle.

INSTALLATION

(1) Insert seat belt through B-pillar trim and web guide (Fig. 3).

(2) Place B-pillar trim cover in position on vehicle.

(3) Engage hidden clips attaching trim cover to B-pillar.

(4) Install shoulder belt bezel into trim cover.

(5) Install height adjuster knob.

(6) Install shoulder belt turning loop onto height adjuster. Tighten bolt to 39 N·m (29 ft. lbs.) torque.

(7) Place seat anchor in position on floor so webbing is pointed rearward and slightly outboard.

(8) Install bolt attaching lower seat belt anchor to floor. Tighten seat belt bolt to 39 N·m (29 ft. lbs.) torque.

CARPETS AND FLOOR MATS

REMOVAL

(1) Remove front seats. (Refer to 23 - BODY/SEATS/SEAT - REMOVAL)

(2) Remove front center console.

(3) Remove the remaining seats. Refer to the Owner's Manual for the proper procedures.

(4) Remove front cowl panels and sill plates.

(5) Remove sliding door sill plates. (Refer to 23 - BODY/INTERIOR/SLIDING DOOR SILL PLATE - REMOVAL)

(6) Remove the cargo organizer, if equipped.

(7) Remove liftgate scuff plate. (Refer to 23 - BODY/INTERIOR/LIFTGATE SCUFF PLATE - REMOVAL)

(8) Remove lower B-pillar trim covers.

(9) Remove D-pillar trim covers.

(10) Remove Quarter trim panels.

(11) Remove floor escutcheons (Fig. 4).

(12) Remove the floor console trays. (Refer to 23 - BODY/INTERIOR/FLOOR CONSOLE TRAY - REMOVAL)

CARPETS AND FLOOR MATS (Continued)

(13) Remove push pin fasteners attaching carpet to floor in front seat and rear area.

(14) Roll carpet from under instrument panel to center of sliding door.

(15) Roll and fold carpet forward away from rear door opening.

(16) Extract carpet through sliding door opening (Fig. 5).

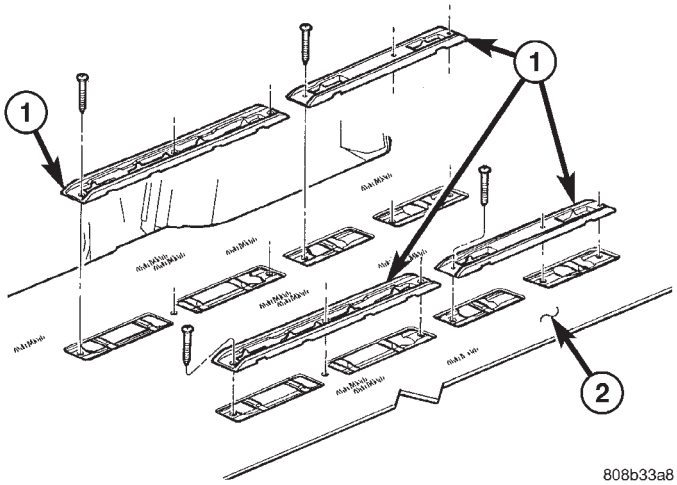

Fig. 4 SEAT ESCUTCHEONS

1 - SEAT ESCUTCHEON
2 - FLOOR CARPET

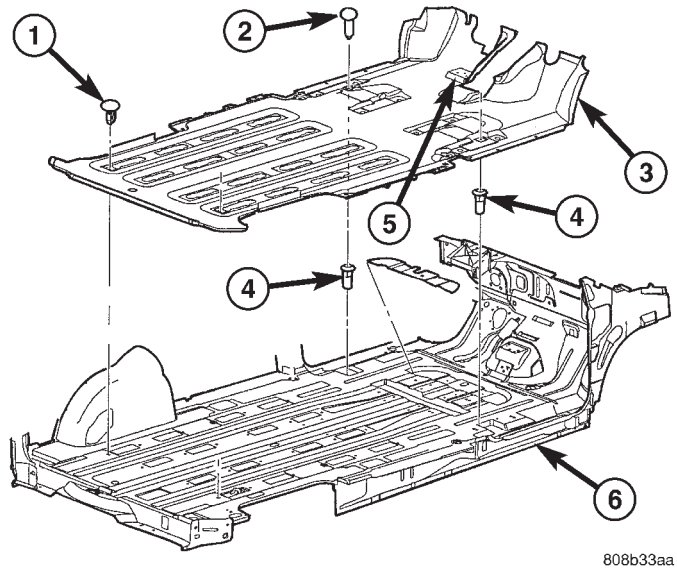

Fig. 5 FLOOR CARPET

1 - CARPET LOCATOR GROMMET
2 - PUSH PIN
3 - CARPET
4 - CARPET GROMMET
5 - HEEL PROTECTOR PAD
6 - BODY ASSEMBLY

INSTALLATION

(1) Insert carpet through sliding door opening.

(2) Roll carpet rearward toward rear door opening.

(3) Roll carpet under instrument panel.

(4) Install push pins fasteners through carpet and grommet into floor to attach carpet to floor in front seat area (Fig. 5).

(5) Install push pins fasteners in the rear area.

CAUTION: Ensure that the correct fasteners are installed in the proper locations. Damage to the fuel tank may result.

(6) Install floor escutcheons (Fig. 4).

(7) Install the floor console trays. (Refer to 23 - BODY/INTERIOR/FLOOR CONSOLE TRAY - INSTALLATION)

(8) Install Quarter trim panels.

(9) Install D-pillar trim covers.

(10) Install lower B-pillar trim covers.

(11) Install rear door sill plate.

(12) Install sliding door sill plates. (Refer to 23 - BODY/INTERIOR/SLIDING DOOR SILL PLATE - INSTALLATION)

(13) Install front cowl panels and sill plates.

(14) Install the passenger seats. Refer to the Owner's Manual for proper procedures.

(15) Install front center console.

(16) Install front seats. (Refer to 23 - BODY/SEATS/SEAT - INSTALLATION)

COWL TRIM

REMOVAL

(1) Remove door sill plate.

(2) Disengage hidden clips holding cowl trim to cowl panel (Fig. 1).

(3) Remove cowl trim from vehicle.

INSTALLATION

(1) Place cowl trim panel in position on vehicle (Fig. 1).

(2) Engage hidden clips attaching cowl trim to cowl panel.

(3) Install door sill plate.

C-PILLAR TRIM

REMOVAL

(1) Remove quarter trim panel.

(2) Remove seat belt turning loop from height adjuster.

(3) Remove screw attaching C-pillar trim panel to C-pillar (Fig. 6).

C-PILLAR TRIM (Continued)

(4) Disengage hidden clips attaching trim to upper C-pillar.
(5) Remove upper C-pillar trim from vehicle.

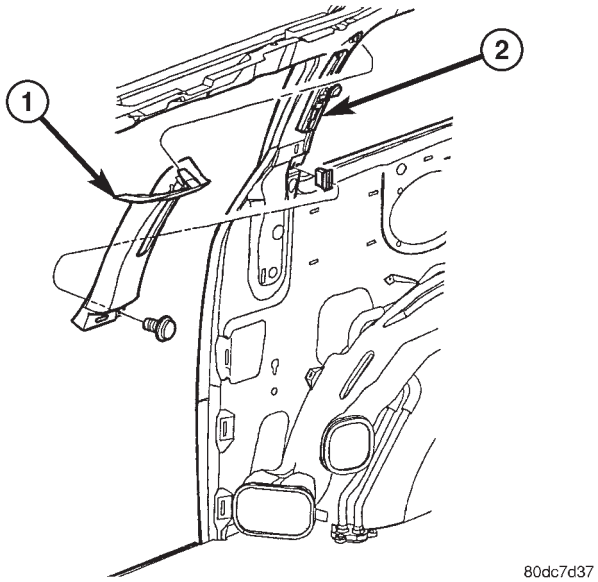

Fig. 6 C-PILLAR

1 - C-PILLAR TRIM PANEL
2 - C-PILLAR

INSTALLATION

(1) Place upper C-pillar trim in position on vehicle (Fig. 6).
(2) Engage hidden clips attaching trim to upper C-pillar.
(3) Install screw attaching C-pillar trim panel to C-pillar.
(4) Install seat belt turning loop onto height adjuster. Tighten all seat belt bolts to 39 N·m (29 ft. lbs.) torque.
(5) Install quarter trim panel.

DOOR SILL TRIM PLATE

REMOVAL

(1) Using trim stick (C-4755), disengage hidden clips holding door sill plate from door sill.
(2) Remove sill plate from vehicle (Fig. 7).

INSTALLATION

(1) Place sill plate in position on vehicle (Fig. 7).
(2) Align interlock tabs at front and rear to mating trim.
(3) Engage hidden clips to hold door sill plate to door sill.

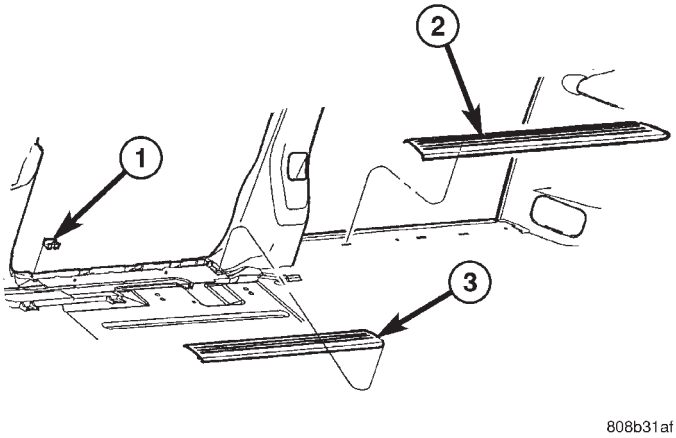

Fig. 7 DOOR SILL PLATE

1 - CLIPS
2 - SLIDING DOOR SILL TRIM PLATE
3 - FRONT DOOR SILL TRIM PLATE

HEADLINER

REMOVAL

(1) Remove sun visors and vanity mirrors.
(2) Remove sun visor center supports.
(3) If equipped, remove coat hooks.
(4) If equipped, remove roof rail modules.
(5) Remove A-pillar trim covers.
(6) Remove B-pillar upper trim covers.
(7) Remove C-pillar upper trim covers.
(8) Remove D-pillar trim covers.
(9) Remove liftgate opening header trim.
(10) If equipped, remove overhead console screw.
(11) If equipped, remove reading lamp.
(12) Remove dome lamp.
(13) Remove push in locking fasteners attaching headlining to rear roof header and roof bows (Fig. 8).
(14) Remove wiring connections.
(15) Remove headlining from roof.
(16) Extract headlining through liftgate opening.

INSTALLATION

(1) Insert headlining through liftgate opening.
(2) Place headlining in position on roof.
(3) Connect wire connectors.
(4) Install left sun visor support.
(5) Install push in locking fasteners attaching headlining to rear roof header and bows (Fig. 8).
(6) Install right sun visor support.
(7) Install sun visors and vanity mirrors.
(8) If equipped, install roof rail modules.
(9) If equipped, install coat hooks.
(10) Install dome lamp.
(11) If equipped, install reading lamp.

HEADLINER (Continued)

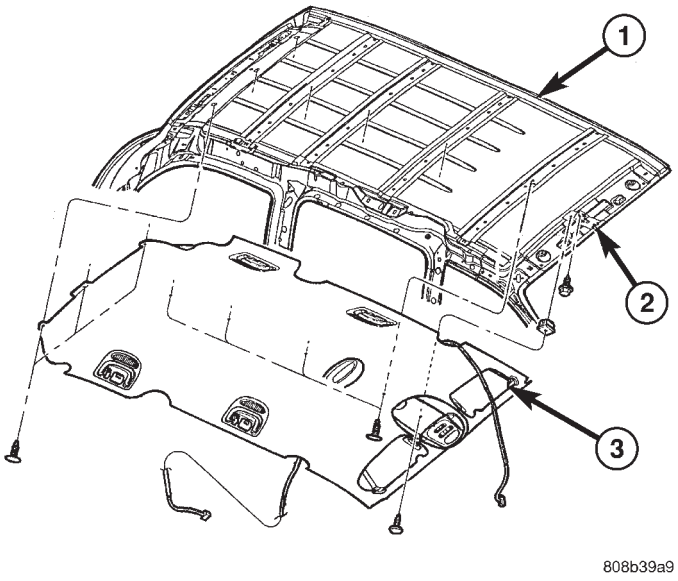

Fig. 8 HEADLINING

1 - ROOF
2 - OVERHEAD CONSOLE BRACKET
3 - HEADLINING ASSEMBLY

(12) If equipped, install overhead console.
(13) Install liftgate opening header trim.
(14) Install D-pillar trim covers.
(15) Install C-pillar upper trim covers.
(16) Install B-pillar upper trim covers.
(17) Install A-pillar trim covers.

LEFT D-PILLAR TRIM PANEL

REMOVAL

(1) Remove rear header trim cover.
(2) Remove liftgate sill plate.
(3) Remove second row seat belt turning loop on long wheel base vehicle.
(4) Remove bolt attaching second row seat belt lower anchor to quarter on short wheel base vehicle.
(5) Disengage hidden clips attaching trim to D-pillar.
(6) Disconnect speaker wire connector, if equipped.
(7) Pass seat belt through slot in D-pillar trim panel on short wheel base vehicle.
(8) Remove D-pillar trim from vehicle.

INSTALLATION

(1) Pass seat belt through slot in D-pillar trim panel on short wheel base vehicle.
(2) Position D-pillar trim panel on vehicle.
(3) Connect speaker wire connector to speaker, if equipped.
(4) Align locating pins on backside of trim panel to mating holes in inner quarter panel.
(5) Engage hidden clips attaching trim to D-pillar.
(6) Install bolt attaching second row seat belt lower anchor to quarter on short wheel base vehicle. Tighten all seat belt bolts to 39 N·m (29 ft. lbs.).
(7) Install second row seat belt turning loop on long wheel base vehicle.
(8) Install liftgate sill plate.
(9) Install rear header trim cover.

LIFTGATE SILL PLATE

REMOVAL

(1) Disengage hidden clips holding sill plate to liftgate door opening sill (Fig. 9).
(2) Remove sill plate from vehicle.

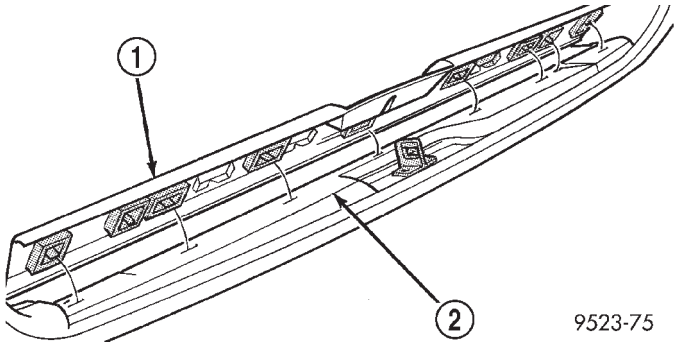

Fig. 9 LIFTGATE SILL PLATE

1 - LIFTGATE SILL PLATE
2 - LIFTGATE SILL

INSTALLATION

(1) Place sill plate in position on vehicle.
(2) Align engage hook tabs at end of liftgate sill plate to D-pillar trim.
(3) Engage hidden clips to hold sill plate to liftgate door opening sill.

QUARTER TRIM BOLSTER

REMOVAL

The speaker grille in the quarter trim panel is not removable. The trim panel must be removed to service the speaker.
(1) Disengage hidden clips attaching trim bolster to quarter trim panel.
(2) Remove quarter trim panel from vehicle.

INSTALLATION

The speaker grille in the quarter trim bolster is not removable. The trim bolster must removed to service the speaker.
(1) Place quarter trim bolster in position on vehicle.

QUARTER TRIM BOLSTER (Continued)

(2) Engage hook retainer attaching front of trim bolster to quarter trim panel, if applicable.
(3) Engage hidden clips attaching trim bolster to quarter trim panel.

RIGHT QUARTER TRIM PANEL

REMOVAL

CAUTION: Disconnect the battery negative cable. Damage to accessory feed circuit can result.

(1) Remove first row seat.
(2) Remove second row seat.
(3) Remove sliding door sill trim panel.
(4) Remove quarter trim bolster.
(5) Remove D-pillar trim panel.
(6) Remove first row seat belt anchor.
(7) Remove second row seat belt anchor.
(8) Remove screws attaching quarter trim to quarter panel from bolster area.
(9) Remove screws attaching rear edge of quarter trim to attaching bracket.
(10) Disengage hidden clips attaching front of quarter trim to quarter panel rearward of sliding door opening and at locators.
(11) Remove quarter trim from quarter panel.
(12) Disconnect speaker wire connector on LWB quarter trim panel with rear air conditioning.
(13) Pass second row seat belt through slot in trim panel on long wheel base vehicle.
(14) Pass first row seat belt through slot in trim panel.
(15) Remove quarter trim panel from vehicle.

INSTALLATION

(1) Position quarter trim panel on vehicle.
(2) Pass first row seat belt through slot in trim panel.
(3) Pass second row seat belt through access hole in trim panel on long wheel base vehicle.
(4) Connect wire connector into speaker on LWB with rear air conditioning.
(5) Align locating pins on backside of trim panel to mating holes in inner quarter panel.
(6) Engage hidden clips attaching front of quarter trim to quarter panel rearward of sliding door opening and at locators.
(7) Install screws attaching rear edge of quarter trim to attaching bracket.
(8) Install screws attaching quarter trim to inner quarter panel in bolster area.
(9) Install second row seat belt anchor on long wheel base vehicle. Tighten all seat belt bolts to 39 N·m (29 ft. lbs.) torque.
(10) Install first row seat belt anchor.
(11) Install D-pillar trim panel.
(12) Install C-pillar trim panel.
(13) Install quarter trim bolster.
(14) Install sliding door sill trim panel.
(15) Install second row seat, if equipped.
(16) Install first row seat.
(17) Connect the battery negative cable.

LEFT QUARTER TRIM PANEL

REMOVAL

CAUTION: Disconnect the negative cable clamp from battery post. Damage to accessory feed circuit can result.

(1) Remove first row seat.
(2) Remove second row seat, if equipped.
(3) Remove front door sill plate on three door vehicle.
(4) Remove sliding door sill plate on four door vehicle.
(5) Remove left quarter trim bolster.
(6) Remove C-pillar trim panel.
(7) Remove left D-pillar trim panel.
(8) Remove first row seat belt anchor.
(9) Remove second row seat belt anchor on long wheel base vehicle.
(10) Remove screws attaching quarter trim to quarter panel from bolster area.
(11) Remove screws attaching rear edge of quarter trim to attaching bracket or inner quarter trim panel.
(12) Disconnect wire connector from accessory power outlet, if equipped.
(13) Remove quarter trim from quarter panel.
(14) Pass front seat belt and turning loop through slot in quarter trim panel on three door vehicle.
(15) Pass first row seat belt through slot in quarter trim panel.
(16) Pass second row seat belt, if equipped, through slot in quarter trim panel on long wheel base vehicle.
(17) Remove quarter trim panel from vehicle.

INSTALLATION

(1) Position quarter trim panel on vehicle.
(2) Pass second row seat belt, if equipped, through slot in quarter trim panel on long wheel base vehicle.
(3) Pass first row seat belt through slot in quarter trim panel.
(4) Connect wire connector into accessory power outlet, if equipped.
(5) Align locating pins on backside of trim panel to mating holes in inner panels.

LEFT QUARTER TRIM PANEL (Continued)

(6) Position quarter trim panel on inner quarter panel.
(7) Install screws attaching rear edge of quarter trim to attaching bracket or inner quarter panel.
(8) Install screws attaching quarter trim to inner quarter panel in bolster area.
(9) Install second row seat belts anchor on long wheel base vehicle. Tighten all seat belt bolts to 39 N·m (28 in. lbs.) torque.
(10) Install first row seat belt anchor.
(11) Install left D-pillar trim panel.
(12) Install C-pillar trim panel.
(13) Install upper left B-pillar trim on three door vehicle.
(14) Install left quarter trim bolster.
(15) Install front door sill plate on three door vehicle.
(16) Install sliding door sill plate on four door vehicle.
(17) Install second row seat, if equipped.
(18) Install first row seat.
(19) Connect the battery negative cable.

REAR HEADER TRIM

REMOVAL

(1) Disengage hidden clips holding trim to rear header (Fig. 10).
(2) Separate rear header trim from vehicle.

INSTALLATION

(1) Place rear header trim in position on vehicle.
(2) Align guide pins on trim to holes in header.
(3) Engage hidden clips to hold trim to rear header.
(4) Engage interlock tabs at D-pillar trim.

REAR HVAC LOUVER

REMOVAL

(1) Using a trim stick (C-4755), pry edge of louver from bezel.
(2) Remove HVAC louver from bezel.
(3) Using a trim stick, pry lower edge of HVAC bezel away from headlining (Fig. 11).
(4) Remove louver from vehicle.

INSTALLATION

(1) Place bezel in position in HVAC duct opening.
(2) Push inward on bezel until clips snap in place. Verify that all four clips have been engaged to the bezel and that the bezel is flush to the headlining
(3) Position HVAC louver to bezel.
(4) Snap both ends of the louver into HVAC bezel.

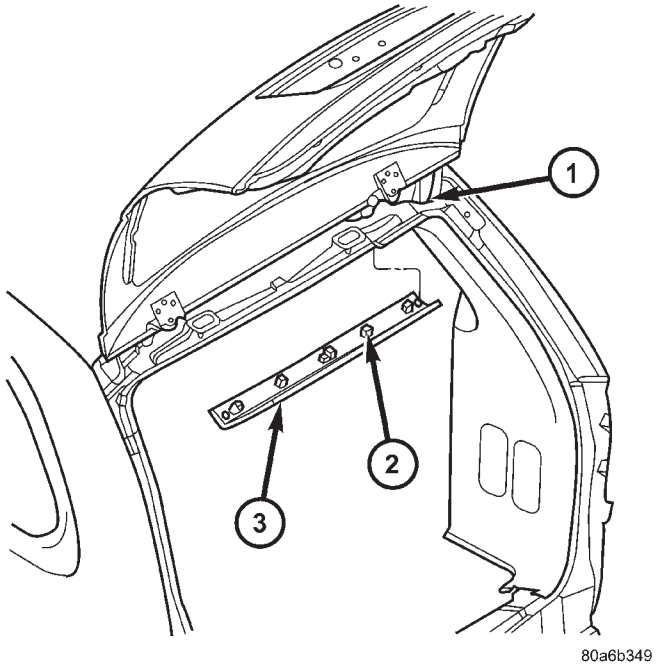

Fig. 10 REAR HEADER TRIM

1 - REAR HEADER
2 - GUIDE PINS
3 - CLIPS

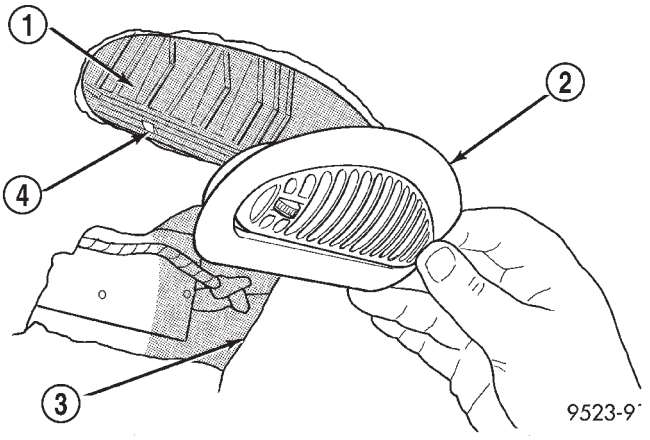

Fig. 11 REAR HVAC LOUVER

1 - HEVAC DUCT
2 - REAR HEVAC LOUVER
3 - HEADLINING
4 - CLIP

REAR VIEW MIRROR

REMOVAL

(1) If equipped, disconnect mirror harness connector (Fig. 12).

(2) Loosen the mirror base set screw (Fig. 13).

(3) Slide the mirror base upward and off the bracket.

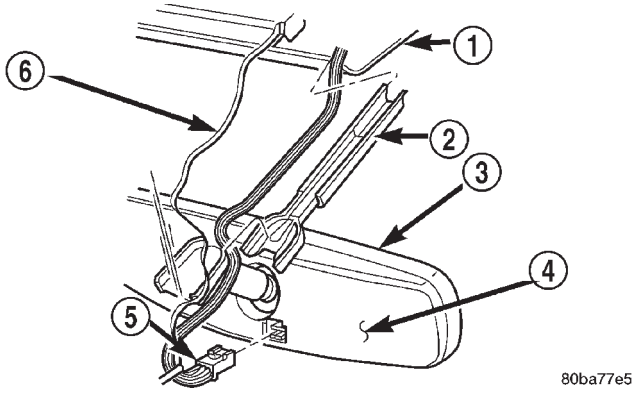

Fig. 12 REAR VIEW MIRROR ASSEMBLY

1 - HEADLINER
2 - WIRE COVER
3 - MIRROR
4 - MIRROR ASSEMBLY
5 - WIRE CONNECTOR
6 - WINDSHIELD

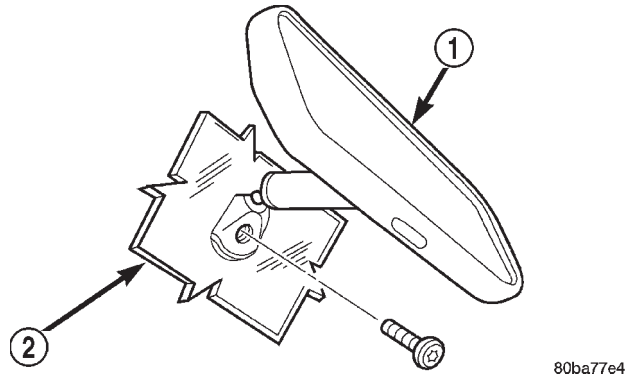

Fig. 13 REAR VIEW MIRROR

1 - MIRROR
2 - WINDSHIELD

INSTALLATION

(1) Position the mirror base at the bracket and slide it downward onto the support bracket.

(2) Tighten the setscrew 1 N·m (15 in. lbs.) torque.

(3) If equipped, connect mirror harness connector.

RIGHT D-PILLAR TRIM PANEL

REMOVAL

(1) Remove rear header trim cover.

(2) Remove liftgate sill plate.

(3) Remove second row seat belt turning loop on long wheel base vehicle.

(4) Remove bolt attaching second row seat belt, anchor to quarter on short wheel base vehicle.

(5) Disengage hidden clips attaching trim to D-pillar.

(6) Remove D-pillar trim panel from D-pillar.

(7) Disconnect speaker wire connector, if equipped.

(8) Pass second row seat belt, if equipped, through slot in trim panel on short wheel base vehicle.

(9) Remove D-pillar trim from vehicle.

INSTALLATION

(1) Position D-pillar trim on vehicle.

(2) Pass second row seat belt, if equipped, through slot in trim panel on short wheel base vehicle.

(3) Connect speaker wire connector to speaker, if equipped.

(4) Align locating pins on backside of trim panel to mating holes in D-pillar.

(5) Engage hidden clips attaching trim to D-pillar.

(6) Install screws attaching trim panel to attaching bracket on short wheel base vehicle.

(7) Install quarter trim bolster on short wheel base vehicle.

(8) Install bolt to attach second row seat belt, if equipped, anchor to quarter on short wheel base vehicle. Tighten all seat belt bolts to 39 N·m (29 ft. lbs.) torque.

(9) Install second row seat belt turning loop on long wheel base vehicle.

(10) Install liftgate sill plate.

(11) Install rear header trim cover.

SLIDING DOOR SILL PLATE

REMOVAL

(1) Disengage hidden clips holding sill plate to sliding door opening sill.

(2) Disengage hooks holding outside edge of sill plate to door sill (Fig. 14).

(3) Remove sill plate from vehicle.

INSTALLATION

(1) Place sill plate in position on vehicle.

(2) Engage hooks to hold outside edge of sill plate to door sill.

(3) Align guide pins to holes in door sill.

(4) Engage hidden clips to hold sill plate to sliding door opening sill.

SLIDING DOOR SILL PLATE (Continued)

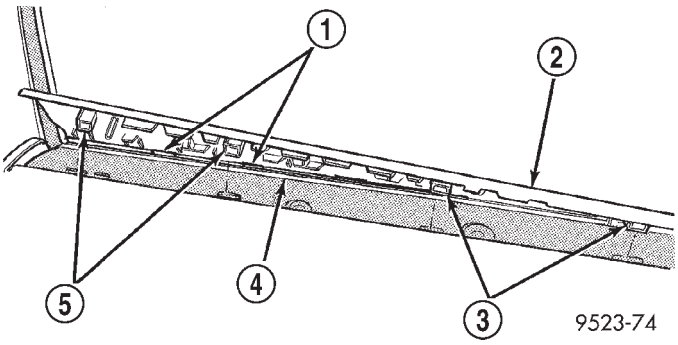

Fig. 14 SLIDING DOOR SILL PLATE

1 - HOOKS
2 - SILL PLATE
3 - CLIPS
4 - SLIDING DOOR SILL
5 - CLIPS

(5) Engage interlock tabs at lower B-pillar and quarter trim panel.

SUN VISOR

REMOVAL

All vehicles with driver and passenger side air bags must have a colored coded five Bullet point air bag warning label applied to the sun visor, verify label availability and ensure the label is installed.

(1) Disengage sun visor from center support.

(2) Remove screws attaching sun visor to roof header (Fig. 15).

(3) Remove sun visor from roof.

(4) If equipped, disconnect illuminated vanity mirror wire connector from body harness.

(5) Remove sun visor from vehicle.

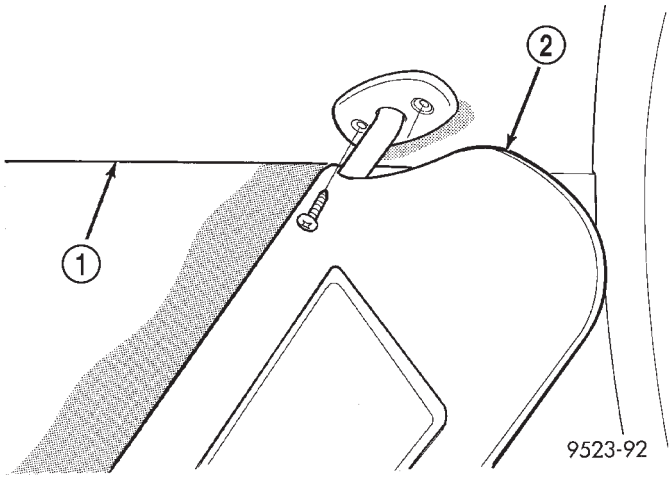

Fig. 15 SUN VISOR

1 - HEADLINING
2 - SUN VISOR

INSTALLATION

All vehicles with driver and passenger side air bags must have a colored coded five Bullet point air bag warning label applied to the sun visor, verify label availability and ensure the label is installed.

(1) Place sun visor in position on vehicle.

(2) Connect illuminated vanity mirror wire connector into body harness.

(3) Place sun visor in position on roof.

(4) Install screws to hold sun visor to roof header (Fig. 15) .

(5) Engage sun visor into center support.

SUN VISOR SUPPORT

REMOVAL

(1) Disengage sun visor from support.

(2) Remove screw holding support to roof header (Fig. 16).

(3) Remove sun visor support from vehicle.

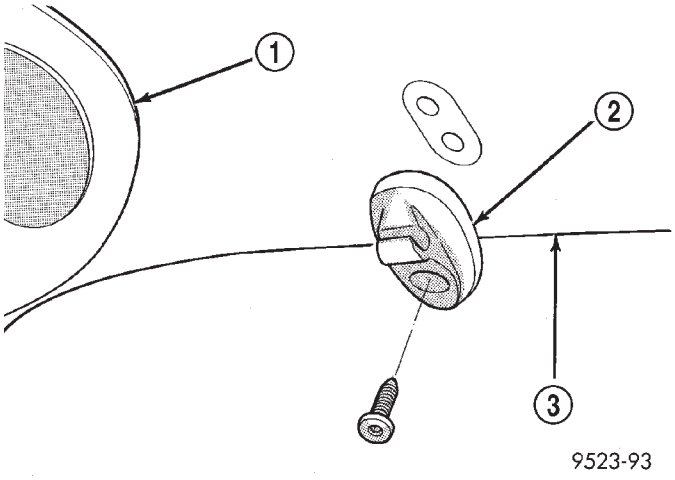

Fig. 16 SUN VISOR SUPPORT

1 - OVERHEAD CONSOLE
2 - SUN VISOR SUPPORT
3 - HEADLINING

INSTALLATION

(1) Place sun visor support in position on vehicle.

(2) Install screw holding support to roof header (Fig. 16) .

(3) Engage sun visor into support.

FLOOR CONSOLE TRAY

REMOVAL

(1) Remove the floor console. Refer to the Owner's Manual for proper procedures.

(2) Remove the four screws and remove the tray.

INSTALLATION

(1) Install the floor console tray and install the screws.

(2) Install the floor console. Refer to the Owner's Manual for proper procedures.

FLOOR CONSOLE TRAY - BRACKET ASSEMBLY

REMOVAL

(1) Remove the floor carpet. (Refer to 23 - BODY/ INTERIOR/CARPETS AND FLOOR MATS - REMOVAL)

(2) Disconnect the electrical connector.

(3) Remove the four screws and remove the bracket assembly.

INSTALLATION

(1) Install the bracket assembly and install the four screws.

(2) Connect the electrical connector.

(3) Install the floor carpet. (Refer to 23 - BODY/ INTERIOR/CARPETS AND FLOOR MATS - INSTALLATION)

PAINT

TABLE OF CONTENTS

page

PAINT
SPECIFICATIONS - COLOR CODE CHARTS . . 83
BASE COAT/CLEARCOAT FINISH
DESCRIPTION 83
PAINT CODE
DESCRIPTION 84
PAINTED TOUCH-UP
DESCRIPTION 84
FINESSE SANDING/BUFFING & POLISHING
DESCRIPTION 84

PAINT

SPECIFICATIONS - COLOR CODE CHARTS

EXTERIOR COLORS

EXTERIOR COLOR	DAIMLERCHRYSLER COLOR CODE	EXTERIOR COLOR	DAIMLERCHRYSLER COLOR CODE
AQUAMARINE METALLIC CLEARCOAT	XQW	ONYX GREEN PEARLCOAT	YJR
BRIGHT SILVER METALLIC CLEARCOAT	WS2	PATRIOT BLUE PEARLCOAT	WB7
DARK GARNET RED PEARLCOAT	XRV	STEEL BLUE PEARLCOAT	XBQ
INFERNO RED TINTED PEARLCOAT	WEL	STERLING BLUE SATIN GLOW	YB2
LIGHT ALMOND PEARL METALLIC CLEARCOAT	ZKJ	STONE WHITE CLEARCOAT	SW1

INTERIOR COLORS

INTERIOR COLOR	DAIMLERCHRYSLER COLOR CODE	INTERIOR COLOR	DAIMLERCHRYSLER COLOR CODE
NAVY BLUE	QL	TAUPE	L5
SANDSTONE	T5		

BASE COAT/CLEARCOAT FINISH

DESCRIPTION

On most vehicles a two-part paint application (basecoat/clearcoat) is used. Color paint that is applied to primer is called basecoat. The clearcoat protects the basecoat from ultraviolet light and provides a durable high-gloss finish.

CAUTION: Do not use abrasive chemicals or compounds on painted surfaces. Damage to finish can result.
Do not use harsh alkaline based cleaning solvents on painted surfaces. Damage to finish or color can result.

PAINT CODE

DESCRIPTION

Exterior vehicle body colors are identified on the Body Code plate. (Refer to VEHICLE DATA/VEHICLE INFORMATION/BODY CODE PLATE - DESCRIPTION). The paint code is also identified on the Vehicle Safety Certification Label which is located on the drivers door shut face. The first digit of the paint code listed on the vehicle indicates the sequence of application, i.e.: P = primary coat, Q = secondary coat. The codes listed in the Color Code Chart are used for manufacturing purposes.

PAINTED TOUCH-UP

DESCRIPTION

When a painted metal surface has been scratched or chipped, it should be touched up as soon as possible to avoid corrosion. For best results, use Mopar® Scratch Filler/Primer, Touch Up Paints and Clear Top Coat. (Refer to VEHICLE DATA/VEHICLE INFORMATION/BODY CODE PLATE - DESCRIPTION).

WARNING: USE A OSHA APPROVED BREATHING MASK WHEN SPRAYING PAINT OR SOLVENTS IN A CONFINED AREA. PERSONAL INJURY CAN RESULT.

TOUCH UP PROCEDURE

(1) Scrape loose paint and corrosion from inside scratch or chip.

(2) Clean affected area with Mopar® Tar/Road Oil Remover, and allow to dry.

(3) Fill the inside of the scratch or chip with a coat of filler/primer. Do not overlap primer onto good surface finish. The applicator brush should be wet enough to puddle-fill the defect without running. Do not stroke brush applicator on body surface. Allow the filler/primer to dry hard.

(4) Cover the filler/primer with color touch up paint. Do not overlap touch up color onto the original color coat around the scratch or chip. Butt the new color to the original color, if possible. Do not stroke applicator brush on body surface. Allow touch up paint to dry hard.

(5) On vehicles without clearcoat, the touch up color can be lightly finesse sanded (1500 grit) and polished with rubbing compound.

(6) On vehicles with clearcoat, apply clear top coat to touch up paint with the same technique as described in Step 4. Allow clear top coat to dry hard. If desired, Step 5 can be performed on clear top coat.

WARNING: AVOID PROLONGED SKIN CONTACT WITH PETROLEUM OR ALCOHOL – BASED CLEANING SOLVENTS. PERSONAL INJURY CAN RESULT.

FINESSE SANDING/BUFFING & POLISHING

DESCRIPTION

Minor acid etching, orange peel, or smudging in clearcoat or single-stage finishes can be reduced with light finesse sanding, hand buffing, and polishing. **If the finish has been finesse sanded in the past, it cannot be repeated. Finesse sanding operation should be performed by a trained automotive paint technician.**

CAUTION: Do not remove clearcoat finish, if equipped. Basecoat paint must retain clearcoat for durability.

SEATS

TABLE OF CONTENTS

page

CHILD SEAT MODULE
REMOVAL 86
INSTALLATION
INSTALLATION 87
SYNCHRONIZING CABLE ADJUSTMENT . . . 87
QUAD CHILD SEAT
REMOVAL 88
INSTALLATION 88
HEADREST
REMOVAL 88
INSTALLATION 88
HEADREST SLEEVE
REMOVAL 88
INSTALLATION 89
RECLINER HANDLE
REMOVAL 89
INSTALLATION 89
ARMREST
REMOVAL 89
INSTALLATION 90
CENTER ARMREST 3 PASSENGER BENCH
REMOVAL 90
INSTALLATION 90
FRONT SEAT
REMOVAL 90
INSTALLATION 90
FRONT SEATBACK
REMOVAL 90
INSTALLATION 91
FRONT SEATBACK ASSIST STRAP
REMOVAL 91
INSTALLATION 92
FRONT SEATBACK PANEL
REMOVAL 92
INSTALLATION 92
FRONT SEATBACK COVER
REMOVAL 92
INSTALLATION 92
FRONT/QUAD SEAT CUSHION
REMOVAL 92
INSTALLATION 93
FRONT SEAT CUSHION SIDE COVER
REMOVAL 93
INSTALLATION 93
FRONT SEAT RISER - MANUAL TRACK
REMOVAL 94
INSTALLATION 94
FRONT SEAT TRACK POWER ADJUSTER
REMOVAL 94
INSTALLATION 94
FRONT SEAT TRACK MANUAL ADJUSTER
REMOVAL 94
INSTALLATION 95
FRONT SEAT TRACK - FRONT COVER
REMOVAL 95
INSTALLATION 95
FRONT SEAT TRACK - REAR COVER
REMOVAL 96
INSTALLATION 96
QUAD BUCKET SEAT SIDE SHIELD/CUP HOLDER
REMOVAL 96
INSTALLATION 96
QUAD BUCKET SEAT SIDE SHIELD - NO CUP HOLDER
REMOVAL 97
INSTALLATION 97
QUAD BUCKET SEAT RISER
REMOVAL 97
INSTALLATION 97
BUCKET SEAT BACK - QUAD BUCKET
REMOVAL 98
INSTALLATION 98
BENCH SEATBACK PANEL
REMOVAL 99
INSTALLATION 99
SEAT CUSHION COVER - QUAD BUCKET, 50/50 SPLIT, BENCH
REMOVAL 99
INSTALLATION 100
BENCH SEAT RISER - 50/50 SPLIT
REMOVAL 100
INSTALLATION 100
BENCH SEAT RISER - SECOND ROW
REMOVAL 100
INSTALLATION 101
BENCH SEAT RISER - THIRD ROW
REMOVAL 101
INSTALLATION 101
SEAT BACK HINGE COVERS - QUAD BUCKET, 50/50 SPLIT, BENCH
REMOVAL 101
INSTALLATION 101
BENCH SEAT BACK HINGE
REMOVAL 101
INSTALLATION
INSTALLATION 101
SYNCHRONIZING CABLE ADJUSTMENT . . 102

BENCH SEAT BACK
REMOVAL 102
INSTALLATION 103
BENCH SEAT BACK COVER
REMOVAL 103
INSTALLATION 103
BENCH SEAT TRACK
REMOVAL 103
INSTALLATION 104
PLASTIC GROCERY BAG RETAINER
REMOVAL 104
INSTALLATION 104
UNDER SEAT STORAGE BIN
REMOVAL 104
INSTALLATION 105
UNDER SEAT STORAGE BIN GUIDE
REMOVAL 105
INSTALLATION 105
UNDER SEAT STORAGE BIN LOCK/LATCH
REMOVAL 105
INSTALLATION 105
LUMBAR SUPPORT
REMOVAL 106
INSTALLATION 106

CHILD SEAT MODULE

REMOVAL

(1) Close child restraint seat.
(2) Remove seat back cover.
(3) Remove screws attaching child restraint seat module hinges to seat back frame lower rail (Fig. 1).
(4) Return seat back to upright position.
(5) Disengage push in fasteners attaching upper bolster to child restraint seat module (Fig. 2).
(6) Remove screws attaching top of module to seat back frame upper rail (Fig. 3).
(7) Remove child restraint seat module from seat back (Fig. 4).

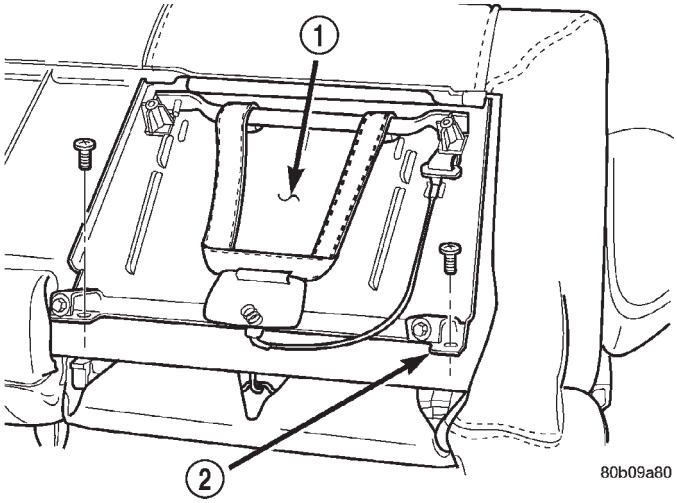

Fig. 1 CHILD RESTRAINT SEAT LOWER HINGE

1 - CHILD RESTRAINT SEAT MODULE
2 - LOWER HINGE

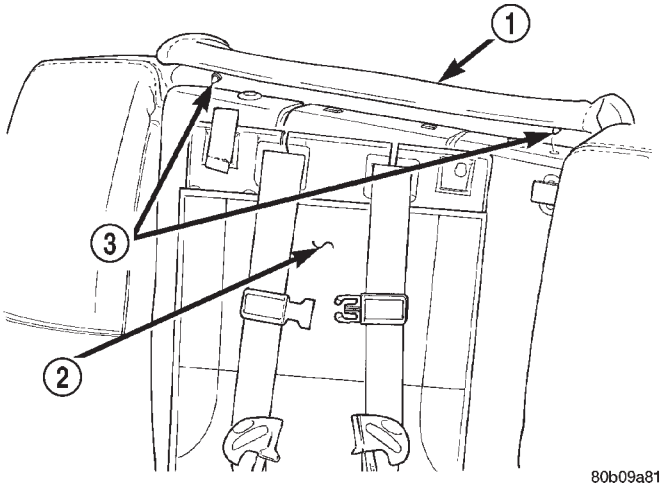

Fig. 2 CHILD RESTRAINT SEAT UPPER BOLSTER

1 - UPPER BOLSTER
2 - CHILD RESTRAINT SEAT MODULE
3 - PUSH-IN FASTENER

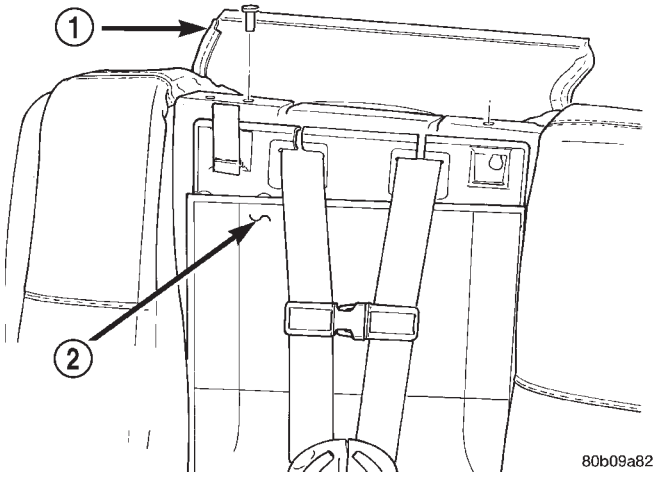

Fig. 3 CHILD RESTRAINT SEAT UPPER SCREWS

1 - UPPER BOLSTER
2 - CHILD RESTRAINT SEAT MODULE

CHILD SEAT MODULE (Continued)

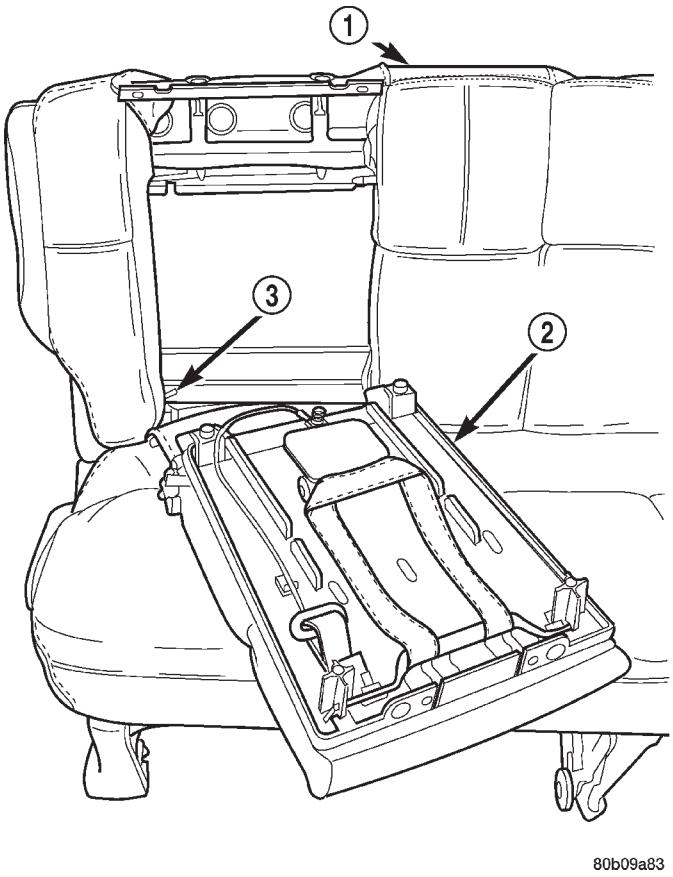

Fig. 4 CHILD RESTRAINT SEAT MODULE

1 - 1ST REAR SEAT BACK
2 - CHILD RESTRAINT SEAT MODULE
3 - SEAT BACK HINGE INTERLOCK LEVER

INSTALLATION

INSTALLATION

(1) Place child restraint seat module in position on seat back (Fig. 4).

(2) Position seat back hinge interlock lever over the top of the outboard child restraint seat hinge (Fig. 5).

(3) Install screws attaching child restraint seat module hinges to seat back frame lower rail (Fig. 1).

(4) Install screws attaching top of module to seat back frame upper rail (Fig. 3). Tighten nuts to 7 N·m (62 in. lbs.) torque.

(5) Install push in fasteners attaching upper bolster to child restraint seat module (Fig. 2).

(6) Return seat back to folded position.

(7) Install seat back cover.

(8) Verify child restraint seat operation.

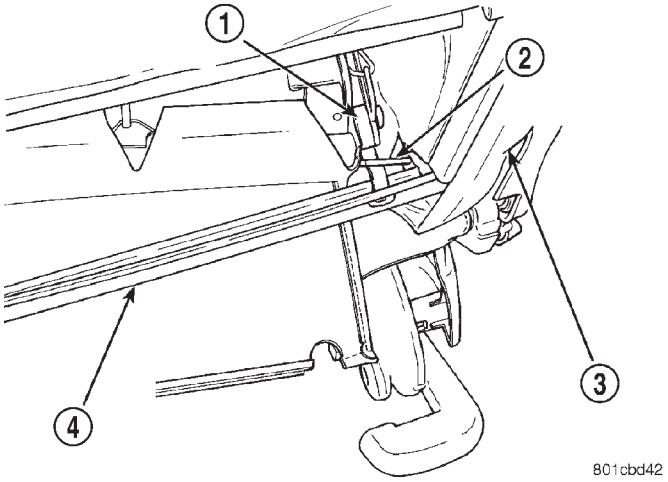

Fig. 5 INTERLOCK LEVER

1 - CHILD RESTRAINT SEAT HINGE
2 - SEAT BACK HINGE INTERLOCK LEVER
3 - 1ST REAR SEAT BACK
4 - SEAT BACK FRAME RAIL

SYNCHRONIZING CABLE ADJUSTMENT

NOTE:
Bench seats equipped with child restraint seats have an interlock feature that will not allow the seat back to fold forward with the child seat open.
If the seat back hinges do not release at the same time the synchronizing cable must be adjusted.

(1) Remove seat from vehicle. Refer to Owner's Manual for proper procedures.

(2) Disengage cable from the recline mechanism by pulling the cable end toward the front of the seat (Fig. 6).

(3) Pull U-shaped locking tab on self-adjusting mehcanism to disengage auto-adjust feature.

(4) Reattach self-adjusting mechanism, pulling against spring load to tighten cable.

(5) Press locking tab onto the adjusting mechanism to lock into place.

CHILD SEAT MODULE (Continued)

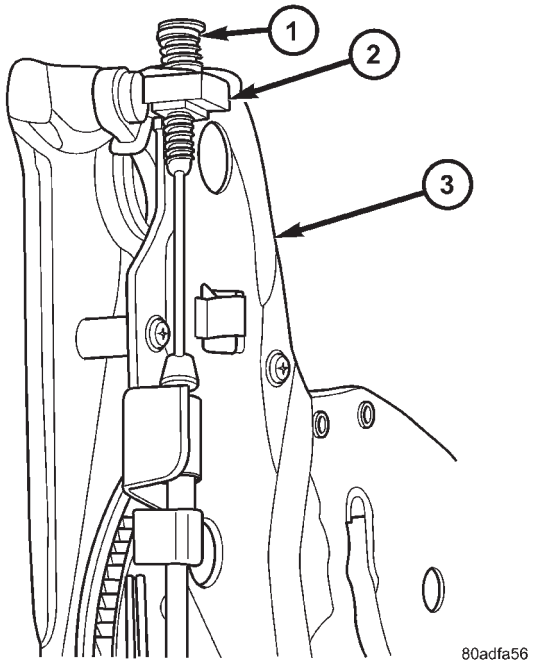

Fig. 6 SYNCHRONIZING CABLE

1 - CABLE END
2 - LOCKING TAB
3 - SETBACK HINGE

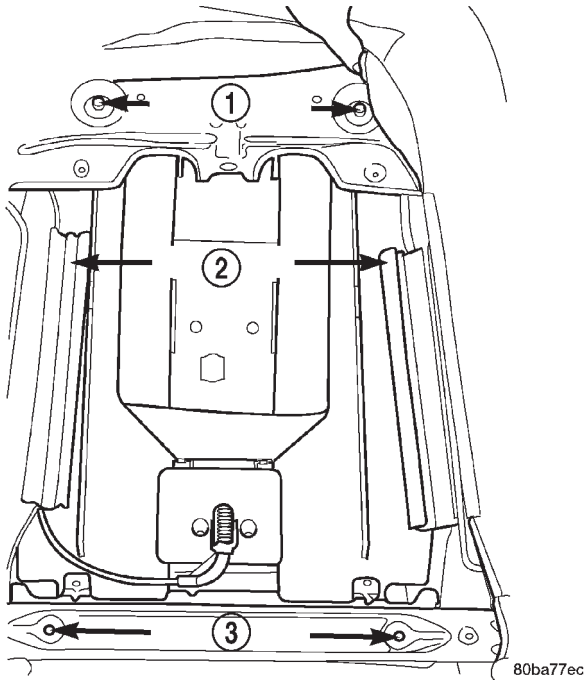

Fig. 8 CHILD RESTRAINT SEAT BACK

1 - FASTENERS
2 - J-STRAPS
3 - FASTENERS

QUAD CHILD SEAT

REMOVAL

(1) Remove the seat. Refer to Owner's Manual for proper procedures.
(2) Remove seat back cover (Fig. 7).
(3) Remove fasteners attaching quad child seat to the seat (Fig. 8).
(4) Remove quad child seat from the seat.

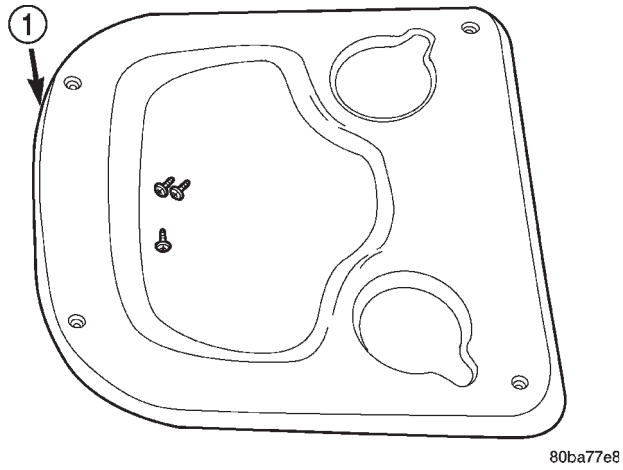

Fig. 7 SEAT BACK COVER

1 - SEAT BACK COVER

INSTALLATION

(1) Place quad child seat in position.
(2) Install fasteners and tighten to 13.5 N·m (10 ft. lbs.)
(3) Install seat back cover.
(4) Install seat in vehicle.

HEADREST

REMOVAL

(1) Lift head restraint to top of travel.
(2) Depress lock button on side of sleeve at top of seat back (Fig. 9).
(3) Pull head restraint from top of seat back.

INSTALLATION

(1) Place head restraint in position.
(2) Depress lock button on side of sleeve at top of seat back.
(3) Push heat restraint down into position.

HEADREST SLEEVE

REMOVAL

(1) Remove head rest.
(2) Disengage closure attaching bottom of trim cover together.

HEADREST SLEEVE (Continued)

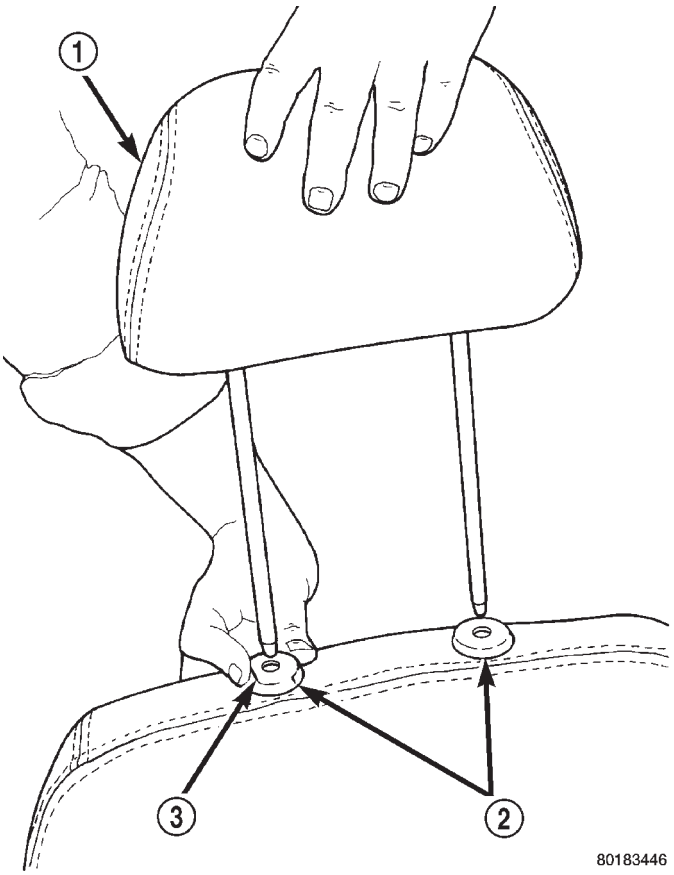

Fig. 9 HEAD RESTRAINT

1 - HEAD RESTRAINT
2 - SLEEVES
3 - LOCK BUTTON

(3) Reach under trim cover through opening at bottom of seat back.

(4) Pinch retainer barbs on end of head restraint sleeve together (Fig. 10).

(5) Pull head restraint sleeve upward and out the top of the seat back frame guide tube (Fig. 11).

INSTALLATION

(1) Insert head restraint sleeve into guide tube at top of seat back.

(2) Push head restraint sleeve downward until retainer clicks into lock position.

(3) Engage closure to hold bottom of trim cover together.

(4) Install head restraint.

RECLINER HANDLE

REMOVAL

(1) Remove screw holding recliner handle to recliner spline shaft (Fig. 12).

(2) Remove recliner handle from spline shaft.

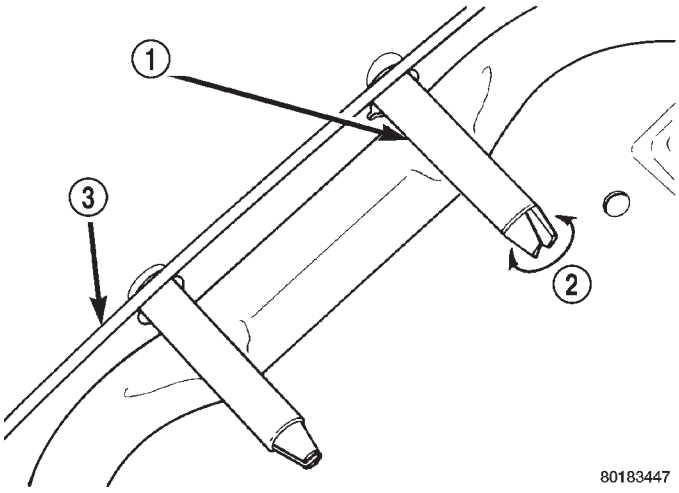

Fig. 10 HEAD RESTRAINT SLEEVE RETAINER

1 - GUIDE TUBE
2 - PINCH RETAINER TO RELEASE
3 - SEAT BACK FRAME

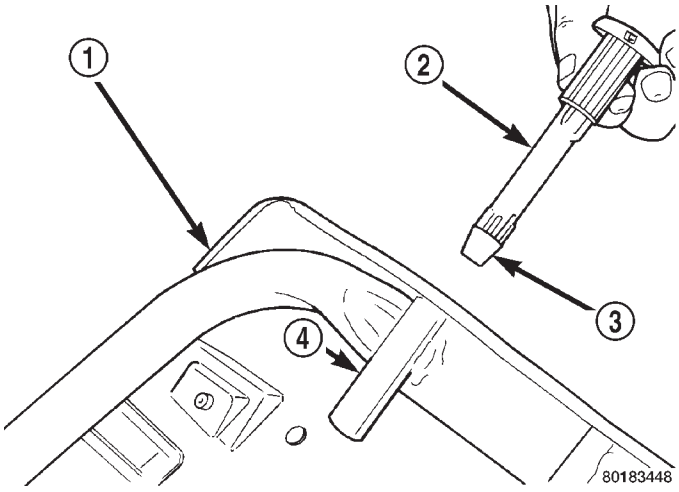

Fig. 11 HEAD RESTRAINT SLEEVE

1 - SEAT BACK FRAME
2 - HEAD RESTRAINT SLEEVE
3 - RETAINER
4 - GUIDE TUBE

INSTALLATION

(1) Place recliner handle in position on spline shaft.

(2) Install screw to hold recliner handle to recliner spline shaft (Fig. 12).

ARMREST

REMOVAL

(1) Using a small flat blade, pry cap from side of armrest (Fig. 13).

(2) Remove bolt attaching armrest to seat back.

ARMREST (Continued)

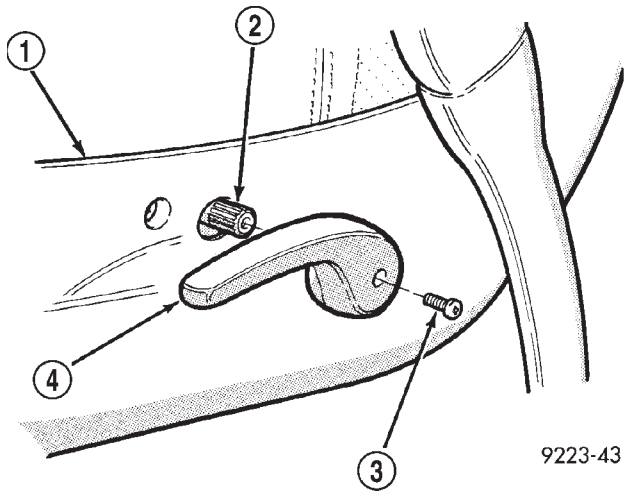

Fig. 12 RECLINER HANDLE - MANUAL

1 - CUSHION SIDE COVER
2 - RECLINER SPLINE
3 - SCREW
4 - RECLINER HANDLE

(3) Remove armrest from seat back.

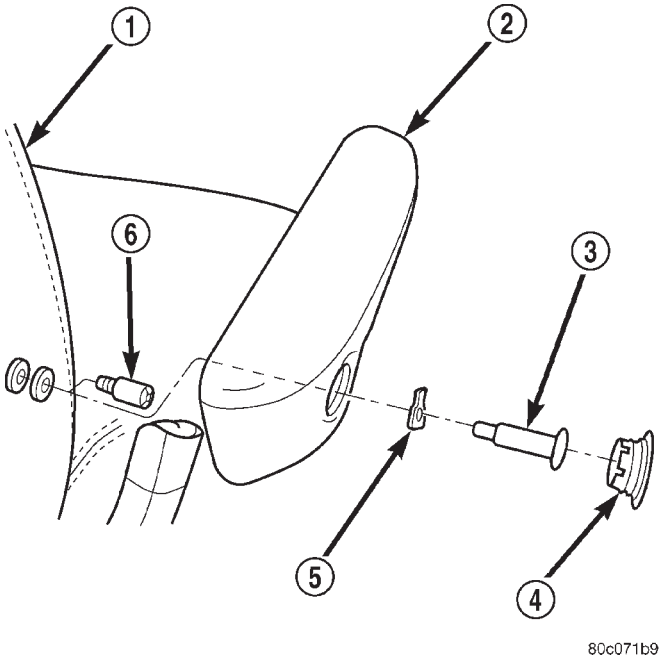

Fig. 13 ARMREST

1 - SEAT BACK
2 - ARMREST
3 - SHOULDER BOLT
4 - CAP
5 - WASHER
6 - STOP SCREW

INSTALLATION

(1) Place armrest in position on seat back.
(2) Install bolt attaching armrest to seat back. Tighten bolt to 29N·m (21 ft. lbs.) torque.
(3) Install side cap into the side of the armrest.

CENTER ARMREST 3 PASSENGER BENCH

REMOVAL

(1) Remove screws attaching the plastic grocery bag retainer. (Refer to 23 - BODY/SEATS/PLASTIC GROCERY BAG RETAINER - REMOVAL)
(2) Remove seat back rear cover.
(3) Remove E-clip from pivot post.
(4) Remove pivot post.
(5) Remove armrest.
(6) Remove pivot bushings.

INSTALLATION

(1) Install pivot bushings.
(2) Place armrest in position.
(3) Install pivot post.
(4) Install E-clip to pivot post.
(5) Install seat back rear cover.
(6) Install screws attaching the plastic grocery bag retainer. (Refer to 23 - BODY/SEATS/PLASTIC GROCERY BAG RETAINER - INSTALLATION)

FRONT SEAT

REMOVAL

(1) From under vehicle, remove nuts attaching front seat risers to the floor.
(2) Remove seat and riser from floor (Fig. 14).
(3) Tip seat rearward and disconnect wire connectors from body harness, if equipped.
(4) Remove seat from vehicle.

INSTALLATION

(1) Place seat into position
(2) Tip seat rearward and connect wire connectors to body harness, if equipped.
(3) Place seat and riser into floor.
(4) From under vehicle, install nuts attaching front seat risers to the floor. Tighten nuts to 60 N·m (44 ft. lbs.) torque.

FRONT SEATBACK

REMOVAL

NOTE: On front seats equipped with side air bags, the seatback is serviced as an assembly.

FRONT SEATBACK (Continued)

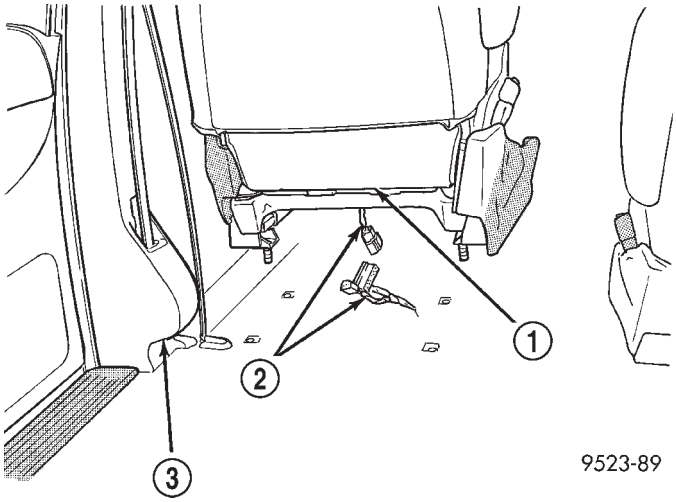

Fig. 14 FRONT SEAT

1 - FRONT SEAT
2 - CONNECTORS
3 - B-PILLAR

(1) Remove head rest sleeves. (Refer to 23 - BODY/SEATS/HEADREST SLEEVE - REMOVAL)
(2) Remove the armrest. (Refer to 23 - BODY/SEATS/ARMREST - REMOVAL)
(3) Remove the seatback recliner lever.
(4) Remove the lumbar adjustment lever.
(5) Remove both seat cushion side covers. (Refer to 23 - BODY/SEATS/FRONT SEAT CUSHION SIDE COVER - REMOVAL)
(6) Remove nut attaching the recliner to the seatback frame (Fig. 15).
(7) Remove both pivot bolts and remove seatback from recliner.

INSTALLATION

(1) Place seat back into position.
(2) Install both pivot bolts attaching seat back frame to seat track. Tighten bolts to 54 N·m (40 ft. lbs.) torque.
(3) Install nut attaching the recliner to the seat back frame. Tighten nut to 12 N·m (105 in. lbs.) torque.
(4) Install both seat cushion side covers. (Refer to 23 - BODY/SEATS/FRONT SEAT CUSHION SIDE COVER - INSTALLATION)
(5) Install the lumbar adjustment lever.
(6) Install the seat back recliner lever.
(7) Install the armrest. (Refer to 23 - BODY/SEATS/ARMREST - INSTALLATION)
(8) Install headrest sleeves. (Refer to 23 - BODY/SEATS/HEADREST SLEEVE - INSTALLATION)

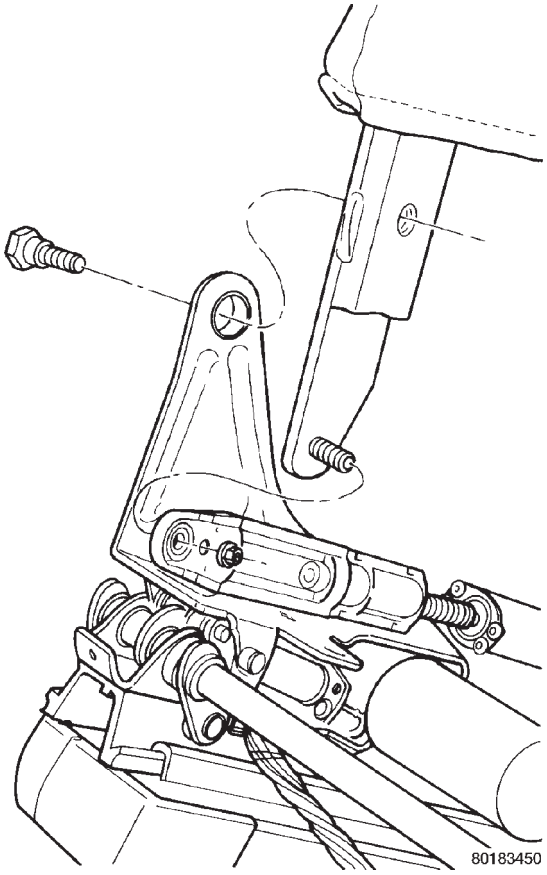

Fig. 15 FRONT SEATBACK

FRONT SEATBACK ASSIST STRAP

REMOVAL

(1) Using a small screw driver, pry screw plugs from ends of assist strap (Fig. 16).
(2) Remove screws attaching assist strap to seatback.
(3) Remove assist strap from vehicle.

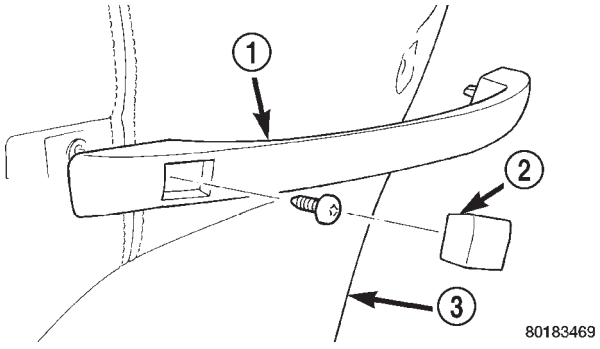

Fig. 16 FRONT SEATBACK ASSIST STRAP

1 - ASSIST STRAP
2 - SCREW PLUG
3 - SEAT BACK

FRONT SEATBACK ASSIST STRAP (Continued)

INSTALLATION

(1) Place assist strap in position on vehicle.
(2) Install screws attaching assist strap to seat back. Tighten screws to 2.5 N·m (22 in. lbs.).
(3) Insert screw plugs into ends of assist strap (Fig. 16).

FRONT SEATBACK PANEL

REMOVAL

(1) Remove the screws (Fig. 17).
(2) Tip the top of the panel away from the seat back and lift off the hooks at the bottom to remove.

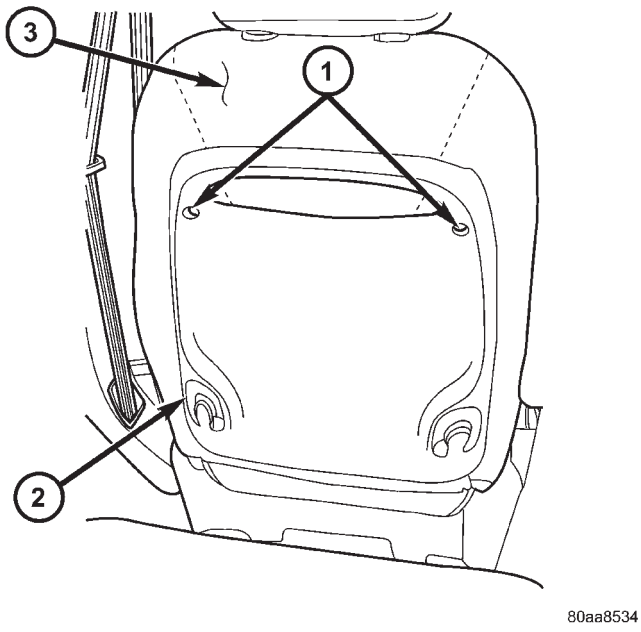

Fig. 17 FRONT SEATBACK PANEL - TYPICAL

1 - SCREWS
2 - SEAT BACK PANEL
3 - SEAT BACK

INSTALLATION

(1) Place seat back cover onto the seat and engage the bottom hooks.
(2) Install the top screws.

FRONT SEATBACK COVER

REMOVAL

NOTE: On vehicles equipped with seat side air bags the seat cover is NOT serviceable. The seat back is serviced as an assembly. (Refer to 23 - BODY/ SEATS/SEAT BACK - REMOVAL)

(1) Remove the seat back. (Refer to 23 - BODY/ SEATS/FRONT SEATBACK - REMOVAL)
(2) Unclip J-straps as necessary.
(3) Remove seat back cover from seat back cushion and frame assembly.

INSTALLATION

NOTE: On vehicles equipped with seat side air bags the seat cover is NOT serviceable. The seat back is serviced as an assembly only. (Refer to 23 - BODY/ SEATS/SEAT BACK - INSTALLATION)

(1) Fit seat cover onto seat back cushion and frame assembly.
(2) Connect the J-straps.
(3) Install the seat back. (Refer to 23 - BODY/ SEATS/FRONT SEATBACK - INSTALLATION)

FRONT/QUAD SEAT CUSHION

REMOVAL

(1) Remove seat cushion side covers, and leave connector connected, if equipped. (Refer to 23 - BODY/SEATS/FRONT SEAT CUSHION SIDE COVER - REMOVAL)
(2) On quad buckets, remove the seat side shield and cup holder. (Refer to 23 - BODY/SEATS/SEAT SIDE SHIELD/QUAD BUCKET SEAT SIDE SHIELD/CUP HOLDER - REMOVAL) and (Refer to 23 - BODY/SEATS/QUAD BUCKET SEAT SIDE SHIELD - NO CUP HOLDER - REMOVAL)
(3) Remove seat track front and rear covers if equipped. (Refer to 23 - BODY/SEATS/SEAT TRACK REAR COVER - REMOVAL) and (Refer to 23 - BODY/SEATS/SEAT TRACK FRONT COVER - REMOVAL)

FRONT/QUAD SEAT CUSHION (Continued)

(4) If equipped, open stowage bin to access front pan bolts.
(5) Remove bolts attaching seat cushion pan to seat track.
(6) Disconnect wire connectors, if equipment.
(7) Remove seat cushion from seat.
(8) Disengage J-strap retainers holding seat cover to cushion.
(9) Remove seat cushion pan from cover and pad.

INSTALLATION

(1) Place seat cushion cover in position on seat cushion.
(2) Engage J-strap retainers to hold seat cover to cushion.
(3) Place seat cushion in position on seat.
(4) Connect wire connectors, if equipment.
(5) Install bolts attaching seat cushion to seat track. Tighten bolts to 28.5 N·m (21 ft. lbs.) torque.
(6) If equipped, close stowage bin.
(7) Install seat track front and rear covers, if equipped. (Refer to 23 - BODY/SEATS/SEAT TRACK REAR COVER - INSTALLATION) and (Refer to 23 - BODY/SEATS/SEAT TRACK FRONT COVER - INSTALLATION)
(8) Install the quad seat side shield and cup holder if equipped. (Refer to 23 - BODY/SEATS/QUAD BUCKET SEAT SIDE SHIELD/CUP HOLDER - INSTALLATION) and (Refer to 23 - BODY/SEATS/QUAD BUCKET SEAT SIDE SHIELD - NO CUP HOLDER - INSTALLATION)
(9) Install seat cushion side covers. (Refer to 23 - BODY/SEATS/FRONT SEAT CUSHION SIDE COVER - INSTALLATION)

FRONT SEAT CUSHION SIDE COVER

REMOVAL

(1) Remove screws and plastic push pin attaching seat cushion side cover to bucket seat (Fig. 18).
(2) Disengage J-strap along rear of seat cushion to access screw.
(3) Remove screw attaching rear of side cover to seat cushion frame.
(4) Remove side cover from seat cushion.
(5) If equipped, disconnect wire connector from power seat switch (Fig. 19).

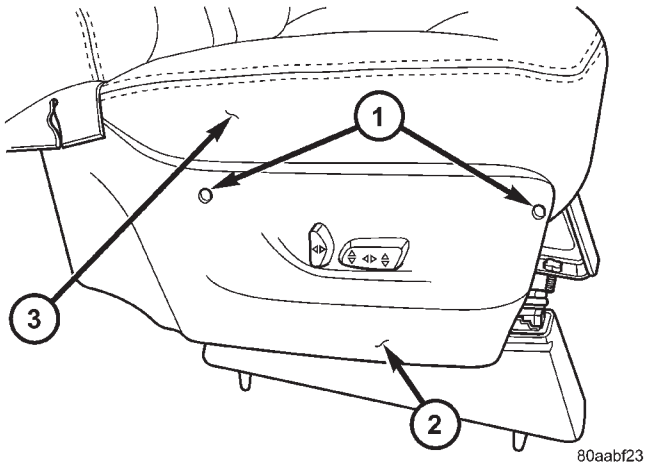

Fig. 18 FRONT SEAT SIDE SHIELD

1 - SCREWS
2 - SIDE SHIELD
3 - SEAT CUSHION

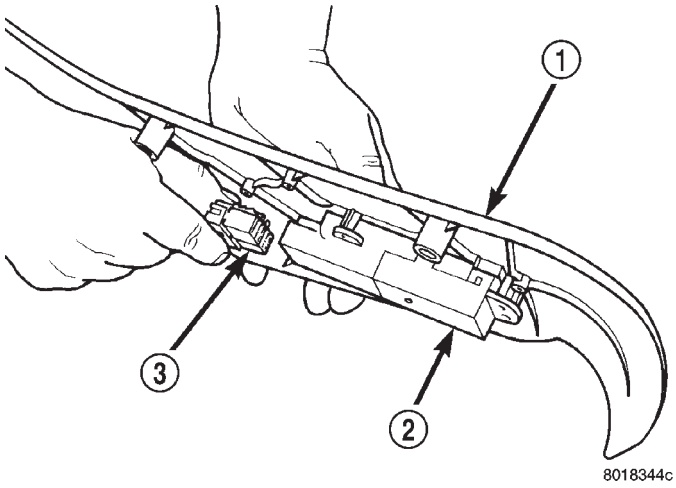

Fig. 19 POWER SEAT SWITCH WIRE CONNECTOR

1 - SEAT CUSHION SIDE COVER
2 - POWER SEAT SWITCH
3 - WIRE CONNECTOR

INSTALLATION

(1) Place side cover in position on seat cushion.
(2) If equipped, connect wire connector into power seat switch.
(3) Install screw attaching rear of side cover to seat cushion frame. Tighten screw to 1 N·m (9 in. lbs.) torque.
(4) Engage J-strap along rear of seat cushion to access screw.
(5) Install screws attaching seat cushion side cover to bucket seat (Fig. 18).

FRONT SEAT RISER - MANUAL TRACK

REMOVAL

(1) Remove seat from vehicle. (Refer to 23 - BODY/SEATS/FRONT SEAT - REMOVAL)

(2) Remove storage bin from riser. (Refer to 23 - BODY/SEATS/UNDER SEAT STORAGE BIN - REMOVAL)

(3) Remove nuts attaching riser to manual seat track (Fig. 20).

(4) Remove riser from seat.

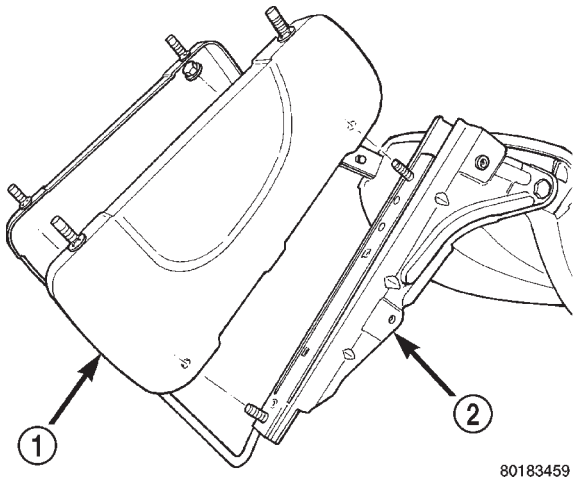

Fig. 20 FRONT SEAT RISER - MANUAL TRACK

1 - RISER
2 - SEAT TRACK

INSTALLATION

(1) Place riser in position on seat.

(2) Install nuts attaching riser to manual seat track (Fig. 20). Tighten fasteners to 81 N·m (60 ft. lbs.) torque.

(3) If equipped, install storage bin into riser. (Refer to 23 - BODY/SEATS/UNDER SEAT STORAGE BIN - INSTALLATION)

(4) Install seat into vehicle. Tighten fasteners to 54 N·m (40 ft. lbs.) torque. (Refer to 23 - BODY/SEATS/FRONT SEAT - INSTALLATION)

FRONT SEAT TRACK POWER ADJUSTER

REMOVAL

The power seat track and motors are serviced as an assembly.

(1) Remove seat from vehicle. (Refer to 23 - BODY/SEATS/FRONT SEAT - REMOVAL)

(2) Remove seat cushion. (Refer to 23 - BODY/SEATS/FRONT/QUAD SEAT CUSHION - REMOVAL)

(3) Remove nut attaching recliner to seat back frame.

(4) Remove bolts attaching seat back frame to seat track.

(5) Remove stud on seat back frame from recliner.

(6) Remove seat back.

(7) If power seat track is being replaced, transfer power recliner, wire harness and trim covers to replacement seat track.

INSTALLATION

The power seat track and motors are serviced as an assembly.

(1) Install wire harness.

(2) Place seat back in position.

(3) Insert stud on seat back frame into recliner.

(4) Install bolts to hold seat back frame to seat track.

(5) Install nut attaching recliner to seat back frame.

(6) Install seat cushion. (Refer to 23 - BODY/SEATS/FRONT/QUAD SEAT CUSHION - INSTALLATION)

(7) Install seat in vehicle. Tighten fasteners to 60 N·m (44 ft. lbs.) torque. (Refer to 23 - BODY/SEATS/FRONT SEAT - INSTALLATION)

FRONT SEAT TRACK MANUAL ADJUSTER

REMOVAL

(1) Remove seat from vehicle. (Refer to 23 - BODY/SEATS/FRONT SEAT - REMOVAL)

(2) Remove seat cushion. (Refer to 23 - BODY/SEATS/FRONT/QUAD SEAT CUSHION - REMOVAL)

(3) Remove riser. (Refer to 23 - BODY/SEATS/FRONT SEAT RISER - MANUAL TRACK - REMOVAL)

FRONT SEAT TRACK MANUAL ADJUSTER (Continued)

(4) Remove bolt attaching seat back frame to seat track (Fig. 21).

(5) Remove seat track from seat adjuster handle (Fig. 22).

(6) Remove seat track from seat.

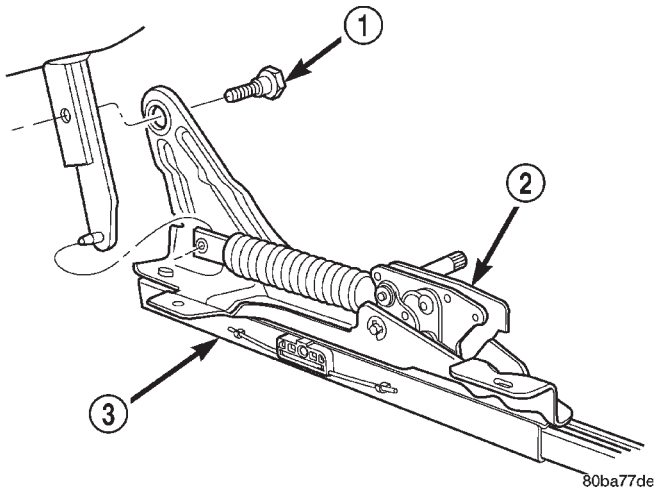

Fig. 21 FRONT SEAT TRACK - MANUAL

1 - SHOULDER BOLT
2 - RECLINER
3 - MANUAL SEAT TRACK

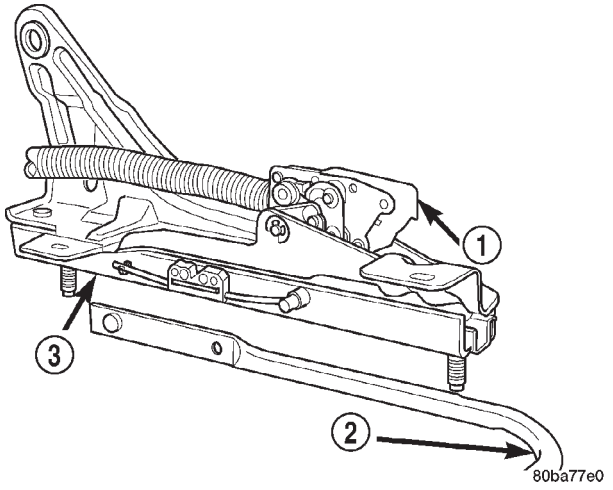

Fig. 22 FRONT SEAT TRACK ADJUSTER HANDLE

1 - RECLINER
2 - SEAT ADJUSTER HANDLE
3 - MANUAL SEAT TRACK

INSTALLATION

(1) Place seat track in position on seat.

(2) Place adjuster handle in position on seat track (Fig. 22).

(3) Insert stud on seat back frame into recliner.

(4) Install bolt attaching seat back frame to seat track (Fig. 21).

(5) Install riser. (Refer to 23 - BODY/SEATS/FRONT SEAT RISER - MANUAL TRACK - INSTALLATION)

(6) Install seat cushion. (Refer to 23 - BODY/SEATS/FRONT/QUAD SEAT CUSHION - INSTALLATION)

(7) Install seat in vehicle. (Refer to 23 - BODY/SEATS/FRONT SEAT - INSTALLATION)

FRONT SEAT TRACK - FRONT COVER

REMOVAL

(1) Remove screws attaching front cover to seat track (Fig. 23).

(2) Remove front cover from vehicle.

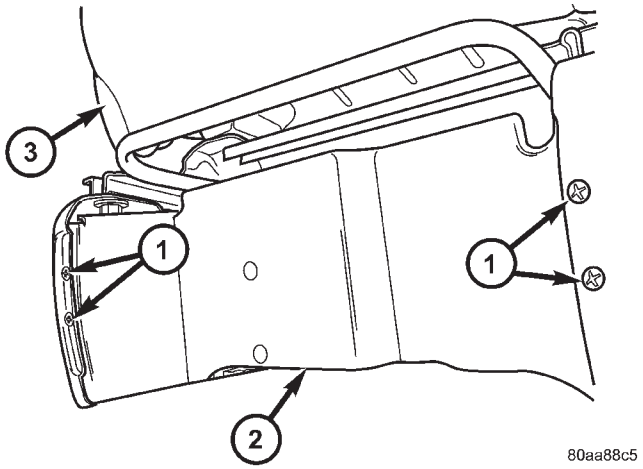

Fig. 23 FRONT SEAT TRACK FRONT COVER - MANUAL DRIVERS SEAT

1 - SCREWS
2 - COVER
3 - SEAT CUSHION

INSTALLATION

(1) Place front cover in position on seat.

(2) Install screws attaching front cover to seat track (Fig. 23). Tighten screws to 4 N·m (35 in. lbs.) torque.

FRONT SEAT TRACK - REAR COVER

REMOVAL

(1) Disengage arrowhead retainer from loop strip attaching rear cover to power seat track crossbar (Fig. 24).

(2) Disengage fasteners attaching rear cover to slots on power seat track.

(3) Remove rear cover from seat.

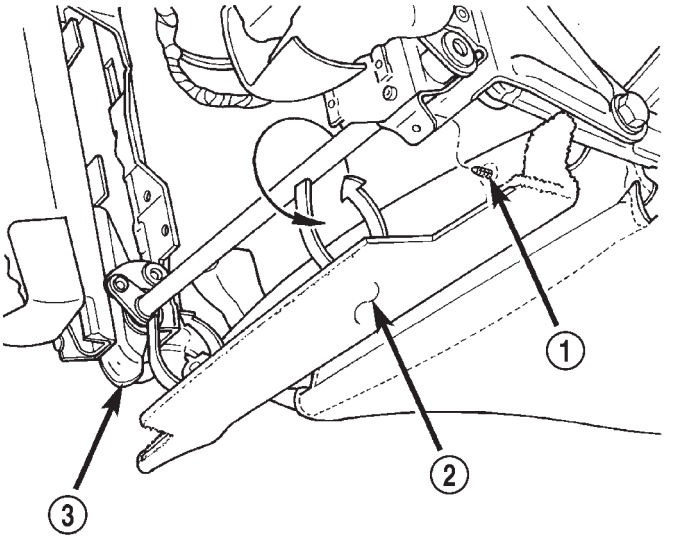

Fig. 24 FRONT POWER SEAT TRACK - REAR COVER

1 - PUSH IN FASTENER
2 - POWER SEAT TRACK REAR COVER
3 - POWER SEAT TRACK

INSTALLATION

(1) Place rear cover in position on seat.

(2) Engage fasteners attaching rear cover to slots on power seat track.

(3) Engage arrowhead retainer into loop strip attaching rear cover to power seat track crossbar (Fig. 24) .

QUAD BUCKET SEAT SIDE SHIELD/CUP HOLDER

REMOVAL

(1) Remove the seat from the vehicle. Refer to Owner's Manual for proper procedures.

(2) Remove the two screws and remove the hinge cover (Fig. 25)

(3) Remove the dump latch handle.

(4) Remove the three screws (Fig. 26).

(5) Depress the tab on the cup holder assembly (Fig. 27).

(6) Using a deep well socket or equivalent, depress the push pin tabs and remove the cup holder assembly (Fig. 28).

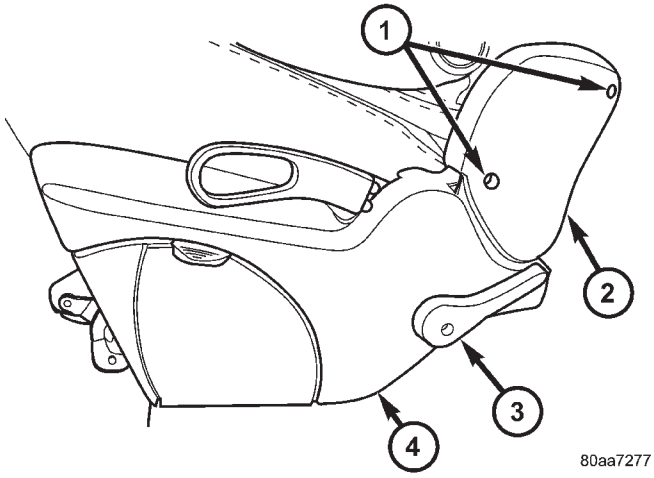

Fig. 25 SEAT SIDE SHIELD/CUP HOLDER

1 - HINGE COVER SCREWS
2 - HINGE COVER
3 - DUMP LATCH HANDLE
4 - SIDE SHIELD/CUP HOLDER

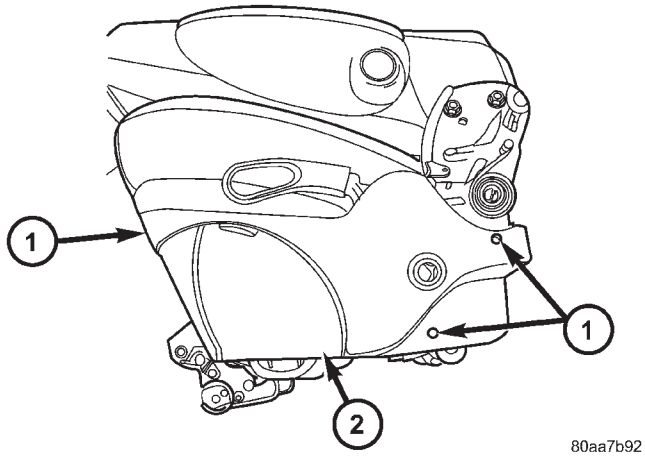

Fig. 26 SEAT SIDE SHIELD/CUP HOLDER SCREWS

1 - SIDE SHIELD/CUP HOLDER SCREWS
2 - SIDE SHIELD/CUP HOLDER

INSTALLATION

(1) Install cup holder onto the pin and lock tab.

(2) Install the three screws.

(3) Install the dump latch handle.

(4) Install the hinge cover and screws.

(5) Install the seat. Refer to Owner's Manual for proper procedures.

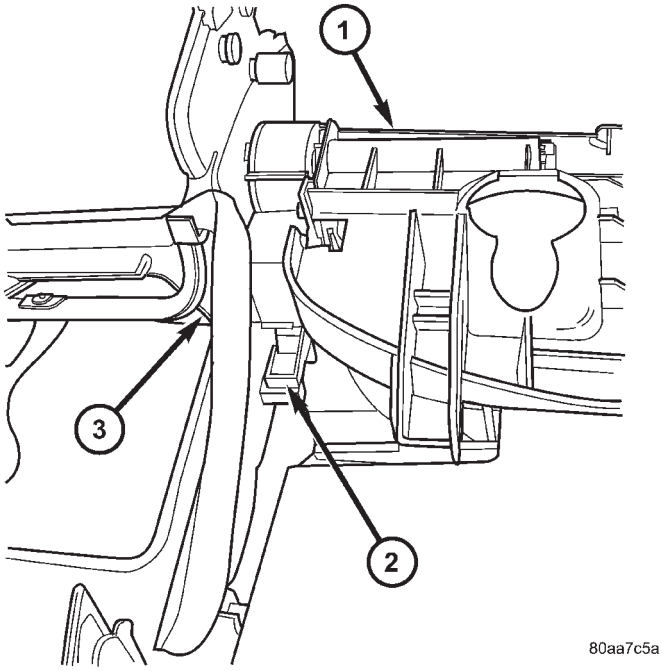

Fig. 27 SIDE SHIELD/CUP HOLDER ATTACHMENT CLIPS

1 - SIDE SHIELD/CUP HOLDER
2 - LOCK TAB
3 - SEAT RISER

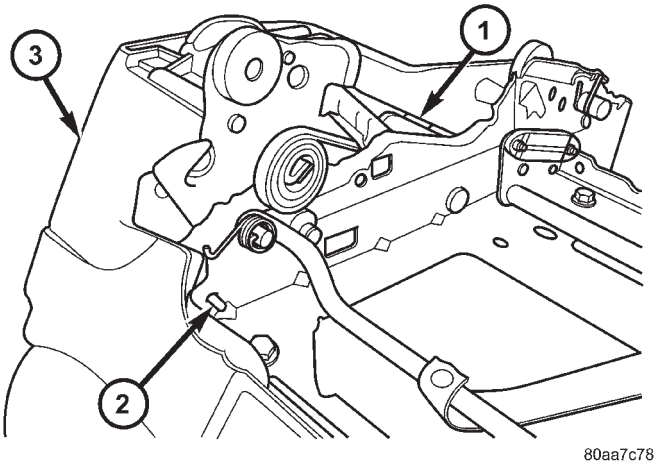

Fig. 28 SIDE SHIELD/CUP HOLDER ATTACHMENT PIN

1 - SEAT RISER
2 - ATTACHMENT PIN
3 - SIDE SHIELD/CUP HOLDER

QUAD BUCKET SEAT SIDE SHIELD - NO CUP HOLDER

REMOVAL

(1) Remove the three screws (Fig. 29).
(2) Remove the side shield.

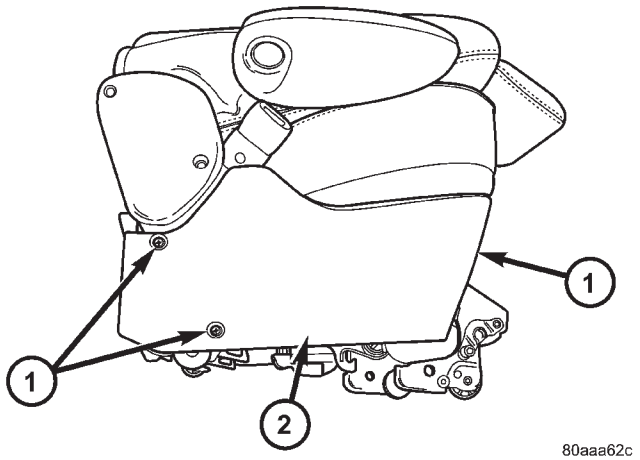

Fig. 29 SEAT SIDE COVER - QUAD BUCKETS

1 - SIDE SHIELD SCREWS
2 - SIDE SHIELD

INSTALLATION

(1) Install the side shield hook into the rectangular hole on the riser.
(2) Install the three screws.

QUAD BUCKET SEAT RISER

REMOVAL

(1) Remove the seat from vehicle. Refer to Owner's Manual for proper procedures.
(2) Remove seat side shield/cupholder. (Refer to 23 - BODY/SEATS/QUAD BUCKET SEAT SIDE SHIELD/CUP HOLDER - REMOVAL)
(3) Remove the seat side shield. (Refer to 23 - BODY/SEATS/QUAD BUCKET SEAT SIDE SHIELD - NO CUP HOLDER - REMOVAL)
(4) Remove the five bolts, two nuts, strut bushing and remove the riser from the seat (Fig. 30).

INSTALLATION

(1) Install the riser, the strut bushing into the hole, the five bolts, two nuts and tighten all fasteners to 40 N·m (30 ft. lbs.).
(2) Install the seat side shield. (Refer to 23 - BODY/SEATS/QUAD BUCKET SEAT SIDE SHIELD - NO CUP HOLDER - INSTALLATION)

QUAD BUCKET SEAT RISER (Continued)

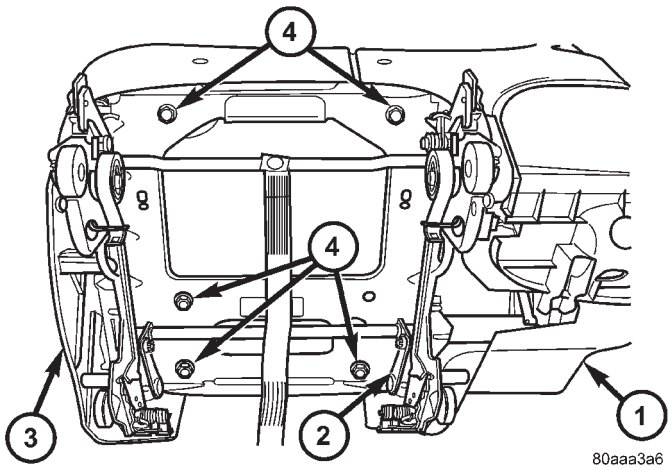

Fig. 30 BUCKET SEAT RISER - QUAD BUCKET

1 - SEAT SIDE SHIELD/CUP HOLDER
2 - SEAT RISER
3 - SEAT SIDE SHIELD
4 - RISER BOLTS

(3) Install the seat side shield/cup holder. (Refer to 23 - BODY/SEATS/QUAD BUCKET SEAT SIDE SHIELD/CUP HOLDER - INSTALLATION)

(4) Install the seat. Refer to Owner's Manual for proper procedures.

BUCKET SEAT BACK - QUAD BUCKET

REMOVAL

NOTE: Quad seats equipped with child restraint seats have an interlock feature that will not allow the seat back to fold forward with the child seat open.

(1) Remove the headrests. (Refer to 23 - BODY/SEATS/HEADREST - REMOVAL)

(2) Remove the armrests, if equipped. (Refer to 23 - BODY/SEATS/ARMREST - REMOVAL)

(3) Remove the seatback hinge covers. (Refer to 23 - BODY/SEATS/SEAT BACK HINGE COVERS - QUAD BUCKET, 50/50 SPLIT, BENCH - REMOVAL)

(4) Disconnect the child seat synchronizer cable, if equipped. (Fig. 31)

(5) Remove the seatback frame bolts and remove the seat back. (Fig. 32)

INSTALLATION

(1) Install the seatback.

(2) Install the shoulder bolts attaching the seatback hinge to the seat back frame and tighten to 34 N·m (25 ft. lbs.) torque.

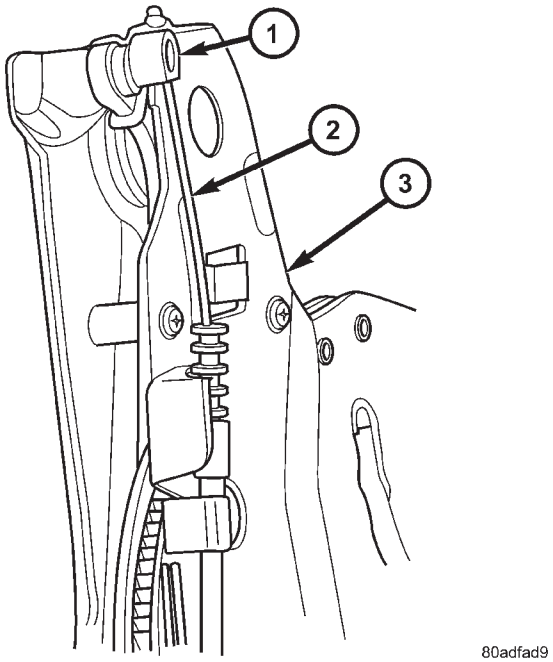

Fig. 31 QUAD SEAT SYNCHRONIZER CABLE

1 - CABLE END CONNECTOR
2 - SYNCHRONIZER CABLE
3 - SEATBACK HINGE

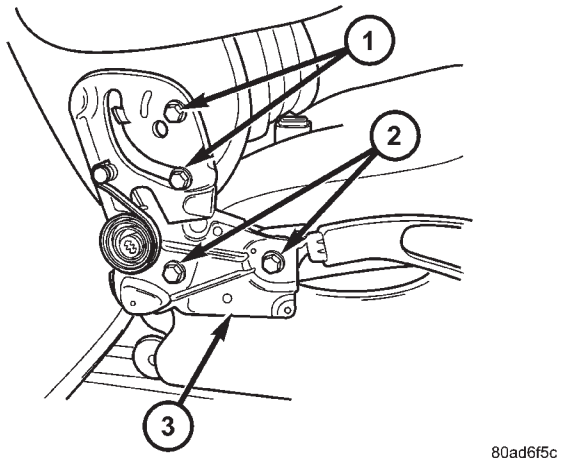

Fig. 32 SEAT BACK HINGE - TYPICAL

1 - SEATBACK FRAME BOLTS
2 - SEAT CUSHION FRAME BOLTS
3 - SEATBACK HINGE

(3) Connect the child seat synchronizer cable, if equipped.

(4) Install the seatback hinge covers. (Refer to 23 - BODY/SEATS/SEAT BACK HINGE COVERS - QUAD BUCKET, 50/50 SPLIT, BENCH - INSTALLATION)

(5) Install the armrests. (Refer to 23 - BODY/SEATS/ARMREST - INSTALLATION)

BUCKET SEAT BACK - QUAD BUCKET (Continued)

(6) Install the headreast. (Refer to 23 - BODY/SEATS/HEADREST - INSTALLATION)
(7) Verify seatback operation.

BENCH SEATBACK PANEL

REMOVAL

(1) On third row seats remove plastic grocery bag retainer. (Refer to 23 - BODY/SEATS/PLASTIC GROCERY BAG RETAINER - REMOVAL)
(2) Using a fork type prying tool (C4829) on three pass seats, disengage push-in fasteners holding seat back cover to seat back frame and remove seat back cover from seat. (Fig. 33).
(3) Using a fork type prying tool (C4829) on two pass seats, disengage push-in fasteners holding the upper corners and lower edge of the seat back panel to seat back frame and remove seat back cover from seat by pulling the lower edge out away from the seatback to disengage the upper two hooks. (Fig. 34).

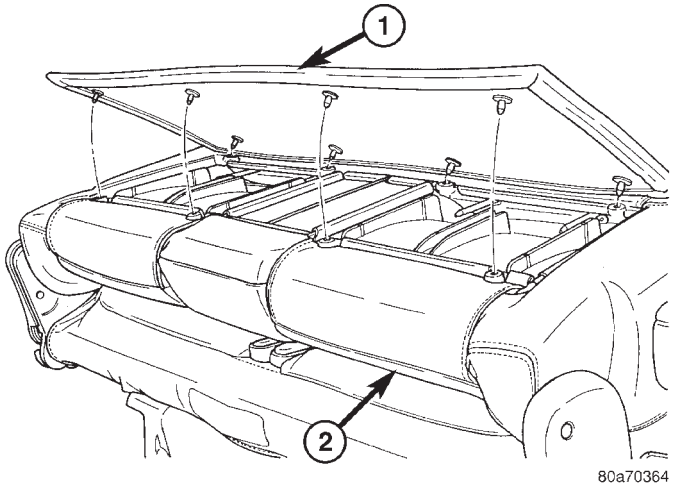

Fig. 33 THREE - PASS BENCH SEATBACK PANEL

1 - SEATBACK REAR PANEL
2 - FIRST REAR CHILD RESTRAINT SEAT

INSTALLATION

(1) On three pass seats place seat back panel in position on seat and install the push-in fasteners (Fig. 33).
(2) On two pass seats engage the two upper hooks of the panel, place the panel into position and install the push-in fasteners (Fig. 34).
(3) On third row bench seats install grocery bag holder. (Refer to 23 - BODY/SEATS/PLASTIC GROCERY BAG RETAINER - INSTALLATION)

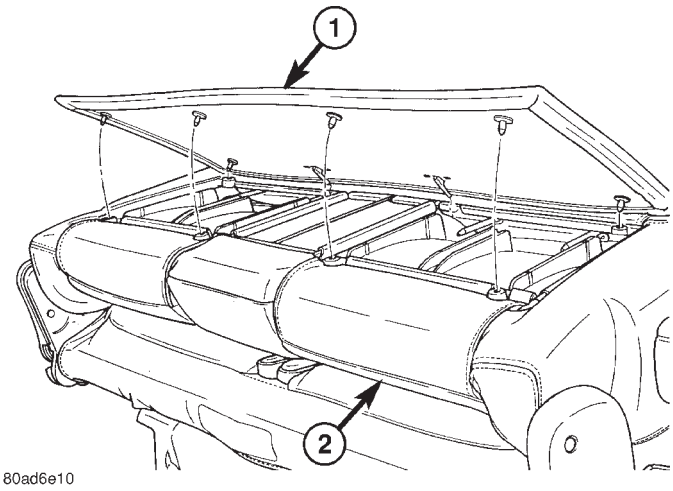

Fig. 34 TWO - PASSENGER BENCH SEATBACK PANEL

1 - SEATBACK REAR PANEL
2 - SEATBACK

SEAT CUSHION COVER - QUAD BUCKET, 50/50 SPLIT, BENCH

REMOVAL

BENCH SEAT & 50/50 SPLIT

(1) Remove seat from vehicle. Refer to Owner's Manual for proper procedures.
(2) Remove seat back. (Refer to 23 - BODY/SEATS/BENCH SEAT BACK - REMOVAL)
(3) Remove seat risers. (Refer to 23 - BODY/SEATS/BENCH SEAT RISER - 50/50 SPLIT - REMOVAL) and (Refer to 23 - BODY/SEATS/BENCH SEAT RISER - FIRST ROW - REMOVAL) and (Refer to 23 - BODY/SEATS/BENCH SEAT RISER - SECOND ROW - REMOVAL)
(4) Disconnect the cushion cover J-straps.
(5) Remove seat cushion cover from seat cushion.

QUAD BUCKET

(1) Remove seat from vehicle. Refer to Owner's Manual for proper procedures.
(2) Remove seat back.(Refer to 23 - BODY/SEATS/BUCKET SEAT BACK - QUAD BUCKET - REMOVAL)
(3) Remove seat risers. (Refer to 23 - BODY/SEATS/QUAD BUCKET SEAT RISER - REMOVAL)
(4) Disconnect the cushion cover J-straps.
(5) Remove seat cushion cover from seat cushion.

SEAT CUSHION COVER - QUAD BUCKET, 50/50 SPLIT, BENCH (Continued)

INSTALLATION

BENCH SEAT & 50/50 SPLIT

(1) Position the seat cushion cover on the cushion.
(2) Engage the J-strap retainers.
(3) Steam wrinkles from seat cushion, if necessary.
(4) Install seat risers. (Refer to 23 - BODY/SEATS/BENCH SEAT RISER - 50/50 SPLIT - INSTALLATION) and (Refer to 23 - BODY/SEATS/BENCH SEAT RISER - SECOND ROW - INSTALLATION) and (Refer to 23 - BODY/SEATS/BENCH SEAT RISER - THIRD ROW - INSTALLATION)
(5) Install seat back. (Refer to 23 - BODY/SEATS/BENCH SEAT BACK - INSTALLATION)
(6) Install seat into vehicle.

QUAD BUCKET

(1) Position the seat cushion cover on the cushion.
(2) Engage the J-strap retainers.
(3) Steam wrinkles from seat cushion, if necessary.
(4) Install seat risers. (Refer to 23 - BODY/SEATS/QUAD BUCKET SEAT RISER - INSTALLATION)
(5) Install seat back. (Refer to 23 - BODY/SEATS/BUCKET SEAT BACK - QUAD BUCKET - INSTALLATION)
(6) Install seat into vehicle.

BENCH SEAT RISER - 50/50 SPLIT

REMOVAL

(1) Remove the seat from the vehicle. Refer to the Owners Manual for proper procedures.
(2) Unclip the seat cushion cover j-strap. (Fig. 35).
(3) Remove the six bolts and remove the riser.

INSTALLATION

(1) Place the riser onto the seat install the bolts and tighten to 48 N·m (35 ft. lbs.) torque.
(2) Clip seat cusion cover j-strap onto the riser.
(3) Install the seat into the vehicle. Refer to the Owner's Manual for proper procedure.

BENCH SEAT RISER - SECOND ROW

REMOVAL

(1) Remove seat from vehicle. Refer to Owner's Manual for proper procedures.
(2) Place seat bottom side up on a clean covered work surface.
(3) Remove bolts attaching seat riser to seat cushion frame (Fig. 36).

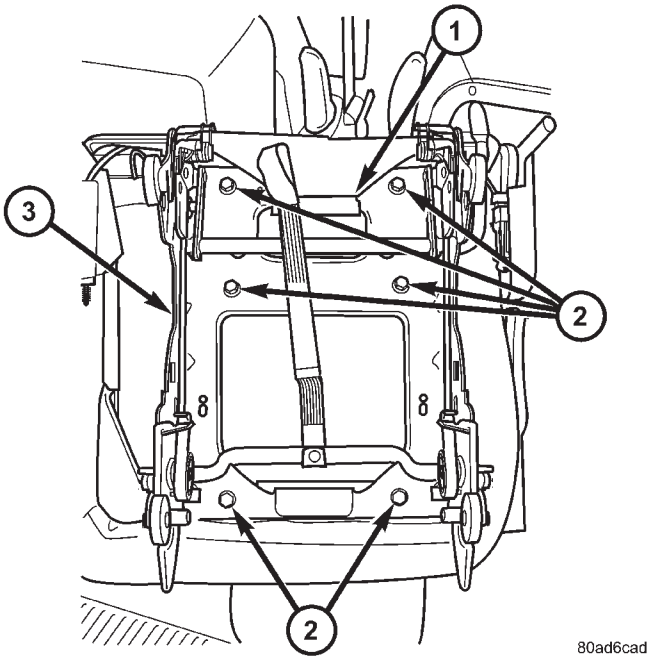

Fig. 35 BENCH SEAT RISER - 50/50 SPLIT

1 - SEAT CUSHION COVER CLIP
2 - SEAT RISER BOLTS
3 - SEAT RISER

(4) Remove riser from seat.

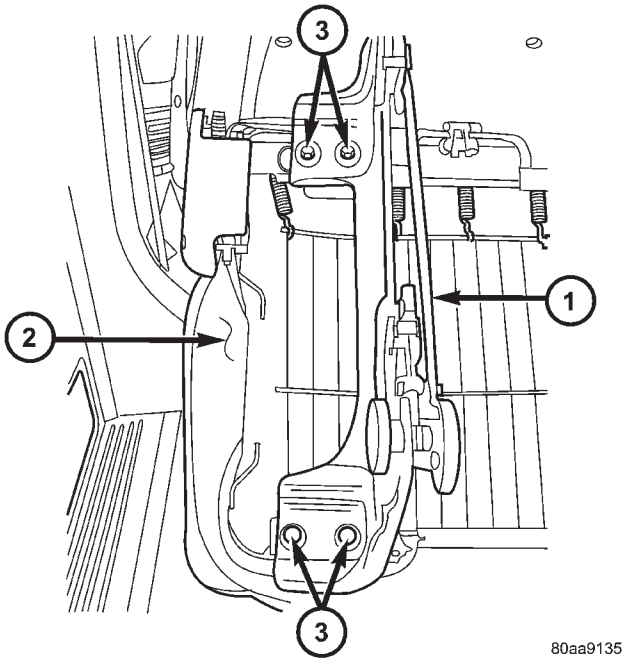

Fig. 36 BENCH SEAT RISER - SECOND ROW

1 - RISER
2 - FIRST ROW BENCH SEAT
3 - RISER BOLTS

BENCH SEAT RISER - SECOND ROW (Continued)

INSTALLATION

(1) Place riser in position on seat.
(2) Install bolts attaching seat riser to seat cushion frame (Fig. 36). Tighten bolts to 48 N·m (35 ft. lbs.) torque.
(3) Install seat into vehicle.

BENCH SEAT RISER - THIRD ROW

REMOVAL

(1) Remove seat track. (Refer to 23 - BODY/SEATS/BENCH SEAT TRACK - REMOVAL)
(2) Remove bolts attaching riser to seat cushion frame and remove the riser. (Fig. 41).

INSTALLATION

(1) Place riser in position on seat.
(2) Install bolts attaching riser to seat cushion frame (Fig. 41). Tighten nuts to 48 N·m (35 ft. lbs.) torque.
(3) Install seat track. (Refer to 23 - BODY/SEATS/BENCH SEAT TRACK - INSTALLATION)

SEAT BACK HINGE COVERS - QUAD BUCKET, 50/50 SPLIT, BENCH

REMOVAL

(1) Remove seat from vehicle. Refer to Owner's Manual for proper procedures.
(2) Remove screws attaching upper hinge cover to seat back hinge (Fig. 37).
(3) Remove upper cover from seat back hinge.
(4) Remove screws attaching lower cover to seat back hinge.
(5) Remove lower cover from hinge.

INSTALLATION

(1) Place upper cover in position on seat back hinge.
(2) Install screws attaching upper hinge cover to seat back hinge. Tighten screws to 2.3 N·m (20 in. lbs.) torque.
(3) Place lower cover in position on hinge.
(4) Install screws attaching lower cover to seat back hinge (Fig. 37). Tighten screws to 2.3 N·m (20 in. lbs.) torque.
(5) Install seat in vehicle.

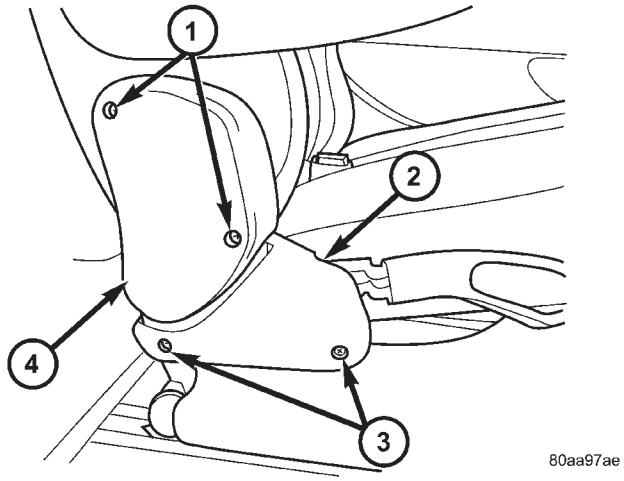

Fig. 37 BENCH SEAT BACK HINGE COVERS - TYPICAL

1 - UPPER COVER SCREWS
2 - LOWER COVER
3 - LOWER COVER SCREWS
4 - UPPER COVER

BENCH SEAT BACK HINGE

REMOVAL

NOTE: Bench seats equipped with child restraint seats have an interlock feature that will not allow the seat back to fold forward with the child seat open.

(1) Remove the bench seat back upper and lower hinge covers. (Refer to 23 - BODY/SEATS/SEAT BACK HINGE COVERS - 50/50 SPLIT, BENCH - REMOVAL)
(2) Remove the seat back. (Refer to 23 - BODY/SEATS/BENCH SEAT BACK - REMOVAL)
(3) Remove bolts attaching seat back hinge to seat cushion frame (Fig. 38).
(4) Remove seat back hinge from seat.
(5) Remove hinge from seat.

INSTALLATION

INSTALLATION

NOTE: Bench seats equipped with child restraint seats have an interlock feature that will not allow the seat back to fold forward with the child seat open.

(1) Place hinge in position on seat.
(2) Engage synchronizing cable end into (clip on left side) hinge latch release arm.

BENCH SEAT BACK HINGE (Continued)

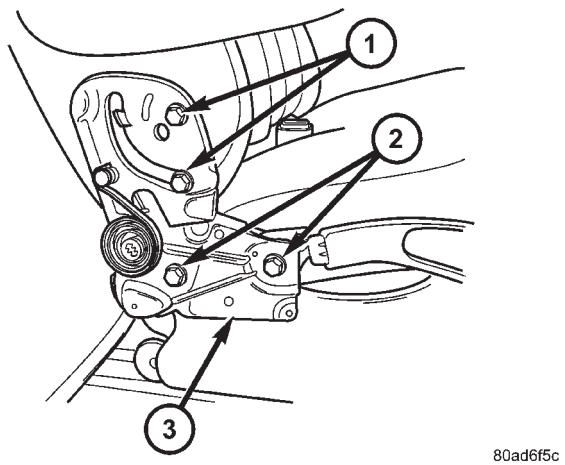

Fig. 38 BENCH SEAT BACK HINGE

1 - SEATBACK FRAME BOLTS
2 - SEAT CUSHION FRAME BOLTS
3 - SEATBACK HINGE

(3) Engage synchronizing cable housing into seat back hinge.

(4) Place seat back hinge in position on seat.

(5) Install bolts attaching seat back hinge to seat cushion frame. Tighten bolts to 48 N·m (35 ft. lbs.) torque.

(6) Install shoulder bolts attaching seat back hinge to seat back frame (Fig. 38). Tighten nuts to 34 N·m (25 ft. lbs.) torque.(Refer to 23 - BODY/SEATS/ BENCH SEAT BACK - INSTALLATION)

(7) Install bench seat back hinge covers. (Refer to 23 - BODY/SEATS/SEAT BACK HINGE COVERS - 50/50 SPLIT, BENCH - INSTALLATION)

(8) Verify seat back hinge operation and adjust synchronizing cable, if equipped. (Refer to 23 - BODY/SEATS/SYNCHRONIZING CABLE ADJUSTMENT)

SYNCHRONIZING CABLE ADJUSTMENT

NOTE:
Bench seats equipped with child restraint seats have an interlock feature that will not allow the seat back to fold forward with the child seat open.
If the seat back hinges do not release at the same time the synchronizing cable must be adjusted.

(1) Remove seat from vehicle. Refer to Owner's Manual for proper procedures.

(2) Disengage cable from the recline mechanism by pulling the cable end toward the front of the seat (Fig. 39).

(3) Pull U-shaped locking tab on self-adjusting mehcanism to disengage auto-adjust feature.

(4) Reattach self-adjusting mechanism, pulling against spring load to tighten cable.

(5) Press locking tab onto the adjusting mechanism to lock into place.

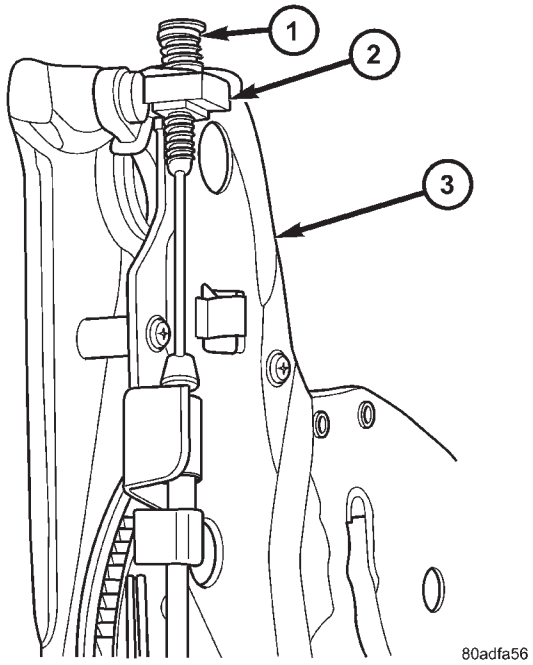

Fig. 39 SYNCHRONIZING CABLE

1 - CABLE END
2 - LOCKING TAB
3 - SETBACK HINGE

BENCH SEAT BACK

REMOVAL

NOTE: Bench seats equipped with child restraint seats have an interlock feature that will not allow the seat back to fold forward with the child seat open.

(1) Remove the headrests. (Refer to 23 - BODY/ SEATS/HEADREST - REMOVAL)

(2) Remove the armrests, if equipped. (Refer to 23 - BODY/SEATS/ARMREST - REMOVAL)

(3) Remove the upper hinge cover. (Refer to 23 - BODY/SEATS/SEAT BACK HINGE COVERS - REMOVAL)

(4) Disengage synchronizing cable housing from seat back hinge, if equipped.

(5) Disengage synchronizing cable end from (clip on left side) hinge latch release arm, if equipped.

(6) Remove shoulder bolts attaching seat back hinge to seat back frame (Fig. 40).

(7) Remove the seat back.

BENCH SEAT BACK (Continued)

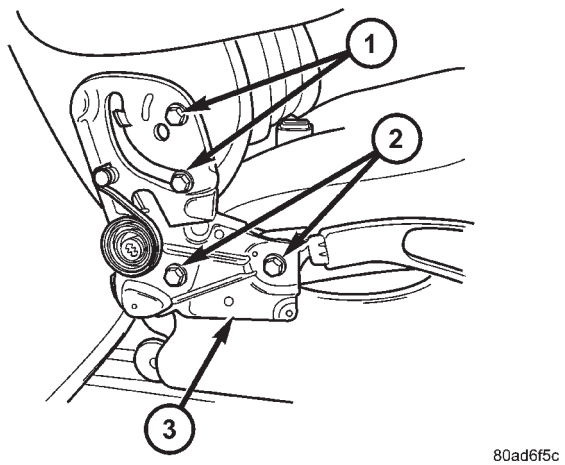

Fig. 40 SEAT BACK HINGE - TYPICAL

1 - SEATBACK FRAME BOLTS
2 - SEAT CUSHION FRAME BOLTS
3 - SEATBACK HINGE

INSTALLATION

NOTE: Bench seats equipped with child restraint seats have an interlock feature that will not allow the seat back to fold forward with the child seat open.

(1) Install the seat back.
(2) Install the shoulder bolts attaching the seat back hinge to the seat back frame and tighten to 34 N·m (25 ft. lbs.) torque.
(3) Connect the synchronizing cable end from (clip on left side) hinge latch release arm, if equipped.
(4) Connect the synchronizing cable housing to the seat back hinge, if equipped.
(5) Install the upper hinge cover. (Refer to 23 - BODY/SEATS/SEAT BACK HINGE - INSTALLATION)
(6) Install the armrests, if equipped. (Refer to 23 - BODY/SEATS/ARMREST - INSTALLATION)
(7) Install the headrest sleeves. (Refer to 23 - BODY/SEATS/HEADREST SLEEVE - INSTALLATION)
(8) Adjust synchronizing cable, if equipped. (Refer to 23 - BODY/SEATS/SYNCHRONIZING CABLE ADJUSTMENT)

BENCH SEAT BACK COVER

REMOVAL

(1) Remove the bench seat back. (Refer to 23 - BODY/SEATS/BENCH SEAT BACK - REMOVAL)
(2) Remove the bench seatback panel. (Refer to 23 - BODY/SEATS/BENCH SEATBACK PANEL - REMOVAL)
(3) Disconnect the cover J-straps.
(4) Remove the seat back cover from the seat back assembly.

INSTALLATION

(1) Install seat back cover onto the seat back frame and cushion assembly.
(2) Connect the J-straps.
(3) Install the bench seatback panel. (Refer to 23 - BODY/SEATS/BENCH SEATBACK PANEL - INSTALLATION)
(4) Install the seat back. (Refer to 23 - BODY/SEATS/BENCH SEAT BACK - INSTALLATION)

BENCH SEAT TRACK

REMOVAL

(1) Remove second row seat from vehicle. Refer to Owner's Manual for proper procedure.
(2) Place seat on clean covered work surface.
(3) Disengage seat track adjuster link wire from track being removed.
(4) Remove nuts attaching track to seat riser (Fig. 41).
(5) Remove track from seat riser.

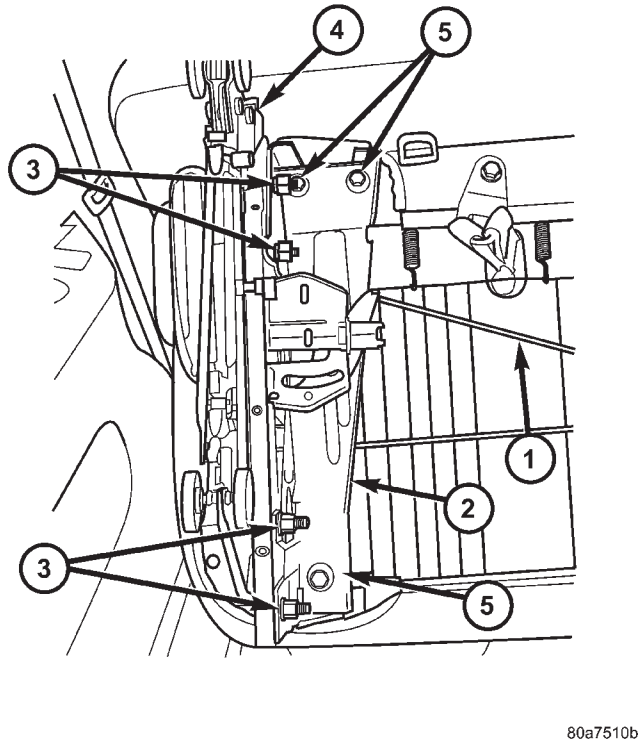

Fig. 41 BENCH SEAT TRACK

1 - SEAT TRACK ADJUSTER LINK
2 - RISER
3 - SEAT TRACK NUTS
4 - SEAT TRACK
5 - RISER BOLTS

BENCH SEAT TRACK (Continued)

INSTALLATION

(1) Place track in position on seat riser.
(2) Install nuts attaching track to seat riser. (Fig. 41). Tighten nuts to 48 N·m (35 ft. lbs.) torque.
(3) Engage seat track adjuster link wire onto track being installed.
(4) Install second row seat into vehicle.

PLASTIC GROCERY BAG RETAINER

REMOVAL

3-PASS BENCH SEAT

(1) Remove five screws attaching the plastic grocery bag retainer to the steel slats on the back frame (Fig. 42).
(2) Remove retainer.

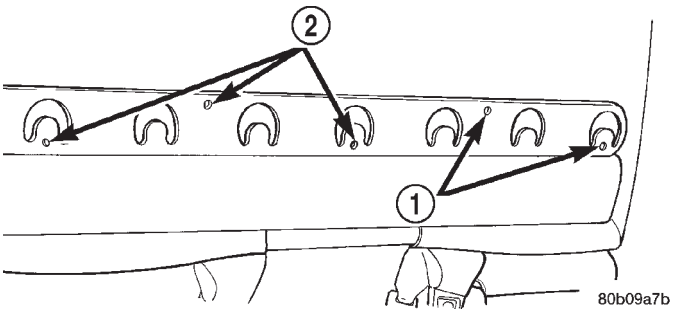

Fig. 42 PLASTIC GROCERY BAG RETAINER

1 - SCREWS
2 - SCREWS

50/50 SPLIT BENCH SEAT

(1) Remove the screws. (Fig. 43)
(2) Pull top of retainer away from the seatback and lift off of the two bottom attachment hooks.

INSTALLATION

3-PASS BENCH SEAT

(1) Place retainer in position.
(2) Install the five attaching screws and tighten 2 N·m (17 in. lbs.) torque.

50/50 SPLIT BENCH SEAT

(1) Engage bottom hooks of the retainer and place into position.
(2) Install the attaching screws and tighten 2 N·m (17 in. lbs.) torque.

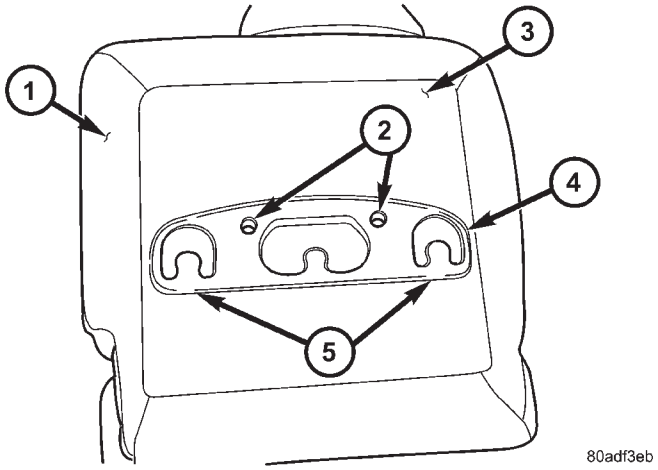

Fig. 43 PLASTIC GROCERY BAG RETAINER - 50/50 SPLIT

1 - SEATBACK
2 - SCREWS
3 - SEATBACK PANEL
4 - GROCERY BAG RETAINER
5 - ATTACHMENT HOOKS

UNDER SEAT STORAGE BIN

REMOVAL

(1) Release under seat storage bin latch and open bin.
(2) Depress lock tabs at the rear/top edge of the storage bin (Fig. 44).
(3) Pull storage bin from bucket seat riser.

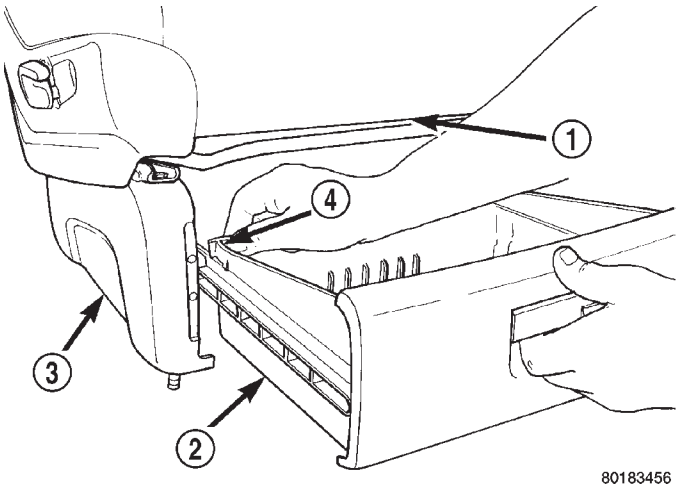

Fig. 44 STORAGE BIN

1 - PASS. SIDE BUCKET SEAT
2 - UNDER SEAT STORAGE BIN
3 - RISER
4 - LOCK TAB

UNDER SEAT STORAGE BIN (Continued)

INSTALLATION

(1) Engage storage bin tracks into guides on each side of seat riser.

(2) Push storage bin inward until lock tabs snap past retaining ridge on tracks

(3) Verify storage bin latch operation.

UNDER SEAT STORAGE BIN GUIDE

REMOVAL

(1) Remove under seat storage bin. (Refer to 23 - BODY/SEATS/UNDER SEAT STORAGE BIN - REMOVAL)

(2) Remove screws attaching storage bin track guide to seat riser (Fig. 45).

(3) Remove track guide from vehicle.

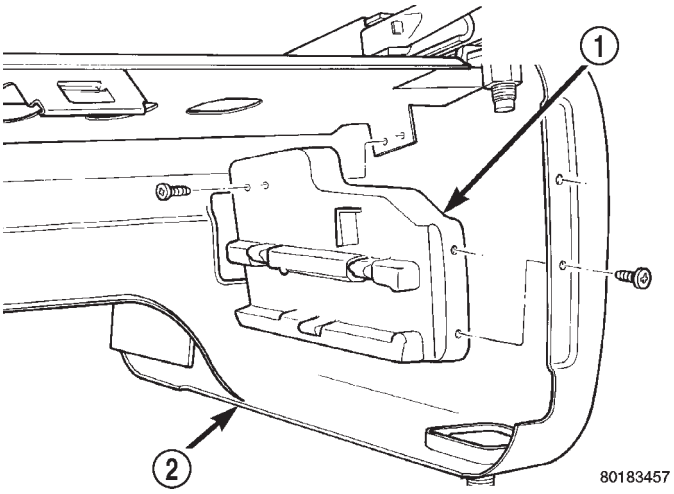

Fig. 45 UNDER SEAT STORAGE BIN GUIDE

1 - STORAGE BIN TRACK GUIDE
2 - RISER

INSTALLATION

(1) Place track guide in position on seat riser.

(2) Install screws attaching storage bin track guide to seat riser (Fig. 45). Tighten screws to 81 N·m (32 in lbs.) torque.

(3) Install under seat storage bin. (Refer to 23 - BODY/SEATS/UNDER SEAT STORAGE BIN - INSTALLATION)

UNDER SEAT STORAGE BIN LOCK/LATCH

REMOVAL

(1) Open under seat storage bin.

(2) Remove screws holding under seat storage bin lock/latch to storage bin (Fig. 46).

(3) Remove lock/latch from bin.

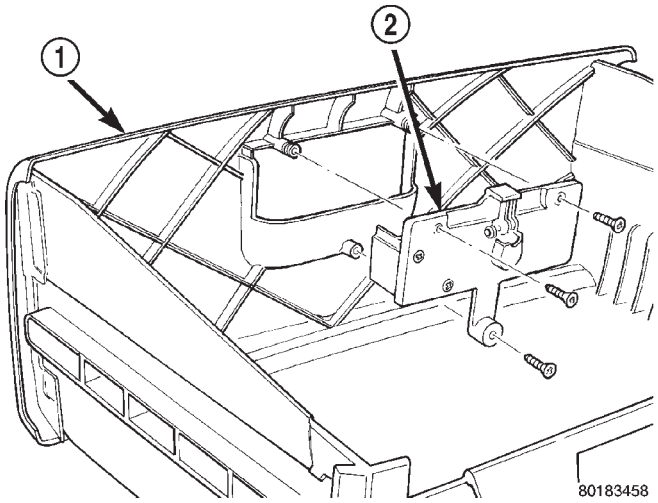

Fig. 46 UNDER SEAT STORAGE BIN LOCK/LATCH

1 - UNDER SEAT STORAGE BIN
2 - LOCK/LATCH

INSTALLATION

(1) Place lock/latch in position on storage bin.

(2) Install screws to hold lock/latch to storage bin (Fig. 46) .

(3) Verify under seat storage bin latch operation.

LUMBAR SUPPORT

REMOVAL

(1) Remove screw attaching lumbar handle to seat back (Fig. 47).
(2) Remove seat back assembly from cushion.
(3) Detrim the seat back assembly.
(4) Remove frame and replace.

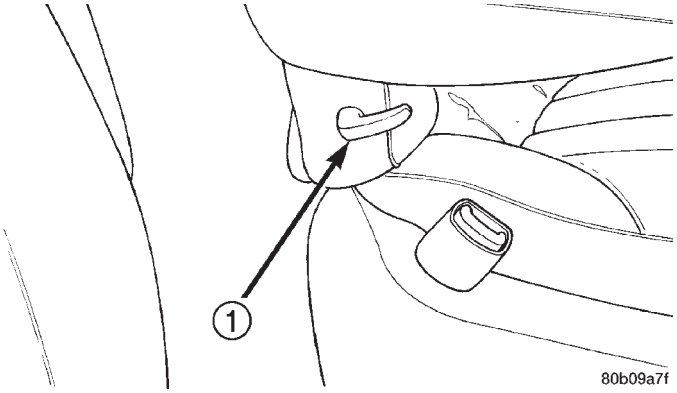

Fig. 47 LUMBAR HANDLE

1 - LUMBAR HANDLE

INSTALLATION

(1) Trim the seat back frame.
(2) Install seat back assembly to cushion.
(3) Install attaching screw to lumbar handle. The handle is to be installed, between two and three O'clock position. Tighten screw to 1 N·m (11 ft. lbs.) torque.
(4) Test lumbar operation.

STATIONARY GLASS

TABLE OF CONTENTS

page

WINDSHIELD
DESCRIPTION 107
WARNING
WINDSHIELD SAFETY PRECAUTIONS 107
REMOVAL 107
INSTALLATION 108
SLIDING DOOR GLASS
REMOVAL 109
INSTALLATION 109
QUARTER WINDOW
REMOVAL 110
INSTALLATION 110
REAR DOOR GLASS
REMOVAL 110
INSTALLATION 110

WINDSHIELD

DESCRIPTION

The windshield is attached to the window frame with urethane adhesive. The urethane adhesive is applied cold and seals the surface area between the window opening and the glass. The primer adheres the urethane adhesive to the windshield.

It is difficult to salvage a windshield during the removal operation. The windshield is part of the structural support for the roof. The urethane bonding used to secure the windshield to the fence is difficult to cut or clean from any surface. If the moldings are set in urethane, it would also be unlikely they could be salvaged. Before removing the windshield, check the availability of the windshield and moldings from the parts supplier.

WARNING

WINDSHIELD SAFETY PRECAUTIONS

WARNING: DO NOT OPERATE THE VEHICLE WITHIN 24 HOURS OF WINDSHIELD INSTALLATION. IT TAKES AT LEAST 24 HOURS FOR URETHANE ADHESIVE TO CURE. IF IT IS NOT CURED, THE WINDSHIELD MAY NOT PERFORM PROPERLY IN AN ACCIDENT.
URETHANE ADHESIVES ARE APPLIED AS A SYSTEM. USE GLASS CLEANER, GLASS PREP SOLVENT, GLASS PRIMER, PVC (VINYL) PRIMER AND PINCH WELD (FENCE) PRIMER PROVIDED BY THE ADHESIVE MANUFACTURER. IF NOT, STRUCTURAL INTEGRITY COULD BE COMPROMISED.
DAIMLERCHRYSLER DOES NOT RECOMMEND GLASS ADHESIVE BY BRAND. TECHNICIANS SHOULD REVIEW PRODUCT LABELS AND TECHNICAL DATA SHEETS, AND USE ONLY ADHESIVES THAT THEIR MANUFACTURES WARRANT WILL RESTORE A VEHICLE TO THE REQUIREMENTS OF FMVSS 212. TECHNICIANS SHOULD ALSO INSURE THAT PRIMERS AND CLEANERS ARE COMPATIBLE WITH THE PARTICULAR ADHESIVE USED.
BE SURE TO REFER TO THE URETHANE MANUFACTURER'S DIRECTIONS FOR CURING TIME SPECIFICATIONS, AND DO NOT USE ADHESIVE AFTER ITS EXPIRATION DATE.
VAPORS THAT ARE EMITTED FROM THE URETHANE ADHESIVE OR PRIMER COULD CAUSE PERSONAL INJURY. USE THEM IN A WELL-VENTILATED AREA.
SKIN CONTACT WITH URETHANE ADHESIVE SHOULD BE AVOIDED. PERSONAL INJURY MAY RESULT.
ALWAYS WEAR EYE AND HAND PROTECTION WHEN WORKING WITH GLASS.

CAUTION: Protect all painted and trimmed surfaces from coming in contact with urethane or primers. Be careful not to damage painted surfaces when removing moldings or cutting urethane around windshield.

REMOVAL

WINDSHIELD REMOVAL – EXTERIOR METHOD

The urethane adhesive holding the windshield to the opening pinch weld (fence) can be cut using a sharp cold knife from the exterior of the vehicle. Using the cold knife method is effective if the windshield is already broken. If the glass must be salvaged, cutting the urethane adhesive from the interior of the vehicle using a reciprocating or oscillating power knife is recommended.

(1) Remove inside rear view mirror.
(2) Remove windshield wiper arms.
(3) Remove cowl cover.

WINDSHIELD (Continued)

(4) Remove A-pillar trim panels.

(5) Disconnect wire connectors to windshield defroster grid.

(6) Place protective covers over instrument panel and hood.

(7) Remove windshield molding. Using pliers, pull outward on molding at the bottom of A-pillars.

(8) Using a sharp cold knife, cut urethane adhesive holding the windshield to the A-pillars, roof header and cowl pinch weld fences (Fig. 1). A power cutting device can be used if available.

(9) Remove windshield from vehicle.

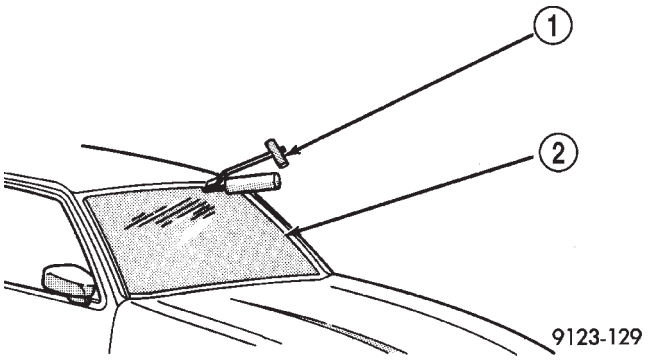

Fig. 1 CUT URETHANE AROUND WINDSHIELD

1 - COLD KNIFE
2 - WINDSHIELD

WINDSHIELD REMOVAL – INTERIOR METHOD

(1) Remove inside rear view mirror.

(2) Remove instrument panel top cover. Refer to Group 8E, Instrument Panel and Systems.

(3) Remove A-pillar trim covers.

(4) Disconnect wire connectors to windshield defroster grid.

(5) Place protective covers over instrument panel and hood.

(6) Using a reciprocating or oscillating power knife, cut urethane adhesive holding the windshield to the A-pillars, roof header and cowl pinch weld fences. Refer to instructions provided with the equipment being used.

(7) Remove windshield from vehicle.

INSTALLATION

The urethane adhesive holding the windshield to the opening pinch weld (fence) can be cut using a sharp cold knife from the exterior of the vehicle. Using the cold knife method is effective if the windshield is already broken. If the glass must be salvaged, cutting the urethane adhesive from the interior of the vehicle using a reciprocating or oscillating power knife is recommended.

CAUTION: Open the left front door glass before installing windshield to avoid pressurizing the passenger compartment. If a door is slammed before urethane bonding is cured, water leaks can result. Allow the urethane at least 24 hours to cure before returning the vehicle to use.

To avoid stressing the replacement windshield, the urethane bonding material on the windshield fence should be smooth and consistent to the shape of the replacement windshield . The support spacers should be cleaned and properly installed on weld studs or repair screws at bottom of windshield opening.

(1) Place replacement windshield into windshield opening and position glass in the center of the opening against the compression spacers.

(2) Verify the glass lays evenly against the pinch weld fence at the sides, top and bottom of the replacement windshield. If not, the pinch weld fence must be formed to the shape of the new glass.

(3) Remove replacement windshield from windshield opening.

(4) Position the windshield inside up on a suitable work surface with two padded, wood 10 cm by 10 cm by 50 cm (4 in. by 4 in. by 20 in.) blocks, placed parallel 75 cm (2.5 ft.) apart (Fig. 2).

WARNING: DO NOT USE SOLVENT BASED GLASS CLEANER TO CLEAN WINDSHIELD BEFORE APPLYING GLASS PREP AND PRIMER. POOR ADHESION CAN RESULT.

(5) Clean inside of windshield with ammonia based glass cleaner and lint-free cloth.

(6) Install molding to perimeter of windshield.

(7) Apply Glass Prep adhesion promoter 25 mm (1 in.) wide around perimeter of windshield and wipe with clean/dry lint-free cloth until no streaks are visible.

(8) Apply Glass Primer 25 mm (1 in.) wide around perimeter of windshield. Allow at least three minutes drying time.

(9) Using a razor knife, remove as much original urethane as possible. Do not damage paint on windshield fence.

(10) Apply pinch weld primer 19 mm (0.75 in.) wide around the windshield fence. Allow at least three minutes drying time.

(11) If a low viscosity urethane adhesive is used, install compression spacers on the fence around the windshield opening (Fig. 3).

(12) Apply a 10 mm (0.4 in.) bead of urethane on center line of windshield fence.

(13) With the aid of a helper, position the windshield over the windshield opening.

(14) Slowly lower windshield glass to windshield opening fence. Guide the molding into proper position as necessary. Push windshield inward until molding is flush to roof line and A-pillars (Fig. 3).

WINDSHIELD (Continued)

(15) Clean access urethane from exterior with Mopar® Super Kleen or equivalent.

(16) Apply 150 mm (6 in.) lengths of 50 mm (2 in.) masking tape spaced 250 mm (10 in.) apart to hold molding in place until urethane cures.

(17) Engage wire connectors to windshield defroster grid.

(18) Install A-pillar trim panels.

(19) Install cowl cover and wipers.

(20) Install inside rear view mirror.

(21) After urethane has cured, remove tape strips and water test windshield to verify repair.

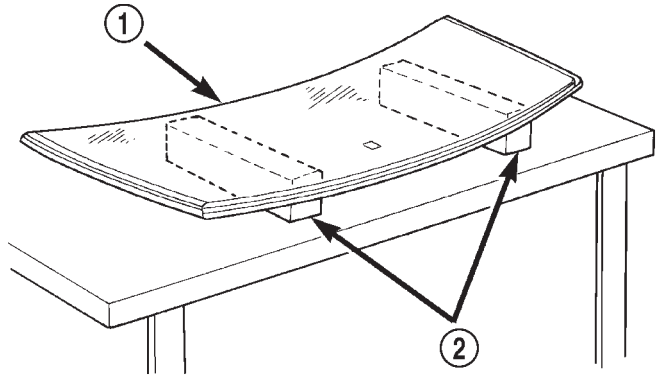

Fig. 2 WORK SURFACE SET UP AND MOLDING INSTALLATION

1 - WINDSHIELD AND MOLDINGS
2 - BLOCKS

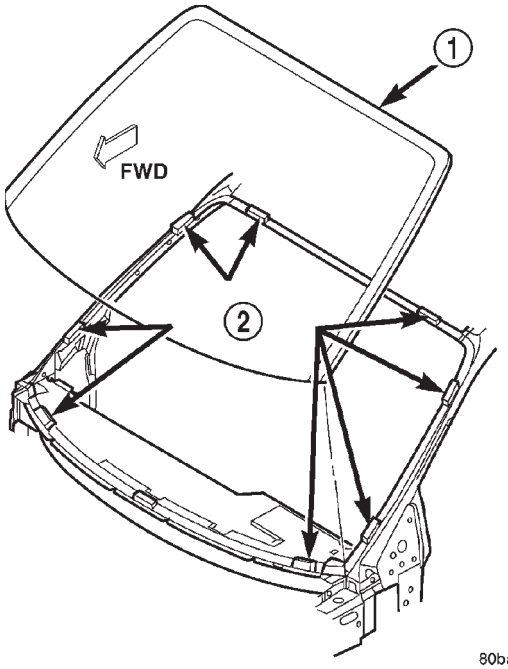

Fig. 3 LOWER WINDSHIELD INTO POSITION

1 - WINDSHIELD
2 - COMPRESSION SPACERS

SLIDING DOOR GLASS

REMOVAL

The temperature of the vehicle should be at least 21° C (70° F) before removing the stationary quarter/ sliding door glass. Butyl sealer becomes more pliable at high temperatures.

(1) Remove interior trim as necessary to gain access attaching locations on back of glass.

(2) Remove nuts holding stationary glass to fence.

(3) Using razor knife, cut butyl sealer holding glass to fence from between the mounting studs (Fig. 4).

(4) Push glass from opening.

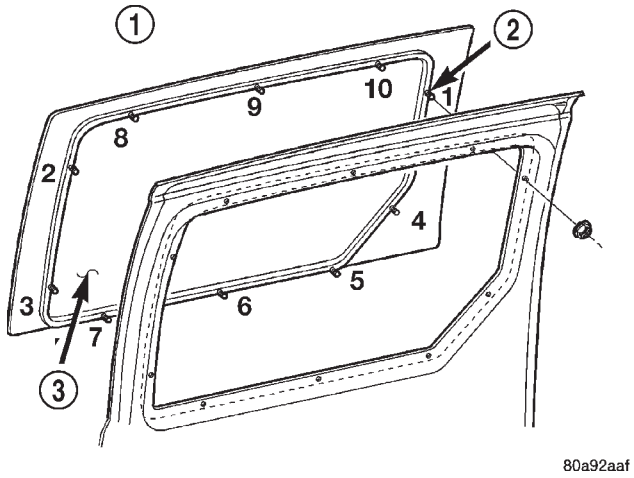

Fig. 4 SLIDING DOOR STATIONARY GLASS

1 - NUMBERS INDICATE THE TIGHTENING SEQUENCE
2 - 6 mm BEAD OF BUTYL TAPE
3 - BODY SIDE/SLIDING DOOR GLASS

INSTALLATION

The temperature of the vehicle should be at least 21° C (70° F) before removing the stationary quarter/ sliding door glass. Butyl sealer becomes more pliable at high temperatures.

The stationary glass fence should be cleaned of all old butyl sealer.

(1) Apply a 6 mm (0.25 in.) butyl tape around perimeter of glass assembly encapsulation track. Ensure that the butyl tape is wrapped around the mounting studs.

(2) Place the glass into the opening and insert mounting studs through holes in fence.

(3) Install nuts to hold stationary glass to fence.

CAUTION: Tighten nuts to 3.4 N·m (30 in. lbs.) torque in the sequence indicated. Do not over torque, or glass breakage may result (Fig. 4).

(4) Install interior trim. (Refer to 23 - BODY/ DOORS - SLIDING/TRIM PANEL - INSTALLATION)

(5) Verify alignment and flushness.

QUARTER WINDOW

REMOVAL

(1) Remove C-pillar trim.
(2) Open quarter glass to vent position.
(3) Disengage quarter window retainer from vent motor arm.
(4) Remove nuts attaching quarter glass to C-pillar (Fig. 5).
(5) Use magnetic socket to prevent dropping into the pillar.
(6) Remove quarter glass from vehicle.

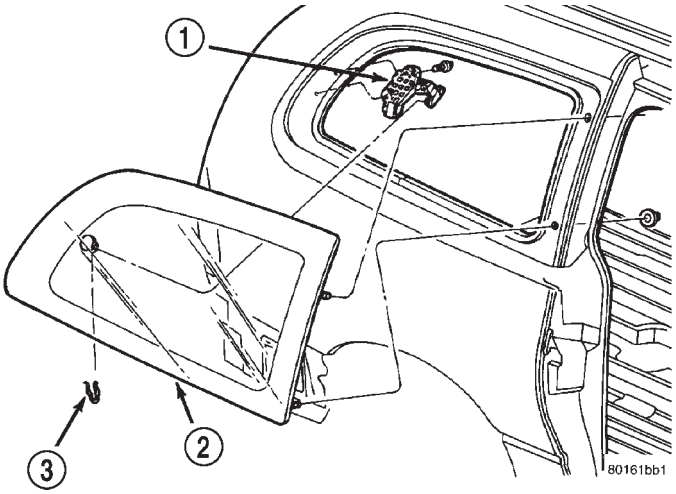

Fig. 5 QUARTER GLASS

1 - VENT CONTROL
2 - QUARTER GLASS
3 - CLIP

INSTALLATION

(1) Place quarter glass in position on vehicle.
(2) Install nuts attaching quarter glass to C-pillar.
(3) Engage quarter window retainer to vent motor arm.
(4) Install screw attaching quarter window retainer to vent motor arm.
(5) Close quarter glass.
(6) Install C-pillar trim.

REAR DOOR GLASS

REMOVAL

Refer to the Safety Precautions in this section for description of tools and adhesive systems that are recommended for use in this procedure.

REAR WINDOW REMOVAL – EXTERIOR METHOD

(1) Remove rear window wiper arm, if equipped.
(2) Remove screws attaching moldings to liftgate at the sides of the rear window (Fig. 6).
(3) Using pliers, pull outward on molding at the top and bottom of liftgate.
(4) Using a sharp cold knife, cut urethane adhesive attaching the rear window to the liftgate. A power cutting device can be used if available (Fig. 1).
(5) Remove rear window from vehicle.

REAR WINDOW REMOVAL – INTERIOR METHOD

(1) Remove rear window wiper arm, if equipped.
(2) Remove screws attaching moldings to liftgate at the sides of the rear window (Fig. 6).
(3) Remove liftgate inside lamps and trim covers.
(4) Remove center high mounted stop lamp.
(5) Using a reciprocating or oscillating power knife, cut urethane adhesive holding the rear window to the liftgate. Refer to instructions provided with the equipment being used.
(6) Remove rear window from vehicle.

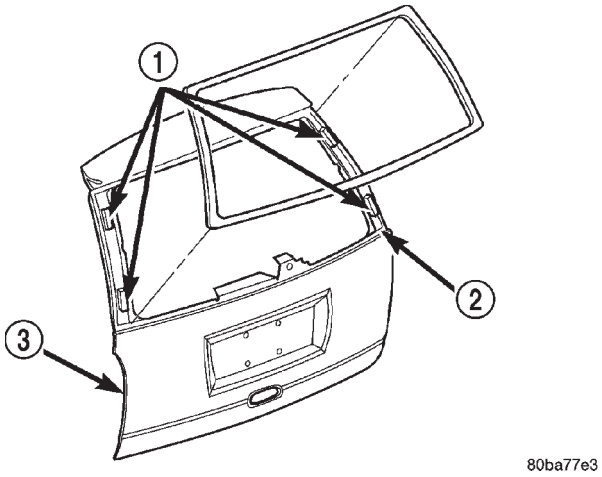

Fig. 6 REAR WINDOW SIDE MOLDINGS

1 - COMPRESSION SPACERS
2 - REAR WINDOW WITH MOLDING
3 - LIFT GATE

INSTALLATION

Refer to the Safety Precautions in this section for description of tools and adhesive systems that are recommended for use in this procedure.

CAUTION: Open the left front door glass before installing rear window to avoid pressurizing the passenger compartment. If a door is slammed before urethane bonding is cured, water leaks can result.
Allow the urethane at least 24 hours to cure before returning the vehicle to use.
To avoid stressing the replacement rear window, the urethane bonding material on the rear window fence should be smooth and consistent to the shape of the replacement glass.

REAR DOOR GLASS (Continued)

(1) Place replacement glass into rear window opening.

(2) Verify the glass lays evenly against the pinch weld fence at the sides, top and bottom of the replacement rear window. If not, the fence must be formed to the shape of the new glass.

(3) Using a grease pencil, mark the glass and liftgate in several locations to aid installation.

(4) Remove replacement glass from liftgate opening.

(5) Position the rear window inside up on a suitable work surface with two padded, wood 10 cm by 10 cm by 50 cm (4 in. by 4 in. by 20 in.) blocks, placed parallel 75 cm (2.5 ft.) apart (Fig. 2).

WARNING: DO NOT USE SOLVENT BASED GLASS CLEANER TO CLEAN REAR WINDOW BEFORE APPLYING GLASS PREP AND PRIMER. POOR ADHESION CAN RESULT.

(6) Clean inside of rear window with ammonia based glass cleaner and lint-free cloth.

(7) Apply molding to top and bottom of rear window.

(8) Apply Glass Prep adhesion promoter 25 mm (1 in.) wide around perimeter of rear window and wipe with clean/dry lint-free cloth until no streaks are visible.

(9) Apply Glass Primer 25 mm (1 in.) wide around perimeter of rear window. Allow at least three minutes drying time.

(10) Apply Pinch weld Primer 19 mm (0.75 in.) wide around the rear window fence. Allow at least three minutes drying time.

(11) If a low viscosity urethane adhesive is used, install compression spacers on the fence around the rear window opening (Fig. 7).

(12) Apply a 10 mm (0.4 in.) bead of urethane along center line of rear window fence.

(13) With the aid of a helper, position the rear window over the rear window opening and align the reference marks.

(14) Slowly lower the glass to rear window opening fence. Guide the molding into proper position as necessary. Push glass inward until molding is flush to liftgate surface (Fig. 7).

(15) Clean excess urethane from exterior with Mopar® Super Kleen, or equivalent.

(16) Apply 150 mm (6 in.) lengths of 50 mm (2 in.) masking tape spaced 250 mm (10 in.) apart to hold molding in place until urethane cures.

(17) Install rear window side moldings and wiper arm (Fig. 6).

(18) Install interior trim.

(19) After urethane has cured, remove tape strips and water test rear window to verify repair.

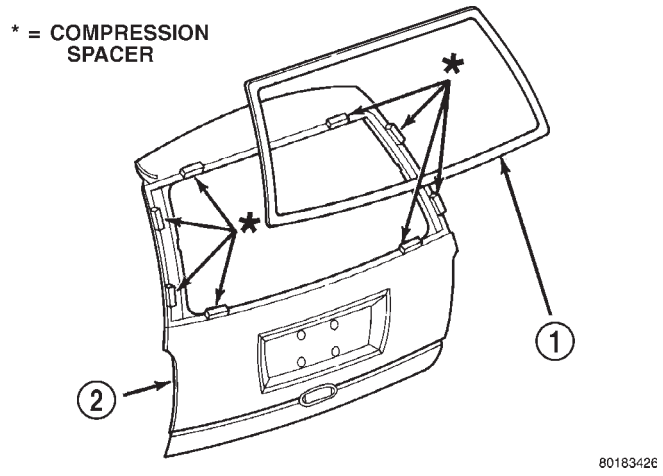

Fig. 7 LOWER REAR WINDOW INTO POSITION

1 - REAR WINDOW WITH MOLDING
2 - LIFTGATE

WEATHERSTRIP/SEALS

TABLE OF CONTENTS

page

FRONT DOOR GLASS RUN WEATHERSTRIP
REMOVAL 112
INSTALLATION 112
FRONT DOOR OUTER BELT MOLDING
REMOVAL 113
INSTALLATION 113
FRONT DOOR WEATHERSTRIP
REMOVAL 113
INSTALLATION 113
SLIDING DOOR WEATHERSTRIP
REMOVAL 114
INSTALLATION 114
FRONT DOOR INNER BELT MOLDING
REMOVAL 114
INSTALLATION 114

FRONT DOOR GLASS RUN WEATHERSTRIP

REMOVAL

(1) Remove door frame closeout moldings.
(2) Pull weatherstrip from glass run channel at rear of door frame, working from the bottom to the top.
(3) Disengage clip attaching weatherstrip to door frame.
(4) Pull weatherstrip from lip along top of door frame (Fig. 1).
(5) Remove door trim panel.
(6) Remove door speaker, if equipped.
(7) Remove watershed as necessary to gain access to screw attaching front lower corner of glass run weatherstrip to inner door panel.
(8) Remove screw attaching glass run weatherstrip to inner door panel.
(9) Remove inner belt weatherstrip.
(10) Pull weatherstrip from front glass run channel.
(11) Remove glass run weatherstrip from vehicle.

INSTALLATION

(1) Position glass run weatherstrip on vehicle (Fig. 1).
(2) Push weatherstrip into front glass run channel.
(3) Install screw attaching glass run weatherstrip to inner door panel.
(4) Install inner belt weatherstrip.
(5) Install watershed.
(6) Push weatherstrip groove onto lip along top of door frame.
(7) Engage clip into slot in door frame.
(8) Push weatherstrip into channel at rear of door frame, working from the top to bottom.
(9) Install door frame closeout moldings.
(10) Install door speaker, if equipped.
(11) Install door trim panel.

FRONT DOOR GLASS RUN WEATHERSTRIP (Continued)

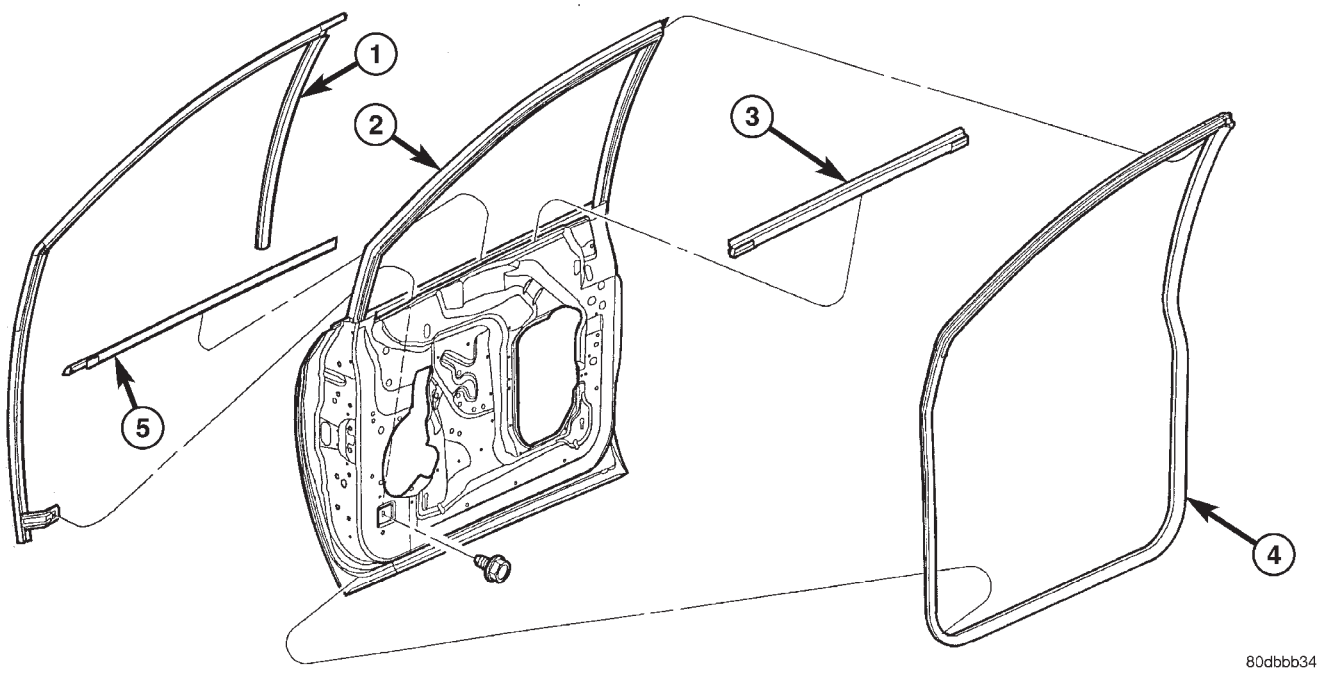

Fig. 1 FRONT DOOR WEATHERSTRIP

1 - DOOR GLASS RUN WEATHERSTRIP
2 - FRONT INNER DOOR
3 - DOOR BELT OUTER WEATHERSTRIP
4 - DOOR MOUNTED WEATHERSTRIP
5 - DOOR OUTER BELT WEATHERSTRIP

FRONT DOOR OUTER BELT MOLDING

REMOVAL

(1) Remove the side view mirror. (Refer to 23 - BODY/EXTERIOR/SIDE VIEW MIRROR - REMOVAL)
(2) Remove door trim panel.
(3) Roll door glass down.
(4) Using a hook tool, disengage interlocking lip at the base of the inward edge of the belt molding (Fig. 1).
(5) Remove belt molding from door.

INSTALLATION

(1) Place belt molding in position on door (Fig. 1).
(2) Engage interlocking lip at the base of the inward edge of the belt molding on door panel.
(3) Install door trim panel.

FRONT DOOR WEATHERSTRIP

REMOVAL

(1) Open front door.
(2) Using fork tool (C-4829), remove push pin fasteners attaching front door weatherstrip to end frames and bottom of door (Fig. 2).
(3) Pull weatherstrip from retaining channel around window frame.
(4) Remove weatherstrip from vehicle.

INSTALLATION

(1) Position weatherstrip on door.
(2) Install push pin fasteners attaching front door weatherstrip to end frames and bottom of door (Fig. 2).
(3) Install weatherstrip into retaining channel around window frame.
(4) Close front door.

FRONT DOOR WEATHERSTRIP (Continued)

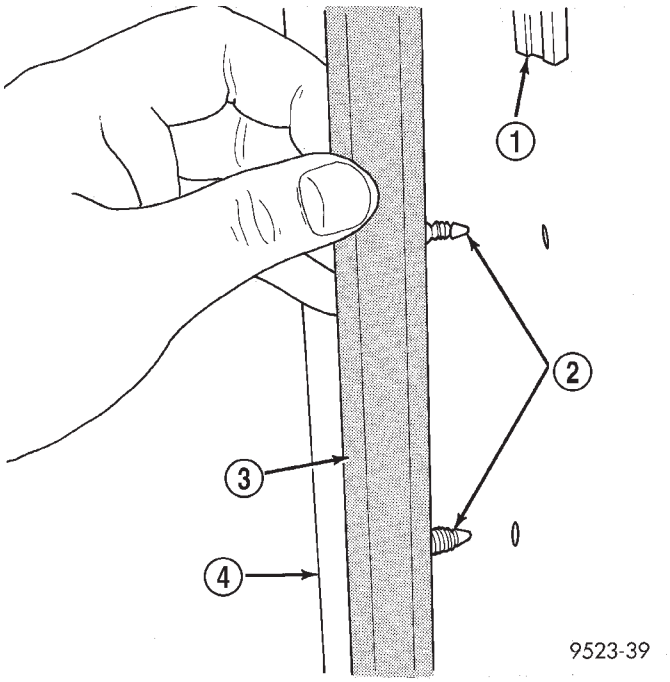

Fig. 2 Front Door Weatherstrip

1 - RETAINING CHANNEL
2 - PUSH-IN FASTENER
3 - WEATHERSTRIP
4 - FRONT DOOR

SLIDING DOOR WEATHERSTRIP

REMOVAL

(1) Open sliding door.
(2) Remove door opening sill plate.
(3) Loosen B-pillar trim covers.
(4) Loosen quarter panel trim panels.
(5) From splice at the bottom center of door opening, pull weatherstrip from pinch flange around door opening.

INSTALLATION

(1) Place splice at the bottom center of door opening, pushing weatherstrip onto pinch flange around door opening.
(2) Tighten quarter panel trim panels.
(3) Tighten B-pillar trim covers.
(4) Install door opening sill plate.
(5) Close sliding and check alignment.

FRONT DOOR INNER BELT MOLDING

REMOVAL

(1) Remove door trim panel.
(2) Peel upper corner seals away form inner belt molding to clear removal path.
(3) Pull inner belt molding upward to disengage retaining channel in bottom of molding from door panel flange (Fig. 1).
(4) Remove inner belt molding from vehicle.

INSTALLATION

(1) Place inner belt molding in position on door (Fig. 1).
(2) Push inner belt molding downward to engage retaining channel onto door panel flange.
(3) Install upper corner seals in proper location.
(4) Install door trim panel.

BODY STRUCTURE

TABLE OF CONTENTS

page

GAP AND FLUSH
SPECIFICATIONS
GAP AND FLUSH MEASUREMENTS 115
OPENING DIMENSIONS
SPECIFICATIONS
BODY OPENING DIMENSIONS 118
SEALER LOCATIONS
SPECIFICATIONS
BODY SEALING LOCATIONS 121

page

STUCTURAL ADHESIVE LOCATIONS
SPECIFICATIONS
STRUCTURAL ADHESIVE LOCATIONS 147
WELD LOCATIONS
SPECIFICATIONS
WELD LOCATIONS 156

GAP AND FLUSH

SPECIFICATIONS

GAP AND FLUSH MEASUREMENTS

INDEX

DESCRIPTION	FIGURE
GAP & FLUSH MEASUREMENTS	1

GAP AND FLUSH (Continued)

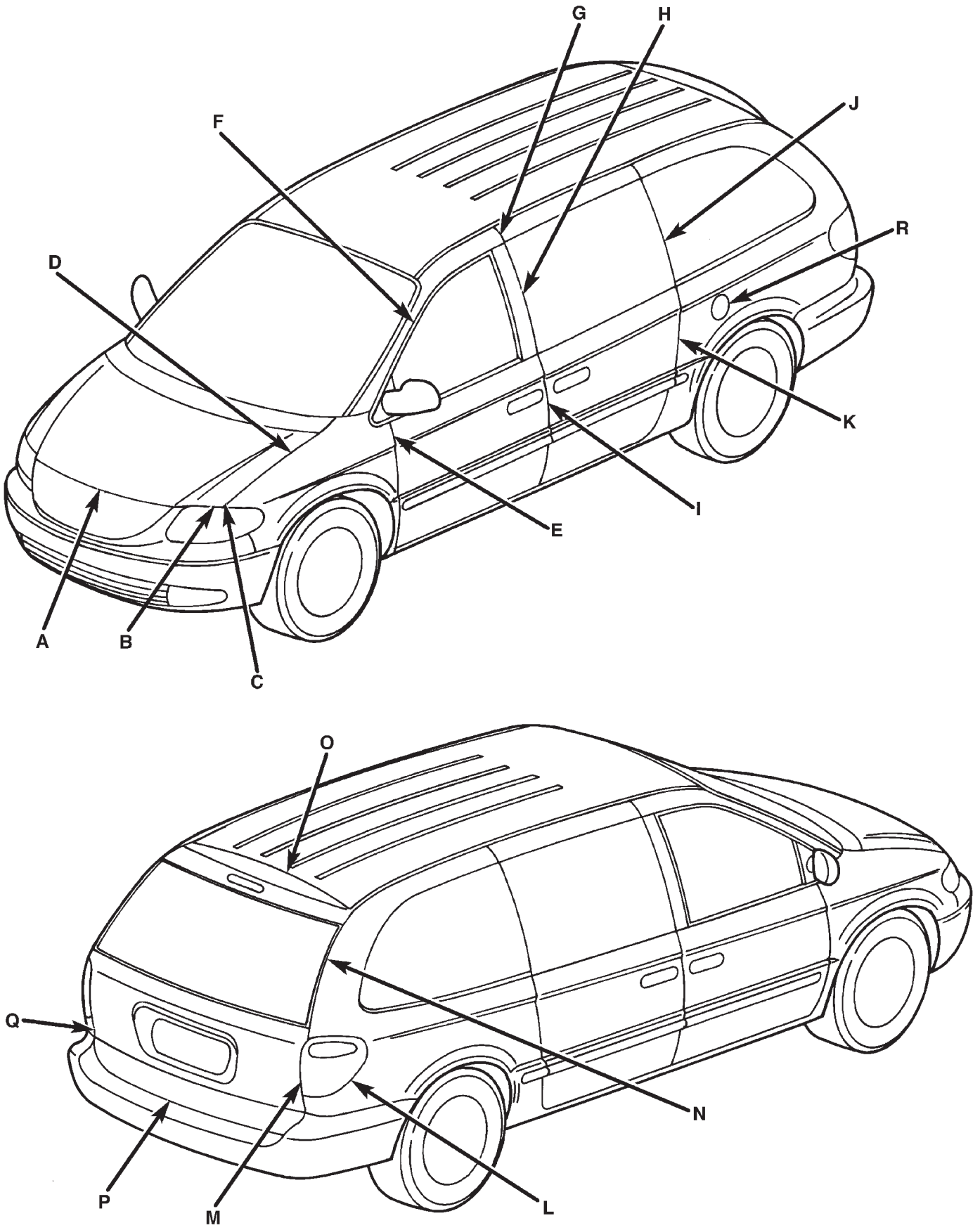

Fig. 1 GAP & FLUSH MEASUREMENTS

GAP AND FLUSH (Continued)

SPECIFICATIONS

ITEM	LOCATION	GAP	FLUSH
A	HOOD TO FASCIA	(VOYAGER ONLY) 8.0 ± 2.0 PARALLEL WITHIN 2.0 RIGHT TO LEFT	2.5 OVER FLUSH TO HOOD ± 1.5 CONSISTENT WITHIN 2.0
B	HEADLAMP MODULE TO HOOD	8.0 ± 2.0 PARALLEL WITHIN 2.0 RIGHT TO LEFT	
C	HOOD TO FENDER (FOR & AFT)	0.0 ± 1.5 LEFT TO RIGHT WITHIN 1.5	
D	HOOD TO FENDER	4.0 ± 1.5 PARALLEL WITHIN 2.5 ± 1.5 LEFT TO RIGHT	UNDER FLUSH ± 2.0
E	FENDER TO DOOR	5.0 ± 1.5 PARALLEL WITHIN 2.0	UNDER FLUSH 0.5 ± 1.5 CONSISTENT WITHIN 2.0
F	FRONT DOOR TO ″A″ PILLAR COVER		UNDER FLUSH 0.5 ± 2.0
G	″A″ PILLAR COVER TO SLIDING DOOR	5.0 ± PARALLEL WITHIN 1.0	1.0 UNDER FLUSH ± CONSISTENT WITHIN 3.0
H	FRONT DOOR APPLIQUE TO SLIDING DOOR GLASS	5.0 ± 2.0 PARALLEL WITHIN 2.0	1.0 UNDER FLUSH ± 2.0 CONSISTENT WITHIN 3.0
I	FRONT DOOR TO SLIDING DOOR	5.0 ± 2.0 PARALLEL WITHIN 2.0	± 2.0 CONSISTENT WITHIN 2.0
J	SLIDING DOOR TO REAR APERTURE GLASS	5.0 ± 2.0 PARALLEL WITHIN 1.5	± 3.0 CONSISTENT WITHIN 3.0
K	SLIDING DOOR TO REAR APERTURE	5.0 ± 1.5 PARALLEL WITHIN 2.0	± 1.5 CONSISTENT WITHIN 1.5
L	TAIL LAMP TO BODY SIDE APERTURE	1.0 ± 1.0 PARALLEL WITHIN 1.5	OVER FLUSH
M	TAIL LAMP TO LIFTGATE	4.0 ± 2.0	OVER FLUSH
N	LIFTGATE TO BODY SIDE APERTURE	4.0 ± 1.5	UNDER FLUSH 1.0 ± 2.5 CONSISTENT WITHIN 2.0
O	LIFTGATE TO ROOF	8.0 ± 2.0	± 1.5
P	LIFTGATE TO FASCIA	8.0 ± 2.5 PARALLEL WITHIN 3.0	
Q	LIFTGATE TO REAR FASCIA		UNDER FLUSH TO 1.0 MAXIMUM OVER FLUSH
R	FUEL FILLER DOOR TO BODY SIDE APERTURE		UNDER FLUSH 0.5 ± 1.0

NOTE: All measurements are in mm.

OPENING DIMENSIONS

SPECIFICATIONS

BODY OPENING DIMENSIONS

INDEX

DESCRIPTION	FIGURE
WINDSHIELD OPENING	2
LIFTGATE OPENING	3
BODY SIDE OPENINGS	4

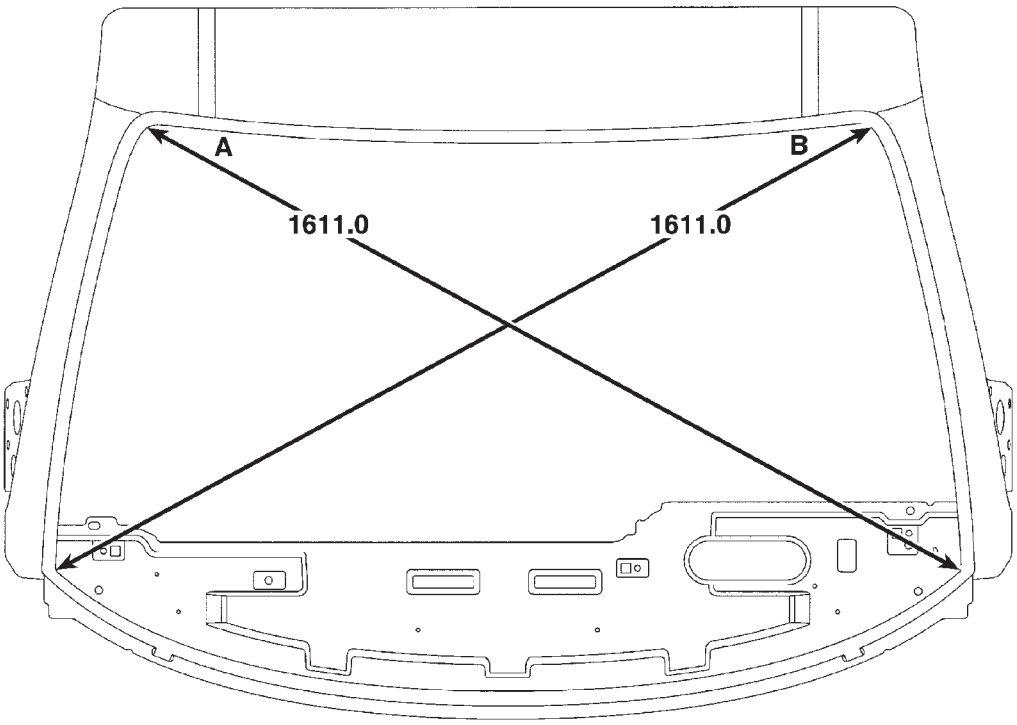

A-B CENTER OF RADIUS TO CENTER OF RADIUS, EDGE OF PINCH WELD TO LOWER WINDSHIELD CORNER

ALL DIMENSIONS IN mm

80c62397

Fig. 2 WINDSHIELD OPENING

OPENING DIMENSIONS (Continued)

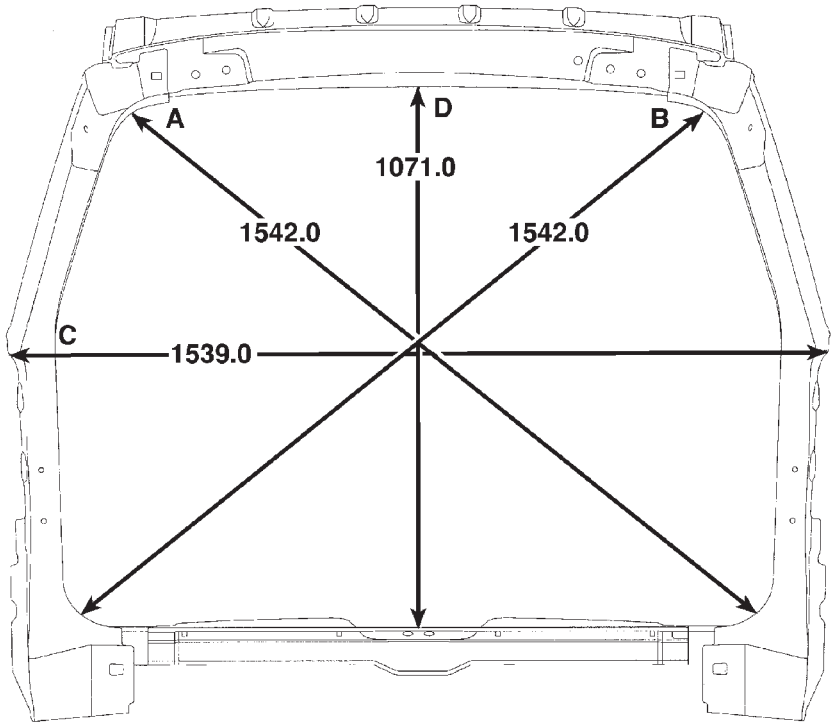

A-B CENTER OF RADIUS TO CENTER OF RADIUS
C TIP OF QUARTER PANEL TO TIP OF QUARTER PANEL
D UPPER PINCH WELD TO LEFT SIDE STRIKER BOLT
ALL DIMENSIONS IN mm

80c62398

Fig. 3 LIFTGATE OPENING

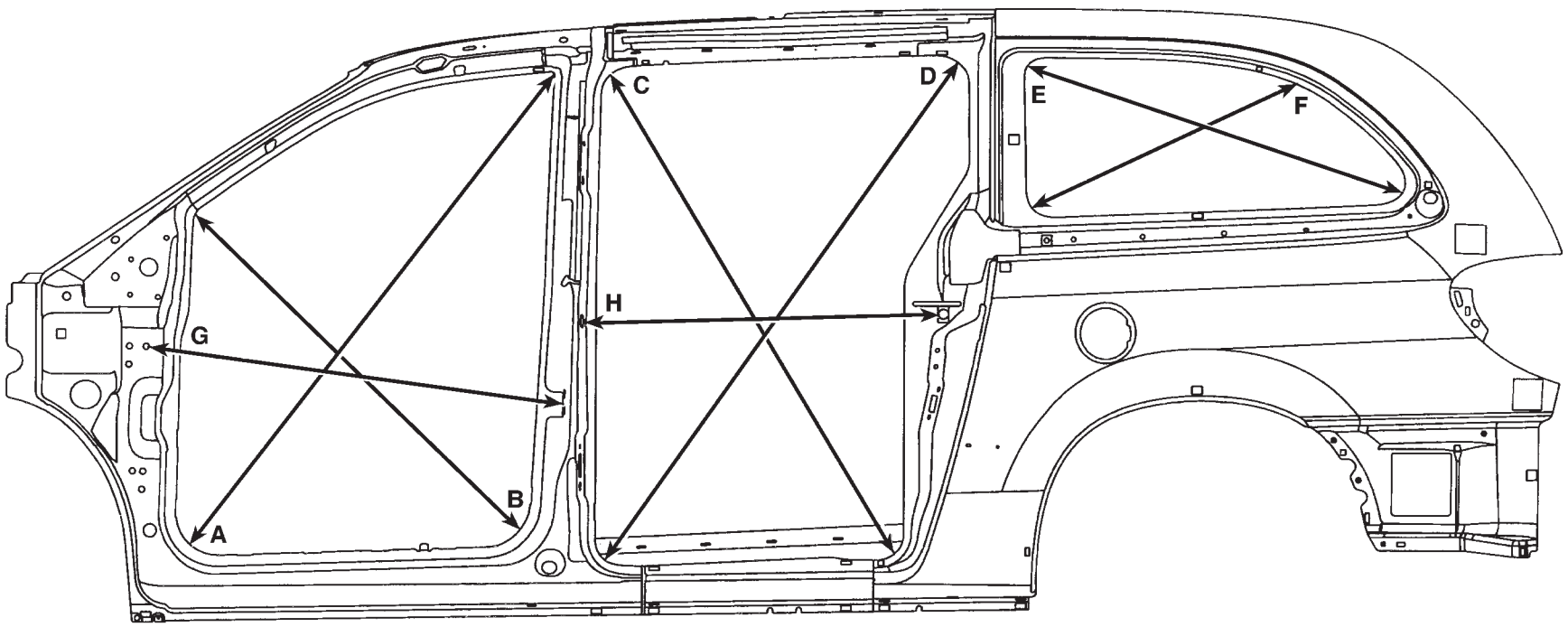

BODY SIDE OPENINGS

A-B-C-D-E-F CENTER OF RADIUS TO CENTER OF RADIUS AT EDGE OF PINCH WELD.

G INNER UPPER HINGE BOLT CENTER TO UPPER EDGE OF UPPER STRIKER BOLT.

H CENTER OF LARGE LATCH HOLE TO QUARTER PANEL PLP.
NOTE: LEFT SIDE IS HIGHER THAN RIGHT.

A – 1457.02
B – 1109.20
C – 1405.30 RIGHT – 1369.20 LEFT
D – 1499.50
E – 970.50 LONG WHEELBASE – 727.40 SHORT WHEELBASE
F – 716.70 LONG WHEELBASE – 500.70 SHORT WHEELBASE
G – 1021.40
H – 849.30

ALL DIMENSIONS IN mm

80c62399

Fig. 4 BODY SIDE OPENINGS

SEALER LOCATIONS

SPECIFICATIONS

BODY SEALING LOCATIONS

INDEX

DESCRIPTION	FIGURE
METHODS OF APPLYING AUTO BODY SEALANT	5
LOWER WINDSHIELD OPENING - RIGHT AND LEFT SIDES	6
COWL SIDE - LEFT AND RIGHT SIDES	7
SIDE QUARTER WINDSHIELD OPENING - LEFT AND RIGHT SIDES	8
UPPER WINDSHIELD A-PILLAR - LEFT AND RIGHT SIDES	9
ROOF TRACK C-PILLAR - LEFT AND RIGHT SIDES	10
SLIDING DOOR UPPER FLANGE SEAMS - LEFT AND RIGHT SIDES	11
QUARTER PANEL EXTERIOR AREA - LEFT AND RIGHT SIDES	12
LOWER REAR EXTERIOR CORNER PANELS - LEFT AND RIGHT SIDES	13
LOWER SILL LIFT GATE OPENING - LEFT AND RIGHT SIDES	14
C-PILLAR CAN - LEFT AND RIGHT SIDES	15
SHOCK TOWER AREA - LEFT AND RIGHT SIDES	16
OUTER SHOCK TOWER AREA - LEFT AND RIGHT SIDES	17
CROSS MEMBER SUPPORT - LEFT AND RIGHT SIDES	18
A & B PILLAR FLOOR PAN RISERS - LEFT AND RIGHT SIDES	19
REAR WHEEL HOUSE FLOOR PAN - LEFT AND RIGHT SIDES	20
REAR WHEELHOUSE TO FLOOR PAN - LEFT AND RIGHT SIDES	21
UPPER SLIDING DOOR FLANGE - LEFT AND RIGHT SIDES	22
UPPER LIFTGATE HINGE AREA - LEFT AND RIGHT SIDES	23
REAR BRACKET SUPPORT REAR HANGER - LEFT AND RIGHT SIDES	24
LIFTGATE PANEL OPENING - UNDERSIDE	25
D-PILLAR INSIDE SEAM - LEFT AND RIGHT SIDES	26
REAR TAIL LAMP AREA SEAMS - LEFT AND RIGHT SIDES	27
UPPER LIFTGATE PANEL SILL - LEFT AND RIGHT SIDES	28
FRONT WHEELHOUSE & SHOCK TOWER - LEFT AND RIGHT SIDES	29
REAR QUARTER WHEELHOUSE LIP & SEAT ANCHOR BOLT - LEFT AND RIGHT SIDES	30
TAILLAMP CAN - LEFT AND RIGHT SIDES	31
B-PILLAR AND SILL AREAS - LEFT AND RIGHT SIDES	32
FRONT FLOOR PAN & RISER	33
FLOOR PAN SEAMS - LEFT AND RIGHT SIDES	34
FLOOR PAN & REAR WHEELHOUSE AREA - LEFT AND RIGHT SIDES	35
FLOOR PAN SILL & D-PILLAR SEAMS - LEFT AND RIGHT SIDES	36
LEFT SIDE SEAT ANCHOR REINFORCEMENT - SHORT WHEEL BASE ONLY	37
UNDERBODY - LEFT AND RIGHT SIDES	38

SEALER LOCATIONS (Continued)

DESCRIPTION	FIGURE
ROOF TOP JOINT & UPPER FRONT SLIDING DOOR - LEFT AND RIGHT SIDES	39
ROOF TOP JOINT & UPPER REAR SLIDING DOOR - LEFT AND RIGHT SIDES	40
ROOF TOP JOINT & WINDSHIELD OPENING - LEFT AND RIGHT SIDES	41
LIFT GATE ROOF COACH JOINT - LEFT AND RIGHT SIDES	42
ROOF RAP JOINT - LEFT AND RIGHT SIDES	43
DRAIN HOLE PATCHES	44
WHEELHOUSE VENT HOLE - LEFT SIDE SHOWN - RIGHT SIDE TYPICAL	45
FLOOR PAN HOLES - LEFT AND RIDE SIDES	46
HOOD FRONT HEM FLANGE & SIDES	47
FRONT DOOR LOWER FLANGE	48
LIFTGATE HEM FLANGE AND LATCH COVER SEAMS	49
FRONT DOOR BELT DOOR BELT SEAMS (FRONT)	50
FRONT DOOR BELT DOOR BELT SEAMS (REAR)	51

SEALER LOCATIONS (Continued)

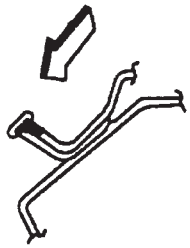

HOLD GUN NOZZLE IN DIRECTION OF ARROW IN ORDER TO EFFECTIVELY SEAL METAL JOINTS.

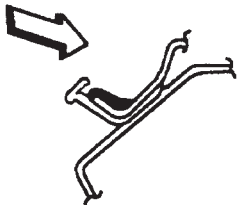

DO NOT HOLD GUN NOZZLE IN DIRECTION OF ARROW. SEALER APPLIED AS SHOWN IS INEFFECTIVE.

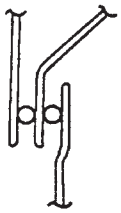

3 METAL THICKNESS

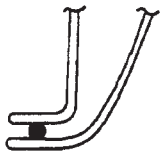

2 METAL THICKNESS

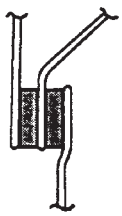

3 METAL THICKNESS

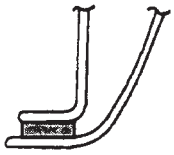

2 METAL THICKNESS

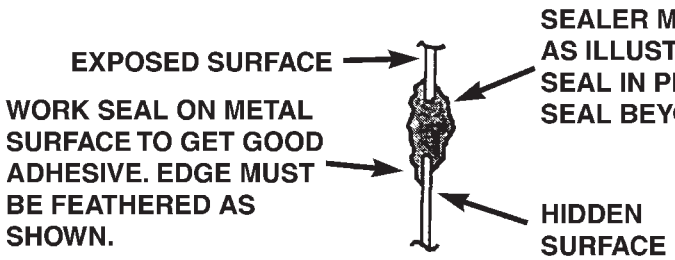

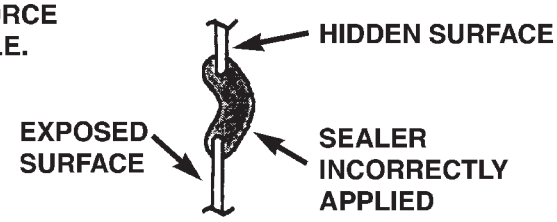

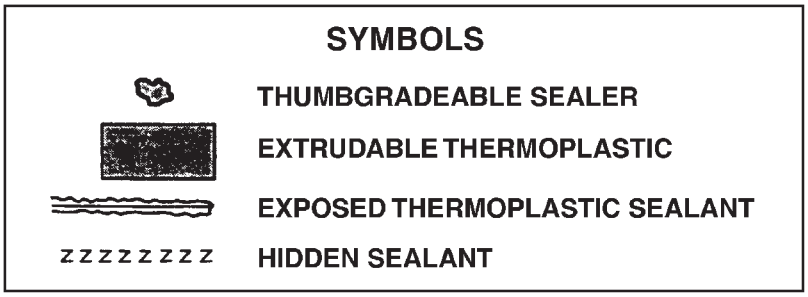

80866cc6

Fig. 5 METHODS OF APPLYING AUTO BODY SEALANT

SEALER LOCATIONS (Continued)

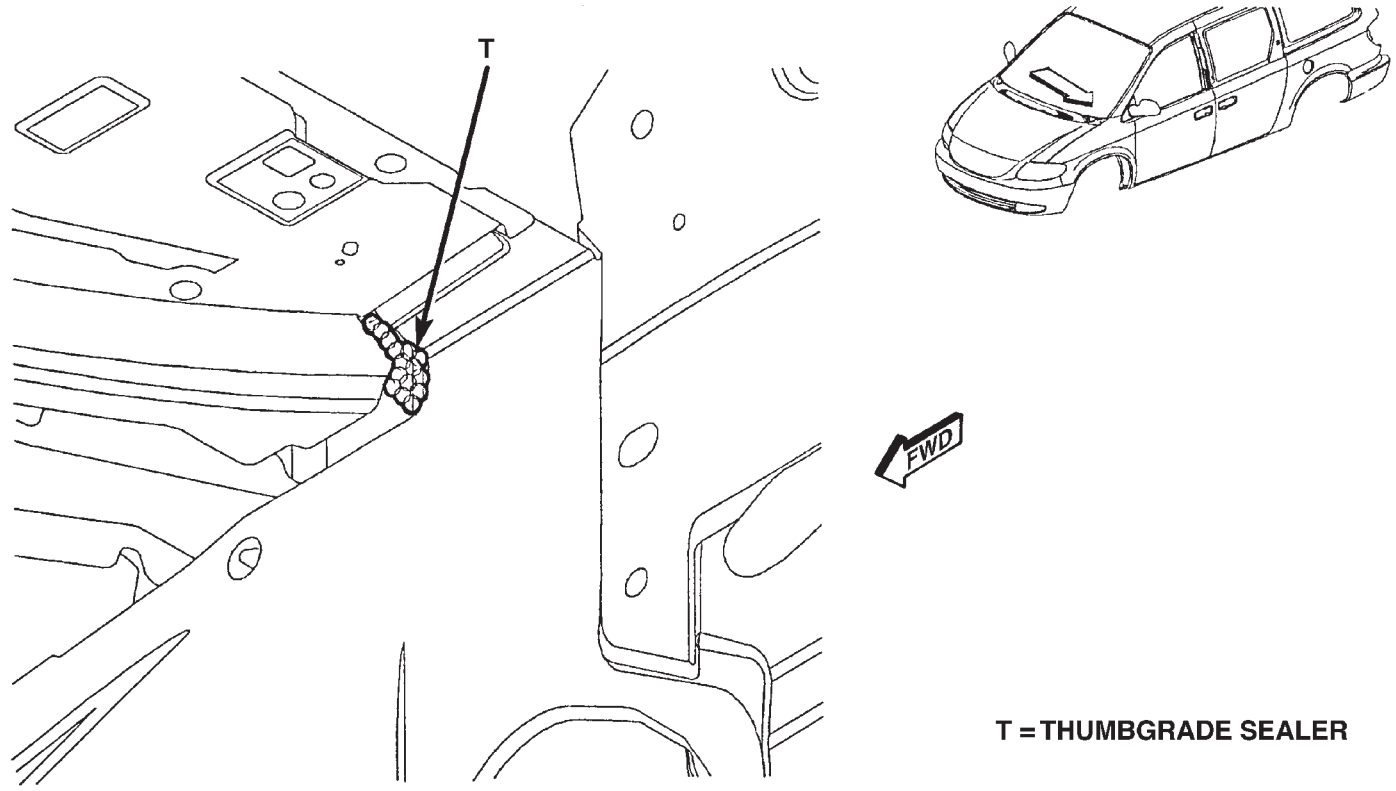

Fig. 6 LOWER WINDSHIELD OPENING - RIGHT AND LEFT SIDES

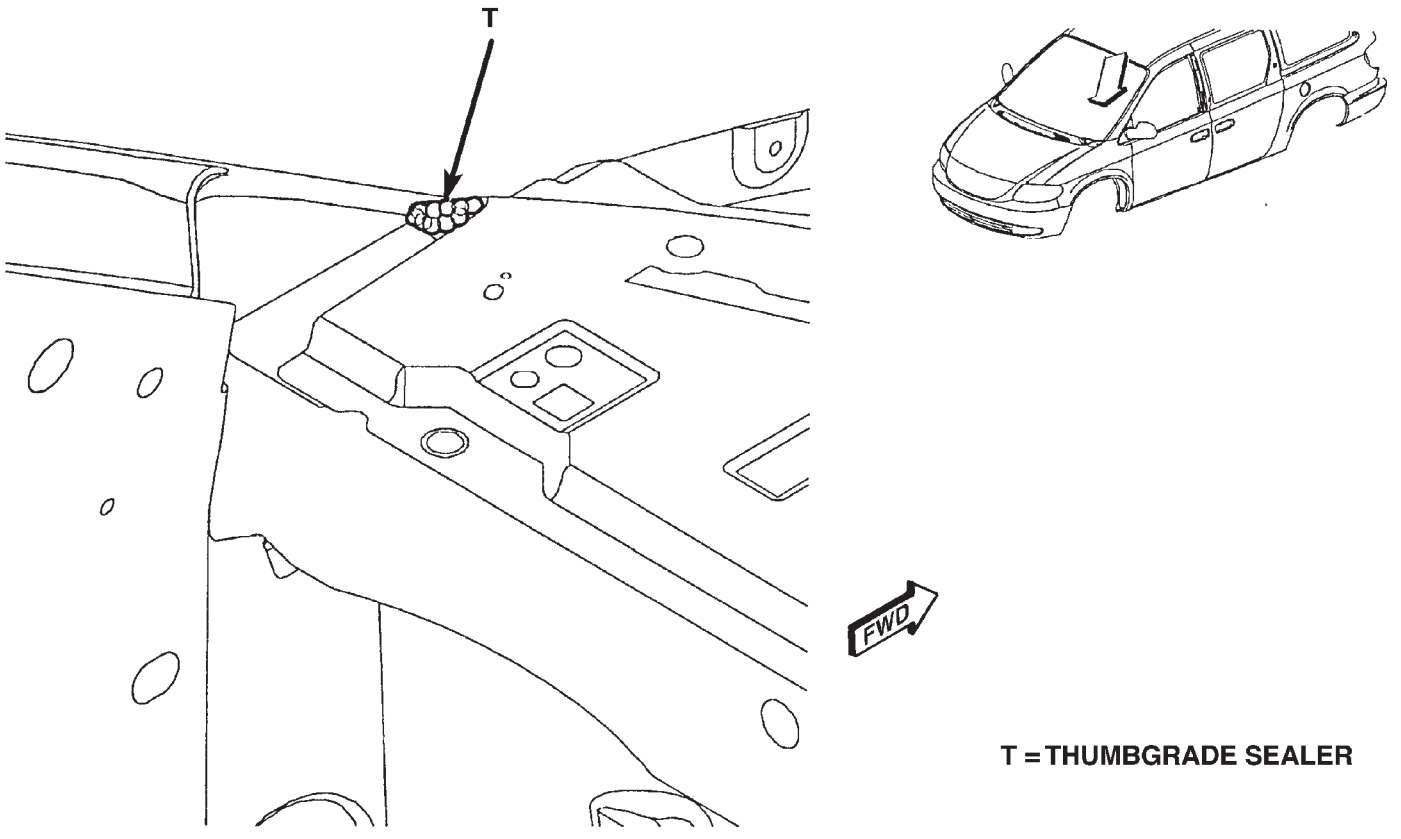

Fig. 7 COWL SIDE - LEFT AND RIGHT SIDES

SEALER LOCATIONS (Continued)

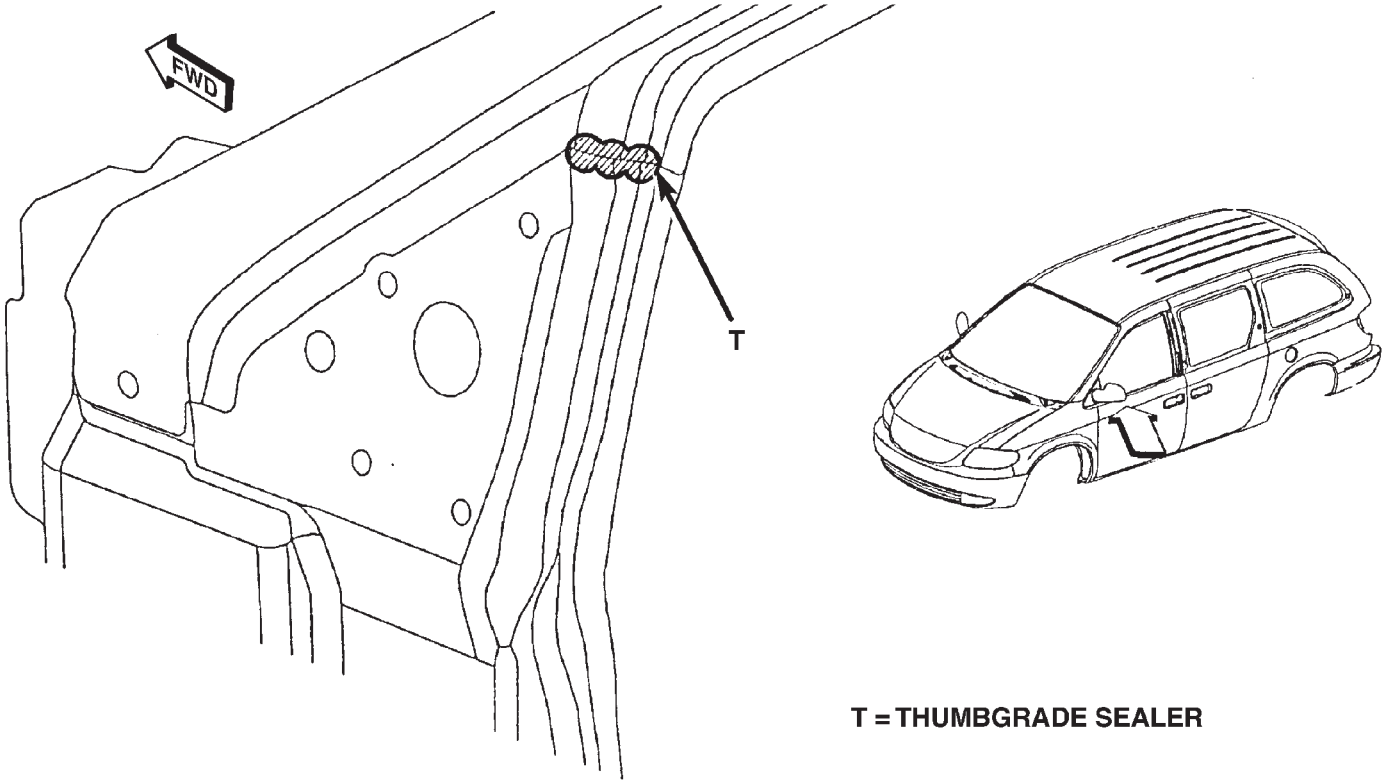

Fig. 8 SIDE QUARTER WINDSHIELD OPENING - LEFT AND RIGHT SIDES

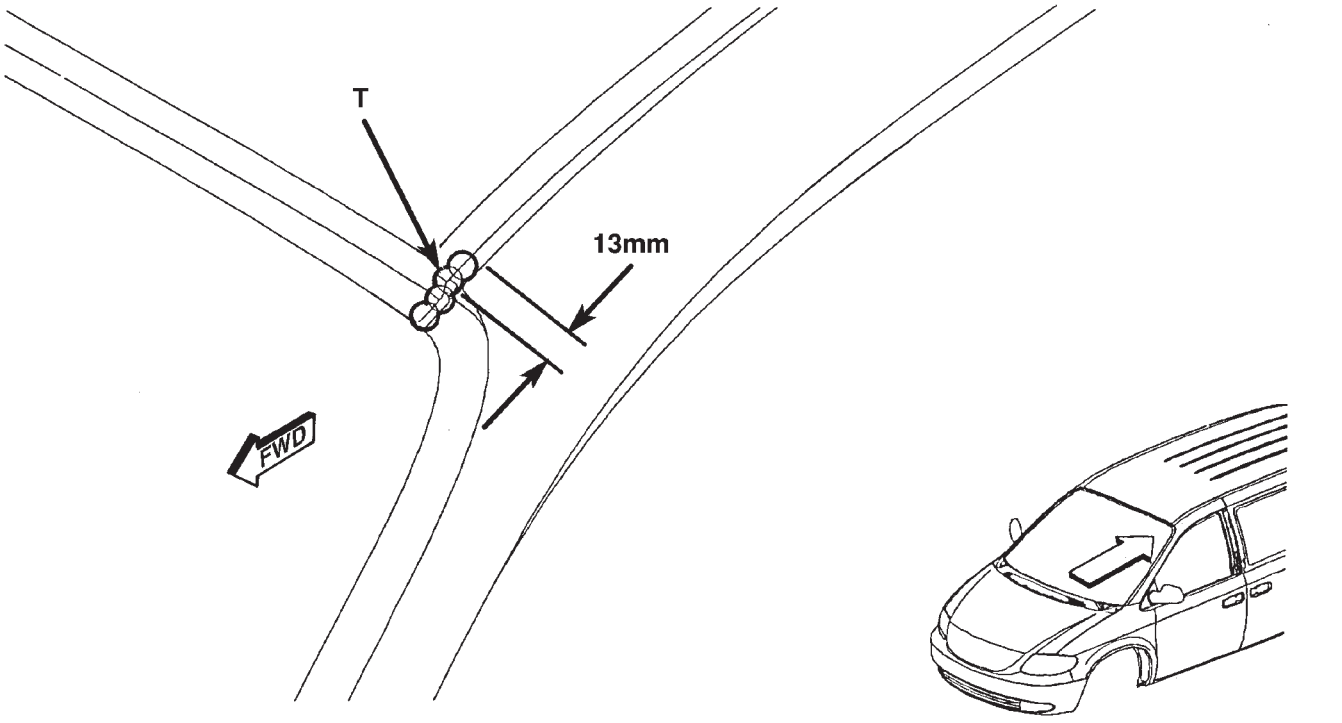

Fig. 9 UPPER WINDSHIELD A-PILLAR - LEFT AND RIGHT SIDES

SEALER LOCATIONS (Continued)

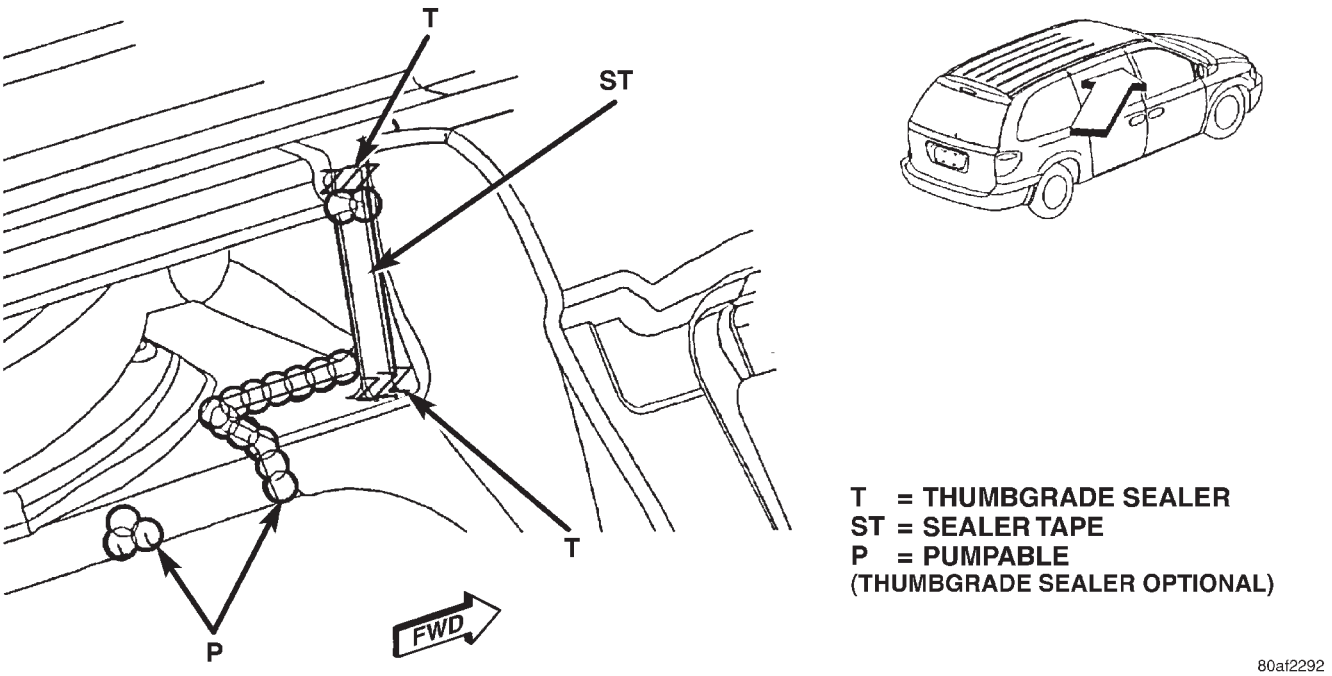

Fig. 10 ROOF TRACK C-PILLAR - LEFT AND RIGHT SIDES

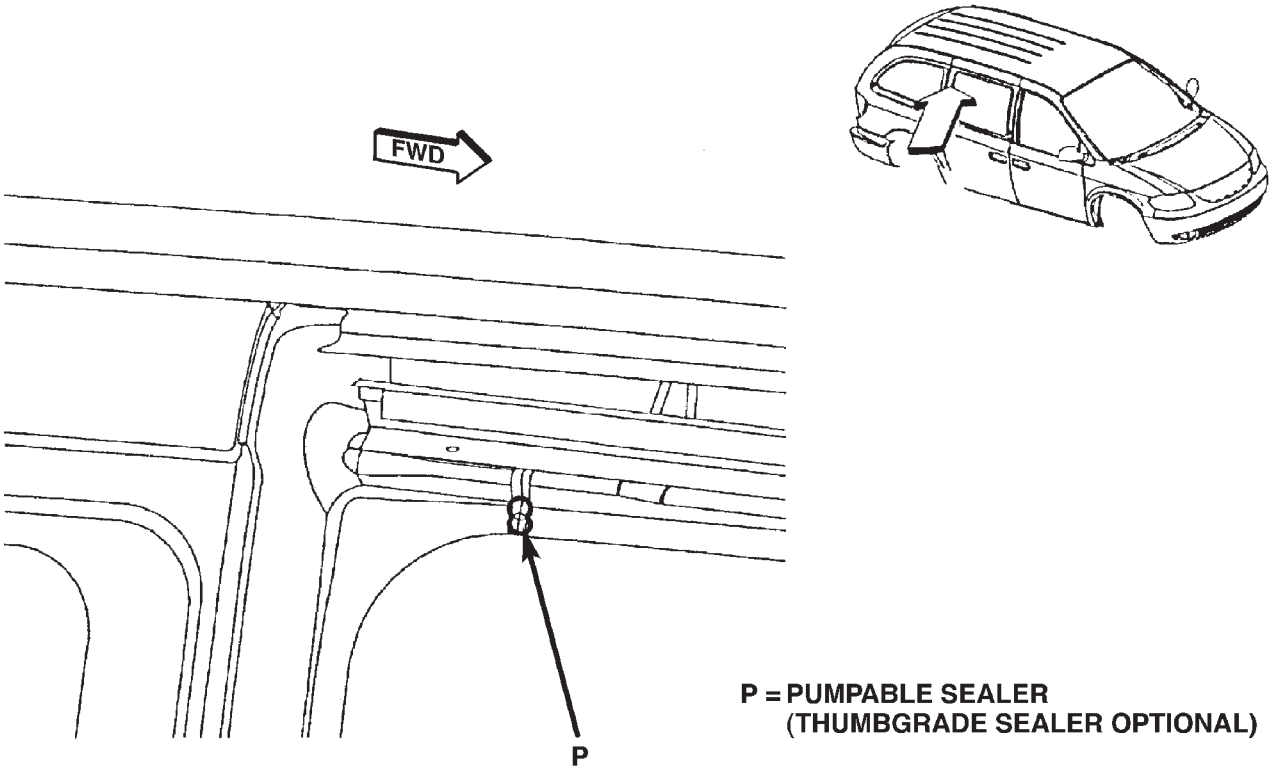

Fig. 11 SLIDING DOOR UPPER FLANGE SEAMS - LEFT AND RIGHT SIDES

SEALER LOCATIONS (Continued)

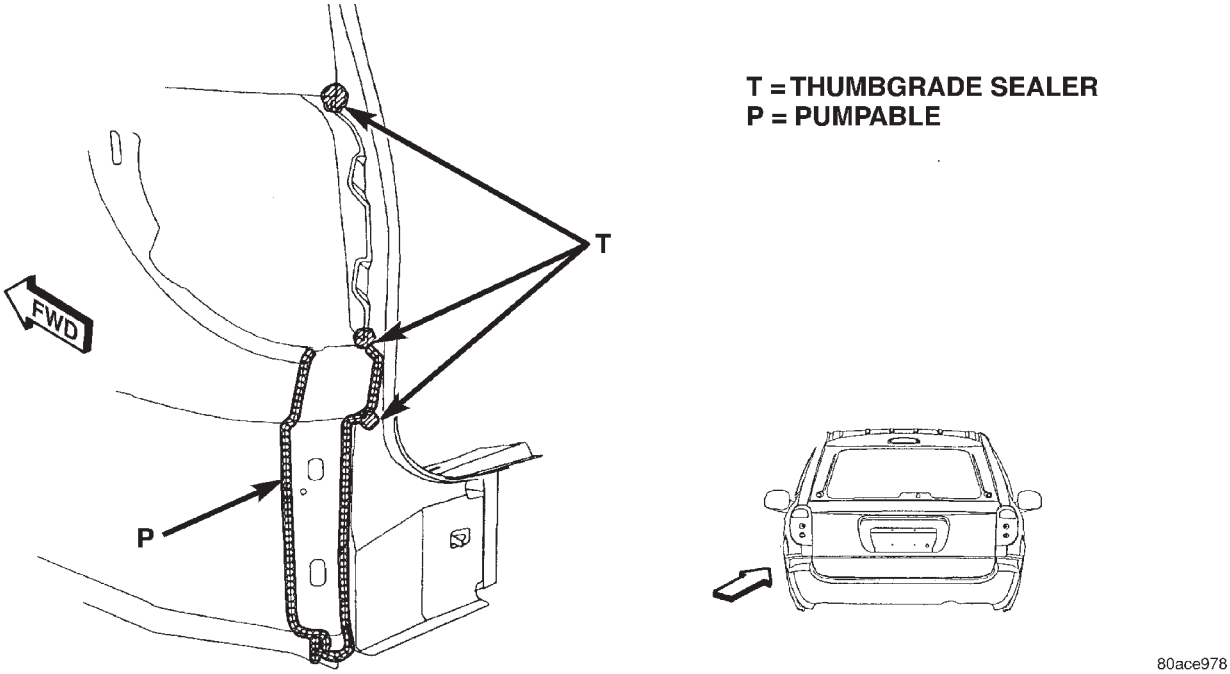

Fig. 12 QUARTER PANEL EXTERIOR AREA - LEFT AND RIGHT SIDES

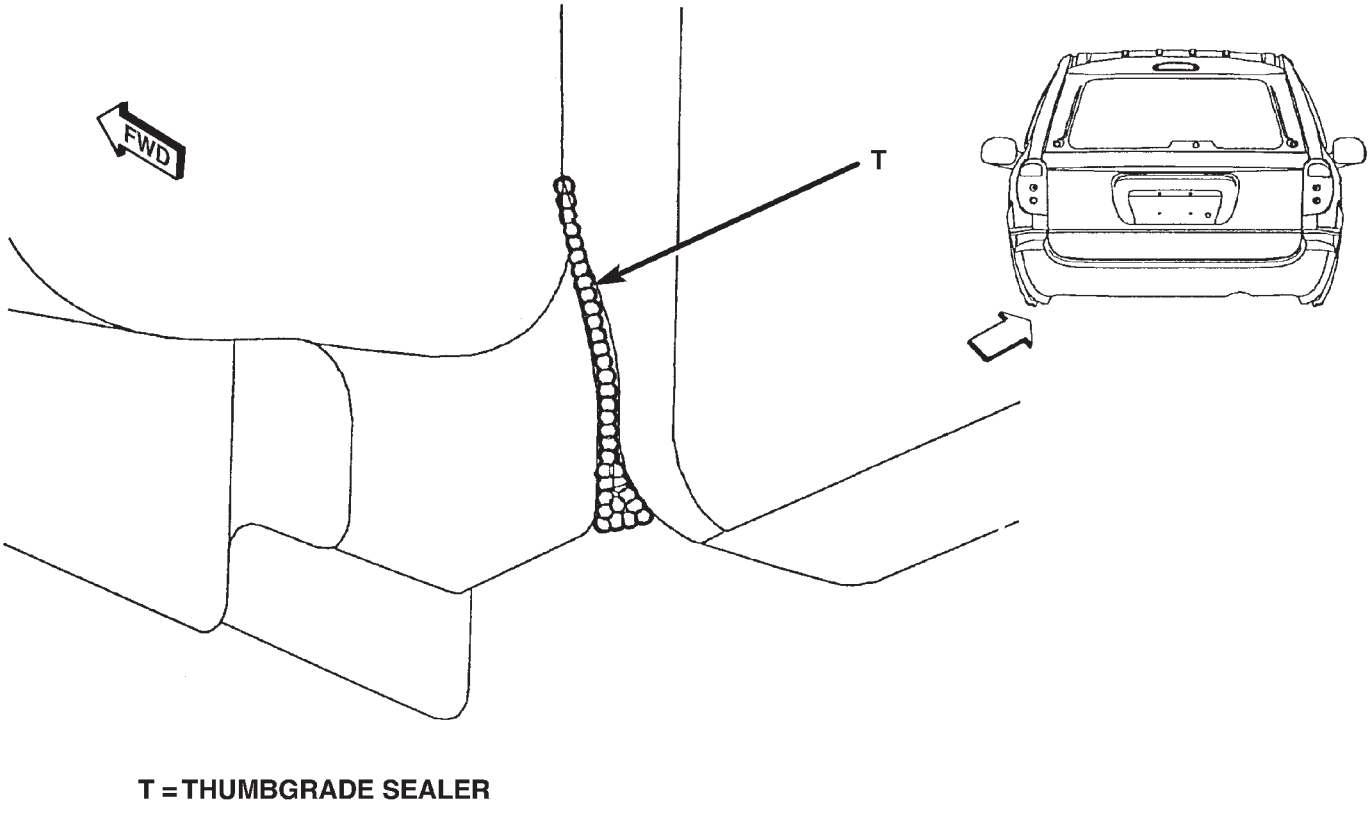

Fig. 13 LOWER REAR EXTERIOR CORNER PANELS - LEFT AND RIGHT SIDES

SEALER LOCATIONS (Continued)

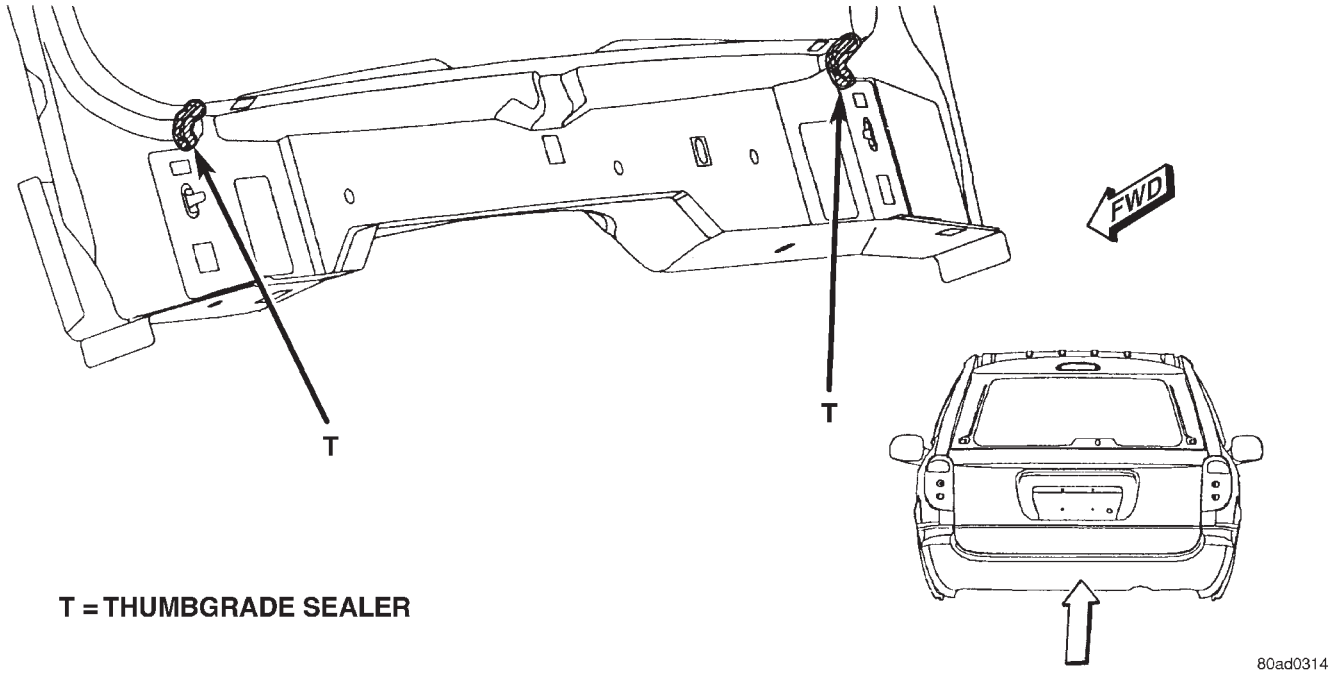

Fig. 14 LOWER SILL LIFTGATE OPENING - LEFT AND RIGHT SIDES

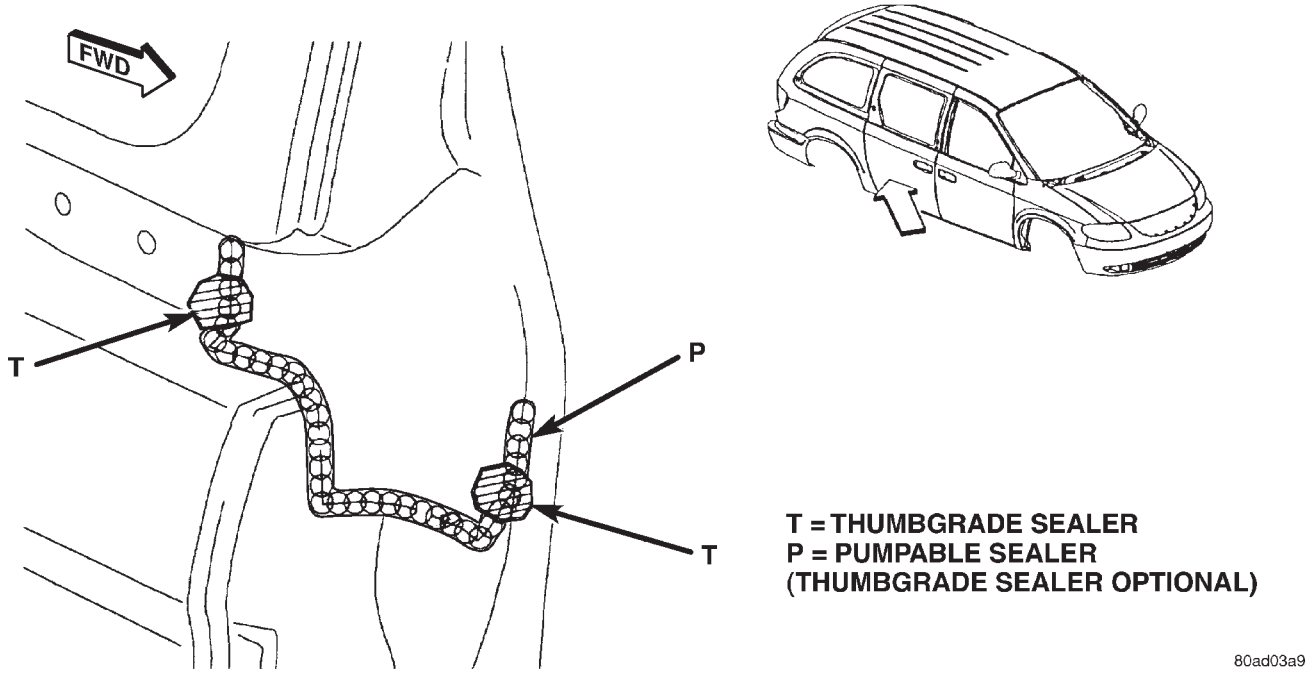

Fig. 15 C-PILLAR CAN - LEFT AND RIGHT SIDES

SEALER LOCATIONS (Continued)

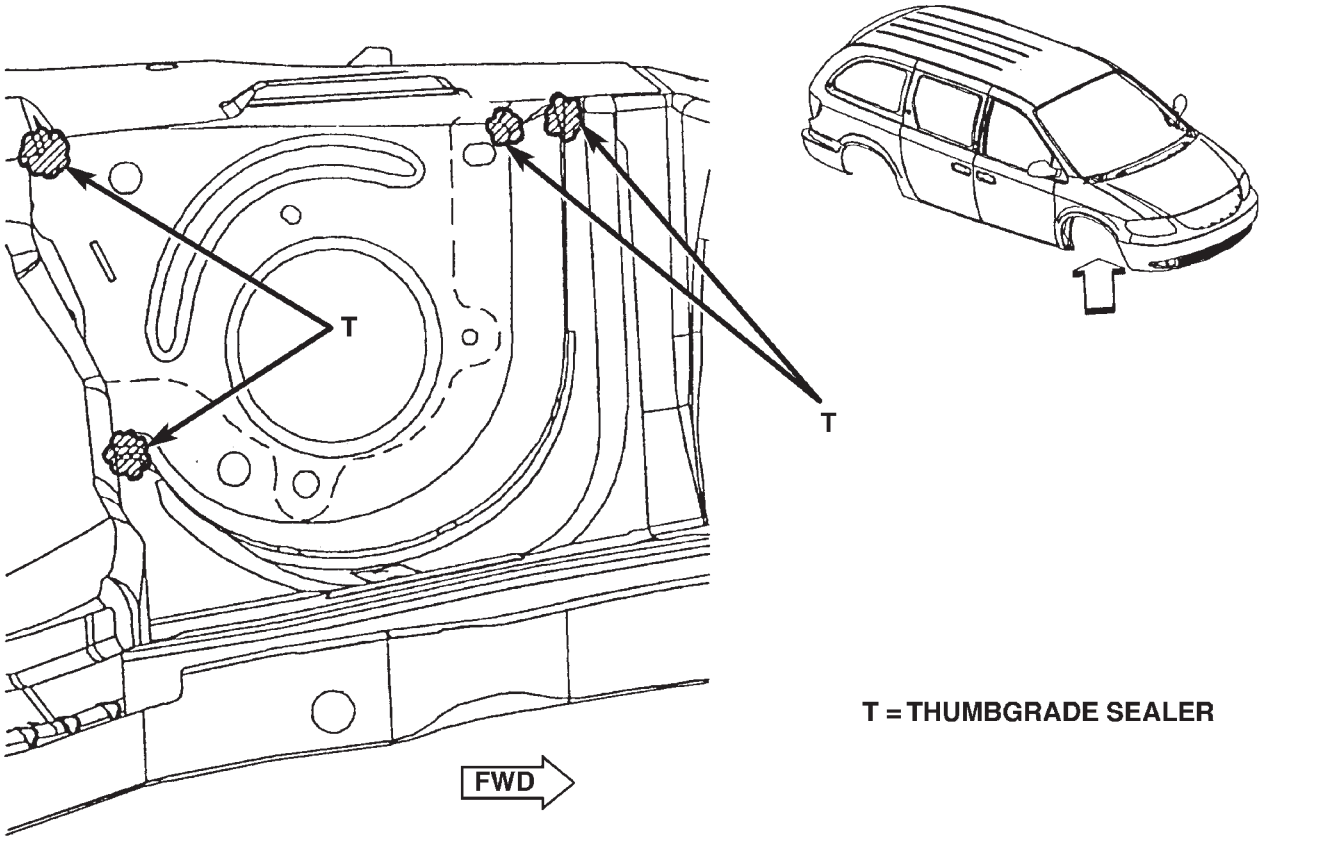

Fig. 16 SHOCK TOWER AREA - LEFT AND RIGHT SIDES

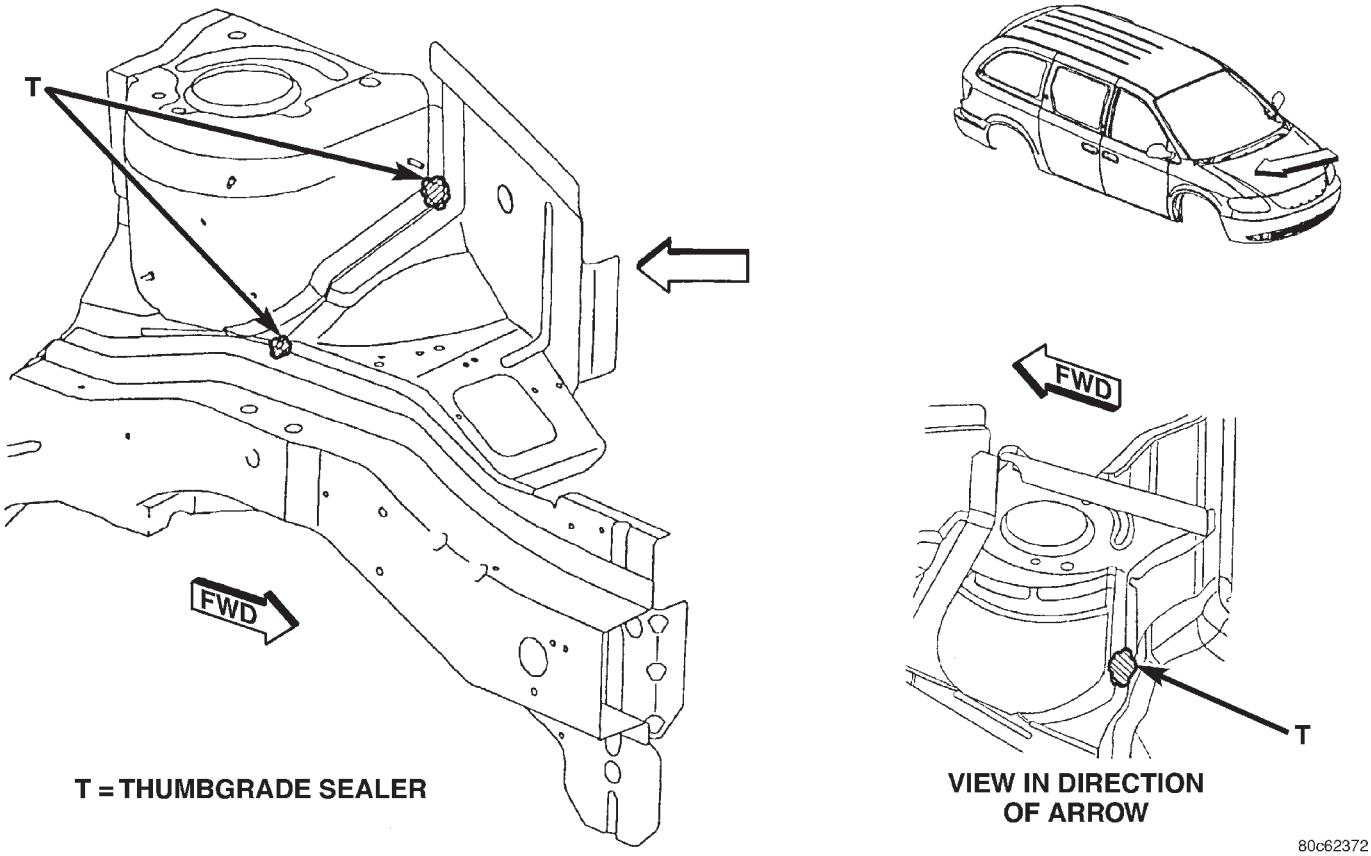

Fig. 17 OUTER SHOCK TOWER AREA - LEFT AND RIGHT SIDES

SEALER LOCATIONS (Continued)

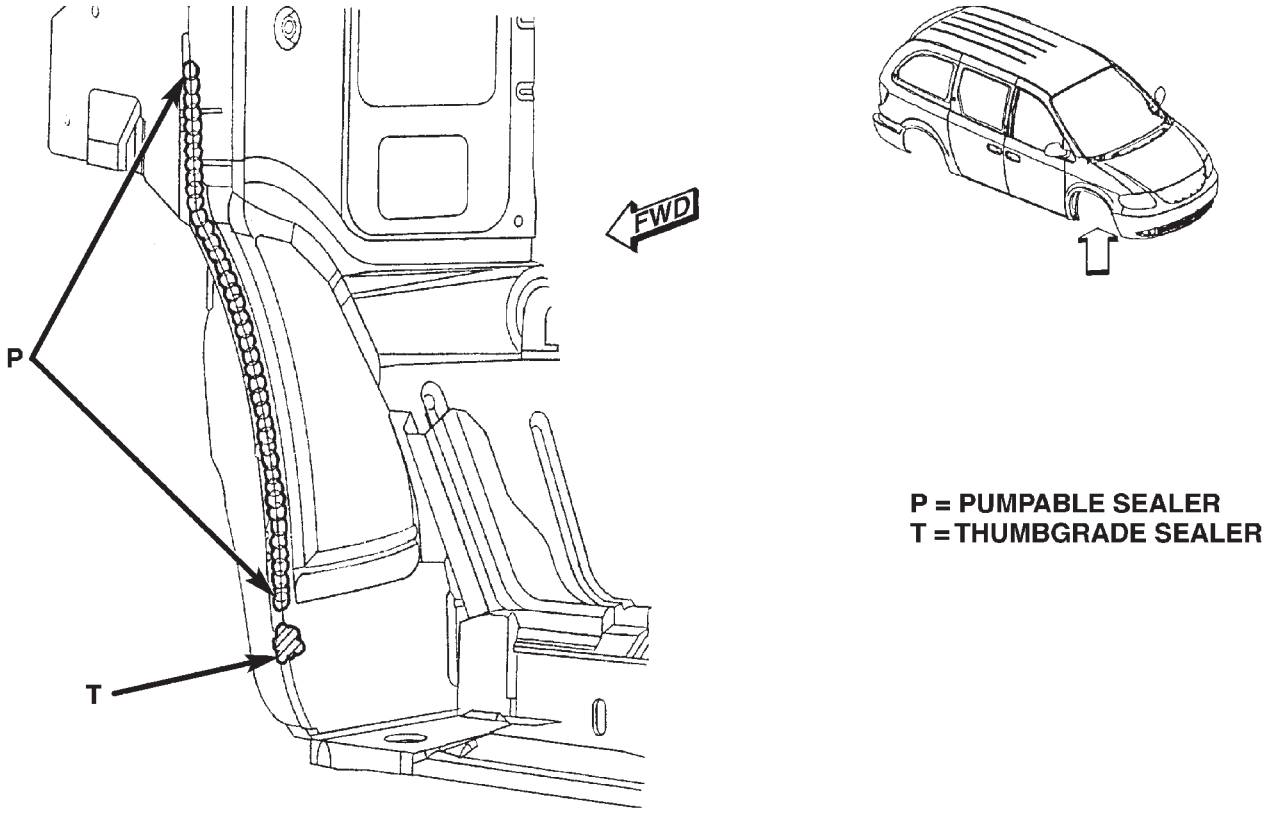

Fig. 18 CROSS MEMBER SUPPORT - LEFT AND RIGHT SIDES

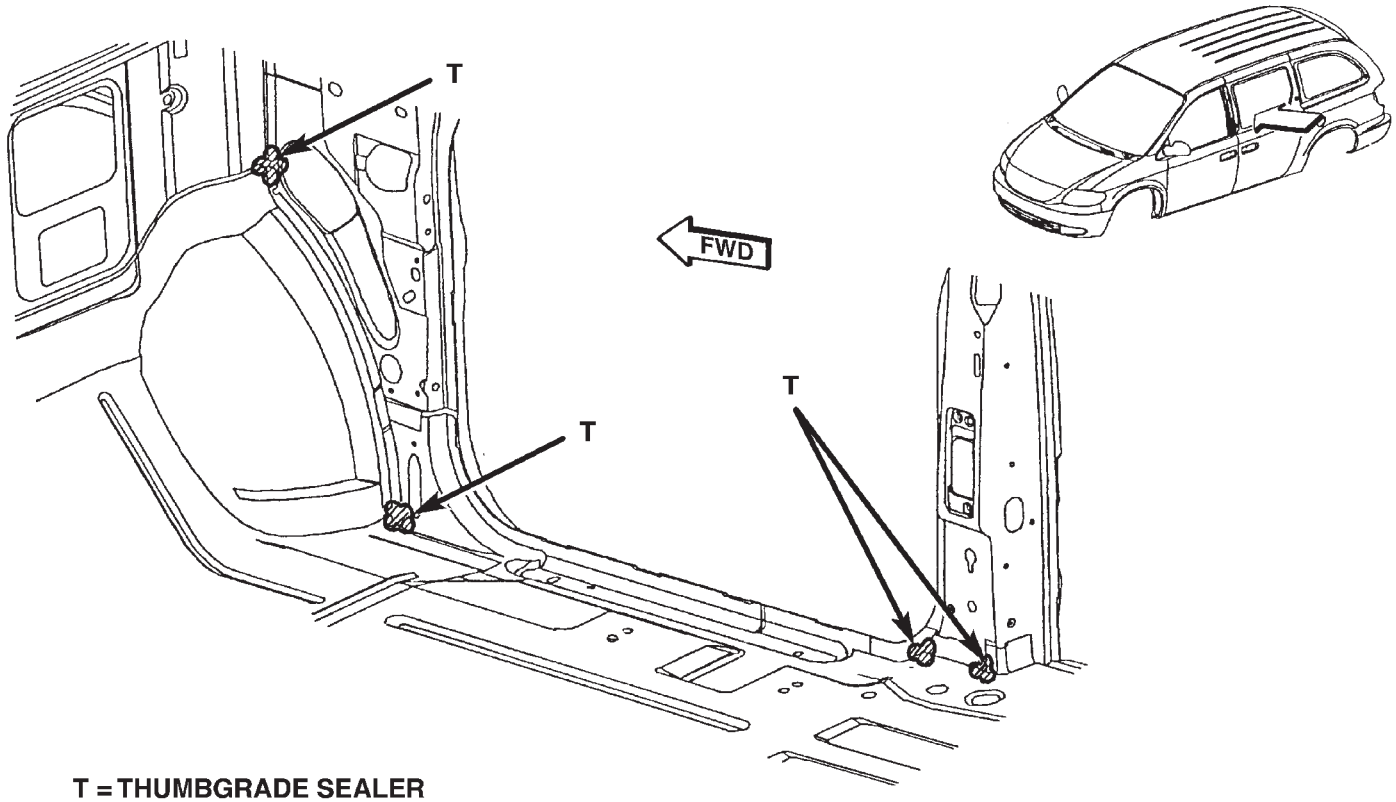

Fig. 19 A & B PILLAR FLOOR PAN RISERS - LEFT AND RIGHT SIDES

SEALER LOCATIONS (Continued)

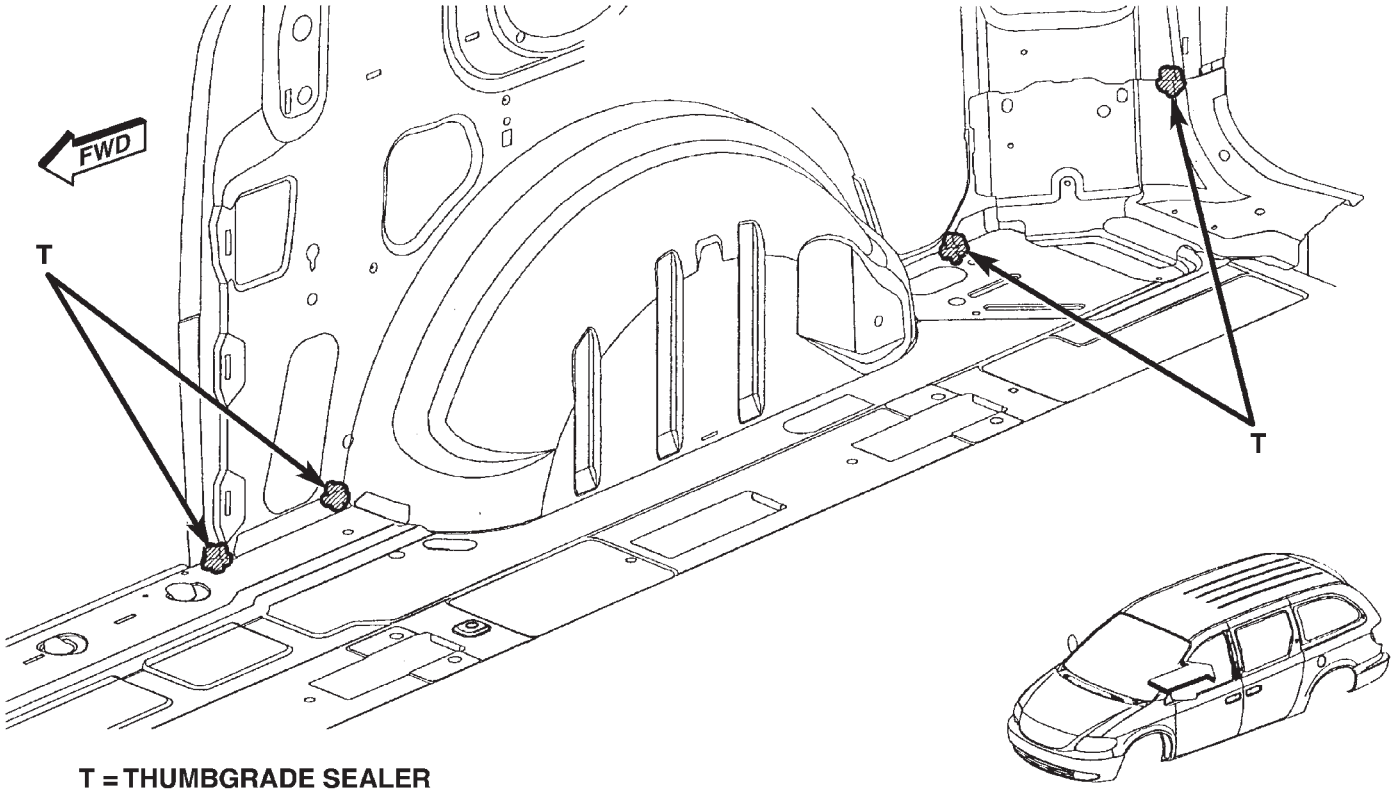

Fig. 20 REAR WHEEL HOUSE FLOOR PAN - LEFT AND RIGHT SIDES

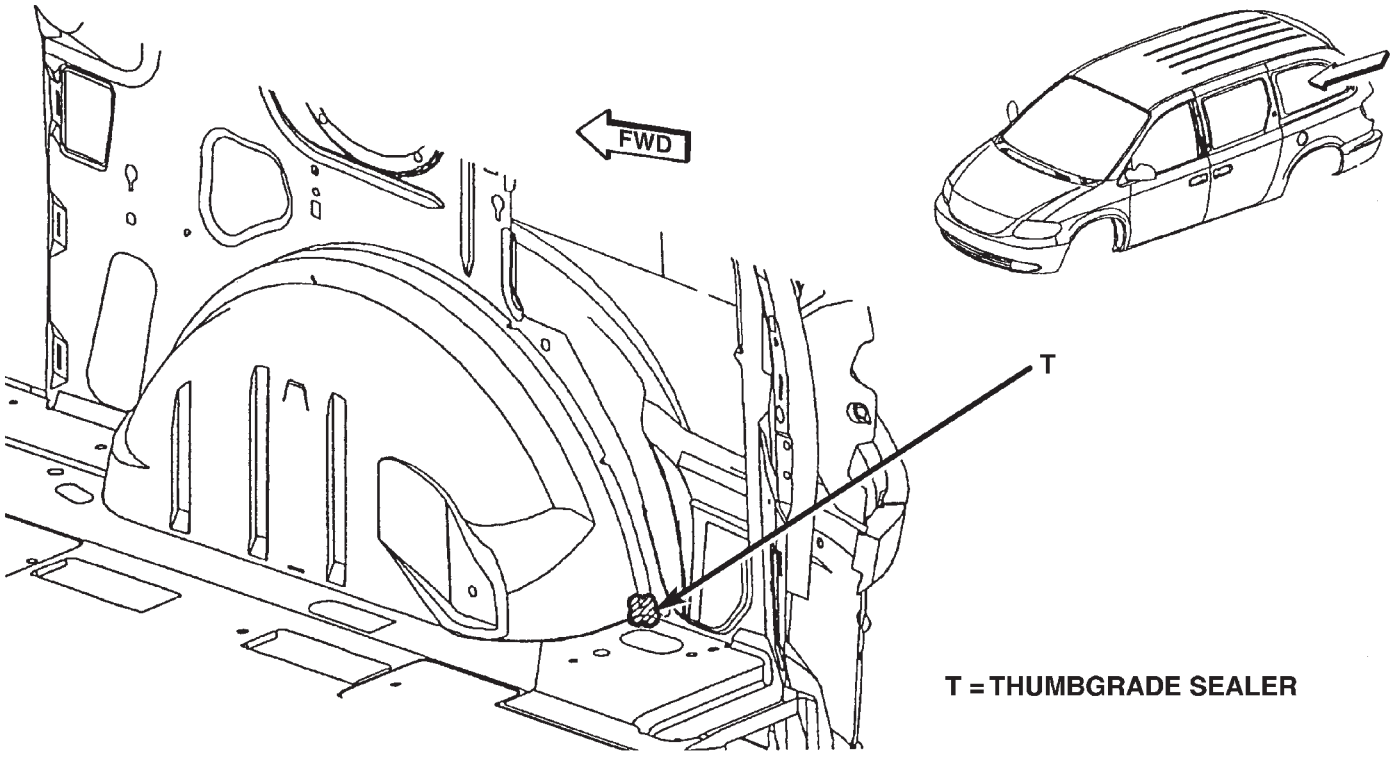

Fig. 21 REAR WHEELHOUSE TO FLOOR PAN - LEFT AND RIGHT SIDES

SEALER LOCATIONS (Continued)

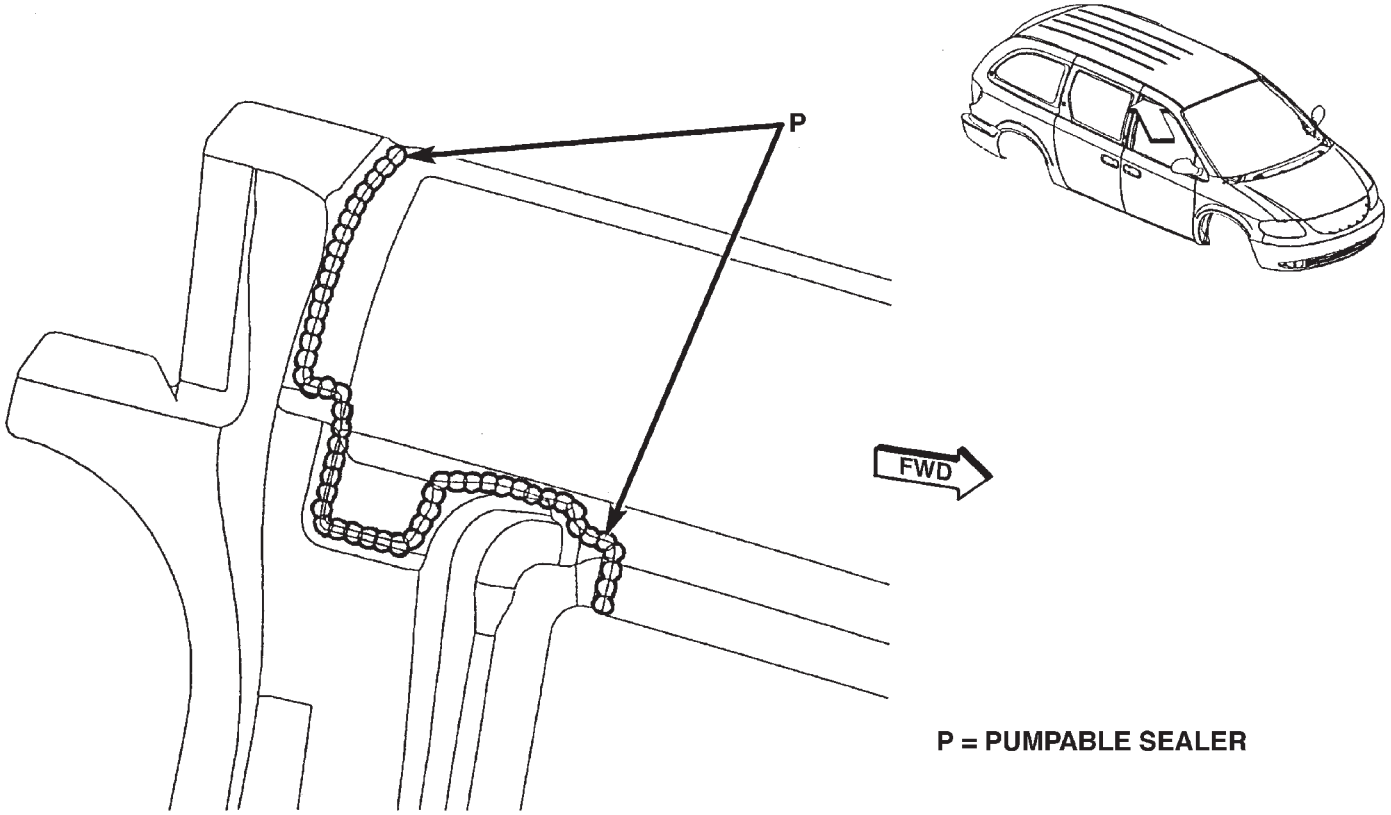

Fig. 22 UPPER SLIDING DOOR FLANGE - LEFT AND RIGHT SIDES

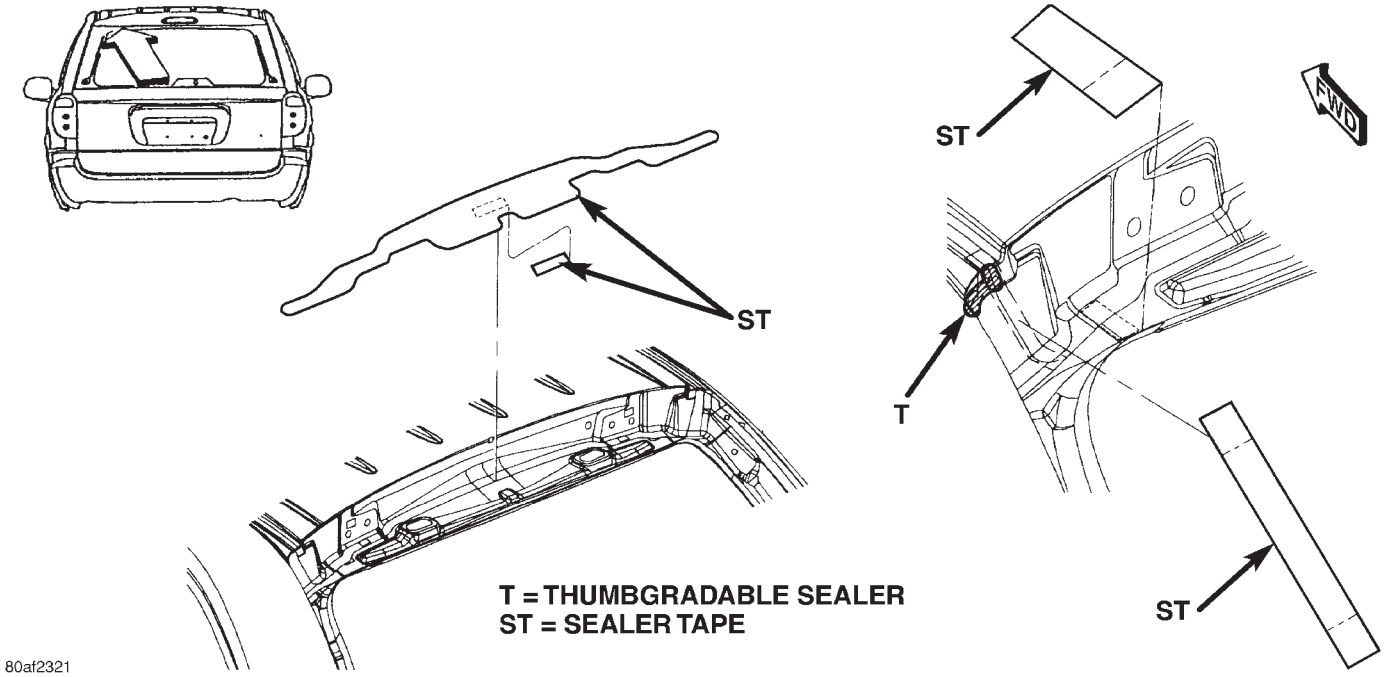

Fig. 23 UPPER LIFTGATE HINGE AREA - LEFT AND RIGHT SIDES

SEALER LOCATIONS (Continued)

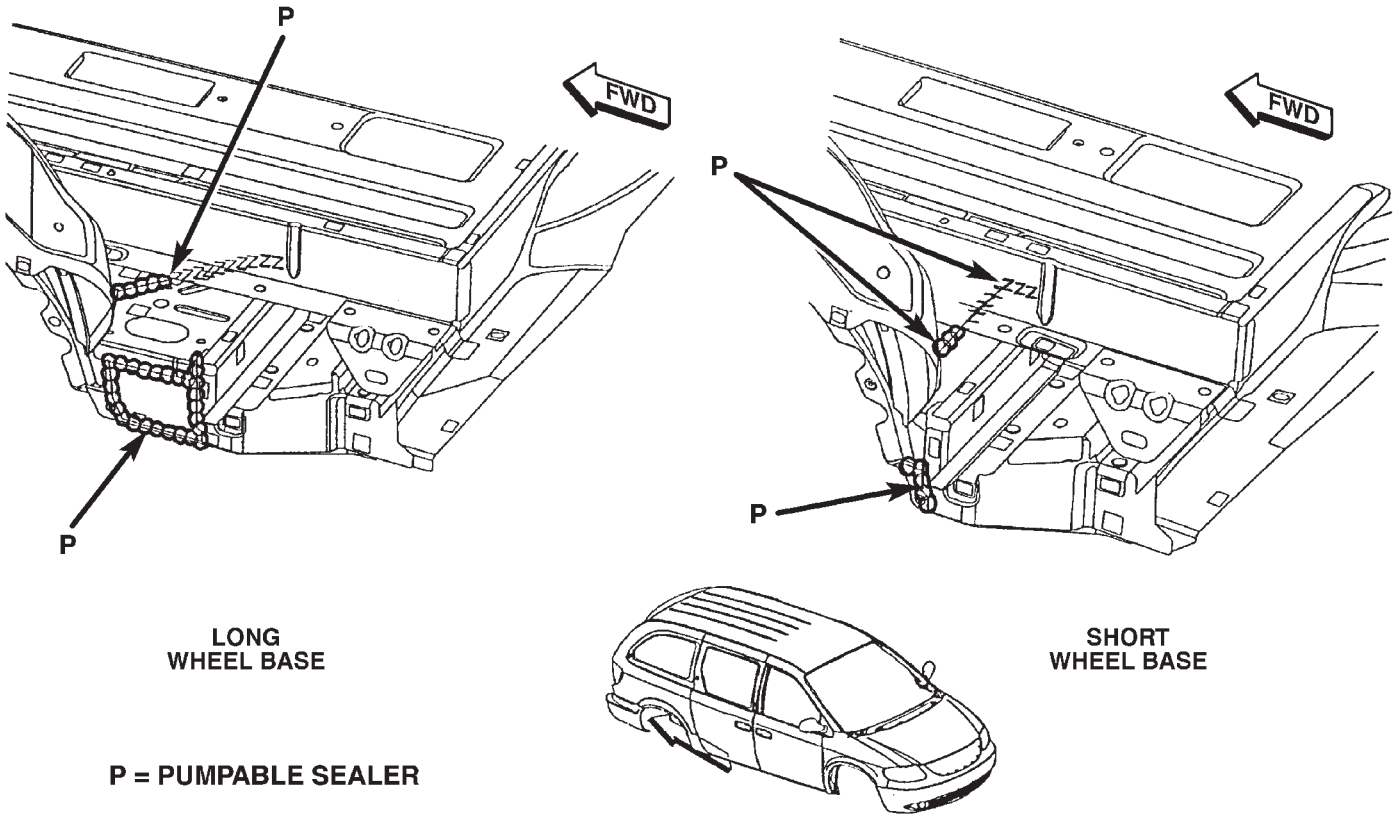

Fig. 24 REAR BRACKET SUPPORT REAR HANGER - LEFT AND RIGHT SIDES

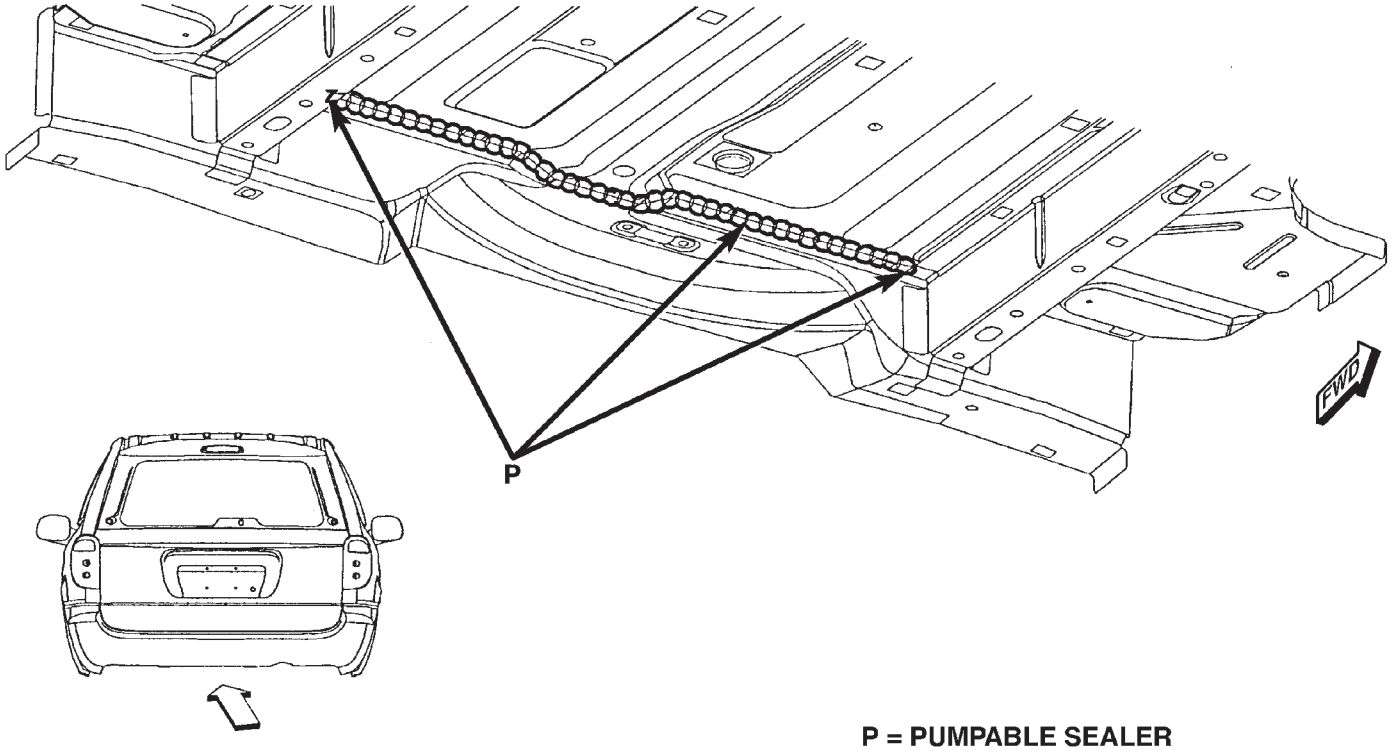

Fig. 25 LIFTGATE PANEL OPENING - UNDERSIDE

SEALER LOCATIONS (Continued)

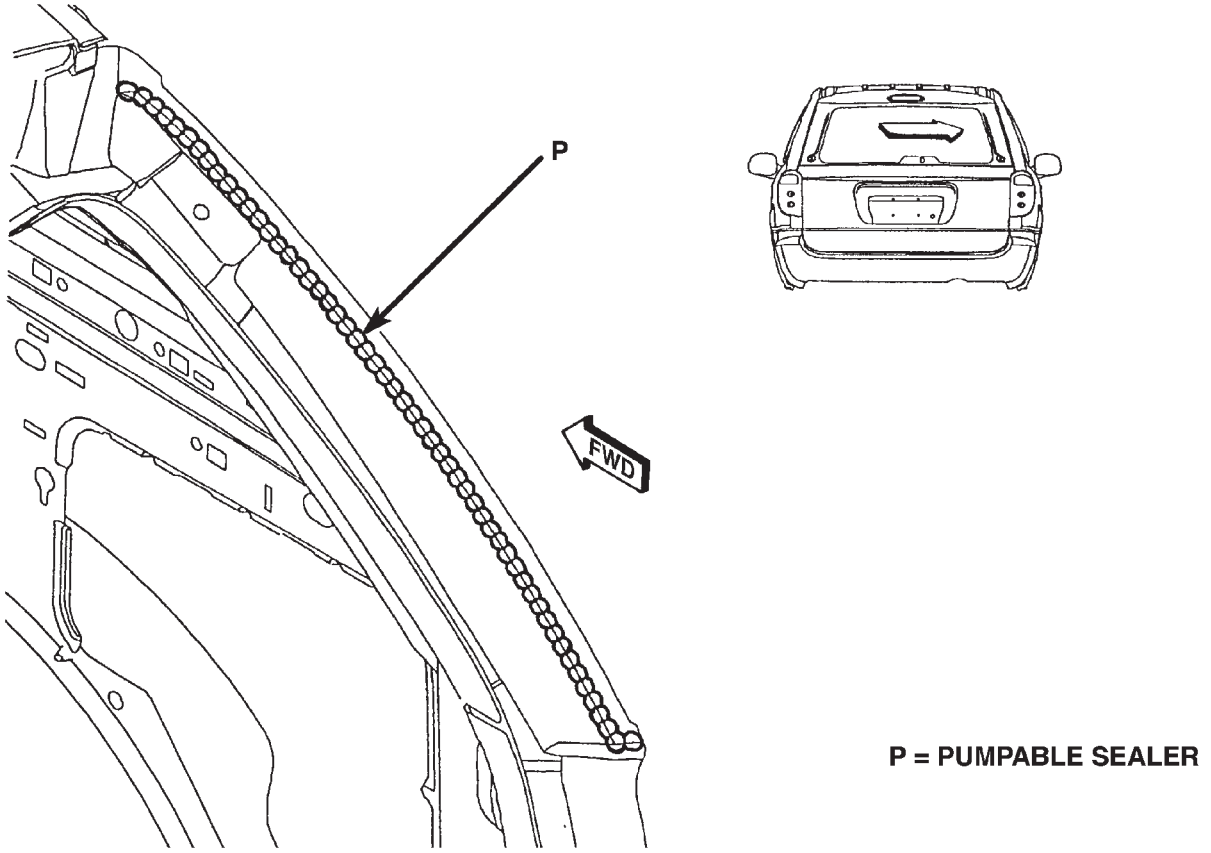

Fig. 26 D-PILLAR INSIDE SEAM - LEFT AND RIGHT SIDES

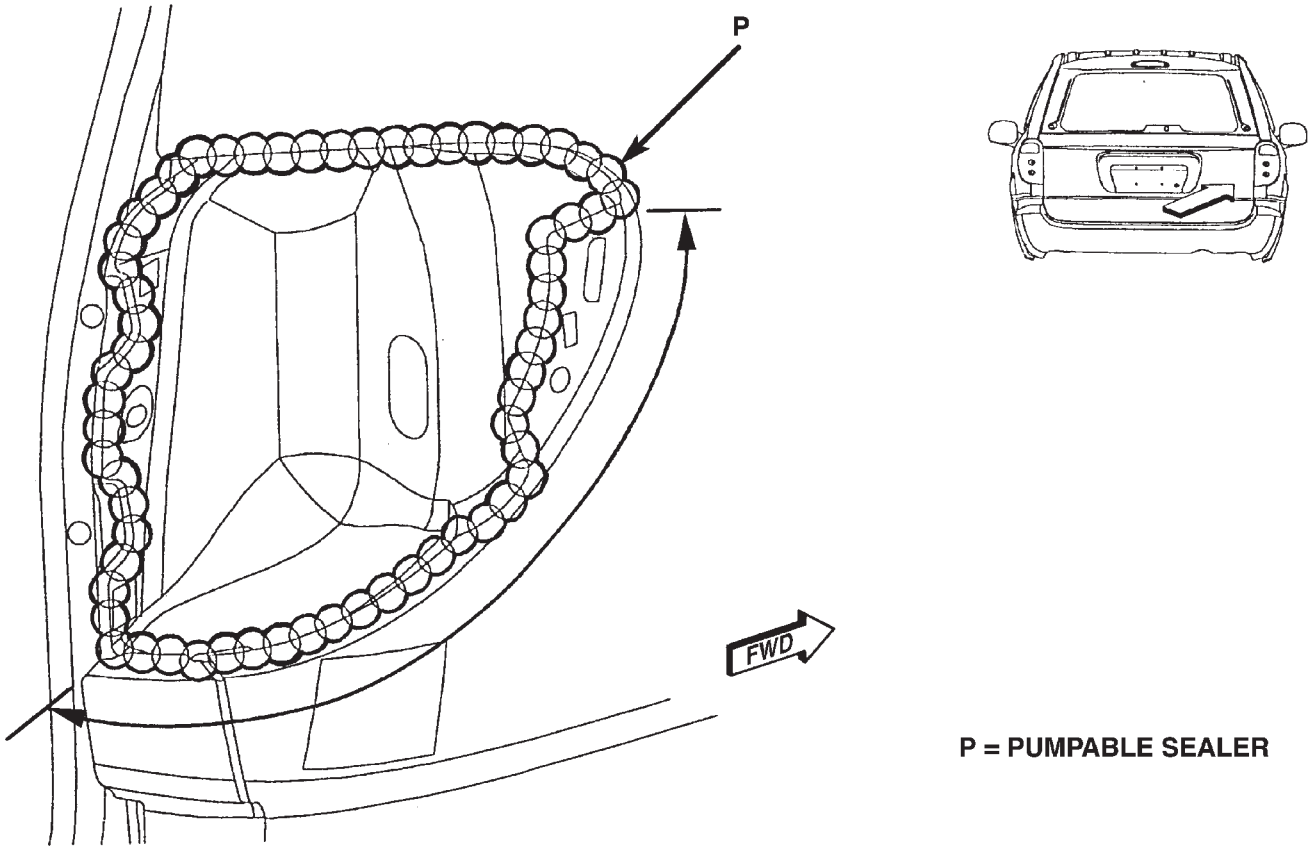

Fig. 27 REAR TAIL LAMP AREA SEAMS - LEFT AND RIGHT SIDES

SEALER LOCATIONS (Continued)

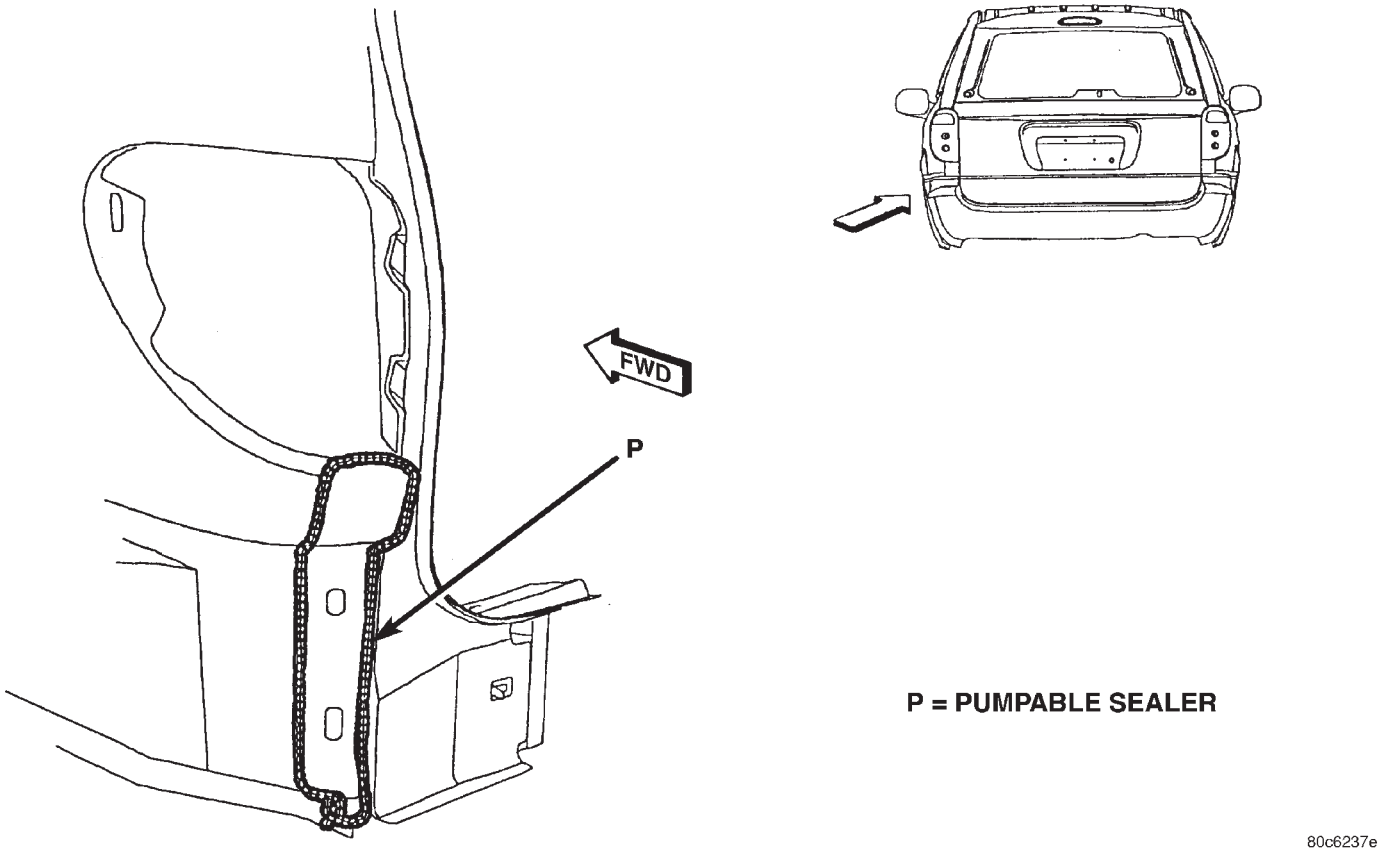

Fig. 28 UPPER LIFTGATE PANEL SILL - LEFT AND RIGHT SIDES

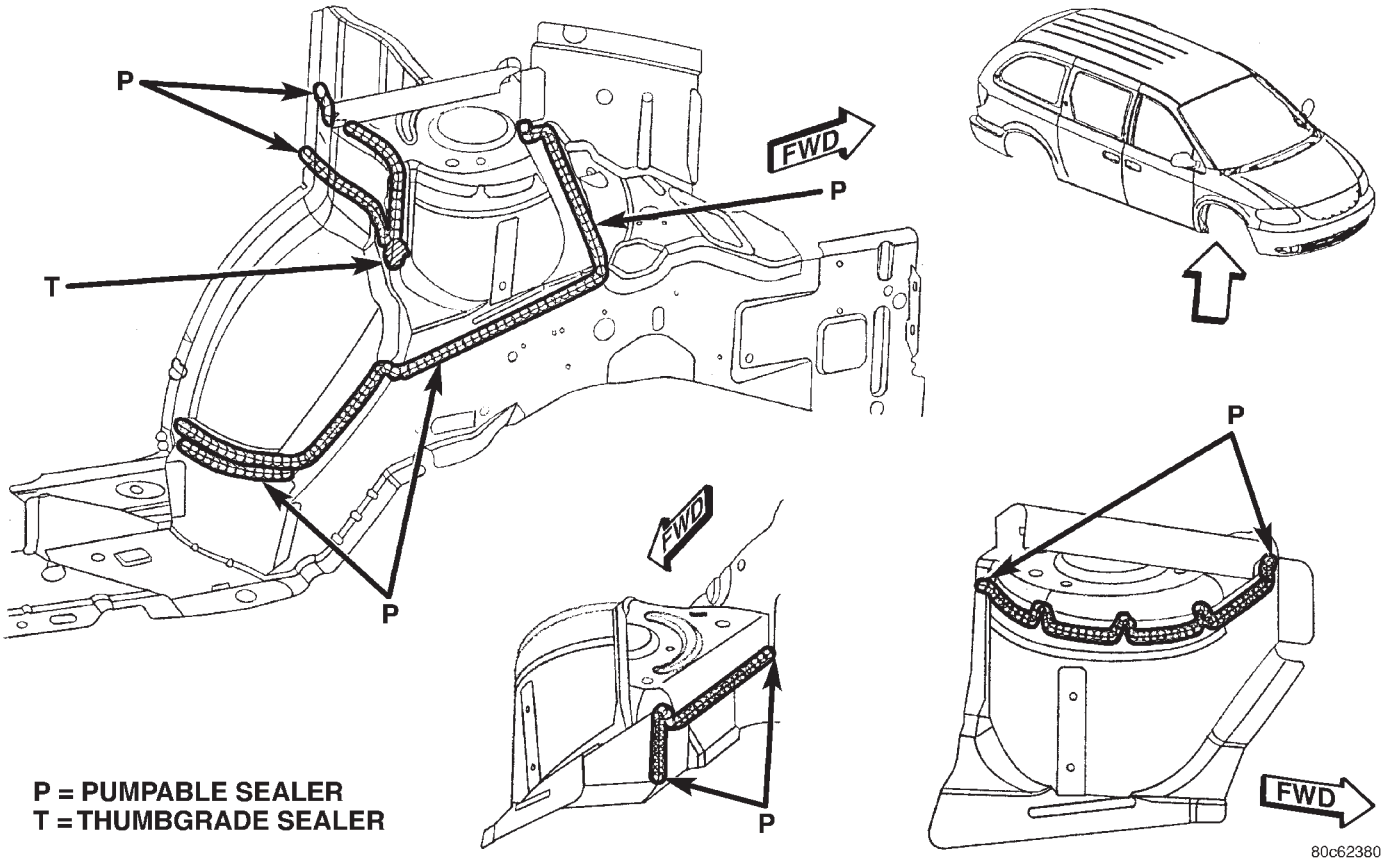

Fig. 29 FRONT WHEELHOUSE & SHOCK TOWER - LEFT AND RIGHT SIDES

SEALER LOCATIONS (Continued)

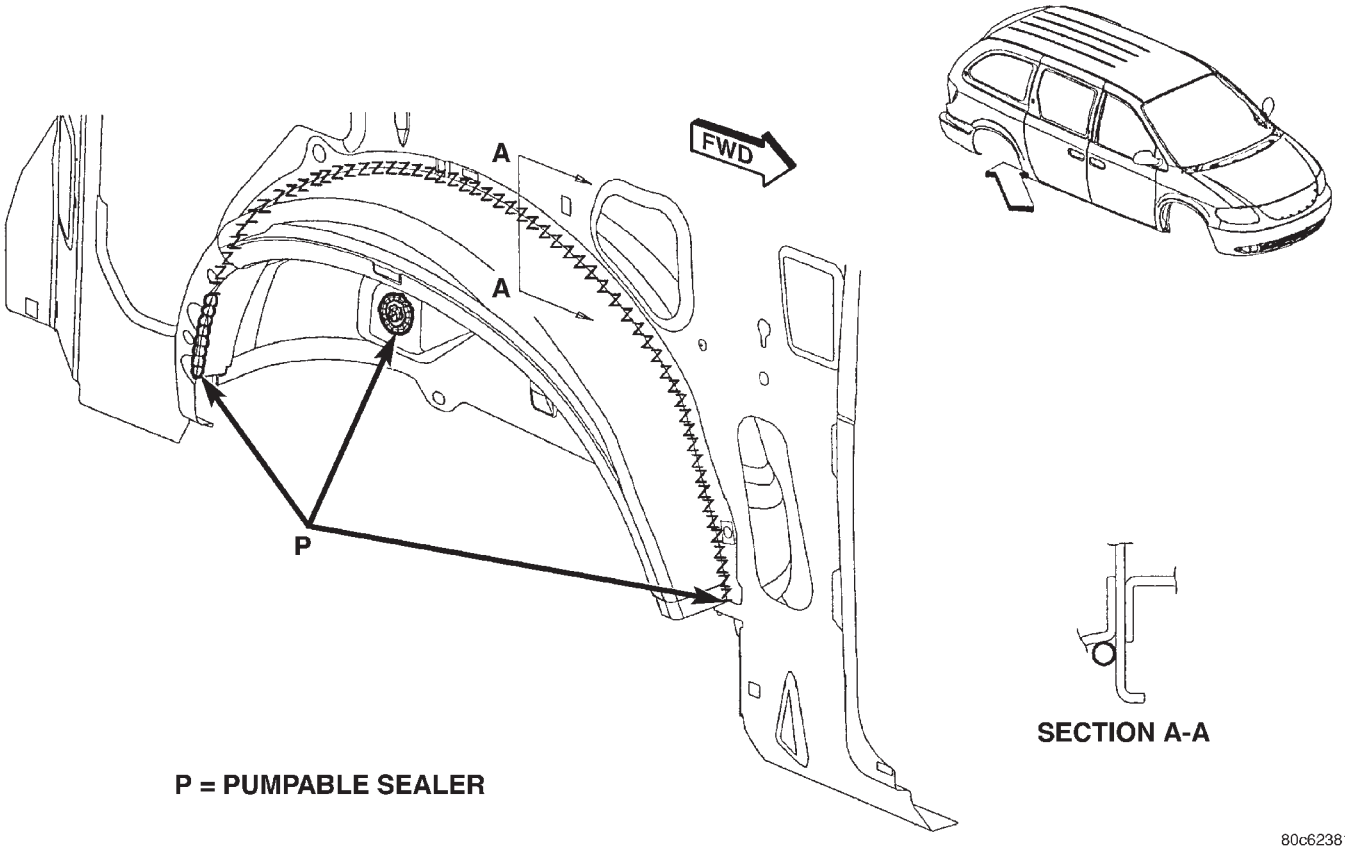

Fig. 30 REAR QUARTER WHEELHOUSE LIP & SEAT ANCHOR BOLT - LEFT AND RIGHT SIDES

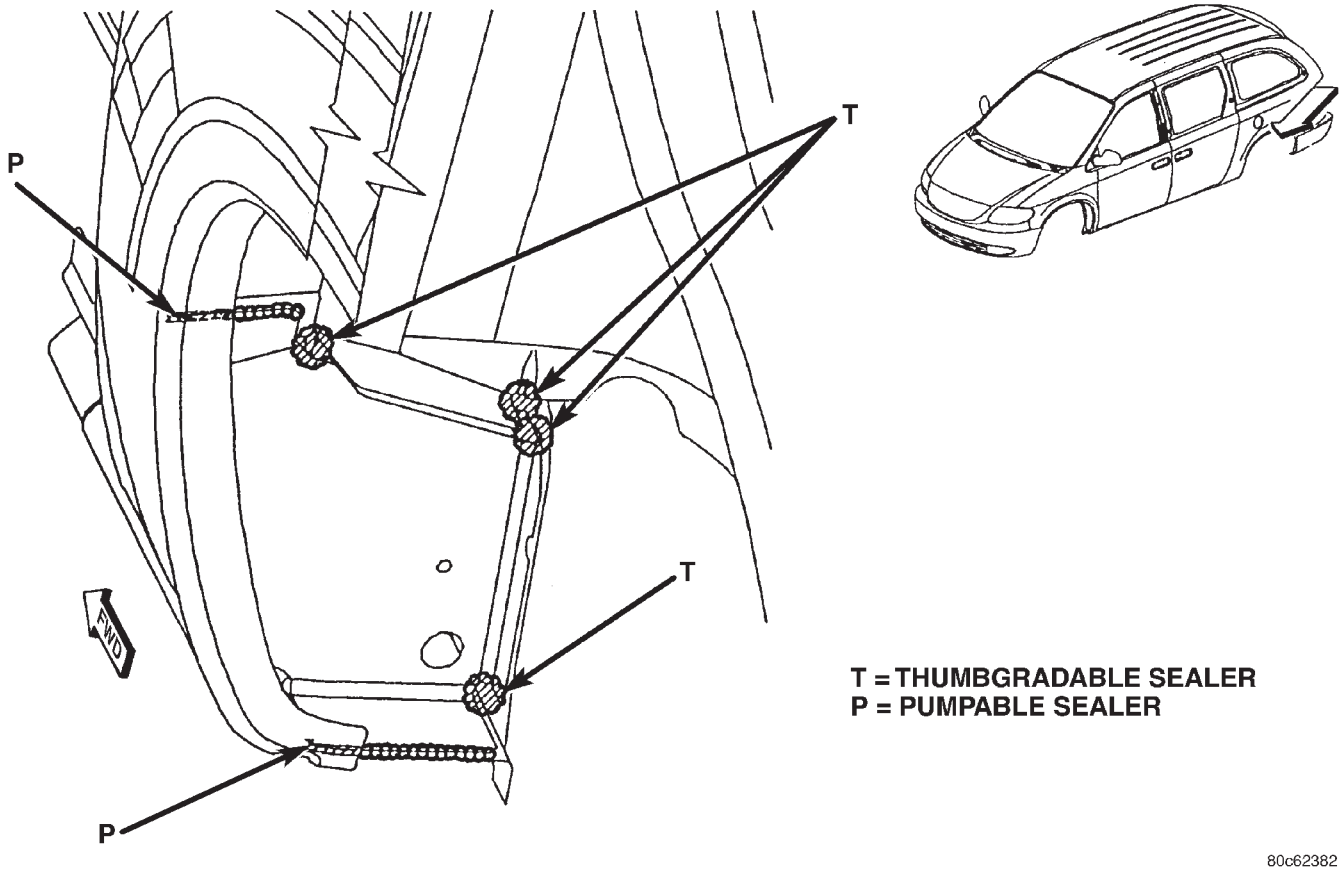

Fig. 31 TAILLAMP CAN - LEFT AND RIGHT SIDES

SEALER LOCATIONS (Continued)

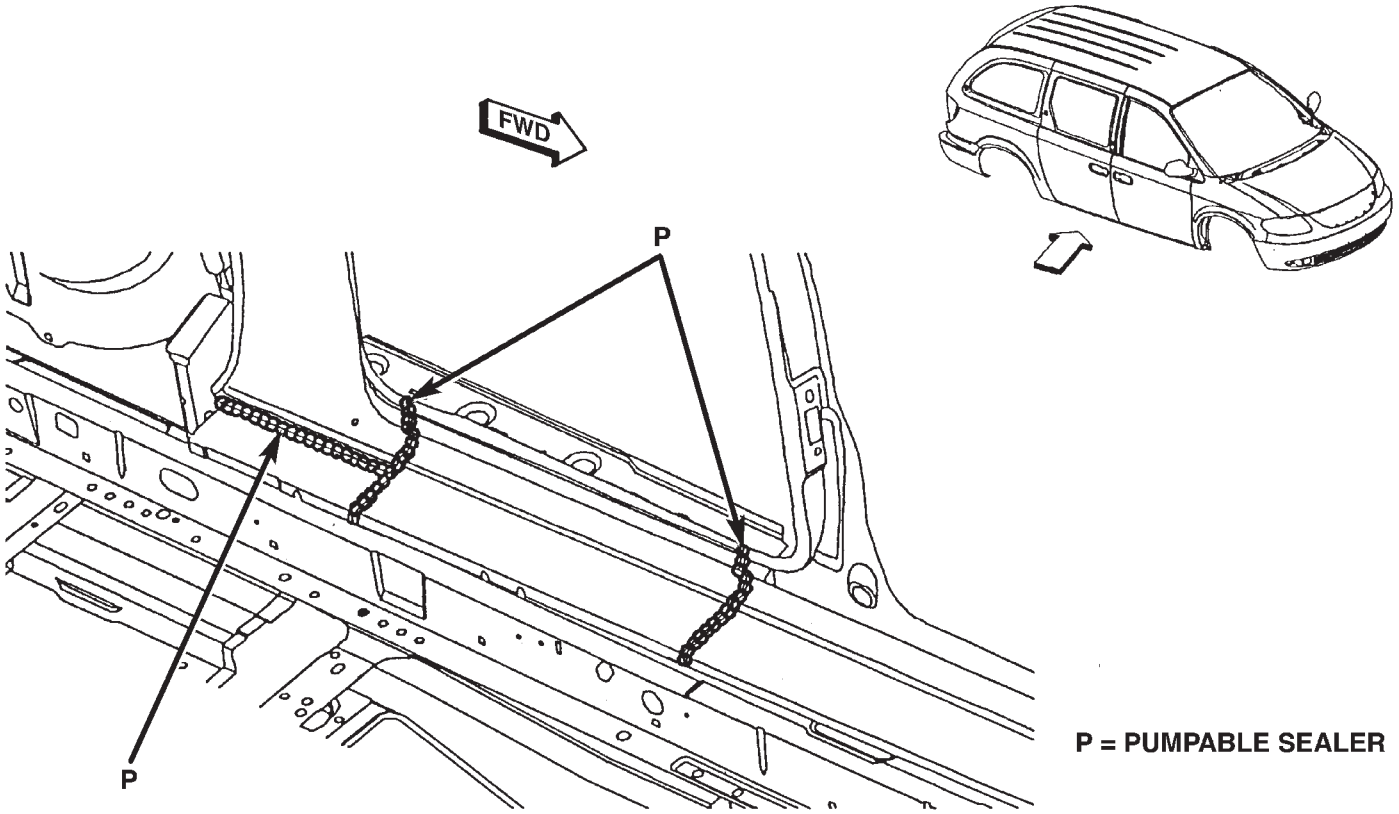

Fig. 32 B-PILLAR AND SILL AREAS - LEFT AND RIGHT SIDES

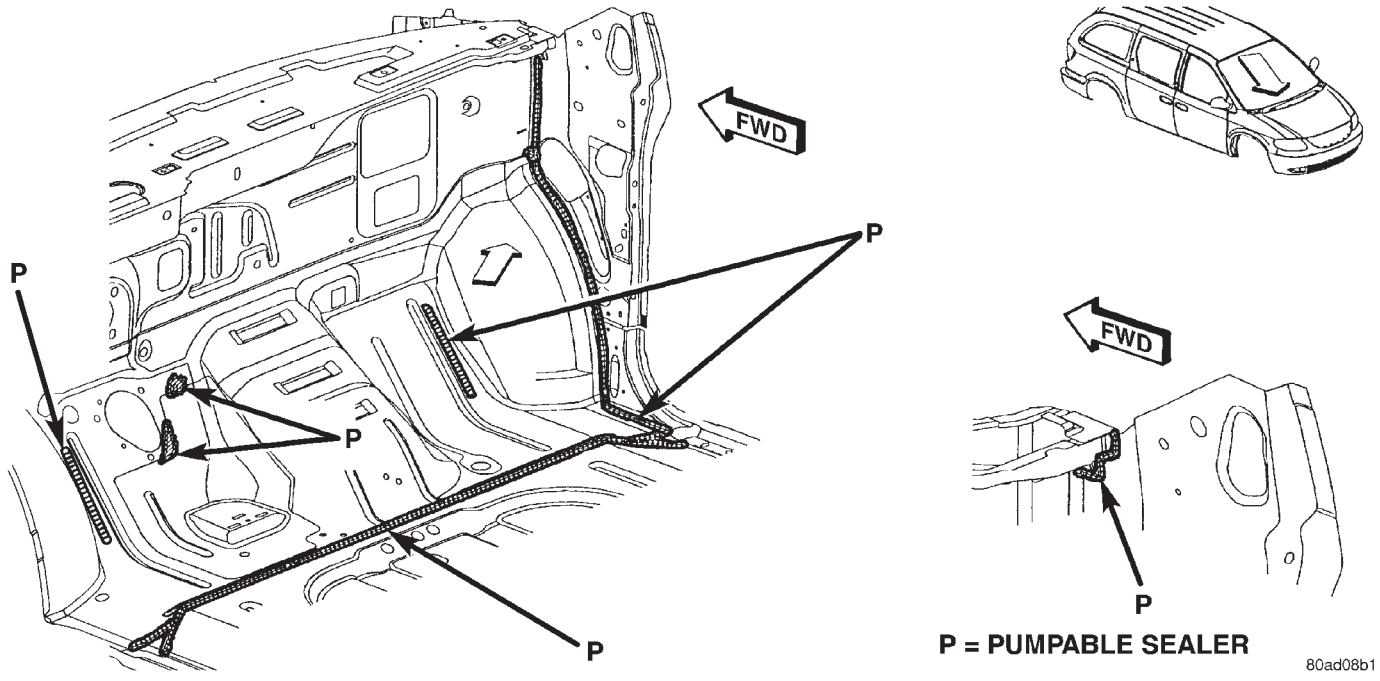

Fig. 33 FRONT FLOOR PAN & RISER

SEALER LOCATIONS (Continued)

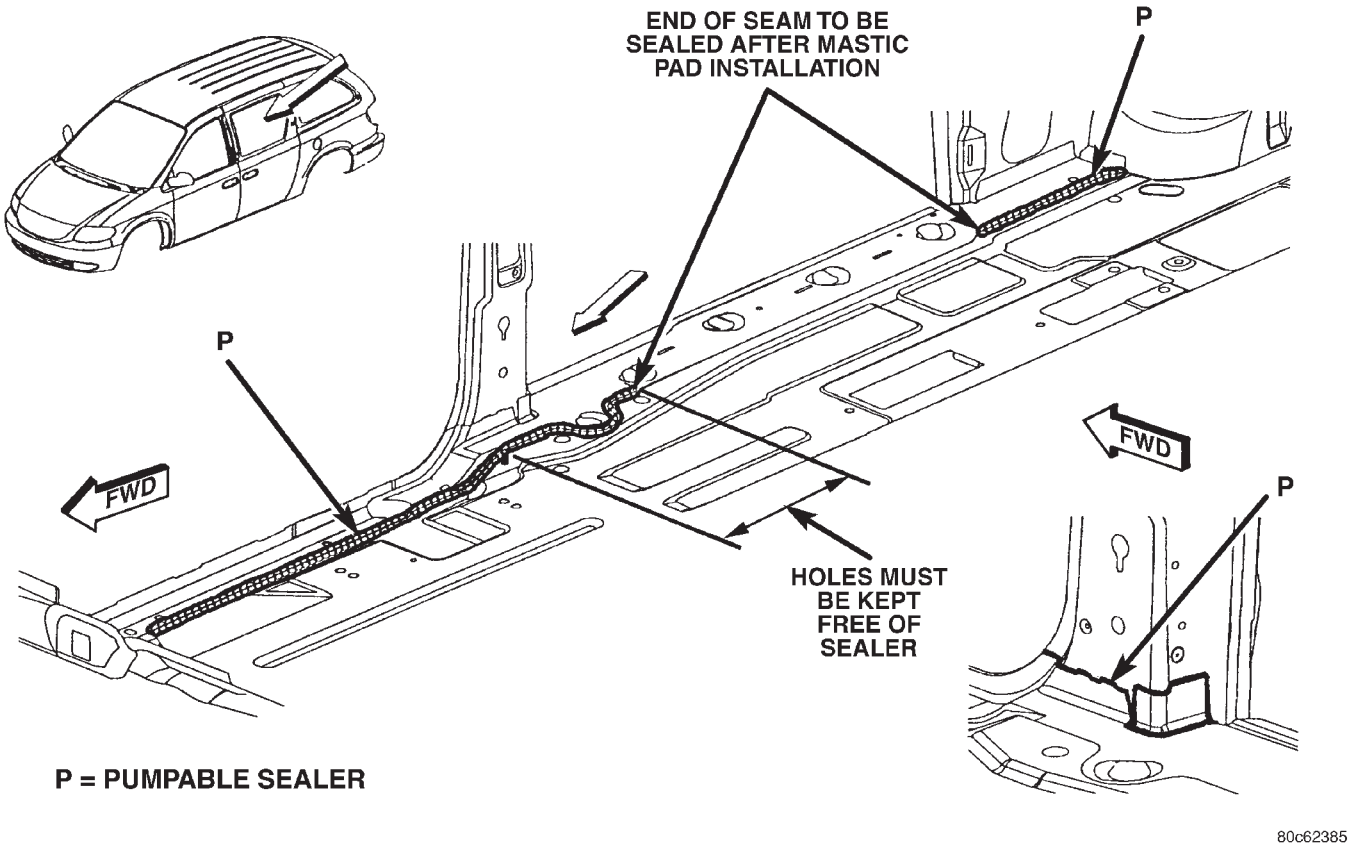

Fig. 34 FLOOR PAN SEAMS - LEFT AND RIGHT SIDES

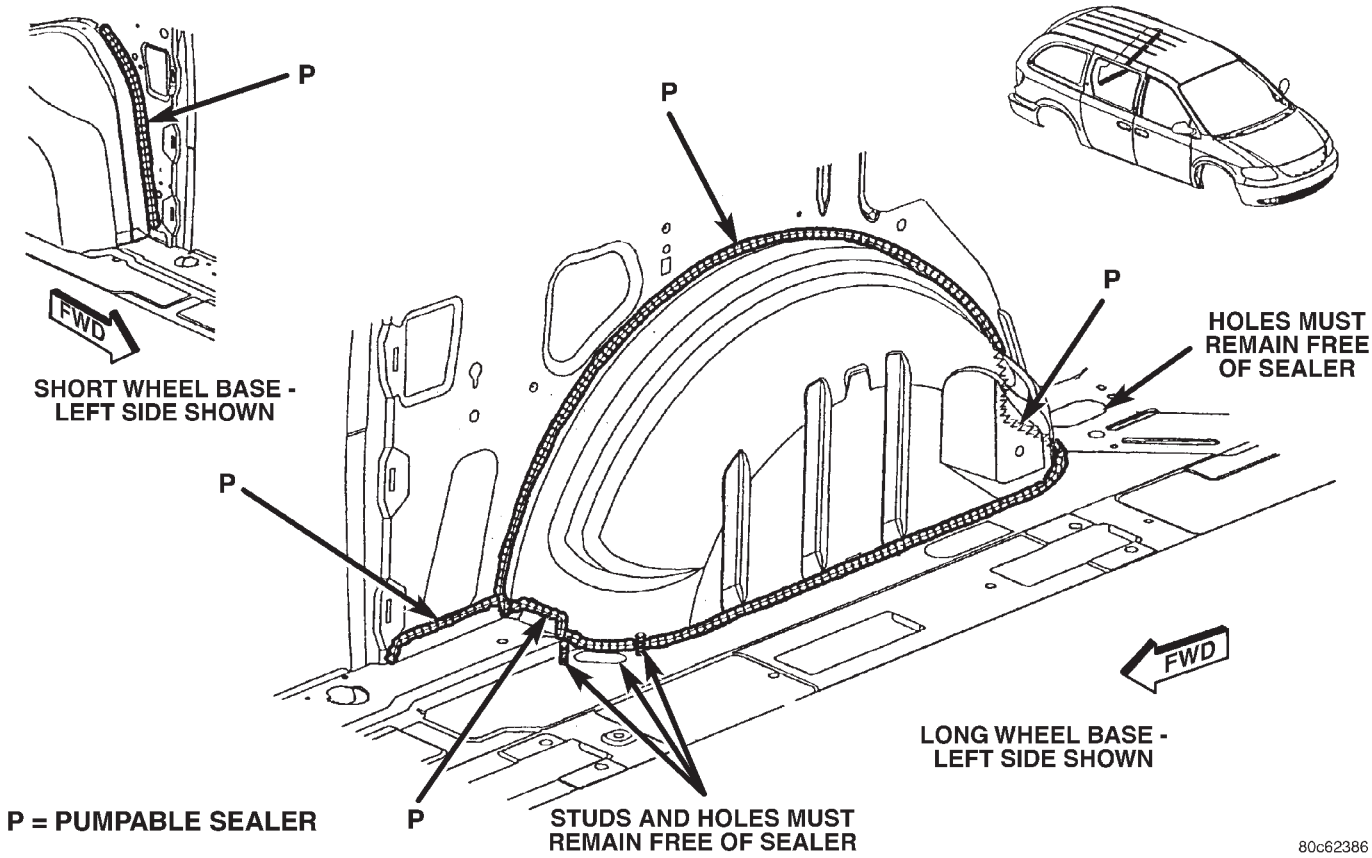

Fig. 35 FLOOR PAN & REAR WHEELHOUSE AREA - LEFT AND RIGHT SIDES

SEALER LOCATIONS (Continued)

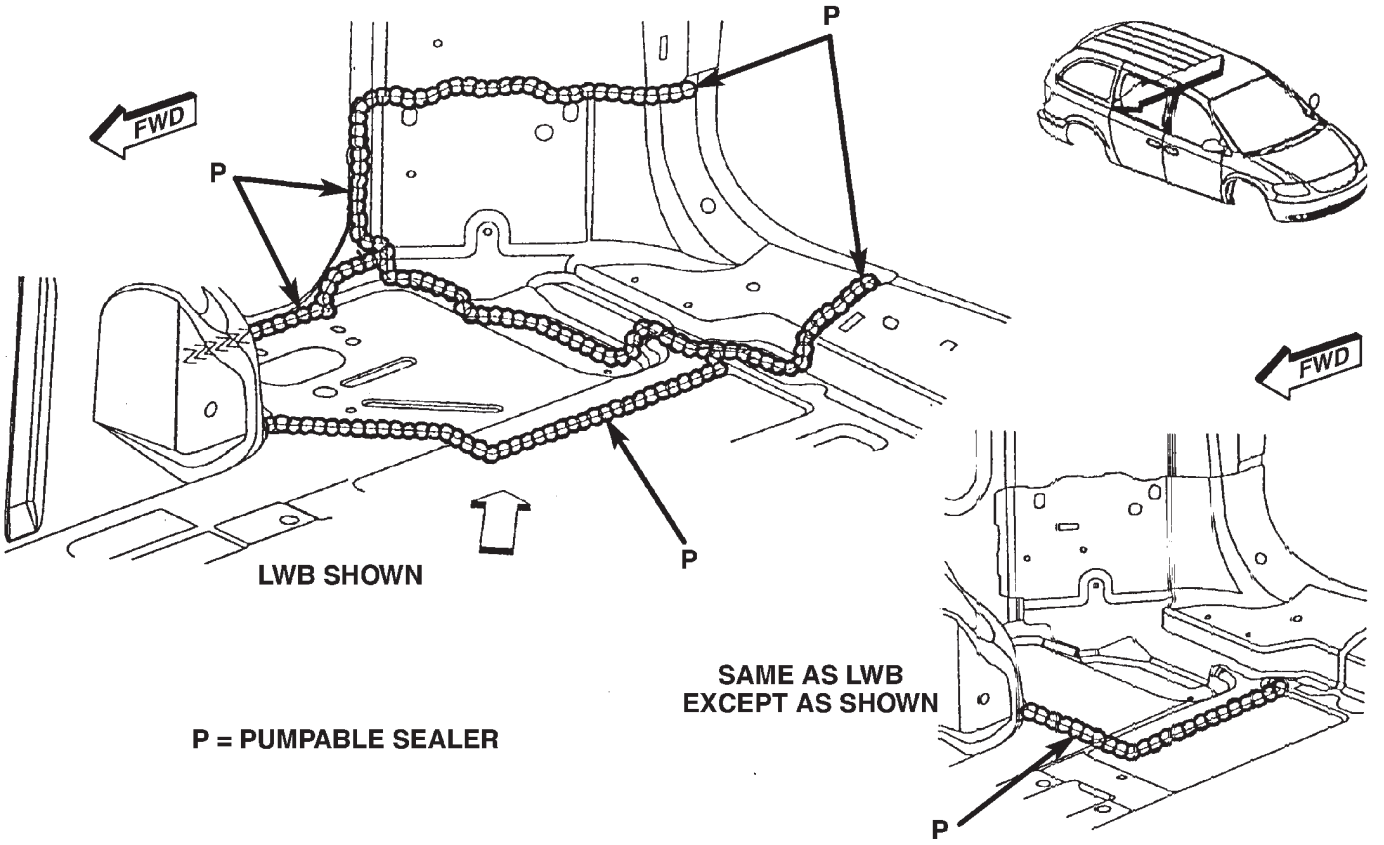

Fig. 36 FLOOR PAN SILL & D-PILLAR SEAMS - LEFT AND RIGHT SIDES

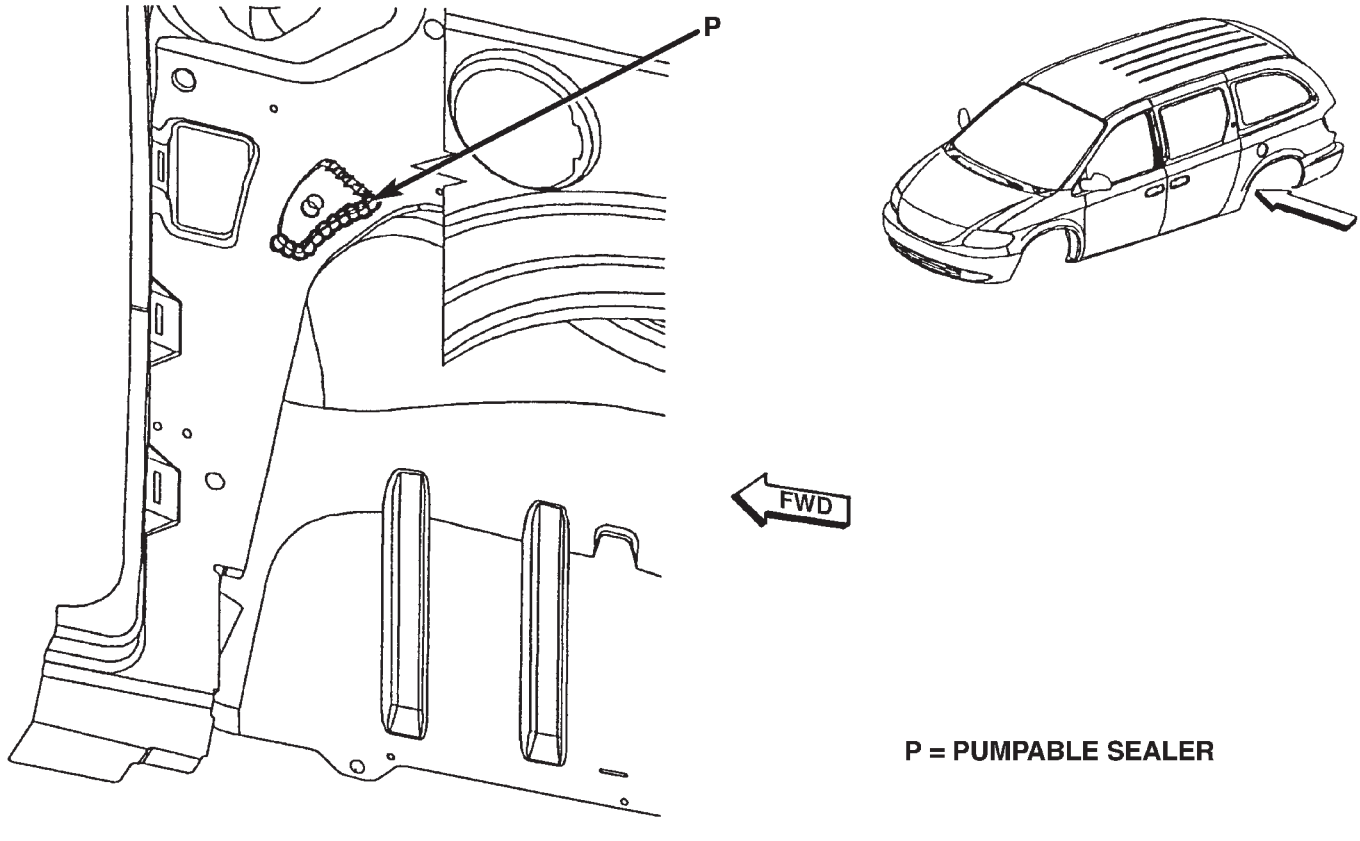

Fig. 37 LEFT SIDE SEAT ANCHOR REINFORCEMENT - SHORT WHEEL BASE ONLY

SEALER LOCATIONS (Continued)

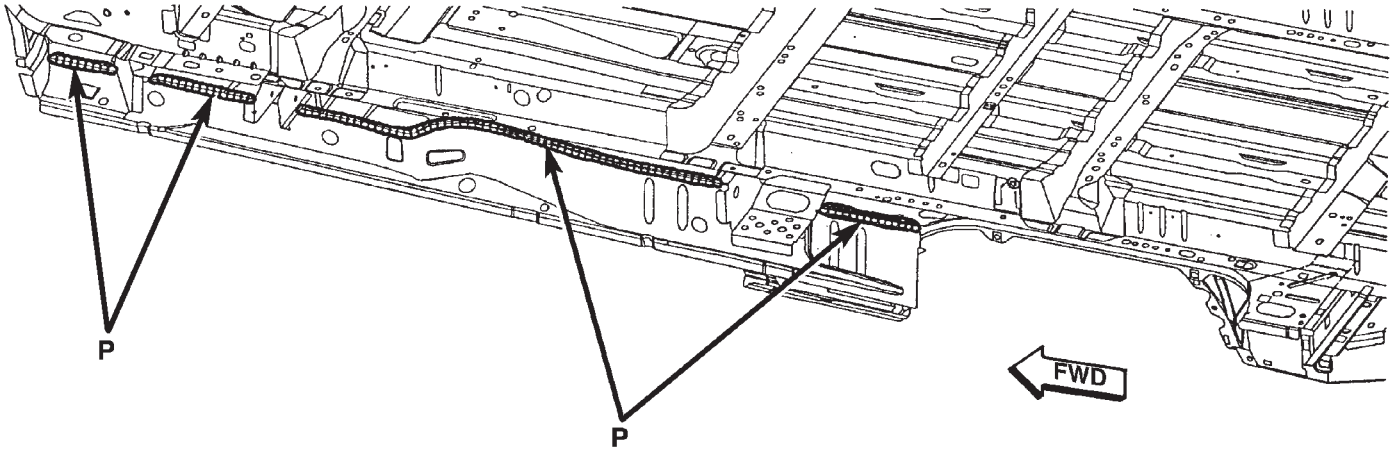

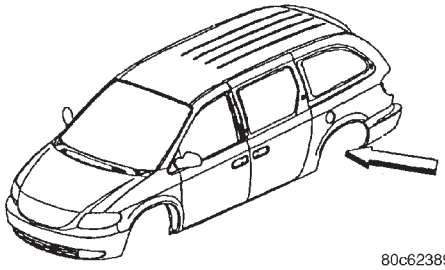

P = PUMPABLE SEALER

80c62389

Fig. 38 UNDERBODY - LEFT AND RIGHT SIDES

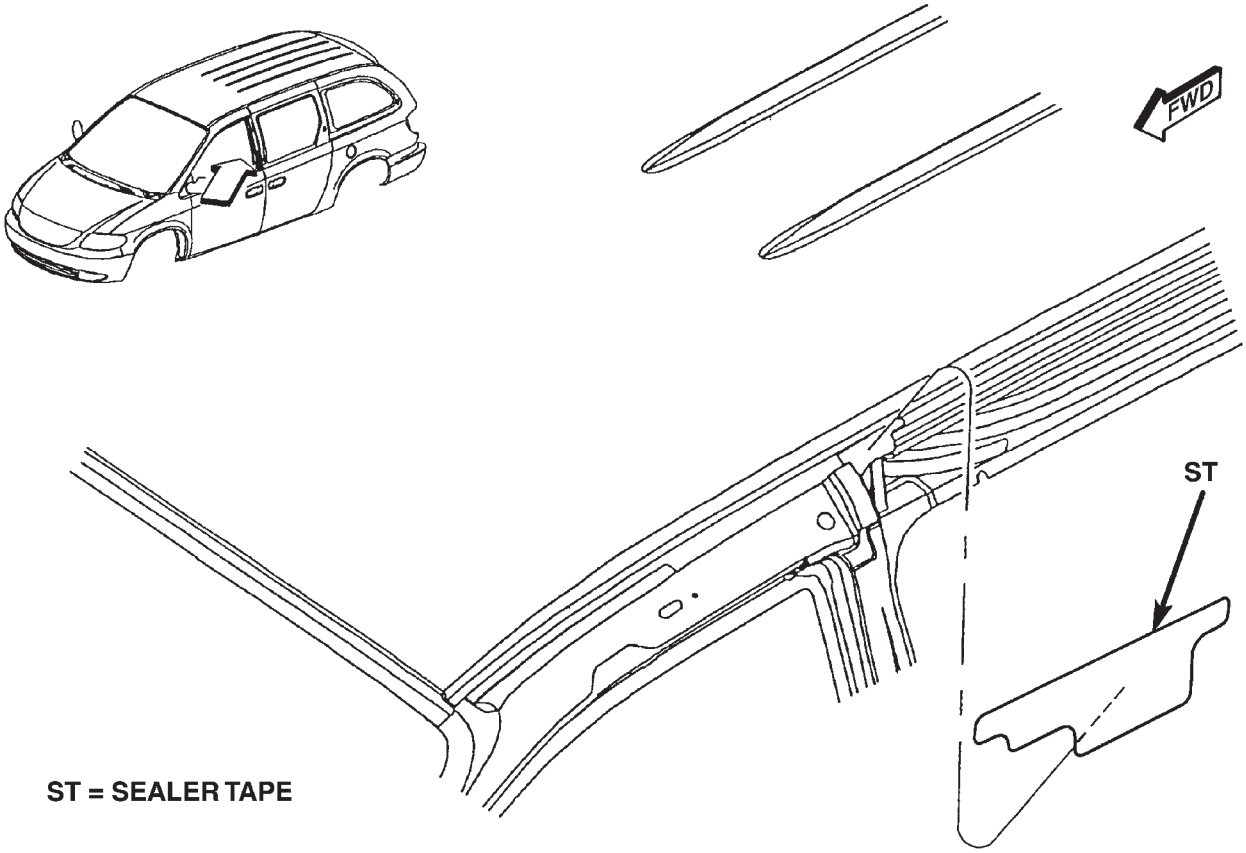

ST = SEALER TAPE

80c6238a

Fig. 39 ROOF TOP JOINT & UPPER FRONT SLIDING DOOR - LEFT AND RIGHT SIDES

SEALER LOCATIONS (Continued)

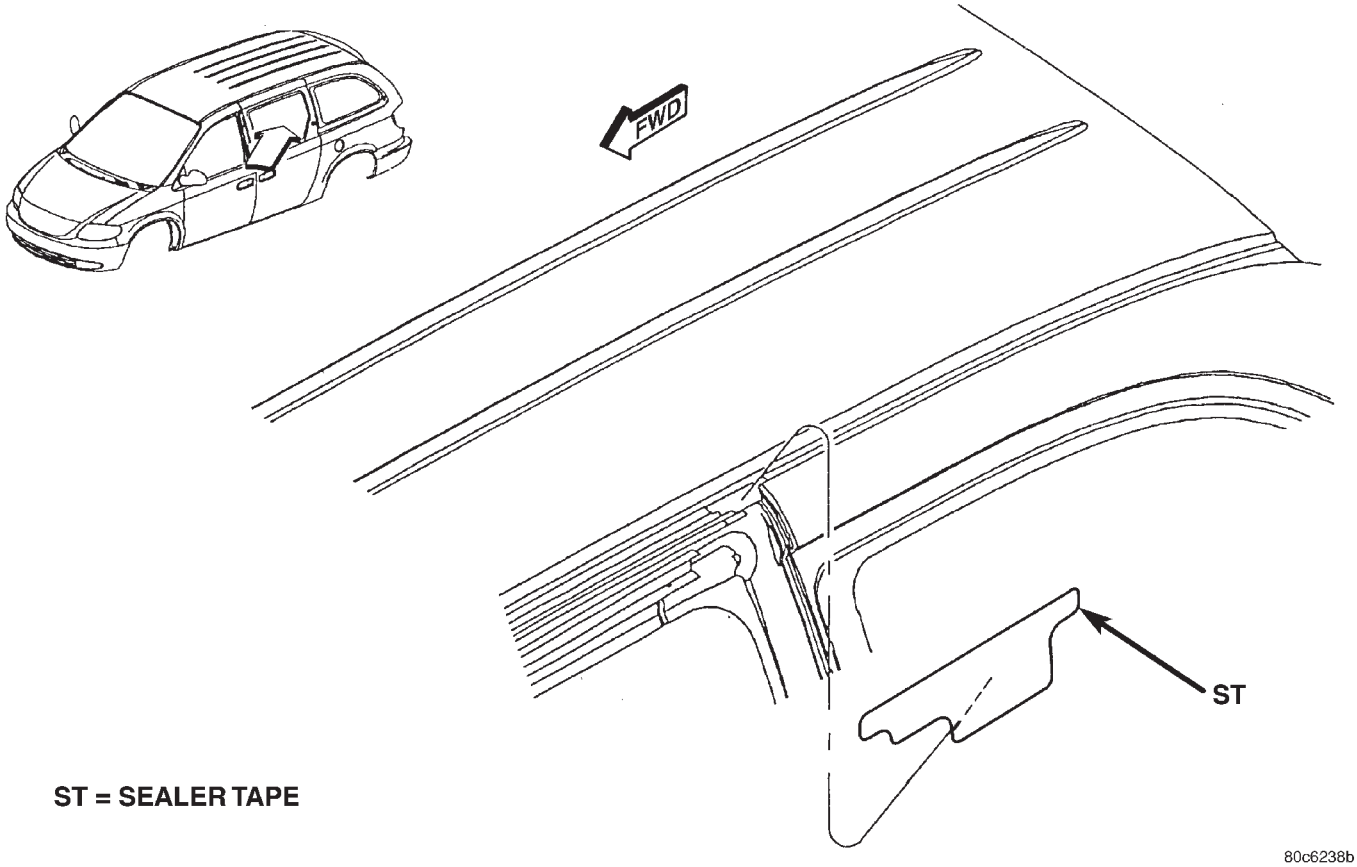

Fig. 40 ROOF TOP JOINT & UPPER REAR SLIDING DOOR - LEFT AND RIGHT SIDES

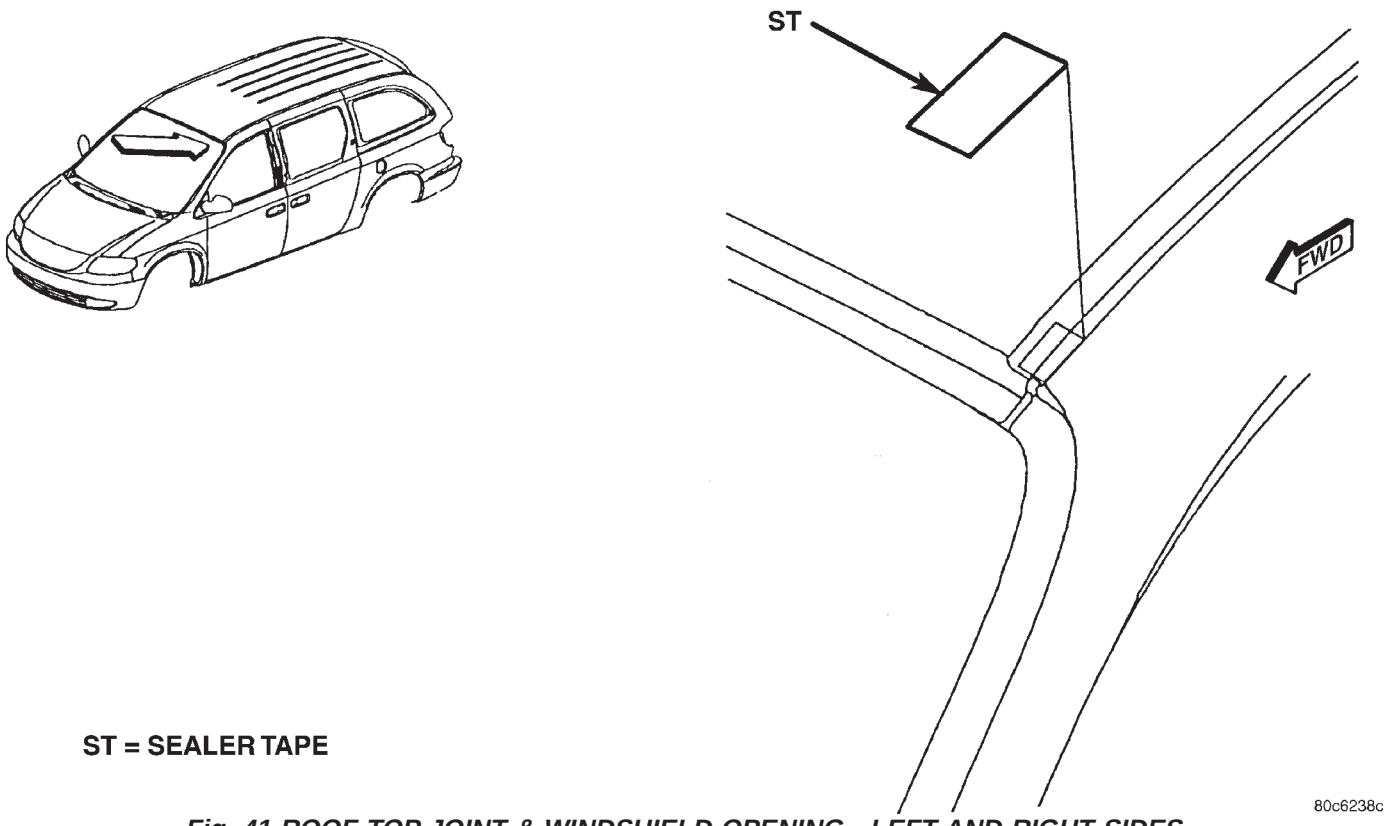

Fig. 41 ROOF TOP JOINT & WINDSHIELD OPENING - LEFT AND RIGHT SIDES

SEALER LOCATIONS (Continued)

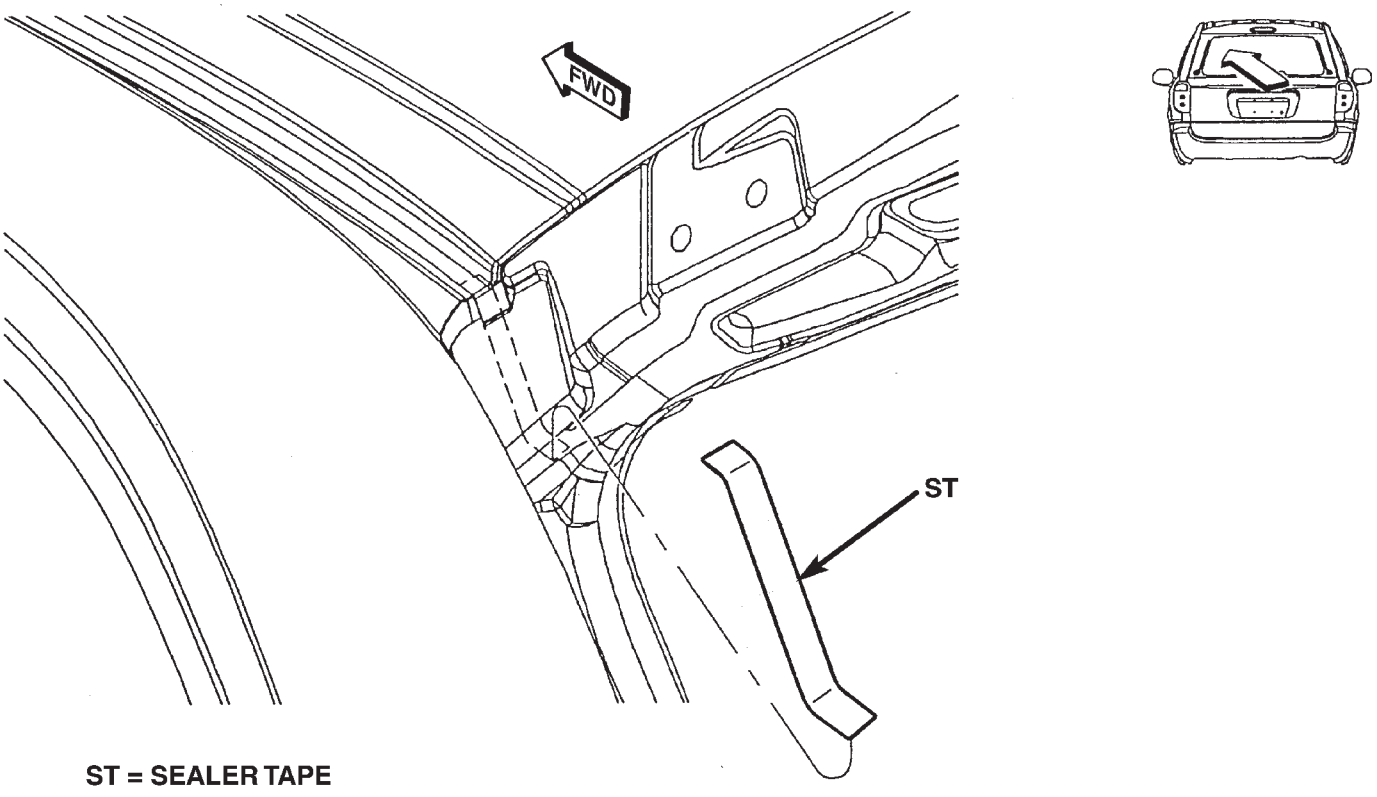

Fig. 42 LIFT GATE ROOF COACH JOINT - LEFT AND RIGHT SIDES

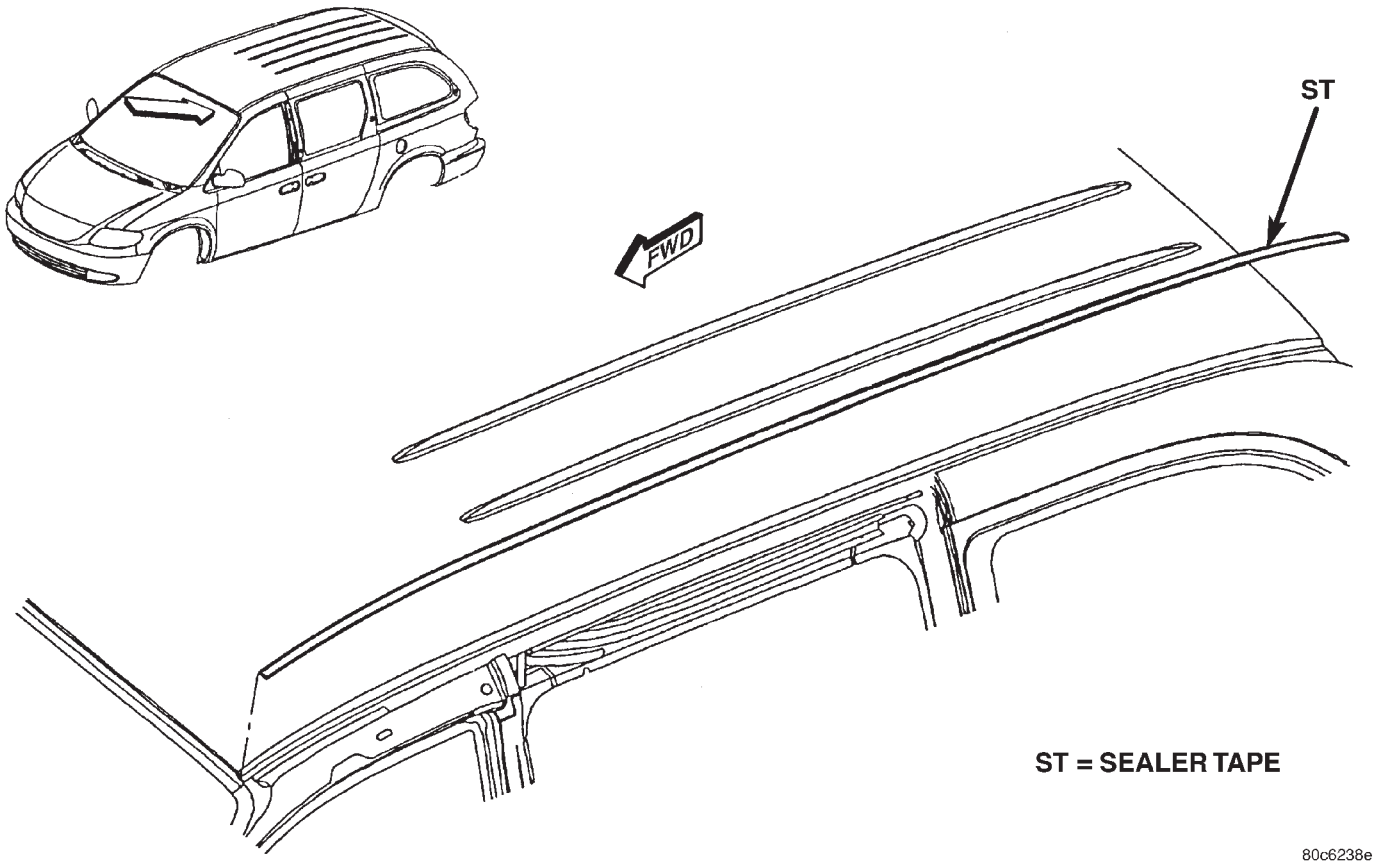

Fig. 43 ROOF RAP JOINT - LEFT AND RIGHT SIDES

SEALER LOCATIONS (Continued)

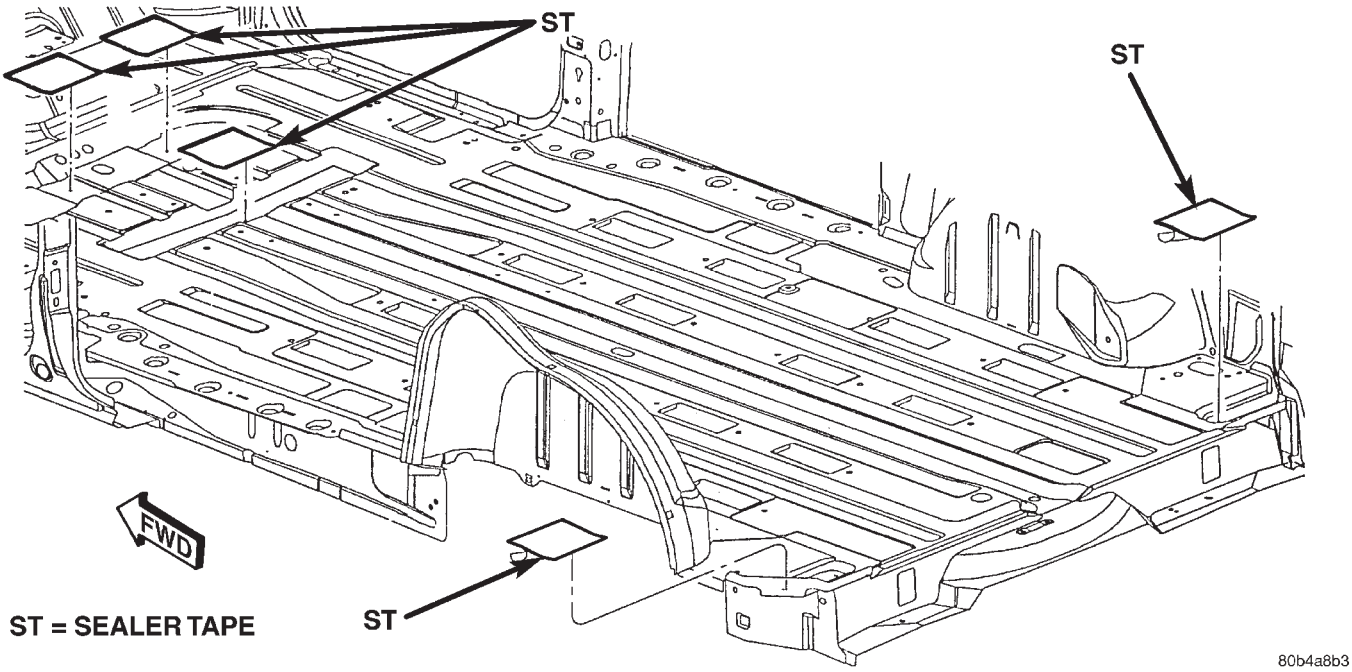

Fig. 44 DRAIN HOLE PATCHES

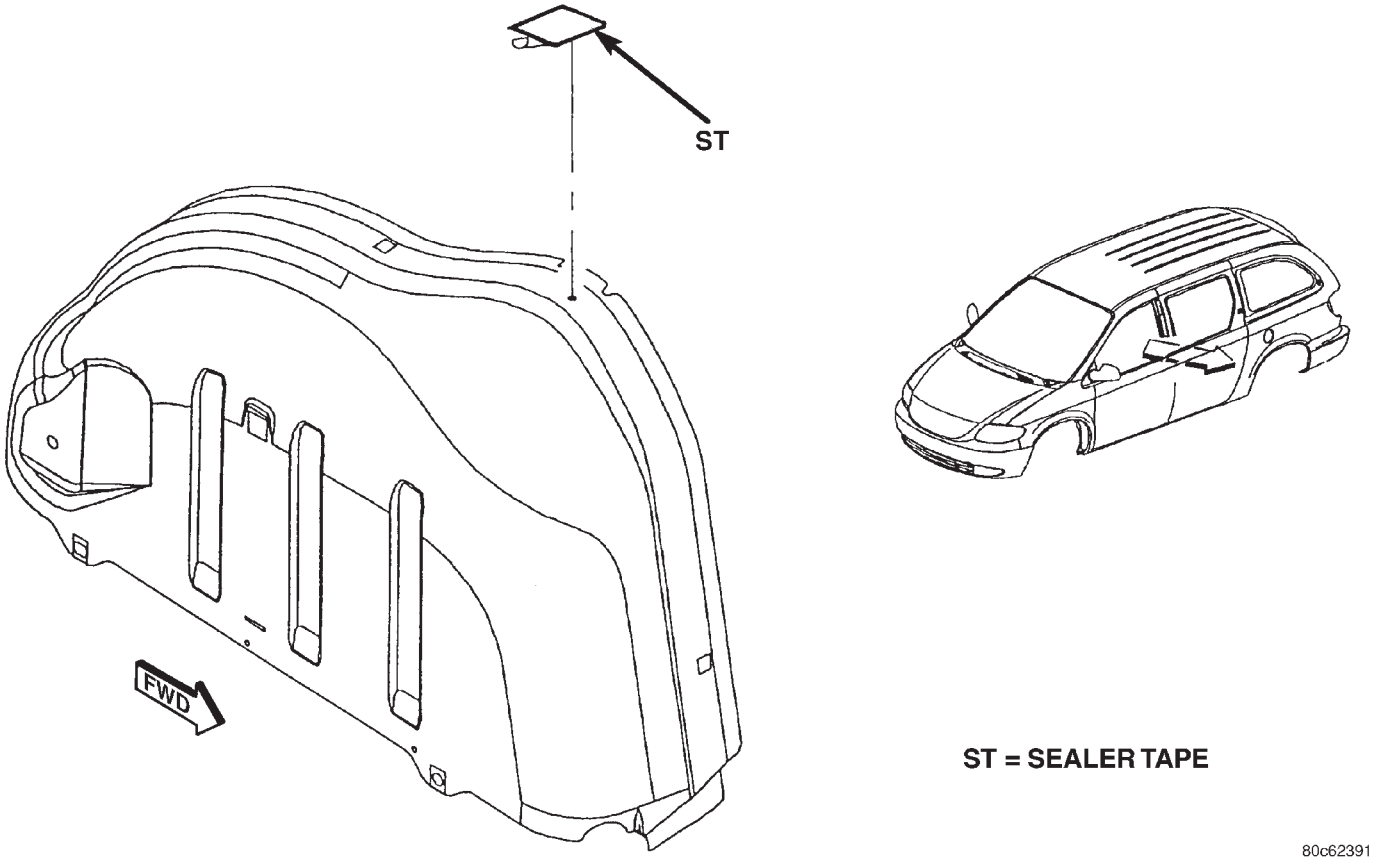

Fig. 45 WHEELHOUSE VENT HOLE - LEFT SIDE SHOWN - RIGHT SIDE TYPICAL

SEALER LOCATIONS (Continued)

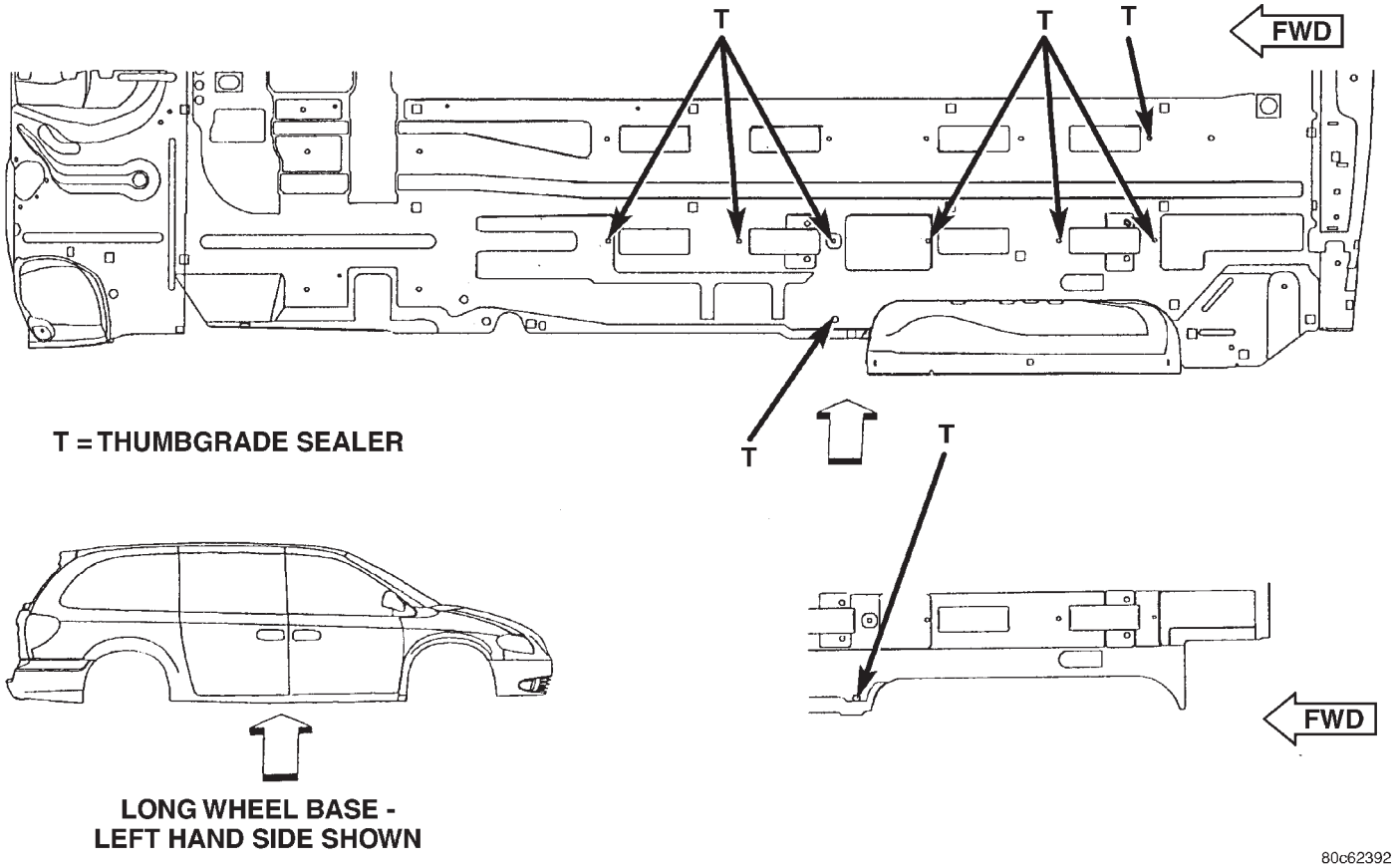

Fig. 46 FLOOR PAN HOLES - LEFT AND RIDE SIDES

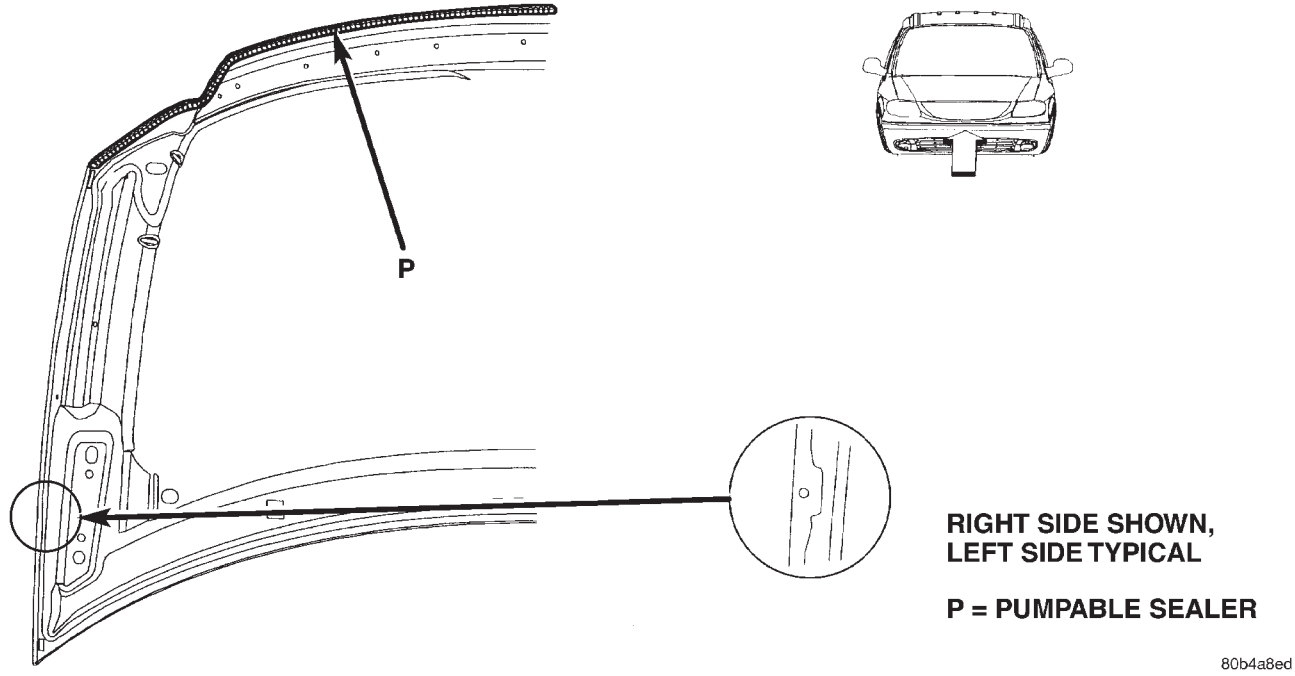

Fig. 47 HOOD FRONT HEM FLANGE & SIDES

SEALER LOCATIONS (Continued)

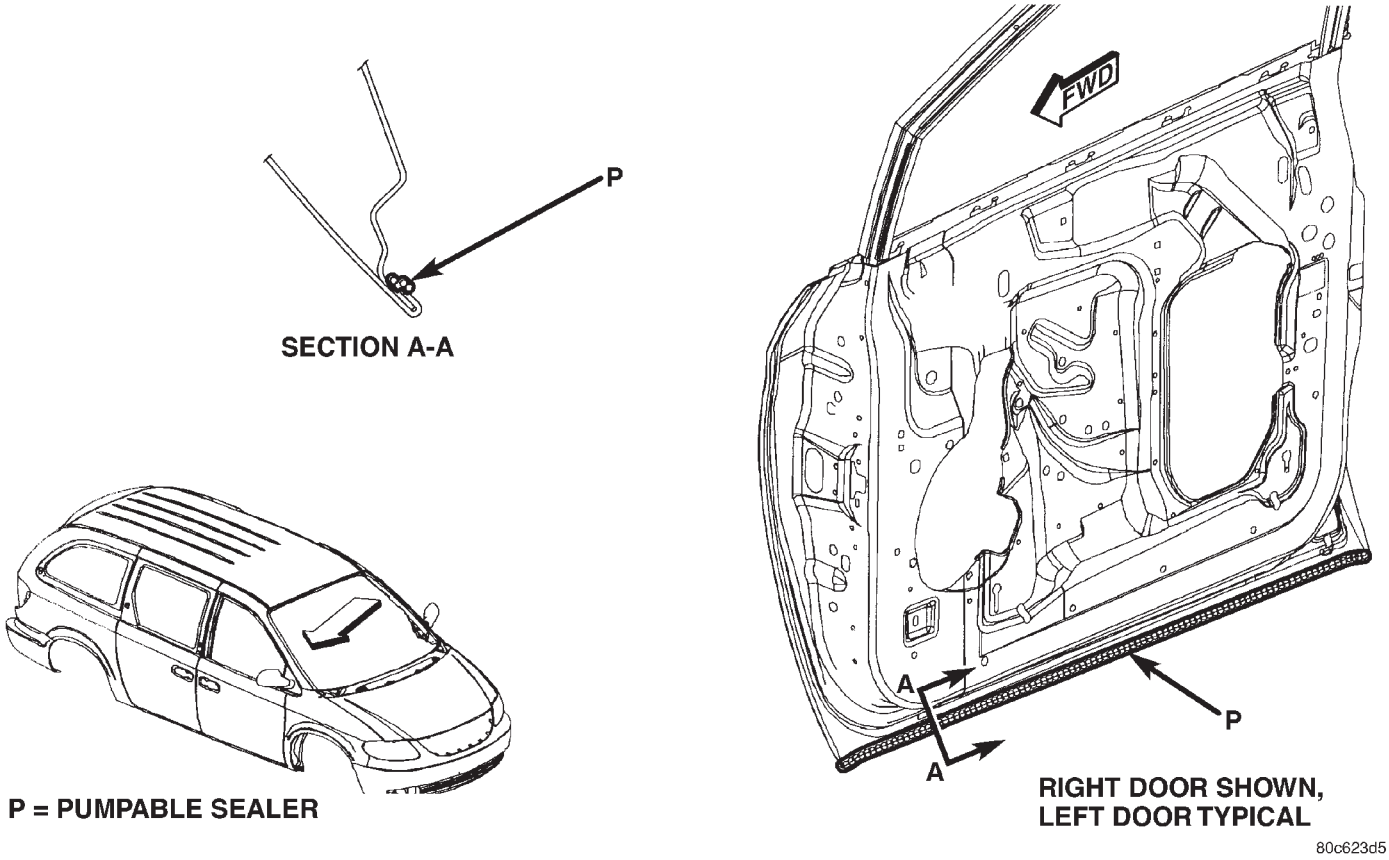

Fig. 48 FRONT DOOR LOWER FLANGE

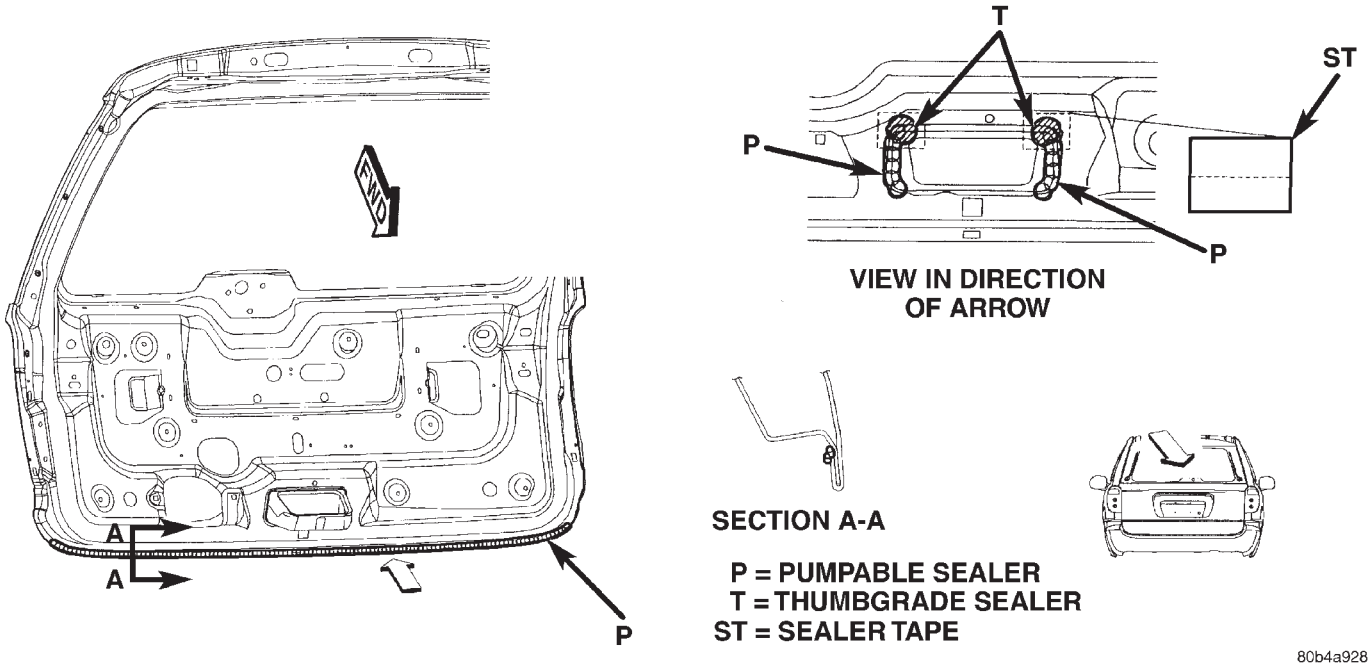

Fig. 49 LIFTGATE HEM FLANGE AND LATCH COVER SEAMS

SEALER LOCATIONS (Continued)

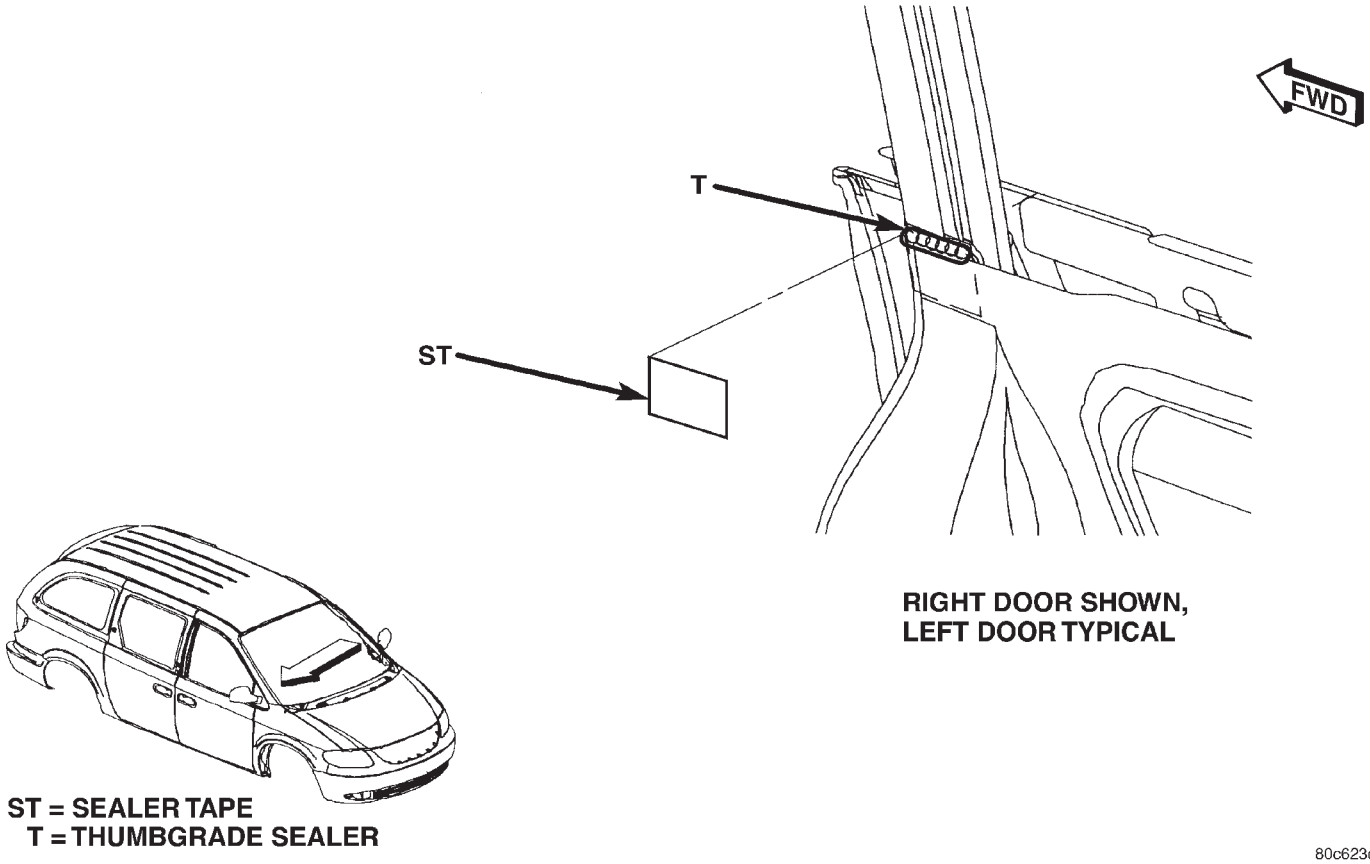

Fig. 50 FRONT DOOR BELT DOOR BELT SEAMS (FRONT)

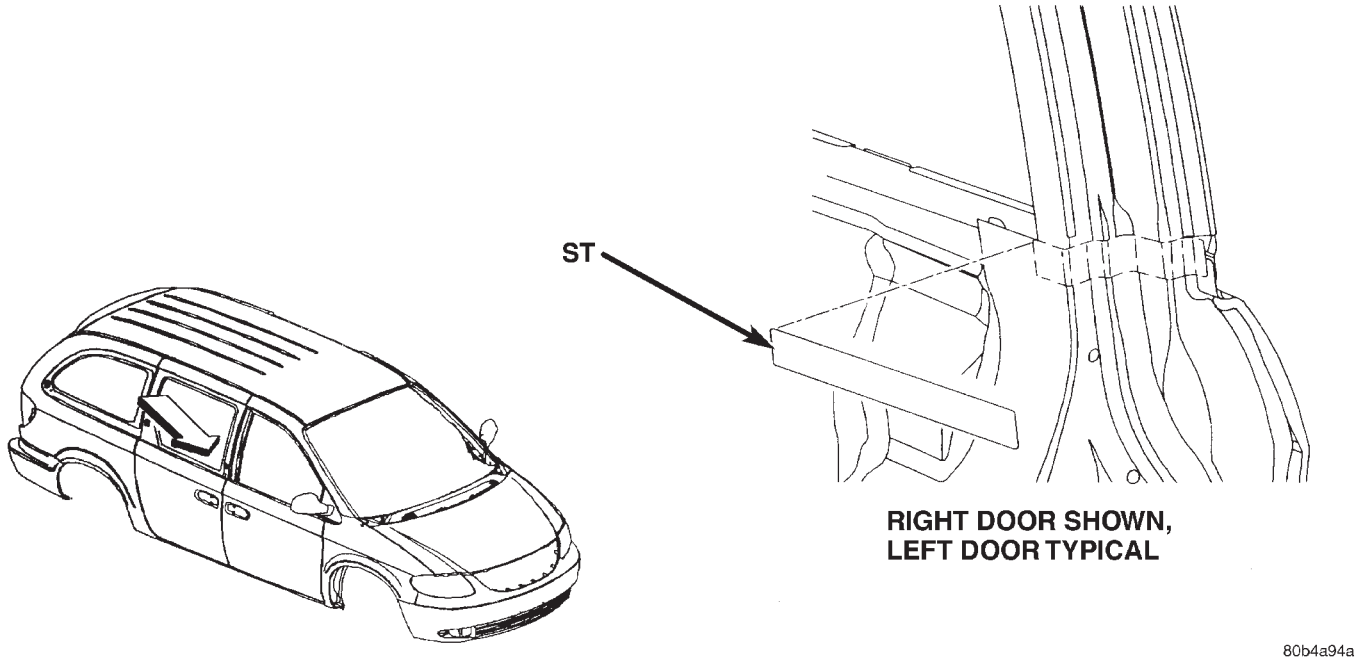

Fig. 51 FRONT DOOR BELT DOOR BELT SEAMS (REAR)

STUCTURAL ADHESIVE LOCATIONS

SPECIFICATIONS

STRUCTURAL ADHESIVE LOCATIONS

INDEX

DESCRIPTION	FIGURE
UPPER COWL PLENUM, UPPER AND LOWER DASH PANEL	52
ROOF AND REAR QUARTER PANELS - LONG WHEEL BASE ONLY	53
FLOOR PAN - LONG WHEEL BASE ONLY	54
SUSPENSION HANGER REINFORCEMENTS - LONG WHEEL BASE ONLY	55
FRONT HINGE PILLAR REINFORCEMENTS - LONG WHEEL BASE ONLY	56
ROOF AND REAR QUARTER PANELS - SHORT WHEEL BASE ONLY	57
FLOOR PAN - SHORT WHEEL BASE ONLY	58
FRONT SIDE RAILS/OUTER CROSS MEMBER BRACKETS	59
OUTER ROOF PANEL/UPPER WINDSHIELD FRAME	60
COWL SIDE PANEL/ BODY SIDE APERTURE, B-PILLAR/SLIDING DOOR TRACK SUPPORT	61

STUCTURAL ADHESIVE LOCATIONS (Continued)

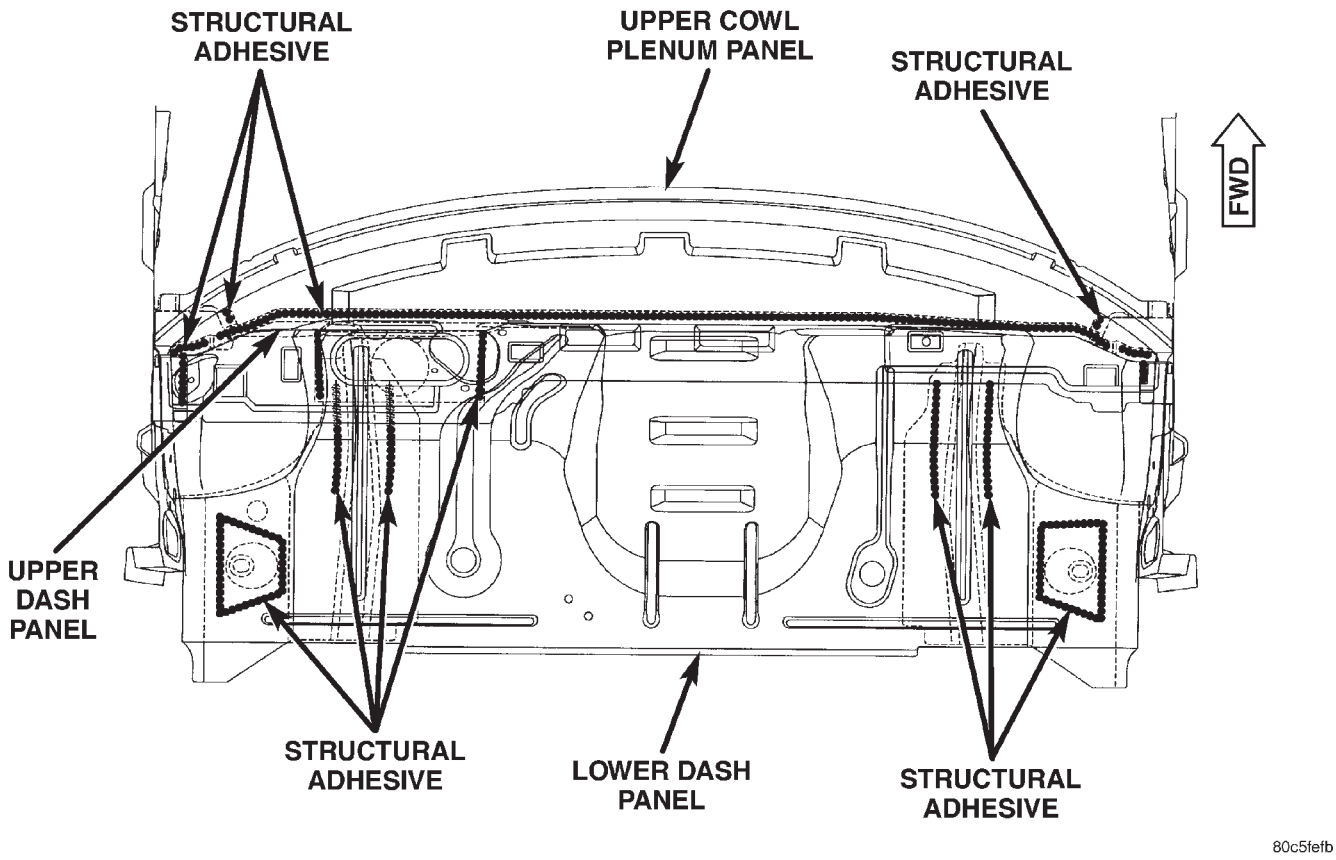

Fig. 52 UPPER COWL PLENUM, UPPER AND LOWER DASH PANEL

STUCTURAL ADHESIVE LOCATIONS (Continued)

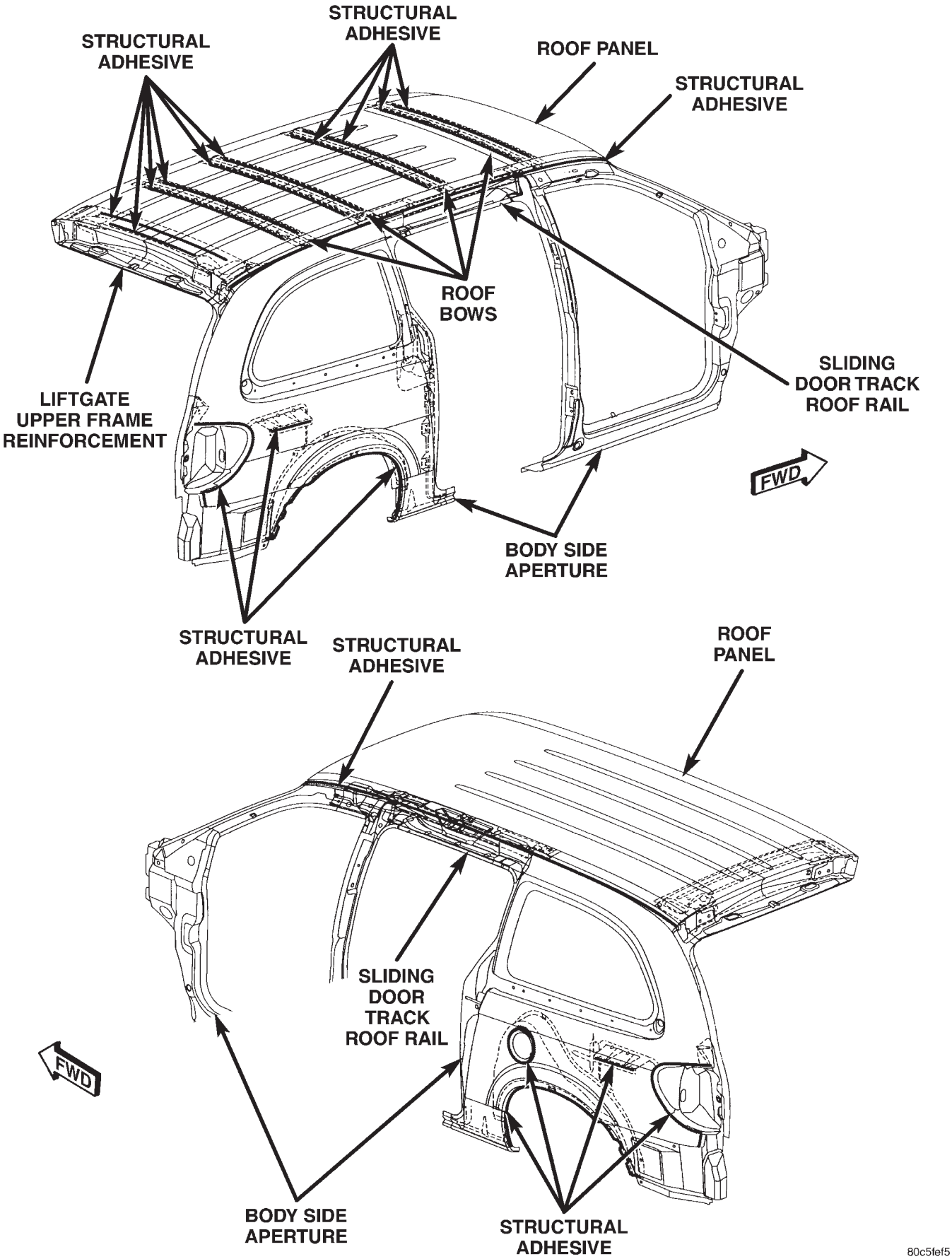

Fig. 53 ROOF AND REAR QUARTER PANELS - LONG WHEEL BASE ONLY

STUCTURAL ADHESIVE LOCATIONS (Continued)

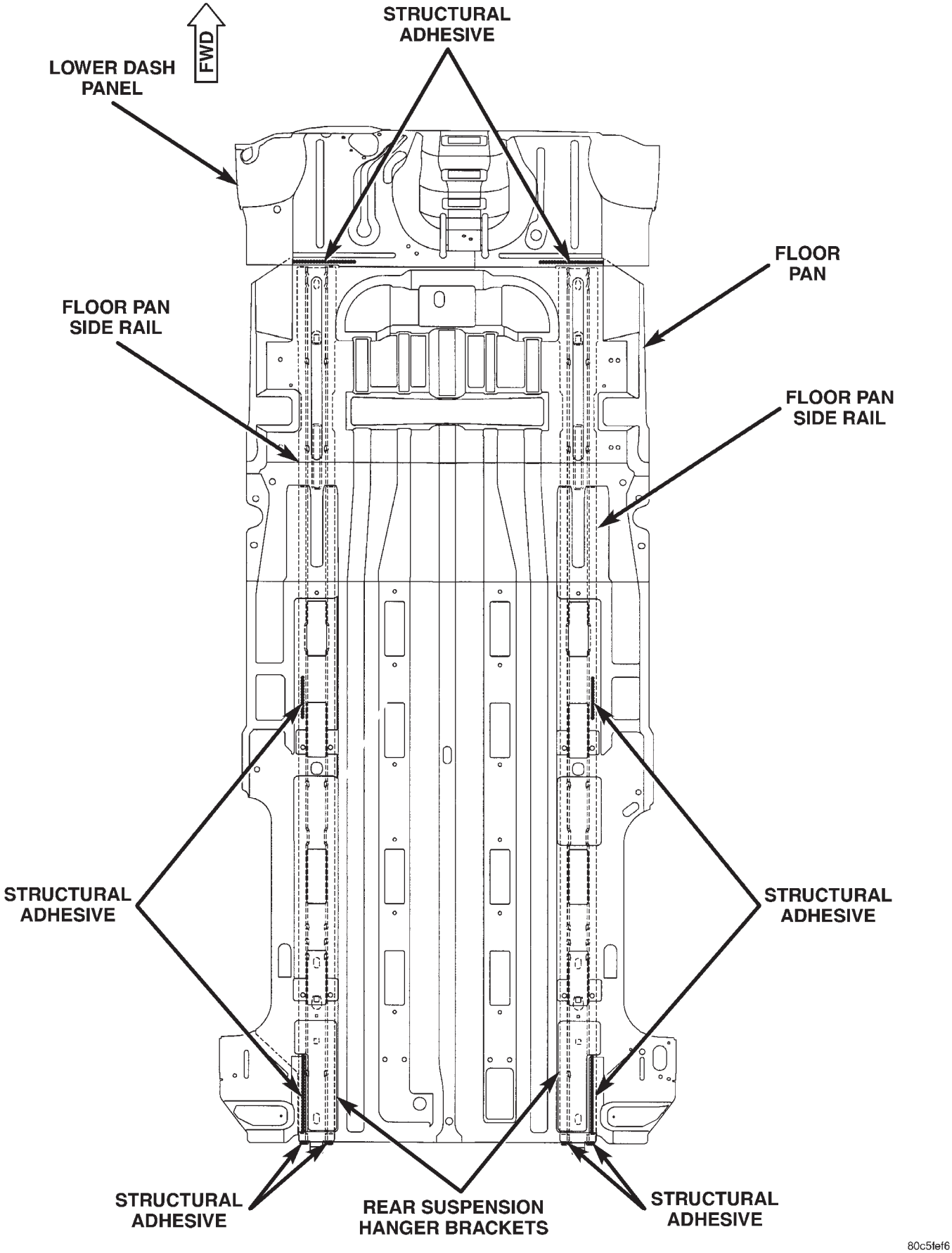

Fig. 54 FLOOR PAN - LONG WHEEL BASE ONLY

STUCTURAL ADHESIVE LOCATIONS (Continued)

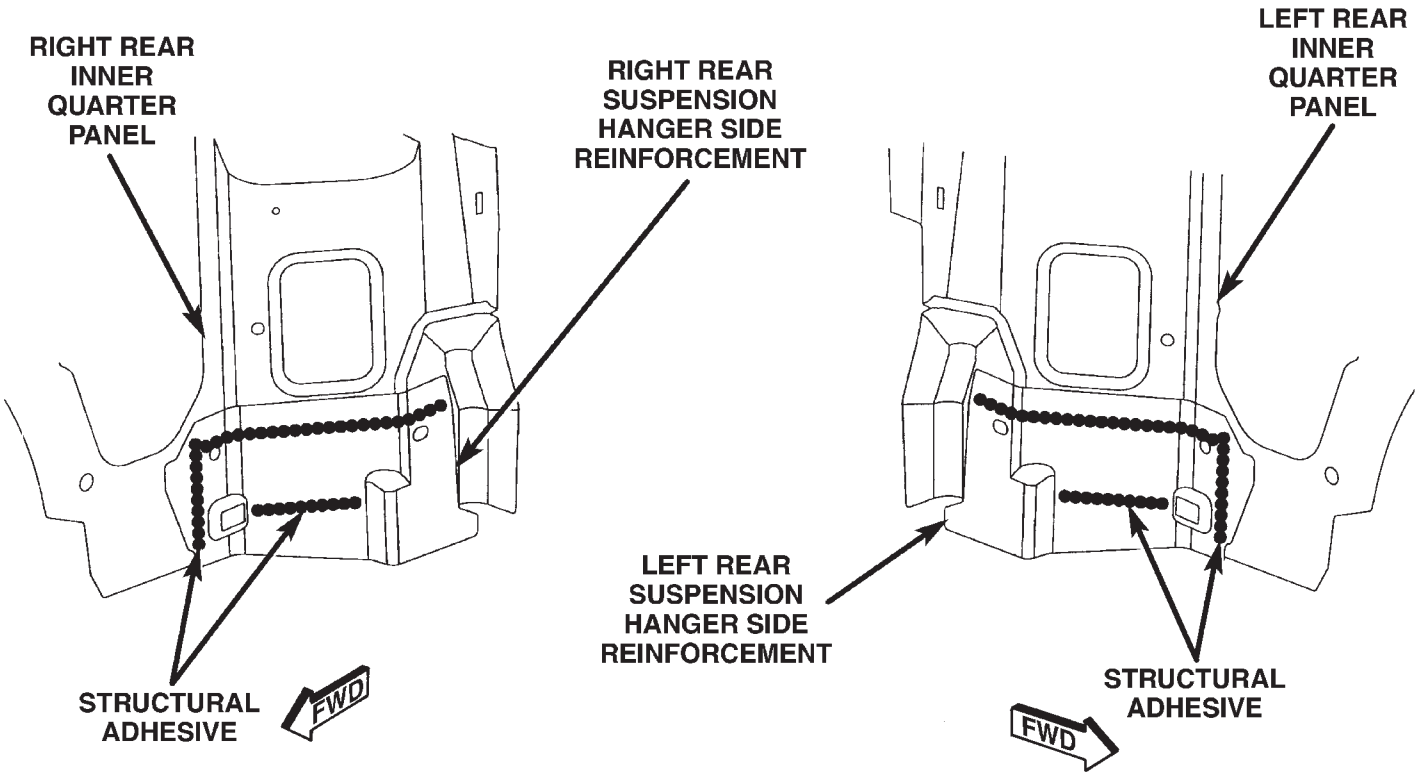

Fig. 55 SUSPENSION HANGER REINFORCEMENTS - LONG WHEEL BASE ONLY

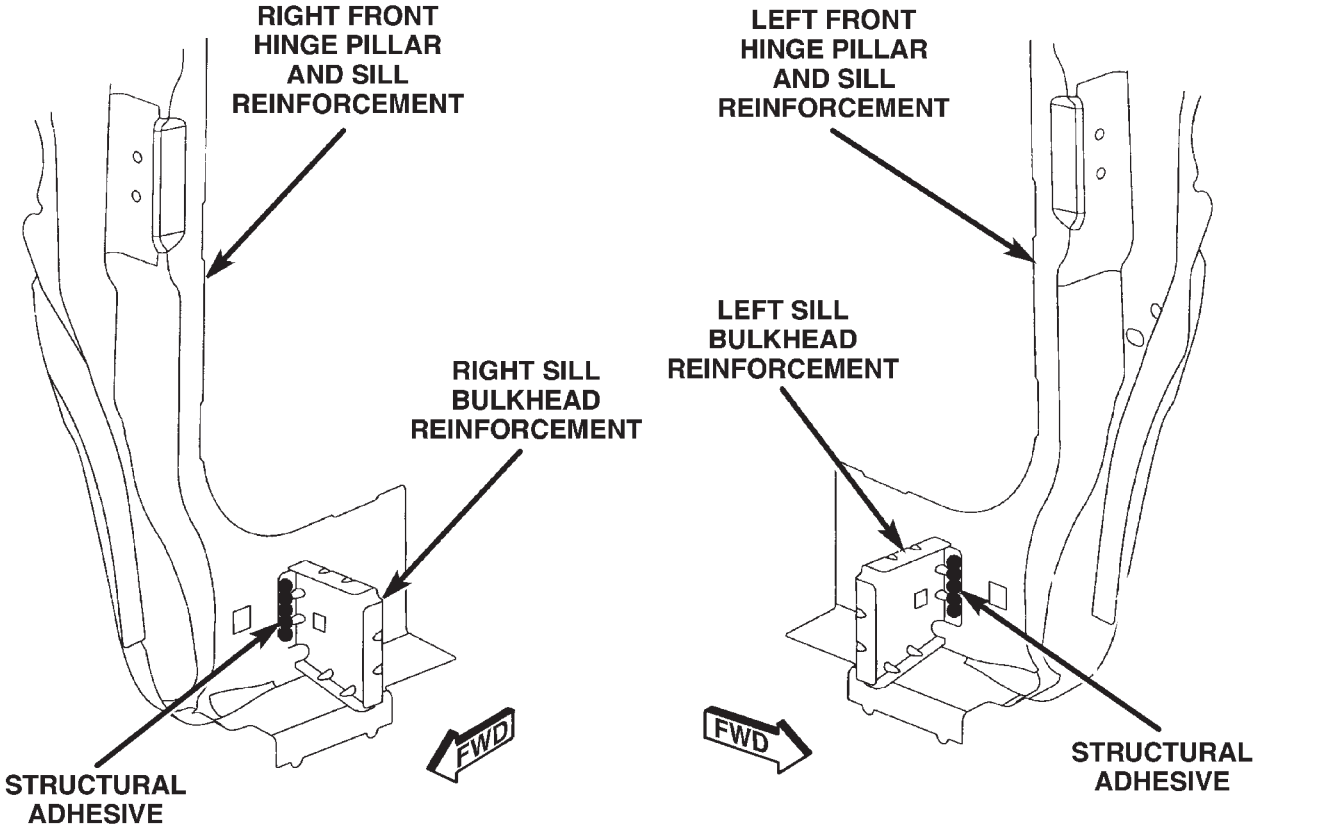

Fig. 56 FRONT HINGE PILLAR REINFORCEMENTS - LONG WHEEL BASE ONLY

STUCTURAL ADHESIVE LOCATIONS (Continued)

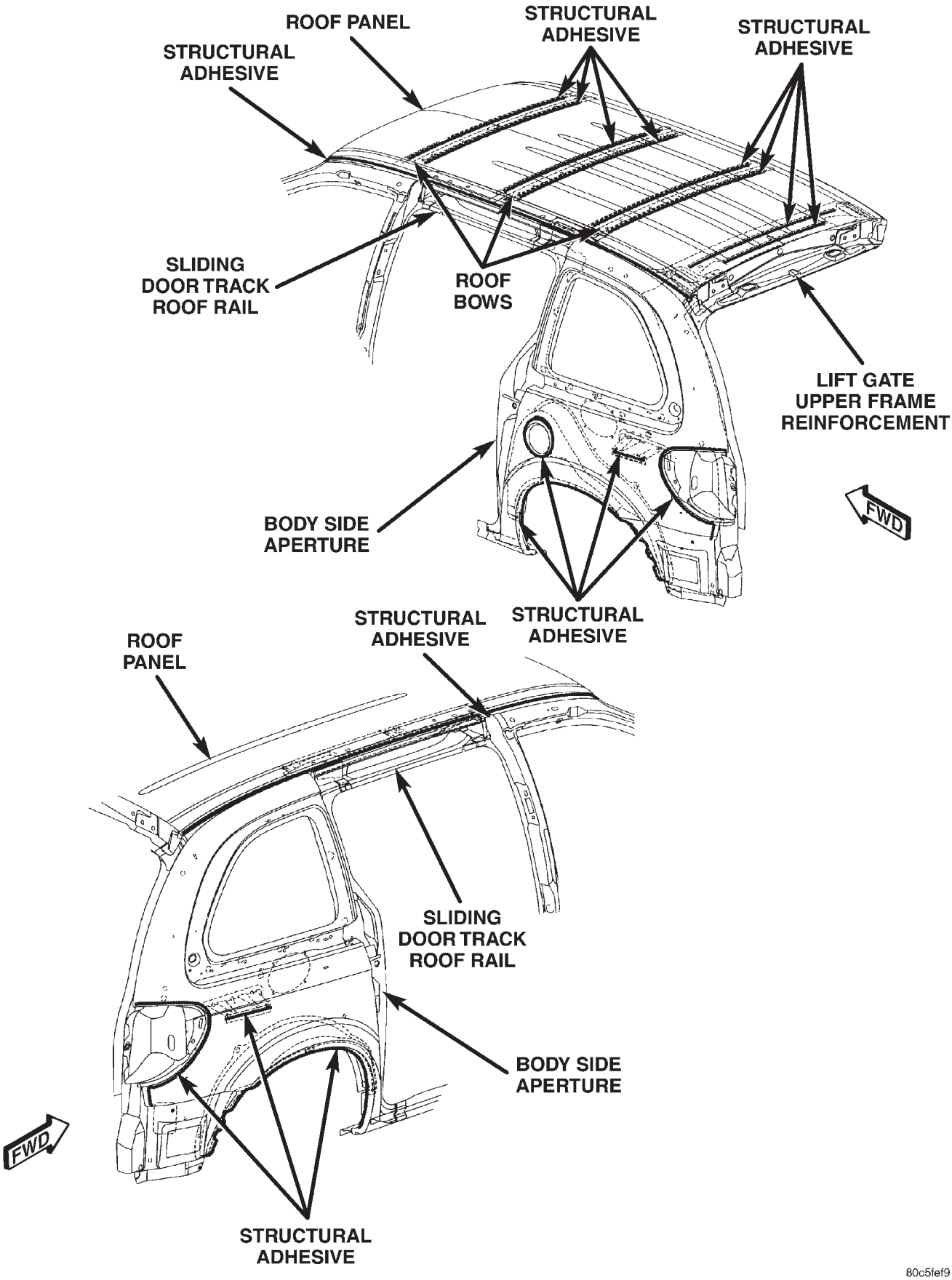

Fig. 57 ROOF AND REAR QUARTER PANELS - SHORT WHEEL BASE ONLY

STUCTURAL ADHESIVE LOCATIONS (Continued)

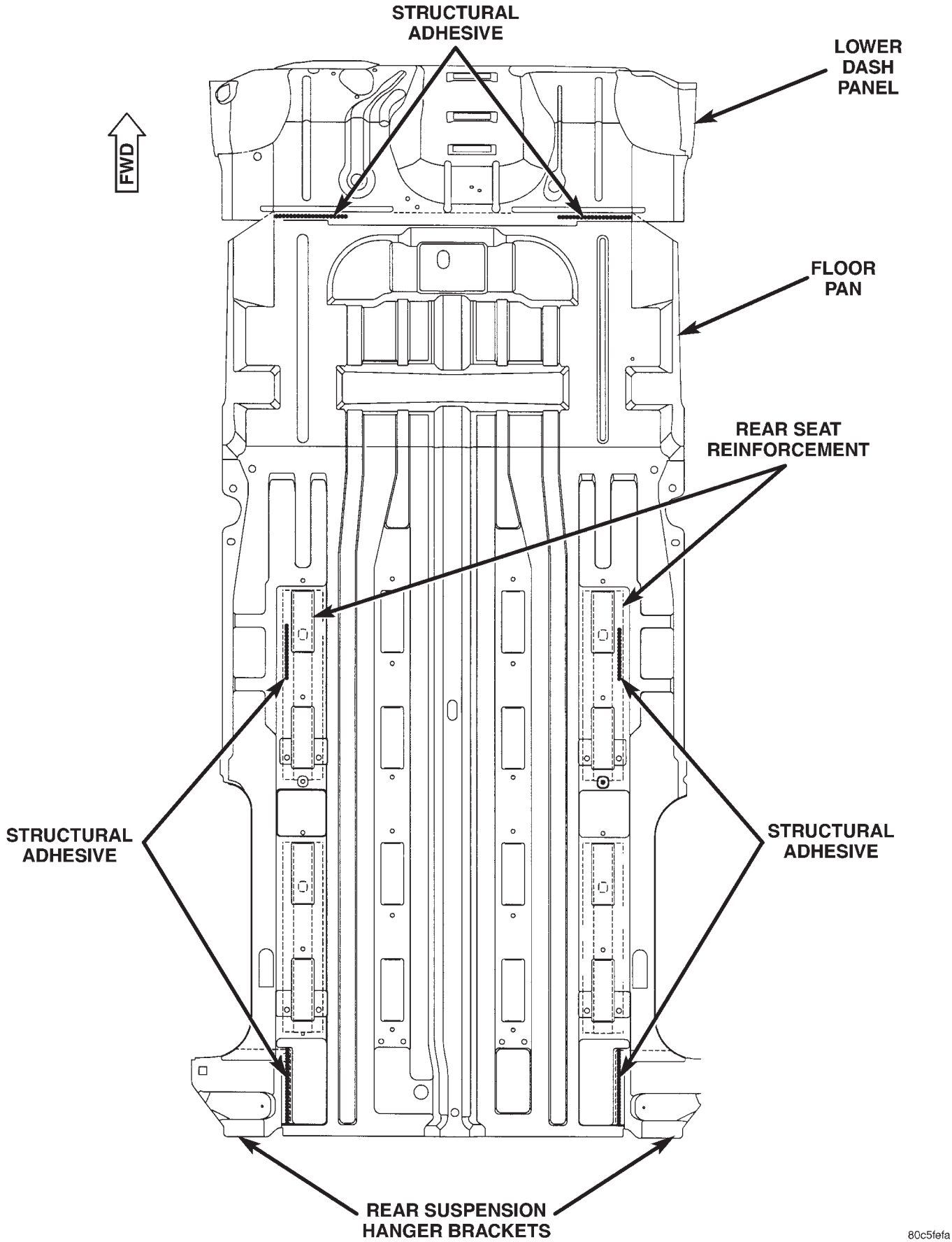

Fig. 58 FLOOR PAN - SHORT WHEEL BASE ONLY

STUCTURAL ADHESIVE LOCATIONS (Continued)

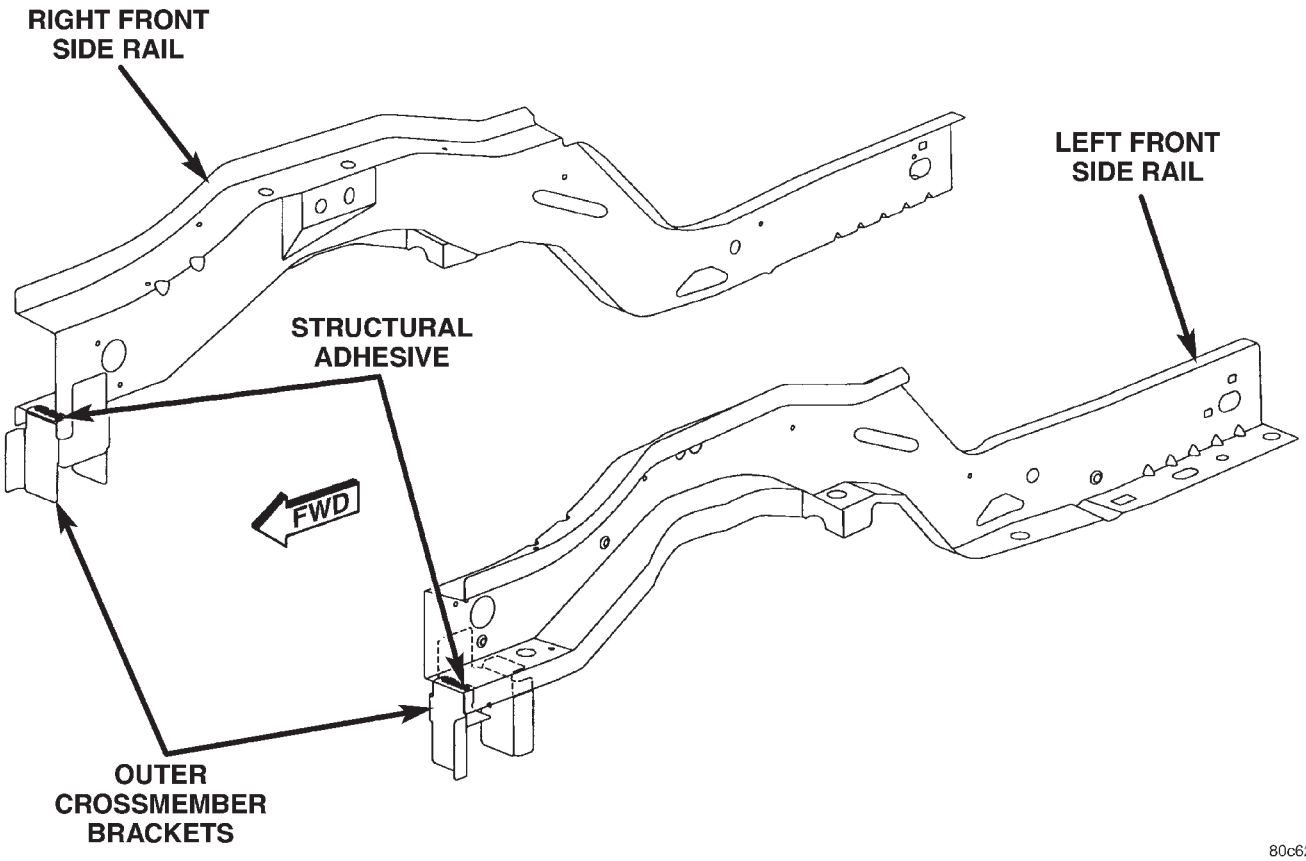

Fig. 59 FRONT SIDE RAILS/OUTER CROSS MEMBER BRACKETS

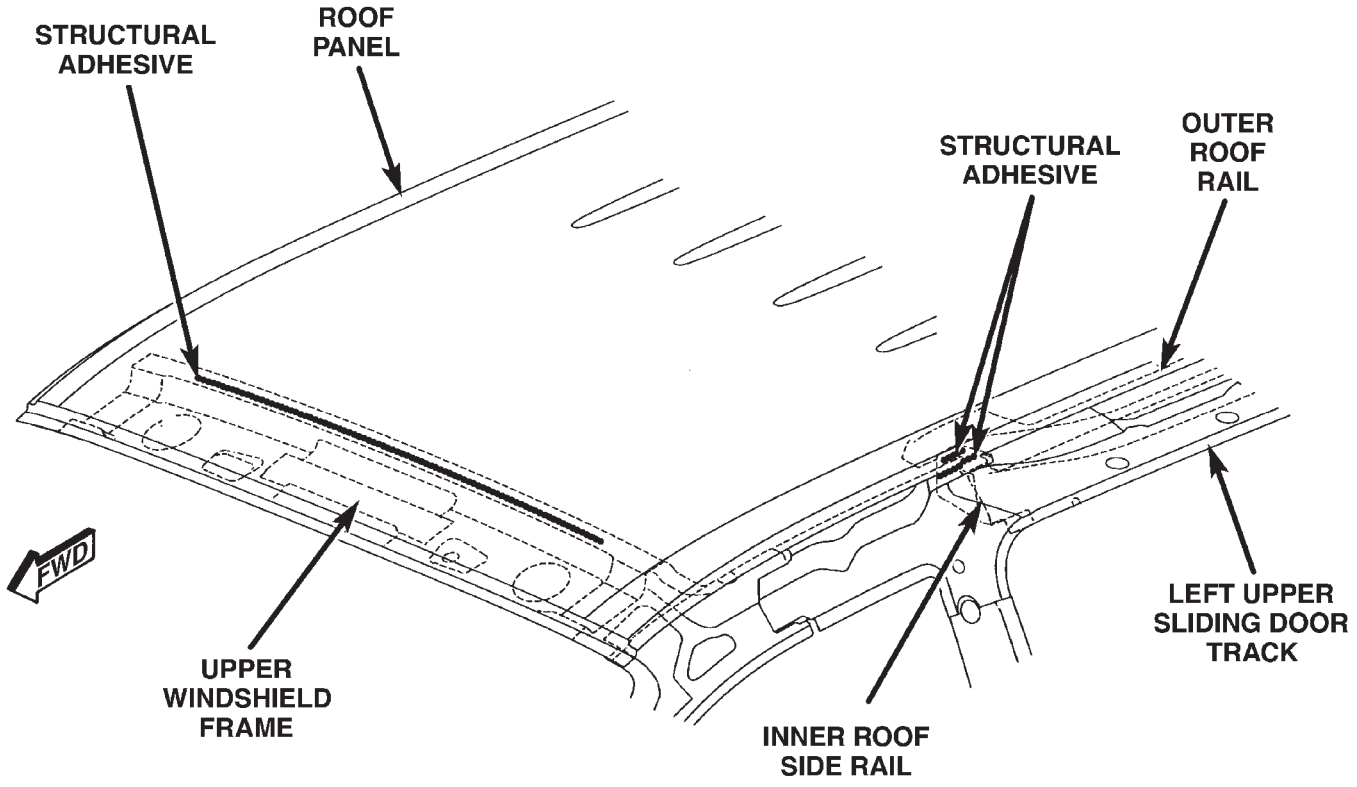

Fig. 60 OUTER ROOF PANEL/UPPER WINDSHIELD FRAME

STUCTURAL ADHESIVE LOCATIONS (Continued)

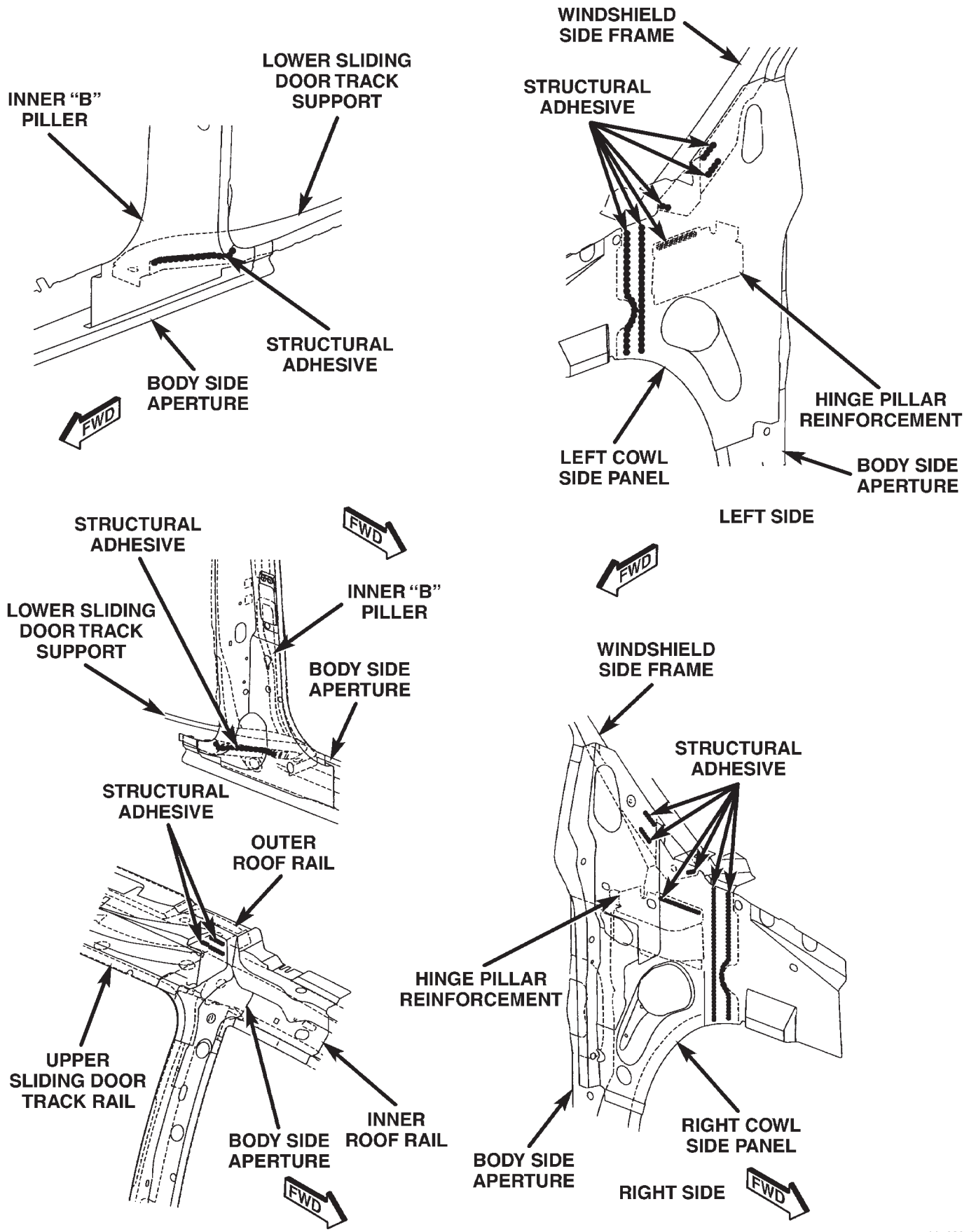

80c622af

Fig. 61 COWL SIDE PANEL/ BODY SIDE APERTURE, B-PILLAR/SLIDING DOOR TRACK SUPPORT

WELD LOCATIONS

SPECIFICATIONS

WELD LOCATIONS

INDEX

DESCRIPTION	FIGURE
FRONT FENDER SHIELD - RIGHT	62
FRONT FENDER SHIELD - LEFT	63
STRUT TOWER AND REINFORCEMENTS - RIGHT	64
SUSPENSION RETAINERS AND REINFORCEMENTS - RIGHT	65
STRUT TOWER AND REINFORCEMENTS - LEFT	66
SUSPENSION RETAINERS AND REINFORCEMENTS - LEFT	67
FLOOR PAN REINFORCEMENTS - SIDE RAILS	68
REAR SUSPENSION BRACKETS	69
FLOOR PAN CROSS MEMBERS	70
SEAT REINFORCEMENTS - LONG WHEEL BASE ONLY	71
STRIKER REINFORCEMENTS - LONG WHEEL BASE ONLY	72
FUEL TANK MOUNTING/REAR SEAT AND SUSPENSION	73
REAR SUSPENSION HANGER BRACKETS - LONG WHEEL BASE	74
FRONT SEAT CROSS MEMBER	75
FLOOR PAN SIDE RAIL REINFORCEMENT	76
SILL BULKHEAD REINFORCEMENTS	77
FLOOR PAN CROSS MEMBER REINFORCEMENTS	78
FRONT SEAT CROSS MEMBER	79
SEAT REINFORCEMENT CROSS MEMBERS - SHORT WHEEL BASE	80
CENTER CONSOLE REINFORCEMENT - SHORT WHEEL BASE	81
REAR SUSPENSION HANGER BRACKETS - SHORT WHEEL BASE	82
LOWER LIFTGATE PANEL LATCH REINFORCEMENT	83
ENGINE MOUNTING PLATE AND TOW BRACKET	84
HEADLAMP MOUNTING PLATE	85
LOWER RADIATOR CROSS MEMBER BRACKETS	86
CROSS MEMBER EXTENSIONS	87
JACK MOUNTING BRACKET - LONG WHEEL BASE SHOWN, SHORT SIMILAR	88
FRONT SEAT CROSS MEMBER - LONG WHEELBASE ONLY	89
FRONT SEAT CROSS MEMBER - ALL WHEEL DRIVE ONLY	90
FUEL TANK SUPPORT CROSS MEMBERS - LONG WHEEL BASE ONLY	91
REAR SUPPORT AND TIRE STOWAGE CROSS MEMBERS - LONG WHEEL BASE ONLY	92
INNER SIDE SILLS - LONG WHEEL BASE ONLY	93
WHEELHOUSES, SIDE SILLS, SUSPENSION BRACKETS - LONG WHEEL BASE ONLY	94
REAR SEAT REINFORCEMENTS - SHORT WHEEL BASE ONLY	95

WELD LOCATIONS (Continued)

DESCRIPTION	FIGURE
FUEL TANK SUPPORT AND TIRE STOWAGE - SHORT WHEEL BASE ONLY	96
INNER SIDE SILLS - SHORT WHEEL BASE ONLY	97
REAR SEAT REINFORCEMENTS - SHORT WHEEL BASE ONLY	98
CENTER CONSOLE REINFORCEMENT - SHORT WHEEL BASE ONLY	99
WHEELHOUSES - SHORT WHEEL BASE ONLY	100
FRONT SEAT CROSS MEMBER - SHORT WHEELBASE, ALL WHEEL DRIVE ONLY	101
FLOOR PAN SIDE RAIL - LONG WHEEL BASE ONLY	102
INNER BODY SIDE SILL REINFORCEMENTS	103
TOE BOARD CROSS MEMBER	104
FRONT SIDE RAIL - SHORT WHEEL BASE ONLY	105
DASH PANEL REINFORCEMENT	106
LOWER COWL PLENUM	107
UPPER COWL PLENUM SUPPORT	108
UPPER DASH PANEL	109
COWL SIDE PANELS	110
INSTRUMENT PANEL ATTACHMENT TAPPING PLATES	111
INSTRUMENT PANEL, DASH PANEL, ACM MODULE AND ACCELERATOR PEDAL	112
STRUT TOWER BRACKET AND COWL PLENUM	113
FRONT SIDE RAILS TO LOWER DASH PANEL	114
INNER BODY SIDE SILL TO LOWER DASH PANEL	115
FRONT HINGE TAPPING PLATE	116
FRONT HINGE PILLAR	117
INNER WINDSHIELD FRAME	118
WINDSHIELD FRAME	119
FENDER BRACKET	120
INNER B-PILLAR	121
STRIKER LATCH AND TAPPING PLATES	122
RIGHT REAR INNER QUARTER PANEL - LONG WHEEL BASE ONLY	123
RIGHT REAR INNER QUARTER PANEL/OUTER WHEELHOUSE - LONG WHEEL BASE ONLY	124
RIGHT REAR BODY SIDE APERTURE - LONG WHEEL BASE ONLY	125
STRIKER LATCH REINFORCEMENT - LONG WHEEL BASE ONLY	126
BELT TAPPING PLATE - LONG WHEEL BASE ONLY	127
C-PILLAR REINFORCEMENT - LONG WHEEL BASE ONLY	128
OUTER WHEELHOUSE - LONG WHEEL BASE ONLY	129
C AND D-PILLAR INNER REINFORCEMENTS - LONG WHEEL BASE ONLY	130
LEFT REAR INNER QUARTER PANEL - LONG WHEEL BASE ONLY	131
OUTER WHEELHOUSE EXTENSION - LONG WHEEL BASE ONLY	132
TAIL LAMP - LONG WHEEL BASE ONLY	133
SLIDING DOOR LATCH - LONG WHEEL BASE ONLY	134
ROOF BOW EXTENSION - LONG WHEEL BASE ONLY	135
RIGHT REAR INNER QUARTER PANEL - SHORT WHEEL BASE ONLY	136

WELD LOCATIONS (Continued)

DESCRIPTION	FIGURE
LATCH REINFORCEMENT AND OUTER WHEELHOUSE - SHORT WHEEL BASE ONLY	137
D-PILLAR REINFORCEMENT - SHORT WHEEL BASE ONLY	138
OUTER WHEELHOUSE - SHORT WHEEL BASE ONLY	139
LEFT REAR INNER QUARTER PANEL - SHORT WHEEL BASE ONLY	140
LATCH REINFORCEMENT - SHORT WHEEL BASE ONLY	141
D-PILLAR REINFORCEMENT - SHORT WHEEL BASE ONLY	142
OUTER WHEELHOUSE - SHORT WHEEL BASE ONLY	143
BODY SIDE APERTURE RIGHT SIDE- LONG WHEEL BASE ONLY	144
BODY SIDE APERTURE LEFT SIDE - LONG WHEEL BASE ONLY	145
BODY SIDE APERTURE RIGHT SIDE - SHORT WHEEL BASE ONLY	146
BODY SIDE APERTURE LEFT SIDE - SHORT WHEEL BASE ONLY	147
LOWER SLIDING DOOR TRACK	148
LIFTGATE UPPER FRAME	149
UPPER WINDSHIELD FRAME	150
FRONT FENDER SHIELD BEAM	151
FRONT FENDER SHIELD BEAM/COWL SIDE PANEL	152
HINGE PILLAR REINFORCEMENT	153
INNER SIDE SILL - LONG WHEEL BASE ONLY	154
INNER SIDE SILL/OUTER SIDE SILL - LONG WHEEL BASE ONLY	155
LOWER SLIDING DOOR TRACK REINFORCEMENT - LONG WHEEL BASE ONLY	156
UPPER WINDSHIELD FRAME/ROOF PANEL - LONG WHEEL BASE ONLY	157
ROOF BOWS/INNER ROOF SIDE RAILS	158
OUTER ROOF PANEL - LONG WHEEL BASE ONLY	159
INNER SIDE SILL - SHORT WHEEL BASE ONLY	160
INNER/OUTER SIDE SILLS - SHORT WHEEL BASE ONLY	161
LOWER SLIDING DOOR TRACK - SHORT WHEEL BASE ONLY	162
UPPER WINDSHIELD FRAME/OUTER ROOF PANEL - SHORT WHEEL BASE ONLY	163
REAR SUSPENSION HANGERS - LONG WHEEL BASE SHOWN, SHORT WHEEL BASE TYPICAL	164
FRONT LOWER LIFTGATE OPENING	165
REAR JACKING REINFORCEMENT - LONG WHEEL BASE ONLY	166
INNER WHEELHOUSE - LONG WHEEL BASE ONLY	167
SUSPENSION HANGER REINFORCEMENT - LONG WHEEL BASE ONLY	168
LOWER LIFTGATE OPENING PANEL - LONG WHEEL BASE ONLY	169
ROOF BOWS/UPPER LIFTGATE FRAME - LONG WHEEL BASE ONLY	170
BODY SIDE APERTURE/INNER QUARTER PANEL - LONG WHEEL BASE ONLY	171
REAR JACKING REINFORCEMENT - SHORT WHEEL BASE ONLY	172
INNER WHEELHOUSE/INNER QUARTER PANEL - SHORT WHEEL BASE ONLY	173
SUSPENSION HANGER REINFORCEMENT - SHORT WHEEL BASE ONLY	174
LOWER LIFTGATE OPENING - SHORT WHEEL BASE ONLY	175
ROOF PANEL/ROOF RAIL - SHORT WHEEL BASE ONLY	176

WELD LOCATIONS (Continued)

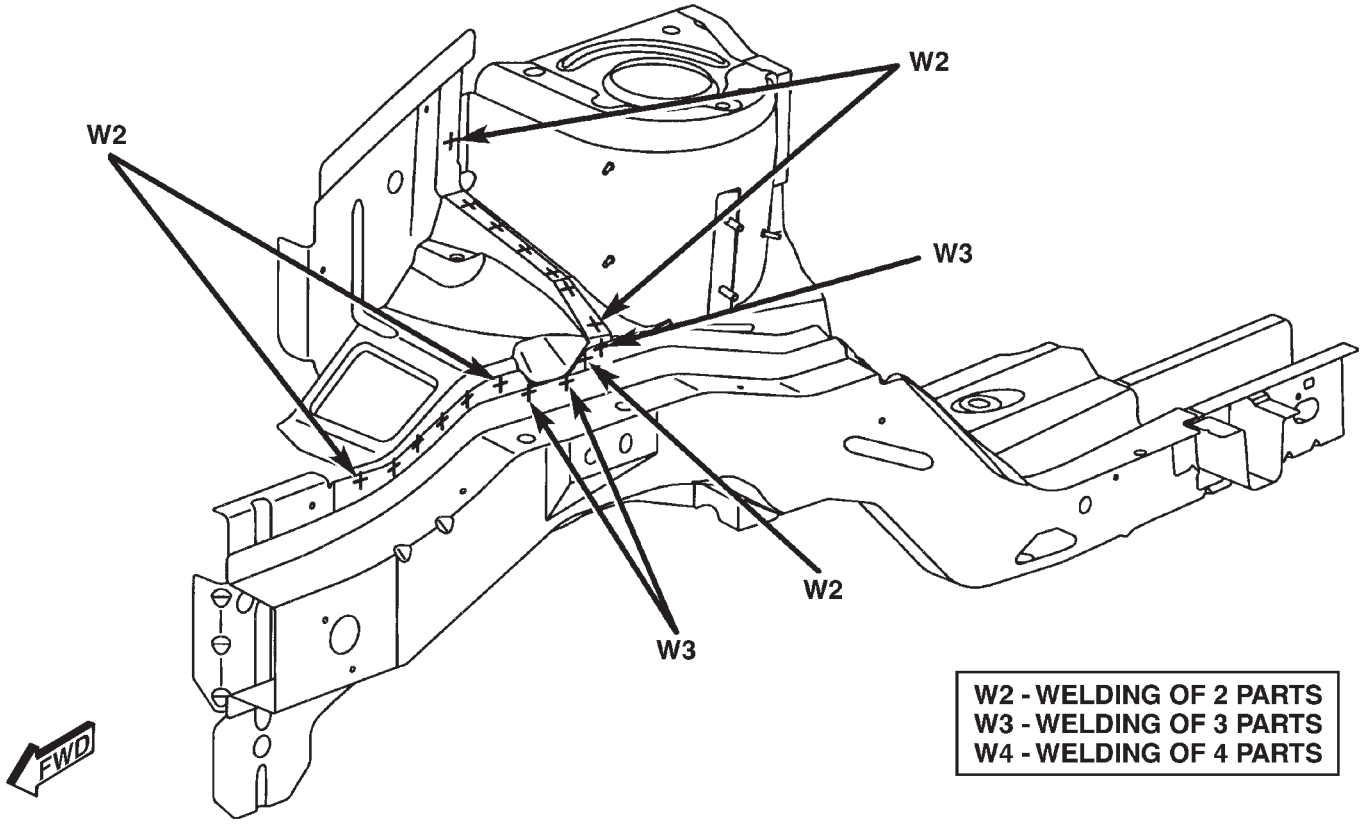

Fig. 62 FRONT FENDER SHIELD - RIGHT

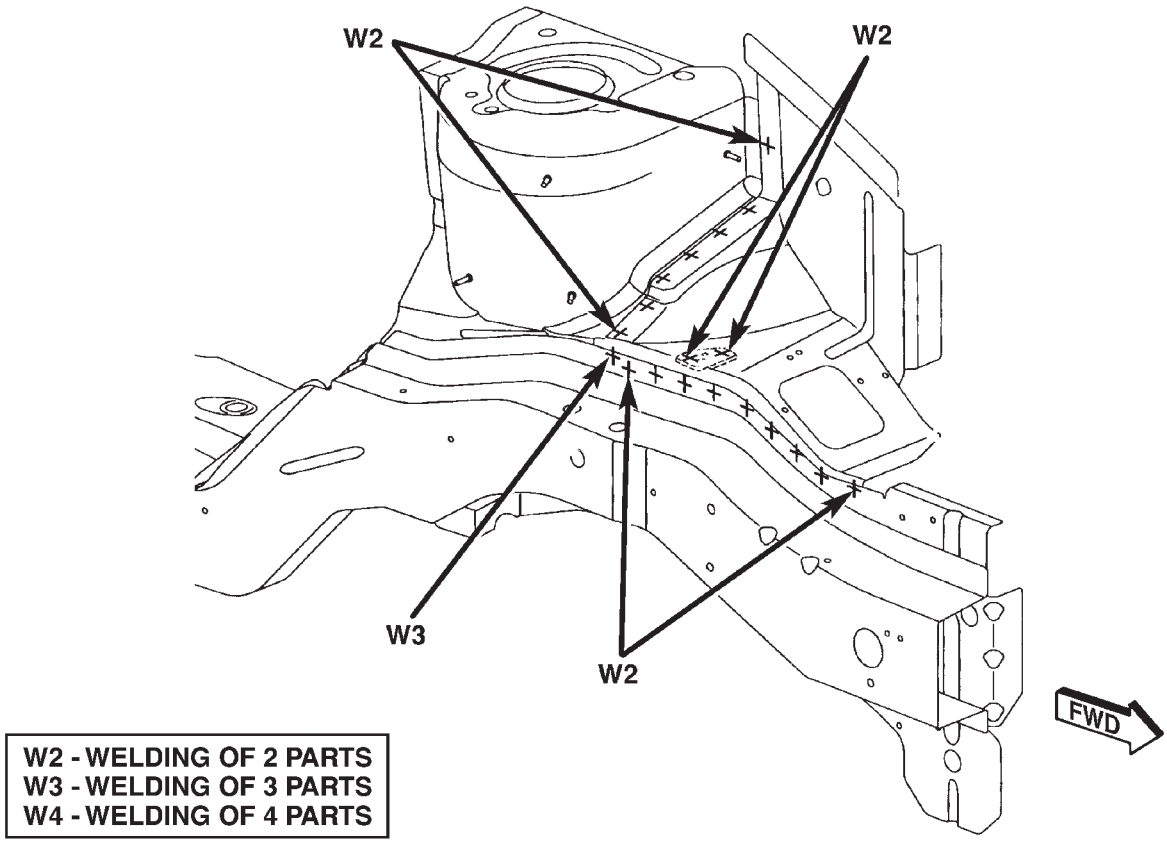

Fig. 63 FRONT FENDER SHIELD - LEFT

WELD LOCATIONS (Continued)

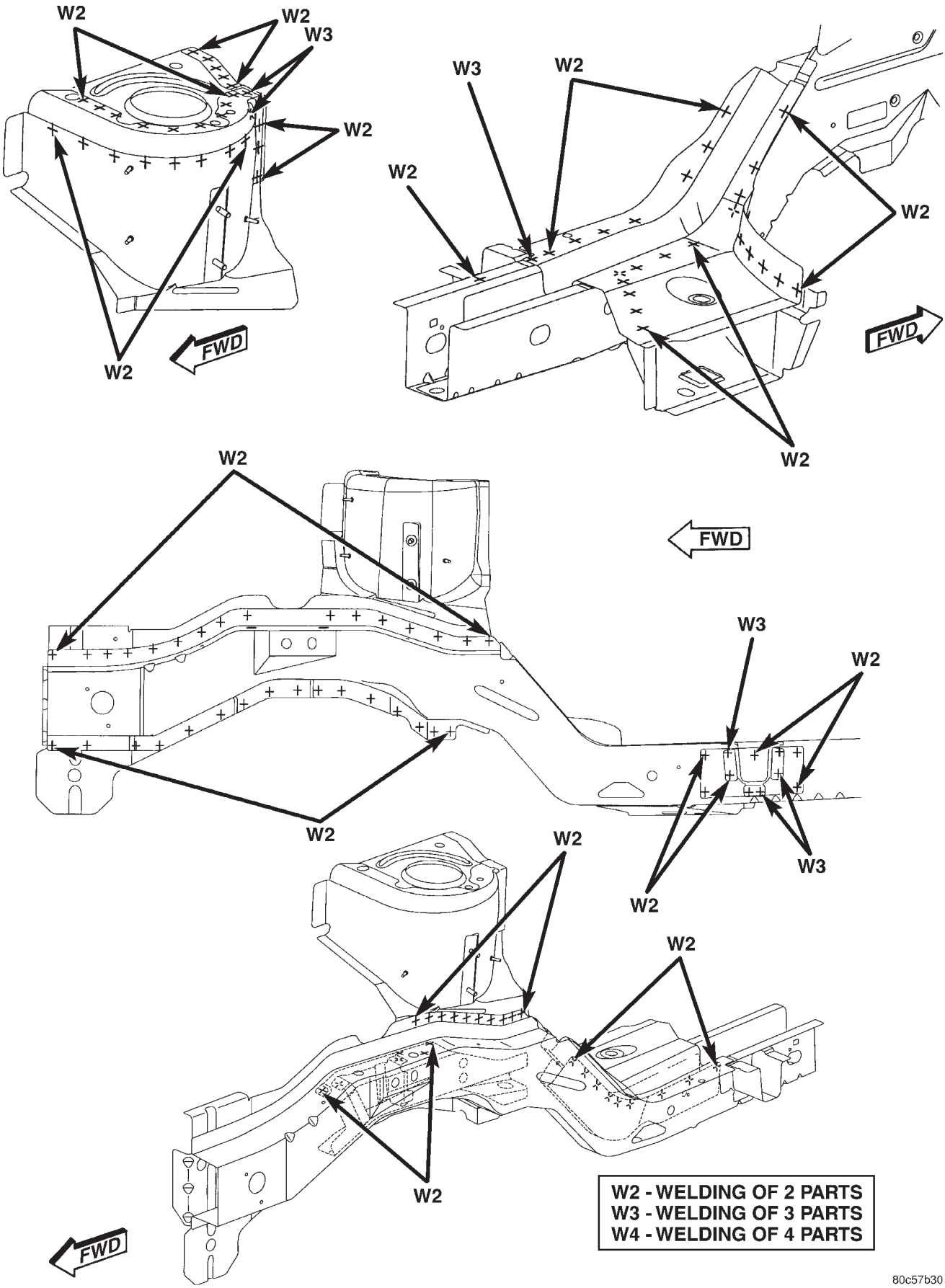

Fig. 64 STRUT TOWER AND REINFORCEMENTS - RIGHT

WELD LOCATIONS (Continued)

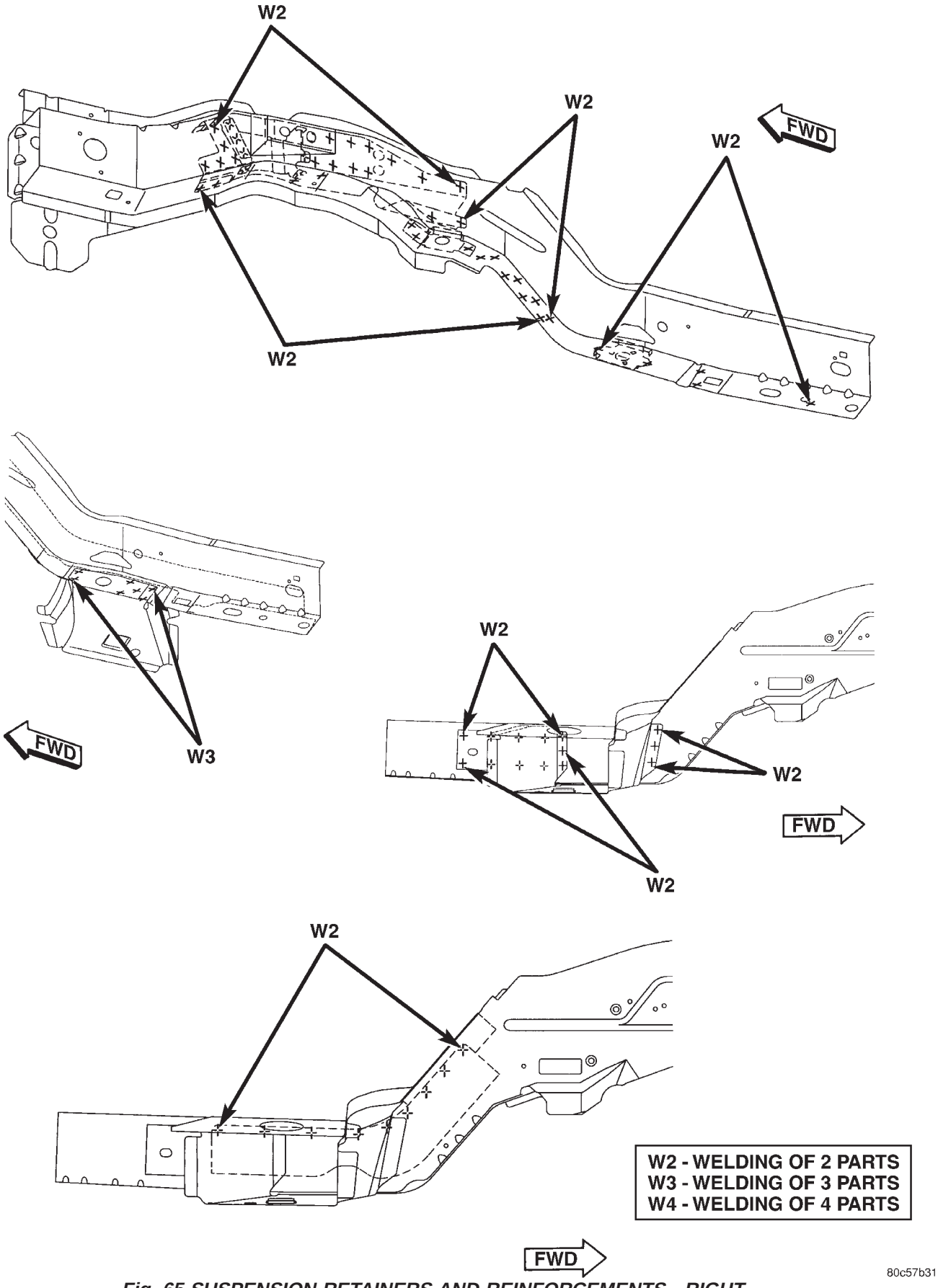

Fig. 65 SUSPENSION RETAINERS AND REINFORCEMENTS - RIGHT

WELD LOCATIONS (Continued)

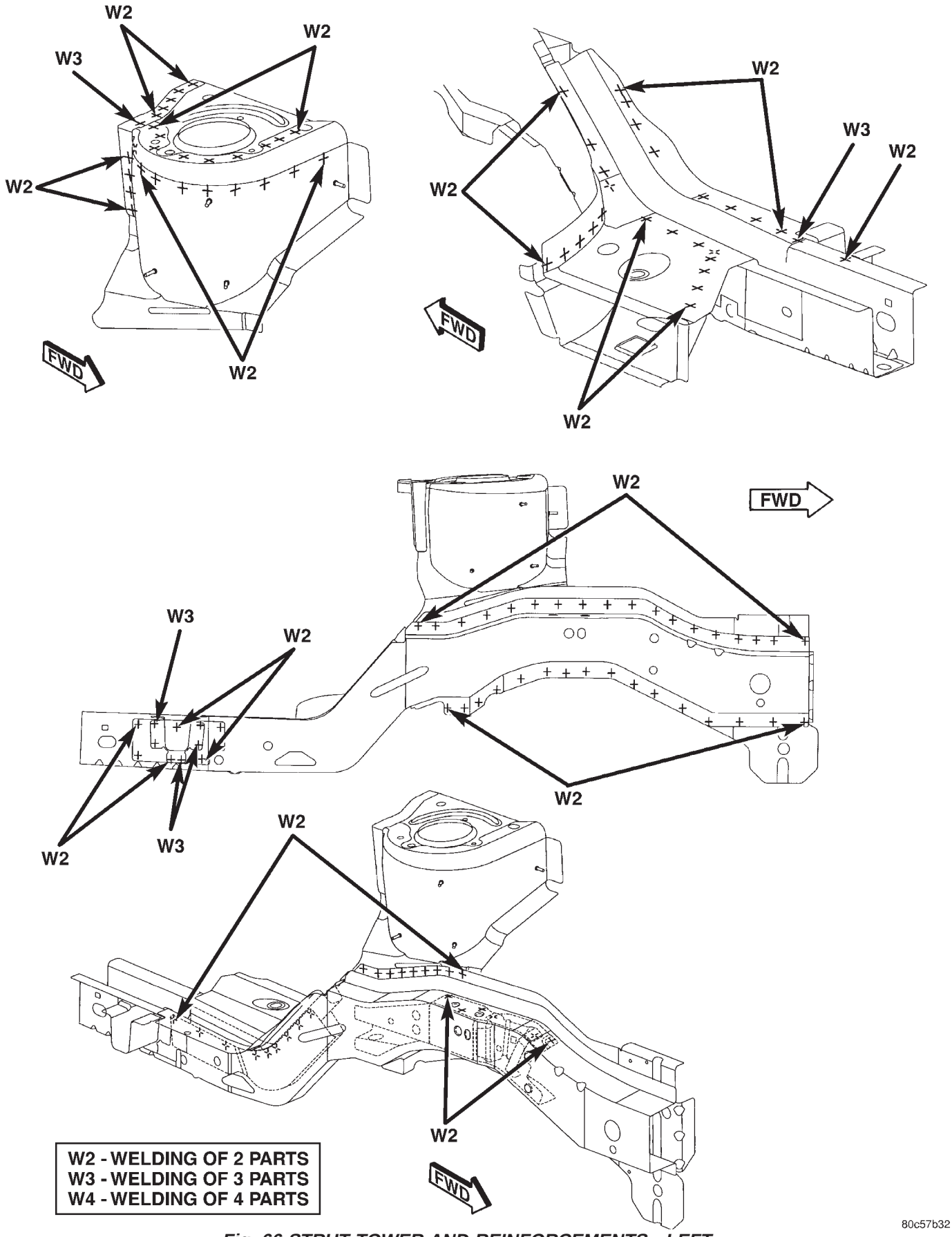

Fig. 66 STRUT TOWER AND REINFORCEMENTS - LEFT

WELD LOCATIONS (Continued)

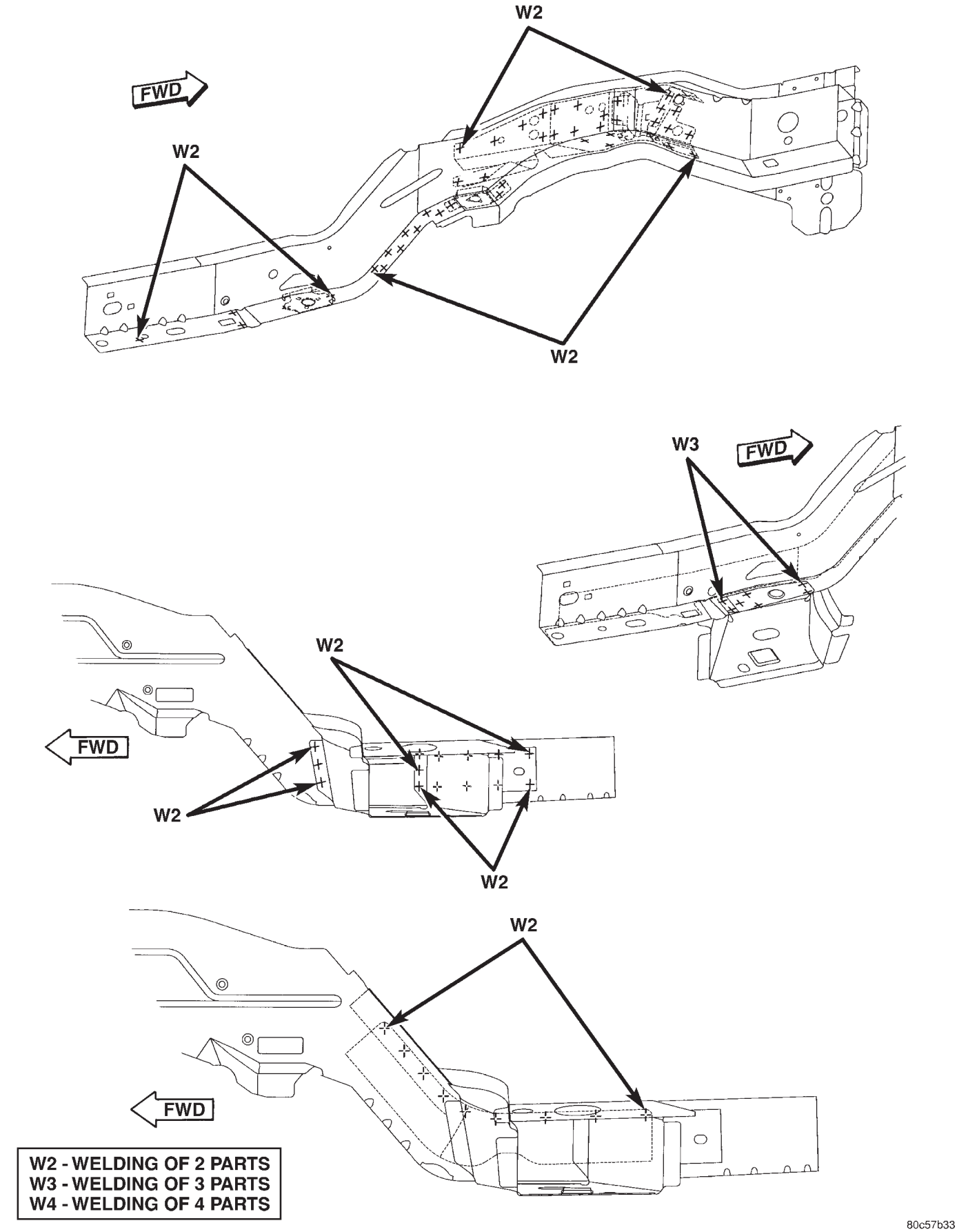

Fig. 67 SUSPENSION RETAINERS AND REINFORCEMENTS - LEFT

WELD LOCATIONS (Continued)

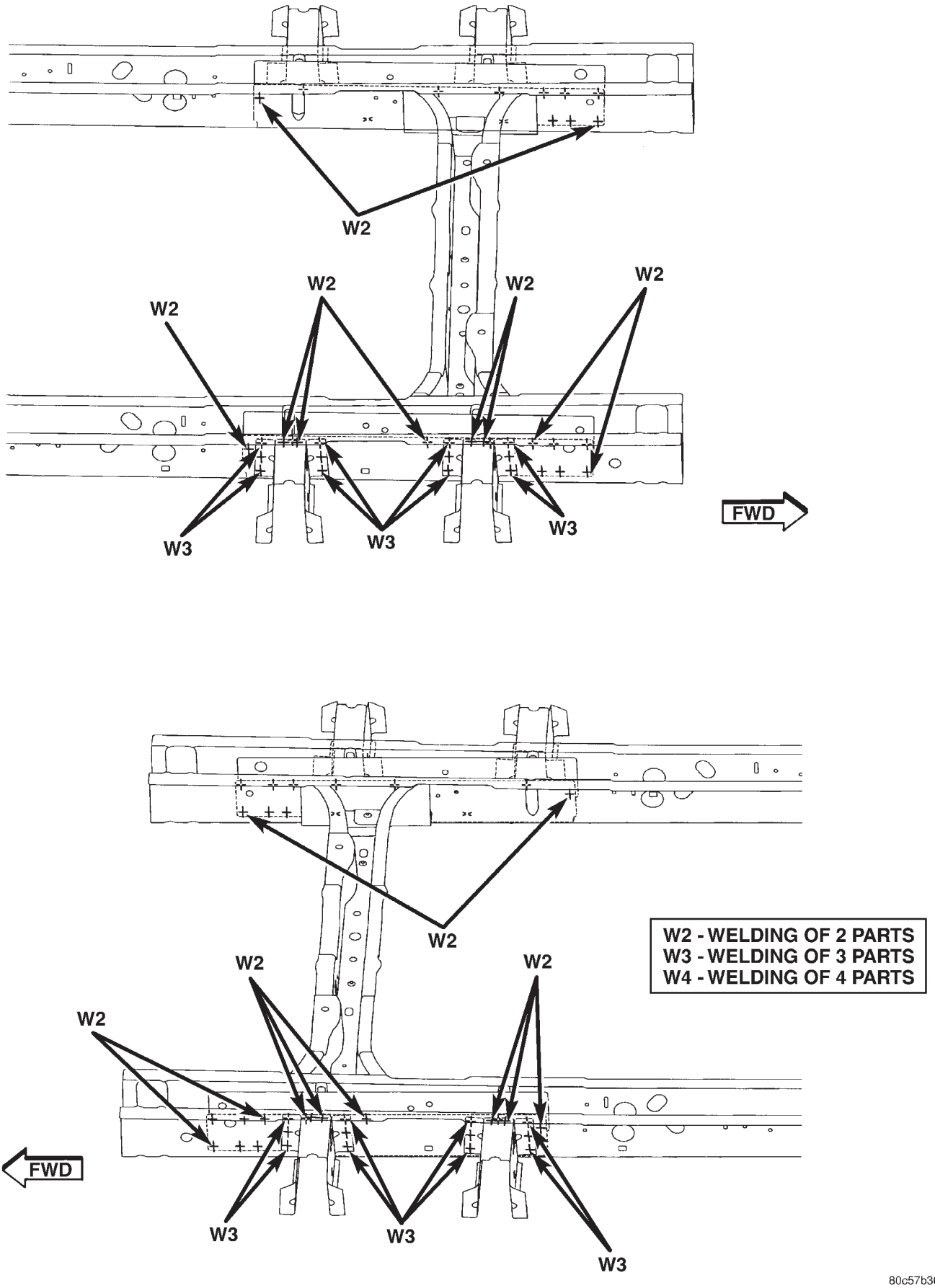

Fig. 68 FLOOR PAN REINFORCEMENTS - SIDE RAILS

WELD LOCATIONS (Continued)

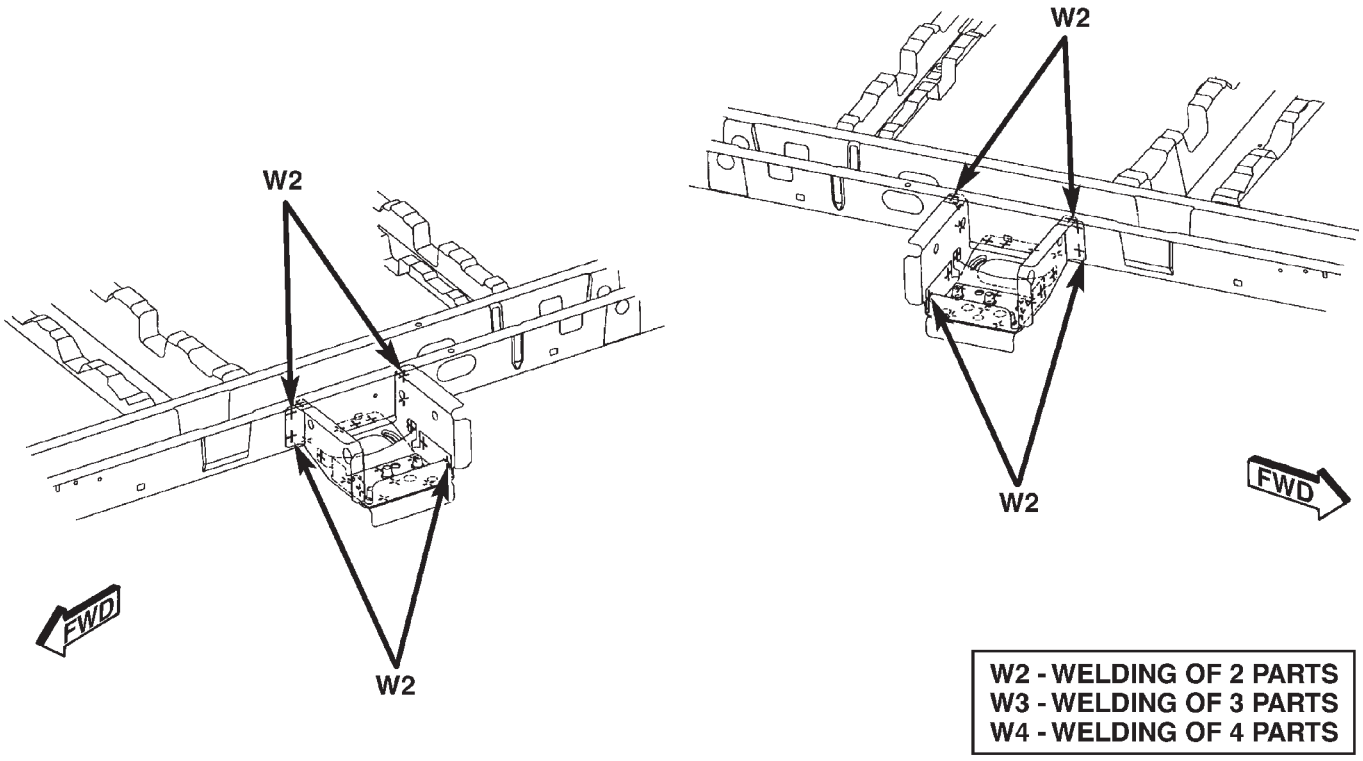

80c57b37

Fig. 69 REAR SUSPENSION BRACKETS

WELD LOCATIONS (Continued)

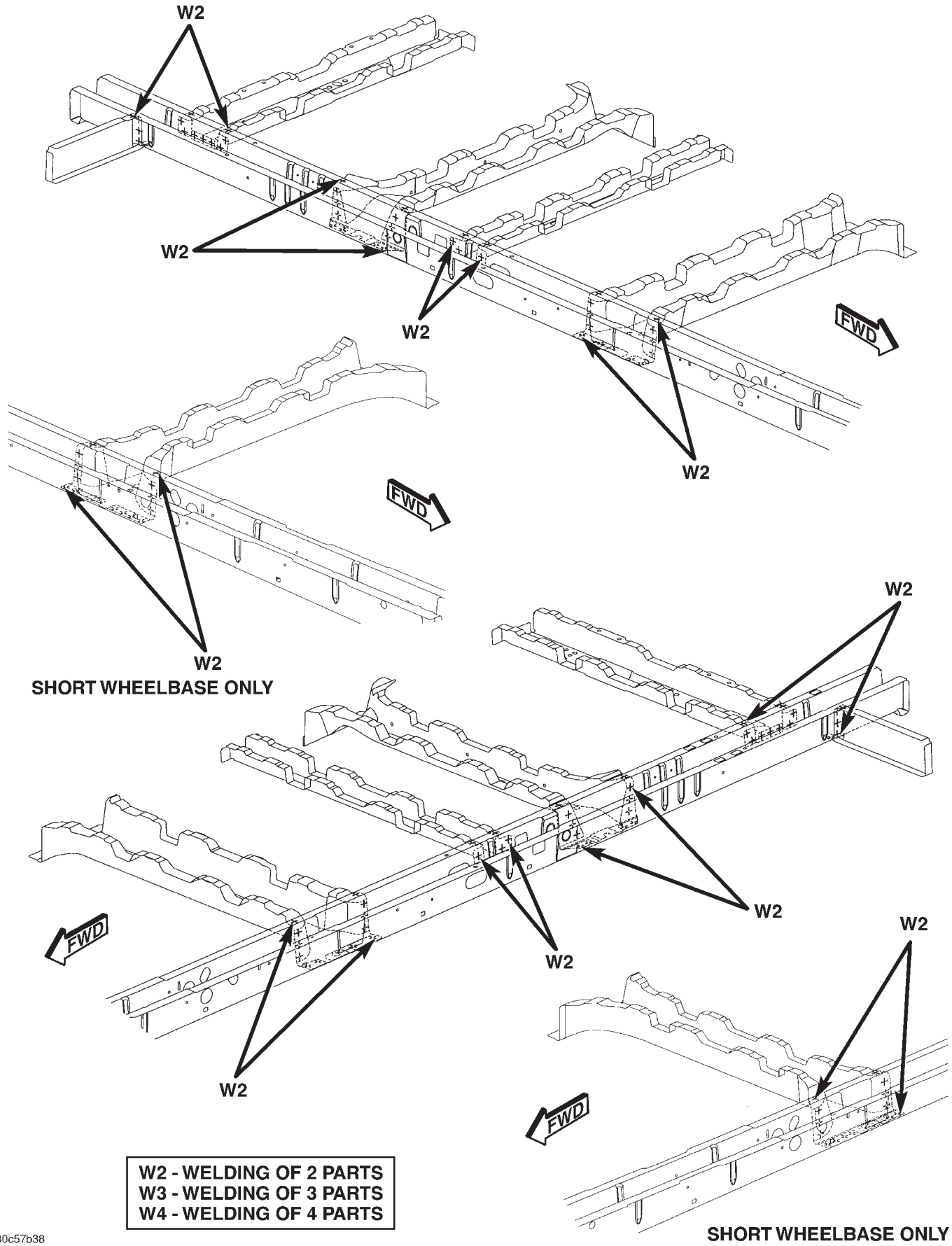

Fig. 70 FLOOR PAN CROSS MEMBERS

WELD LOCATIONS (Continued)

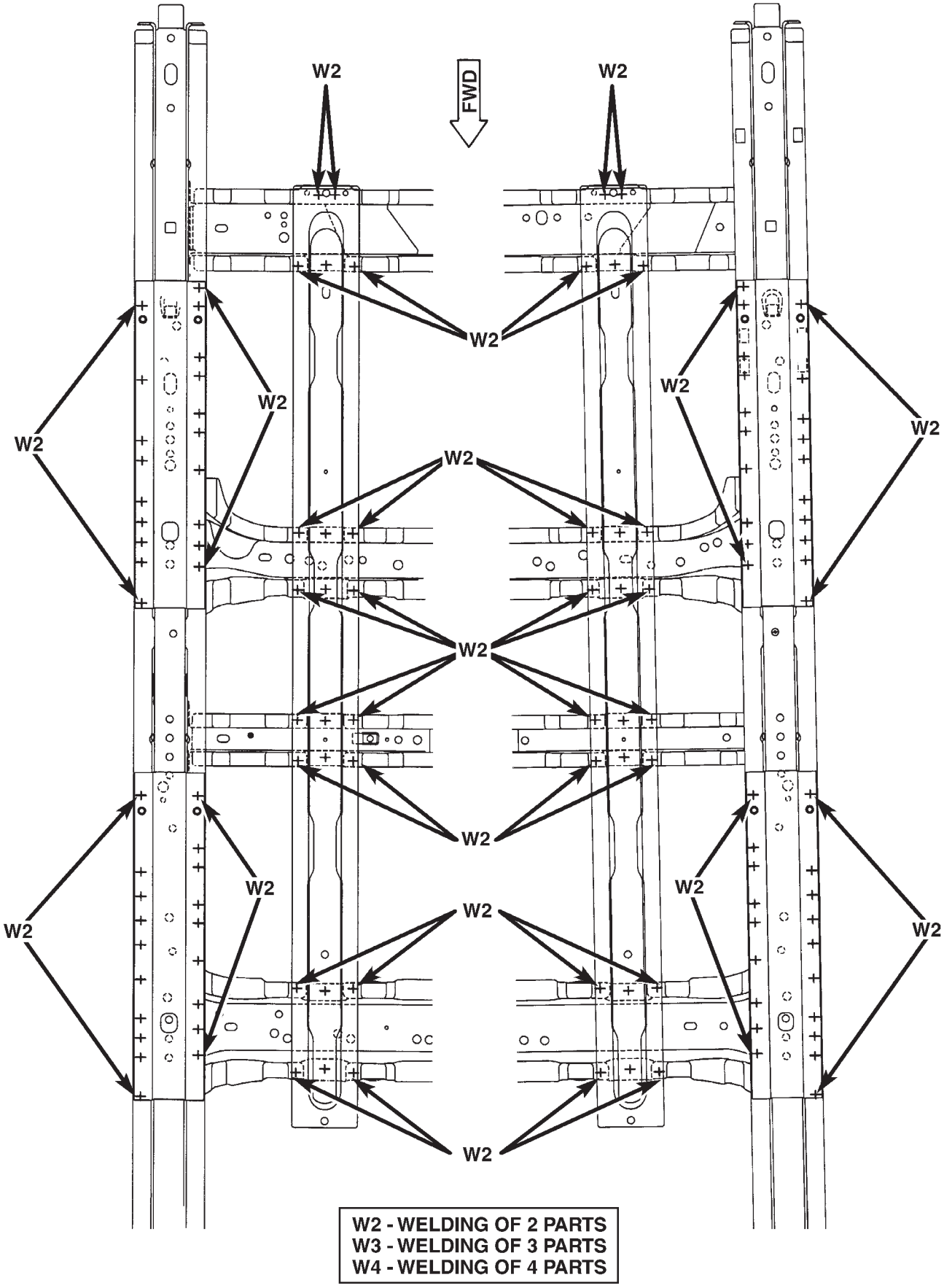

80c57b39

Fig. 71 SEAT REINFORCEMENTS - LONG WHEEL BASE ONLY

WELD LOCATIONS (Continued)

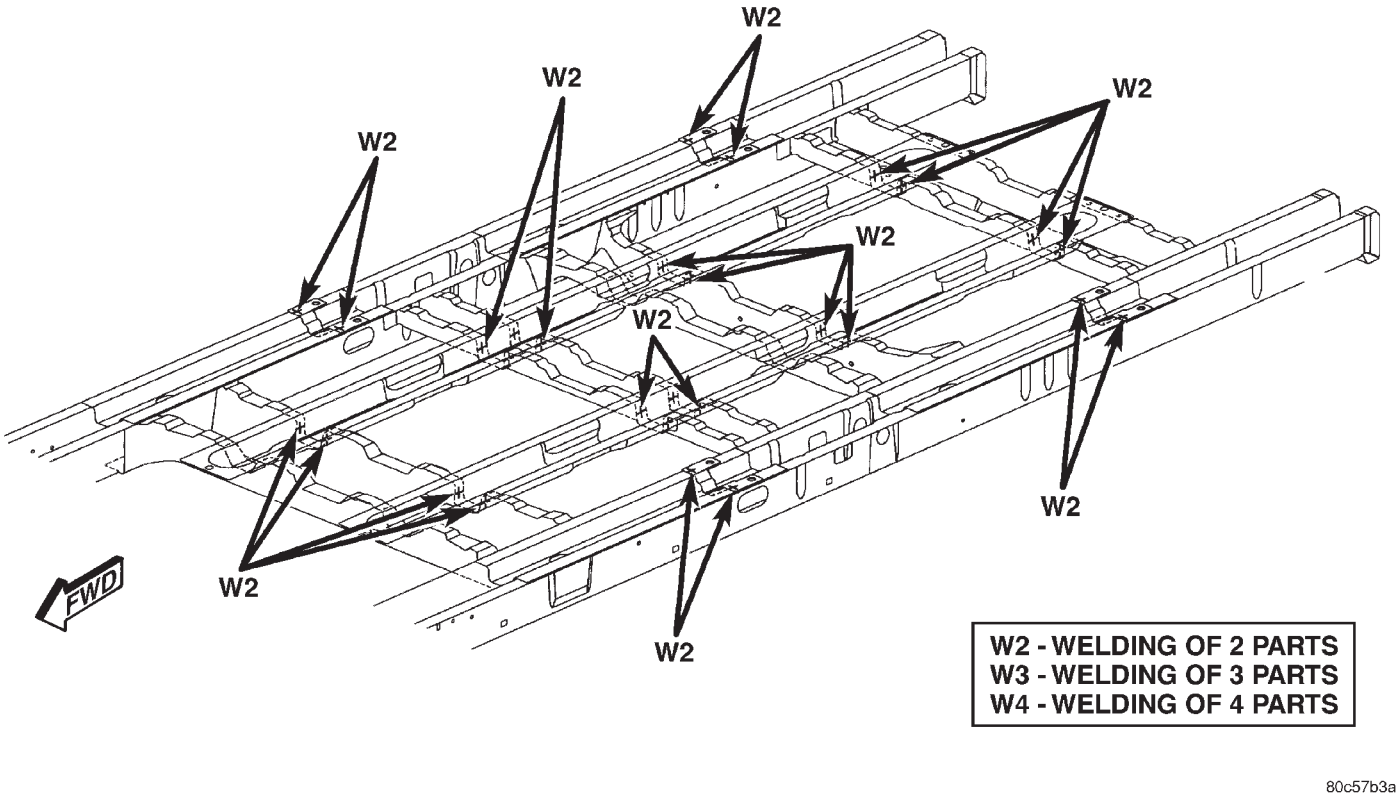

Fig. 72 STRIKER REINFORCEMENTS - LONG WHEEL BASE ONLY

WELD LOCATIONS (Continued)

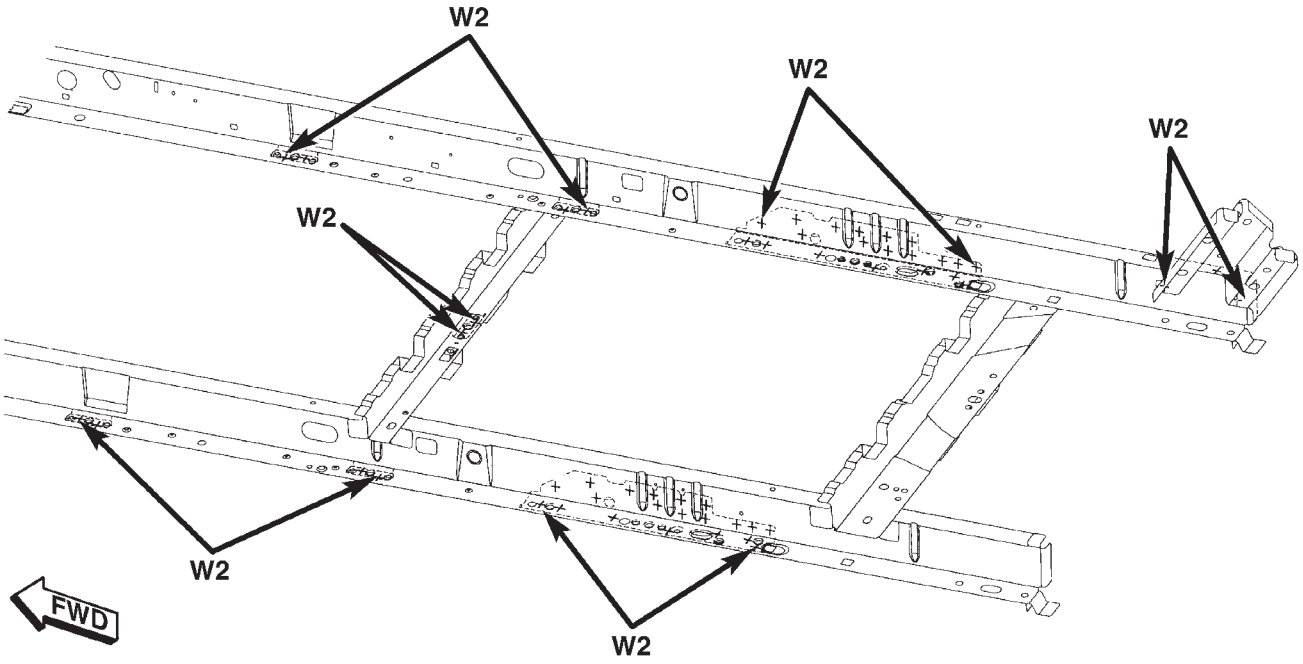

LONG WHEELBASE SHOWN –
SHORT WHEELBASE TYPICAL

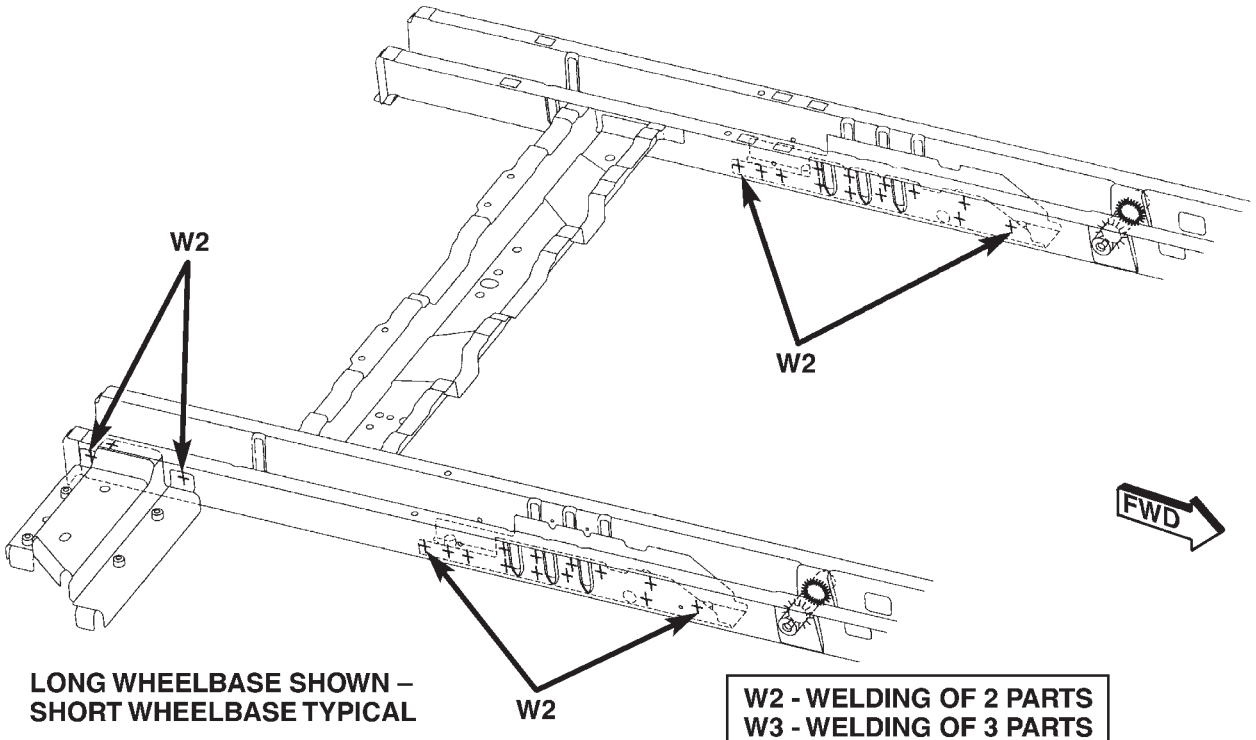

LONG WHEELBASE SHOWN –
SHORT WHEELBASE TYPICAL

W2 - WELDING OF 2 PARTS
W3 - WELDING OF 3 PARTS
W4 - WELDING OF 4 PARTS

80c57b3b

Fig. 73 FUEL TANK MOUNTING/REAR SEAT AND SUSPENSION

WELD LOCATIONS (Continued)

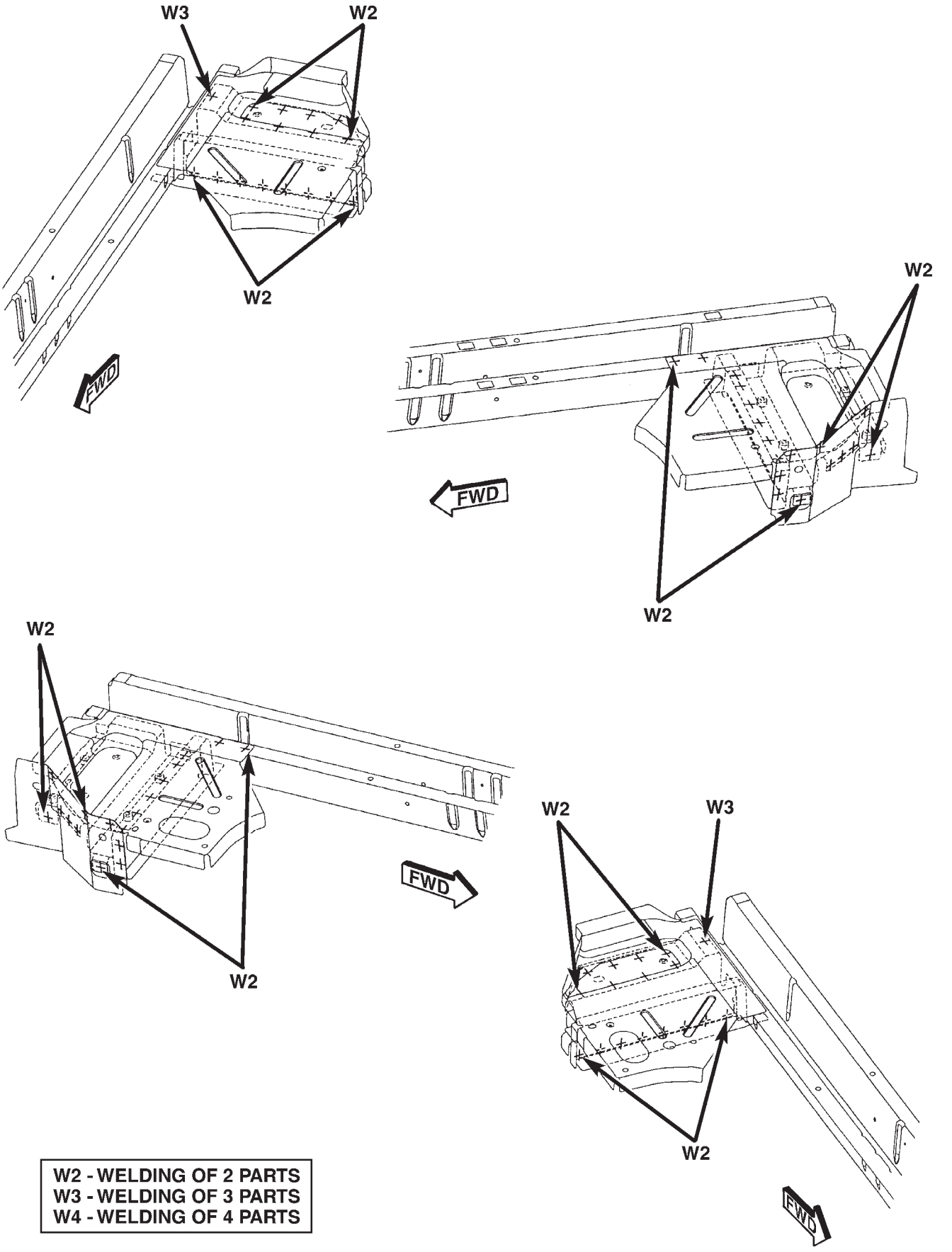

Fig. 74 REAR SUSPENSION HANGER BRACKETS - LONG WHEEL BASE

WELD LOCATIONS (Continued)

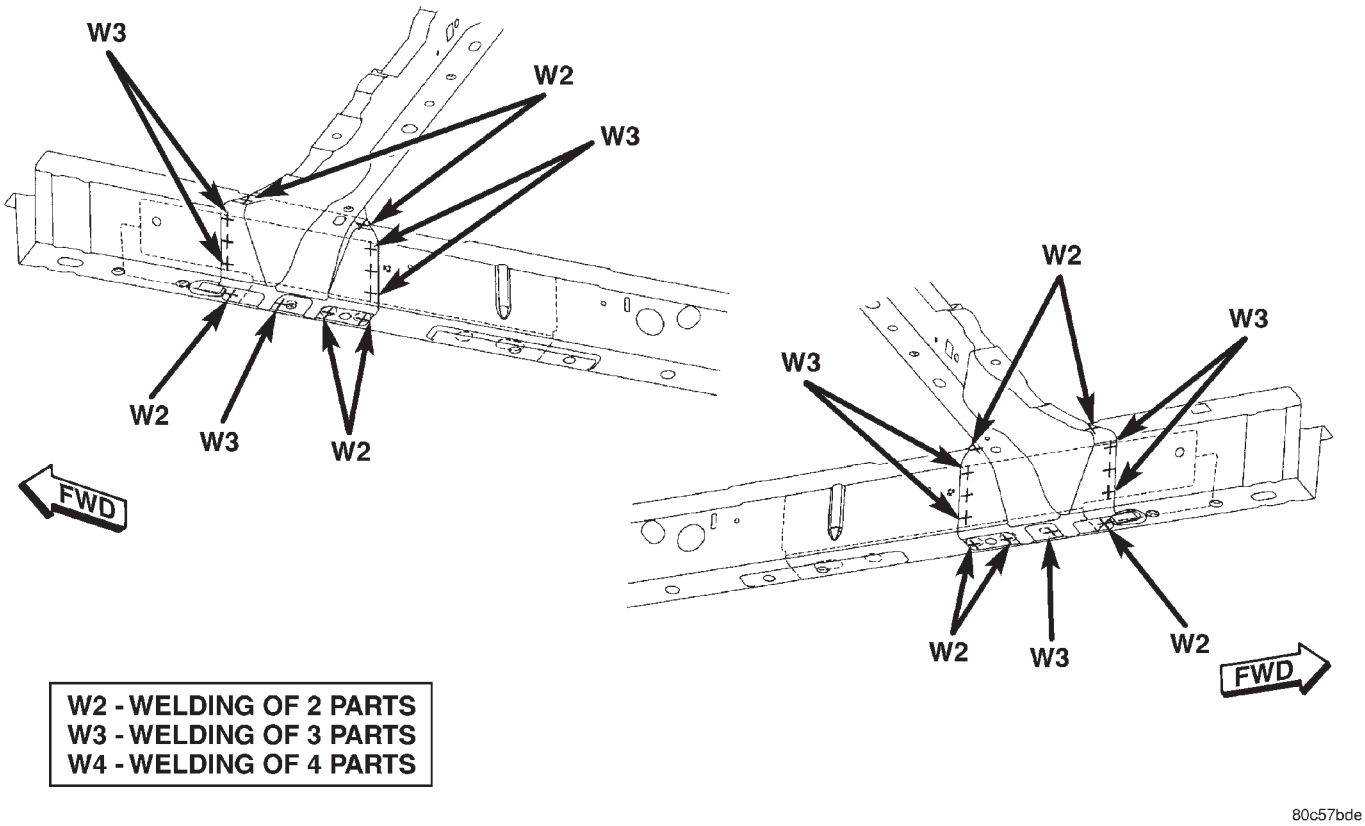

Fig. 75 FRONT SEAT CROSS MEMBER

WELD LOCATIONS (Continued)

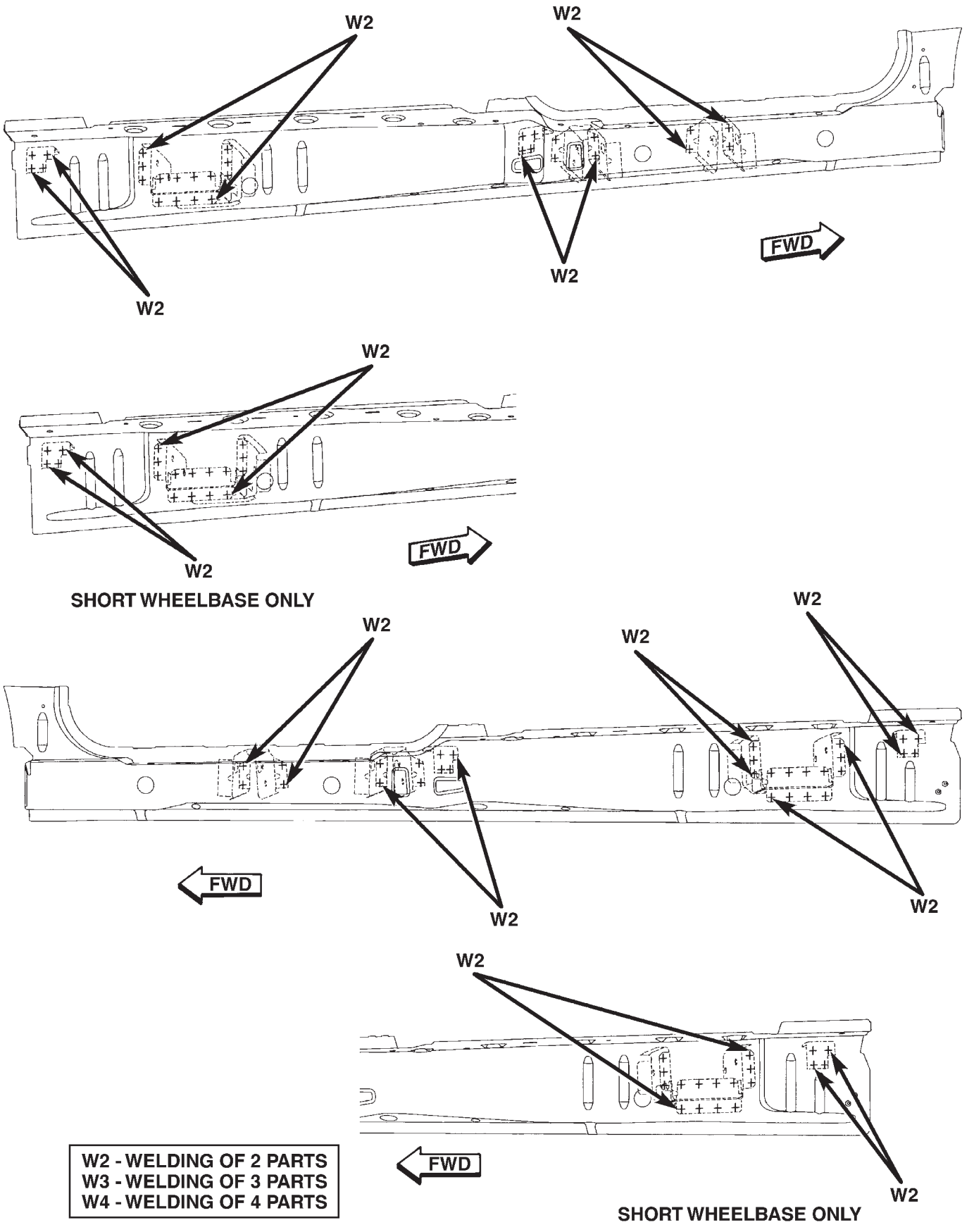

Fig. 76 FLOOR PAN SIDE RAIL REINFORCEMENT

WELD LOCATIONS (Continued)

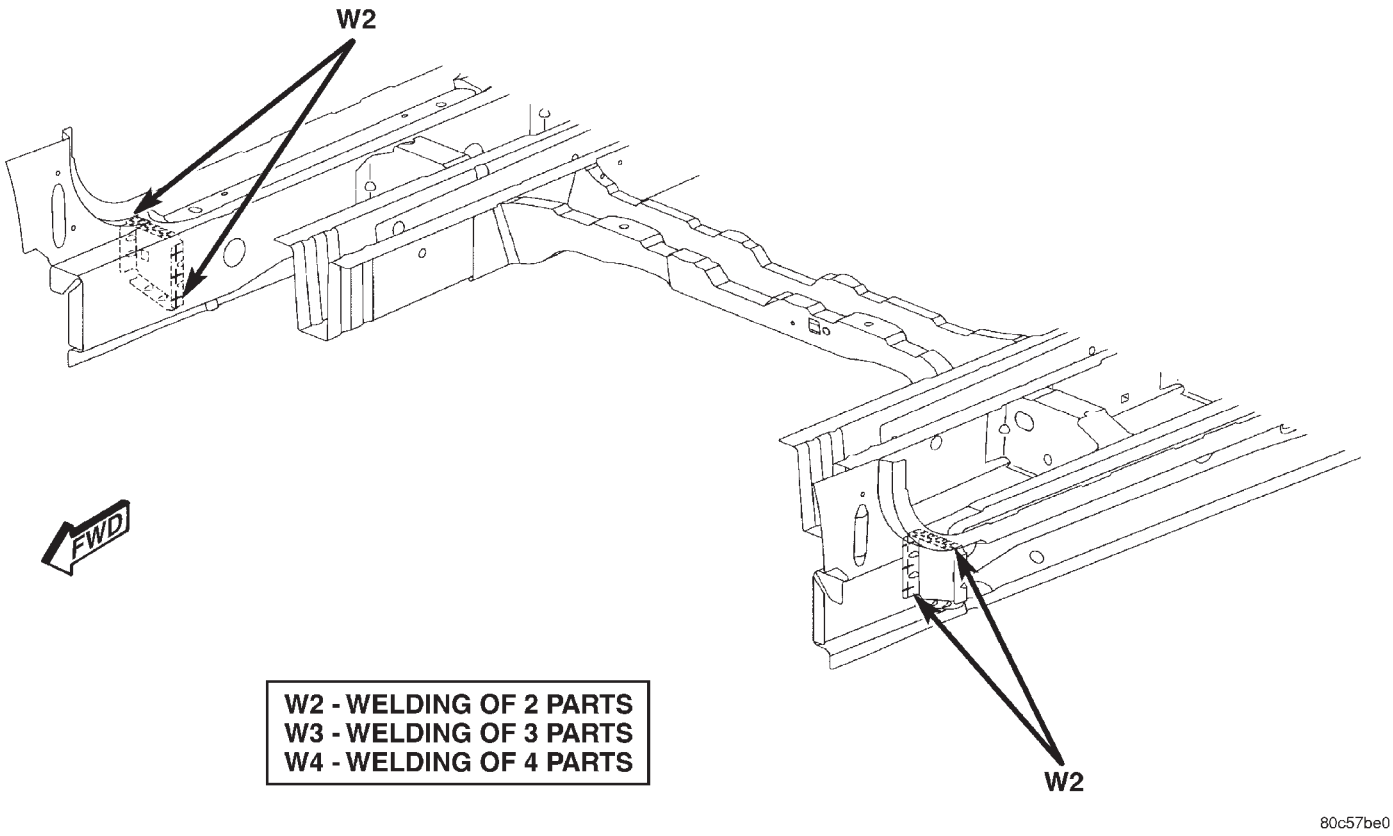

Fig. 77 SILL BULKHEAD REINFORCEMENTS

WELD LOCATIONS (Continued)

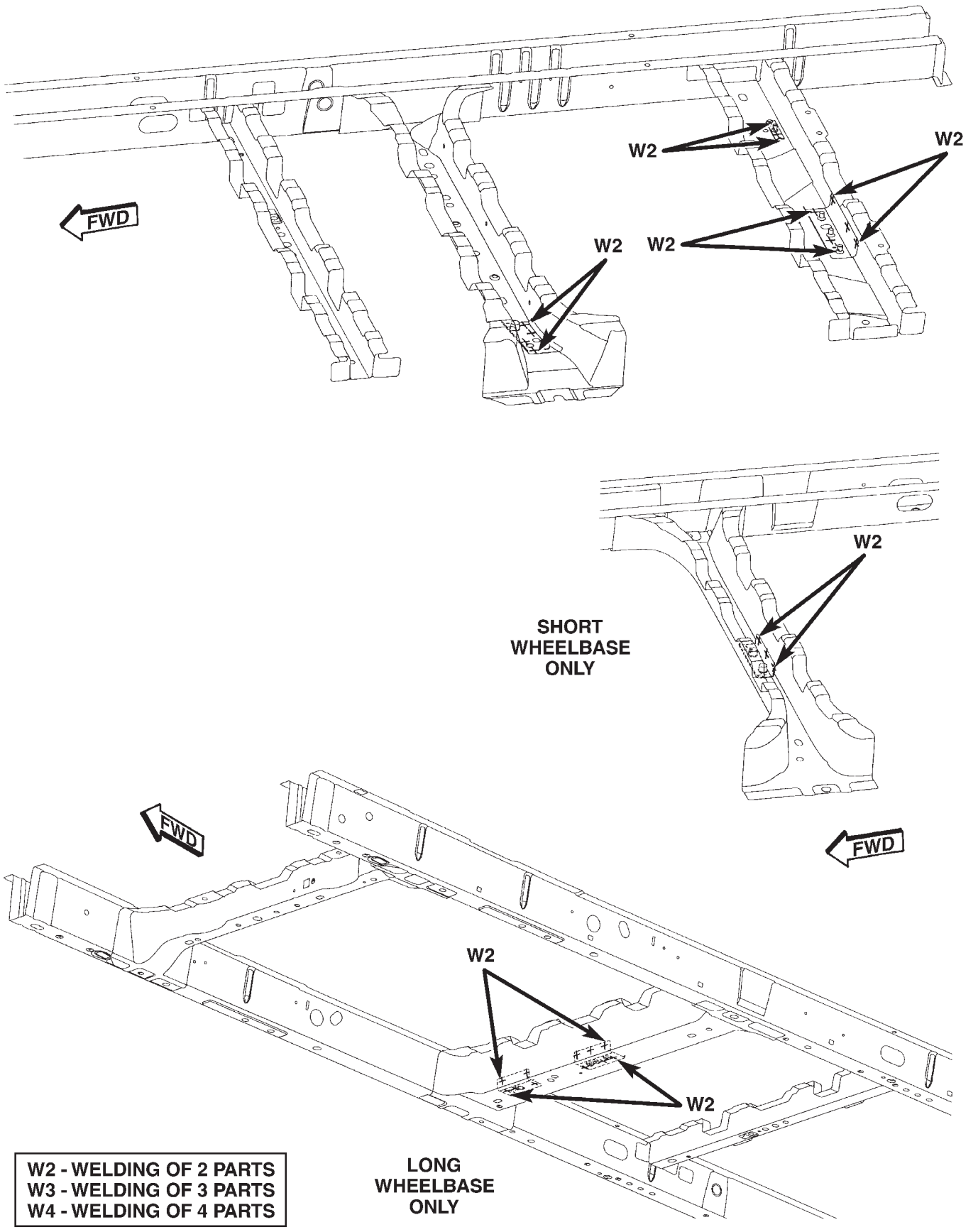

80c57be1

Fig. 78 FLOOR PAN CROSS MEMBER REINFORCEMENTS

WELD LOCATIONS (Continued)

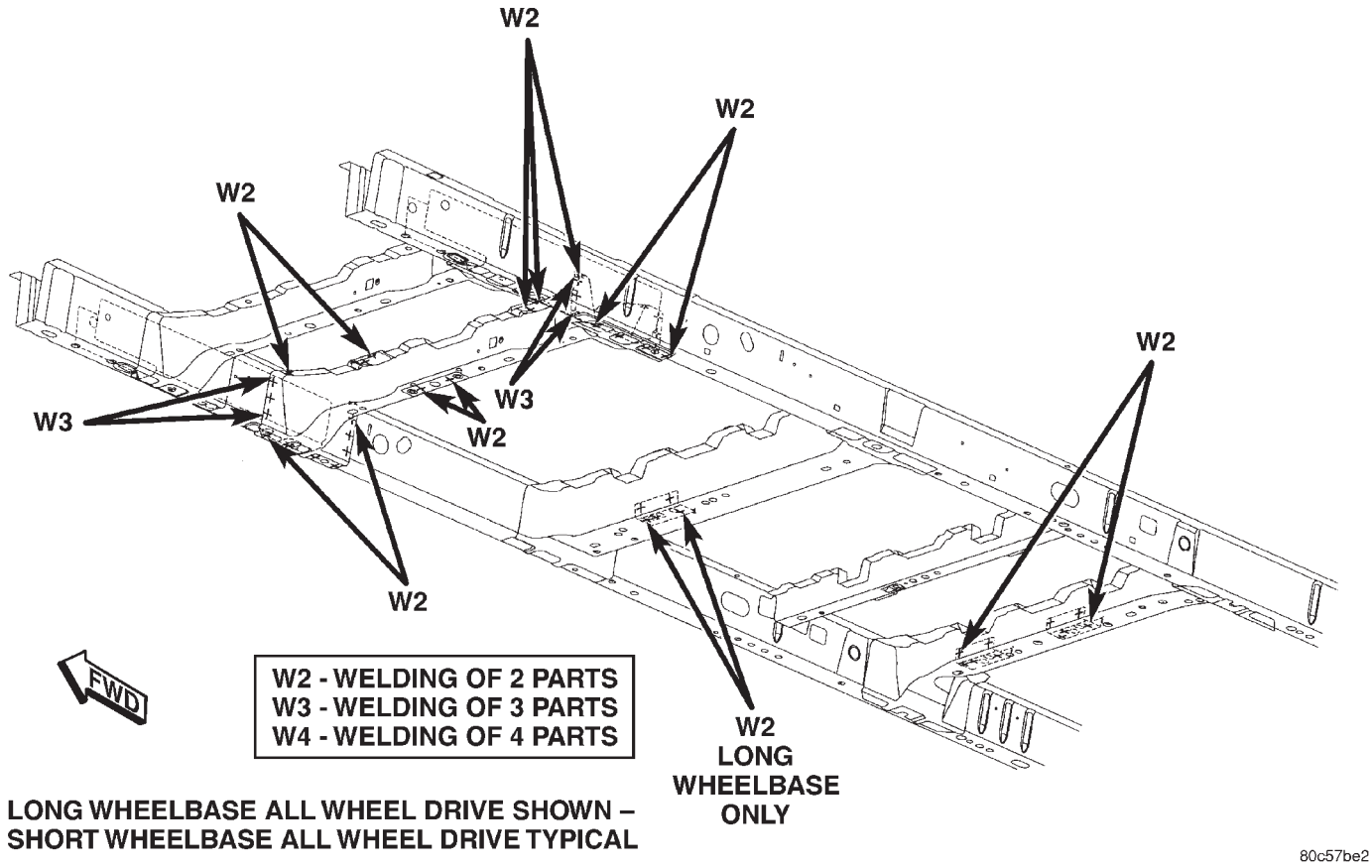

Fig. 79 FRONT SEAT CROSS MEMBER

WELD LOCATIONS (Continued)

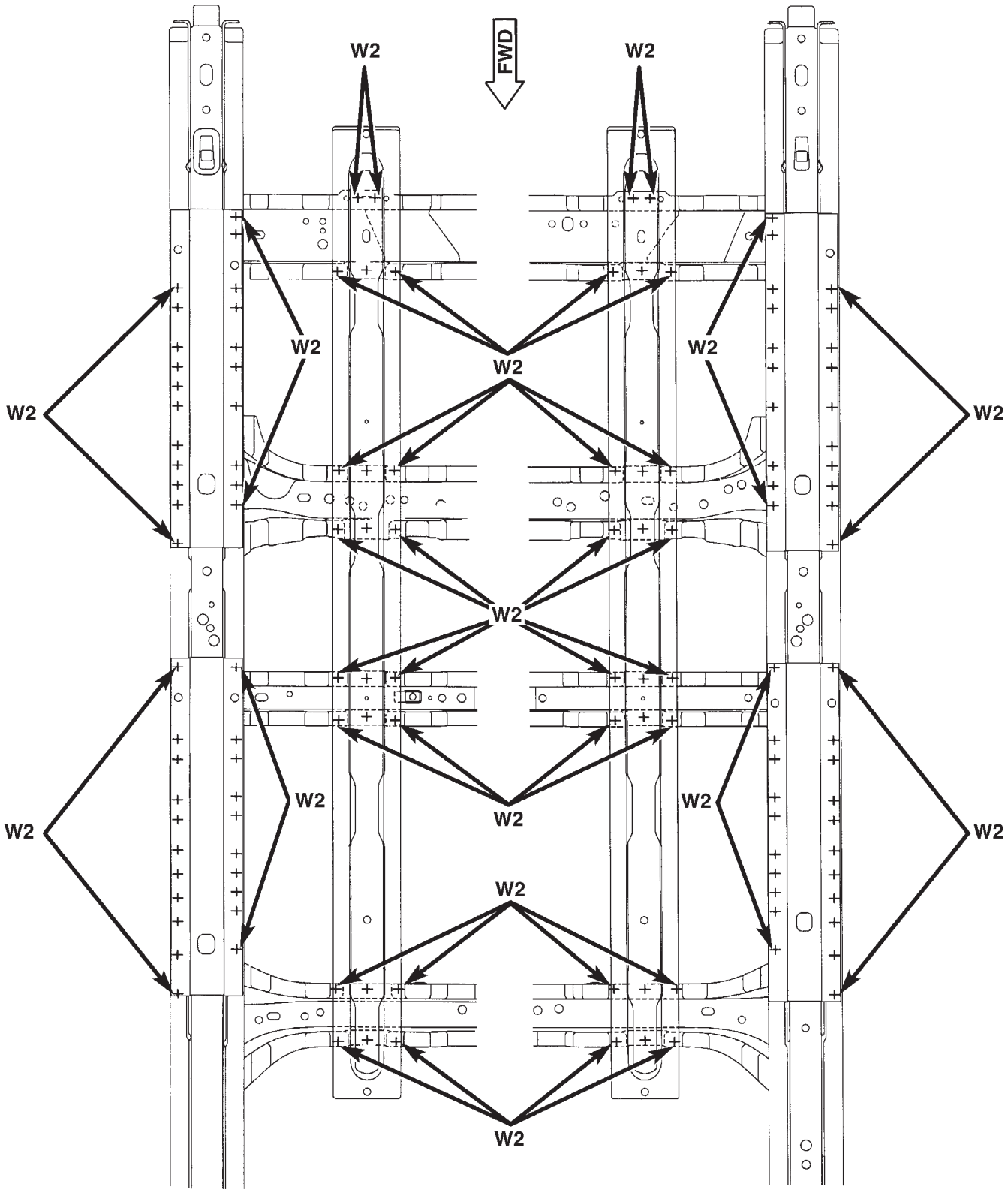

80c57be3

Fig. 80 SEAT REINFORCEMENT CROSS MEMBERS - SHORT WHEEL BASE

WELD LOCATIONS (Continued)

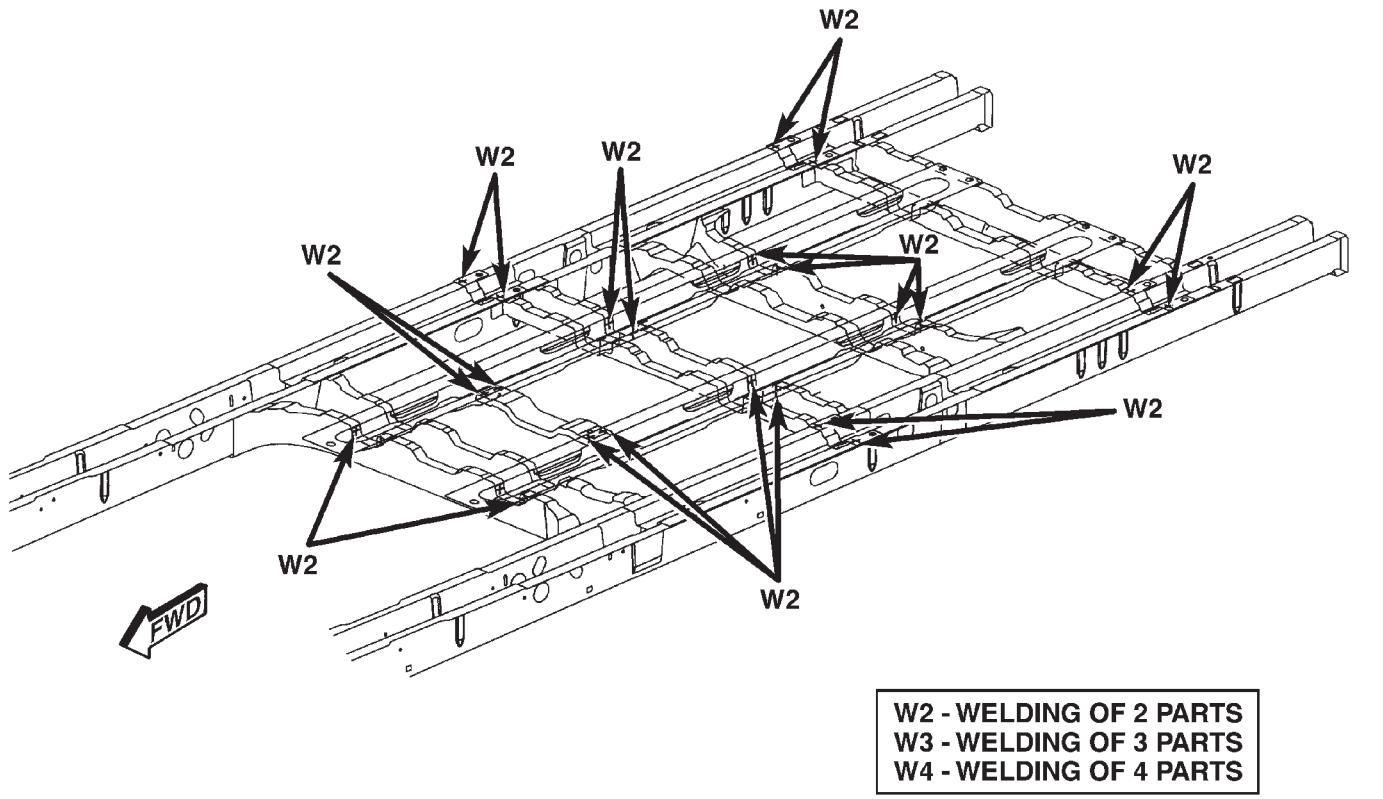

Fig. 81 CENTER CONSOLE REINFORCEMENT - SHORT WHEEL BASE

WELD LOCATIONS (Continued)

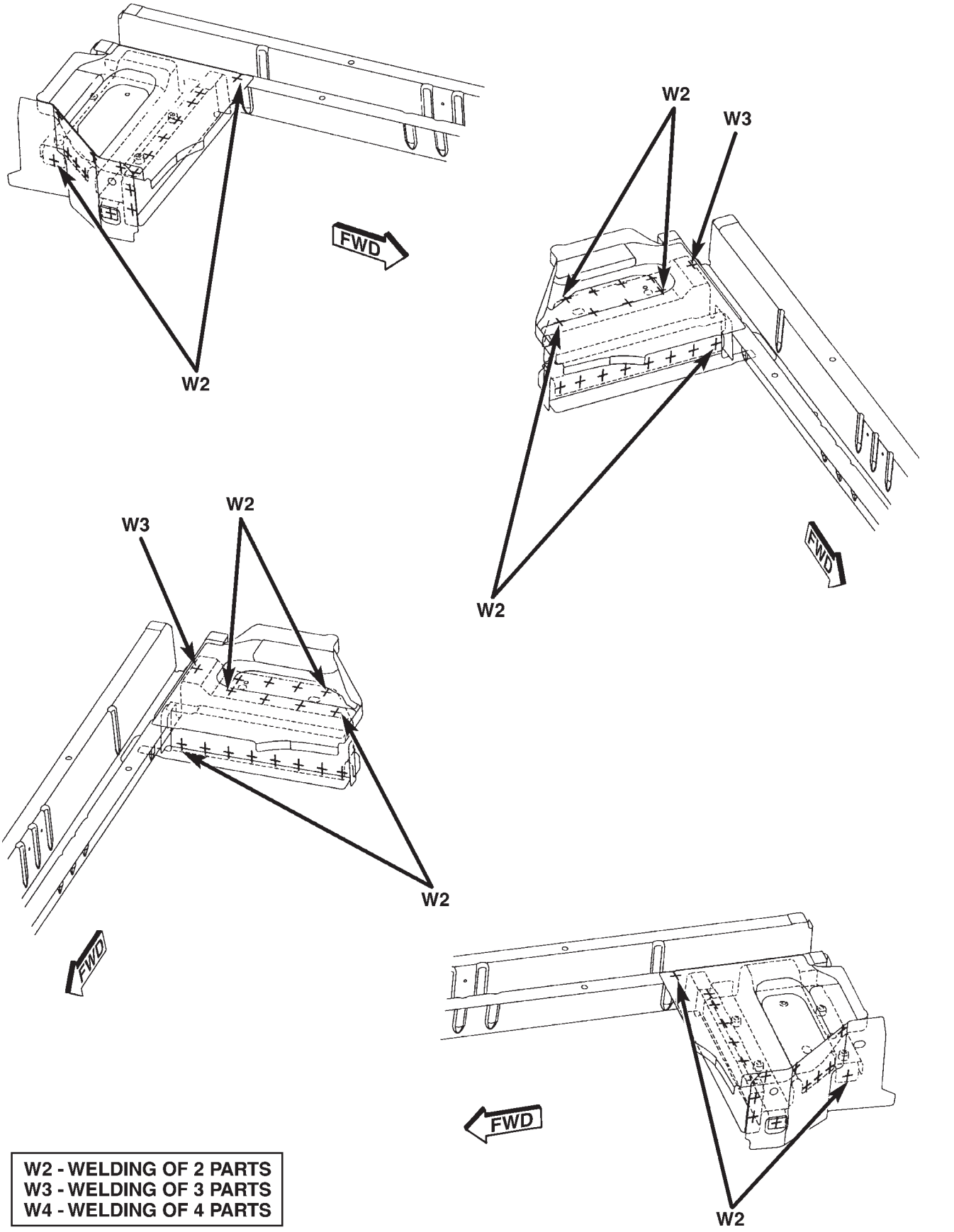

80c57be5

Fig. 82 REAR SUSPENSION HANGER BRACKETS - SHORT WHEEL BASE

WELD LOCATIONS (Continued)

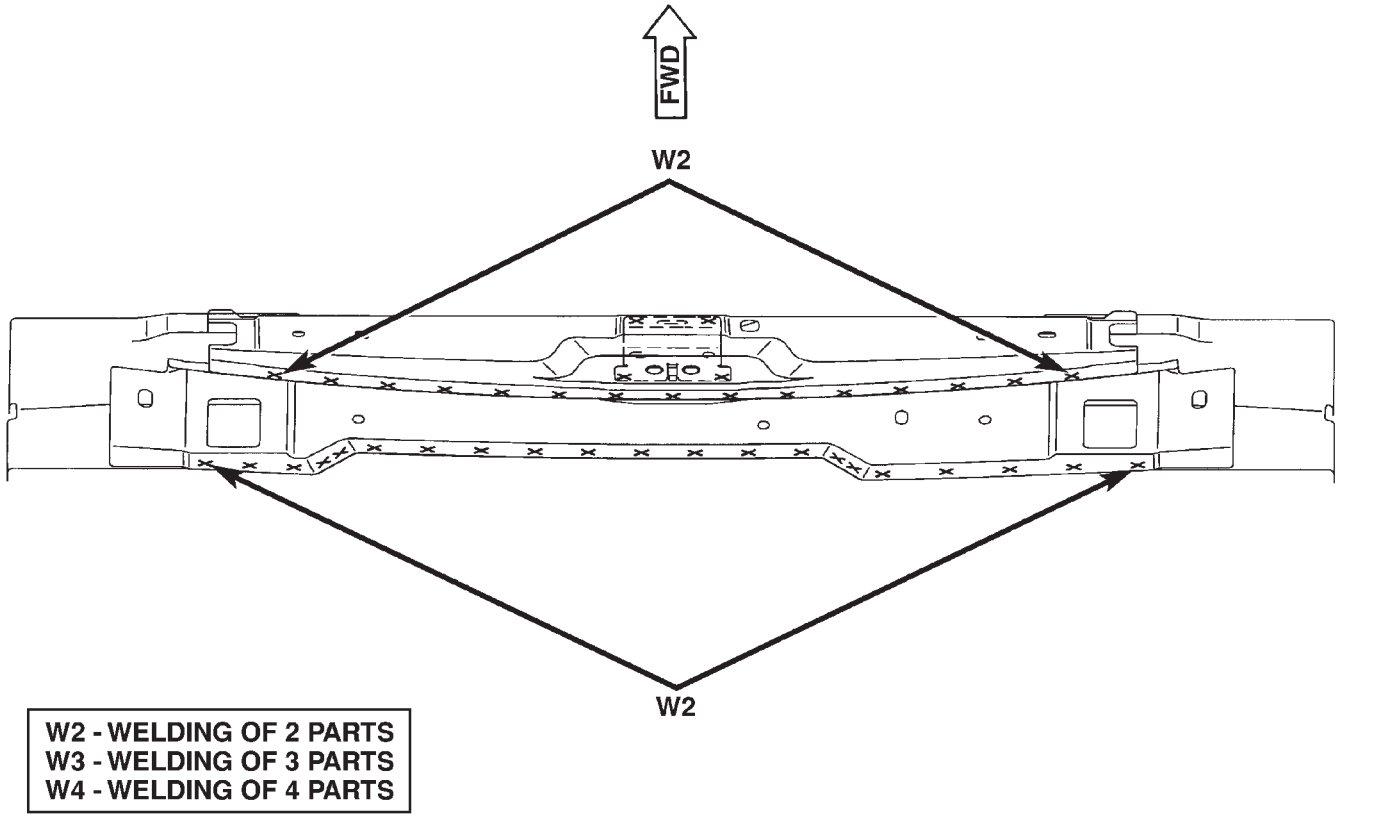

Fig. 83 LOWER LIFTGATE PANEL LATCH REINFORCEMENT

WELD LOCATIONS (Continued)

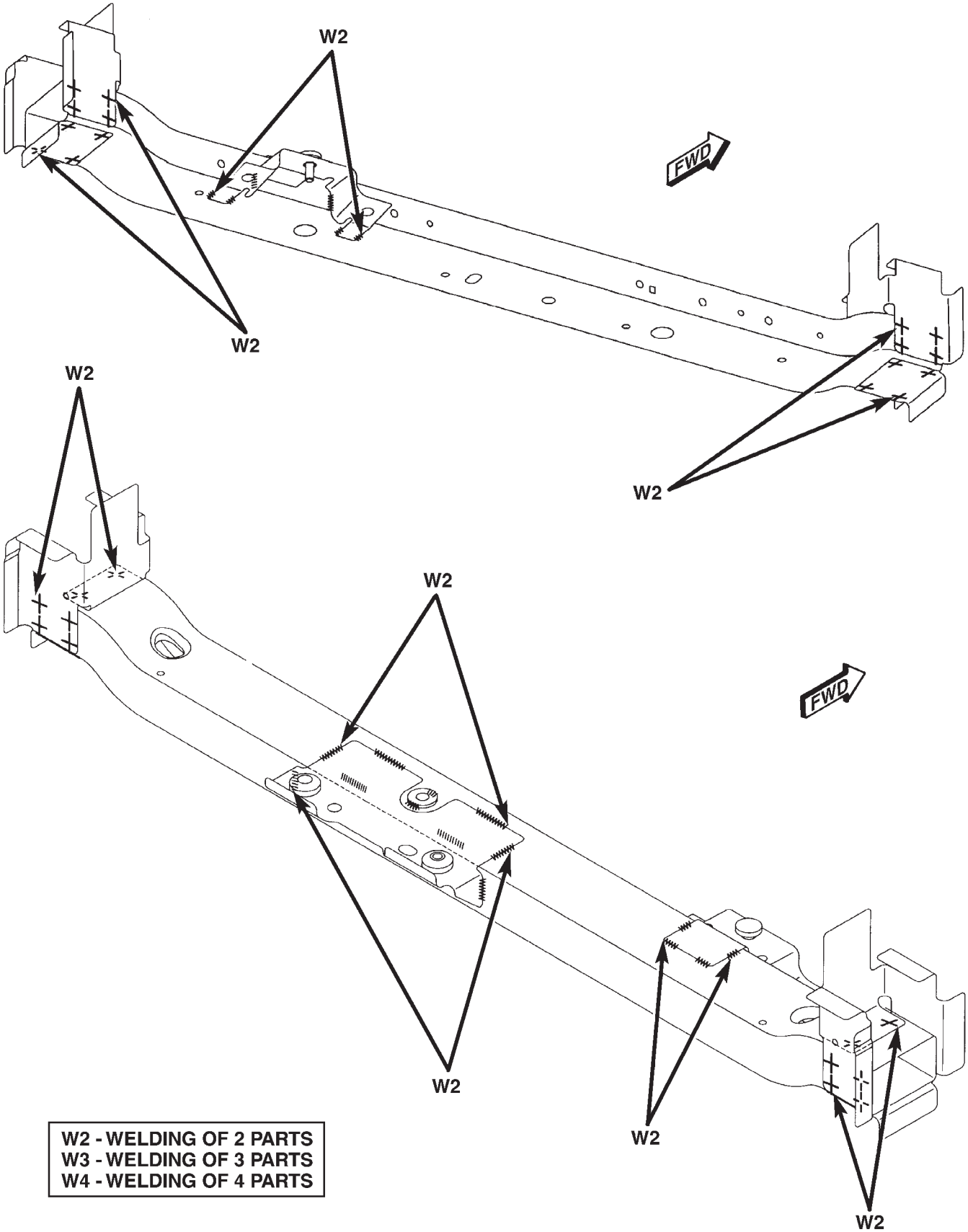

80c5fd75

Fig. 84 ENGINE MOUNTING PLATE AND TOW BRACKET

WELD LOCATIONS (Continued)

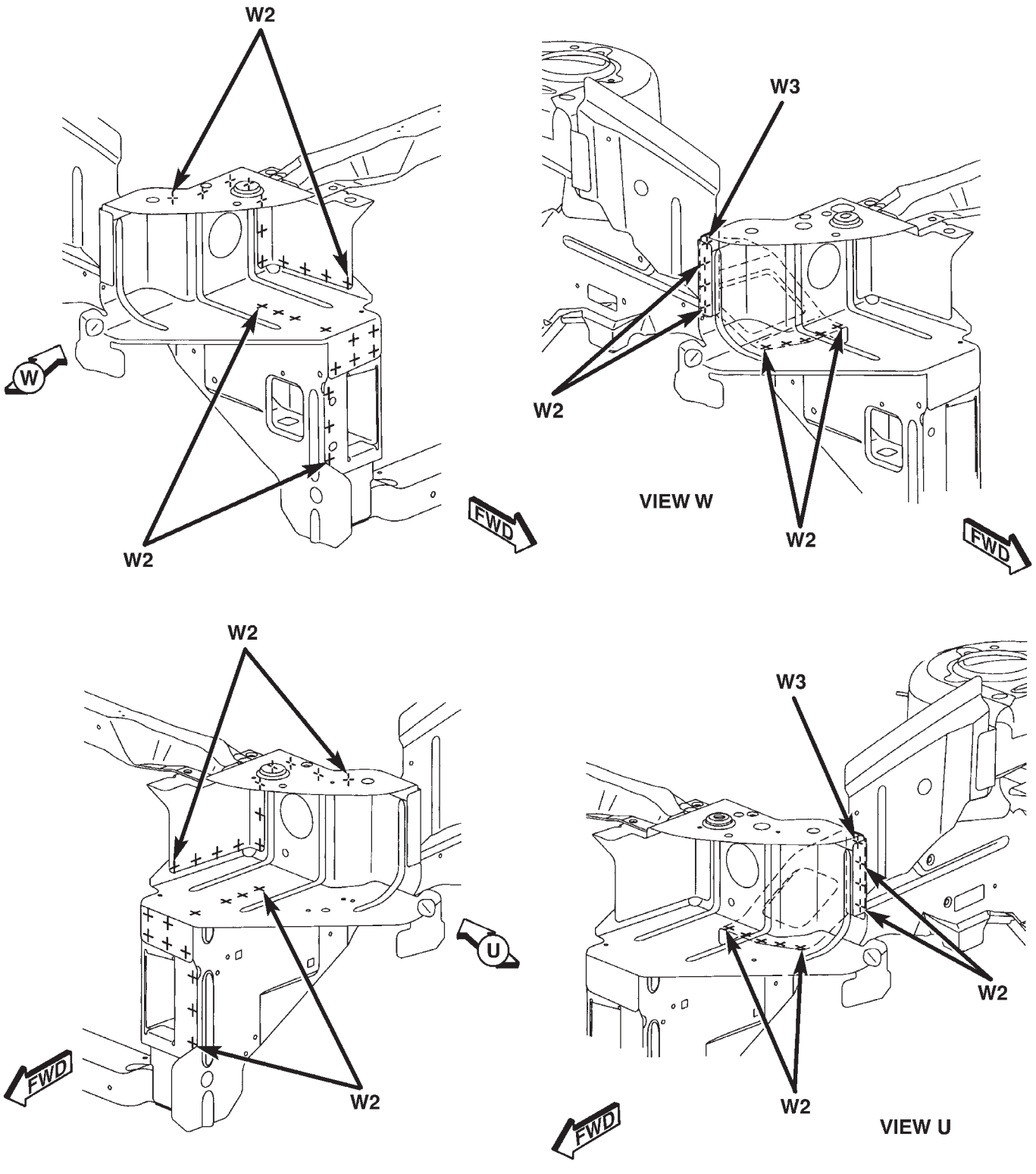

80c5fd76

Fig. 85 HEADLAMP MOUNTING PLATE

WELD LOCATIONS (Continued)

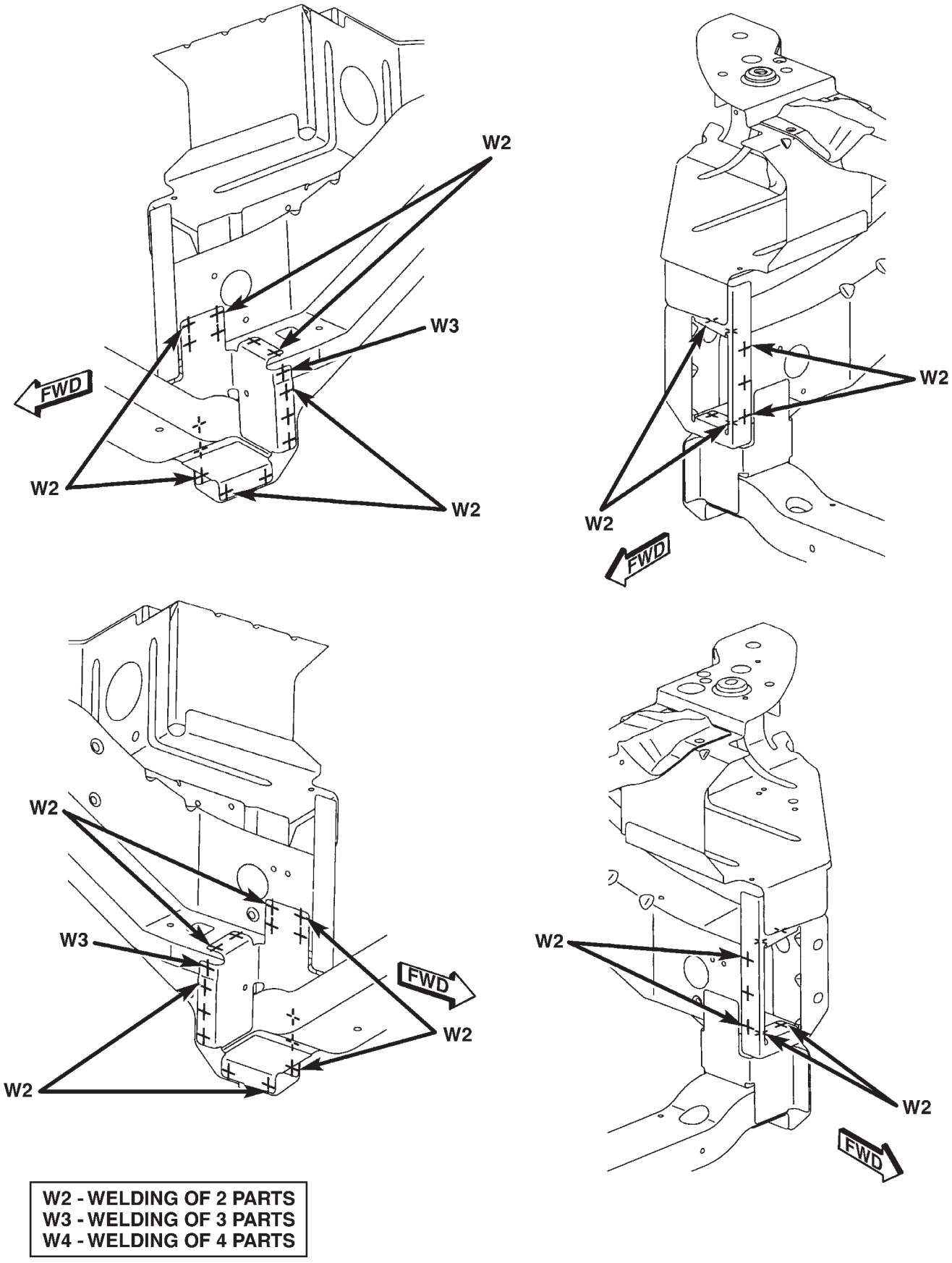

80c5fd77

Fig. 86 LOWER RADIATOR CROSS MEMBER BRACKETS

WELD LOCATIONS (Continued)

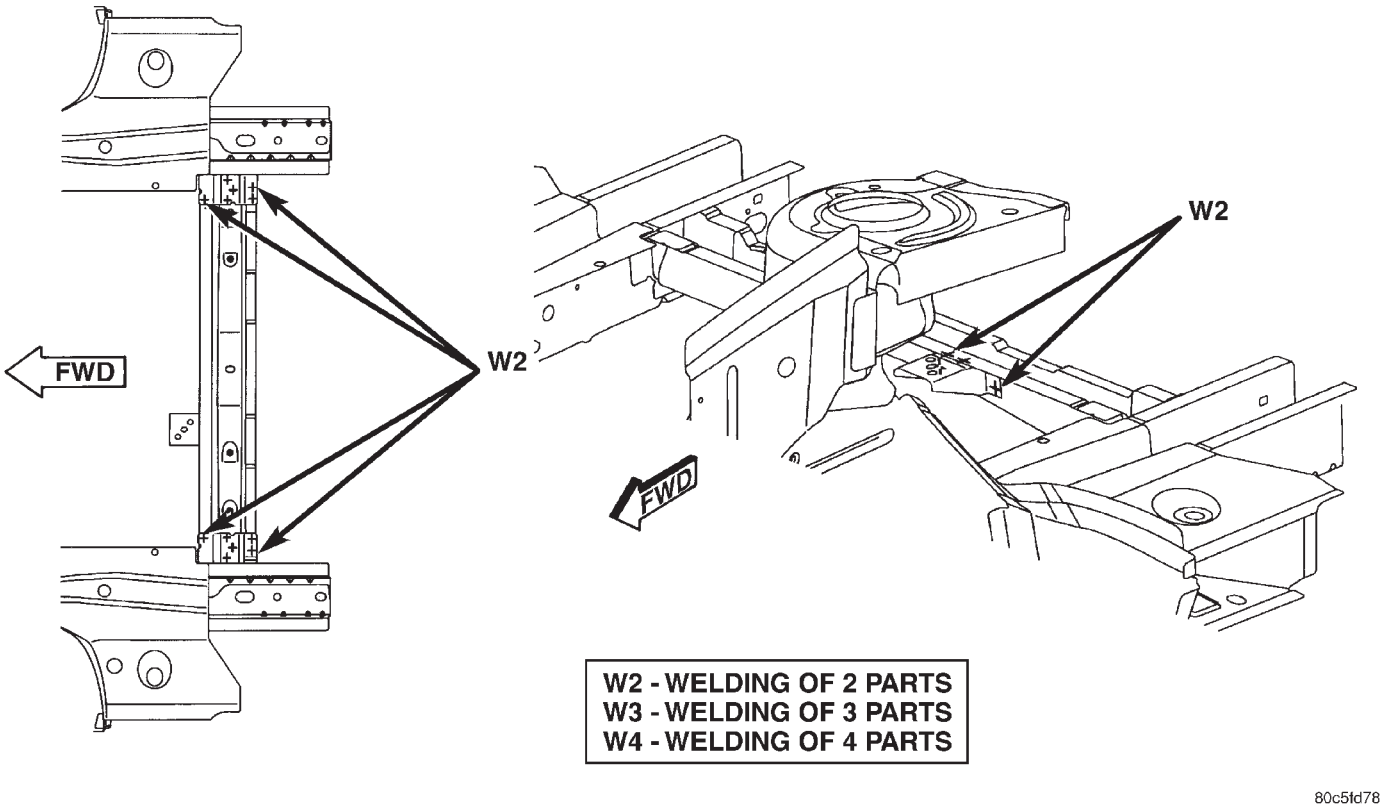

Fig. 87 CROSS MEMBER EXTENSIONS

WELD LOCATIONS (Continued)

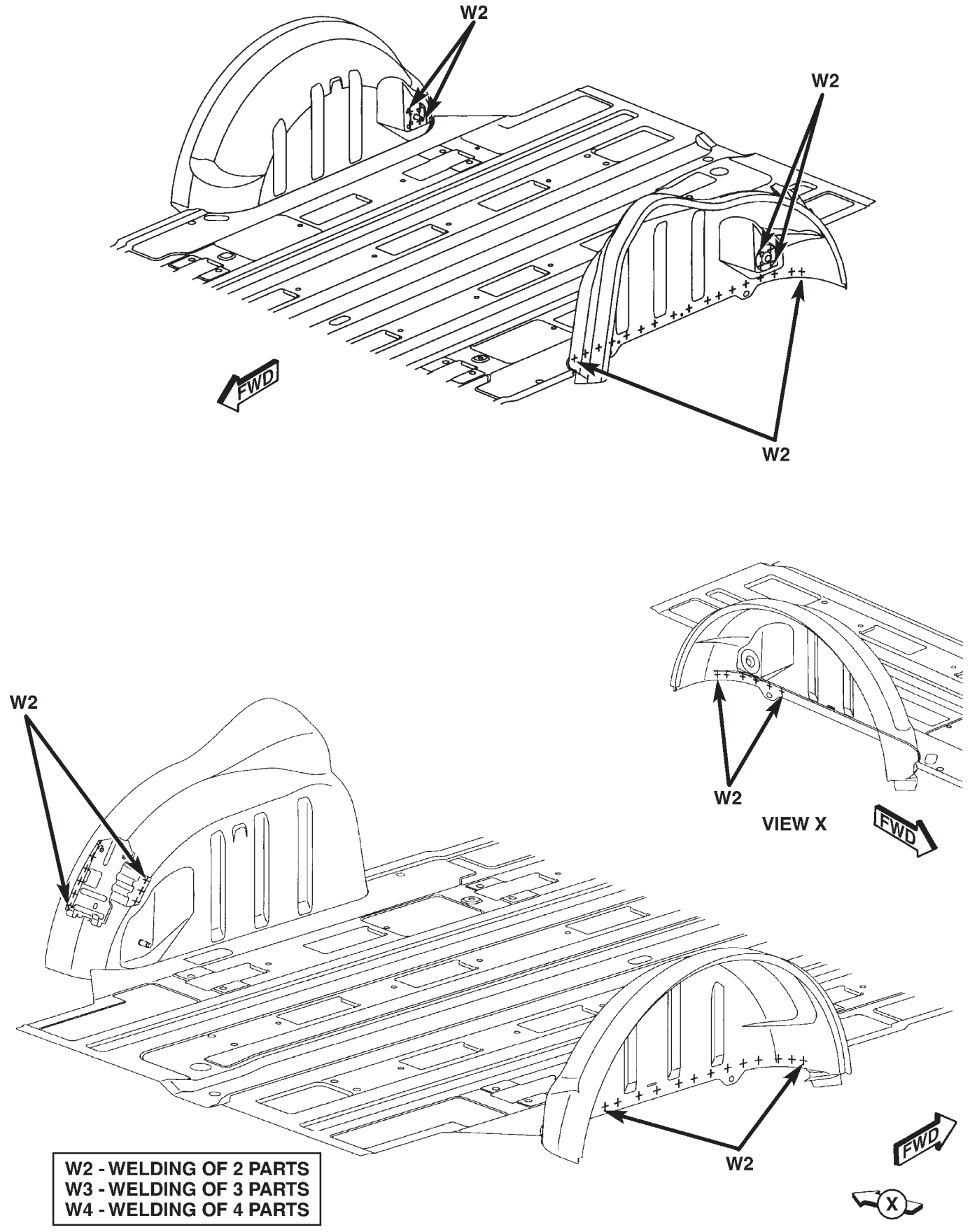

Fig. 88 JACK MOUNTING BRACKET - LONG WHEEL BASE SHOWN, SHORT SIMILAR

WELD LOCATIONS (Continued)

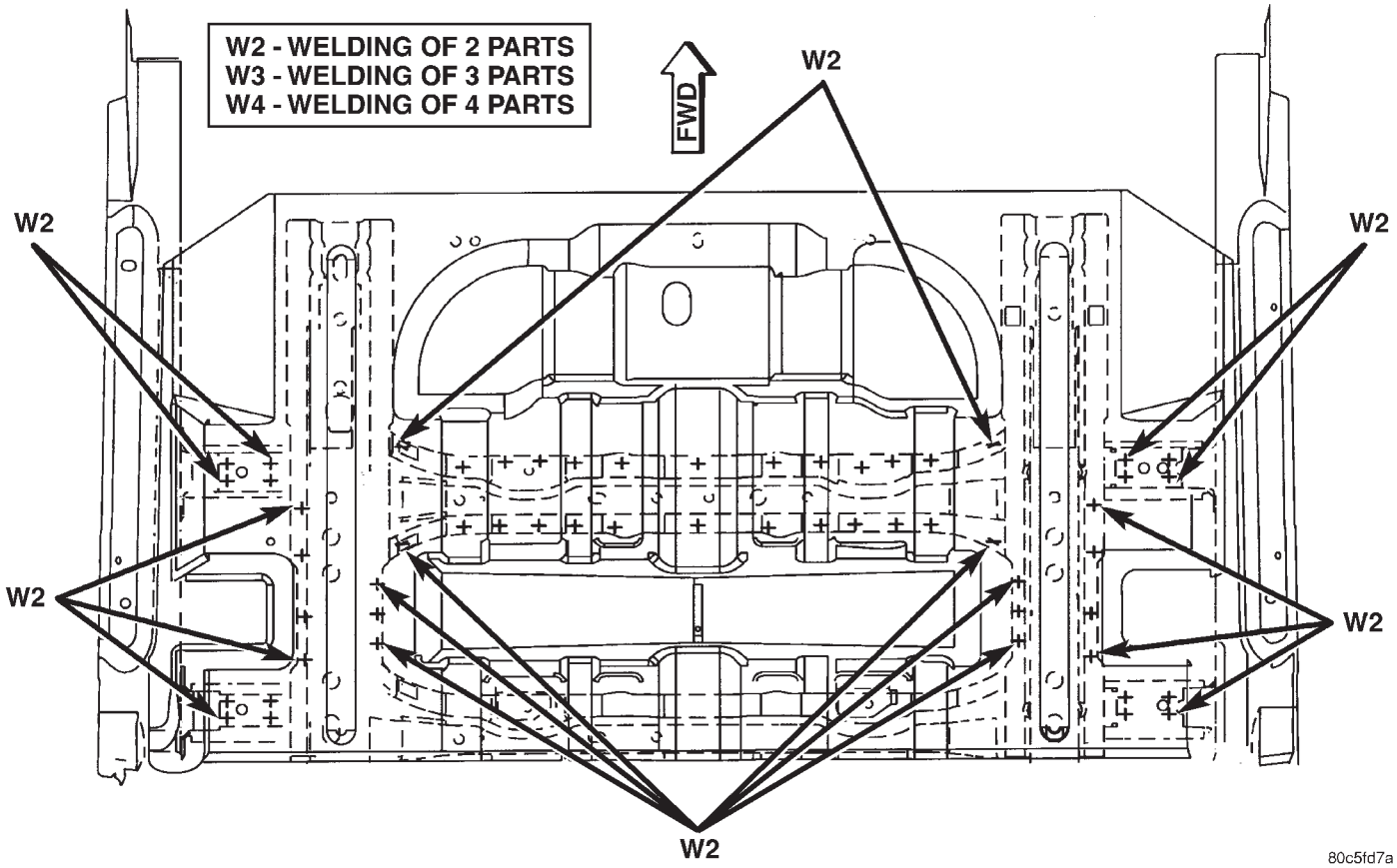

Fig. 89 FRONT SEAT CROSS MEMBER - LONG WHEELBASE ONLY

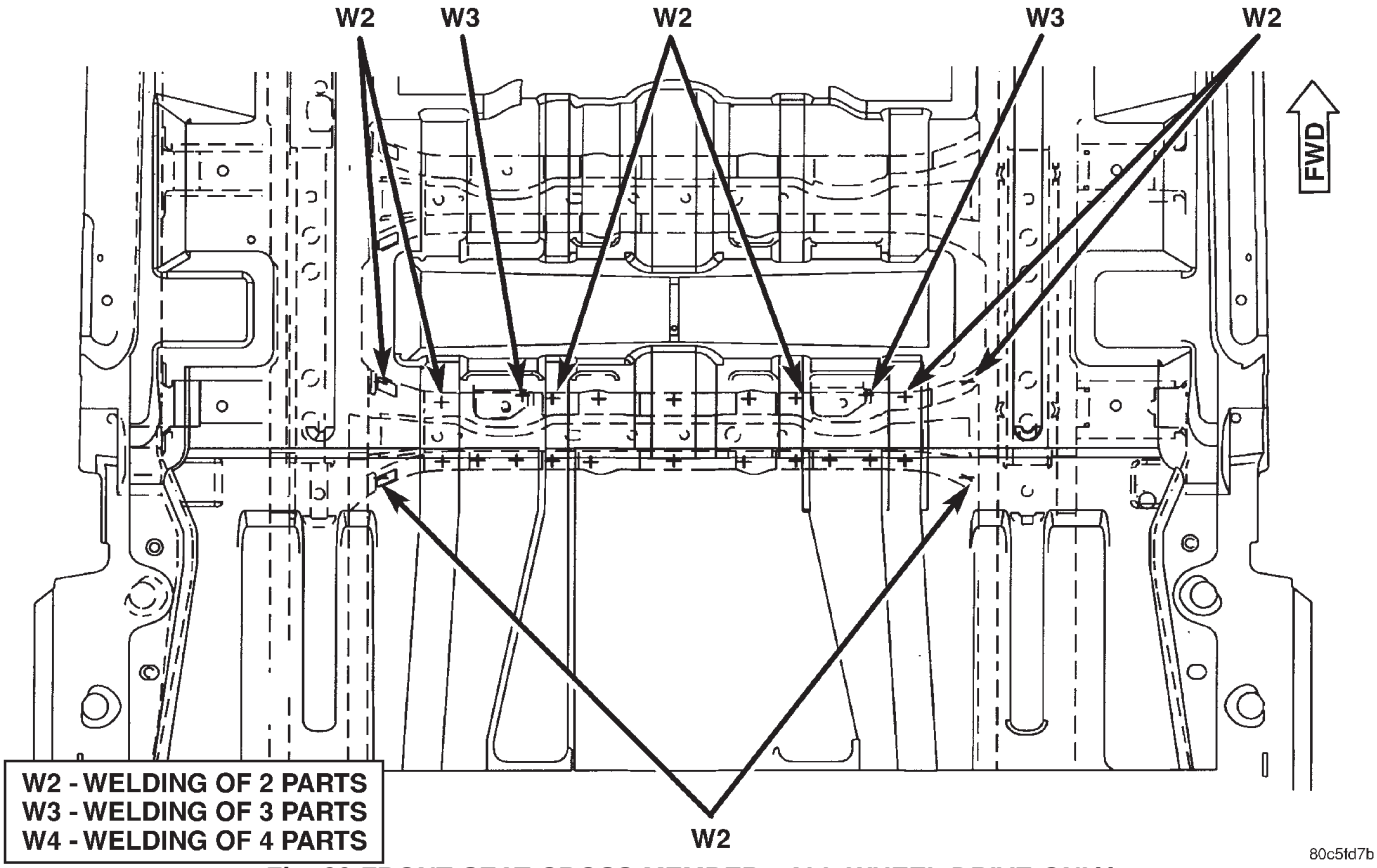

Fig. 90 FRONT SEAT CROSS MEMBER - ALL WHEEL DRIVE ONLY

WELD LOCATIONS (Continued)

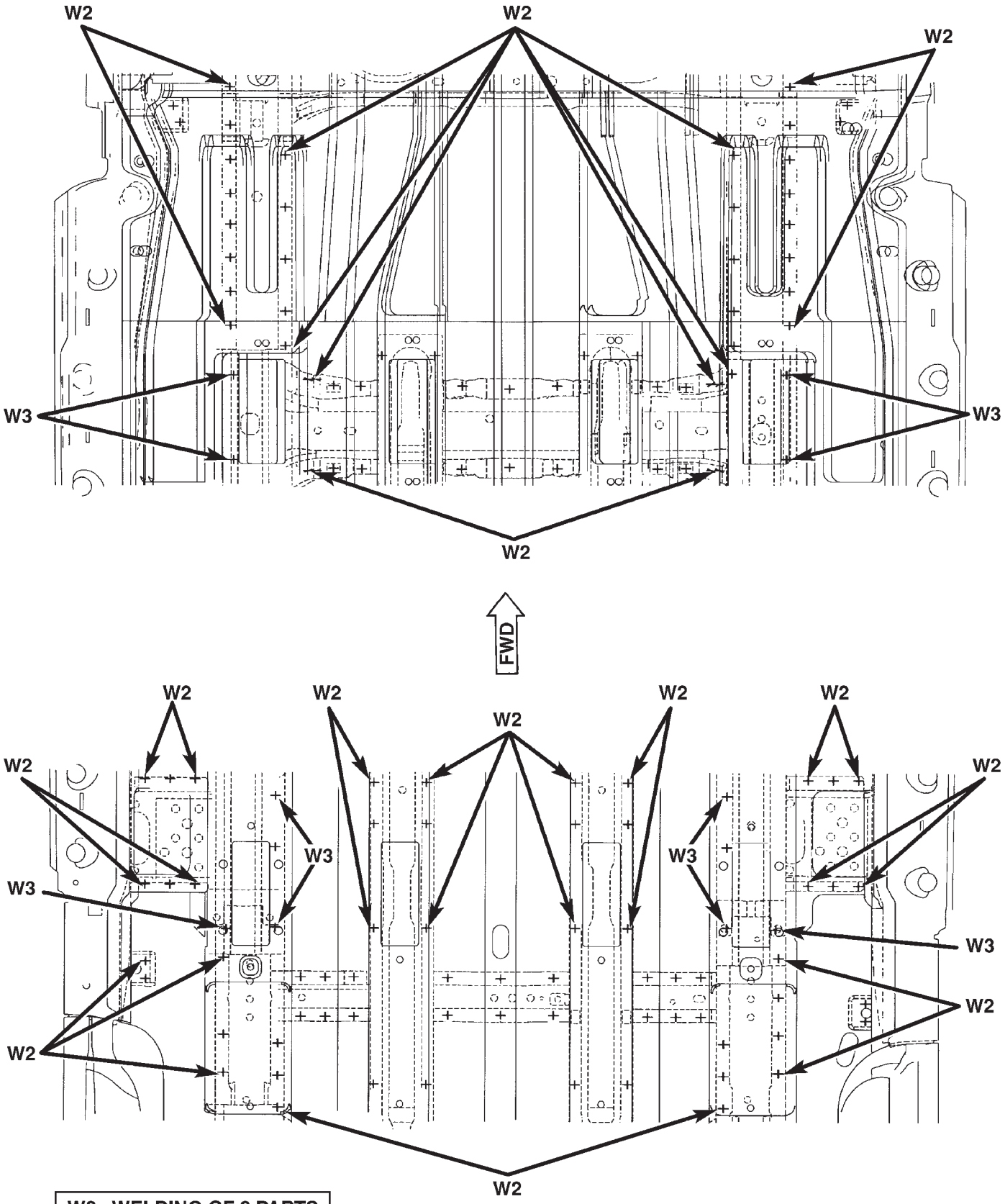

80c5fd7c

Fig. 91 FUEL TANK SUPPORT CROSS MEMBERS - LONG WHEEL BASE ONLY

WELD LOCATIONS (Continued)

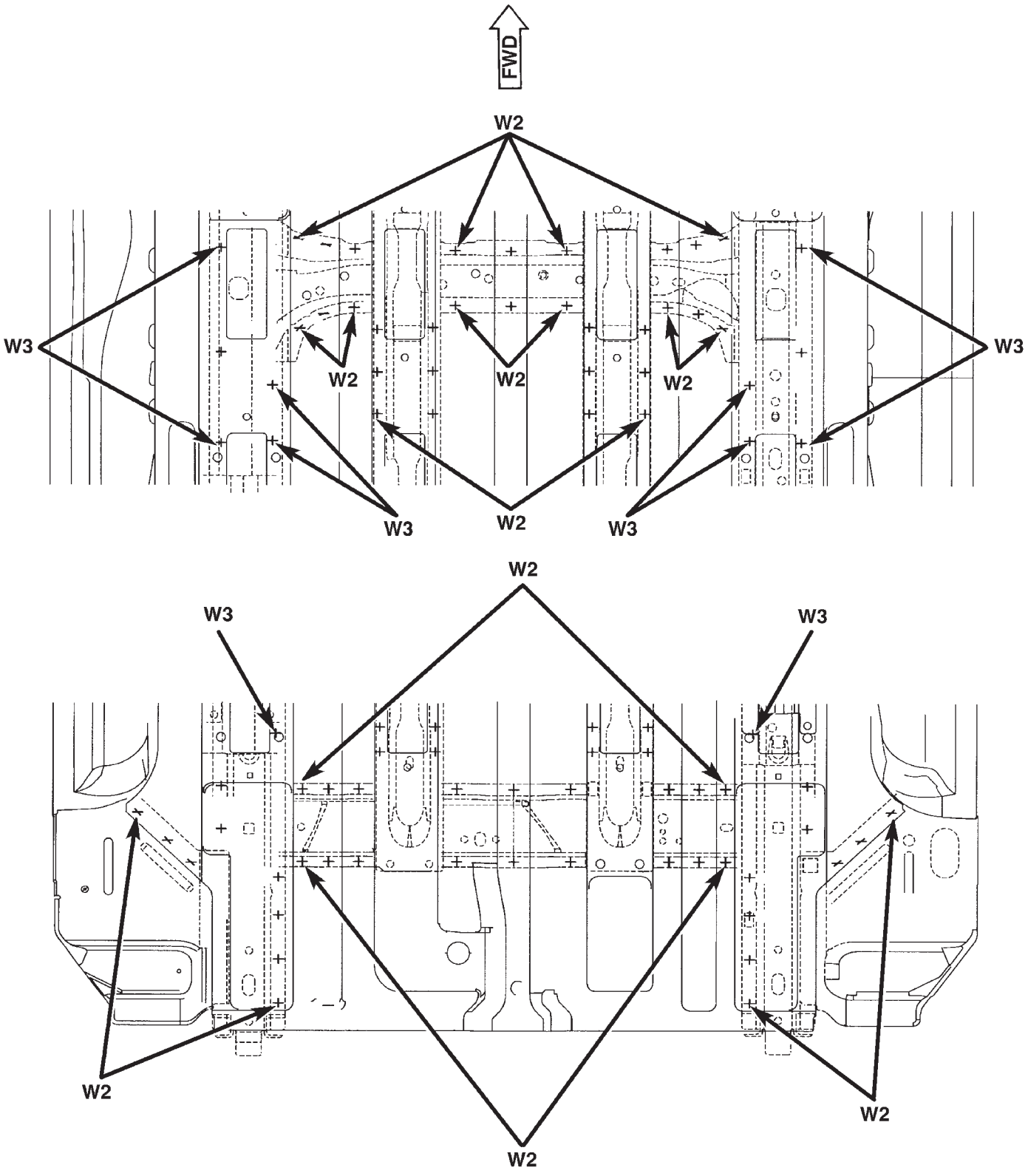

W2 - WELDING OF 2 PARTS
W3 - WELDING OF 3 PARTS
W4 - WELDING OF 4 PARTS

80c5fe9e

Fig. 92 REAR SUPPORT AND TIRE STOWAGE CROSS MEMBERS - LONG WHEEL BASE ONLY

WELD LOCATIONS (Continued)

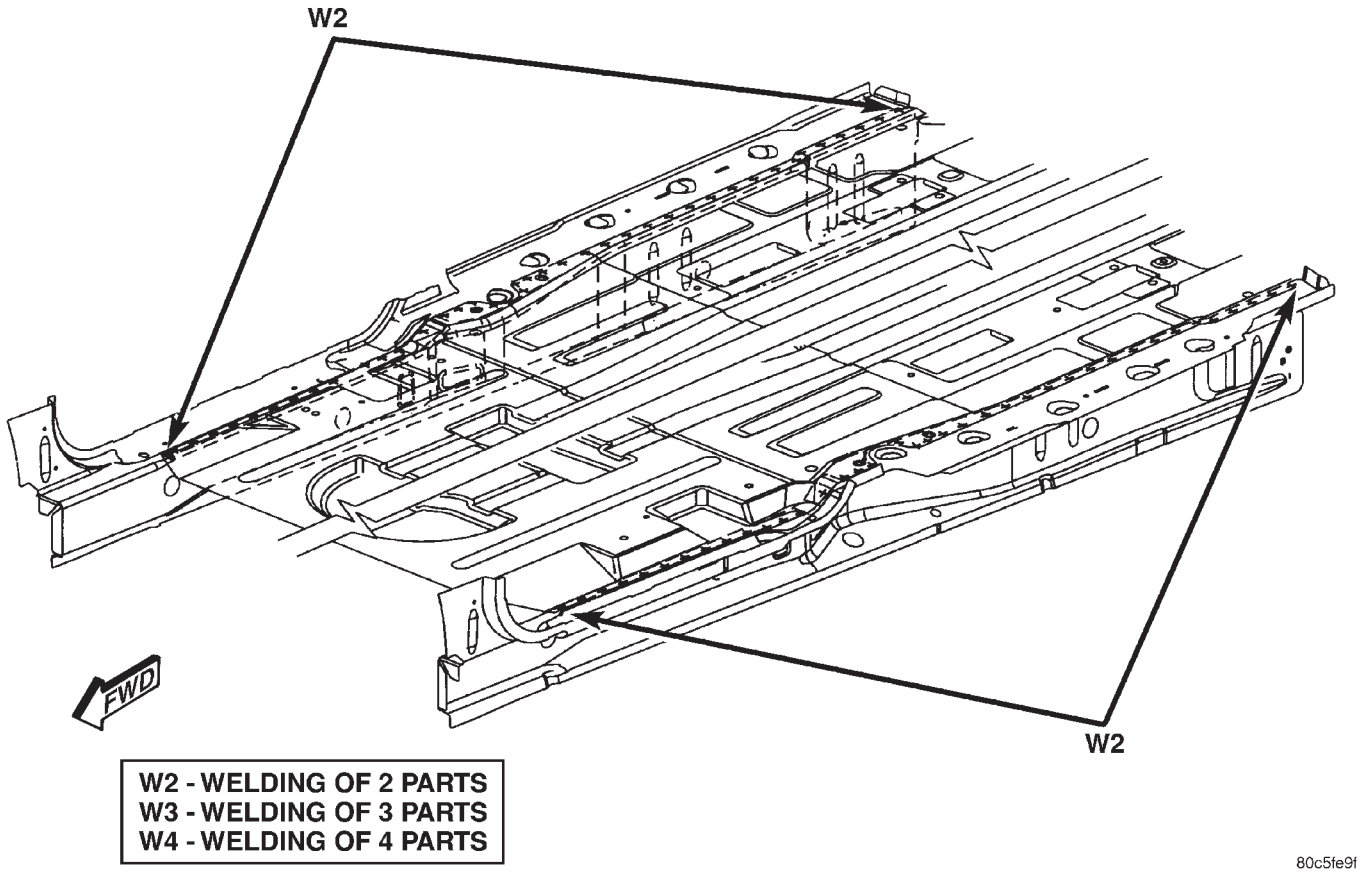

Fig. 93 INNER SIDE SILLS - LONG WHEEL BASE ONLY

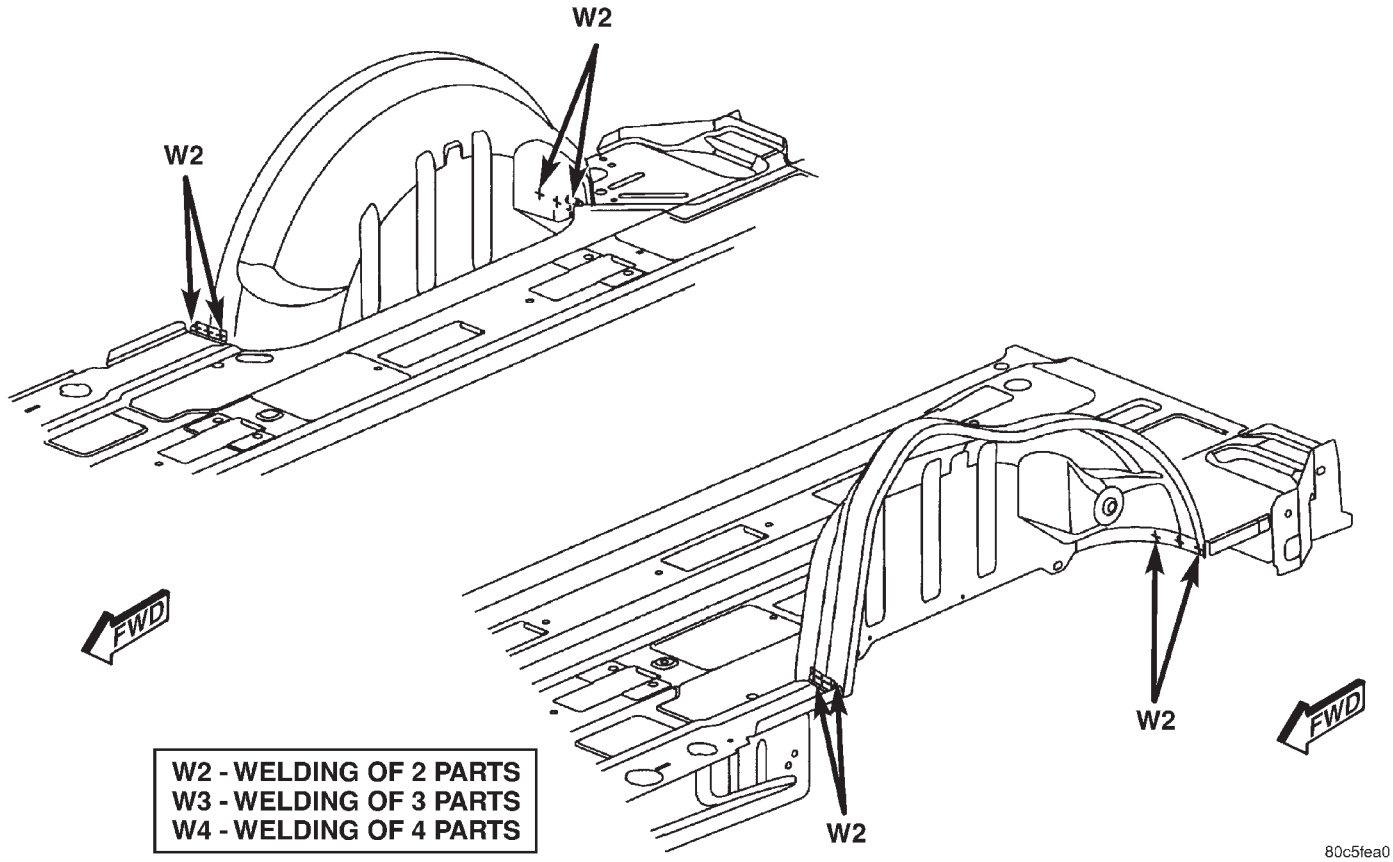

Fig. 94 WHEELHOUSES, SIDE SILLS, SUSPENSION BRACKETS - LONG WHEEL BASE ONLY

WELD LOCATIONS (Continued)

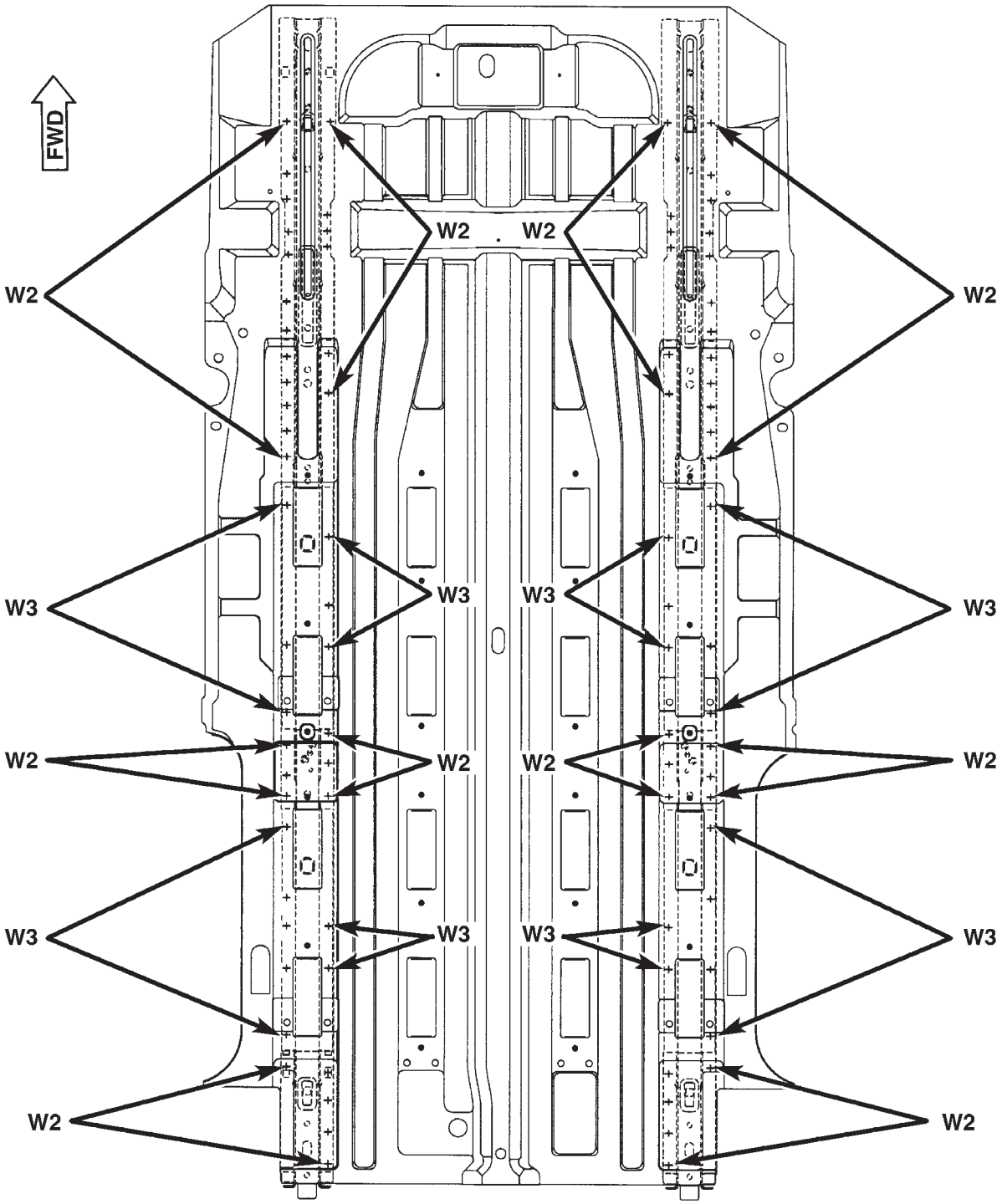

W2 - WELDING OF 2 PARTS
W3 - WELDING OF 3 PARTS
W4 - WELDING OF 4 PARTS

80c5fea1

Fig. 95 REAR SEAT REINFORCEMENTS - SHORT WHEEL BASE ONLY

WELD LOCATIONS (Continued)

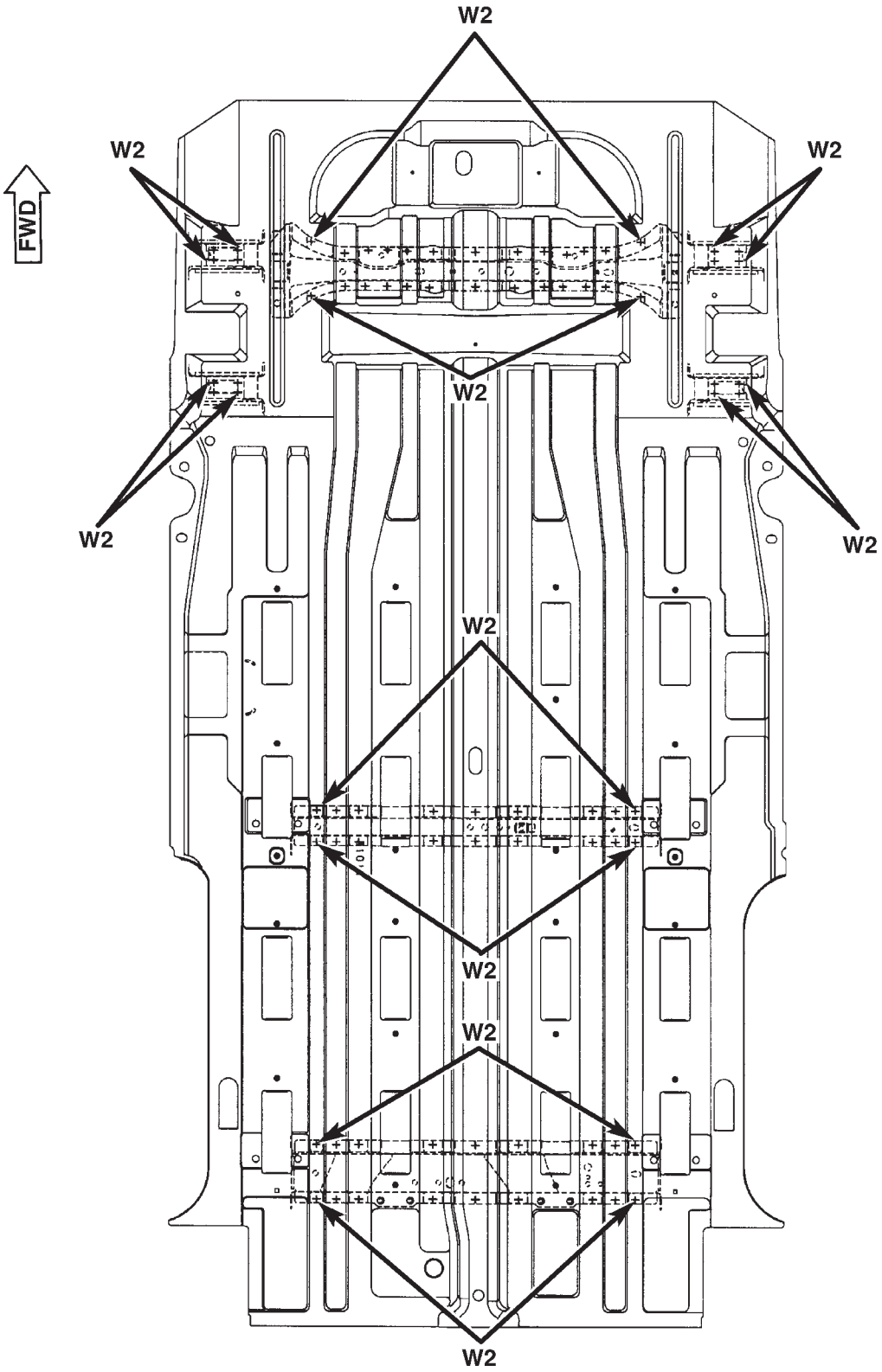

80c5fea2

Fig. 96 FUEL TANK SUPPORT AND TIRE STOWAGE - SHORT WHEEL BASE ONLY

WELD LOCATIONS (Continued)

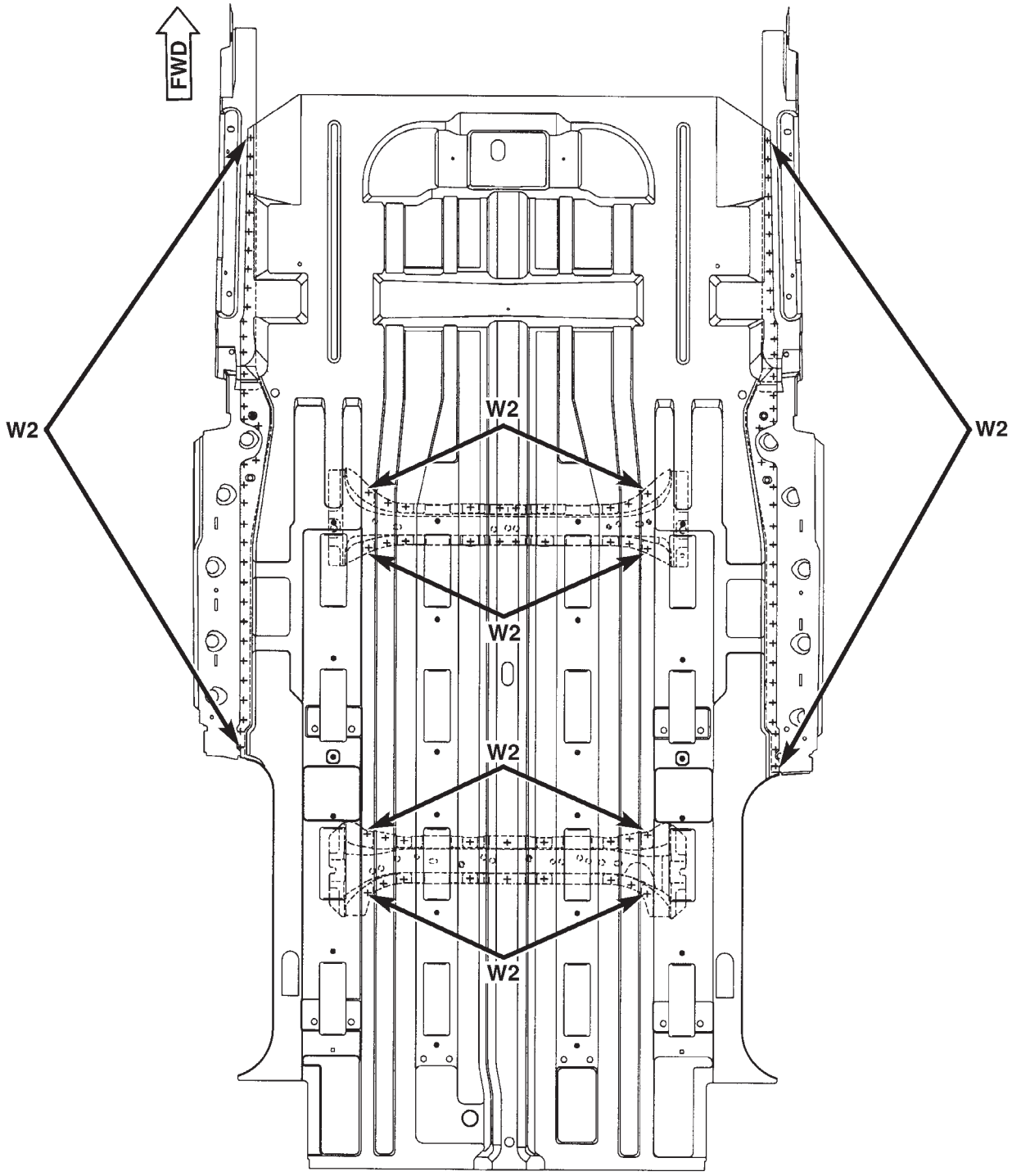

W2 - WELDING OF 2 PARTS
W3 - WELDING OF 3 PARTS
W4 - WELDING OF 4 PARTS

80c5fea3

Fig. 97 INNER SIDE SILLS - SHORT WHEEL BASE ONLY

WELD LOCATIONS (Continued)

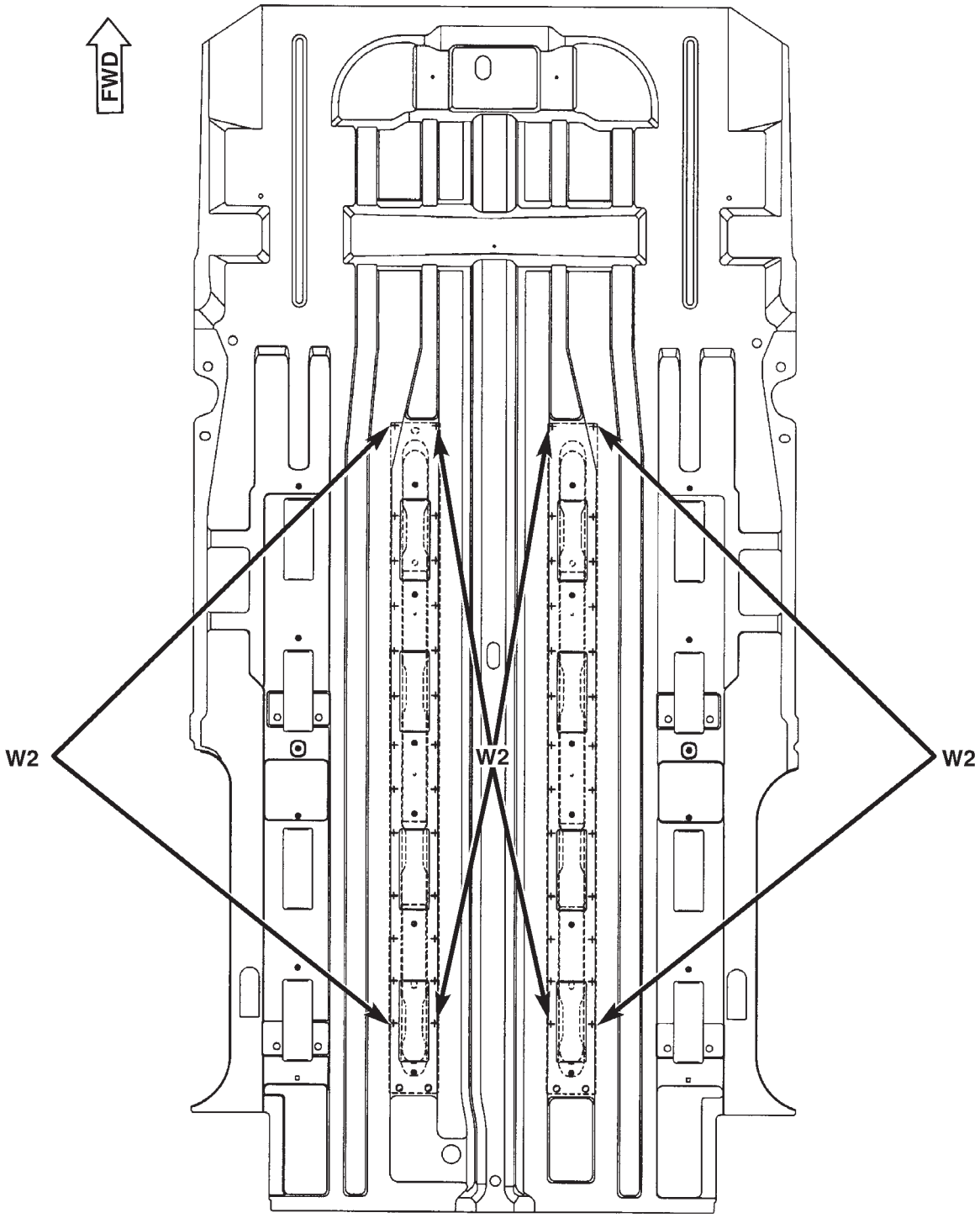

W2 - WELDING OF 2 PARTS
W3 - WELDING OF 3 PARTS
W4 - WELDING OF 4 PARTS

80c5fea4

Fig. 98 REAR SEAT REINFORCEMENTS - SHORT WHEEL BASE ONLY

WELD LOCATIONS (Continued)

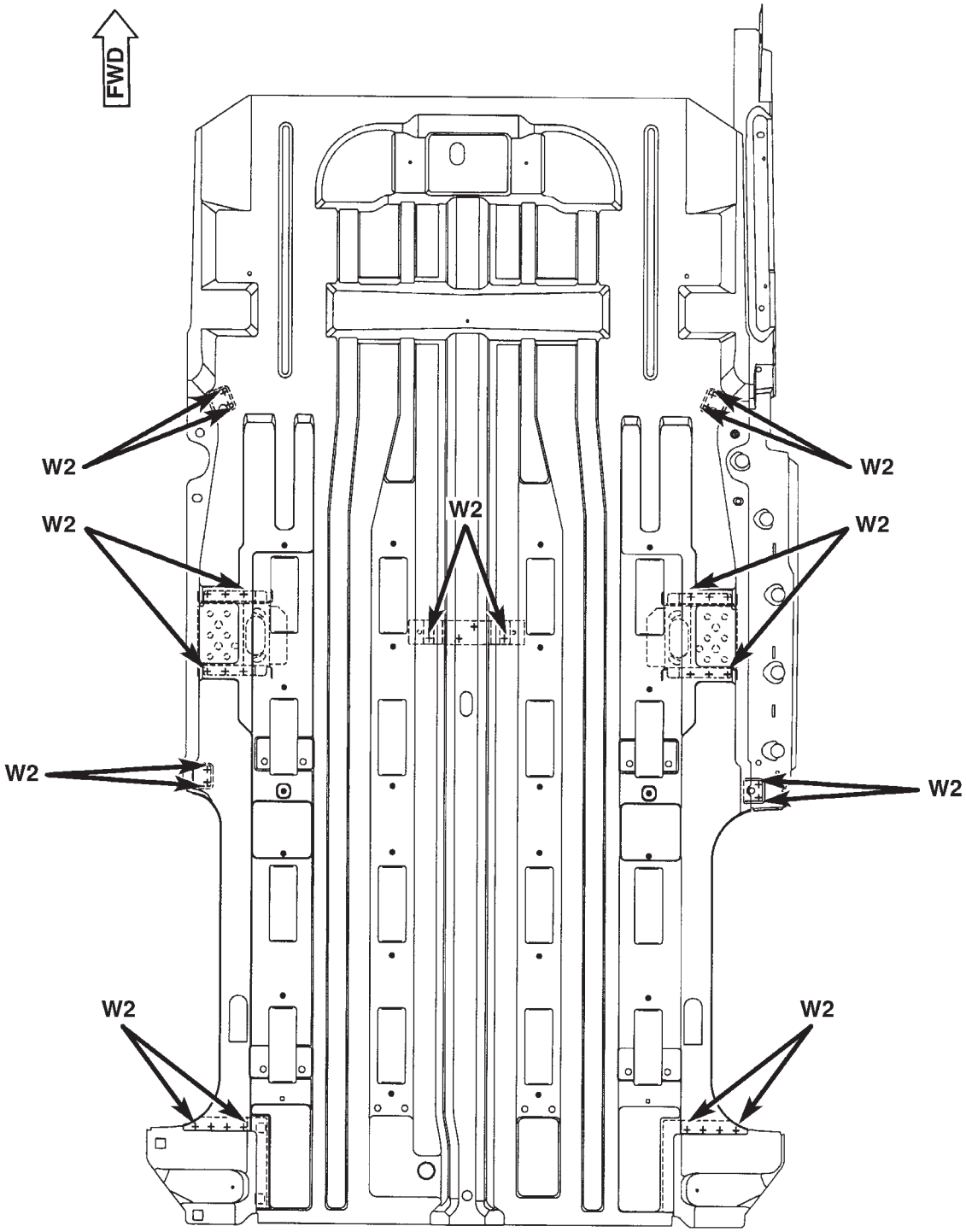

80c5fea5

Fig. 99 CENTER CONSOLE REINFORCEMENT - SHORT WHEEL BASE ONLY

WELD LOCATIONS (Continued)

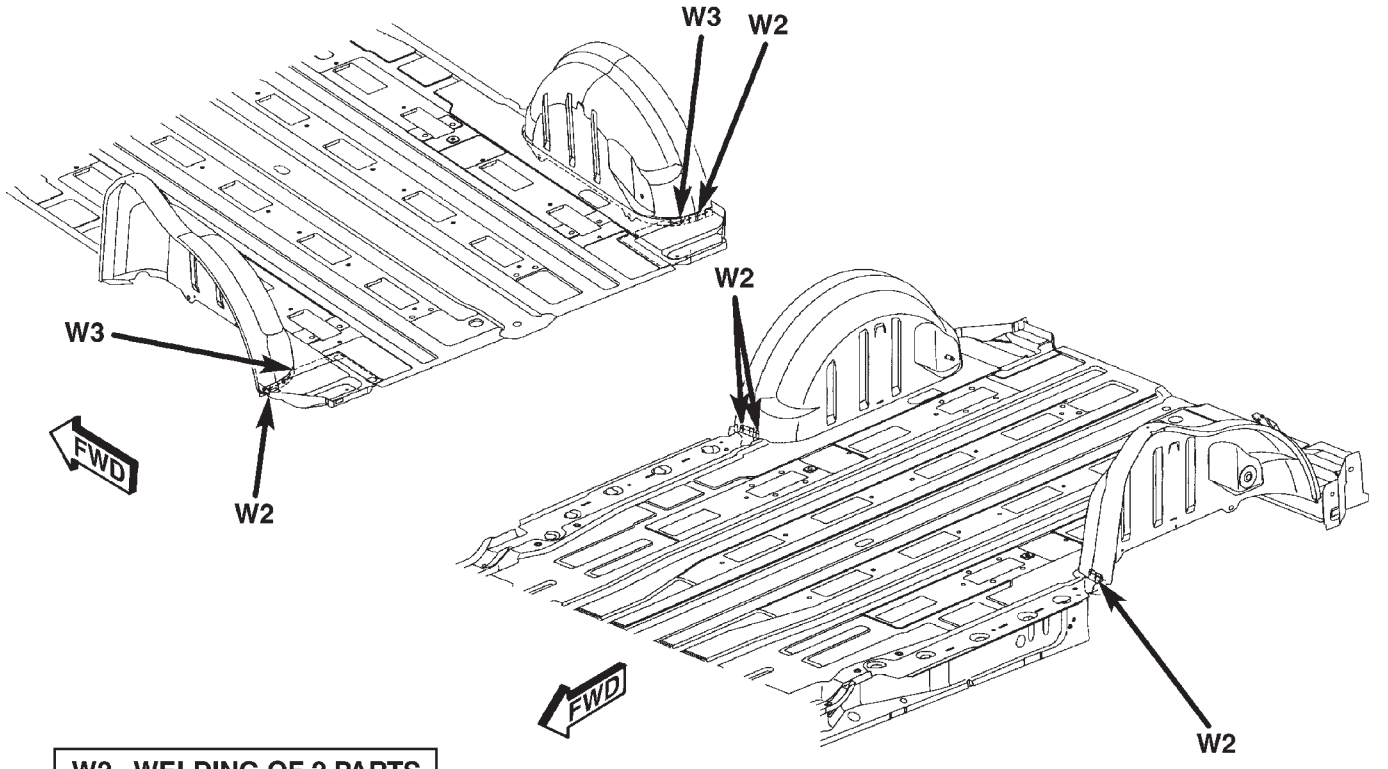

Fig. 100 WHEELHOUSES - SHORT WHEEL BASE ONLY

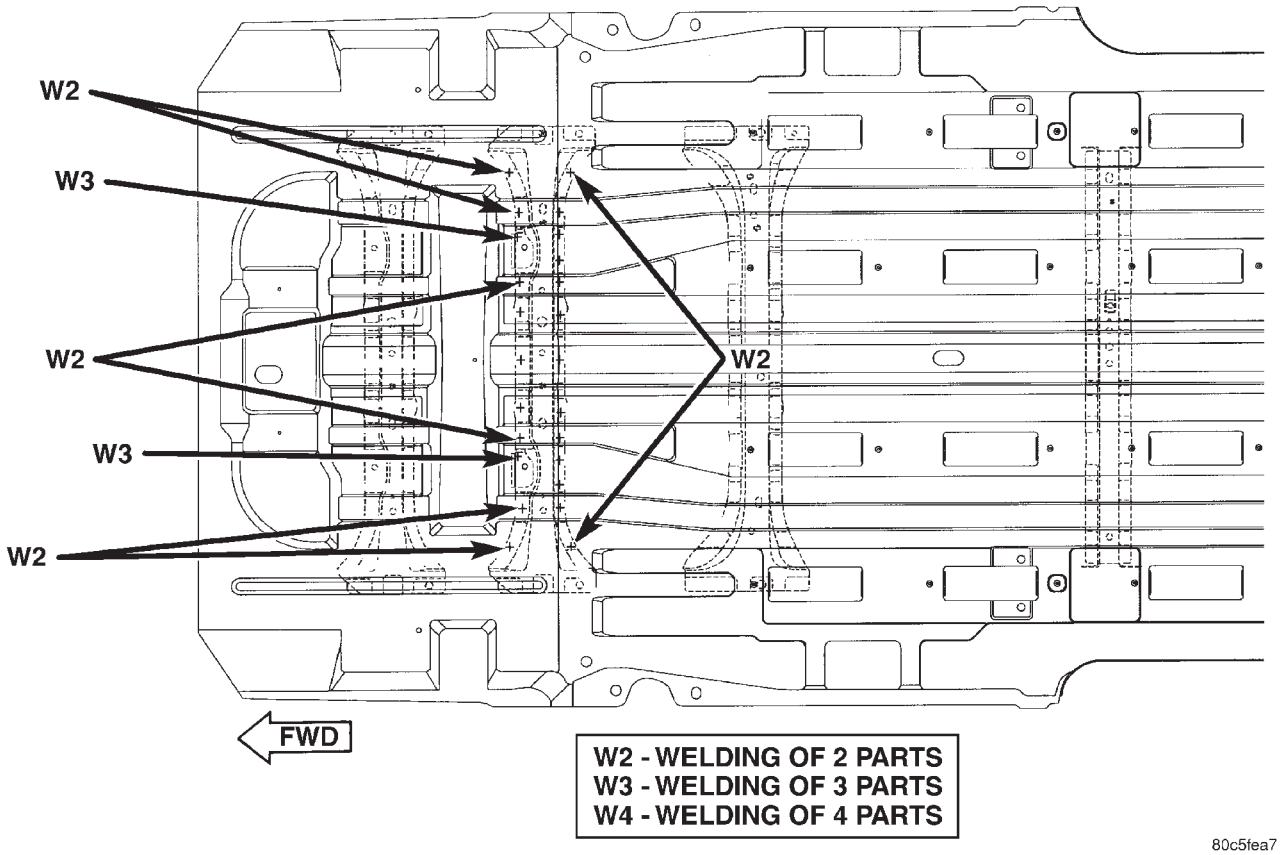

Fig. 101 FRONT SEAT CROSS MEMBER - SHORT WHEELBASE, ALL WHEEL DRIVE ONLY

WELD LOCATIONS (Continued)

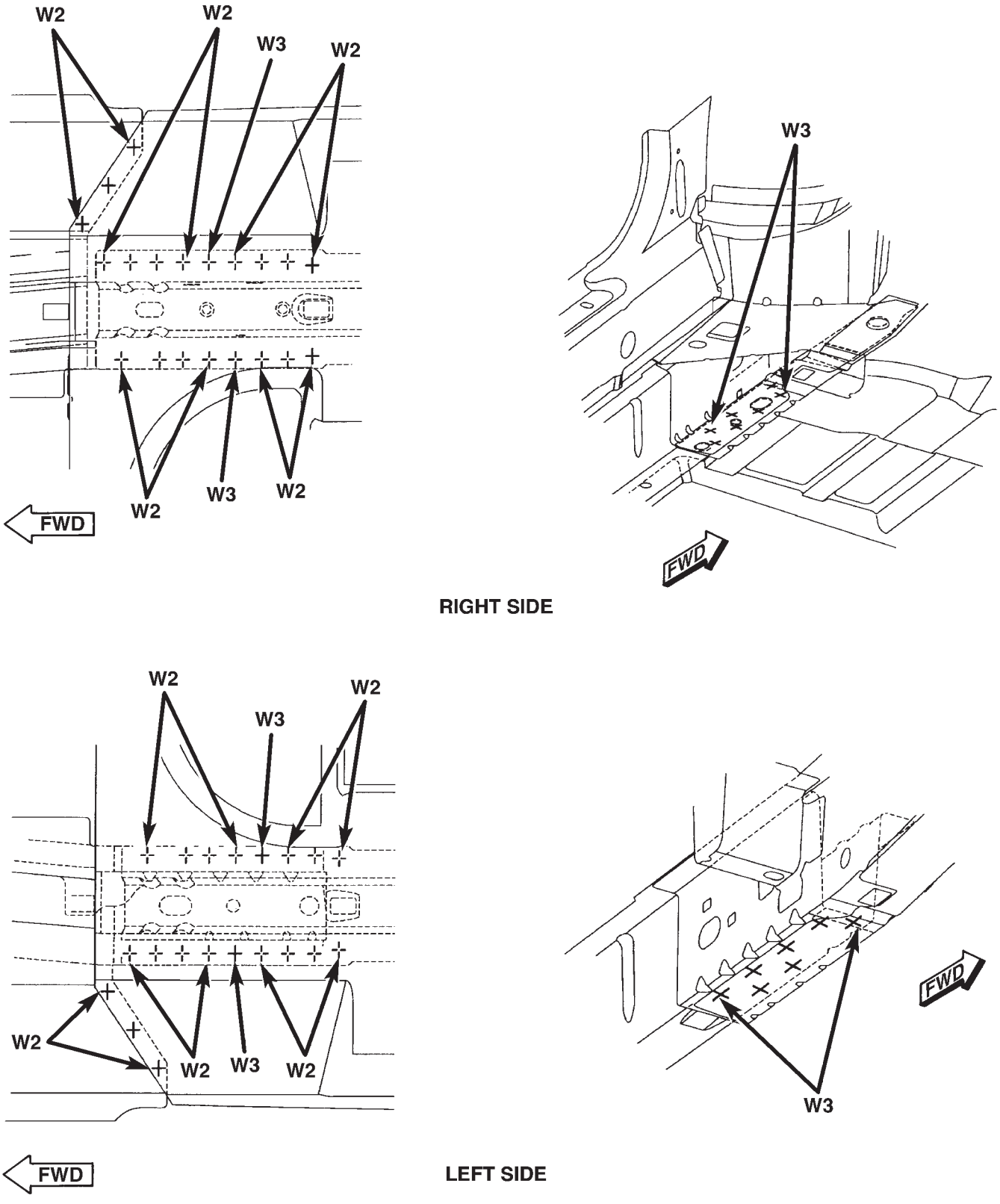

Fig. 102 FLOOR PAN SIDE RAIL - LONG WHEEL BASE ONLY

WELD LOCATIONS (Continued)

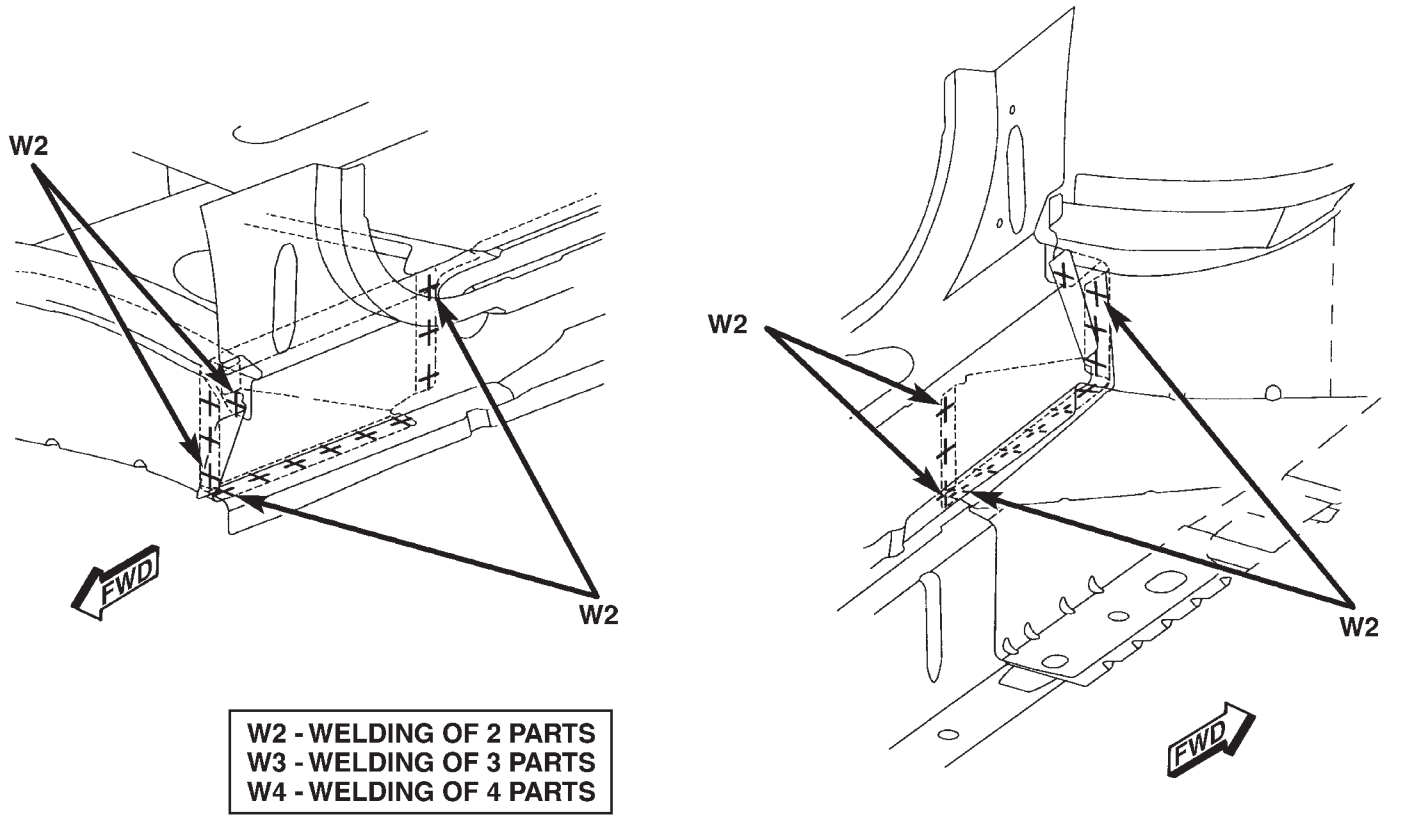

Fig. 103 INNER BODY SIDE SILL REINFORCEMENTS

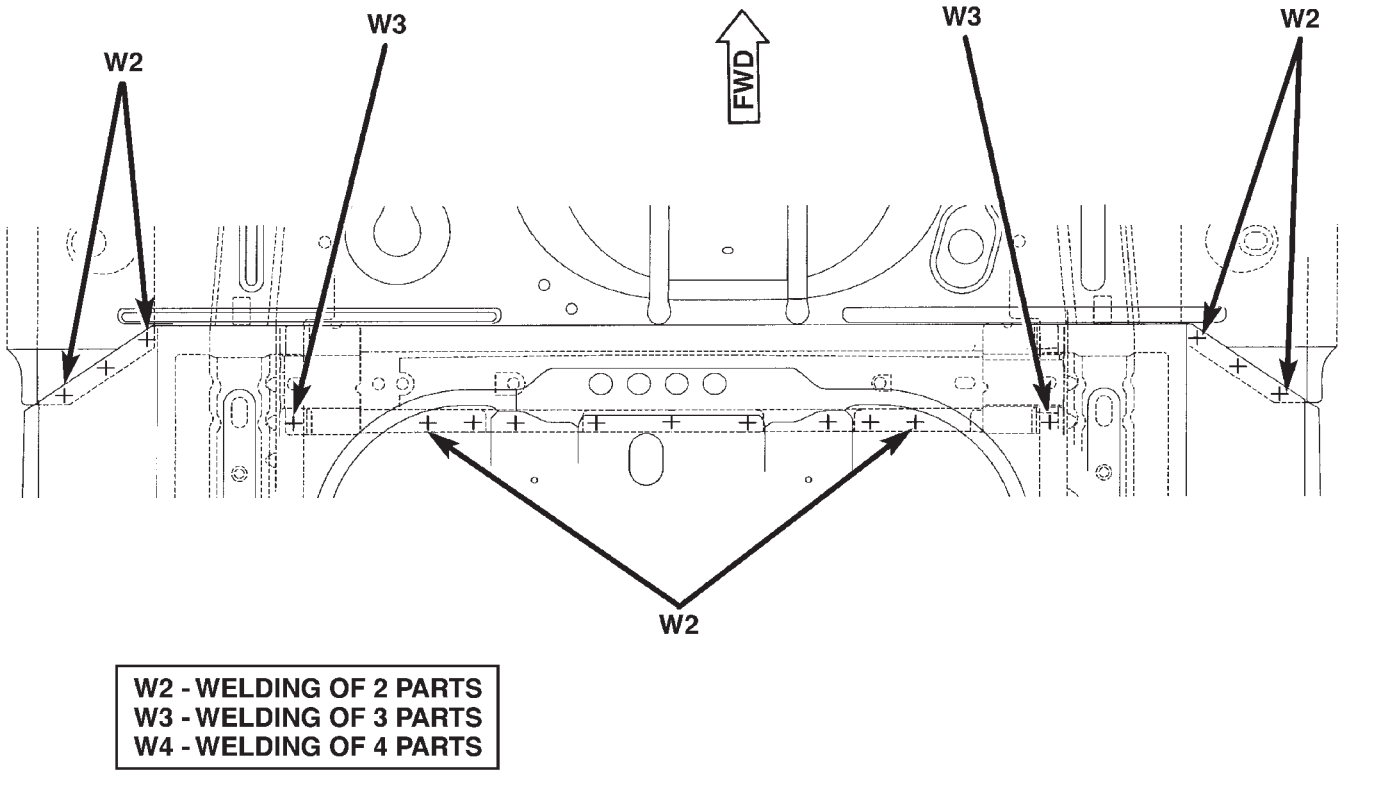

Fig. 104 TOE BOARD CROSS MEMBER

WELD LOCATIONS (Continued)

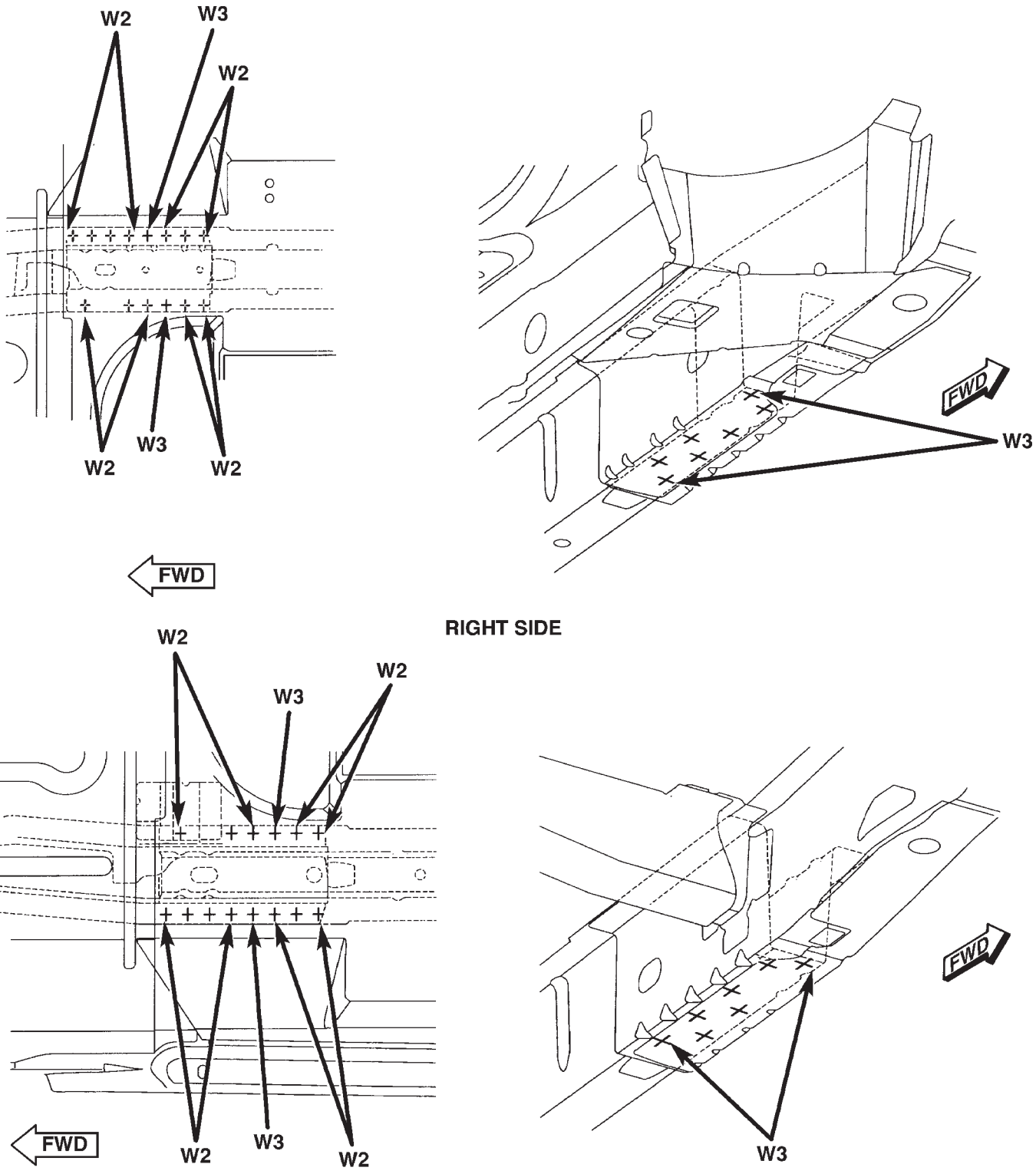

Fig. 105 FRONT SIDE RAIL - SHORT WHEEL BASE ONLY

WELD LOCATIONS (Continued)

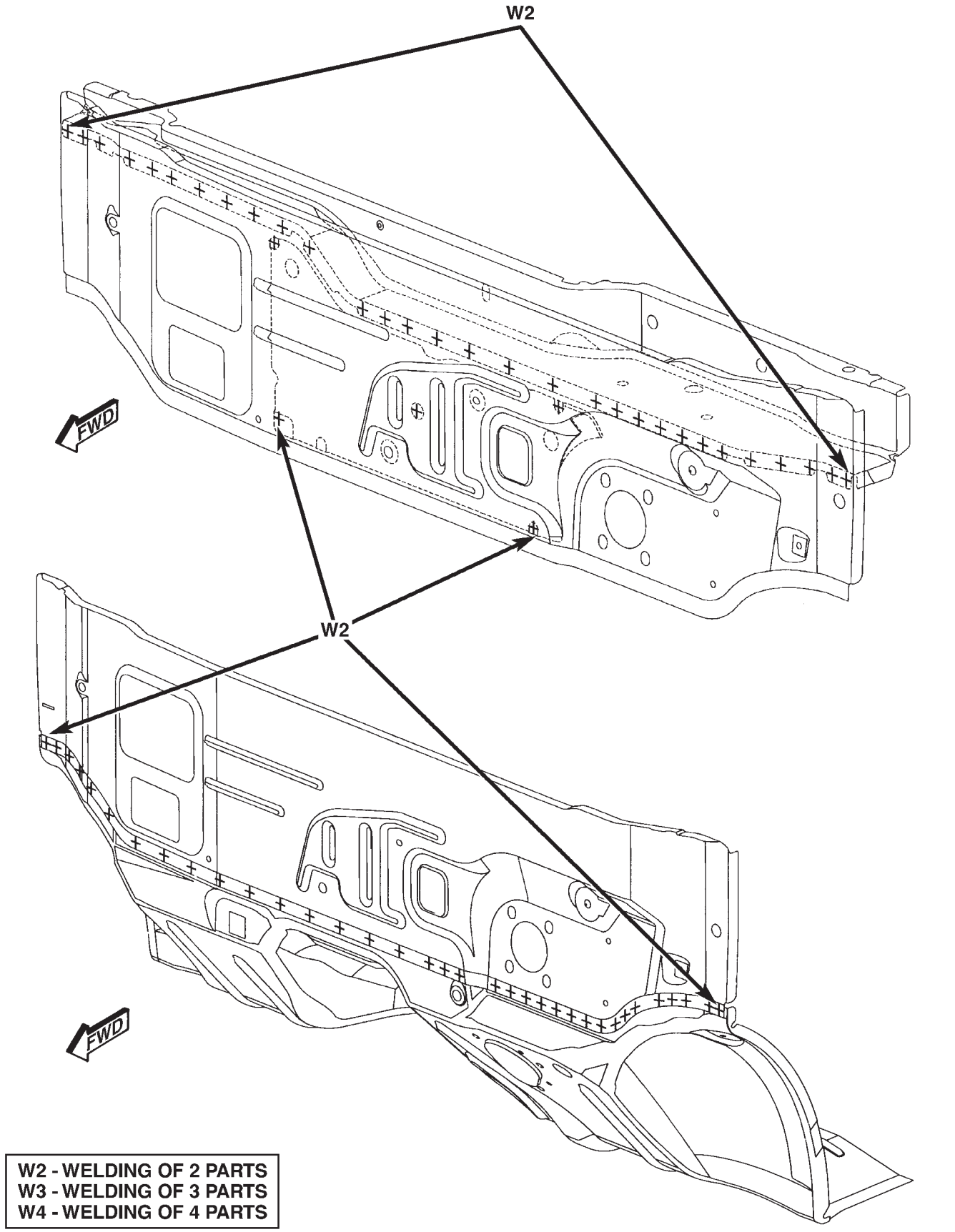

Fig. 106 DASH PANEL REINFORCEMENT

WELD LOCATIONS (Continued)

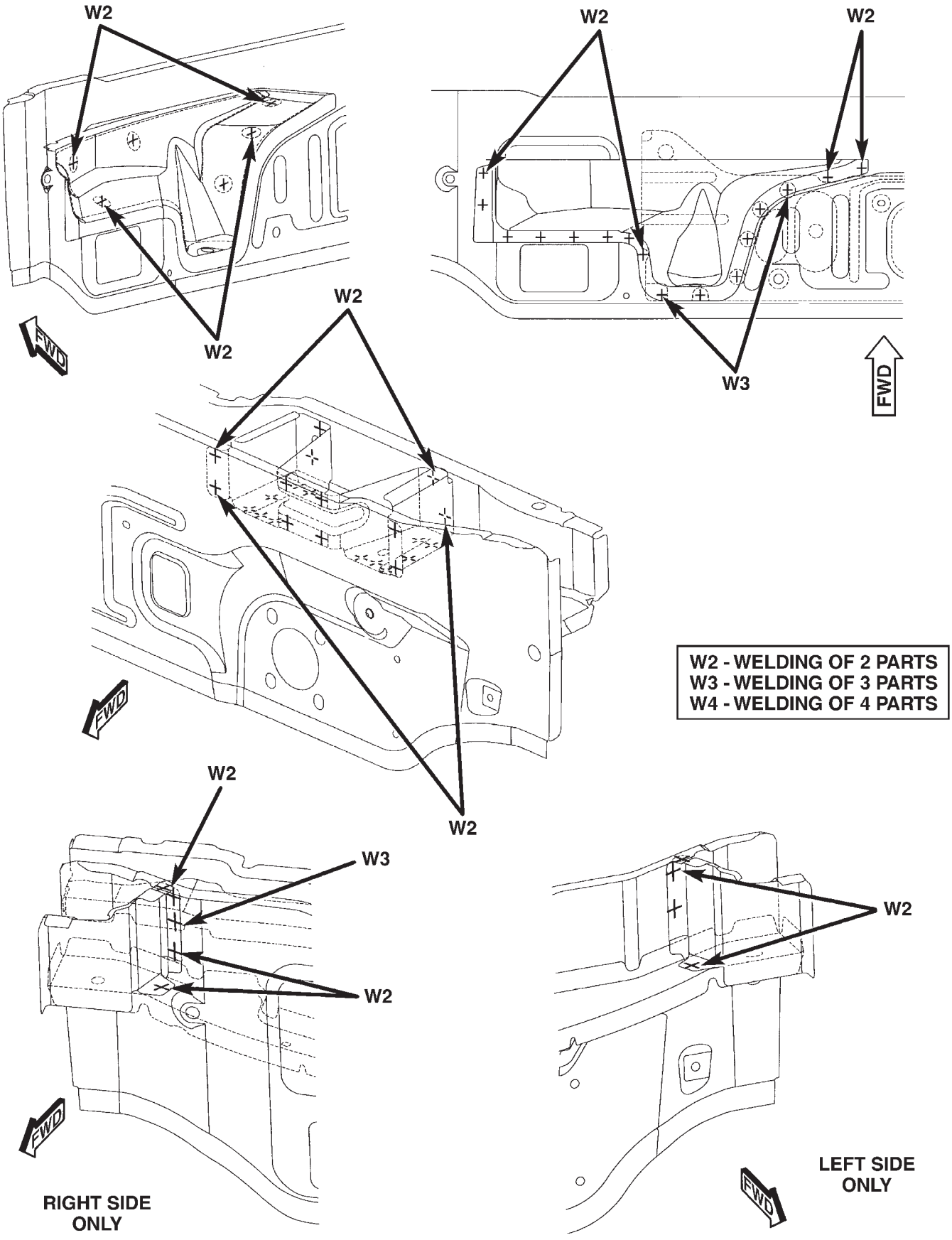

Fig. 107 LOWER COWL PLENUM

WELD LOCATIONS (Continued)

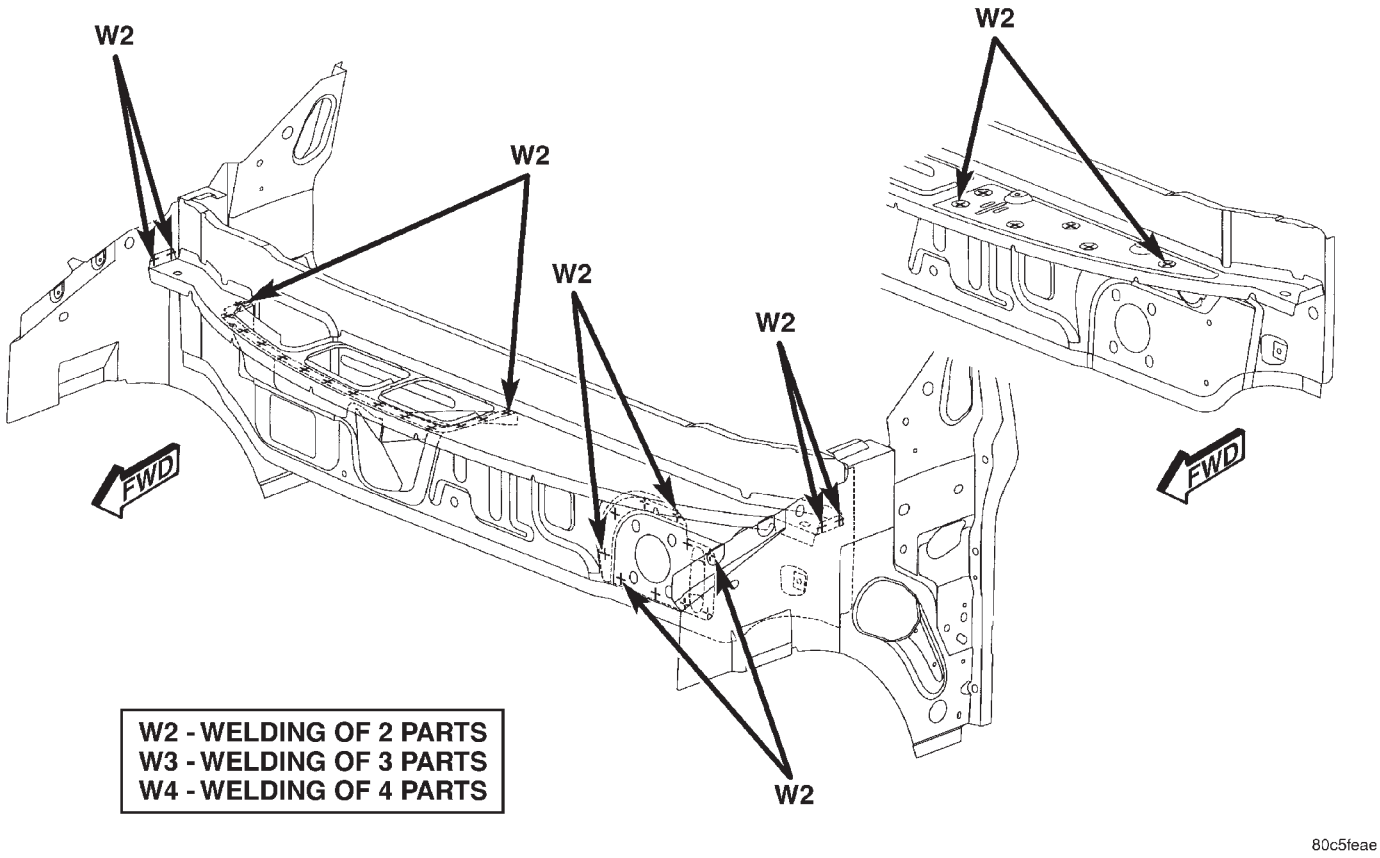

Fig. 108 UPPER COWL PLENUM SUPPORT

WELD LOCATIONS (Continued)

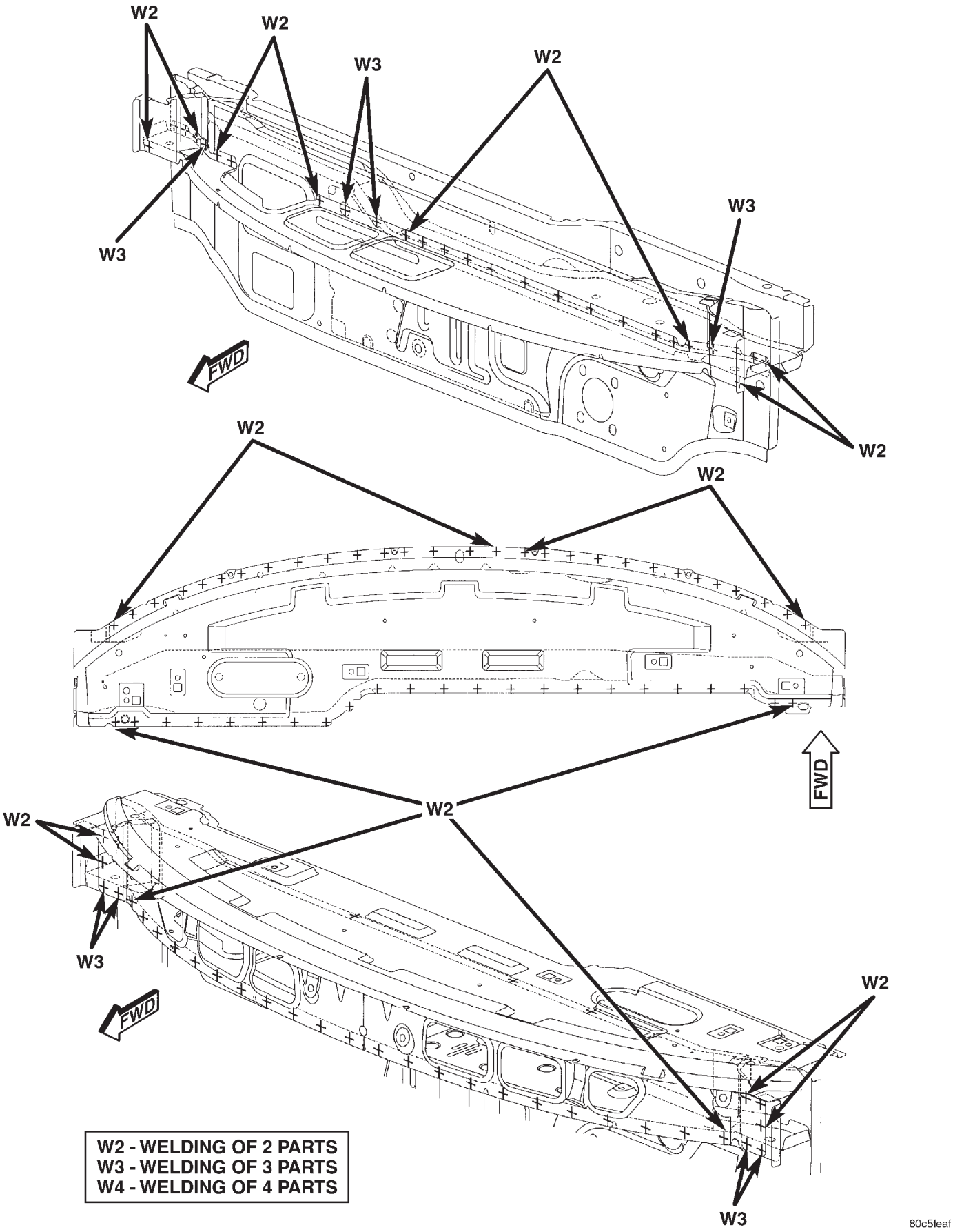

Fig. 109 UPPER DASH PANEL

WELD LOCATIONS (Continued)

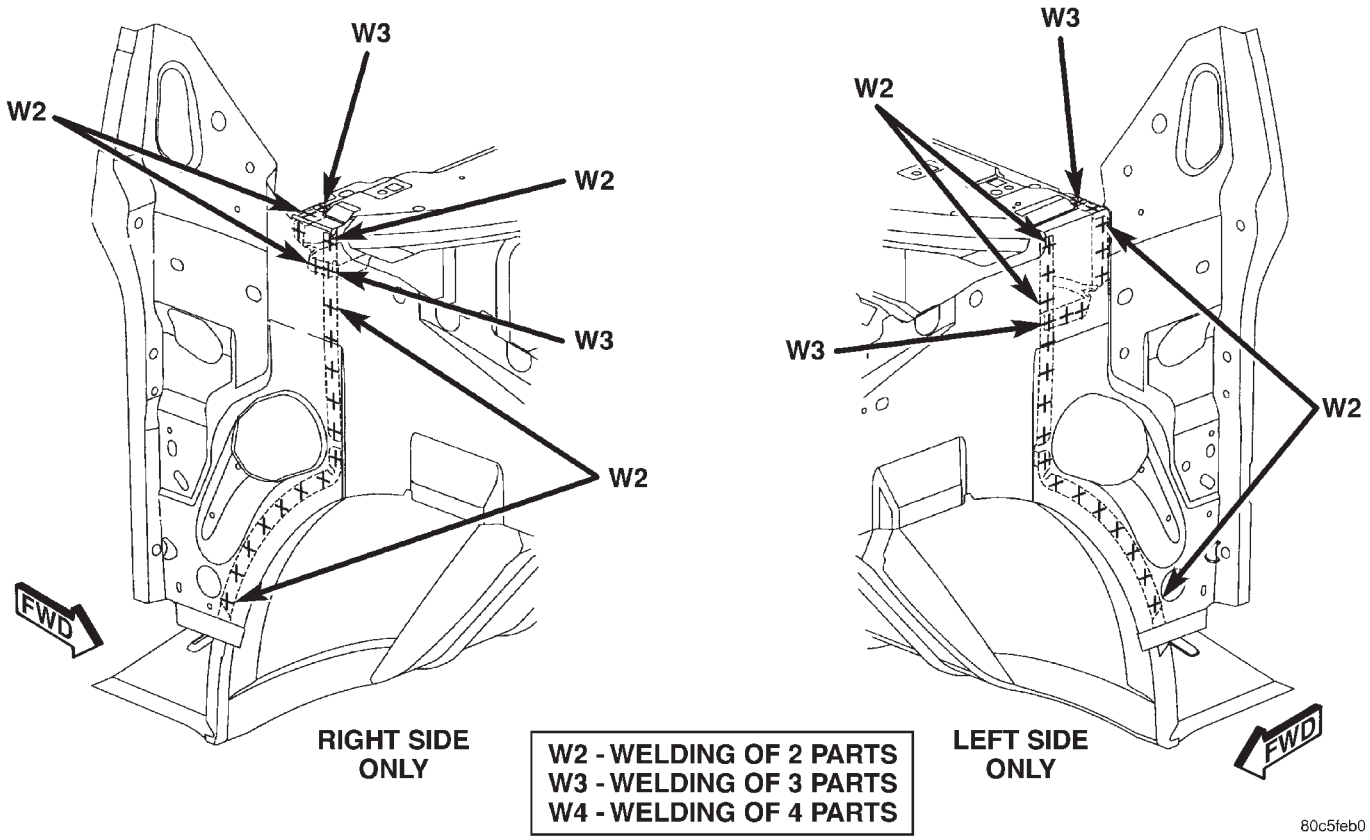

Fig. 110 COWL SIDE PANELS

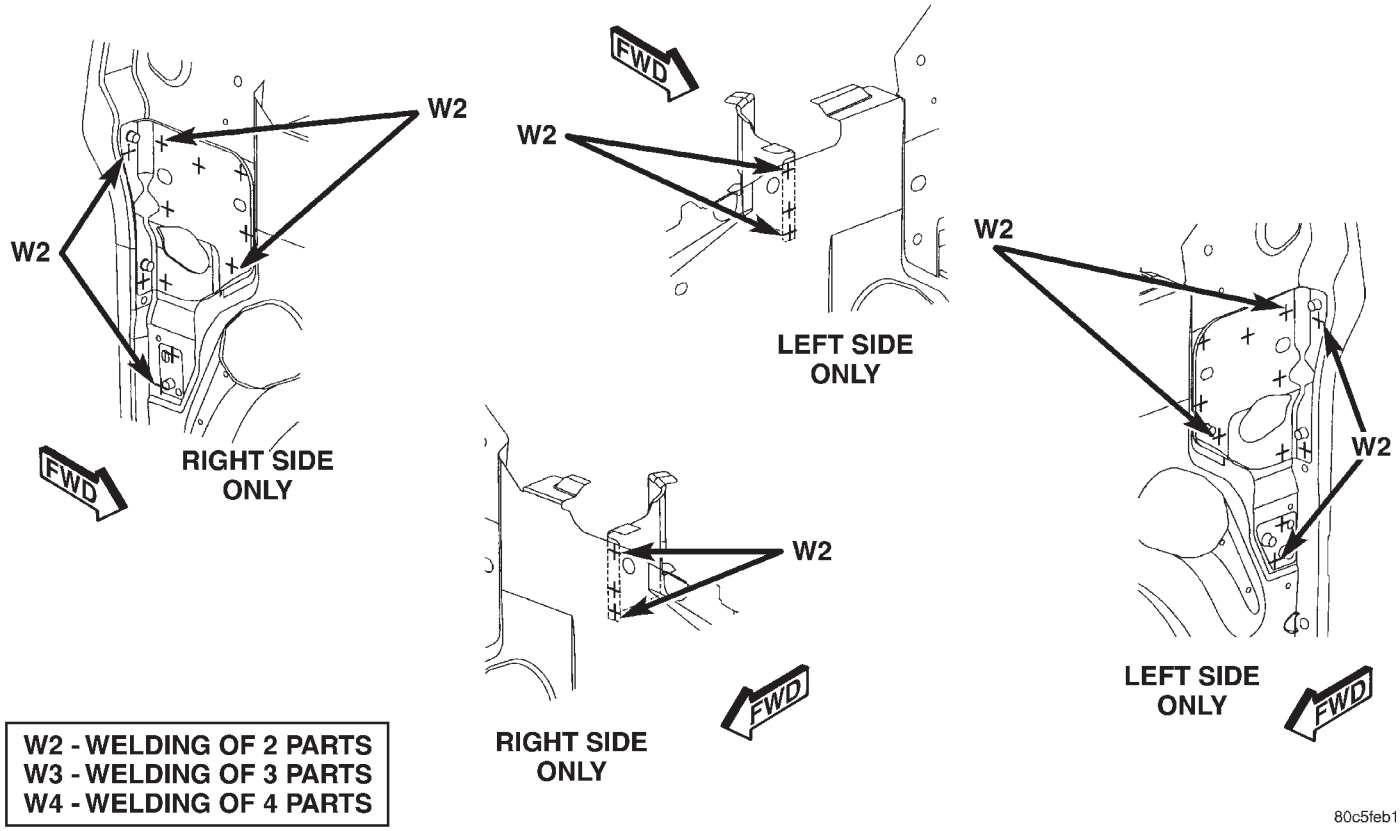

Fig. 111 INSTRUMENT PANEL ATTACHMENT TAPPING PLATES

WELD LOCATIONS (Continued)

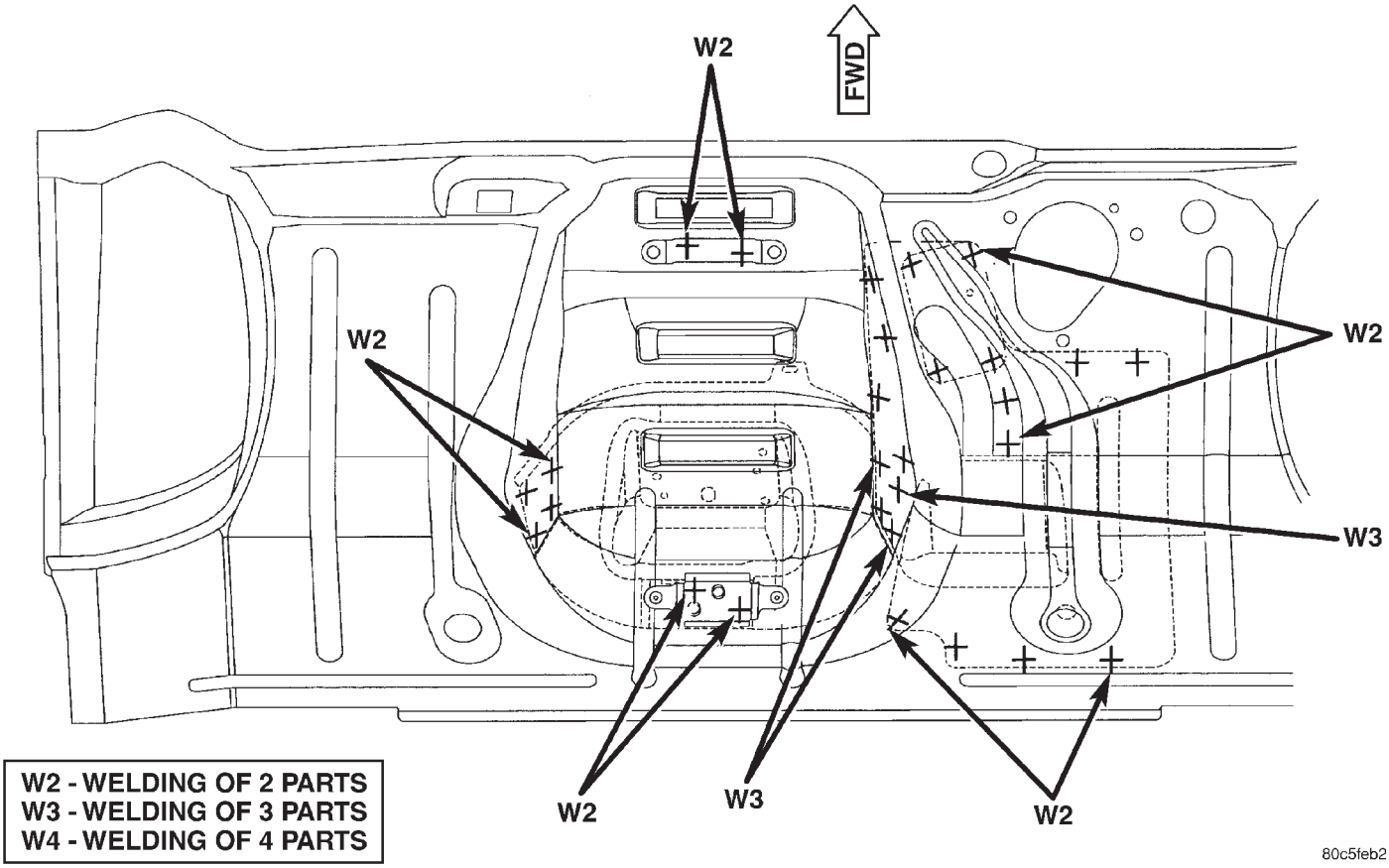

Fig. 112 INSTRUMENT PANEL, DASH PANEL, ACM MODULE AND ACCELERATOR PEDAL

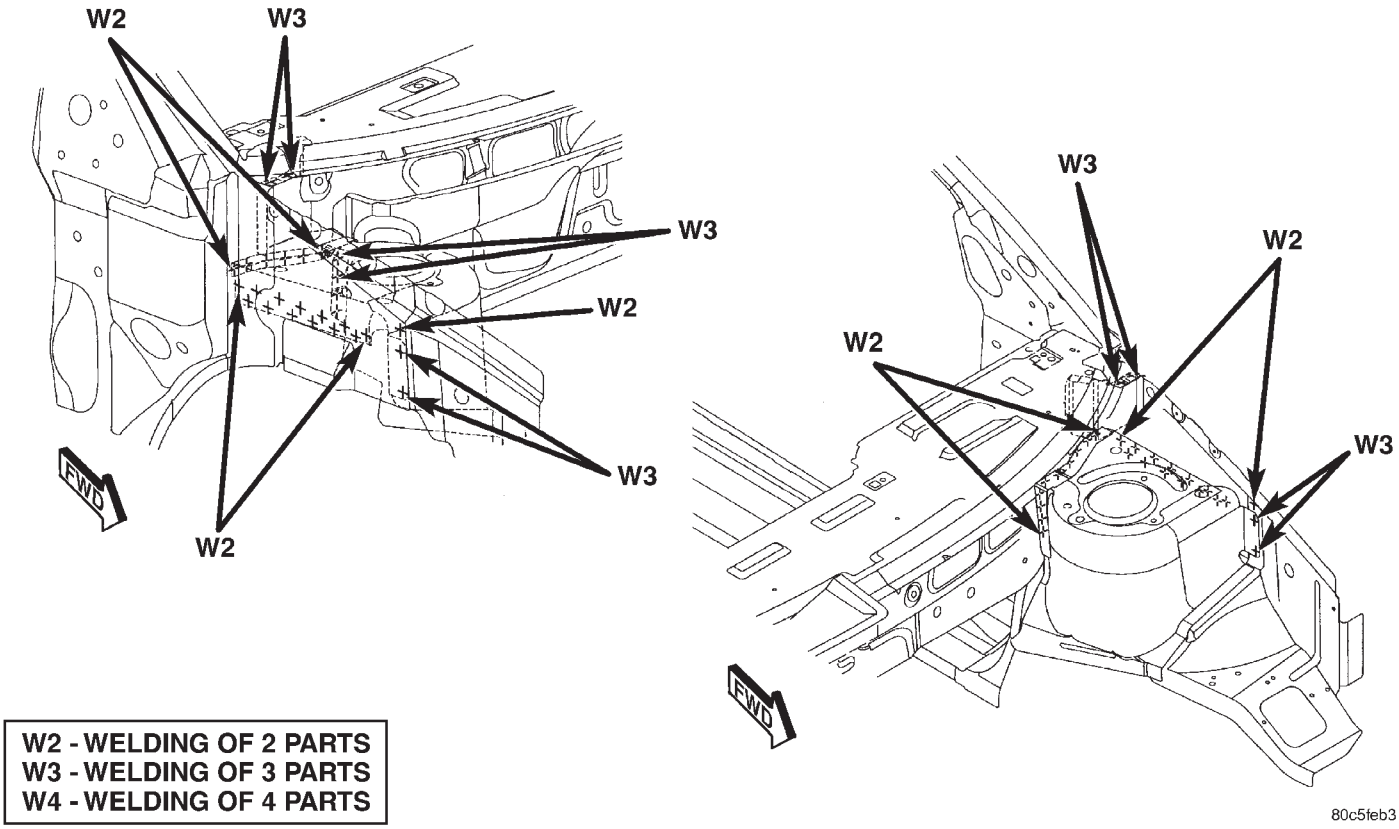

Fig. 113 STRUT TOWER BRACKET AND COWL PLENUM

WELD LOCATIONS (Continued)

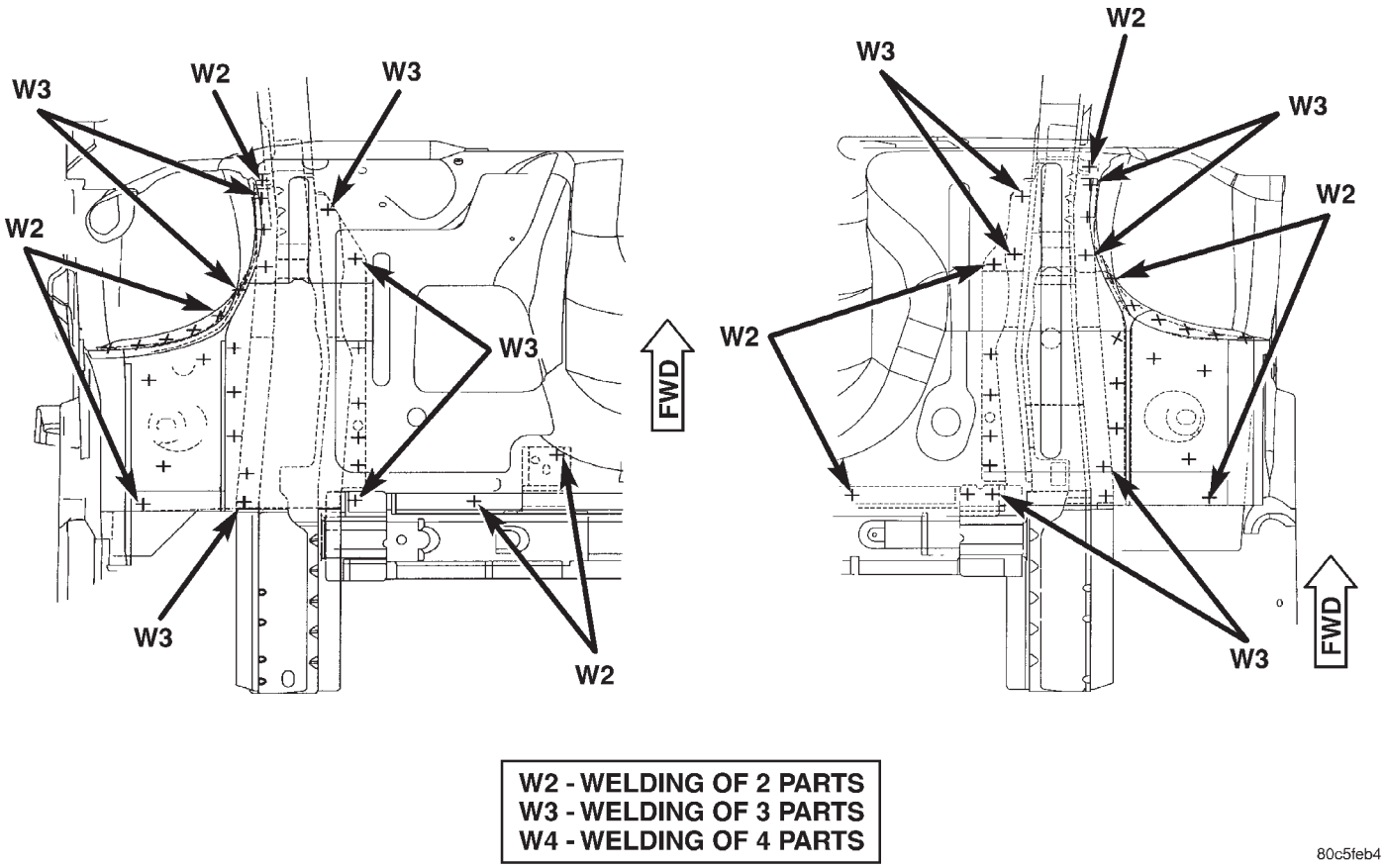

Fig. 114 FRONT SIDE RAILS TO LOWER DASH PANEL

WELD LOCATIONS (Continued)

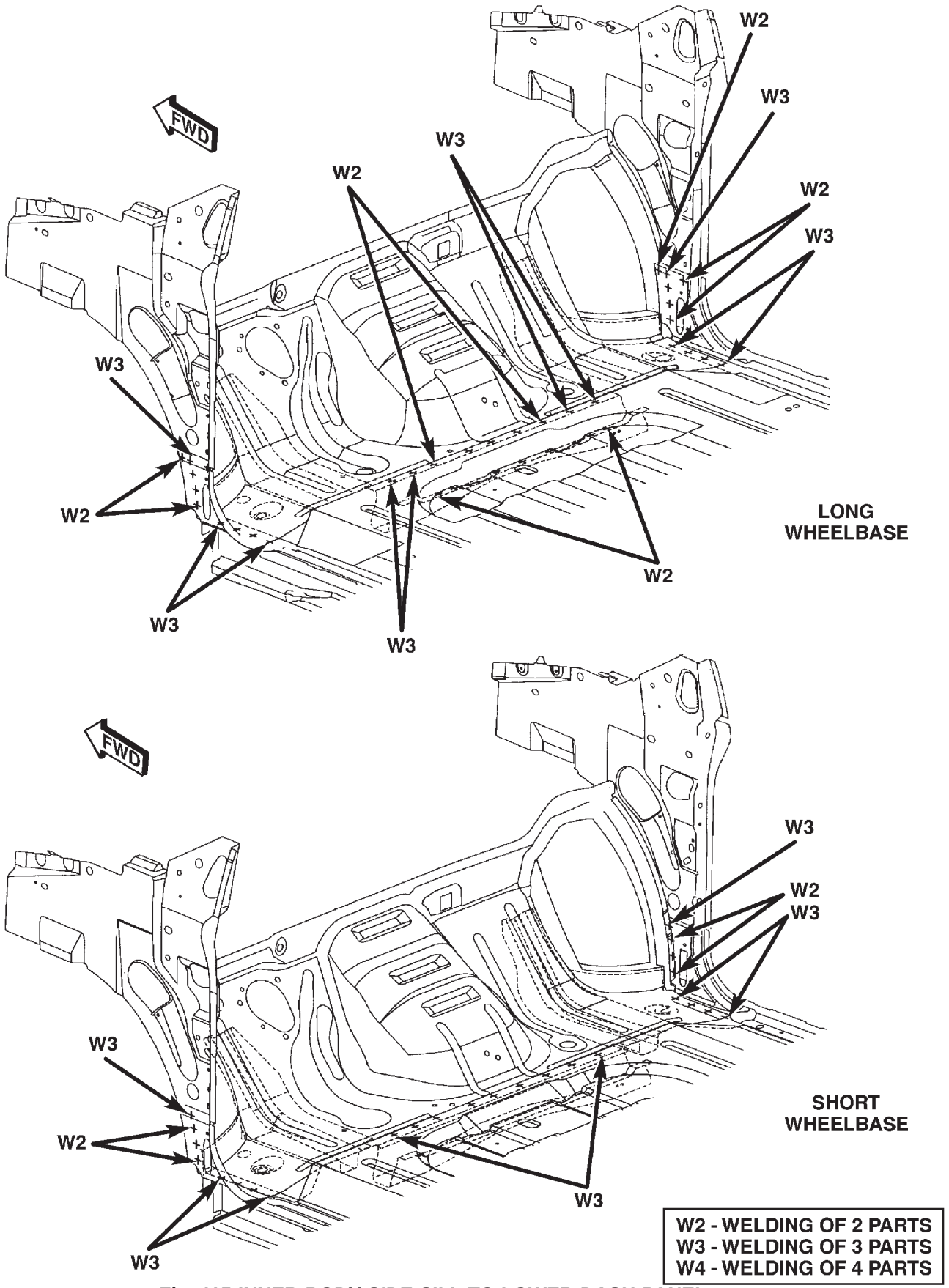

Fig. 115 INNER BODY SIDE SILL TO LOWER DASH PANEL

WELD LOCATIONS (Continued)

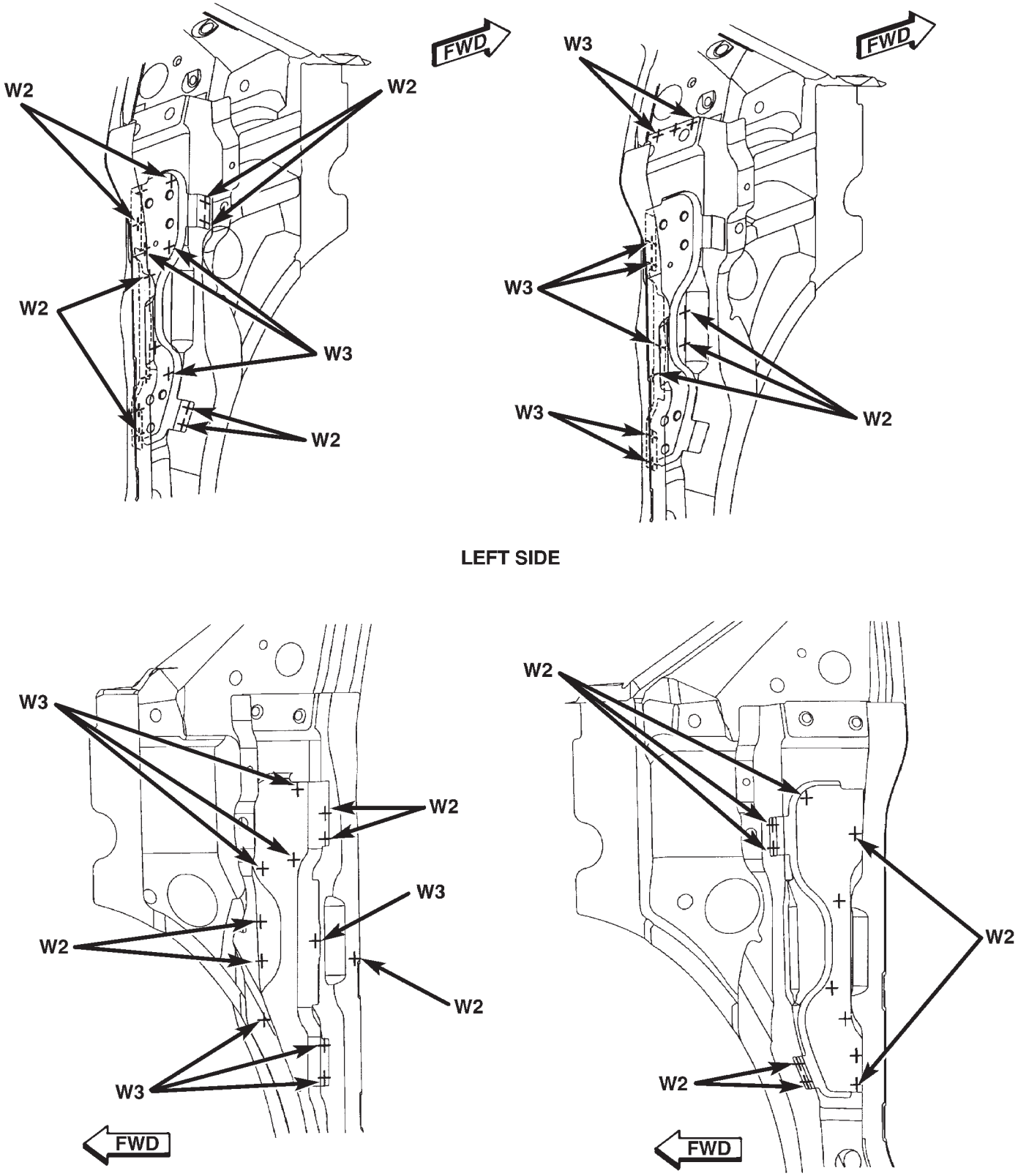

Fig. 116 FRONT HINGE TAPPING PLATE

WELD LOCATIONS (Continued)

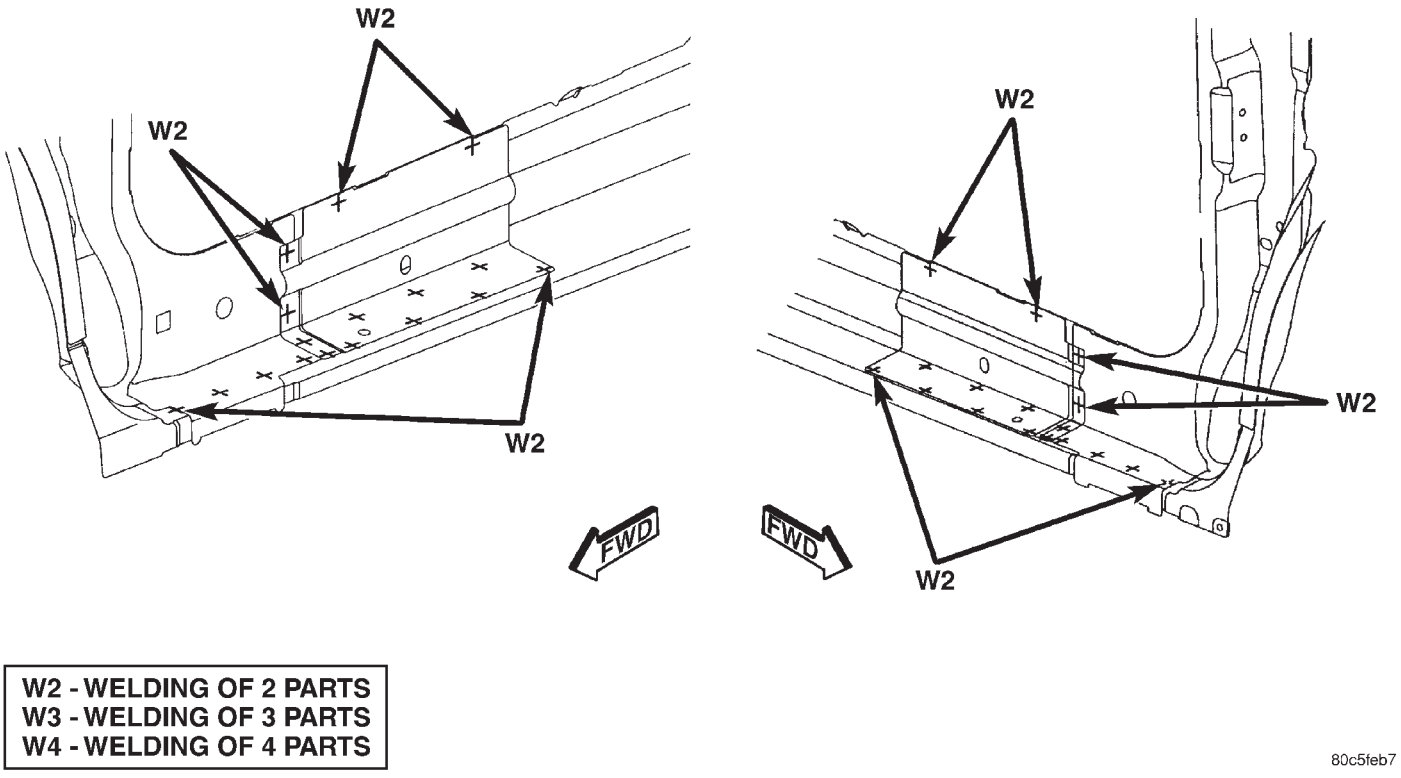

Fig. 117 FRONT HINGE PILLAR

WELD LOCATIONS (Continued)

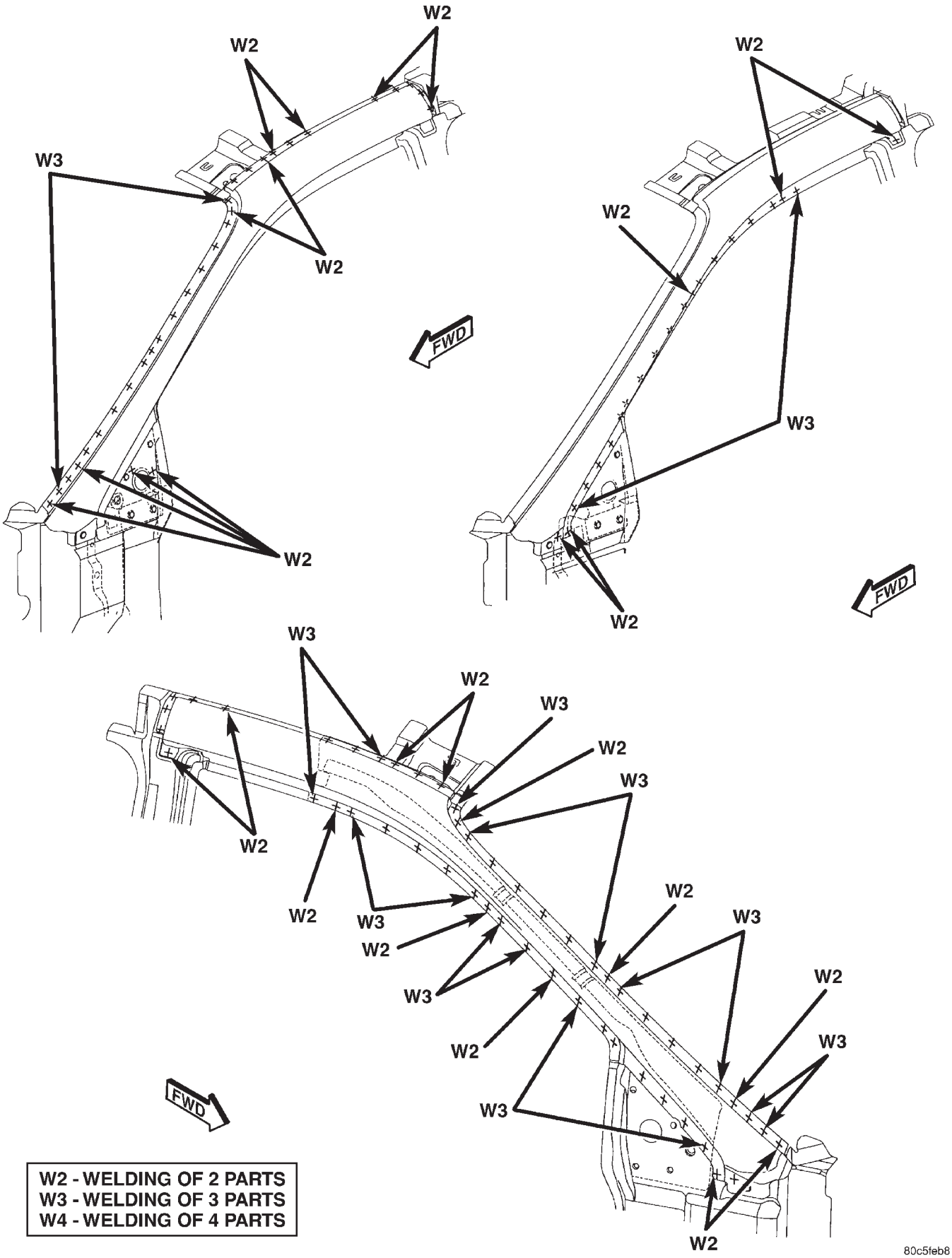

Fig. 118 INNER WINDSHIELD FRAME

WELD LOCATIONS (Continued)

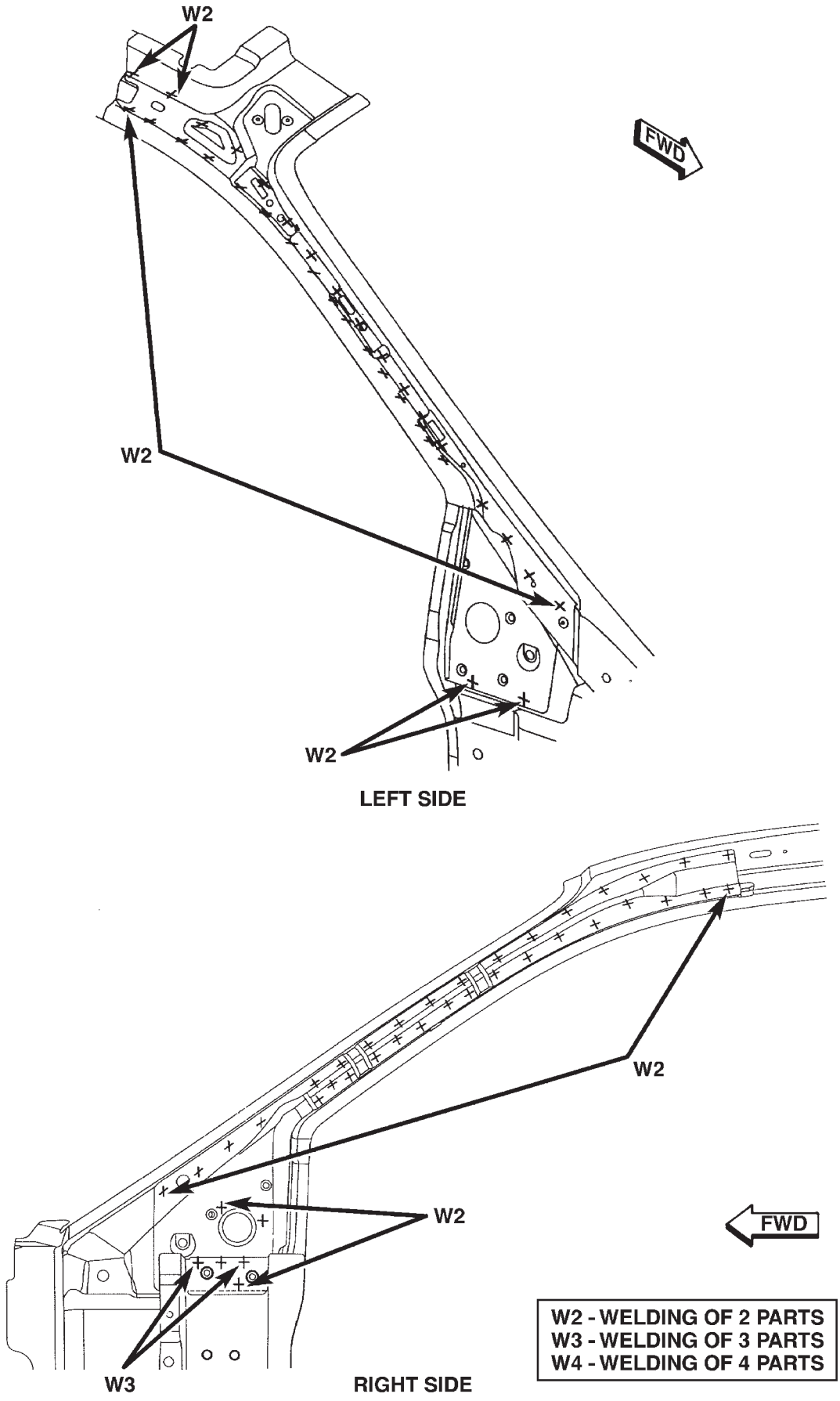

Fig. 119 WINDSHIELD FRAME

WELD LOCATIONS (Continued)

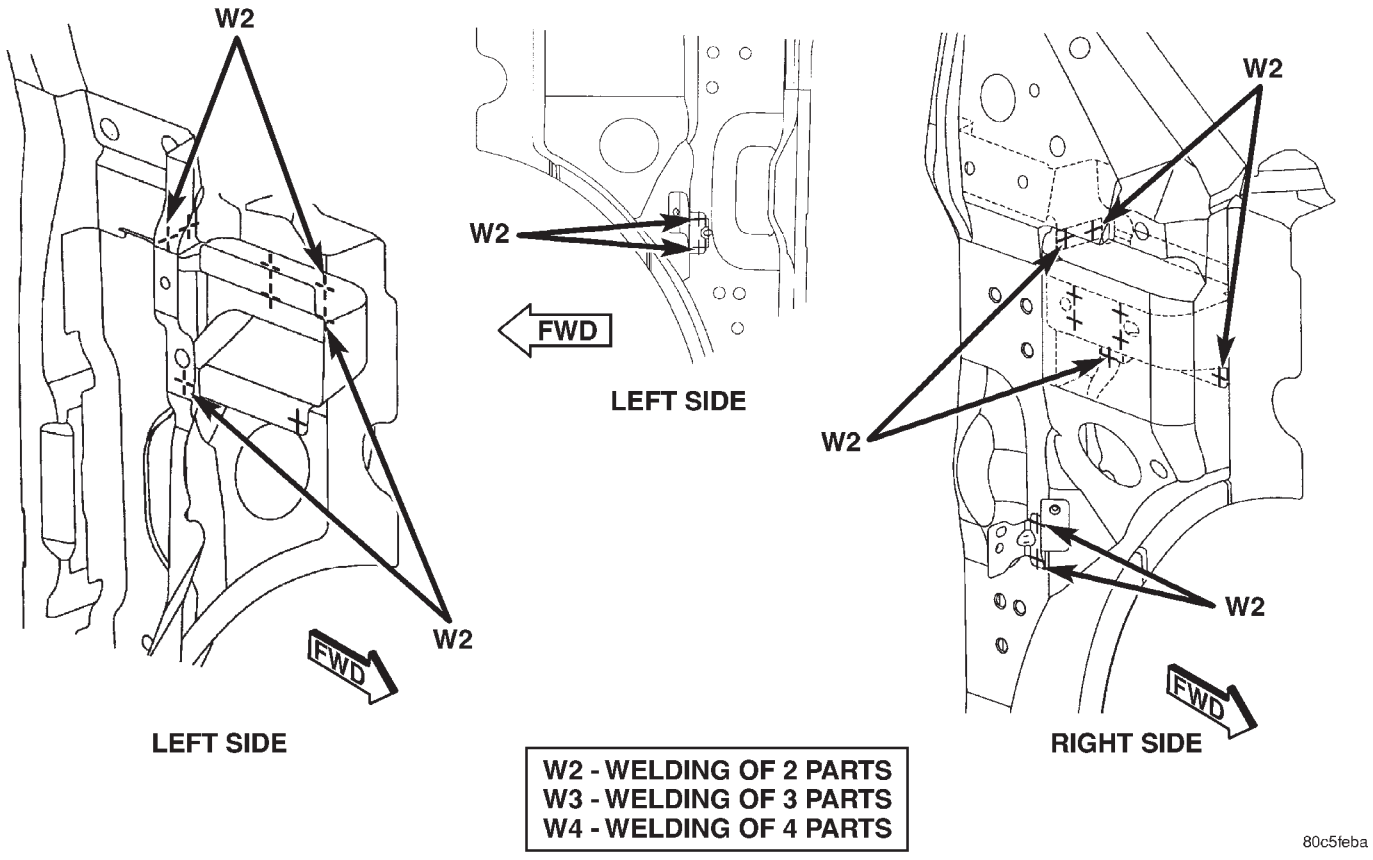

Fig. 120 FENDER BRACKET

WELD LOCATIONS (Continued)

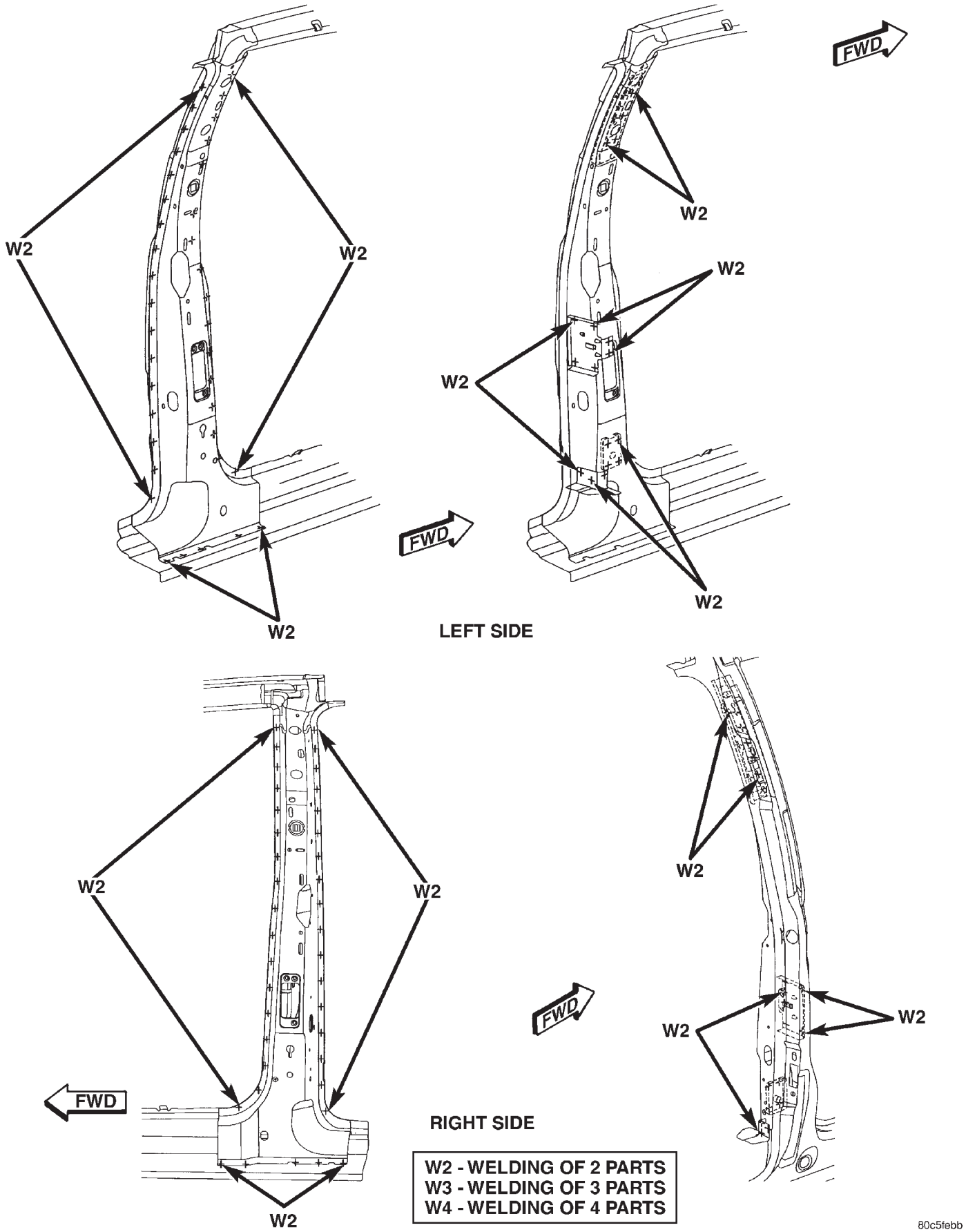

Fig. 121 INNER B-PILLAR

WELD LOCATIONS (Continued)

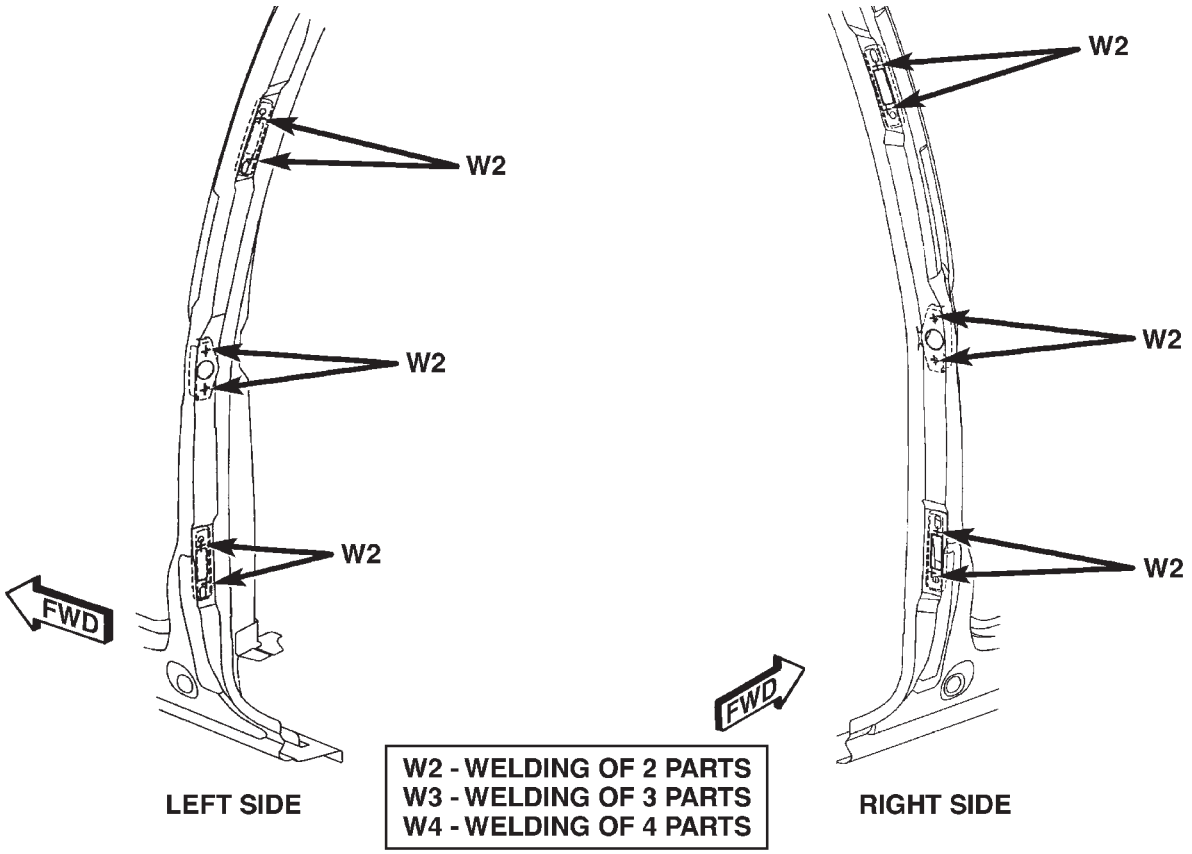

Fig. 122 STRIKER LATCH AND TAPPING PLATES

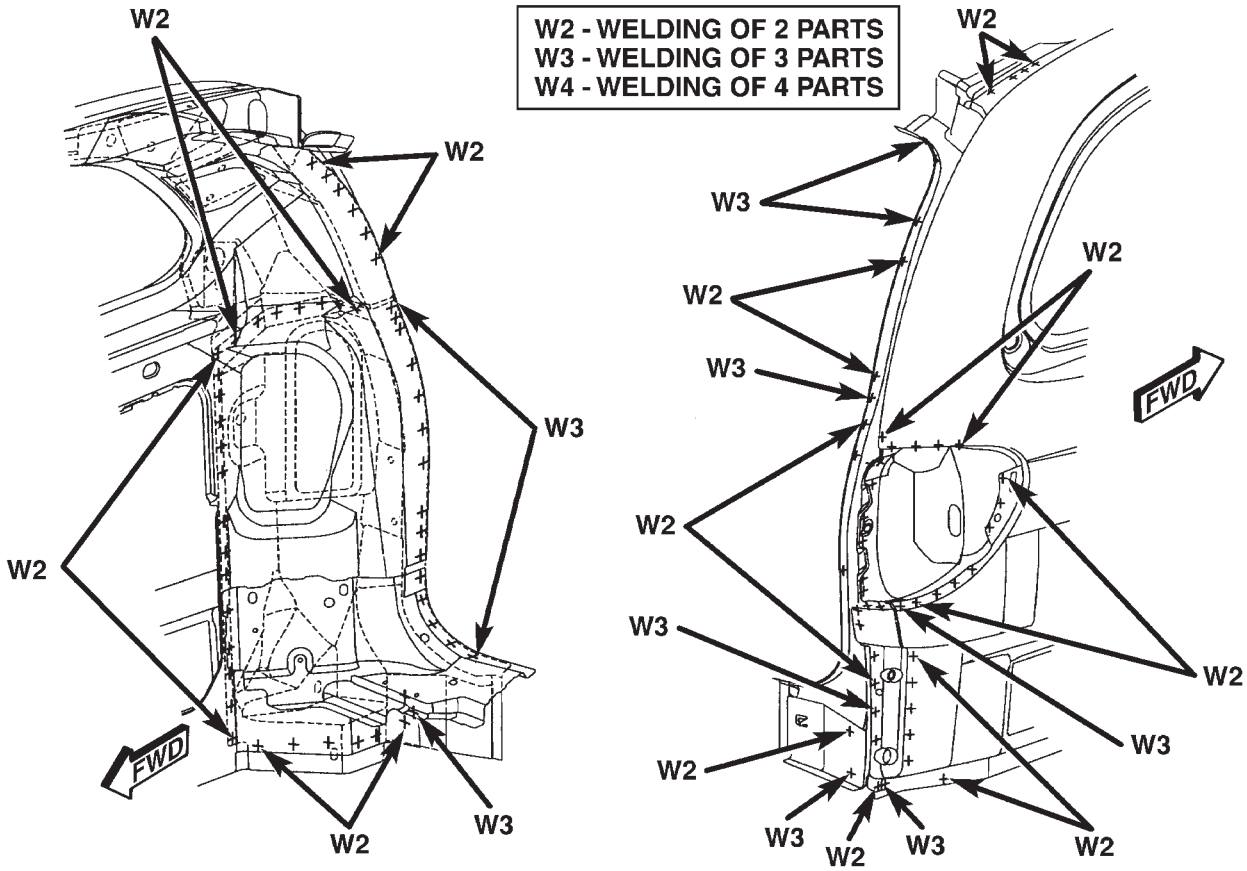

Fig. 123 RIGHT REAR INNER QUARTER PANEL - LONG WHEEL BASE ONLY

WELD LOCATIONS (Continued)

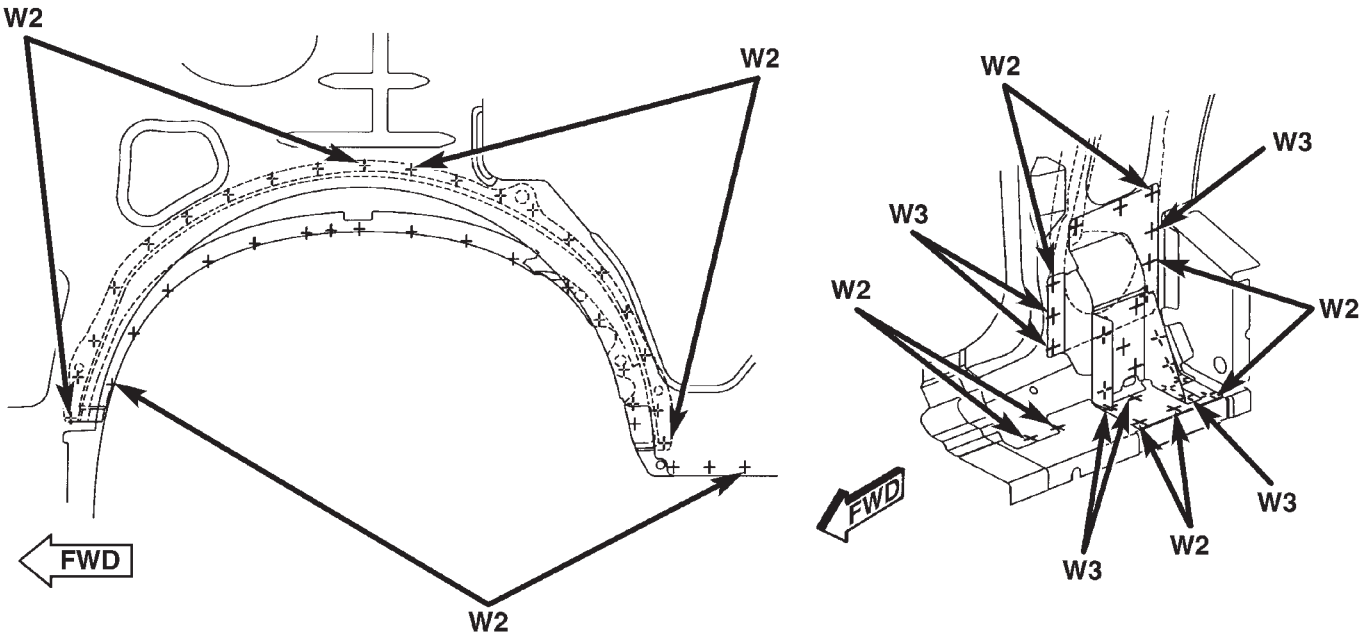

80c5febf

Fig. 124 RIGHT REAR INNER QUARTER PANEL/OUTER WHEELHOUSE - LONG WHEEL BASE ONLY

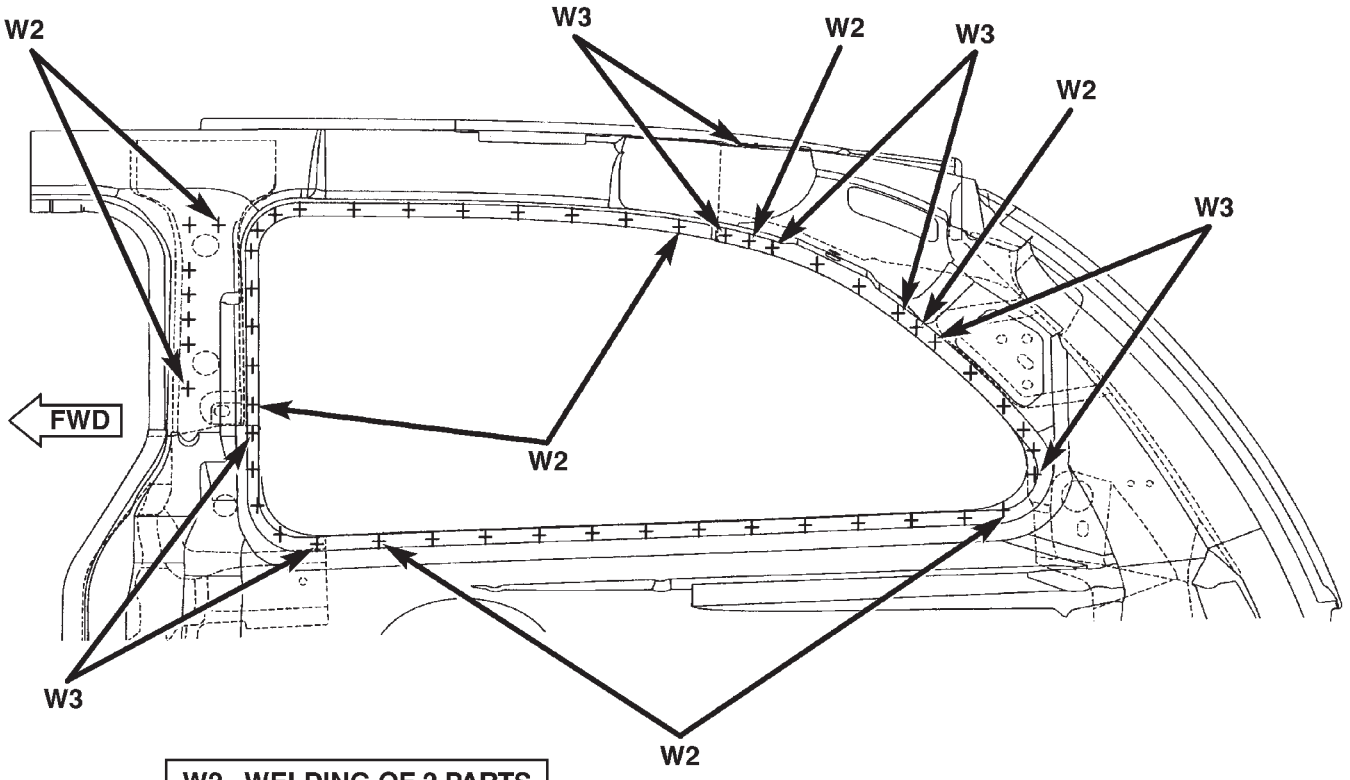

80c5fec0

Fig. 125 RIGHT REAR BODY SIDE APERTURE - LONG WHEEL BASE ONLY

WELD LOCATIONS (Continued)

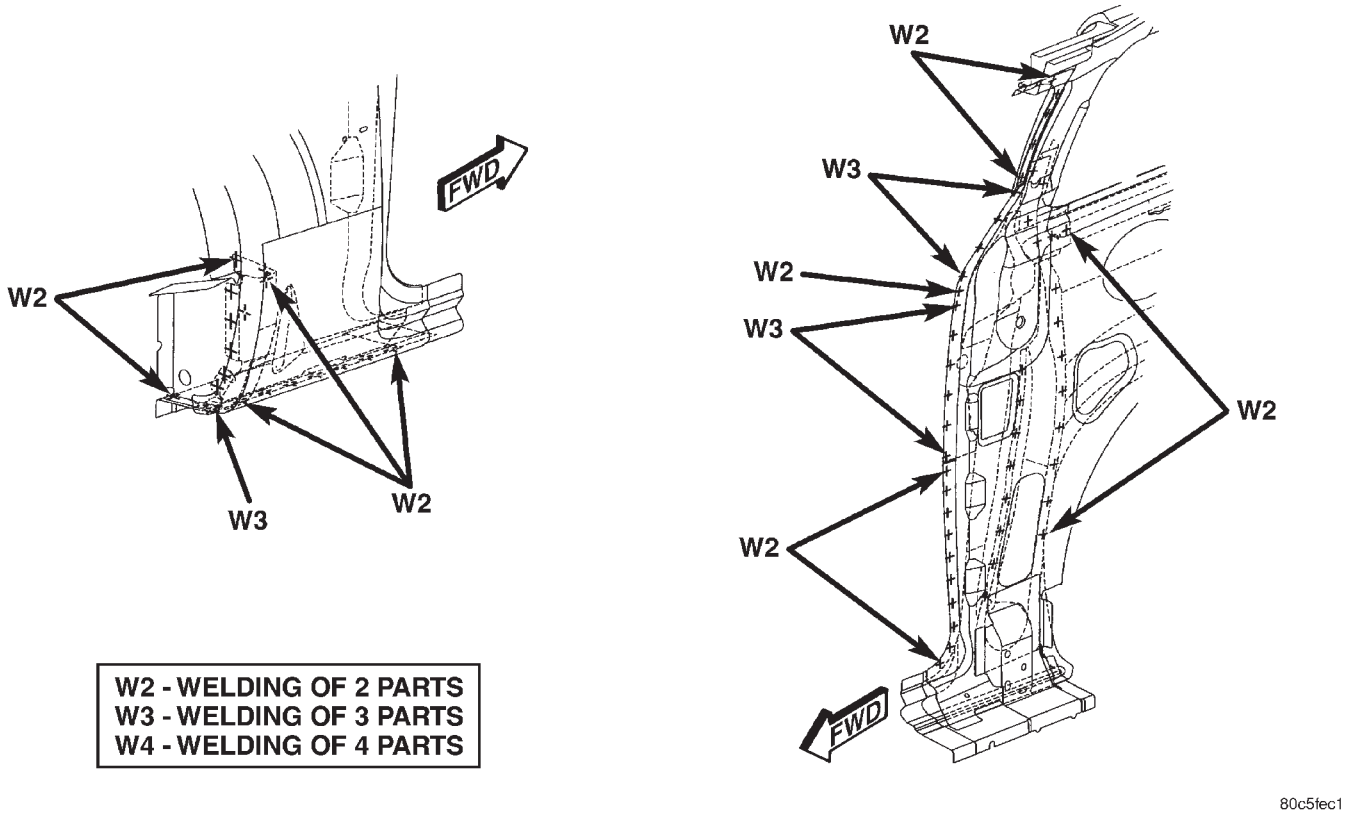

Fig. 126 STRIKER LATCH REINFORCEMENT - LONG WHEEL BASE ONLY

WELD LOCATIONS (Continued)

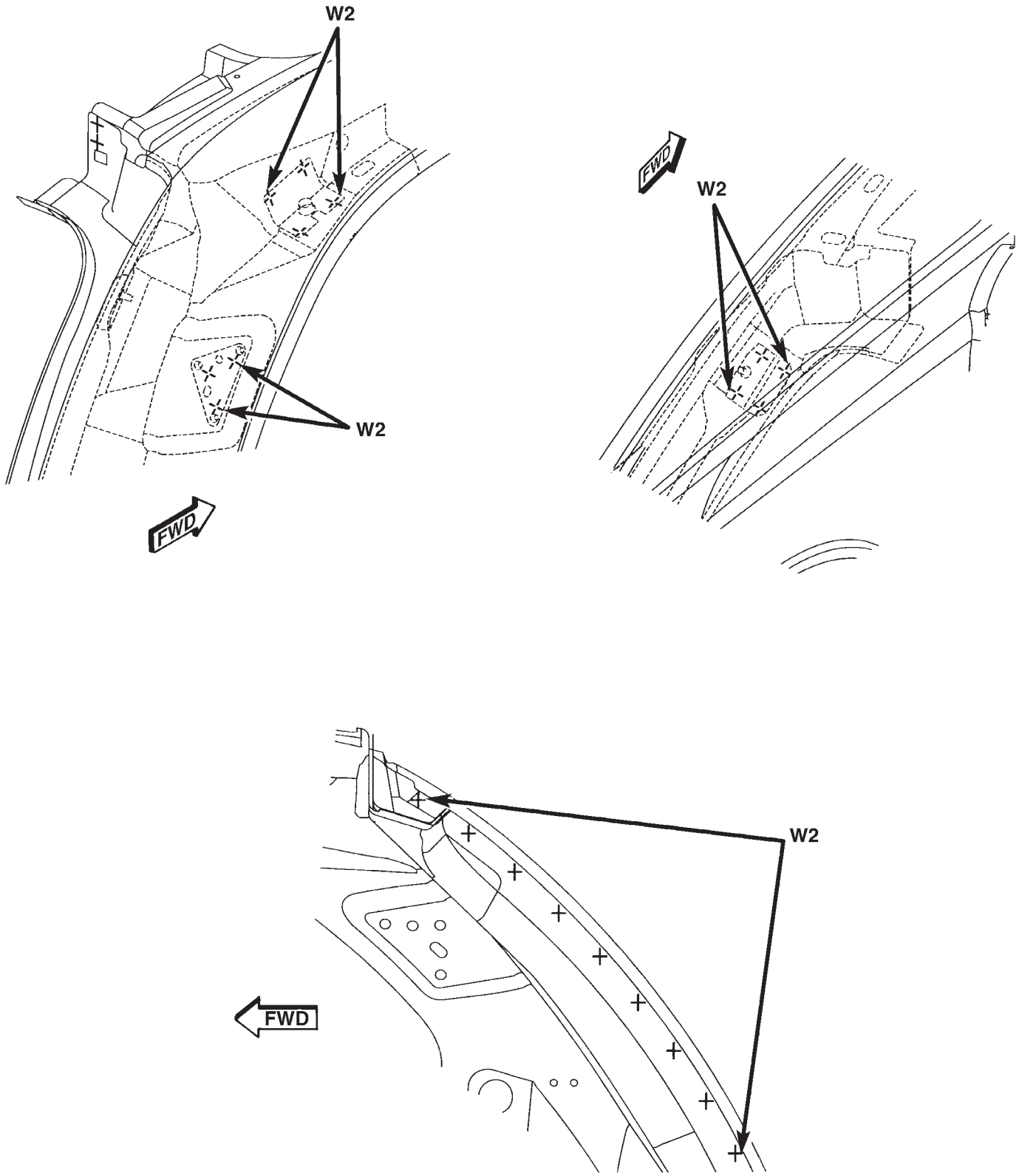

W2 - WELDING OF 2 PARTS
W3 - WELDING OF 3 PARTS
W4 - WELDING OF 4 PARTS

80c5fec2

Fig. 127 BELT TAPPING PLATE - LONG WHEEL BASE ONLY

WELD LOCATIONS (Continued)

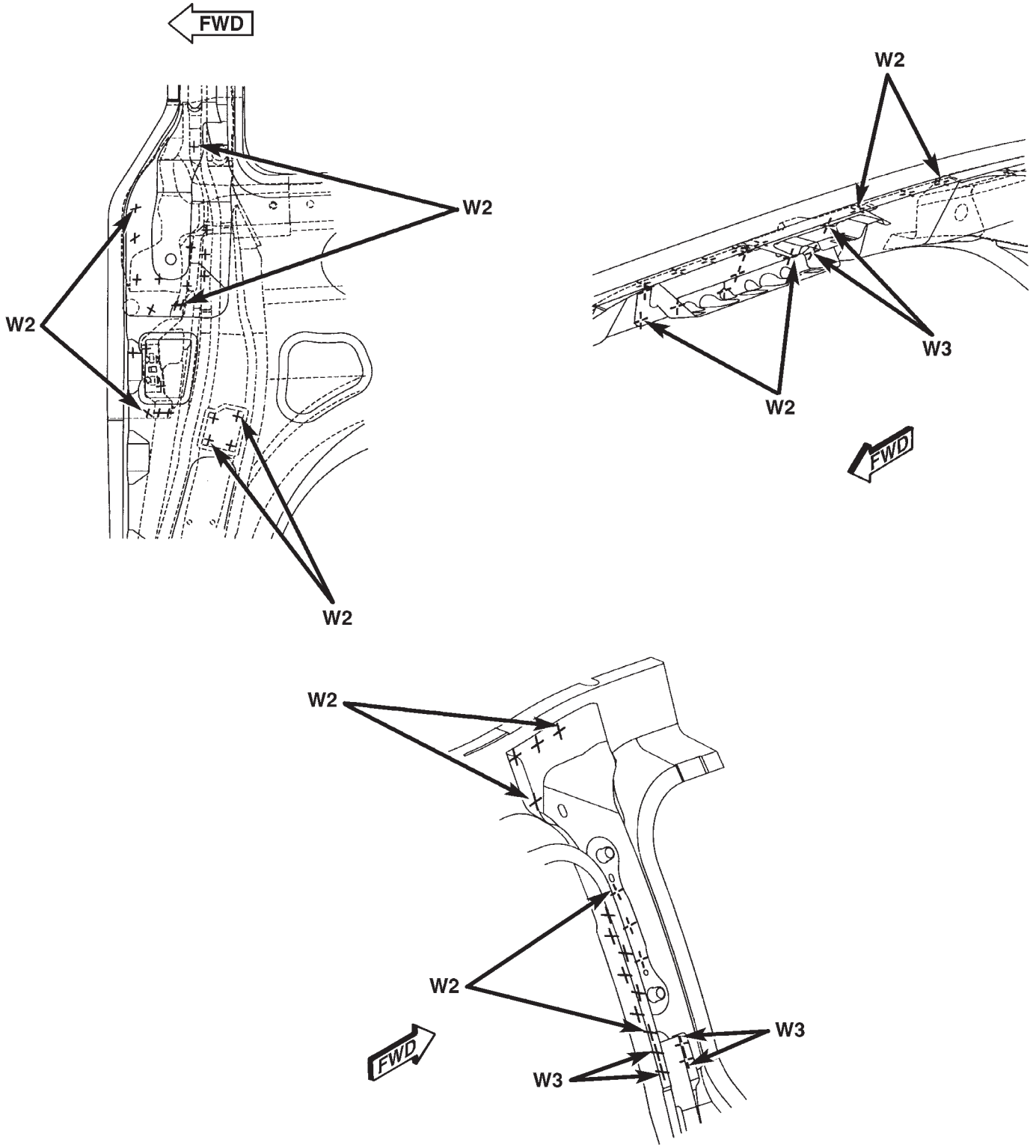

W2 - WELDING OF 2 PARTS
W3 - WELDING OF 3 PARTS
W4 - WELDING OF 4 PARTS

80c5fec3

Fig. 128 C-PILLAR REINFORCEMENT - LONG WHEEL BASE ONLY

WELD LOCATIONS (Continued)

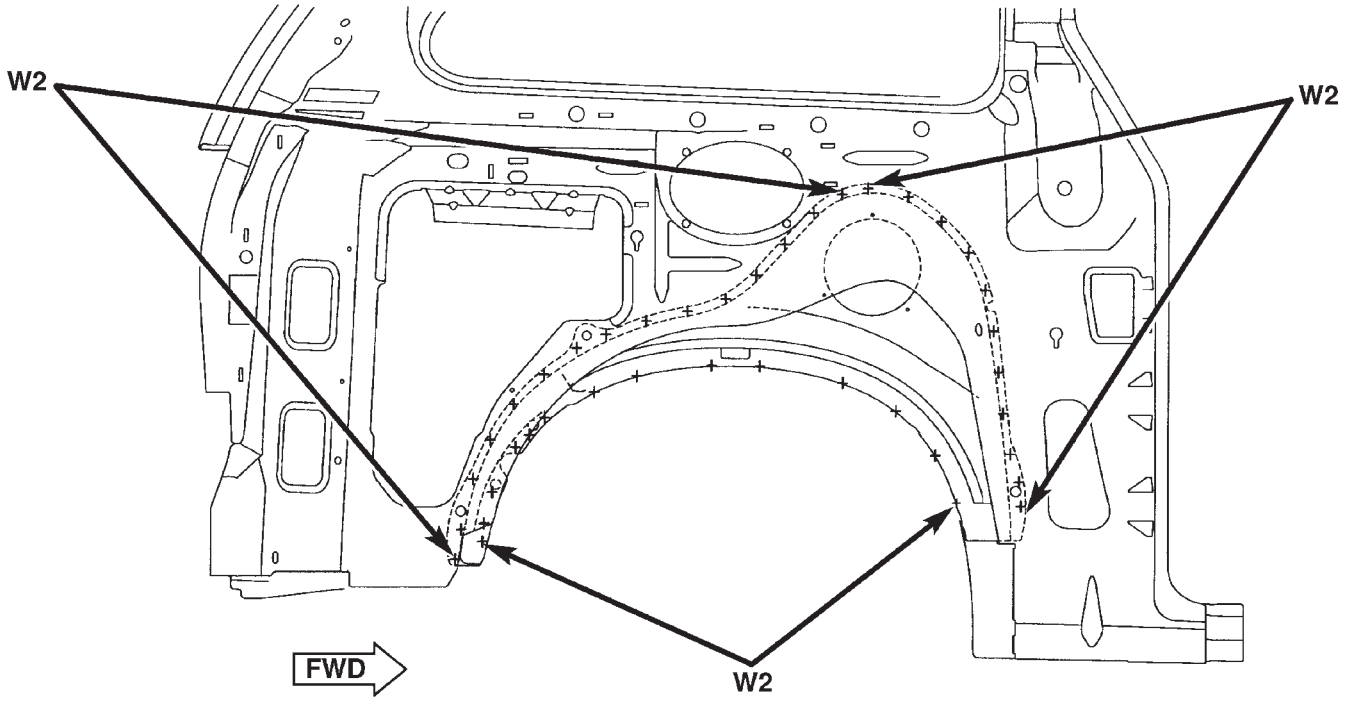

W2 - WELDING OF 2 PARTS
W3 - WELDING OF 3 PARTS
W4 - WELDING OF 4 PARTS

80c5fec4

Fig. 129 OUTER WHEELHOUSE - LONG WHEEL BASE ONLY

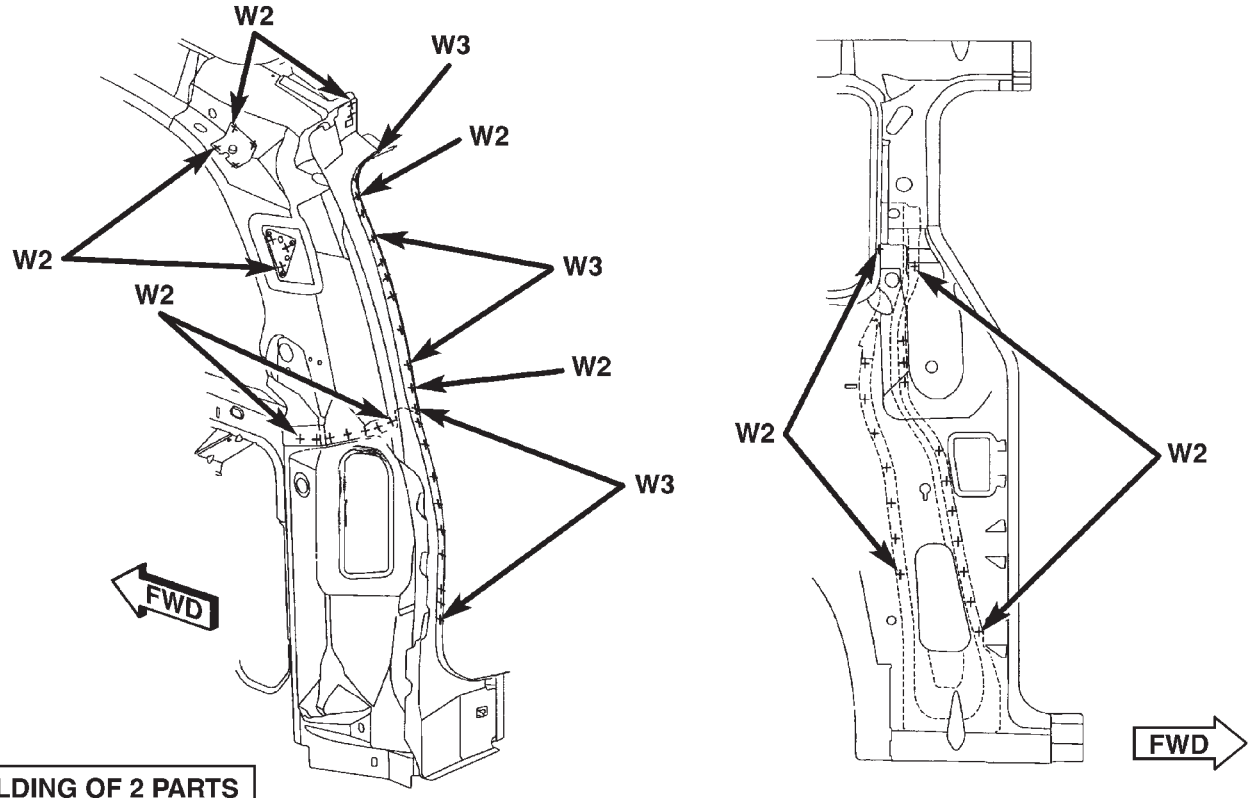

W2 - WELDING OF 2 PARTS
W3 - WELDING OF 3 PARTS
W4 - WELDING OF 4 PARTS

80c5fec5

Fig. 130 C AND D-PILLAR INNER REINFORCEMENTS - LONG WHEEL BASE ONLY

WELD LOCATIONS (Continued)

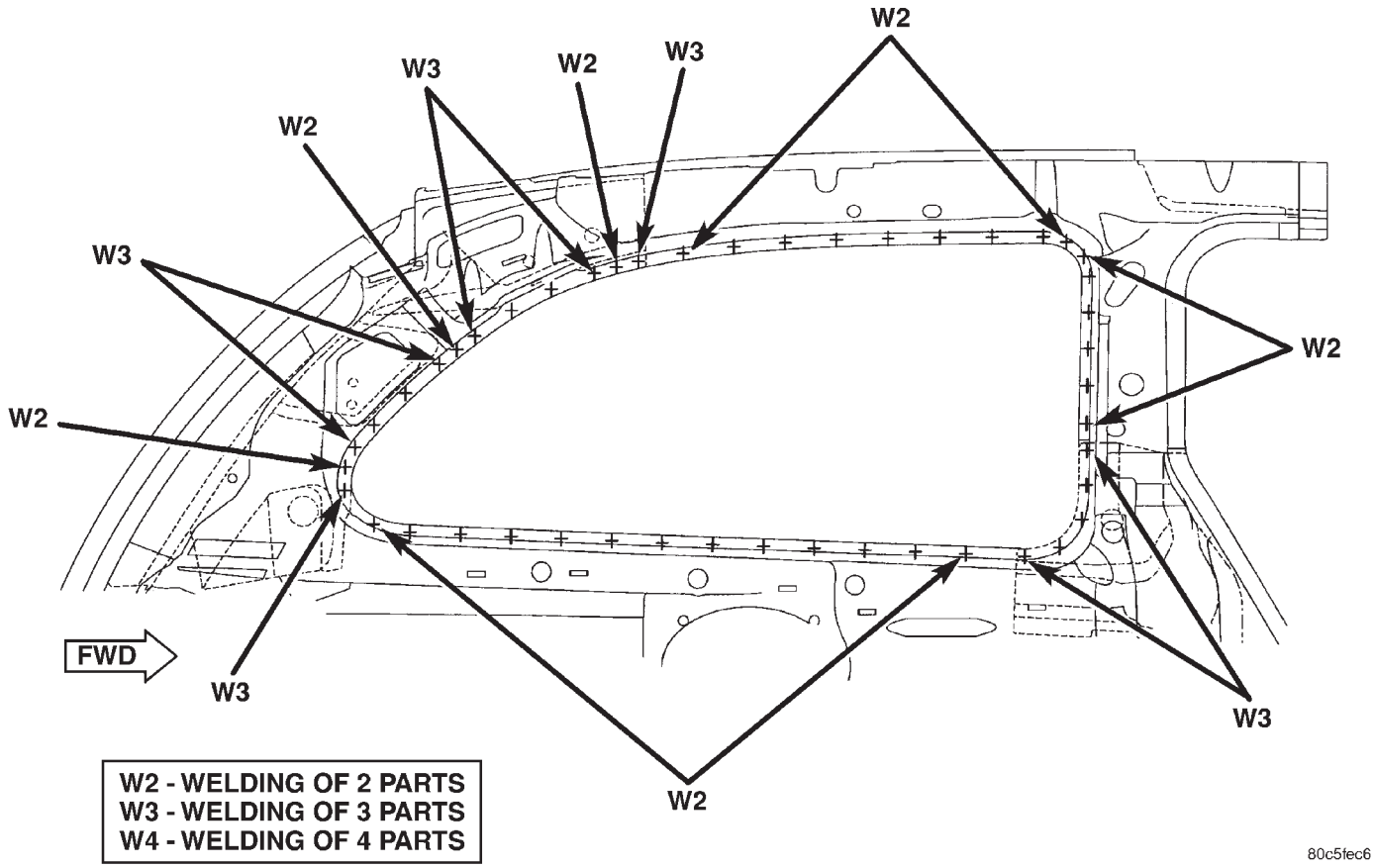

Fig. 131 LEFT REAR INNER QUARTER PANEL - LONG WHEEL BASE ONLY

WELD LOCATIONS (Continued)

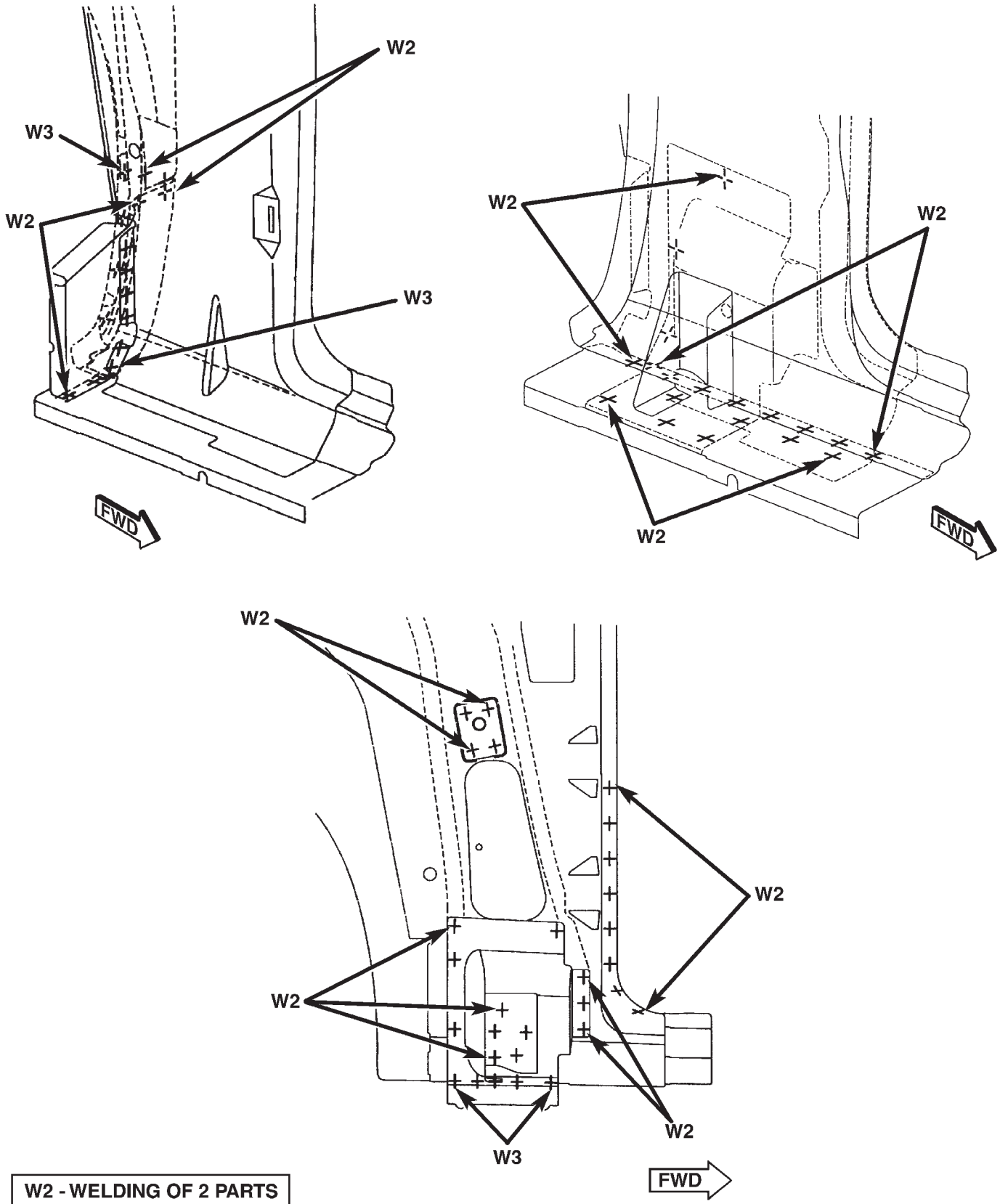

Fig. 132 OUTER WHEELHOUSE EXTENSION - LONG WHEEL BASE ONLY

WELD LOCATIONS (Continued)

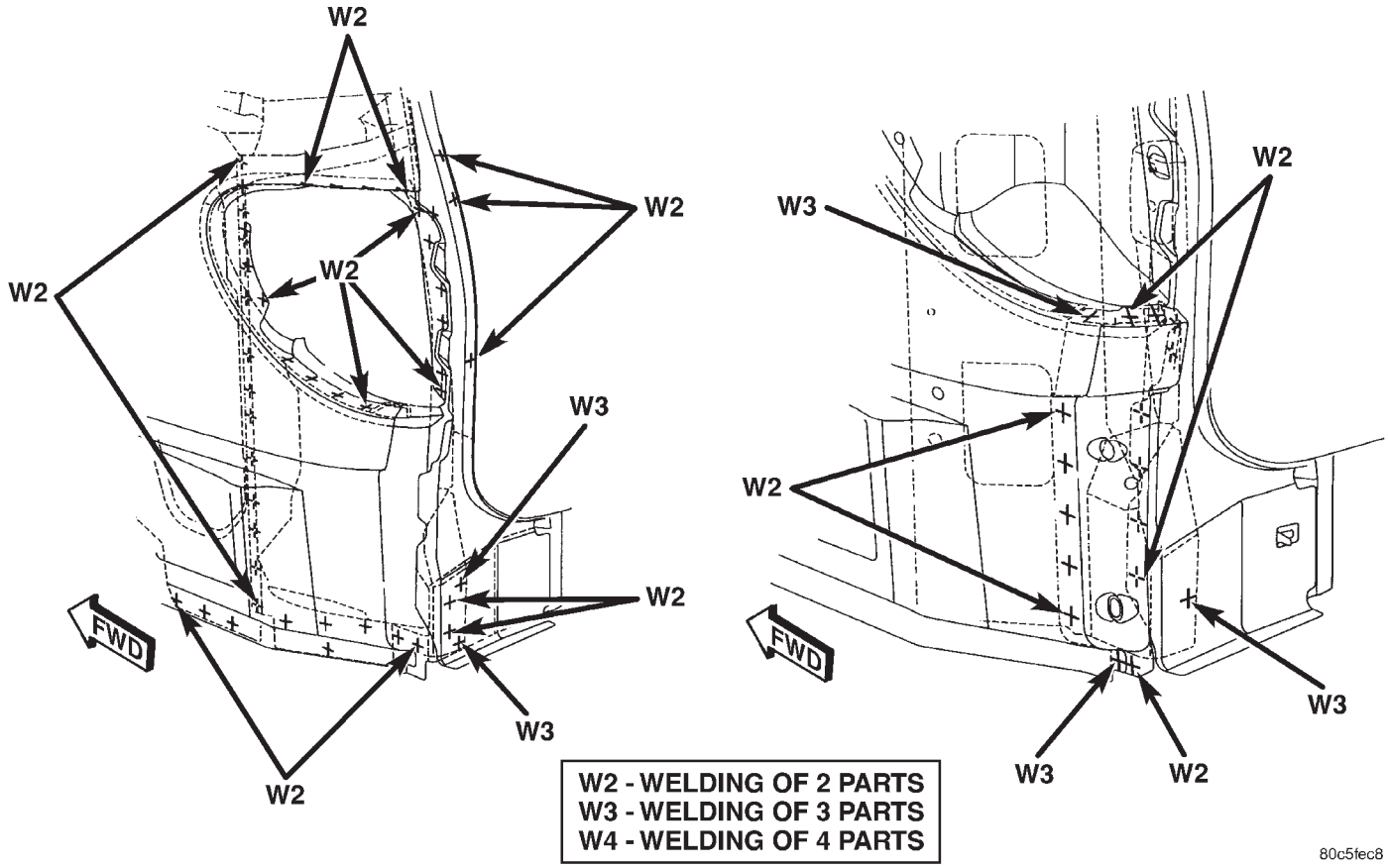

Fig. 133 TAIL LAMP - LONG WHEEL BASE ONLY

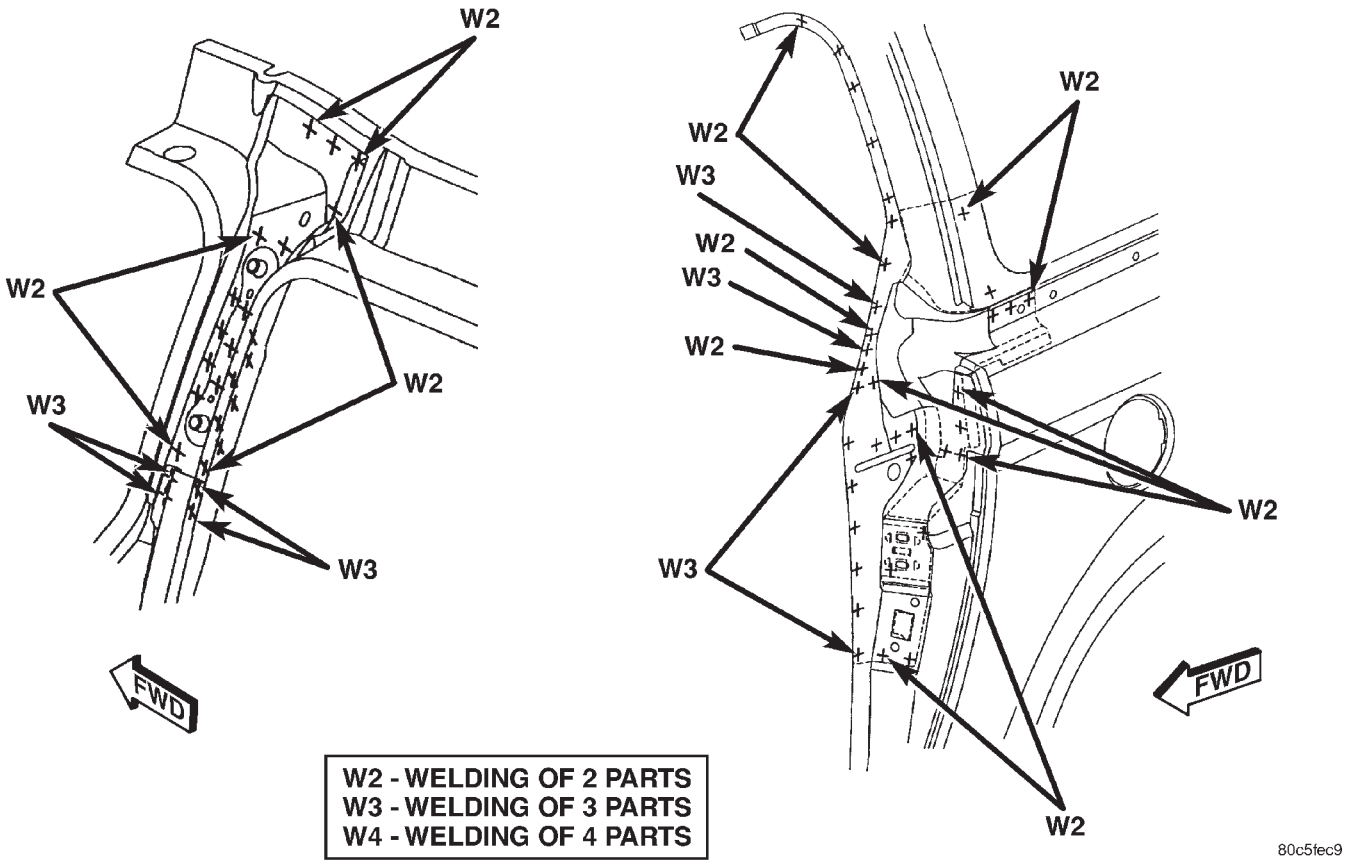

Fig. 134 SLIDING DOOR LATCH - LONG WHEEL BASE ONLY

WELD LOCATIONS (Continued)

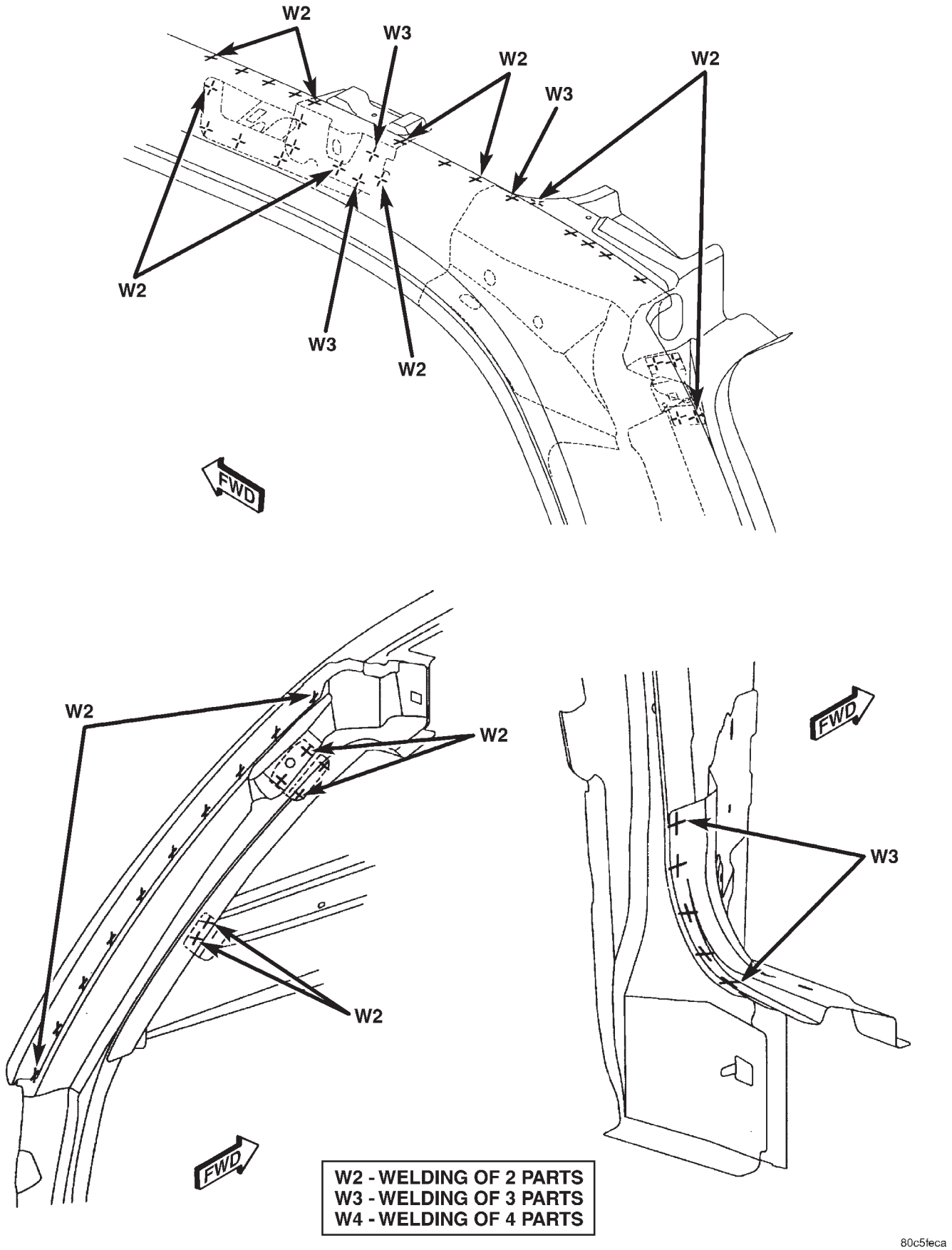

Fig. 135 ROOF BOW EXTENSION - LONG WHEEL BASE ONLY

WELD LOCATIONS (Continued)

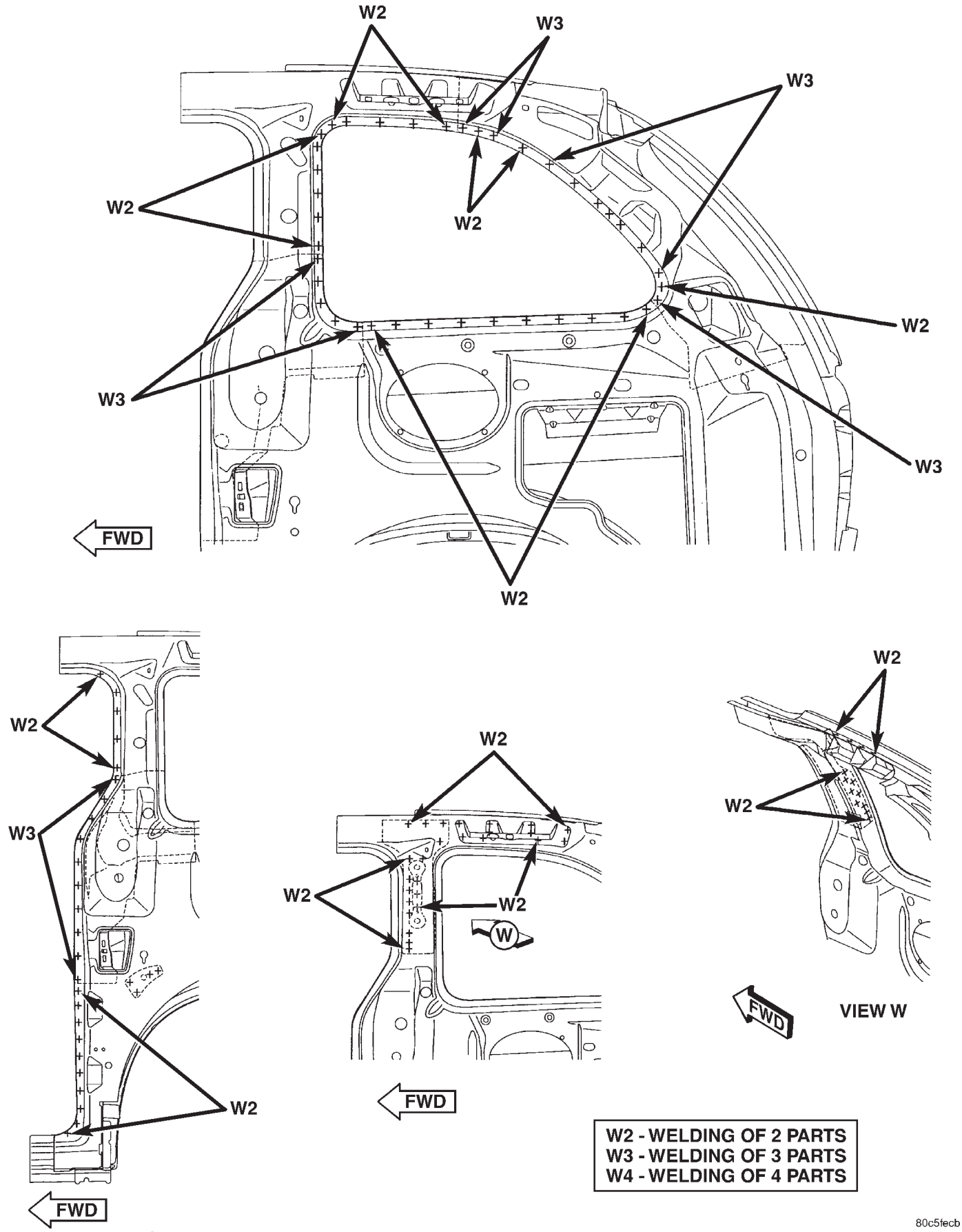

Fig. 136 RIGHT REAR INNER QUARTER PANEL - SHORT WHEEL BASE ONLY

WELD LOCATIONS (Continued)

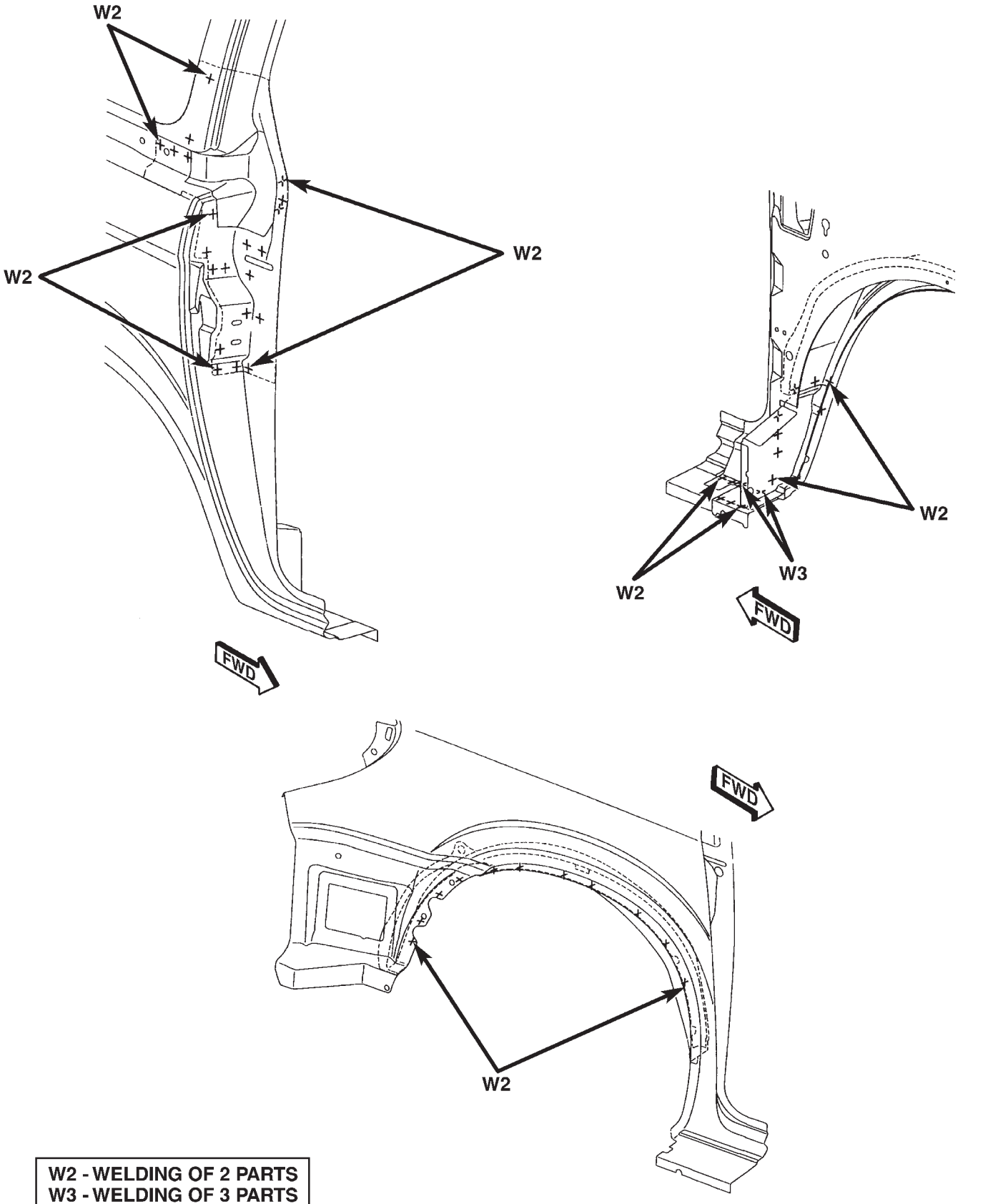

Fig. 137 LATCH REINFORCEMENT AND OUTER WHEELHOUSE - SHORT WHEEL BASE ONLY

WELD LOCATIONS (Continued)

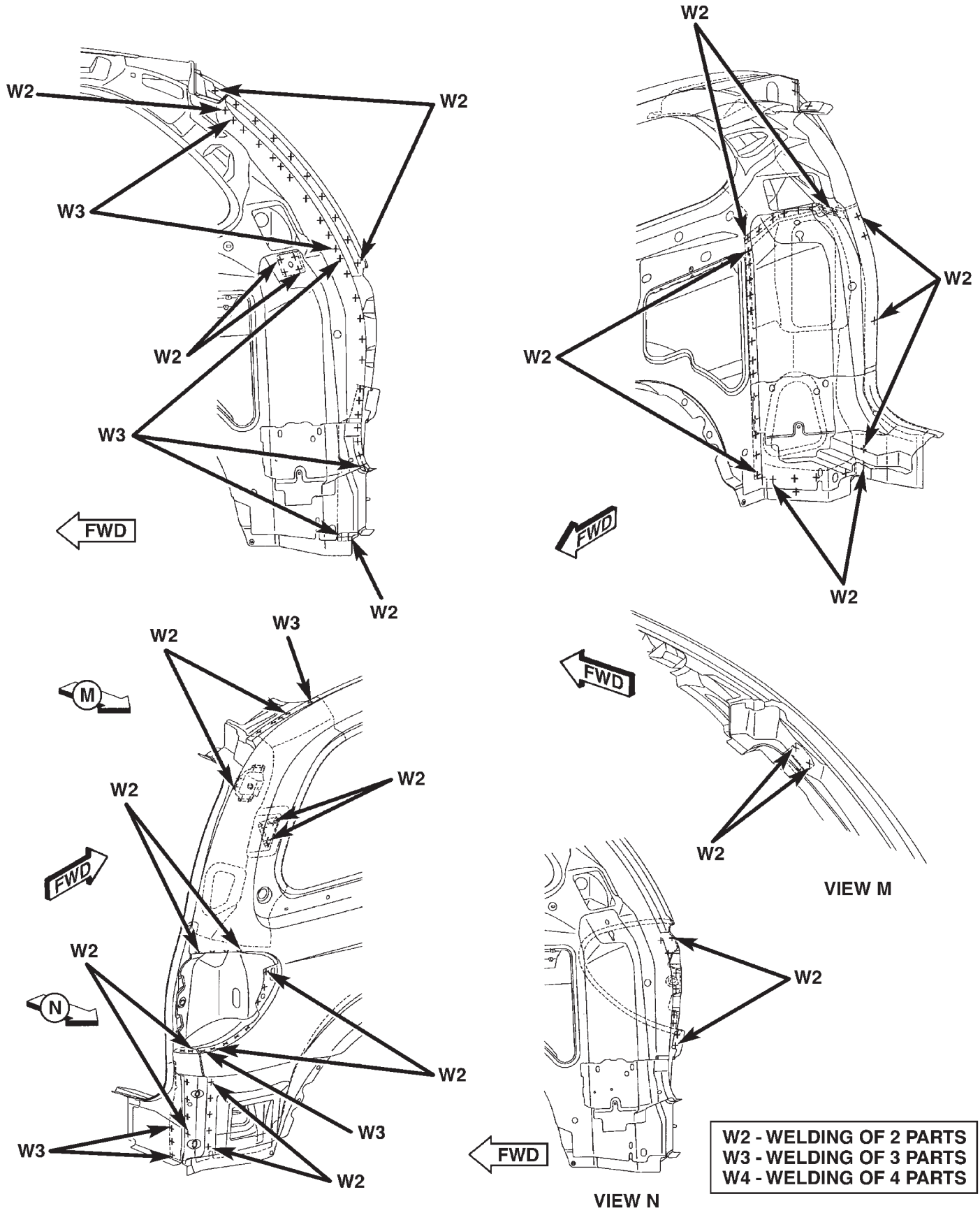

80c5fecd

Fig. 138 D-PILLAR REINFORCEMENT - SHORT WHEEL BASE ONLY

WELD LOCATIONS (Continued)

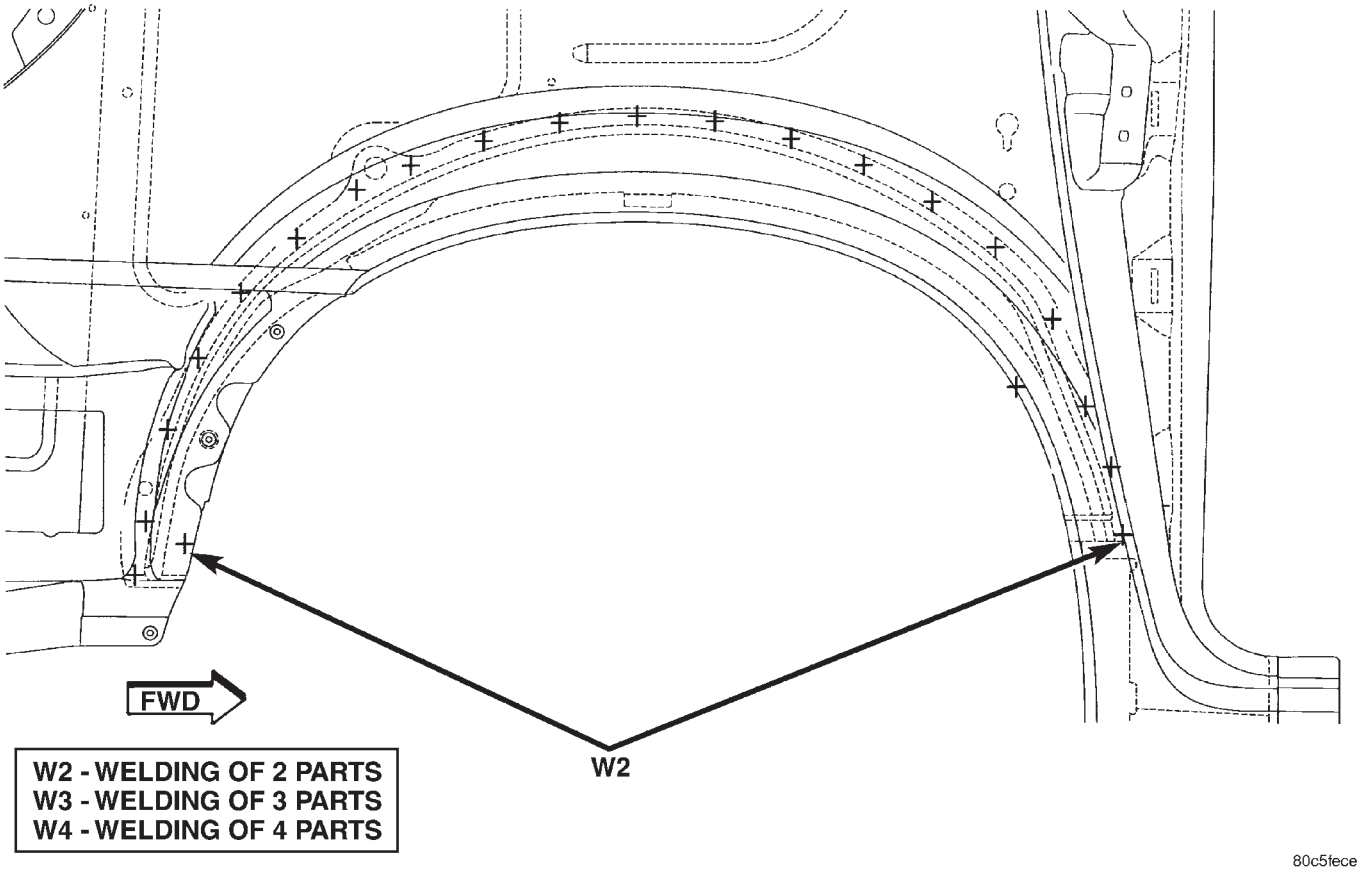

Fig. 139 OUTER WHEELHOUSE - SHORT WHEEL BASE ONLY

WELD LOCATIONS (Continued)

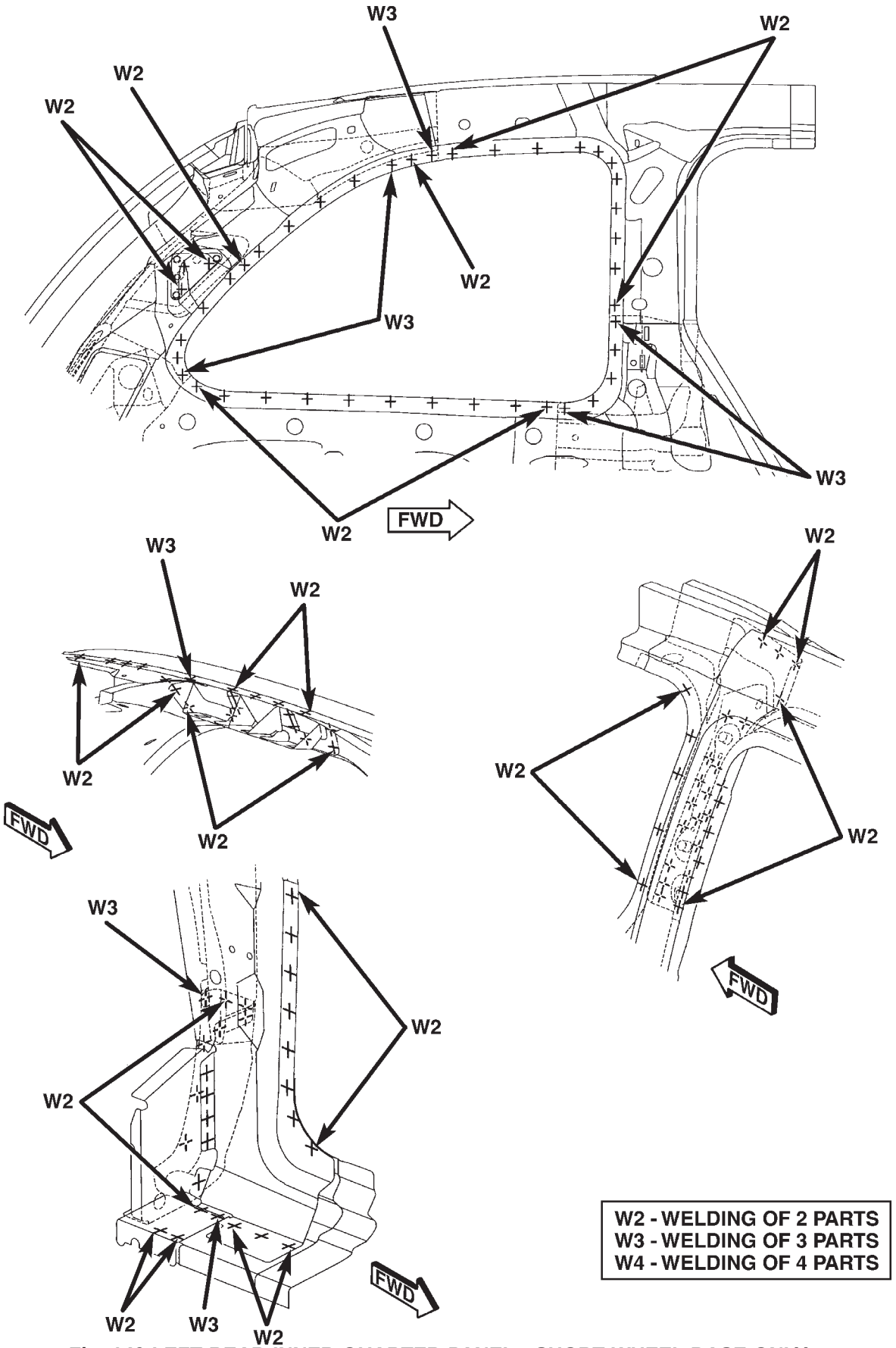

80c5fecf

Fig. 140 LEFT REAR INNER QUARTER PANEL - SHORT WHEEL BASE ONLY

WELD LOCATIONS (Continued)

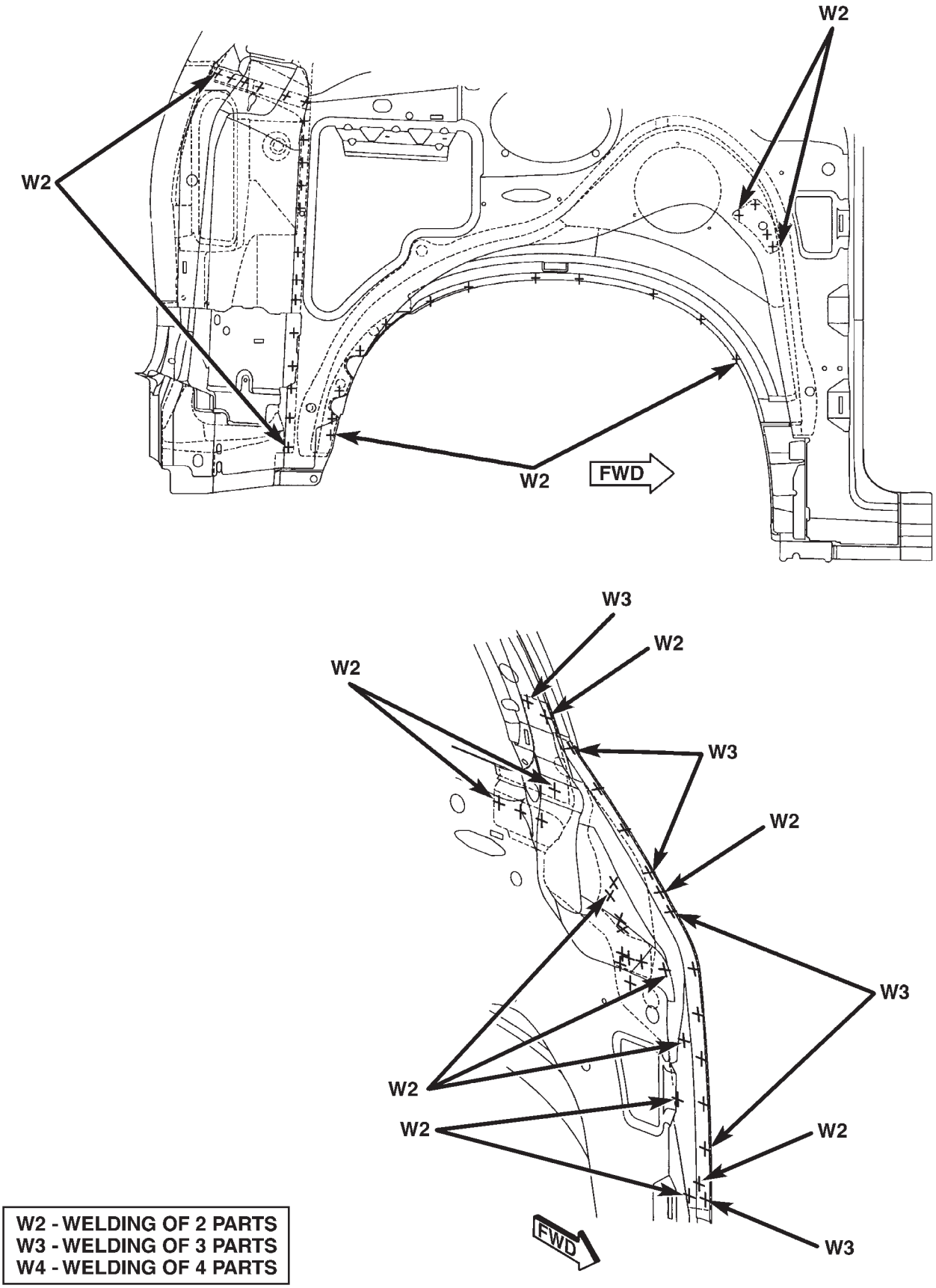

Fig. 141 LATCH REINFORCEMENT - SHORT WHEEL BASE ONLY

WELD LOCATIONS (Continued)

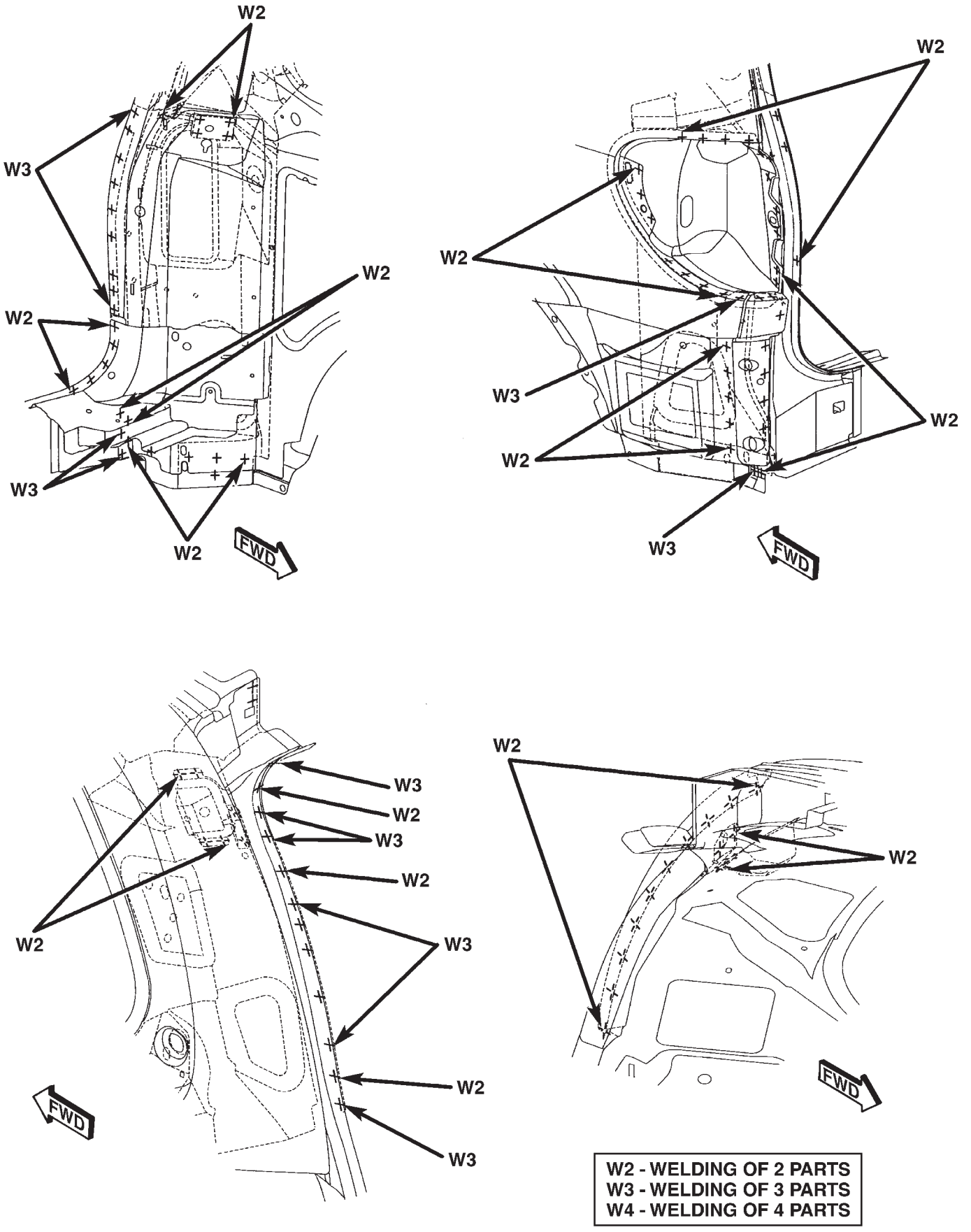

Fig. 142 D-PILLAR REINFORCEMENT - SHORT WHEEL BASE ONLY

WELD LOCATIONS (Continued)

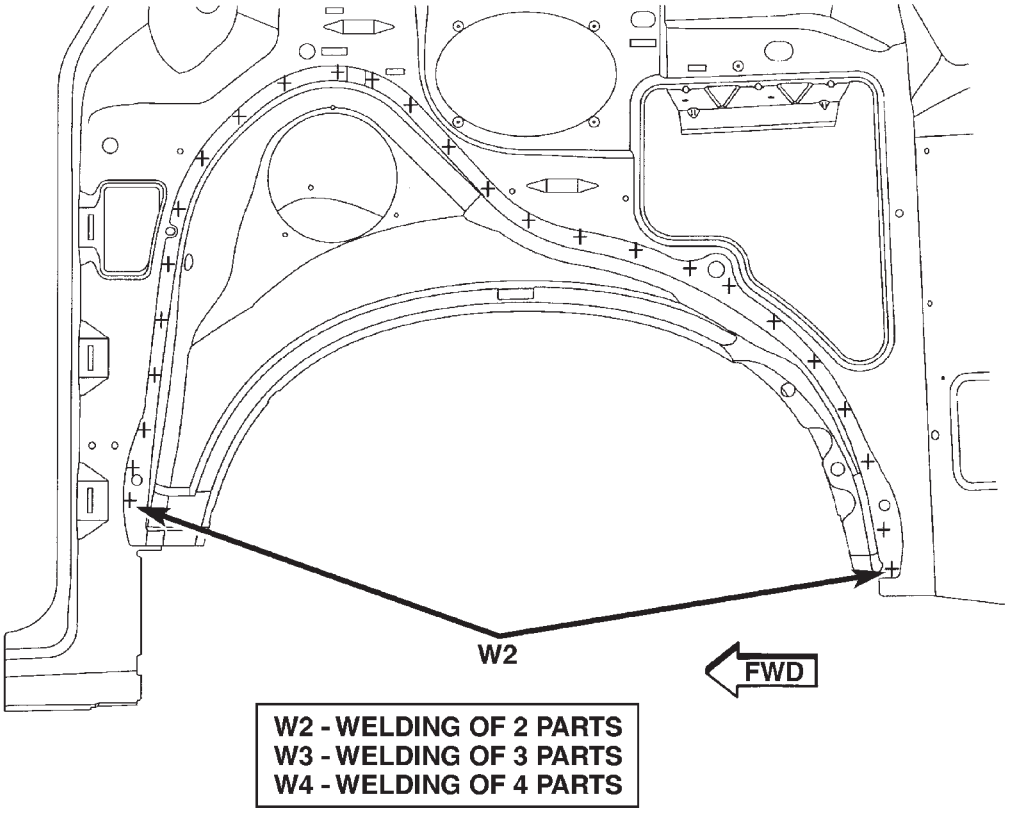

Fig. 143 OUTER WHEELHOUSE - SHORT WHEEL BASE ONLY

WELD LOCATIONS (Continued)

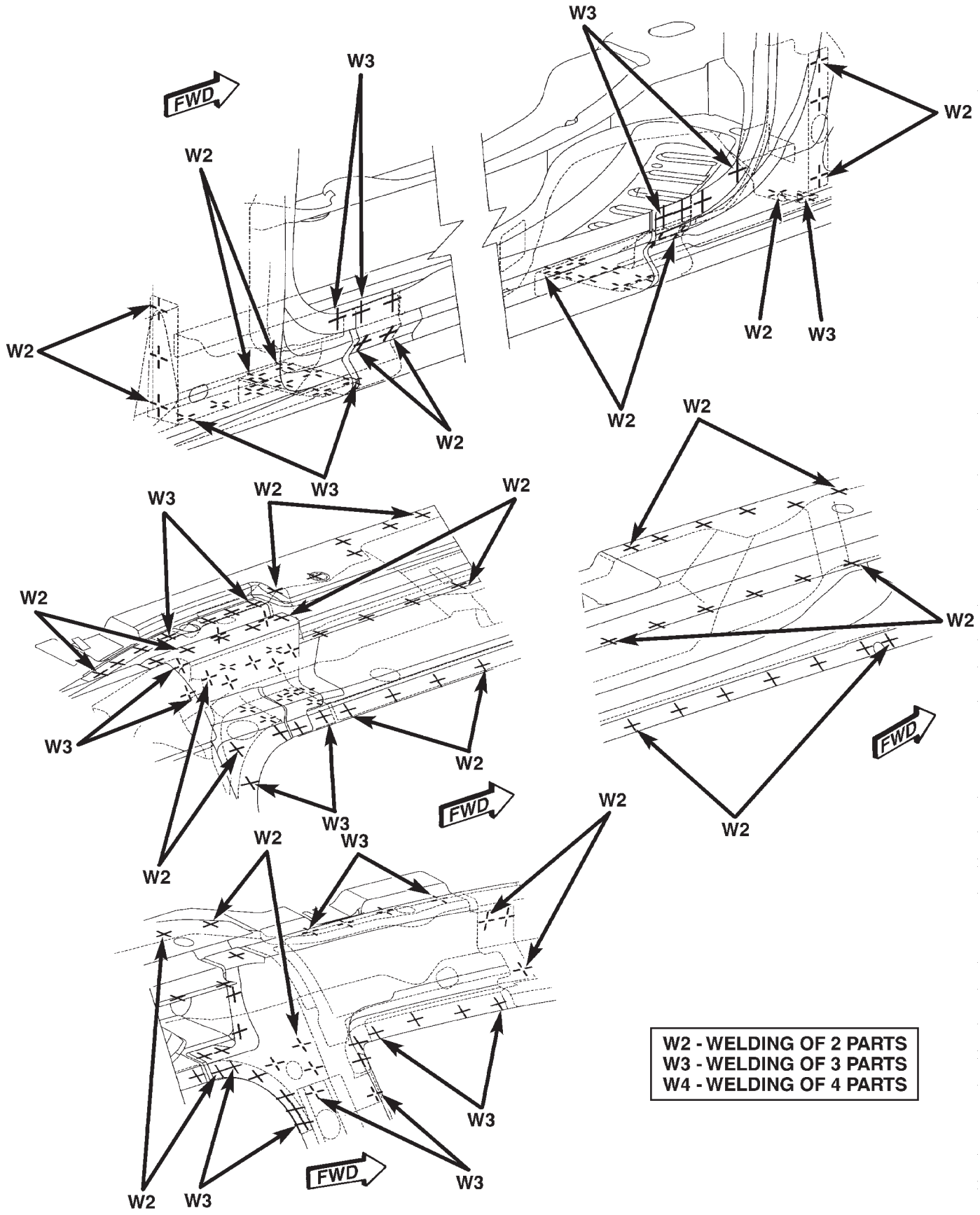
W3
W2
FWD
W2
W3
W2
W2
W3
W2
W2
W3
W2

WELD LOCATIONS (Continued)

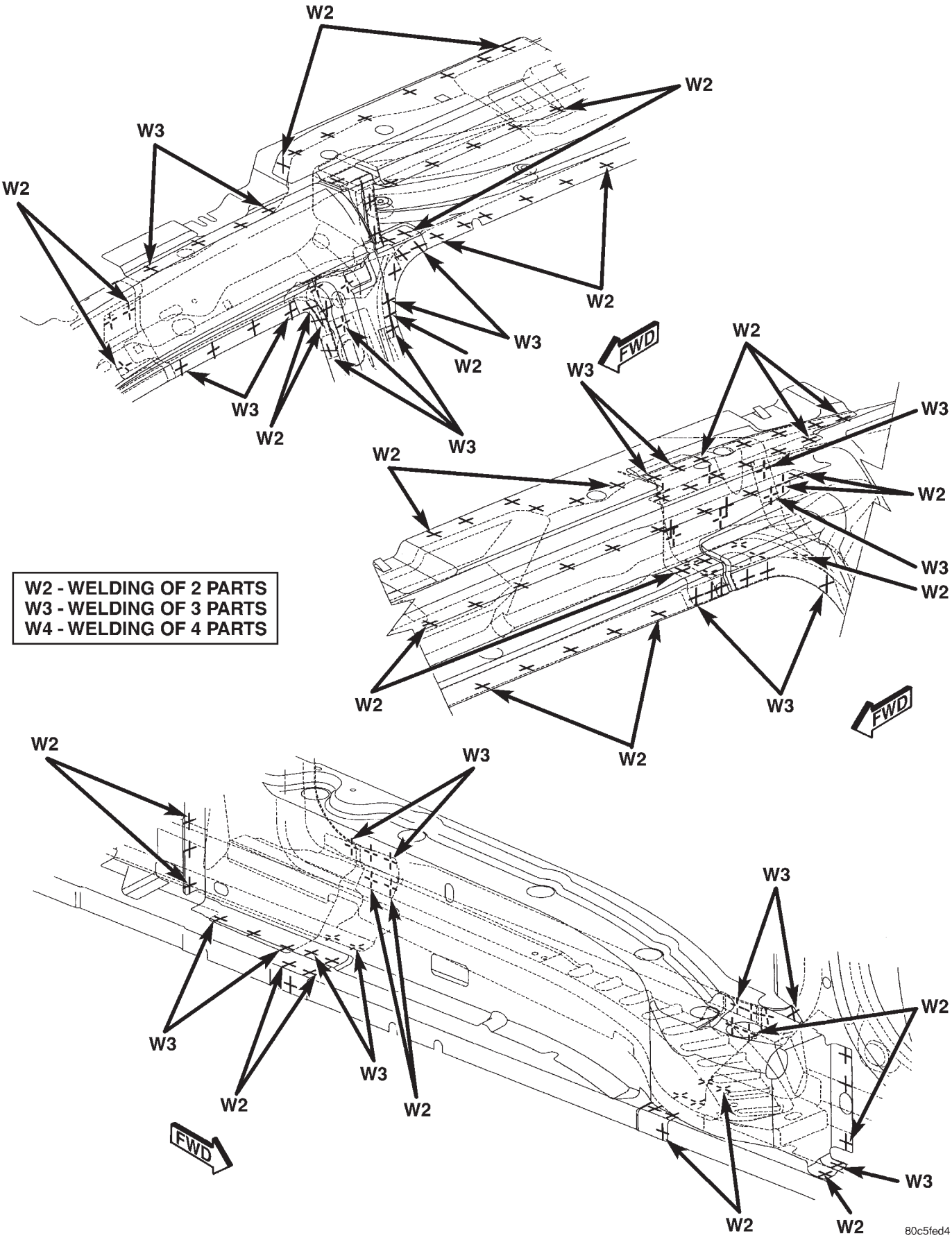

Fig. 145 BODY SIDE APERTURE LEFT SIDE - LONG WHEEL BASE ONLY

WELD LOCATIONS (Continued)

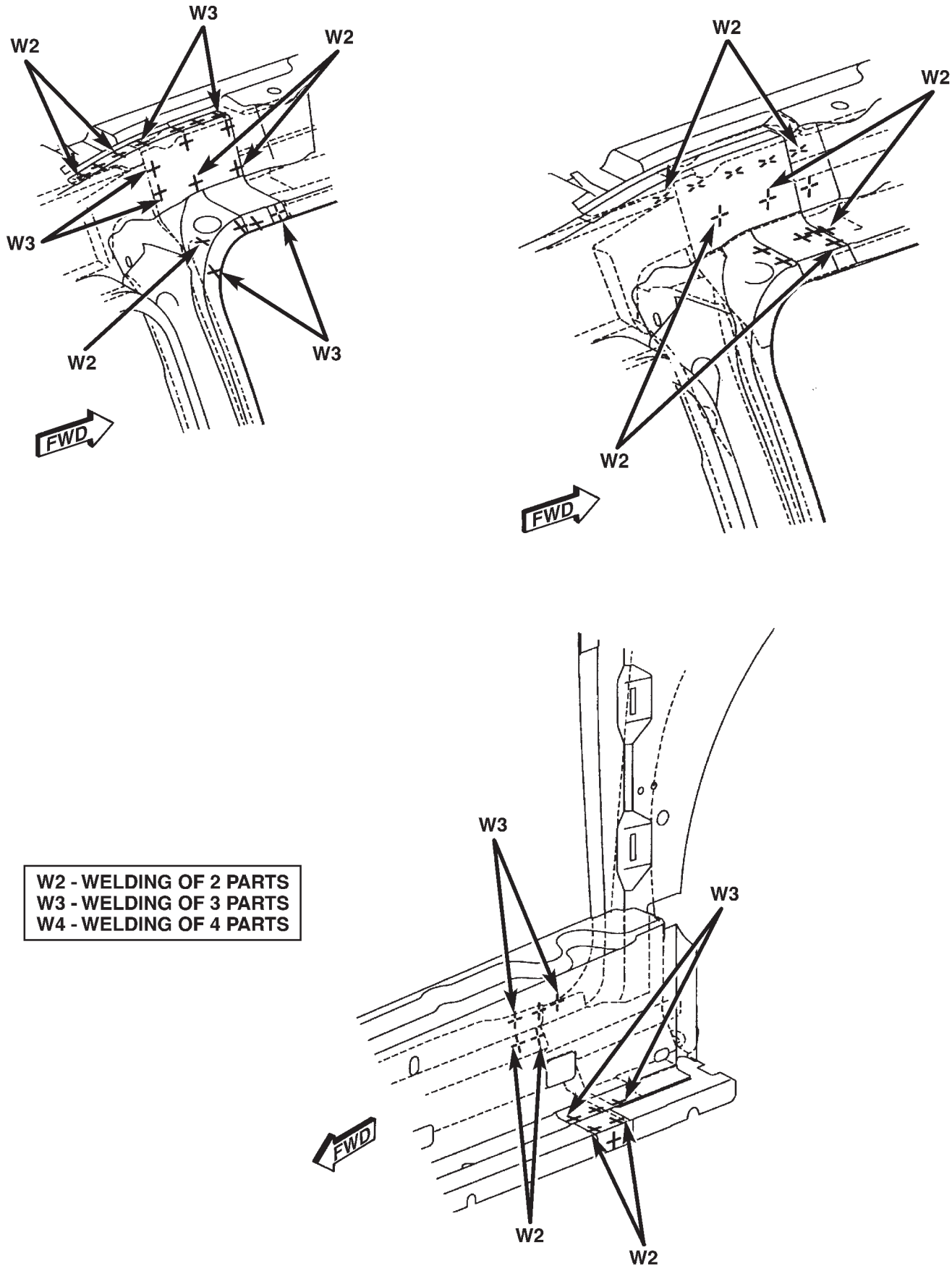

Fig. 146 BODY SIDE APERTURE RIGHT SIDE - SHORT WHEEL BASE ONLY

WELD LOCATIONS (Continued)

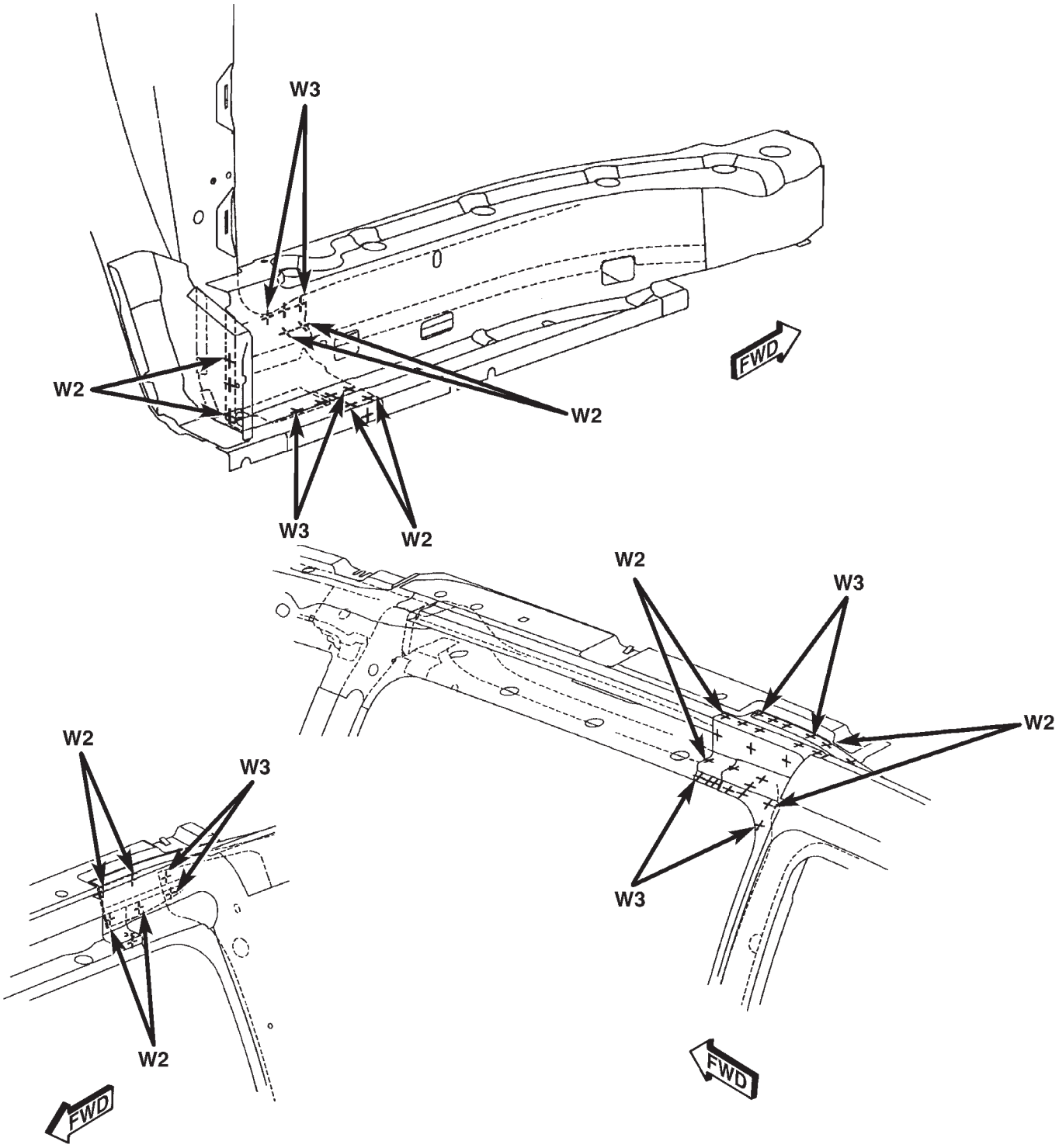

W2 - WELDING OF 2 PARTS
W3 - WELDING OF 3 PARTS
W4 - WELDING OF 4 PARTS

80c5fed6

Fig. 147 BODY SIDE APERTURE LEFT SIDE - SHORT WHEEL BASE ONLY

WELD LOCATIONS (Continued)

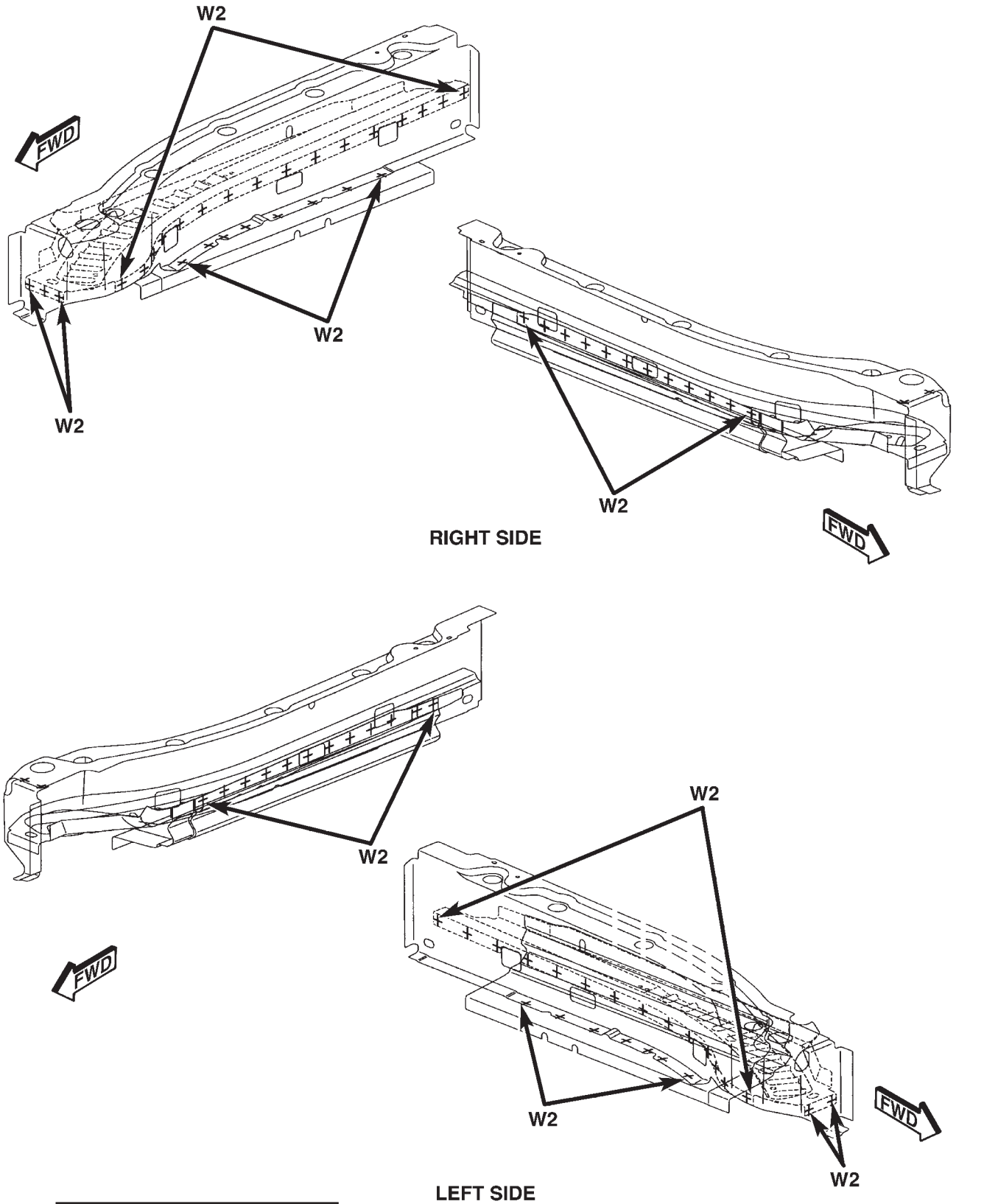

80c5fed7

Fig. 148 LOWER SLIDING DOOR TRACK

WELD LOCATIONS (Continued)

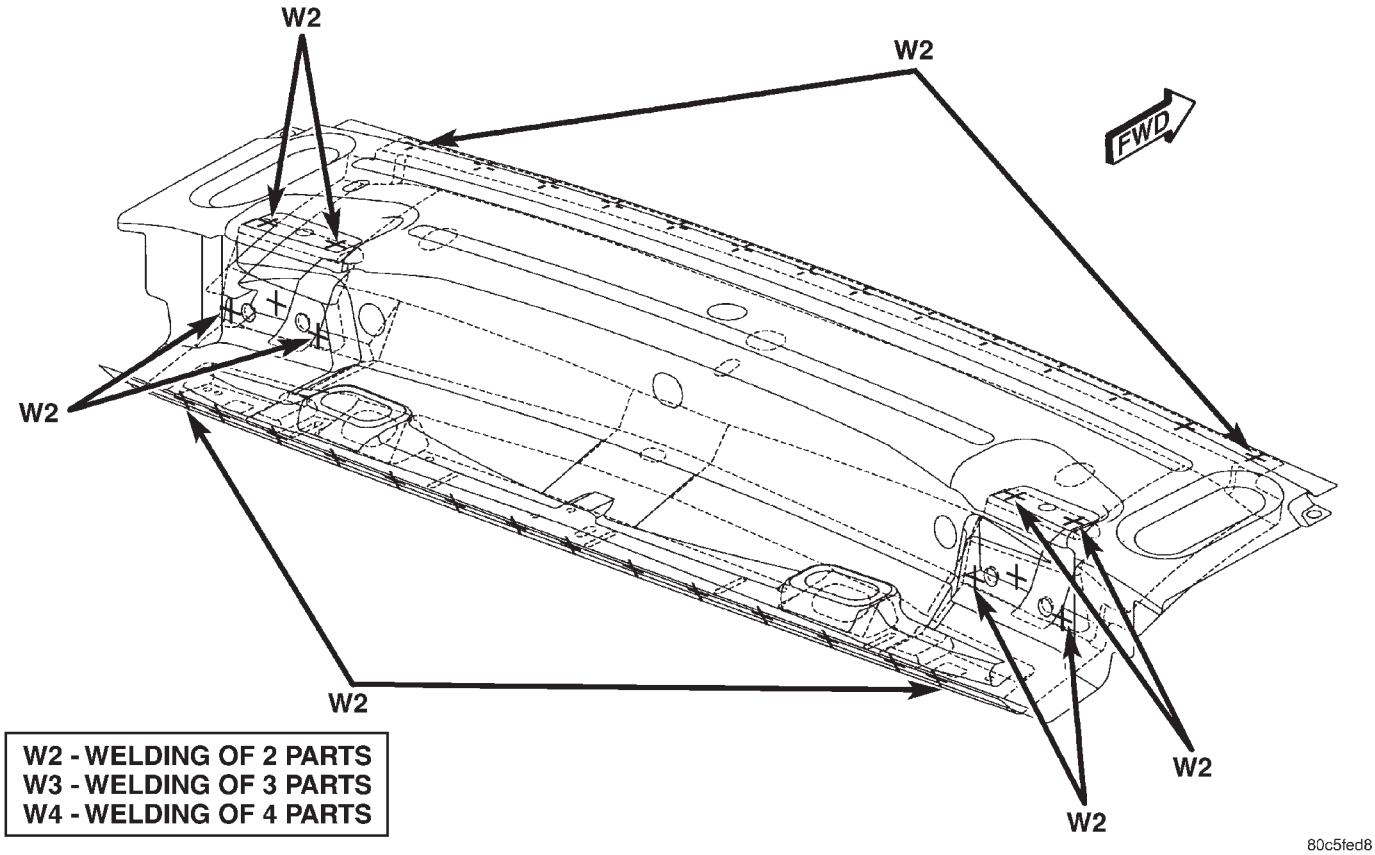

Fig. 149 LIFTGATE UPPER FRAME

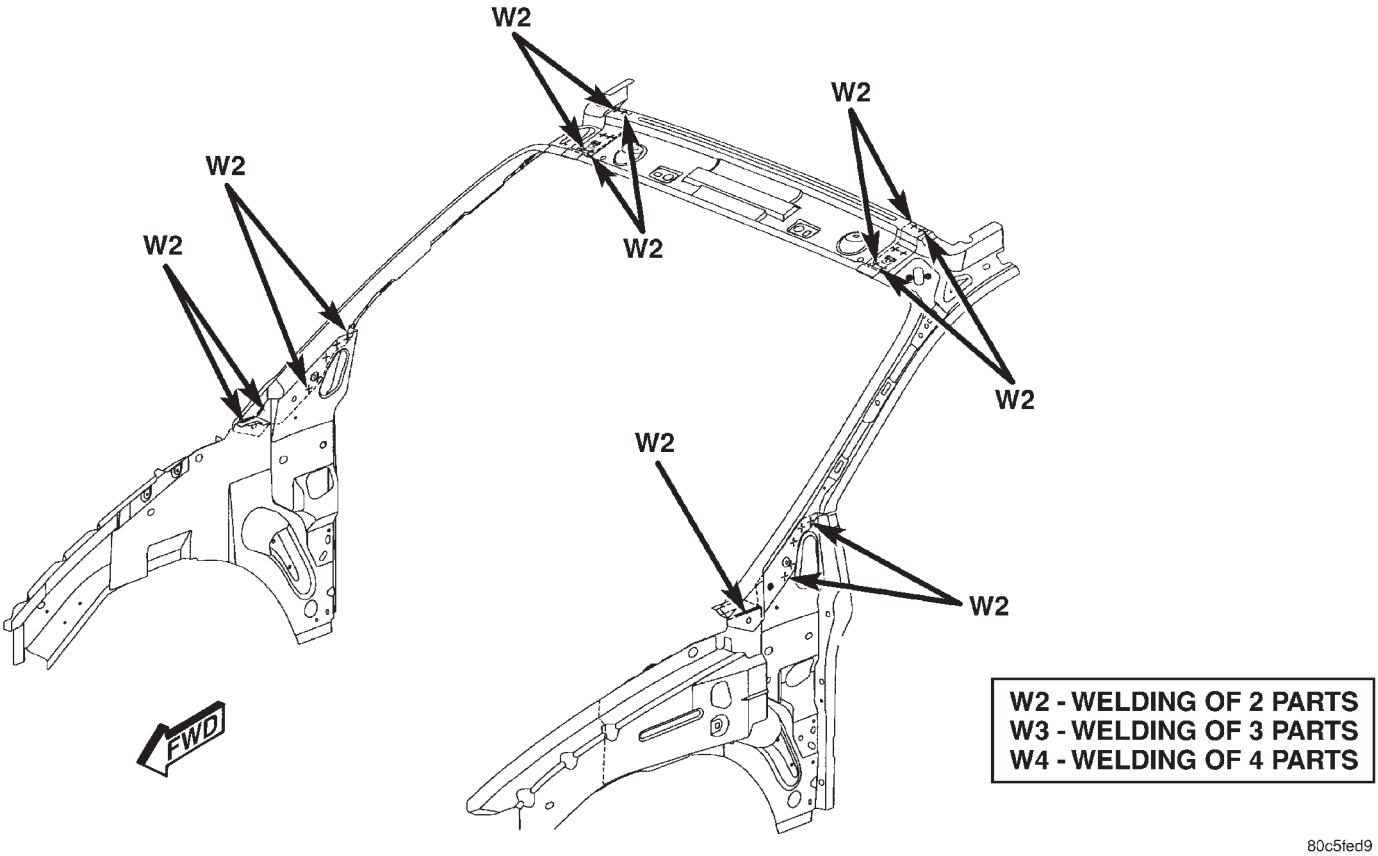

Fig. 150 UPPER WINDSHIELD FRAME

WELD LOCATIONS (Continued)

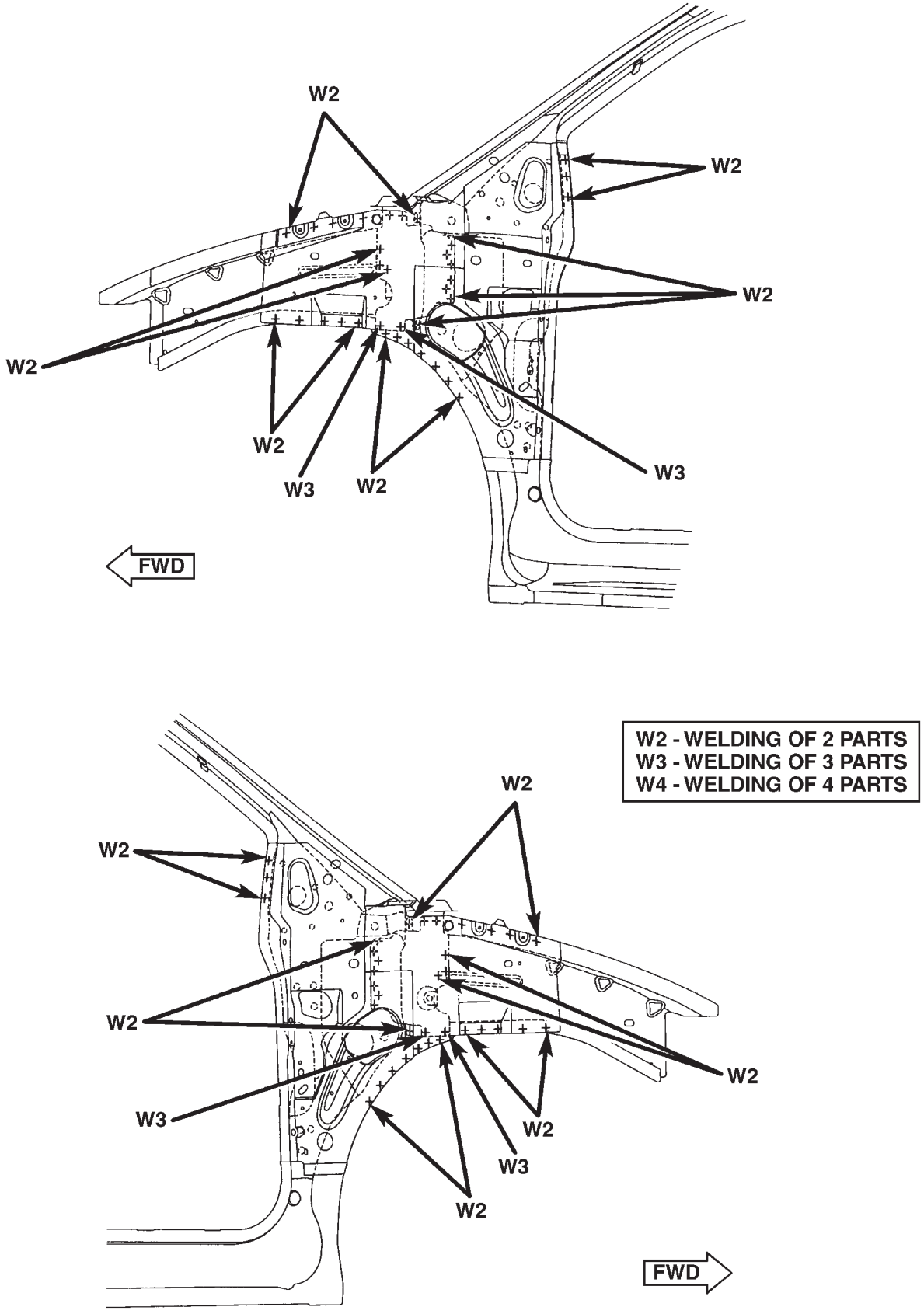

Fig. 151 FRONT FENDER SHIELD BEAM

WELD LOCATIONS (Continued)

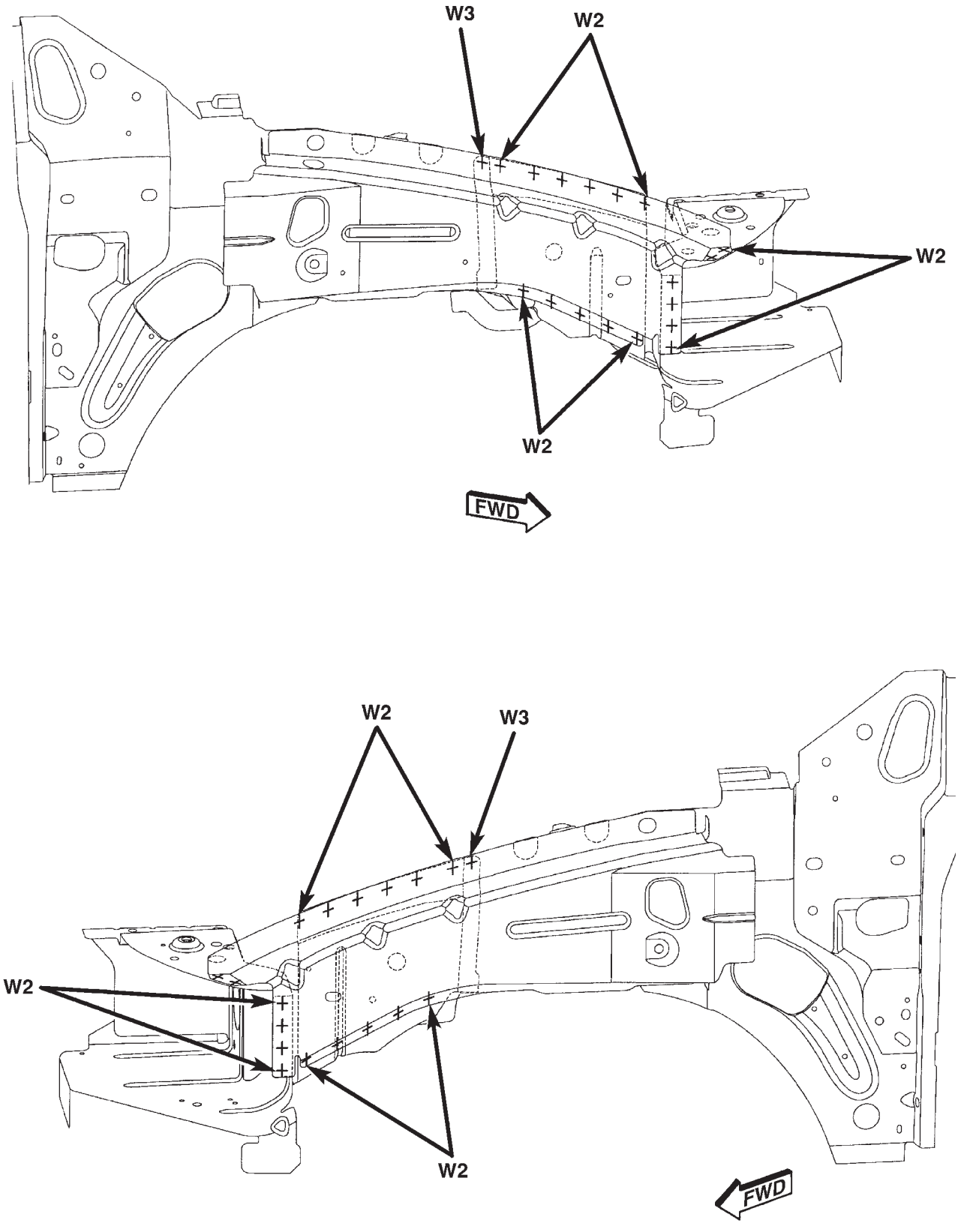

Fig. 152 FRONT FENDER SHIELD BEAM/COWL SIDE PANEL

WELD LOCATIONS (Continued)

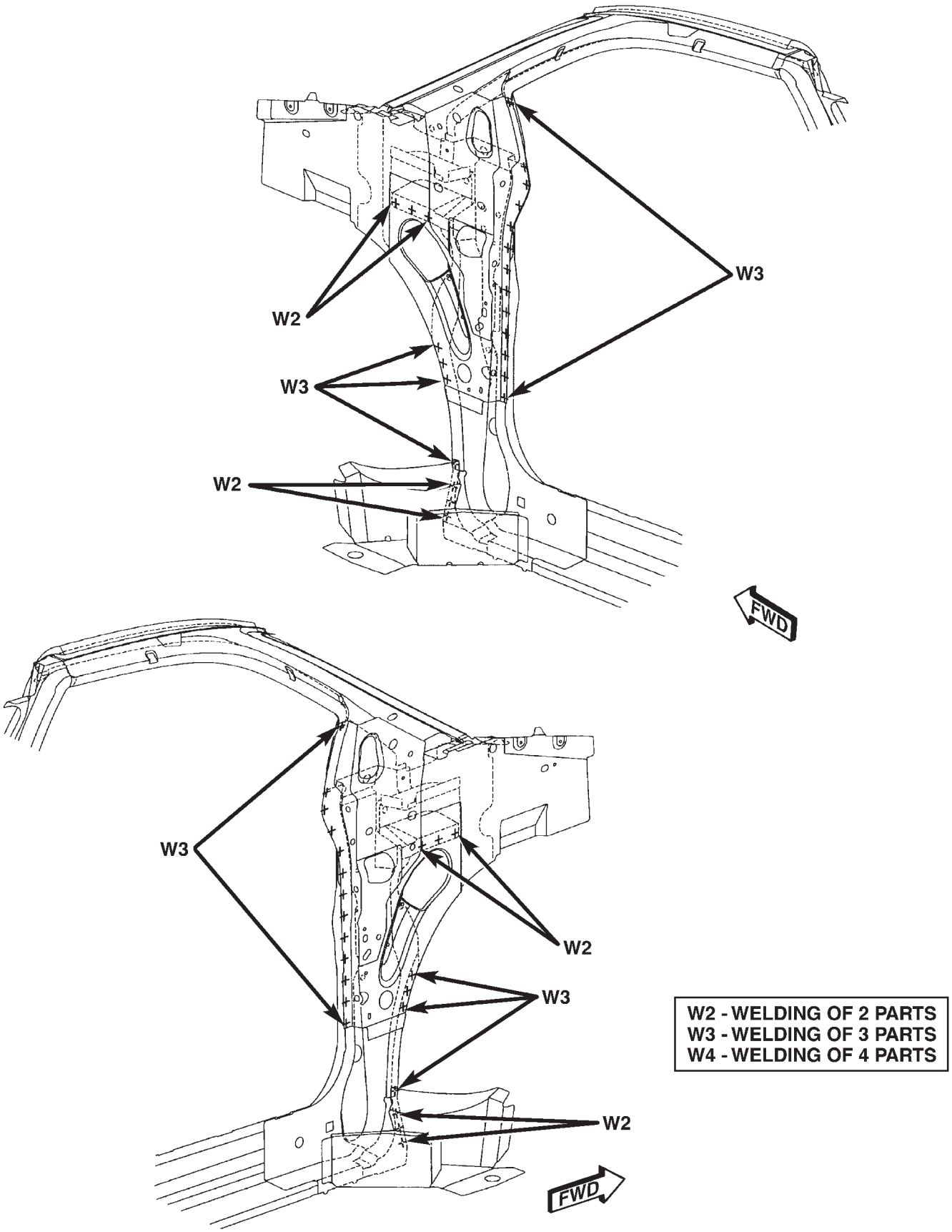

Fig. 153 HINGE PILLAR REINFORCEMENT

WELD LOCATIONS (Continued)

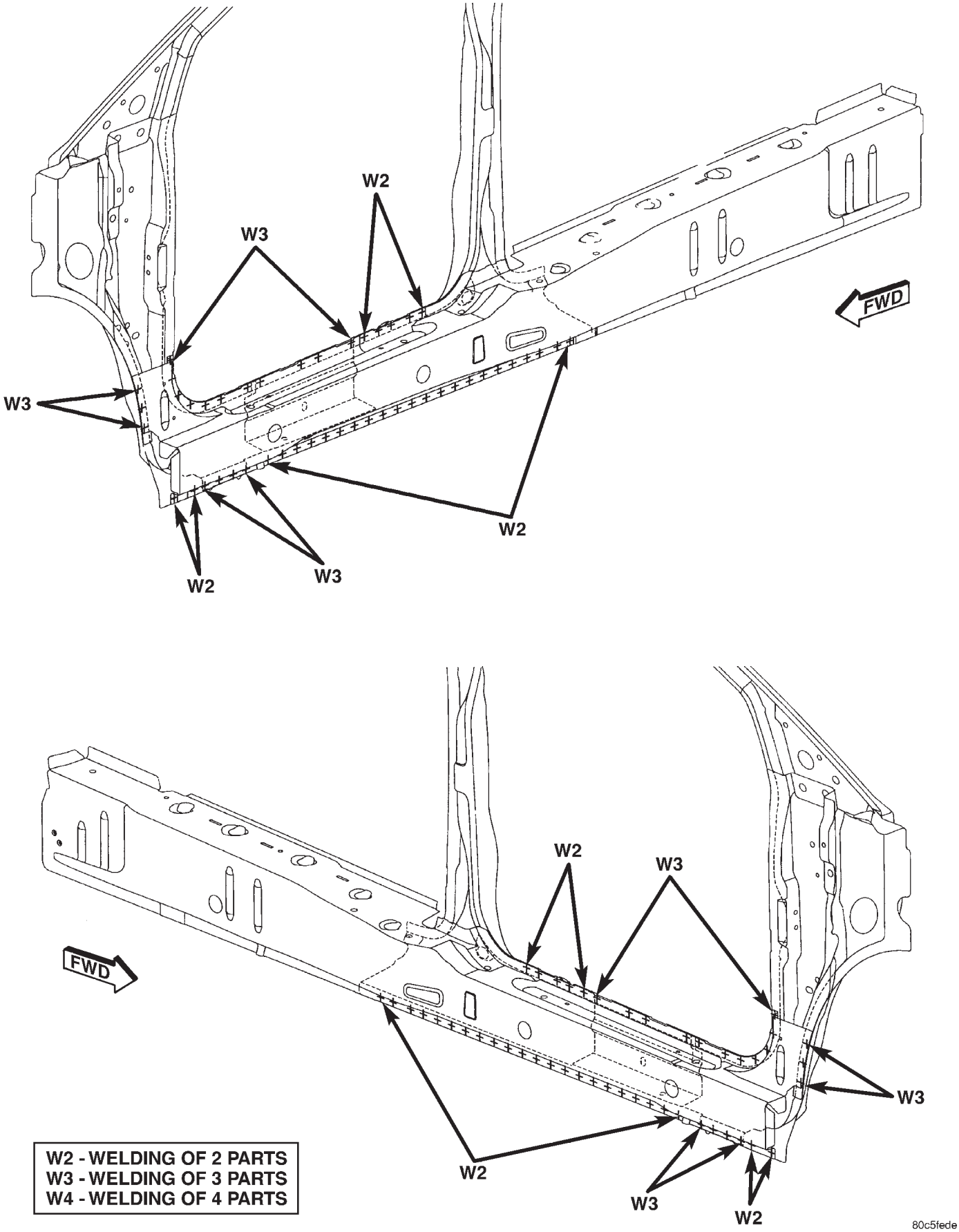

Fig. 154 INNER SIDE SILL - LONG WHEEL BASE ONLY

WELD LOCATIONS (Continued)

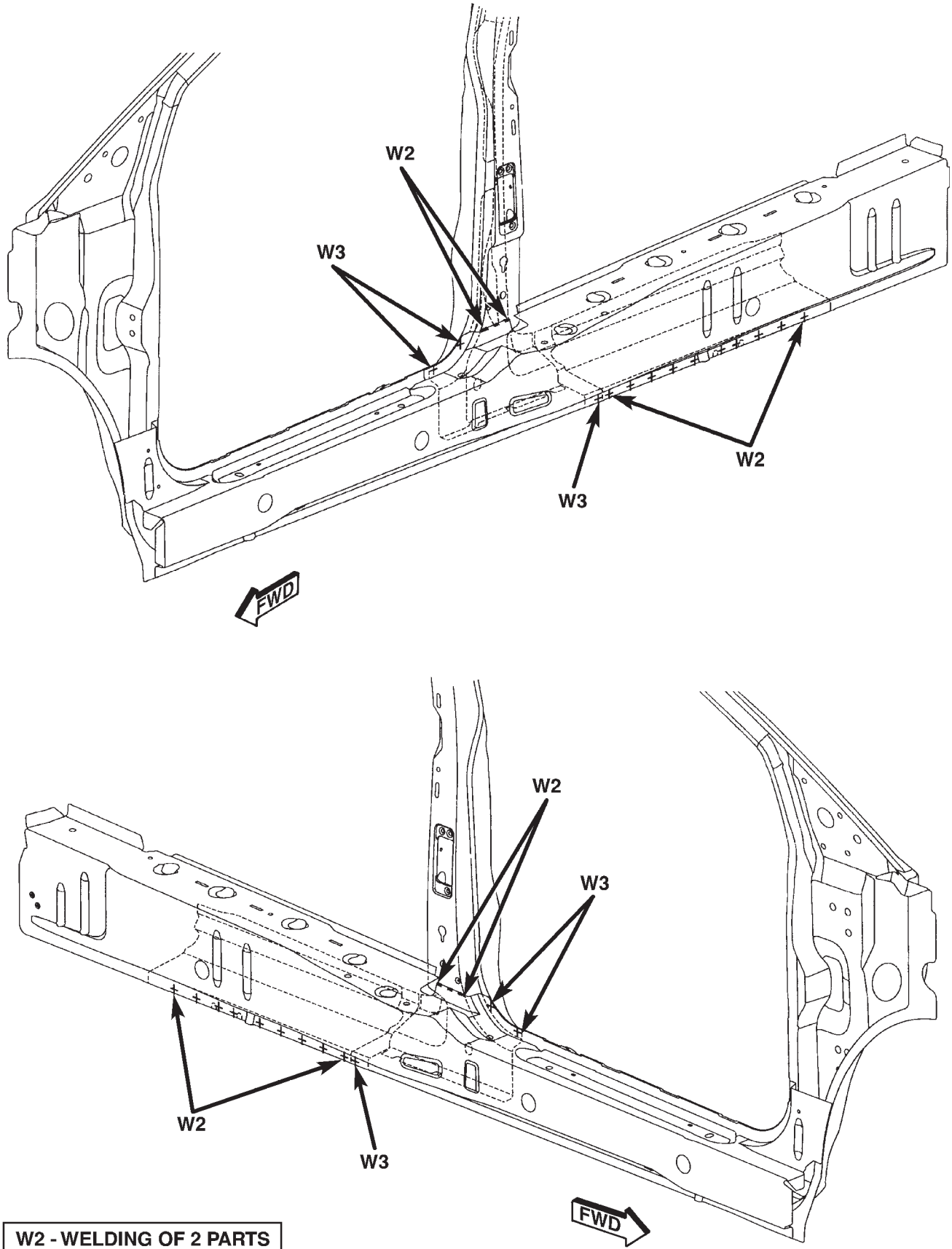

Fig. 155 INNER SIDE SILL/OUTER SIDE SILL - LONG WHEEL BASE ONLY

WELD LOCATIONS (Continued)

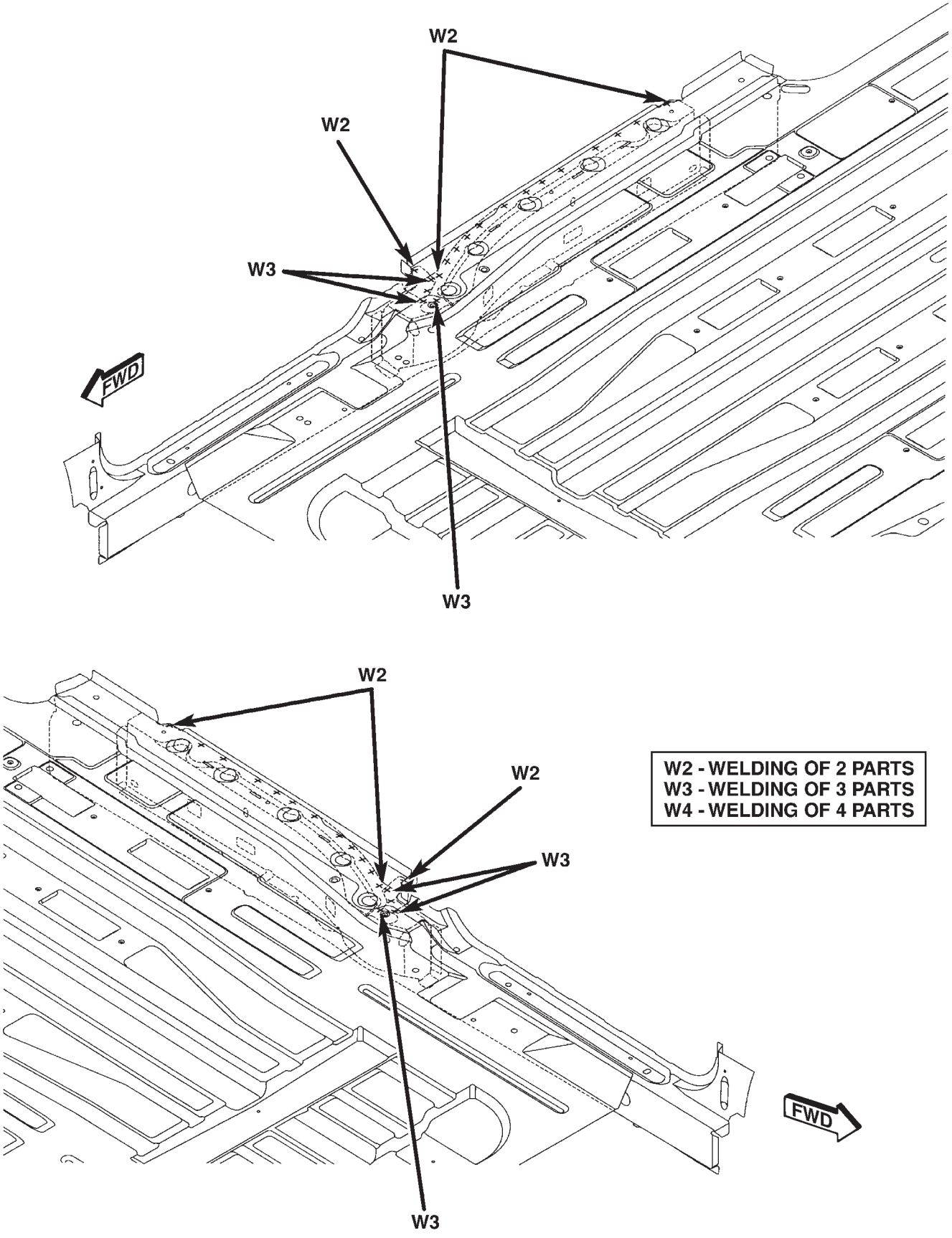

Fig. 156 LOWER SLIDING DOOR TRACK REINFORCEMENT - LONG WHEEL BASE ONLY

WELD LOCATIONS (Continued)

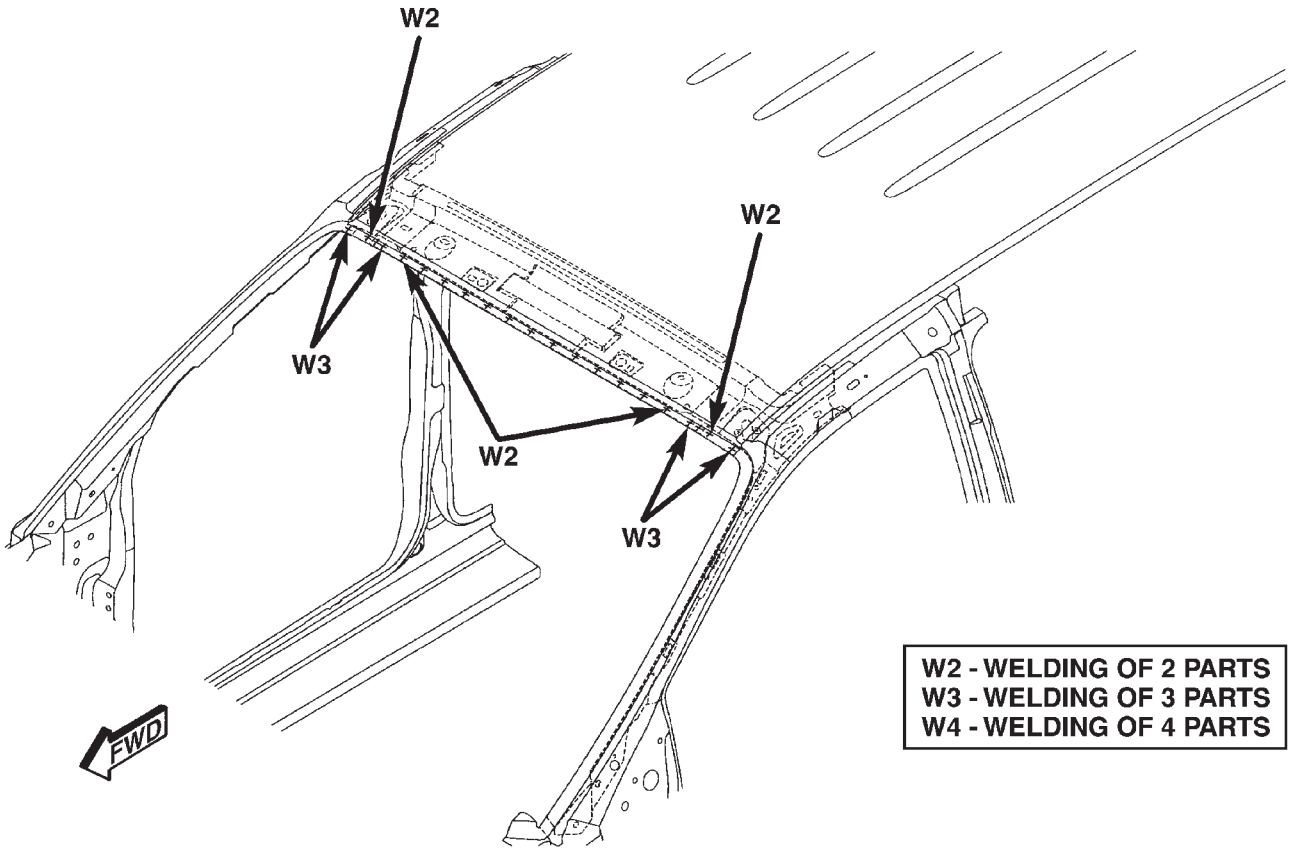

Fig. 157 UPPER WINDSHIELD FRAME/ROOF PANEL - LONG WHEEL BASE ONLY

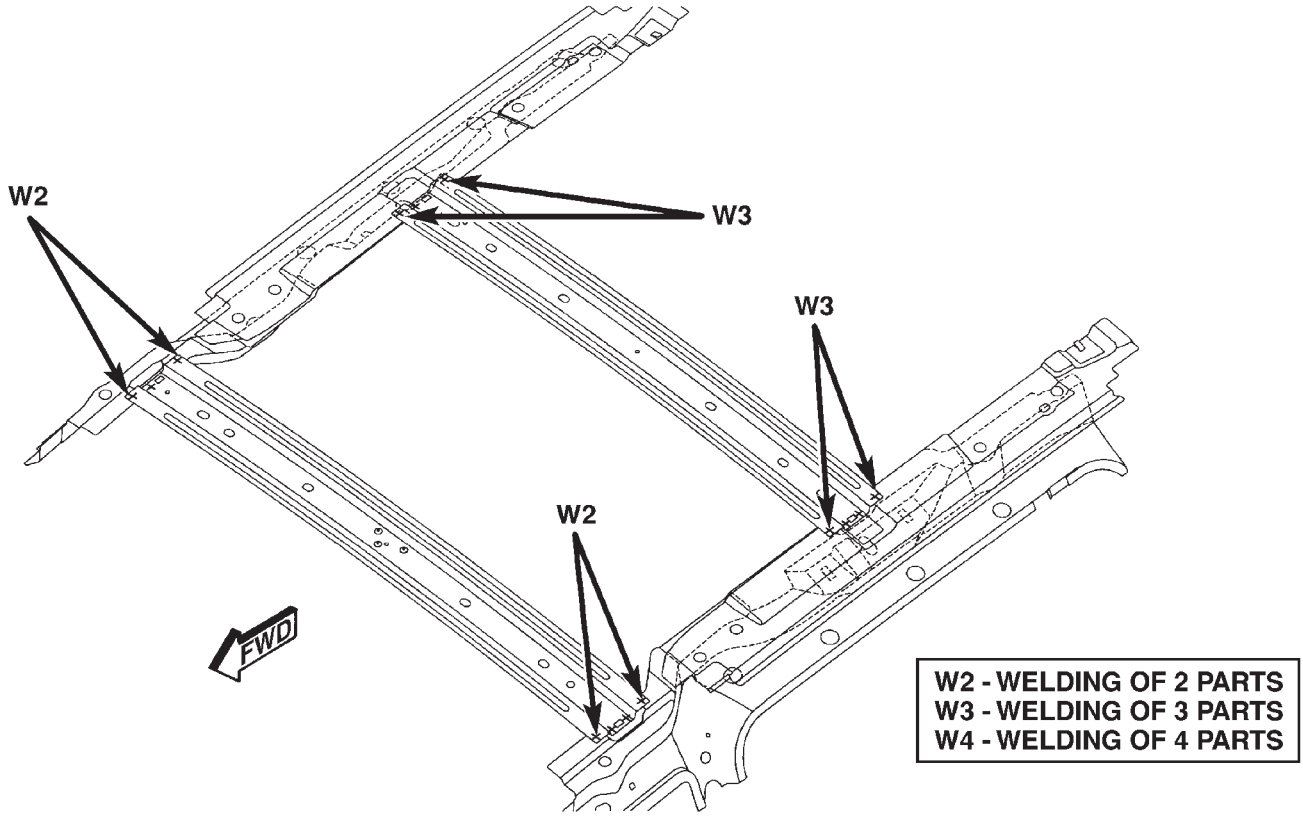

Fig. 158 ROOF BOWS/INNER ROOF SIDE RAILS

WELD LOCATIONS (Continued)

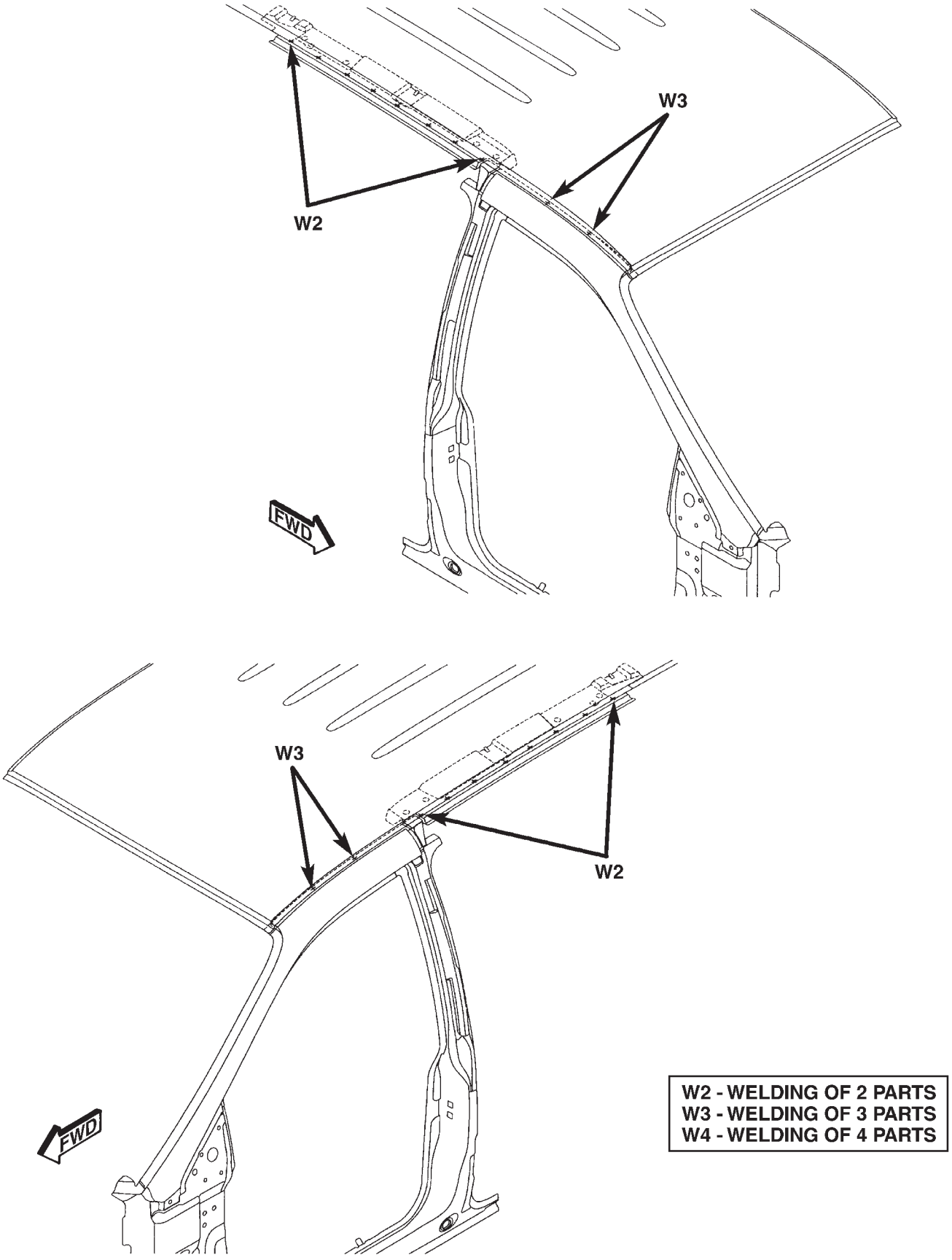

Fig. 159 OUTER ROOF PANEL - LONG WHEEL BASE ONLY

WELD LOCATIONS (Continued)

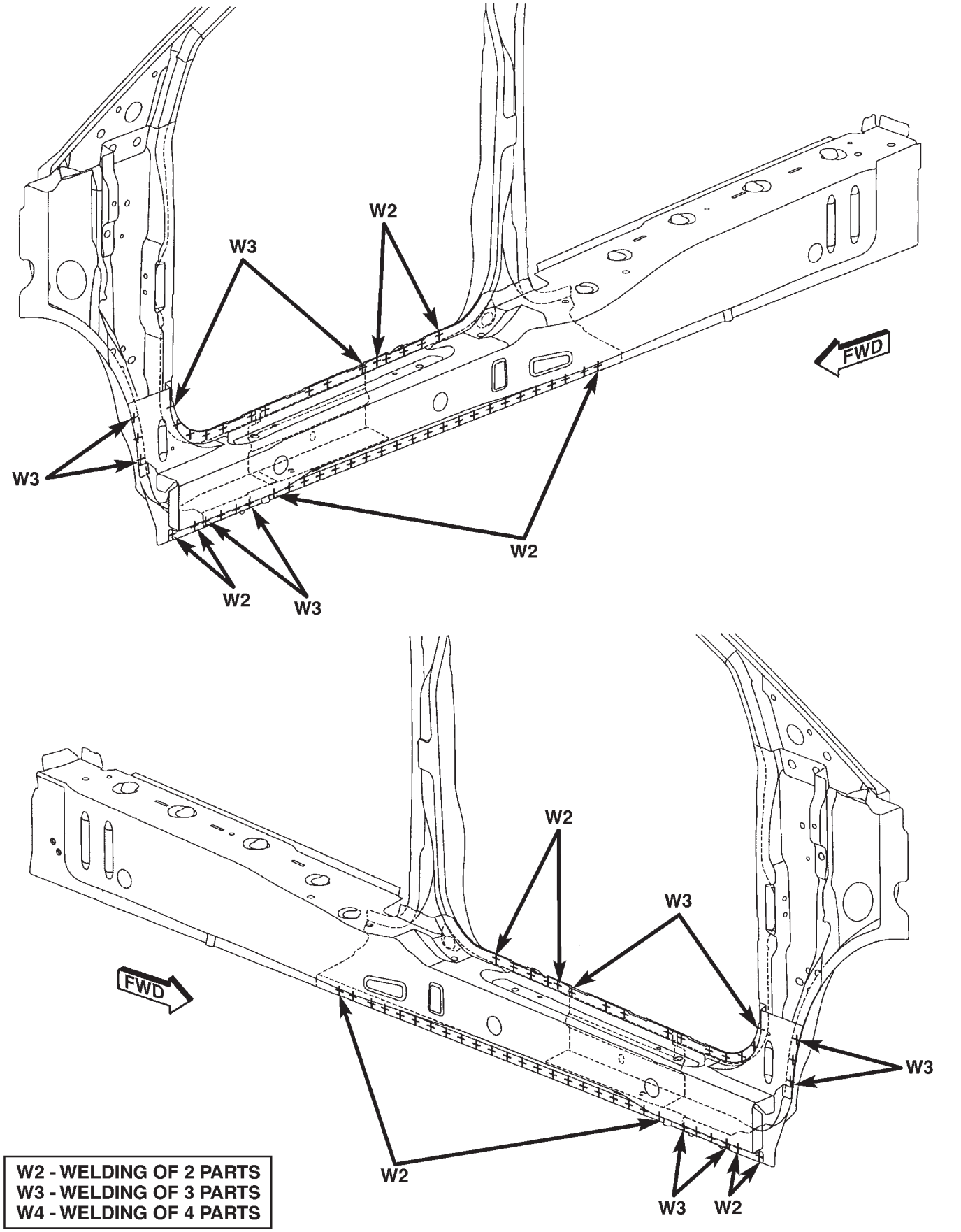

Fig. 160 INNER SIDE SILL - SHORT WHEEL BASE ONLY

WELD LOCATIONS (Continued)

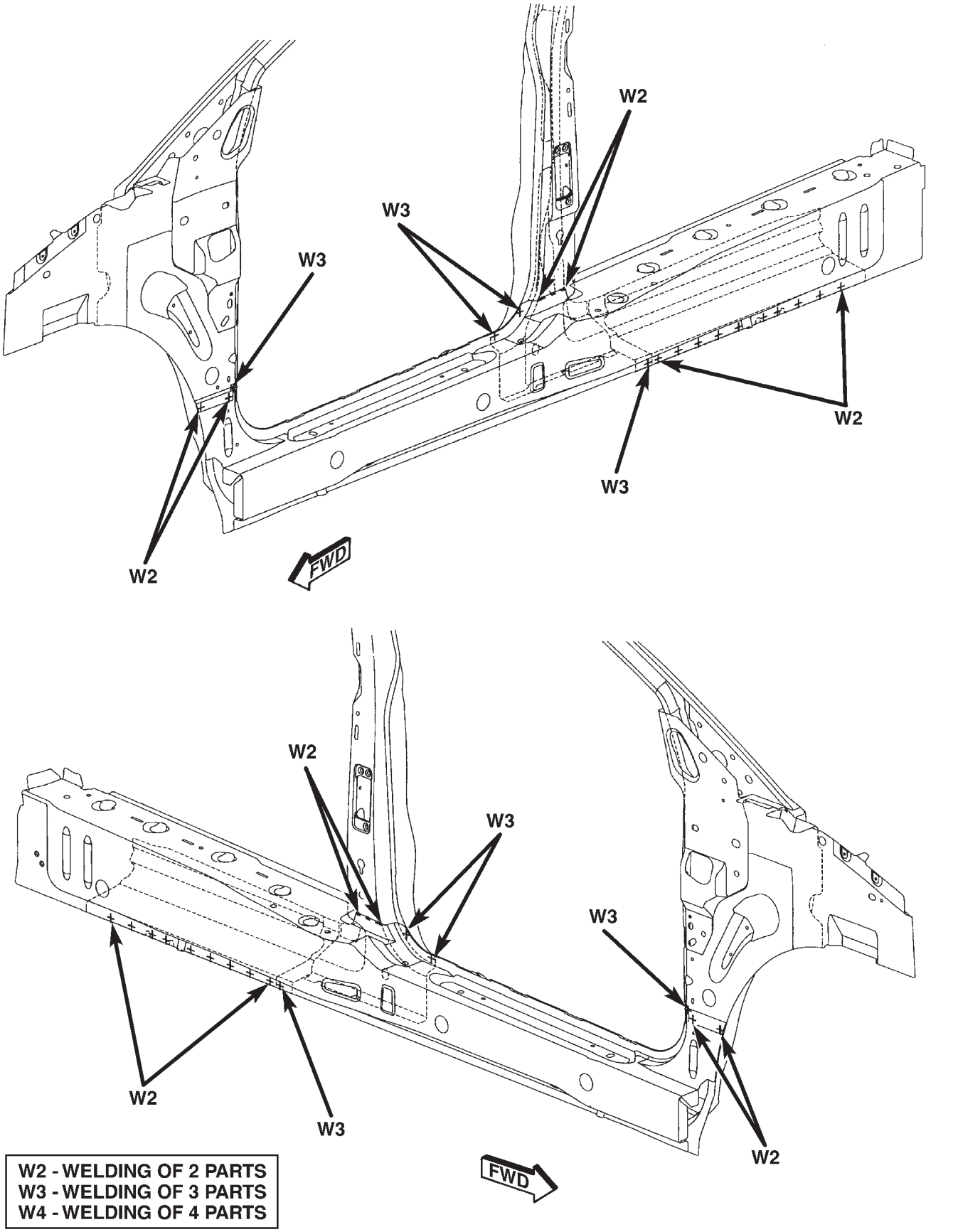

Fig. 161 INNER SIDE/OUTER SIDE SILLS - SHORT WHEEL BASE ONLY

WELD LOCATIONS (Continued)

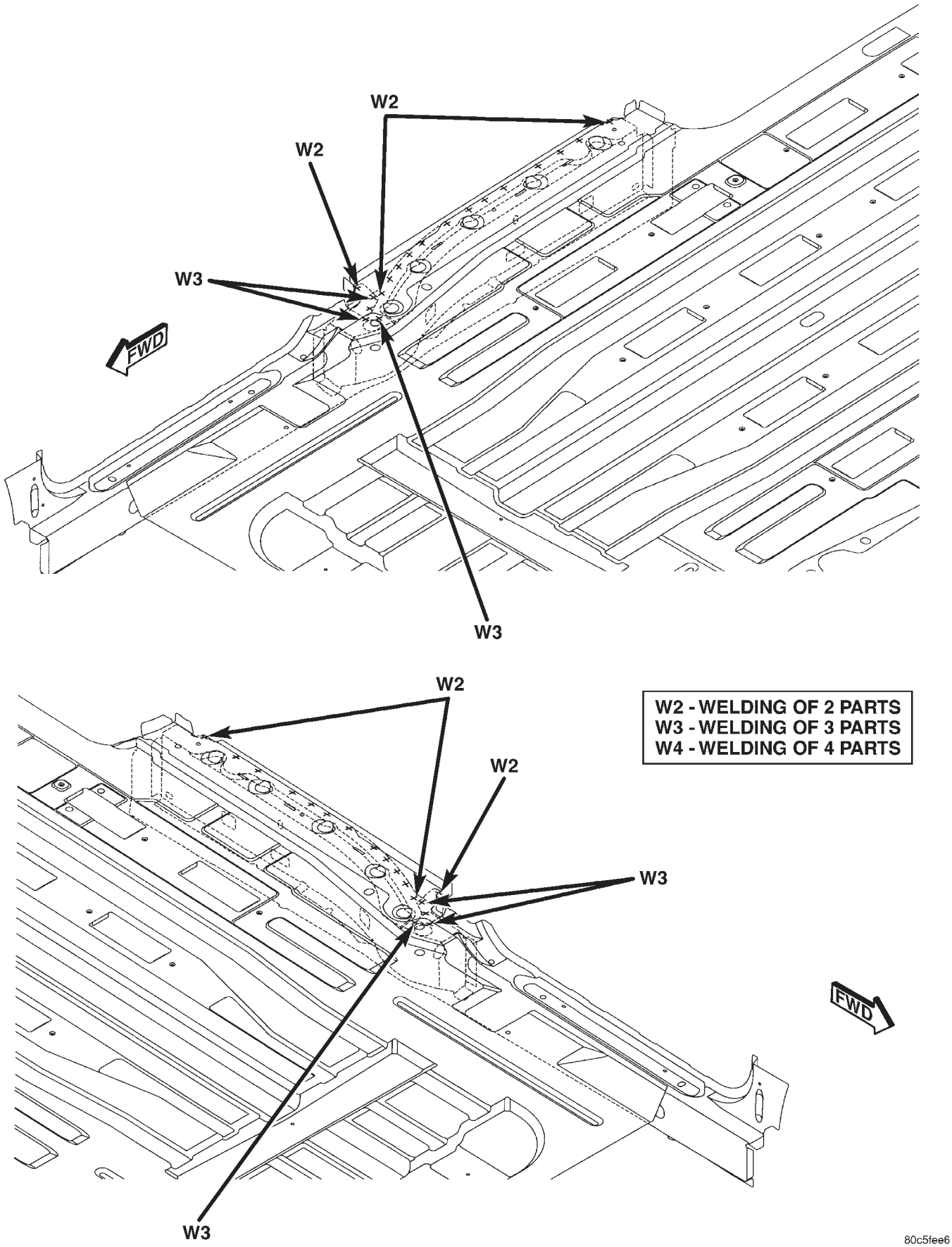

Fig. 162 LOWER SLIDING DOOR TRACK - SHORT WHEEL BASE ONLY

WELD LOCATIONS (Continued)

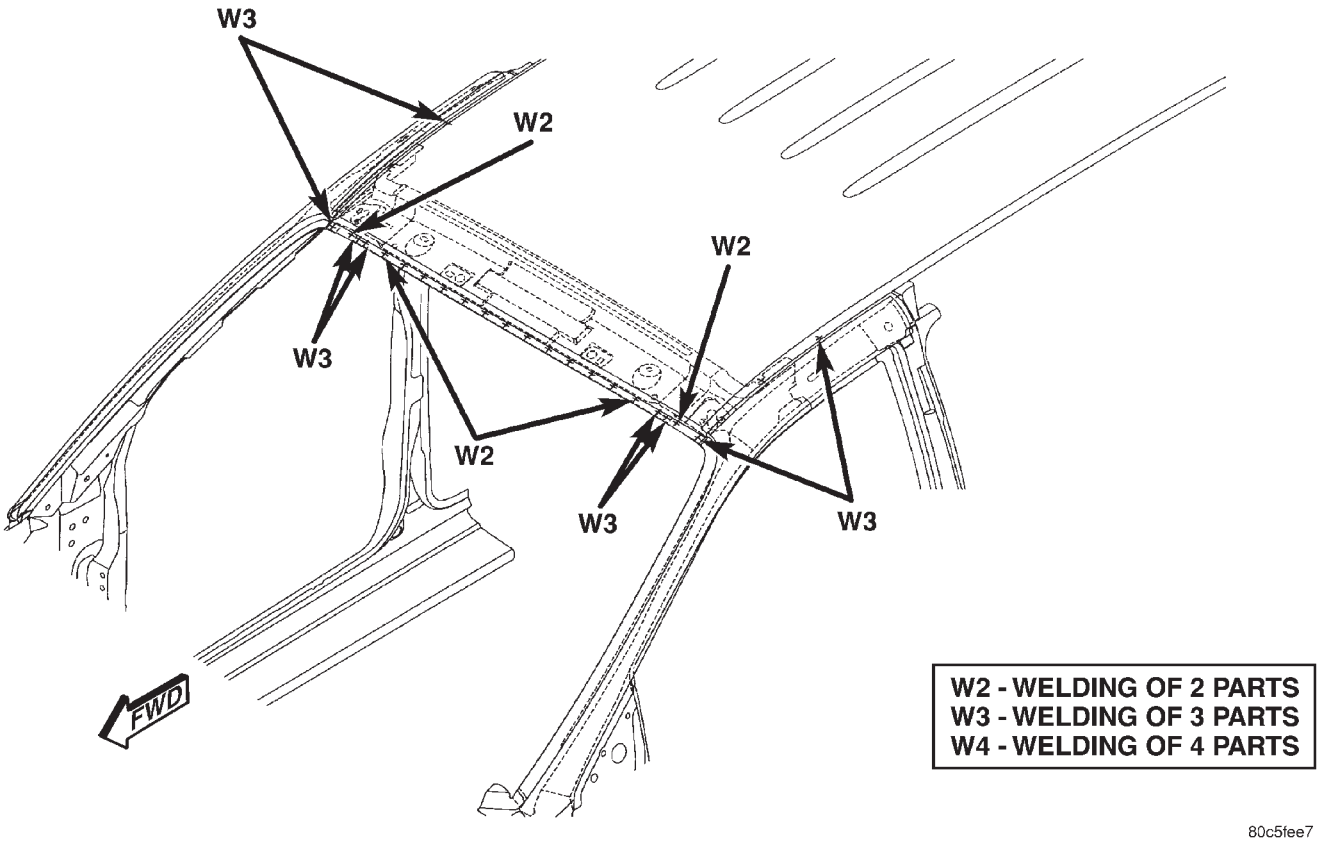

Fig. 163 UPPER WINDSHIELD FRAME/OUTER ROOF PANEL - SHORT WHEEL BASE ONLY

WELD LOCATIONS (Continued)

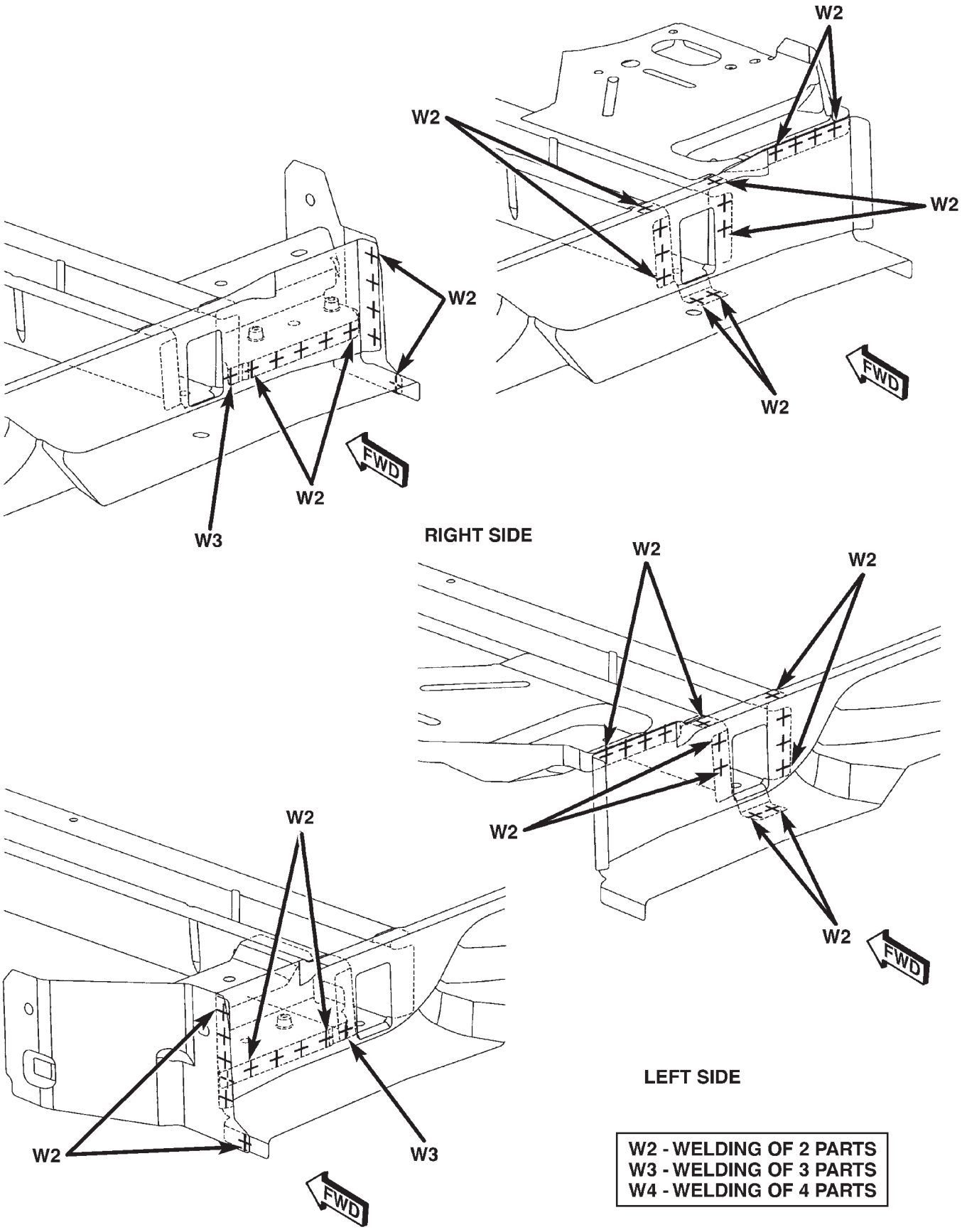

80c5fee8

Fig. 164 REAR SUSPENSION HANGERS - LONG WHEEL BASE SHOWN, SHORT WHEEL BASE TYPICAL

WELD LOCATIONS (Continued)

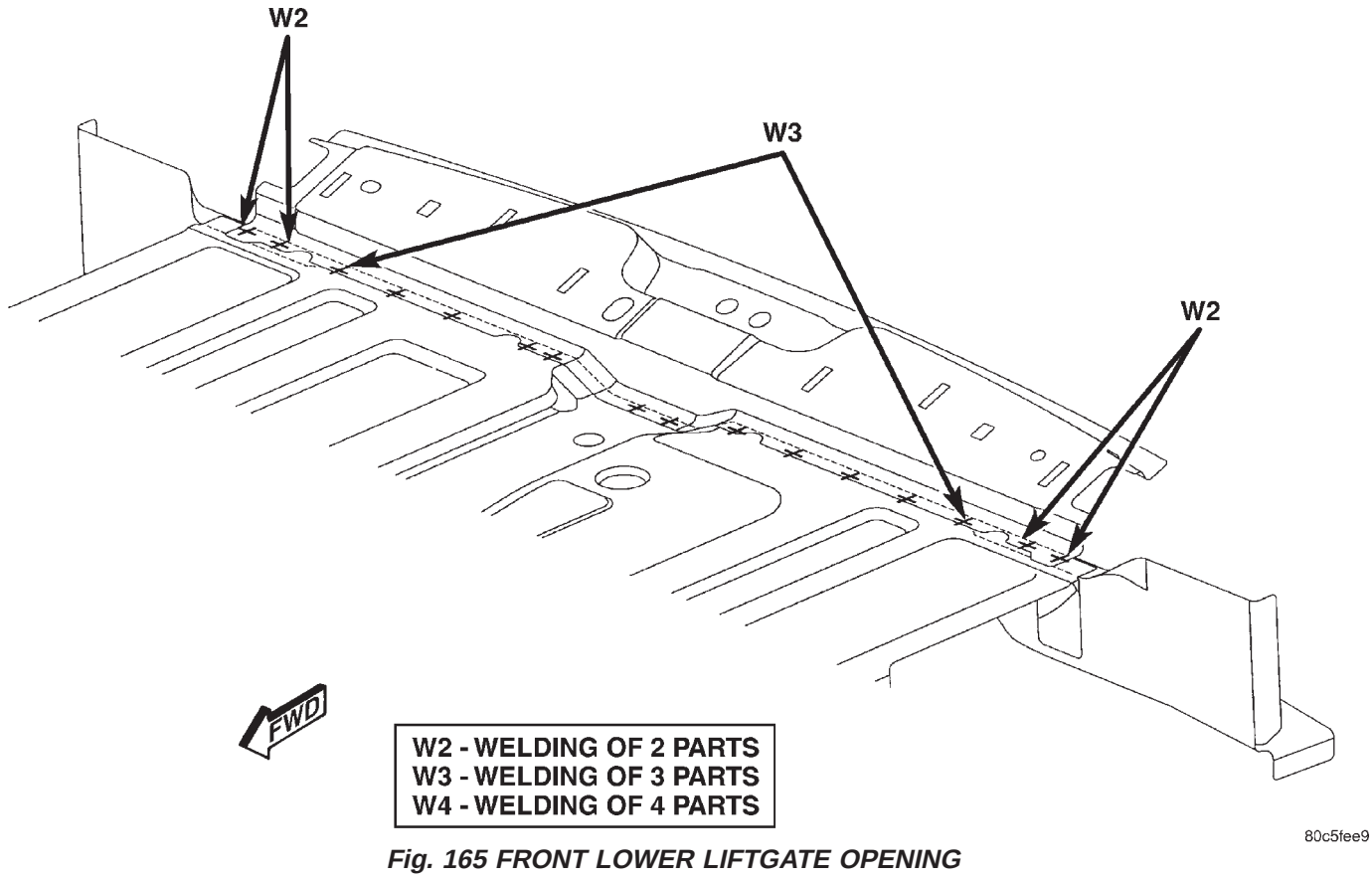

Fig. 165 FRONT LOWER LIFTGATE OPENING

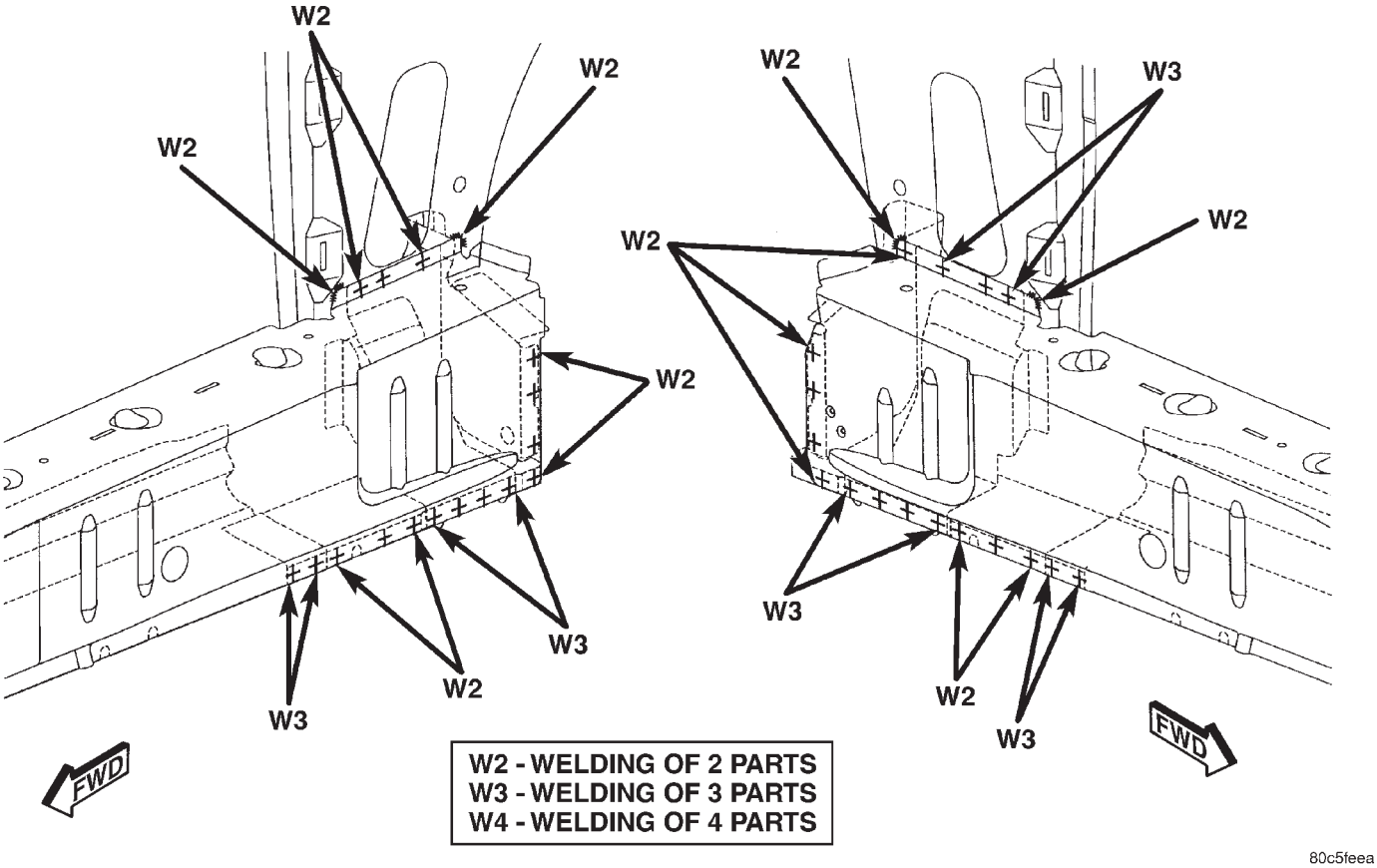

Fig. 166 REAR JACKING REINFORCEMENT - LONG WHEEL BASE ONLY

WELD LOCATIONS (Continued)

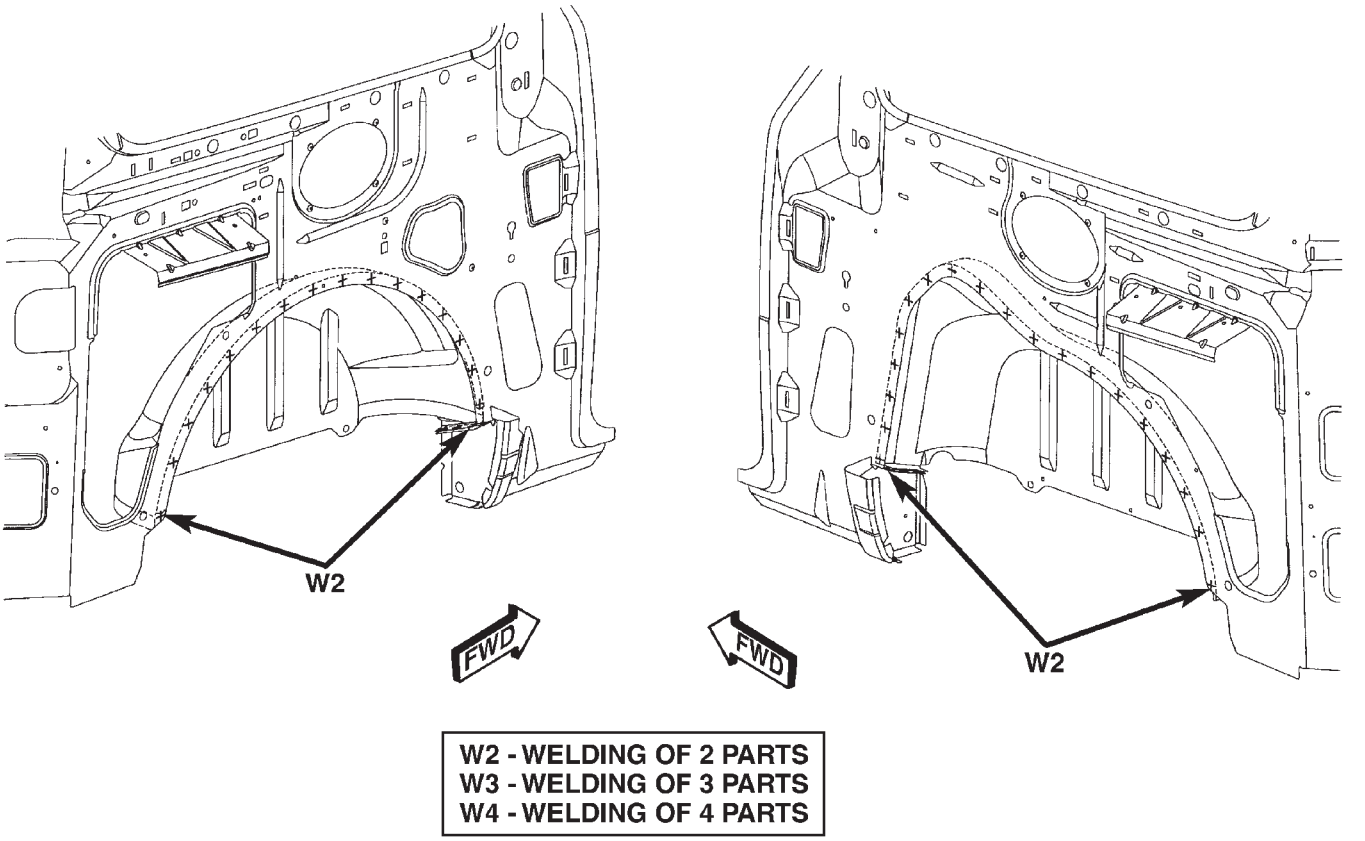

Fig. 167 INNER WHEELHOUSE - LONG WHEEL BASE ONLY

WELD LOCATIONS (Continued)

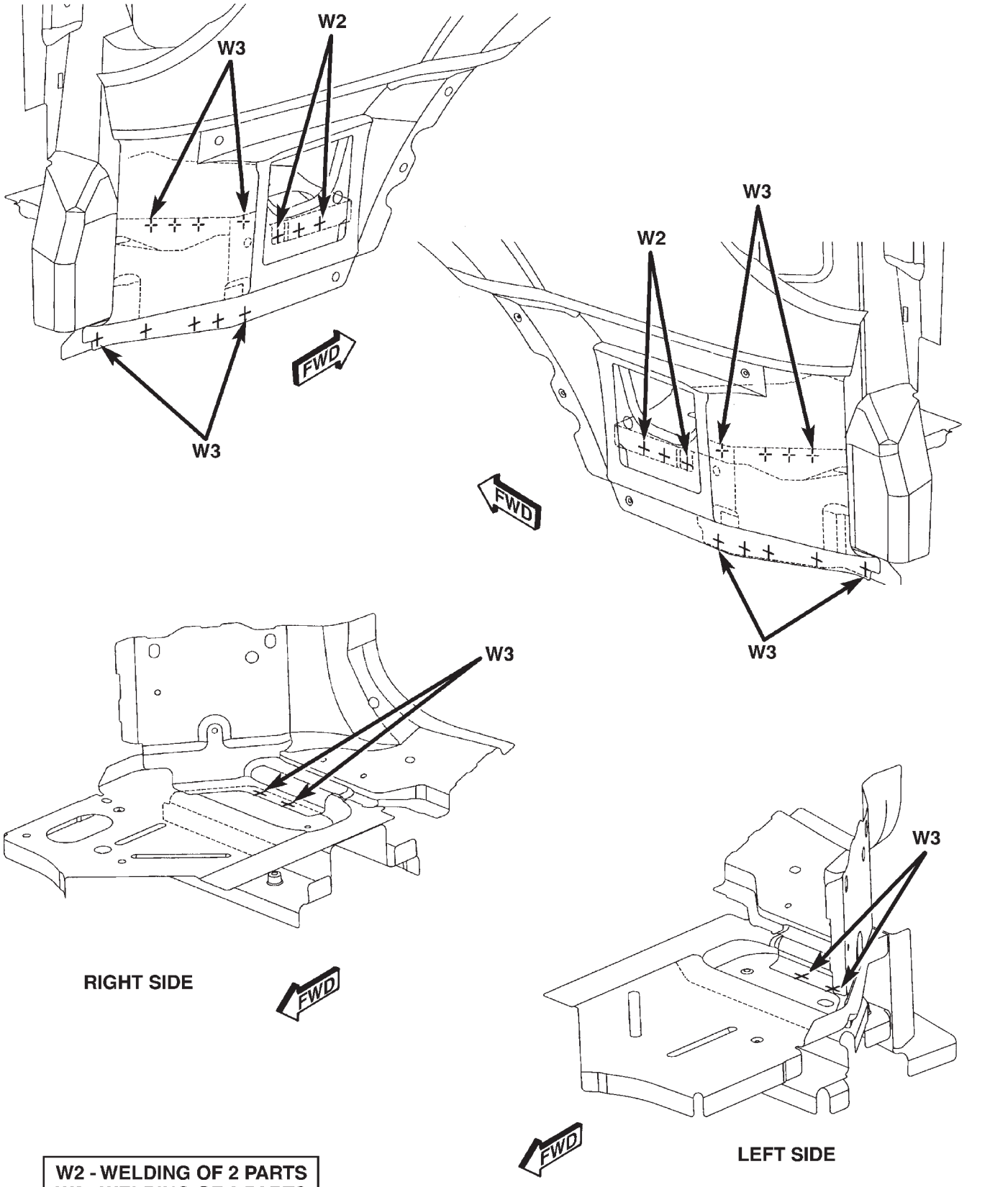

80c5feec

Fig. 168 SUSPENSION HANGER REINFORCEMENT - LONG WHEEL BASE ONLY

WELD LOCATIONS (Continued)

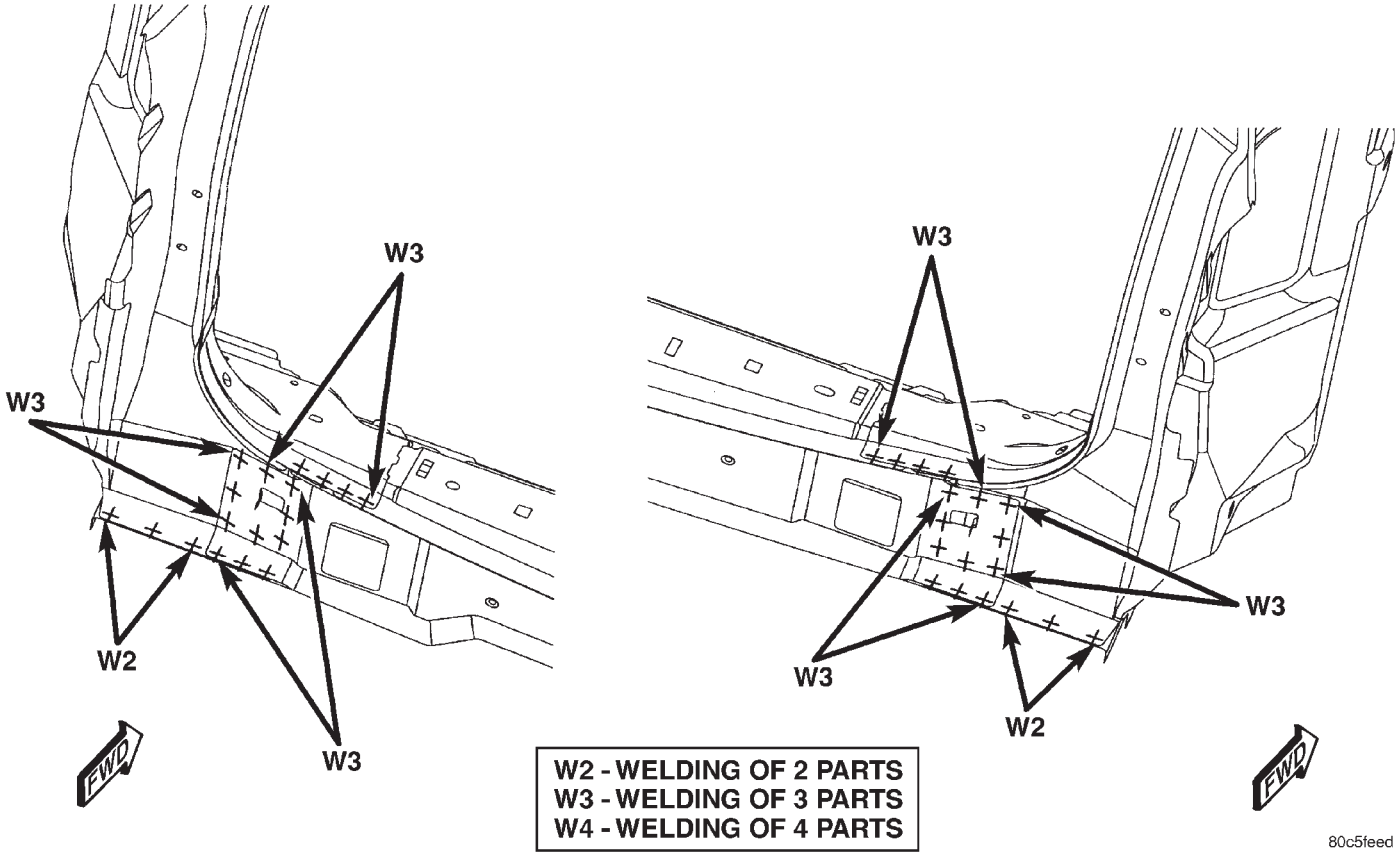

Fig. 169 LOWER LIFTGATE OPENING PANEL - LONG WHEEL BASE ONLY

WELD LOCATIONS (Continued)

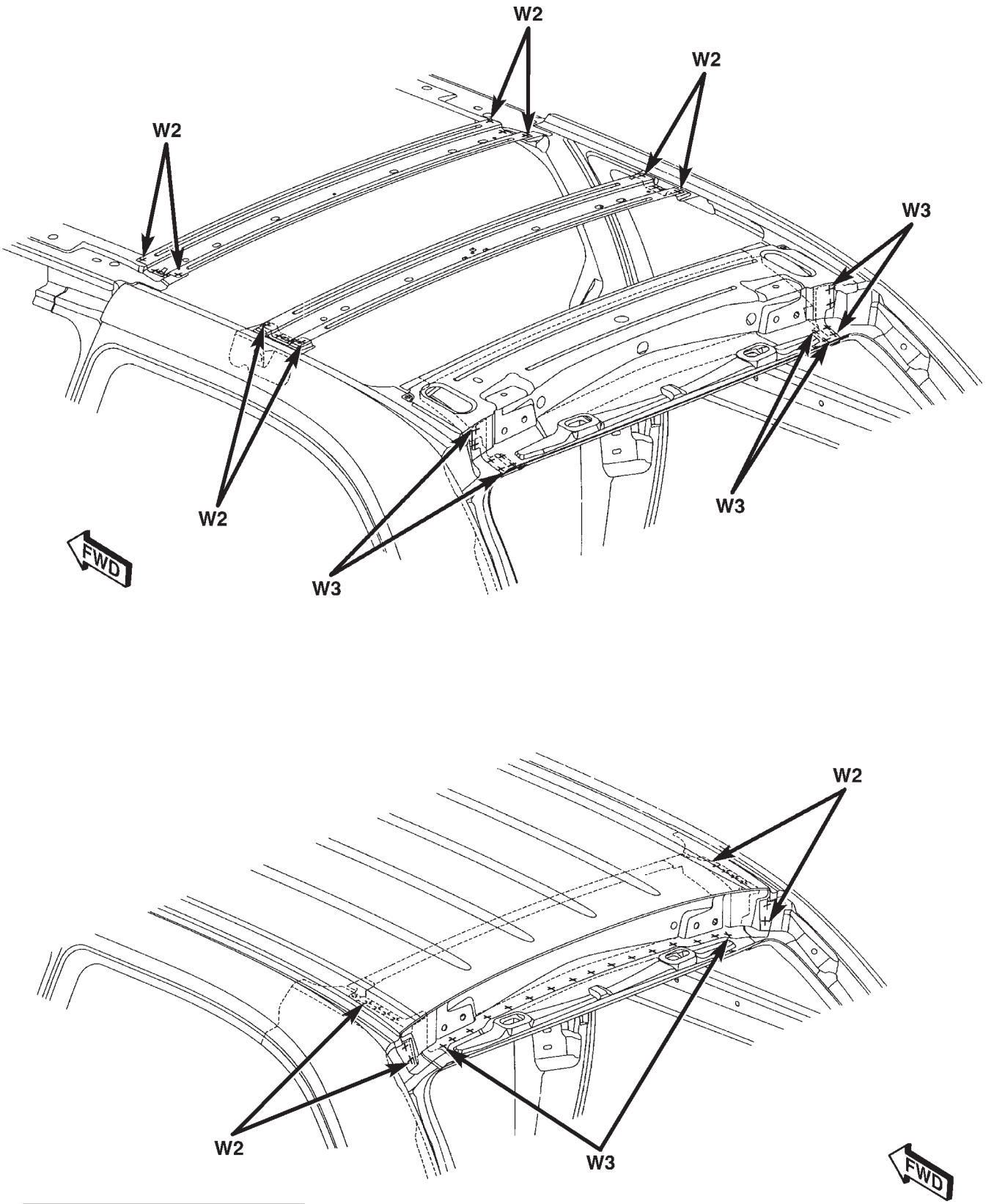

Fig. 170 ROOF BOWS/UPPER LIFTGATE FRAME - LONG WHEEL BASE ONLY

WELD LOCATIONS (Continued)

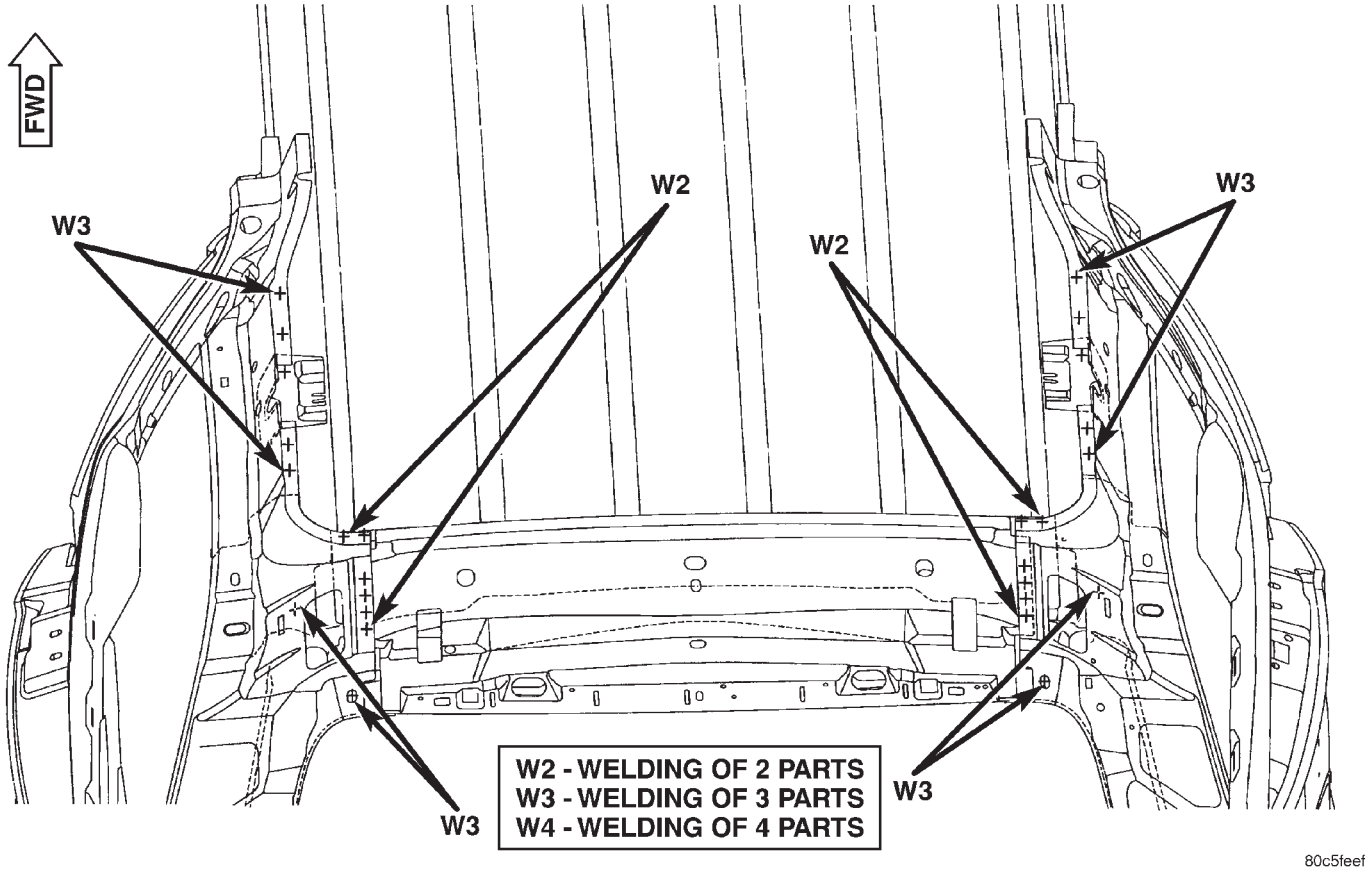

Fig. 171 BODY SIDE APERTURE/INNER QUARTER PANEL - LONG WHEEL BASE ONLY

WELD LOCATIONS (Continued)

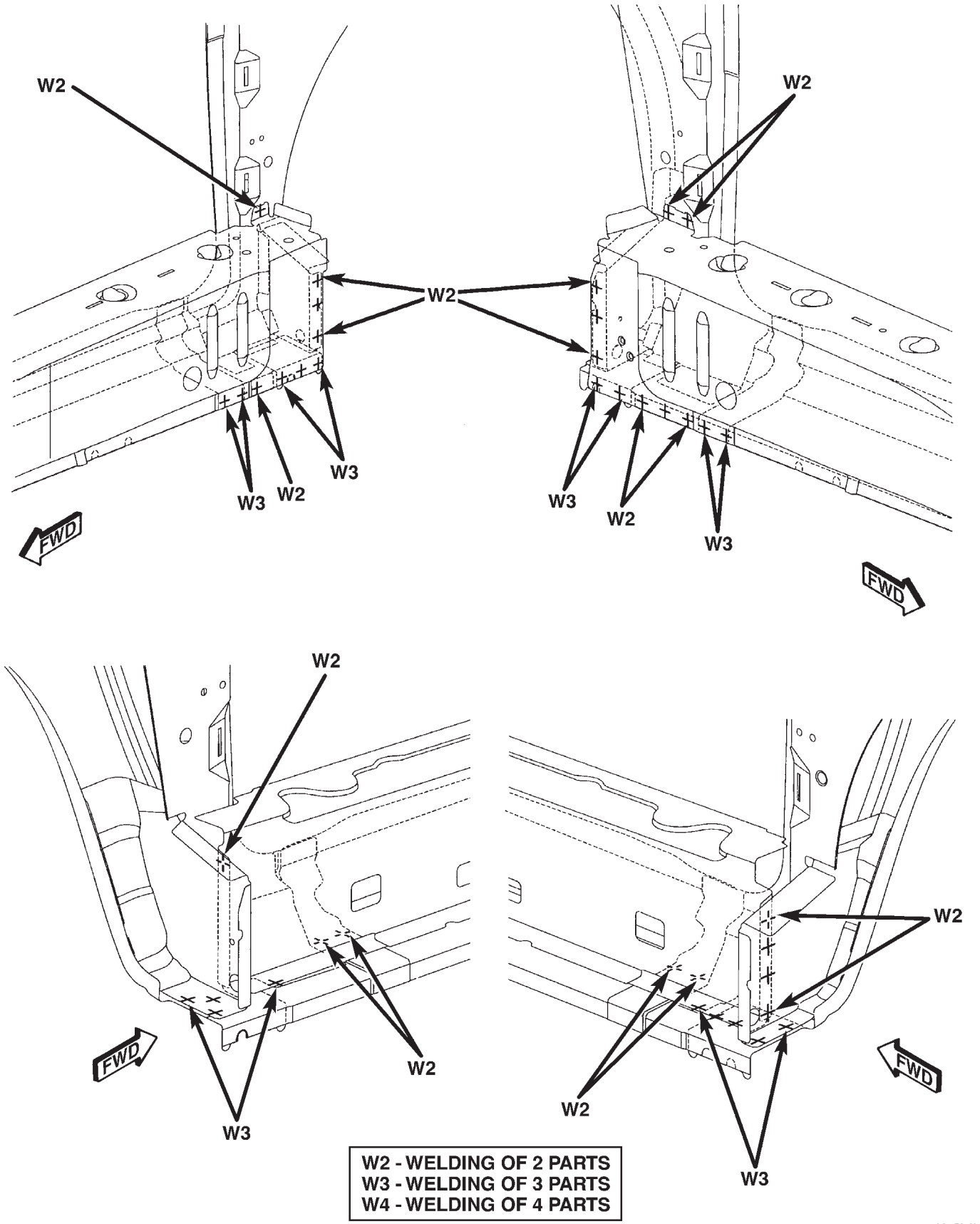

Fig. 172 REAR JACKING REINFORCEMENT - SHORT WHEEL BASE ONLY

WELD LOCATIONS (Continued)

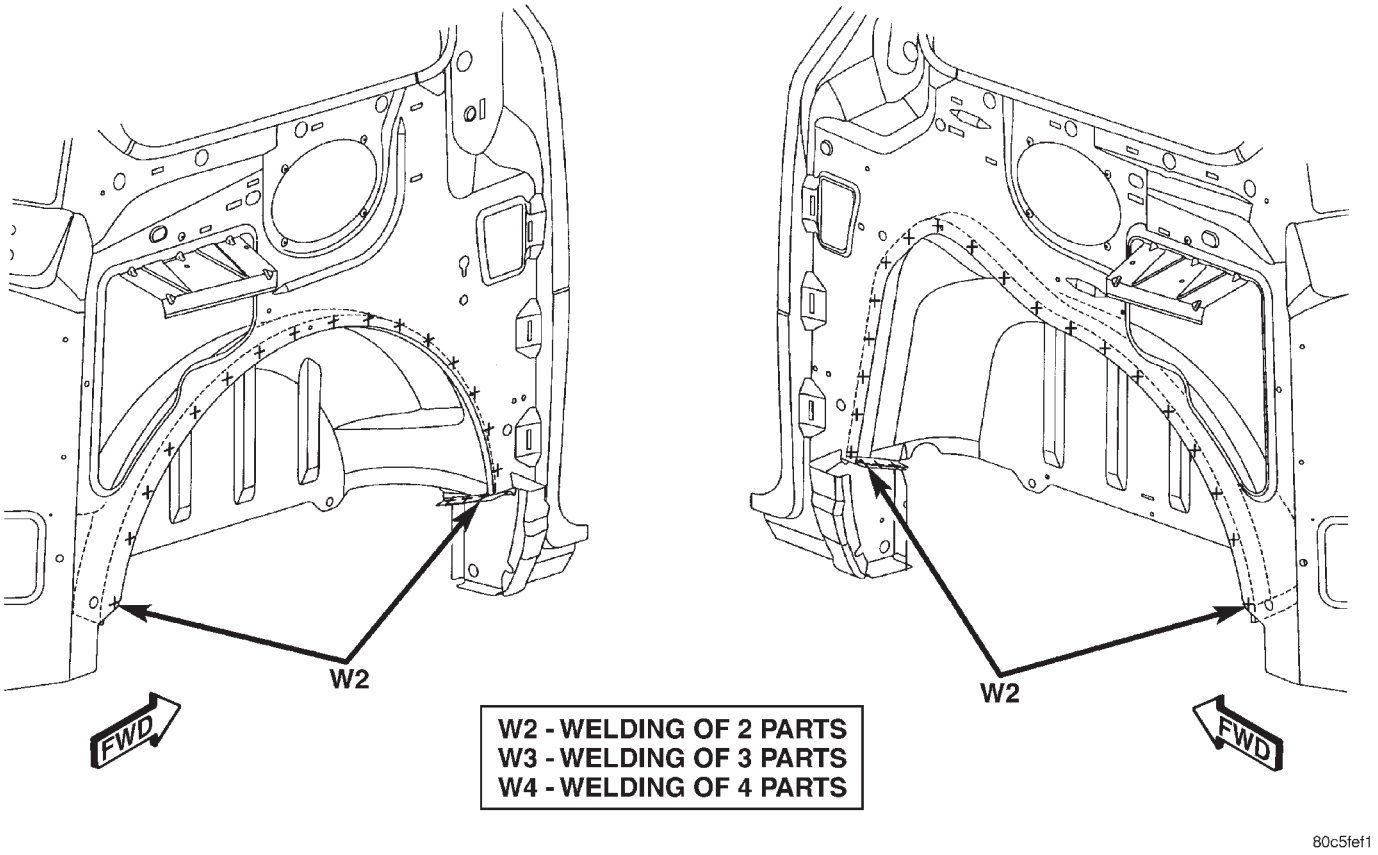

Fig. 173 INNER WHEELHOUSE/INNER QUARTER PANEL - SHORT WHEEL BASE ONLY

WELD LOCATIONS (Continued)

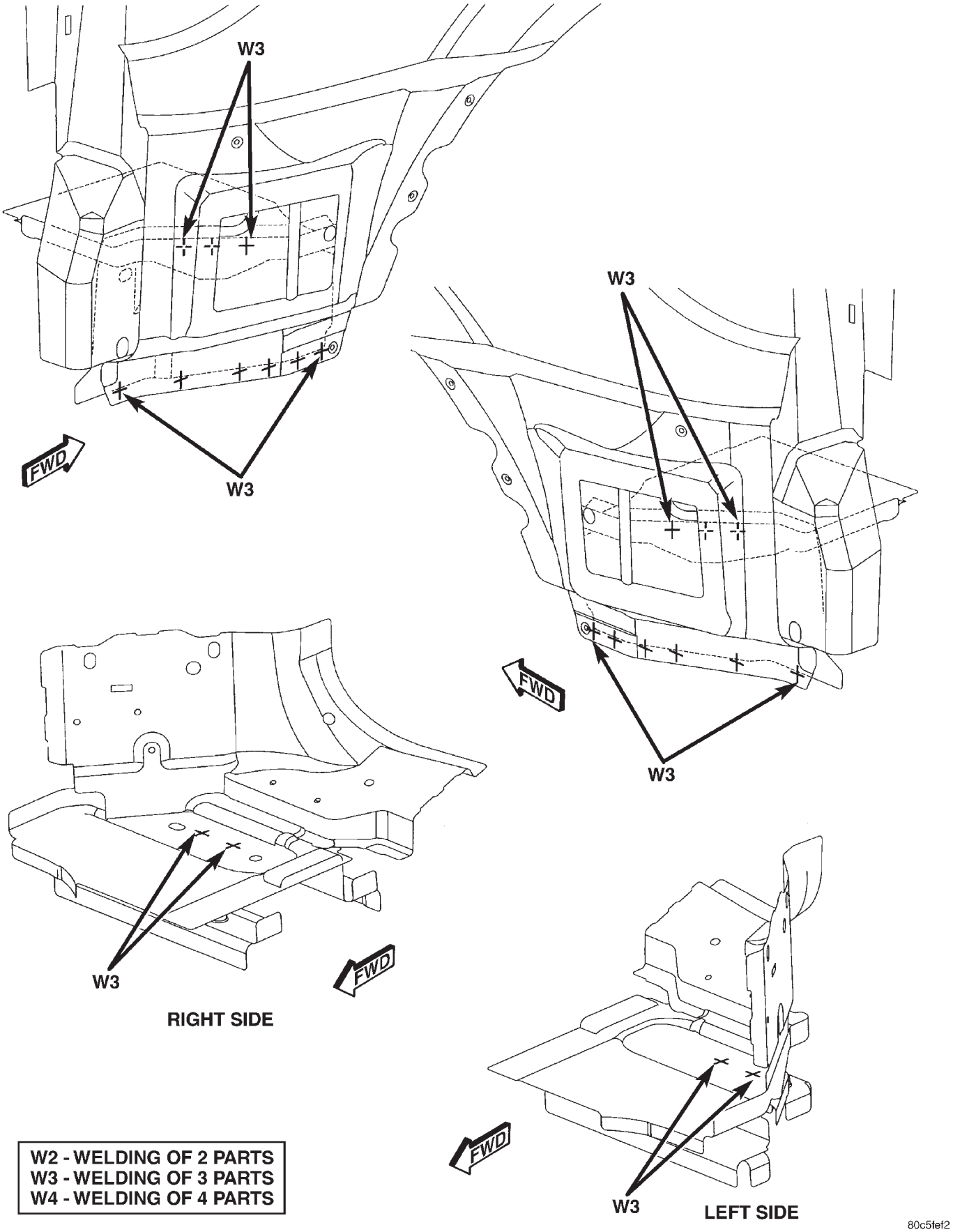

Fig. 174 SUSPENSION HANGER REINFORCEMENT - SHORT WHEEL BASE ONLY

WELD LOCATIONS (Continued)

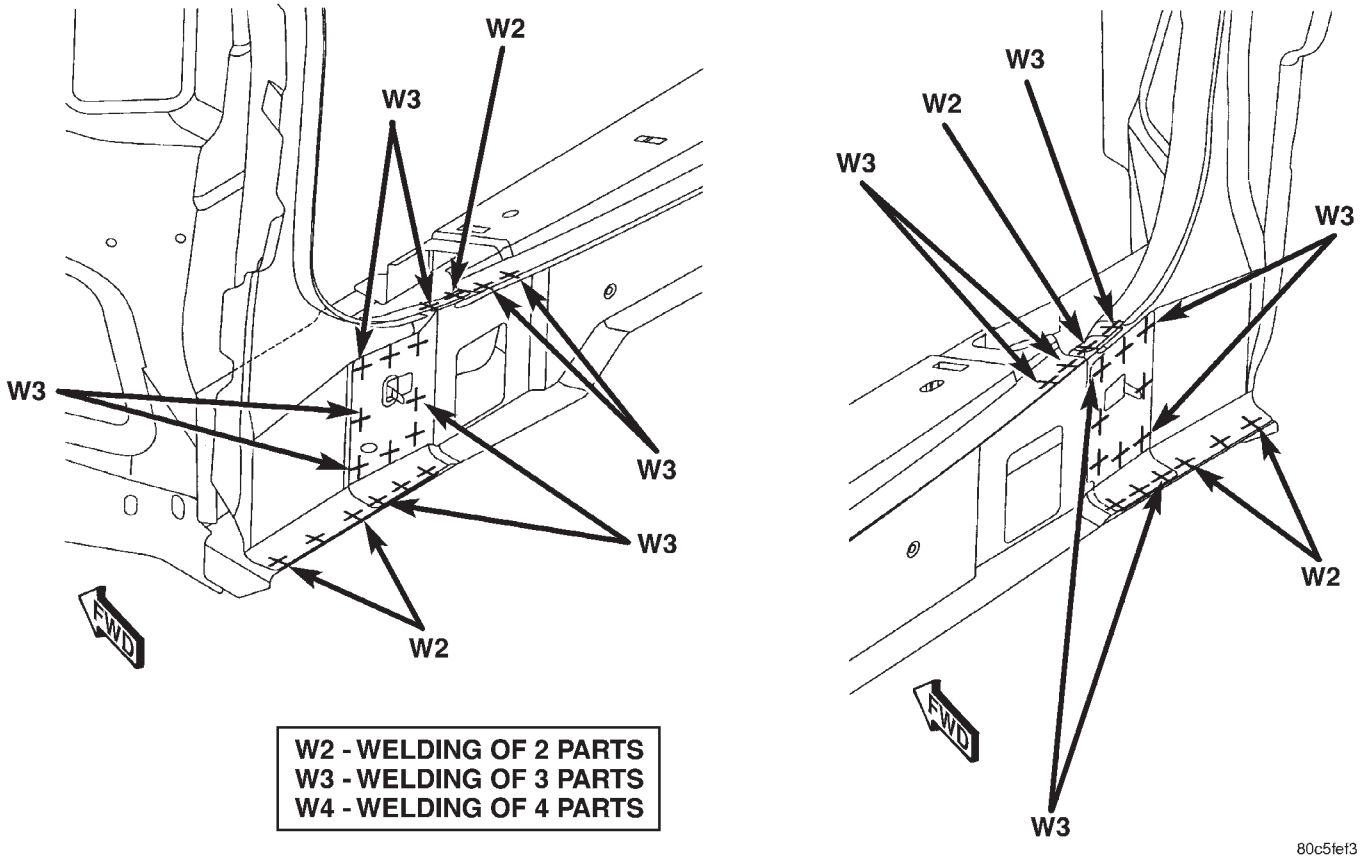

Fig. 175 LOWER LIFTGATE OPENING - SHORT WHEEL BASE ONLY

WELD LOCATIONS (Continued)

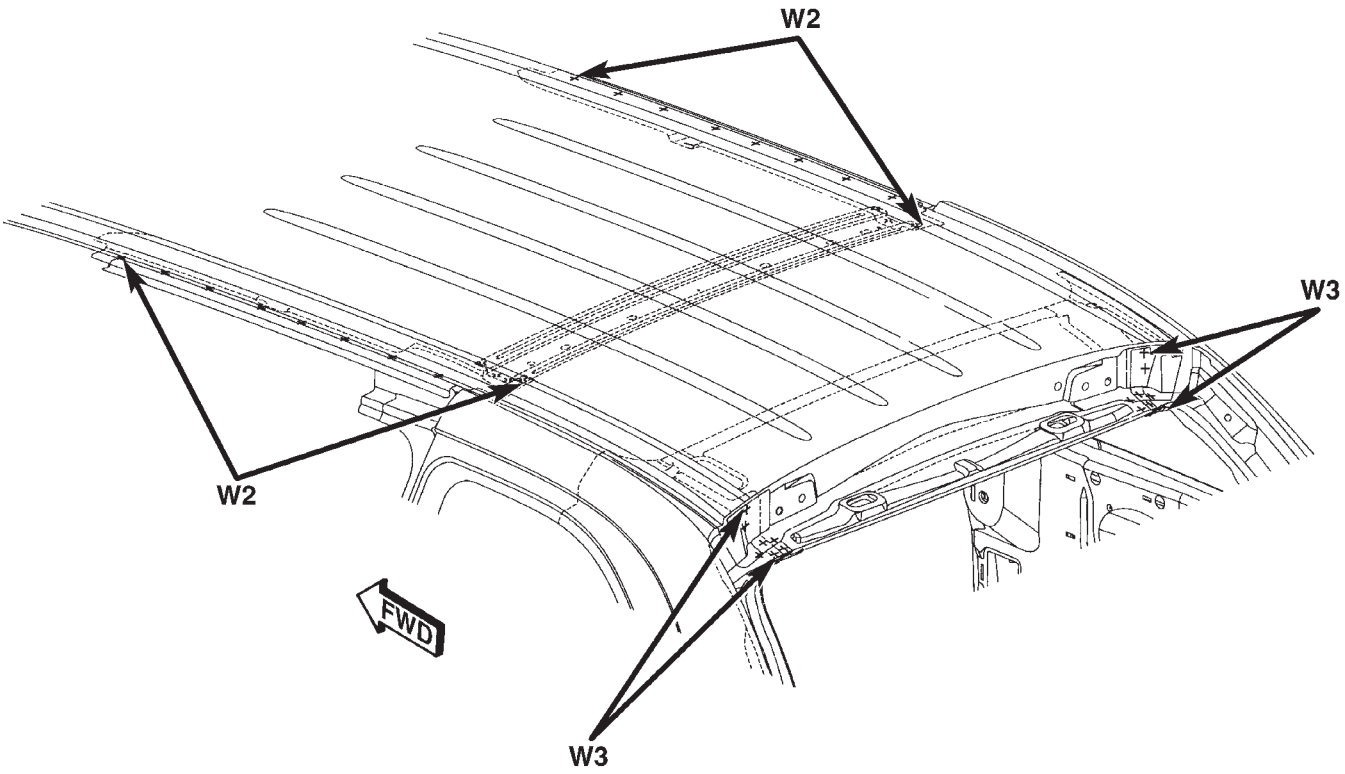

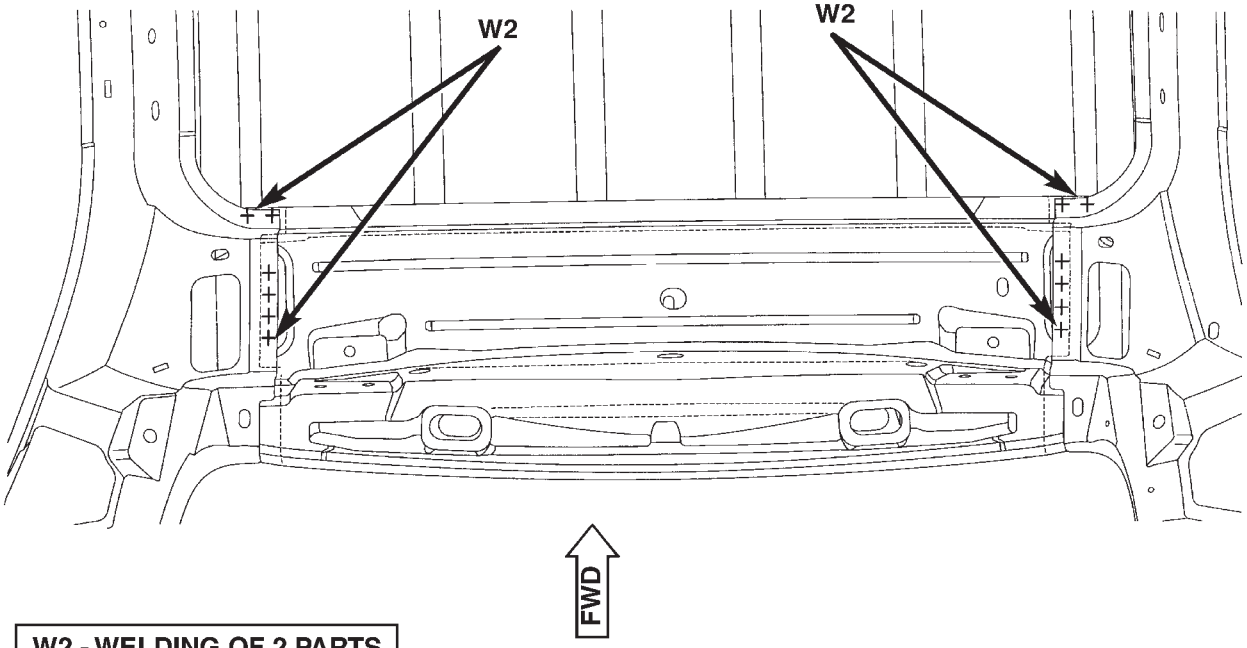

W2 - WELDING OF 2 PARTS
W3 - WELDING OF 3 PARTS
W4 - WELDING OF 4 PARTS

80c5fef4

Fig. 176 ROOF PANEL/ROOF RAIL - SHORT WHEEL BASE ONLY

HEATING & AIR CONDITIONING

TABLE OF CONTENTS

page

HEATING & AIR CONDITIONING
DESCRIPTION
DESCRIPTION - SINGLE ZONE 1
DESCRIPTION - DUAL ZONE 1
DESCRIPTION - MANUAL THREE ZONE 1
DESCRIPTION - THREE ZONE AUTOMATIC TEMPERATURE CONTROL 2
OPERATION
OPERATION - DUAL ZONE 3
OPERATION - MANUAL THREE ZONE 3
OPERATION - THREE ZONE ATC 4
DIAGNOSIS AND TESTING
DIAGNOSIS AND TESTING - A/C COOL DOWN TEST 5
DIAGNOSIS AND TESTING - A/C PERFORMANCE TEST 5
DIAGNOSIS AND TESTING - HEATER PERFORMANCE TEST 6
SPECIFICATIONS - HEATER-A/C SYSTEM 7
CONTROLS - FRONT 8
CONTROLS - REAR 29
DISTRIBUTION - FRONT 39
DISTRIBUTION - REAR 51
PLUMBING - FRONT 59
PLUMBING - REAR 97
DIESEL SUPPLEMENTAL HEATER - DCHA - BUX 109

HEATING & AIR CONDITIONING

DESCRIPTION

DESCRIPTION - SINGLE ZONE

A single zone heating and air conditioning system allows one temperature setting for the entire vehicle. The full range of temperatures that the system can produce are available by rotating the temperature control located in control panel.

The control panel and integral computer is mounted in the instrument panel.

DESCRIPTION - DUAL ZONE

A manual Dual Zone Heating and Air Conditioning system allows completely independent side-to-side tempeture control of the discharge air.

The Dual Zone Heating and Air Conditioning system includes a dust and odor air filter. The filter element is the same size as the air conditioning evaporator to ensure ample capacity. A door at the base of the heating and air conditioning housing below the glove box provides easy access to the filter element.

The control panel and integral computer is located in the instrument panel.

The instrument panel mounted control and integral computer contains:

- a power button which allows the system to be completely turned off. Contains an LED that illuminates to show when the function is operational.
- rear window defogger on/off switch. Contains an LED that illuminates to show when the function is operational.
- slide controls for completely independent side-to-side temperature control of the discharged air. The full range of temperature that the system can produce in any mode is available on either side of the vehicle by independently positioning the slide controls on the instrument panel.
- air recirculation on/off switch. The Recirculate button contains an LED that illuminates to show when the function is in operation.
- air conditioning on/off switch. The Snowflake button contains an LED that illuminates to shown when the function is in operation.
- rotary knob for fan speed selection.
- a rotary knob for mode control.

DESCRIPTION - MANUAL THREE ZONE

The fully adjustable Three-Zone front and rear heating and air conditioning system allows intermediate seat passengers the ability to regulate air temperature as well as fan speed. All controls are identified by ISO graphic symbols.

The Three Zone Heating and Air Conditioning system includes a dust and odor air filter. The filter element is the same size as the air conditioning evaporator to ensure ample capacity. A door at the base of the heating and air conditioning housing below the glove box provides easy access to the filter element.

HEATING & AIR CONDITIONING (Continued)

FRONT CONTROL PANEL

The front control panel and integral computer is mounted in the instrument panel.

The instrument panel mounted control and integral computer contains:

- a power button which allows the system to be completely turned off.
- rear window defogger on/off switch.
- slide controls for completely independent side-to-side temperature control of the discharge air. The full range of temperature that the system can produce in any mode is available on either side of the vehicle by independently positioning the slide controls on the instrument panel.
- air recirculation button. The Recirculate button contains an LED that illuminates to show when the function is in operation.
- an air conditioning button that allows the compressor to be turned on/off. The Snowflake button contains an LED that illuminates to shown when the function is in operation.
- rotary knobs for front and rear fan speed selection.
- a rotary knob for mode control.

REAR CONTROL PANEL

A rear control panel centrally mounted on the headliner has a rotary adjustment for temperature and fan speed control of the rear unit by intermediate seat passengers when the front control rear knob is set to the rear position.

DESCRIPTION - THREE ZONE AUTOMATIC TEMPERATURE CONTROL

The Three-Zone Automatic Temperature Control (ATC) allows occupants to select a comfort temperature, which is the perceived temperature level not the actual passenger compartment air temperature.

The Three Zone Automatic Temperature Control system includes a dust and odor air filter. The filter element is the same size as the air conditioning evaporator to ensure ample capacity. A door at the base of the heater and air conditioning housing below the glove box provides easy access to the filter element.

The ATC computer utilizes integrated circuitry and information carried on the Programmable Communications Interface (PCI) data bus network to monitor many sensors and switch inputs throughout the vehicle. In response to those inputs, the internal circuitry and programming of the ATC computer allow it to control electronic functions and features of the ATC system. The inputs to the ATC computer are:

- **Vehicle Speed/Engine RPM** – The ATC computer monitors engine RPM, vehicle speed and Manifold Absolute Pressure information from the PCM.
- **Coolant Temperature** – ATC computer monitors Coolant temperature received from the PCM and converts it to degrees Fahrenheit.
- **Ambient Temperature** – ATC computer monitors Ambient temperature from the Compass Mini Trip Computer (CMTC) and converts it to degrees Fahrenheit.
- **Engine Miscellaneous Sensor Status** – ATC computer monitors A/C disable information from the PCM.
- **Refrigerant Pressure** – ATC computer monitors Barometric Pressure, Intake Air Temperature, High Side Pressure and Methanol Content as broadcast by the PCM.
- **Door Ajar Status** – The ATC computer monitors Driver Front Door, Passenger Front Door, Left Rear Door, Right Rear Door and Liftgate ajar information, as identified by the Body Control Module (BCM), to determine if all in-car temperatures should be maintained.
- **Dimming** – The ATC computer monitors dimming status from the BCM to determine the required level of brightness and will dim accordingly.
- **Vehicle Odometer** – The ATC computer monitors the vehicle odometer information from the BCM to prevent flashing the VF tube icons if the manual motor calibration or manual cool down tests have failed. Flashing of the display icons will cease when the vehicle odometer is greater than 3 miles.
- **English Metric** – The ATC computer monitors the English/Metric information broadcast by the CMTC. The set temp displays for both the front and rear control heads will be set accordingly.
- **Vehicle Identification Number** – The ATC computer monitors the last eight characters of the VIN broadcast by the PCM and compares it to the information stored in EEPROM. If it is different, the new number will be stored over the old one and a motor calibration shall be initiated.
- **A/C System Information** – The ATC computer will send a message for Evaporator Temperature too Low, Fan Blower Relay status, Evaporator Sensor Failure, Rear Window Defogger Relay and A/C Select.

FRONT CONTROL PANEL

The front control panel and integral computer is mounted in the instrument panel.

The instrument panel mounted control and integral computer contains:

- A power button which allows the system to be completely turned off. The display is blank when the system is off.
- Three rocker switches that select comfort temperatures from 15° to 30° C (59° to 85° F), which are shown in the vacuum-fluorescent digital control display. If the set temp is 59 and the down button is

pressed, the set temp value will become 55 but the display will show LO. If the set temp is 85 and the up button is pressed, the set temp value will become 90 but the display will show HIGH. Temperatures can be displayed in either metric or Fahrenheit, which is controlled from the overhead console.

- A rocker switch that selects a cool-down rate. LO-AUTO or HI-AUTO are displayed when the system is in automatic operation.
- A defroster button which turns on the defroster independently during full automatic control. A defroster symbol illuminates in the display when the button is pressed.
- Air recirculation button. A Recirculation symbol appears in the display when the button is pressed, or when the system exceeds 80 percent circulated air under automatic control due to high air conditioning demand.
- Rear window defogger on/off switch. A graphic symbol shows when the defroster is on.
- An air conditioning button that allows the compressor to be turned off. A Snowflake symbol is illuminated when air conditioning is on, whether under manual or automatic control.
- Rotary knob for front fan speed selection can override the automatic controls. LEDs surrounding the knob show the current setting.
- Rotary knob for control of the Rear system.
- A rotary knob for mode control can override the automatic controls. LEDs surrounding the knob show the current setting.
- Computer logic remembers the settings of the controls when the ignition is turned off and retains those settings after a restart. If the system is off when the ignition is turned off it will be off when the engine is restarted, etc.
- Computer logic provides variable air recirculation under high temperature and humidity conditions. Because recirculation is generally accompanied by increased fan noise, the proportion of recirculated to outside air gradually approaches full recirculation over a broad temperature range.
- A graphic symbol of the windshield that illuminates when the windshield wiper deicer is active.

REAR CONTROL PANEL

A rear control panel centrally mounted on the headliner includes a vacuum-flourescent digital display, a rocker control for temperature and rotary controls for adjustment of mode and fan speed control of the rear unit by intermediate seat passengers.

OPERATION

OPERATION - DUAL ZONE

- The mode control knob enables continously variable proportioning of air flow between modes but has detents adjacent to each icon.
- The blower control provides five separate speeds.
- When the fan is off, the HVAC computer closes the recirculation door to prevent outside air from entering the passenger compartment.
- Interior air may be recirculated to speed up heating or cooling in all modes except defrost and mix by pressing the Recirculate button on the control panel.
- To reduce humidity for rapid defogging the A/C compressor runs automatically in modes from “mix’ to full defrost when outside temperatures are above freezing.
- Air conditioning is available in any mode by pressing the snowflake, A/C on/off, button.

OPERATION - MANUAL THREE ZONE

FRONT CONTROL PANEL

- Primary control of the rear compartment unit is on the instrument panel. This control allows the driver to set the rear compartment fan speed, to turn the rear unit off, or to give control to the intermediate seat occupants by switching to the REAR position. When the rear unit is controlled from the instrument panel, rear air temperature is based on the driver-side temperature control position, and the mode (floor or overhead air) is based on the front control’s mode position.
- The mode control knob enables continously variable proportioning of air flow between modes but has detents adjacent to each icon.
- The blower control provides five separate speeds and Off. When the fan is off, the HVAC computer closes the recirculation door to prevent outside air from entering the passenger compartment.
- Interior air may be recirculated to speed up heating or cooling in all modes exccept defrost and mix by pressing the Recirculate button on the control panel.
- To reduce humidity for rapid defogging the A/C compressor runs automatically in modes from “mix’ to full defrost when outside temperatures are above freezing.
- Air conditioning is available in any mode by pressing the snowflake, A/C on/off, button.

HEATING & AIR CONDITIONING (Continued)

REAR CONTROL PANEL

With the rear control active, temperature selection dictates indirectly the mode (floor or overhead air) of the rear unit: a low temperature setting directs flow to the overhead outlets and a high temperature setting to the floor.

OPERATION - THREE ZONE ATC

Comfort temperature or perceived temperature is affected by air flow, sun impinging on exposed skin, etc. The air temperature may be higher or lower than the comfort temperature. Three infrared sensors, two in the instrument panel center stack, and one in the overhead-mounted rear control panel, independently measure the temperature of the driver, front passenger, and rear compartment occupants to determine their comfort level relative to the selected comfort temperature. The HVAC computer in the control module adjusts the air flow rate and temperature to maintain the customer-perceived comfort temperature. The air temperature in the passenger compartment at any time may be slightly higher or lower than the comfort temperature. For instance, on sunny summer days the air flow will probably be cooler than the comfort temperature; on cold or cloudy days and at night it will probably be slightly warmer. Infrared Three-Zone Temperature Control provides side-to-side and front-to-rear variation in comfort temperature settings. The Infrared Three-Zone Automatic Temperature Control fan provides a continuously variable air flow rate to meet occupant comfort requirements.

FRONT CONTROL PANEL

- **AUTO HI/LO** – This system features two sets of automatic control logic that allow either a rapid cool-down rate or a somewhat slower cool-down rate with less fan noise. HI-AUTO controls the system to reach its assigned temperature quickly with a higher fan speed. LO-AUTO controls the system to reach its assigned temperature somewhat slower with less fan noise. Both modes will automatically engage auto recirculation.
- **DE-FROST** – The front de-frost function is active when the rear window defogger function is active or when the defog/defrost mode is selected.
- **RECIRC** – The RECIRC button will close the air inlet door. If the system is in auto recirc (indicator being displayed automatically), pressing the manual recirc button will disable the auto recirc function until one of the auto keys are pressed or the ignition is cycled. If Auto HI/LO is pressed while manual recirc is active, manual recirc will be deactivated.
- **REAR WINDOW DEFOGGER** – Pushing the button sends a PCI bus message to the Intelligent Power Module which controls the Rear Window Defogger and side view mirror (if equipped) circuitry. The defogger function will be active for 10 minutes and can be turned off by a switch press. The defogger will function while the control is in the OFF mode.
- **FAN/MODE** – The Fan and Mode knobs have 17 manual selectable positions. Manually changing either of the rotary knobs for mode or fan speed settings makes control of that function alone manual for as long as the ignition is on. If only one is changed manually, the other remains under automatic control. Pressing the HI-AUTO/LO-AUTO rocker switch restores full automatic control.
- **REAR CONTROL** – When the Rear System control knob is moved to the OFF position, there will be a delay of approximately 1 second before the system actually turns off. This delay is to prevent an undesired blower dropout if the knob is moved through OFF to the other selections.
- **BLOWER DELAY TIMER** – The word DELAY is displayed at start-up to signify that the system is waiting so that cold air will not be blowing. This tells the operator that it is unnecessary to turn the system off, raise the temperature setting or turn the fan speed setting down to prevent cold air from blowing. A countdown in minutes and seconds until the engine is warm enough to begin delivering heat to the passengers alternates with the DELAY message at 25 second intervals. This countdown is based on actual measurement of the rate of engine coolant temperature change. During the delay time, Defrost mode is selected and the fan operates at a low speed to keep the windshield fog free.

REAR CONTROL PANEL

Primary control of the rear compartment unit is in the instrument panel center stack. The rear unit control knob there allows the driver to turn the rear unit off, allow control by the intermediate seat occupants by switching to the REAR position, or provide fully automatic control based on the temperature setting shown on the front control display.

- **REAR CONTROL** – Selecting automatic control of the rear unit at the instrument panel, illuminates a Locked Padlock in the rear control panel display. Selecting REAR activates the rear control panel and the Padlock then appears unlocked.
- **FAN KNOB** – The rear fan control has Off and AUTO positions and a range of manual speed settings that override the AUTO setting.
- **MODE KNOB** – The mode control allows intermediate seat occupants to manually override the automatic mode and select any balance of air flow between overhead and floor outlets from full overhead to full floor.
- **SET TEMP** – The rear set temp control will operate identical to the front controls. If the front

control rear set temp button is pressed simultaneously with the rear control head, then the front control head press events shall have priority, i.e. if the front user presses Rear Set Temp down and the rear user presses Set Temp up, then the rear set temp will decrease.

DIAGNOSIS AND TESTING

DIAGNOSIS AND TESTING - A/C COOL DOWN TEST

The heater-A/C control module can perform an A/C cool down test, which is a test performed during the manufacturing process to confirm that the air conditioning system is performing satisfactorily. This test can also provide a quick confirmation of air conditioning system performance to the service technician. If the test is completed satisfactorily, no further service is required. If the test is failed, proceed to the A/C Performance Test to confirm the a/c system is operating properly, or use a DRBIII® scan tool to diagnose the A/C system control and distribution systems. Refer to the appropriate diagnostic information.

MANUAL TEMPERATURE CONTROL

The front blower speed and rear blower speed (if equipped with rear HVAC) must be set to High and the evaporator temperature sensor must be greater than 55° F or the test will fail immediately. The test is activated by depressing the A/C and PWR buttons simultaneously and holding them depressed for no less than five seconds. The PWR and A/C LEDs will blink on and off until the test is complete. If the LEDs stop blinking before two minutes, then the cool down test has been completed successfully. If the two minutes expire without the expansion valve temperature reaching 20° F less than the outside air temperature, then the cool down test has been failed and further A/C system diagnosis is required. If the test is failed, the LEDs will continue to blink until the vehicle has been driven for greater than (8 miles).

AUTOMATIC TEMPERATURE CONTROL

The ambient air temperature in the room where the vehicle will be tested must be a minimum of 21° C (70°F) for this test. The test is activated by depressing the A/C and PWR buttons simultaneously and holding them depressed for no less than four seconds. The snowflake icon and the DELAY text in the ATC display will blink on and off alternately until the test is complete. If the snowflake icon and the DELAY text stop blinking before two minutes, then the cool down test has been completed successfully. If the two minutes expire without the evaporator temperature reaching 20° F less than the evaporator initial temperature, then the cool down test has been failed and further A/C system diagnosis is required. If the test is failed, the snowflake icon and the DELAY text will continue to blink across ignition cycles until the vehicle has been driven for greater than (8 miles).

DIAGNOSIS AND TESTING - A/C PERFORMANCE TEST

An air conditioning performance test is the best way to determine whether the system is performing up to standard. This test also provides valuable clues as to the possible cause of trouble with the air conditioning system. The ambient air temperature in the location where the vehicle will be tested must be a minimum of 21° C (70°F) for this test.

WARNING: REFER TO THE APPLICABLE WARNINGS AND CAUTIONS FOR THIS SYSTEM BEFORE PERFORMING THE FOLLOWING OPERATION. (Refer to 24 - HEATING & AIR CONDITIONING/ PLUMBING - FRONT - WARNING - A/C PLUMBING) and (Refer to 24 - HEATING & AIR CONDITIONING/ PLUMBING - FRONT - CAUTION - A/C PLUMBING).

NOTE: When connecting the service equipment coupling to the line fitting, verify that the valve of the coupling is fully closed. This will reduce the amount of effort required to make the connection.

(1) Connect a tachometer to monitor the engine speed.

(2) Remove the caps from the refrigerant system service ports and attach a manifold gauge set to monitor the refrigerant system pressures.

(3) Set the heater-air conditioner controls so that the compressor is engaged, the air within the vehicle is being recirculated, the output air is directed through the panel outlets, the temperature control is in the full cool position, and the blower motor is operating at its highest speed.

(4) Start the engine and allow the engine to operate for about five minutes or until it reaches normal operating temperature. Then hold the engine speed at 1000 rpm with the compressor clutch engaged. If the compressor clutch does not engage, proceed with diagnosis of the compressor clutch coil. (Refer to 24 - HEATING & AIR CONDITIONING/CONTROLS - FRONT/COMPRESSOR CLUTCH COIL - DIAGNOSIS AND TESTING).

(5) Close all the vehicle windows and doors.

(6) Insert a thermometer in the left center panel outlet and operate the engine for five minutes.

HEATING & AIR CONDITIONING (Continued)

(7) With the compressor clutch engaged, record the left center panel outlet discharge air temperature, the discharge pressure (high side service port), and the suction pressure (low side service port). The compressor clutch may cycle, depending upon the ambient temperature and humidity. If the clutch cycles, use the readings obtained before the clutch disengaged.

(8) Compare the discharge air temperature reading to the Performance Temperature and Pressure chart. If the temperature reading is high, check the refrigerant system for leaks and proper refrigerant charge level. (Refer to 24 - HEATING & AIR CONDITIONING/PLUMBING - FRONT/REFRIGERANT - DIAGNOSIS AND TESTING - REFRIGERANT SYSTEM LEAKS) and (Refer to 24 - HEATING & AIR CONDITIONING/PLUMBING - FRONT/REFRIGERANT - DIAGNOSIS AND TESTING - REFRIGERANT SYSTEM CHARGE LEVEL).

Performance Temperature and Pressure					
Ambient Temperature	21° C (70° F)	27° C (80° F)	32° C (90° F)	38° C (100° F)	43° C (110° F)
Left Center Panel Outlet Discharge Air Temperature	1 to 8° C (34 to 46° F)	3 to 9° C (37 to 49° F)	4 to 10°C (39 to 50° F)	6 to 11°C (43 to 52° F)	7 to 18° C (45 to 65° F)
Discharge Pressure (High Side Service Port)	1034 to 1724 kPa (150 to 250 psi)	1517 to 2275 kPa (220 to 330 psi)	1999 to 2620 kPa (290 to 380 psi)	2068 to 2965 kPa (300 to 430 psi)	2275 to 3421 kPa (330 to 450 psi)
Suction Pressure (Low Side Service Port)	103 to 207 kPa (15 to 30 psi)	117 to 221 kPa (17 to 32 psi)	138 to 241 kPa (20 to 35 psi)	172 to 269 kPa (25 to 39 psi)	207 to 345 kPa (30 to 50 psi)

DIAGNOSIS AND TESTING - HEATER PERFORMANCE TEST

PRE-DIAGNOSTIC PREPARATIONS

WARNING: REFER TO THE APPLICABLE WARNINGS AND CAUTIONS FOR THIS SYSTEM BEFORE PERFORMING THE FOLLOWING OPERATION. (Refer to 24 - HEATING & AIR CONDITIONING/ PLUMBING FRONT - WARNING - HEATER PLUMBING).

Check the coolant level, drive belt tension, radiator air flow, and cooling fan operation. Start the engine and allow it to warm up to normal temperature.

MAXIMUM HEATER OUTPUT: TEST AND ACTION

Engine coolant is provided to the heater system by two 16 mm (5/8 inch inside diameter) heater hoses. With the engine idling at normal running temperature, set the heater-A/C controls as follows. Temperature control to full Heat, Mode control to Floor, Blower control to the highest speed setting. Using a test thermometer, check the air temperature coming from the center floor outlets and compare this reading to the Temperature Reference table.

TEMPERATURE REFERENCE			
AMBIENT TEMPERATURE		MINIMUM FLOOR OUTLET TEMPERATURE	
CELSIUS	FAHRENHEIT	CELSIUS	FAHRENHEIT
15.5°	60°	62.2°	144°
21.1°	70°	63.8°	147°
26.6°	80°	65.5°	150°
32.2°	90°	67.2°	153°

If the floor outlet air temperature is insufficient, check that the cooling system is operating to specifications. (Refer to 7 - COOLING/ENGINE - DIAGNOSIS AND TESTING). Both heater hoses should be HOT to the touch (the coolant return hose should be slightly cooler than the supply hose). If the coolant return hose is much cooler than the supply hose, locate and repair the engine coolant flow obstruction in heater system.

POSSIBLE LOCATIONS OR CAUSE OF OBSTRUCTED COOLANT FLOW

- Pinched or kinked heater hoses.
- Improper heater hose routing.
- Plugged heater hoses or supply and return ports at cooling system connections.
- Plugged heater core.
- Air locked heater core.
- Restrictor in backwards.

If coolant flow is verified and the heater floor outlet temperature is insufficient, a mechanical problem may exist.

POSSIBLE LOCATION OR CAUSE OF INSUFFICIENT HEAT

- Obstructed cowl air intake.
- Obstructed heater system outlets.
- Blend-air door not functioning properly.

TEMPERATURE CONTROL

If heater floor outlet temperature cannot be adjusted with the heater-A/C control temperature control lever, one of the following could require service:

- Blend-air door binding.
- Faulty blend-air door motor.
- Improper engine coolant temperature.
- Faulty heater-A/C control.

SPECIFICATIONS - HEATER-A/C SYSTEM

ITEM	DESCRIPTION	NOTES
Vehicle	RS - Caravan, Town & Country, Voyager	
System	R134a with expansion valve(s)	
Compressor	Nippondenso - 10S20	ND-8 PAG Oil
Freeze–up Control	evaporator temperature sensor	expansion valve mounted - input to heater-A/C control module
Low PSI Control		liquid line mounted - input to Powertrain Control Module (PCM) - PCM opens compressor clutch relay < 29.4 psi
High PSI Control	pressure transducer	liquid line mounted - input to PCM - PCM opens compressor clutch relay > 450 psi
	pressure relief valve	compressor mounted - opens > 495 psi
Control Head	single zone, dual zone, and three zone Manual Temperature Control (MTC) - or three zone Automatic Temperature Control (ATC)	PCI data bus messaging - ATC uses three infrared temperature sensors - two front/one rear
Mode Door	electric actuator	Control head driven
Blend Air Door	electric actuator	
Fresh/Recirc Door	electric actuator	
Blower Motor	control head switch	resistor and relay with MTC, power module and relay with ATC
Cooling Fans	pulse width modulated variable speed	PCM control through solid state fan relay
Clutch		
Clutch Control	PCM	PCM control through compressor clutch relay
Clutch Coil Draw	2.2 amps @ 12V	± 0.5amps@ 70° F
Compressor Clutch Air Gap	0.020″ - 0.035″	
Diagnostics	DRBIII® scan tool	

CONTROLS - FRONT

TABLE OF CONTENTS

page

A/C HEATER CONTROL
STANDARD PROCEDURE - HEATER-A/C CONTROL CALIBRATION . . . 8
REMOVAL . . . 9
INSTALLATION . . . 9
A/C PRESSURE TRANSDUCER
DESCRIPTION - A/C PRESSURE TRANSDUCER . . . 10
OPERATION . . . 10
DIAGNOSIS AND TESTING - A/C PRESSURE TRANSDUCER . . . 10
REMOVAL . . . 11
INSTALLATION . . . 11
BLEND DOOR ACTUATOR
DESCRIPTION . . . 11
OPERATION . . . 11
REMOVAL . . . 12
INSTALLATION . . . 12
BLOWER MOTOR RELAY
DESCRIPTION . . . 13
OPERATION . . . 13
DIAGNOSIS AND TESTING - BLOWER MOTOR RELAY . . . 14
REMOVAL . . . 14
INSTALLATION . . . 14
BLOWER MOTOR RESISTOR
DESCRIPTION . . . 15
OPERATION . . . 15
DIAGNOSIS AND TESTING - BLOWER MOTOR RESISTOR . . . 15
REMOVAL . . . 16
INSTALLATION . . . 16
COMPRESSOR CLUTCH
DESCRIPTION . . . 16
OPERATION . . . 17
STANDARD PROCEDURE
STANDARD PROCEDURE - COMPRESSOR CLUTCH AIR GAP . . . 17

page

STANDARD PROCEDURE - COMPRESSOR CLUTCH BREAK-IN . . . 17
REMOVAL . . . 17
INSPECTION - COMPRESSOR CLUTCH/COIL . 18
INSTALLATION . . . 19
COMPRESSOR CLUTCH COIL
DIAGNOSIS AND TESTING - COMPRESSOR CLUTCH COIL . . . 20
COMPRESSOR CLUTCH RELAY
DESCRIPTION . . . 21
OPERATION . . . 21
DIAGNOSIS AND TESTING - COMPRESSOR CLUTCH RELAY . . . 22
REMOVAL . . . 22
INSTALLATION . . . 22
EVAPORATOR TEMPERATURE SENSOR
DESCRIPTION . . . 22
OPERATION . . . 23
REMOVAL . . . 23
INSTALLATION . . . 23
INFRARED TEMPERATURE SENSOR
DESCRIPTION . . . 24
OPERATION . . . 24
MODE DOOR ACTUATOR
DESCRIPTION . . . 24
OPERATION . . . 25
REMOVAL . . . 25
INSTALLATION . . . 25
POWER MODULE
DESCRIPTION . . . 26
OPERATION . . . 26
REMOVAL . . . 26
INSTALLATION . . . 27
RECIRCULATION DOOR ACTUATOR
DESCRIPTION . . . 27
OPERATION . . . 27
REMOVAL . . . 28
INSTALLATION . . . 28

A/C HEATER CONTROL

STANDARD PROCEDURE - HEATER-A/C CONTROL CALIBRATION

The heater-A/C control module must be recalibrated each time an actuator motor or the control module is replaced. If the vehicle is so equipped, the calibration procedure also includes rear HVAC positions for each actuator motor.

(1) Turn the ignition switch to the On position.

(2) Simultaneously depress and hold the Power and Recirculation buttons on the heater-A/C control for at least five seconds. The manual heater-A/C control power Light Emitting Diode (LED) and Recirculation LED, or the Automatic Temperature Control (ATC) heater-A/C control Delay and Recirculation graphics will begin to flash when the calibration procedure has begun.

A/C HEATER CONTROL (Continued)

(3) The calibration procedure should take less than two minutes to complete for the manual heater-A/C control, and less than twenty seconds for the ATC heater-A/C control. When the LEDs or graphics stop flashing, the calibration procedure is complete.

(4) If the LEDs or graphics continue to flash beyond the normal three minute (manual) or twenty second (ATC) calibration time, it indicates that the heater-A/C control has detected a failure and a Diagnostic Trouble Code (DTC) has been set. Use a DRBIII® scan tool to perform further diagnosis. Refer to the appropriate diagnostic information. The LEDs or graphics will continue to flash even after the ignition switch is cycled Off and On, until a successful calibration is completed or until the vehicle has been driven about 13 kilometers (8 miles).

REMOVAL

WARNING: ON VEHICLES EQUIPPED WITH AIRBAGS, DISABLE THE AIRBAG SYSTEM BEFORE ATTEMPTING ANY STEERING WHEEL, STEERING COLUMN, OR INSTRUMENT PANEL COMPONENT DIAGNOSIS OR SERVICE. DISCONNECT AND ISOLATE THE BATTERY NEGATIVE (GROUND) CABLE, THEN WAIT TWO MINUTES FOR THE AIRBAG SYSTEM CAPACITOR TO DISCHARGE BEFORE PERFORMING FURTHER DIAGNOSIS OR SERVICE. THIS IS THE ONLY SURE WAY TO DISABLE THE AIRBAG SYSTEM. FAILURE TO TAKE THE PROPER PRECAUTIONS COULD RESULT IN ACCIDENTAL AIRBAG DEPLOYMENT AND POSSIBLE PERSONAL INJURY.

(1) Disconnect and isolate the battery negative cable.

(2) Remove the center bezel from the instrument panel. (Refer to 23 - BODY/INSTRUMENT PANEL/ INSTRUMENT PANEL CENTER BEZEL - REMOVAL).

(3) Place the instrument panel center bezel unit face down on a suitable work surface. Take the proper precautions to protect the center bezel from cosmetic damage.

(4) If the vehicle is equipped with the optional Automatic Temperature Control (ATC) system, disconnect the infrared sensor jumper harness connector from the receptacle on the back of the heater-A/C control (Fig. 1).

(5) Remove the six screws that secure the heater-A/C control to the back of the instrument panel center bezel.

(6) Remove the heater-A/C control from the instrument panel center bezel.

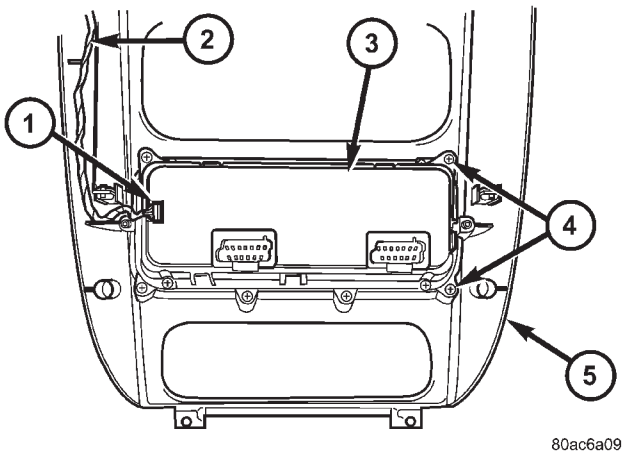

Fig. 1 Heater-A/C Control

1 - INFRARED SENSOR JUMPER CONNECTOR (ATC ONLY)
2 - INFRARED SENSOR JUMPER HARNESS (ATC ONLY)
3 - HEATER-A/C CONTROL
4 - SCREW (6)
5- INSTRUMENT PANEL CENTER BEZEL

INSTALLATION

WARNING: ON VEHICLES EQUIPPED WITH AIRBAGS, DISABLE THE AIRBAG SYSTEM BEFORE ATTEMPTING ANY STEERING WHEEL, STEERING COLUMN, OR INSTRUMENT PANEL COMPONENT DIAGNOSIS OR SERVICE. DISCONNECT AND ISOLATE THE BATTERY NEGATIVE (GROUND) CABLE, THEN WAIT TWO MINUTES FOR THE AIRBAG SYSTEM CAPACITOR TO DISCHARGE BEFORE PERFORMING FURTHER DIAGNOSIS OR SERVICE. THIS IS THE ONLY SURE WAY TO DISABLE THE AIRBAG SYSTEM. FAILURE TO TAKE THE PROPER PRECAUTIONS COULD RESULT IN ACCIDENTAL AIRBAG DEPLOYMENT AND POSSIBLE PERSONAL INJURY.

(1) Position the heater-A/C control onto the back of instrument panel center bezel.

(2) Install and tighten the six screws that secure the heater-A/C control to the back of the instrument panel center bezel. Tighten the screws to 2 N·m (17 in. lbs.).

(3) If the vehicle is equipped with the optional ATC system, reconnect the infrared sensor jumper harness connector to the receptacle on the back of the heater-A/C control.

(4) Reinstall the center bezel onto the instrument panel. (Refer to 23 - BODY/INSTRUMENT PANEL/ INSTRUMENT PANEL CENTER BEZEL - INSTALLATION).

(5) Reconnect the battery negative cable.

A/C PRESSURE TRANSDUCER

DESCRIPTION - A/C PRESSURE TRANSDUCER

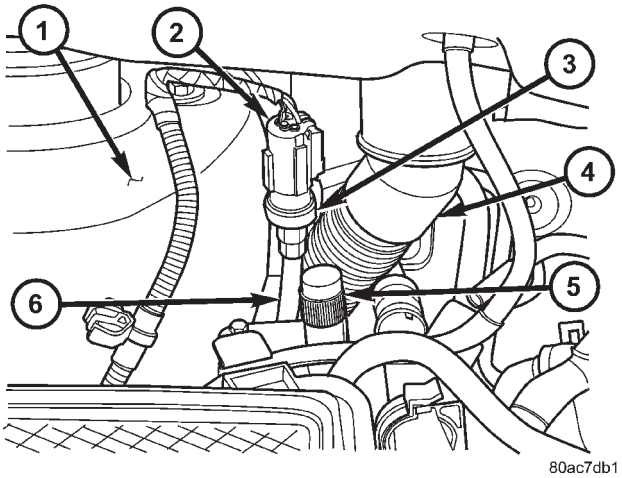

Fig. 2 A/C Pressure Transducer

1 - RIGHT FRONT STRUT TOWER
2 - CONNECTOR
3 - A/C PRESSURE TRANSDUCER
4 - RIGHT WIPER MODULE DRAIN TUBE
5 - HIGH SIDE SERVICE PORT
6 - LIQUID LINE

The A/C pressure transducer (Fig. 2) is a switch that is installed on a fitting located on the refrigerant liquid line between the filter-drier and the expansion valve in the right rear corner of the engine compartment. An internally threaded hex fitting on the transducer connects it to the externally threaded Schrader-type fitting on the liquid line. A rubber O-ring seals the connection between the transducer and the liquid line fitting. Three terminals within a molded plastic connector receptacle on the top of the transducer connect it to the vehicle electrical system through a take out and connector of the headlamp and dash wire harness.

The A/C pressure transducer cannot be adjusted or repaired and, if faulty or damaged, it musty be replaced.

OPERATION

The A/C pressure transducer monitors the pressures in the high side of the refrigerant system through its connection to a fitting on the liquid line. The transducer will change its internal resistance in response to the pressures it monitors. The Powertrain Control Module (PCM) provides a five volt reference signal and a sensor ground to the transducer, then monitors the output voltage of the transducer on a sensor return circuit to determine refrigerant pressure. The PCM is programmed to respond to this and other sensor inputs by controlling the operation of the air conditioning compressor clutch and the radiator cooling fan to help optimize air conditioning system performance and to protect the system components from damage. The A/C pressure transducer input to the PCM will also prevent the air conditioning compressor clutch from engaging when ambient temperatures are below about 10° C (50° F) due to the pressure/temperature relationship of the refrigerant. The Schrader-type valve in the liquid line fitting permits the A/C pressure transducer to be removed or installed without disturbing the refrigerant in the system. The A/C pressure transducer is diagnosed using a DRBIII® scan tool. Refer to the appropriate diagnostic information.

DIAGNOSIS AND TESTING - A/C PRESSURE TRANSDUCER

The A/C pressure transducer is tested using a DRBIII® scan tool. Refer to the appropriate diagnostic information. Before testing the A/C pressure transducer, be certain that the transducer wire harness connection is clean of corrosion and properly connected. For the air conditioning system to operate, an A/C pressure transducer voltage reading between 0.451 and 4.519 volts is required. Voltages outside this range indicate a low or high refrigerant system pressure condition to the Powertrain Control Module (PCM). The PCM is programmed to respond to a low or high refrigerant system pressure by suppressing operation of the compressor. Refer to the A/C Pressure Transducer Voltage table for the possible condition indicated by the transducer voltage readings.

A/C PRESSURE TRANSDUCER VOLTAGE	
VOLTAGE	POSSIBLE INDICATION
0.0	1. NO SENSOR SUPPLY VOLTAGE FROM PCM. 2. SHORTED SENSOR CIRCUIT. 3. FAULTY TRANSDUCER.
0.150 TO 0.450	1. AMBIENT TEMPERATURE BELOW 10° C (50° F). 2. LOW REFRIGERANT SYSTEM PRESSURE.
0.451 TO 4.519	1. NORMAL REFRIGERANT SYSTEM PRESSURE.
4.520 TO 4.850	1. HIGH REFRIGERANT SYSTEM PRESSURE.
5.0	1. OPEN SENSOR CIRCUIT. 2. FAULTY TRANSDUCER.

A/C PRESSURE TRANSDUCER (Continued)

REMOVAL

(1) Disconnect and isolate the battery negative cable.

(2) Disconnect the headlamp and dash wire harness connector for the A/C pressure transducer from the transducer connector receptacle (Fig. 3).

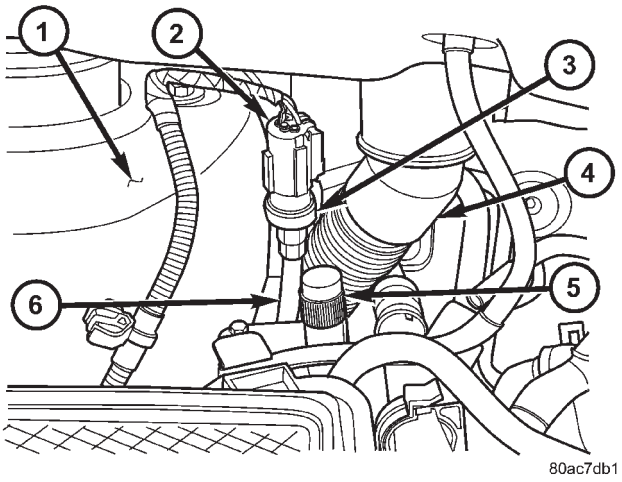

Fig. 3 A/C Pressure Transducer

1 - RIGHT FRONT STRUT TOWER
2 - CONNECTOR
3 - A/C PRESSURE TRANSDUCER
4 - RIGHT WIPER MODULE DRAIN TUBE
5 - HIGH SIDE SERVICE PORT
6 - LIQUID LINE

(3) Using an open end wrench, unscrew the A/C pressure transducer from the fitting on the liquid line between the filter-drier and the expansion valve.

(4) Remove the seal from the A/C pressure transducer fitting and discard.

INSTALLATION

(1) Lubricate a new rubber O-ring seal with clean refrigerant oil and install it on the A/C pressure transducer fitting.

(2) Using an open end wrench, install and tighten the A/C pressure transducer onto the fitting on the liquid line between the filter-drier and the expansion valve.

(3) Reconnect the headlamp and dash wire harness connector for the A/C pressure transducer to the transducer connector receptacle.

(4) Reconnect the battery negative cable.

BLEND DOOR ACTUATOR

DESCRIPTION

The blend door actuators are reversible, 12-volt Direct Current (DC), servo motors. Models with the single zone heater and air conditioner system have a single blend air door, which is controlled by a single blend door actuator. Models with the optional dual zone front heater and air conditioner system have dual blend air doors, which are controlled by two blend door actuators. The single zone blend door actuator is located on the driver side end of the heater-A/C housing unit, close to the dash panel. In the dual zone system, the same blend door actuator used for the single zone system becomes the passenger blend door actuator, and is mechanically connected to only the passenger side blend air door. In the dual zone system, a second separate blend door actuator is also located on the driver side end of the heater-A/C housing unit close to the instrument panel, and is mechanically connected to only the driver side blend air door.

The blend door actuators are interchangeable with each other, as well as with the actuators for the mode door and the recirculation air door. Each actuator is contained within an identical black molded plastic housing with an integral wire connector receptacle. Two integral mounting tabs allow the actuator to be secured with two screws to the heater-A/C unit housing. Each actuator also has an identical output shaft with splines that connects it to the linkage that drives the proper blend air door. The blend door actuators do not require mechanical indexing to the blend door linkage, as they are electronically calibrated by the heater-A/C control module. The blend door actuators cannot be adjusted or repaired and, if damaged or faulty, they must be replaced.

OPERATION

Each blend door actuator is connected to the heater-A/C control module through the vehicle electrical system by a dedicated two-wire take out and connector of the HVAC wire harness. The blend door actuator can move the blend air door in two directions. When the heater-A/C control module pulls the voltage on one side of the motor connection high and the other connection low, the blend air door will move in one direction. When the module reverses the polarity of the voltage to the motor, the blend air door moves in the opposite direction. When the module makes the voltage to both connections high or both connections low, the blend air door stops and will not move. These same motor connections also provide a feedback signal to the heater-A/C control module. This feedback signal allows the module to monitor the operation and relative positions of the blend door actuator and the blend air door. The heater-A/C control module learns the blend air door stop positions during the calibration procedure and will store a Diagnostic Trouble Code (DTC) for any problems it detects in the blend door actuator circuits. The blend door actuator can be diagnosed using a DRBIII® scan tool. Refer to the appropriate diagnostic information.

BLEND DOOR ACTUATOR (Continued)

REMOVAL

The single zone heating and air conditioning system is equipped with a single blend door actuator. The dual zone system has two blend door actuators, one for the driver side blend air door and one for the passenger side blend air door. The same service procedures can be used for each of these actuators.

WARNING: ON VEHICLES EQUIPPED WITH AIRBAGS, DISABLE THE AIRBAG SYSTEM BEFORE ATTEMPTING ANY STEERING WHEEL, STEERING COLUMN, OR INSTRUMENT PANEL COMPONENT DIAGNOSIS OR SERVICE. DISCONNECT AND ISOLATE THE BATTERY NEGATIVE (GROUND) CABLE, THEN WAIT TWO MINUTES FOR THE AIRBAG SYSTEM CAPACITOR TO DISCHARGE BEFORE PERFORMING FURTHER DIAGNOSIS OR SERVICE. THIS IS THE ONLY SURE WAY TO DISABLE THE AIRBAG SYSTEM. FAILURE TO TAKE THE PROPER PRECAUTIONS COULD RESULT IN ACCIDENTAL AIRBAG DEPLOYMENT AND POSSIBLE PERSONAL INJURY.

(1) Disconnect and isolate the battery negative cable.

(2) Remove the silencer from beneath the driver side end of the instrument panel. (Refer to 23 - BODY/INSTRUMENT PANEL/INSTRUMENT PANEL SILENCER - REMOVAL).

(3) Remove the three screws that secure the heater core shield to the left end of the HVAC distribution housing (Fig. 4).

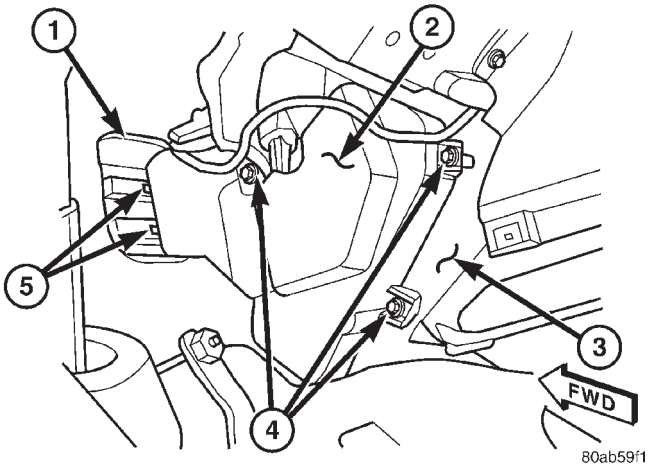

Fig. 4 Heater Core Shield

1 - HEATER/ AIR CONDITIONER HOUSING
2 - HEATER CORE SHIELD
3 - DISTRIBUTION HOUSING
4 - SCREWS (3)
5 - LOCATION TABS (2)

(4) Pull the heater core shield rearward far enough to disengage the two location tabs that position the front of the shield to the receptacles in the two lower finger formations of the heater/ air conditioner housing near the dash panel.

(5) Remove the heater core shield from the distribution housing.

(6) Disconnect the HVAC wire harness connector for the blend door actuator from the actuator connector receptacle (Fig. 5).

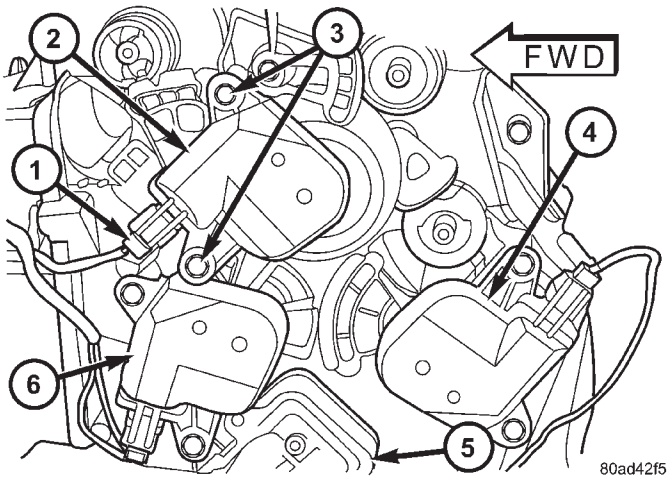

Fig. 5 Blend Door Actuator

1 - CONNECTOR
2 - MODE DOOR ACTUATOR
3 - SCREW (2)
4 - DRIVER BLEND DOOR ACTUATOR (DUAL-ZONE ONLY)
5 - HEATER CORE
6 - BLEND DOOR ACTUATOR (SINGLE ZONE) OR PASSENGER BLEND DOOR ACTUATOR (DUAL-ZONE)

(7) Remove the two screws that secure the blend door actuator to the distribution housing.

(8) Remove the blend door actuator from the distribution housing.

INSTALLATION

(1) Position the blend door actuator onto the heater/air conditioner housing. If necessary, rotate the actuator slightly to align the splines on the actuator output shaft with those in the blend air door linkage.

(2) Install and tighten the two screws that secure the blend door actuator to the distribution housing. Tighten the screws to 2 N·m (17 in. lbs.).

(3) Reconnect the HVAC wire harness connector for the blend door actuator to the actuator connector receptacle.

(4) Position the heater core shield onto the distribution housing. Be certain that the two location tabs on the front of the shield are engaged in the receptacles in the two lower finger formations of the evaporator housing near the dash panel.

BLEND DOOR ACTUATOR (Continued)

(5) Install and tighten the three screws that secure the heater core shield to the left end of the heater/air conditioner housing. Tighten the screws to 2 N·m (17 in. lbs.).

(6) Reinstall the silencer under the driver side end of the instrument panel. (Refer to 23 - BODY/INSTRUMENT PANEL/INSTRUMENT PANEL SILENCER - INSTALLATION).

(7) Reconnect the battery negative cable.

(8) Perform the heater-A/C control calibration procedure. (Refer to 24 - HEATING & AIR CONDITIONING/CONTROLS - FRONT/A/C-HEATER CONTROL - STANDARD PROCEDURE - HEATER-A/C CONTROL CALIBRATION).

BLOWER MOTOR RELAY

DESCRIPTION

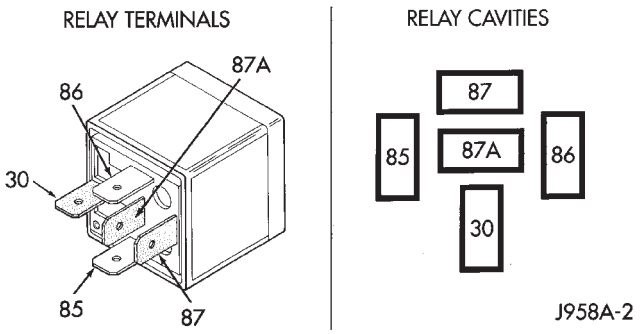

Fig. 6 Blower Motor Relay

NUMBER	IDENTIFICATION
30	COMMON FEED
85	COIL GROUND
86	COIL BATTERY
87	NORMALLY OPEN
87A	NORMALLY CLOSED

The blower motor relay (Fig. 6) is a International Standards Organization (ISO) mini-relay. Relays conforming to the ISO specifications have common physical dimensions, current capacities, terminal patterns, and terminal functions. The ISO mini-relay terminal functions are the same as a conventional ISO relay. However, the ISO mini-relay terminal pattern (or footprint) is different, the current capacity is lower, and the physical dimensions are smaller than those of the conventional ISO relay. The blower motor relay is located in the Intelligent Power Module (IPM), which is in the engine compartment near the battery. See the fuse and relay layout map molded into the inner surface of the IPM cover for blower motor relay identification and location.

The black, molded plastic case is the most visible component of the blower motor relay. Five male spade-type terminals extend from the bottom of the base to connect the relay to the vehicle electrical system, and the ISO designation for each terminal is molded into the base adjacent to each terminal.

OPERATION

The blower motor relay is an electromechanical switch that uses a low current input from the Front Control Module (FCM) to control the high current output to the blower motor resistor (manual heater-A/C control) or blower power module (ATC control). The movable common feed contact point is held against the fixed normally closed contact point by spring pressure. When the relay coil is energized, an electromagnetic field is produced by the coil windings. This electromagnetic field draws the movable relay contact point away from the fixed normally closed contact point, and holds it against the fixed normally open contact point. When the relay coil is de-energized, spring pressure returns the movable contact point back against the fixed normally closed contact point. The resistor or diode is connected in parallel with the relay coil in the relay, and helps to dissipate voltage spikes and electromagnetic interference that can be generated as the electromagnetic field of the relay coil collapses.

The blower motor relay terminals are connected to the vehicle electrical system through a receptacle in the Intelligent Power Module (IPM). The inputs and outputs of the blower motor relay include:

- The common feed terminal (30) receives a battery current input from the battery through a B(+) circuit at all times.
- The coil ground terminal (85) receives a ground input through the front/rear blower motor relay control circuit only when the FCM electronically pulls the control circuit to ground.
- The coil battery terminal (86) receives a battery current input from the battery through a B(+) circuit at all times.
- The normally open terminal (87) provides a battery current output to the blower motor resistor (manual heater-A/C control) or blower power module (automatic heater-A/C control) through a fuse in the IPM on the fused front blower motor relay output circuit only when the blower motor relay coil is energized.
- The normally closed terminal (87A) is not connected to any circuit in this application, but provides a battery current output only when the blower motor relay coil is de-energized.

BLOWER MOTOR RELAY (Continued)

Refer to the appropriate wiring information. The wiring information includes wiring diagrams, proper wire and connector repair procedures, further details on wire harness routing and retention, as well as pin-out and location views for the various wire harness connectors, splices, and grounds.

DIAGNOSIS AND TESTING - BLOWER MOTOR RELAY

The front blower motor relay (Fig. 7) is located in the Intelligent Power Module (IPM), which is in the engine compartment near the battery. See the fuse and relay layout map molded into the inner surface of the IPM cover for front blower motor relay identification and location. Remove the relay from the IPM to perform the following tests:

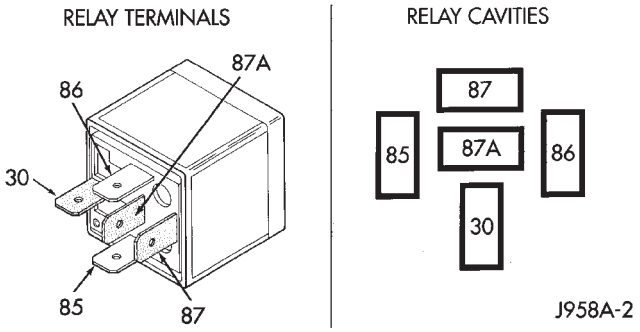

Fig. 7 Blower Motor Relay - Terminal Legend

NUMBER	IDENTIFICATION
30	COMMON FEED
85	COIL GROUND
86	COIL BATTERY
87	NORMALLY OPEN
87A	NORMALLY CLOSED

(1) A relay in the de-energized position should have continuity between terminals 87A and 30, and no continuity between terminals 87 and 30. If OK, go to Step 2. If not OK, replace the faulty relay.

(2) Resistance between terminals 85 and 86 (electromagnet) should be 75 ± 5 ohms. If OK, go to Step 3. If not OK, replace the faulty relay.

(3) Connect a battery to terminals 85 and 86. There should now be continuity between terminals 30 and 87, and no continuity between terminals 87A and 30. If OK, use a DRBIII® scan tool to perform further diagnosis of the relay circuits. Refer to the appropriate diagnostic information. If not OK, replace the faulty relay.

REMOVAL

(1) Disconnect and isolate the battery negative cable.

(2) Unlatch and remove the cover from the Intelligent Power Module (IPM) (Fig. 8).

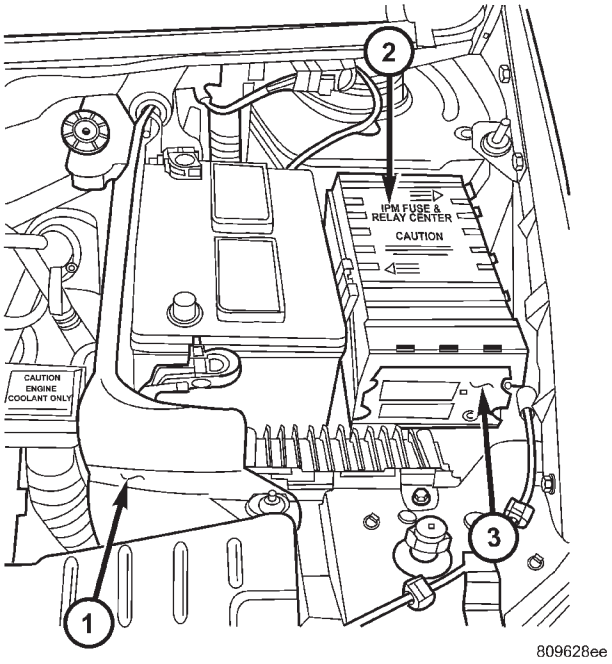

Fig. 8 Intelligent Power Module

1 - BATTERY THERMAL GUARD
2 - INTELLIGENT POWER MODULE
3 - FRONT CONTROL MODULE

(3) See the fuse and relay layout map molded into the inner surface of the IPM cover for front blower motor relay identification and location.

(4) Remove the front blower motor relay from the IPM by pulling the relay straight up.

INSTALLATION

(1) See the fuse and relay layout map molded into the inner surface of the Intelligent Power Module (IPM) cover for front blower motor relay identification and location.

(2) Position the front blower motor relay to the proper receptacle in the IPM.

(3) Align the front blower motor relay terminals with the terminal cavities in the IPM relay receptacle.

(4) Push down firmly on the front blower motor relay until the terminals are fully seated in the terminal cavities in the IPM receptacle.

(5) Install and latch the cover onto the IPM.

(6) Reconnect the battery negative cable.

BLOWER MOTOR RESISTOR

DESCRIPTION

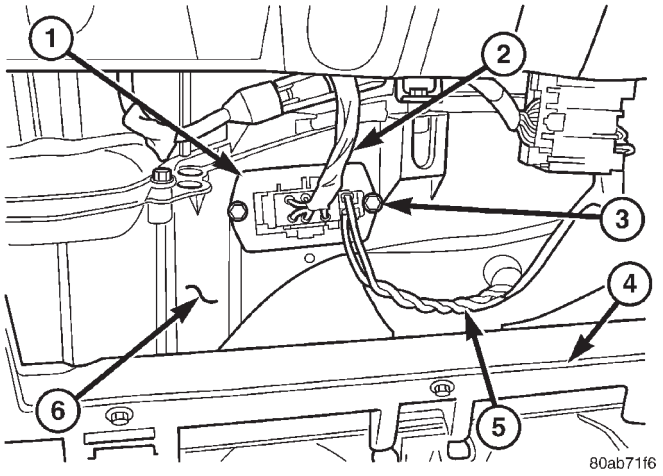

Fig. 9 Blower Motor Resistor

1 - BLOWER MOTOR RESISTOR
2 - INSTRUMENT PANEL WIRE HARNESS
3 - SCREW (2)
4 - GLOVE BOX OPENING LOWER REINFORCEMENT
5 - BLOWER MOTOR PIGTAIL WIRE
6 - EVAPORATOR HOUSING

A blower motor resistor is used on this model when it is equipped with the manual heater-A/C control (Fig. 9). Models equipped with the optional Automatic Temperature Control (ATC) use a blower power module, instead of the blower motor resistor. The blower motor resistor is installed in a mounting hole in the heater/AC housing, directly behind the glove box opening of the instrument panel. The resistor consists of a molded plastic mounting plate with two integral connector receptacles. Concealed behind the mounting plate within the heater/AC housing are four coiled resistor wires contained within a protective stamped steel cage. The resistor mounting plate is secured with two screws to the heater/AC housing and is accessed for service by rolling down the glove box from the instrument panel.

The blower motor resistor wires will get hot when in use. Do not touch the resistor wires or the protective cage if the blower motor has been running. The blower motor resistor cannot be adjusted or repaired and, if faulty or damaged, it must be replaced.

OPERATION

The blower motor resistor is connected to the vehicle electrical system through a dedicated take out and connector of the instrument panel wire harness. A second connector receptacle receives the pigtail wire connector from the blower motor. The blower motor resistor has multiple resistor wires, each of which will reduce the current flow through the blower motor to change the blower motor speed. The blower motor switch in the manual heater-A/C control directs the ground path for the blower motor through the correct resistor wire to obtain the selected speed. With the blower motor switch in the lowest speed position, the ground path for the motor is applied through all of the resistor wires. Each higher speed selected with the blower motor switch applies the blower motor ground path through fewer of the resistor wires, increasing the blower motor speed. When the blower motor switch is in the highest speed position, the blower motor resistor wires are bypassed and the blower motor receives a direct path to ground through the blower motor switch. The blower motor resistor may be diagnosed using conventional diagnostic tools and methods.

DIAGNOSIS AND TESTING - BLOWER MOTOR RESISTOR

Refer to the appropriate wiring information. The wiring information includes wiring diagrams, proper wire and connector repair procedures, details of wire harness routing and retention, connector pin-out information and location views for the various wire harness connectors, splices and grounds.

WARNING: ON VEHICLES EQUIPPED WITH AIRBAGS, DISABLE THE AIRBAG SYSTEM BEFORE ATTEMPTING ANY STEERING WHEEL, STEERING COLUMN, OR INSTRUMENT PANEL COMPONENT DIAGNOSIS OR SERVICE. DISCONNECT AND ISOLATE THE BATTERY NEGATIVE (GROUND) CABLE, THEN WAIT TWO MINUTES FOR THE AIRBAG SYSTEM CAPACITOR TO DISCHARGE BEFORE PERFORMING FURTHER DIAGNOSIS OR SERVICE. THIS IS THE ONLY SURE WAY TO DISABLE THE AIRBAG SYSTEM. FAILURE TO TAKE THE PROPER PRECAUTIONS COULD RESULT IN ACCIDENTAL AIRBAG DEPLOYMENT AND POSSIBLE PERSONAL INJURY.

(1) Disconnect and isolate the battery negative cable.

(2) Disconnect the instrument panel wire harness connector for the blower motor resistor and the blower motor pigtail wire connector from the resistor connector receptacles.

(3) Check for continuity between each of the blower motor switch input terminals of the blower motor resistor and the resistor output terminal. In each case there should be continuity. If OK, repair the instrument panel wire harness circuits between the blower motor switch and the blower motor resistor or the blower motor pigtail wires as required. If not OK, replace the faulty blower motor resistor.

BLOWER MOTOR RESISTOR (Continued)

REMOVAL

WARNING: ON VEHICLES EQUIPPED WITH AIRBAGS, DISABLE THE AIRBAG SYSTEM BEFORE ATTEMPTING ANY STEERING WHEEL, STEERING COLUMN, OR INSTRUMENT PANEL COMPONENT DIAGNOSIS OR SERVICE. DISCONNECT AND ISOLATE THE BATTERY NEGATIVE (GROUND) CABLE, THEN WAIT TWO MINUTES FOR THE AIRBAG SYSTEM CAPACITOR TO DISCHARGE BEFORE PERFORMING FURTHER DIAGNOSIS OR SERVICE. THIS IS THE ONLY SURE WAY TO DISABLE THE AIRBAG SYSTEM. FAILURE TO TAKE THE PROPER PRECAUTIONS COULD RESULT IN ACCIDENTAL AIRBAG DEPLOYMENT AND POSSIBLE PERSONAL INJURY.

WARNING: THE BLOWER MOTOR RESISTOR MAY GET VERY HOT DURING NORMAL OPERATION. IF THE BLOWER MOTOR WAS TURNED ON, WAIT FIVE MINUTES TO ALLOW THE BLOWER MOTOR RESISTOR TO COOL BEFORE PERFORMING DIAGNOSIS OR SERVICE. FAILURE TO TAKE THIS PRECAUTION CAN RESULT IN PERSONAL INJURY.

CAUTION: Do not operate the blower motor with the blower motor resistor removed from the circuit. Failure to take this precaution can result in vehicle damage.

(1) Disconnect and isolate the battery negative cable.
(2) Open the glove box.
(3) Flex both sides of the glove box bin inward near the top far enough for the rubber glove box stop bumpers to clear the sides of the glove box opening, then roll the glove box downward.
(4) Reach through the glove box opening to access and disconnect the instrument panel wire harness connector for the blower motor resistor from the resistor connector receptacle (Fig. 10).
(5) Reach through the glove box opening to access and disconnect the blower motor pigtail wire connector from the resistor connector receptacle.
(6) Remove the two screws that secure the blower motor resistor to the evaporator housing.
(7) Remove the blower motor resistor from the evaporator housing.

INSTALLATION

CAUTION: Do not operate the blower motor with the blower motor resistor removed from the circuit. Failure to take this precaution can result in vehicle damage.

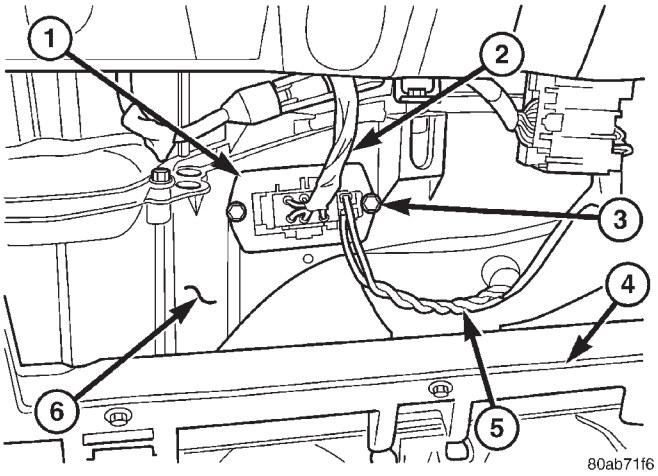

Fig. 10 Blower Motor Resistor

1 - BLOWER MOTOR RESISTOR
2 - INSTRUMENT PANEL WIRE HARNESS
3 - SCREW (2)
4 - GLOVE BOX OPENING LOWER REINFORCEMENT
5 - BLOWER MOTOR PIGTAIL WIRE
6 - EVAPORATOR HOUSING

(1) Position the blower motor resistor into the evaporator housing.
(2) Install and tighten the two screws that secure the blower motor resistor to the evaporator housing. Tighten the screws to 2 N·m (17 in. lbs.).
(3) Reconnect the blower motor pigtail wire connector to the blower motor resistor connector receptacle.
(4) Reconnect the instrument panel wire harness connector for the blower motor resistor to the resistor connector receptacle.
(5) Flex both sides of the glove box bin inward near the top far enough for the rubber glove box stop bumpers to clear the sides of the glove box opening, then roll the glove box upward.
(6) Close and latch the glove box.
(7) Reconnect the battery negative cable.

COMPRESSOR CLUTCH

DESCRIPTION

The compressor clutch assembly consists of a stationary electromagnetic coil with a zener diode, a hub bearing and pulley assembly, and a clutch plate (Fig. 11). The electromagnetic coil unit and the hub bearing and pulley assembly are each retained on the nose of the compressor front housing with snap rings. The clutch plate is keyed or splined to the compressor shaft, and secured with a bolt.

COMPRESSOR CLUTCH (Continued)

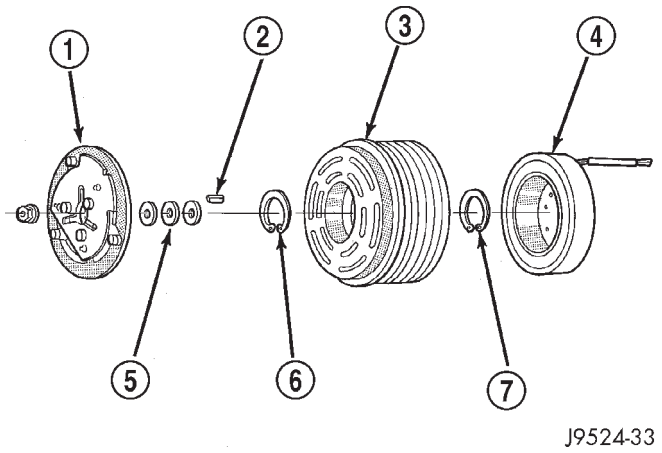

Fig. 11 Compressor Clutch - Typical

1 - CLUTCH PLATE
2 - SHAFT KEY (SOME MODELS)
3 - PULLEY AND BEARING
4 - CLUTCH COIL
5 - CLUTCH SHIMS
6 - SNAP RING
7 - SNAP RING

The compressor clutch plate and pulley unit, or the clutch coil are available for separate service replacement. The clutch coil zener diode is integral to the clutch coil pigtail wire and connector and, if faulty or damaged, the clutch electromagnetic coil unit must be replaced.

OPERATION

The compressor clutch components provide the means to engage and disengage the compressor from the engine serpentine accessory drive belt. When the clutch coil is energized, it magnetically draws the clutch plate into contact with the clutch pulley and drives the compressor shaft. When the coil is not energized, the pulley freewheels on the clutch hub bearing, which is part of the pulley.

A zener diode is connected in parallel with the clutch electromagnetic coil. This diode controls the dissipation of voltage induced into the coil windings by the collapsing of the electromagnetic fields that occurs when the compressor clutch is disengaged. The zener diode dissipates this induced voltage by regulating a current path to ground. This arrangement serves to protect other circuits and components from potentially damaging voltage spikes in the vehicle electrical system that might occur if the voltage induced in the clutch coil windings could not be dissipated.

The compressor clutch engagement is controlled by several components: the heater-A/C controls in the passenger compartment, the A/C pressure transducer on the liquid line, the evaporator temperature sensor on the expansion valve, the Powertrain Control Module (PCM) in the engine compartment, and the compressor clutch relay in the Intelligent Power Module (IPM). The PCM may delay compressor clutch engagement for up to thirty seconds. (Refer to 8 - ELECTRICAL/ELECTRONIC CONTROL MODULES/POWERTRAIN CONTROL MODULE - DESCRIPTION - PCM OPERATION).

STANDARD PROCEDURE

STANDARD PROCEDURE - COMPRESSOR CLUTCH AIR GAP

If a new clutch plate and/or clutch pulley are being used, the air gap between the clutch plate and clutch pulley must be checked using the following procedure:

(1) Using feeler gauges, measure the air gap between the clutch plate and the clutch pulley friction surfaces.

(2) If the air gap is not between 0.5 and 0.9 mm (0.020 and 0.035 in.), add or subtract shims until the desired air gap is obtained.

NOTE: The shims may compress after tightening the compressor shaft bolt. Check the air gap in four or more places on the clutch plate to verify that the air gap is still correct. Spin the clutch pulley before making the final air gap check.

STANDARD PROCEDURE - COMPRESSOR CLUTCH BREAK-IN

After a new compressor clutch has been installed, check that the compressor clutch coil is performing to specifications. (Refer to 24 - HEATING & AIR CONDITIONING/CONTROLS - FRONT/COMPRESSOR CLUTCH COIL - DIAGNOSIS AND TESTING). If the clutch coil is performing to specifications, perform the compressor clutch break-in procedure. This procedure (burnishing) will seat the opposing friction surfaces and provide a higher compressor clutch torque capability.

(1) Set the heater-A/C controls to the A/C mode, with the blower switch in the highest speed position.

(2) Start the engine and hold the engine speed at 1500 to 2000 rpm.

(3) Cycle the compressor clutch On and Off about twenty times (five seconds On, then five seconds Off).

REMOVAL

The refrigerant system can remain fully charged during compressor clutch, pulley, or coil replacement. Although the compressor assembly must be removed from its mounting, the compressor clutch can be service with the compressor in the vehicle.

COMPRESSOR CLUTCH (Continued)

(1) Disconnect and isolate the battery negative cable.

(2) Raise and support the vehicle.

(3) Remove the serpentine drive belt. (Refer to 7 - COOLING/ACCESSORY DRIVE/DRIVE BELTS - 2.4L - REMOVAL) or (Refer to 7 - COOLING/ACCESSORY DRIVE/DRIVE BELTS - 3.3/3.8L - REMOVAL).

(4) Disconnect the engine wire harness connector for the compressor clutch coil from the clutch coil pigtail wire connector on the top of the compressor.

(5) On models with the 3.3L and 3.8L engines, disengage the retainer on the engine wire harness compressor clutch coil take out from the bracket on the top of the compressor.

(6) On models with the 2.4L engine, remove all of the compressor mounting screws except the upper left (rear of the compressor) screw, which should only be loosened. Allow the front (pulley end) of the compressor to tilt downward far enough to access the clutch for removal, then tighten the loosened upper left compressor mounting screw.

(7) On models with the 3.3L and 3.8L engines, remove the three screws and one nut that secure the compressor to the engine. Disengage the mounting ear at the front of the compressor from the stud on the engine, allow the front (pulley end) of the compressor to tilt downward far enough to access the clutch for removal, then reinstall and tighten the upper left compressor mounting screw.

(8) Remove the compressor shaft bolt (Fig. 12). If necessary, a band-type oil filter wrench or a strap wrench can be placed around the clutch plate to aid in bolt removal.

(9) Tap the clutch plate lightly with a plastic hammer and remove the clutch plate and shim(s) from the compressor shaft (Fig. 13). **Be certain not to lose the shim or shims.**

CAUTION: Do not pry between the clutch plate unit and the pulley to remove the clutch plate from the compressor shaft as this may damage the clutch plate.

(10) Using snap ring pliers (Special Tool C-4574 or equivalent), remove the external snap ring that secures the pulley to the front cover of the compressor, then slide the pulley off of the compressor (Fig. 14).

(11) Remove the screw that secures the clutch coil pigtail wire connector bracket and ground clip to the top of the compressor housing.

(12) Using snap ring pliers (Special Tool C-4574 or equivalent), remove the external snap ring that secures the clutch coil to the front cover of the compressor housing, then slide the clutch coil off of the compressor (Fig. 15).

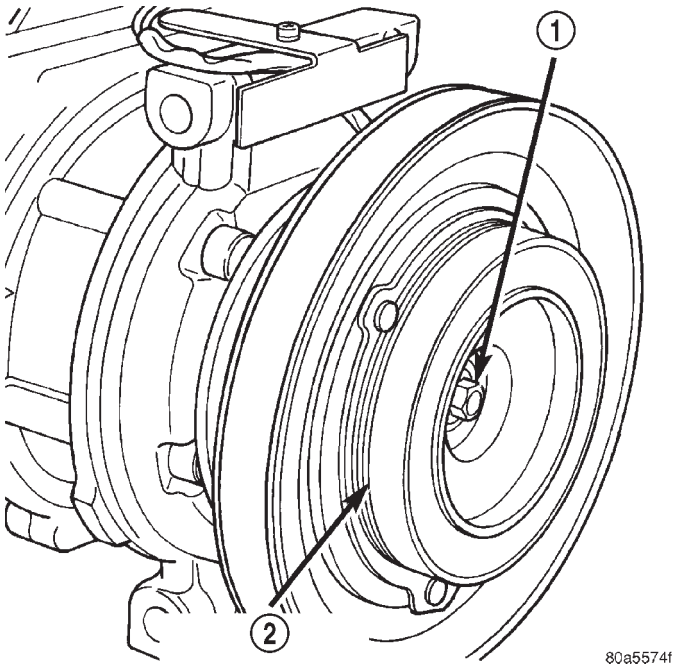

Fig. 12 Compressor Shaft Bolt and Clutch Plate

1 - COMPRESSOR SHAFT BOLT
2 - COMPRESSOR CLUTCH PLATE

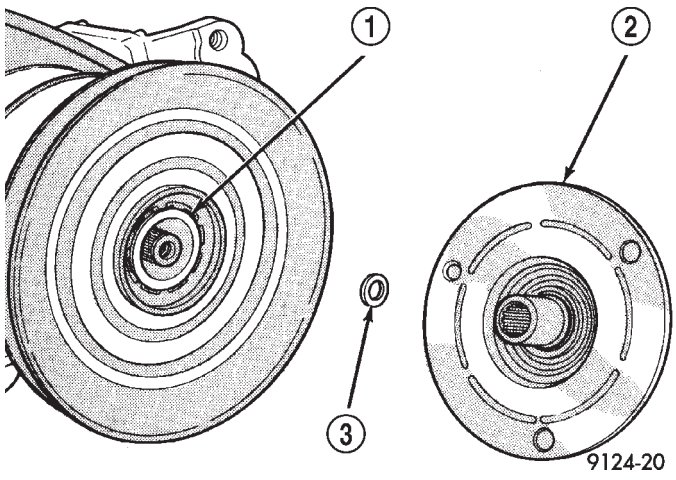

Fig. 13 Clutch Plate and Shim(s)

1 - COMPRESSOR SHAFT
2 - CLUTCH PLATE
3 - CLUTCH PLATE SHIM

INSPECTION - COMPRESSOR CLUTCH/COIL

Compressor clutch components should always be inspected closely before they are reinstalled. The clutch plate and clutch pulley are mated at the factory using a burnishing operation. No attempt should be made to separately replace the compressor clutch pulley or clutch plate. The clutch coil may be serviced separately.

COMPRESSOR CLUTCH (Continued)

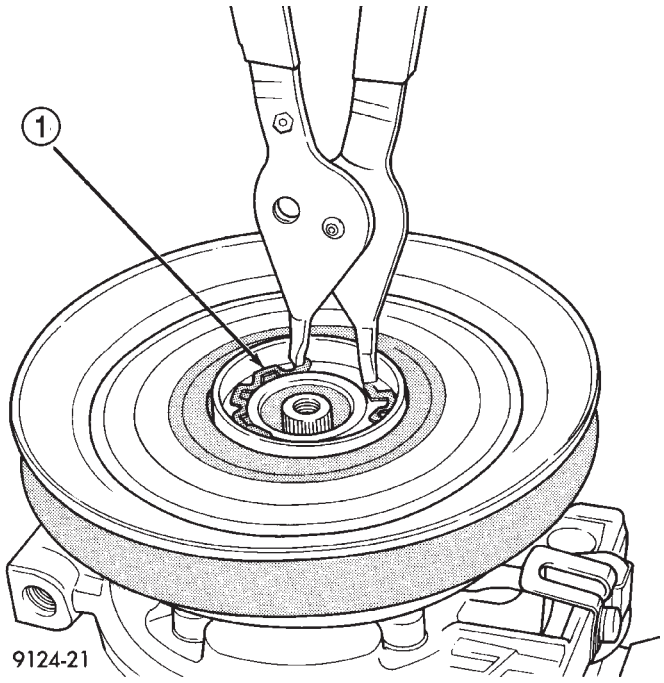

Fig. 14 Remove Clutch Pulley Snap Ring

1 - SNAP RING

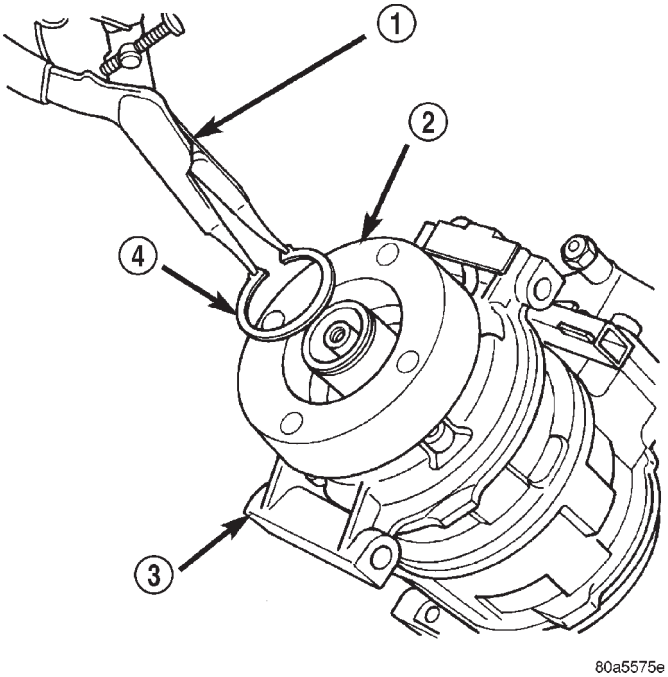

Fig. 15 Remove Clutch Coil Snap Ring

1 - SNAP RING PLIERS
2 - CLUTCH COIL
3 - COMPRESSOR
4 - SNAP RING

(1) Examine the friction surfaces of the clutch pulley and the clutch plate for wear. The clutch pulley and clutch plate should be replaced if there is excessive wear or scoring.

(2) Examine the friction surfaces of the clutch pulley and the clutch plate for oil contamination. If the friction surfaces are oily, the clutch pulley and clutch plate should be replaced. Also inspect the shaft and nose area of the compressor for oil. Remove the felt packing from around the compressor shaft in the compressor front cover. If the felt is saturated with oil, the compressor front shaft seal is leaking and the compressor will also have to be replaced.

(3) Check the clutch pulley bearing for roughness or excessive leakage of grease. Replace the clutch pulley and clutch plate if the bearing is faulty.

INSTALLATION

The refrigerant system can remain fully charged during compressor clutch, pulley, or coil replacement. Although the compressor assembly must be removed from its mounting, the compressor clutch can be service with the compressor in the vehicle.

(1) Align the dowel pin on the back of the clutch coil with the hole in the compressor front cover, and position the clutch coil onto the compressor. Be certain that the clutch coil pigtail wires are properly oriented and routed so that they are not pinched between the compressor front cover and the clutch coil.

NOTE: A new snap ring must be used to secure the clutch coil to the compressor. The bevel side of the snap ring must face outward.

(2) Using snap ring pliers (Special Tool C-4574 or equivalent), install the external snap ring that secures the clutch coil to the front cover of the compressor. The bevel side of the snap ring must face outward and both snap ring eyelets must be oriented to the right or the left of the clutch coil dowel pin location on the compressor. Be certain that the snap ring is fully and properly seated in the groove.

CAUTION: If the snap ring is not fully seated in the groove it will vibrate out, resulting in a clutch failure and severe damage to the compressor front cover.

(3) Install and tighten the screw that secures the clutch coil pigtail wire connector bracket and ground clip to the top of the compressor housing.

(4) Install the pulley onto the front cover of the compressor. If necessary, tap the pulley gently with a block of wood placed on the pulley friction surface (Fig. 16).

CAUTION: Do not mar the friction surfaces of the pulley.

COMPRESSOR CLUTCH (Continued)

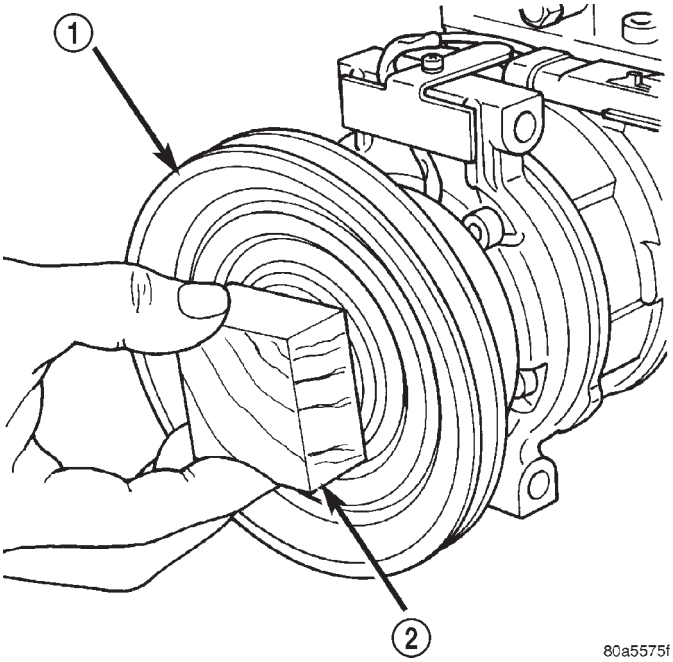

Fig. 16 Install Clutch Pulley

1 - PULLEY ASSEMBLY
2 - WOOD BLOCK

NOTE: A new snap ring must be used to secure the clutch pulley to the compressor. The bevel side of the snap ring must face outward.

(5) Using snap ring pliers (Special Tool C-4574 or equivalent), install the external snap ring (bevel side facing outward) that secures the clutch pulley to the front cover of the compressor. Be certain that the snap ring is fully and properly seated in the groove.

(6) If the original clutch plate and clutch pulley are to be reused, reinstall the original shim(s) on the compressor shaft against the shoulder. If a new clutch plate and/or clutch pulley are being used, install a trial stack of shims 1.0 mm (0.040 in.) thick on the compressor shaft against the shoulder.

(7) Install the clutch plate onto the compressor shaft.

(8) Install and tighten the compressor shaft nut. If necessary, a band-type oil filter wrench or a strap wrench can be placed around the clutch plate to aid in bolt tightening. Tighten the bolt to 17.5 N·m (155 in. lbs.).

(9) If a new clutch plate and/or clutch pulley are being installed, the air gap between the clutch plate and clutch pulley must be checked. (Refer to 24 - HEATING & AIR CONDITIONING/CONTROLS - FRONT/COMPRESSOR CLUTCH - STANDARD PROCEDURE - COMPRESSOR CLUTCH AIR GAP).

(10) On models with the 2.4L engine only, loosely install the four screws that secure the compressor to the mounting bracket on the engine. Tighten the screws to 28 N·m (21 ft. lbs.).

(11) On models with the 3.3L and 3.8L engines only, loosely install the three screws and one nut that secure the compressor to the engine. Tighten each of the fasteners using the following sequence to 54 N·m (40 ft. lbs.).

- The upper screw at the rear of the compressor.
- The lower screw at the rear of the compressor.
- The lower screw at the front of the compressor.
- The upper nut at the front of the compressor.

(12) On models with the 3.3L and 3.8L engines only, engage the retainer on the engine wire harness compressor clutch coil take out with the bracket on the top of the compressor.

(13) Reconnect the engine wire harness connector for the compressor clutch coil to the coil pigtail wire connector on the top of the compressor.

(14) Reinstall the serpentine accessory drive belt onto the front of the engine. (Refer to 7 - COOLING/ACCESSORY DRIVE/DRIVE BELTS - 2.4L - INSTALLATION) or (Refer to 7 - COOLING/ACCESSORY DRIVE/DRIVE BELTS - 3.3L/3.8L - INSTALLATION).

(15) Lower the vehicle.

(16) Reconnect the battery negative cable.

(17) If a new clutch plate and/or clutch pulley are being installed, the new clutch components must be burnished. (Refer to 24 - HEATING & AIR CONDITIONING/CONTROLS - FRONT/COMPRESSOR CLUTCH - STANDARD PROCEDURE - COMPRESSOR CLUTCH BREAK-IN).

COMPRESSOR CLUTCH COIL

DIAGNOSIS AND TESTING - COMPRESSOR CLUTCH COIL

The air conditioning compressor clutch coil electrical circuit is controlled by the Powertrain Control Module (PCM) through the compressor clutch relay, which is located in the Intelligent Power Module (IPM) in the engine compartment near the battery. Begin testing of a suspected compressor clutch coil problem by performing the preliminary checks.

PRELIMINARY CHECKS

(1) If the compressor clutch will not engage, verify the refrigerant charge level. (Refer to 24 - HEATING & AIR CONDITIONING/PLUMBING - FRONT/REFRIGERANT - DIAGNOSIS AND TESTING - REFRIGERANT CHARGE LEVEL). If the refrigerant charge level is OK, go to Step 2. If the refrigerant charge level is not OK, adjust the refrigerant charge as required.

COMPRESSOR CLUTCH COIL (Continued)

(2) If the a/c compressor clutch still will not engage, disconnect the headlamp and dash wire harness connector for the A/C pressure transducer and check for battery current at the connector with the engine running and the heater-A/C control set to the A/C mode. If OK, go to TESTS . If not OK, use a DRBIII® scan tool to perform further diagnosis. Refer to the appropriate diagnostic information.

TESTS

(1) Verify the battery state of charge. (Refer to 8 - ELECTRICAL/BATTERY SYSTEM/BATTERY - DIAGNOSIS AND TESTING).

(2) Connect an ammeter (0 to 10 ampere scale selected) in series with the clutch coil feed terminal. Connect a voltmeter (0 to 20 volt scale selected) to measure voltage across the battery and the clutch coil.

(3) With the heater-A/C control in the A/C mode and the blower at low speed, start the engine and allow it to run at a normal idle speed.

(4) The compressor clutch should engage immediately, and the clutch coil voltage should be within two volts of the battery voltage. If the coil voltage is not within two volts of battery voltage, test the clutch coil feed circuit for excessive voltage drop. If the compressor clutch does not engage, use a DRBIII® scan tool to perform further diagnosis. Refer to the appropriate diagnostic information.

(5) With the ambient temperature at 21° C (70° F), the compressor clutch coil is acceptable if the current draw is 2.0 to 3.7 amperes at 11.5 to 12.5 volts at the clutch coil. If the voltage is more than 12.5 volts, add electrical loads by turning on electrical accessories until the voltage reads below 12.5 volts.

(a) If the compressor clutch coil current reading is zero, the coil is open and must be replaced.

(b) If the compressor clutch coil current reading is four amperes or more, the coil is shorted and must be replaced.

COMPRESSOR CLUTCH RELAY

DESCRIPTION

The compressor clutch relay (Fig. 17) is a International Standards Organization (ISO) micro-relay. Relays conforming to the ISO specifications have common physical dimensions, current capacities, terminal patterns, and terminal functions. The ISO micro-relay terminal functions are the same as a conventional ISO relay. However, the ISO micro-relay terminal pattern (or footprint) is different, the current capacity is lower, and the physical dimensions are smaller than those of the conventional ISO relay. The compressor clutch relay is located in the Intelligent Power Module (IPM), which is in the engine compartment near the battery. See the fuse and relay layout map molded into the inner surface of the IPM cover for compressor clutch relay identification and location.

The black, molded plastic case is the most visible component of the compressor clutch relay. Five male spade-type terminals extend from the bottom of the base to connect the relay to the vehicle electrical system, and the ISO designation for each terminal is molded into the base adjacent to each terminal.

OPERATION

The compressor clutch relay is an electromechanical switch that uses a low current input from the Powertrain Control Module (PCM) to control the high current output to the compressor clutch electromagnetic coil. The movable common feed contact point is held against the fixed normally closed contact point by spring pressure. When the relay coil is energized, an electromagnetic field is produced by the coil windings. This electromagnetic field draws the movable relay contact point away from the fixed normally closed contact point, and holds it against the fixed normally open contact point. When the relay coil is de-energized, spring pressure returns the movable contact point back against the fixed normally closed contact point. The resistor or diode is connected in parallel with the relay coil in the relay, and helps to dissipate voltage spikes and electromagnetic interference that can be generated as the electromagnetic field of the relay coil collapses.

The compressor clutch relay terminals are connected to the vehicle electrical system through a receptacle in the Intelligent Power Module (IPM). The inputs and outputs of the compressor clutch relay include:

- The common feed terminal (30) receives a battery current input from a fuse in the IPM through a fused B(+) circuit at all times.
- The coil ground terminal (85) receives a ground input from the PCM through the compressor clutch relay control circuit only when the PCM electronically pulls the control circuit to ground.
- The coil battery terminal (86) receives a battery current input from the PCM through a fused ignition switch output (run-start) circuit only when the ignition switch is in the On or Start positions.
- The normally open terminal (87) provides a battery current output to the compressor clutch coil through the compressor clutch relay output circuit only when the compressor clutch relay coil is energized.
- The normally closed terminal (87A) is not connected to any circuit in this application, but provides

COMPRESSOR CLUTCH RELAY (Continued)

a battery current output only when the compressor clutch relay coil is de-energized.

Refer to the appropriate wiring information. The wiring information includes wiring diagrams, proper wire and connector repair procedures, further details on wire harness routing and retention, as well as pin-out and location views for the various wire harness connectors, splices, and grounds.

DIAGNOSIS AND TESTING - COMPRESSOR CLUTCH RELAY

The compressor clutch relay (Fig. 17) is located in the Intelligent Power Module (IPM), which is in the engine compartment near the battery. See the fuse and relay layout map molded into the inner surface of the IPM cover for compressor clutch relay identification and location. Remove the relay from the IPM to perform the following tests:

(1) A relay in the de-energized position should have continuity between terminals 87A and 30, and no continuity between terminals 87 and 30. If OK, go to Step 2. If not OK, replace the faulty relay.

(2) Resistance between terminals 85 and 86 (electromagnet) should be 75 ± 5 ohms. If OK, go to Step 3. If not OK, replace the faulty relay.

(3) Connect a battery to terminals 85 and 86. There should now be continuity between terminals 30 and 87, and no continuity between terminals 87A and 30. If OK, use a DRBIII® scan tool to perform further diagnosis of the relay circuits. Refer to the appropriate diagnostic information. If not OK, replace the faulty relay.

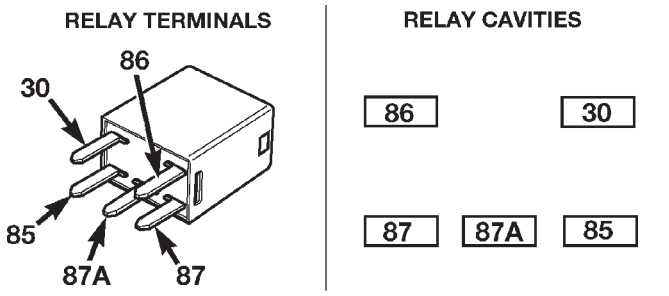

Fig. 17 Compressor Clutch Relay

TERMINAL LEGEND	
NUMBER	IDENTIFICATION
30	COMMON FEED
85	COIL GROUND
86	COIL BATTERY
87	NORMALLY OPEN
87A	NORMALLY CLOSED

REMOVAL

(1) Disconnect and isolate the battery negative cable.

(2) Unlatch and remove the cover from the Intelligent Power Module (IPM).

(3) See the fuse and relay layout map molded into the inner surface of the IPM cover for compressor clutch relay identification and location.

(4) Remove the compressor clutch relay from the IPM by pulling it straight up.

INSTALLATION

(1) See the fuse and relay layout map molded into the inner surface of the Intelligent Power Module (IPM) cover for compressor clutch relay identification and location.

(2) Position the compressor clutch relay to the proper receptacle in the IPM.

(3) Align the compressor clutch relay terminals with the terminal cavities in the IPM relay receptacle.

(4) Push down firmly on the compressor clutch relay until the terminals are fully seated in the terminal cavities in the IPM receptacle.

(5) Install and latch the cover onto the IPM.

(6) Reconnect the battery negative cable.

EVAPORATOR TEMPERATURE SENSOR

DESCRIPTION

The evaporator temperature sensor is a switch that is installed on the top of the expansion valve in the right rear corner of the engine compartment (Fig. 18). The sensor has a small probe that is inserted in a small well in the body of the expansion valve that is filled with a special silicone-based thermal grease. A small molded plastic push-in retainer secures the sensor to a threaded hole in the top surface of the expansion valve. Two terminals within a molded plastic connector receptacle on the sensor connect it to the vehicle electrical system through a take out and connector of the HVAC wire harness.

EVAPORATOR TEMPERATURE SENSOR (Continued)

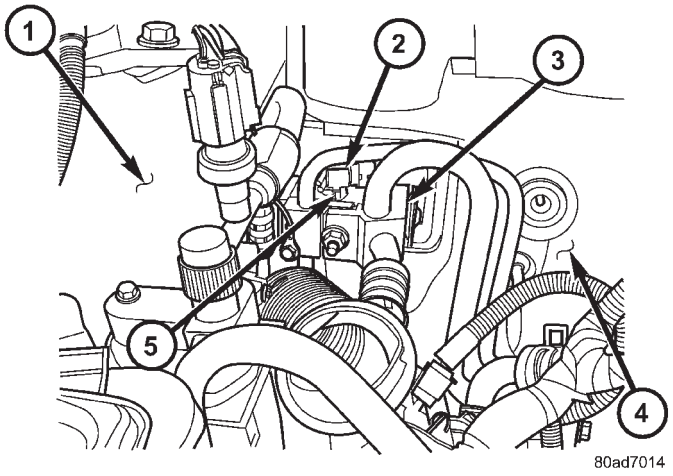

Fig. 18 Evaporator Temperature Sensor

1 - RIGHT FRONT STRUT TOWER
2 - EVAPORATOR TEMPERATURE SENSOR
3 - EXPANSION VALVE
4 - DASH PANEL
5 - RETAINER

The evaporator temperature sensor cannot be adjusted or repaired and, if faulty or damaged, it must be replaced.

OPERATION

The evaporator temperature sensor monitors the temperature of the evaporator through its connection to the top of the expansion valve. The sensor will change its internal resistance in response to the temperatures it monitors. The heater-A/C control module is connected to the sensor through a sensor ground circuit and a sensor signal circuit. As the evaporator temperature increases, the resistance of the sensor decreases and the voltage monitored by the module decreases. The module uses this monitored voltage reading to an indication of the evaporator temperature. The heater-A/C control module is programmed to respond to this input by sending electronic messages to the Powertrain Control Module (PCM) over the Programmable Communications Interface (PCI) data bus, and the PCM then cycles the air conditioning compressor clutch as necessary to optimize air conditioning system performance and to protect the system from evaporator freezing. The external location of the sensor and the use of a screw allows the sensor to be removed or installed from the expansion valve without disturbing the refrigerant in the system. The evaporator temperature sensor is diagnosed using a DRBIII® scan tool. Refer to the appropriate diagnostic information.

REMOVAL

(1) Disconnect and isolate the battery negative cable.

(2) Remove the air cleaner housing from the right side of the engine compartment.

(3) Remove the windshield wiper assembly from the vehicle(Refer to 8 - ELECTRICAL/WIPERS/WASHERS/WIPER MODULE - REMOVAL).

(4) Remove the temperature sensor attaching screw from the expansion valve.

(5) Pull the evaporator temperature sensor away from the expansion valve far enough to access the red release ring on the wiring connector. Push the red ring toward the connector to release lock and remove the HVAC wire harness connector from the temperature sensor.

(6) Remove the evaporator temperature sensor from the engine compartment. Please note that any grease removed with the old temperature sensor must be replaced, failure to do so could result in poor a/c performance.

INSTALLATION

(1) Position the evaporator temperature sensor into the right rear corner of the engine compartment. Please make sure any grease removed with the old sensor has been replaced before the new sensor is installed, failure to do so could lead to poor a/c performance.

(2) Reconnect the HVAC wire harness connector for the evaporator temperature sensor to the sensor connector receptacle.

(3) Position the evaporator temperature sensor onto the top of the expansion valve with the sensor probe inserted into the well in the expansion valve.

(4) Install the temperature sensor retaining screw and tighten.

(5) Install the window wiper assembly to the vehicle(Refer to 8 - ELECTRICAL/WIPERS/WASHERS/WIPER MODULE - INSTALLATION).

(6) Reinstall the air cleaner housing into the right side of the engine compartment.

(7) Reconnect the battery negative cable.

(8) Run the HVAC Cool Down test to verify system is operating properly(Refer to 24 - HEATING & AIR CONDITIONING - DIAGNOSIS AND TESTING).

INFRARED TEMPERATURE SENSOR

DESCRIPTION

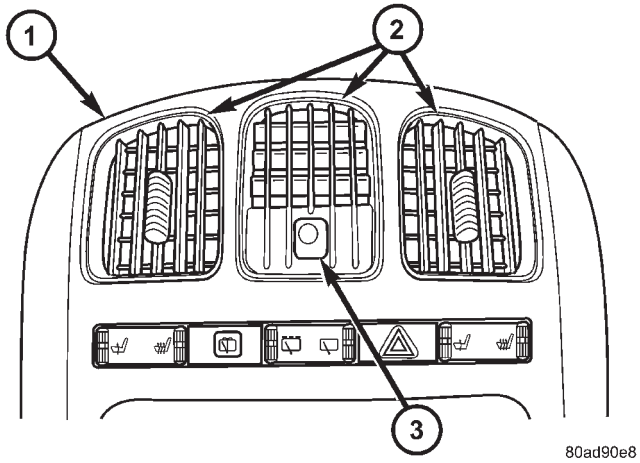

Fig. 19 Infrared Temperature Sensor

1 - INSTRUMENT PANEL CENTER BEZEL
2 - CENTER BEZEL OUTLETS
3 - INFRARED TEMPERATURE SENSOR

The infrared temperature sensor consists of two infrared transducers that are concealed behind a clear lens located near the bottom of the center panel outlet near the top of the instrument panel center bezel (Fig. 19). These sensors are used only on models equipped with the optional Automatic Temperature Control (ATC) heating and air conditioning system. A molded plastic connector receptacle on the bottom of the panel outlet unit is concealed behind the center bezel. A short, dedicated jumper wire harness routed behind the center bezel connects the sensors directly to the ATC heater-A/C control module near the bottom of the center bezel. The infrared temperature sensor is integral to the center bezel panel outlet unit. The infrared sensors cannot be adjusted or repaired and, if faulty or damaged, the center bezel panel outlet unit must be replaced.

OPERATION

The dual infrared temperature sensors provide independent measurement inputs to the Automatic Temperature Control (ATC) heater-A/C control module that indicates the surface temperature of the driver seat and front seat passenger seat occupants. By using a surface temperature measurement, rather than an air temperature measurement, the ATC system is able to adjust itself to the comfort level as perceived by the occupant. This allows the system to detect and compensate for other ambient conditions affecting comfort levels, such as solar heat gain or evaporative heat loss. The ATC system logic responds to the infrared sensor inputs by calculating and adjusting the air flow temperature and air flow rate needed to properly obtain and maintain the individually selected comfort level temperatures of both the driver and passenger seat occupants. The ATC heater-A/C control module continually monitors the infrared sensor circuits, and will store a Diagnostic Trouble Code (DTC) for any problem it detects. This DTC information can be retrieved and the infrared temperature sensor diagnosed using a DRBIII® scan tool. Refer to the appropriate diagnostic information.

MODE DOOR ACTUATOR

DESCRIPTION

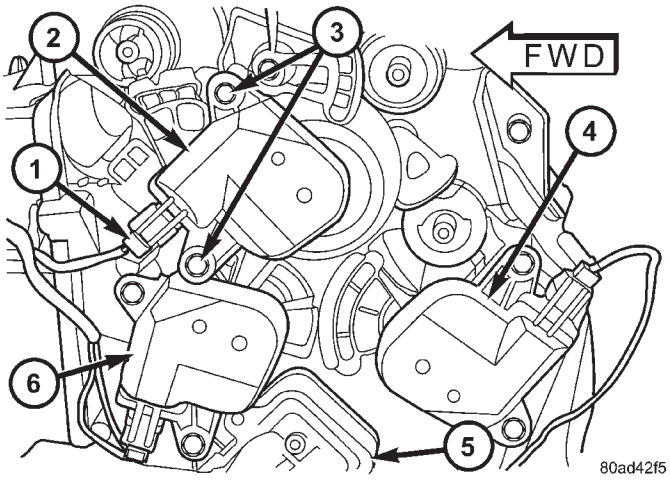

Fig. 20 Mode Door Actuator

1 - CONNECTOR
2 - MODE DOOR ACTUATOR
3 - SCREW (2)
4 - DRIVER BLEND DOOR ACTUATOR (DUAL-ZONE ONLY)
5 - HEATER CORE
6 - BLEND DOOR ACTUATOR (SINGLE ZONE) OR PASSENGER BLEND DOOR ACTUATOR (DUAL-ZONE)

The mode door actuator is a reversible, 12-volt Direct Current (DC), servo motor (Fig. 20). The single mode door actuator is located on the driver side end of the heater-A/C housing unit, close to the top of the distribution housing. The mode door actuator is mechanically connected to the mode door. The mode door actuator is interchangeable with the actuators for the blend air door(s) and the recirculation air door. Each actuator is contained within an identical black molded plastic housing with an integral wire connector receptacle. Two integral mounting tabs allow the actuator to be secured with two screws to the heater-A/C unit housing. Each actuator also has an identical output shaft with splines that connects

MODE DOOR ACTUATOR (Continued)

it to the linkage that drives the mode door. The mode door actuator does not require mechanical indexing to the mode door linkage, as it is electronically calibrated by the heater-A/C control module. The mode door actuator cannot be adjusted or repaired and, if damaged or faulty, it must be replaced.

OPERATION

The mode door actuator is connected to the heater-A/C control module through the vehicle electrical system by a dedicated two-wire take out and connector of the HVAC wire harness. The mode door actuator can move the mode door in two directions. When the heater-A/C control module pulls the voltage on one side of the motor connection high and the other connection low, the mode door will move in one direction. When the module reverses the polarity of the voltage to the motor, the mode door moves in the opposite direction. When the module makes the voltage to both connections high or both connections low, the mode door stops and will not move. These same motor connections also provide a feedback signal to the heater-A/C control module. This feedback signal allows the module to monitor the operation and relative position of the mode door actuator and the mode door. The heater-A/C control module learns the mode door stop positions during the calibration procedure and will store a Diagnostic Trouble Code (DTC) for any problems it detects in the mode door actuator circuits. The mode door actuator can be diagnosed using a DRBIII® scan tool. Refer to the appropriate diagnostic information.

REMOVAL

WARNING: ON VEHICLES EQUIPPED WITH AIRBAGS, DISABLE THE AIRBAG SYSTEM BEFORE ATTEMPTING ANY STEERING WHEEL, STEERING COLUMN, OR INSTRUMENT PANEL COMPONENT DIAGNOSIS OR SERVICE. DISCONNECT AND ISOLATE THE BATTERY NEGATIVE (GROUND) CABLE, THEN WAIT TWO MINUTES FOR THE AIRBAG SYSTEM CAPACITOR TO DISCHARGE BEFORE PERFORMING FURTHER DIAGNOSIS OR SERVICE. THIS IS THE ONLY SURE WAY TO DISABLE THE AIRBAG SYSTEM. FAILURE TO TAKE THE PROPER PRECAUTIONS COULD RESULT IN ACCIDENTAL AIRBAG DEPLOYMENT AND POSSIBLE PERSONAL INJURY.

(1) Disconnect and isolate the battery negative cable.

(2) Remove the silencer from beneath the driver side end of the instrument panel. (Refer to 23 - BODY/INSTRUMENT PANEL/INSTRUMENT PANEL SILENCER - REMOVAL).

(3) Disconnect the HVAC wire harness connector for the mode door actuator from the actuator connector receptacle (Fig. 21).

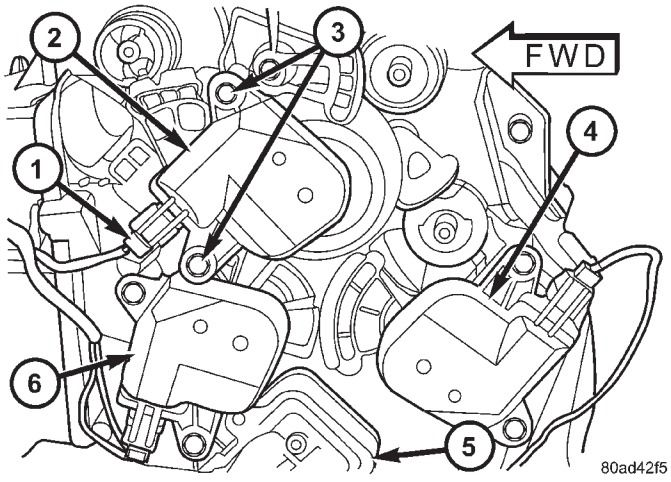

Fig. 21 Mode Door Actuator

1 - CONNECTOR
2 - MODE DOOR ACTUATOR
3 - SCREW (2)
4 - DRIVER BLEND DOOR ACTUATOR (DUAL-ZONE ONLY)
5 - HEATER CORE
6 - BLEND DOOR ACTUATOR (SINGLE ZONE) OR PASSENGER BLEND DOOR ACTUATOR (DUAL-ZONE)

(4) Remove the two screws that secure the mode door actuator to the distribution housing.

(5) Remove the mode door actuator from the distribution housing.

INSTALLATION

WARNING: ON VEHICLES EQUIPPED WITH AIRBAGS, DISABLE THE AIRBAG SYSTEM BEFORE ATTEMPTING ANY STEERING WHEEL, STEERING COLUMN, OR INSTRUMENT PANEL COMPONENT DIAGNOSIS OR SERVICE. DISCONNECT AND ISOLATE THE BATTERY NEGATIVE (GROUND) CABLE, THEN WAIT TWO MINUTES FOR THE AIRBAG SYSTEM CAPACITOR TO DISCHARGE BEFORE PERFORMING FURTHER DIAGNOSIS OR SERVICE. THIS IS THE ONLY SURE WAY TO DISABLE THE AIRBAG SYSTEM. FAILURE TO TAKE THE PROPER PRECAUTIONS COULD RESULT IN ACCIDENTAL AIRBAG DEPLOYMENT AND POSSIBLE PERSONAL INJURY.

(1) Position the mode door actuator onto the heater/AC housing. If necessary, rotate the actuator slightly to align the splines on the actuator output shaft with those in the mode door linkage.

MODE DOOR ACTUATOR (Continued)

(2) Install and tighten the two screws that secure the mode door actuator to the distribution housing. Tighten the screws to 2 N·m (17 in. lbs.).

(3) Reconnect the HVAC wire harness connector for the mode door actuator to the actuator connector receptacle.

(4) Reinstall the silencer under the driver side end of the instrument panel. (Refer to 23 - BODY/INSTRUMENT PANEL/INSTRUMENT PANEL SILENCER - INSTALLATION).

(5) Reconnect the battery negative cable.

(6) Perform the heater-A/C control calibration procedure. (Refer to 24 - HEATING & AIR CONDITIONING/CONTROLS - FRONT/A/C-HEATER CONTROL - STANDARD PROCEDURE - HEATER-A/C CONTROL CALIBRATION).

POWER MODULE

DESCRIPTION

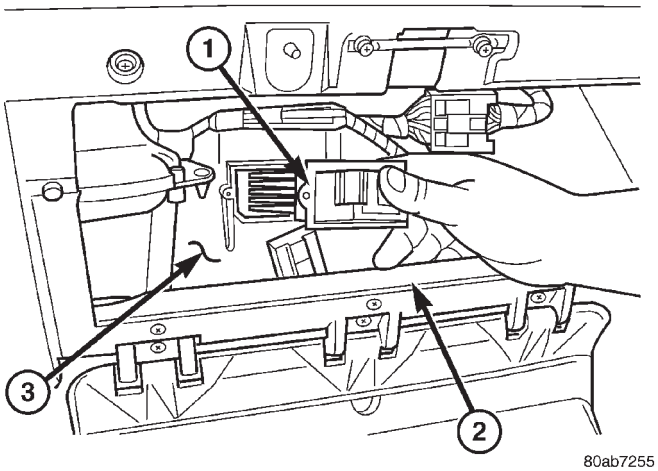

Fig. 22 Power Module

1 - POWER MODULE
2 - LOWER GLOVE BOX OPENING REINFORCEMENT
3 - EVAPORATOR HOUSING

A blower power module is used on this model when it is equipped with the optional Automatic Temperature Control (ATC) (Fig. 22). Models equipped with the standard manual heater-A/C control use a blower motor resistor, instead of the blower power module. The blower power module is installed in a mounting hole in the evaporator housing, directly behind the glove box opening of the instrument panel. The module consists of a molded plastic mounting plate with two integral connector receptacles. Concealed behind the mounting plate within the evaporator housing is the power module electronic circuitry and a large finned, heat sink. The module mounting plate is secured with two screws to the evaporator housing and is accessed for service by rolling down the glove box from the instrument panel.

The power module heat sink will get hot when in use. Do not touch the heat sink if the blower motor has been running. The blower power module cannot be adjusted or repaired and, if faulty or damaged, it must be replaced.

OPERATION

The blower power module is connected to the vehicle electrical system through a dedicated take out and connector of the instrument panel wire harness. A second connector receptacle receives the pigtail wire connector from the blower motor. The blower power module allows the microprocessor-based Automatic Temperature Control (ATC) heater-A/C control module to calculate and provide infinitely variable blower motor speeds based upon either manual blower switch input or the ATC programming using a Pulse Width Modulated (PWM) circuit strategy. The PWM voltage is applied to a comparator circuit which compares the PWM signal voltage to the blower motor feedback voltage. The resulting output drives the power module circuitry, which adjusts the voltage output received from the blower motor relay to change or maintain the desired blower speed. The blower power module is diagnosed using a DRBIII® scan tool. Refer to the appropriate diagnostic information.

REMOVAL

WARNING: ON VEHICLES EQUIPPED WITH AIRBAGS, DISABLE THE AIRBAG SYSTEM BEFORE ATTEMPTING ANY STEERING WHEEL, STEERING COLUMN, OR INSTRUMENT PANEL COMPONENT DIAGNOSIS OR SERVICE. DISCONNECT AND ISOLATE THE BATTERY NEGATIVE (GROUND) CABLE, THEN WAIT TWO MINUTES FOR THE AIRBAG SYSTEM CAPACITOR TO DISCHARGE BEFORE PERFORMING FURTHER DIAGNOSIS OR SERVICE. THIS IS THE ONLY SURE WAY TO DISABLE THE AIRBAG SYSTEM. FAILURE TO TAKE THE PROPER PRECAUTIONS COULD RESULT IN ACCIDENTAL AIRBAG DEPLOYMENT AND POSSIBLE PERSONAL INJURY.

(1) Disconnect and isolate the battery negative cable.

(2) Open the glove box.

(3) Flex both sides of the glove box bin inward near the top far enough for the rubber glove box stop bumpers to clear the sides of the glove box opening, then roll the glove box downward.

(4) Reach through the glove box opening to access and disconnect the instrument panel wire harness

POWER MODULE (Continued)

connector for the power module from the module connector receptacle.

(5) Reach through the glove box opening to access and disconnect the blower motor pigtail wire connector from the power module connector receptacle.

(6) Remove the two screws that secure the power module to the evaporator housing.

(7) Remove the power module from the evaporator housing.

INSTALLATION

WARNING: ON VEHICLES EQUIPPED WITH AIRBAGS, DISABLE THE AIRBAG SYSTEM BEFORE ATTEMPTING ANY STEERING WHEEL, STEERING COLUMN, OR INSTRUMENT PANEL COMPONENT DIAGNOSIS OR SERVICE. DISCONNECT AND ISOLATE THE BATTERY NEGATIVE (GROUND) CABLE, THEN WAIT TWO MINUTES FOR THE AIRBAG SYSTEM CAPACITOR TO DISCHARGE BEFORE PERFORMING FURTHER DIAGNOSIS OR SERVICE. THIS IS THE ONLY SURE WAY TO DISABLE THE AIRBAG SYSTEM. FAILURE TO TAKE THE PROPER PRECAUTIONS COULD RESULT IN ACCIDENTAL AIRBAG DEPLOYMENT AND POSSIBLE PERSONAL INJURY.

(1) Position the power module into the evaporator housing.

(2) Install and tighten the two screws that secure the power module to the evaporator housing. Tighten the screws to 2 N·m (18 in. lbs.).

(3) Reconnect the blower motor pigtail wire connector to the power module connector receptacle.

(4) Reconnect the instrument panel wire harness connector for the power module to the module connector receptacle.

(5) Flex both sides of the glove box bin inward near the top far enough for the rubber glove box stop bumpers to clear the sides of the glove box opening, then roll the glove box upward.

(6) Close and latch the glove box.

(7) Reconnect the battery negative cable.

RECIRCULATION DOOR ACTUATOR

DESCRIPTION

The recirculation door actuator is a reversible, 12-volt Direct Current (DC), servo motor (Fig. 23). The single recirculation door actuator is located on the passenger side end of the heater-A/C housing unit, on the bottom of the lower intake air housing. The recirculation door actuator is mechanically connected to the recirculation air door. The recirculation door actuator is interchangeable with the actuators for the blend air door(s) and the mode door. Each actuator is contained within an identical black molded plastic housing with an integral wire connector receptacle. Two integral mounting tabs allow the actuator to be secured with two screws to the lower intake air housing. Each actuator also has an identical output shaft with splines that connects it to the linkage that drives the recirculation air door. The recirculation door actuator does not require mechanical indexing to the recirculation air door, as it is electronically calibrated by the heater-A/C control module. The recirculation door actuator cannot be adjusted or repaired and, if damaged or faulty, it must be replaced.

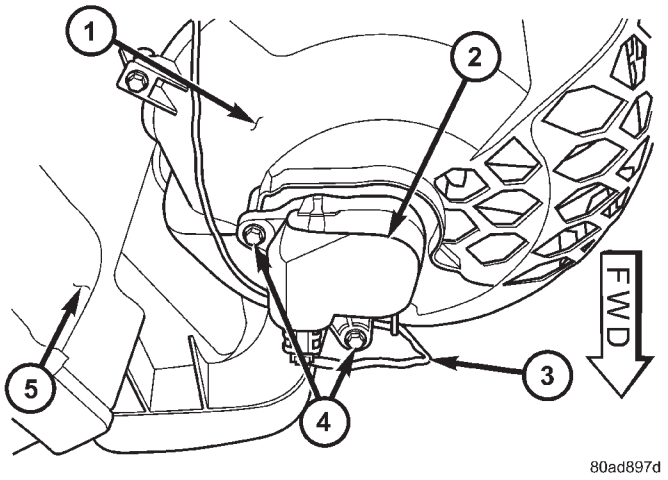

Fig. 23 Recirculation Door Actuator

1 - LOWER INTAKE AIR HOUSING
2 - RECIRCULATION DOOR ACTUATOR
3 - HVAC WIRE HARNESS
4 - SCREW (2)
5 - LOWER EVAPORATOR HOUSING

OPERATION

The recirculation door actuator is connected to the heater-A/C control module through the vehicle electrical system by a dedicated two-wire take out and connector of the HVAC wire harness. The recirculation door actuator can move the recirculation door in two directions. When the heater-A/C control module pulls the voltage on one side of the motor connection high and the other connection low, the recirculation air door will move in one direction. When the module reverses the polarity of the voltage to the motor, the recirculation air door moves in the opposite direction. When the module makes the voltage to both connections high or both connections low, the recirculation air door stops and will not move. These same motor connections also provide a feedback signal to the heater-A/C control module. This feedback signal

RECIRCULATION DOOR ACTUATOR (Continued)

allows the module to monitor the operation and relative position of the recirculation door actuator and the recirculation air door. The heater-A/C control module learns the recirculation air door stop positions during the calibration procedure and will store a Diagnostic Trouble Code (DTC) for any problems it detects in the recirculation door actuator circuits. The recirculation door actuator can be diagnosed using a DRBIII® scan tool. Refer to the appropriate diagnostic information.

REMOVAL

WARNING: ON VEHICLES EQUIPPED WITH AIRBAGS, DISABLE THE AIRBAG SYSTEM BEFORE ATTEMPTING ANY STEERING WHEEL, STEERING COLUMN, OR INSTRUMENT PANEL COMPONENT DIAGNOSIS OR SERVICE. DISCONNECT AND ISOLATE THE BATTERY NEGATIVE (GROUND) CABLE, THEN WAIT TWO MINUTES FOR THE AIRBAG SYSTEM CAPACITOR TO DISCHARGE BEFORE PERFORMING FURTHER DIAGNOSIS OR SERVICE. THIS IS THE ONLY SURE WAY TO DISABLE THE AIRBAG SYSTEM. FAILURE TO TAKE THE PROPER PRECAUTIONS COULD RESULT IN ACCIDENTAL AIRBAG DEPLOYMENT AND POSSIBLE PERSONAL INJURY.

(1) Disconnect and isolate the battery negative cable.

(2) Pull the carpet on the passenger side front floor away from the dash panel far enough to access the recirculation door actuator.

(3) Disconnect the HVAC wire harness connector for the recirculation door actuator from the actuator connector receptacle (Fig. 24).

(4) Remove the two screws that secure the recirculation door actuator to the lower intake air housing.

(5) Remove the recirculation door actuator from the lower intake air housing.

INSTALLATION

WARNING: ON VEHICLES EQUIPPED WITH AIRBAGS, DISABLE THE AIRBAG SYSTEM BEFORE ATTEMPTING ANY STEERING WHEEL, STEERING COLUMN, OR INSTRUMENT PANEL COMPONENT DIAGNOSIS OR SERVICE. DISCONNECT AND ISOLATE THE BATTERY NEGATIVE (GROUND) CABLE, THEN WAIT TWO MINUTES FOR THE AIRBAG SYSTEM CAPACITOR TO DISCHARGE BEFORE PERFORMING FURTHER DIAGNOSIS OR SERVICE. THIS IS THE ONLY SURE WAY TO DISABLE THE AIRBAG SYSTEM. FAILURE TO TAKE THE PROPER PRECAUTIONS COULD RESULT IN ACCIDENTAL AIRBAG DEPLOYMENT AND POSSIBLE PERSONAL INJURY.

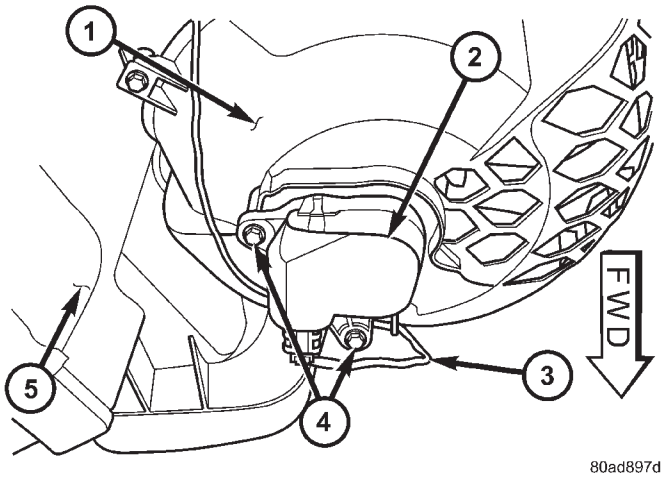

Fig. 24 Recirculation Door Actuator

1 - LOWER INTAKE AIR HOUSING
2 - RECIRCULATION DOOR ACTUATOR
3 - HVAC WIRE HARNESS
4 - SCREW (2)
5 - LOWER EVAPORATOR HOUSING

(1) Position the recirculation door actuator onto the lower intake air housing. If necessary, rotate the actuator slightly to align the splines on the actuator output shaft with those in the recirculation air door.

(2) Install and tighten the two screws that secure the recirculation door actuator to the lower intake air housing. Tighten the screws to 2 N·m (17 in. lbs.).

(3) Reconnect the HVAC wire harness connector for the recirculation door actuator to the actuator connector receptacle.

(4) Reposition the carpet on the passenger side front floor back up to the dash panel.

(5) Reconnect the battery negative cable.

(6) Perform the heater-A/C control calibration procedure. (Refer to 24 - HEATING & AIR CONDITIONING/CONTROLS - FRONT/A/C-HEATER CONTROL - STANDARD PROCEDURE - HEATER-A/C CONTROL CALIBRATION).

CONTROLS - REAR

TABLE OF CONTENTS

page

A/C-HEATER CONTROL
REMOVAL 29
INSTALLATION 29
BLEND DOOR ACTUATOR
DESCRIPTION 30
OPERATION 30
REMOVAL 31
INSTALLATION 31
BLOWER MOTOR RELAY
DESCRIPTION 32
OPERATION 32
DIAGNOSIS AND TESTING - BLOWER MOTOR RELAY 33
REMOVAL 33
INSTALLATION 34
BLOWER MOTOR RESISTOR
DESCRIPTION 34
OPERATION 34
DIAGNOSIS AND TESTING - BLOWER MOTOR RESISTOR 35
REMOVAL 35
INSTALLATION 35
INFRARED TEMPERATURE SENSOR
DESCRIPTION 36
OPERATION 36
MODE DOOR ACTUATOR
REMOVAL 36
INSTALLATION 37
POWER MODULE
DESCRIPTION 37
OPERATION 37
REMOVAL 38
INSTALLATION 38

A/C-HEATER CONTROL

REMOVAL

(1) Disconnect and isolate the battery negative cable.

(2) Using a trim stick or another suitable wide flat bladed tool, gently pry the top edge of the rear heater-A/C control bezel away from the headliner far enough to release the two snap clip retainers (Fig. 1).

(3) Pull the rear heater-A/C control and bezel unit rearward far enough to access the headliner wire harness connector on the back of the control.

(4) Disconnect the headliner wire harness connector for the rear heater-A/C control from the control connector receptacle.

(5) Remove the rear heater-A/C control from the headliner.

(6) Remove the three screws that secure the rear heater-A/C control to the bezel (Fig. 2).

(7) Remove the rear heater-A/C control from the bezel.

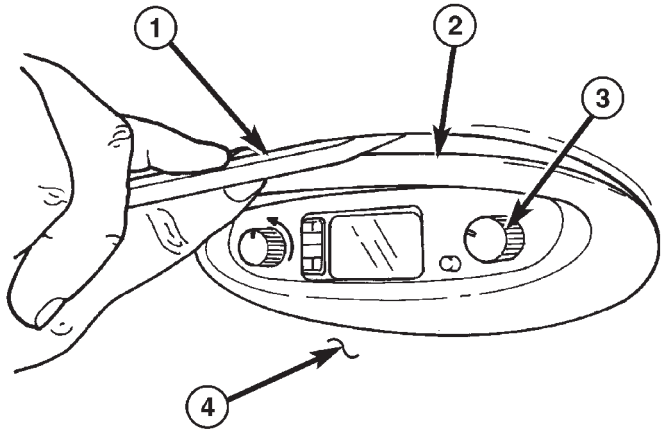

Fig. 1 Heater-A/C Control

1 - TRIM STICK
2 - BEZEL
3 - HEATER-A/C CONTROL
4 - HEADLINER

INSTALLATION

(1) Position the rear heater-A/C control onto the bezel.

(2) Install and tighten the three screws that secure the rear heater-A/C control to the bezel. Tighten the screws to 2 N·m (17 in. lbs.).

(3) Position the rear heater-A/C control and bezel unit to the headliner.

(4) Reconnect the headliner wire harness connector for the rear heater-A/C control to the control connector receptacle.

(5) Insert the locator tabs on the back of the rear heater-A/C control and bezel unit over the forward edge of the headliner opening for the control.

(6) Slide the rear heater-A/C control and bezel unit forward far enough to align the snap clips on the

A/C-HEATER CONTROL (Continued)

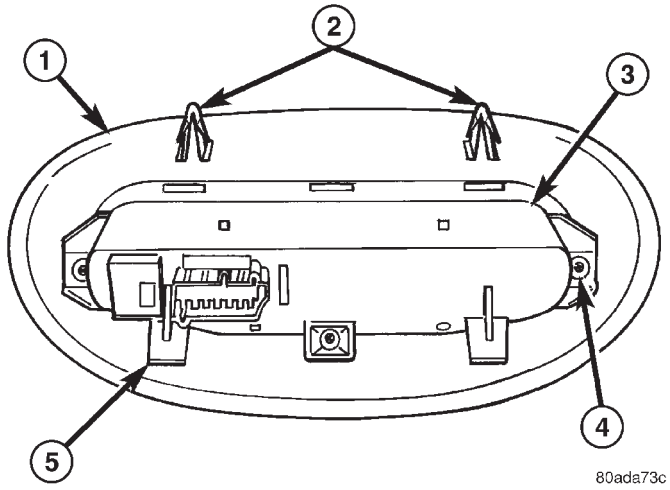

Fig. 2 Heater-A/C Control Bezel

1 - BEZEL
2 - SNAP CLIP (2)
3 - HEATER-A/C CONTROL
4 - SCREW (3)
5 - LOCATOR TAB (2)

bezel with the snap clip receptacles on the retainer above the headliner.

(7) Using hand pressure, press the top edge of the rear heater-A/C control bezel upward until the two snap clips are fully seated in their receptacles.

(8) Reconnect the battery negative cable.

(9) Using the DRB-III® reset the Rear Temperature Selector calibration values.

(10) Verify that the Actuator Calibration of the Front Control has passed. If an Actuator Calibration has not passed correct any errors before proceeding further.

(11) Rotate the Rear Temperature Selector counter clockwise to the Cold Position, allow the Selector to remain in the Cold Position for 5 seconds.

(12) Rotate the Rear Temperature Selector Clockwise to the Hot Position, allow the Selector to remain in the Cold Position for 5 seconds.

(13) calibration is now complete.

BLEND DOOR ACTUATOR

DESCRIPTION

The blend door actuator is a reversible, 12-volt Direct Current (DC), servo motor (Fig. 3). The single blend door actuator is located on the outboard side of the rear heater-A/C unit housing, below the mode door actuator. The blend door actuator is mechanically connected to the blend air door. The blend door actuator is interchangeable with the actuator for the mode door. Each actuator is contained within an identical black molded plastic housing with an integral wire connector receptacle. Two integral mounting tabs allow the actuator to be secured with two screws to the rear heater-A/C unit housing. Each actuator also has an identical output shaft with splines that connects it to the pivot or linkage of the proper door. The blend door actuator does not require mechanical indexing to the blend air door pivot, as it is electronically calibrated by the front heater-A/C control module. The blend door actuator cannot be adjusted or repaired and, if damaged or faulty, it must be replaced.

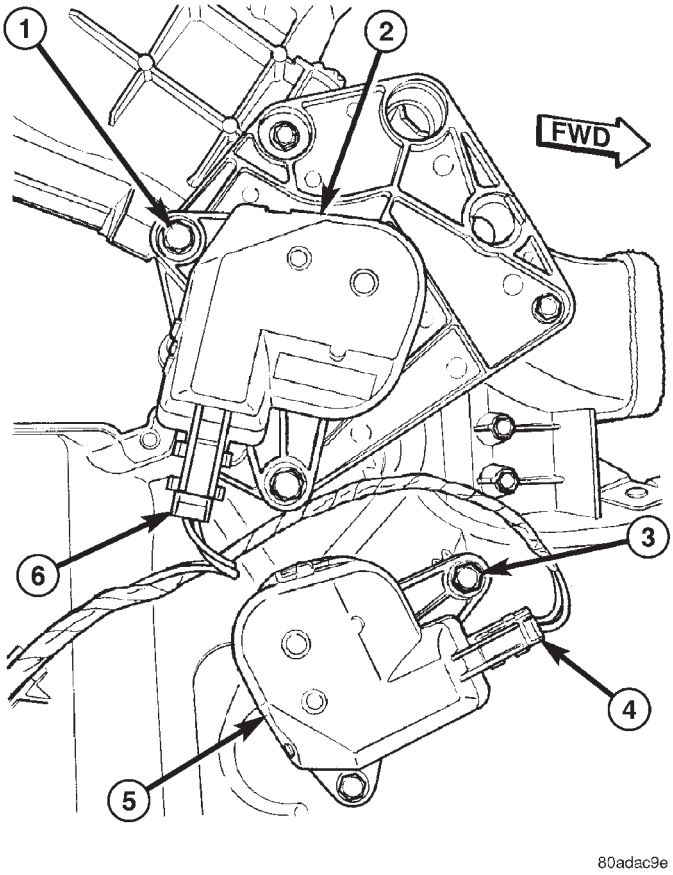

Fig. 3 Blend Door Actuator

1 - SCREW (2)
2 - MODE DOOR ACTUATOR
3 - SCREW (2)
4 - CONNECTOR
5 - BLEND DOOR ACTUATOR
6 - CONNECTOR

OPERATION

The blend door actuator is connected to the front heater-A/C control module through the vehicle electrical system by a dedicated two-wire take out and connector of the rear HVAC wire harness. The blend door actuator can move the blend air door in two directions. When the front heater-A/C control module pulls the voltage on one side of the motor connection

BLEND DOOR ACTUATOR (Continued)

high and the other connection low, the blend air door will move in one direction. When the module reverses the polarity of the voltage to the motor, the blend air door moves in the opposite direction. When the module makes the voltage to both connections high or both connections low, the blend air door stops and will not move. These same motor connections also provide a feedback signal to the front heater-A/C control module. This feedback signal allows the module to monitor the operation and relative positions of the blend door actuator and the blend air door. The front heater-A/C control module learns the blend air door stop positions during the calibration procedure and will store a Diagnostic Trouble Code (DTC) for any problems it detects in the blend door actuator circuits. A DTC can be retrieved and the blend door actuator can be diagnosed using a DRBIII® scan tool. Refer to the appropriate diagnostic information.

REMOVAL

(1) Disconnect and isolate the battery negative cable.

(2) Remove the right quarter trim panel and right D-pillar trim panel from the quarter inner panel. (Refer to 23 - BODY/INTERIOR/QUARTER TRIM PANEL - REMOVAL).

(3) Remove the two screws that secure the top of the quarter trim panel attaching bracket to the quarter inner panel.

(4) Remove the screw that secures the back of the rear heater-A/C unit housing to the right D-pillar.

(5) Remove the screw that secures the front of the rear heater-A/C unit housing to the right quarter inner panel.

(6) Carefully pull the top of the rear heater-A/C unit housing away from the right quarter inner panel far enough to reach between the rear heater-A/C unit housing and the quarter inner panel to access the blend door actuator (Fig. 4).

(7) Remove the two screws that secure the blend door actuator to the rear heater-A/C unit housing.

(8) Pull the blend door actuator away from the rear heater-A/C unit housing far enough to disengage the actuator output shaft from the blend air door pivot.

(9) Raise the blend door actuator far enough to access and disconnect the rear HVAC wire harness connector for the actuator from the actuator connector receptacle.

(10) Remove the blend door actuator from between the rear heater-A/C unit housing and the quarter inner panel.

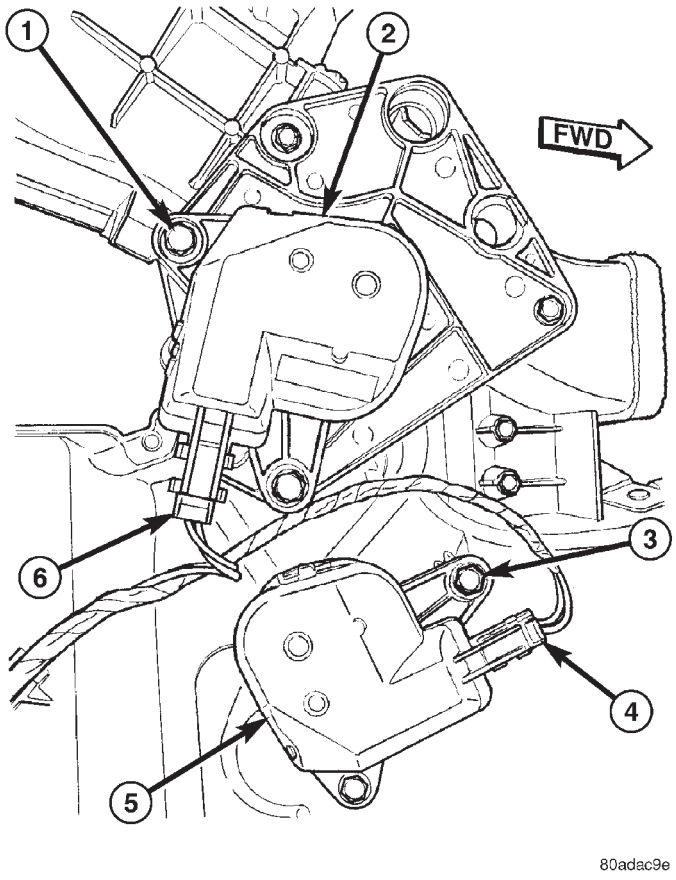

Fig. 4 Mode Door Actuator

1 - SCREW (2)
2 - MODE DOOR ACTUATOR
3 - SCREW (2)
4 - CONNECTOR
5 - BLEND DOOR ACTUATOR
6 - CONNECTOR

INSTALLATION

(1) Position the blend door actuator between the rear heater-A/C unit housing and the quarter inner panel.

(2) Reconnect the rear HVAC wire harness connector for the blend door actuator to the actuator connector receptacle.

(3) Position the blend door actuator onto the rear heater-A/C unit housing. If necessary, rotate the actuator slightly to align the splines on the actuator output shaft with those in the blend air door pivot.

(4) Install and tighten the two screws that secure the blend door actuator to the rear heater-A/C unit housing. Tighten the screws to 2 N·m (18 in. lbs.).

(5) Push the top of the rear heater-A/C unit housing back into position against the right quarter inner panel.

(6) Install and tighten the screw that secures the front of the rear heater-A/C unit housing to the right

BLEND DOOR ACTUATOR (Continued)

quarter inner panel. Tighten the screw to 11 N·m (97 in. lbs.).

(7) Install and tighten the screw that secures the back of the rear heater-A/C unit housing to the right D-pillar. Tighten the screw to 11 N·m (97 in. lbs.).

(8) Install and tighten the two screws that secure the top of the quarter trim panel attaching bracket to the quarter inner panel. Tighten the screws to 1.7 N·m (15 in. lbs.).

(9) Reinstall the right quarter trim panel and right D-pillar trim panel onto the quarter inner panel. (Refer to 23 - BODY/INTERIOR/QUARTER TRIM PANEL - INSTALLATION).

(10) Reconnect the battery negative cable.

(11) Perform the heater-A/C control calibration procedure. (Refer to 24 - HEATING & AIR CONDITIONING/CONTROLS - FRONT/A/C-HEATER CONTROL - STANDARD PROCEDURE - HEATER-A/C CONTROL CALIBRATION).

BLOWER MOTOR RELAY

DESCRIPTION

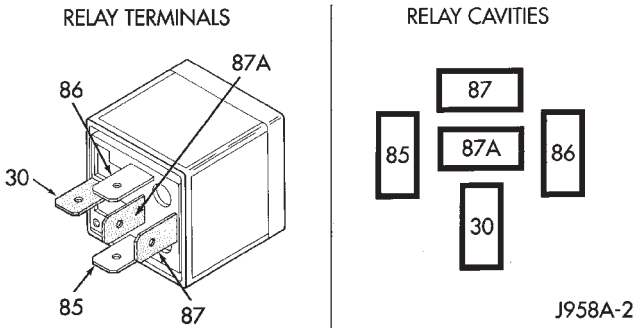

Fig. 5 Blower Motor Relay

TERMINAL LEGEND	
NUMBER	IDENTIFICATION
30	COMMON FEED
85	COIL GROUND
86	COIL BATTERY
87	NORMALLY OPEN
87A	NORMALLY CLOSED

The blower motor relay (Fig. 5) is a International Standards Organization (ISO) mini-relay. Relays conforming to the ISO specifications have common physical dimensions, current capacities, terminal patterns, and terminal functions. The ISO mini-relay terminal functions are the same as a conventional ISO relay. However, the ISO mini-relay terminal pattern (or footprint) is different, the current capacity is lower, and the physical dimensions are smaller than those of the conventional ISO relay. The blower motor relay is located in the Intelligent Power Module (IPM), which is in the engine compartment near the battery. See the fuse and relay layout map molded into the inner surface of the IPM cover for compressor clutch relay identification and location.

The black, molded plastic case is the most visible component of the blower motor relay. Five male spade-type terminals extend from the bottom of the base to connect the relay to the vehicle electrical system, and the ISO designation for each terminal is molded into the base adjacent to each terminal. The ISO terminal designations are as follows:

- **30 (Common Feed)** - This terminal is connected to the movable contact point of the relay.
- **85 (Coil Ground)** - This terminal is connected to the ground feed side of the relay control coil.
- **86 (Coil Battery)** - This terminal is connected to the battery feed side of the relay control coil.
- **87 (Normally Open)** - This terminal is connected to the normally open fixed contact point of the relay.
- **87A (Normally Closed)** - This terminal is connected to the normally closed fixed contact point of the relay.

The factory-installed blower motor relay cannot be adjusted or repaired. If the relay is damaged or faulty, it must be replaced.

OPERATION

The blower motor relay is an electromechanical switch that uses a low current input from the Front Control Module (FCM) to control the high current output to the blower motor resistor (manual heater-A/C control) or blower power module (automatic heater-A/C control). The movable common feed contact point is held against the fixed normally closed contact point by spring pressure. When the relay coil is energized, an electromagnetic field is produced by the coil windings. This electromagnetic field draws the movable relay contact point away from the fixed normally closed contact point, and holds it against the fixed normally open contact point. When the relay coil is de-energized, spring pressure returns the movable contact point back against the fixed normally closed contact point. The resistor or diode is connected in parallel with the relay coil in the relay, and helps to dissipate voltage spikes and electromagnetic interference that can be generated as the electromagnetic field of the relay coil collapses.

BLOWER MOTOR RELAY (Continued)

The blower motor relay terminals are connected to the vehicle electrical system through a receptacle in the Intelligent Power Module (IPM). The inputs and outputs of the compressor clutch relay include:

- The common feed terminal (30) receives a battery current input from the battery through a B(+) circuit at all times.
- The coil ground terminal (85) receives a ground input through the front/rear blower motor relay control circuit only when the FCM electronically pulls the control circuit to ground.
- The coil battery terminal (86) receives a battery current input from the battery through a B(+) circuit at all times.
- The normally open terminal (87) provides a battery current output to the blower motor resistor (manual heater-A/C control) or blower power module (automatic heater-A/C control) through a fuse in the IPM on the fused rear blower motor relay output circuit only when the blower motor relay coil is energized.
- The normally closed terminal (87A) is not connected to any circuit in this application, but provides a battery current output only when the blower motor relay coil is de-energized.

Refer to the appropriate wiring information. The wiring information includes wiring diagrams, proper wire and connector repair procedures, further details on wire harness routing and retention, as well as pin-out and location views for the various wire harness connectors, splices, and grounds.

DIAGNOSIS AND TESTING - BLOWER MOTOR RELAY

The rear blower motor relay (Fig. 6) is located in the Intelligent Power Module (IPM), which is in the engine compartment near the battery. See the fuse and relay layout map molded into the inner surface of the IPM cover for rear blower motor relay identification and location. Remove the relay from the IPM to perform the following tests:

(1) A relay in the de-energized position should have continuity between terminals 87A and 30, and no continuity between terminals 87 and 30. If OK, go to Step 2. If not OK, replace the faulty relay.

(2) Resistance between terminals 85 and 86 (electromagnet) should be 75 ± 5 ohms. If OK, go to Step 3. If not OK, replace the faulty relay.

(3) Connect a battery to terminals 85 and 86. There should now be continuity between terminals 30 and 87, and no continuity between terminals 87A and 30. If OK, use a DRBIII® scan tool to perform further diagnosis of the relay circuits. Refer to the appropriate diagnostic information. If not OK, replace the faulty relay.

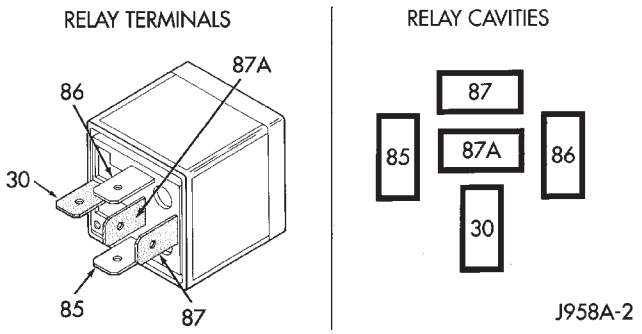

Fig. 6 Blower Motor Relay

NUMBER	IDENTIFICATION
30	COMMON FEED
85	COIL GROUND
86	COIL GROUND
87	NORMALLY OPEN
87A	NORMALLY CLOSED

REMOVAL

(1) Disconnect and isolate the battery negative cable.

(2) Unlatch and remove the cover from the Intelligent Power Module (IPM) (Fig. 7).

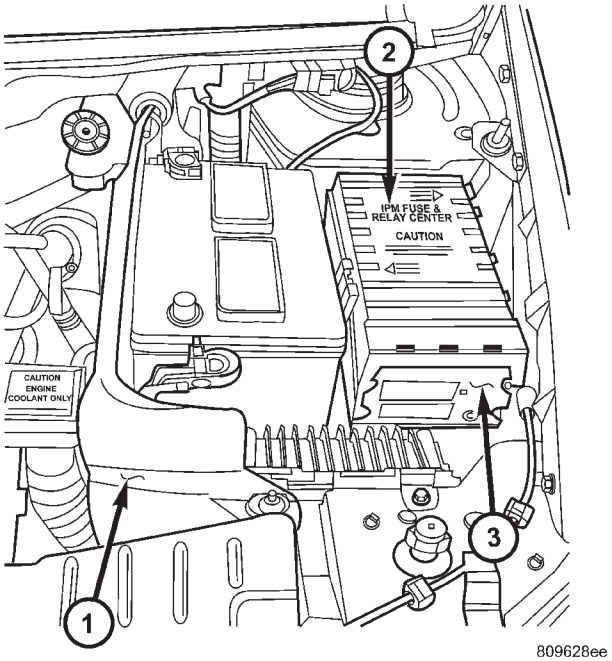

Fig. 7 Intelligent Power Module

1 - BATTERY THERMAL GUARD
2 - INTELLIGENT POWER MODULE
3 - FRONT CONTROL MODULE

BLOWER MOTOR RELAY (Continued)

(3) See the fuse and relay layout map molded into the inner surface of the IPM cover for rear blower motor relay identification and location.

(4) Remove the rear blower motor relay from the IPM.

INSTALLATION

(1) See the fuse and relay layout map molded into the inner surface of the Intelligent Power Module (IPM) cover for rear blower motor relay identification and location.

(2) Position the rear blower motor relay to the proper receptacle in the IPM.

(3) Align the rear blower motor relay terminals with the terminal cavities in the IPM relay receptacle.

(4) Push down firmly on the rear blower motor relay until the terminals are fully seated in the terminal cavities in the IPM receptacle.

(5) Install and latch the cover onto the IPM.

(6) Reconnect the battery negative cable.

BLOWER MOTOR RESISTOR

DESCRIPTION

A blower motor resistor is used on this model when it is equipped with the manual heater-A/C control (Fig. 8). Models equipped with the optional Automatic Temperature Control (ATC) use a blower power module, instead of the blower motor resistor. The blower motor resistor is installed in a mounting hole on the back of the rear heater-A/C unit housing, directly above the expansion valve. The resistor consists of a molded plastic mounting plate with an integral connector receptacle. Concealed behind the mounting plate within the rear heater-A/C unit housing are two coiled resistor wires contained within a protective stamped steel cage. The resistor mounting plate is secured with two screws to the rear heater-A/C unit housing and is accessed for service by removing the right quarter and D-pillar trim panels.

The blower motor resistor wires will get hot when in use. Do not touch the resistor wires or the protective cage if the blower motor has been running. The blower motor resistor cannot be adjusted or repaired and, if faulty or damaged, it must be replaced.

OPERATION

The blower motor resistor is connected to the vehicle electrical system through a dedicated take out and connector of the rear HVAC wire harness. The blower motor resistor has two resistor wires, each of which will reduce the current flow through the blower motor to change the blower motor speed. The blower motor switch in the manual heater-A/C control directs the ground path for the blower motor through the correct resistor wire to obtain the selected speed. With the blower motor switch in the lowest speed position, the ground path for the motor is applied through both resistor wires. Each higher speed selected with the blower motor switch applies the blower motor ground path through fewer of the resistor wires, increasing the blower motor speed. When the blower motor switch is in the highest speed position, the blower motor resistor wires are bypassed and the blower motor receives a direct path to ground through the blower motor switch. The blower motor resistor may be diagnosed using conventional diagnostic tools and methods.

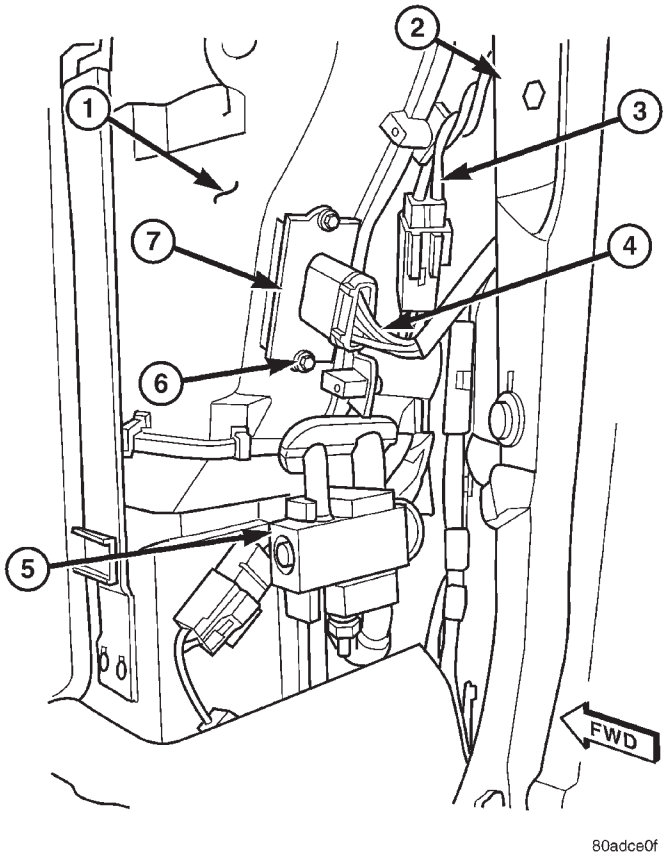

Fig. 8 Blower Motor Resistor

1 - REAR HEATER-A/C UNIT HOUSING
2 - D-PILLAR
3 - BLOWER PIGTAIL WIRE
4 - CONNECTOR
5 - EXPANSION VALVE
6 - SCREW (2)
7 - BLOWER MOTOR RESISTOR

BLOWER MOTOR RESISTOR (Continued)

DIAGNOSIS AND TESTING - BLOWER MOTOR RESISTOR

Refer to the appropriate wiring information. The wiring information includes wiring diagrams, proper wire and connector repair procedures, details of wire harness routing and retention, connector pin-out information and location views for the various wire harness connectors, splices and grounds.

(1) Disconnect and isolate the battery negative cable.

(2) Disconnect the rear HVAC wire harness connector for the blower motor resistor from the resistor connector receptacle.

(3) Check for continuity between each of the blower motor switch input terminals of the blower motor resistor and the resistor output terminal. In each case there should be continuity. If OK, repair the wire harness circuits between the blower motor switch and the blower motor resistor or the blower motor pigtail wires as required. If not OK, replace the faulty blower motor resistor.

REMOVAL

WARNING: THE BLOWER MOTOR RESISTOR MAY GET VERY HOT DURING NORMAL OPERATION. IF THE BLOWER MOTOR WAS TURNED ON, WAIT FIVE MINUTES TO ALLOW THE BLOWER MOTOR RESISTOR TO COOL BEFORE PERFORMING DIAGNOSIS OR SERVICE. FAILURE TO TAKE THIS PRECAUTION CAN RESULT IN PERSONAL INJURY.

CAUTION: Do not operate the blower motor with the blower motor resistor removed from the circuit. Failure to take this precaution can result in vehicle damage.

(1) Disconnect and isolate the battery negative cable.

(2) Remove the right quarter trim panel and right D-pillar trim panel from the quarter inner panel. (Refer to 23 - BODY/INTERIOR/QUARTER TRIM PANEL - REMOVAL).

(3) Disconnect the rear HVAC wire harness connector for the blower motor resistor from the resistor connector receptacle (Fig. 9).

(4) Remove the two screws that secure the blower motor resistor to the rear heater-A/C unit housing.

(5) Remove the blower motor resistor from the rear heater-A/C unit housing.

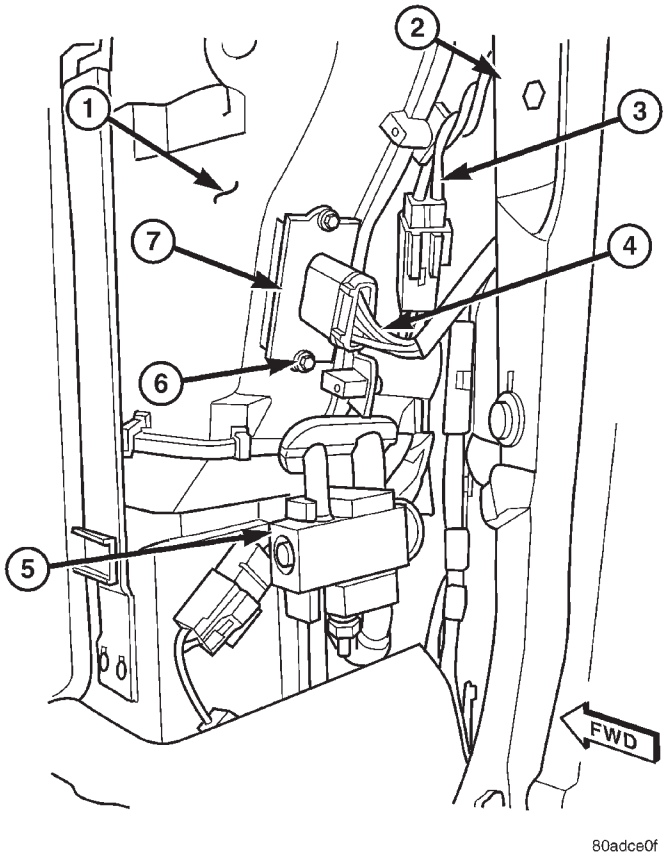

Fig. 9 Blower Motor Resistor

1 - REAR HEATER-A/C UNIT HOUSING
2 - D-PILLAR
3 - BLOWER PIGTAIL WIRE
4 - CONNECTOR
5 - EXPANSION VALVE
6 - SCREW (2)
7 - BLOWER MOTOR RESISTOR

INSTALLATION

CAUTION: Do not operate the blower motor with the blower motor resistor removed from the circuit. Failure to take this precaution can result in vehicle damage.

(1) Position the blower motor resistor into the rear heater-A/C unit housing.

(2) Install and tighten the two screws that secure the blower motor resistor to the rear heater-A/C unit housing. Tighten the screws to 2 N·m (17 in. lbs.).

(3) Reconnect the rear HVAC wire harness connector for the blower motor resistor to the resistor connector receptacle.

(4) Reinstall the right quarter trim panel and right D-pillar trim panel onto the quarter inner panel. (Refer to 23 - BODY/INTERIOR/QUARTER TRIM PANEL - INSTALLATION).

(5) Reconnect the battery negative cable.

INFRARED TEMPERATURE SENSOR

DESCRIPTION

The rear infrared temperature sensor consists of an infrared transducer that is concealed behind the lens of the rear heater-A/C control in the headliner. This sensor is used only on models equipped with the optional Automatic Temperature Control (ATC) heating and air conditioning system. The rear infrared temperature sensor is integral to the rear heater-A/C control. The infrared sensor cannot be adjusted or repaired and, if faulty or damaged, the rear heater-A/C control unit must be replaced.

OPERATION

The rear infrared temperature sensor provides an independent measurement input to the Automatic Temperature Control (ATC) heater-A/C control module that indicates the surface temperature of the rear seat occupants. By using a surface temperature measurement, rather than an air temperature measurement, the ATC system is able to adjust itself to the comfort level as perceived by the occupant. This allows the system to detect and compensate for other ambient conditions affecting comfort levels, such as solar heat gain or evaporative heat loss. The ATC system logic responds to the infrared sensor input by calculating and adjusting the air flow temperature and air flow rate needed to properly obtain and maintain the selected comfort level temperatures for the rear seat occupants. The ATC heater-A/C control module continually monitors the infrared sensor circuit, and will store a Diagnostic Trouble Code (DTC) for any problem it detects. This DTC information can be retrieved and the infrared temperature sensor diagnosed using a DRBIII® scan tool. Refer to the appropriate diagnostic information.

MODE DOOR ACTUATOR

REMOVAL

(1) Disconnect and isolate the battery negative cable.

(2) Remove the right quarter trim panel and right D-pillar trim panel from the quarter inner panel. (Refer to 23 - BODY/INTERIOR/QUARTER TRIM PANEL - REMOVAL).

(3) Remove the two screws that secure the top of the quarter trim panel attaching bracket to the quarter inner panel.

(4) Remove the screw that secures the back of the rear heater-A/C unit housing to the right D-pillar.

(5) Remove the screw that secures the front of the rear heater-A/C unit housing to the right quarter inner panel.

(6) Carefully pull the top of the rear heater-A/C unit housing away from the right quarter inner panel far enough to reach between the rear heater-A/C unit housing and the quarter inner panel to access the mode door actuator (Fig. 10).

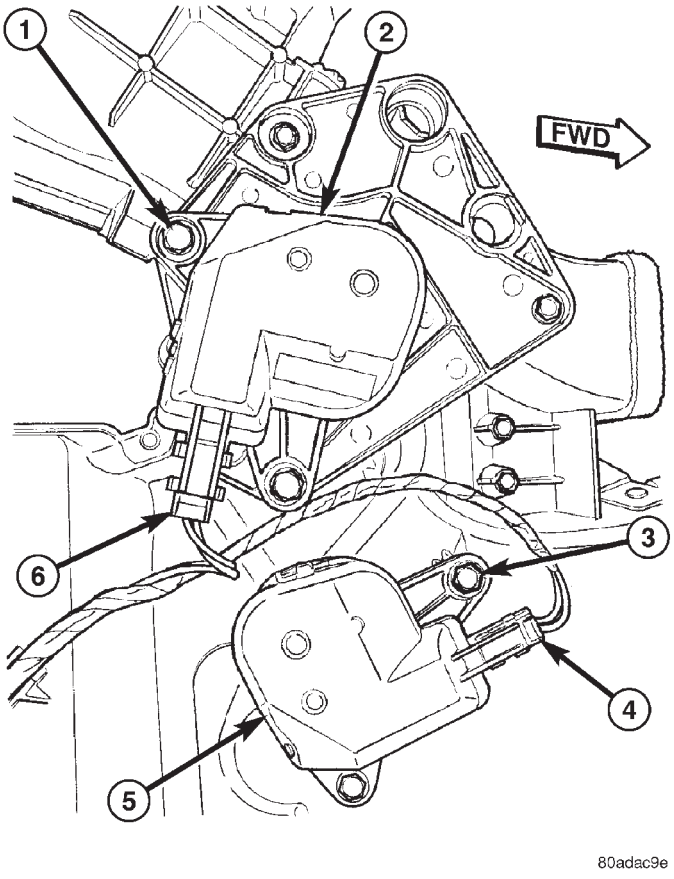

Fig. 10 Blend Door Actuator

1 - SCREW (2)
2 - MODE DOOR ACTUATOR
3 - SCREW (2)
4 - CONNECTOR
5 - BLEND DOOR ACTUATOR
6 - CONNECTOR

(7) Remove the two screws that secure the mode door actuator to the rear heater-A/C unit housing.

(8) Pull the mode door actuator away from the rear heater-A/C unit housing far enough to disengage the actuator output shaft from the mode door linkage.

(9) Raise the mode door actuator far enough to access and disconnect the rear HVAC wire harness connector for the actuator from the actuator connector receptacle.

MODE DOOR ACTUATOR (Continued)

(10) Remove the mode door actuator from between the rear heater-A/C unit housing and the quarter inner panel.

INSTALLATION

(1) Position the mode door actuator between the rear heater-A/C unit housing and the quarter inner panel.

(2) Reconnect the rear HVAC wire harness connector for the mode door actuator to the actuator connector receptacle.

(3) Position the mode door actuator onto the rear heater-A/C unit housing. If necessary, rotate the actuator slightly to align the splines on the actuator output shaft with those in the mode door linkage.

(4) Install and tighten the two screws that secure the mode door actuator to the rear heater-A/C unit housing. Tighten the screws to 2 N·m (18 in. lbs.).

(5) Push the top of the rear heater-A/C unit housing back into position against the right quarter inner panel.

(6) Install and tighten the screw that secures the front of the rear heater-A/C unit housing to the right quarter inner panel. Tighten the screw to 11 N·m (97 in. lbs.).

(7) Install and tighten the screw that secures the back of the rear heater-A/C unit housing to the right D-pillar. Tighten the screw to 11 N·m (97 in. lbs.).

(8) Install and tighten the two screws that secure the top of the quarter trim panel attaching bracket to the quarter inner panel. Tighten the screws to 1.7 N·m (15 in. lbs.).

(9) Reinstall the right quarter trim panel and right D-pillar trim panel onto the quarter inner panel. (Refer to 23 - BODY/INTERIOR/QUARTER TRIM PANEL - INSTALLATION).

(10) Reconnect the battery negative cable.

(11) Perform the heater-A/C control calibration procedure. (Refer to 24 - HEATING & AIR CONDITIONING/CONTROLS - FRONT/A/C-HEATER CONTROL - STANDARD PROCEDURE - HEATER-A/C CONTROL CALIBRATION).

POWER MODULE

DESCRIPTION

A blower power module is used on this model when it is equipped with the optional Automatic Temperature Control (ATC) (Fig. 11). Models equipped with the standard manual heater-A/C control use a blower motor resistor, instead of the blower power module. The blower power module is installed in a mounting hole in the back of the rear heater-A/C unit housing, directly above the expansion valve. The module consists of a molded plastic mounting plate with two integral connector receptacles. Concealed behind the mounting plate within the evaporator housing is the power module electronic circuitry and a large finned, heat sink. The module mounting plate is secured with two screws to the rear heater-A/C unit housing and is accessed for service by removing the right quarter and D-pillar trim panels.

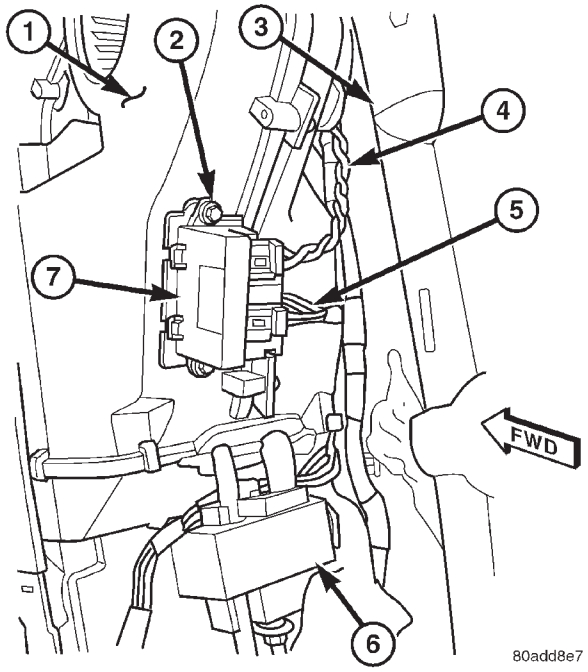

Fig. 11 Power Module

1 - REAR HEATER-A/C UNIT HOUSING
2 - SCREW (2)
3 - D-PILLAR
4 - BLOWER PIGTAIL WIRE
5 - REAR HVAC WIRE HARNESS
6 - EXPANSION VALVE
7 - BLOWER POWER MODULE

The power module heat sink will get hot when in use. Do not touch the heat sink if the blower motor has been running. The blower power module cannot be adjusted or repaired and, if faulty or damaged, it must be replaced.

OPERATION

The blower power module is connected to the vehicle electrical system through a dedicated take out and connector of the rear HVAC wire harness. A second connector receptacle receives the pigtail wire connector from the blower motor. The blower power module allows the microprocessor-based Automatic Temperature Control (ATC) heater-A/C control module to calculate and provide infinitely variable blower motor speeds based upon either manual blower switch input or the ATC programming using a Pulse Width Modulated (PWM) circuit strategy. The PWM

POWER MODULE (Continued)

voltage is applied to a comparator circuit which compares the PWM signal voltage to the blower motor feedback voltage. The resulting output drives the power module circuitry, which adjusts the voltage output received from the blower motor relay to change or maintain the desired blower speed. The blower power module is diagnosed using a DRBIII® scan tool. Refer to the appropriate diagnostic information.

REMOVAL

(1) Disconnect and isolate the battery negative cable.

(2) Remove the right quarter trim panel and right D-pillar trim panel from the quarter inner panel. (Refer to 23 - BODY/INTERIOR/QUARTER TRIM PANEL - REMOVAL).

(3) Disconnect the rear HVAC wire harness connector for the blower power module from the resistor connector receptacle (Fig. 12).

(4) Disconnect the blower motor pigtail wire connector from the blower power module connector receptacle.

(5) Remove the two screws that secure the blower power module to the rear heater-A/C unit housing.

(6) Remove the blower power module from the rear heater-A/C unit housing.

INSTALLATION

(1) Position the blower power module into the rear heater-A/C unit housing.

(2) Install and tighten the two screws that secure the blower power module to the rear heater-A/C unit housing. Tighten the screws to 2 N·m (17 in. lbs.).

(3) Reconnect the blower motor pigtail wire to the blower power module connector receptacle.

(4) Reconnect the rear HVAC wire harness connector for the blower power module to the module connector receptacle.

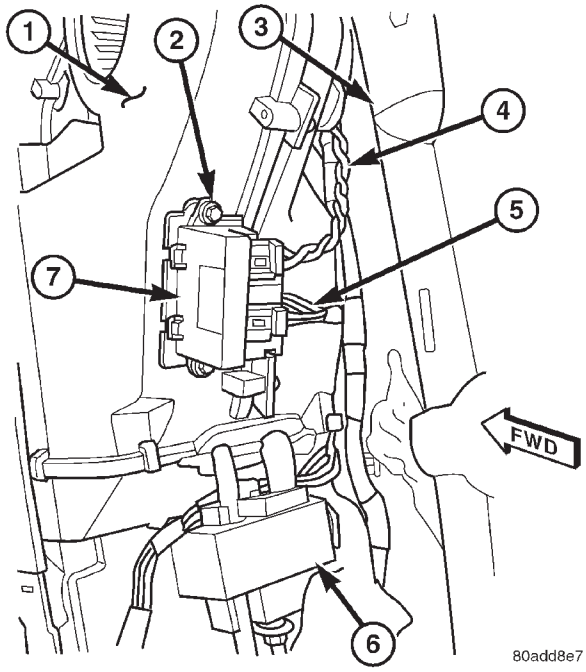

Fig. 12 Power Module

1 - REAR HEATER-A/C UNIT HOUSING
2 - SCREW (2)
3 - D-PILLAR
4 - BLOWER PIGTAIL WIRE
5 - REAR HVAC WIRE HARNESS
6 - EXPANSION VALVE
7 - BLOWER POWER MODULE

(5) Reinstall the right quarter trim panel and right D-pillar trim panel onto the quarter inner panel. (Refer to 23 - BODY/INTERIOR/QUARTER TRIM PANEL - INSTALLATION).

(6) Reconnect the battery negative cable.

DISTRIBUTION - FRONT

TABLE OF CONTENTS

page

AIR FILTER
DESCRIPTION 40
REMOVAL 40
INSTALLATION 40
AIR OUTLETS
DESCRIPTION 40
REMOVAL
REMOVAL - CENTER BEZEL OUTLETS 41
REMOVAL - DEMISTER OUTLET 41
REMOVAL - FRONT DOOR REAR OUTLET . . 41
REMOVAL - INSTRUMENT PANEL OUTLET . 42
INSTALLATION
INSTALLATION - CENTER BEZEL OUTLETS . 43
INSTALLATION - DEMISTER OUTLET 43
INSTALLATION - FRONT DOOR REAR OUTLET 43
INSTALLATION - INSTRUMENT PANEL OUTLET 43
BLOWER MOTOR
DESCRIPTION 43

page

OPERATION 43
DIAGNOSIS AND TESTING - BLOWER MOTOR 44
REMOVAL 44
INSTALLATION 46
DEFROSTER DUCT
REMOVAL 47
INSTALLATION 47
DEMISTER DUCTS
REMOVAL 47
INSTALLATION 48
FLOOR DISTRIBUTION DUCTS
REMOVAL 48
INSTALLATION 48
HVAC HOUSING
REMOVAL 49
INSTALLATION 50
PANEL DUCTS
REMOVAL 50
INSTALLATION 50

AIR FILTER

DESCRIPTION

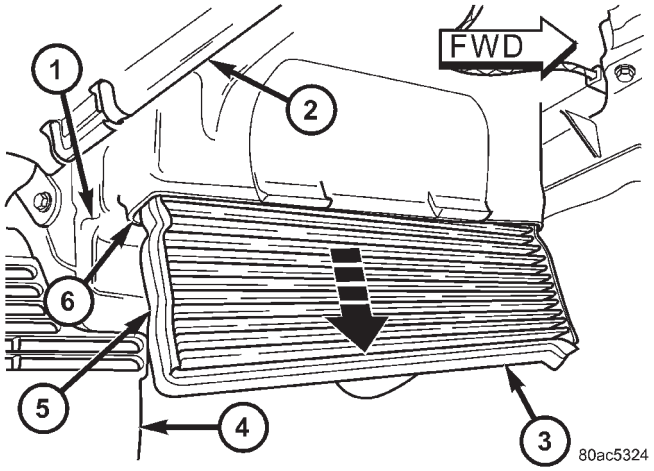

Fig. 1 Air Filter

1 - LOWER EVAPORATOR HOUSING
2 - LOWER EDGE OF INSTRUMENT PANEL
3 - AIR FILTER
4 - INSTRUMENT PANEL CENTER FLOOR BRACKET COVER
5 - FOAM SEAL
6 - AIR FILTER OPENING

A dust and odor air filter is standard equipment on models equipped with the dual zone or three zone temperature control systems (Fig. 1). The filter element is the same size as the front air conditioner evaporator to ensure ample filtering capacity. A removable door on the bottom of the front heater-A/C unit housing below the glove box provides easy access to the filter element for replacement. Filter replacement is recommended at 24,000 kilometer (15,000 mile) intervals.

REMOVAL

(1) Locate the air filter door on the bottom of the lower evaporator housing just outboard of the passenger side of the instrument panel center stack (Fig. 2).

(2) Slide the air filter door latch toward the rear of the vehicle until it engages the opened stop on the door.

(3) Pull the air filter door straight downward to disengage it from the air filter opening of the lower evaporator housing.

(4) Use your fingers to reach through the air filter opening of the lower evaporator housing far enough to grasp the air filter.

(5) Pull the air filter straight down and out of the evaporator housing (Fig. 2).

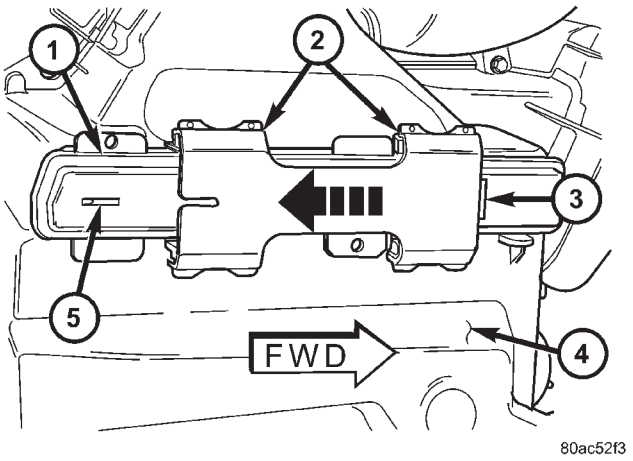

Fig. 2 Air Filter Door

1 - AIR FILTER DOOR
2 - LATCH
3 - CLOSED STOP
4 - LOWER EVAPORATOR HOUSING
5 - OPENED STOP

INSTALLATION

(1) Note the “Airflow” directional arrow imprinted on the foam seal around the frame of the air filter. This arrow should always be oriented towards the center of the vehicle.

(2) With the air filter “Airflow” arrow properly oriented, carefully slide the filter fully upward into the evaporator housing through the air filter opening.

(3) With the latch still positioned against its opened stop, reinstall the air filter door onto the lower evaporator housing air filter opening.

(4) Slide the air filter door latch toward the front of the vehicle until it hits the closed stop on the door.

AIR OUTLETS

DESCRIPTION

Based upon the system mode selected, conditioned air can exit the front heater-A/C unit housing through one or a combination of the four main housing outlets: defrost, demist, panel, or floor. Once the conditioned air exits the unit housing, it is directed through molded plastic ducts to the various outlets in the vehicle interior. These outlets and their locations are as follows:

- **Defroster Outlet** - A single, centrally mounted outlet delivers air for defrosting the large windshield. Because outlet vanes are not needed to direct flow, a simple, integral grid is molded into the center of the instrument panel top cover to prevent objects from falling into the duct. If the defroster outlet is faulty

AIR OUTLETS (Continued)

or damaged, the instrument panel top cover must be replaced.

- **Demister Outlets** - There are two side window demisters that aid in defogging and defrosting the front door windows. One demister outlet is located at each outboard end of the instrument panel top pad, near the belt line at the A-pillars. The demister outlets can be removed from the top pad individually for service replacement.
- **Instrument Panel Outlets** - There are five panel outlets in the instrument panel, one located near each outboard end of the instrument panel facing the rear of the vehicle, and three located near the top of the instrument panel center bezel. On models with manual temperature control, all five of these outlets are fully adjustable. On models with Automatic Temperature Control (ATC), the center outlet in the center bezel has fixed vanes because it also houses the remote infrared temperature sensors for the front seat positions. The outboard outlets can be removed individually for service replacement. The center bezel outlets are serviced as a gang of three outlets and, on models with ATC, also includes the infrared sensors.
- **Front Door Rear Outlets** - A fully adjustable outlet located at the rear of each front door trim panel supplies only cooled air to the intermediate seat passengers. Air is supplied to these outlets from the instrument panel through ducts in the doors that use molded seals at the instrument panel to prevent air leakage. The door ducts are integral to the front door trim panels. These outlets also incorporate a red reflector to improve the safety and visibility of an opened front door to traffic approaching the vehicle from the rear at night. These outlets can be removed from the door trim panels for service replacement.
- **Front Floor Outlets** - There are two front floor outlets, one located above each side of the floor panel center tunnel below the instrument panel. These outlets are integral to the front heater-A/C unit distribution housing.
- **Rear Floor Outlets** - Wide rear floor outlets located under each front seat have integral, fixed directional dividers to distribute heated air across the floor for intermediate seat passengers. These outlets are integral to the floor distribution ducts routed under the front floor carpet from an outlet nozzle on the bottom of the front heater-A/C unit distribution housing.

REMOVAL

REMOVAL - CENTER BEZEL OUTLETS

The three outlets located near the top of the instrument panel center bezel are serviced only as a set of all three outlets. If the vehicle is equipped with the optional Automatic Temperature Control (ATC) system, the center outlet of the three has fixed vanes and also houses the remote front infrared temperature sensors.

WARNING: ON VEHICLES EQUIPPED WITH AIRBAGS, DISABLE THE AIRBAG SYSTEM BEFORE ATTEMPTING ANY STEERING WHEEL, STEERING COLUMN, OR INSTRUMENT PANEL COMPONENT DIAGNOSIS OR SERVICE. DISCONNECT AND ISOLATE THE BATTERY NEGATIVE (GROUND) CABLE, THEN WAIT TWO MINUTES FOR THE AIRBAG SYSTEM CAPACITOR TO DISCHARGE BEFORE PERFORMING FURTHER DIAGNOSIS OR SERVICE. THIS IS THE ONLY SURE WAY TO DISABLE THE AIRBAG SYSTEM. FAILURE TO TAKE THE PROPER PRECAUTIONS COULD RESULT IN ACCIDENTAL AIRBAG DEPLOYMENT AND POSSIBLE PERSONAL INJURY.

(1) Disconnect and isolate the battery negative cable.

(2) Remove the center bezel from the instrument panel. (Refer to 23 - BODY/INSTRUMENT PANEL/ INSTRUMENT PANEL CENTER BEZEL - REMOVAL).

(3) Place the center bezel face down on a suitable work surface. Be certain to take the proper precautions to protect the face of the center bezel from cosmetic damage.

(4) If the vehicle is equipped with the optional ATC system, disconnect the ATC remote infrared temperature sensor jumper harness from the sensor connector receptacle located on the bottom of the center outlet housing (Fig. 3).

(5) Remove the three screws that secure the bottom of the outlet housing to the center bezel.

(6) Roll the bottom of the outlet housing upwards towards the top of the center bezel far enough to disengage the retainer features on the top of the outlet housing from their receptacles at the top of the center bezel.

(7) Remove the center bezel outlets and housing from the center bezel as a unit.

REMOVAL - DEMISTER OUTLET

(1) Using a trim stick or another suitable wide flat-bladed tool, gently pry the outer perimeter of the demister outlet away from the instrument panel top pad until the snap features on the outlet are released (Fig. 4).

(2) Remove the demister outlet from the demister duct opening in the instrument panel top pad.

REMOVAL - FRONT DOOR REAR OUTLET

(1) Disconnect and isolate the battery negative cable.

AIR OUTLETS (Continued)

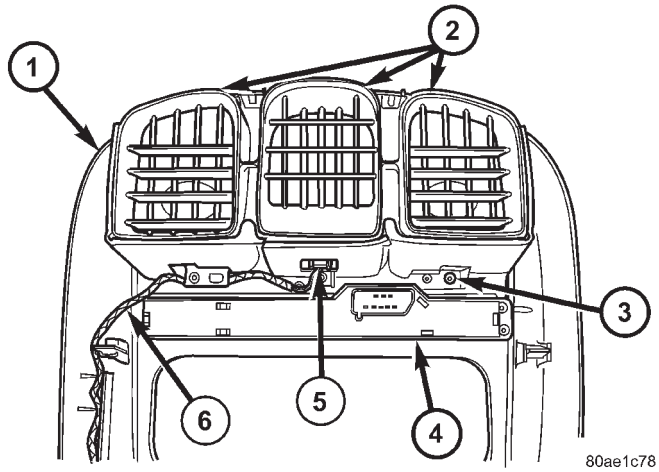

Fig. 3 Center Bezel Outlets

1 - CENTER BEZEL
2 - CENTER BEZEL OUTLETS
3 - SCREW (3)
4 - INSTRUMENT PANEL SWITCH BANK
5 - CONNECTOR (ATC ONLY)
6 - JUMPER HARHESS (ATC ONLY)

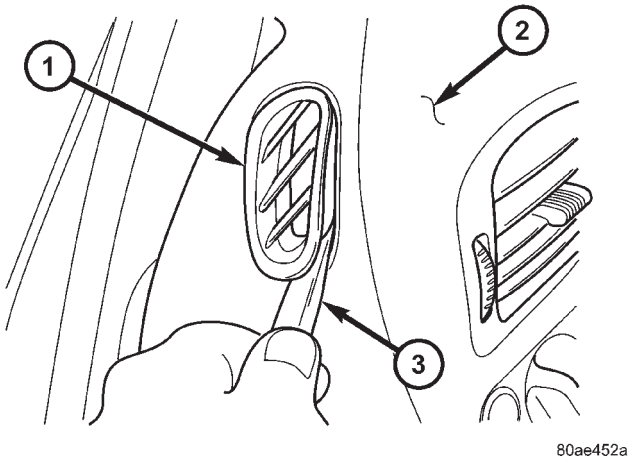

Fig. 4 Demister Outlet

1 - DEMISTER OUTLET
2 - INSTRUMENT PANEL TOP PAD
3 - TRIM STICK

(2) Remove the trim panel from the front door inner panel. (Refer to 23 - BODY/DOOR - FRONT/ TRIM PANEL - REMOVAL).

(3) Using a trim stick or another suitable wide flat-bladed tool, depress the four latch features (two top and two bottom) that secure the outlet to the inside of the trim panel rear outlet opening and push the outlet unit out through the opening (Fig. 5).

(4) Remove the front door rear outlet through the outside of the front door trim panel outlet opening.

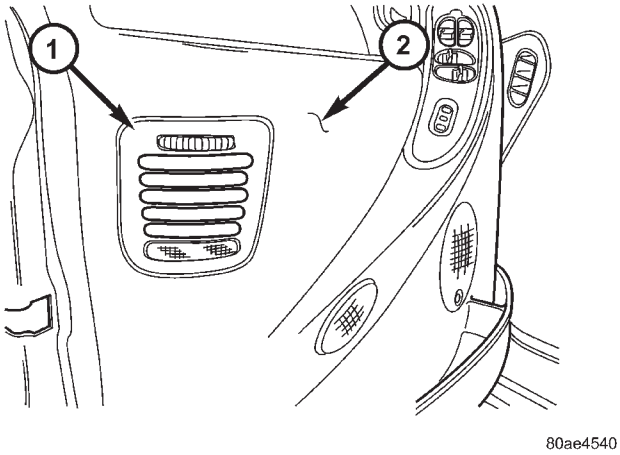

Fig. 5 Front Door Rear Outlet

1 - FRONT DOOR REAR OUTLET
2 - FRONT DOOR TRIM PANEL

REMOVAL - INSTRUMENT PANEL OUTLET

(1) Using a trim stick or another suitable wide flat-bladed tool, gently pry the outer perimeter of the instrument panel outlet away from the instrument panel top pad until the snap features on the outlet are released (Fig. 6).

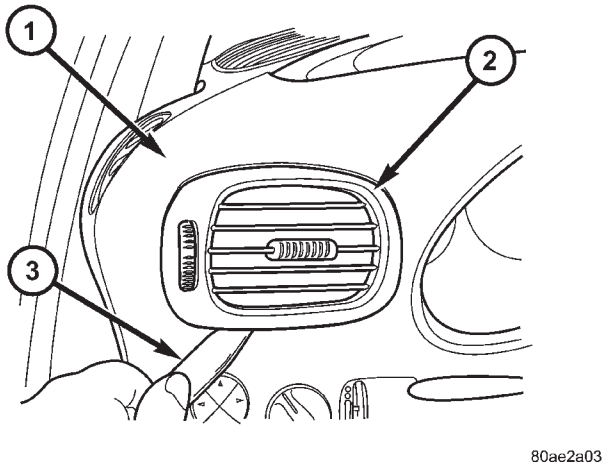

Fig. 6 Instrument Panel Outlet

1 - INSTRUMENT PANEL TOP PAD
2 - INSTRUMENT PANEL OUTLET
3 - TRIM STICK

(2) Remove the instrument panel outlet from the panel duct opening in the instrument panel top pad.

AIR OUTLETS (Continued)

INSTALLATION

INSTALLATION - CENTER BEZEL OUTLETS

(1) Position the center bezel outlets and housing onto the center bezel as a unit.

(2) Engage the retainer features on the top of the outlet housing with their receptacles at the top of the center bezel, then roll the bottom of the outlet housing downwards towards the center bezel.

(3) Install and tighten the three screws that secure the bottom of the outlet housing to the center bezel. Tighten the screws to 2 N·m (17 in. lbs.).

(4) If the vehicle is equipped with the optional ATC system, reconnect the ATC remote infrared temperature sensor jumper harness to the sensor connector receptacle located on the bottom of the center outlet housing.

(5) Reinstall the center bezel onto the instrument panel. (Refer to 23 - BODY/INSTRUMENT PANEL/ INSTRUMENT PANEL CENTER BEZEL - INSTALLATION).

(6) Reconnect the battery negative cable.

INSTALLATION - DEMISTER OUTLET

(1) Position the demister outlet over the demister duct opening in the instrument panel top pad.

(2) Using hand pressure, press the demister outlet firmly and evenly into the instrument panel top pad opening until the snap features on the outlet are fully engaged.

INSTALLATION - FRONT DOOR REAR OUTLET

(1) Position the front door rear outlet through the outside of the front door trim panel outlet opening.

(2) While keeping the outlet aligned with the door duct opening behind the trim panel, use hand pressure to press the outlet firmly and evenly through the outside of the front door trim panel outlet opening until the four latch features (two top and two bottom) that secure the outlet to the inside of the opening are fully engaged.

(3) Reinstall the trim panel onto the front door inner panel. (Refer to 23 - BODY/DOOR - FRONT/ TRIM PANEL - INSTALLATION).

(4) Reconnect the battery negative cable.

INSTALLATION - INSTRUMENT PANEL OUTLET

(1) Position the instrument panel outlet into the panel duct opening in the instrument panel top pad.

(2) Using hand pressure, press the instrument panel outlet firmly and evenly into the instrument panel top pad opening until the snap features on the outlet are fully engaged.

BLOWER MOTOR

DESCRIPTION

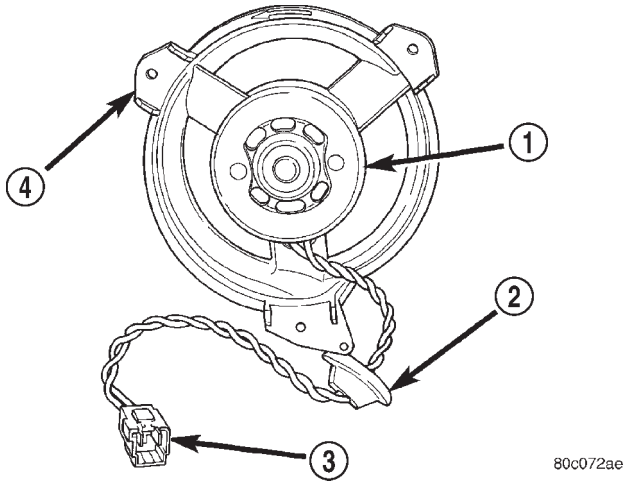

Fig. 7 Blower Motor

1 - BLOWER MOTOR
2 - RUBBER GROMMET
3 - BLOWER MOTOR CONNECTOR
4 - MOUNTING TABS

The blower motor is a 12-volt, Direct Current (DC) motor with a squirrel cage-type blower wheel that is secured to the blower motor shaft (Fig. 7). The blower motor and wheel are located near the passenger side end of the heater-A/C unit within the two halves of the intake air housing in the passenger compartment below the instrument panel. The blower motor and blower motor wheel are a factory balanced unit and cannot be adjusted or repaired. If faulty or damaged, the blower motor and blower wheel must be replaced as a unit.

OPERATION

The blower motor will operate whenever the ignition switch is in the On position and the heater-A/C control power is turned on. The blower motor can only be turned off by turning off the power at the heater-A/C control. The blower motor receives battery current whenever the front blower motor relay is energized. The front blower motor relay output circuit is protected by a fuse in the Intelligent Power Module (IPM) located in the engine compartment near the battery. In the Manual system, the blower motor speed is controlled by regulating the path to ground through the blower control switch and the blower motor resistor. In the ATC system, the blower motor speed is controlled by an electronic blower power module, which uses a pulse width modulated input from the ATC module and feedback from the blower motor to regulate the blower motor ground

path it provides. The blower motor and wheel are used to control the velocity of air moving through the heater-A/C unit housing. The blower motor controls the velocity of the air flowing through the heater-A/C housing by spinning the blower wheel within the housing at the selected speed or, in the ATC system, at the selected or programmed speed.

DIAGNOSIS AND TESTING - BLOWER MOTOR

BLOWER MOTOR INOPERATIVE

WARNING: ON VEHICLES EQUIPPED WITH AIRBAGS, DISABLE THE AIRBAG SYSTEM BEFORE ATTEMPTING ANY STEERING WHEEL, STEERING COLUMN, OR INSTRUMENT PANEL COMPONENT DIAGNOSIS OR SERVICE. DISCONNECT AND ISOLATE THE BATTERY NEGATIVE (GROUND) CABLE, THEN WAIT TWO MINUTES FOR THE AIRBAG SYSTEM CAPACITOR TO DISCHARGE BEFORE PERFORMING FURTHER DIAGNOSIS OR SERVICE. THIS IS THE ONLY SURE WAY TO DISABLE THE AIRBAG SYSTEM. FAILURE TO TAKE THE PROPER PRECAUTIONS COULD RESULT IN ACCIDENTAL AIRBAG DEPLOYMENT AND POSSIBLE PERSONAL INJURY.

(1) Check the fuse (Fuse 10 - 40 ampere) in the Intelligent Power Module (IPM). If OK, go to Step 2. If not OK, repair the shorted circuit or component as required and replace the faulty fuse.

(2) Turn the ignition switch to the On position. Be certain that the heater-A/C control power is turned on. Check for battery voltage at the fuse (Fuse 10 - 40 ampere) in the IPM. If OK, go to Step 3. If not OK, proceed to diagnosis of the front blower motor relay. (Refer to 24 - HEATING & AIR CONDITIONING/CONTROLS - FRONT/BLOWER MOTOR RELAY - DIAGNOSIS AND TESTING).

(3) Turn the ignition switch to the Off position. Disconnect and isolate the battery negative cable. Disconnect the front HVAC wire harness connector for the front blower motor resistor (Manual Temperature Control) or the front blower power module (Automatic Temperature Control) from the resistor or module connector receptacle. Reconnect the battery negative cable. Turn the ignition switch to the On position. Be certain that the heater-A/C control power is turned on. Check for battery voltage at the fused front blower motor relay output circuit cavity of the front HVAC wire harness connector for the front blower motor resistor (MTC) or the front blower power module (ATC). If OK, go to Step 4. If not OK, repair the open fused front blower motor relay output circuit to the IPM as required.

(4) Turn the ignition switch to the Off position. Disconnect and isolate the battery negative cable. Disconnect the front blower motor pigtail wire connector from the connector receptacle of the front blower motor resistor (MTC) or the front blower power module (ATC). Use jumper wires to connect a battery and ground feeds to the blower motor pigtail wire connector. The blower motor should operate. If OK with MTC, proceed to diagnosis of the front blower motor resistor. (Refer to 24 - HEATING & AIR CONDITIONING/CONTROLS - FRONT/BLOWER MOTOR RESISTOR - DIAGNOSIS AND TESTING). If OK with ATC, use a DRBIII scan tool to diagnose the front blower power module. Refer to the appropriate diagnostic information. If not OK with MTC or ATC, replace the faulty front blower motor.

BLOWER MOTOR NOISE OR VIBRATION

Refer to the Blower Motor Noise/Vibration Diagnosis chart (Fig. 8).

REMOVAL

The blower motor and blower wheel are serviced only as a balanced unit. If either component is faulty or damaged, the entire unit must be replaced.

WARNING: REFER TO THE APPLICABLE WARNINGS AND CAUTIONS FOR THIS SYSTEM BEFORE PERFORMING THE FOLLOWING OPERATION. (Refer to 24 - HEATING & AIR CONDITIONING/PLUMBING - FRONT - WARNING - A/C PLUMBING), (Refer to 24 - HEATING & AIR CONDITIONING/PLUMBING - FRONT - CAUTION - A/C PLUMBING), and (Refer to 24 - HEATING & AIR CONDITIONING/PLUMBING - FRONT - WARNING - HEATER PLUMBING).

(1) Disconnect the blower motor pigtail harness connector from the connector receptacle of either the blower motor resistor or power module, depending how vehicle is equipped (Fig. 9).

(2) Remove the lower right trim panel and roll back the carpet.

(3) Remove the two screws that secure the recirculation door actuator and disengage the wire harness from the routing clips molded into the bottom of the lower air intake housing.

(4) Remove the one screw (from the top) that secures the lower air intake housing to the upper air intake housing.

(5) Remove the four screws (from the bottom) that secures the lower air intake housing to the lower half of the evaporator housing and the upper air intake housing.

(6) Push the rubber grommet on the blower motor pigtail wires through the hole in the lower intake air housing (Fig. 10).

BLOWER MOTOR (Continued)

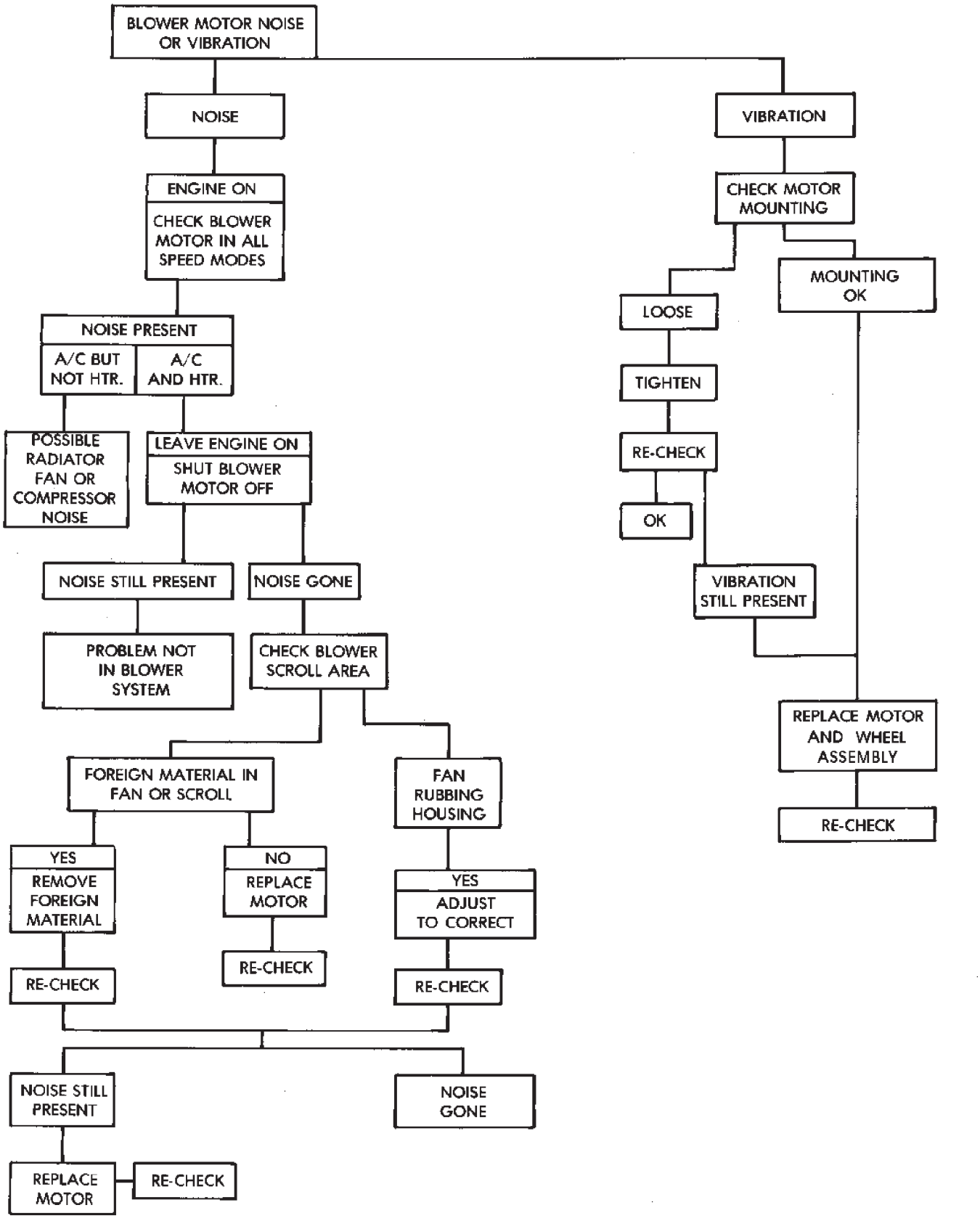

Fig. 8 Blower Motor Noise/Vibration Diagnosis

BLOWER MOTOR (Continued)

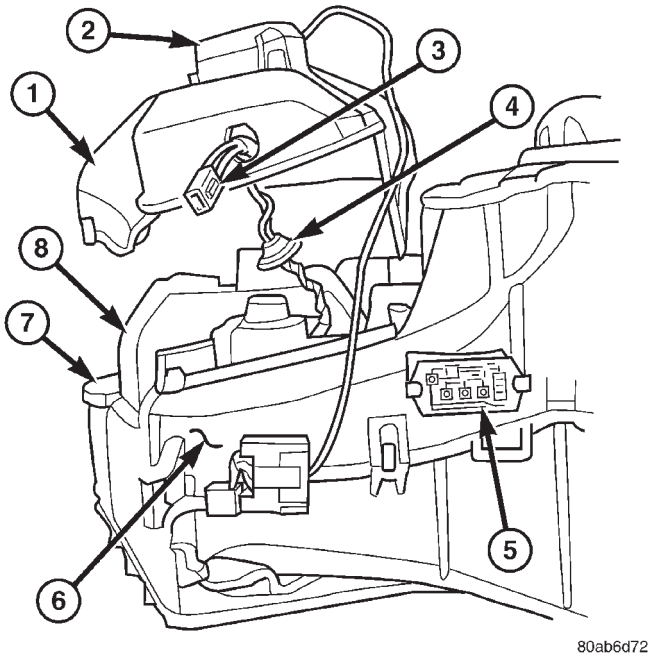

Fig. 9 Lower Intake Air Housing

1 - LOWER INTAKE AIR HOUSING
2 - RECIRCULATION AIR DOOR ACTUATOR
3 - BLOWER MOTOR PIGTAIL WIRE CONNECTOR
4 - RUBBER GROMMET
5 - BLOWER MOTOR RESISTOR/POWER MODULE
6 - LOWER EVAPORATOR HOUSING
7 - UPPER INTAKE AIR HOUSING
8 - RECIRCULATION AIR DOOR

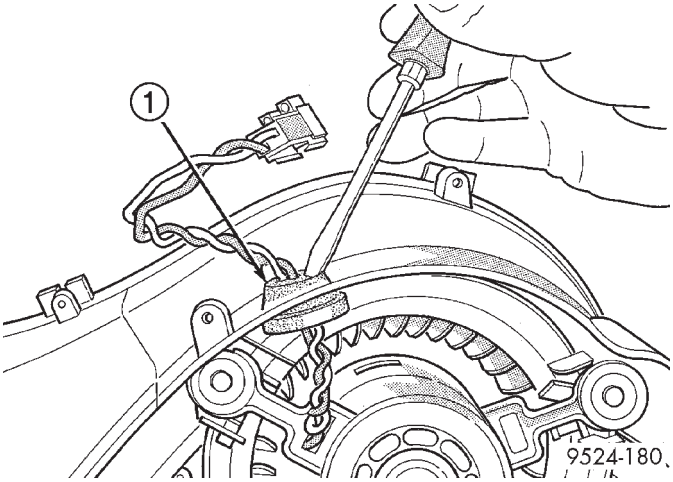

Fig. 10 Rubber Grommet - Typical

1 - BLOWER MOTOR PIGTAIL WIRE GROMMET

(7) Feed the blower motor pigtail wires and electrical connector through the grommet hole in the lower intake air housing.

(8) Relocate the recirculation air door as necessary to access and remove the three screws that secure the blower motor to the blower housing in the lower half of the evaporator housing (Fig. 11).

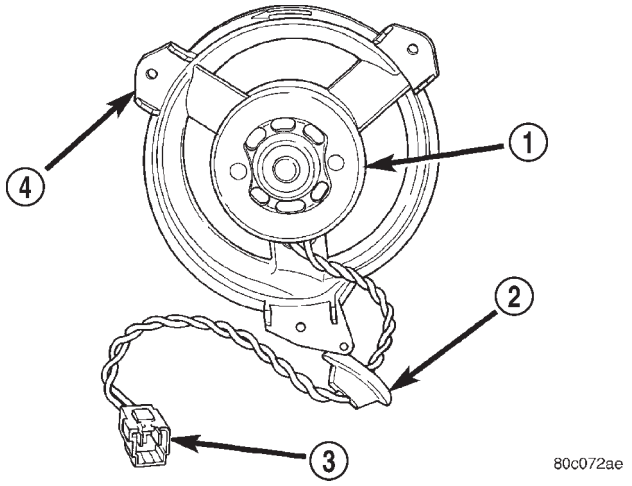

Fig. 11 Blower Motor Mounting Tabs

1 - BLOWER MOTOR
2 - RUBBER GROMMET
3 - BLOWER MOTOR CONNECTOR
4 - MOUNTING TABS

(9) Gently flex the recirculation air door far enough to remove the blower motor and blower wheel from the blower housing in the lower half of the evaporator housing.

INSTALLATION

The blower motor and blower wheel are serviced only as a balanced unit. If either component is faulty or damaged, the entire unit must be replaced.

WARNING: REFER TO THE APPLICABLE WARNINGS AND CAUTIONS FOR THIS SYSTEM BEFORE PERFORMING THE FOLLOWING OPERATION. (Refer to 24 - HEATING & AIR CONDITIONING/ PLUMBING - FRONT - WARNING - A/C PLUMBING), (Refer to 24 - HEATING & AIR CONDITIONING/ PLUMBING - FRONT - CAUTION - A/C PLUMBING), and (Refer to 24 - HEATING & AIR CONDITIONING/ PLUMBING - FRONT - WARNING - HEATER PLUMBING).

(1) Gently flex the recirculation air door far enough to position the blower motor and blower wheel into the blower housing in the lower half of the evaporator housing.

(2) Install and tighten the four screws that secure the blower motor to the blower housing in the lower half of the evaporator housing. Tighten the screws to 2 N·m (18 in. lbs.).

(3) Feed the blower motor pigtail wires and electrical connector through the grommet hole in the lower intake air housing and seat the rubber grommet.

BLOWER MOTOR (Continued)

(4) Position the upper pivot of the recirculation door into the opening at the top of the air inlet housing an dhold in place while the lower air inlet housing is placed in position.

(5) Install and tighten the three screws (from the bottom) that secure the lower air intake housing to the lower half of the evaporator housing. Tighten the screws to 2 N·m (18 in. lbs.).

(6) Install and tighten the one screw that secures the upper intake air housing to the lower intake air housing. Tighten the screws to 2 N·m (18 in. lbs.).

(7) Install the recirculation actuator making certain that the splines are aligned and secure the actuator with two screws and torque the to 2 N·m (18 in. lbs.). Route the wiring into the molded inn routing clips.

(8) Position the carpet into location and install the lower right trim panel.

(9) Connect the blower motor pigtail wire harness electrical connector back into either the power module or resistor receptacle.

(10) Run the Heater-A/C Calibration procedure(Refer to 24 - HEATING & AIR CONDITIONING/CONTROLS/A/C HEATER CONTROL - STANDARD PROCEDURE).

(11) Run the HVAC Control Cooldown test(Refer to 24 - HEATING & AIR CONDITIONING - DIAGNOSIS AND TESTING).

DEFROSTER DUCT

REMOVAL

WARNING: ON VEHICLES EQUIPPED WITH AIRBAGS, DISABLE THE AIRBAG SYSTEM BEFORE ATTEMPTING ANY STEERING WHEEL, STEERING COLUMN, OR INSTRUMENT PANEL COMPONENT DIAGNOSIS OR SERVICE. DISCONNECT AND ISOLATE THE BATTERY NEGATIVE (GROUND) CABLE, THEN WAIT TWO MINUTES FOR THE AIRBAG SYSTEM CAPACITOR TO DISCHARGE BEFORE PERFORMING FURTHER DIAGNOSIS OR SERVICE. THIS IS THE ONLY SURE WAY TO DISABLE THE AIRBAG SYSTEM. FAILURE TO TAKE THE PROPER PRECAUTIONS COULD RESULT IN ACCIDENTAL AIRBAG DEPLOYMENT AND POSSIBLE PERSONAL INJURY.

(1) Disconnect and isolate the battery negative cable.

(2) Remove the instrument panel from the vehicle. (Refer to 23 - BODY/INSTRUMENT PANEL/INSTRUMENT PANEL ASSEMBLY - REMOVAL).

(3) Place the instrument panel face down on a suitable work surface. Be certain to take the proper precautions to protect the face of the instrument panel from cosmetic damage.

(4) Remove the fasteners that secure the defroster duct to the instrument panel armature.

(5) Remove the defroster duct from the instrument panel.

INSTALLATION

WARNING: ON VEHICLES EQUIPPED WITH AIRBAGS, DISABLE THE AIRBAG SYSTEM BEFORE ATTEMPTING ANY STEERING WHEEL, STEERING COLUMN, OR INSTRUMENT PANEL COMPONENT DIAGNOSIS OR SERVICE. DISCONNECT AND ISOLATE THE BATTERY NEGATIVE (GROUND) CABLE, THEN WAIT TWO MINUTES FOR THE AIRBAG SYSTEM CAPACITOR TO DISCHARGE BEFORE PERFORMING FURTHER DIAGNOSIS OR SERVICE. THIS IS THE ONLY SURE WAY TO DISABLE THE AIRBAG SYSTEM. FAILURE TO TAKE THE PROPER PRECAUTIONS COULD RESULT IN ACCIDENTAL AIRBAG DEPLOYMENT AND POSSIBLE PERSONAL INJURY.

(1) Position the defroster duct to the instrument panel.

(2) Install the fasteners that secure the defroster duct to the instrument panel armature.

(3) Reinstall the instrument panel in the vehicle. (Refer to 23 - BODY/INSTRUMENT PANEL/INSTRUMENT PANEL ASSEMBLY - INSTALLATION).

(4) Reconnect the battery negative cable.

DEMISTER DUCTS

REMOVAL

WARNING: ON VEHICLES EQUIPPED WITH AIRBAGS, DISABLE THE AIRBAG SYSTEM BEFORE ATTEMPTING ANY STEERING WHEEL, STEERING COLUMN, OR INSTRUMENT PANEL COMPONENT DIAGNOSIS OR SERVICE. DISCONNECT AND ISOLATE THE BATTERY NEGATIVE (GROUND) CABLE, THEN WAIT TWO MINUTES FOR THE AIRBAG SYSTEM CAPACITOR TO DISCHARGE BEFORE PERFORMING FURTHER DIAGNOSIS OR SERVICE. THIS IS THE ONLY SURE WAY TO DISABLE THE AIRBAG SYSTEM. FAILURE TO TAKE THE PROPER PRECAUTIONS COULD RESULT IN ACCIDENTAL AIRBAG DEPLOYMENT AND POSSIBLE PERSONAL INJURY.

(1) Disconnect and isolate the battery negative cable.

DEMISTER DUCTS (Continued)

(2) Remove the instrument panel from the vehicle. (Refer to 23 - BODY/INSTRUMENT PANEL/INSTRUMENT PANEL ASSEMBLY - REMOVAL).

(3) Place the instrument panel face down on a suitable work surface. Be certain to take the proper precautions to protect the face of the instrument panel from cosmetic damage.

(4) Remove the fasteners that secure the demister ducts to the instrument panel armature.

(5) Disengage the demister ducts from the demister outlets.

(6) Remove the demister ducts from the instrument panel.

INSTALLATION

WARNING: ON VEHICLES EQUIPPED WITH AIRBAGS, DISABLE THE AIRBAG SYSTEM BEFORE ATTEMPTING ANY STEERING WHEEL, STEERING COLUMN, OR INSTRUMENT PANEL COMPONENT DIAGNOSIS OR SERVICE. DISCONNECT AND ISOLATE THE BATTERY NEGATIVE (GROUND) CABLE, THEN WAIT TWO MINUTES FOR THE AIRBAG SYSTEM CAPACITOR TO DISCHARGE BEFORE PERFORMING FURTHER DIAGNOSIS OR SERVICE. THIS IS THE ONLY SURE WAY TO DISABLE THE AIRBAG SYSTEM. FAILURE TO TAKE THE PROPER PRECAUTIONS COULD RESULT IN ACCIDENTAL AIRBAG DEPLOYMENT AND POSSIBLE PERSONAL INJURY.

(1) Position the demister ducts to the instrument panel.

(2) Engage the demister ducts to the demister outlets.

(3) Install the fasteners that secure the demister ducts to the instrument panel armature.

(4) Reinstall the instrument panel into the vehicle. (Refer to 23 - BODY/INSTRUMENT PANEL/INSTRUMENT PANEL ASSEMBLY - INSTALLATION).

(5) Reconnect the battery negative cable.

FLOOR DISTRIBUTION DUCTS

REMOVAL

(1) Roll back the carpet on the front floor from under the instrument panel toward the rear of the vehicle. (Refer to 23 - BODY/INTERIOR/CARPETS AND FLOOR MATS - REMOVAL).

(2) Lift the center floor distribution duct upward far enough to disengage its locator hole from the weld stud on the front floor panel (Fig. 12).

(3) Pull the floor distribution duct assembly rearward far enough to disengage the center floor distribution duct from the outlet on the bottom of the heater-A/C housing unit.

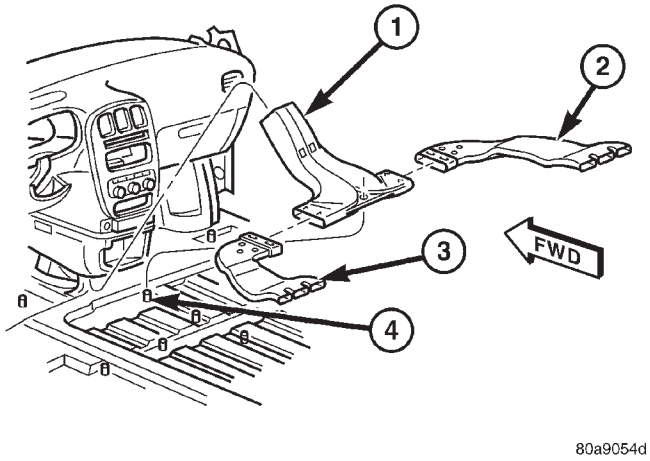

Fig. 12 Floor Distribution Ducts

1 - CENTER FLOOR DISTRIBUTION DUCT
2 - RIGHT FLOOR DISTRIBUTION DUCT
3 - LEFT FLOOR DISTRIBUTION DUCT
4 - WELD STUD

(4) Disassemble the right and/or left floor distribution ducts from the center floor distribution duct as required.

INSTALLATION

(1) Assemble the right and/or left floor distribution ducts onto the center floor distribution duct as required.

(2) Slide the floor distribution duct assembly under the instrument panel center stack far enough to engage the center floor distribution duct with the outlet on the bottom of the heater-A/C housing unit.

(3) Align the locator hole on the center floor distribution duct with the weld stud on the front floor panel.

(4) Using hand pressure, push the locator hole of the center floor distribution duct down over the weld stud on the front floor panel.

(5) Reinstall the carpet onto the front floor panel and under the instrument panel. (Refer to 23 - BODY/INTERIOR/CARPETS AND FLOOR MATS - INSTALLATION).

HVAC HOUSING

REMOVAL

WARNING: REFER TO THE APPLICABLE WARNINGS AND CAUTIONS FOR THIS SYSTEM BEFORE PERFORMING THE FOLLOWING OPERATION. (Refer to 24 - HEATING & AIR CONDITIONING/ PLUMBING - FRONT - WARNING - A/C PLUMBING), (Refer to 24 - HEATING & AIR CONDITIONING/ PLUMBING - FRONT - CAUTION - A/C PLUMBING), and (Refer to 24 - HEATING & AIR CONDITIONING/ PLUMBING - FRONT - WARNING - HEATER PLUMBING).

WARNING: ON VEHICLES EQUIPPED WITH AIRBAGS, DISABLE THE AIRBAG SYSTEM BEFORE ATTEMPTING ANY STEERING WHEEL, STEERING COLUMN, OR INSTRUMENT PANEL COMPONENT DIAGNOSIS OR SERVICE. DISCONNECT AND ISOLATE THE BATTERY NEGATIVE (GROUND) CABLE, THEN WAIT TWO MINUTES FOR THE AIRBAG SYSTEM CAPACITOR TO DISCHARGE BEFORE PERFORMING FURTHER DIAGNOSIS OR SERVICE. THIS IS THE ONLY SURE WAY TO DISABLE THE AIRBAG SYSTEM. FAILURE TO TAKE THE PROPER PRECAUTIONS COULD RESULT IN ACCIDENTAL AIRBAG DEPLOYMENT AND POSSIBLE PERSONAL INJURY.

(1) Recover the refrigerant from the refrigerant system. (Refer to 24 - HEATING & AIR CONDITIONING/PLUMBING - FRONT/REFRIGERANT - STANDARD PROCEDURE - REFRIGERANT RECOVERY).

(2) Drain the engine cooling system. (Refer to 7 - COOLING - STANDARD PROCEDURE - COOLING SYSTEM DRAIN).

(3) Disconnect and isolate the battery negative cable.

(4) Disconnect the liquid line and suction line from the expansion valve. (Refer to 24 - HEATING & AIR CONDITIONING/PLUMBING - FRONT/LIQUID LINE - REMOVAL) and (Refer to 24 - HEATING & AIR CONDITIONING/PLUMBING - FRONT/SUCTION LINE - REMOVAL).

(5) Disconnect the heater hoses from the heater core tubes. (Refer to 24 - HEATING & AIR CONDITIONING/PLUMBING - FRONT/HEATER HOSE - REMOVAL).

(6) Remove the four nuts that secure the heater-A/C unit housing studs to the engine compartment side of the dash panel (Fig. 13).

(7) Remove the instrument panel from the passenger compartment. (Refer to 23 - BODY/INSTRUMENT PANEL/INSTRUMENT PANEL ASSEMBLY - REMOVAL).

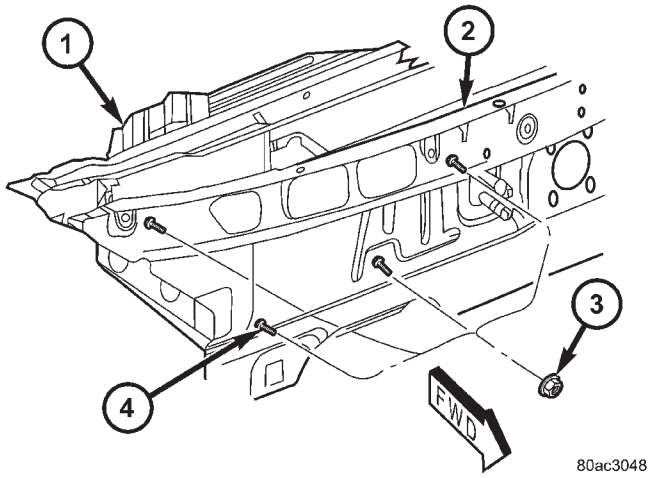

Fig. 13 Heater-A/C Unit Housing Studs

1 - HEATER-A/C UNIT HOUSING
2 - DASH PANEL
3 - NUT (4)
4 - STUD (4)

(8) Remove the floor distribution duct from the heater-A/C unit housing. (Refer to 24 - HEATING & AIR CONDITIONING/DISTRIBUTION - FRONT/ FLOOR DISTRIBUTION DUCTS - REMOVAL).

(9) Remove the one screw that secures the heater-A/C unit housing bracket to the passenger compartment side of the dash panel (Fig. 14).

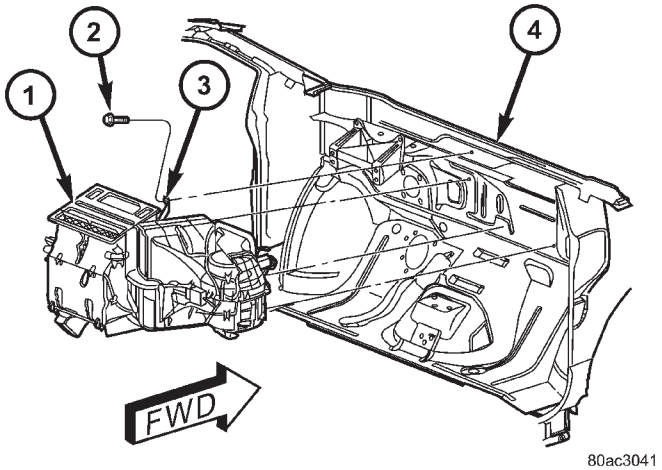

Fig. 14 Heater-A/C Unit Housing

1 - HEATER-A/C UNIT HOUSING
2 - SCREW
3 - BRACKET
4 - DASH PANEL

HVAC HOUSING (Continued)

(10) Pull the heater-A/C unit housing rearward far enough for the mounting studs to clear the dash panel and remove the unit from the passenger compartment.

INSTALLATION

(1) Position the heater-A/C unit housing against the dash panel in the passenger compartment with the four mounting studs located in their proper mounting holes in the dash panel.

(2) Install and tighten the one screw that secures the heater-A/C unit housing bracket to the passenger compartment side of the dash panel. Tighten the screw to 3 N·m (26 in. lbs.).

(3) Install and tighten the four nuts that secure the heater-A/C unit housing studs to the engine compartment side of the dash panel. Tighten the nuts to 7 N·m (62 in. lbs.).

(4) Reinstall the floor distribution duct onto the heater-A/C unit housing. (Refer to 24 - HEATING & AIR CONDITIONING/DISTRIBUTION - FRONT/FLOOR DISTRIBUTION DUCTS - INSTALLATION).

(5) Reinstall the instrument panel into the passenger compartment. (Refer to 23 - BODY/INSTRUMENT PANEL/INSTRUMENT PANEL ASSEMBLY - INSTALLATION).

(6) Reconnect the heater hoses to the heater core tubes. (Refer to 24 - HEATING & AIR CONDITIONING/PLUMBING - FRONT/HEATER HOSE - INSTALLATION).

(7) Reconnect the suction line and liquid line to the expansion valve. (Refer to 24 - HEATING & AIR CONDITIONING/PLUMBING - FRONT/SUCTION LINE - INSTALLATION) and (Refer to 24 - HEATING & AIR CONDITIONING/PLUMBING - FRONT/LIQUID LINE - INSTALLATION).

(8) Reconnect the battery negative cable.

(9) Refill the engine cooling system. (Refer to 7 - COOLING - STANDARD PROCEDURE - COOLING SYSTEM REFILL).

(10) Evacuate the refrigerant system. (Refer to 24 - HEATING & AIR CONDITIONING/PLUMBING - FRONT/REFRIGERANT - STANDARD PROCEDURE - REFRIGERANT SYSTEM EVACUATE).

(11) Charge the refrigerant system. (Refer to 24 - HEATING & AIR CONDITIONING/PLUMBING - FRONT/REFRIGERANT - STANDARD PROCEDURE - REFRIGERANT SYSTEM CHARGE).

PANEL DUCTS

REMOVAL

WARNING: ON VEHICLES EQUIPPED WITH AIRBAGS, DISABLE THE AIRBAG SYSTEM BEFORE ATTEMPTING ANY STEERING WHEEL, STEERING COLUMN, OR INSTRUMENT PANEL COMPONENT DIAGNOSIS OR SERVICE. DISCONNECT AND ISOLATE THE BATTERY NEGATIVE (GROUND) CABLE, THEN WAIT TWO MINUTES FOR THE AIRBAG SYSTEM CAPACITOR TO DISCHARGE BEFORE PERFORMING FURTHER DIAGNOSIS OR SERVICE. THIS IS THE ONLY SURE WAY TO DISABLE THE AIRBAG SYSTEM. FAILURE TO TAKE THE PROPER PRECAUTIONS COULD RESULT IN ACCIDENTAL AIRBAG DEPLOYMENT AND POSSIBLE PERSONAL INJURY.

(1) Disconnect and isolate the battery negative cable.

(2) Remove the instrument panel from the vehicle. (Refer to 23 - BODY/INSTRUMENT PANEL/INSTRUMENT PANEL ASSEMBLY - REMOVAL).

(3) Place the instrument panel face down on a suitable work surface. Be certain to take the proper precautions to protect the face of the instrument panel from cosmetic damage.

(4) Remove the fasteners that secure the panel ducts to the instrument panel armature.

(5) Disengage the panel ducts from the panel outlets.

(6) Remove the panel ducts from the instrument panel.

INSTALLATION

(1) Position the panel ducts to the instrument panel.

(2) Engage the panel ducts to the panel outlets.

(3) Install the fasteners that secure the panel ducts to the instrument panel armature.

(4) Reinstall the instrument panel into the vehicle. (Refer to 23 - BODY/INSTRUMENT PANEL/INSTRUMENT PANEL ASSEMBLY - INSTALLATION).

(5) Reconnect the battery negative cable.

DISTRIBUTION - REAR

TABLE OF CONTENTS

	page
AIR OUTLETS	
DESCRIPTION	51
REMOVAL	51
INSTALLATION	51
A/C DISTRIBUTION DUCT	
REMOVAL	52
INSTALLATION	52
BLOWER MOTOR	
DESCRIPTION	52
OPERATION	52
DIAGNOSIS AND TESTING - BLOWER MOTOR	53
REMOVAL	53
INSTALLATION	55
REAR HEATER-A/C HOUSING	
REMOVAL	55
INSTALLATION	56
REAR HEATER DISTRIBUTION DUCT	
REMOVAL	58
INSTALLATION	58

AIR OUTLETS

DESCRIPTION

Based upon the system mode selected, conditioned air can exit the rear heater-A/C unit housing through one or a combination of the two main housing outlets: air conditioner, or heater. Once the conditioned air exits the unit housing, it is directed through molded plastic ducts to the various outlets in the vehicle interior. These outlets and their locations are as follows:

- **Floor Outlets** - Three floor outlets with fixed vanes are located in the right quarter trim panel, near the floor. These outlets distribute air from the rear heater distribution duct to the intermediate and rear seat occupants. The floor outlets are integral to the right quarter trim panel and, if faulty or damaged, the quarter trim panel must be replaced.
- **Overhead Outlets** - Four (two right side and two left side) fully adjustable outlets along the roof rails distribute air from the rear A/C distribution duct and the headliner ducts to the intermediate and rear seat occupants. The headliner ducts are integral to the headliner panel. Each overhead outlet is housed in a headliner bezel. The two forward headliner bezels also feature a courtesy lamp, a fold-away coat hook, and a fold-away assist handle. The overhead outlets can be removed from the headliner bezels individually for service replacement.

REMOVAL

(1) Using a trim stick or another suitable wide flat-bladed tool, gently pry the thumb wheel end of the overhead outlet away from the pivot pin in the headliner bezel until one end of the outlet is released (Fig. 1).

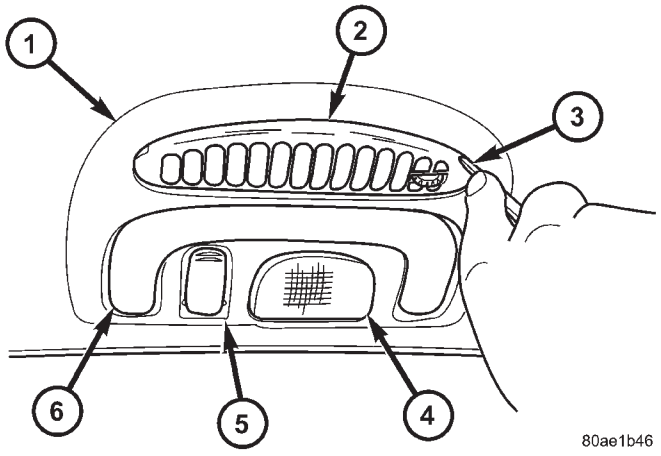

Fig. 1 Overhead Outlet

1 - HEADLINER BEZEL
2 - OVERHEAD OUTLET
3 - TRIM STICK
4 - COURTESY LAMP
5 - COAT HOOK
6 - ASSIST HANDLE

(2) Pull the opposite end of the overhead outlet away from its pivot pin in the headliner bezel until that end of the outlet is released.

(3) Remove the overhead outlet from the opening in the headliner bezel.

INSTALLATION

(1) Position the overhead outlet into the opening in the headliner bezel.

(2) Slide the non-thumb wheel end of the outlet onto the pivot pin in the headliner bezel. Using hand pressure, push the thumb wheel end outboard onto the pivot pin until it fully seats.

A/C DISTRIBUTION DUCT

REMOVAL

(1) Remove the trim from the right quarter inner panel and the right D pillar. (Refer to 23 - BODY/INTERIOR/RIGHT QUARTER TRIM PANEL - REMOVAL).

(2) Slide the rear air conditioning distribution duct upwards far enough to disengage it from the outlet at the top of the rear heater-A/C unit housing (Fig. 2).

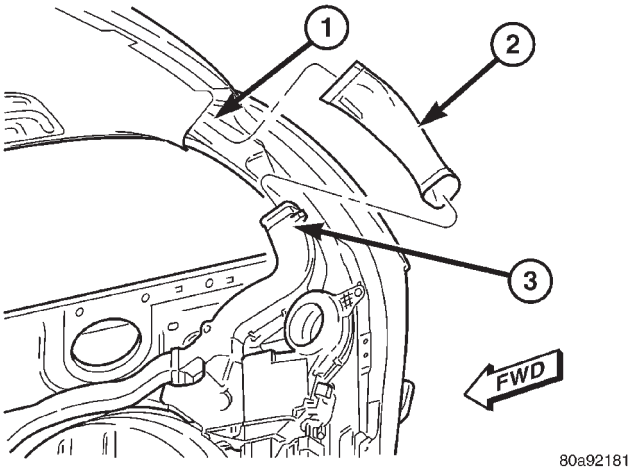

Fig. 2 Rear A/C Distribution Duct

1 - HEADLINER DUCT
2 - REAR A/C DISTRIBUTION DUCT
3 - REAR HEATER-A/C UNIT OUTLET

(3) While pulling the lower end of the auxiliary air conditioning distribution duct away from the rear heater-A/C unit outlet, disengage the upper end of the distribution duct from the headliner duct.

(4) Remove the auxiliary air conditioning distribution duct from the vehicle.

INSTALLATION

(1) Align the upper end of the rear air conditioning distribution duct to the headliner duct.

(2) Slide the upper end of the rear air conditioning distribution duct onto the headliner duct far enough to align the lower end of the duct with the outlet at the top of the rear heater-A/C unit housing.

(3) Slide the rear air conditioning distribution duct downwards far enough to engage it onto the outlet at the top of the rear heater-A/C unit housing.

(4) Reinstall the trim onto the right quarter inner panel and the right D pillar. (Refer to 23 - BODY/INTERIOR/RIGHT QUARTER TRIM PANEL - INSTALLATION).

BLOWER MOTOR

DESCRIPTION

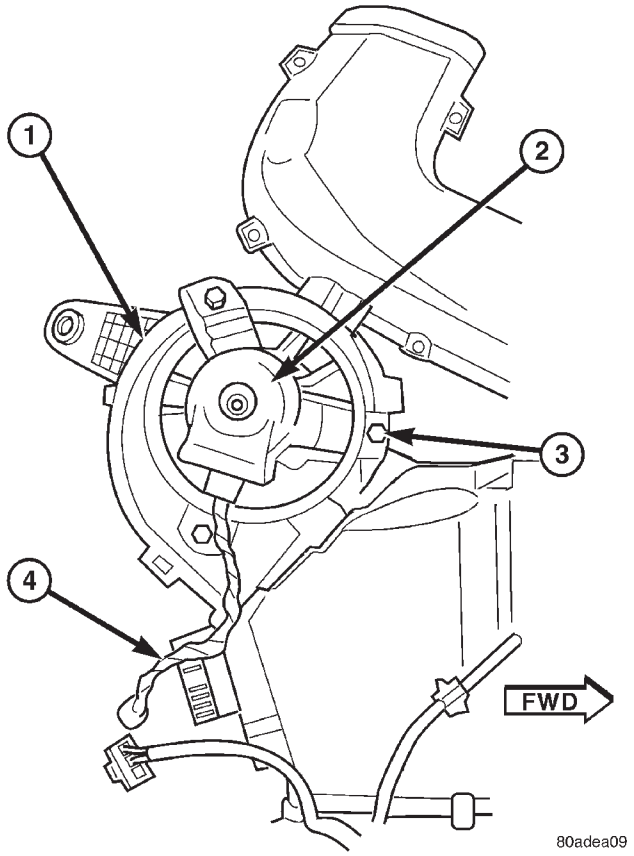

Fig. 3 Blower Motor

1 - REAR HEATER-A/C UNIT HOUSING
2 - BLOWER MOTOR
3 - SCREW (3)
4 - BLOWER PIGTAIL WIRE

The blower motor is a 12-volt, Direct Current (DC) motor with a squirrel cage-type blower wheel that is secured to the blower motor shaft (Fig. 3). The blower motor and wheel are located in a housing near the top of the rear heater-A/C unit in the passenger compartment behind the right rear wheel house. The rear heater-A/C unit housing must be removed from the vehicle to access the blower motor and blower wheel for service. The blower motor and blower motor wheel are a factory balanced unit and cannot be adjusted or repaired. If faulty or damaged, the blower motor and blower wheel must be replaced as a unit.

OPERATION

The rear blower motor will operate whenever the ignition switch is in the On position, the heater-A/C control power is turned on, and the rear heater-A/C

system control switch on the front heater-A/C control is not in the Off position. The blower motor can only be turned off by turning off the rear system at the front heater-A/C control. The blower motor receives battery current whenever the rear blower motor relay is energized. The rear blower motor relay output circuit is protected by a fuse in the Intelligent Power Module (IPM) located in the engine compartment near the battery. In the MTC system, the blower motor speed is controlled by regulating the path to ground through the blower control switch and the blower motor resistor. In the ATC system, the blower motor speed is controlled by an electronic blower power module, which uses a pulse width modulated input from the ATC module and feedback from the blower motor to regulate the blower motor ground path it provides. The blower motor and wheel are used to control the velocity of air moving through the rear heater-A/C unit housing. The blower motor controls the velocity of the air flowing through the rear heater-A/C housing by spinning the blower wheel within the housing at the selected speed or, in the ATC system, at the selected or programmed speed.

DIAGNOSIS AND TESTING - BLOWER MOTOR

BLOWER MOTOR INOPERATIVE

(1) Check the fuse (Fuse 12 - 25 ampere) in the Intelligent Power Module (IPM). If OK, go to Step 2. If not OK, repair the shorted circuit or component as required and replace the faulty fuse.

(2) Turn the ignition switch to the On position. Be certain that the rear heater-A/C control power is turned on. Check for battery voltage at the fuse (Fuse 12 - 25 ampere) in the IPM. If OK, go to Step 3. If not OK, proceed to diagnosis of the rear blower motor relay. (Refer to 24 - HEATING & AIR CONDITIONING/CONTROLS - REAR/BLOWER MOTOR RELAY - DIAGNOSIS AND TESTING).

(3) Turn the ignition switch to the Off position. Disconnect and isolate the battery negative cable. Disconnect the rear HVAC wire harness connector for the rear blower motor resistor (Manual Temperature Control) or the rear blower power module (Automatic Temperature Control) from the resistor or module connector receptacle. Reconnect the battery negative cable. Turn the ignition switch to the On position. Be certain that the rear heater-A/C control power is turned on. Check for battery voltage at the fused rear blower motor relay output circuit cavity of the rear HVAC wire harness connector for the rear blower motor resistor (MTC) or the rear blower power module (ATC). If OK, go to Step 4. If not OK, repair the open fused front blower motor relay output circuit to the IPM as required.

(4) Turn the ignition switch to the Off position. Disconnect and isolate the battery negative cable. Disconnect the rear blower motor pigtail wire connector from the take out and connector of the rear HVAC wire harness (MTC) or the connector receptacle of the rear blower power module (ATC). Use jumper wires to connect a battery and ground feeds to the blower motor pigtail wire connector. The blower motor should operate. If OK with MTC, proceed to diagnosis of the rear blower motor resistor. (Refer to 24 - HEATING & AIR CONDITIONING/ CONTROLS - REAR/BLOWER MOTOR RESISTOR - DIAGNOSIS AND TESTING). If OK with ATC, use a DRBIII scan tool to diagnose the rear blower power module. Refer to the appropriate diagnostic information. If not OK with MTC or ATC, replace the faulty rear blower motor.

BLOWER MOTOR NOISE OR VIBRATION

Refer to the Blower Motor Noise/Vibration Diagnosis chart (Fig. 4).

REMOVAL

The rear blower motor and blower wheel are serviced only as a balanced unit. If either component is faulty or damaged, the entire unit must be replaced.

WARNING: REFER TO THE APPLICABLE WARNINGS AND CAUTIONS FOR THIS SYSTEM BEFORE PERFORMING THE FOLLOWING OPERATION. (Refer to 24 - HEATING & AIR CONDITIONING/ PLUMBING - FRONT - WARNING - A/C PLUMBING), (Refer to 24 - HEATING & AIR CONDITIONING/ PLUMBING - FRONT - CAUTION - A/C PLUMBING), and (Refer to 24 - HEATING & AIR CONDITIONING/ PLUMBING - FRONT - WARNING - HEATER PLUMBING).

(1) Remove the rear heater-A/C unit housing from the vehicle. (Refer to 24 - HEATING & AIR CONDITIONING/DISTRIBUTION - REAR/REAR HEATER-A/C HOUSING - REMOVAL).

(2) Disconnect the rear blower motor pigtail wire connector. With manual temperature control, the blower pigtail wire is connected to a take out and connector of the rear HVAC wire harness. With automatic temperature control, the blower pigtail wire is connected to a receptacle on the blower power module.

(3) Remove the three screws that secure the blower motor to the outboard side of the rear heater-A/C unit housing (Fig. 5).

(4) Remove the blower motor and blower wheel from the rear heater-A/C unit housing.

BLOWER MOTOR (Continued)

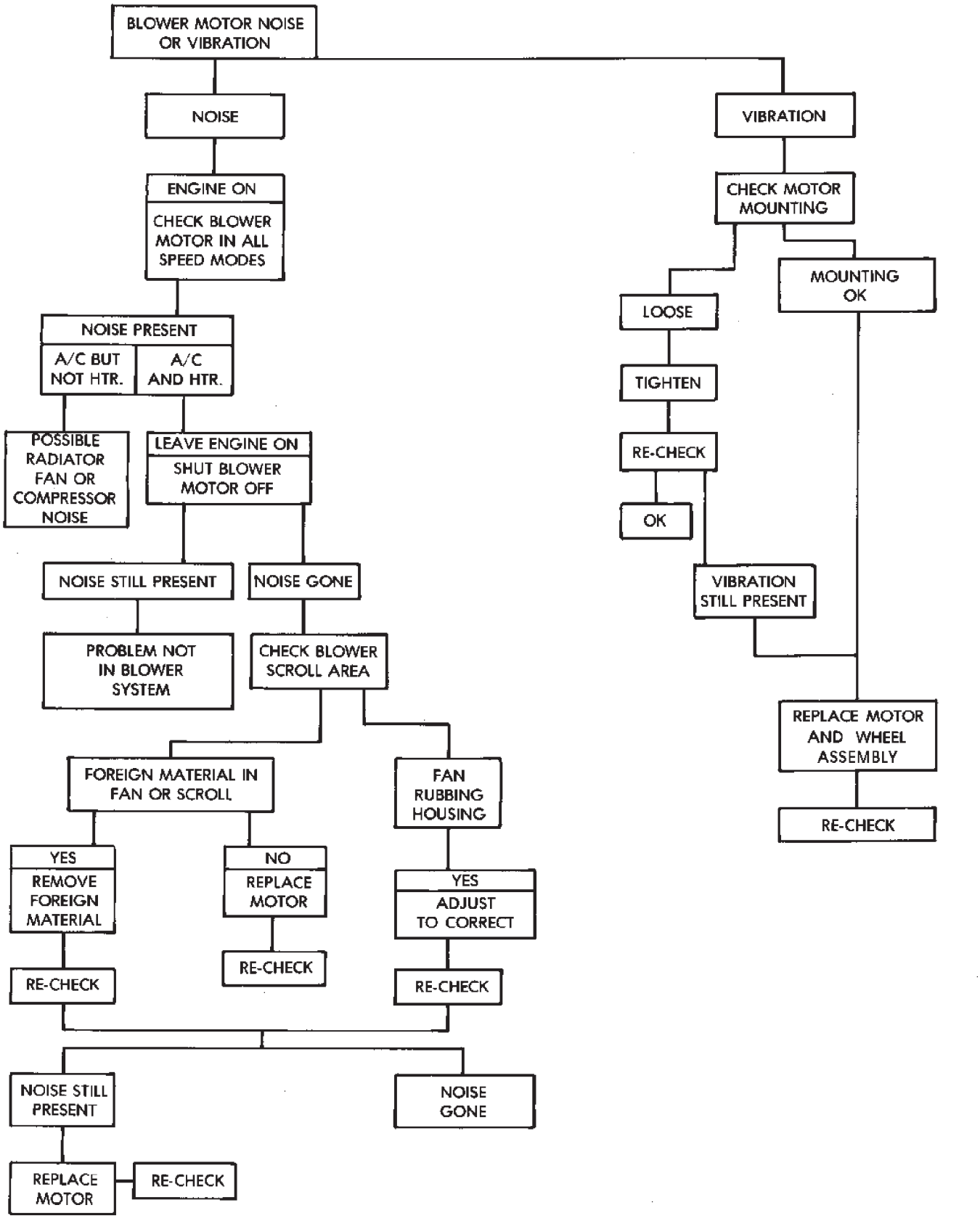

Fig. 4 Blower Motor Noise/Vibration Diagnosis

BLOWER MOTOR (Continued)

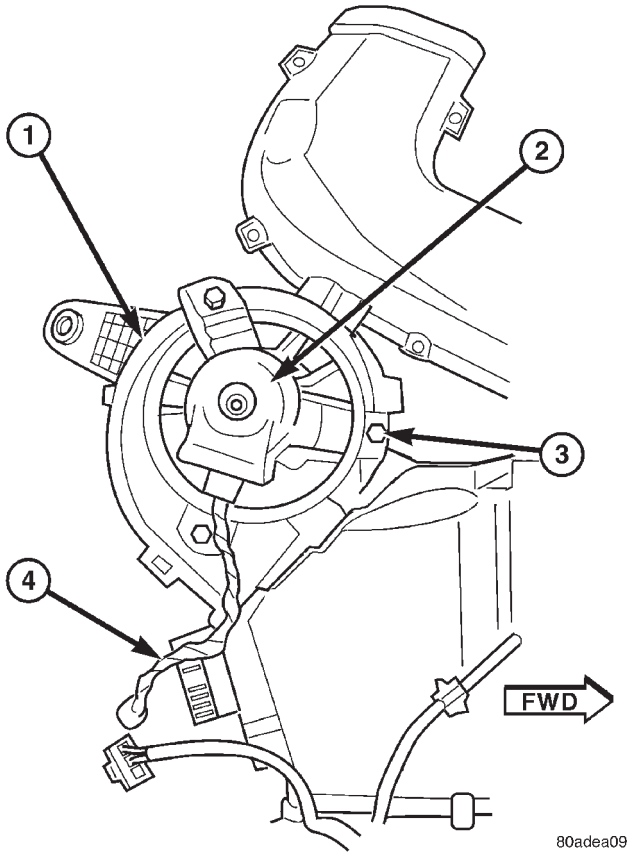

Fig. 5 Blower Motor

1 - REAR HEATER-A/C UNIT HOUSING
2 - BLOWER MOTOR
3 - SCREW (3)
4 - BLOWER PIGTAIL WIRE

INSTALLATION

(1) Position the blower motor and blower wheel onto the outboard side of the rear heater-A/C unit housing.

(2) Install and tighten the three screws that secure the blower motor to the rear heater-A/C unit housing. Tighten the screws to 2 N·m (18 in. lbs.).

(3) Reconnect the rear blower motor pigtail wire connector. With manual temperature control, the blower pigtail wire is connected to a take out and connector of the rear HVAC wire harness. With automatic temperature control, the blower pigtail wire is connected to a receptacle on the blower power module.

(4) Reinstall the rear heater-A/C unit housing into the vehicle. (Refer to 24 - HEATING & AIR CONDITIONING/DISTRIBUTION - REAR/REAR HEATER-A/C HOUSING - INSTALLATION).

REAR HEATER-A/C HOUSING

REMOVAL

WARNING: REFER TO THE APPLICABLE WARNINGS AND CAUTIONS FOR THIS SYSTEM BEFORE PERFORMING THE FOLLOWING OPERATION. (Refer to 24 - HEATING & AIR CONDITIONING/ PLUMBING - FRONT - WARNING - A/C PLUMBING), (Refer to 24 - HEATING & AIR CONDITIONING/ PLUMBING - FRONT - CAUTION - A/C PLUMBING), and (Refer to 24 - HEATING & AIR CONDITIONING/ PLUMBING - FRONT - WARNING - HEATER PLUMBING).

(1) Recover the refrigerant from the refrigerant system. (Refer to 24 - HEATING & AIR CONDITIONING/PLUMBING - FRONT/REFRIGERANT - STANDARD PROCEDURE - REFRIGERANT RECOVERY).

(2) Drain the engine cooling system. (Refer to 7 - COOLING - STANDARD PROCEDURE - COOLING SYSTEM DRAIN).

(3) Disconnect and isolate the battery negative cable.

(4) Raise and support the vehicle.

(5) Disconnect the underbody refrigerant line sealing plate from the rear heater-A/C unit evaporator extension line sealing plate that extends through the rear floor panel behind the right rear wheel housing (Fig. 6).

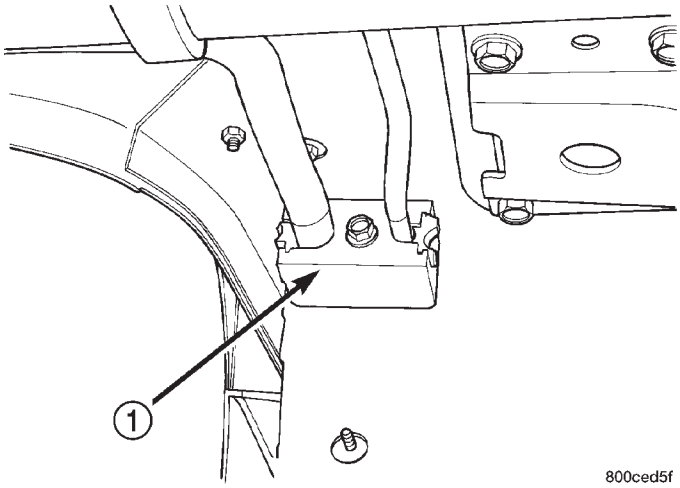

Fig. 6 Refrigerant Lines

1 - UNDERBODY REFRIGERANT LINE SEALING PLATE

(6) Remove the seals from the liquid line and suction line fittings and discard.

(7) Install plugs in, or tape over the opened liquid line and suction line fittings and both ports in the evaporator extension line sealing plate.

REAR HEATER-A/C HOUSING (Continued)

(8) Remove the three nuts that secure the rear heater-A/C unit mounting studs to the rear floor panel behind the right rear wheel housing (Fig. 7).

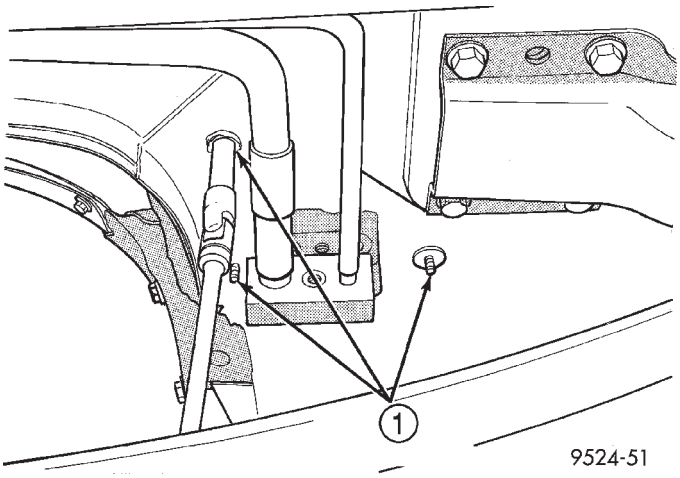

Fig. 7 Rear Heater-A/C Unit Mounting Studs

1 - REAR HEATER-A/C UNIT MOUNTING STUDS

(9) Lower the vehicle.

(10) Remove the right quarter trim panel and right D-pillar trim panel from the quarter inner panel. (Refer to 23 - BODY/INTERIOR/QUARTER TRIM PANEL - REMOVAL).

(11) Remove the rear A/C distribution duct from the rear heater-A/C unit and the rear roof duct. (Refer to 24 - HEATING & AIR CONDITIONING/ DISTRIBUTION - REAR/AUXILIARY A/C DISTRIBUTION DUCT - REMOVAL).

(12) Disconnect the body wire harness connector for the rear heater-A/C unit housing from the rear HVAC wire harness connector located near the expansion valve at the back of the unit.

(13) Remove the two screws that secure the top of the quarter trim panel attaching bracket to the quarter inner panel.

(14) Remove the two screws that secure the bottom of the quarter trim panel attaching bracket to the rear heater-A/C unit housing.

(15) Remove the rear heater distribution duct from the right quarter inner panel. (Refer to 24 - HEATING & AIR CONDITIONING/DISTRIBUTION - REAR/REAR HEATER DISTRIBUTION DUCT - REMOVAL).

(16) Take the proper precautions to protect the carpeting below the rear heater core from spilled engine coolant and have absorbent toweling readily available to clean up any spills.

(17) Disconnect the heater hoses at the rear heater core. (Refer to 24 - HEATING & AIR CONDITIONING/PLUMBING - REAR/HEATER HOSE - REMOVAL).

(18) Install plugs in, or tape over the opened heater core fittings and both heater hoses.

(19) Use absorbent toweling to mop up any engine coolant spills from the preceding operation.

(20) Remove the screw that secures the back of the rear heater-A/C unit housing to the right D-pillar (Fig. 8).

(21) Remove the screw that secures the front of the rear heater-A/C unit housing to the right quarter inner panel.

(22) Lift the rear heater-A/C unit housing up far enough for the lower mounting studs and the evaporator extension lines to clear the mounting holes in the rear floor panel.

(23) Remove the rear heater-A/C unit housing from the vehicle.

(24) Use absorbent toweling to mop up any engine coolant spills from the preceding operation.

INSTALLATION

NOTE: If the rear heater core or the rear heater-A/C housing have been removed from the vehicle for service, the rear heater core may be pre-filled with the proper engine coolant mixture prior to reconnecting the heater hoses to the heater core hose fittings. (Refer to 24 - HEATING & AIR CONDITIONING/ PLUMBING - REAR/HEATER CORE - STANDARD PROCEDURE - HEATER CORE FILLING).

(1) Position the rear heater-A/C unit housing into the vehicle with the evaporator extension line sealing plate inserted into the rectangular hole in the rear floor panel behind the right rear wheel house.

(2) Align the rear heater-A/C unit housing lower mounting studs with the mounting holes in the rear floor panel and lower the unit to the floor.

(3) Install and tighten the screw that secures the front of the rear heater-A/C unit housing to the right quarter inner panel. Tighten the screw to 11 N·m (97 in. lbs.).

(4) Install and tighten the screw that secures the back of the rear heater-A/C unit housing to the right D-pillar. Tighten the screw to 11 N·m (97 in. lbs.).

(5) Remove the plugs or tape from both heater core fittings and both heater hoses.

(6) Reconnect the heater hoses to the rear heater core. (Refer to 24 - HEATING & AIR CONDITIONING/PLUMBING - REAR/HEATER HOSE - INSTALLATION).

(7) Reinstall the rear heater distribution duct onto the right quarter inner panel. (Refer to 24 - HEATING & AIR CONDITIONING/DISTRIBUTION - REAR/REAR HEATER DISTRIBUTION DUCT - INSTALLATION).

REAR HEATER-A/C HOUSING (Continued)

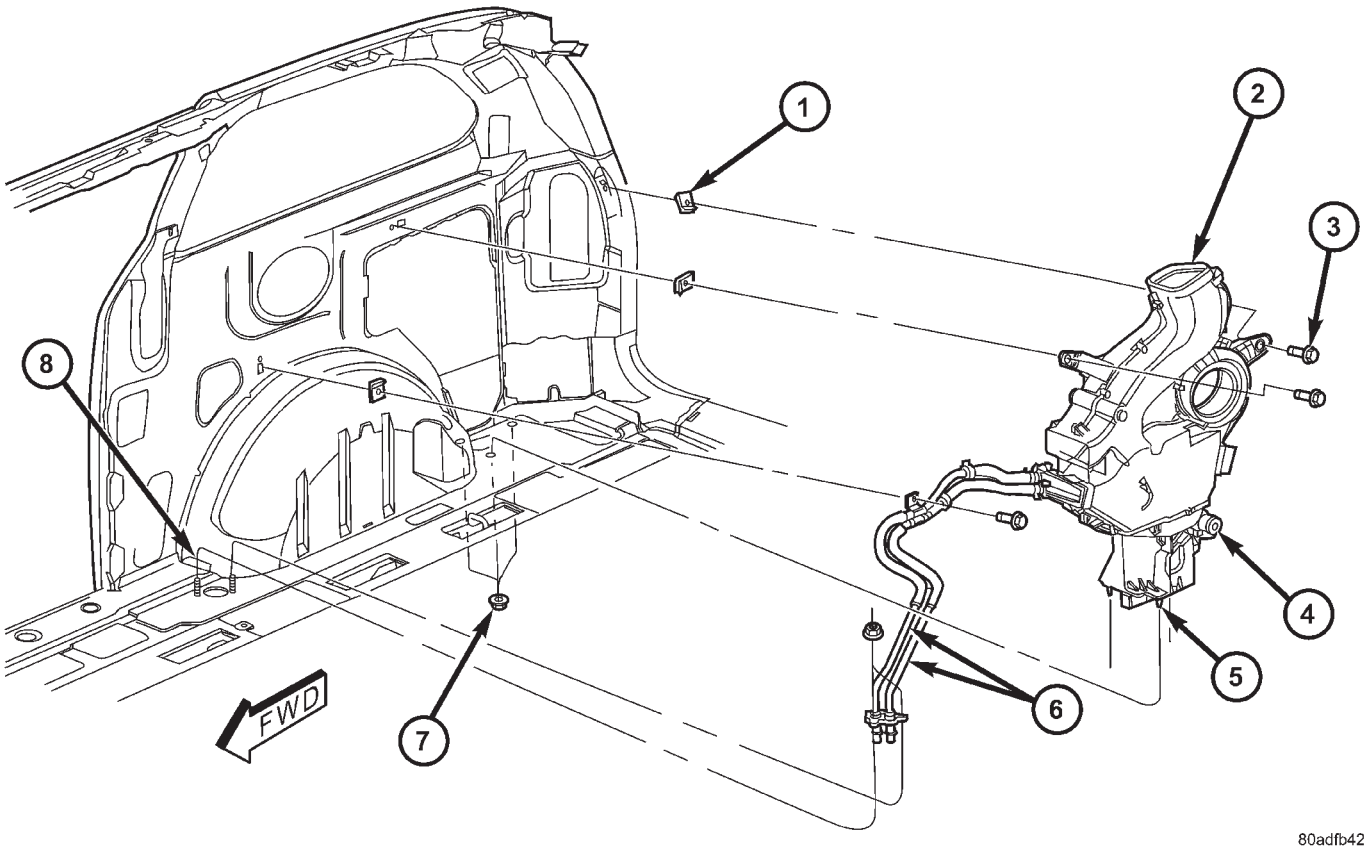

Fig. 8 Rear Heater-A/C Housing

1 - U-NUT (3)	5 - STUD (3)
2 - REAR HEATER-A/C HOUSING	6 - HEATER LINES
3 - SCREW (3)	7 - NUT (5)
4 - EXPANSION VALVE	8 - STUD (2)

(8) Install and tighten the two screws that secure the bottom of the quarter trim panel attaching bracket to the rear heater-A/C unit housing. Tighten the screws to 1.7 N·m (15 in. lbs.).

(9) Install and tighten the two screws that secure the top of the quarter trim panel attaching bracket to the quarter inner panel.

(10) Reconnect the body wire harness connector for the rear heater-A/C unit housing to the rear HVAC wire harness connector located near the expansion valve at the back of the unit.

(11) Reinstall the auxiliary A/C distribution duct onto the rear heater-A/C unit and the rear roof duct. (Refer to 24 - HEATING & AIR CONDITIONING/ DISTRIBUTION - REAR/AUXILIARY A/C DISTRIBUTION DUCT - INSTALLATION).

(12) Reinstall the right quarter trim panel and right D-pillar trim panel onto the quarter inner panel. (Refer to 23 - BODY/INTERIOR/QUARTER TRIM PANEL - INSTALLATION).

(13) Raise and support the vehicle.

(14) Install and tighten the three nuts that secure the rear heater-A/C unit mounting studs to the rear floor panel behind the right rear wheel housing. Tighten the nuts to 9 N·m (80 in. lbs.).

(15) Remove the tape or plugs from the underbody liquid line and suction line fittings and both ports in the rear heater-A/C unit evaporator extension line sealing plate that extends through the rear floor panel behind the right rear wheel housing.

(16) Lubricate new rubber O-ring seals with clean refrigerant oil and install them on the liquid line and suction line fittings.

(17) Reconnect the underbody refrigerant line sealing plate to the evaporator extension line sealing plate.

(18) Install and tighten the screw that secures the underbody refrigerant line sealing plate to the evaporator extension line sealing plate. Tighten the screw to 23 N·m (17 ft. lbs.).

(19) Lower the vehicle.

(20) Reconnect the battery negative cable.

REAR HEATER-A/C HOUSING (Continued)

(21) Refill the engine cooling system. (Refer to 7 - COOLING - STANDARD PROCEDURE - COOLING SYSTEM REFILL).

(22) Evacuate the refrigerant system. (Refer to 24 - HEATING & AIR CONDITIONING/PLUMBING - FRONT/REFRIGERANT - STANDARD PROCEDURE - REFRIGERANT SYSTEM EVACUATE).

(23) Charge the refrigerant system. (Refer to 24 - HEATING & AIR CONDITIONING/PLUMBING - FRONT/REFRIGERANT - STANDARD PROCEDURE - REFRIGERANT SYSTEM CHARGE).

(24) Run the HVAC Cooldown test to verify proper operation(Refer to 24 - HEATING & AIR CONDITIONING - DIAGNOSIS AND TESTING).

REAR HEATER DISTRIBUTION DUCT

REMOVAL

(1) Remove the trim from the right quarter inner panel. (Refer to 23 - BODY/INTERIOR/RIGHT QUARTER TRIM PANEL - REMOVAL).

(2) Remove the two screws that secure the rear heater distribution duct to the right quarter inner panel (Fig. 9).

(3) Slide the rear heater distribution duct forward far enough to disengage it from the outlet on the front of the rear heater-air conditioner unit housing.

(4) Remove the rear heater distribution duct from the vehicle.

INSTALLATION

(1) Align the inlet end of rear heater distribution duct with the outlet on the front of the rear heater-air conditioner unit housing.

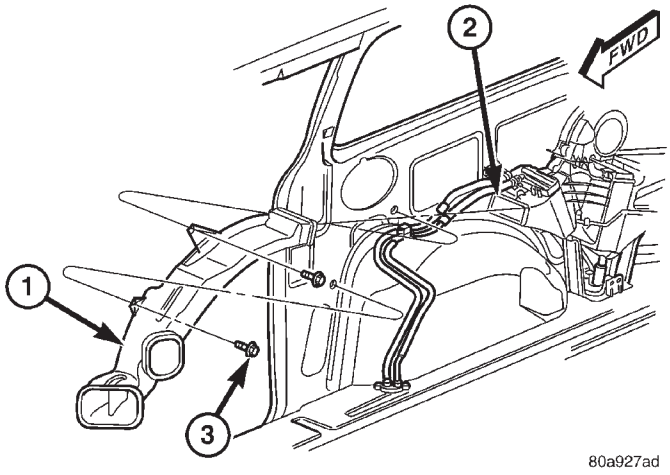

Fig. 9 Rear Heater Distribution Duct

1 - REAR HEATER DISTRIBUTION DUCT
2 - REAR HEATER-A/C UNIT OUTLET
3 - SCREW (2)

(2) Slide the rear heater distribution duct rearward far enough to fully engage the inlet end of the duct with the outlet on the front of the rear heater-air conditioner unit housing.

(3) Install and tighten the two screws that secure the rear heater distribution duct to the right quarter inner panel. Tighten the screws to 1.6 N·m (14 in. lbs.).

(4) Reinstall the trim onto the right quarter inner panel. (Refer to 23 - BODY/INTERIOR/RIGHT QUARTER TRIM PANEL - INSTALLATION).

PLUMBING - FRONT

TABLE OF CONTENTS

page

PLUMBING - FRONT
WARNING
WARNING . . . 60
WARNING . . . 60
WARNING - A/C PLUMBING . . . 60
CAUTION - A/C PLUMBING . . . 61
COMPRESSOR
DESCRIPTION . . . 62
OPERATION . . . 62
DIAGNOSIS AND TESTING - COMPRESSOR NOISE DIAGNOSIS . . . 62
REMOVAL
REMOVAL - COMPRESSOR . . . 63
REMOVAL - COMPRESSOR MOUNTING BRACKET - 2.4L ENGINE . . . 64
INSTALLATION
INSTALLATION - COMPRESSOR . . . 64
INSTALLATION - COMPRESSOR MOUNTING BRACKET - 2.4L ENGINE . . . 65
CONDENSER
DESCRIPTION . . . 65
OPERATION . . . 65
REMOVAL . . . 65
INSTALLATION . . . 66
DISCHARGE LINE
REMOVAL . . . 67
INSTALLATION . . . 68
EVAPORATOR
DESCRIPTION . . . 68
OPERATION . . . 68
REMOVAL . . . 69
INSTALLATION . . . 70
EXPANSION VALVE
DESCRIPTION . . . 71
OPERATION . . . 71
DIAGNOSIS AND TESTING - EXPANSION VALVE . . . 71
REMOVAL . . . 72
INSTALLATION . . . 73
HEATER CORE
DESCRIPTION . . . 73
OPERATION . . . 73
REMOVAL
REMOVAL- HEATER CORE EXTENSION TUBES . . . 74
REMOVAL - HEATER CORE . . . 75
INSTALLATION
INSTALLATION- HEATER CORE EXTENSION TUBES . . . 76
INSTALLATION - HEATER CORE . . . 77

page

HEATER HOSE
REMOVAL . . . 78
INSTALLATION . . . 79
HEATER HOSES - DIESEL SUPPLEMENTAL HEATER - BUX
REMOVAL . . . 80
INSTALLATION . . . 80
HEATER PIPES - DIESEL SUPPLEMENTAL HEATER - BUX
REMOVAL . . . 80
INSTALLATION . . . 82
LIQUID LINE
REMOVAL . . . 82
INSTALLATION . . . 84
RECEIVER/DRIER
DESCRIPTION . . . 85
OPERATION . . . 85
REMOVAL . . . 85
INSTALLATION . . . 86
REFRIGERANT
DESCRIPTION . . . 87
OPERATION . . . 87
DIAGNOSIS AND TESTING
DIAGNOSIS AND TESTING - REFRIGERANT SYSTEM CHARGE LEVEL . . . 87
DIAGNOSIS AND TESTING - REFRIGERANT SYSTEM LEAKS . . . 88
DIAGNOSIS AND TESTING - REFRIGERANT SYSTEM CHARGE LEVEL 2.5L DIESEL . . . 89
STANDARD PROCEDURE
STANDARD PROCEDURE - REFRIGERANT SYSTEM SERVICE EQUIPMENT . . . 90
STANDARD PROCEDURE - REFRIGERANT SYSTEM CHARGE . . . 91
STANDARD PROCEDURE - REFRIGERANT SYSTEM EVACUATE . . . 92
STANDARD PROCEDURE - REFRIGERANT RECOVERY . . . 93
REFRIGERANT OIL
DESCRIPTION . . . 93
OPERATION . . . 93
STANDARD PROCEDURE - REFRIGERANT OIL LEVEL . . . 93
SUCTION LINE
REMOVAL . . . 94
INSTALLATION . . . 95
SERVICE PORTS
REMOVAL . . . 95
INSTALLATION . . . 96

PLUMBING - FRONT

WARNING

WARNING

WARNING: DO NOT OPERATE DCHA IN AN ENCLOSED AREA SUCH AS A GARAGE THAT DOES NOT HAVE EXHAUST VENTILATION FACILITIES. ALWAYS VENT THE DCHA'S EXHAUST WHEN OPERATING THE DCHA. FAILURE TO FOLLOW THESE INSTRUCTION MAY RESULT IN PERSONAL INJURY OR DEATH.
ALLOW THE DCHA ASSEMBLY TO COOL BEFORE PERFORMING A COMPONENT INSPECTION/REPAIR/REPLACEMENT. FAILURE TO FOLLOW THESE INSTRUCTIONS MY RESULT IN PERSONAL INJURY. VERIFY THAT ALL DCHA FUEL LINES ARE SECURELY FASTENED TO THEIR RESPECTIVE COMPONENTS BEFORE THIS PROCEDURE.

WARNING

WARNING:: THE ENGINE COOLING SYSTEM IS DESIGNED TO DEVELOP INTERNAL PRESSURES OF 97 TO 123 KILOPASCALS (14 TO 18 POUNDS PER SQUARE INCH). DO NOT REMOVE OR LOOSEN THE COOLANT PRESSURE CAP, CYLINDER BLOCK DRAIN PLUGS, RADIATOR DRAIN, RADIATOR HOSES, HEATER HOSES, OR HOSE CLAMPS WHILE THE SYSTEM IS HOT AND UNDER PRESSURE. FAILURE TO OBSERVE THIS WARNING CAN RESULT IN SERIOUS BURNS FROM THE HEATED ENGINE COOLANT. ALLOW THE VEHICLE TO COOL FOR A MINIMUM OF 15 MINUTES BEFORE OPENING THE COOLING SYSTEM FOR SERVICE.

WARNING: THE ENGINE COOLING SYSTEM CONTAINS ANTIFREEZE. ANTIFREEZE IS AN ETHYLENE GLYCOL BASED COOLANT AND IS HARMFUL IF SWALLOWED OR IF THE VAPORS ARE INHALED. IF SWALLOWED, DRINK TWO GLASSES OF WATER AND INDUCE VOMITING. IF VAPORS ARE INHALED, MOVE TO AN AREA FOR FRESH AIR. SEEK MEDICAL ATTENTION IMMEDIATELY. DO NOT STORE IN OPEN OR UNMARKED CONTAINERS. WASH SKIN AND CLOTHING THOROUGHLY AFTER COMING IN CONTACT WITH ETHYLENE GLYCOL. KEEP OUT OF REACH OF CHILDREN.

WARNING: DISPOSE OF ETHYLENE GLYCOL BASED COOLANT PROPERLY. CONTACT YOUR DEALER OR A LOCAL GOVERNMENT AGENCY FOR THE LOCATION OF AN APPROVED ETHYLENE GLYCOL COLLECTION AND/OR RECYCLING CENTER IN YOUR AREA.

WARNING - A/C PLUMBING

WARNING:: THE AIR CONDITIONING SYSTEM CONTAINS REFRIGERANT UNDER HIGH PRESSURE. SEVERE PERSONAL INJURY MAY RESULT FROM IMPROPER SERVICE PROCEDURES. REPAIRS SHOULD ONLY BE PERFORMED BY QUALIFIED SERVICE PERSONNEL.

WARNING: AVOID BREATHING THE REFRIGERANT AND REFRIGERANT OIL VAPOR OR MIST. EXPOSURE MAY IRRITATE THE EYES, NOSE, AND/OR THROAT. WEAR EYE PROTECTION WHEN SERVICING THE AIR CONDITIONING REFRIGERANT SYSTEM. SERIOUS EYE INJURY CAN RESULT FROM DIRECT CONTACT WITH THE REFRIGERANT. IF EYE CONTACT OCCURS, SEEK MEDICAL ATTENTION IMMEDIATELY.

WARNING: DO NOT EXPOSE THE REFRIGERANT TO OPEN FLAME. POISONOUS GAS IS CREATED WHEN REFRIGERANT IS BURNED. AN ELECTRONIC LEAK DETECTOR IS RECOMMENDED.

WARNING: IF ACCIDENTAL SYSTEM DISCHARGE OCCURS, VENTILATE THE WORK AREA BEFORE RESUMING SERVICE. LARGE AMOUNTS OF REFRIGERANT RELEASED IN A CLOSED WORK AREA WILL DISPLACE THE OXYGEN AND CAUSE SUFFOCATION.

WARNING: THE EVAPORATION RATE OF R-134a REFRIGERANT AT AVERAGE TEMPERATURE AND ALTITUDE IS EXTREMELY HIGH. AS A RESULT, ANYTHING THAT COMES IN CONTACT WITH THE REFRIGERANT WILL FREEZE. ALWAYS PROTECT THE SKIN OR DELICATE OBJECTS FROM DIRECT CONTACT WITH THE REFRIGERANT.

WARNING: THE R-134a SERVICE EQUIPMENT OR THE VEHICLE REFRIGERANT SYSTEM SHOULD NOT BE PRESSURE TESTED OR LEAK TESTED WITH COMPRESSED AIR. SOME MIXTURES OF AIR AND R-134a HAVE BEEN SHOWN TO BE COMBUSTIBLE AT ELEVATED PRESSURES. THESE MIXTURES ARE POTENTIALLY DANGEROUS, AND MAY RESULT IN FIRE OR EXPLOSION CAUSING INJURY OR PROPERTY DAMAGE.

PLUMBING - FRONT (Continued)

CAUTION - A/C PLUMBING

CAUTION:: Liquid refrigerant is corrosive to metal surfaces. Follow the operating instructions supplied with the service equipment being used.

CAUTION: Never add R-12 to a refrigerant system designed to use R-134a. Damage to the system will result.

CAUTION: R-12 refrigerant oil must not be mixed with R-134a refrigerant oil. They are not compatible.

CAUTION: Do not use R-12 equipment or parts on the R-134a system. Damage to the system will result. All parts, tools, and equipment must be designed for R-134a refrigerant.

CAUTION: Do not discharge refrigerant into the atmosphere. Use an R-134a refrigerant recovery/recycling device that meets SAE Standard J2210.

CAUTION: The refrigerant must be recovered completely from the system before opening any fitting or connection. Open the fittings with caution, even after the system has been discharged. If any pressure is noticed as a fitting is loosened, tighten the fitting and recover the refrigerant from the system again.

CAUTION: The refrigerant system must always be evacuated before charging.

CAUTION: Do not overcharge the refrigerant system. This will cause excessive compressor head pressure and can cause noise and system failure.

CAUTION: Do not open the refrigerant system or remove the sealing caps from a replacement component until it is to be installed. This will prevent contamination in the system.

CAUTION: Before disconnecting a component, clean the outside of the fittings thoroughly to prevent contamination from entering the refrigerant system.

CAUTION: When it is necessary to open the refrigerant system, have everything needed to service the system ready. Immediately after disconnecting a component from the refrigerant system, seal the open fittings with a cap or plug to prevent the entrance of dirt and moisture. The refrigerant system should not be left open to the atmosphere any longer than necessary.

CAUTION: Before connecting an open refrigerant fitting, always install a new seal or gasket. All fittings with O-rings need to be coated with refrigerant oil before installation. Use only O-rings that are the correct size and approved for use with R-134a refrigerant. Failure to do so may result in a leak. Coat the fitting and seal with clean refrigerant oil before connecting. Unified plumbing connections with gaskets cannot be serviced with O-rings. The gaskets are not reusable and new gaskets do not require lubrication before installing.

CAUTION: When installing a refrigerant line, avoid sharp bends that may restrict refrigerant flow. A good rule for the flexible hose refrigerant lines is to keep the radius of all bends at least ten times the diameter of the hose. Sharp bends will reduce the flow of refrigerant.

CAUTION: Position the refrigerant lines away from exhaust system components or any sharp edges, which may damage the line. The flexible hose lines should be routed so they are at least 80 millimeters (3 inches) from the exhaust manifold. Inspect all flexible refrigerant system hose lines at least once a year to make sure they are in good condition and properly routed.

CAUTION: High pressures are produced in the refrigerant system when it is operating. Extreme care must be exercised to make sure that all refrigerant system connections are pressure tight.

CAUTION: Tighten refrigerant fittings only to the specified torque. The aluminum fittings used in the refrigerant system will not tolerate overtightening.

CAUTION: When disconnecting a refrigerant fitting, use a wrench on both halves of the fitting. This will prevent twisting of the refrigerant lines or tubes.

CAUTION: Refrigerant oil will absorb moisture from the atmosphere if left uncapped. Do not open a container of refrigerant oil until you are ready to use it. Replace the cap on the oil container immediately after using. Store refrigerant oil only in a clean, airtight, and moisture-free container.

PLUMBING - FRONT (Continued)

CAUTION: All tools, including the refrigerant recycling equipment, the manifold gauge set, and test hoses should be kept clean and dry. Keep the work area clean. Contamination of the refrigerant system through careless work habits must be avoided. The refrigerant system will remain chemically stable as long as pure, moisture-free R-134a refrigerant and refrigerant oil is used. Dirt, moisture, or air can upset this chemical stability. Operational troubles or serious damage can occur if foreign material is introduced to the refrigerant system.

COMPRESSOR

DESCRIPTION

The compressor used on this vehicle can be one of two models, depending upon the air conditioning system in the vehicle. All vehicles use the Nippondenso 10S20 compressor. This compressor use an aluminum swash plate, teflon coated pistons and aluminum sleeveless cylinder walls. This compressor includes an integral high pressure relief valve. The compressor is secured low in the right front corner of the engine compartment to a mounting bracket on the cylinder block (2.4L engine), or directly to the cylinder block (3.3L and 3.8L engines) is integral to the compressor. This compressor cannot be repaired. If faulty or damaged, the entire compressor must be replaced. The compressor clutch, pulley, and clutch coil are available for service replacement.

OPERATION

The compressor is driven by the engine through an electric clutch, drive pulley and belt arrangement. The compressor is lubricated by refrigerant oil that is circulated throughout the refrigerant system with the refrigerant. The compressor draws in low-pressure refrigerant vapor from the evaporator through its suction port. It then compresses the refrigerant into a high-pressure, high-temperature refrigerant vapor. The compressor pumps high-pressure refrigerant vapor to the condenser through the compressor discharge port. The mechanical high pressure relief valve is designed to vent refrigerant from the system to protect against damage to the compressor or other system components, caused by condenser air flow restrictions or an overcharge of refrigerant. The valve only vents enough refrigerant to reduce the system pressure, then re-seats itself. The valve opens at a discharge pressure of 3445 to 4135 kPA (500 to 600 psi) or above, and closes when a minimum discharge pressure of 2756 kPa (400 psi) is reached.

DIAGNOSIS AND TESTING - COMPRESSOR NOISE DIAGNOSIS

Excessive noise while the air conditioning compressor is operating can be caused by loose compressor mounts, a loose compressor clutch, or high operating pressures in the refrigerant system. Verify compressor drive belt condition, proper compressor mounting, correct refrigerant charge level, and compressor head pressure before compressor repair is performed.

With the close tolerances within the compressor, it is possible to experience a temporary lockup. The longer the compressor is inactive, the more likely the condition is to occur. This condition is the result of normal refrigerant migration within the refrigerant system caused by ambient temperature changes. The refrigerant migration may wash the refrigerant oil out of the compressor.

NOTE: Prior to a vehicle being removed from service or stored for more than two weeks, the compressor should be operated to ensure adequate refrigerant oil distribution throughout the system components. Turn on the air conditioner for a minimum of five minutes with outside air and the highest blower speed selected.

BELT NOISE

If the compressor drive belt slips at initial start-up, it does not necessarily mean the compressor has failed. The following procedure can be used to identify a compressor drive belt noise problem.

- Start the vehicle and run at idle.
- Turn the air conditioner On and listen for belt squeal.
- If belt squeal is heard, turn the air conditioner Off immediately.

If the belt squeal stops when the air conditioner is turned Off, perform the following repair procedures.

(1) Using an appropriate sized oil filter wrench or a strap wrench, grasp the outer diameter of the compressor clutch hub. While facing the compressor, rotate the hub clockwise, then counterclockwise. If the hub rotates, proceed to the next step. If the hub will not rotate, the compressor is internally damaged, and must be replaced.

(2) Turn the hub clockwise five complete revolutions and remove the tool.

(3) Start the vehicle and run at idle.

(4) Turn the air conditioner On. Observe the compressor and the system for normal operation, noting cooling performance and noise levels. Operate for five minutes before turning the air conditioner Off. If acceptable cooling performance is observed during compressor operation, the compressor does not need to be replaced.

COMPRESSOR (Continued)

(5) Inspect the drive belt for wear, damage, and proper tension. (Refer to 7 - COOLING/ACCESSORY DRIVE/DRIVE BELTS - DIAGNOSIS AND TESTING).

REMOVAL

REMOVAL - COMPRESSOR

WARNING: REFER TO THE APPLICABLE WARNINGS AND CAUTIONS FOR THIS SYSTEM BEFORE PERFORMING THE FOLLOWING OPERATION. (Refer to 24 - HEATING & AIR CONDITIONING/ PLUMBING - FRONT - WARNING - A/C PLUMBING) and (Refer to 24 - HEATING & AIR CONDITIONING/ PLUMBING - FRONT - CAUTION - A/C PLUMBING).

(1) Recover the refrigerant from the refrigerant system. (Refer to 24 - HEATING & AIR CONDITIONING/PLUMBING - FRONT/REFRIGERANT - STANDARD PROCEDURE - REFRIGERANT RECOVERY).

(2) Disconnect and isolate the battery negative cable.

(3) Remove the nut that secures the suction line fitting to the top of the compressor.

(4) Disconnect the suction line fitting from the compressor suction port.

(5) Remove the seal from the suction line fitting and discard.

(6) Install plugs in, or tape over the opened suction line fitting and the compressor suction port.

(7) Remove the nut that secures the discharge line fitting to the top of the compressor.

(8) Disconnect the discharge line fitting from the compressor discharge port.

(9) Remove the seal from the discharge line fitting and discard.

(10) Install plugs in, or tape over the opened discharge line fitting and the compressor discharge port.

(11) Raise and support the vehicle.

(12) Remove the serpentine accessory drive belt from the front of the engine. (Refer to 7 - COOLING/ ACCESSORY DRIVE/DRIVE BELTS - 2.4L - REMOVAL) or (Refer to 7 - COOLING/ACCESSORY DRIVE/DRIVE BELTS - 3.3L/3.8L - REMOVAL).

(13) Disconnect the engine wire harness connector for the compressor clutch coil from the coil pigtail wire connector on the top of the compressor (Fig. 1) or (Fig. 2).

(14) On models with the 3.3L and 3.8L engines, disengage the retainer on the engine wire harness compressor clutch coil take out from the bracket on the top of the compressor.

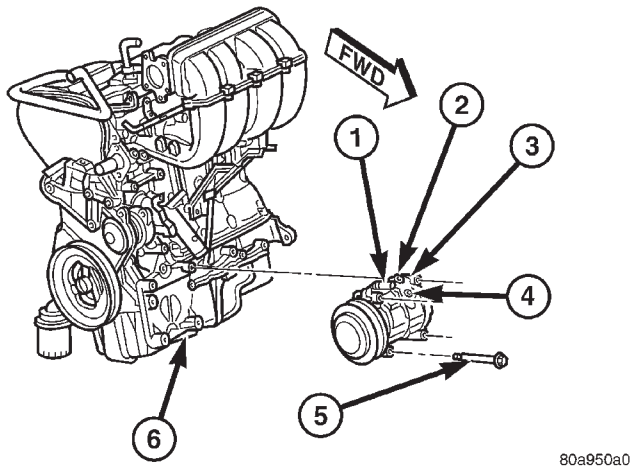

Fig. 1 Compressor - 2.4L Engine

1 - CLUTCH COIL CONNECTOR
2 - DISCHARGE PORT
3 - COMPRESSOR
4 - SUCTION PORT
5 - SCREW (4)
6 - COMPRESSOR MOUNTING BRACKET

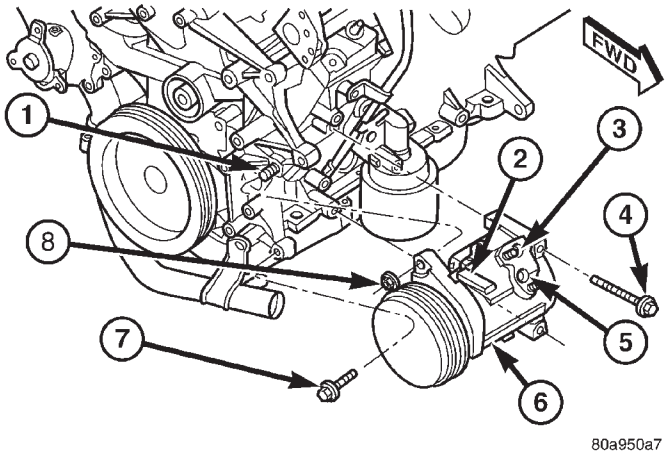

Fig. 2 Compressor - 3.3L/3.8L Engine

1 - STUD
2 - CLUTCH COIL CONNECTOR
3 - DISCHARGE PORT
4 - SCREW (2)
5 - SUCTION PORT
6 - COMPRESSOR
7 - SCREW
8 - NUT

(15) On models with the 2.4L engine, remove the four screws that secure the compressor to the mounting bracket on the engine.

(16) On models with the 3.3L and 3.8L engines, remove the three screws and one nut that secure the compressor to the engine.

COMPRESSOR (Continued)

(17) Remove the compressor from the engine compartment.

NOTE: If a replacement compressor is being installed, be certain to drain and measure the refrigerant oil contained in the removed compressor. This will determine how much oil the replacement compressor must contain before it is installed. (Refer to 24 - HEATING & AIR CONDITIONING/ PLUMBING - FRONT/REFRIGERANT OIL - STANDARD PROCEDURE - REFRIGERANT OIL LEVEL).

REMOVAL - COMPRESSOR MOUNTING BRACKET - 2.4L ENGINE

(1) Remove the compressor from the mounting bracket. (Refer to 24 - HEATING & AIR CONDITIONING/PLUMBING/COMPRESSOR - REMOVAL).

(2) Remove the four screws that secure the compressor mounting bracket to the engine (Fig. 3).

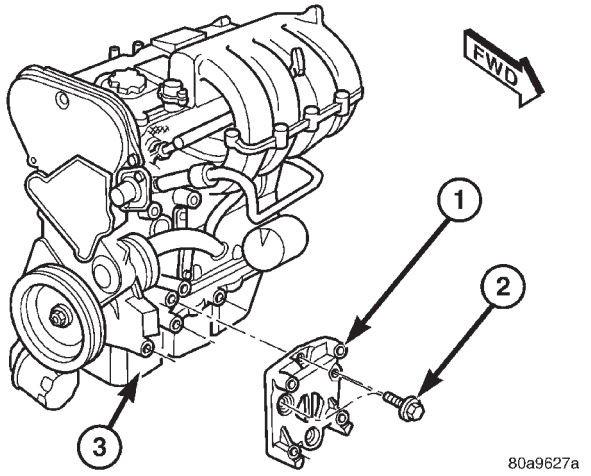

Fig. 3 Compressor Mounting Bracket - 2.4L Engine

1 - MOUNTING BRACKET
2 - SCREWS (4)
3 - ENGINE

(3) Remove the compressor mounting bracket from the engine.

INSTALLATION

INSTALLATION - COMPRESSOR

NOTE: If a replacement compressor is being installed, be certain to check the refrigerant oil level. (Refer to 24 - HEATING & AIR CONDITIONING/ PLUMBING - FRONT/REFRIGERANT OIL - STANDARD PROCEDURE - REFRIGERANT OIL LEVEL). Use only refrigerant oil of the type recommended for the compressor in the vehicle.

(1) Position the compressor into the engine compartment.

(2) On models with the 2.4L engine, loosely install the four screws that secure the compressor to the mounting bracket on the engine. Tighten the screws to 28 N·m (21 ft. lbs.).

(3) On models with the 3.3L and 3.8L engines, loosely install the three screws and one nut that secure the compressor to the engine. Tighten each of the fasteners using the following sequence to 54 N·m (40 ft. lbs.).

- The upper screw at the rear of the compressor.
- The lower screw at the rear of the compressor.
- The lower screw at the front of the compressor.
- The upper nut at the front of the compressor.

(4) On models with the 3.3L and 3.8L engines only, engage the retainer on the engine wire harness compressor clutch coil take out with the bracket on the top of the compressor.

(5) Reconnect the engine wire harness connector for the compressor clutch coil to the coil pigtail wire connector on the top of the compressor.

(6) Reinstall the serpentine accessory drive belt onto the front of the engine. (Refer to 7 - COOLING/ ACCESSORY DRIVE/DRIVE BELTS - 2.4L - INSTALLATION) or (Refer to 7 - COOLING/ACCESSORY DRIVE/DRIVE BELTS - 3.3L/3.8L - INSTALLATION).

(7) Lower the vehicle.

(8) Remove the tape or plugs from the compressor discharge port and the discharge line fitting.

(9) Lubricate a new rubber O-ring seal with clean refrigerant oil and install it on the discharge line fitting.

(10) Reconnect the discharge line fitting to the compressor discharge port.

(11) Install and tighten the nut that secures the discharge line fitting to the compressor. Tighten the nut to 23 N·m (17 ft. lbs.).

(12) Remove the tape or plugs from the compressor suction port and the suction line fitting.

(13) Lubricate a new rubber O-ring seal with clean refrigerant oil and install it on the suction line fitting.

(14) Reconnect the suction line fitting to the compressor suction port.

(15) Install and tighten the nut that secures the suction line fitting to the compressor. Tighten the nut to 23 N·m (17 ft. lbs.).

(16) Reconnect the battery negative cable.

(17) Evacuate the refrigerant system. (Refer to 24 - HEATING & AIR CONDITIONING/PLUMBING - FRONT/REFRIGERANT - STANDARD PROCEDURE - REFRIGERANT SYSTEM EVACUATE).

(18) Charge the refrigerant system. (Refer to 24 - HEATING & AIR CONDITIONING/PLUMBING -

COMPRESSOR (Continued)

FRONT/REFRIGERANT - STANDARD PROCEDURE - REFRIGERANT SYSTEM CHARGE).

INSTALLATION - COMPRESSOR MOUNTING BRACKET - 2.4L ENGINE

(1) Position the compressor mounting bracket onto the engine.

(2) Install and tighten the four screws that secure the compressor mounting bracket to the engine. Tighten the screws to 54 N·m (40 ft. lbs.).

(3) Reinstall the compressor onto the mounting bracket. (Refer to 24 - HEATING & AIR CONDITIONING/PLUMBING/COMPRESSOR - INSTALLATION).

CONDENSER

DESCRIPTION

The condenser is integral to a cooling module which includes the radiator, the electric cooling fan, the fan shroud, air seals and an automatic transmission oil cooler. The cooling module is located in the air flow in the front of the engine compartment behind the radiator grille. The condenser cannot be repaired or adjusted and, if faulty or damaged, it must be replaced. The condenser may be removed from the cooling module for service without removing the cooling module from the vehicle.

OPERATION

The condenser is a heat exchanger that allows the high-pressure refrigerant gas being discharged by the compressor to give up its heat to the air passing over the condenser fins. When the refrigerant gas gives up its heat, it condenses. When the refrigerant leaves the condenser, it has become a high-pressure liquid refrigerant. The volume of air flowing over the condenser fins is critical to the proper cooling performance of the air conditioning system. Therefore, it is important that there are no objects placed in front of the radiator grille openings in the front of the vehicle or foreign material on the condenser fins that might obstruct air flow. Also, any factory-installed air seals or shrouds must be properly reinstalled following radiator or condenser service.

REMOVAL

WARNING: REFER TO THE APPLICABLE WARNINGS AND CAUTIONS FOR THIS SYSTEM BEFORE PERFORMING THE FOLLOWING OPERATION. (Refer to 24 - HEATING & AIR CONDITIONING/PLUMBING - FRONT - WARNING - A/C PLUMBING) and (Refer to 24 - HEATING & AIR CONDITIONING/PLUMBING - FRONT - CAUTION - A/C PLUMBING).

NOTE: Before removing the condenser, note the location of each of the radiator and condenser air seals. These air seals are used to direct air through the condenser and radiator. The air seals must be reinstalled in their proper locations in order for the air conditioning and engine cooling systems to perform as designed.

(1) Recover the refrigerant from the refrigerant system. (Refer to 24 - HEATING & AIR CONDITIONING/PLUMBING - FRONT/REFRIGERANT - STANDARD PROCEDURE - REFRIGERANT RECOVERY).

(2) Remove the two large screws that secure the front fascia and the outboard ends of the radiator sight shield to the radiator closure panel crossmember (Fig. 4).

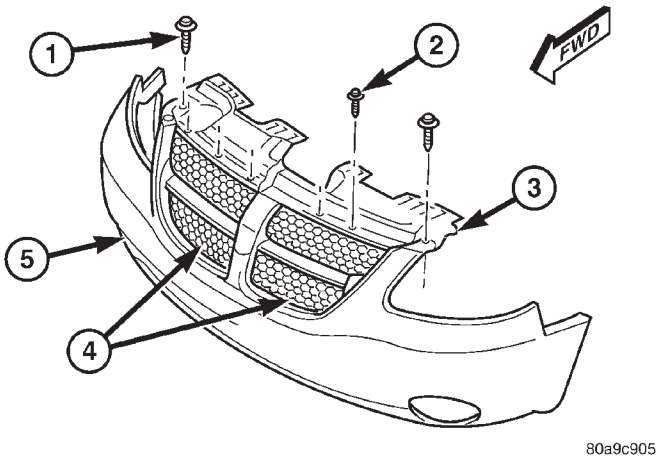

Fig. 4 Radiator Sight Shield

1 - LARGE SCREWS (2)
2 - SMALL SCREWS (5)
3 - RADIATOR SIGHT SHIELD
4 - GRILLE INSERTS
5 - FRONT FASCIA

(3) Remove the five small screws that secure the front fascia grille inserts to the radiator sight shield.

(4) Remove the radiator sight shield from the radiator closure panel crossmember.

(5) Remove the two screws that secure the hood latch unit to the front of the radiator closure panel crossmember and move the latch out of the way over the top of the crossmember. Mark the location of latch for reinstallation.

(6) Disconnect the hoses from the transmission oil cooler fittings on the left side of the cooling module. (Refer to 7 - COOLING/TRANSMISSION/TRANS COOLER LINES - REMOVAL).

(7) Remove the nut that secures the discharge line fitting to the condenser on the right side of the cooling module.

CONDENSER (Continued)

(8) Disconnect the discharge line fitting from the condenser inlet port.

(9) Remove the seal from the discharge line fitting and discard.

(10) Install plugs in, or tape over the opened discharge line fitting and the condenser inlet port.

(11) Remove the nut that secures the liquid line fitting to the condenser on the right side of the cooling module.

(12) Disconnect the liquid line fitting from the condenser outlet port.

(13) Remove the seal from the liquid line fitting and discard.

(14) Install plugs in, or tape over the opened liquid line fitting and the condenser outlet port.

(15) Remove the screw that secures the top of the mounting bracket on each side of the condenser to the cooling module (Fig. 5).

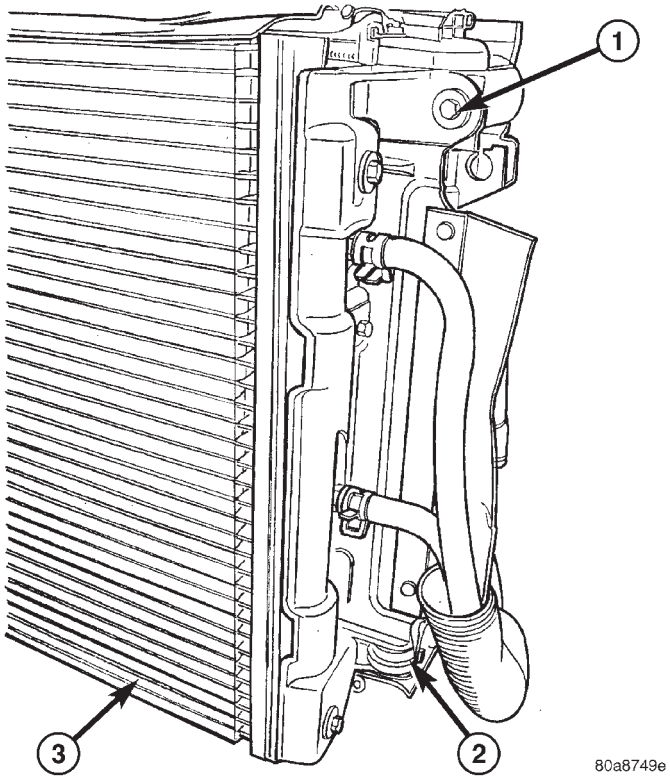

Fig. 5 Condenser Mounting

1 - SCREW (2)
2 - LOWER MOUNT ISOLATOR (2)
3 - CONDENSER

(16) Lift the condenser, transmission oil cooler, and mounting brackets as a unit far enough to disengage the locating pin that secures the mounting brackets in the lower mount rubber isolators on each side of the cooling module.

(17) Remove the condenser, transmission oil cooler, and mounting brackets from the vehicle as a unit.

(18) Remove the two screws that secure each mounting bracket to the sides of the condenser.

(19) Remove the one screw that secures the left mounting bracket to the side of the transmission oil cooler.

(20) Remove the left mounting bracket from the side of the condenser and transmission oil cooler.

(21) Remove the condenser from the right mounting bracket and transmission oil cooler unit.

INSTALLATION

NOTE: If the condenser is being replaced, add 30 milliliters (1 fluid ounce) of refrigerant oil to the refrigerant system. Use only refrigerant oil of the type recommended for the compressor in the vehicle.

NOTE: Be certain that each of the radiator and condenser air seals are reinstalled in their proper locations. These air seals are required in order for the air conditioning and engine cooling systems to perform as designed.

(1) Position the condenser to the right mounting bracket and transmission oil cooler unit.

(2) Position the left mounting bracket onto the side of the condenser and transmission oil cooler.

(3) Install and tighten the one screw that secures the left mounting bracket to the side of the transmission oil cooler. Tighten the screw to 5 N·m (45 in. lbs.).

(4) Install and tighten the two screws that secure each mounting bracket to the sides of the condenser. Tighten the screws to 5 N·m (45 in. lbs.).

(5) Position the condenser, transmission oil cooler, and mounting brackets into the vehicle as a unit. Be certain that the locating pins that secure the mounting brackets are engaged in the lower mount rubber isolators on each side of the cooling module.

NOTE: Verify that the condensor isolators are all installed and positioned correctly.

(6) Install and tighten the two screws that secure the top of the mounting bracket on each side of the condenser to the cooling module. Tighten the screws to 5 N·m (45 in. lbs.).

(7) Remove the tape or plugs from the condenser outlet port and the liquid line fitting.

(8) Lubricate a new rubber O-ring seal with clean refrigerant oil and install it on the liquid line fitting.

(9) Reconnect the liquid line fitting to the condenser outlet port on the right side of the cooling module.

CONDENSER (Continued)

(10) Install and tighten the nut that secures the liquid line fitting to the condenser. Tighten the nut to 23 N·m (17 ft. lbs.).

(11) Remove the tape or plugs from the condenser inlet port and the discharge line fitting.

(12) Lubricate a new rubber O-ring seal with clean refrigerant oil and install it on the discharge line fitting.

(13) Reconnect the discharge line fitting to the condenser inlet port on the right side of the cooling module.

(14) Install and tighten the nut that secures the discharge line fitting to the condenser. Tighten the nut to 23 N·m (17 ft. lbs.).

(15) Reconnect the hoses to the transmission oil cooler fittings on the left side of the cooling module. (Refer to 7 - COOLING/TRANSMISSION/TRANS COOLER LINES - INSTALLATION).

(16) Reposition the hood latch unit to the front of the radiator closure panel crossmember.

(17) Install and tighten the two screws that secure the hood latch unit to the front of the radiator closure panel crossmember. Check and adjust the hood latch as needed. Tighten the screws to 14 N·m (123 in. lbs.).

(18) Position the radiator sight shield onto the radiator closure panel crossmember.

(19) Install and tighten the five small screws that secure the front fascia grille inserts to the radiator sight shield. Tighten the screws to 2 N·m (18 in. lbs.).

(20) Install and tighten the two large screws that secure the front fascia and the outboard ends of the radiator sight shield to the radiator closure panel crossmember. Tighten the screws to 6 N·m (53 in. lbs.).

(21) Evacuate the refrigerant system. (Refer to 24 - HEATING & AIR CONDITIONING/PLUMBING - FRONT/REFRIGERANT - STANDARD PROCEDURE - REFRIGERANT SYSTEM EVACUATE).

(22) Charge the refrigerant system. (Refer to 24 - HEATING & AIR CONDITIONING/PLUMBING - FRONT/REFRIGERANT - STANDARD PROCEDURE - REFRIGERANT SYSTEM CHARGE).

DISCHARGE LINE

REMOVAL

WARNING: REFER TO THE APPLICABLE WARNINGS AND CAUTIONS FOR THIS SYSTEM BEFORE PERFORMING THE FOLLOWING OPERATION. (Refer to 24 - HEATING & AIR CONDITIONING/PLUMBING - FRONT - WARNING - A/C PLUMBING) and (Refer to 24 - HEATING & AIR CONDITIONING/PLUMBING - FRONT - CAUTION - A/C PLUMBING).

(1) Recover the refrigerant from the refrigerant system. (Refer to 24 - HEATING & AIR CONDITIONING/PLUMBING - FRONT/REFRIGERANT - STANDARD PROCEDURE - REFRIGERANT RECOVERY).

(2) Remove the two large screws that secure the front fascia and the outboard ends of the radiator sight shield to the radiator closure panel crossmember (Fig. 6).

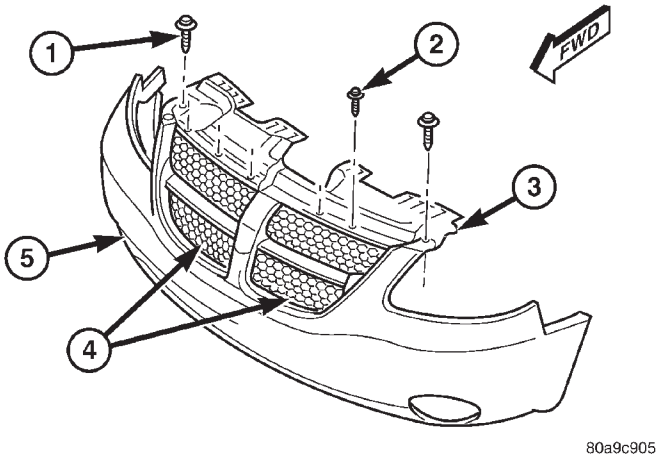

Fig. 6 Radiator Sight Shield

1 - LARGE SCREWS (2)
2 - SMALL SCREWS (5)
3 - RADIATOR SIGHT SHIELD
4 - GRILLE INSERTS
5 - FRONT FASCIA

(3) Remove the five small screws that secure the front fascia grille inserts to the radiator sight shield.

(4) Remove the radiator sight shield from the radiator closure panel crossmember.

(5) Remove the nut that secures the discharge line fitting to the condenser on the right side of the cooling module (Fig. 7).

(6) Disconnect the discharge line fitting from the condenser inlet port.

(7) Remove the seal from the discharge line fitting and discard.

(8) Install plugs in, or tape over the opened discharge line fitting and the condenser inlet port.

(9) Remove the nut that secures the discharge line fitting to the top of the compressor (Fig. 8).

(10) Disconnect the discharge line fitting from the compressor discharge port.

(11) Remove the seal from the discharge line fitting and discard.

(12) Install plugs in, or tape over the opened discharge line fitting and the compressor discharge port.

(13) Remove the discharge line from the engine compartment.

DISCHARGE LINE (Continued)

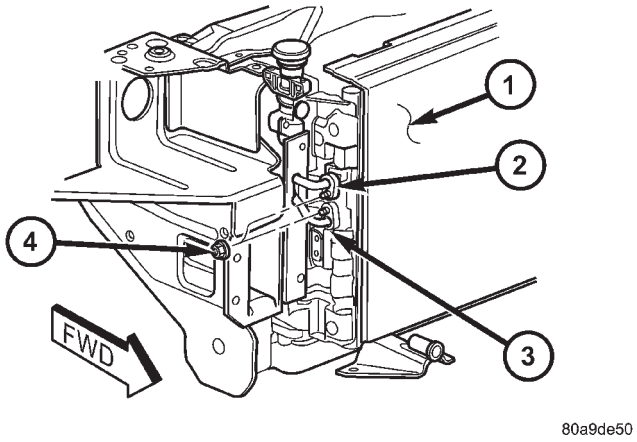

Fig. 7 Condenser Connections

1 - CONDENSER
2 - DISCHARGE LINE FITTING
3 - LIQUID LINE FITTING
4 - NUT

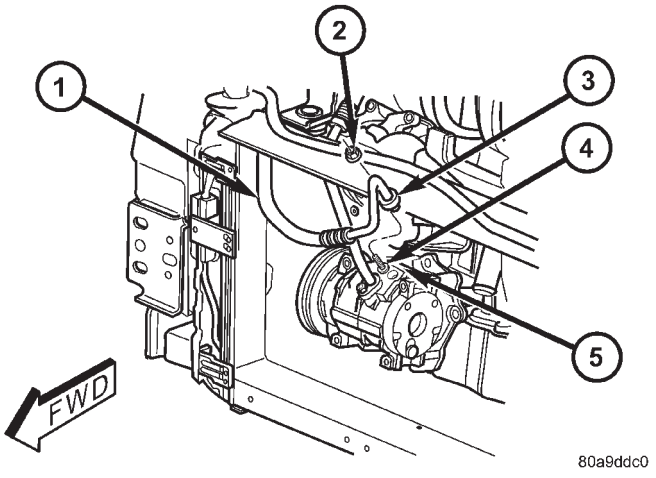

Fig. 8 Discharge Line

1 - DISCHARGE LINE
2 - NUT
3 - DISCHARGE LINE FITTING
4 - STUD
5 - DISCHARGE PORT

INSTALLATION

(1) Position the discharge line into the engine compartment.

(2) Remove the tape or plugs from the compressor discharge port and the discharge line fitting.

(3) Lubricate a new rubber O-ring seal with clean refrigerant oil and install it on the discharge line fitting.

(4) Reconnect the discharge line fitting to the compressor discharge port on the top of the compressor.

(5) Install and tighten the nut that secures the discharge line fitting to the compressor. Tighten the nut to 23 N·m (17 ft. lbs.).

(6) Remove the tape or plugs from the condenser inlet port and the discharge line fitting.

(7) Lubricate a new rubber O-ring seal with clean refrigerant oil and install it on the discharge line fitting.

(8) Reconnect the discharge line fitting to the condenser inlet port on the right side of the cooling module.

(9) Install and tighten the nut that secures the discharge line fitting to the condenser. Tighten the nut to 23 N·m (17 ft. lbs.).

(10) Position the radiator sight shield onto the radiator closure panel crossmember.

(11) Install and tighten the five small screws that secure the front fascia grille inserts to the radiator sight shield. Tighten the screws to 2 N·m (18 in. lbs.).

(12) Install and tighten the two large screws that secure the front fascia and the outboard ends of the radiator sight shield to the radiator closure panel crossmember. Tighten the screws to 6 N·m (53 in. lbs.).

(13) Evacuate the refrigerant system. (Refer to 24 - HEATING & AIR CONDITIONING/PLUMBING - FRONT/REFRIGERANT - STANDARD PROCEDURE - REFRIGERANT SYSTEM EVACUATE).

(14) Charge the refrigerant system. (Refer to 24 - HEATING & AIR CONDITIONING/PLUMBING - FRONT/REFRIGERANT - STANDARD PROCEDURE - REFRIGERANT SYSTEM CHARGE).

EVAPORATOR

DESCRIPTION

The evaporator is located in the heater-A/C unit housing, behind the instrument panel. The evaporator is positioned in the heater-A/C housing so that all air that enters the housing must pass over the fins of the evaporator before it is distributed through the system ducts and outlets. However, air passing over the evaporator fins will only be conditioned when the compressor is engaged and circulating refrigerant through the evaporator tubes. The heater-A/C unit housing must be removed from the vehicle to access the evaporator for service. The evaporator cannot be adjusted or repaired and, if faulty or damaged, it must be replaced.

OPERATION

Refrigerant enters the evaporator from the expansion valve as a low-temperature, low-pressure liquid/vapor mixture. As air flows over the fins of the evaporator, the humidity in the air condenses on the fins,

EVAPORATOR (Continued)

and the heat from the air is absorbed by the refrigerant. Heat absorption causes the refrigerant to boil and vaporize. The refrigerant becomes a low-pressure gas when it leaves the evaporator.

REMOVAL

WARNING: REFER TO THE APPLICABLE WARNINGS AND CAUTIONS FOR THIS SYSTEM BEFORE PERFORMING THE FOLLOWING OPERATION. (Refer to 24 - HEATING & AIR CONDITIONING/ PLUMBING - FRONT - WARNING - A/C PLUMBING), (Refer to 24 - HEATING & AIR CONDITIONING/ PLUMBING - FRONT - CAUTION - A/C PLUMBING), and (Refer to 24 - HEATING & AIR CONDITIONING/ PLUMBING - FRONT - WARNING - HEATER PLUMBING).

(1) Remove the HVAC unit housing from the vehicle. (Refer to 24 - HEATING & AIR CONDITIONING/DISTRIBUTION - FRONT/HVAC HOUSING - REMOVAL).

(2) Remove the heater core tubes from the heater core. (Refer to 24 - HEATING & AIR CONDITIONING/PLUMBING - FRONT/HEATER CORE - REMOVAL - HEATER CORE TUBES).

(3) Remove and discard the foam seal from the HVAC housing seal flange around the fresh air inlet opening and the expansion valve/evaporator tube opening on the dash panel side of the unit.

(4) Remove the expansion valve from the evaporator inlet and outlet tube fittings. (Refer to 24 - HEATING & AIR CONDITIONING/PLUMBING - FRONT/EXPANSION VALVE - REMOVAL).

(5) Disconnect the HVAC wire harness connector for the blower motor from the motor connector receptacle on the bottom of the outboard end of the evaporator housing.

(6) Disengage the HVAC wire harness from the routing clips molded into the outside of the HVAC housing components.

(7) Remove the three screws from the dash panel side of the unit that secure the top of the distribution housing to the inboard end of the evaporator housing (Fig. 9).

(8) Pull the top of the distribution housing away from the evaporator housing far enough to disengage the two hook formations on the bottom of the distribution housing from the two receptacles on the evaporator housing (Fig. 10).

(9) Remove the two screws that secure the upper intake air housing to the lower intake air housing.

(10) Remove the three screws that secure the upper intake air housing to the top of the outboard end of the evaporator housing. Be certain not to miss the screw located just inside the inboard side of the fresh air intake opening.

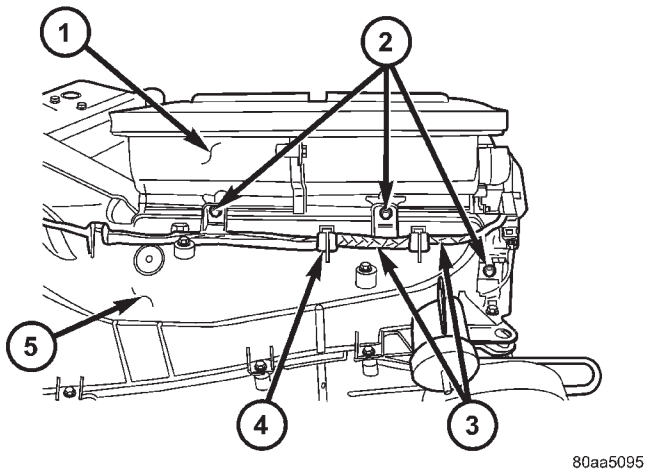

Fig. 9 HVAC Housing

1 - DISTRIBUTION HOUSING
2 - SCREWS (3)
3 - HVAC WIRING HARNESS
4 - ROUTING CLIP
5 - EVAPORATOR HOUSING

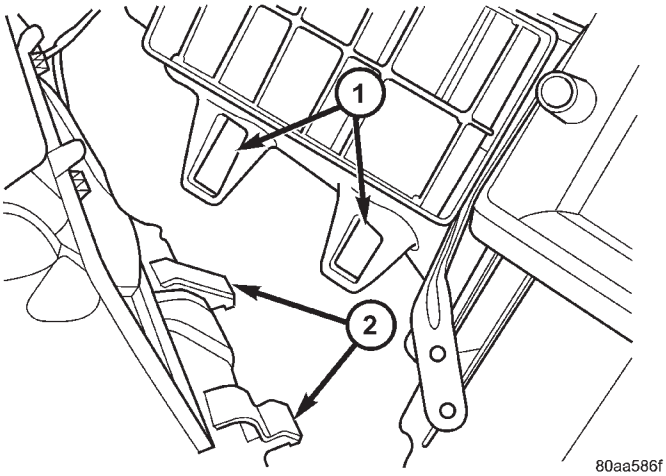

Fig. 10 Distribution Housing Hooks

1 - RECEPTACLES ON EVAPORATOR HOUSING
2 - HOOKS ON DISTRIBUTION HOUSING

(11) Remove the upper intake air housing from the top of the evaporator housing to expose the recirculation air door and the blower wheel housing (Fig. 11).

(12) Remove the two screws that secure the upper half of the recirculation air door to the lower half of the door.

(13) Remove the upper half of the recirculation air door from the lower half of the door (Fig. 12).

(14) Remove the twelve screws around the perimeter of the evaporator housing that secure the upper housing half to the lower half.

EVAPORATOR (Continued)

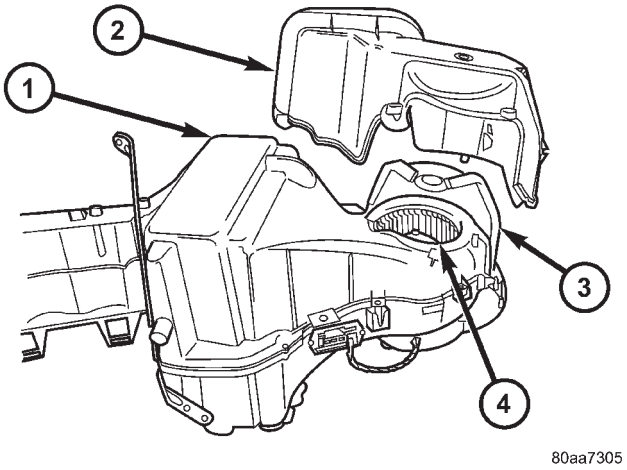

Fig. 11 Upper Intake Air Housing

1 - EVAPORATOR HOUSING
2- UPPER INTAKE AIR HOUSING
3 - RECIRCULATION AIR DOOR
4 - BLOWER WHEEL

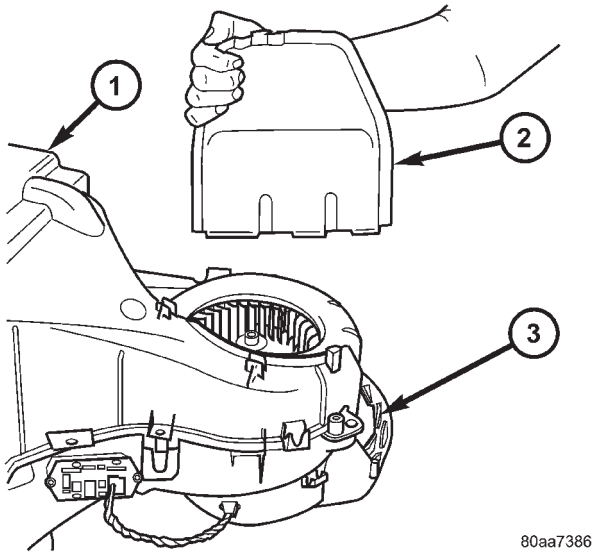

Fig. 12 Recirculation Air Door

1 - EVAPORATOR HOUSING
2 - UPPER RECIRCULATION AIR DOOR
3 - LOWER INTAKE AIR HOUSING

(15) Carefully separate and remove the upper half of the evaporator housing from the lower half. Be certain not to lose the rubber grommet for the HVAC wire harness evaporator temperature sensor take out. This grommet is located on the inboard side of the flange around the expansion valve/evaporator tube opening on the dash panel side of the unit, where it is captured in a notched area between the upper and lower housing halves (Fig. 13).

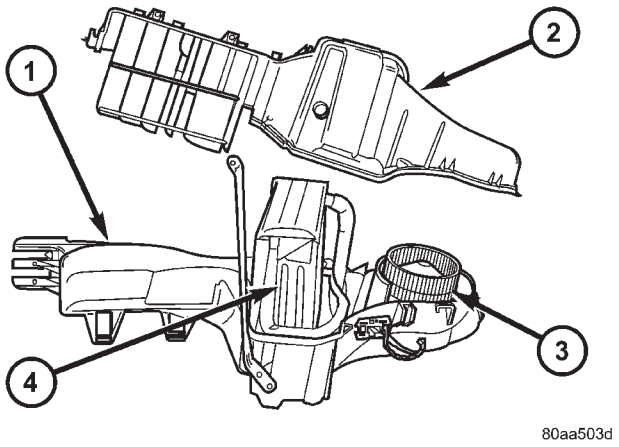

Fig. 13 Evaporator Housing

1 - LOWER EVAPORATOR HOUSING
2 - UPPER EVAPORATOR HOUSING
3 - BLOWER WHEEL
4 - EVAPORATOR

(16) Carefully lift the evaporator and its foam wrap out of the lower half of the evaporator housing as a unit. Be certain not to lose the clam shell type rubber seal that is fitted to the evaporator inlet and outlet tubes where they exit the evaporator housing.

INSTALLATION

NOTE: If the evaporator is being replaced, add 60 milliliters (2 fluid ounces) of refrigerant oil to the refrigerant system. Use only refrigerant oil of the type recommended for the compressor in the vehicle.

(1) Carefully lower the evaporator and its foam wrap into the lower half of the evaporator housing as a unit. Be certain that the clam shell type rubber seal is fitted to the evaporator inlet and outlet tubes where they exit the evaporator housing.

(2) Position the upper half of the evaporator housing onto the lower half. Be certain that the rubber grommet and the HVAC wire harness take out for the evaporator temperature sensor are captured in the notched area between the upper and lower housing halves.

(3) Install and tighten the twelve screws around the perimeter of the evaporator housing that secure the upper housing half to the lower half. Tighten the screws to 2 N·m (18 in. lbs.).

(4) Position the upper half of the recirculation air door onto the lower half of the door.

(5) Install and tighten the two screws that secure the upper half of the recirculation air door to the

EVAPORATOR (Continued)

lower half of the door. Tighten the screws to 2 N·m (18 in. lbs.).

(6) Position the upper intake air housing onto the top of the evaporator housing over the recirculation air door and the blower wheel housing. Be certain that the upper pivot of the recirculation air door is captured in the pivot receptacle of the upper intake air housing.

(7) Install and tighten the three screws that secure the upper intake air housing to the top of the outboard end of the evaporator housing. Be certain not to miss the screw located just inside the inboard side of the fresh air intake opening. Tighten the screws to 2 N·m (18 in. lbs.).

(8) Install and tighten the two screws that secure the upper intake air housing to the lower intake air housing. Tighten the screws to 2 N·m (18 in. lbs.).

(9) Engage the two hook formations on the bottom of the distribution housing in the two receptacles on the evaporator housing.

(10) Roll the top of the distribution housing up into position against the evaporator housing.

(11) Install and tighten the three screws from the dash panel side of the unit that secure the top of the distribution housing to the inboard end of the evaporator housing. Tighten the screws to 2 N·m (18 in. lbs.).

(12) Engage the HVAC wire harness in the routing clips molded into the outside of the HVAC housing components.

(13) Reconnect the HVAC wire harness connector for the blower motor with the motor connector receptacle on the bottom of the outboard end of the evaporator housing.

(14) Reinstall the expansion valve onto the evaporator inlet and outlet tube fittings. (Refer to 24 - HEATING & AIR CONDITIONING/PLUMBING - FRONT/EXPANSION VALVE - INSTALLATION).

(15) Install a new foam seal onto the HVAC housing seal flange around the fresh air inlet opening and the expansion valve/evaporator tube opening on the dash panel side of the unit.

(16) Reinstall the heater core tubes into the heater core. (Refer to 24 - HEATING & AIR CONDITIONING/PLUMBING - FRONT/HEATER CORE - INSTALLATION - HEATER CORE TUBES).

(17) Reinstall the HVAC unit housing into the vehicle. (Refer to 24 - HEATING & AIR CONDITIONING/DISTRIBUTION - FRONT/HVAC HOUSING - INSTALLATION).

(18) Run the HVAC Control Actuator Calibration procedure(Refer to 24 - HEATING & AIR CONDITIONING - DIAGNOSIS AND TESTING)(Refer to 24 - HEATING & AIR CONDITIONING - DIAGNOSIS AND TESTING).

EXPANSION VALVE

DESCRIPTION

The front “H” valve-type thermal expansion valve (TXV) is located at the dash panel between the liquid and suction lines, and the evaporator coil. The assembly consists of an H-valve body and a thermal sensor. High-pressure, low temperature liquid refrigerant from the liquid line passes through the expansion valve orifice, converting it into a low-pressure, low-temperature mixture of liquid and gas before it enters the evaporator coil. The expansion valve is a factory calibrated unit and cannot be adjusted or repaired. If faulty or damaged, the expansion valve must be replaced.

OPERATION

A mechanical sensor in the expansion valve control head monitors the temperature and pressure of the refrigerant leaving the evaporator coil through the suction line, and adjusts the orifice size at the liquid line to let the proper amount of refrigerant into the evaporator coil to meet the vehicle cooling requirements. Controlling the refrigerant flow through the evaporator ensures that none of the refrigerant leaving the evaporator is still in a liquid state, which could damage the compressor. The thermo sensor measures refrigerant suction gas temperature which is monitored by the a/c control assembly.

DIAGNOSIS AND TESTING - EXPANSION VALVE

WARNING: REFER TO THE APPLICABLE WARNINGS AND CAUTIONS FOR THIS SYSTEM BEFORE PERFORMING THE FOLLOWING OPERATION. (Refer to 24 - HEATING & AIR CONDITIONING/ PLUMBING - FRONT - WARNING - A/C PLUMBING) and (Refer to 24 - HEATING & AIR CONDITIONING/ PLUMBING - FRONT - CAUTION - A/C PLUMBING).

NOTE: The expansion valve should only be tested following testing of the compressor.

NOTE: Liquid CO is required to test the expansion valve. This material is available from most welding supply facilities. Liquid CO is also available from companies which service and sell fire extinguishers.

When testing the expansion valve, the work area and the vehicle temperature must be 21° to 27° C (70° to 85° F). To test the expansion valve:

(1) Connect a charging station or manifold gauge set to the refrigerant system service ports. Verify the refrigerant charge level.

EXPANSION VALVE (Continued)

(2) Close all doors, windows and vents to the passenger compartment.

(3) Set the heater-air conditioner controls so that the compressor is operating, the temperature control is in the highest temperature position, the mode door is directing the output to the floor outlets, and the blower is operating at the highest speed setting.

(4) Start the engine and allow it to idle at 1000 rpm. After the engine has reached normal operating temperature, allow the passenger compartment to heat up. This will create the need for maximum refrigerant flow into the evaporator.

(5) If the refrigerant charge is sufficient, the discharge (high pressure) gauge should read 965 to 1655 kPa (140 to 240 psi). The suction (low pressure) gauge should read 140 kPa to 207 kPa (20 psi to 30 psi). If OK, go to Step 6. If not OK, replace the faulty expansion valve.

WARNING:
PROTECT THE SKIN AND EYES FROM EXPOSURE TO LIQUID CO. PERSONAL INJURY CAN RESULT.

(6) If the suction (low pressure) gauge reads within the specified range, freeze the expansion valve control head for 30 seconds using liquid CO or another suitable super-cold material.**Do not spray R-134a or R-12 refrigerant on the expansion valve control head for this test.** The suction (low pressure) gauge reading should drop by 10 psi. If OK, go to Step 7 If not OK, replace the faulty expansion valve.

(7) Allow the expansion valve control head to thaw. The suction (low pressure) gauge reading should stabilize at 140 kPa to 240 kPa (20 psi to 30 psi). If not OK, replace the faulty expansion valve.

(8) When expansion valve testing is complete, test the overall air conditioner performance. (Refer to 24 - HEATING & AIR CONDITIONING - DIAGNOSIS AND TESTING - A/C PERFORMANCE TEST). Remove all test equipment before returning the vehicle to service.

REMOVAL

WARNING: REFER TO THE APPLICABLE WARNINGS AND CAUTIONS FOR THIS SYSTEM BEFORE PERFORMING THE FOLLOWING OPERATION. (Refer to 24 - HEATING & AIR CONDITIONING/ PLUMBING - FRONT - WARNING - A/C PLUMBING) and (Refer to 24 - HEATING & AIR CONDITIONING/ PLUMBING - FRONT - CAUTION - A/C PLUMBING).

(1) Recover the refrigerant from the refrigerant system. (Refer to 24 - HEATING & AIR CONDITIONING/PLUMBING - FRONT/REFRIGERANT - STANDARD PROCEDURE - REFRIGERANT RECOVERY).

(2) Disconnect and isolate the battery negative cable.

(3) Remove the air cleaner housing from the right side of the engine compartment.

(4) Disconnect the drain tube from the wiper module drain on the right side of the engine compartment.

(5) Disconnect the headlamp and dash wire harness connector for the A/C pressure transducer from the transducer on the front liquid line rear section (Fig. 14).

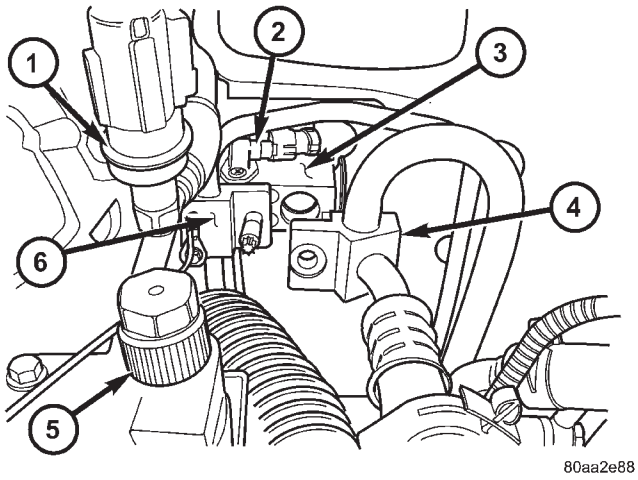

Fig. 14 Expansion Valve

1 - A/C PRESSURE TRANSDUCER
2 - EVAPORATOR TEMPERATURE SENSOR
3 - EXPANSION VALVE
4 - SUCTION LINE
5 - HIGH SIDE SERVICE PORT
6 - FRONT LIQUID LINE REAR SECTION

(6) Remove the screw that secures the front liquid line rear section fitting to the top of the filter-drier.

(7) Disconnect the liquid line fitting from the filter-drier outlet port.

(8) Remove the seal from the liquid line fitting and discard.

(9) Install plugs in, or tape over the opened liquid line fitting and the filter-drier outlet port.

(10) Remove the nut that secures the suction line and liquid line fittings to the stud on the expansion valve.

(11) Disconnect the suction line and liquid line fittings from the expansion valve and move the lines out of the way.

(12) Remove the seals from the suction line and liquid line fittings and discard.

(13) Install plugs in, or tape over the opened suction line and liquid line fittings and both expansion valve ports.

EXPANSION VALVE (Continued)

(14) Remove the two screws that secure the expansion valve to the evaporator tube tapping plate.

(15) Disconnect the HVAC wire harness connector for the evaporator temperature sensor from the sensor on the top of the expansion valve.

(16) Remove the expansion valve from the evaporator inlet and outlet tube fittings.

(17) Remove the seals from the evaporator inlet and outlet tube fittings and discard.

(18) Install plugs in, or tape over the opened evaporator inlet and outlet tube fittings and both expansion valve ports.

INSTALLATION

(1) Remove the tape or plugs from the evaporator inlet and outlet tube fittings and both ports on the back of the expansion valve.

(2) Lubricate new rubber O-ring seals with clean refrigerant oil and install them on the evaporator inlet and outlet tube fittings.

(3) Position the expansion valve onto the evaporator inlet and outlet tube fittings.

(4) Install and tighten the two screws that secure the expansion valve to the evaporator tube tapping plate plate. Tighten the screws to 11 N·m (97 in. lbs.).

(5) Reconnect the HVAC wire harness connector for the evaporator temperature sensor to the sensor connector receptacle on the top of the expansion valve.

(6) Remove the tape or plugs from the front liquid line rear section and suction line fittings for the expansion valve and both ports on the front of the expansion valve.

(7) Lubricate new rubber O-ring seals with clean refrigerant oil and install them on the front liquid line rear section and suction line fittings for the expansion valve.

(8) Reconnect the liquid line and suction line fittings to the expansion valve.

(9) Install and tighten the nut that secures the suction line and liquid line fittings to the stud on the expansion valve. Tighten the nut to 23 N·m (17 ft. lbs.).

(10) Remove the tape or plugs from the liquid line rear section fitting for the filter-drier and the filter-drier outlet port.

(11) Lubricate a new rubber O-ring seal with clean refrigerant oil and install it on the liquid line fitting.

(12) Reconnect the liquid line fitting to the filter-drier outlet port on the top of the filter-drier.

(13) Install and tighten the screw that secures the liquid line fitting to the filter-drier. Tighten the screw to 2 N·m (18 in. lbs.).

(14) Reconnect the headlamp and dash wire harness connector for the A/C pressure transducer to the transducer on the front liquid line rear section.

(15) Reconnect the drain tube to the wiper module drain on the right side of the engine compartment.

(16) Reinstall the air cleaner housing into the right side of the engine compartment.

(17) Reconnect the battery negative cable.

(18) Evacuate the refrigerant system. (Refer to 24 - HEATING & AIR CONDITIONING/PLUMBING - FRONT/REFRIGERANT - STANDARD PROCEDURE - REFRIGERANT SYSTEM EVACUATE).

(19) Charge the refrigerant system. (Refer to 24 - HEATING & AIR CONDITIONING/PLUMBING - FRONT/REFRIGERANT - STANDARD PROCEDURE - REFRIGERANT SYSTEM CHARGE).

HEATER CORE

DESCRIPTION

The heater core is located in the distribution housing of the heater-A/C unit, under the instrument panel. It is a heat exchanger made of rows of tubes and fins. One end of the core is fitted with a molded plastic tank that includes integral heater core inlet and outlet ports. The removable heater core tubes are held in place these ports by a sealing plate secured with a screw to the heater core tank. This removable heater core tube arrangement allows the heater core to be serviced without removing the heater-A/C unit housing from the vehicle. The heater core cannot be repaired and, if faulty or damaged, it must be replaced.

OPERATION

Engine coolant is circulated through heater hoses to the heater core at all times. As the coolant flows through the heater core, heat removed from the engine is transferred to the heater core fins and tubes. Air directed through the heater core picks up the heat from the heater core fins. The blend air door allows control of the heater output air temperature by controlling how much of the air flowing through the heater-A/C unit housing is directed through the heater core.

HEATER CORE (Continued)

REMOVAL

REMOVAL- HEATER CORE EXTENSION TUBES

WARNING: REFER TO THE APPLICABLE WARNINGS AND CAUTIONS FOR THIS SYSTEM BEFORE PERFORMING THE FOLLOWING OPERATION. (Refer to 24 - HEATING & AIR CONDITIONING/ PLUMBING FRONT - WARNING - HEATER PLUMBING).

WARNING: ON VEHICLES EQUIPPED WITH AIRBAGS, DISABLE THE AIRBAG SYSTEM BEFORE ATTEMPTING ANY STEERING WHEEL, STEERING COLUMN, OR INSTRUMENT PANEL COMPONENT DIAGNOSIS OR SERVICE. DISCONNECT AND ISOLATE THE BATTERY NEGATIVE (GROUND) CABLE, THEN WAIT TWO MINUTES FOR THE AIRBAG SYSTEM CAPACITOR TO DISCHARGE BEFORE PERFORMING FURTHER DIAGNOSIS OR SERVICE. THIS IS THE ONLY SURE WAY TO DISABLE THE AIRBAG SYSTEM. FAILURE TO TAKE THE PROPER PRECAUTIONS COULD RESULT IN ACCIDENTAL AIRBAG DEPLOYMENT AND POSSIBLE PERSONAL INJURY.

(1) Drain the engine cooling system. (Refer to 7 - COOLING - STANDARD PROCEDURE - COOLING SYSTEM DRAIN).

(2) Disconnect and isolate the battery negative cable.

(3) Disconnect the heater hoses from the heater hose tubes. (Refer to 24 - HEATING & AIR CONDITIONING/PLUMBING - FRONT/HEATER HOSE - REMOVAL).

(4) Remove the silencer from beneath the driver side end of the instrument panel. (Refer to 23 - BODY/INSTRUMENT PANEL/INSTRUMENT PANEL SILENCER - REMOVAL).

(5) Remove the three screws that secure the heater core shield to the left end of the HVAC distribution housing (Fig. 15).

(6) Pull the heater core shield rearward far enough to disengage the two location tabs that position the front of the shield to the receptacles in the two lower finger formations of the evaporator housing near the dash panel.

(7) Remove the heater core shield from the distribution housing.

(8) Take the proper precautions to protect the carpeting below the heater core from spilled engine coolant and have absorbent toweling readily available to clean up any spills.

(9) Remove the screw that secures the heater core tube sealing plate to the heater core supply and return ports (Fig. 16).

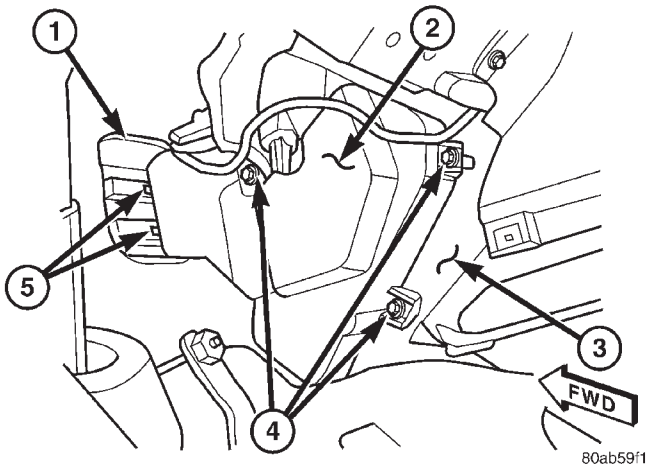

Fig. 15 Heater Core Shield

1 - HEATER/ AIR CONDITIONER HOUSING
2 - HEATER CORE SHIELD
3 - DISTRIBUTION HOUSING
4 - SCREWS (3)
5 - LOCATION TABS (2)

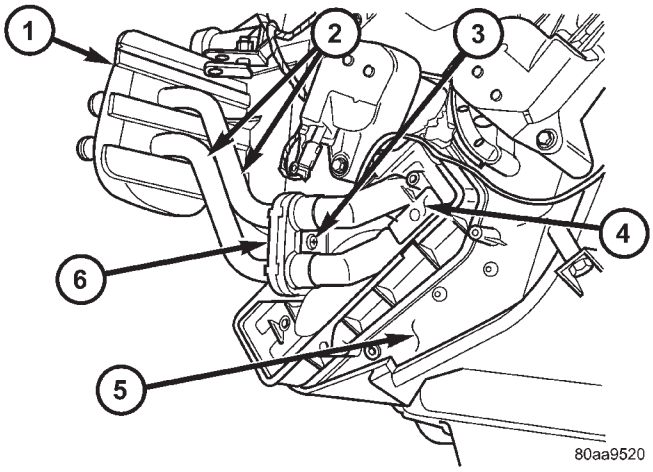

Fig. 16 Heater Core Tubes

1 - SEAL
2 - HEATER CORE TUBES
3 - SCREW
4 - HEATER CORE
5 - DISTRIBUTION HOUSING
6 - SEALING PLATE

(10) Push both heater core tubes simultaneously toward the dash panel far enough to disengage their fittings from the heater core supply and return ports.

(11) Install plugs in, or tape over the opened heater core tube fittings and both heater core ports.

(12) Use absorbent toweling to mop up any engine coolant spills from the preceding operation.

(13) Pull both heater core tubes simultaneously slightly away from the distribution housing and rear-

HEATER CORE (Continued)

ward far enough to disengage the engine compartment ends of the tubes from the dash panel seal.

(14) Remove the heater core tubes and sealing plate as a unit from beneath the instrument panel.

(15) Use absorbent toweling to clean up any engine coolant spills from the preceding operation.

REMOVAL - HEATER CORE

WARNING: REFER TO THE APPLICABLE WARNINGS AND CAUTIONS FOR THIS SYSTEM BEFORE PERFORMING THE FOLLOWING OPERATION. (Refer to 24 - HEATING & AIR CONDITIONING/ PLUMBING FRONT - WARNING - HEATER PLUMBING).

WARNING: ON VEHICLES EQUIPPED WITH AIRBAGS, DISABLE THE AIRBAG SYSTEM BEFORE ATTEMPTING ANY STEERING WHEEL, STEERING COLUMN, OR INSTRUMENT PANEL COMPONENT DIAGNOSIS OR SERVICE. DISCONNECT AND ISOLATE THE BATTERY NEGATIVE (GROUND) CABLE, THEN WAIT TWO MINUTES FOR THE AIRBAG SYSTEM CAPACITOR TO DISCHARGE BEFORE PERFORMING FURTHER DIAGNOSIS OR SERVICE. THIS IS THE ONLY SURE WAY TO DISABLE THE AIRBAG SYSTEM. FAILURE TO TAKE THE PROPER PRECAUTIONS COULD RESULT IN ACCIDENTAL AIRBAG DEPLOYMENT AND POSSIBLE PERSONAL INJURY.

(1) Drain the engine cooling system. (Refer to 7 - COOLING - STANDARD PROCEDURE - COOLING SYSTEM DRAIN).

(2) Disconnect and isolate the battery negative cable.

(3) Remove the silencer boot fasteners located around the base of the lower steering shaft from the dash panel so that it may be pushed aside.

(4) Remove the brake lamp switch from its mounting bracket. (Refer to 8 - ELECTRICAL/LAMPS/ LIGHTING - EXTERIOR/BRAKE LAMP SWITCH - REMOVAL).

(5) Disconnect the power brake booster input rod (push rod) from the pin on the brake pedal arm. (Refer to 5 - BRAKES - ABS/HYDRAULIC/MECHANICAL/POWER BRAKE BOOSTER - REMOVAL).

(6) Remove the three screws that secure the heater core shield to the left end of the HVAC distribution housing (Fig. 17).

(7) Pull the heater core shield rearward far enough to disengage the two location tabs that position the front of the shield to the receptacles in the two lower finger formations of the evaporator housing near the dash panel.

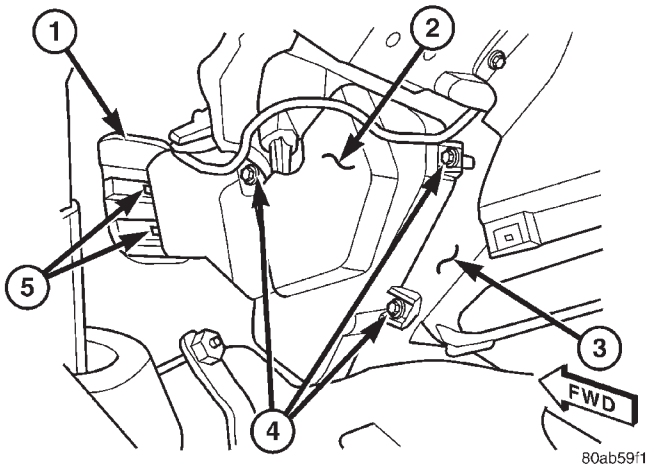

Fig. 17 Heater Core Shield

1 - HEATER/ AIR CONDITIONER HOUSING
2 - HEATER CORE SHIELD
3 - DISTRIBUTION HOUSING
4 - SCREWS (3)
5 - LOCATION TABS (2)

(8) Remove the heater core shield from the distribution housing.

(9) Take the proper precautions to protect the carpeting below the heater core from spilled engine coolant and have absorbent toweling readily available to mop up any spills.

(10) Remove the screw that secures the heater core tube sealing plate to the heater core supply and return ports (Fig. 18).

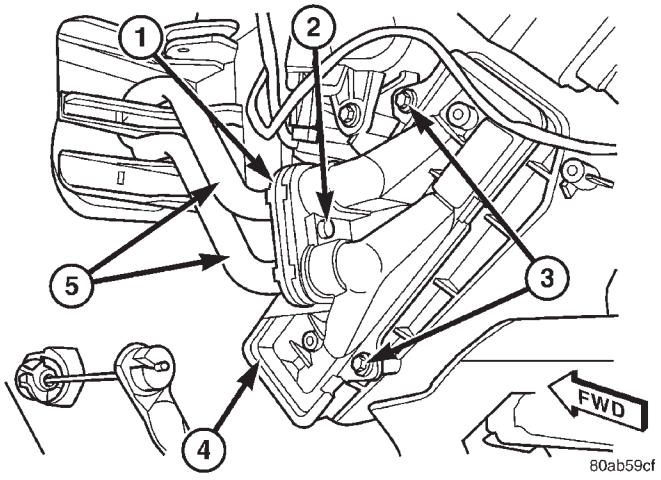

Fig. 18 Heater Core

1 - SEALING PLATE
2 - SCREW
3 - SCREWS (2)
4 - HEATER CORE
5 - HEATER CORE TUBES

HEATER CORE (Continued)

(11) Push both heater core tubes simultaneously toward the dash panel far enough to disengage their fittings from the heater core supply and return ports.

(12) Install plugs in, or tape over the opened heater core tube fittings and both heater core ports.

(13) Use absorbent toweling to mop up any engine coolant spills from the preceding operation.

(14) Remove the two screws that secure the heater core mounting plate to the distribution housing.

(15) While pulling the accelerator pedal upward (Fig. 19) and pushing the brake pedal downward (Fig. 20) far enough for clearance, pull the heater core out of the distribution housing.

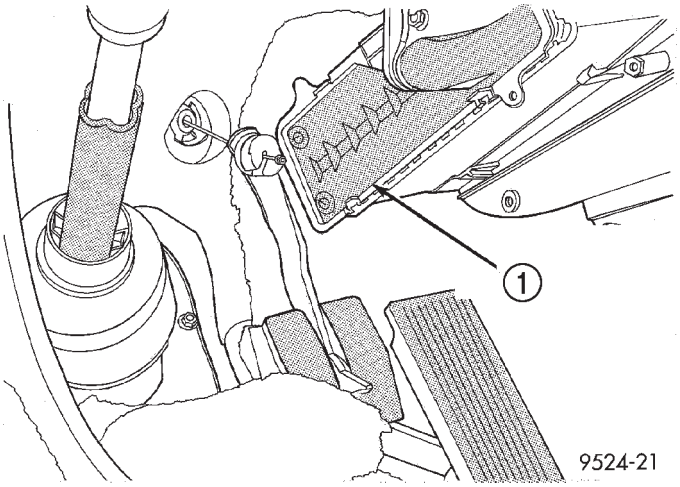

Fig. 19 Accelerator Pedal

1 - SLIDE HEATER CORE PAST ACCELERATOR PEDAL

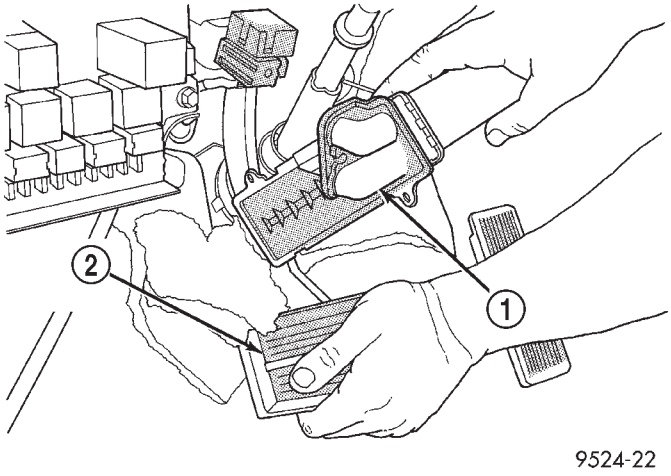

Fig. 20 Brake Pedal

1 - SLIDE HEATER CORE PAST BRAKE PEDAL
2 - DEPRESS BRAKE PEDAL

(16) Use absorbent toweling to mop up any engine coolant spills from the preceding operation. Also, if the heater core was leaking, use absorbent toweling and reach into the heater core opening to mop up any residual engine coolant within the distribution housing.

INSTALLATION

INSTALLATION- HEATER CORE EXTENSION TUBES

WARNING: REFER TO THE APPLICABLE WARNINGS AND CAUTIONS FOR THIS SYSTEM BEFORE PERFORMING THE FOLLOWING OPERATION. (Refer to 24 - HEATING & AIR CONDITIONING/ PLUMBING FRONT - WARNING - HEATER PLUMBING).

WARNING: ON VEHICLES EQUIPPED WITH AIRBAGS, DISABLE THE AIRBAG SYSTEM BEFORE ATTEMPTING ANY STEERING WHEEL, STEERING COLUMN, OR INSTRUMENT PANEL COMPONENT DIAGNOSIS OR SERVICE. DISCONNECT AND ISOLATE THE BATTERY NEGATIVE (GROUND) CABLE, THEN WAIT TWO MINUTES FOR THE AIRBAG SYSTEM CAPACITOR TO DISCHARGE BEFORE PERFORMING FURTHER DIAGNOSIS OR SERVICE. THIS IS THE ONLY SURE WAY TO DISABLE THE AIRBAG SYSTEM. FAILURE TO TAKE THE PROPER PRECAUTIONS COULD RESULT IN ACCIDENTAL AIRBAG DEPLOYMENT AND POSSIBLE PERSONAL INJURY.

(1) Remove the plugs or tape from both heater core tube fittings and both heater core ports.

(2) Position the heater core tubes and sealing plate as a unit beneath the instrument panel.

(3) Align the engine compartment ends of both heater core tubes with the openings in the dash panel seal and push them simultaneously forward through the seal far enough to engage the heater core ends of the tubes with the heater core supply and return ports.

(4) Position both heater core tubes and the sealing plate simultaneously to the heater core supply and return ports.

(5) The heater core tubes each have a slot that must be indexed to a location tab within each of the heater core ports. Adjust the position of the tubes as required so that the sealing plate fits flush against the heater core supply and return ports, which indicates that the tubes are properly indexed.

HEATER CORE (Continued)

(6) Install and tighten the screw that secures the heater core tube sealing plate to the heater core supply and return ports. Tighten the screw to 3 N·m (27 in. lbs.).

(7) Position the heater core shield onto the distribution housing. Be certain that the two location tabs on the front of the shield are engaged in the receptacles in the two lower finger formations of the evaporator housing near the dash panel.

(8) Install and tighten the three screws that secure the heater core shield to the left end of the HVAC distribution housing. Tighten the screws to 2 N·m (17 in. lbs.).

(9) Reinstall the silencer under the driver side end of the instrument panel. (Refer to 23 - BODY/INSTRUMENT PANEL/INSTRUMENT PANEL SILENCER - INSTALLATION).

(10) Reconnect the heater hoses to the heater hose tubes. (Refer to 24 - HEATING & AIR CONDITIONING/PLUMBING - FRONT/HEATER HOSE - INSTALLATION).

(11) Reconnect the battery negative cable.

(12) Refill the engine cooling system. (Refer to 7 - COOLING - STANDARD PROCEDURE - COOLING SYSTEM REFILL).

INSTALLATION - HEATER CORE

WARNING: REFER TO THE APPLICABLE WARNINGS AND CAUTIONS FOR THIS SYSTEM BEFORE PERFORMING THE FOLLOWING OPERATION. (Refer to 24 - HEATING & AIR CONDITIONING/PLUMBING FRONT - WARNING - HEATER PLUMBING).

WARNING: ON VEHICLES EQUIPPED WITH AIRBAGS, DISABLE THE AIRBAG SYSTEM BEFORE ATTEMPTING ANY STEERING WHEEL, STEERING COLUMN, OR INSTRUMENT PANEL COMPONENT DIAGNOSIS OR SERVICE. DISCONNECT AND ISOLATE THE BATTERY NEGATIVE (GROUND) CABLE, THEN WAIT TWO MINUTES FOR THE AIRBAG SYSTEM CAPACITOR TO DISCHARGE BEFORE PERFORMING FURTHER DIAGNOSIS OR SERVICE. THIS IS THE ONLY SURE WAY TO DISABLE THE AIRBAG SYSTEM. FAILURE TO TAKE THE PROPER PRECAUTIONS COULD RESULT IN ACCIDENTAL AIRBAG DEPLOYMENT AND POSSIBLE PERSONAL INJURY.

(1) While pushing the brake pedal downward and pulling the accelerator pedal upward far enough for clearance, slide the heater core into the distribution housing.

(2) Install and tighten the two screws that secure the heater core mounting plate to the distribution housing. Tighten the screws to 2 N·m (17 in. lbs.).

(3) Remove the plugs or tape from the heater core tube fittings and both heater core ports.

(4) Position both heater core tubes and the sealing plate simultaneously to the heater core supply and return ports.

(5) The heater core tubes each have a slot that must be indexed to a location tab within each of the heater core ports. Adjust the position of the tubes as required so that the sealing plate fits flush against the heater core supply and return ports, which indicates that the tubes are properly indexed.

(6) Install and tighten the screw that secures the heater core tube sealing plate to the heater core supply and return ports. Tighten the screw to 3 N·m (27 in. lbs.).

(7) Position the heater core shield onto the distribution housing. Be certain that the two location tabs on the front of the shield are engaged in the receptacles in the two lower finger formations of the evaporator housing near the dash panel.

(8) Install and tighten the three screws that secure the heater core shield to the left end of the HVAC distribution housing. Tighten the screws to 2 N·m (17 in. lbs.).

(9) Reconnect the power brake booster input rod (push rod) to the pin on the brake pedal arm(Refer to 5 - BRAKES/HYDRAULIC/MECHANICAL/POWER BRAKE BOOSTER - INSTALLATION).

(10) Reinstall the brake lamp switch into its mounting bracket(Refer to 8 - ELECTRICAL/LAMPS/LIGHTING - EXTERIOR/BRAKE LAMP SWITCH - INSTALLATION).

(11) Reinstall the silencer boot around the base of the lower steering shaft on the dash panel.

(12) Reconnect the battery negative cable.

(13) Refill the engine cooling system. (Refer to 7 - COOLING - STANDARD PROCEDURE - COOLING SYSTEM REFILL).

(14) Operate system for two thermostat cycles to assure elimination of air in the system.

HEATER HOSE

REMOVAL

There are several heater core plumbing configurations used on this model, depending upon the engine size and other optional equipment. One plumbing configuration is used for all 2.4L engines (Fig. 21), while the 3.3L and 3.8L engines have unique heater return plumbing on the engine for models with or without an optional engine oil cooler (Fig. 24) or (Fig. 25). There are also unique plumbing configurations at the heater core for models with or without the optional rear heater and air conditioner (Fig. 22) or (Fig. 23). All models use a combination of formed steel tubing and rubber hoses. In most cases, the rubber hose is secured to the steel tubing with a spring tension clamp.

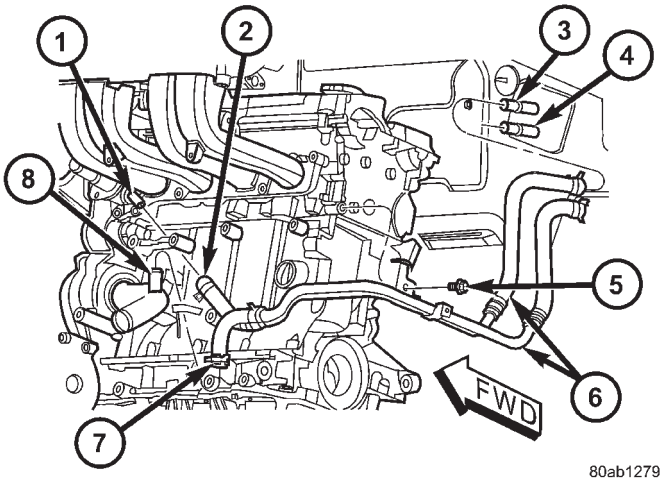

Fig. 21 Heater Plumbing - 2.4L Engine

1 - ENGINE OUTLET NIPPLE
2 - HEATER SUPPLY
3 - HEATER CORE OUTLET
4 - HEATER CORE INLET
5 - SCREW
6 - HEATER TUBE & HOSE UNIT
7 - HEATER RETURN
8 - ENGINE INLET NIPPLE

WARNING: REFER TO THE APPLICABLE WARNINGS AND CAUTIONS FOR THIS SYSTEM BEFORE PERFORMING THE FOLLOWING OPERATION. (Refer to 24 - HEATING & AIR CONDITIONING/ PLUMBING FRONT - WARNING - HEATER PLUMBING).

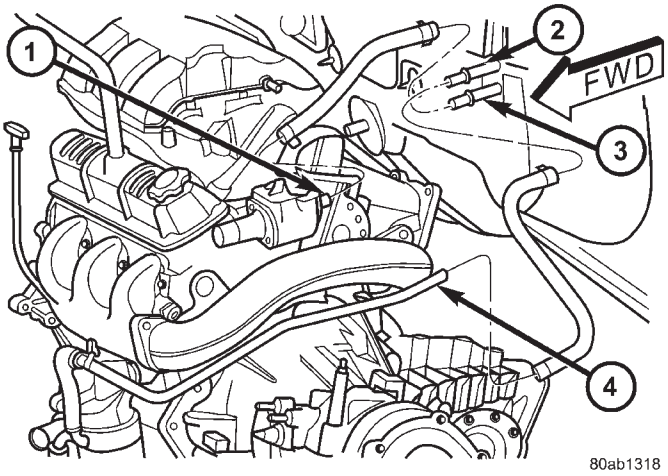

Fig. 22 Heater Plumbing - 3.3/3.8L Engine w/o Rear Heater

1 - ENGINE OUTLET NIPPLE
2 - HEATER CORE OUTLET
3 - HEATER CORE INLET
4 - HEATER RETURN TUBE & HOSE (TYPICAL)

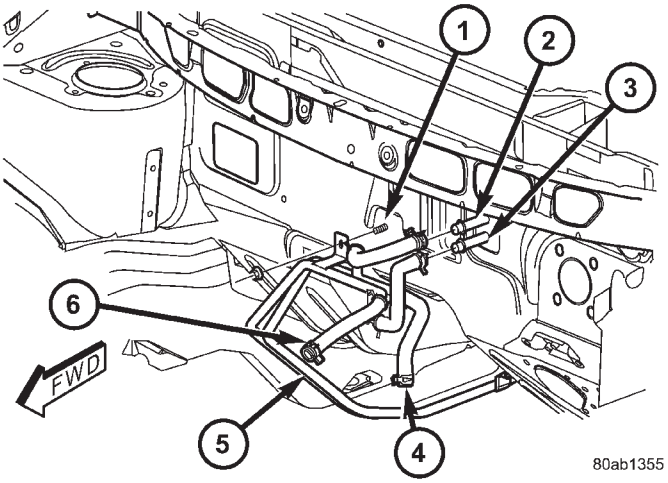

Fig. 23 Heater Plumbing - 3.3/3.8L Engine w/Rear Heater

1 - STUD
2 - HEATER CORE OUTLET
3 - HEATER CORE INLET
4 - TO ENGINE OUTLET NIPPLE
5 - TO UNDERBODY PLUMBING
6 - TO HEATER RETURN TUBE & HOSE

(1) Drain the engine cooling system. (Refer to 7 - COOLING - STANDARD PROCEDURE - COOLING SYSTEM DRAIN).

(2) Using spring tension clamp pliers, compress and slide the clamps that secure each end of the heater hose to the tube or nipple toward the center of the hose to be removed. Release the clamp when it is off of the tube or nipple.

HEATER HOSE (Continued)

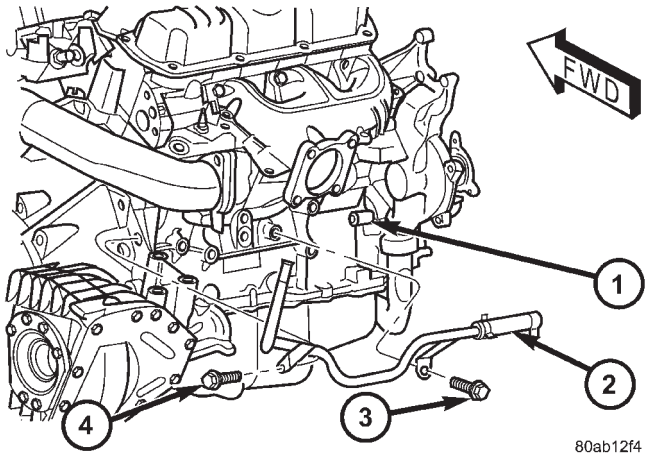

Fig. 24 Heater Return - 3.3/3.8L Engine w/o Oil Cooler

1 - WATER PUMP RETURN NIPPLE
2 - HEATER RETURN TUBE & HOSE
3 - SCREW
4 - SCREW

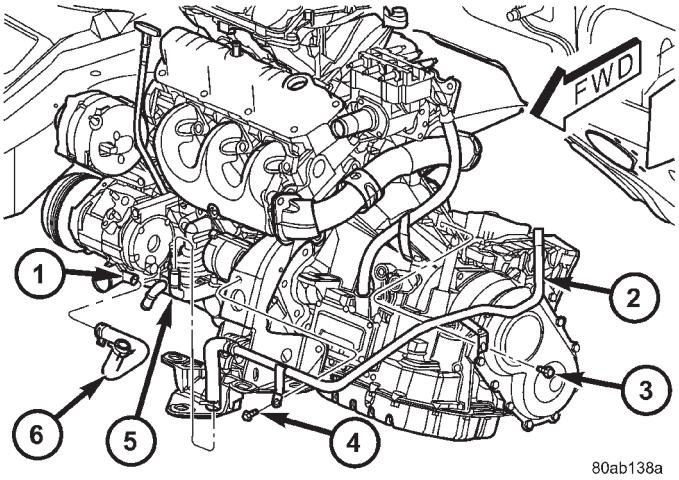

Fig. 25 Heater Return - 3.3/3.8L Engine w/Oil Cooler

1 - ENGINE INLET NIPPLE
2 - HEATER RETURN TUBE & HOSE
3 - SCREW
4 - SCREW
5 - OIL COOLER
6 - HEATER RETURN HOSE

CAUTION:
When removing the heater hose from the heater core or supply and return tube nipples, DO NOT apply excessive pressure. Excessive pressure may damage or deform the nipples and/or the heater core causing an engine coolant leak.

(3) After the clamp has been moved, grasp the end of the hose firmly and carefully twist the hose back and forth while pulling it away from the barbed end of the nipple. Repeat this procedure at the opposite end of the hose being removed. If this procedure is not successful in removing the hose from the nipple, carefully make a parallel cut through the hose where it is engaged on the nipple and peel the hose off of the nipple. This method of removal will require heater hose replacement.

INSTALLATION

There are several heater core plumbing configurations used on this model, depending upon the engine size and other optional equipment. One plumbing configuration is used for all 2.4L engines, while the 3.3L and 3.8L engines have unique heater return plumbing on the engine for models with or without an optional engine oil cooler. There are also unique plumbing configurations at the heater core for models with or without the optional rear heater and air conditioner. All models use a combination of formed steel tubing and rubber hoses. In most cases, the rubber hose is secured to the steel tubing with a spring tension clamp.

WARNING: REFER TO THE APPLICABLE WARNINGS AND CAUTIONS FOR THIS SYSTEM BEFORE PERFORMING THE FOLLOWING OPERATION. (Refer to 24 - HEATING & AIR CONDITIONING/ PLUMBING FRONT - WARNING - HEATER PLUMBING).

(1) Using spring tension clamp pliers, compress and slide the clamps that secure each end of the heater hose toward the center of the hose being installed. Release the clamp when it is near the center of the hose.

(2) Grasp one end of the heater hose being installed firmly and carefully twist the hose back and forth while pushing it over from the barbed end of the nipple. Repeat this procedure at the opposite end of the hose being installed.

(3) Using spring tension clamp pliers, compress and slide the clamps that secure each end of the heater hose over the tube or nipple. Release the clamp when it is over the tube or nipple.

(4) Refill the engine cooling system. (Refer to 7 - COOLING - STANDARD PROCEDURE - COOLING SYSTEM REFILL).

HEATER HOSES - DIESEL SUPPLEMENTAL HEATER - BUX

REMOVAL

(1) Elevate vehicle on a lift taking note of the exhaust tube flexible section.
(2) Drain cooling system(Refer to 7 - COOLING - STANDARD PROCEDURE).
(3) Lower heater unit from vehicle(Refer to 24 - HEATING & AIR CONDITIONING/CABIN HEATER/HEATER UNIT - REMOVAL).

NOTE: Complete removal of cabin heater from vehicle is not required, lowering unit allows easier access to coolant line clamps.

(4) Remove clamps from both flexible coolant line ends.
(5) Remove both lines from vehicle.

NOTE: If either line is damaged it is recommended that both flexible lines be replaced.

INSTALLATION

(1) Install both flexible coolant lines to the heater unit and install clamps.
(2) Install flexible coolant lines to the coolant pipes and install clamps.
(3) Install heater unit into vehicle(Refer to 24 - HEATING & AIR CONDITIONING/CABIN HEATER/HEATER UNIT - INSTALLATION).
(4) Lower vehicle.
(5) Refill cooling system(Refer to 7 - COOLING - STANDARD PROCEDURE).
(6) Verify operation of heater unit.

HEATER PIPES - DIESEL SUPPLEMENTAL HEATER - BUX

REMOVAL

CAUTION: Allow cooling system to cool completely before removing radiator cap or draining cooling system. Injury could result is system is opened while system coolant is hot and under pressure.

NOTE: Steel heater lines from engine compartment to heater unit are part of an assembly that includes the air intake pipe. If the heater lines or air intake pipe require removal or replacement the entire assembly must be removed or replaced.

(1) Open hood.
(2) Drain the cooling system(Refer to 7 - COOLING - STANDARD PROCEDURE).
(3) Remove clamps from both the EGR cooler and the lower heater port. Separate hoses from the mating plumbing port. (Fig. 26).
(4) Remove retaining nut from heater line under hood bracket.
(5) Elevate vehicle on a lift.

NOTE: When supporting vehicle care should be taken not to damage the heater exhaust tube.

(6) Remove clamps from heater lines to the rubber connection nearest the tubes. Separate the hoses from the tube assembly leaving the rubber hose attached to the supplemental heater.
(7) Remove heater unit intake pipe from heater-(Refer to 24 - HEATING & AIR CONDITIONING/CABIN HEATER/INLET HOSE - REMOVAL) (Fig. 27).
(8) Remove heater pipe assembly retaining screws and remove assembly from vehicle.

HEATER PIPES - DIESEL SUPPLEMENTAL HEATER - BUX (Continued)

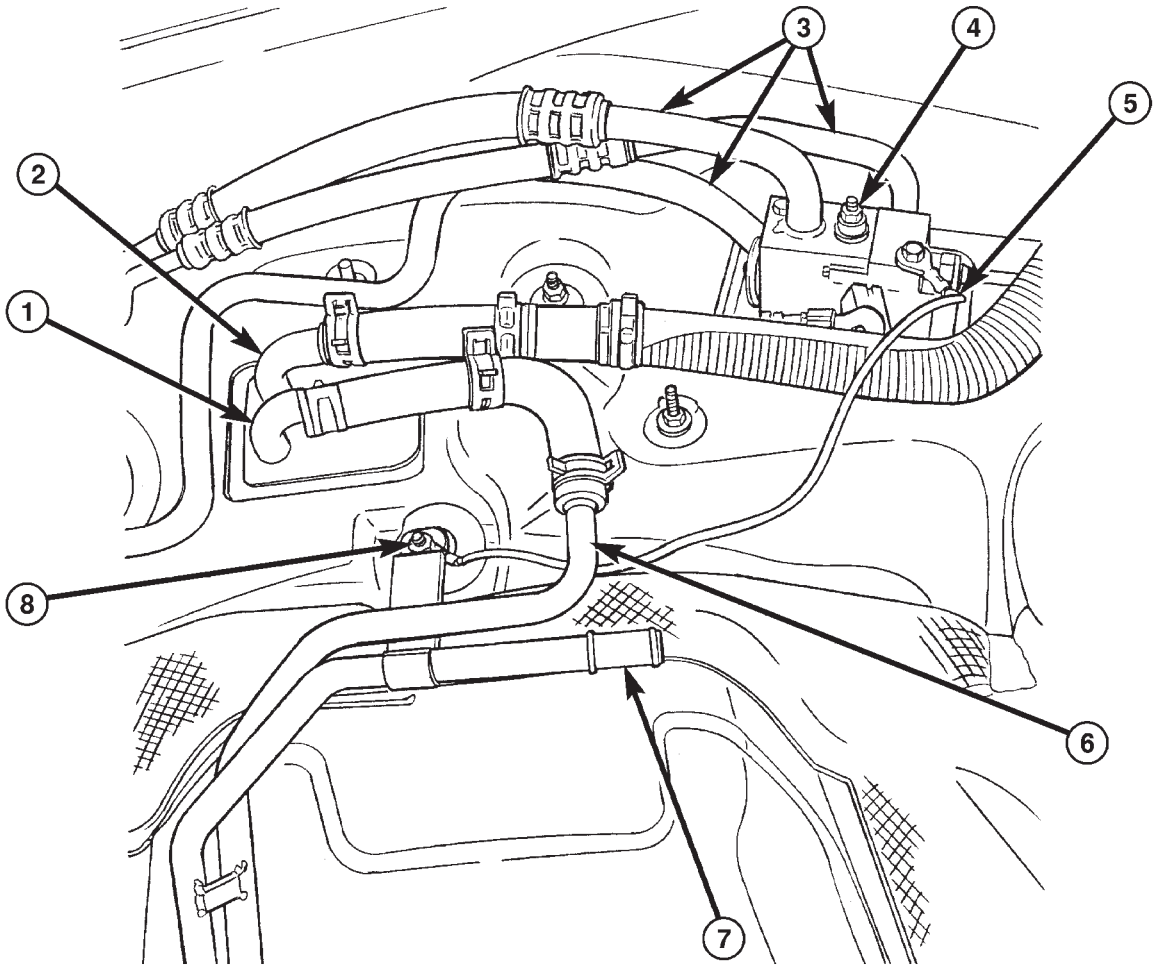

Fig. 26 CABIN HEATER PIPES

1 - HEATER CORE INTAKE PIPE
2 - HEATER CORE RETURN PIPE
3 - A/C LINES
4 - A/C EXPANSION VALVE
5 - A/C EXPANSION VALVE GROUND WIRE
6 - CABIN HEATER RETURN PIPE
7 - CABIN HEATER INTAKE PIPE
8 - CABIN HEATER PIPES RETAINING NUT

HEATER PIPES - DIESEL SUPPLEMENTAL HEATER - BUX (Continued)

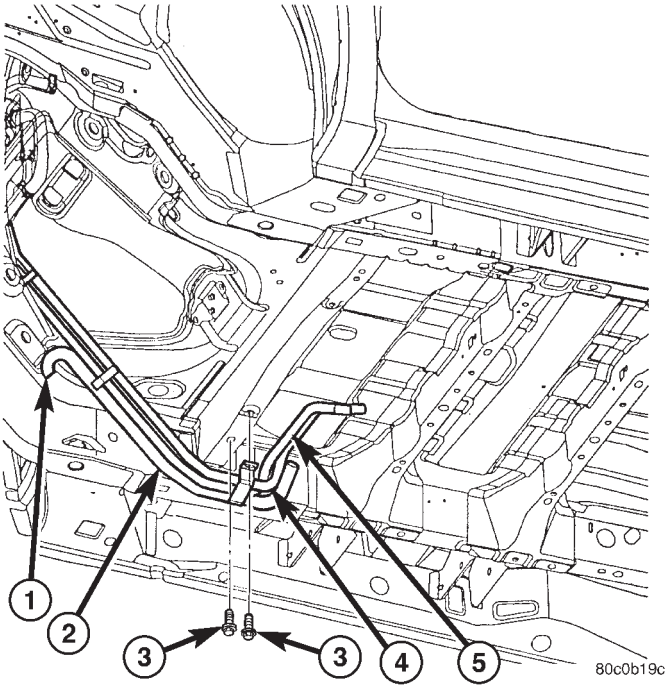

Fig. 27 AIR INTAKE AND HEATER PIPE ASSEMBLY

1 - INTAKE TUBE AIR INTAKE
2 - INTAKE PIPE
3 - RETAINING SCREWS
4 - INTAKE HEATER LINE
5 - RETURN HEATER LINE

INSTALLATION

(1) With vehicle on a lift position the heater pipe assembly and install the retaining screws.

(2) Install the heater unit intake pipe to the heater unit(Refer to 24 - HEATING & AIR CONDITIONING/CABIN HEATER/INLET HOSE - INSTALLATION).

(3) Connect heater hoses to the heater unit and tighten the clamps.

(4) Install heater unit intake pipe to heater unit (Refer to 24 - HEATING & AIR CONDITIONING/ CABIN HEATER/INLET HOSE - INSTALLATION).

(5) Lower vehicle on lift.

(6) Install retaining nut to heater line under hood bracket and tighten.

(7) Connect heater lines to heater hoses at heater core and EGR port. Position spring clamps onto the installed hoses.

(8) Refill cooling system(Refer to 7 - COOLING - STANDARD PROCEDURE).

(9) Close hood.

LIQUID LINE

REMOVAL

The front air conditioner liquid line is serviced in two sections. The front section connects between the condenser and the filter/drier and includes the high side service port on the fitting for the filter/drier. The rear section connects between the filter/drier and the expansion valve and includes the fitting for the A/C pressure transducer. On models equipped with the optional rear air conditioner, the rear section of the front air conditioner liquid line also includes a liquid line hose and tube extension that connects the front liquid line to the liquid line for the rear air conditioner.

WARNING: REFER TO THE APPLICABLE WARNINGS AND CAUTIONS FOR THIS SYSTEM BEFORE PERFORMING THE FOLLOWING OPERATION. (Refer to 24 - HEATING & AIR CONDITIONING/ PLUMBING - FRONT - WARNING - A/C PLUMBING) and (Refer to 24 - HEATING & AIR CONDITIONING/ PLUMBING - FRONT - CAUTION - A/C PLUMBING).

FRONT SECTION

(1) Recover the refrigerant from the refrigerant system. (Refer to 24 - HEATING & AIR CONDITIONING/ PLUMBING - FRONT/REFRIGERANT - STANDARD PROCEDURE - REFRIGERANT RECOVERY).

(2) Disconnect and isolate the battery negative cable.

(3) Remove the air cleaner housing from the right side of the engine compartment.

(4) Remove the two large screws that secure the front fascia and the outboard ends of the radiator sight shield to the radiator closure panel crossmember (Fig. 28).

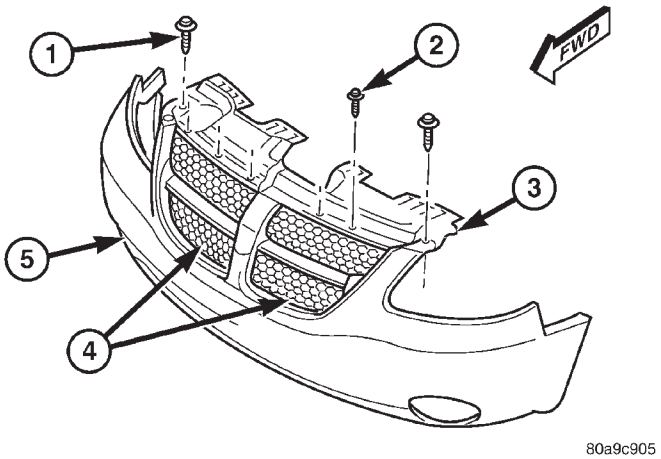

Fig. 28 Radiator Sight Shield

1 - LARGE SCREWS (2)
2 - SMALL SCREWS (5)
3 - RADIATOR SIGHT SHIELD
4 - GRILLE INSERTS
5 - FRONT FASCIA

LIQUID LINE (Continued)

(5) Remove the five small screws that secure the front fascia grille inserts to the radiator sight shield.

(6) Remove the radiator sight shield from the radiator closure panel crossmember.

(7) Remove the nut that secures the liquid line fitting to the condenser on the right side of the cooling module (Fig. 29).

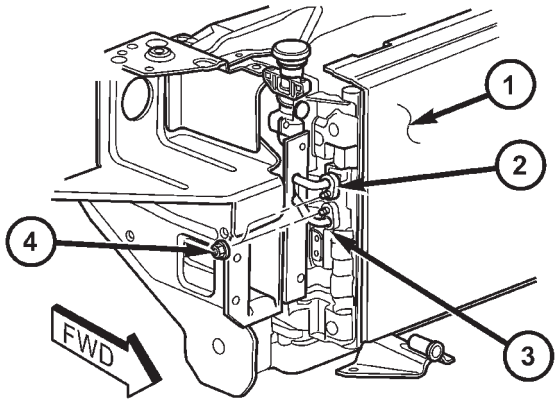

80a9de50

Fig. 29 Condenser Connections

1 - CONDENSER
2 - DISCHARGE LINE FITTING
3 - LIQUID LINE FITTING
4 - NUT

(8) Disconnect the liquid line fitting from the condenser outlet port.

(9) Remove the seal from the liquid line fitting and discard.

(10) Install plugs in, or tape over the opened liquid line fitting and the condenser outlet port.

(11) Disengage the retainer that secures the liquid line routing clip to the top of the right frame rail ahead of the front strut tower in the engine compartment (Fig. 30).

(12) Remove the screw that secures the liquid line front section fitting to the top of the filter-drier.

(13) Disconnect the liquid line fitting from the filter-drier inlet port.

(14) Remove the seal from the liquid line fitting and discard.

(15) Install plugs in, or tape over the opened liquid line fitting and the filter-drier inlet port.

(16) Remove the front section of the front liquid line from the engine compartment.

REAR SECTION

(1) Recover the refrigerant from the refrigerant system. (Refer to 24 - HEATING & AIR CONDITIONING/PLUMBING - FRONT/REFRIGERANT - STANDARD PROCEDURE - REFRIGERANT RECOVERY).

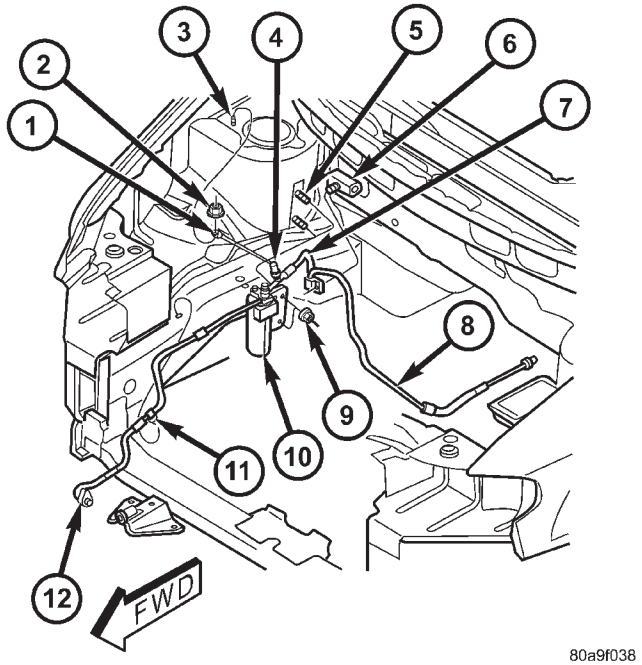

80a9f038

Fig. 30 Front Liquid Lines

1 - A/C GROUND STRAP
2 - NUT
3 - WELD STUD
4 - A/C PRESSURE TRANSDUCER
5 - WELD STUD (2)
6 - EXPANSION VALVE
7 - FRONT LIQUID LINE REAR SECTION
8 - LIQUID LINE EXTENSION (REAR A/C ONLY)
9 - NUT (2)
10 - FILTER-DRIER
11 - ROUTING CLIP
12 - FRONT LIQUID LINE FRONT SECTION

(2) Disconnect and isolate the battery negative cable.

(3) Remove the air cleaner housing from the right side of the engine compartment.

(4) Disconnect the drain tube from the wiper module drain on the right side of the engine compartment.

(5) Remove the A/C pressure transducer from the fitting on the front liquid line rear section. (Refer to 24 - HEATING & AIR CONDITIONING/CONTROLS - FRONT/A/C PRESSURE TRANSDUCER - REMOVAL).

(6) Remove the nut that secures the A/C ground strap to the weld stud on the top of the right front strut tower (Fig. 30).

(7) Remove the A/C ground strap eyelet terminal connector from the weld stud.

(8) Remove the screw that secures the liquid line rear section fitting to the top of the filter-drier.

(9) Disconnect the liquid line fitting from the filter-drier outlet port.

LIQUID LINE (Continued)

(10) Remove the seal from the liquid line fitting and discard.

(11) Install plugs in, or tape over the opened liquid line fitting and the filter-drier outlet port.

(12) Remove the nut that secures the suction line and liquid line fittings to the expansion valve.

(13) Disconnect the suction line and liquid line fittings from the expansion valve.

(14) Remove the seals from the suction line and liquid line fittings and discard.

(15) Install plugs in, or tape over the opened suction line and liquid line fittings and both expansion valve ports.

(16) If the vehicle is equipped with the optional rear air conditioner, go to Step 17. If the vehicle does not have the optional rear air conditioner, go to Step 23.

(17) Raise and support the vehicle.

(18) Cut the tie strap located just forward of the connections between the underbody plumbing and the engine compartment plumbing for the rear heater and air conditioner (Fig. 31).

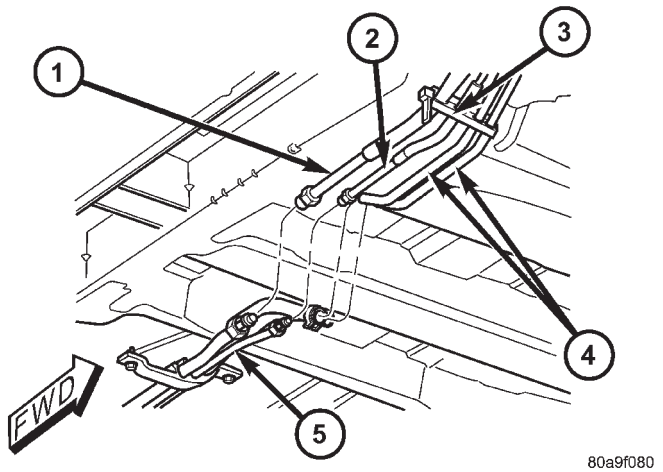

Fig. 31 Underbody Connections

1 - SUCTION LINE EXTENSION
2 - LIQUID LINE EXTENSION
3 - TIE STRAP
4- HEATER LINE EXTENSIONS
5 - UNDERBODY LINES

(19) Disconnect the front liquid line extension fitting from the underbody liquid line fitting for the rear air conditioner.

(20) Remove the seal from the underbody liquid line fitting and discard.

(21) Install plugs in, or tape over the opened liquid line fittings.

(22) Lower the vehicle.

(23) Remove the front liquid line rear section from the engine compartment.

INSTALLATION

The front air conditioner liquid line is serviced in two sections. The front section connects between the condenser and the filter/drier and includes the high side service port on the fitting for the filter/drier. The rear section connects between the filter/drier and the expansion valve and includes the fitting for the A/C pressure transducer. On models equipped with the optional rear air conditioner, the rear section of the front air conditioner liquid line also includes a liquid line hose and tube extension that connects the front liquid line to the liquid line for the rear air conditioner.

FRONT SECTION

(1) Position the front section of the front liquid line into the engine compartment.

(2) Remove the tape or plugs from the liquid line front section fitting for the filter-drier and the filter-drier inlet port.

(3) Lubricate a new rubber O-ring seal with clean refrigerant oil and install it on the liquid line fitting.

(4) Reconnect the liquid line fitting to the filter-drier inlet port on the top of the filter-drier.

(5) Install and tighten the screw that secures the liquid line fitting to the filter-drier. Tighten the screw to 2 N·m (16 in. lbs.).

(6) Engage the retainer that secures the liquid line routing clip to the top of the right frame rail ahead of the front strut tower in the engine compartment.

(7) Remove the tape or plugs from the condenser outlet port and the liquid line fitting.

(8) Lubricate a new rubber O-ring seal with clean refrigerant oil and install it on the liquid line fitting.

(9) Reconnect the liquid line fitting to the condenser outlet port on the right side of the cooling module.

(10) Install and tighten the nut that secures the liquid line fitting to the condenser. Tighten the nut to 23 N·m (17 ft. lbs.).

(11) Position the radiator sight shield onto the radiator closure panel crossmember.

(12) Install and tighten the five small screws that secure the front fascia grille inserts to the radiator sight shield. Tighten the screws to 2 N·m (16 in. lbs.).

(13) Install and tighten the two large screws that secure the front fascia and the outboard ends of the radiator sight shield to the radiator closure panel crossmember. Tighten the screws to 6 N·m (53 in. lbs.).

(14) Reinstall the air cleaner housing into the right side of the engine compartment.

(15) Reconnect the battery negative cable.

(16) Evacuate the refrigerant system. (Refer to 24 - HEATING & AIR CONDITIONING/PLUMBING -

LIQUID LINE (Continued)

FRONT/REFRIGERANT - STANDARD PROCEDURE - REFRIGERANT SYSTEM EVACUATE).

(17) Charge the refrigerant system. (Refer to 24 - HEATING & AIR CONDITIONING/PLUMBING - FRONT/REFRIGERANT - STANDARD PROCEDURE - REFRIGERANT SYSTEM CHARGE).

REAR SECTION

(1) Position the rear section of the front liquid line into the engine compartment.

(2) Remove the tape or plugs from the suction line and liquid line fittings and both expansion valve ports.

(3) Lubricate new rubber O-ring seals with clean refrigerant oil and install them on the suction line and liquid line fittings.

(4) Reconnect the liquid line and suction line fittings to the expansion valve.

(5) Install and tighten the nut that secures the suction line and liquid line fittings to the expansion valve. Tighten the nut to 23 N·m (17 ft. lbs.).

(6) Remove the tape or plugs from the liquid line rear section fitting for the filter-drier and the filter-drier outlet port.

(7) Lubricate a new rubber O-ring seal with clean refrigerant oil and install it on the liquid line fitting.

(8) Reconnect the liquid line fitting to the filter-drier outlet port on the top of the filter-drier.

(9) Install and tighten the screw that secures the liquid line fitting to the filter-drier. Tighten the screw to 2 N·m (16 in. lbs.).

(10) Reinstall the A/C ground strap eyelet terminal connector onto the weld stud on the top of the right front strut tower.

(11) Install and tighten the nut that secures the A/C ground strap to the weld stud. Tighten the nut to 12 N·m (106 in. lbs.).

(12) Reinstall the A/C pressure transducer onto the fitting on the front liquid line rear section. (Refer to 24 - HEATING & AIR CONDITIONING/CONTROLS - FRONT/A/C PRESSURE TRANSDUCER - INSTALLATION).

(13) Reconnect the drain tube to the wiper module drain on the right side of the engine compartment.

(14) Reinstall the air cleaner housing into the right side of the engine compartment.

(15) Reconnect the battery negative cable.

(16) If the vehicle is equipped with the optional rear air conditioner, go to Step 17. If the vehicle does not have the optional rear air conditioner, go to Step 23.

(17) Raise and support the vehicle.

(18) Remove the tape or plugs from the liquid line rear section extension fitting and the underbody liquid line fitting.

(19) Lubricate a new rubber O-ring seal with clean refrigerant oil and install it on the underbody liquid line fitting.

(20) Reconnect the liquid line rear section extension fitting to the underbody liquid line fitting. Tighten the fittings to 23 N·m (17 ft. lbs.).

(21) Install a new tie strap just forward of the connections between the underbody plumbing and the engine compartment plumbing for the rear heater and air conditioner.

(22) Lower the vehicle.

(23) Evacuate the refrigerant system. (Refer to 24 - HEATING & AIR CONDITIONING/PLUMBING - FRONT/REFRIGERANT - STANDARD PROCEDURE - REFRIGERANT SYSTEM EVACUATE).

(24) Charge the refrigerant system. (Refer to 24 - HEATING & AIR CONDITIONING/PLUMBING - FRONT/REFRIGERANT - STANDARD PROCEDURE - REFRIGERANT SYSTEM CHARGE).

RECEIVER/DRIER

DESCRIPTION

The filter-drier is mounted in a bracket secured to the right front strut tower in the engine compartment. The filter-drier is connected between the front and rear sections of the liquid line between the condenser outlet and the evaporator inlet. The filter-drier cannot be repaired. If the filter-drier is faulty or damaged, or if the refrigerant system has been contaminated or left open to the atmosphere for an indeterminable period, it must be replaced.

OPERATION

The filter-drier performs a filtering action to prevent foreign material in the refrigerant from contaminating the expansion valve. A desiccant bag is mounted inside the filter-drier canister to absorb any moisture which may have entered and become trapped within the refrigerant system. In addition, during periods of high demand air conditioner operation, the filter-drier acts as a reservoir to store surplus refrigerant. Refrigerant enters the filter-drier as a high-pressure, low temperature liquid.

REMOVAL

WARNING: REFER TO THE APPLICABLE WARNINGS AND CAUTIONS FOR THIS SYSTEM BEFORE PERFORMING THE FOLLOWING OPERATION. (Refer to 24 - HEATING & AIR CONDITIONING/PLUMBING - FRONT - WARNING - A/C PLUMBING) and (Refer to 24 - HEATING & AIR CONDITIONING/PLUMBING - FRONT - CAUTION - A/C PLUMBING).

RECEIVER/DRIER (Continued)

(1) Recover the refrigerant from the refrigerant system. (Refer to 24 - HEATING & AIR CONDITIONING/PLUMBING - FRONT/REFRIGERANT - STANDARD PROCEDURE - REFRIGERANT RECOVERY).

(2) Remove the air cleaner housing from the right side of the engine compartment.

(3) Remove the screw that secures the liquid line front section fitting to the top of the filter-drier (Fig. 32).

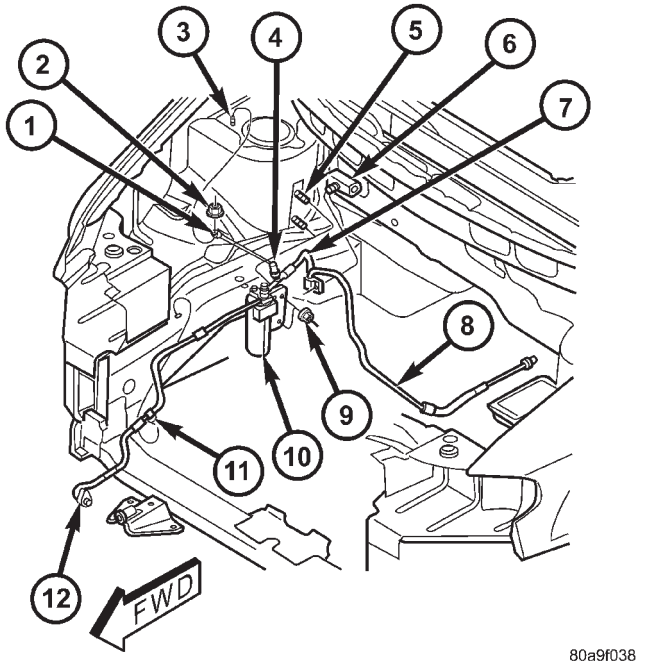

Fig. 32 Front Liquid Lines

1 - A/C GROUND STRAP
2 - NUT
3 - WELD STUD
4 - A/C PRESSURE TRANSDUCER
5 - WELD STUD (2)
6 - EXPANSION VALVE
7 - FRONT LIQUID LINE REAR SECTION
8 - LIQUID LINE EXTENSION (REAR A/C ONLY)
9 - NUT (2)
10 - FILTER-DRIER
11 - ROUTING CLIP
12 - FRONT LIQUID LINE FRONT SECTION

(4) Disconnect the liquid line fitting from the filter-drier inlet port.

(5) Remove the seal from the liquid line fitting and discard.

(6) Install plugs in, or tape over the opened liquid line fitting and the filter-drier inlet port.

(7) Remove the screw that secures the liquid line rear section fitting to the top of the filter-drier.

(8) Disconnect the liquid line fitting from the filter-drier outlet port.

(9) Remove the seal from the liquid line fitting and discard.

(10) Install plugs in, or tape over the opened liquid line fitting and the filter-drier outlet port.

(11) Remove the two nuts that secure the filter-drier mounting bracket to the weld studs on the side of the right front strut tower.

(12) Remove the filter-drier and mounting bracket unit from the studs.

INSTALLATION

NOTE: If the filter-drier is being replaced, add 30 milliliters (1 fluid ounce) of refrigerant oil to the refrigerant system. Use only refrigerant oil of the type recommended for the compressor in the vehicle.

(1) Position the filter-drier and mounting bracket unit onto the weld studs on the side of the right front strut tower.

(2) Install and tighten the two nuts that secure the filter-drier mounting bracket to the studs. Tighten the nuts to 10 N·m (89 in. lbs.).

(3) Remove the tape or plugs from the liquid line rear section fitting for the filter-drier and the filter-drier outlet port.

(4) Lubricate a new rubber O-ring seal with clean refrigerant oil and install it on the liquid line fitting.

(5) Reconnect the liquid line fitting to the filter-drier outlet port on the top of the filter-drier.

(6) Install and tighten the screw that secures the liquid line fitting to the filter-drier. Tighten the screw to 2 N·m (18 in. lbs.).

(7) Remove the tape or plugs from the liquid line front section fitting for the filter-drier and the filter-drier inlet port.

(8) Lubricate a new rubber O-ring seal with clean refrigerant oil and install it on the liquid line fitting.

(9) Reconnect the liquid line fitting to the filter-drier inlet port on the top of the filter-drier.

(10) Install and tighten the screw that secures the liquid line fitting to the filter-drier. Tighten the screw to 2 N·m (18 in. lbs.).

(11) Reinstall the air cleaner housing into the right side of the engine compartment.

(12) Evacuate the refrigerant system. (Refer to 24 - HEATING & AIR CONDITIONING/PLUMBING - FRONT/REFRIGERANT - STANDARD PROCEDURE - REFRIGERANT SYSTEM EVACUATE).

(13) Charge the refrigerant system. (Refer to 24 - HEATING & AIR CONDITIONING/PLUMBING - FRONT/REFRIGERANT - STANDARD PROCEDURE - REFRIGERANT SYSTEM CHARGE).

REFRIGERANT

DESCRIPTION

The refrigerant used in this air conditioning system is a HydroFluoroCarbon (HFC), type R-134a. Unlike R-12, which is a ChloroFluoroCarbon (CFC), R-134a refrigerant does not contain ozone-depleting chlorine. R-134a refrigerant is a non-toxic, non-flammable, clear, and colorless liquefied gas. Even though R-134a does not contain chlorine, it must be reclaimed and recycled just like CFC-type refrigerants. This is because R-134a is a greenhouse gas and can contribute to global warming.

OPERATION

R-134a refrigerant is not compatible with R-12 refrigerant in an air conditioning system. Even a small amount of R-12 added to an R-134a refrigerant system will cause compressor failure, refrigerant oil sludge or poor air conditioning system performance. In addition, the PolyAlkylene Glycol (PAG) synthetic refrigerant oils used in an R-134a refrigerant system are not compatible with the mineral-based refrigerant oils used in an R-12 refrigerant system. R-134a refrigerant system service ports, service tool couplers and refrigerant dispensing bottles have all been designed with unique fittings to ensure that an R-134a system is not accidentally contaminated with the wrong refrigerant (R-12). There are also labels posted in the engine compartment of the vehicle and on the compressor identifying to service technicians that the air conditioning system is equipped with R-134a.

DIAGNOSIS AND TESTING

DIAGNOSIS AND TESTING - REFRIGERANT SYSTEM CHARGE LEVEL

WARNING: REFER TO THE APPLICABLE WARNINGS AND CAUTIONS FOR THIS SYSTEM BEFORE PERFORMING THE FOLLOWING OPERATION. (Refer to 24 - HEATING & AIR CONDITIONING/ PLUMBING - FRONT - WARNING - A/C PLUMBING) and (Refer to 24 - HEATING & AIR CONDITIONING/ PLUMBING - FRONT - CAUTION - A/C PLUMBING).

NOTE: The proper amount of R-134a refrigerant for the refrigerant system in this model is:

- **Single or Dual Zone (Front Unit Only) - 0.96 kilograms (2.13 pounds or 34 ounces)**
- **Three Zone (Front and Rear Units) - 1.31 kilograms (2.88 pounds or 46 ounces)**

The procedure that follows should be used to determine whether the refrigerant system contains the proper refrigerant charge. Symptoms of an improper refrigerant charge (low) include: poor air conditioner performance, fog emitted from the air conditioner outlets, a hissing sound from the expansion valve/ evaporator area. There are two different methods with which the refrigerant charge level may be tested:

- Using a DRBIII® scan tool, a thermocouple and the Charge Determination Chart (Fig. 33). Refer to the appropriate diagnostic information.
- Using a manifold gauge set, a thermocouple and the Charge Determination Chart (Fig. 33).

A temperature probe is required to measure liquid line temperature. The clamp-on, Type K thermocouple temperature probe used in this procedure is available through the DaimlerChrysler Professional Service Equipment (PSE) program. This probe (PSE #66-324-0014 or #80PK-1A) is compatible with temperature-measuring instruments that accept Type K thermocouples, and have a miniature connector input. Other temperature probes are available through aftermarket sources; however, all references in this procedure will reflect the use of the probe made available through the PSE program.

In order to use the temperature probe, a digital thermometer will also be required. If a digital thermometer is not available, an adapter is available through the PSE program that will convert any standard digital multimeter into a digital thermometer. This adapter is designed to accept any standard Type K thermocouple. If a digital multimeter is not available, this tool is also available through the PSE program.

NOTE: When connecting the service equipment couplings to the refrigerant system service ports, be certain that the valve of each coupling is fully closed. This will reduce the amount of effort required to make the connection.

(1) Remove the caps from the refrigerant system service ports and attach a manifold gauge set or a R-134a refrigerant recovery/recycling/charging station that meets SAE Standard J2210 to the refrigerant system.

(2) Attach a clamp-on thermocouple to the liquid line. The thermocouple must be placed as close to the A/C pressure transducer as possible to accurately observe liquid line temperature.

(3) Bring the refrigerant system up to operating temperature and pressure. This is done by allowing the engine to run at idle under the following conditions for five minutes.

(a) Front windows are open.

(b) Transaxle in Park.

REFRIGERANT (Continued)

(c) Front heater-A/C controls set to outside air, full cool, panel mode, blower high, and compressor engaged.

(d) If the vehicle is so equipped, the rear heater-A/C controls must be set to full cool and blower high.

(4) Raise the liquid line (discharge) pressure to about 1793 kPa (260 psi) by placing a piece of cardboard over part of the front side of the condenser. To place the cardboard properly, remove the upper radiator sight shield from the front fascia. Cover only enough of the condenser to raise and maintain the liquid line pressure at the specified level.

(5) Observe the liquid line (discharge) pressure and liquid line temperature. Using the Charge Determination Chart (Fig. 33), determine whether the refrigerant system is operating within the Proper Charge Range.

(a) If the refrigerant system is operating in the Undercharged area of the chart, add 0.057 kilogram (0.125 pound or 2 ounces) of refrigerant to the system.

(b) If the refrigerant system is operating in the Overcharged area of the chart, reclaim 0.057 kilogram (0.125 pound or 2 ounces) of refrigerant from the system.

(6) Recheck the system charge level following each refrigerant adjustment. Continue this process until the system readings are in the Proper Charge Range area on the Charge Determination Chart.

DIAGNOSIS AND TESTING - REFRIGERANT SYSTEM LEAKS

WARNING: REFER TO THE APPLICABLE WARNINGS AND CAUTIONS FOR THIS SYSTEM BEFORE PERFORMING THE FOLLOWING OPERATION. (Refer to 24 - HEATING & AIR CONDITIONING/ PLUMBING - FRONT - WARNING - A/C PLUMBING) and (Refer to 24 - HEATING & AIR CONDITIONING/ PLUMBING - FRONT - CAUTION - A/C PLUMBING).

If the air conditioning system is not cooling properly, determine if the refrigerant system is fully-charged. (Refer to 24 - HEATING & AIR CONDITIONING/PLUMBING - FRONT/REFRIGERANT - DIAGNOSIS AND TESTING - REFRIGERANT SYSTEM CHARGE LEVEL).

If the refrigerant system is low or empty; a leak at a refrigerant line, connector fitting, component, or component seal is likely. While an oily residue on or near refrigerant system lines, connector fittings, components, or component seals can indicate the general

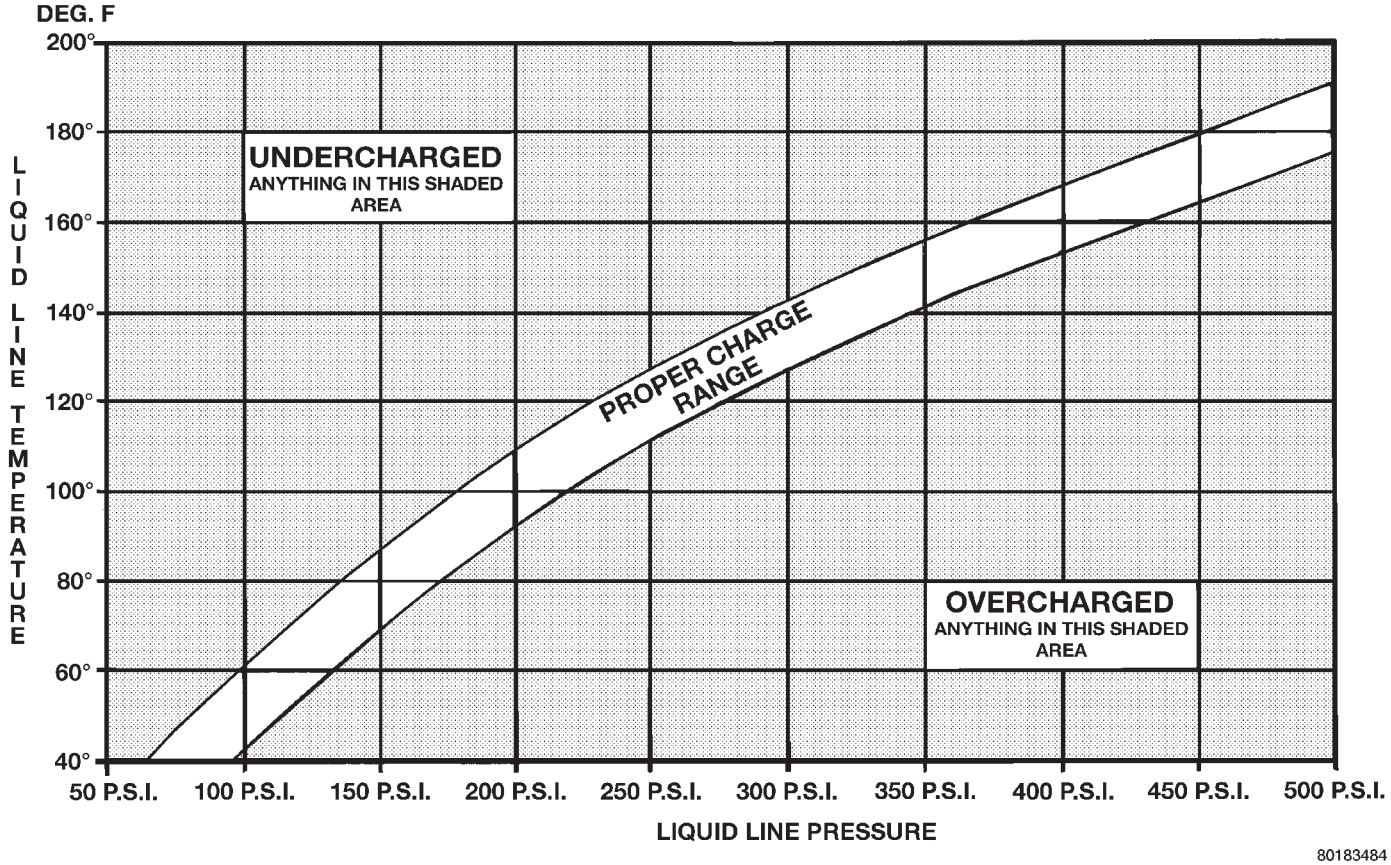

Fig. 33 Charge Determination Chart, Ambient Test Condition 85°F

REFRIGERANT (Continued)

location of a possible refrigerant leak, the exact leak location should be confirmed with an electronic leak detector prior to component repair or replacement. An electronic leak detector designed for R-134a refrigerant is recommended for locating and confirming refrigerant system leaks. See the operating instructions supplied by the equipment manufacturer for proper care and use of this equipment.

To detect a leak in the refrigerant system, perform one of the following procedures as indicated by the results of the refrigerant system charge level test.

SYSTEM EMPTY

(1) Evacuate the refrigerant system. (Refer to 24 - HEATING & AIR CONDITIONING/PLUMBING - FRONT/REFRIGERANT - STANDARD PROCEDURE - REFRIGERANT SYSTEM EVACUATE).

(2) Connect and dispense 0.283 kilograms (0.625 pounds or 10 ounces) of R-134a refrigerant into the evacuated refrigerant system. (Refer to 24 - HEATING & AIR CONDITIONING/PLUMBING - FRONT/REFRIGERANT - STANDARD PROCEDURE - REFRIGERANT SYSTEM CHARGE).

(3) Proceed to the SYSTEM LOW procedures.

SYSTEM LOW

(1) Position the vehicle in a wind-free work area. This will aid in detecting small leaks.

(2) Bring the refrigerant system up to operating temperature and pressure. This is done by allowing the engine to run at idle under the following conditions for five minutes, then turning the engine off.

(a) Front windows are open.

(b) Rear air conditioner Off (if equipped).

(c) Transaxle in Park.

(d) Front heater-A/C controls set to outside air, panel mode, blower high, and compressor engaged.

(3) Wait five to seven minutes and, with the engine not running, use a electronic R-134a leak detector and search for leaks. Because R-134a refrigerant is heavier than air, the leak detector probe should be moved slowly along the bottom side of all refrigerant lines, connector fittings and components.

(4) To inspect an evaporator for leaks, insert the electronic leak detector probe into a floor outlet or the recirculation air intake.

DIAGNOSIS AND TESTING - REFRIGERANT SYSTEM CHARGE LEVEL 2.5L DIESEL

WARNING: REFER TO THE APPLICABLE WARNINGS AND CAUTIONS FOR THIS SYSTEM BEFORE PERFORMING THE FOLLOWING OPERATION. (Refer to 24 - HEATING & AIR CONDITIONING/PLUMBING - FRONT - WARNING - A/C PLUMBING) and (Refer to 24 - HEATING & AIR CONDITIONING/PLUMBING - FRONT - CAUTION - A/C PLUMBING).

NOTE: The proper amount of R-134a refrigerant for the refrigerant system in this model is:

- **Single or Dual Zone (Front Unit Only - 2.5L Diesel) – 0.91 kilograms (2.00 pounds or 32 ounces)**
- **Single or Dual Zone (Front Unit Only) - 0.96 kilograms (2.13 pounds or 34 ounces)**
- **Three Zone (Front and Rear Units) - 1.31 kilograms (2.88 pounds or 46 ounces)**

The procedure that follows should be used to determine whether the refrigerant system contains the proper refrigerant charge. Symptoms of an improper refrigerant charge (low) include: poor air conditioner performance, fog emitted from the air conditioner outlets, a hissing sound from the expansion valve/evaporator area. There are two different methods with which the refrigerant charge level may be tested:

- Using a DRBIII® scan tool, a thermocouple and the Charge Determination Chart (Fig. 34). Refer to the appropriate diagnostic information.
- Using a manifold gauge set, a thermocouple and the Charge Determination Chart (Fig. 34).

A temperature probe is required to measure liquid line temperature. The clamp-on, Type K thermocouple temperature probe used in this procedure is available through the DaimlerChrysler Professional Service Equipment (PSE) program. This probe (PSE #66-324-0014 or #80PK-1A) is compatible with temperature-measuring instruments that accept Type K thermocouples, and have a miniature connector input. Other temperature probes are available through aftermarket sources; however, all references in this procedure will reflect the use of the probe made available through the PSE program.

In order to use the temperature probe, a digital thermometer will also be required. If a digital thermometer is not available, an adapter is available through the PSE program that will convert any standard digital multimeter into a digital thermometer. This adapter is designed to accept any standard Type K thermocouple. If a digital multimeter is not available, this tool is also available through the PSE program.

NOTE: When connecting the service equipment couplings to the refrigerant system service ports, be certain that the valve of each coupling is fully closed. This will reduce the amount of effort required to make the connection.

(1) Remove the caps from the refrigerant system service ports and attach a manifold gauge set or a R-134a refrigerant recovery/recycling/charging sta-

REFRIGERANT (Continued)

tion that meets SAE Standard J2210 to the refrigerant system.

(2) Attach a clamp-on thermocouple to the liquid line. The thermocouple must be placed as close to the A/C pressure transducer as possible to accurately observe liquid line temperature.

(3) Bring the refrigerant system up to operating temperature and pressure. This is done by allowing the engine to run at idle under the following conditions for five minutes.

(a) Front windows are open.

(b) Transaxle in Park.

(c) Front heater-A/C controls set to outside air, full cool, panel mode, blower high, and compressor engaged.

(d) If the vehicle is so equipped, the rear heater-A/C controls must be set to full cool and blower high.

(4) Raise the liquid line (discharge) pressure to about 1793 kPa (260 psi) by placing a piece of cardboard over part of the front side of the condenser. To place the cardboard properly, remove the upper radiator sight shield from the front fascia. Cover only enough of the condenser to raise and maintain the liquid line pressure at the specified level.

(5) Observe the liquid line (discharge) pressure and liquid line temperature. Using the Charge Determination Chart (Fig. 34), determine whether the refrigerant system is operating within the Proper Charge Range.

(a) If the refrigerant system is operating in the Undercharged area of the chart, add 0.057 kilogram (0.125 pound or 2 ounces) of refrigerant to the system.

(b) If the refrigerant system is operating in the Overcharged area of the chart, reclaim 0.057 kilogram (0.125 pound or 2 ounces) of refrigerant from the system.

(6) Recheck the system charge level following each refrigerant adjustment. Continue this process until the system readings are in the Proper Charge Range area on the Charge Determination Chart (Fig. 34).

STANDARD PROCEDURE

STANDARD PROCEDURE - REFRIGERANT SYSTEM SERVICE EQUIPMENT

RECOVERY/RECYCLING STATION

When servicing the air conditioning system, a R-134a refrigerant recovery/recycling/charging station that meets SAE Standard J2210 must be used (Fig. 35). Contact PSE or an automotive service equipment supplier for refrigerant recovery/recycling/charging equipment. See the operating instructions

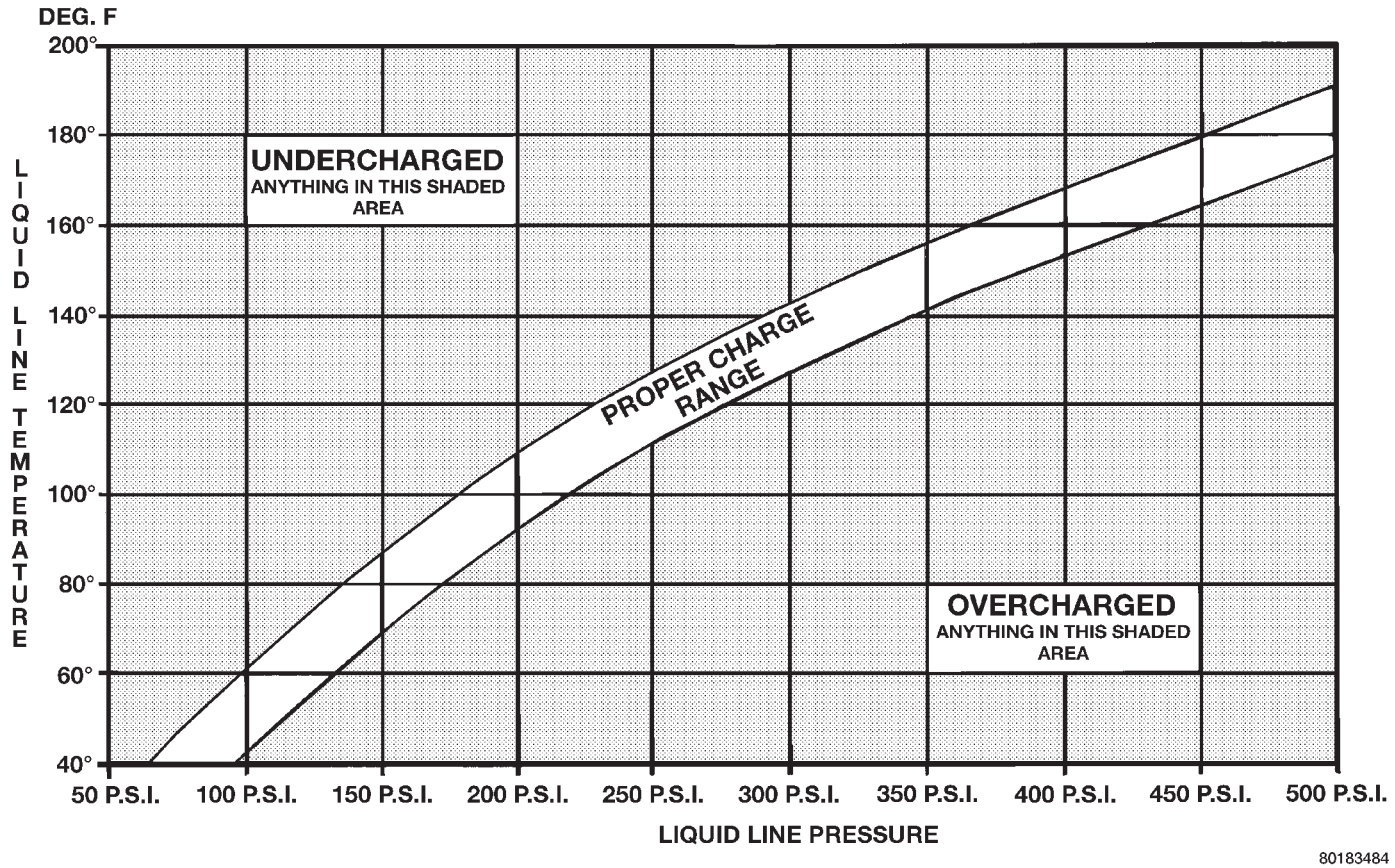

Fig. 34 Charge Determination Chart, Ambient Test Condition 85°F

REFRIGERANT (Continued)

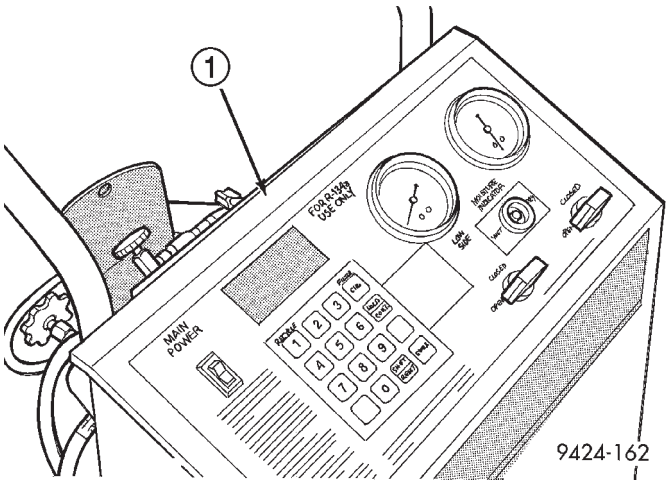

Fig. 35 Refrigerant Recovery/Recycling Station - Typical

1 - R-134 REFRIGERANT RECOVERY MACHINE

supplied by the equipment manufacturer for proper care and use of this equipment.

MANIFOLD GAUGE SET CONNECTIONS

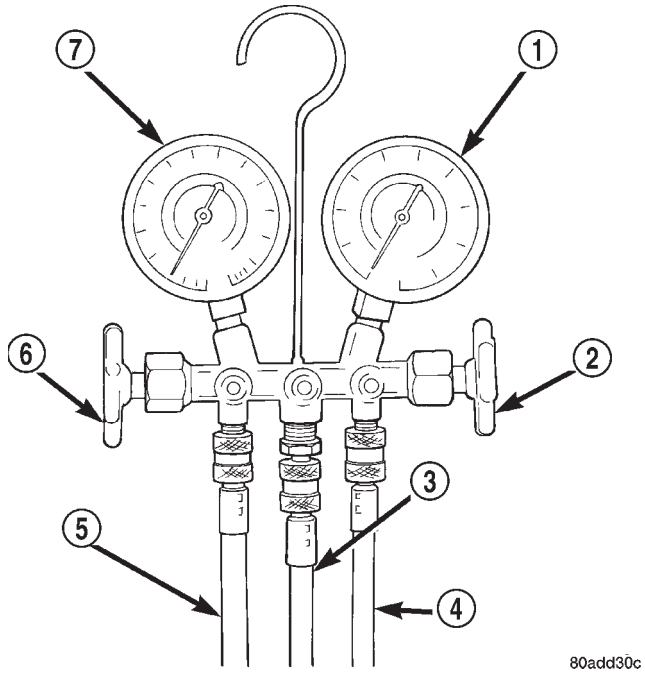

Fig. 36 Manifold Gauge Set - Typical

1 - HIGH PRESSURE GAUGE
2 - VALVE
3 - VACUUM/REFRIGERANT HOSE (YELLOW W/BLACK STRIPE)
4 - HIGH PRESSURE HOSE (RED W/BLACK STRIPE)
5 - LOW PRESSURE HOSE (BLUE W/BLACK STRIPE)
6 - VALVE
7 - LOW PRESSURE GAUGE

CAUTION: Do not use an R-12 manifold gauge set on an R-134a system. The refrigerants are not compatible and system damage will result.

A manifold gauge set may be needed with some recovery/recycling/charging equipment (Fig. 36). The service hoses on the gauge set being used should have manual (turn wheel), or automatic back-flow valves at the service port connector ends. This will prevent refrigerant from being released into the atmosphere.

- **LOW PRESSURE GAUGE HOSE** - The low pressure hose (Blue with Black stripe) attaches to the suction (low side) service port. This port is located on the suction line, near the compressor at the front of the engine compartment.
- **HIGH PRESSURE GAUGE HOSE** - The high pressure hose (Red with Black stripe) attaches to the discharge (high side) service port. This port is located on the liquid line near the filter-drier at the rear of the engine compartment.
- **RECOVERY/RECYCLING/EVACUATION/ CHARGING HOSE** - The center manifold hose (Yellow, or White, with Black stripe) is used to recover, evacuate, and charge the refrigerant system. When the low or high pressure valves on the manifold gauge set are opened, the refrigerant in the system will escape through this hose.

STANDARD PROCEDURE - REFRIGERANT SYSTEM CHARGE

WARNING: REFER TO THE APPLICABLE WARNINGS AND CAUTIONS FOR THIS SYSTEM BEFORE PERFORMING THE FOLLOWING OPERATION. (Refer to 24 - HEATING & AIR CONDITIONING/ PLUMBING - FRONT - WARNING - A/C PLUMBING) and (Refer to 24 - HEATING & AIR CONDITIONING/ PLUMBING - FRONT - CAUTION - A/C PLUMBING).

After all refrigerant system leaks have been repaired and the refrigerant system has been evacuated, a refrigerant charge can be injected into the system. For the proper amount of the refrigerant charge, refer to REFRIGERANT CHARGE CAPACITY . A R-134a refrigerant recovery/recycling/charging station that meets SAE Standard J2210 must be used to charge the refrigerant system with R-134a refrigerant. See the operating instructions supplied by the equipment manufacturer for proper care and use of this equipment.

REFRIGERANT CHARGE CAPACITY

The R-134a refrigerant system charge capacity for this vehicle is:

REFRIGERANT (Continued)

- **Single or Dual Zone (Front Unit Only - with 2.5L Turbo Diesel)**0.91 kilograms (2.00 pounds or 32 ounces)
- **Single or Dual Zone (Front Unit Only)** - 0.96 kilograms (2.13 pounds or 34 ounces)
- **Three Zone (Front and Rear Units)** - 1.31 kilograms (2.88 pounds or 46 ounces)

CHARGING PROCEDURE

(1) Evacuate the refrigerant system. (Refer to 24 - HEATING & AIR CONDITIONING/PLUMBING - FRONT/REFRIGERANT - STANDARD PROCEDURE - REFRIGERANT SYSTEM EVACUATE).

(2) A manifold gauge set and a R-134a refrigerant recovery/recycling/charging station that meets SAE Standard J2210 should still be connected to the refrigerant system.

(3) Measure the proper amount of refrigerant and heat it to 52° C (125° F) with the charging station. See the operating instructions supplied by the equipment manufacturer for proper use of this equipment.

(4) Open both the suction and discharge valves, then open the charge valve to allow the heated refrigerant to flow into the system.

(5) When the transfer of refrigerant has stopped, close both the suction and discharge valves.

(6) If all of the refrigerant charge did not transfer from the dispensing device, open all of the windows in the vehicle and set the heater-air conditioner controls so that the compressor is engaged and the blower motor is operating at its lowest speed setting. Run the engine at a steady high idle (about 1400 rpm). If the compressor will not engage, test the compressor clutch control circuit and repair as required.

(7) Open the suction valve to allow the remaining refrigerant to transfer to the refrigerant system.

WARNING: TAKE CARE NOT TO OPEN THE DISCHARGE (HIGH PRESSURE) VALVE AT THIS TIME.

(8) Close the suction valve and test the system performance. (Refer to 24 - HEATING & AIR CONDITIONING - STANDARD PROCEDURE - A/C PERFORMANCE TEST).

(9) Disconnect the charging station and manifold gauge set from the refrigerant system service ports.

(10) Reinstall the caps onto the refrigerant system service ports.

(11) Run the HVAC Control Cooldown test to verify proper operation(Refer to 24 - HEATING & AIR CONDITIONING - DIAGNOSIS AND TESTING).

STANDARD PROCEDURE - REFRIGERANT SYSTEM EVACUATE

WARNING: REFER TO THE APPLICABLE WARNINGS AND CAUTIONS FOR THIS SYSTEM BEFORE PERFORMING THE FOLLOWING OPERATION. (Refer to 24 - HEATING & AIR CONDITIONING/ PLUMBING - FRONT - WARNING - A/C PLUMBING) and (Refer to 24 - HEATING & AIR CONDITIONING/ PLUMBING - FRONT - CAUTION - A/C PLUMBING).

If the refrigerant system has been open to the atmosphere, it must be evacuated before the system can be charged. If moisture and air enters the system and becomes mixed with the refrigerant, the compressor head pressure will rise above acceptable operating levels. This will reduce the performance of the air conditioner and damage the compressor. Evacuating the refrigerant system will remove the air and boil the moisture out of the system at near room temperature. A R-134a refrigerant recovery/recycling/charging station that meets SAE Standard J2210 must be used to evacuate the refrigerant system. See the operating instructions supplied by the equipment manufacturer for proper care and use of this equipment. To evacuate the refrigerant system, use the following procedure:

NOTE: When connecting the service equipment couplings to the refrigerant system service ports, be certain that the valve of each coupling is fully closed. This will reduce the amount of effort required to make the connection.

(1) Remove the caps from the refrigerant system service ports and attach a manifold gauge set and a R-134a refrigerant recovery/recycling/charging station that meets SAE Standard J2210 to the refrigerant system.

(2) Open both the suction and discharge valves and start the charging station vacuum pump.

(3) When the suction gauge has read 88 kPa (26 in. Hg.) vacuum or greater for 45 minutes, close both the suction and discharge valves and turn off the vacuum pump. If the refrigerant system fails to reach the specified vacuum, the system has a leak that must be corrected. (Refer to 24 - HEATING & AIR CONDITIONING/PLUMBING - FRONT/REFRIGERANT - STANDARD PROCEDURE - REFRIGERANT SYSTEM LEAKS).

(4) If the refrigerant system maintains the specified vacuum for thirty minutes, restart the vacuum pump, open both the suction and discharge valves, and evacuate the system for an additional ten minutes.

(5) Close both the suction and discharge valves, and turn off the charging station vacuum pump.

(6) The refrigerant system is now ready to be charged with R-134a refrigerant. (Refer to 24 - HEATING & AIR CONDITIONING/PLUMBING - FRONT/REFRIGERANT - STANDARD PROCEDURE - REFRIGERANT SYSTEM CHARGE).

REFRIGERANT (Continued)

STANDARD PROCEDURE - REFRIGERANT RECOVERY

WARNING: REFER TO THE APPLICABLE WARNINGS AND CAUTIONS FOR THIS SYSTEM BEFORE PERFORMING THE FOLLOWING OPERATION. (Refer to 24 - HEATING & AIR CONDITIONING/ PLUMBING - FRONT - WARNING - A/C PLUMBING) and (Refer to 24 - HEATING & AIR CONDITIONING/ PLUMBING - FRONT - CAUTION - A/C PLUMBING).

A R-134a refrigerant recovery/recycling/charging station that meets SAE Standard J2210 must be used to recover the refrigerant from an R-134a refrigerant system, whenever the refrigerant system must be opened for service. See the operating instructions supplied by the equipment manufacturer for the proper care and use of this equipment.

REFRIGERANT OIL

DESCRIPTION

The refrigerant oil used in R-134a refrigerant systems is a synthetic-based, PolyAlkylene Glycol (PAG), wax-free lubricant. Mineral-based R-12 refrigerant oils are not compatible with PAG oils, and should never be introduced to an R-134a refrigerant system. There are different PAG oils available, and each contains a different additive package. The 10S20H compressor used in this vehicle are designed to use an ND-8 PAG refrigerant oil. Use only refrigerant oil of this same type to service the refrigerant system.

OPERATION

After performing any refrigerant recovery or recycling operation, always replenish the refrigerant system with the same amount of the recommended refrigerant oil as was removed. Too little refrigerant oil can cause compressor damage, and too much can reduce air conditioning system performance. PAG refrigerant oil is much more hygroscopic than mineral oil, and will absorb any moisture it comes into contact with, even moisture in the air. The PAG oil container should always be kept tightly capped until it is ready to be used. After use, recap the oil container immediately to prevent moisture contamination.

STANDARD PROCEDURE - REFRIGERANT OIL LEVEL

WARNING: REFER TO THE APPLICABLE WARNINGS AND CAUTIONS FOR THIS SYSTEM BEFORE PERFORMING THE FOLLOWING OPERATION. (Refer to 24 - HEATING & AIR CONDITIONING/ PLUMBING - FRONT - WARNING - A/C PLUMBING) and (Refer to 24 - HEATING & AIR CONDITIONING/ PLUMBING - FRONT - CAUTION - A/C PLUMBING).

When an air conditioning system is assembled at the factory, all components except the compressor are refrigerant oil free. After the refrigerant system has been charged and operated, the refrigerant oil in the compressor is dispersed throughout the refrigerant system. The receiver/drier, evaporator, condenser, and compressor will each retain a significant amount of the needed refrigerant oil.

It is important to have the correct amount of oil in the refrigerant system. This ensures proper lubrication of the compressor. Too little oil will result in damage to the compressor. Too much oil will reduce the cooling capacity of the air conditioning system.

It will not be necessary to check the oil level in the compressor or to add oil, unless there has been an oil loss. An oil loss may occur due to a rupture or leak from a refrigerant line, a connector fitting, a component, or a component seal. If a leak occurs, add 30 milliliters (1 fluid ounce) of refrigerant oil to the refrigerant system after the repair has been made. Refrigerant oil loss will be evident at the leak point by the presence of a wet, shiny surface around the leak.

Refrigerant oil must be added when an receiver/ drier, evaporator or condenser is replaced. See the Refrigerant Oil Capacities chart for the proper amount of refrigerant oil to add. When a compressor is replaced, the refrigerant oil must be drained from the old compressor and measured. Drain all of the refrigerant oil from the new compressor, then fill the new compressor with the same amount of fresh new refrigerant oil that was drained out of the old compressor.

REFRIGERANT OIL CAPACITIES				
	Front A/C		Front & Rear A/C	
COMPONENT	ml	fl oz	ml	fl oz
Compressor	150	5.0	220	7.4
Filter-Drier	30	1.0	30	1.0
Condenser	30	1.0	30	1.0
Front Evaporator	60	2.0	60	2.0
Rear Evap. (including underbody lines)	N/A	N/A	60	2.0
Compressor	Drain and measure the oil from the old compressor - See text above.			

SUCTION LINE

REMOVAL

The front air conditioner suction line includes the low side service port on a section of tubing located near the compressor. On models equipped with the optional rear air conditioner, the front air conditioner suction line also includes a suction line hose and tube extension that connects the front suction line to the suction line for the rear air conditioner.

WARNING: REFER TO THE APPLICABLE WARNINGS AND CAUTIONS FOR THIS SYSTEM BEFORE PERFORMING THE FOLLOWING OPERATION. (Refer to 24 - HEATING & AIR CONDITIONING/ PLUMBING - FRONT - WARNING - A/C PLUMBING) and (Refer to 24 - HEATING & AIR CONDITIONING/ PLUMBING - FRONT - CAUTION - A/C PLUMBING).

(1) Recover the refrigerant from the refrigerant system. (Refer to 24 - HEATING & AIR CONDITIONING/ PLUMBING - FRONT/REFRIGERANT - STANDARD PROCEDURE - REFRIGERANT RECOVERY).

(2) Disconnect and isolate the battery negative cable.

(3) Remove the air cleaner top cover and snorkel from the air cleaner housing located on the right side of the engine compartment.

(4) Disconnect the drain tube from the wiper module drain on the right side of the engine compartment.

(5) Remove the nut that secures the suction line fitting to the top of the compressor.

(6) Disconnect the suction line fitting from the compressor suction port.

(7) Remove the seal from the suction line fitting and discard.

(8) Install plugs in, or tape over the opened suction line fitting and the compressor suction port.

(9) Disengage the retainer that secures the suction line routing clip to the filter-drier mounting bracket on the side of the right front strut tower in the engine compartment (Fig. 37).

(10) Remove the nut that secures the suction line and liquid line fittings to the expansion valve.

(11) Disconnect the suction line and liquid line fittings from the expansion valve.

(12) Remove the seals from the suction line and liquid line fittings and discard.

(13) Install plugs in, or tape over the opened suction line and liquid line fittings and both expansion valve ports.

(14) If the vehicle is equipped with the optional rear air conditioner, go to Step 15. If the vehicle does not have the optional rear air conditioner, go to Step 21.

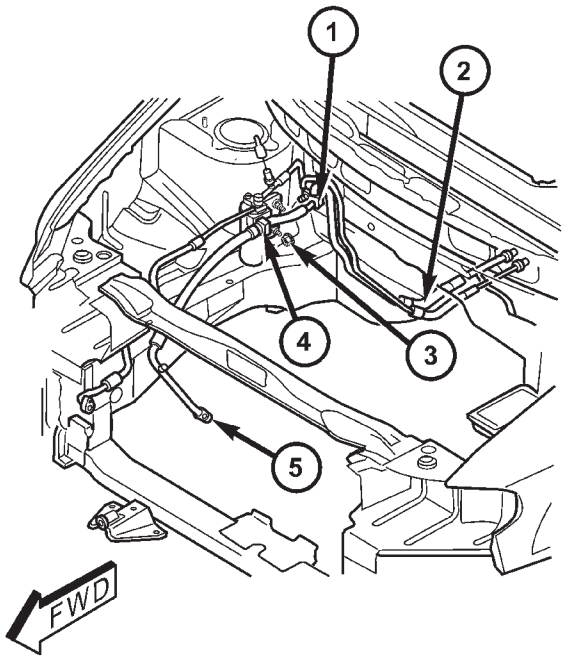

Fig. 37 Suction Line

1 - EXPANSION VALVE
2 - SUCTION LINE EXTENSION (REAR A/C ONLY)
3 - NUT
4 - ROUTING CLIP
5 - SUCTION LINE

(15) Raise and support the vehicle.

(16) Cut the tie strap located just forward of the connections between the underbody plumbing and the engine compartment plumbing for the rear heater and air conditioner (Fig. 38).

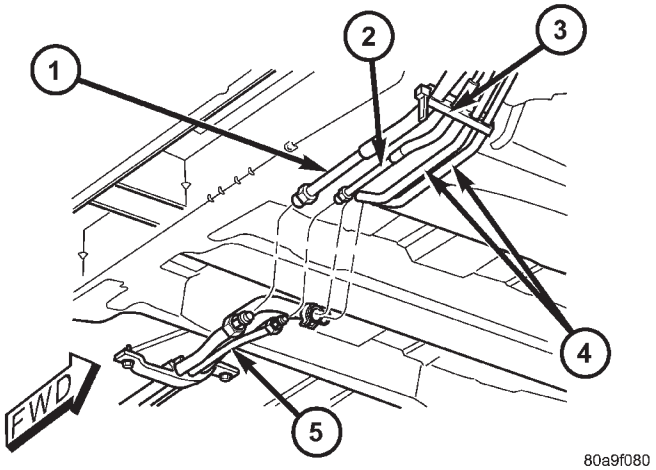

Fig. 38 Underbody Connections

1 - SUCTION LINE EXTENSION
2 - LIQUID LINE EXTENSION
3 - TIE STRAP
4- HEATER LINE EXTENSIONS
5 - UNDERBODY LINES

SUCTION LINE (Continued)

(17) Disconnect the suction line extension fitting from the underbody suction line fitting for the rear air conditioner.
(18) Remove the seal from the underbody suction line fitting and discard.
(19) Install plugs in, or tape over the opened suction line fittings.
(20) Lower the vehicle.
(21) Remove the suction line from the engine compartment.

INSTALLATION

The front air conditioner suction line includes the low side service port on a section of tubing located near the compressor. On models equipped with the optional rear air conditioner, the front air conditioner suction line also includes a suction line hose and tube extension that connects the front suction line to the suction line for the rear air conditioner.

WARNING: REFER TO THE APPLICABLE WARNINGS AND CAUTIONS FOR THIS SYSTEM BEFORE PERFORMING THE FOLLOWING OPERATION. (Refer to 24 - HEATING & AIR CONDITIONING/ PLUMBING - FRONT - WARNING - A/C PLUMBING) and (Refer to 24 - HEATING & AIR CONDITIONING/ PLUMBING - FRONT - CAUTION - A/C PLUMBING).

(1) Position the suction line into the engine compartment.
(2) Remove the tape or plugs from the suction line and liquid line fittings and both expansion valve ports.
(3) Lubricate new rubber O-ring seals with clean refrigerant oil and install them on the suction line and liquid line fittings.
(4) Reconnect the liquid line and suction line fittings to the expansion valve.
(5) Install and tighten the nut that secures the suction line and liquid line fittings to the expansion valve. Tighten the nut to 23 N·m (17 ft. lbs.).
(6) Engage the retainer that secures the suction line routing clip to the filter-drier mounting bracket on the side of the right front strut tower in the engine compartment.
(7) Remove the tape or plugs from the compressor suction port and the suction line fitting.
(8) Lubricate a new rubber O-ring seal with clean refrigerant oil and install it on the suction line fitting.
(9) Reconnect the suction line fitting to the compressor suction port.
(10) Install and tighten the nut that secures the suction line fitting to the compressor. Tighten the nut to 23 N·m (17 ft. lbs.).
(11) Reconnect the drain tube to the wiper module drain on the right side of the engine compartment.
(12) Reinstall the air cleaner top cover and snorkel onto the air cleaner housing located on the right side of the engine compartment.
(13) Reconnect the battery negative cable.
(14) If the vehicle is equipped with the optional rear air conditioner, go to Step 15. If the vehicle does not have the optional rear air conditioner, go to Step 21.
(15) Raise and support the vehicle.
(16) Remove the tape or plugs from the suction line extension fitting and the underbody suction line fitting.
(17) Lubricate a new rubber O-ring seal with clean refrigerant oil and install it on the underbody suction line fitting.
(18) Reconnect the suction line extension fitting to the underbody suction line fitting. Tighten the fittings to 23 N·m (17 ft. lbs.).
(19) Install a new tie strap just forward of the connections between the underbody plumbing and the engine compartment plumbing for the rear heater and air conditioner.
(20) Lower the vehicle.
(21) Evacuate the refrigerant system. (Refer to 24 - HEATING & AIR CONDITIONING/PLUMBING - FRONT/REFRIGERANT - STANDARD PROCEDURE - REFRIGERANT SYSTEM EVACUATE).
(22) Charge the refrigerant system. (Refer to 24 - HEATING & AIR CONDITIONING/PLUMBING - FRONT/REFRIGERANT - STANDARD PROCEDURE - REFRIGERANT SYSTEM CHARGE).

SERVICE PORTS

REMOVAL

WARNING: REFER TO THE APPLICABLE WARNINGS AND CAUTIONS FOR THIS SYSTEM BEFORE PERFORMING THE FOLLOWING OPERATION. (Refer to 24 - HEATING & AIR CONDITIONING/ PLUMBING - FRONT - WARNING - A/C PLUMBING) and (Refer to 24 - HEATING & AIR CONDITIONING/ PLUMBING - FRONT - CAUTION - A/C PLUMBING).

(1) Remove the protective cap from the A/C service port (Fig. 39).
(2) Recover the refrigerant from the refrigerant system. (Refer to 24 - HEATING & AIR CONDITIONING/PLUMBING - FRONT/REFRIGERANT - STANDARD PROCEDURE - REFRIGERANT RECOVERY).
(3) Using a standard Schrader-type valve core tool, remove the valve core from the A/C service port.
(4) Install a plug in or tape over the opened A/C service port.

SERVICE PORTS (Continued)

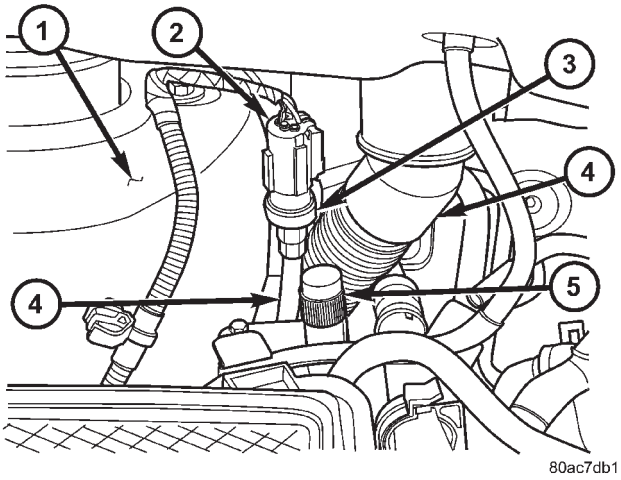

Fig. 39 A/C Service Port - Typical

1 - RIGHT FRONT STRUT TOWER
2 - CONNECTOR
3 - A/C PRESSURE TRANSDUCER
4 - RIGHT WIPER MODULE DRAIN TUBE
5 - HIGH SIDE SERVICE PORT
6 - LIQUID LINE

INSTALLATION

WARNING: REFER TO THE APPLICABLE WARNINGS AND CAUTIONS FOR THIS SYSTEM BEFORE PERFORMING THE FOLLOWING OPERATION. (Refer to 24 - HEATING & AIR CONDITIONING/ PLUMBING - FRONT - WARNING - A/C PLUMBING) and (Refer to 24 - HEATING & AIR CONDITIONING/ PLUMBING - FRONT - CAUTION - A/C PLUMBING).

(1) Lubricate the A/C service port valve core with clean refrigerant oil prior to installation. Use only refrigerant oil of the type recommended for the compressor in the vehicle.

(2) Remove the tape or plug from the A/C service port.

(3) Using a standard Schrader-type valve core tool, install and tighten the replacement valve core into the A/C service port.

CAUTION: A valve core that is not fully seated in the A/C service port can result in damage to the valve during refrigerant system evacuation and charge. Such damage may result in a loss of system refrigerant while uncoupling the charge adapters.

(4) Evacuate the refrigerant system. (Refer to 24 - HEATING & AIR CONDITIONING/PLUMBING - FRONT/REFRIGERANT - STANDARD PROCEDURE - REFRIGERANT SYSTEM EVACUATE).

(5) Charge the refrigerant system. (Refer to 24 - HEATING & AIR CONDITIONING/PLUMBING - FRONT/REFRIGERANT - STANDARD PROCEDURE - REFRIGERANT SYSTEM CHARGE).

(6) Reinstall the protective cap onto the A/C service port.

PLUMBING - REAR

TABLE OF CONTENTS

page

EVAPORATOR
DESCRIPTION 97
OPERATION 97
REMOVAL
REMOVAL - REAR EVAPORATOR 97
REMOVAL - EVAPORATOR LINE EXTENSION 98
INSTALLATION
INSTALLATION - REAR EVAPORATOR 99
INSTALLATION - EVAPORATOR LINE EXTENSION 99
EXPANSION VALVE
DESCRIPTION 99
OPERATION 100
DIAGNOSIS AND TESTING - EXPANSION VALVE 100
REMOVAL 100
INSTALLATION 101
HEATER CORE
DESCRIPTION 101
OPERATION 101
STANDARD PROCEDURE - HEATER CORE FILLING 101
REMOVAL 102
INSTALLATION 103
HEATER HOSE
REMOVAL 103
INSTALLATION 103
SUCTION LINE
REMOVAL 104
INSTALLATION 105
UNDERBODY LINES
DESCRIPTION 106
OPERATION 106
REMOVAL
REMOVAL - REAR HEATER LINES 107
REMOVAL - REAR AIR CONDITIONING LINES 107
INSTALLATION
INSTALLATION - REAR HEATER LINES 108
INSTALLATION - REAR AIR CONDITIONING LINES 108

EVAPORATOR

DESCRIPTION

The rear evaporator is located in the rear heater-A/C unit housing, behind the right rear wheel house. The evaporator is positioned in the rear heater-A/C housing so that all air that enters the housing must pass over the fins of the evaporator before it is distributed through the system ducts and outlets. However, air passing over the evaporator fins will only be conditioned when the compressor is engaged and circulating refrigerant through the evaporator tubes. The rear heater-A/C unit housing must be removed from the vehicle to access the evaporator for service. The evaporator cannot be adjusted or repaired and, if faulty or damaged, it must be replaced.

OPERATION

Refrigerant enters the rear evaporator from the rear expansion valve as a low-temperature, low-pressure liquid. As air flows over the fins of the evaporator, the humidity in the air condenses on the fins, and the heat from the air is absorbed by the refrigerant. Heat absorption causes the refrigerant to boil and vaporize. The refrigerant becomes a low-pressure gas when it leaves the evaporator.

REMOVAL

REMOVAL - REAR EVAPORATOR

WARNING: REFER TO THE APPLICABLE WARNINGS AND CAUTIONS FOR THIS SYSTEM BEFORE PERFORMING THE FOLLOWING OPERATION. (Refer to 24 - HEATING & AIR CONDITIONING/ PLUMBING - FRONT - WARNING - A/C PLUMBING), (Refer to 24 - HEATING & AIR CONDITIONING/ PLUMBING - FRONT - CAUTION - A/C PLUMBING), and (Refer to 24 - HEATING & AIR CONDITIONING/ PLUMBING - FRONT - WARNING - HEATER PLUMBING).

(1) Remove the rear heater-A/C unit housing from the vehicle. (Refer to 24 - HEATING & AIR CONDITIONING/DISTRIBUTION - REAR/REAR HEATER-A/C HOUSING - REMOVAL).

(2) Remove the rear evaporator line extension from the expansion valve. (Refer to 24 - HEATING & AIR CONDITIONING/PLUMBING - REAR/EVAPORATOR - REMOVAL - EVAPORATOR LINE EXTENSION).

(3) Remove the rear expansion valve from the rear evaporator. (Refer to 24 - HEATING & AIR CONDI-

EVAPORATOR (Continued)

TIONING/PLUMBING - REAR/EXPANSION VALVE - REMOVAL).

(4) Remove the rubber grommet that seals the evaporator inlet and outlet tubes to the rear heater-A/C housing near the expansion valve.

(5) Remove the three screws that secure the upper half of the rear heater-A/C housing to the lower half (Fig. 1).

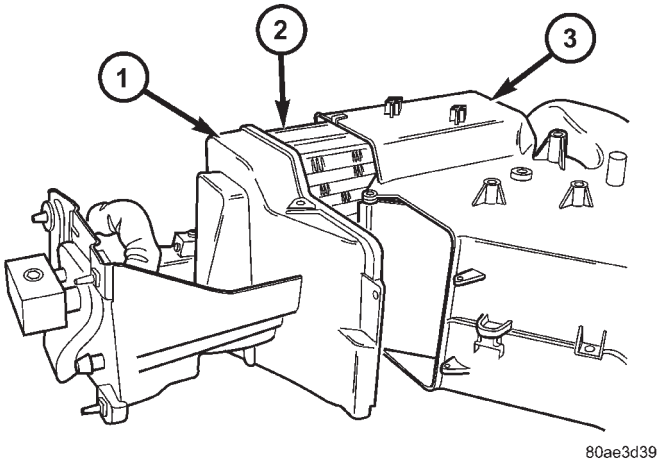

Fig. 1 Rear Evaporator

1 - UPPER REAR HEATER-A/C HOUSING
2 - EVAPORATOR
3 - LOWER REAR HEATER-A/C HOUSING

(6) Remove the three small metal spring clips that secure the upper half of the rear heater-A/C housing to the lower half.

(7) Carefully separate and remove the upper half of the rear heater-A/C housing from the lower half.

(8) Remove the evaporator from the lower half of the rear heater-A/C housing.

REMOVAL - EVAPORATOR LINE EXTENSION

WARNING: REFER TO THE APPLICABLE WARNINGS AND CAUTIONS FOR THIS SYSTEM BEFORE PERFORMING THE FOLLOWING OPERATION. (Refer to 24 - HEATING & AIR CONDITIONING/ PLUMBING - FRONT - WARNING - A/C PLUMBING), (Refer to 24 - HEATING & AIR CONDITIONING/ PLUMBING - FRONT - CAUTION - A/C PLUMBING), and (Refer to 24 - HEATING & AIR CONDITIONING/ PLUMBING - FRONT - WARNING - HEATER PLUMBING).

(1) Remove the rear heater-A/C unit housing from the vehicle. (Refer to 24 - HEATING & AIR CONDITIONING/DISTRIBUTION - REAR/REAR HEATER-A/C HOUSING - REMOVAL).

(2) Remove the screw that secures the plate that captures and seals the evaporator line extension within the base of the rear heater-A/C unit housing (Fig. 2).

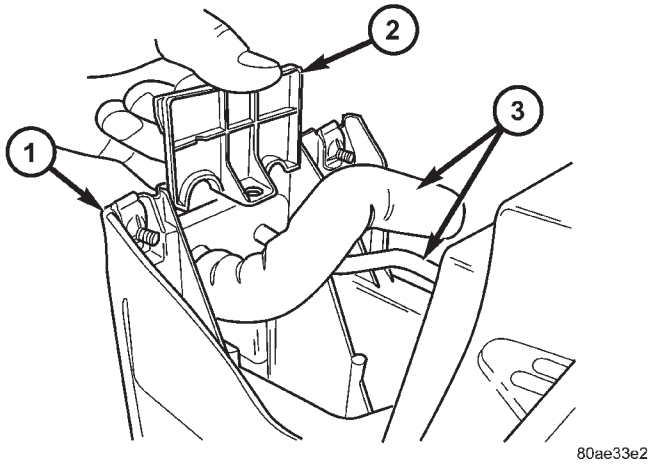

Fig. 2 Evaporator Line Extension Plate

1 - REAR HEATER-A/C HOUSING BASE
2 - PLATE
3 - EVAPORATOR LINE EXTENSION

(3) Remove the capture plate from the rear heater-A/C unit housing base.

(4) Carefully peel back the expansion valve foam insulator wrap far enough to access the evaporator line extension sealing plate on the bottom of the expansion valve (Fig. 3).

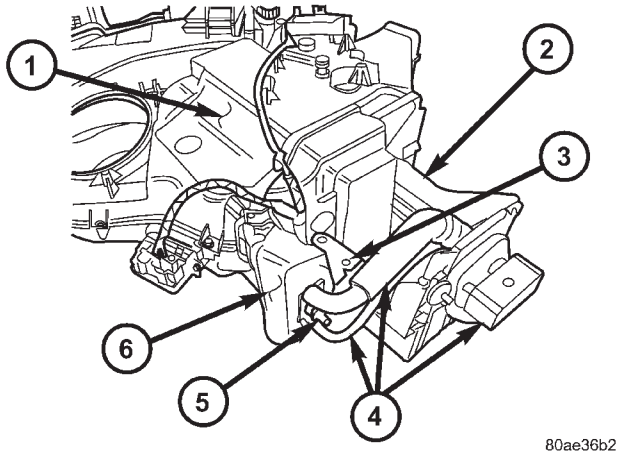

Fig. 3 Evaporator Line Extension

1 - UPPER REAR HEATER-A/C HOUSING
2 - LOWER REAR HEATER-A/C HOUSING
3 - EXPANSION VALVE BRACKET
4 - EVAPORATOR LINE EXTENSION
5 - EXPANSION VALVE STUD
6 - INSULATOR WRAP

EVAPORATOR (Continued)

(5) Remove the two screws that secure the expansion valve bracket to the lower rear heater-A/C unit housing.

(6) Remove the nut that secures the expansion valve bracket to the expansion valve stud.

(7) Remove the expansion valve bracket from the expansion valve stud.

(8) Remove the nut that secures the evaporator line extension seal plate to the expansion valve stud.

(9) Remove the evaporator line extension seal plate from the expansion valve stud.

(10) Remove the evaporator line extension from the expansion valve and the rear heater-A/C housing base.

(11) Remove the seals from the evaporator line extension fittings and discard.

(12) Install plugs in, or tape over the opened evaporator line extension fittings and both expansion valve ports.

INSTALLATION

INSTALLATION - REAR EVAPORATOR

NOTE: If the evaporator is being replaced, add 60 milliliters (2 fluid ounces) of refrigerant oil to the refrigerant system. Use only refrigerant oil of the type recommended for the compressor in the vehicle.

(1) Carefully lower the evaporator and its foam wrap into the lower half of the rear heater-A/C housing.

(2) Position the upper half of the rear heater-A/C housing onto the lower half.

(3) Install the three small metal spring clips that secure the upper half of the rear heater-A/C housing to the lower half.

(4) Install and tighten the three screws that secure the upper half of the rear heater-A/C housing to the lower half. Tighten the screws to 2 N·m (18 in. lbs.).

(5) Install the rubber grommet that seals the evaporator inlet and outlet tubes to the rear heater-A/C housing near the expansion valve.

(6) Reinstall the rear expansion valve onto the rear evaporator. (Refer to 24 - HEATING & AIR CONDITIONING/PLUMBING - REAR/EXPANSION VALVE - INSTALLATION).

(7) Reinstall the rear evaporator extension line onto the expansion valve. (Refer to 24 - HEATING & AIR CONDITIONING/PLUMBING - REAR/EVAPORATOR - INSTALLATION - EVAPORATOR EXTENSION LINE).

(8) Reinstall the rear heater-A/C unit housing into the vehicle. (Refer to 24 - HEATING & AIR CONDITIONING/DISTRIBUTION - REAR/REAR HEATER-A/C HOUSING - INSTALLATION).

INSTALLATION - EVAPORATOR LINE EXTENSION

(1) Remove the tape or plugs from the evaporator line extension fittings and both expansion valve ports.

(2) Lubricate new rubber O-ring seals with clean refrigerant oil and install them on the evaporator line extension fittings.

(3) Position the evaporator line extension to the expansion valve and the rear heater-A/C housing base.

(4) Position the evaporator line extension seal plate over the expansion valve stud.

(5) Install and tighten the nut that secures the evaporator line extension seal plate to the expansion valve stud. Tighten the nut to 23 N·m (17 ft. lbs.).

(6) Position the expansion valve bracket over the expansion valve stud.

(7) Install and tighten the two screws that secure the expansion valve bracket to the lower rear heater-A/C unit housing. Tighten the screws to 2 N·m (18 in. lbs.).

(8) Install and tighten the nut that secures the expansion valve bracket to the expansion valve stud. Tighten the nut to 23 N·m (17 ft. lbs.).

(9) Carefully restore the expansion valve foam insulator wrap back around the expansion valve.

(10) Position the plate that captures and seals the evaporator line extension onto the rear heater-A/C unit housing base.

(11) Install and tighten the screw that secures the capture plate to the base of the rear heater-A/C unit housing. Tighten the screw to 2 N·m (18 in. lbs.).

(12) Reinstall the rear heater-A/C unit housing into the vehicle. (Refer to 24 - HEATING & AIR CONDITIONING/DISTRIBUTION - REAR/REAR HEATER-A/C HOUSING - INSTALLATION).

EXPANSION VALVE

DESCRIPTION

The rear “H” valve-type thermal expansion valve (TXV) is located at the rear of the rear heater-A/C unit housing between the evaporator line extension and the evaporator coil. High-pressure, low temperature liquid refrigerant from the liquid line passes through the expansion valve orifice, converting it into a low-pressure, low-temperature mixture of liquid and gas before it enters the evaporator coil. The expansion valve is a factory calibrated unit and cannot be adjusted or repaired. If faulty or damaged, the expansion valve must be replaced.

EXPANSION VALVE (Continued)

OPERATION

A mechanical sensor in the expansion valve control head monitors the temperature and pressure of the refrigerant leaving the evaporator coil through the suction line, and adjusts the orifice size at the liquid line to let the proper amount of refrigerant into the evaporator coil to meet the vehicle cooling requirements. Controlling the refrigerant flow through the evaporator ensures that none of the refrigerant leaving the evaporator is still in a liquid state, which could damage the compressor.

DIAGNOSIS AND TESTING - EXPANSION VALVE

WARNING: REFER TO THE APPLICABLE WARNINGS AND CAUTIONS FOR THIS SYSTEM BEFORE PERFORMING THE FOLLOWING OPERATION. (Refer to 24 - HEATING & AIR CONDITIONING/ PLUMBING - FRONT - WARNING - A/C PLUMBING) and (Refer to 24 - HEATING & AIR CONDITIONING/ PLUMBING - FRONT - CAUTION - A/C PLUMBING).

NOTE: The expansion valve should only be tested following testing of the compressor.

NOTE: Liquid CO is required to test the expansion valve. This material is available from most welding supply facilities. Liquid CO is also available from companies which service and sell fire extinguishers.

When testing the expansion valve, the work area and the vehicle temperature must be 21° to 27° C (70° to 85° F). To test the expansion valve:

(1) Connect a charging station or manifold gauge set to the refrigerant system service ports. Verify the refrigerant charge level.

(2) Close all doors, windows and vents to the passenger compartment.

(3) Set the heater-air conditioner controls so that the compressor is operating, the temperature control is in the highest temperature position, the mode door is directing the output to the floor outlets, and the blower is operating at the highest speed setting.

(4) Start the engine and allow it to idle at 1000 rpm. After the engine has reached normal operating temperature, allow the passenger compartment to heat up. This will create the need for maximum refrigerant flow into the evaporator.

(5) If the refrigerant charge is sufficient, the discharge (high pressure) gauge should read 965 to 1655 kPa (140 to 240 psi). The suction (low pressure) gauge should read 140 kPa to 207 kPa (20 psi to 30 psi). If OK, go to Step 6. If not OK, replace the faulty expansion valve.

WARNING: PROTECT THE SKIN AND EYES FROM EXPOSURE TO LIQUID CO. PERSONAL INJURY CAN RESULT.

(6) If the suction (low pressure) gauge reads within the specified range, freeze the expansion valve control head for 30 seconds using liquid CO or another suitable super-cold material.**Do not spray R-134a or R-12 refrigerant on the expansion valve control head for this test.** The suction (low pressure) gauge reading should drop by 10 psi. If OK, go to Step 7 If not OK, replace the faulty expansion valve.

(7) Allow the expansion valve control head to thaw. The suction (low pressure) gauge reading should stabilize at 140 kPa to 240 kPa (20 psi to 30 psi). If not OK, replace the faulty expansion valve.

(8) When expansion valve testing is complete, test the overall air conditioner performance. (Refer to 24 - HEATING & AIR CONDITIONING - DIAGNOSIS AND TESTING - A/C PERFORMANCE TEST). Remove all test equipment before returning the vehicle to service.

REMOVAL

WARNING: REFER TO THE APPLICABLE WARNINGS AND CAUTIONS FOR THIS SYSTEM BEFORE PERFORMING THE FOLLOWING OPERATION. (Refer to 24 - HEATING & AIR CONDITIONING/ PLUMBING - FRONT - WARNING - A/C PLUMBING), (Refer to 24 - HEATING & AIR CONDITIONING/ PLUMBING - FRONT - CAUTION - A/C PLUMBING), and (Refer to 24 - HEATING & AIR CONDITIONING/ PLUMBING - FRONT - WARNING - HEATER PLUMBING).

(1) Remove the rear heater-A/C unit housing from the vehicle. (Refer to 24 - HEATING & AIR CONDITIONING/DISTRIBUTION - REAR/REAR HEATER-A/C HOUSING - REMOVAL).

(2) Carefully remove the foam insulator wrap from the rear expansion valve.

(3) Remove the rear evaporator line extension from the expansion valve. (Refer to 24 - HEATING & AIR CONDITIONING/PLUMBING - REAR/EVAPORATOR - REMOVAL - EVAPORATOR LINE EXTENSION).

(4) Remove the two screws that secure the expansion valve to the evaporator tube sealing plate.

(5) Remove the expansion valve from the evaporator tubes.

(6) Remove the seals from the evaporator tube fittings and discard.

(7) Install plugs in, or tape over the opened evaporator tube fittings and both expansion valve ports.

EXPANSION VALVE (Continued)

INSTALLATION

(1) Remove the tape or plugs from the evaporator tube fittings and both expansion valve ports.

(2) Lubricate new rubber O-ring seals with clean refrigerant oil and install them on the evaporator tube fittings.

(3) Position the expansion valve onto the evaporator tubes.

(4) Install and tighten the two screws that secure the expansion valve to the evaporator tube sealing plate. Tighten the screws to 11 N·m (97 in. lbs.).

(5) Reinstall the rear evaporator line extension onto the expansion valve. (Refer to 24 - HEATING & AIR CONDITIONING/PLUMBING - REAR/EVAPORATOR - INSTALLATION - EVAPORATOR LINE EXTENSION).

(6) Install the foam insulator wrap over the rear expansion valve.

(7) Reinstall the rear heater-A/C unit housing into the vehicle. (Refer to 24 - HEATING & AIR CONDITIONING/DISTRIBUTION - REAR/REAR HEATER-A/C HOUSING - INSTALLATION).

(8) Run the HVAC Cooldown Test to verify proper operation.

HEATER CORE

DESCRIPTION

The rear heater core is located near the front of the rear heater-A/C unit housing, behind the right rear wheel house. It is a heat exchanger made of rows of tubes and fins. One end of the core is fitted with a molded plastic tank that includes integral heater core inlet and outlet nipples. The heater core can be serviced without removing the rear heater-A/C unit housing from the vehicle. The heater core cannot be repaired and, if faulty or damaged, it must be replaced.

OPERATION

Engine coolant is circulated through heater hoses to the heater core at all times. As the coolant flows through the heater core, heat removed from the engine is transferred to the heater core fins and tubes. Air directed through the heater core picks up the heat from the heater core fins. The blend air door allows control of the heater output air temperature by controlling how much of the air flowing through the rear heater-A/C unit housing is directed through the heater core.

STANDARD PROCEDURE - HEATER CORE FILLING

In its final installed position, the rear heater core is positioned higher than the radiator fill cap. Therefore, when the cooling system is drained and refilled, gravity will not refill the heater core with coolant to the proper level. This may result in two problems: **1.** Insufficient coolant level in the engine cooling system, which may result in engine overheating. **2.** Air entrapped within the rear heater core, which may result in insufficient rear heater performance. There are two methods that may be employed to prevent these problems: **1.** Pre-filling of the rear heater core. **2.** Thermal cycling of the engine cooling system. Following are descriptions of both prevention methods, as well as a method to verify rear heater performance.

WARNING: REFER TO THE APPLICABLE WARNINGS AND CAUTIONS FOR THIS SYSTEM BEFORE PERFORMING THE FOLLOWING OPERATION. (Refer to 24 - HEATING & AIR CONDITIONING/PLUMBING FRONT - WARNING - HEATER PLUMBING).

PRE-FILLING

If the rear heater core or the rear heater-A/C housing have been removed from the vehicle for service, the rear heater core may be pre-filled with the proper engine coolant mixture prior to reconnecting the heater hoses to the heater core hose fittings.

(1) The heater core should be installed in the rear heater-A/C unit housing, and the rear heater-A/C unit housing should be installed in the vehicle.

(2) Take the proper precautions to protect the carpeting below the rear heater core from spilled engine coolant and have absorbent toweling readily available to mop up any spills.

(3) Insert the small end of an appropriate funnel into the upper hose fitting of the heater core (Fig. 4).

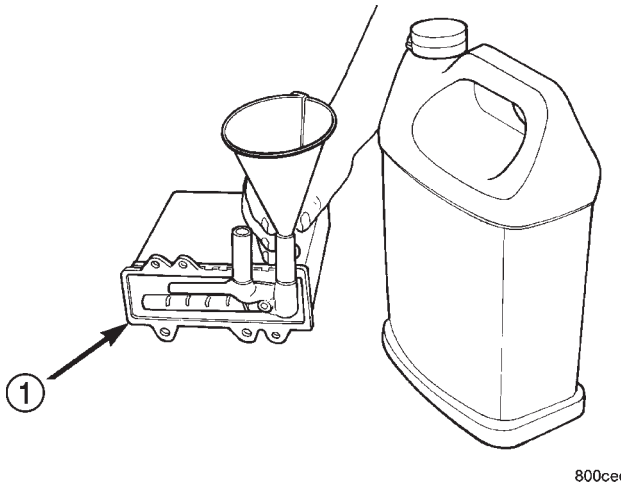

Fig. 4 Pre-Filling Heater Core - Typical

1 - REAR HEATER CORE

HEATER CORE (Continued)

(4) Carefully pour the proper pre-mixed engine coolant solution into the rear heater core through a funnel until coolant begins to appear at the lower hose fitting of the heater core.

(5) Use absorbent toweling to clean up any engine coolant spills from the preceding operation.

(6) Reconnect the heater hoses to the rear heater core. (Refer to 24 - HEATING & AIR CONDITIONING/PLUMBING - REAR/HEATER HOSE - INSTALLATION).

(7) Refill the engine cooling system. (Refer to 7 - COOLING - STANDARD PROCEDURE - COOLING SYSTEM REFILL).

THERMAL CYCLING

If the rear heater core was emptied and was not pre-filled, it will be necessary to thermal cycle the vehicle at least two times to ensure that the rear heater core is properly filled.

(1) Refill the engine cooling system. (Refer to 7 - COOLING - STANDARD PROCEDURE - COOLING SYSTEM REFILL).

(2) Start the engine and allow it to operate until the thermostat opens.

(3) Turn the engine off and allow it to cool.

(4) With the engine cold and not running, check and top off the engine coolant level as necessary. (Refer to 7 - COOLING - STANDARD PROCEDURE - COOLANT LEVEL CHECK) and (Refer to 7 - COOLING - STANDARD PROCEDURE - COOLANT - ADDING).

(5) Start the engine and allow it to operate until the thermostat opens again.

(6) Turn the engine off and allow it to cool down again.

(7) With the engine cold and not running, check and top off the engine coolant level as necessary. (Refer to 7 - COOLING - STANDARD PROCEDURE - COOLANT LEVEL CHECK) and (Refer to 7 - COOLING - STANDARD PROCEDURE - COOLANT - ADDING).

(8) Check the performance of the rear heater. Refer to REAR HEATER PERFORMANCE CHECK .

REAR HEATER PERFORMANCE CHECK

Successful completion of the rear heater performance check will confirm that the rear heater core is properly filled with engine coolant. If the check is not successful, either there is still air trapped in the rear heater core or the rear heater plumbing is restricted. This check should be performed with the vehicle in a shop where the ambient temperature is about 21° C (70° F).

(1) Start the engine and allow it to idle until it warms up to normal operating temperature.

(2) Adjust the heater-A/C controls so that the front heater is turned Off, the rear heater is set for full Heat, and the rear blower motor is at its highest speed setting.

(3) Use an accurate test thermometer to measure the temperature of the air being discharged from the rear heater outlet located at the base of the right C-pillar.

(4) Proper discharge air temperature readings should be from 57° to 63° C (135° to 145° F).

REMOVAL

WARNING: REFER TO THE APPLICABLE WARNINGS AND CAUTIONS FOR THIS SYSTEM BEFORE PERFORMING THE FOLLOWING OPERATION. (Refer to 24 - HEATING & AIR CONDITIONING/PLUMBING FRONT - WARNING - HEATER PLUMBING).

(1) Drain the engine cooling system. (Refer to 7 - COOLING - STANDARD PROCEDURE - COOLING SYSTEM DRAIN).

(2) Remove the right quarter trim panel and right D-pillar trim panel from the quarter inner panel. (Refer to 23 - BODY/INTERIOR/QUARTER TRIM PANEL - REMOVAL).

(3) Remove the rear heater distribution duct from the right quarter inner panel. (Refer to 24 - HEATING & AIR CONDITIONING/DISTRIBUTION - REAR/REAR HEATER DISTRIBUTION DUCT - REMOVAL).

(4) Remove the screw that secures the back of the rear heater-A/C unit housing to the right D-pillar.

(5) Remove the screw that secures the front of the rear heater-A/C unit housing to the right quarter inner panel.

(6) Take the proper precautions to protect the carpeting below the rear heater core from spilled engine coolant and have absorbent toweling readily available to mop up any spills.

(7) Disconnect the heater hoses at the rear heater core. (Refer to 24 - HEATING & AIR CONDITIONING/PLUMBING - REAR/HEATER HOSE - REMOVAL).

(8) Install plugs in, or tape over the opened heater core fittings and both heater hoses (Fig. 5).

(9) Use absorbent toweling to clean up any engine coolant spills from the preceding operation.

(10) Release the four latch tabs that secure the heater core in the rear heater-A/C unit housing.

(11) Carefully pull the heater core straight out of the rear heater-A/C unit housing.

(12) Use absorbent toweling to clean up any engine coolant spills from the preceding operation.

HEATER CORE (Continued)

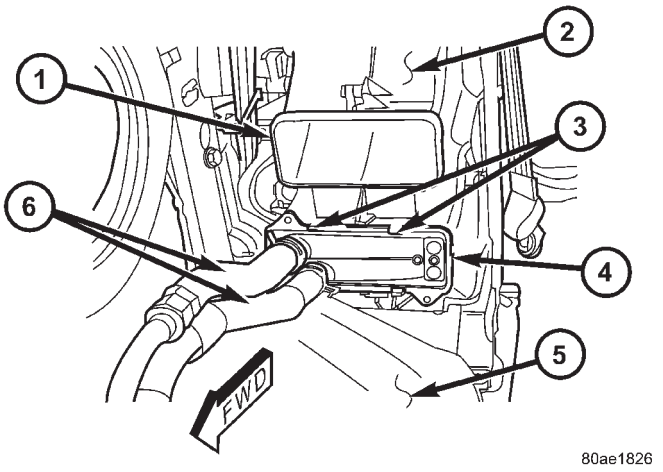

Fig. 5 Heater Core

1 - REAR HEATER-A/C HOUSING OUTLET
2 - REAR HEATER-A/C UNIT HOUSING
3 - LATCH (4)
4 - HEATER CORE
5 - RIGHT REAR WHEEL HOUSE
6 - HEATER HOSES

INSTALLATION

NOTE: If the rear heater core or the rear heater-A/C housing have been removed from the vehicle for service, the rear heater core may be pre-filled with the proper engine coolant mixture prior to reconnecting the heater hoses to the heater core hose fittings. (Refer to 24 - HEATING & AIR CONDITIONING/PLUMBING - REAR/HEATER CORE - STANDARD PROCEDURE - HEATER CORE FILLING).

(1) Carefully slide the heater core into the rear heater-A/C unit housing.

(2) Using hand pressure, press firmly and evenly on the heater core end plate until the four latch tabs that secure the heater core in the rear heater-A/C unit housing are fully engaged (Fig. 5).

(3) Remove the plugs or tape from the heater core fittings and both heater hoses.

(4) Reconnect the heater hoses to the rear heater core. (Refer to 24 - HEATING & AIR CONDITIONING/PLUMBING - REAR/HEATER HOSE - INSTALLATION).

(5) Install and tighten the screw that secures the front of the rear heater-A/C unit housing to the right quarter inner panel. Tighten the screw to 11 N·m (97 in. lbs.).

(6) Install and tighten the screw that secures the back of the rear heater-A/C unit housing to the right D-pillar. Tighten the screw to 11 N·m (97 in. lbs.).

(7) Reinstall the rear heater distribution duct onto the right quarter inner panel. (Refer to 24 - HEATING & AIR CONDITIONING/DISTRIBUTION - REAR/REAR HEATER DISTRIBUTION DUCT - INSTALLATION).

(8) Remove the right quarter trim panel and right D-pillar trim panel from the quarter inner panel. (Refer to 23 - BODY/INTERIOR/QUARTER TRIM PANEL - INSTALLATION).

(9) Drain the engine cooling system. (Refer to 7 - COOLING - STANDARD PROCEDURE - COOLING SYSTEM REFILL).

HEATER HOSE

REMOVAL

REFER TO THE APPLICABLE WARNINGS AND CAUTIONS FOR THIS SYSTEM BEFORE PERFORMING THE FOLLOWING OPERATION. (Refer to 24 - HEATING & AIR CONDITIONING/PLUMBING FRONT - WARNING - HEATER PLUMBING).

(1) Partially drain engine cooling system. Refer to Group 7, Engine Cooling.

(2) Loosen clamp at the front end of the hose located at the right, outboard side of the underbody, rearward of the front crossmember. (Fig. 9)

(3) Carefully rotate hose back and forth while tugging slightly away from connector nipple. If the hose will not come off, slice the hose at the connector nipple and peel off heater hose. This method will require heater hose replacement.

CAUTION:
When removing hoses from outlet nipples, do not use excessive force. Outlet nipples may become damaged and leak engine coolant.

(4) Compress insert in rear heater hose quick connection and pull downward on hose. (Fig. 11)

(5) Remove (3) straps securing underbody lines. (Fig. 8)

(6) Separate and remove rear heater lines from vehicle.

INSTALLATION

There are several heater core plumbing configurations used on this model, depending upon the engine size and other optional equipment. One plumbing configuration is used for all 2.4L engines, while the 3.3L and 3.8L engines have unique heater return plumbing on the engine for models with or without an optional engine oil cooler. There are also unique plumbing configurations at the heater core for models with or without the optional rear heater and air conditioner. All models use a combination of formed steel tubing and rubber hoses. In most cases, the rubber hose is secured to the steel tubing with a spring tension clamp.

HEATER HOSE (Continued)

WARNING: REFER TO THE APPLICABLE WARNINGS AND CAUTIONS FOR THIS SYSTEM BEFORE PERFORMING THE FOLLOWING OPERATION. (Refer to 24 - HEATING & AIR CONDITIONING/ PLUMBING FRONT - WARNING - HEATER PLUMBING).

(1) Using spring tension clamp pliers, compress and slide the clamps that secure each end of the heater hose toward the center of the hose being installed. Release the clamp when it is near the center of the hose.

(2) Grasp one end of the heater hose being installed firmly and carefully twist the hose back and forth while pushing it over from the barbed end of the nipple. Repeat this procedure at the opposite end of the hose being installed.

(3) Using spring tension clamp pliers, compress and slide the clamps that secure each end of the heater hose over the tube or nipple. Release the clamp when it is over the tube or nipple.

(4) Refill the engine cooling system. (Refer to 7 - COOLING - STANDARD PROCEDURE - COOLING SYSTEM REFILL).

SUCTION LINE

REMOVAL

The front air conditioner suction line includes the low side service port on a section of tubing located near the compressor. On models equipped with the optional rear air conditioner, the front air conditioner suction line also includes a suction line hose and tube extension that connects the front suction line to the suction line for the rear air conditioner.

WARNING: REFER TO THE APPLICABLE WARNINGS AND CAUTIONS FOR THIS SYSTEM BEFORE PERFORMING THE FOLLOWING OPERATION. (Refer to 24 - HEATING & AIR CONDITIONING/ PLUMBING - FRONT - WARNING - A/C PLUMBING) and (Refer to 24 - HEATING & AIR CONDITIONING/ PLUMBING - FRONT - CAUTION - A/C PLUMBING).

(1) Recover the refrigerant from the refrigerant system. (Refer to 24 - HEATING & AIR CONDITIONING/PLUMBING - FRONT/REFRIGERANT - STANDARD PROCEDURE - REFRIGERANT RECOVERY).

(2) Disconnect and isolate the battery negative cable.

(3) Remove the air cleaner top cover and snorkel from the air cleaner housing located on the right side of the engine compartment.

(4) Disconnect the drain tube from the wiper module drain on the right side of the engine compartment.

(5) Remove the nut that secures the suction line fitting to the top of the compressor.

(6) Disconnect the suction line fitting from the compressor suction port.

(7) Remove the seal from the suction line fitting and discard.

(8) Install plugs in, or tape over the opened suction line fitting and the compressor suction port.

(9) Disengage the retainer that secures the suction line routing clip to the filter-drier mounting bracket on the side of the right front strut tower in the engine compartment (Fig. 6).

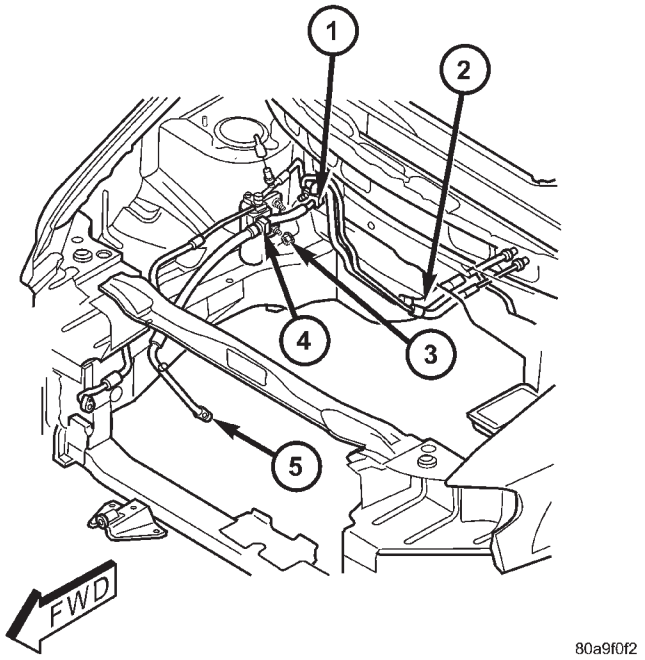

Fig. 6 Suction Line

1 - EXPANSION VALVE
2 - SUCTION LINE EXTENSION (REAR A/C ONLY)
3 - NUT
4 - ROUTING CLIP
5 - SUCTION LINE

(10) Remove the nut that secures the suction line and liquid line fittings to the expansion valve.

(11) Disconnect the suction line and liquid line fittings from the expansion valve.

(12) Remove the seals from the suction line and liquid line fittings and discard.

(13) Install plugs in, or tape over the opened suction line and liquid line fittings and both expansion valve ports.

SUCTION LINE (Continued)

(14) If the vehicle is equipped with the optional rear air conditioner, go to Step 15. If the vehicle does not have the optional rear air conditioner, go to Step 21.

(15) Raise and support the vehicle.

(16) Cut the tie strap located just forward of the connections between the underbody plumbing and the engine compartment plumbing for the rear heater and air conditioner (Fig. 7).

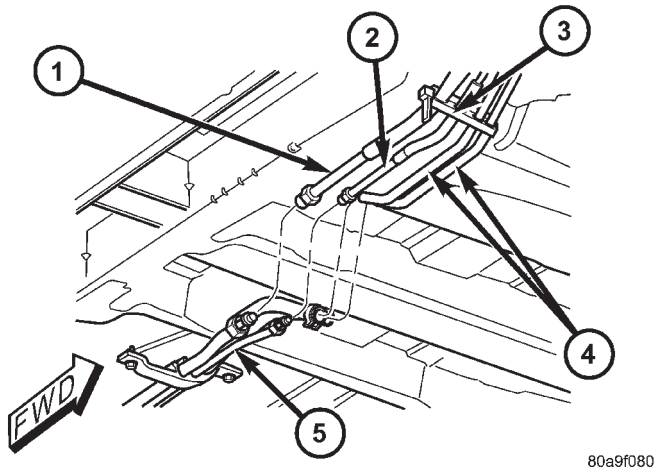

Fig. 7 Underbody Connections

1 - SUCTION LINE EXTENSION
2 - LIQUID LINE EXTENSION
3 - TIE STRAP
4- HEATER LINE EXTENSIONS
5 - UNDERBODY LINES

(17) Disconnect the suction line extension fitting from the underbody suction line fitting for the rear air conditioner.

(18) Remove the seal from the underbody suction line fitting and discard.

(19) Install plugs in, or tape over the opened suction line fittings.

(20) Lower the vehicle.

(21) Remove the suction line from the engine compartment.

INSTALLATION

The front air conditioner suction line includes the low side service port on a section of tubing located near the compressor. On models equipped with the optional rear air conditioner, the front air conditioner suction line also includes a suction line hose and tube extension that connects the front suction line to the suction line for the rear air conditioner.

WARNING: REFER TO THE APPLICABLE WARNINGS AND CAUTIONS FOR THIS SYSTEM BEFORE PERFORMING THE FOLLOWING OPERATION. (Refer to 24 - HEATING & AIR CONDITIONING/ PLUMBING - FRONT - WARNING - A/C PLUMBING) and (Refer to 24 - HEATING & AIR CONDITIONING/ PLUMBING - FRONT - CAUTION - A/C PLUMBING).

(1) Position the suction line into the engine compartment.

(2) Remove the tape or plugs from the suction line and liquid line fittings and both expansion valve ports.

(3) Lubricate new rubber O-ring seals with clean refrigerant oil and install them on the suction line and liquid line fittings.

(4) Reconnect the liquid line and suction line fittings to the expansion valve.

(5) Install and tighten the nut that secures the suction line and liquid line fittings to the expansion valve. Tighten the nut to 23 N·m (17 ft. lbs.).

(6) Engage the retainer that secures the suction line routing clip to the filter-drier mounting bracket on the side of the right front strut tower in the engine compartment.

(7) Remove the tape or plugs from the compressor suction port and the suction line fitting.

(8) Lubricate a new rubber O-ring seal with clean refrigerant oil and install it on the suction line fitting.

(9) Reconnect the suction line fitting to the compressor suction port.

(10) Install and tighten the nut that secures the suction line fitting to the compressor. Tighten the nut to 23 N·m (17 ft. lbs.).

(11) Reconnect the drain tube to the wiper module drain on the right side of the engine compartment.

(12) Reinstall the air cleaner top cover and snorkel onto the air cleaner housing located on the right side of the engine compartment.

(13) Reconnect the battery negative cable.

(14) If the vehicle is equipped with the optional rear air conditioner, go to Step 15. If the vehicle does not have the optional rear air conditioner, go to Step 21.

(15) Raise and support the vehicle.

(16) Remove the tape or plugs from the suction line extension fitting and the underbody suction line fitting (Fig. 38).

(17) Lubricate a new rubber O-ring seal with clean refrigerant oil and install it on the underbody suction line fitting.

SUCTION LINE (Continued)

(18) Reconnect the suction line extension fitting to the underbody suction line fitting. Tighten the fittings to 23 N·m (17 ft. lbs.).

(19) Install a new tie strap just forward of the connections between the underbody plumbing and the engine compartment plumbing for the rear heater and air conditioner.

(20) Lower the vehicle.

(21) Evacuate the refrigerant system. (Refer to 24 - HEATING & AIR CONDITIONING/PLUMBING - FRONT/REFRIGERANT - STANDARD PROCEDURE - REFRIGERANT SYSTEM EVACUATE).

(22) Charge the refrigerant system. (Refer to 24 - HEATING & AIR CONDITIONING/PLUMBING - FRONT/REFRIGERANT - STANDARD PROCEDURE - REFRIGERANT SYSTEM CHARGE).

UNDERBODY LINES

DESCRIPTION

The rear heater-A/C unit plumbing is used only on models with the optional rear heater-A/C unit. The formed metal rear heater-A/C unit suction line, liquid line, and heater lines are available for separate service replacement. The molded and straight heater hoses used on the rear heater-A/C unit can be serviced in the vehicle. Refer to Group 7 - Cooling System for the heater hose service procedures.

OPERATION

The rear heater and A/C lines are all serviced as individual pieces. When disconnecting any line or block ensure that the area around it is clean of any contaminations that can get in to the system (Fig. 8), (Fig. 9), (Fig. 11), (Fig. 10) and (Fig. 12).

Any kinks or sharp bends in the rear heater-A/C unit plumbing will reduce the capacity of the entire heating and air conditioning system. Kinks and sharp bends reduce the system flow. High pressures are produced in the refrigerant system when the air conditioning compressor is operating. High temperature coolant is present in the heater plumbing when the engine is operating. Extreme care must be exercised to make sure that each of the plumbing connections is pressure-tight and leak free.

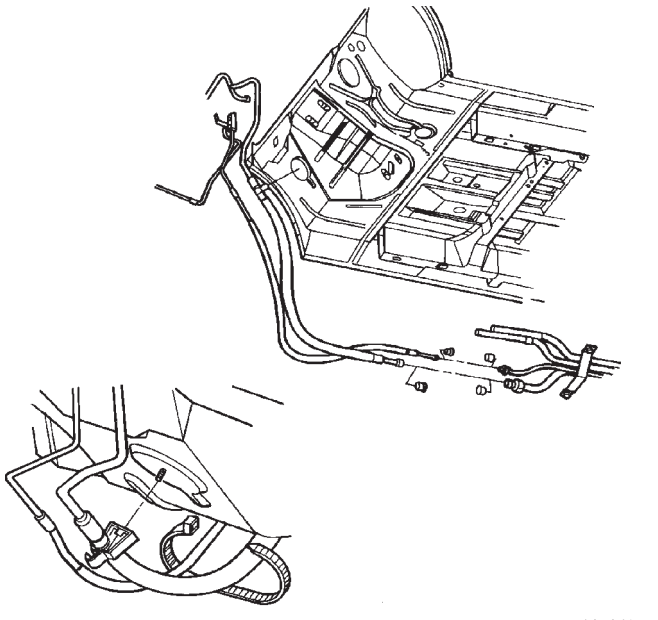

80a243ee

Fig. 9 Front Lines Connected to Rear Lines

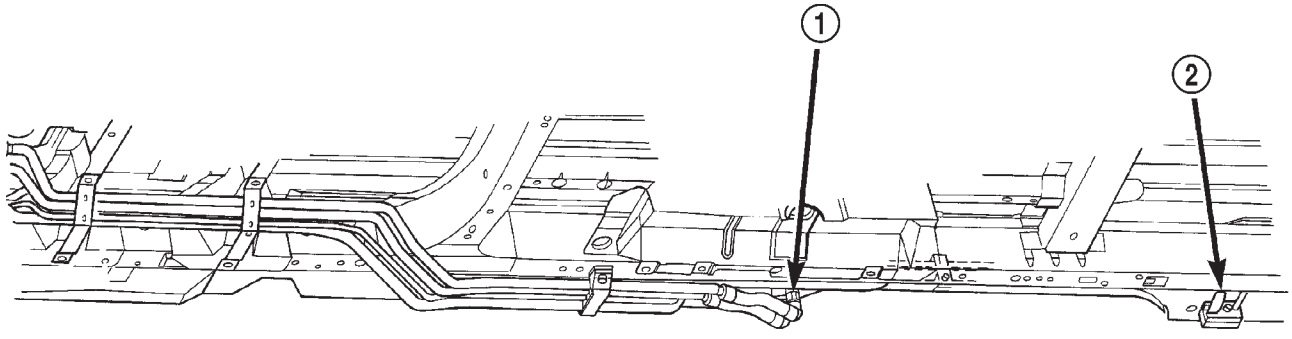

80a13854

Fig. 8 Rear Heater and A/C Lines

1 - HEATER CONNECTION
2 - REAR A/C LINE BLOCK CONNECTION

UNDERBODY LINES (Continued)

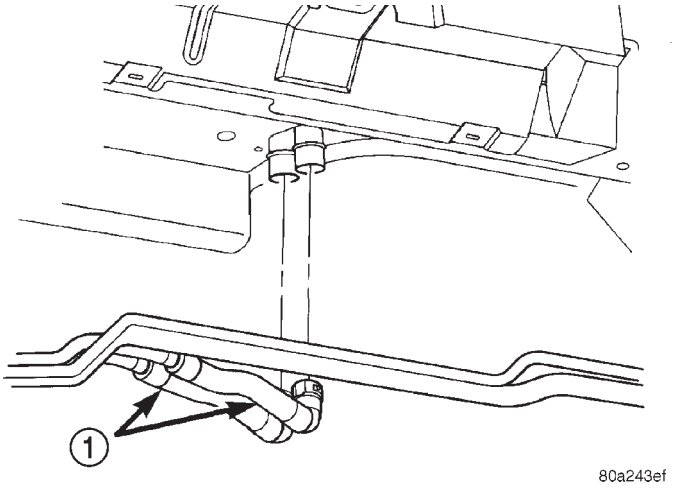

Fig. 10 Rear Heater Hose Connection

1 - REAR HEATER HOSE

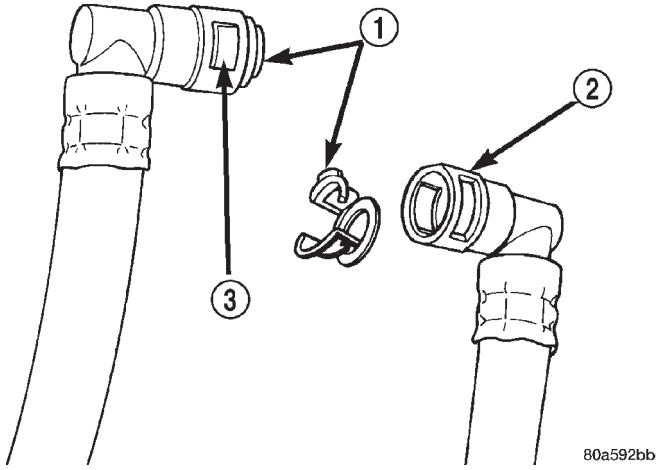

Fig. 11 Rear heater hose quick connects

1 - INSERT
2 - QUICK CONNECT
3 - COMPRESS INSERT FOR REMOVAL

REMOVAL

REMOVAL - REAR HEATER LINES

(1) Raise and support vehicle.
(2) Pinch off rubber heater line hose.
(3) Disconnect quick connect fitting at C-pillar.
(4) Loosen one screw and remove the other screw at each of the three brackets holding the front of the line to the underbody.
(5) Lower rear of line and drain coolant into a suitable container.
(6) Loosen hose clamps at front of line and remove line from vehicle.

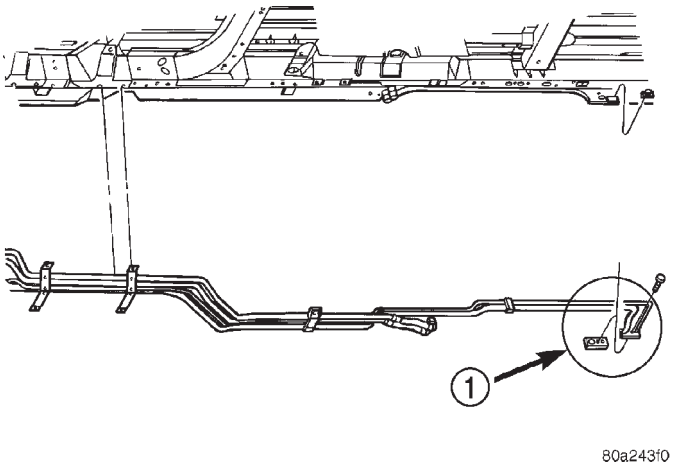

Fig. 12 Rear A/C Block Connection

1 - CLEAN AREA AROUND BLOCK BEFORE REMOVAL

REMOVAL - REAR AIR CONDITIONING LINES

(1) Recover A/C system.
(2) Hoist and support vehicle.
(3) Loosen one screw and remove the other screw at each of the three brackets holding the A/C lines to the underbody (Fig. 8).
(4) Remove both A/C lines from the two rear retaining clamps, behind rear wheel.
(5) Remove both compression fittings at front of A/C lines (Fig. 9).
(6) Remove (1) bolt securing A/C lines to block located at A/C housing, behind rear wheel, and separate block (Fig. 12).
(7) Remove rear wheel.
(8) Separate ABS harness from flex hose clamps.
(9) Remove heater lines from underbody brackets.
(10) Pinch off rubber heater line hoses at front of vehicle.
(11) Loosen hose clamps at front of heater lines and allow them to hang from vehicle.
(12) Remove rear A/C lines from vehicle.
(13) Remove nylon wedge holding lines into rear block (Fig. 13).

UNDERBODY LINES (Continued)

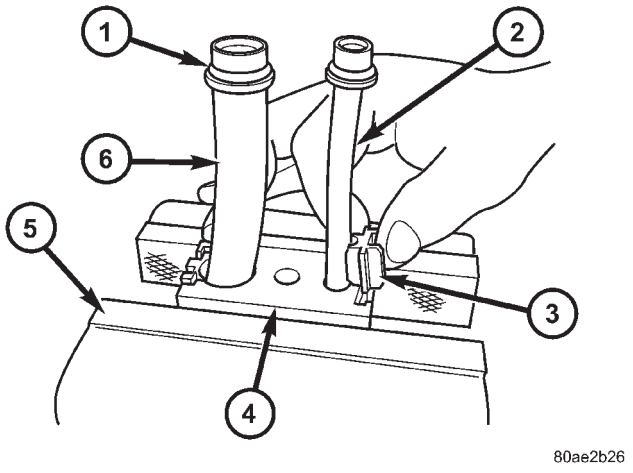

Fig. 13 UNDERBODY LINE WEDGES

1 - O-RING
2 - DISCHARGE LINE
3 - NYLON WEDGE
4 - SEALING BLOCK
5 - VISE
6 - SUCTION LINE

INSTALLATION

INSTALLATION - REAR HEATER LINES

(1) Install line into underbody straps.
(2) Install line into front hose and install hose clamp.
(3) Connect quick fitting at rear of line.
(4) Lower vehicle.
(5) Fill cooling system (Refer to 7 - COOLING - STANDARD PROCEDURE).

INSTALLATION - REAR AIR CONDITIONING LINES

(1) Before installation, replace all O-rings and gaskets. Coat all sealing surfaces with approved wax-free refrigerant oil.
(2) Install A/C line into rear block with nylon wedge.
(3) Install A/C lines into five underbody brackets.
(4) Connect forward compression fittings.
(5) Install bolt at sealing block to rear A/C housing.
(6) Install ABS harness into clips.
(7) Install heater hoses into underbody brackets.
(8) Install lines into front hoses and install hose clamps.
(9) Lower vehicle.
(10) Evacuate and recharge system.
(11) Fill cooling system (Refer to 7 - COOLING - STANDARD PROCEDURE).

DIESEL SUPPLEMENTAL HEATER - DCHA - BUX

TABLE OF CONTENTS

page

DIESEL SUPPLEMENTAL HEATER - DCHA - BUX
DESCRIPTION 109
OPERATION 109
DIAGNOSIS AND TESTING - DIESEL SUPPLEMENTAL HEATER - DCHA 110
EXHAUST TUBE
REMOVAL 110
INSTALLATION 110
FUEL DOSING PUMP
DESCRIPTION 111
OPERATION 111
REMOVAL 111
INSTALLATION 111

page

FUEL LINE
STANDARD PROCEDURE - CLEANING 112
REMOVAL 112
INSTALLATION 112
HEATER UNIT
REMOVAL 114
INSTALLATION 114
SUPPLEMENTAL DIESEL HEATER WIRING
REMOVAL 115
INSTALLATION 115
AIR INTAKE PIPE
REMOVAL 115
INSTALLATION 116

DIESEL SUPPLEMENTAL HEATER - DCHA - BUX

DESCRIPTION

Vehicles equipped with the optional diesel engine are also equipped with a supplemental heater unit. This unit is mounted under the vehicle and operates similar to an oil fired furnace. The heater burns small amounts of fuel to provide additional heat to the coolant. Coolant is routed from the engine, to the supplemental heater, and then to the front heater core. This provides additional heat to the passenger compartment. The system is interfaced to the vehicles on-board computer systems and DRB-III diagnostics.

OPERATION

The supplemental heater unit is activated via the temperature slide control or knob on the vehicle HVAC control unit. If the control slide or knob is moved to or above the upper set point the heater is activated. The unit can operate in a full or partial load range as well as an idle mode all dependent on the engine coolant temperature. The heater unit will also turn off if the HVAC temperature control is lowered to less than the lower set point. The heater unit can take up to three minutes to completely shut down when either the heater temperature is set below the lower set point or the vehicle ignition is shut down.

DIAGNOSIS AND TESTING - DIESEL SUPPLEMENTAL HEATER - DCHA

The following table lists possible fault symptoms of diesel fueled heaters.

SYMPTOM	POSSIBLE CAUSES
Smell of diesel fuel	Check heater system integration in vehicle's fuel system. Check fuel lines for leakage, kinks or obstructions. If OK, Inspect the inlet muffler, drain as necessary. Re-test the unit and re-inspect. Inspect the exhaust tube and heater unit for the presence of external fuel. If a volume is observed on the unit or in the exhaust tube or after draining and testing. Remove heater unit from vehicle and repair or replace components as required.
Heater does not achieve full load operation.	Check heater operation with DRB-III and replace components as required.
Continuous white smoke from heater exhaust during combustion operation.	Check heater operation with DRB-III and replace components as required. White smoke is typical in extreme weather conditions.
Heater can not be switched off.	Check heater operation with DRB-III and replace components as required.
Heater does not operate.	Diagnosis cabin heater ECU using the DRB-III and the procedures listed in Vehicle Performance under Cabin Heater Diagnosis in Group 18.
Loss of coolant (Leakage) or heater develops smoke during combustion operation and exhaust has an extremely sweet smell.	Inspect coolant hoses for leakage, kinks or loose hose connection. Inspect the exhaust tube assembly for continuous flow, if OK there is an internal heater leak and unit should be inspected and components should be replaced as required.
Loss of fuel (dripping).	Check heater system integration in vehicles fuel system. Check fuel line connection for leakage. If OK there is an internal leak and unit should be inspected and replaced as required.

EXHAUST TUBE

REMOVAL

WARNING: THERE IS A POTENTIAL DANGER OF SKIN BURNS AS THE HEATER AND ITS COMPONENTS MAY BE VERY HOT. MAKE SURE THE HEATER IS ALLOWED TO COOL DOWN BEFORE ANY SERVICE WORK IS ATTEMPTED.

WARNING: THERE IS A POTENTIAL DANGER OF SKIN BURNS AS THE EXHAUST SYSTEM MAY BE VERY HOT. MAKE SURE THE EXHAUST SYSTEM IS ALLOWED TO COOL DOWN BEFORE ANY SERVICE WORK IS ATTEMPTED ON THE CABIN HEATER.

(1) Elevate vehicle on a lift taking note of the exhaust tube flexible section.

(2) Remove the exhaust clamp at the flexible pipe and steel pipe connection (Fig. 1).

(3) Remove the clamp at the flexible pipe connection and the heater unit housing (if required).

(4) Remove the three screws holding the exhaust pipe to the body.

(5) Remove the steel exhaust pipe from the vehicle.

(6) Remove the flexible exhaust pipe from the vehicle (if required).

INSTALLATION

(1) Install the flexible exhaust pipe to the heater unit. Tighten mounting clamp.

(2) Position the steel exhaust pipe to the flexible exhaust and install and tighten the mounting clamp.

(3) Install the three exhaust pipe screws, adjust pipe placement as needed and tighten the screws.

(4) Install the clamp to connect the steel exhaust pipe to the flexible exhaust pipe and tighten clamp.

(5) Check exhaust pipe exhaust end placement and make any final adjustments.

(6) Lower vehicle from lift.

EXHAUST TUBE (Continued)

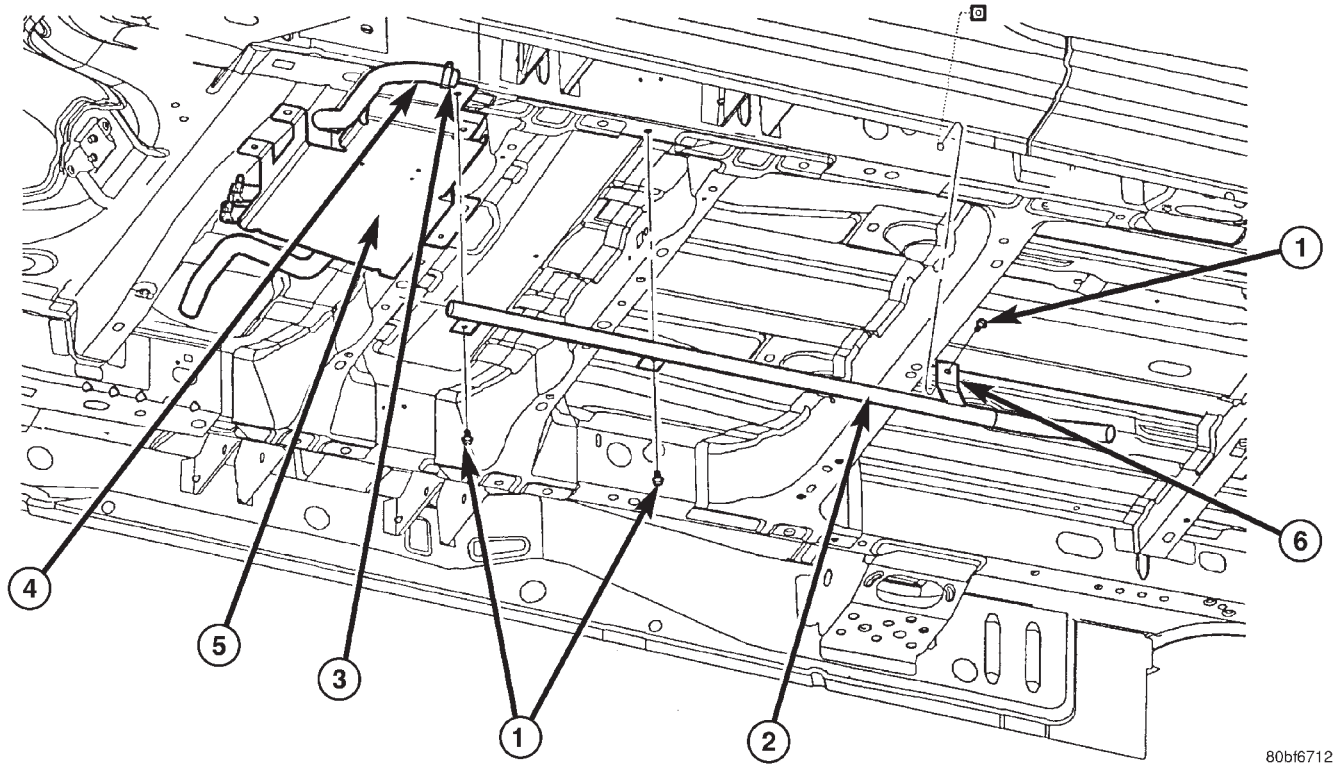

Fig. 1 Diesel Cabin Heater Exhaust System

1 - Mounting screws (3)
2 - Steel heater exhaust pipe
3 - Exhaust clamp (2)
4 - Flexible heater exhaust pipe
5 - Heater and heater shield
6 - Exhaust pipe mounting clips (3)

FUEL DOSING PUMP

DESCRIPTION

The dosing pump is a combined delivery, dosing and shut-off system for the fuel supply to the heater from the vehicles fuel tank.

OPERATION

The dosing pump is an electrically operated pump that receives its operation instructions from the supplemental heater electronic control module. The pump supplies diesel fuel from the fuel tank to the heater unit.

REMOVAL

The dosing pump is serviceable without removing the component from the vehicle.

(1) Disconnect the rubber hose at the fuel line to heater fuel pump. Leave the rubber hose on the fuel line.(Refer to 24 - HEATING & AIR CONDITIONING/CABIN HEATER/FUEL LINE - REMOVAL) (Fig. 2).

(2) Disconnect the fuel line between the dosing pump and the heater unit.

NOTE: Position and retain heater fuel line to prevent fuel leakage while servicing dosing pump.

NOTE: Utilize an approved fuel storage container to catch any residual fuel.

(3) Disconnect the electrical connector to the fuel pump by depressing the integral spring and pulling the connector away from the pump.

(4) Remove the dosing pump from the rubber isolation.

INSTALLATION

(1) Mount the rubber isolation back onto the splash shield mounting flanges at two locations.

(2) Connect fuel lines to the dosing pump and the heater unit. The connectors should point towards the heater fuel line.

(3) Use aviation style clamps to attach the hose to the fuel pump nipples(Refer to 24 - HEATING & AIR CONDITIONING/CABIN HEATER/FUEL LINE - INSTALLATION).

FUEL DOSING PUMP (Continued)

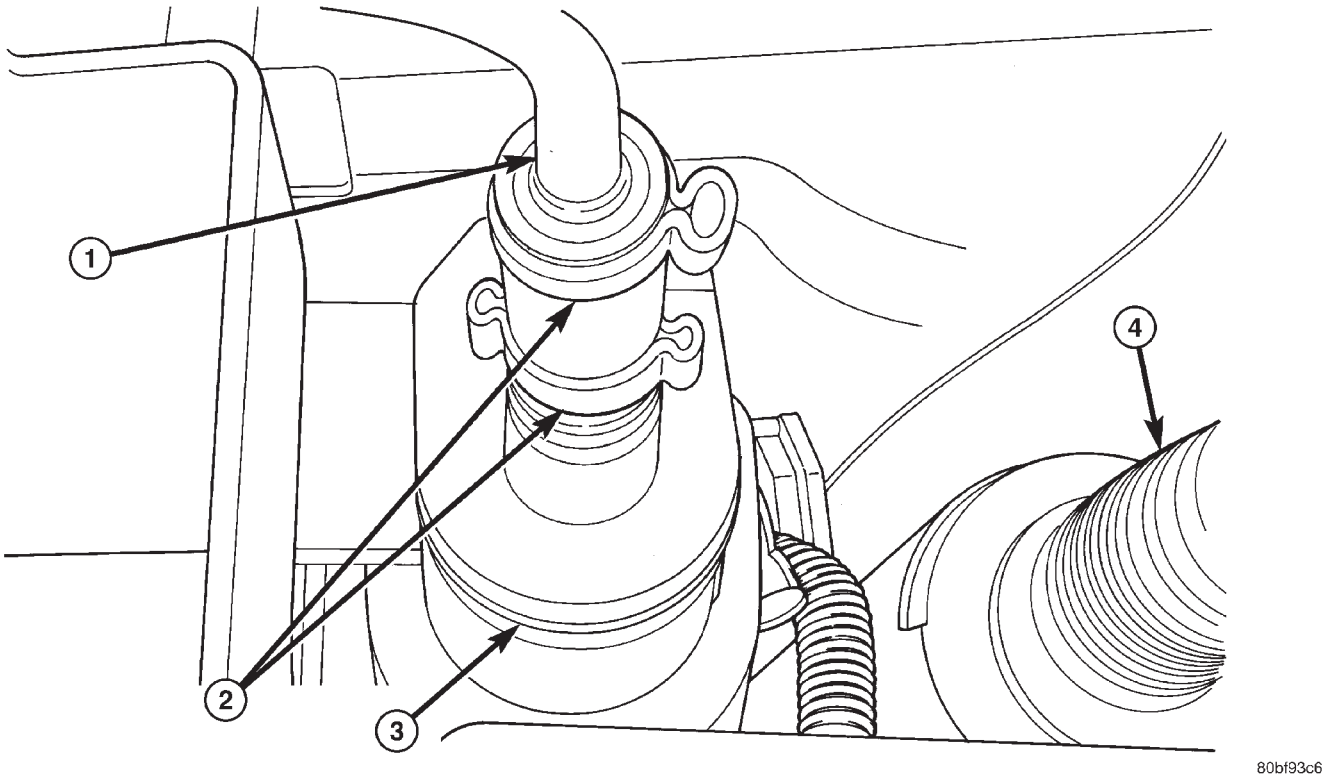

Fig. 2 Dosing Pump Fuel Line

1 - Fuel Line
2 - Retaining Clamps
3 - Dosing Pump
4 - Heater Unit Air Intake Pipe

(4) Connect the electrical connector to the fuel pump by depressing the integral spring and pushing the connector towards the dosing pump. Pull the connector towards the heater to verify the installation.

(5) Verify function of the heater.

FUEL LINE

STANDARD PROCEDURE - CLEANING

(1) Remove the cabin heater fuel line(Refer to 24 - HEATING & AIR CONDITIONING/CABIN HEATER/FUEL LINE - REMOVAL).

(2) With cabin heater line removed from vehicle place a shop cloth on the fuel tank end of the fuel line to catch any residue, then apply a small amount of air pressure to the other end of the fuel line.

(3) Check to see if air pressure is coming from the tank end of the line. If pressure is flowing unrestricted the line is clean.

(4) If the line shows any signs of being restricted after air pressure is applied, then the fuel line should be replaced.

(5) Install the cabin heater line(Refer to 24 - HEATING & AIR CONDITIONING/CABIN HEATER/FUEL LINE - INSTALLATION).

(6) Verify function of the heater.

REMOVAL

(1) Elevate vehicle on a lift taking note of the heater exhaust tube flexible section.

(2) Remove clamps on dosing pump end of fuel line and separate line from pump (Fig. 3).

NOTE: Have an approved fuel holding device ready to capture any diesel fuel that drains from fuel line or heater unit.

(3) Remove clamp from fuel line at fuel tank connection and separate line from tank.

(4) Remove any retaining clips and remove line from vehicle.

INSTALLATION

WARNING: DO NOT OPERATE THE DCHA IN AN ENCLOSED AREA SUCH AS A GARAGE THAT DOES NOT HAVE EXHAUST VENTILATION FACILITIES. ALWAYS VENT THE DCHA'S EXHAUST WHEN OPERATING THE DCHA. FAILURE TO FOLLOW THESE INSTRUCTIONS MAY RESULT IN PERSONAL INJURY OR DEATH.

FUEL LINE (Continued)

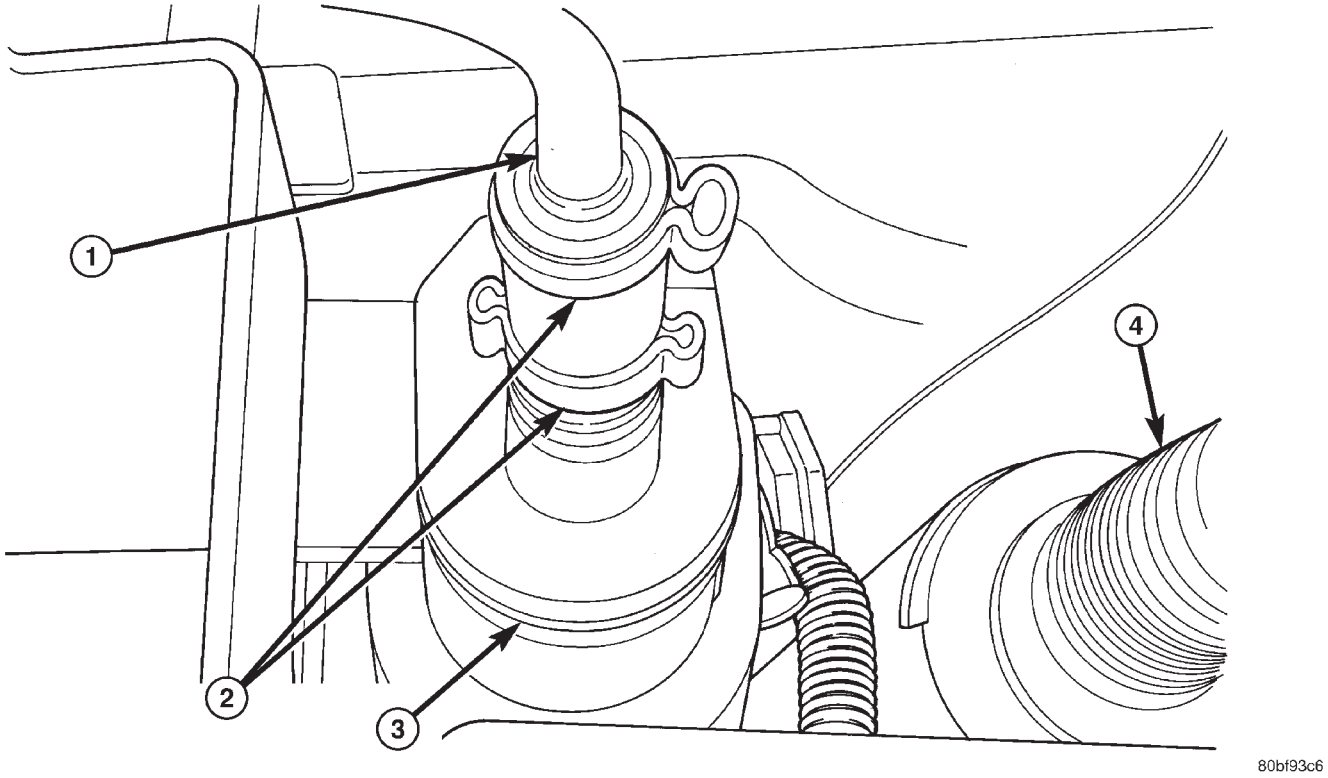

Fig. 3 Dosing Pump Fuel Line

1 - Fuel Line
2 - Retaining Clamps
3 - Dosing Pump
4 - Heater Unit Air Intake Pipe

WARNING: ALLOW THE DCHA ASSEMBLY TO COOL BEFORE PERFORMING A COMPONENT INSPECTION/REPAIR/REPLACEMENT. FAILURE TO FOLLOW THESE INSTRUCTIONS MAY RESULT IN PERSONAL INJURY.

WARNING: VERIFY THAT ALL DCHA FUEL LINES ARE SECURELY FASTENED TO THEIR RESPECTIVE COMPONENTS BEFORE PERFORMING THIS PROCEDURE.

NOTE: Verify that there is more than 1/8 of a tank of fuel in the vehicle's fuel tank before performing this procedure. Add fuel, if necessary.

(1) Install heater fuel supply line to vehicle and install in fuel line retainers
(2) Install fuel line connection at fuel tank and tighten connection.
(3) Install fuel line at Dosing Pump and tighten connection.
(4) Lower vehicle from lift.

NOTE: Failure to prime the Dosing Pump after draining the DCHA fuel line will prevent DCHA heater activation during the first attempt to start the heater. This will also set a Diagnostic Trouble Code (DCT) in the DCHA Control's memory. do not perform the Dosing Pump Priming procedure if an attempt was made to start the DCHA without priming the Dosing Pump first. This will put excess fuel in the DCHA Heater Module and cause smoke to emit from the DCHA exhaust pipe when heater activation occurs.

(5) Connect the DRBIII® to the Diagnostic Link Connector.
(6) Turn the ignition to the on position.

NOTE: Do not activate the Dosing Pump Prime more than one time. This will put excess fuel in the DCHA Heater Module an cause smoke to emit from the DCHA exhaust pipe when heater activation occurs.

NOTE: A clicking noise heard coming from the Dosing Pump indicates that the pump is operational.

FUEL LINE (Continued)

(7) With the DRBIII® in Cabin Heater, select System Tests and Dosing Pump Prime. Allow the Dosing Pump to run for the full 45 second cycle time. When the 45 second cycle is complete, press Page Back on the DRBIII® key pad to exit the Dosing Pump Prime. The Dosing Pump priming procedure is now complete.

HEATER UNIT

REMOVAL

WARNING: ALLOW THE DCHA TO COOL BEFORE PERFORMING A COMPONENT INSPECTION/REPAIR OR REPLACEMENT. FAILURE TO FOLLOW THESE INSTRUCTIONS MAY RESULT IN PERSONAL INJURY.

WARNING: ALLOW THE EXHAUST SYSTEM TO COOL BEFORE PERFORMING A COMPONENT INSPECTION/REPAIR OR REPLACEMENT. FAILURE TO FOLLOW THESE INSTRUCTION MAY RESULT IN PERSONAL INJURY.

(1) Elevate the vehicle on a hoist/lift taking note of heater exhaust tube flexible section.

(2) Drain cooling system(Refer to 7 - COOLING - STANDARD PROCEDURE).

(3) Carefully open one hose to the underbody tube assembly and drain the remaining coolant. A salvage hose is a good idea to control the residual coolant, as flow will occur from both the heater and the hose and tube assemblies.

(4) Remove the second hose from the underbody hose and tube assembly.

(5) Loosen the hose and tube assembly from the toe-board cross member at two locations.

(6) Disconnect the electrical connector from the body harness near the toe board cross member and rail.

(7) Remove the wiring harness from the toe board cross member(Refer to 24 - HEATING & AIR CONDITIONING/CABIN HEATER/HEATER UNIT - REMOVAL).

(8) Open the fuel fill cap. Disconnect the rubber fuel hose between the body tube assembly and the fuel pump nipple at the body tube joint. A minimal amount of fuel may flow from the open port.

NOTE: Utilize an approved fuel storage container to catch any residual fuel.

(9) Loosen the two M8 fasteners at the rail. Take care to notice that the exhaust tube bracket tab is on top of the heater bracket.

(10) Remove the heater exhaust tube flex section from the exhaust tube by loosening the M6 bolt of the clamp assembly. Remove the hose from the exhaust tube. Removal of the rail tube assembly may aid in this service operation.(Refer to 24 - HEATING & AIR CONDITIONING/CABIN HEATER/EXHAUST TUBE - REMOVAL).

(11) Remove seat hex nut at the heater mounting flange to cross member.

(12) Loosen the remaining M6 and M8 fasteners which mount the exhaust tube assembly to the vehicle.

(a) Install a suitable cabin heater support device under the cabin heater and secure the cabin heater to the device.

(13) Loosen the remaining three M6 fasteners to the cross members.

(14) Remove the loosened fasteners that support the heater while supporting the weight of the heater.

(15) Swing the unit mounting bracket from between the exhaust bracket and rail mounting location. Drain any residual coolant from the heater unit.

(16) Lower the cabin heater and remove from the supporting device and place on a suitable work area.

INSTALLATION

(1) Install the unit mounting bracket between the exhaust bracket and the rail mounting location.

(2) Install the fasteners that support the heater while supporting the weight of the heater.

(3) Install the three M6 fasteners to the cross members. Tighten the M6 fasteners to 7 Nm (5 ft. lbs.).

(4) Tighten the remaining M6 fasteners to 7 Nm (5 ft. lbs.) and the M8 fasteners to 23 Nm (17 ft. lbs.) which mount the exhaust tube assembly to the vehicle.

(5) Install the seat hex nut at the heater mounting flange to the cross members. Tighten to 60 Nm (44 ft. lbs.)

(6) Install the heater exhaust tube flex section to the exhaust tube by tightening the M6 bolt of the clamp assembly. Install the hose to the exhaust tube.

(7) Tighten the two M8 fasteners at the rail to 23 Nm (17 ft. lbs.). Taking care so that the exhaust tube bracket tab is on the top of the heater bracket.

(8) Install the wiring harness(Refer to 24 - HEATING & AIR CONDITIONING/CABIN HEATER/HEATER UNIT - INSTALLATION).

(9) Tighten the hose and tube assembly to the toe-board cross member at two locations.

(10) Install the second hose to the underbody hose and tube assembly.

(11) Connect the rubber fuel hose between the body tube assembly and the fuel pump nipple at the body tube joint. Close the fuel fill cap.

HEATER UNIT (Continued)

(12) Remove the heater unit support device from under the vehicle.
(13) Lower vehicle from lift.
(14) Refill cooling system(Refer to 7 - COOLING - STANDARD PROCEDURE).
(15) Verify function of the cabin heater.

SUPPLEMENTAL DIESEL HEATER WIRING

REMOVAL

(1) Elevate vehicle on a lift taking note of the exhaust tube flexible section.
(2) Unplug connector from vehicle wiring harness to cabin heater harness.
(3) Unplug connector from cabin heater harness to dosing pump connector.
(4) Unplug two connectors from cabin heater harness to cabin heater controller connectors.
(5) Remove two wiring harness connectors from underbody.
(6) Remove two wiring harness connectors from cabin heater shield.
(7) Carefully route the cabin heater harness to the left side between the cabin heater unit and the cabin heater shield.

INSTALLATION

(1) Carefully route the cabin heater harness from the left side of the cabin heater between the cabin heater unit and the cabin heater shield.
(2) Install the two wiring harness retaining connectors to the cabin heater shield.
(3) Route the wiring harness along the underside of the vehicle and install the two wiring harness retaining connectors.
(4) Plug the two connectors from the cabin heater harness to the cabin heater controller.
(5) Plug the connector to the cabin heater harness to the dosing pump connector.
(6) Plug the connector from the vehicle wiring harness to the cabin heater harness.
(7) Lower the vehicle.
(8) Verify function of the cabin heater.

AIR INTAKE PIPE

REMOVAL

NOTE: Heater air intake tube is part of an assembly that includes the heater cooling intake and return pipes. If heater air intake tube requires removal or replacement the entire assembly will require removal/replacement.

(1) Drain cooling system(Refer to 7 - COOLING - STANDARD PROCEDURE).
(2) Remove clamps from the heater tubes at the lower heater port and the lower EGR connector which are located under the hood.
(3) Remove the retaining clamp at the heater air intake muffler connection(Refer to 24 - HEATING & AIR CONDITIONING/CABIN HEATER/INLET MUFFLER - REMOVAL).
(4) Remove the clamp at the flexible tube to steel tube connection (Fig. 4).

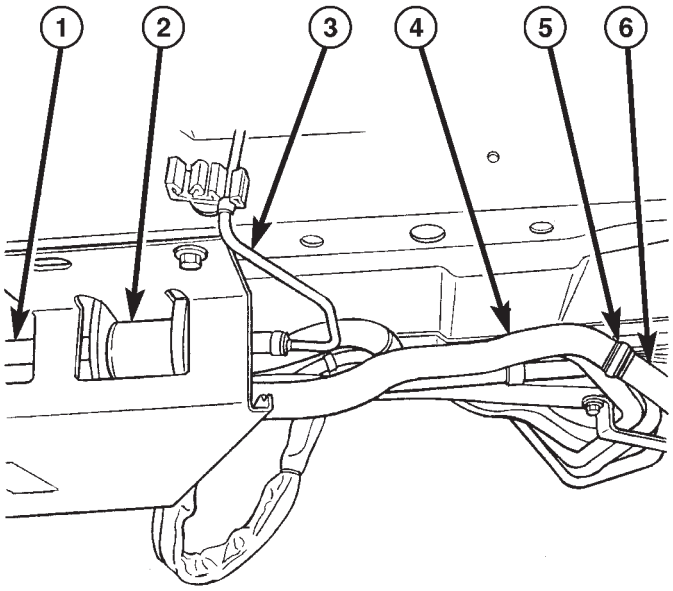

Fig. 4 FLEXIBLE AIR INTAKE LINE

1 - HEATER UNIT AND SPLASH SHIELD
2 - DOSING PUMP
3 - DOSING PUMP FUEL LINE
4 - FLEXIBLE INTAKE LINE
5 - CLAMP
6 - STEEL INTAKE PIPE

AIR INTAKE PIPE (Continued)

(5) Remove the two retaining screws and remove pipe assembly (Fig. 5).

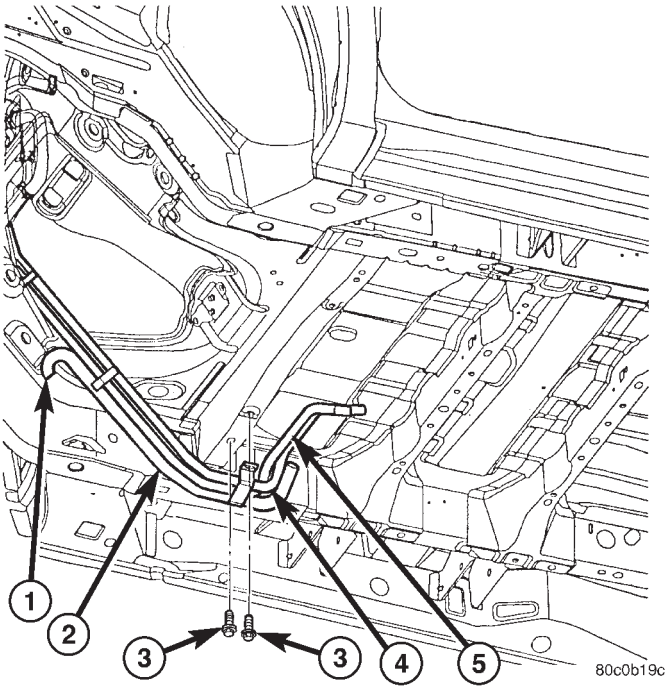

Fig. 5 AIR INTAKE AND HEATER PIPE ASSEMBLY

1 - INTAKE TUBE AIR INTAKE
2 - INTAKE PIPE
3 - RETAINING SCREWS
4 - INTAKE HEATER LINE
5 - RETURN HEATER LINE

INSTALLATION

(1) Install the air intake pipe assembly and install the two retaining screws. Tighten the screws to 7 Nm (5 ft. lbs.).

(2) Attach the steel tube to the flexible tube and position and then tighten the retaining clamp.

(3) Install the flexible tube to the heater air intake muffler and install and tighten the retaining clamp.

(4) Install the heater tubes to the lower heater connection and the lower EGR cooler connection and tighten the retaining clamps.

(5) Lower the vehicle.

(6) Refill the cooling system(Refer to 7 - COOLING - STANDARD PROCEDURE).

(7) Verify function of the heater unit.

EMISSIONS CONTROL

TABLE OF CONTENTS

page

EMISSIONS CONTROL
DESCRIPTION
DESCRIPTION - VEHICLE EMISSION CONTROL INFORMATION LABEL 1
DESCRIPTION - TRIP DEFINITION 1
DESCRIPTION - MONITORED COMPONENT . 1
OPERATION - NON-MONITORED CIRCUITS . . 5
DESCRIPTION - MONITORED SYSTEMS 6
DESCRIPTION - HIGH AND LOW LIMITS 9
OPERATION
OPERATION - SYSTEM 9
DRB III® STATE DISPLAY TEST MODE 10
EVAPORATIVE EMISSIONS 11
EXHAUST GAS RECIRCULATION 20
ON-BOARD DIAGNOSTICS 24

EMISSIONS CONTROL

DESCRIPTION

DESCRIPTION - VEHICLE EMISSION CONTROL INFORMATION LABEL

All models have a Vehicle Emission Control Information (VECI) Label. Chrysler permanently attaches the label in the engine compartment. It cannot be removed without defacing information and destroying the label.

The label contains the vehicle's emission specifications and vacuum hose routings. All hoses must be connected and routed according to the label.

DESCRIPTION - TRIP DEFINITION

A "Trip" means vehicle operation (following an engine-off period) of duration and driving mode such that all components and systems are monitored at least once by the diagnostic system. The monitors must successfully pass before the PCM can verify that a previously malfunctioning component is meeting the normal operating conditions of that component. For misfire or fuel system malfunction, the MIL may be extinguished if the fault does not recur when monitored during three subsequent sequential driving cycles in which conditions are similar to those under which the malfunction was first determined.

Anytime the MIL is illuminated, a DTC is stored. The DTC can self erase only after the MIL has been extinguished. Once the MIL is extinguished, the PCM must pass the diagnostic test for the most recent DTC for 40 warm-up cycles (80 warm-up cycles for the Fuel System Monitor and the Misfire Monitor). A warm-up cycle can best be described by the following:

- The engine must be running
- A rise of 40°F in engine temperature must occur from the time when the engine was started
- Engine coolant temperature must crossover 160°F
- A "driving cycle" that consists of engine start up and engine shut off.

Once the above conditions occur, the PCM is considered to have passed a warm-up cycle. Due to the conditions required to extinguish the MIL and erase the DTC, it is most important that after a repair has been made, all DTC's be erased and the repair verified by running 1–good trip.

DESCRIPTION - MONITORED COMPONENT

There are several components that will affect vehicle emissions if they malfunction. If one of these components malfunctions the Malfunction Indicator Lamp (Check Engine) will illuminate.

Some of the component monitors are checking for proper operation of the part. Electrically operated components now have input (rationality) and output (functionality) checks. Previously, a component like the Throttle Position sensor (TPS) was checked by the PCM for an open or shorted circuit. If one of these conditions occurred, a DTC was set. Now there is a check to ensure that the component is working. This is done by watching for a TPS indication of a greater or lesser throttle opening than MAP and engine rpm indicate. In the case of the TPS, if engine vacuum is low and engine rpm is 1600 or greater and the TPS indicates a small throttle opening, a DTC will be set. The same applies to low vacuum and 1600 rpm.

Any component that has an associated limp in will set a fault after 1 trip with the malfunction present.

Refer to the Diagnostic Trouble Codes Description Charts (Refer to 8 - ELECTRICAL/ELECTRONIC CONTROL MODULES/POWERTRAIN CONTROL MODULE - DESCRIPTION) and the appropriate Powertrain Diagnostic Procedure Manual for diagnostic procedures.

EMISSIONS CONTROL (Continued)

The following is a list of the monitored components:

- Comprehensive Components
- Oxygen Sensor Monitor
- Oxygen Sensor Heater Monitor
- Catalyst Monitor

COMPREHENSIVE COMPONENTS

Along with the major monitors, OBD II requires that the diagnostic system monitor any component that could affect emissions levels. In many cases, these components were being tested under OBD I. The OBD I requirements focused mainly on testing emissions-related components for electrical opens and shorts.

However, OBD II also requires that inputs from powertrain components to the PCM be tested for **rationality**, and that outputs to powertrain components from the PCM be tested for **functionality**. Methods for monitoring the various Comprehensive Component monitoring include:

(1) Circuit Continuity
- Open
- Shorted high
- Shorted to ground

(2) Rationality or Proper Functioning
- Inputs tested for rationality
- Outputs tested for functionality

NOTE: Comprehensive component monitors are continuous. Therefore, enabling conditions do not apply.

Input Rationality—While input signals to the PCM are constantly being monitored for electrical opens and shorts, they are also tested for rationality. This means that the input signal is compared against other inputs and information to see if it makes sense under the current conditions.

PCM sensor inputs that are checked for rationality include:

- Manifold Absolute Pressure (MAP) Sensor
- Oxygen Sensor (O2S)
- Engine Coolant Temperature (ECT) Sensor
- Camshaft Position (CMP) Sensor
- Vehicle Speed Sensor
- Crankshaft Position (CKP) Sensor
- Intake/inlet Air Temperature (IAT) Sensor
- Throttle Position (TPS) Sensor
- Ambient/Battery Temperature Sensors
- Power Steering Switch
- Oxygen Sensor Heater
- Engine Controller
- Brake Switch
- Leak Detection Pump Switch (if equipped)
- P/N Switch
- Trans Controls

Output Functionality—PCM outputs are tested for functionality in addition to testing for opens and shorts. When the PCM provides a voltage to an output component, it can verify that the command was carried out by monitoring specific input signals for expected changes. For example, when the PCM commands the Idle Air Control (IAC) Motor to a specific position under certain operating conditions, it expects to see a specific (target) idle speed (RPM). If it does not, it stores a DTC.

PCM outputs monitored for functionality include:

- Fuel Injectors
- Ignition Coils
- Torque Converter Clutch Solenoid
- Idle Air Control
- Purge Solenoid
- EGR Solenoid (if equipped)
- LDP Solenoid (if equipped)
- Radiator Fan Control
- Trans Controls

OXYGEN SENSOR (O2S) MONITOR

DESCRIPTION—Effective control of exhaust emissions is achieved by an oxygen feedback system. The most important element of the feedback system is the O2S. The O2S is located in the exhaust path. Once it reaches operating temperature 300° to 350°C (572° to 662°F), the sensor generates a voltage that is inversely proportional to the amount of oxygen in the exhaust. When there is a large amount of oxygen in the exhaust caused by a lean condition, the sensor produces a low voltage, below 450 mV. When the oxygen content is lower, caused by a rich condition, the sensor produces a higher voltage, above 450mV.

The information obtained by the sensor is used to calculate the fuel injector pulse width. The PCM is programmed to maintain the optimum air/fuel ratio. At this mixture ratio, the catalyst works best to remove hydrocarbons (HC), carbon monoxide (CO) and nitrous oxide (NOx) from the exhaust.

The O2S is also the main sensing element for the EGR (if equipped), Catalyst and Fuel Monitors.

The O2S may fail in any or all of the following manners:

- Slow response rate (Big Slope)
- Reduced output voltage (Half Cycle)
- Heater Performance

Slow Response Rate (Big Slope)—Response rate is the time required for the sensor to switch from lean to rich signal output once it is exposed to a richer than optimum A/F mixture or vice versa. As the PCM adjusts the air/fuel ratio, the sensor must be able to rapidly detect the change. As the sensor ages, it could take longer to detect the changes in the oxygen content of the exhaust gas. The rate of change that an oxygen sensor experiences is called

EMISSIONS CONTROL (Continued)

"Big Slope". The PCM checks the oxygen sensor voltage in increments of a few milliseconds.

Reduced Output Voltage (Half Cycle)—The output voltage of the O2S ranges from 0 to 1 volt. A good sensor can easily generate any output voltage in this range as it is exposed to different concentrations of oxygen. To detect a shift in the A/F mixture (lean or rich), the output voltage has to change beyond a threshold value. A malfunctioning sensor could have difficulty changing beyond the threshold value. Each time the voltage signal surpasses the threshold, a counter is incremented by one. This is called the Half Cycle Counter.

Heater Performance—The heater is tested by a separate monitor. Refer to the Oxygen Sensor Heater Monitor.

OPERATION—As the Oxygen Sensor signal switches, the PCM monitors the half cycle and big slope signals from the oxygen sensor. If during the test neither counter reaches a predetermined value, a malfunction is entered and Freeze Frame data is stored. Only one counter reaching its predetermined value is needed for the monitor to pass.

The Oxygen Sensor Monitor is a two trip monitor that is tested only once per trip. When the Oxygen Sensor fails the test in two consecutive trips, the MIL is illuminated and a DTC is set. The MIL is extinguished when the Oxygen Sensor monitor passes in three consecutive trips. The DTC is erased from memory after 40 consecutive warm-up cycles without test failure.

Enabling Conditions—The following conditions must typically be met for the PCM to run the oxygen sensor monitor:

- Battery voltage
- Engine temperature
- Engine run time
- Engine run time at a predetermined speed
- Engine run time at a predetermined speed and throttle opening
- Transmission in gear and brake depressed (automatic only)
- Fuel system in Closed Loop
- Long Term Adaptive (within parameters)
- Power Steering Switch in low PSI (no load)
- Engine at idle
- Fuel level above 15%
- Ambient air temperature
- Barometric pressure
- Engine RPM within acceptable range of desired idle

Pending Conditions—The Task Manager typically does not run the Oxygen Sensor Monitor if overlapping monitors are running or the MIL is illuminated for any of the following:

- Misfire Monitor
- Front Oxygen Sensor and Heater Monitor
- MAP Sensor
- Vehicle Speed Sensor
- Engine Coolant Temperature Sensor
- Throttle Position Sensor
- Engine Controller Self Test Faults
- Cam or Crank Sensor
- Injector and Coil
- Idle Air Control Motor
- EVAP Electrical
- EGR Solenoid Electrical (if equipped)
- Intake/inlet Air Temperature
- 5 Volt Feed

Conflict—The Task Manager does not run the Oxygen Sensor Monitor if any of the following conditions are present:

- A/C ON (A/C clutch cycling temporarily suspends monitor)
- Purge flow in progress
- Ethanel content learn is takeng place and the ethenal used once flag is set (if equipped)

Suspend—The Task Manager suspends maturing a fault for the Oxygen Sensor Monitor if any of the following are present:

- Oxygen Sensor Heater Monitor, Priority 1
- Misfire Monitor, Priority 2

OXYGEN SENSOR HEATER MONITOR

DESCRIPTION—If there is an oxygen sensor (O2S) DTC as well as a O2S heater DTC, the O2S fault MUST be repaired first. After the O2S fault is repaired, verify that the heater circuit is operating correctly.

The voltage readings taken from the O2S are very temperature sensitive. The readings are not accurate below 300°C. Heating of the O2S is done to allow the engine controller to shift to closed loop control as soon as possible. The heating element used to heat the O2S must be tested to ensure that it is heating the sensor properly.

The heater element itself is not tested. The sensor output is used to test the heater by isolating the effect of the heater element on the O2S output voltage from the other effects. The resistance is normally between 100 ohms and 4.5 megaohms. When oxygen sensor temperature increases, the resistance in the internal circuit decreases. The PCM sends a 5 volts biased signal through the oxygen sensors to ground this monitoring circuit. As the temperature increases, resistance decreases and the PCM detects a lower voltage at the reference signal. Inversely, as the temperature decreases, the resistance increases and the PCM detects a higher voltage at the reference signal. The O2S circuit is monitored for a drop in voltage.

OPERATION—The Oxygen Sensor Heater Monitor begins after the ignition has been turned OFF.

EMISSIONS CONTROL (Continued)

The PCM sends a 5 volt bias to the oxygen sensor every 1.6 seconds. The PCM keeps it biased for 35 ms each time. As the sensor cools down, the resistance increases and the PCM reads the increase in voltage. Once voltage has increased to a predetermined amount, higher than when the test started, the oxygen sensor is cool enough to test heater operation.

When the oxygen sensor is cool enough, the PCM energizes the ASD relay. Voltage to the O2 sensor begins to increase the temperature. As the sensor temperature increases, the internal resistance decreases. The PCM continues biasing the 5 volt signal to the sensor. Each time the signal is biased, the PCM reads a voltage decrease. When the PCM detects a voltage decrease of a predetermined value for several biased pulses, the test passes.

The heater elements are tested each time the engine is turned OFF if all the enabling conditions are met. If the monitor fails, the PCM stores a maturing fault and a Freeze Frame is entered. If two consecutive tests fail, a DTC is stored. Because the ignition is OFF, the MIL is illuminated at the beginning of the next key cycle.

Enabling Conditions—The following conditions must be met for the PCM to run the oxygen sensor heater test:

- Engine run time of at least 3 minutes
- Engine run time at a predetermind speed and throttle opening.
- Key OFF power down
- Battery voltage of at least 10 volts
- Sufficient Oxygen Sensor cool down

Pending Conditions—There are not conditions or situations that prompt conflict or suspension of testing. The oxygen sensor heater test is not run pending resolution of MIL illumination due to oxygen sensor failure.

Suspend—There are no conditions which exist for suspending the Heater Monitor.

CATALYST MONITOR

To comply with clean air regulations, vehicles are equipped with catalytic converters. These converters reduce the emission of hydrocarbons, oxides of nitrogen and carbon monoxide.

Normal vehicle miles or engine misfire can cause a catalyst to decay. A meltdown of the ceramic core can cause a reduction of the exhaust passage. This can increase vehicle emissions and deteriorate engine performance, driveability and fuel economy.

The catalyst monitor uses dual oxygen sensors (O2S's) to monitor the efficiency of the converter. The dual O2S strategy is based on the fact that as a catalyst deteriorates, its oxygen storage capacity and its efficiency are both reduced. By monitoring the oxygen storage capacity of a catalyst, its efficiency can be indirectly calculated. The upstream O2S is used to detect the amount of oxygen in the exhaust gas before the gas enters the catalytic converter. The PCM calculates the A/F mixture from the output of the O2S. A low voltage indicates high oxygen content (lean mixture). A high voltage indicates a low content of oxygen (rich mixture).

When the upstream O2S detects a lean condition, there is an abundance of oxygen in the exhaust gas. A functioning converter would store this oxygen so it can use it for the oxidation of HC and CO. As the converter absorbs the oxygen, there will be a lack of oxygen downstream of the converter. The output of the downstream O2S will indicate limited activity in this condition.

As the converter loses the ability to store oxygen, the condition can be detected from the behavior of the downstream O2S. When the efficiency drops, no chemical reaction takes place. This means the concentration of oxygen will be the same downstream as upstream. The output voltage of the downstream O2S copies the voltage of the upstream sensor. The only difference is a time lag (seen by the PCM) between the switching of the O2S's.

To monitor the system, the number of lean-to-rich switches of upstream and downstream O2S's is counted. The ratio of downstream switches to upstream switches is used to determine whether the catalyst is operating properly. An effective catalyst will have fewer downstream switches than it has upstream switches i.e., a ratio closer to zero. For a totally ineffective catalyst, this ratio will be one-to-one, indicating that no oxidation occurs in the device.

The system must be monitored so that when catalyst efficiency deteriorates and exhaust emissions increase to over the legal limit, the MIL (check engine lamp) will be illuminated.

Monitor Operation—To monitor catalyst efficiency, the PCM expands the rich and lean switch points of the heated oxygen sensor. With extended switch points, the air/fuel mixture runs richer and leaner to overburden the catalytic converter. Once the test is started, the air/fuel mixture runs rich and lean and the O2 switches are counted. A switch is counted when an oxygen sensor signal goes from below the lean threshold to above the rich threshold. The number of Rear O2 sensor switches is divided by the number of Front O2 sensor switches to determine the switching ratio.

The test runs for 20 seconds. As catalyst efficiency deteriorated over the life of the vehicle, the switch rate at the downstream sensor approaches that of the upstream sensor. If at any point during the test period the switch ratio reaches a predetermined value, a counter is incremented by one. The monitor

EMISSIONS CONTROL (Continued)

is enabled to run another test during that trip. When the test fails 6 times, the counter increments to 3, a malfunction is entered, and a Freeze Frame is stored, the code is matured and the MIL is illuminated. If the first test passes, no further testing is conducted during that trip.

The MIL is extinguished after three consecutive good trips. The good trip criteria for the catalyst monitor is more stringent than the failure criteria. In order to pass the test and increment one good trip, the downstream sensor switch rate must be less than 45% of the upstream rate. The failure percentages are 59% respectively.

Enabling Conditions—The following conditions must typically be met before the PCM runs the catalyst monitor. Specific times for each parameter may be different from engine to engine.

- Accumulated drive time
- Enable time
- Ambient air temperature
- Barometric pressure
- Catalyst warm-up counter
- Engine coolant temperature
- Vehicle speed
- MAP
- RPM
- Engine in closed loop
- Fuel level

Pending Conditions—

- Misfire DTC
- Front Oxygen Sensor Response
- Front Oxygen Sensor Heater Monitor
- Front Oxygen Sensor Electrical
- Rear Oxygen Sensor Rationality (middle check)
- Rear Oxygen Sensor Heater Monitor
- Rear Oxygen Sensor Electrical
- Fuel System Monitor
- All TPS faults
- All MAP faults
- All ECT sensor faults
- Purge flow solenoid functionality
- Purge flow solenoid electrical
- All PCM self test faults
- All CMP and CKP sensor faults
- All injector and ignition electrical faults
- Idle Air Control (IAC) motor functionality
- Vehicle Speed Sensor
- Brake switch (auto trans only)
- Intake air temperature

Conflict—The catalyst monitor does not run if any of the following are conditions are present:

- EGR Monitor in progress (if equipped)
- Fuel system rich intrusive test in progress
- EVAP Monitor in progress
- Time since start is less than 60 seconds
- Low fuel level-less than 15 %
- Low ambient air temperature
- Ethanel content learn is takeng place and the ethenal used once flag is set

Suspend—The Task Manager does not mature a catalyst fault if any of the following are present:

- Oxygen Sensor Monitor, Priority 1
- Oxygen Sensor Heater, Priority 1
- EGR Monitor, Priority 1 (if equipped)
- EVAP Monitor, Priority 1
- Fuel System Monitor, Priority 2
- Misfire Monitor, Priority 2

OPERATION - NON-MONITORED CIRCUITS

The PCM does not monitor all circuits, systems and conditions that could have malfunctions causing driveability problems. However, problems with these systems may cause the PCM to store diagnostic trouble codes for other systems or components. For example, a fuel pressure problem will not register a fault directly, but could cause a rich/lean condition or misfire. This could cause the PCM to store an oxygen sensor or misfire diagnostic trouble code.

The major non-monitored circuits are listed below along with examples of failures modes that do not directly cause the PCM to set a DTC, but for a system that is monitored.

FUEL PRESSURE

The fuel pressure regulator controls fuel system pressure. The PCM cannot detect a clogged fuel pump inlet filter, clogged in-line fuel filter, or a pinched fuel supply or return line. However, these could result in a rich or lean condition causing the PCM to store an oxygen sensor, fuel system, or misfire diagnostic trouble code.

SECONDARY IGNITION CIRCUIT

The PCM cannot detect an inoperative ignition coil, fouled or worn spark plugs, ignition cross firing, or open spark plug cables. The misfire will however, increase the oxygen content in the exhaust, deceiving the PCM in to thinking the fuel system is too lean. Also misfire detection.

CYLINDER COMPRESSION

The PCM cannot detect uneven, low, or high engine cylinder compression. Low compression lowers O2 content in the exhaust. Leading to fuel system, oxygen sensor, or misfire detection fault.

EXHAUST SYSTEM

The PCM cannot detect a plugged, restricted or leaking exhaust system. It may set a EGR (if equipped) or Fuel system or O2S fault.

EMISSIONS CONTROL (Continued)

FUEL INJECTOR MECHANICAL MALFUNCTIONS

The PCM cannot determine if a fuel injector is clogged, the needle is sticking or if the wrong injector is installed. However, these could result in a rich or lean condition causing the PCM to store a diagnostic trouble code for either misfire, an oxygen sensor, or the fuel system.

EXCESSIVE OIL CONSUMPTION

Although the PCM monitors engine exhaust oxygen content when the system is in closed loop, it cannot determine excessive oil consumption.

THROTTLE BODY AIR FLOW

The PCM cannot detect a clogged or restricted air cleaner inlet or filter element.

VACUUM ASSIST

The PCM cannot detect leaks or restrictions in the vacuum circuits of vacuum assisted engine control system devices. However, these could cause the PCM to store a MAP sensor diagnostic trouble code and cause a high idle condition.

PCM SYSTEM GROUND

The PCM cannot determine a poor system ground. However, one or more diagnostic trouble codes may be generated as a result of this condition. The module should be mounted to the body at all times, also during diagnostic.

PCM CONNECTOR ENGAGEMENT

The PCM may not be able to determine spread or damaged connector pins. However, it might store diagnostic trouble codes as a result of spread connector pins.

DESCRIPTION - MONITORED SYSTEMS

There are new electronic circuit monitors that check fuel, emission, engine and ignition performance. These monitors use information from various sensor circuits to indicate the overall operation of the fuel, engine, ignition and emission systems and thus the emissions performance of the vehicle.

The fuel, engine, ignition and emission systems monitors do not indicate a specific component problem. They do indicate that there is an implied problem within one of the systems and that a specific problem must be diagnosed.

If any of these monitors detect a problem affecting vehicle emissions, the Malfunction Indicator (Check Engine) Lamp will be illuminated. These monitors generate Diagnostic Trouble Codes that can be displayed with the a DRBIII® scan tool.

The following is a list of the system monitors:

- EGR Monitor (if equipped)
- Misfire Monitor
- Fuel System Monitor
- Oxygen Sensor Monitor
- Oxygen Sensor Heater Monitor
- Catalyst Monitor
- Evaporative System Leak Detection Monitor (if equipped)

Following is a description of each system monitor, and its DTC.

Refer to the appropriate Powertrain Diagnostics Procedures manual for diagnostic procedures.

OXYGEN SENSOR (O2S) MONITOR

Effective control of exhaust emissions is achieved by an oxygen feedback system. The most important element of the feedback system is the O2S. The O2S is located in the exhaust path. Once it reaches operating temperatures of 300° to 350°C (572° to 662°F), the sensor generates a voltage that is inversely proportional to the amount of oxygen in the exhaust. The information obtained by the sensor is used to calculate the fuel injector pulse width. The PCM is programmed to maintain the optimum air/fuel ratio. At this mixture ratio, the catalyst works best to remove hydrocarbons (HC), carbon monoxide (CO) and nitrous oxide (NOx) from the exhaust.

The O2S is also the main sensing element for the EGR (if equipped), Catalyst and Fuel Monitors.

The O2S may fail in any or all of the following manners:

- Slow response rate
- Reduced output voltage
- Dynamic shift
- Shorted or open circuits

Response rate is the time required for the sensor to switch from lean to rich once it is exposed to a richer than optimum A/F mixture or vice versa. As the sensor starts malfunctioning, it could take longer to detect the changes in the oxygen content of the exhaust gas.

The output voltage of the O2S ranges from 0 to 1 volt. A good sensor can easily generate any output voltage in this range as it is exposed to different concentrations of oxygen. To detect a shift in the A/F mixture (lean or rich), the output voltage has to change beyond a threshold value. A malfunctioning sensor could have difficulty changing beyond the threshold value.

OXYGEN SENSOR HEATER MONITOR

If there is an oxygen sensor (O2S) DTC as well as a O2S heater DTC, the O2S fault MUST be repaired first. After the O2S fault is repaired, verify that the heater circuit is operating correctly.

EMISSIONS CONTROL (Continued)

Effective control of exhaust emissions is achieved by an oxygen feedback system. The most important element of the feedback system is the O2S. The O2S is located in the exhaust path. Once it reaches operating temperatures of 300° to 350°C (572 ° to 662°F), the sensor generates a voltage that is inversely proportional to the amount of oxygen in the exhaust. The information obtained by the sensor is used to calculate the fuel injector pulse width. This maintains a 14.7 to 1 Air Fuel (A/F) ratio. At this mixture ratio, the catalyst works best to remove hydrocarbons (HC), carbon monoxide (CO) and nitrogen oxide (NOx) from the exhaust.

The voltage readings taken from the O2S are very temperature sensitive. The readings are not accurate below 300°C. Heating of the O2S is done to allow the engine controller to shift to closed loop control as soon as possible. The heating element used to heat the O2S must be tested to ensure that it is heating the sensor properly.

The O2S circuit is monitored for a drop in voltage. The sensor output is used to test the heater by isolating the effect of the heater element on the O2S output voltage from the other effects.

EGR MONITOR (if equipped)

The Powertrain Control Module (PCM) performs an on-board diagnostic check of the EGR system.

The EGR monitor is used to test whether the EGR system is operating within specifications. The diagnostic check activates only during selected engine/ driving conditions. When the conditions are met, the EGR is turned off (solenoid energized) and the O2S compensation control is monitored. Turning off the EGR shifts the air fuel (A/F) ratio in the lean direction. The O2S data should indicate an increase in the O2 concentration in the combustion chamber when the exhaust gases are no longer recirculated. While this test does not directly measure the operation of the EGR system, it can be inferred from the shift in the O2S data whether the EGR system is operating correctly. Because the O2S is being used, the O2S test must pass its test before the EGR test. Also looks at EGR linear potentiometer for feedback.

MISFIRE MONITOR

Excessive engine misfire results in increased catalyst temperature and causes an increase in HC emissions. Severe misfires could cause catalyst damage. To prevent catalytic convertor damage, the PCM monitors engine misfire.

The Powertrain Control Module (PCM) monitors for misfire during most engine operating conditions (positive torque) by looking at changes in the crankshaft speed. If a misfire occurs the speed of the crankshaft will vary more than normal.

FUEL SYSTEM MONITOR

To comply with clean air regulations, vehicles are equipped with catalytic converters. These converters reduce the emission of hydrocarbons, oxides of nitrogen and carbon monoxide. The catalyst works best when the air fuel (A/F) ratio is at or near the optimum of 14.7 to 1.

The PCM is programmed to maintain the optimum air/fuel ratio. This is done by making short term corrections in the fuel injector pulse width based on the O2S output. The programmed memory acts as a self calibration tool that the engine controller uses to compensate for variations in engine specifications, sensor tolerances and engine fatigue over the life span of the engine. By monitoring the actual air-fuel ratio with the O2S (short term) and multiplying that with the program long-term (adaptive) memory and comparing that to the limit, it can be determined whether it will pass an emissions test. If a malfunction occurs such that the PCM cannot maintain the optimum A/F ratio, then the MIL will be illuminated.

CATALYST MONITOR

To comply with clean air regulations, vehicles are equipped with catalytic converters. These converters reduce the emission of hydrocarbons, oxides of nitrogen and carbon monoxide.

Normal vehicle miles or engine misfire can cause a catalyst to decay. A meltdown of the ceramic core can cause a reduction of the exhaust passage. This can increase vehicle emissions and deteriorate engine performance, driveability and fuel economy.

The catalyst monitor uses dual oxygen sensors (O2S's) to monitor the efficiency of the converter. The dual O2S's strategy is based on the fact that as a catalyst deteriorates, its oxygen storage capacity and its efficiency are both reduced. By monitoring the oxygen storage capacity of a catalyst, its efficiency can be indirectly calculated. The upstream O2S is used to detect the amount of oxygen in the exhaust gas before the gas enters the catalytic converter. The PCM calculates the A/F mixture from the output of the O2S. A low voltage indicates high oxygen content (lean mixture). A high voltage indicates a low content of oxygen (rich mixture).

When the upstream O2S detects a lean condition, there is an abundance of oxygen in the exhaust gas. A functioning converter would store this oxygen so it can use it for the oxidation of HC and CO. As the converter absorbs the oxygen, there will be a lack of oxygen downstream of the converter. The output of the downstream O2S will indicate limited activity in this condition.

As the converter loses the ability to store oxygen, the condition can be detected from the behavior of the downstream O2S. When the efficiency drops, no

EMISSIONS CONTROL (Continued)

chemical reaction takes place. This means the concentration of oxygen will be the same downstream as upstream. The output voltage of the downstream O2S copies the voltage of the upstream sensor. The only difference is a time lag (seen by the PCM) between the switching of the O2S's.

To monitor the system, the number of lean-to-rich switches of upstream and downstream O2S's is counted. The ratio of downstream switches to upstream switches is used to determine whether the catalyst is operating properly. An effective catalyst will have fewer downstream switches than it has upstream switches i.e., a ratio closer to zero. For a totally ineffective catalyst, this ratio will be one-to-one, indicating that no oxidation occurs in the device.

The system must be monitored so that when catalyst efficiency deteriorates and exhaust emissions increase to over the legal limit, the MIL (Check Engine lamp) will be illuminated.

LEAK DETECTION PUMP MONITOR (if equipped)

The leak detection assembly incorporates two primary functions: it must detect a leak in the evaporative system and seal the evaporative system so the leak detection test can be run.

The primary components within the assembly are: A three port solenoid that activates both of the functions listed above; a pump which contains a switch, two check valves, a spring/diaphragm, and a canister vent valve (CVV) seal which contains a spring loaded vent seal valve.

Immediately after a cold start, between predetermined temperature thresholds limits, the three port solenoid is briefly energized. This initializes the pump by drawing air into the pump cavity and also closes the vent seal. During non test conditions the vent seal is held open by the pump diaphragm assembly which pushes it open at the full travel position. The vent seal will remain closed while the pump is cycling due to the reed switch triggering of the three port solenoid that prevents the diaphragm assembly from reaching full travel. After the brief initialization period, the solenoid is de-energized allowing atmospheric pressure to enter the pump cavity, thus permitting the spring to drive the diaphragm which forces air out of the pump cavity and into the vent system. When the solenoid is energized and de energized, the cycle is repeated creating flow in typical diaphragm pump fashion. The pump is controlled in 2 modes:

Pump Mode: The pump is cycled at a fixed rate to achieve a rapid pressure build in order to shorten the overall test length.

Test Mode: The solenoid is energized with a fixed duration pulse. Subsequent fixed pulses occur when the diaphragm reaches the Switch closure point.

The spring in the pump is set so that the system will achieve an equalized pressure of about 7.5" water. The cycle rate of pump strokes is quite rapid as the system begins to pump up to this pressure. As the pressure increases, the cycle rate starts to drop off. If there is no leak in the system, the pump would eventually stop pumping at the equalized pressure. If there is a leak, it will continue to pump at a rate representative of the flow characteristic of the size of the leak. From this information we can determine if the leak is larger than the required detection limit (currently set at .020" orifice by CARB). If a leak is revealed during the leak test portion of the test, the test is terminated at the end of the test mode and no further system checks will be performed.

The canister vent valve will unseal the system after completion of the test sequence as the pump diaphragm assembly moves to the full travel position.

Evaporative system functionality will be verified by using the stricter evap purge flow monitor. At an appropriate warm idle the LDP will be energized to seal the canister vent. The purge flow will be clocked up from some small value in an attempt to see a shift in the 02 control system. If fuel vapor, indicated by a shift in the 02 control, is present the test is passed. If not, it is assumed that the purge system is not functioning in some respect. The LDP is again turned off and the test is ended.

Natural Vacuum Leak Detection (NVLD) (if equipped)

The Natural Vacuum Leak Detection (NVLD) system is the next generation evaporative leak detection system that will first be used on vehicles equipped with the Next Generation Controller (NGC) starting in 2002 M.Y. This new system replaces the leak detection pump as the method of evaporative system leak detection. This is to detect a leak equivalent to a 0.020″ (0.5 mm) hole. This system has the capability to detect holes of this size very dependably.

The basic leak detection theory employed with NVLD is the ″Gas Law″. This is to say that the pressure in a sealed vessel will change if the temperature of the gas in the vessel changes. The vessel will only see this effect if it is indeed sealed. Even small leaks will allow the pressure in the vessel to come to equilibrium with the ambient pressure. In addition to the detection of very small leaks, this system has the capability of detecting medium as well as large evaporative system leaks.

A vent valve seals the canister vent during engine off conditions. If the vapor system has a leak of less than the failure threshold, the evaporative system will be pulled into a vacuum, either due to the cool down from operating temperature or diurnal ambient temperature cycling. The diurnal effect is considered one of the primary contributors to the leak determi-

nation by this diagnostic. When the vacuum in the system exceeds about 1″ H2O (0.25 KPA), a vacuum switch closes. The switch closure sends a signal to the NGC. The NGC, via appropriate logic strategies (described below), utilizes the switch signal, or lack thereof, to make a determination of whether a leak is present.

The NVLD device is designed with a normally open vacuum switch, a normally closed solenoid, and a seal, which is actuated by both the solenoid and a diaphragm. The NVLD is located on the atmospheric vent side of the canister. The NVLD assembly may be mounted on top of the canister outlet, or in-line between the canister and atmospheric vent filter. The normally open vacuum switch will close with about 1″ H2O (0.25 KPA) vacuum in the evaporative system. The diaphragm actuates the switch. This is above the opening point of the fuel inlet check valve in the fill tube so cap off leaks can be detected. Submerged fill systems must have recirculation lines that do not have the in-line normally closed check valve that protects the system from failed nozzle liquid ingestion, in order to detect cap off conditions.

The normally closed valve in the NVLD is intended to maintain the seal on the evaporative system during the engine off condition. If vacuum in the evaporative system exceeds 3″ to 6″ H2O (0.75 to 1.5 KPA), the valve will be pulled off the seat, opening the seal. This will protect the system from excessive vacuum as well as allowing sufficient purge flow in the event that the solenoid was to become inoperative.

The solenoid actuates the valve to unseal the canister vent while the engine is running. It also will be used to close the vent during the medium and large leak tests and during the purge flow check. This solenoid requires initial 1.5 amps of current to pull the valve open but after 100 ms. will be duty cycled down to an average of about 150 mA for the remainder of the drive cycle.

Another feature in the device is a diaphragm that will open the seal in the NVLD with pressure in the evaporative system. The device will ″blow off″ at about 0.5″ H2O (0.12 KPA) pressure to permit the venting of vapors during refueling. An added benefit to this is that it will also allow the tank to ″breathe″ during increasing temperatures, thus limiting the pressure in the tank to this low level. This is beneficial because the induced vacuum during a subsequent declining temperature will achieve the switch closed (pass threshold) sooner than if the tank had to decay from a built up pressure.

The device itself has 3 wires: Switch sense, solenoid driver and ground. It also includes a resistor to protect the switch from a short to battery or a short to ground. The NGC utilizes a high-side driver to energize and duty-cycle the solenoid.

DESCRIPTION - HIGH AND LOW LIMITS

The PCM compares input signal voltages from each input device with established high and low limits for the device. If the input voltage is not within limits and other criteria are met, the PCM stores a diagnostic trouble code in memory. Other diagnostic trouble code criteria might include engine RPM limits or input voltages from other sensors or switches that must be present before verifying a diagnostic trouble code condition.

OPERATION

OPERATION - SYSTEM

The Powertrain Control Module (PCM) monitors many different circuits in the fuel injection, ignition, emission and engine systems. If the PCM senses a problem with a monitored circuit often enough to indicate an actual problem, it stores a Diagnostic Trouble Code (DTC) in the PCM's memory. If the code applies to a non-emissions related component or system, and the problem is repaired or ceases to exist, the PCM cancels the code after 40 warmup cycles. Diagnostic trouble codes that affect vehicle emissions illuminate the Malfunction Indicator Lamp (MIL). Refer to Malfunction Indicator Lamp in this section.

Certain criteria must be met before the PCM stores a DTC in memory. The criteria may be a specific range of engine RPM, engine temperature, and/or input voltage to the PCM.

The PCM might not store a DTC for a monitored circuit even though a malfunction has occurred. This may happen because one of the DTC criteria for the circuit has not been met. **For example** , assume the diagnostic trouble code criteria requires the PCM to monitor the circuit only when the engine operates between 750 and 2000 RPM. Suppose the sensor's output circuit shorts to ground when engine operates above 2400 RPM (resulting in 0 volt input to the PCM). Because the condition happens at an engine speed above the maximum threshold (2000 rpm), the PCM will not store a DTC.

There are several operating conditions for which the PCM monitors and sets DTC's. Refer to Monitored Systems, Components, and Non-Monitored Circuits in this section.

NOTE: Various diagnostic procedures may actually cause a diagnostic monitor to set a DTC. For instance, pulling a spark plug wire to perform a spark test may set the misfire code. When a repair is completed and verified, use the DRBIII® scan tool to erase all DTC's and extinguish the MIL.

EMISSIONS CONTROL (Continued)

Technicians can display stored DTC's. Refer to Diagnostic Trouble Codes (Refer to 8 - ELECTRICAL/ ELECTRONIC CONTROL MODULES/POWER-TRAIN CONTROL MODULE - DESCRIPTION). For obtaining the DTC information, use the Data Link Connector with the DRBIII® scan tool (Fig. 1).

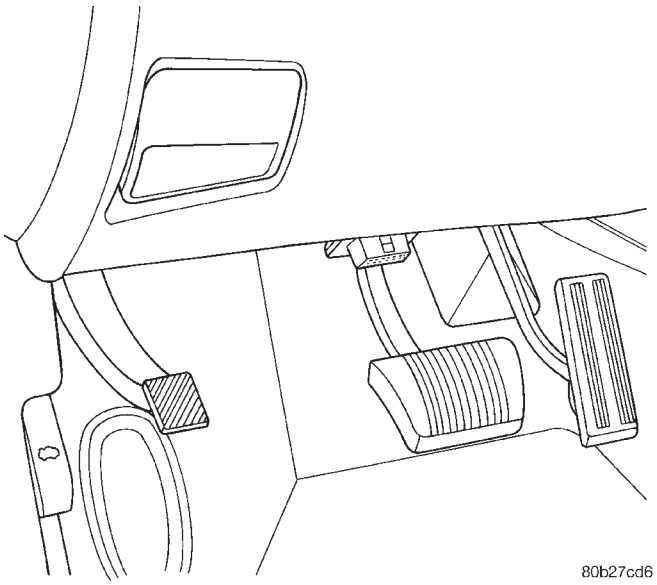

Fig. 1 Data Link Connector

DRB III® STATE DISPLAY TEST MODE

OPERATION

The switch inputs to the Powertrain Control Module (PCM) have two recognized states; HIGH and LOW. For this reason, the PCM cannot recognize the difference between a selected switch position versus an open circuit, a short circuit, or a defective switch. If the State Display screen shows the change from HIGH to LOW or LOW to HIGH, assume the entire switch circuit to the PCM functions properly. From the state display screen, access either State Display Inputs and Outputs or State Display Sensors.

EVAPORATIVE EMISSIONS

TABLE OF CONTENTS

page

EVAPORATIVE EMISSIONS
OPERATION - EVAPORATION CONTROL SYSTEM . . . 11
SPECIFICATIONS
TORQUE . . . 12
EVAP/PURGE SOLENOID
DESCRIPTION . . . 13
OPERATION . . . 13
REMOVAL . . . 13
INSTALLATION . . . 13
FUEL FILLER CAP
DESCRIPTION . . . 13
OPERATION . . . 13
LEAK DETECTION PUMP
REMOVAL . . . 14
INSTALLATION . . . 14
ORVR
OPERATION . . . 14

page

DIAGNOSIS AND TESTING - VEHICLE DOES NOT FILL . . . 16
PCV VALVE
DESCRIPTION . . . 17
OPERATION . . . 17
DIAGNOSIS AND TESTING - PCV SYSTEM . . . 17
VAPOR CANISTER
DESCRIPTION . . . 18
OPERATION . . . 18
REMOVAL
REMOVAL . . . 19
REMOVAL - REAR EVAP CANISTER . . . 19
INSTALLATION
INSTALLATION . . . 19
INSTALLATION - REAR EVAP CANISTER . . . 19

EVAPORATIVE EMISSIONS

OPERATION - EVAPORATION CONTROL SYSTEM

The evaporation control system prevents the emission of fuel tank vapors into the atmosphere. When fuel evaporates in the fuel tank, the vapors pass through vent hoses or tubes to an activated carbon filled evaporative canister. The canister temporarily holds the vapors. The Powertrain Control Module (PCM) allows intake manifold vacuum to draw vapors into the combustion chambers during certain operating conditions (Fig. 1).

All engines use a proportional purge solenoid system. The PCM controls vapor flow by operating the purge solenoid. Refer to Proportional Purge Solenoid in this section.

NOTE: The evaporative system uses specially manufactured hoses. If they need replacement, only use fuel resistant hose. Also the hoses must be able to pass an Ozone compliance test.

NOTE: For more information on Onboard Refueling Vapor Recovery (ORVR), refer to the Fuel Delivery section.

EVAPORATIVE EMISSIONS (Continued)

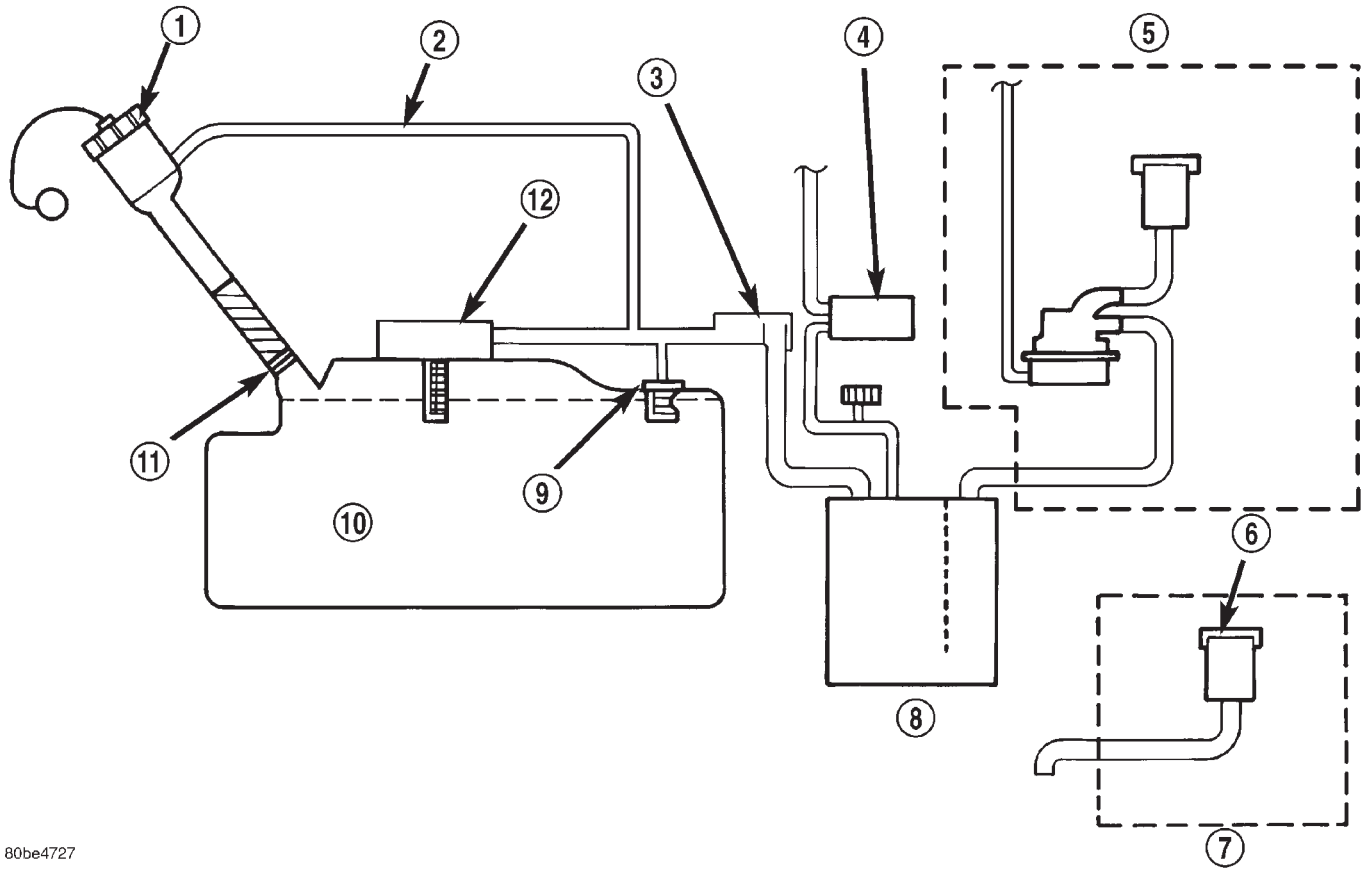

Fig. 1 ORVR System Schematic

1 - FUEL CAP
2 - RECIRCULATION TUBE
3 - LIQUID SEPARATOR
4 - PURGE SOLENOID
5 - W/LDP
6 - BREATHER ELEMENT
7 - W/O LDP
8 - CANISTER
9 - ROLLOVER VALVE
10 - FUEL TANK
11 - CHECK VALVE
12 - CONTROL VALVE

SPECIFICATIONS

TORQUE

DESCRIPTION	N·m	Ft. Lbs.	In. Lbs.
PCV VAlve 3.3/3.8L	6.3		55

EVAP/PURGE SOLENOID

DESCRIPTION

All vehicles use a proportional purge solenoid (Fig. 2). The solenoid regulates the rate of vapor flow from the EVAP canister to the throttle body. The PCM operates the solenoid.

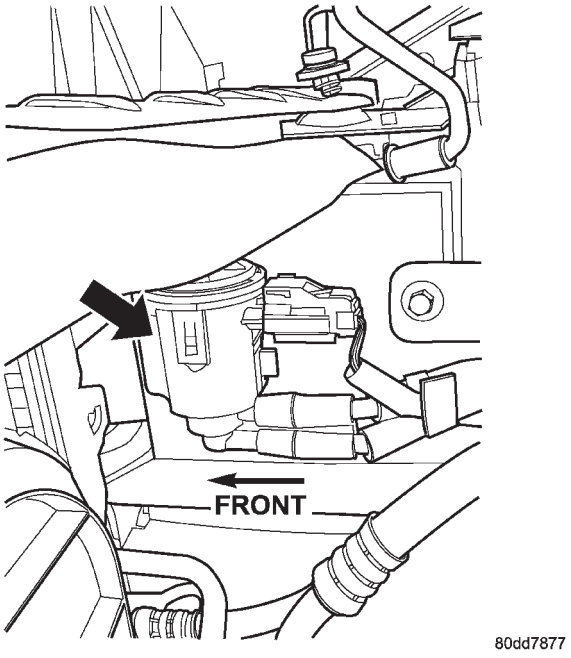

Fig. 2 Proportional Purge Solenoid

OPERATION

During the cold start warm-up period and the hot start time delay, the PCM does not energize the solenoid. When de-energized, no vapors are purged.

The proportional purge solenoid operates at a frequency of 200 hz and is controlled by an engine controller circuit that senses the current being applied to the proportional purge solenoid and then adjusts that current to achieve the desired purge flow. The proportional purge solenoid controls the purge rate of fuel vapors from the vapor canister and fuel tank to the engine intake manifold.

REMOVAL

The solenoid attaches to a bracket near the radiator on the passenger side of vehicle (Fig. 3). The solenoid will not operate unless it is installed correctly.

(1) Disconnect electrical connector from solenoid.
(2) Disconnect vacuum tubes from solenoid.
(3) Remove solenoid from bracket.

INSTALLATION

The solenoid attaches to a bracket near the radiator on the passenger side of vehicle. The solenoid will not operate unless it is installed correctly.

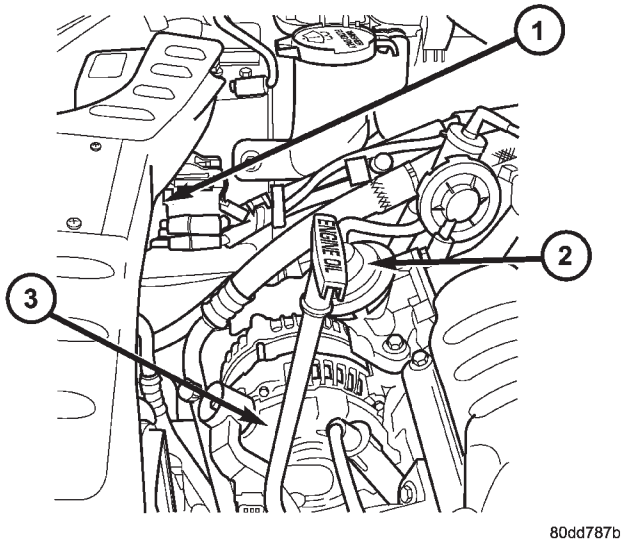

Fig. 3 EVAP PURGE SOLENOID

1 - EVAP Purge Solenoid
2 - EGR VAlve
3 - Generator

The top of the solenoid has TOP printed on it. The solenoid will not operate unless it is installed correctly.

(1) Install solenoid on bracket.
(2) Connect vacuum tube to solenoid.
(3) Connect electrical connector to solenoid.

FUEL FILLER CAP

DESCRIPTION

The plastic fuel fill cap is threaded/quarter turn onto the end of the fuel filler tube. It's purpose is to retain vapors and fuel in the fuel tank.

OPERATION

The fuel filler cap incorporates a two-way relief valve that is closed to atmosphere during normal operating conditions. The relief valve is calibrated to open when a pressure of 17 kPa (2.5 psi) or vacuum of 2 kPa (0.6 in. Hg) occurs in the fuel tank. When the pressure or vacuum is relieved, the valve returns to the normally closed position.

CAUTION: Remove the fuel filler cap to release fuel tank pressure before disconnecting any fuel system component.

LEAK DETECTION PUMP

REMOVAL

(1) Disconnect the negative battery cable.
(2) Raise and support the vehicle.

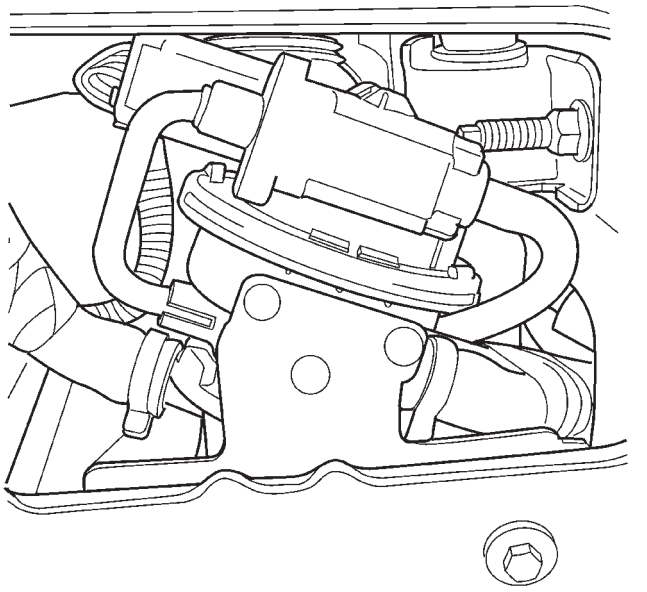

Fig. 4 LDP LOCATION

(3) Remove 3 hoses (Fig. 4).
(4) Remove the electrical connector (Fig. 5).

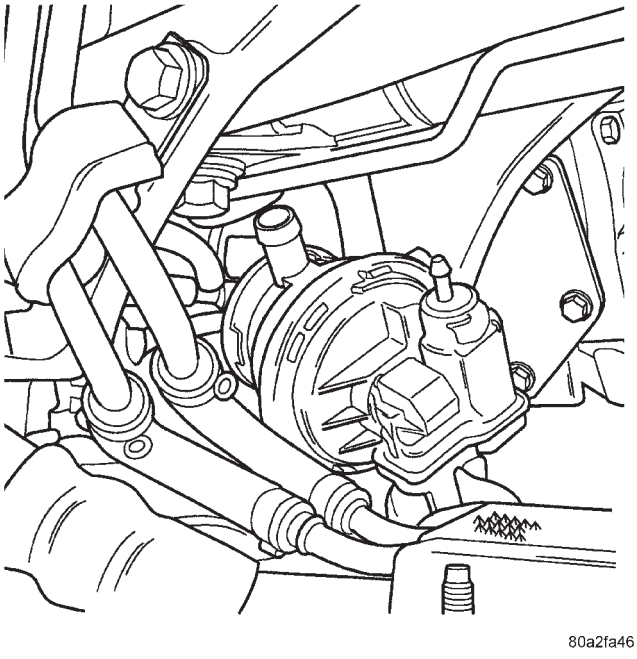

Fig. 5 LDP REMOVAL/INSTALLATION

(5) Remove the 3 screws and remove LDP pump.

INSTALLATION

(1) Install LDP.
(2) Install the 3 screws and tighten (Fig. 5).
(3) Install the electrical connector.
(4) Install the 3 hoses (Fig. 4).
(5) Lower vehicle.
(6) Connect the negative battery cable.

ORVR

OPERATION

The emission control principle used in the ORVR system is that the fuel flowing into the filler tube (appx. 1" I.D.) creates an aspiration effect which draws air into the fill tube (Fig. 6). During refueling, the fuel tank is vented to the vapor canister to capture escaping vapors. With air flowing into the filler tube, there are no fuel vapors escaping to the atmosphere. Once the refueling vapors are captured by the canister, the vehicle's computer controlled purge system draws vapor out of the canister for the engine to burn. The vapors flow is metered by the purge solenoid so that there is no or minimal impact on driveability or tailpipe emissions.

As fuel starts to flow through the fill tube, it opens the normally closed check valve and enters the fuel tank. Vapor or air is expelled from the tank through the control valve to the vapor canister. Vapor is absorbed in the canister until vapor flow in the lines stops, either following shut-off or by having the fuel level in the tank rise high enough to close the control valve. The control valve(Refer to 14 - FUEL SYSTEM/FUEL DELIVERY/FUEL TANK - OPERATION) contains a float that rises to seal the large diameter vent path to the canister. At this point in the fueling of the vehicle, the tank pressure increases, the check valve closes (preventing tank fuel from spitting back at the operator), and fuel then rises up the filler tube to shut-off the dispensing nozzle.

If the engine is shut-off while the On-Board diagnostics test is running, low level tank pressure can be trapped in the fuel tank and fuel can not be added to the tank until the pressure is relieved. This is due to the leak detection pump closing the vapor outlet from the top of the tank and the one-way check valve not allowing the tank to vent through the fill tube to atmosphere. Therefore, when fuel is added, it will back-up in the fill tube and shut off the dispensing nozzle. The pressure can be eliminated in two ways: 1. Vehicle purge must be activated and for a long enough period to eliminate the pressure. 2. Removing the fuel cap and allowing enough time for the system to vent thru the recirulation tube.

ORVR (Continued)

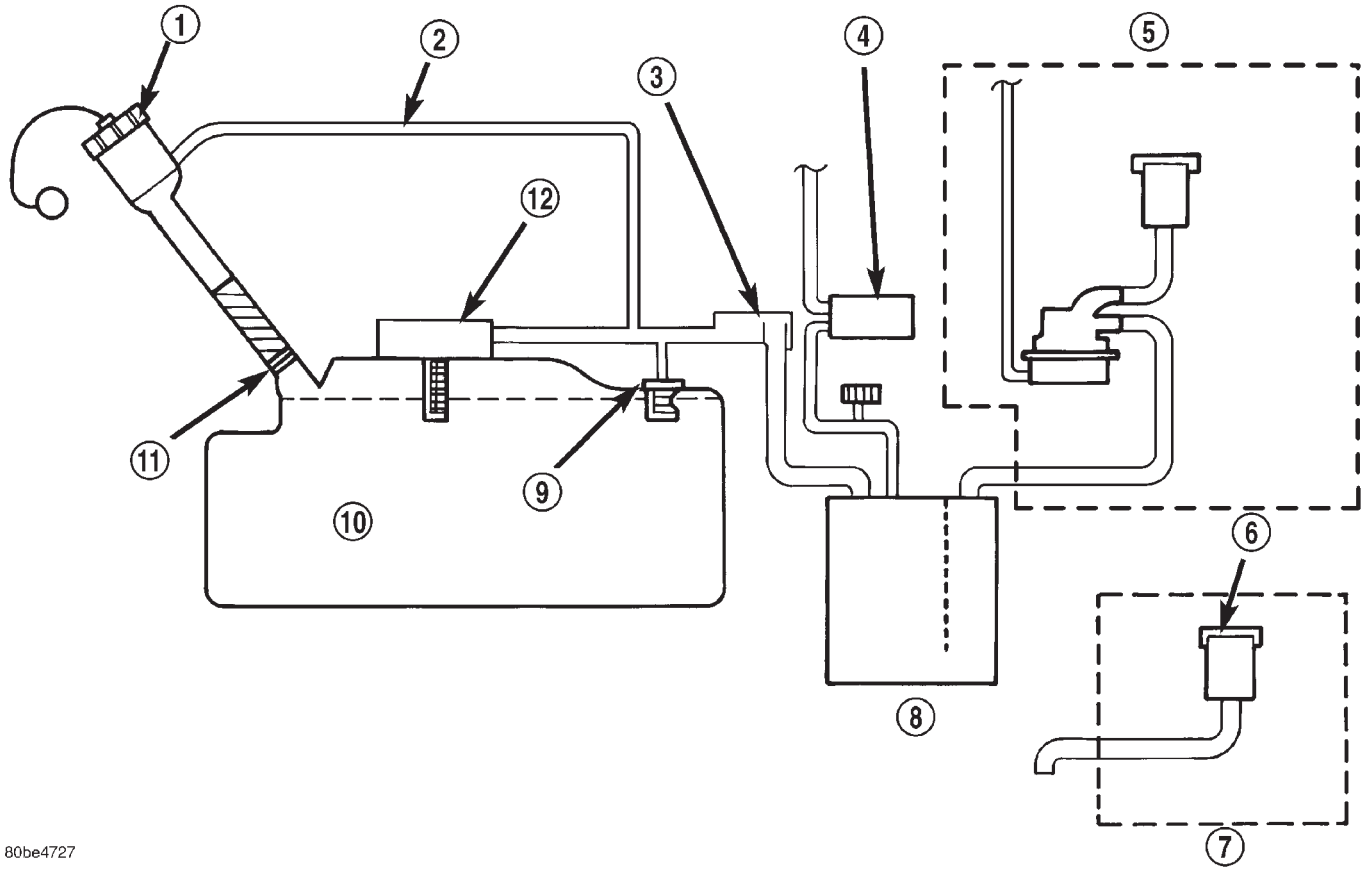

Fig. 6 ORVR System Schematic

1 - FUEL CAP
2 - RECIRCULATION TUBE
3 - LIQUID SEPARATOR
4 - PURGE SOLENOID
5 - W/LDP
6 - BREATHER ELEMENT
7 - W/O LDP
8 - CANISTER
9 - ROLLOVER VALVE
10 - FUEL TANK
11 - CHECK VALVE
12 - CONTROL VALVE

ORVR (Continued)

DIAGNOSIS AND TESTING - VEHICLE DOES NOT FILL

CONDITION	POSSIBLE CAUSES	CORRECTION
Pre-Mature Nozzle Shut-Off	Defective fuel tank assembly components.	Fill tube improperly installed (sump) Fill tube hose pinched. Check valve stuck shut. Control valve stuck shut.
	Defective vapor/vent components.	Vent line from control valve to canister pinched. Vent line from canister to vent filter pinched. Canister vent valve failure (requires double failure, plugged to LDP and atmosphere). Leak detection pump failed closed. Leak detection pump filter plugged.
	On-Board diagnostics evaporative system leak test just conducted.	Canister vent valve vent plugged to atmosphere. engine still running when attempting to fill (System designed not to fill).
	Defective fill nozzle.	Try another nozzle.
Fuel Spits Out Of Filler Tube.	During fill.	See Pre-Mature Shut-Off.
	At conclusion of fill.	Defective fuel handling component. (Check valve stuck open).
		Defective vapor/vent handling component.
		Defective fill nozzle.

PCV VALVE

DESCRIPTION

The PCV valve contains a spring loaded plunger. The plunger meters the amount of crankcase vapors routed into the combustion chamber based on intake manifold vacuum (Fig. 7) or (Fig. 8).

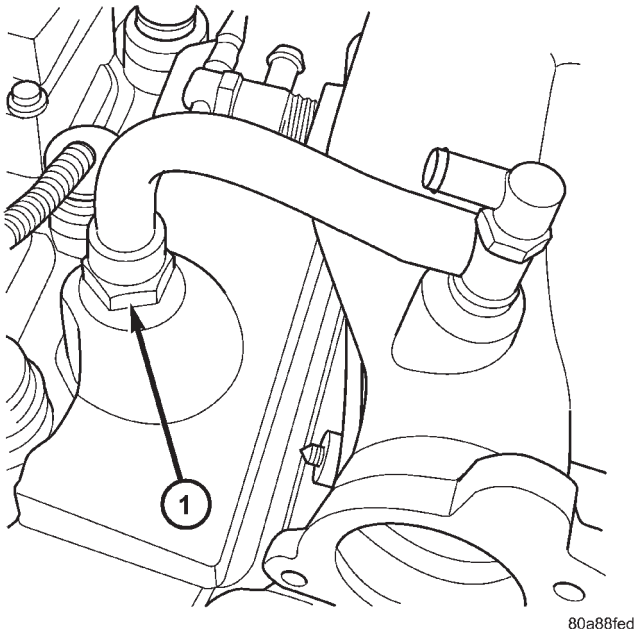

Fig. 7 PCV VALVE 2.4L

1 - PCV Valve

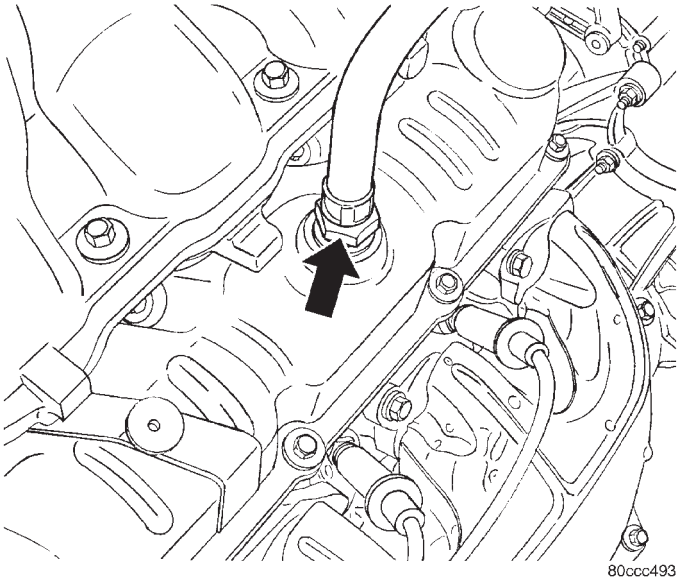

Fig. 8 PCV VALVE 3.3/3.8L

OPERATION

When the engine is not operating or during an engine backfire, the spring forces the plunger back against the seat. This prevents vapors from flowing through the valve (Fig. 9).

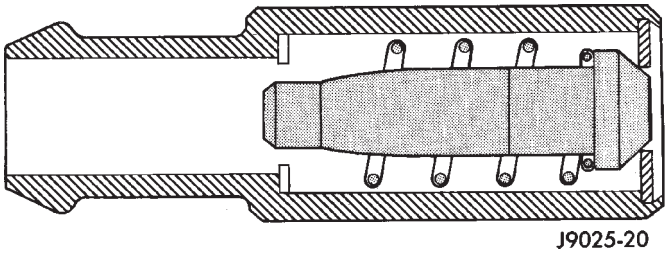

Fig. 9 Engine Off or Engine Backfire No Vapor Flow

When the engine is at idle or cruising, high manifold vacuum is present. At these times manifold vacuum is able to completely compress the spring and pull the plunger to the top of the valve (Fig. 10). In this position there is minimal vapor flow through the valve.

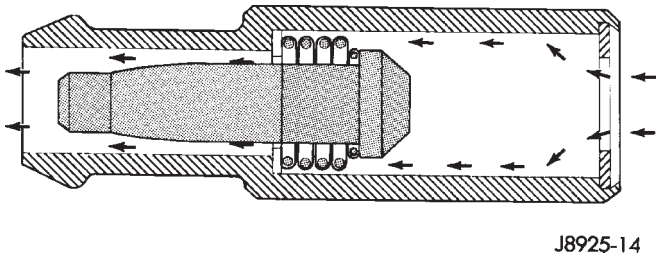

Fig. 10 High Intake Manifold Vacuum Minimal Vapor Flow

During periods of moderate intake manifold vacuum the plunger is only pulled part way back from the inlet. This results in maximum vapor flow through the valve (Fig. 11).

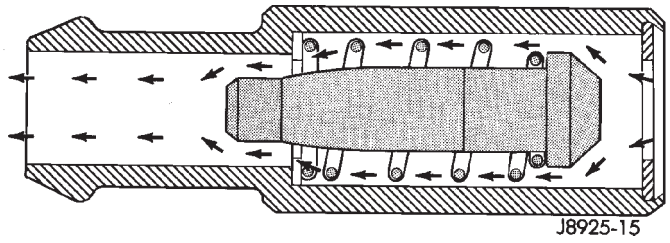

Fig. 11 Moderate Intake Manifold Vacuum Maximum Vapor Flow

DIAGNOSIS AND TESTING - PCV SYSTEM

WARNING: APPLY PARKING BRAKE AND/OR BLOCK WHEELS BEFORE PERFORMING ANY TEST OR ADJUSTMENT WITH THE ENGINE OPERATING.

(1) With engine idling, remove the hose from the PCV valve. If the valve is not plugged, a hissing

PCV VALVE (Continued)

noise will be heard as air passes through the valve. A strong vacuum should also be felt when a finger is placed over the valve inlet.

(2) Install hose on PCV valve. Remove the make-up air hose from the air plenum at the rear of the engine. Hold a piece of stiff paper (parts tag) loosely over the end of the make-up air hose.

(3) After allowing approximately one minute for crankcase pressure to reduce, the paper should draw up against the hose with noticeable force. If the engine does not draw the paper against the grommet after installing a new valve, replace the PCV valve hose.

(4) Turn the engine off. Remove the PCV valve from intake manifold. The valve should rattle when shaken.

(5) Replace the PCV valve and retest the system if it does not operate as described in the preceding tests. **Do not attempt to clean the old PCV valve.** If the valve rattles, apply a light coating of Loctite® Pipe Sealant With Teflon to the threads. Thread the PCV valve into the manifold plenum and tighten to 7 N·m (60 in. lbs.) torque.

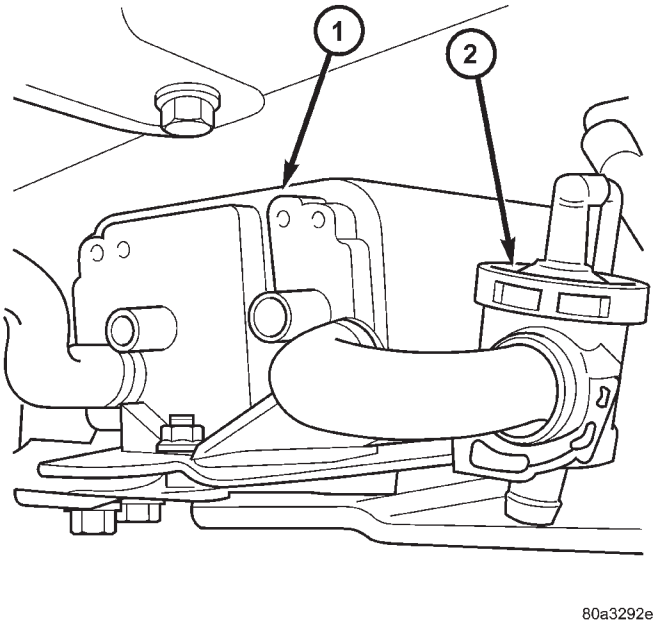

Fig. 12 FRONT EVAP CANISTER

1 - Front EVAP Canister
2 - Vent Valve

VAPOR CANISTER

DESCRIPTION

There are 2 EVAP canisters on the vehicle. The vacuum and vapor tubes connect to the top of the canister. It is a charcoal canister (Fig. 12) or (Fig. 13).

OPERATION

All vehicles use a maintenance free, evaporative (EVAP) canister. Fuel tank vapors vent into the canister. The canister temporarily holds the fuel vapors until intake manifold vacuum draws them into the combustion chamber. The Powertrain Control Module (PCM) purges the canister through the proportional purge solenoid. The PCM purges the canister at predetermined intervals and engine conditions.

Purge Free Cells

Purge-free memory cells are used to identify the fuel vapor content of the evaporative canister. Since the evaporative canister is not purged 100% of the time, the PCM stores information about the evaporative canister's vapor content in a memory cell.

The purge-free cells are constructed similar to certain purge-normal cells. The purge-free cells can be monitored by the DRB III® Scan Tool. The only difference between the purge-free cells and normal adaptive cells is that in purge-free, the purge is completely turned off. This gives the PCM the ability to compare purge and purge-free operation.

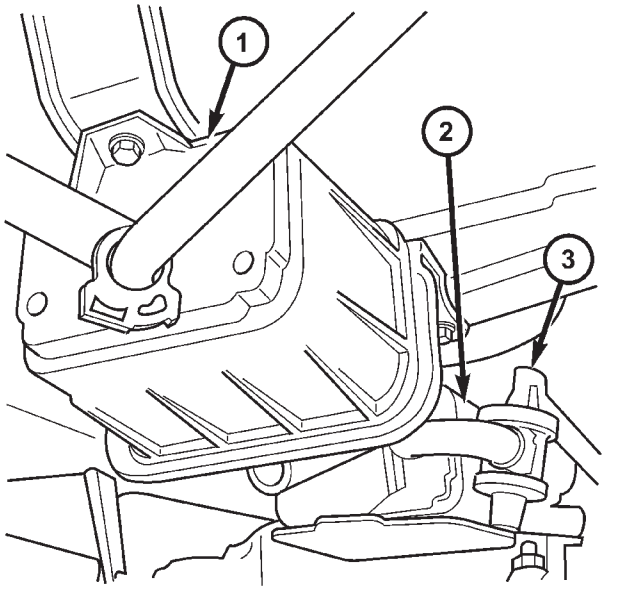

Fig. 13 REAR EVAP CANISTER

1 - Rear EVAP Canister
2 - Front EVAP Canister
3 - Vent Valve

VAPOR CANISTER (Continued)

REMOVAL

REMOVAL

(1) Raise and support the vehicle.
(2) Remove the 2 hoses (Fig. 12).
(3) Remove bolt.
(4) Pull canister rearward to remove.

REMOVAL - REAR EVAP CANISTER

(1) Raise and support the vehicle.
(2) Remove 3 hoses (Fig. 13).
(3) Remove the bolt.
(4) Pull rearward to remove canister.

INSTALLATION

INSTALLATION

(1) Install canister arrow heads into the rubber gromments (Fig. 14)

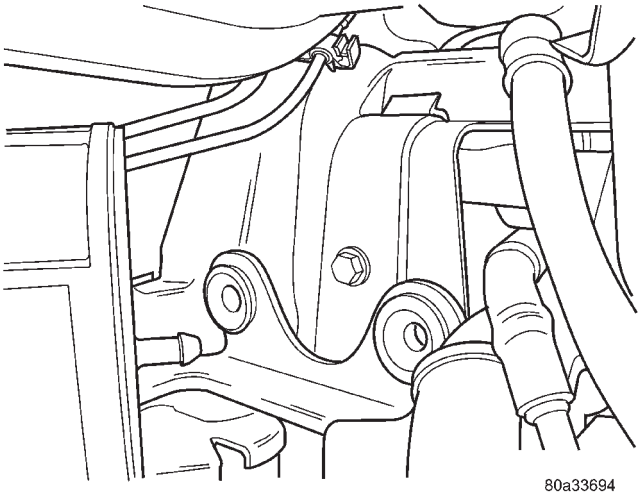

Fig. 14 FRONT EVAP CANISTER BRACKET

(2) Install bolt and tighten.
(3) Install hoses.
(4) Lower vehicle.

INSTALLATION - REAR EVAP CANISTER

(1) Install canister arrow heads into the rubber gromments (Fig. 15).

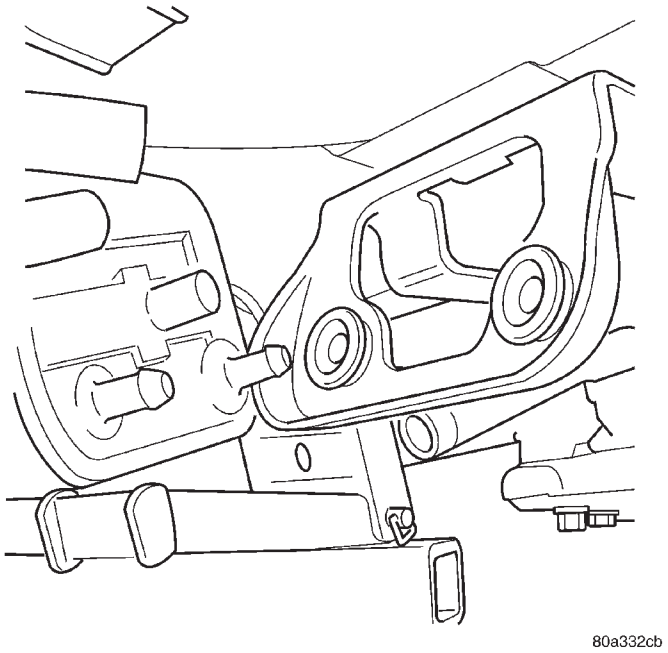

Fig. 15 REAR EVAP CANISTER BRACKET

(2) Install bolt and tighten.
(3) Install hoses.
(4) Lower vehicle.

EXHAUST GAS RECIRCULATION

TABLE OF CONTENTS

page

EXHAUST GAS RECIRCULATION
SPECIFICATIONS
TORQUE 20
TUBE
REMOVAL
REMOVAL - 2.4L 20
REMOVAL - FRONT TUBE- 3.5L 20
REMOVAL - REAR TUBE - 3.5L 21
INSTALLATION
INSTALLATION - 2.4L 21
INSTALLATION - FRONT TUBE - 3.5L 21
INSTALLATION - REAR TUBE - 3.5L 21
VALVE
DESCRIPTION 21
OPERATION 21
REMOVAL
REMOVAL - 2.4L 23
REMOVAL - 3.5L 23
INSTALLATION
INSTALLATION - 2.4L 23
INSTALLATION - 3.5L 23

EXHAUST GAS RECIRCULATION

SPECIFICATIONS

TORQUE

DESCRIPTION	N·m	Ft. Lbs.	In. Lbs.
EGR valve to cyl. head 2.4L	22	-	200 ±25
EGR tube to EGR valve 2.4L	11.9	-	105 ±20
EGR tube to intake manifold 2.4L	11.9	-	105 ±20
EGR valve to adaptor 3.3/3.8L	22	-	200 ±25
EGR tube to EGR valve 3.3/3.8L	11.9	-	105 ±20
EGR tube to intake manifold 3.3L	5.6	-	50 ±10
EGR tube to intake manifold 3.8L	11.9	-	105 ±20

TUBE

REMOVAL

REMOVAL - 2.4L

(1) Remove EGR tube attaching bolts at intake manifold.

(2) Remove EGR tube attaching bolts at EGR valve.

(3) Check for signs of leakage or cracked surfaces on either the manifold or tube. Repair or replace as necessary.

REMOVAL - FRONT TUBE- 3.5L

(1) Disconnect the negative battery cable.

TUBE (Continued)

(2) Disconnect the fresh air makeup hose on rear valve cover.
(3) Remove the air box bolt.
(4) Remove the hose clamp at throttle body.
(5) Unlatch 2 clamps for air box cover.
(6) Remove air box cover.
(7) Disconnect the washer fluid fill hose.
(8) Remove air box.
(9) Remove the 2 bolts at the EGR valve.
(10) Remove the 2 bolts at the intake manifold.
(11) Remove front EGR tube.

REMOVAL - REAR TUBE - 3.5L

(1) Remove the battery, refer to the Battery section.
(2) Remove the Battery tray/vacuum reservoir.
(3) Remove the speed control servo and bracket and relocate.
(4) Remove the 2 bolts from the EGR valve.
(5) Remove the 2 bolts from the rear cylinder head.
(6) Remove the EGR rear tube.

INSTALLATION

INSTALLATION - 2.4L

(1) Loose install EGR tube and gasket with attaching bolts at intake manifold.
(2) Loose install EGR tube and gasket with attaching bolts at EGR valve.
(3) Tighten bolts to EGR valve to 11.9 N·m (105 ±20 ins. lbs.).
(4) Tighten bolts to Intake manifold to 11.9 N·m (105 ±20 ins. lbs.).

INSTALLATION - FRONT TUBE - 3.5L

(1) Install front EGR tube and gaskets.
(2) Install the 2 bolts at the EGR valve.
(3) Install the 2 bolts at the intake manifold.
(4) Tighten all 4 bolts.
(5) Install air box.
(6) Connect the washer fluid fill hose.
(7) Install air box cover.
(8) Latch 2 clamps for air box cover.
(9) Install the hose clamp at throttle body.
(10) Install the air box bolt.
(11) Connect the fresh air makeup hose on rear valve cover.
(12) Connect the negative battery cable.

INSTALLATION - REAR TUBE - 3.5L

(1) Install the EGR rear tube.
(2) Install the 2 bolts to the rear cylinder head.
(3) Install the 2 bolts to the EGR valve.
(4) Tighten the 4 bolts.
(5) Install the speed control servo and bracket, refer to the speed control section.
(6) Install the Battery tray/vacuum reservoir refer to the battery section.
(7) Install the battery, refer to the Battery section.

VALVE

DESCRIPTION

The EGR system consists of:
- EGR tube (connects a passage in the intake manifold to the exhaust port in the cylinder head)
- EGR valve
- Electronic EGR Transducer
- Connecting hoses

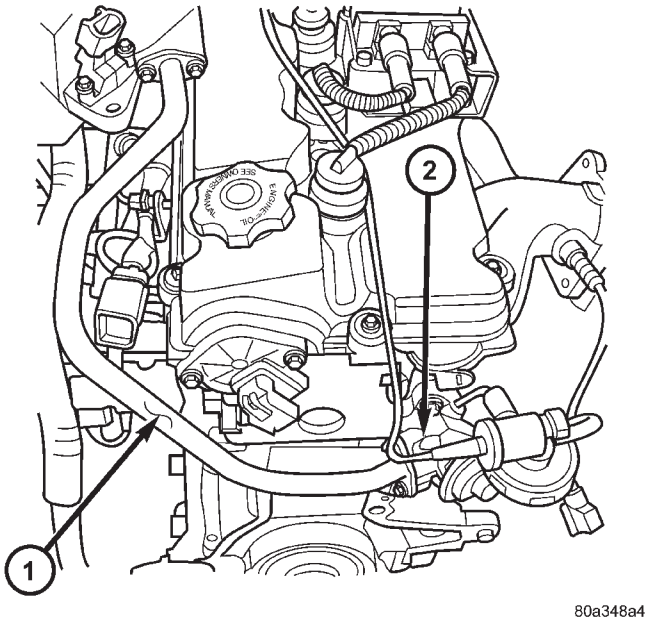

Fig. 1 EGR VALVE AND TUBE 2.4L

1 - EGR Tube
2 - EGR Valve

OPERATION

Refer to Monitored Systems - EGR Monitor in this group for more information.

The engines use Exhaust Gas Recirculation (EGR) systems. The EGR system reduces oxides of nitrogen (NOx) in engine exhaust and helps prevent detonation (engine knock). Under normal operating conditions, engine cylinder temperature can reach more than 3000°F. Formation of NOx increases proportionally with combustion temperature. To reduce the emission of these oxides, the cylinder temperature must be lowered. The system allows a predetermined amount of hot exhaust gas to recirculate and dilute

VALVE (Continued)

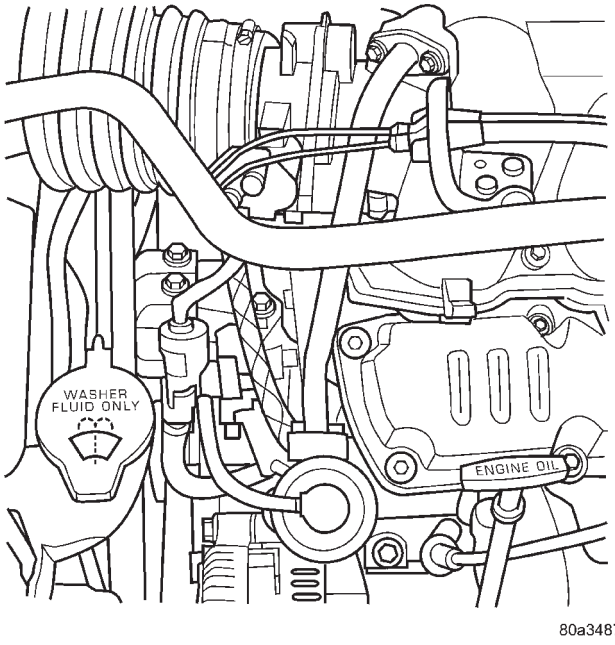

Fig. 2 EGR VALVE AND TUBE 3.3/3.8L

the incoming air/fuel mixture. The diluted air/fuel mixture reduces peak flame temperature during combustion.

The electric EGR transducer contains an electrically operated solenoid and a back-pressure transducer (Fig. 3). The Powertrain Control Module (PCM) operates the solenoid. The PCM determines when to energize the solenoid. Exhaust system back-pressure controls the transducer.

When the PCM energizes the solenoid, vacuum does not reach the transducer. Vacuum flows to the transducer when the PCM de-energizes the solenoid.

When exhaust system back-pressure becomes high enough, it fully closes a bleed valve in the transducer. When the PCM de-energizes the solenoid and back-pressure closes the transducer bleed valve, vacuum flows through the transducer to operate the EGR valve.

De-energizing the solenoid, but not fully closing the transducer bleed hole (because of low back-pressure), varies the strength of vacuum applied to the EGR valve. Varying the strength of the vacuum changes the amount of EGR supplied to the engine. This provides the correct amount of exhaust gas recirculation for different operating conditions.

This system does not allow EGR at idle.

A failed or malfunctioning EGR system can cause engine spark knock, sags or hesitation, rough idle, engine stalling and increased emissions.

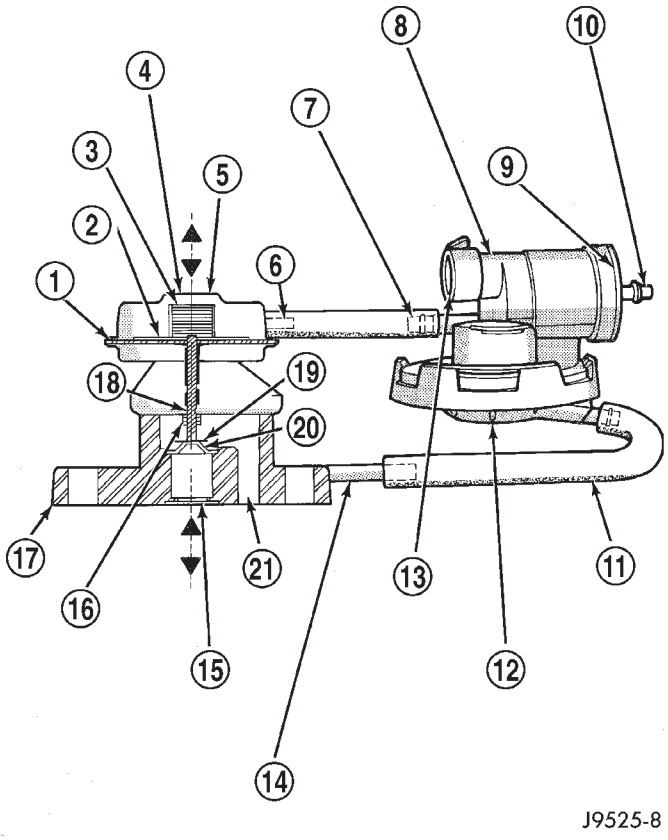

Fig. 3 EGR Valve and Transducer - Typical

1 - DIAPHRAGM
2 - PISTON
3 - SPRING
4 - EGR VALVE ASSEMBLY
5 - VACUUM MOTOR
6 - VACUUM MOTOR FITTING
7 - VACUUM OUTLET FITTING TO EGR VALVE
8 - EGR VALVE CONTROL ASSEMBLY
9 - ELECTRIC SOLENOID PORTION OF VALVE CONTROL
10 - VACUUM INLET FITTING FROM ENGINE
11 - BACK-PRESSURE HOSE
12 - TRANSDUCER PORTION OF VALVE CONTROL
13 - ELECTRICAL CONNECTION POINT
14 - EGR VALVE BACK-PRESSURE FITTING
15 - EXHAUST GAS INLET
16 - STEM PROTECTOR AND BUSHING
17 - BASE
18 - MOVEMENT INDICATOR
19 - POPPET VALVE
20 - SEAT
21 - EXHAUST GAS OUTLET

VALVE (Continued)

REMOVAL

REMOVAL - 2.4L

The EGR valve and Electrical EGR Transducer are serviced as an assembly (Fig. 1).

(1) Disconnect vacuum tube from electric EGR transducer. Inspect vacuum tube for damage.

(2) Remove electrical connector from solenoid.

(3) Remove EGR tube bolts from EGR valve.

(4) Remove EGR valve from cylinder head adaptor.

(5) Clean gasket surface and discard old gasket. Check for any signs of leakage or cracked surfaces. Repair or replace as necessary.

REMOVAL - 3.5L

(1) Disconnect the negative battery cable.

(2) Disconnect the fresh air makeup hose on rear valve cover.

(3) Remove the air box bolt.

(4) Remove the hose clamp at throttle body.

(5) Unlatch 2 clamps for air box cover.

(6) Remove air box cover.

(7) Unlock the electrical connector.

(8) Disconnect the electrical connector from the EGR valve.

(9) Remove the 2 bolts for the front EGR tube

(10) Remove the 2 bolts for the rear EGR tube

(11) Remove the 2 EGR valve mounting bolts.

(12) Remove the EGR valve.

INSTALLATION

INSTALLATION - 2.4L

The EGR valve and Electrical EGR Transducer are serviced as an assembly (Fig. 1).

(1) Assemble EGR valve with new gasket onto the cylinder head adaptor.

(2) Loose assemble the bolts from EGR valve to EGR tube.

(3) Loose assemble the bolts from EGR valve to cylinder head.

(4) Tighten bolts from EGR valve to cylinder head to 22.8 N·m (200 ±25 in. lbs.) torque.

(5) Tighten bolts from EGR valve to EGR tube to 11.9 N·m (105 ±20 in. lbs.) torque.

(6) Reconnect vacuum hose and electrical connector to electrical EGR transducer.

INSTALLATION - 3.5L

(1) Install the EGR valve.

(2) Install the 2 bolts for the rear EGR tube

(3) Install the 2 bolts for the front EGR tube

(4) Tighten the EGR tube bolts.

(5) Tighten the EGR valve mounting bolts.

(6) Connect the electrical connector to the EGR valve.

(7) Lock the electrical connector.

(8) Install air box cover.

(9) Latch 2 clamps for air box cover.

(10) Install the hose clamp at throttle body.

(11) Connect the fresh air makeup hose on rear valve cover.

(12) Connect the negative battery cable.

ON-BOARD DIAGNOSTICS

TABLE OF CONTENTS

page

TASK MANAGER
DESCRIPTION 24
OPERATION 24

TASK MANAGER

DESCRIPTION

The PCM is responsible for efficiently coordinating the operation of all the emissions-related components. The PCM is also responsible for determining if the diagnostic systems are operating properly. The software designed to carry out these responsibilities is call the “Task Manager”.

OPERATION

The Task Manager determines when tests happen and when functions occur. Many of the diagnostic steps required by OBD II must be performed under specific operating conditions. The Task Manager software organizes and prioritizes the diagnostic procedures. The job of the Task Manager is to determine if conditions are appropriate for tests to be run, monitor the parameters for a trip for each test, and record the results of the test. Following are the responsibilities of the Task Manager software:

- Test Sequence
- MIL Illumination
- Diagnostic Trouble Codes (DTCs)
- Trip Indicator
- Freeze Frame Data Storage
- Similar Conditions Window

Test Sequence

In many instances, emissions systems must fail diagnostic tests more than once before the PCM illuminates the MIL. These tests are know as 'two trip monitors.' Other tests that turn the MIL lamp on after a single failure are known as 'one trip monitors.' A trip is defined as 'start the vehicle and operate it to meet the criteria necessary to run the given monitor.'

Many of the diagnostic tests must be performed under certain operating conditions. However, there are times when tests cannot be run because another test is in progress (conflict), another test has failed (pending) or the Task Manager has set a fault that may cause a failure of the test (suspend).

- Pending

Under some situations the Task Manager will not run a monitor if the MIL is illuminated and a fault is stored from another monitor. In these situations, the Task Manager postpones monitors **pending** resolution of the original fault. The Task Manager does not run the test until the problem is remedied.

For example, when the MIL is illuminated for an Oxygen Sensor fault, the Task Manager does not run the Catalyst Monitor until the Oxygen Sensor fault is remedied. Since the Catalyst Monitor is based on signals from the Oxygen Sensor, running the test would produce inaccurate results.

- Conflict

There are situations when the Task Manager does not run a test if another monitor is in progress. In these situations, the effects of another monitor running could result in an erroneous failure. If this **conflict** is present, the monitor is not run until the conflicting condition passes. Most likely the monitor will run later after the conflicting monitor has passed.

For example, if the Fuel System Monitor is in progress, the Task Manager does not run the catalyst Monitor. Since both tests monitor changes in air/fuel ratio and adaptive fuel compensation, the monitors will conflict with each other.

- Suspend

Occasionally the Task Manager may not allow a two trip fault to mature. The Task Manager will **suspend** the maturing of a fault if a condition exists that may induce an erroneous failure. This prevents illuminating the MIL for the wrong fault and allows more precise diagnosis.

For example, if the PCM is storing a one trip fault for the Oxygen Sensor and the catalyst monitor, the Task Manager may still run the catalyst Monitor but will suspend the results until the Oxygen Sensor Monitor either passes or fails. At that point the Task Manager can determine if the catalyst system is actually failing or if an Oxygen Sensor is failing.

MIL Illumination

The PCM Task Manager carries out the illumination of the MIL. The Task Manager triggers MIL illumination upon test failure, depending on monitor failure criteria.

TASK MANAGER (Continued)

The Task Manager Screen shows both a Requested MIL state and an Actual MIL state. When the MIL is illuminated upon completion of a test for a good trip, the Requested MIL state changes to OFF. However, the MIL remains illuminated until the next key cycle. (On some vehicles, the MIL will actually turn OFF during the third key cycle) During the key cycle for the third good trip, the Requested MIL state is OFF, while the Actual MIL state is ON. After the next key cycle, the MIL is not illuminated and both MIL states read OFF.

Diagnostic Trouble Codes (DTCs)

With OBD II, different DTC faults have different priorities according to regulations. As a result, the priorities determine MIL illumination and DTC erasure. DTCs are entered according to individual priority. DTCs with a higher priority overwrite lower priority DTCs.

Priorities

- Priority 0 —Non-emissions related trouble codes.
- Priority 1 — One trip failure of a two trip fault for non-fuel system and non-misfire. (MIL Off)
- Priority 2 — One trip failure of a two trip fault for fuel system (rich/lean) or misfire. (MIL Off)
- Priority 3 — Two trip failure for a non-fuel system and non-misfire or matured one trip comprehensive component fault. (MIL On)
- Priority 4 — Two trip failure or matured fault for fuel system (rich/lean) and misfire or one trip catalyst damaging misfire. Catalyst damage misfire is a 2 trip MIL. The MIL flashes on the first trip when catalyst damage misfire levels are present. (MIL On)

Non-emissions related failures have no priority. One trip failures of two trip faults have low priority. Two trip failures or matured faults have higher priority. One and two trip failures of fuel system and misfire monitor take precedence over non-fuel system and non-misfire failures.

DTC Self Erasure

With one trip components or systems, the MIL is illuminated upon test failure and DTCs are stored.

Two trip monitors are components requiring failure in two consecutive trips for MIL illumination. Upon failure of the first test, the Task Manager enters a maturing code. If the component fails the test for a second time the code matures and a DTC is set.

After three good trips the MIL is extinguished and the Task Manager automatically switches the trip counter to a warm-up cycle counter. DTCs are automatically erased following 40 warm-up cycles if the component does not fail again.

For misfire and fuel system monitors, the component must pass the test under a Similar Conditions Window in order to record a good trip. A Similar Conditions Window is when engine RPM is within ±375 RPM and load is within ±20% of when the fault occurred.

NOTE: It is important to understand that a component does not have to fail under a similar window of operation to mature. It must pass the test under a Similar Conditions Window when it failed to record a Good Trip for DTC erasure for misfire and fuel system monitors.

DTCs can be erased anytime with a DRBIII®. Erasing the DTC with the DRBIII® erases all OBD II information. The DRBIII® automatically displays a warning that erasing the DTC will also erase all OBD II monitor data. This includes all counter information for warm-up cycles, trips and Freeze Frame.

Trip Indicator

The **Trip** is essential for running monitors and extinguishing the MIL. In OBD II terms, a trip is a set of vehicle operating conditions that must be met for a specific monitor to run. All trips begin with a key cycle.

Good Trip

The Good Trip counters are as follows:

- Global Good Trip
- Fuel System Good Trip
- Misfire Good Trip
- Alternate Good Trip (appears as a Global Good Trip on DRBIII®)
  - Comprehensive Components
  - Major Monitor
- Warm-Up Cycles

Global Good Trip

To increment a Global Good Trip, the Oxygen sensor and Catalyst efficiency monitors must have run and passed, and 2 minutes of engine run time.

Fuel System Good Trip

To count a good trip (three required) and turn off the MIL, the following conditions must occur:

- Engine in closed loop
- Operating in Similar Conditions Window
- Short Term multiplied by Long Term less than threshold
- Less than threshold for a predetermined time

If all of the previous criteria are met, the PCM will count a good trip (three required) and turn off the MIL.

Misfire Good Trip

If the following conditions are met the PCM will count one good trip (three required) in order to turn off the MIL:

- Operating in Similar Condition Window
- 1000 engine revolutions with no misfire

Alternate Good Trip

TASK MANAGER (Continued)

Alternate Good Trips are used in place of Global Good Trips for Comprehensive Components and Major Monitors. If the Task Manager cannot run a Global Good Trip because a component fault is stopping the monitor from running, it will attempt to count an Alternate Good Trip.

The Task Manager counts an Alternate Good Trip for Comprehensive components when the following conditions are met:

- Two minutes of engine run time, idle or driving
- No other faults occur

The Task Manager counts an Alternate Good Trip for a Major Monitor when the monitor runs and passes. Only the Major Monitor that failed needs to pass to count an Alternate Good Trip.

Warm-Up Cycles

Once the MIL has been extinguished by the Good Trip Counter, the PCM automatically switches to a Warm-Up Cycle Counter that can be viewed on the DRBIII®. Warm-Up Cycles are used to erase DTCs and Freeze Frames. Forty Warm-Up cycles must occur in order for the PCM to self-erase a DTC and Freeze Frame. A Warm-Up Cycle is defined as follows:

- Engine coolant temperature must start below and rise above 160° F
- Engine coolant temperature must rise by 40° F
- No further faults occur

Freeze Frame Data Storage

Once a failure occurs, the Task Manager records several engine operating conditions and stores it in a Freeze Frame. The Freeze Frame is considered one frame of information taken by an on-board data recorder. When a fault occurs, the PCM stores the input data from various sensors so that technicians can determine under what vehicle operating conditions the failure occurred.

The data stored in Freeze Frame is usually recorded when a system fails the first time for two trip faults. Freeze Frame data will only be overwritten by a different fault with a higher priority.

CAUTION: Erasing DTCs, either with the DRBIII®; or by disconnecting the battery, also clears all Freeze Frame data.

Similar Conditions Window

The Similar Conditions Window displays information about engine operation during a monitor. Absolute MAP (engine load) and Engine RPM are stored in this window when a failure occurs. There are two different Similar conditions Windows: Fuel System and Misfire.

FUEL SYSTEM

- **Fuel System Similar Conditions Window** — An indicator that 'Absolute MAP When Fuel Sys Fail' and 'RPM When Fuel Sys Failed' are all in the same range when the failure occurred. Indicated by switching from 'NO' to 'YES'.
- **Absolute MAP When Fuel Sys Fail** — The stored MAP reading at the time of failure. Informs the user at what engine load the failure occurred.
- **Absolute MAP** — A live reading of engine load to aid the user in accessing the Similar Conditions Window.
- **RPM When Fuel Sys Fail** — The stored RPM reading at the time of failure. Informs the user at what engine RPM the failure occurred.
- **Engine RPM** — A live reading of engine RPM to aid the user in accessing the Similar Conditions Window.
- **Adaptive Memory Factor** — The PCM utilizes both Short Term Compensation and Long Term Adaptive to calculate the Adaptive Memory Factor for total fuel correction.
- **Upstream O2S Volts** — A live reading of the Oxygen Sensor to indicate its performance. For example, stuck lean, stuck rich, etc.
- **SCW Time in Window (Similar Conditions Window Time in Window)** — A timer used by the PCM that indicates that, after all Similar Conditions have been met, if there has been enough good engine running time in the SCW without failure detected. This timer is used to increment a Good Trip.
- **Fuel System Good Trip Counter** — A Trip Counter used to turn OFF the MIL for Fuel System DTCs. To increment a Fuel System Good Trip, the engine must be in the Similar Conditions Window, Adaptive Memory Factor must be less than calibrated threshold and the Adaptive Memory Factor must stay below that threshold for a calibrated amount of time.
- **Test Done This Trip** — Indicates that the monitor has already been run and completed during the current trip.

MISFIRE

- **Same Misfire Warm-Up State** — Indicates if the misfire occurred when the engine was warmed up (above 160° F).
- **In Similar Misfire Window** — An indicator that 'Absolute MAP When Misfire Occurred' and 'RPM When Misfire Occurred' are all in the same range when the failure occurred. Indicated by switching from 'NO' to 'YES'.
- **Absolute MAP When Misfire Occurred** — The stored MAP reading at the time of failure. Informs the user at what engine load the failure occurred.

TASK MANAGER (Continued)

- **Absolute MAP** — A live reading of engine load to aid the user in accessing the Similar Conditions Window.
- **RPM When Misfire Occurred** — The stored RPM reading at the time of failure. Informs the user at what engine RPM the failure occurred.
- **Engine RPM** — A live reading of engine RPM to aid the user in accessing the Similar Conditions Window.
- **Adaptive Memory Factor** — The PCM utilizes both Short Term Compensation and Long Term Adaptive to calculate the Adaptive Memory Factor for total fuel correction.
- **200 Rev Counter** — Counts 0–100 720 degree cycles.
- **SCW Cat 200 Rev Counter** — Counts when in similar conditions.
- **SCW FTP 1000 Rev Counter** — Counts 0–4 when in similar conditions.
- **Misfire Good Trip Counter** — Counts up to three to turn OFF the MIL.

EMISSIONS CONTROL 2.5L TURBO DIESEL

TABLE OF CONTENTS

page

EMISSIONS CONTROL 2.5L TURBO DIESEL
DESCRIPTION 1
SPECIFICATIONS - TORQUE 2
EXHAUST GAS RECIRCULATION 3
ON-BOARD DIAGNOSTICS 6

EMISSIONS CONTROL 2.5L TURBO DIESEL

DESCRIPTION

The 2.5L diesel Engine Control Module (ECM) controls many different circuits in the fuel injection pump and engine systems. If the ECM senses a problem with a monitored circuit that indicates an actual problem, a Diagnostic Trouble Code (DTC) will be stored in the ECM's memory, and eventually may illuminate the MIL (Malfunction Indicator Lamp) constantly while the key is on. If the problem is repaired, or is intermittent, the ECM will erase the DTC after 40 warm-up cycles without the the fault detected. A warm-up cycle consists of starting the vehicle when the engine is cold, then the engine is warmed up to a certain temperature, and finally, the engine temperature falls to a normal operating temperature, then the key is turned off.

Certain criteria must be met for a DTC to be entered into ECM memory. The criteria may be a specific range of engine rpm, engine or fuel temperature and/or input voltage to the ECM. A DTC indicates that the ECM has identified an abnormal signal in a circuit or the system.

There are several operating conditions that the ECM does not monitor and set a DTC for. Refer to the following Monitored Circuits and Non–Monitored Circuits in this section.

ECM MONITORED SYSTEMS

The ECM can detect certain problems in the electrical system.

Open or Shorted Circuit – The ECM will not distinguish between an open or a short to ground, however the ECM can determine if there is excessive current on a circuit, such as a short to voltage or a decrease in component resistance.

Output Device Current Flow – The ECM senses whether the output devices are electrically connected.

If there is a problem with the circuit, the ECM senses whether the circuit is open, shorted to ground (–), or shorted to (+) voltage.

Fuel Pressure: Fuel pressure is controlled by the fuel injection pump and fuel pressure solenoid. The ECM uses a fuel pressure sensor to determine if a fuel pressure problem exists.

Fuel Injector Malfunctions: The ECM can determine if a fuel injector has an electrical problem. The fuel injectors on the diesel engine are **controlled** by the ECM.

ECM NON–MONITORED SYSTEMS

The ECM does not monitor the following circuits, systems or conditions that could have malfunctions that result in driveability problems. A DTC will not be displayed for these conditions.

Cylinder Compression: The ECM cannot detect uneven, low, or high engine cylinder compression.

Exhaust System: The ECM cannot detect a plugged, restricted or leaking exhaust system.

Vacuum Assist: Leaks or restrictions in the vacuum circuits of the Exhaust Gas Recirculation System (EGR) are not monitored by the ECM.

ECM System Ground: The ECM cannot determine a poor system ground. However, a DTC may be generated as a result of this condition.

ECM/PCM Connector Engagement: The ECM cannot determine spread or damaged connector pins. However, a DTC may be generated as a result of this condition.

HIGH AND LOW LIMITS

The ECM compares input signals from each input device. It has high and low limits that are programmed into it for that device. If the inputs are not within specifications and other DTC criteria are met, a DTC will be stored in memory. Other DTC criteria might include engine rpm limits or input voltages from other sensors or switches. The other inputs might have to be sensed by the ECM when it senses a high or low input voltage from the control system device in question.

EMISSIONS CONTROL 2.5L TURBO DIESEL (Continued)

SPECIFICATIONS - TORQUE

2.5L DIESEL - TORQUE SPECIFICATIONS

DESCRIPTION	N·m	Ft. Lbs.	In. Lbs.
EGR Cooler to EGR Bolts	32.4	24	—
EGR Cooler to Exhaust Manifold	27.5	21	—
EGR Valve Nuts	32.4	24	—

EXHAUST GAS RECIRCULATION

TABLE OF CONTENTS

page

EXHAUST GAS RECIRCULATION
DESCRIPTION 3
OPERATION 3
VALVE
DESCRIPTION 3
OPERATION 3
REMOVAL 4
INSTALLATION 4
VALVE COOLER
DESCRIPTION 4
REMOVAL 4
INSTALLATION 5

EXHAUST GAS RECIRCULATION

DESCRIPTION

The EGR system reduces oxides of nitrogen (NOx) in the engine exhaust. This is accomplished by allowing a predetermined amount of hot exhaust gas to recirculate and dilute the incoming fuel/air mixture.

A malfunctioning EGR system can cause engine stumble, sags, or hesitation, rough idle, engine stalling and poor driveability.

OPERATION

The system consists of:

- An EGR valve assembly. The valve is located on the rear of the engine above the exhaust manfiold.
- An EGR solenoid.The EGR solenoid controls the “on time” of the EGR valve.
- The ECM operates the EGR solenoid. The ECM is located inside the vehicle under the instrument panel.
- An EGR tube connects a passage in the EGR valve to the rear of the exhaust manifold.
- The vacuum pump supplies vacuum for the EGR solenoid and the EGR valve. This pump also supplies vacuum for operation of the power brake boosterb and the heating and air conditioning system. The pump is located internally in the front of the engine block and is driven by the crankshaft gear.
- Vacuum lines and hoses connect the various components.

When the ECM supplies a variable ground signal to the EGR solenoid, EGR system operation starts to occur. The ECM will monitor and determine when to supply and remove this variable ground signal. This will depend on inputs from the engine coolant temperature, throttle position and engine speed sensors.

When the variable ground signal is supplied to the EGR solenoid, vacuum from the vacuum pump will be allowed to pass through the EGR solenoid and on to the EGR valve with a connecting hose.

Exhaust gas recirculation will begin in this order when:

- The ECM determines that EGR system operation is necessary.
- The engine is running to operate the vacuum pump.
- A variable ground signal is supplied to the EGR solenoid.
- Variable vacuum passes through the EGR solenoid to the EGR valve.
- The inlet seat (poppet valve) at the bottom of the EGR valve opens to dilute and recirculate exhaust gas back into the intake manifold.

The EGR system will be shut down by the ECM after 60 seconds of continuous engine idling to improve idle quality.

VALVE

DESCRIPTION

The EGR system consists of (Fig. 1):

- EGR valve
- EGR tube
- Vacuum hoses
- EGR cooler
- EGR solenoid

OPERATION

The engines use Exhaust Gas Recirculation (EGR) systems. The EGR system reduces oxides of nitrogen (NOx) in engine exhaust and helps prevent detonation (engine knock). Under normal operating conditions, engine cylinder temperature can reach more than 3000°F. Formation of NOx increases proportionally with combustion temperature. To reduce the emission of these oxides, the cylinder temperature must be lowered. The system allows a predetermined amount of hot exhaust gas to recirculate and dilute the incoming air/fuel mixture. The diluted air/fuel mixture reduces peak flame temperature during combustion.

REMOVAL

(1) Remove engine cover (Refer to 9 - ENGINE - REMOVAL).

(2) Remove front wiper unit (Refer to 8 - ELECTRICAL/WIPERS/WASHERS/WIPER MODULE - REMOVAL).

(3) Disconnect EGR valve vacuum line.

(4) Remove EGR cooler to EGR valve retaining bolts (Fig. 1).

(5) Remove EGR valve retaining nuts (Fig. 1) and EGR valve.

INSTALLATION

(1) Clean gasket mating surfaces.

(2) Install EGR valve (Fig. 1). Torque nuts to 32.4N·m.

(3) Connect EGR cooler to EGR valve (Fig. 1). Torque bolts to 32.4N·m

(4) Install front wiper unit (Refer to 8 - ELECTRICAL/WIPERS/WASHERS/WIPER MODULE - INSTALLATION).

(5) Install engine cover (Refer to 9 - ENGINE - INSTALLATION).

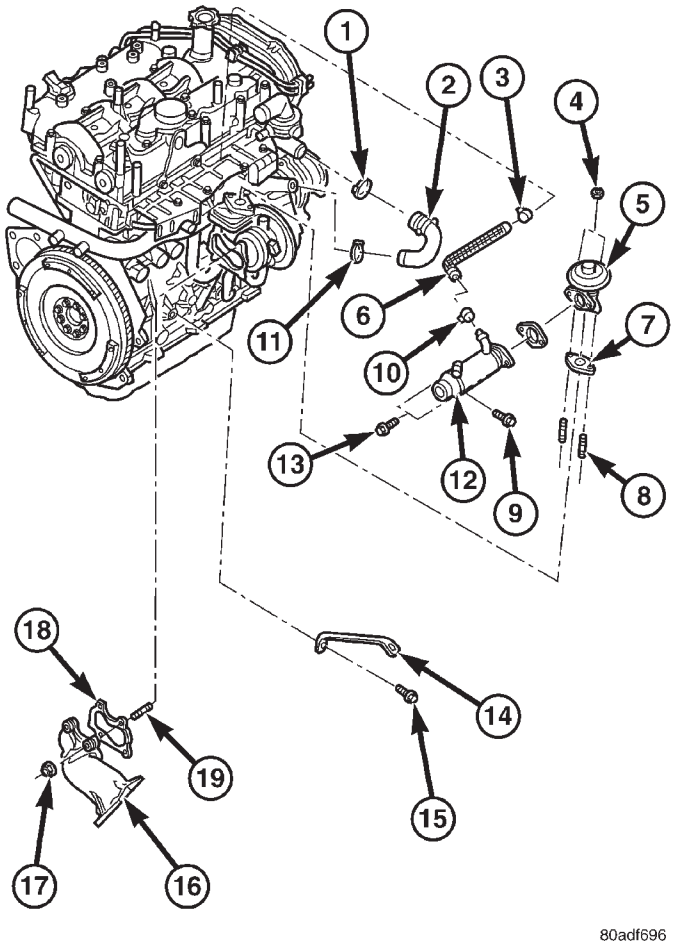

Fig. 1 EGR COMPONENTS

1 - HOSE CLAMP
2 - COOLANT HOSE
3 - HOSE CLAMP
4 - EGR VALVE RETAINING NUT
5 - EGR VALVE
6 - COOLANT HOSE
7 - EGR VALVE GASKET
8 - EGR VALVE RETAINING STUDS
9 - EGR COOLER RETAINING BOLT
10 - HOSE CLAMP
11 - HOSE CLAMP
12 - EGR COOLER
13 - EGR COOLER TO EGR VALVE RETAINING BOLT
14 - TURBOCHARGER BRACKET
15 - TURBOCHARGER BRACKET RETAINING BOLT
16 - TURBOCHARGER DOWNPIPE
17 - TURBOCHARGER DOWNPIPE RETAINING NUT
18 - DOWNPIPE GASKET
19 - DOWNPIPE STUD

VALVE COOLER

DESCRIPTION

The EGR valve on this engine uses a cooler to cool the exhaust gases before the returned to the intake manifold (Fig. 2). The EGR cooler attaches to the EGR valve and is cooled with engine coolant.

REMOVAL

(1) Remove engine cover (Refer to 9 - ENGINE - REMOVAL).

(2) Partially drain cooling system (Refer to 7 - COOLING/ENGINE/COOLANT - STANDARD PROCEDURE).

(3) Remove front wiper unit (Refer to 8 - ELECTRICAL/WIPERS/WASHERS/WIPER MODULE - REMOVAL).

(4) Disconnect coolant supply and return lines at EGR cooler (Fig. 2).

(5) Remove EGR cooler to exhaust manifold retaining bolt (Fig. 2).

(6) Remove EGR cooler to EGR valve retaining bolts (Fig. 2) and remove cooler.

INSTALLATION

(1) Clean gasket sealing surfaces.

(2) Connect EGR valve cooler and new gasket to EGR valve (Fig. 2). Torque bolts to 32.4N·m.

(3) Install EGR valve cooler to exhaust manifold attaching bolt (Fig. 2). Torque bolt to 32.4N·m.

(4) Connect EGR cooler coolant supply and return hoses to cooler (Fig. 2).

(5) Install front wiper unit (Refer to 8 - ELECTRICAL/WIPERS/WASHERS/WIPER MODULE - INSTALLATION).

(6) Refill cooling system (Refer to 7 - COOLING/ENGINE/COOLANT - STANDARD PROCEDURE).

(7) Install engine cover (Refer to 9 - ENGINE - INSTALLATION).

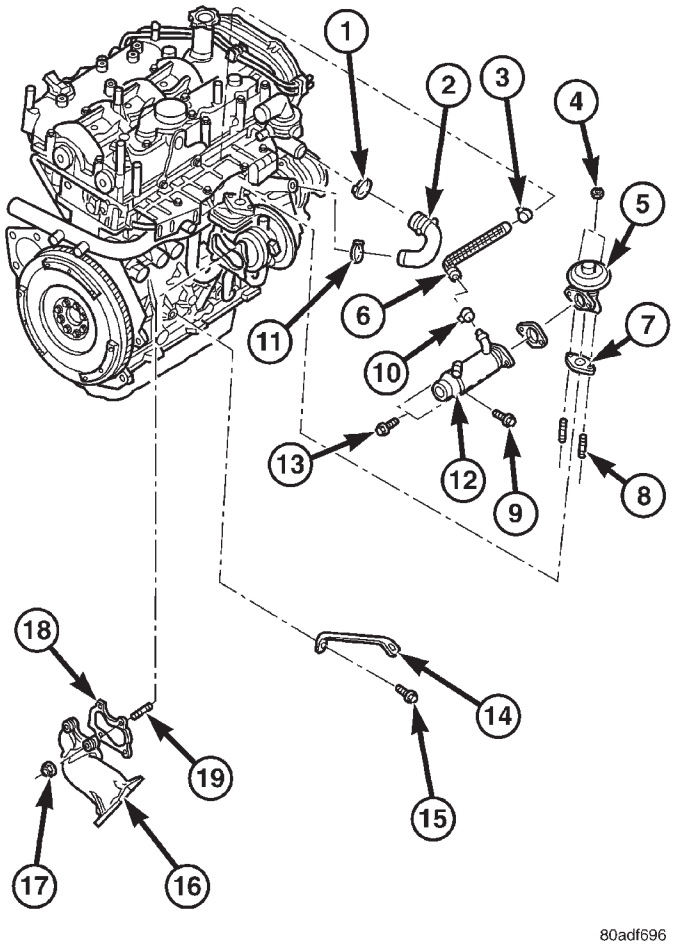

Fig. 2 EGR COMPONENTS

1 - HOSE CLAMP
2 - COOLANT HOSE
3 - HOSE CLAMP
4 - EGR VALVE RETAINING NUT
5 - EGR VALVE
6 - COOLANT HOSE
7 - EGR VALVE GASKET
8 - EGR VALVE RETAINING STUDS
9 - EGR COOLER RETAINING BOLT
10 - HOSE CLAMP
11 - HOSE CLAMP
12 - EGR COOLER
13 - EGR COOLER TO EGR VALVE RETAINING BOLT
14 - TURBOCHARGER BRACKET
15 - TURBOCHARGER BRACKET RETAINING BOLT
16 - TURBOCHARGER DOWNPIPE
17 - TURBOCHARGER DOWNPIPE RETAINING NUT
18 - DOWNPIPE GASKET
19 - DOWNPIPE STUD

ON-BOARD DIAGNOSTICS

TABLE OF CONTENTS

page

ON-BOARD DIAGNOSTICS
DESCRIPTION - DIAGNOSTIC TROUBLE CODES 6

ON-BOARD DIAGNOSTICS

DESCRIPTION - DIAGNOSTIC TROUBLE CODES

On the following pages, a list of DTC's is provided for the 2.5L diesel engine. A DTC indicates that the ECM has recognized an abnormal signal in a circuit or the system. A DTC may indicate the result of a failure, but most likely will not identify the failed component directly. Refer to the appropriate diagnostic manual for more information on diagnosis of trouble codes.

ACCESSING DIAGNOSTIC TROUBLE CODES

A stored DTC can be displayed through the use of the DRB III® scan tool. The DRB III® connects to the data link connector. The data link connector is located under the instrument panel near bottom of the steering column (Fig. 1).

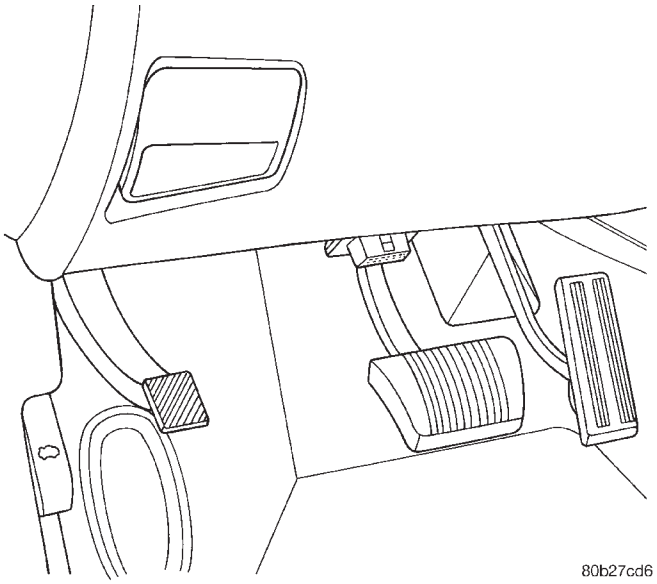

Fig. 1 DATA LINK CONNECTOR

ERASING TROUBLE CODES

After the problem has been repaired, use the DRB III® scan tool to erase a DTC.

ON-BOARD DIAGNOSTICS (Continued)

ENGINE CONTROL MODULE (ECM) - DRBIII® CODES

Generic Scan Tool Code	DRB III® Scan Tool Display
P0070	Ambient Air Temperature Circuit Signal Voltage Too High Ambient Air Temperature Circuit Signal Voltage Too Low
P0100	Mass Air Flow Sensor Plausibility Mass Air Flow Sensor Plausibility Positive Area Mass Air Flow Sensor Signal Voltage Too High Mass Air Flow Sensor Signal Voltage Too Low Mass Air Flow Sensor Supply Voltage Too High Or Low
P0105	Barometric Pressure Circuit Signal Voltage To High Barometric Pressure Circuit Signal Voltage To Low
P0110	Intake Air Temperature Sensor Circuit Signal Too High Intake Air Temperature Sensor Circuit Signal Too Low
P0115	Engine Coolant Temperature Sensor Circuit Engine Is Cold Too Long Engine Coolant Temperature Sensor Circuit Voltage To Low Engine Coolant Temperature Sensor Circuit Voltage To High
P0190	Fuel Pressure Sensor Circuit MALF Signal Voltage Too High Fuel Pressure Sensor Circuit MALF Signal Voltage Too Low
P0195	Oil Temperature Sensor Circuit MALF Signal Voltage Too High Oil Temperature Sensor Circuit MALF Signal Voltage Too Low
P0201	Cylinder 1 Injector Circuit Current Decrease Cylinder 1 Injector Circuit Load Drop Cylinder 1 Injector Circuit Overcurrent High Side Cylinder 1 Injector Circuit Overcurrent Low Side
P0202	Cylinder 2 Injector Circuit Current Decrease Cylinder 2 Injector Circuit Load Drop Cylinder 2 Injector Circuit Overcurrent High Side Cylinder 2 Injector Circuit Overcurrent Low Side
P0203	Cylinder 3 Injector Circuit Current Decrease Cylinder 3 Injector Circuit Load Drop Cylinder 3 Injector Circuit Overcurrent High Side Cylinder 3 Injector Circuit Overcurrent Low Side
P0204	Cylinder 4 Injector Circuit Current Decrease Cylinder 4 Injector Circuit Load Drop Cylinder 4 Injector Circuit Overcurrent High Side Cylinder 4 Injector Circuit Overcurrent Low Side
P0235	Boost Pressure Sensor Plausibility Boost Pressure Sensor Signal Voltage Too Low Boost Pressure Sensor Signal Voltage Too High

ON-BOARD DIAGNOSTICS (Continued)

Generic Scan Tool Code	DRB III® Scan Tool Display
	Boost Pressure Sensor Signal Voltage Too High Or Low
P0335	CKP Position Sensor Circuit Dynamic Plausibility CKP Position Sensor Circuit Overspeed Recognition CKP Position Sensor Circuit Static Plausibility
P0340	CMP Position Sensor Circuit CMP/CKP Sync. Failure CMP Position Sensor Circuit Dynamic Plausibility CMP Position Sensor Circuit Fuel Shut-Off Activated CMP Position Sensor Circuit Signal Frequency Too High CMP Position Sensor Circuit Static Plausibility
P0380	Glow Plug Circuit A Open Circuit Glow Plug Circuit A Short Circuit
P0403	EGR Solenoid Circuit Open Circuit EGR Solenoid Circuit Short Circuit
P0480	Fan 1 Control Circuit Open Circuit Fan 1 Control Circuit Short Circuit
P0481	Fan 2 Control Circuit Open Circuit Fan 2 Control Circuit Short Circuit
P0500	Vehicle Speed Sensor Frequency Too High Vehicle Speed Sensor Frequency High Level Duration Vehicle Speed Sensor Plausibility Vehicle Speed Sensor Signal Voltage Too High
P0514	Battery Temperature Sensor Circuit Signal Voltage Too High
P0520	Oil Pressure Sensor Circuit MALF Signal Voltage Too High Oil Pressure Sensor Circuit MALF Signal Voltage Too Low Oil Pressure Sensor Circuit MALF Signal Voltage Too Low or High
P0530	A/C Pressure Sensor Circuit Plausibility A/C Pressure Sensor Circuit Signal Voltage Too High A/C Pressure Sensor Circuit Signal Voltage Too Low A/C Pressure Sensor Circuit Supply Voltage Too High Or Low
P0560	System Voltage Too High System Voltage Too Low
P0579	Speed Control Switch Signal Circuit Voltage Too High Speed Control Switch Signal Circuit Voltage Too Low
P0606	ECM Error Gate Array - Communication ECM Error Gate Array - Communication Not Verified ECM Error Gate Array - Quantity Stop ECM Error Gate Array - Has Occurred

ON-BOARD DIAGNOSTICS (Continued)

Generic Scan Tool Code	DRB III® Scan Tool Display
	ECM Error Redundant Overrun Monitoring
P0615	Starter Relay Circuit Open Circuit Starter Relay Circuit Short Circuit
P0620	Generator Field Control MALF Open Circuit Generator Field Control MALF Short Circuit
P0641	Sensor Reference Voltage A CKT Voltage Too High Sensor Reference Voltage A CKT Voltage Too Low
P0645	A/C Clutch Relay Circuit Open Circuit A/C Clutch Relay Circuit Short Circuit
P0651	Sensor Reference Voltage B CKT Voltage Too Low Sensor Reference Voltage B CKT Voltage Too High
P0685	ECM/PCM Relay Control Circuit Shuts Off Too Early ECM/PCM Relay Control Circuit Shuts Off Too Late
P0703	Brake Switch Signal Circuits Incorrect Can Message Brake Switch Signal Circuits Plausibility With Redundant Contact
P1130	Fuel Rail Pressure Malfunction Small Leakage Detected Fuel Rail Pressure Malfunction Small Leakage Detected
P1131	Fuel Pressure Solenoid Open Circuit Fuel Pressure Solenoid Short Circuit
P1206	Calculated Injector Voltage #1 Too Low Calculated Injector Voltage #2 Too Low
P1511	Battery Sense Line 1 Voltage Too High Battery Sense Line 1 Voltage Too Low
P1601	Capacitor Voltage 1 Voltage Too High Capacitor Voltage 1 Voltage Too Low
P1602	Capacitor Voltage 2 Voltage Too High Capacitor Voltage 2 Voltage Too Low
P1605	Ignition Switch Plausibility
P1610	Voltage Regulator Signal Voltage Too High Voltage Regulator Signal Voltage Too Low

ON-BOARD DIAGNOSTICS (Continued)

Generic Scan Tool Code	DRB III® Scan Tool Display
P1680	EEPROM Plausibility Checksum Error EEPROM Plausibility Code Word Incorrect Or Missing EEPROM Plausibility Communication Error EEPROM Plausibility Variation Number Error EEPROM Plausibility VIN Checksum Error EEPROM Plausibility VIN Write Error
P1685	SKIM System Invalid Key Code Received SKIM System Invalid Secret Key In EEPROM SKIM System Key Communication Timed Out SKIM System SKIM Error SKIM System Write Access To EEPROM Failure
P1696	EEPROM Communication Error EEPROM Communication Not Verified EEPROM Quanity Stop EEPROM Recovery Occured EEPROM Redundant Overrun Monitoring
P1703	Brake Switch Signal CKTS Plaus. With Redundant Contact After Initialization
P2120	Acc. Pedal Position Sensor 1 CKT Plausibility Acc. Pedal Position Sensor 1 CKT Plausibility With Brake Switch Acc. Pedal Position Sensor 1 CKT Plausibility With Potentiometer Acc. Pedal Position Sensor 1 CKT Signal Voltage Too High Acc. Pedal Position Sensor 1 CKT Signal Voltage Too Low Acc. Pedal Position Sensor 1 CKT Signal Voltage Too High or Low

SERVICE MANUAL COMMENTS

What errors(s) have you found?

_____

_____

_____

_____

In order for us to assist you, please include as much details as possible when reporting an error

Comments / Suggestions

_____

_____

_____

_____

☐ **Dealership Technician**
Dealer Code: _____

Retail Customer ☐

Manual Title, Year, Number and Page: _____

_____

Your Name: _____

Address: _____

_____

_____

All comments become property of DaimlerChrysler Corporation and may be used without compensation.

Fold Here

Place
Stamp
Here

DaimlerChrysler Corporation
Attn. Publications Dept.
CIMS 486-02-70
800 Chrysler Drive
Auburn Hills, MI 48326-2757

Fold Here