TABLE OF CONTENTS

1.0 INTRODUCTION 1

1.1 SYSTEM COVERAGE 1
1.2 SIX-STEP TROUBLESHOOTING PROCEDURE 1

2.0 IDENTIFICATION OF SYSTEM 1

3.0 SYSTEM DESCRIPTION AND FUNCTIONAL OPERATION 1

3.1 AIRBAG SYSTEM 2
3.1.1 DRIVER AIRBAG 2
3.1.2 CLOCKSPRING 4
3.1.3 PASSENGER AIRBAG 4
3.1.4 SEAT BELT TENSIONER (SBT) 5
3.1.5 SEAT BELT SWITCHES (SBS) 5
3.1.6 SIDE IMPACT AIRBAG CONTROL MODULE (SIACM) 5
3.1.7 SEAT AIRBAGS (SAB) 6
3.1.8 DIAGNOSTIC TROUBLE CODES 6
3.1.9 SPECIAL TOOLS 7
3.1.10 ACTIVE CODES 7
3.1.11 STORED CODES 7
3.2 AUDIO SYSTEM 7
3.2.1 REMOTE RADIO CONTROLS 8
3.2.2 CD CHANGER 8
3.3 BODY CONTROL MODULE 8
3.4 CHIME WARNING SYSTEM 9
3.4.1 CHIME PRIORITY 9
3.4.2 CHIME ON CONDITIONS 10
3.4.3 WARNING LAMP ANNOUNCEMENT 10
3.4.4 OTHER CHIME ON CONDITIONS 10
3.5 COMMUNICATION 11
3.6 DOOR AJAR SYSTEM 12
3.7 EXTERIOR LIGHTING SYSTEM 12
3.7.1 HEADLAMP POWER 12
3.7.2 HEADLAMP SWITCH 12
3.7.3 PARK LAMP RELAY 12
3.7.4 FOG LAMP RELAY 12
3.7.5 FOG LAMPS 12
3.7.6 EXTERIOR LIGHTING BATTERY SAVER 13
3.7.7 AUTO HEADLAMPS 13
3.8 FRONT CONTROL MODULE 13
3.8.1 CONTROLLED POWER FEEDS 13
3.8.2 RELAY CONTROLS 14
3.8.3 ELECTRICAL INPUTS 15
3.9 HEATING & A/C 16
3.9.1 AUTOMATIC TEMPERATURE CONTROL (ATC) 16
3.9.1.1 SYSTEM OPERATION 16
3.9.1.2 SYSTEM OPERATION 16
3.9.1.2 BLOWER MOTOR OPERATION 16
3.9.1.3 INFRARED SENSORS 16
3.9.1.4 REAR ATC SWITCH 16
3.9.1.5 COOLDOWN TESTING 16
3.9.1.6 ACTIVE AND STORED TROUBLE CODES 17

TABLE OF CONTENTS - Continued

3.9.2 MANUAL TEMPERATURE CONTROL 17
3.9.2.1 SYSTEM AVAILABILITY 17
3.9.2.2 CABIN HEATER 17
3.9.2.3 ZONE CONTROL 17
3.9.2.4 FRONT HVAC UNIT 17
3.9.2.5 REAR HVAC UNIT 17
3.9.2.6 A/C – HEATER CONTROL MODULE, SWITCH OPERATION 17
3.9.2.7 REAR BLOWER REAR CONTROL 19
3.9.2.8 HVAC DIAGNOSTICS 19
3.10 CABIN HEATER 19
3.10.1 GENERAL SAFETY INFORMATION 20
3.10.2 COMPONENT DESCRIPTION AND OPERATION 20
3.10.2.1 DCHA ASSEMBLY 20
3.10.2.2 COMBUSTION AIR FAN 20
3.10.2.3 BURNER HOUSING 20
3.10.2.4 BURNER INSERT 21
3.10.2.5 CONTROL UNIT/HEAT EXCHANGER 21
3.10.2.6 DOSING PUMP 21
3.10.3 OPERATION 21
3.10.3.1 ACTIVATION 21
3.10.3.2 HEATING 22
3.10.3.3 DEACTIVATION 22
3.10.4 DIAGNOSTICS 22
3.11 INSTRUMENT CLUSTER 22
3.11.1 INSTRUMENT CLUSTER SELF TEST 22
3.11.2 MESSAGE CENTER 23
3.12 INTERIOR LIGHTING 23
3.12.1 COURTESY LAMP CONTROL 23
3.12.2 ILLUMINATED ENTRY 23
3.12.3 INTERIOR LIGHTING BATTERY SAVER 23
3.13 MEMORY SYSTEM 23
3.13.1 POWER SEAT 23
3.13.2 MEMORY MIRRORS 24
3.14 OVERHEAD CONSOLE 24
3.14.1 VEHICLE INFORMATION DISPLAY 24
3.14.2 TRAVELER DISPLAY FUNCTIONS 25
3.14.3 SETTING MAGNETIC ZONE VARIANCE 26
3.14.4 COMPASS CALIBRATION 26
3.14.5 SELF-CHECK DIAGNOSTICS 27
3.14.6 AMBIENT TEMPERATURE SENSOR 27
3.14.7 AMBIENT TEMPERATURE SENSOR FAULT CODES 27
3.14.8 HOMELINK® UNIVERSAL TRANSMITTER 28
3.14.9 TIRE PRESSURE MONITORING SYSTEM (TPM) 28
3.14.9.1 TRAINING THE EVIC 28
3.14.9.2 PRESSURE THRESHOLDS 29
3.14.9.3 CRITICAL AND NON-CRITICAL SYSTEM ALERTS 29
3.14.9.4 SYSTEM FAULTS 29
3.14.9.5 SPARE WHEEL AUTO-DETECT 29
3.14.9.6 DIAGNOSING AND CLEARING SYSTEM FAULTS 29
3.14.9.7 SYSTEM TEST 30
3.15 POWER DOOR LOCK SYSTEM 30
3.15.1 DOOR LOCK INHIBIT 30
3.15.2 AUTOMATIC DOOR LOCKS 30

3.15.3 REMOTE KEYLESS ENTRY (RKE) 30
3.16 POWER FOLDING MIRRORS 31
3.17 POWER LIFTGATE SYSTEM 31
3.17.1 POWER LIFTGATE 31
3.17.2 DIAGNOSTIC FEATURES 31
3.17.3 SYSTEM INHIBITORS 31
3.18 POWER SLIDING DOOR SYSTEM 31
3.18.1 POWER SLIDING DOOR 31
3.18.2 DIAGNOSTIC FEATURES 32
3.18.3 SYSTEM INHIBITORS 32
3.19 REAR WINDOW DEFOG/HEATED MIRROR/FRONT WIPER DE-ICE 32
3.20 VEHICLE THEFT SECURITY SYSTEM 32
3.20.1 THATCHAM ALARM SYSTEM (EXPORT ONLY) 33
3.21 WIPER SYSTEM 33
3.21.1 FRONT WIPER 33
3.21.2 SPEED SENSITIVE INTERMITTENT WIPE MODE 33
3.21.3 PULSE WIPE 33
3.21.4 PARK AFTER IGNITION OFF 33
3.21.5 WIPE AFTER WASH 33
3.21.6 REAR WIPER 33
3.21.7 SPEED SENSITIVE INTERMITTENT WIPE MODE 34
3.21.8 WIPE AFTER WASH 34
3.22 USING THE DRBIII® 34
3.23 DRBIII® ERROR MESSAGES 34
3.24 DRBIII® DOES NOT POWER UP (BLANK SCREEN) 34
3.25 DISPLAY IS NOT VISIBLE 34

4.0 DISCLAIMERS, SAFETY, WARNINGS 34

4.1 DISCLAIMERS 34
4.2 SAFETY 34
4.2.1 TECHNICIAN SAFETY INFORMATION 34
4.2.2 VEHICLE PREPARATION FOR TESTING 35
4.2.3 SERVICING SUB-ASSEMBLIES 35
4.2.4 DRBIII® SAFETY INFORMATION 35
4.3 WARNINGS 36
4.3.1 VEHICLE DAMAGE WARNINGS 36
4.3.2 ROAD TESTING A COMPLAINT VEHICLE 36

5.0 REQUIRED TOOLS AND EQUIPMENT 36

6.0 GLOSSARY OF TERMS 36

7.0 DIAGNOSTIC INFORMATION AND PROCEDURES 39

AIRBAG
ACCELEROMETER 1 40
ACCELEROMETER 2 40
INTERNAL 1 40
INTERNAL 2 40
OUTPUT DRIVER 1 40
OUTPUT DRIVER 2 40
STORED ENERGY FIRING 1 40
AIRBAG WARNING INDICATOR OPEN 42

TABLE OF CONTENTS - Continued

AIRBAG WARNING INDICATOR SHORT 42
CALIBRATION MISMATCH. 44
CLUSTER MESSAGE MISMATCH 46
CONFIGURATION ERROR 48
DRIVER SEAT BELT SWITCH OPEN 50
DRIVER SEAT BELT SWITCH SHORT TO BATTERY 52
DRIVER SEAT BELT SWITCH SHORT TO GROUND 54
DRIVER SEAT BELT TENSIONER CIRCUIT OPEN. 57
DRIVER SEAT BELT TENSIONER CIRCUIT SHORT 59
DRIVER SEAT BELT TENSIONER SHORT TO BATTERY. 61
DRIVER SEAT BELT TENSIONER SHORT TO GROUND. 63
DRIVER SQUIB 1 CIRCUIT OPEN 65
DRIVER SQUIB 1 CIRCUIT SHORT 68
DRIVER SQUIB 1 SHORT TO BATTERY 70
DRIVER SQUIB 1 SHORT TO GROUND 73
DRIVER SQUIB 2 CIRCUIT OPEN 76
DRIVER SQUIB 2 CIRCUIT SHORT 79
DRIVER SQUIB 2 SHORT TO BATTERY 82
DRIVER SQUIB 2 SHORT TO GROUND 85
INTERROGATE LEFT SIACM 88
INTERROGATE RIGHT SIACM 90
LOSS OF IGNITION RUN ONLY 92
LOSS OF IGNITION RUN-START 94
MODULE NOT CONFIGURED FOR SAB 96
NO CLUSTER MESSAGE 98
NO LEFT SIACM MESSAGE 100
NO ODOMETER MESSAGE 102
NO PCI TRANSMISSION 104
NO RIGHT SIACM MESSAGE. 107
ORC RUN - START DRIVER OVER CURRENT. 109
ORC RUN - START DRIVER OVER TEMP. 109
ORC RUN - START DRIVER SHORT TO GROUND 109
ORC RUN - START DRIVER OPEN 109
ORC RUN - START DRIVER OVER VOLT 109
ORC RUN ONLY DRIVER OPEN. 114
ORC RUN ONLY DRIVER OVER CURRENT 114
ORC RUN ONLY DRIVER OVER TEMP 114
ORC RUN ONLY DRIVER OVER VOLT 114
ORC RUN ONLY DRIVER SHORT TO GROUND. 114
PASSENGER SEAT BELT SWITCH OPEN 119
PASSENGER SEAT BELT SWITCH SHORT TO BATTERY. 121
PASSENGER SEAT BELT SWITCH SHORT TO GROUND. 123
PASSENGER SEAT BELT TENSIONER CIRCUIT OPEN 126
PASSENGER SEAT BELT TENSIONER CIRCUIT SHORT 128
PASSENGER SEAT BELT TENSIONER SHORT TO BATTERY 130
PASSENGER SEAT BELT TENSIONER SHORT TO GROUND 132
PASSENGER SQUIB 1 CIRCUIT OPEN. 134
PASSENGER SQUIB 1 CIRCUIT SHORT. 137
PASSENGER SQUIB 1 SHORT TO BATTERY. 139
PASSENGER SQUIB 1 SHORT TO GROUND 141
PASSENGER SQUIB 2 CIRCUIT OPEN. 143
PASSENGER SQUIB 2 CIRCUIT SHORT. 146
PASSENGER SQUIB 2 SHORT TO BATTERY. 148

PASSENGER SQUIB 2 SHORT TO GROUND 150
SEAT SQUIB CIRCUIT OPEN 152
SEAT SQUIB CIRCUIT SHORT 155
SEAT SQUIB SHORT TO BATTERY 158
SEAT SQUIB SHORT TO GROUND 161
SIACM RUN - START DRIVER OPEN. 164
SIACM RUN - START DRIVER OVER CURRENT 164
SIACM RUN - START DRIVER OVER TEMP 164
SIACM RUN - START DRIVER SHORT TO GROUND. 164
SIACM RUN - START DRIVER OVER VOLT 164
VEHICLE BODY STYLE UNKNOWN. 170
*AIRBAG INDICATOR ON WITHOUT ACM TROUBLE CODES 172

AUDIO
ALL OUTPUTS SHORT 173
CASSETTE PLAYER INOP 176
CD MECHANICAL FAILURE 176
REAR TRANSMITTER FAILURE 176
*AM/FM SWITCH INOPERATIVE. 176
*ANY STATION PRESET SWITCH INOPERATIVE. 176
*BALANCE INOPERATIVE 176
*CD EJECT SWITCH INOPERATIVE. 176
*EQUALIZER INOPERATIVE 176
*FADER INOPERATIVE 176
*FF/RW SWITCH INOPERATIVE 176
*HOUR/MINUTE SWITCHES INOPERATIVE 176
*PAUSE/PLAY SWITCH INOPERATIVE 176
*PWR SWITCH INOPERATIVE 176
*SCAN SWITCH INOPERATIVE 176
*SEEK SWITCH INOPERATIVE. 176
*SET SWITCH INOPERATIVE 176
*TAPE EJECT SWITCH INOPERATIVE. 176
*TIME SWITCH INOPERATIVE 176
*TUNE SWITCH INOPERATIVE. 176
CD CHANGER MECHANICAL FAILURE. 178
CD CHANGER READ FAILURE. 179
CD CHANGER TEMPERATURE HIGH 180
CD READ FAILURE 181
CD TEMPERATURE HIGH 182
NBS OUTPUT 1 OPEN. 183
NBS OUTPUT 2 OPEN. 183
NBS OUTPUT 1 SHORT TO BATT 185
NBS OUTPUT 2 SHORT TO BATT 185
NO ANTENNA CONNECTION 187
POWER AMP SHUTDOWN 188
REMOTE RADIO SWITCH STUCK 191
*REMOTE RADIO CONTROLS INOPERATIVE 194

AUTOMATIC TEMPERATURE CONTROL
AC PRESSURE TOO HIGH (ACTIVE). 197
AC PRESSURE TOO HIGH (STORED). 198
DRIVER BLEND DOOR NOT RESPONDING (STORED) 198
DRIVER BLEND DOOR RANGE TOO LARGE (STORED) 198

TABLE OF CONTENTS - Continued

DRIVER BLEND DOOR TRAVEL TOO SMALL (STORED) 198
EVAP TEMP SENSOR OPEN (STORED) 198
EVAP TEMP SENSOR SHORTED (STORED) 198
FRONT IR SENSOR AND CONTROL HEAD MISMATCH (STORED) 198
FRONT IR SENSOR CHANGE TOO LARGE (STORED) 198
FRONT IR SENSOR HIGH (STORED) 198
FRONT IR SENSOR LOW (STORED) 198
FRONT IR SENSOR NOT CALIBRATED (STORED) 198
FRONT KEYBOARD COMMUNICATION FAULT (STORED) 198
FRONT KEYBOARD FAULT (STORED) 198
FRONT MODE DOOR NOT RESPONDING (STORED) 198
FRONT MODE DOOR TRAVEL TOO LARGE (STORED) 198
FRONT MODE DOOR TRAVEL TOO SMALL (STORED) 198
PASS BLEND DOOR NOT RESPONDING (STORED) 198
PASS BLEND DOOR TRAVEL TOO LARGE (STORED) 198
PASS BLEND DOOR TRAVEL TOO SMALL (STORED) 198
PCI BUS SHORTED HIGH (STORED) 198
PCI BUS SHORTED LOW (STORED) 198
REAR BLEND DOOR NOT RESPONDING (STORED) 198
REAR BLEND DOOR RANGE TOO LARGE (STORED) 198
REAR BLEND DOOR TRAVEL TOO SMALL (STORED) 198
REAR FAN POT OPEN (STORED) 198
REAR FAN POT SHORTED (STORED) 198
REAR IR SENSOR HIGH (STORED) 198
REAR IR SENSOR LOW (STORED) 198
REAR IR SENSOR NOT CALIBRATED (STORED) 198
REAR KEYBOARD FAULT (STORED) 198
REAR MODE DOOR NOT RESPONDING (STORED) 198
REAR MODE DOOR TRAVEL TOO LARGE (STORED) 198
REAR MODE DOOR TRAVEL TOO SMALL (STORED) 198
REAR MODE POT OPEN (STORED) 198
REAR MODE POT SHORTED (STORED) 198
RECIRC DOOR NOT RESPONDING (STORED) 198
RECIRC DOOR TRAVEL TOO LARGE (STORED) 198
RECIRC DOOR TRAVEL TOO SMALL (STORED) 198
COOLDOWN TEST FAILED 205
DRIVER BLEND DOOR NOT RESPONDING (ACTIVE) 207
DRIVER BLEND DOOR TRAVEL TOO LARGE (ACTIVE) 209
DRIVER BLEND DOOR TRAVEL TOO SMALL (ACTIVE) 211
EEPROM CHECKSUM ERROR (ACTIVE) 213
EVAP TEMP SENSOR OPEN (ACTIVE) 214
EVAP TEMP SENSOR SHORTED (ACTIVE) 217
FRONT IR SENSOR AND CONTROL HEAD MISMATCH (ACTIVE) 219
FRONT IR SENSOR CHANGE TOO LARGE (ACTIVE) 219
FRONT IR SENSOR HIGH (ACTIVE) 219
FRONT IR SENSOR LOW (ACTIVE) 219
FRONT IR SENSOR NOT CALIBRATED (ACTIVE) 220
FRONT KEYBOARD FAULT (ACTIVE) 220
FRONT KEYBOARD COMMUNICATION FAULT (ACTIVE) 225
FRONT MODE DOOR NOT RESPONDING (ACTIVE) 226
FRONT MODE DOOR TRAVEL TOO LARGE (ACTIVE) 228
FRONT MODE DOOR TRAVEL TOO SMALL (ACTIVE) 230

INVALID CONDITIONS FOR COOLDOWN TEST,
EVAP TEMPERATURE TOO LOW 232
PASS BLEND DOOR NOT RESPONDING (ACTIVE) 235
PASS BLEND DOOR TRAVEL TOO LARGE (ACTIVE) 237
PASS BLEND DOOR TRAVEL TOO SMALL (ACTIVE) 239
PCI BUS SHORTED HIGH (ACTIVE) 241
PCI BUS SHORTED LOW (ACTIVE) 241
REAR BLEND DOOR NOT RESPONDING (ACTIVE) 242
REAR BLEND DOOR TRAVEL TOO LARGE (ACTIVE) 244
REAR BLEND DOOR TRAVEL TOO SMALL (ACTIVE) 246
REAR FAN POT OPEN (ACTIVE) 248
REAR FAN POT SHORTED (ACTIVE) 248
REAR IR SENSOR HIGH (ACTIVE) 248
REAR IR SENSOR LOW (ACTIVE) 248
REAR MODE POT OPEN (ACTIVE) 248
REAR MODE POT SHORTED (ACTIVE) 248
REAR IR SENSOR NOT CALIBRATED (ACTIVE) 250
REAR KEYBOARD FAULT (ACTIVE) 254
REAR MODE DOOR NOT RESPONDING (ACTIVE) 258
REAR MODE DOOR TRAVEL TOO LARGE (ACTIVE) 260
REAR MODE DOOR TRAVEL TOO SMALL (ACTIVE) 262
RECIRC DOOR NOT RESPONDING (ACTIVE) 264
RECIRC DOOR TRAVEL TOO LARGE (ACTIVE) 266
RECIRC DOOR TRAVEL TOO SMALL (ACTIVE) 268
*ATC HEAD LED(S)/BACK LIGHTING INOPERATIVE 270
*FRONT BLOWER MOTOR INOPERATIVE 272
*FRONT BLOWER RUNS AT ONLY ONE SPEED 279
*HVAC SYSTEM TEST 281
*REAR ATC SWITCH LED(S)/BACK LIGHTING INOPERATIVE 283
*REAR BLOWER MOTOR INOPERATIVE 285
*REAR BLOWER RUNS AT ONLY ONE SPEED 292

CABIN HEATER
CABIN HEATER PRE-TEST 294
CABIN HEATER CONTROL CIRCUIT OPEN (STORED) 294
CABIN HEATER CONTROL CIRCUIT SHORT TO BATTERY (STORED) 294
B1000 CONTROL UNIT ERRONEOUS 297
B1800 NO START 298
B1801 FLAME OUT: DURING HEATING CYCLE 298
B1801 FLAME OUT: UNSTABLE OPERATION 298
B1802 POWER SUPPLY OUT OF RANGE: LOW VOLTAGE THRESHOLD 302
B1802 POWER SUPPLY OUT OF RANGE: VOLTAGE ABOVE 15.5 VOLTS 305
B1803 FLAME DETECTED PRIOR TO COMBUSTION 306
B1811 HEATER OVERHEATED 307
B1813 HEATER IN LOCKOUT MODE 311
B1820 DOSING PUMP CIRCUIT: OPEN OR SHORT TO BATTERY 313
B1820 DOSING PUMP CIRCUIT: SHORT TO GROUND 316
B1821 COMBUSTION AIR FAN CIRCUIT: OPEN 319
B1821 COMBUSTION AIR FAN CIRCUIT: SHORT TO GROUND 319
B1822 GLOW PIN/FLAME SENSOR: OPEN 320
B1822 GLOW PIN/FLAME SENSOR: SHORT TO GROUND 320
B1823 WATER PUMP CIRCUIT: OPEN 321
B1823 WATER PUMP CIRCUIT: SHORT TO GROUND 321

B1824 FAN SWITCH LINE SHORT TO GROUND 322
CABIN HEATER CONTROL CIRCUIT OPEN (ACTIVE). 323
CABIN HEATER CONTROL CIRCUIT SHORT TO BATTERY (ACTIVE). 327
*CABIN HEATER INOPERABLE FROM A/C - HEATER MODULE 330

CHIME
*CHIME INOPERATIVE. 332
*KEY IN IGNITION AND DRIVER'S DOOR OPEN CHIME
NOT OPERATING PROPERLY 334
*PROBLEM WITH THE VEHICLE SPEED WARNING CHIME. 335

COMMUNICATION
APM MESSAGES NOT RECEIVED. 336
ATC MODULE MESSAGES NOT RECEIVED. 337
AUDIO MESSAGES NOT RECEIVED 338
BCM, PCI BUS SHORTED TO BATTERY 339
BCM, PCI BUS SHORTED TO GROUND 339
FCM, PCI BUS SHORTED TO BATTERY 339
FCM, PCI BUS SHORTED TO GROUND 339
COUNTRY CODE NOT PROGRAMMED 341
FCM MESSAGES NOT RECEIVED. 342
FCM, BCM COMMUNICATION FAULT 343
FCM, HVAC COMMUNICATION FAULT 344
FCM, PCI INTERNAL FAULT 345
FCM, PCM COMMUNICATION FAULT 346
FCM, RADIO COMMUNICATION FAULT 347
FCM, TCM COMMUNICATION FAULT 348
IGNITION MUX SWITCH INPUT OPEN 349
IGNITION MUX SWITCH INPUT SHORT 351
IGNITION RUN OUTPUT SHORT 353
INTERNAL BCM FAILURE 355
LEFT PSD MESSAGES NOT RECEIVED 356
LIFTGATE MODULE MESSAGES NOT RECEIVED. 357
MIC MESSAGES NOT RECEIVED 358
MSM MESSAGES NOT RECEIVED 359
NO PCI MESSAGES FROM CD CHANGER. 360
ORC MESSAGES NOT RECEIVED. 362
OTIS MODULE MESSAGES NOT RECEIVED 363
PCI INTERNAL HARDWARE FAILURE 364
PCM MESSAGES NOT RECEIVED. 365
RADIO MEM MSG NOT RECEIVED 366
RIGHT PSD MESSAGES NOT RECEIVED. 367
RUN/START HARDWIRE INPUT FAILURE 368
SKIM MESSAGES NOT RECEIVED 370
TCM MESSAGES NOT RECEIVED. 371
*BUS +/- SIGNALS OPEN OR NO RESPONSE
FROM AUTOMATIC TEMPERATURE CONTROL MODULE 372
*BUS +/- SIGNALS OPEN OR NO RESPONSE
FROM BODY CONTROL MODULE 374
*BUS +/- SIGNALS OPEN OR NO RESPONSE FROM HVAC 376
*BUS +/- SIGNALS OPEN OR NO RESPONSE FROM INSTRUMENT CLUSTER . .378
*BUS +/- SIGNALS OPEN OR NO RESPONSE
FROM LEFT SLIDING DOOR CONTROL MODULE 381

*BUS +/- SIGNALS OPEN OR NO RESPONSE FROM MEMORY SEAT/MIRROR MODULE 384
*BUS +/- SIGNALS OPEN OR NO RESPONSE FROM POWER LIFTGATE MODULE 386
*BUS +/- SIGNALS OPEN OR NO RESPONSE FROM RIGHT SLIDING DOOR CONTROL MODULE 389
*BUS +/- SIGNALS OPEN OR NO RESPONSE FROM SENTRY KEY IMMOBILIZER MODULE 392
*BUS +/- SIGNALS OPEN OR NO RESPONSE FROM THATCHAM ALARM MODULE. 394
*NO RESPONSE FROM ADJUSTABLE PEDAL MODULE 396
*NO RESPONSE FROM AIRBAG CONTROL MODULE 398
*NO RESPONSE FROM CABIN HEATER ASSIST - DIESEL ONLY 400
*NO RESPONSE FROM CONTROLLER ANTILOCK BRAKE 402
*NO RESPONSE FROM ECM (PCI BUS) - DIESEL ONLY 404
*NO RESPONSE FROM ECM (SCI ONLY) - DIESEL ONLY 405
*NO RESPONSE FROM FRONT CONTROL MODULE 407
*NO RESPONSE FROM LEFT SIACM 409
*NO RESPONSE FROM OVERHEAD CONSOLE 411
*NO RESPONSE FROM PCM (PCI BUS). 413
*NO RESPONSE FROM PCM (SCI ONLY). 414
*NO RESPONSE FROM RADIO 417
*NO RESPONSE FROM RIGHT SIACM 419
*NO RESPONSE FROM TRANSMISSION CONTROL MODULE 421
*PCI BUS COMMUNICATION FAILURE 424

DOOR AJAR

*HOOD AJAR CIRCUIT OPEN (VTSS ONLY). 427
*HOOD AJAR CIRCUIT SHORTED TO GROUND (VTSS ONLY) 428
*LEFT FRONT DOOR AJAR SWITCH SENSE CIRCUIT OPEN 429
*LEFT FRONT DOOR AJAR SWITCH SENSE CIRCUIT SHORTED TO GROUND. .430
*LEFT SLIDING DOOR AJAR SWITCH SENSE CIRCUIT OPEN 431
*LEFT SLIDING DOOR AJAR SWITCH SENSE CIRCUIT SHORTED TO GROUND 433
*LIFTGATE AJAR CIRCUIT OPEN. 434
*LIFTGATE AJAR CIRCUIT SHORTED TO GROUND 435
*RIGHT FRONT DOOR AJAR SWITCH SENSE CIRCUIT OPEN 436
*RIGHT FRONT DOOR AJAR SWITCH SENSE CIRCUIT SHORTED TO GROUND 437
*RIGHT SLIDING DOOR AJAR CIRCUIT OPEN 438
*RIGHT SLIDING DOOR AJAR CIRCUIT SHORTED TO GROUND 440

ELECTRICALLY HEATED SYSTEMS

EBL RUN ONLY RELAY OPEN 441
EBL RUN ONLY RELAY SHORTED TO BATTERY. 443

EXTERIOR LIGHTING

BACKUP LAMP OUTPUT OPEN 444
BACKUP LAMP OUTPUT SHORT 446
FRONT FOG LAMP RELAY OPEN 447
FRONT FOG LAMP SHORTED TO BATTERY 449
HEADLAMP SWITCH MISMATCH 450
HEADLAMP SWITCH OPEN 451

HEADLAMP SWITCH SHORT TO GROUND 453
HIGH BEAM SWITCH INPUT OPEN 455
HIGH BEAM SWITCH INPUT SHORT 457
LEFT FRONT TURN SIGNAL OUTPUT OPEN 459
LEFT FRONT TURN SIGNAL OUTPUT SHORT 461
LEFT HIGH BEAM HEADLAMP CIRCUIT OPEN 463
LEFT HIGH BEAM HEADLAMP CIRCUIT SHORTED TO GROUND 465
LEFT HIGH BEAM HEADLAMP CIRCUIT SHORTED TO VOLTAGE 467
LEFT LOW BEAM HEADLAMP CIRCUIT OPEN 469
LEFT LOW BEAM HEADLAMP CIRCUIT SHORTED TO GROUND 471
LEFT LOW BEAM HEADLAMP CIRCUIT SHORTED TO VOLTAGE 473
LEFT REAR TURN SIGNAL OUTPUT OPEN 475
LEFT REAR TURN SIGNAL OUTPUT SHORT 477
LEFT SIDE PARK LAMP OPEN 479
PARK LAMP OUTPUT 1 OPEN 481
PARK LAMP OUTPUT 1 SHORT TO BATTERY 483
PARK LAMP OUTPUT 2 OPEN 484
PARK LAMP OUTPUT 2 SHORT TO BATTERY 486
RIGHT FRONT TURN SIGNAL OUTPUT OPEN 487
RIGHT FRONT TURN SIGNAL OUTPUT SHORT 489
RIGHT HIGH BEAM HEADLAMP CIRCUIT OPEN 491
RIGHT HIGH BEAM HEADLAMP CIRCUIT SHORTED TO GROUND 493
RIGHT HIGH BEAM HEADLAMP CIRCUIT SHORTED TO VOLTAGE 495
RIGHT LOW BEAM HEADLAMP CIRCUIT OPEN 497
RIGHT LOW BEAM HEADLAMP CIRCUIT SHORTED TO GROUND 499
RIGHT LOW BEAM HEADLAMP CIRCUIT SHORTED TO VOLTAGE 501
RIGHT REAR TURN SIGNAL OUTPUT OPEN 503
RIGHT REAR TURN SIGNAL OUTPUT SHORT 505
RIGHT SIDE PARK LAMP OPEN 507
TURN SIGNAL SWITCH INPUT OPEN 509
TURN SIGNAL SWITCH INPUT SHORT 511

HEATING & A/C

A/C FAULT (ACTIVE) - MTC 513
CHECKSUM FAILURE (ACTIVE) - MTC 513
POWER FAULT (ACTIVE) - MTC 513
REAR DEFOG FAILURE (ACTIVE) - MTC 513
RECIRCULATION FAULT (ACTIVE) - MTC 513
UNKNOWN FAULT DETECTED (ACTIVE) - MTC 513
A/C FAULT (STORED) - MTC 515
BACKLIGHT DIMMING RX FAILURE (STORED) - MTC 515
BLEND OVERCURRENT (STORED) - MTC 515
CHECKSUM FAILURE (STORED) - MTC 515
EVAPORATOR TEMPERATURE SENSOR CIRCUIT OPEN (STORED) - MTC 515
EVAPORATOR TEMPERATURE SENSOR CIRCUIT SHORT (STORED) - MTC 515
LOOPBACK TEST FAILURE (STORED) - MTC 515
MODE OVERCURRENT (STORED) - MTC 515
NO BCM MESSAGE RECEIVED (STORED) - MTC 515
NO PCM MESSAGE RECEIVED (STORED) - MTC 515
PCM COMMUNICATION FAILURE (STORED) - MTC 515
POWER FAULT (STORED) - MTC 515
REAR BLEND OVERCURRENT (STORED) - MTC 515
REAR BLEND POT CIRCUIT OPEN (STORED) - MTC 515

REAR BLEND POT CIRCUIT SHORT (STORED) - MTC. 515
REAR DEFOG FAILURE (STORED) - MTC 515
REAR MODE OVERCURRENT (STORED) - MTC. 515
RECIRC OVERCURRENT (STORED) - MTC 515
RECIRCULATION FAULT (STORED) - MTC. 515
TX FAILURE (STORED) - MTC 515
UNKNOWN FAULT DETECTED (STORED) - MTC 515
VEHICLE ODOMETER FAILURE (STORED) - MTC 515
ZONE OVERCURRENT (STORED) - MTC. 515
BACKLIGHT DIMMING RX FAILURE (ACTIVE) - MTC 520
NO BCM MESSAGE RECEIVED (ACTIVE) - MTC. 520
BLEND CALIBRATION FAULT - MTC 522
MODE CALIBRATION FAULT - MTC. 522
RECIRCULATION CALIBRATION FAULT - MTC 522
ZONE CALIBRATION FAULT - MTC 522
BLEND OVERCURRENT (ACTIVE) - MTC. 526
MODE OVERCURRENT (ACTIVE) - MTC 526
REAR BLEND OVERCURRENT (ACTIVE) - MTC 526
REAR MODE OVERCURRENT (ACTIVE) - MTC. 526
RECIRC OVERCURRENT (ACTIVE) - MTC. 526
ZONE OVERCURRENT (ACTIVE) - MTC. 526
COOLDOWN TEST EXCESSIVE FAULT - MTC. 532
COOLDOWN TEST SENSOR FAILURE - MTC 532
COOLDOWN TEST SET UP FAULT - MTC 534
COOLDOWN TEST TOO COLD TO START - MTC 535
EVAPORATOR TEMPERATURE SENSOR CIRCUIT
OPEN (ACTIVE) - MTC 538
EVAPORATOR TEMPERATURE SENSOR CIRCUIT
SHORT (ACTIVE) - MTC 541
FRONT AND REAR BLOWER OUTPUT 1 OPEN 543
FRONT AND REAR BLOWER OUTPUT 2 OPEN 543
FRONT AND REAR BLOWER OUTPUT 1 SHORT TO BATT 545
FRONT AND REAR BLOWER OUTPUT 2 SHORT TO BATT 545
LOOPBACK TEST FAILURE (ACTIVE) - MTC 547
NO PCM MESSAGE RECEIVED (ACTIVE) - MTC. 548
PCM COMMUNICATION FAILURE (ACTIVE) - MTC 548
VEHICLE ODOMETER FAILURE (ACTIVE) - MTC 548
REAR BLEND CALIBRATION FAULT - MTC 550
REAR MODE CALIBRATION FAULT - MTC 550
REAR BLEND POT CIRCUIT OPEN (ACTIVE) - MTC. 554
REAR BLEND POT CIRCUIT SHORT (ACTIVE) - MTC. 557
TX FAILURE (ACTIVE) - MTC 559
*A/C STATUS INDICATOR FLASHING - MTC 561
*RECIRC STATUS INDICATOR FLASHING - MTC. 561
*BLEND/MODE/RECIRC DOOR OPERATION IMPROPER --
DUAL & THREE-ZONE MTC 563
*BLEND/MODE/RECIRC DOOR OPERATION IMPROPER --
SINGLE-ZONE MTC 567
*FRONT A/C - HEATER CONTROL ILLUMINATION INOPERATIVE - MTC 569
*FRONT BLOWER MOTOR INOPERATIVE - MTC 571
*FRONT BLOWER MOTOR SPEEDS INCORRECT - MTC. 576
*HVAC SYSTEM TEST - MTC 578
*REAR A/C - HEATER CONTROL ILLUMINATION INOPERATIVE - MTC 580

*REAR BLOWER MOTOR INOPERATIVE - MTC 582
*REAR BLOWER MOTOR SPEEDS INCORRECT - MTC 586
*REAR BLOWER REAR CONTROL SWITCH INOP
IN ONE OR MORE SPEEDS - MTC 590

INSTRUMENT CLUSTER
ABS LAMP CKT SHORT 592
ABS LAMP OPEN 592
AIRBAG LAMP CKT SHORT 592
AIRBAG LAMP OPEN 592
EL PANEL SHORT 593
FRONT FOG LAMP INDICATOR OPEN 595
FRONT FOG LAMP INDICATOR SHORT TO GROUND 597
FUEL GAUGE CHECKSUM FAILURE 599
SPEEDOMETER CHECKSUM FAILURE 599
TACHOMETER CHECKSUM FAILURE 599
TEMPERATURE GAUGE CHECKSUM FAILURE 599
FUEL LEVEL SENDING UNIT INPUT OPEN 600
FUEL LEVEL SENDING UNIT INPUT SHORT 602
IOD WAKEUP CLUSTER OUTPUT OPEN 604
IOD WAKEUP CLUSTER OUTPUT SHORT 606
LEFT TURN SIGNAL INDICATOR OPEN (HIGHLINE) 608
LEFT TURN SIGNAL INDICATOR OPEN (LOWLINE) 610
LEFT TURN SIGNAL INDICATOR SHORT (HIGHLINE) 612
LEFT TURN SIGNAL INDICATOR SHORT (LOWLINE) 614
LOOPBACK FAILURE 616
NO ABS BUS MESSAGES RECEIVED 617
NO BCM BUS MESSAGES RECEIVED 617
NO FCM BUS MESSAGES RECEIVED 617
NO ORC BUS MESSAGES RECEIVED 617
NO TCM BUS MESSAGES RECEIVED 617
NO PCM BUS MESSAGES RECEIVED 618
PANEL DIMMING OUTPUT SHORT 619
REAR FOG INDICATOR OUTPUT OPEN 624
REAR FOG INDICATOR OUTPUT SHORT 626
RIGHT TURN SIGNAL INDICATOR OPEN (HIGHLINE) 628
RIGHT TURN SIGNAL INDICATOR OPEN (LOWLINE) 630
RIGHT TURN SIGNAL INDICATOR SHORT (HIGHLINE) 632
RIGHT TURN SIGNAL INDICATOR SHORT (LOWLINE) 634
TCM MESSAGE MISMATCH 636
*ANY PCI BUS INDICATOR INOPERATIVE 637
*SEAT BELT INDICATOR ALWAYS ON 638

INTEGRATED POWER MODULE
ACCESSORY POWER OUTPUT #1 OPEN 639
ACCESSORY POWER OUTPUT #1 SHORTED TO BATTERY 641
ACCESSORY POWER OUTPUT #2 OPEN 643
ACCESSORY POWER OUTPUT #2 SHORTED TO BATTERY 645
CPA NOT ENGAGED 647
IGN RUN/START INPUT WIRING 649
IGNITION START INPUT WIRING 651
INTERNAL DRIVER FAULT #1 653
INTERNAL DRIVER FAULT #2 654

INTERNAL DRIVER FAULT #3. 655

INTERIOR LIGHTING
DOME LAMP OUTPUT SHORT. 656
DOME SWITCH INPUT OPEN. 657
DOME SWITCH INPUT SHORT. 658
DOOR/LIFTGATE LAMP OUTPUT SHORT. 659
FRONT COURTESY LAMPS OUTPUT SHORT 660
READING LAMP OUTPUT SHORT 661

MEMORY SEAT
BCM MESSAGE NOT RECEIVED. 662
CHARGING VOLTAGE HIGH MESSAGE 663
CHARGING VOLTAGE LOW MESSAGE. 664
EEPROM REFRESH FAILURE 665
FRONT RISER DOWN POSITION STUCK. 666
FRONT RISER SENSOR OUT OF RANGE HIGH 668
FRONT RISER SENSOR OUT OF RANGE LOW. 671
FRONT RISER UP POSITION STUCK 674
HORIZONTAL FORWARD POSITION STUCK 676
HORIZONTAL REARWARD POSITION STUCK 678
HORIZONTAL SENSOR OUT OF RANGE HIGH 680
HORIZONTAL SENSOR OUT OF RANGE LOW 683
LEFT MIRROR HORIZONTAL SENSOR OUT OF RANGE HIGH 686
LEFT MIRROR HORIZONTAL SENSOR OUT OF RANGE LOW 688
LEFT MIRROR VERTICAL SENSOR OUT OF RANGE HIGH. 690
LEFT MIRROR VERTICAL SENSOR OUT OF RANGE LOW 692
MEMORY POSITION SWITCH STUCK. 694
MEMORY SWITCH INPUT OPEN 696
MEMORY SWITCH INPUT SHORT. 698
REAR RISER DOWN POSITION STUCK 700
REAR RISER SENSOR OUT OF RANGE HIGH 702
REAR RISER SENSOR OUT OF RANGE LOW. 705
REAR RISER UP POSITION STUCK 708
RECLINER DOWN POSITION STUCK 710
RECLINER SENSOR OUT OF RANGE HIGH 712
RECLINER SENSOR OUT OF RANGE LOW. 715
RECLINER UP POSITION STUCK 718
RIGHT MIRROR HORIZONTAL SENSOR OUT OF RANGE HIGH. 720
RIGHT MIRROR HORIZONTAL SENSOR OUT OF RANGE LOW 722
RIGHT MIRROR VERTICAL SENSOR OUT OF RANGE HIGH 724
RIGHT MIRROR VERTICAL SENSOR OUT OF RANGE LOW. 726

OVERHEAD CONSOLE
BUS MESSAGES MISSING. 728
COMPASS TEST FAILURE 730
DEMAGNETIZE COMPASS AS PER SERVICE MANUAL. 731
EC MIRROR DAY/NIGHT LINE FAULT 732
EVIC INTERNAL FAILURE. 734
LOOPBACK FAILURE. 735
NO BCM MESSAGES RECEIVED. 736
NO FCM MESSAGES RECEIVED. 737
NO PCM MESSAGES RECEIVED. 738

NO TCM MESSAGES RECEIVED 739
OTIS MODULE MESSAGE MISMATCH 740
OTIS MODULE MESSAGE MISMATCH (DIESEL) 742
*REPAIRING CMTC DISPLAYS DOUBLE DASH (- -) IN TEMP DISPLAY 744

POWER DOOR LOCKS/RKE
DRIVER DOOR LOCK SWITCH INPUT OPEN OR SHORT TO VOLTAGE 747
DRIVER DOOR LOCK SWITCH INPUT SHORT 749
DRIVER DOOR LOCK SWITCH INPUT STUCK. 751
LEFT CYLINDER LOCK SWITCH INPUT OPEN OR SHORT TO VOLTAGE 753
LEFT CYLINDER LOCK SWITCH INPUT SHORT 755
LEFT CYLINDER LOCK SWITCH INPUT STUCK 757
LEFT UNLOCK OUTPUT FAILURE 759
LIFTGATE CYLINDER LOCK SWITCH INPUT OPEN OR SHORT TO VOLTAGE - (EXPORT ONLY) 761
LIFTGATE CYLINDER LOCK SWITCH INPUT SHORT - (EXPORT ONLY) 763
LIFTGATE CYLINDER LOCK SWITCH INPUT STUCK - (EXPORT ONLY) 765
LIFTGATE POWER RELEASE OUTPUT SHORT. 767
LOCK OUTPUT FAILURE. 769
PASSENGER DOOR LOCK SWITCH INPUT OPEN OR SHORT TO VOLTAGE 772
PASSENGER DOOR LOCK SWITCH INPUT SHORT 774
PASSENGER DOOR LOCK SWITCH INPUT STUCK 776
RIGHT CYLINDER LOCK SWITCH INPUT OPEN OR SHORT TO VOLTAGE. 778
RIGHT CYLINDER LOCK SWITCH INPUT SHORT 780
RIGHT CYLINDER LOCK SWITCH INPUT STUCK 782
RIGHT UNLOCK OUTPUT FAILURE. 784
RKE PROGRAM LINE OUTPUT OPEN 786
RKE PROGRAM LINE OUTPUT SHORT 788

POWER DOORS - LIFTGATE
AMBIENT TEMPERATURE SENSOR CIRCUIT OPEN 789
AMBIENT TEMPERATURE SENSOR CIRCUIT SHORT TO GROUND 791
CONTROL MODULE FAILURE - INTERNAL FAILURE 793
INCOMPLETE LATCH CINCH - NO PAWL TRANSITION 794
INCOMPLETE LATCH CINCH - OVERCURRENT 796
INCOMPLETE LATCH RELEASE - RATCHET SWITCH FAILURE 799
INCOMPLETE LATCH RELEASE- PAWL SWITCH FAILURE 801
INCOMPLETE LATCH RELEASE- SECTOR GEAR RETURN FAILURE 803
INCOMPLETE POWER CLOSE - FULL OPEN SWITCH FAILURE/NON ENGAGEMENT 804
INCOMPLETE POWER CLOSE - EXCESSIVE H.E. COUNTS/NON ENGAGEMENT 806
INCOMPLETE POWER CLOSE - HALL EFFECT SIGNAL MISSING 810
INCOMPLETE POWER CLOSE - OVER CURRENT 813
INCOMPLETE POWER CLOSE - TIME OUT 816
INCOMPLETE POWER CLOSE - TRANSISTOR SHORTED. 817
INCOMPLETE POWER CLOSE - VOLTAGE BELOW MINIMUM LEVEL 818
INCOMPLETE POWER OPEN - FULL OPEN SWITCH FAILURE/NON ENGAGEMENT 820
INCOMPLETE POWER OPEN - EXCESSIVE H.E. COUNTS/ NON ENGAGEMENT 822
INCOMPLETE POWER OPEN - HALL EFFECT SIGNAL MISSING 826
INCOMPLETE POWER OPEN - LATCH FAILURE. 829

INCOMPLETE POWER OPEN - LINK ROD FAILURE 835
INCOMPLETE POWER OPEN - OVERCURRENT 837
INCOMPLETE POWER OPEN - TIME OUT 840
INCOMPLETE POWER OPEN - TRANSISTOR SHORTED 841
INCOMPLETE POWER OPEN - VOLTAGE BELOW MINIMUM LEVEL 842
IOD WAKE UP OPEN - PLG 844
LOOPBACK TEST FAILURE 846
LOSS OF BCM MESSAGES 847
LOSS OF EATX MESSAGES 848
LOSS OF FCM MESSAGES 849
LOSS OF SBEC MESSAGES 850
OUTSIDE LIFTGATE HANDLE INPUT SHORT 851
OUTSIDE LIFTGATE HANDLE INPUT STUCK 852
OVERHEAD LIFTGATE SWITCH INPUT STUCK 853
OVERHEAD LIFTGATE/LOCKOUT SWITCHES OPEN OR SHT TO VOLTAGE 854
OVERHEAD LIFTGATE/LOCKOUT SWITCHES SHORT 856
PINCH SENSOR CIRCUIT OPEN 857
PINCH SENSOR SIGNAL CIRCUIT SHORT TO GROUND 860
*POWER LIFTGATE INOPERATIVE 862

POWER DOORS - SLIDING

AMBIENT TEMPERATURE SENSOR CIRCUIT OPEN 863
AMBIENT TEMPERATURE SENSOR CIRCUIT SHORT TO GROUND 864
CONTROL MODULE FAILURE - INTERNAL FAILURE 865
INCOMPLETE LATCH CINCH - NO PAWL TRANSITION 866
INCOMPLETE LATCH CINCH - OVERCURRENT 868
INCOMPLETE LATCH RELEASE - FULL OPEN SWITCH FAILURE 870
INCOMPLETE LATCH RELEASE - RATCHET SWITCH FAILURE 873
INCOMPLETE LATCH RELEASE- NO REVERSE TO UNLOAD CLUTCH 875
INCOMPLETE LATCH RELEASE- OVERCURRENT 876
INCOMPLETE LATCH RELEASE- PAWL SWITCH FAILURE 878
INCOMPLETE LATCH RELEASE- SECTOR GEAR RETURN FAILURE 880
INCOMPLETE POWER CLOSE - FULL OPEN SWITCH FAILURE 881
INCOMPLETE POWER CLOSE - EXCESSIVE HALL EFFECT SIGNAL 883
INCOMPLETE POWER CLOSE - LATCH FAILURE 886
INCOMPLETE POWER CLOSE - OVERCURRENT 892
INCOMPLETE POWER CLOSE - TIME OUT 894
INCOMPLETE POWER CLOSE- VOLTAGE BELOW MINIMUM LEVEL 895
INCOMPLETE POWER OPEN - FULL OPEN SWITCH FAILURE 897
INCOMPLETE POWER OPEN - EXCESSIVE HALL EFFECT SIGNAL 899
INCOMPLETE POWER OPEN - LATCH FAILURE 902
INCOMPLETE POWER OPEN - OVERCURRENT 907
INCOMPLETE POWER OPEN - TIME OUT 909
INCOMPLETE POWER OPEN - VOLTAGE BELOW MINIMUM LEVEL 910
IOD WAKE UP OPEN - PSD 912
IOD WAKE UP PSD & PLG SHORT 914
LEFT B-PILLAR SWITCH INPUT OPEN OR SHORT TO VOLTAGE 916
LEFT B-PILLAR SWITCH INPUT SHORT 918
LEFT B-PILLAR SWITCH INPUT STUCK 919
LOOPBACK TEST FAILURE 920
LOSS OF BCM MESSAGES 921
LOSS OF EATX MESSAGES 922
LOSS OF FCM MESSAGES 923

LOSS OF SBEC MESSAGES 924
OVERHEAD LEFT SWITCH INPUT STUCK 925
OVERHEAD RIGHT SWITCH INPUT STUCK 926
OVERHEAD RIGHT/LEFT SWITCHES SHORT 927
RIGHT B-PILLAR SWITCH INPUT OPEN OR SHORT TO VOLTAGE 928
RIGHT B-PILLAR SWITCH INPUT SHORT 930
RIGHT B-PILLAR SWITCH INPUT STUCK 931
*POWER SLIDING DOOR INOPERATIVE 932

POWER MIRROR
FOLD MIRROR OUTPUT FAILURE (EXPORT ONLY) 933
PASSENGER MIRROR RELAY OUTPUT OPEN (EXPORT ONLY) 935
PASSENGER MIRROR RELAY OUTPUT SHORT (EXPORT ONLY) 937
UNFOLD MIRROR OUTPUT FAILURE (EXPORT ONLY) 938
*BOTH MIRRORS DO NOT UNFOLD EXCEPT WITH EITHER FRONT DOOR (EXPORT ONLY) 941
*BOTH POWER FOLDING MIRRORS DO NOT FOLD (EXPORT ONLY) 942
*DRIVER FOLDING MIRROR DOES NOT FOLD (EXPORT ONLY) 943
*PASSENGER FOLDING MIRROR DOES NOT FOLD (EXPORT ONLY) 945

TIRE PRESSURE MONITORING
LF TIRE PRESSURE SENSOR BATTERY LOW 947
LF TIRE PRESSURE SENSOR FAILURE 947
LR TIRE PRESSURE SENSOR BATTERY LOW 947
LR TIRE PRESSURE SENSOR FAILURE 947
RF TIRE PRESSURE SENSOR BATTERY LOW 947
RF TIRE PRESSURE SENSOR FAILURE 947
RR TIRE PRESSURE SENSOR BATTERY LOW 947
RR TIRE PRESSURE SENSOR FAILURE 947

VEHICLE THEFT/SECURITY
BCM MESSAGES NOT RECEIVED (EXPORT ONLY) 949
HORN INPUT STUCK 950
HORN RELAY OPEN 951
HORN RELAY SHORTED TO BATTERY 952
INTERNAL EEPROM WRITE ERROR (EXPORT ONLY) 954
INTERNAL TRANSMIT FAILURE (EXPORT ONLY) 955
INTERNAL ULTRASONIC FAULT (EXPORT ONLY) 956
LOOPBACK ERROR (EXPORT ONLY) 960
NO VALID MESSAGES RECEIVED (EXPORT ONLY) 961
PCI BUS SHORTED TO BATTERY (EXPORT ONLY) 962
PCI BUS SHORTED TO GROUND (EXPORT ONLY) 963
PCM MESSAGES NOT RECEIVED (EXPORT ONLY) 964
VEHICLE THEFT ALARM INDICATOR OUTPUT OPEN 965
VEHICLE THEFT ALARM INDICATOR OUTPUT SHORT 966
*ALARM TRIPS ON ITS OWN 967
*HOOD DOES NOT TRIP VTSS 968
*LEFT FRONT DOOR DOES NOT TRIP VTSS 969
*LEFT SLIDING DOOR DOES NOT TRIP VTSS 970
*LIFTGATE DOES NOT TRIP VTSS (EXPORT ONLY) 971
*REPEATER LAMPS INOPERATIVE WITH ALARM (EXPORT ONLY) 972
*RIGHT FRONT DOOR DOES NOT TRIP VTSS 973
*RIGHT SLIDING DOOR DOES NOT TRIP VTSS 974

*VTSS INDICATOR INOPERATIVE 975
*VTSS INDICATOR LAMP INOPERATIVE (EXPORT ONLY) 976
*VTSS SIREN INOP (EXPORT ONLY) 977
*VTSS WILL NOT ARM. 980

WINDSHIELD WIPER & WASHER
FR WIPER HI-LO RELAY OPEN 981
FR WIPER HI-LO RELAY SHORT TO BATT 983
FRONT WASH SWITCH INPUT STUCK 984
FRONT WASHER OUTPUT OPEN 986
FRONT WIPER NOT PARKED. 988
FRONT WIPER ON RELAY OPEN 990
FRONT WIPER ON RELAY SHORT TO BATT 991
FRONT WIPER PARK SWITCH SHORT TO GND 992
FRONT WIPER SWITCH MUX INPUT OPEN. 994
FRONT WIPER SWITCH MUX INPUT SHORT TO GROUND. 996
HEADLAMP WASHER RELAY OPEN 998
HEADLAMP WASHER RELAY SHORT TO BATT. 1000
REAR WASH SWITCH INPUT STUCK 1001
REAR WASHER OUTPUT OPEN 1003
REAR WIPER OUTPUT OPEN 1005
REAR WIPER OUTPUT SHORT TO GROUND 1007
REAR WIPER SWITCH MUX INPUT OPEN. 1009
REAR WIPER SWITCH MUX INPUT SHORT TO GROUND 1011

VERIFICATION TESTS
VERIFICATION TESTS. 1013

8.0 COMPONENT LOCATIONS. 1021

8.1 AIRBAG SYSTEM. 1021
8.2 BODY CONTROL MODULE. 1022
8.3 ENGINE CONTROL MODULE - DIESEL. 1022
8.4 HEATING & A/C. 1022
8.4.1 ACTUATORS – FRONT, LHD. 1022
8.4.2 ACTUATOR – FRONT, LHD 1023
8.4.3 ACTUATORS – FRONT, RHD 1023
8.4.4 ACTUATOR – FRONT, RHD. 1024
8.4.5 EVAPORATOR TEMPERATURE SENSOR, LHD 1024
8.4.6 EVAPORATOR TEMPERATURE SENSOR, RHD. 1025
8.4.7 C202 CONNECTOR 1025
8.4.8 ACTUATORS – REAR 1026
8.4.9 REAR A/C HEATER UNIT CONNECTOR 1026
8.4.10 DIESEL CABIN HEATER ASSIST (DCHA) ASSEMBLY 1027
8.4.11 C330 HARNESS CONNECTOR (DCHA). 1027
8.4.12 C331 HARNESS CONNECTOR (DCHA). 1028
8.5 INTEGRATED POWER MODULE & FRONT CONTROL MODULE. 1028
8.6 MEMORY SYSTEM. 1029
8.6.1 MEMORY SEAT MIRROR MODULE/SEAT MOTORS 1029
8.6.2 MEMORY SEAT MIRROR MODULE CIRCUIT BREAKER. 1029
8.7 OVERHEAD SWITCHES 1029
8.8 POWER FOLDING MIRRORS 1030
8.9 POWER LIFTGATE SYSTEM. 1030

8.9.1 MODULE 1030
8.9.2 PINCH SENSORS (TAPE SWITCH) 1031
8.9.3 LATCH ASSEMBLY 1031
8.10 POWER DOOR LOCK/RKE SYSTEM 1031
8.10.1 DOOR LOCK MOTOR/AJAR SWITCH 1031
8.10.2 CYLINDER LOCK SWITCH 1032
8.10.3 REMOTE KEYLESS ENTRY MODULE 1032
8.11 POWER SLIDING DOOR 1032
8.11.1 MODULE 1032
8.11.2 LOWER DRIVE UNIT 1033
8.11.3 LATCH ASSEMBLY 1033
8.12 VEHICLE THEFT SECURITY SYSTEM 1033
8.12.1 RKE/THATCHAM ALARM MODULE (EXPORT ONLY) 1033
8.12.2 RKE/THATCHAM ALARM MODULE CONNECTORS (EXPORT ONLY) 1034
8.12.3 VTSS LED (EXPORT ONLY) 1034
8.12.4 VTSS SIREN (EXPORT ONLY) 1035
8.12.5 FRONT INTRUSION SENSOR (EXPORT ONLY) 1035
8.12.6 REAR INTRUSION SENSOR (EXPORT ONLY) 1036

9.0 CONNECTOR PINOUTS 1037

A/C-HEATER CONTROL C1 (MTC) - BLACK/RED 20 WAY 1037
A/C-HEATER CONTROL C2 (MTC) - BLACK/BLUE 10 WAY 1037
AIRBAG CONTROL MODULE (ORC) - YELLOW/RED 23 WAY 1038
AMBIENT TEMP SENSOR (EXCEPT BASE) - BLACK 2 WAY 1038
AMBIENT TEMP SENSOR (SENSOR SIDE) 1038
ATC REMOTE SENSOR (ATC) - 4 WAY 1038
AUTO TEMP CONTROL C1 - WHITE 13 WAY 1039
AUTO TEMP CONTROL C2 - BLACK 13 WAY 1039
AUTO TEMP CONTROL C3 - 4 WAY 1039
BLOWER MOTOR RESISTOR C1 (MTC) - BLACK 6 WAY 1039
BLOWER MOTOR RESISTOR C2 (MTC) - BLACK 2 WAY 1040
BODY CONTROL MODULE C1 - BLACK/BLACK 6 WAY 1040
BODY CONTROL MODULE C2 - BLACK/GREEN 34 WAY 1041
BODY CONTROL MODULE C3 - BLACK/WHITE 34 WAY 1042
BODY CONTROL MODULE C4 - BLACK/GRAY 34 WAY 1043
BODY CONTROL MODULE C5 - BLACK/BLACK 34 WAY 1044
C200 - GRAY (BODY SIDE) 1045
C200 - GRAY (INSTRUMENT PANEL SIDE) 1047
C201 - YELLOW (BODY SIDE) 1049
C201 - YELLOW (INSTRUMENT PANEL SIDE) 1049
C202 - GRAY (COMPONENT SIDE) 1049
C202 - GRAY (INSTRUMENT PANEL SIDE) 1050
C304 - YELLOW (BODY SIDE) 1050
C304 - YELLOW (SEAT SIDE) 1050
C305 - GRAY (BODY SIDE) 1051
C305 - GRAY (SEAT SIDE) 1051
C306 - YELLOW (BODY SIDE) 1051
C306 - YELLOW (SEAT SIDE) 1051
C307 - GRAY (BODY SIDE) 1052
C307 - GRAY (SEAT SIDE) 1052
C326 - YELLOW (SAFETY SEAT SIDE) 1052

C326 - YELLOW (SEAT SIDE) 1052
C327 - YELLOW (SAFETY SEAT SIDE) 1053
C327 - YELLOW (SEAT SIDE) 1053
C330 (DIESEL) - GRAY (CABIN HEATER JUMPER SIDE) 1053
C330 (DIESEL) - LT. GRAY (BODY SIDE) 1053
C331 (DIESEL) - BLACK (CABIN HEATER JUMPER SIDE) 1053
C331 (DIESEL) - GRAY (CABIN HEATER COMPONENT SIDE) 1054
C332 (ATC) - BLACK (COMPONENT SIDE) 1054
C332 (ATC) - LT. GREEN (BODY SIDE) 1054
CABIN HEATER ASSIST C1 (DIESEL) - BLACK 6 WAY 1054
CABIN HEATER ASSIST C2 (DIESEL) - BLACK 2 WAY 1055
CD CHANGER - 8 WAY 1055
CLOCKSPRING C1 - WHITE 6 WAY 1055
CLOCKSPRING C2 - YELLOW 4 WAY 1055
CLOCKSPRING C4 - BLACK 2 WAY 1055
CLOCKSPRING C5 - YELLOW 4 WAY 1056
CONTROLLER ANTILOCK BRAKE - BLACK 24 WAY 1056
DATA LINK CONNECTOR - BLACK 16 WAY 1057
DIAGNOSTIC JUNCTION PORT - BLACK 16 WAY 1057
DOSING PUMP (DIESEL) - BLACK 2 WAY 1057
DRIVER AIRBAG C1 - BROWN 2 WAY 1058
DRIVER AIRBAG C2 - BLACK 2 WAY 1058
DRIVER BLEND DOOR ACTUATOR (ATC) - GRAY 2 WAY 1058
DRIVER BLEND DOOR ACTUATOR (MTC) - GRAY 2 WAY 1058
DRIVER DOOR LOCK SWITCH - BLACK 3 WAY 1059
DRIVER POWER SEAT FRONT RISER MOTOR - RED 2 WAY 1059
DRIVER POWER SEAT FRONT RISER POSITION SENSOR - BLACK 3 WAY . . . 1059
DRIVER POWER SEAT HORIZONTAL MOTOR - BLACK 2 WAY 1059
DRIVER POWER SEAT HORIZONTAL POSITION SENSOR - BLACK 3 WAY 1059
DRIVER POWER SEAT REAR RISER MOTOR - RED 2 WAY 1060
DRIVER POWER SEAT REAR RISER POSITION SENSOR - BLACK 3 WAY 1060
DRIVER POWER SEAT RECLINER MOTOR - GREEN 2 WAY 1060
DRIVER POWER SEAT RECLINER POSITION SENSOR - BLACK 3 WAY 1060
DRIVER POWER SEAT SWITCH - GREEN 10 WAY 1061
DRIVER SEAT BELT SWITCH - WHITE 2 WAY 1061
DRIVER SEAT BELT TENSIONER - 2 WAY 1061
ENGINE CONTROL MODULE C1 (DIESEL) - BLACK 81 WAY 1062
ENGINE CONTROL MODULE C2 (DIESEL) - BLACK 40 WAY 1064
EVAPORATOR TEMPERATURE SENSOR - BLACK 2 WAY 1064
FRONT BLOWER MODULE C1 (ATC) - BLACK 4 WAY 1065
FRONT BLOWER MODULE C2 (ATC) - BLACK 2 WAY 1065
FRONT CONTROL MODULE - BLACK 49 WAY 1066
HIGH NOTE HORN - BLACK 2 WAY 1067
HOOD AJAR SWITCH - BLACK 2 WAY 1067
IGNITION SWITCH - BLACK 5 WAY 1067
INSTRUMENT CLUSTER - BLACK 13 WAY 1067
FUSES (IPM) 1069
DEFOGGER RELAY 1069
FRONT BLOWER MOTOR RELAY 1069
HORN RELAY 1070
NAME BRAND SPEAKER RELAY 1070
POSITIVE TEMPERATURE COEFFICIENTS 1070
REAR BLOWER MOTOR RELAY 1070

TABLE OF CONTENTS - Continued

INTEGRATED POWER MODULE C1 - LT. GREEN/RED 20 WAY 1071
INTEGRATED POWER MODULE C2 - GREEN/BLUE 10 WAY 1071
INTEGRATED POWER MODULE C3 (DIESEL) - YELLOW/RED 20 WAY 1072
INTEGRATED POWER MODULE C3 (GAS) - NATURAL/RED 20 WAY 1072
INTEGRATED POWER MODULE C4 - BLUE 10 WAY 1073
INTEGRATED POWER MODULE C5 - BLACK 4 WAY 1073
INTEGRATED POWER MODULE C6 - NATURAL 10 WAY 1073
INTEGRATED POWER MODULE C7 - BLACK/RED 20 WAY 1074
INTEGRATED POWER MODULE C8 - ORANGE 10 WAY 1074
INTEGRATED POWER MODULE C9 - BLACK 10 WAY 1075
LEFT B-PILLAR SWITCH (POWER SLIDING DOOR) - GRAY 3 WAY 1075
LEFT CINCH/RELEASE MOTOR (POWER SLIDING DOOR) - GRAY 4 WAY 1075
LEFT CYLINDER LOCK SWITCH - BLACK 2 WAY 1075
LEFT DOOR SPEAKER - BLACK/RED 6 WAY 1076
LEFT FRONT DOOR AJAR SWITCH (BASE) - BLACK 2 WAY 1076
LEFT FRONT DOOR LOCK MOTOR/AJAR SWITCH (EXCEPT BASE) - BLACK 4 WAY 1076
LEFT FULL OPEN SWITCH (POWER SLIDING DOOR) - BLACK 2 WAY 1076
LEFT INSTRUMENT PANEL SPEAKER - BLACK 2 WAY 1077
LEFT POWER MIRROR - BLACK 12 WAY 1077
LEFT REAR PILLAR SPEAKER - BLACK 2 WAY 1077
LEFT REAR SPEAKER - BLACK/RED 6 WAY 1077
LEFT REMOTE RADIO SWITCH - BLACK 2 WAY 1078
LEFT SEAT AIRBAG - YELLOW 2 WAY 1078
LEFT SIDE IMPACT AIRBAG CONTROL MODULE - YELLOW/RED 7 WAY 1078
LEFT SLIDING DOOR CONTROL MODULE C1 (POWER SLIDING DOOR) - BLACK 8 WAY 1078
LEFT SLIDING DOOR CONTROL MODULE C2 (POWER SLIDING DOOR) - BLACK/RED 20 WAY 1079
LEFT SLIDING DOOR LATCH SENSING SWITCH (POWER SLIDING DOOR) - BLACK 6 WAY 1079
LEFT SLIDING DOOR LOCK MOTOR (POWER SLIDING DOOR) - BLACK 4 WAY 1079
LEFT SLIDING DOOR LOCK MOTOR/AJAR SWITCH (MANUAL SLIDING DOOR) - BLACK 4 WAY 1080
LEFT SLIDING DOOR MOTOR (POWER SLIDING DOOR) - BLACK 8 WAY 1080
LICENSE LAMP (POWER LIFTGATE) - DK. GRAY 8 WAY 1080
LICENSE LAMP (POWER RELEASE) - DK. GRAY 4 WAY 1080
LIFTGATE AJAR SWITCH (MANUAL RELEASE) - BLACK 2 WAY 1081
LIFTGATE AJAR SWITCH (POWER RELEASE) - BLACK 4 WAY 1081
LIFTGATE CINCH/RELEASE MOTOR (POWER LIFTGATE) - BLUE 7 WAY 1081
LIFTGATE CYLINDER LOCK SWITCH - BLACK 2 WAY 1081
LIFTGATE LEFT PINCH SENSOR (POWER LIFTGATE) - BLACK 2 WAY 1081
LIFTGATE RIGHT PINCH SENSOR (POWER LIFTGATE) - BLACK 2 WAY 1082
LOW NOTE HORN - BLACK 2 WAY 1082
MEMORY SEAT/MIRROR MODULE C1 - GRAY 26 WAY 1082
MEMORY SEAT/MIRROR MODULE C2 - GRAY 16 WAY 1083
MEMORY SEAT/MIRROR MODULE C3 - WHITE 12 WAY 1083
MEMORY SEAT/MIRROR MODULE C4 - GRAY 2 WAY 1083
MEMORY SET SWITCH - BLACK 2 WAY 1083
MODE DOOR ACTUATOR (ATC) - GRAY 2 WAY 1084
MODE DOOR ACTUATOR (MTC) - GRAY 2 WAY 1084
OVERHEAD CONSOLE (EXCEPT BASE) - BLACK 12 WAY 1084

RADIATOR FAN RELAY NO. 1 (DIESEL) - BLUE 9 WAY 1084
PASSENGER AIRBAG - YELLOW 4 WAY. 1085
PASSENGER BLEND DOOR ACTUATOR (ATC) - GRAY 2 WAY 1085
PASSENGER BLEND DOOR ACTUATOR (MTC) - GRAY 2 WAY. 1085
PASSENGER DOOR LOCK SWITCH - BLACK 3 WAY 1085
PASSENGER FOLDING MIRROR RELAY (BUILT-UP-EXPORT) - BLUE 9 WAY . .1086
PASSENGER SEAT BELT SWITCH - 2 WAY 1086
PASSENGER SEAT BELT TENSIONER - 2 WAY. 1086
POWER LIFTGATE MODULE C1 - BLACK 8 WAY 1086
POWER LIFTGATE MODULE C2 - BLACK/RED 20 WAY 1087
POWER LIFTGATE MOTOR - BLACK 10 WAY 1087
POWERTRAIN CONTROL MODULE C1 (GAS) - GRAY/BLACK 40-WAY 1088
POWERTRAIN CONTROL MODULE C2 (GAS) - GRAY/GRAY 40 WAY 1089
RADIO C1 - 22 WAY. 1090
RADIO C2 - 8 WAY. 1090
RADIO CHOKE - LT. GRAY 2 WAY 1091
REAR A/C-HEATER UNIT (3 ZONE HVAC) - LT. GREEN 10 WAY 1091
REAR AUTO TEMP CONTROL SWITCH (ATC) - BLACK 13 WAY 1091
REAR BLOWER FRONT CONTROL SWITCH (3 ZONE HVAC) - BLACK 8 WAY . .1091
REAR BLOWER MOTOR POWER MODULE C1 (ATC) - RED/BLACK 4 WAY 1092
REAR BLOWER MOTOR POWER MODULE C2 (ATC) - BLACK 2 WAY. 1092
REAR BLOWER REAR CONTROL SWITCH C1 (3 ZONE HVAC) -
BLACK 4 WAY. 1092
REAR BLOWER REAR CONTROL SWITCH C2 (3 ZONE HVAC) -
BLACK 6 WAY. 1092
REAR MODE MOTOR (ATC) - GRAY 2 WAY 1093
REAR TEMPERATURE MOTOR (ATC) - GRAY 2 WAY. 1093
RECIRCULATION DOOR ACTUATOR (ATC) - GRAY 2 WAY 1093
RECIRCULATION DOOR ACTUATOR (MTC) - GRAY 2 WAY. 1093
REMOTE KEYLESS ENTRY ANTENNA (JAPAN) - BLACK 2 WAY. 1094
REMOTE KEYLESS ENTRY MODULE - BLACK/RED 6 WAY 1094
RIGHT B-PILLAR SWITCH (POWER SLIDING DOOR) - GRAY 3 WAY. 1094
RIGHT CINCH/RELEASE MOTOR (POWER SLIDING DOOR) - GRAY 4 WAY. . . .1094
RIGHT CYLINDER LOCK SWITCH - BLACK 2 WAY 1095
RIGHT DOOR SPEAKER - BLACK/RED 6 WAY 1095
RIGHT FRONT DOOR AJAR SWITCH (BASE) - BLACK 2 WAY 1095
RIGHT FRONT DOOR LOCK MOTOR/AJAR SWITCH (EXCEPT BASE) -
BLACK 4 WAY. 1095
RIGHT FULL OPEN SWITCH (POWER SLIDING DOOR) - BLACK 2 WAY. 1096
RIGHT INSTRUMENT PANEL SPEAKER - BLACK 2 WAY 1096
RIGHT POWER MIRROR - BLACK 12 WAY. 1096
RIGHT REAR PILLAR SPEAKER - BLACK 2 WAY 1096
RIGHT REAR SPEAKER - BLACK/RED 6 WAY 1097
RIGHT REMOTE RADIO SWITCH - BLACK 2 WAY 1097
RIGHT SEAT AIRBAG - YELLOW 2 WAY 1097
RIGHT SIDE IMPACT AIRBAG CONTROL MODULE - YELLOW/RED 7 WAY. 1097
RIGHT SLIDING DOOR CONTROL MODULE C1 (POWER SLIDING DOOR) -
BLACK 8 WAY. 1098
RIGHT SLIDING DOOR CONTROL MODULE C2 (POWER SLIDING DOOR) -
BLACK/RED 20 WAY 1098
RIGHT SLIDING DOOR LATCH SENSING SWITCH (POWER SLIDING DOOR) -
BLACK 6 WAY. 1098

RIGHT SLIDING DOOR LOCK MOTOR (POWER SLIDING DOOR) - BLACK 4 WAY 1099
RIGHT SLIDING DOOR LOCK MOTOR/AJAR SWITCH (MANUAL SLIDING DOOR) - BLACK 4 WAY 1099
RIGHT SLIDING DOOR MOTOR (POWER SLIDING DOOR) - BLACK 8 WAY 1099
SENTRY KEY IMMOBILIZER MODULE - BLACK 6 WAY 1099
SIREN (UNITED KINGDOM) - BLACK 4 WAY 1099
THATCHAM ALARM MODULE C1 (UNITED KINGDOM) - BLACK 16 WAY 1100
THATCHAM ALARM MODULE C2 (UNITED KINGDOM) - WHITE 4 WAY 1100
TRANSMISSION CONTROL MODULE (EATX) - BLACK 60 WAY 1101

10.0 SCHEMATIC DIAGRAMS 1103

10.1 AIRBAG SYSTEM 1103
10.2 AUDIO SYSTEM 1104
10.2.1 PREMIUM AUDIO SYSTEM 1104
10.2.2 BASE AUDIO SYSTEM 1105
10.2.3 CD CHANGER 1106
10.2.4 REMOTE RADIO CONTROLS 1107
10.3 AUTOMATIC TEMPERATURE CONTROL SYSTEM 1108
10.3.1 FRONT ATC 1108
10.3.2 REAR ATC 1109
10.4 COMMUNICATION 1110
10.4.1 PCM COMMUNICATION 1111
10.4.2 ECM & CABIN HEATER ASSIST COMMUNICATION - DIESEL ONLY 1111
10.5 DOOR AJAR SYSTEM 1112
10.5.1 DOOR AJAR SYSTEM WITH POWER SLIDING DOORS 1112
10.5.2 DOOR AJAR WITHOUT POWER SLIDING DOORS 1113
10.6 EXTERIOR LIGHTING 1114
10.7 IGNITION SWITCH 1115
10.8 INSTRUMENT CLUSTER 1116
10.8.1 INSTRUMENT CLUSTER — BASE 1116
10.8.2 INSTRUMENT CLUSTER & MESSAGE CENTER 1117
10.9 INTEGRATED POWER MODULE/BODY CONTROL MODULE POWER AND GROUNDS 1118
10.10 INTERIOR LIGHTING 1119
10.11 MANUAL TEMPERATURE CONTROLS 1120
10.11.1 BASE MANUAL TEMPERATURE CONTROL SYSTEM, LHD 1120
10.11.2 BASE MANUAL TEMPERATURE CONTROL SYSTEM, RHD 1121
10.11.3 DUAL-ZONE & THREE-ZONE (FRONT) MANUAL TEMPERATURE CONTROL SYSTEM, LHD 1122
10.11.4 DUAL-ZONE (FRONT) MANUAL TEMPERATURE CONTROL SYSTEM, RHD 1123
10.11.5 THREE ZONE REAR MANUAL TEMPERATURE CONTROL SYSTEM 1124
10.11.6 FRONT BLOWER MOTOR 1125
10.11.7 REAR BLOWER MOTOR 1126
10.11.8 DIESEL CABIN HEATER ASSIT (DCHA) 1127
10.12 MEMORY SYSTEM 1128
10.13 OVERHEAD CONSOLE 1129
10.14 POWER DOOR LOCKS/RKE 1130
10.15 POWER FOLDING MIRROR LHD (EXPORT ONLY) 1131

10.16 POWER FOLDING MIRROR RHD 1132
10.17 POWER LIFTGATE SYSTEM 1133
10.18 POWER SLIDING DOOR SYSTEM 1134
10.18.1 LEFT POWER SLIDING DOOR 1134
10.18.2 RIGHT POWER SLIDING DOOR 1135
10.19 POWER SLIDING DOOR AND LIFTGATE SWITCHES 1136
10.20 REAR DEFOG/HEATED MIRROR/FRONT WIPER DE-ICE 1137
10.21 VEHICLE THEFT SECURITY SYSTEM 1138
10.21.1 THATCHAM ALARM SYSTEM (EXPORT ONLY) 1139
10.22 WIPERS - FRONT AND REAR 1140

11.0 CHARTS AND GRAPHS 1141

11.1 KDB LAB SCOPE PATTERN 1141
11.2 PCI BUS LAB SCOPE PATTERN 1142

NOTES

1.0 INTRODUCTION

The procedures contained in this manual include all the specifications, instructions and graphics needed to diagnose 2002 body system problems. The diagnostics in this manual are based on the failure condition or symptom being present at the time of diagnosis.

Please follow the recommendations below when choosing your diagnostic path.

1. First make sure the DRBIII® is communicating with the appropriate modules; i.e., if the DRBIII® displays a "No Response" or a "Bus ± Signals Open" condition, you must diagnose that first.
2. Read DTC's (diagnostic trouble codes) with the DRBIII®.
3. If no DTC's are present, identify the customer complaint.
4. Once the DTC or customer complaint is identified, locate the matching test in the Table of Contents and begin to diagnose the symptom.

All component location views are in Section 8.0. All connector pinouts are in Section 9.0. All schematics are in Section 10.0. All Charts and Graphs are in Section 11.0.

An * placed before the symptom description indicated a customer complaint.

When repairs are required, refer to the appropriate service information for the proper removal and repair procedure.

Diagnostic procedures change every year. New diagnostic systems may be added: carryover systems may be enhanced. READ THIS MANUAL BEFORE TRYING TO DIAGNOSE A VEHICLE DIAGNOSTIC TROUBLE CODE. It is recommended that you review the entire manual to become familiar with all the new and changed diagnostic procedures.

This book reflects many suggested changes from readers of past issues. After using this book, if you have any comments or suggestions, please fill out the form in the back of this book and mail it back to us.

1.1 SYSTEM COVERAGE

This diagnostic procedures manual covers all 2002 Chrysler Town and Country, Chrysler Voyager and Caravan vehicles. This diagnostic procedures manual also covers both left hand drive (LHD) and right hand drive (RHD) vehicles. There may be some slight differences in the location views of components. If the location views shown are on a LHD vehicle, a RHD vehicle will be symmetrically opposite.

1.2 SIX-STEP TROUBLESHOOTING PROCEDURE

Diagnosis of the body system is done in six basic steps:

- verification of complaint
- verification of any related symptoms
- symptom analysis
- problem isolation
- repair of isolated problem
- verification of proper operation

2.0 IDENTIFICATION OF SYSTEM

The vehicle systems that are part of the "body" system are:

- Airbag
- Audio
- Automatic Temperature Control
- Cabin Heater
- Chime
- Communication
- Door Ajar System
- Electrically heated system
- Exterior lighting
- Instrument Cluster
- Interior Lighting
- Manual Temperature Control
- Memory Seat
- Overhead Console
- Power Door Lock/RKE
- Power Folding Mirrors
- Power Sliding Doors
- Power Liftgate
- Power windows
- Tire Pressure Monitor
- Vehicle Theft Security System (VTSS)
- Windshield Wiper and Washer

3.0 SYSTEM DESCRIPTION AND FUNCTIONAL OPERATION

The body system on the 2002 RS and RG consists of a combination of modules that communicate over the PCI bus (Programmable Communication Interface multiplex system). Through the PCI bus, information about the operation of vehicle components and circuits is relayed quickly to the appropriate

modules. All modules receive all the information transmitted on the bus even though a module may not require all information to perform its function. It will only respond to messages "addressed" to it through binary coding process. This method of data transmission significantly reduces the complexity of the wiring in the vehicle and the size of wiring harnesses. All of the information about the functioning of all the systems is organized, controlled, and communicated by the PCI bus, which is described in the Communication Section of this general information.

3.1 AIRBAG SYSTEM

The 2002 Minivan Airbag System contain the following components: Occupant Restraint Controller (ORC), Airbag Warning Indicator, Clockspring, Driver and Passenger Airbags, Seat belt Tensioners (SBT), Hall-effect Seat Belt Switches (SBS), Left and Right Side Airbag Control Module (SIACM), and Seat (mounted side) Airbags.

The Occupant Restraint Controller (ORC) is a new type of Airbag Control Module (ACM) that supports staged airbag deployment. Staged deployment is the ability to trigger airbag system squib inflators all at once or individually as needed to provide the appropriate restraint for the severity of the impact. The ACM has four major functions: PCI Bus communications, onboard diagnostics, impact sensing, and component deployment. The ACM also contains an energy-storage capacitor. This capacitor stores enough electrical energy to deploy the front airbag components for two seconds following a battery disconnect or failure during an impact. The ORC is secured to the floor panel transmission tunnel below the instrument panel inside the vehicle. The ACM cannot be repaired or adjusted and must be replaced.

The ACM sends and/or receives PCI Bus messages with the Instrument Cluster (MIC), Body Control Module (BCM), and Powertrain Control Module (PCM). Diagnostic trouble codes will be set if the communication with these modules is lost or contains invalid information.

The microprocessor in the ACM monitors the impact sensor signal and the airbag system electrical circuits to determine the system readiness. The ACM also monitors bus messages from both SIACM. If the ACM detects a monitored system fault or SIACM fault, it sends a message to the instrument cluster via PCI bus to turn on the airbag warning indicator. The ACM can set both active and stored diagnostic trouble codes to aid in the diagnosing system problems. See DIAGNOSTIC TROUBLE CODES in this section.

The ACM has an internal accelerometer that senses the rate of vehicle deceleration, which provides verification of the direction and severity of an impact. A pre-programmed decision algorithm in the ACM microprocessor determines when the deceleration rate is severe enough to require airbag system protection. The ACM also uses the driver and front passenger seat belt switch status (buckled or unbuckled) to determine whether or not the seat belt tensioners should deploy. The ACM also uses the crash severity to determine the level of driver and front passenger deployment, low medium or high. When the programmed conditions are met, the ACM sends an electrical signal to deploy the appropriate airbag system components.

WARNING: THE AIRBAG SYSTEM IS A SENSITIVE, COMPLEX ELECTRO-MECHANICAL UNIT. BEFORE ATTEMPTING TO DIAGNOSE OR SERVICE ANY AIRBAG SYSTEM OR RELATED STEERING WHEEL, STEERING COLUMN, OR INSTRUMENT PANEL COMPONENTS YOU MUST FIRST DISCONNECT AND ISOLATE THE BATTERY NEGATIVE (GROUND) CABLE. WAIT TWO MINUTES FOR THE SYSTEM CAPACITOR TO DISCHARGE BEFORE FURTHER SYSTEM SERVICE. THIS IS THE ONLY SURE WAY TO DISABLE THE AIRBAG SYSTEM. FAILURE TO DO THIS COULD RESULT IS ACCIDENTAL AIRBAG DEPLOYMENT AND POSSIBLE PERSONAL INJURY. NEVER STRIKE OR KICK THE AIRBAG CONTROL MODULE, AS IT CAN DAMAGE THE IMPACT SENSOR OR AFFECT ITS CALIBRATION. IF AN AIRBAG CONTROL MODULE IS ACCIDENTALLY DROPPED DURING SERVICE, THE MODULE MUST BE SCRAPPED AND REPLACED WITH A NEW UNIT.

The airbag warning lamp is the only point at which the customer can observe symptoms of a system malfunction. Whenever the ignition key is turned to the run or start position, the MIC performs a lamp check by turning the airbag warning indicator on for 6-8 seconds. After the lamp check, if the indicator turns on, it means that the ACM has checked the system and found it to be free of discernible malfunctions. If the lamp remains on, there could be an active fault in the system or the MIC lamp circuit may be internally shorted to ground. If the lamp comes on and stays on for a period longer than 6-8 seconds then goes off, there is usually an intermittent problem in the system.

3.1.1 DRIVER AIRBAG

The airbag protective trim cover is the most visible part of the driver side airbag system. The protective trim cover is fitted to the front of the

airbag module and forms a decorative cover in the center of the steering wheel. The module is mounted directly to the steering wheel. Located under the trim cover are the horn switch, the airbag cushion, and the airbag cushion supporting components. The airbag module includes a housing to which the cushion and hybrid inflator are attached and sealed. The Minivan is equipped with driver airbag with dual stage inflators that include a small canister of highly compressed argon gas. The ACM uses vehicle crash severity, seat belt switch status (buckled or unbuckled) as inputs to determine the level of airbag deployment. When supplied with the proper electrical signal, the hybrid inflator or inflators discharge the compressed gas it contains directly into the cushion. The airbag cannot be repaired, and must be replaced if deployed or in any way damaged.

WARNING: THE DRIVER AIRBAG MODULE CONTAINS ARGON GAS PRESSURIZED TO OVER 17236.89 Kpa (2500 PSI). DO NOT ATTEMPT TO DISMANTLE AN AIRBAG MODULE OR TAMPER WITH ITS INFLATOR. DO NOT PUNCTURE, INCINERATE, OR BRING INTO CONTACT WITH ELECTRICITY. DO NOT STORE AT TEMPERATURE EXCEEDING 93°C (200°F). REPLACE AIRBAG SYSTEM COMPONENTS ONLY BUT INTERNAL DIFFERENCES MAY RESULT IN INFERIOR OCCUPANT PROTECTION. THE FASTENERS, SCREWS, AND BOLTS ORIGINALLY USED FOR THE AIRBAG SYSTEM COMPONENTS HAVE SPECIAL COATINGS AND ARE SPECIFICALLY DESIGNED FOR THE AIRBAG SYSTEM. THEY MUST NEVER BE REPLACED WITH ANY SUBSTITUTES. ANY TIME A NEW FASTENER IS NEEDED, REPLACE IT WITH THE CORRECT FASTENERS PROVIDED IN THE SERVICE PACKAGE OR SPECIFIED IN THE MOPAR PARTS CATALOG.

CAUTION: Deployed Front Air Bags may or may not have live pyrotechnic material within the air bag inflator. Do not dispose of 2002 Model Year Driver and Passenger Airbags unless you are sure of complete deployment. Please refer to the Hazardous Substance Control System for Proper Disposal. Dispose of deployed air bags in a manner consistent with state, provincial, local, and federal regulations. Use the following table to identify the status of the Airbag Squib.

AIRBAG SQUIB STATUS

(1) Using a DRBIII® read Airbag DTC's **If** the following active codes are present:

ACTIVE DTC	CONDITIONS	SQUIB STATUS
Driver Squib 1 open Driver Squib 2 open	Check the stored DTC's **AND IF** the stored minutes for both are within 15 minutes of each other.	Both Driver Squib 1 and 2 were used.
Driver Squib 1 open Driver Squib 2 open	Check the stored DTC's **AND IF** the stored minutes for Driver Squib 2 open is GREATER than the stored minutes for Driver Squib 1 by 15 minutes or more.	Driver Squib 1 was used; Driver Squib 2 is live.
Driver Squib 1 open Driver Squib 2 open	Check the stored DTC's **AND IF** the stored minutes for Driver Squib 1 open is GREATER than the stored minutes for Driver Squib 2 by 15 minutes or more.	Driver Squib 1 is live; Driver Squib 2 was used.
If Driver Squib 1 open	**AND IF** Driver Squib 2 opens is NOT an active code.	Driver Squib 1 was used; Driver Squib 2 is live.
If Driver Squib 2 open	**AND IF** Driver Squib 1 open is NOT an active code.	Driver Squib 1 is live; Driver Squib 2 was used.

If neither of the following codes is an active code:

ACTIVE DTC	SQUIB STATUS
Driver squib 1 open	Status of Airbag is
Driver Squib 2 open	Unknown.

3.1.2 CLOCKSPRING

The clockspring is mounted on the steering column behind the steering wheel. This assembly consist of a plastic housing which contains a flat, ribbon-like, electrically conductive tape that winds and unwinds with the steering wheel rotation. The clockspring is used to maintain a continuous electrical circuit between the instrument panel wiring and the driver airbag, the horn, and the vehicle speed control switches if equipped. The clockspring must be properly centered when it is reinstalled on the steering column following any service procedure, or it could be damaged. The clockspring cannot be repaired and it must be replaced.

3.1.3 PASSENGER AIRBAG

The airbag door in the instrument panel top cover the glove box is the most visible part of the passenger side airbag system. The airbag door has a living hinge at the top, which is secured to the instrument panel top cover. Located under the airbag door is the airbag cushion and its supporting components. The airbag module includes a housing to which the cushion and hybrid inflators are attached and sealed. The 2001 Minivan is equipped with front passenger airbag with dual stage inflators that include a small canister of highly compressed argon gas. The ACM uses vehicle crash severity, front passenger seat belt switch status (buckled or unbuckled) inputs to determine the level of airbag deployment. When supplied with the proper electrical signal, the hybrid inflator or inflators discharge the compressed gas it contains directly into the cushion. The airbag cannot be repaired, and must be replaced if deployed or in any way damaged.

WARNING: THE PASSENGER AIRBAG MODULE CONTAINS ARGON GAS PRESSURIZED TO 17236.89 Kpa (2500 PSI). DO NOT ATTEMPT TO DISMANTLE AN AIRBAG MODULE OR TAMPER WITH ITS INFLATOR. DO NOT PUNCTURE, INCINERATE, OR BRING INTO CONTACT WITH ELECTRICITY. DO NOT STORE AT TEMPERATURE EXCEEDING 93°C (200°F). REPLACE AIRBAG SYSTEM COMPONENTS ONLY WITH PARTS SPECIFIED IN THE MOPAR PARTS CATALOG. SUBSTITUTE PARTS MAY APPEAR INTERCHANGEABLE, BUT INTERNAL DIFFERENCES MAY RESULT IN INFERIOR OCCUPANT PROTECTION. THE FASTENERS, SCREWS, AND BOLTS ORIGINALLY USED FOR THE AIRBAG SYSTEM COMPONENTS HAVE SPECIAL COATINGS AND ARE SPECIFICALLY DESIGNED FOR THE AIRBAG SYSTEM. THEY MUST NEVER BE REPLACED WITH ANY SUBSTITUTES. ANY TIME A NEW FASTENER IS NEEDED, REPLACE IT WITH THE CORRECT FASTENERS PROVIDED IN THE SERVICE PACKAGE OR SPECIFIED IN THE MOPAR PARTS CATALOG.

CAUTION: Deployed Front Air Bags may or may not have live pyrotechnic material within the air bag inflator. Do not dispose of 2002 Mopar Year Driver and Passenger Airbags unless you are sure of complete deployment. Please refer to the Hazardous Substance Control System for Proper Disposal. Dispose of deployed air bags in a manner consistent with state, provincial, local, and federal regulations. Use the following table to identify the status of the Airbag Squib.

AIRBAG SQUIB STATUS

(1) Using a DRBIII® read Airbag DTC's **If** the following active codes are present:

ACTIVE DTC	CONDITIONS	SQUIB STATUS
Passenger Squib 1 open Passenger Squib 2 open	Check the stored DTC's **AND IF** the stored minutes for both are within 15 minutes of each other.	Both Passenger Squib 1 and 2 were used.
Passenger Squib 1 open Passenger Squib 2 open	Check the stored DTC's **AND IF** the stored minutes for Passenger Squib 2 open is GREATER than the stored minutes for Passenger Squib 1 by 15 minutes or more.	Passenger Squib 1 was used; Passenger Squib 2 is live.
Passenger Squib 1 open Passenger Squib 2 open	Check the stored DTC's **AND IF** the stored minutes for Passenger Squib 1 open is GREATER than the stored minutes for Driver Squib 2 by 15 minutes or more.	Passenger Squib 1 is live; Driver Squib 2 was used.
If Passenger Squib 1 open	**AND IF** Passenger Squib 2 open is NOT an active code.	Passenger Squib 1 was used; Passenger Squib 2 is live.
If Passenger Squib 2 open	**AND IF** Passenger Squib 1 open is NOT an active code.	Passenger Squib 1 is live; Passenger Squib 2 was used.

If neither of the following codes is an active code:

ACTIVE DTC	SQUIB STATUS
Passenger squib 1 open	Status of Airbag is
Passenger squib 2 open	Unknown.

3.1.4 SEAT BELT TENSIONER (SBT)

The driver and passenger seat belt (buckle) tensioners are mounted to the inboard side of the front seats. The seat belt buckle and seat belt switch are connected directly to the seat belt tensioner cable. At the onset of an impact event the ACM uses the seat belt tensioner to rapidly retract the seat belt buckles. With the slack removed, the occupant's forward motion in an impact will be reduced as will the likelihood of contacting interior components. The seat belt tensioner cannot be removed, the occupant's forward motion in an impact will be reduced as will the likelihood of contacting repaired, if damaged or defective it must be replaced. The ACM continuously monitors the resistance of the seat belt tensioner circuits an open or shorted conditions.

3.1.5 SEAT BELT SWITCHES (SBS)

The hall-effect driver and front passenger seat belt switches provide the seat belt status, buckled or unbuckled, via hardwired inputs to the ACM. If the seat belt switches are damaged or defective the seat belt tensioner must be replaced. The ACM continuously monitors the seat belt switch circuits for an open or shorted conditions.

3.1.6 SIDE IMPACT AIRBAG CONTROL MODULE (SIACM)

Supplemental driver and front passenger seat airbags provide side impact protection for the front seat occupants. Each side airbag has it own side impact airbag control module (SIACM) to provide independent impact sensing and deployment. SIACM are located on the left and right B post just above the seat belt retractor. Both the left and right side impact airbag control modules (SIACM) use the same part number. However, for proper PCI bus operation each SIACM must have a unique module identification. To provide the unique module identification for both, left and right, the SIACM software looks for a ground on cavity 5 of the SIACM connector. If cavity 5 is grounded the SIACM communicates as a left SIACM otherwise it communicates as a right SIACM. The SIACM performs self diagnostics and circuit tests to determine if the system is functioning properly. If the test finds a problem the SIACM will set both active and stored diagnostic trouble codes. If a DTC is active the

SIACM will request that the airbag warning lamp be turned on. The results of the system test are transmitted on the PCI Bus to the ACM once each second or on change in lamp state. If the warning lamp status message from the either SIACM contains a lamp on request, the ACM will set an active DTC. At the same time as the DTC is set the ACM sends a PCI Bus message to the mechanical instrument cluster (MIC) requesting the airbag warning lamp be turned on. Observe all ACM warning and caution statements when servicing or handling the SIACM. SIACM are not repairable and must be replaced if they are dropped.

WARNING: THE AIRBAG SYSTEM IS A SENSITIVE, COMPLEX ELECTRO-MECHANICAL UNIT. BEFORE ATTEMPTING TO DIAGNOSE OR SERVICE ANY AIRBAG SYSTEM OR RELATED STEERING WHEEL, STEERING COLUMN, OR INSTRUMENT PANEL COMPONENTS YOU MUST FIRST DISCONNECT AND ISOLATE THE BATTERY NEGATIVE (GROUND) CABLE. WAIT TWO MINUTES FOR THE SYSTEM CAPACITOR TO DISCHARGE BEFORE FURTHER SYSTEM SERVICE. THIS IS THE ONLY SURE WAY TO DISABLE THE AIRBAG SYSTEM. FAILURE TO DO THIS COULD RESULT IN ACCIDENTAL AIRBAG DEPLOYMENT AND POSSIBLE PERSONAL INJURY. NEVER STRIKE OR KICK THE AIRBAG CONTROL MODULE, AS IT CAN DAMAGE THE IMPACT SENSOR OR AFFECT ITS CALIBRATION. IF AN AIRBAG CONTROL MODULE IS ACCIDENTALLY DROPPED DURING SERVICE, THE MODULE MUST BE SCRAPPED AND REPLACED WITH A NEW UNIT.

The airbag warning lamp is the only point at which the customer can observe symptoms of a system malfunction. Whenever the ignition key is turned to the run or start position, the MIC performs a lamp check by turning the airbag warning indicator on for 6-8 seconds. After the lamp check, if the indicator turns on, it means that the ACM has checked the system and found it to be free of discernible malfunctions. If the lamp remains on, there could be an active fault in the system or the MIC lamp circuit may be internally shorted to ground. If the lamp comes on and stays on for a period longer than 6-8 seconds then goes off, there is usually an intermittent problem in the system.

3.1.7 SEAT AIRBAGS (SAB)

The left and right seat airbags are located in the outboard end of the front seat backs. The airbag module contains a bag, an inflator (a small canister of highly compressed argon gas) and a mounting bracket. The seat airbags cannot be repaired and must be replaced if deployed or in any way damaged. When supplied with the proper electrical signal the inflator seals the hole in the airbag cushion so it can discharge the compressed gas it contains directly into the cushion. Upon deployment, the seat back trim cover will tear open and allow the seat airbag to fully deploy between the seat and the door.

WARNING: SEAT AIRBAG CONTAINS ARGON GAS PRESSURIZED TO OVER 17236.89 Kpa (2500 PSI). DO NOT ATTEMPT TO DISMANTLE AN AIRBAG MODULE OR TAMPER WITH ITS INFLATOR. DO NOT PUNCTURE, INCINERATE, OR BRING INTO CONTACT WITH ELECTRICITY. DO NOT STORE AT TEMPERATURE EXCEEDING 93°C (200°F). REPLACE AIRBAG SYSTEM COMPONENTS ONLY WITH PARTS SPECIFIED IN THE CHRYSLER MOPAR PARTS CATALOG. SUBSTITUTE PARTS MAY APPEAR INTERCHANGEABLE, BUT INTERNAL DIFFERENCES MAY RESULT IN INFERIOR OCCUPANT PROTECTION. THE FASTENERS, SCREWS, AND BOLTS ORIGINALLY USED FOR THE AIRBAG SYSTEM COMPONENTS HAVE SPECIAL COATINGS AND ARE SPECIFICALLY DESIGNED FOR THE AIRBAG SYSTEM. THEY MUST NEVER BE REPLACED WITH ANY SUBSTITUTES. ANY TIME A NEW FASTENER IS NEEDED, REPLACE IT WITH THE CORRECT FASTENERS PROVIDED IN THE SERVICE PACKAGE OR SPECIFIED IN THE MOPAR PARTS CATALOG.

3.1.8 DIAGNOSTIC TROUBLE CODES

Airbag diagnostic trouble codes consist of active and stored codes. If more than one code exists, diagnostic priority should be given to the active codes. Each diagnostic trouble code is diagnosed by following a specific testing procedure. The diagnostic test procedures contain step-by-step instructions for determining the cause of the trouble codes. It is not necessary to perform all of the tests in this book to diagnose an individual code. Always begin by reading the diagnostic trouble codes using the DRBIII®. Always begin diagnostic with the Table of Contents section 7.0. This will direct you to the specific test(s) that must be performed. Active diagnostic trouble codes for the airbag system are not permanent and will change the moment the reason

for the code is corrected. In certain test procedures within this manual, diagnostic trouble codes are used as a diagnostic tool.

3.1.9 SPECIAL TOOLS

Some airbag diagnostic test use special tools, 8310 and 8443 airbag load tool, for testing squib circuits. The load tools contain fixed resistive loads, jumpers and adapters. The fixed loads are connected to cables and mounted in a storage case. The cables can be directly connected to some airbag system connectors. Jumpers are used to convert the load tool cable connectors to the other airbag system connectors. The adapters are connected to the module harness connector to open shorting clips and protect the connector terminal during testing. When using the load tool follow all of the safety procedures in the service information for disconnecting airbag system components. Inspect the wiring, connector and terminals for damage or misalignment. Substitute the airbag load tool in place of a Driver or Passenger Airbag, seat airbag, clockspring, or seat belt tensioner (use a jumper if needed). Then follow all of the safety procedures in the service information for connecting airbag system components. Read the module active DTC's. If the module reports NO ACTIVE DTC's the defective component has been removed from the system and should be replaced. If the DTC is still active, continue this process until all component in the circuit have been tested. Then disconnect the module connector and connect the matching adapter to the module connector. With all airbags disconnected and the adapter installed the squib wiring can be tested for open and shorted conditions.

3.1.10 ACTIVE CODES

The code becomes active as soon as the malfunction is detected or key-on, whichever occurs first. An active trouble code indicates an on-going malfunction. This means that the defect is currently there every time the airbag control module checks that circuit or component. It is impossible to erase an active code. Active codes automatically erase by themselves when the reason for the code has been corrected. With the exception of the warning lamp trouble codes or malfunctions, when a malfunction is detected, the airbag lamp remains lit for a minimum of 12 seconds or as long as the malfunction is present.

3.1.11 STORED CODES

Airbag codes are automatically stored in the ACM's memory as soon as the malfunction is detected. The exception is the Loss of Ignition Run Only code which is an active code only. A stored code indicates there was an active code present at some time. However, the code currently may not be present as an active code, although another code could be active. When a trouble code occurs, the airbag warning indicator illuminates for 12 seconds minimum (even if the problem existed for less than 12 seconds). The code is stored, along with the time in minutes it was active, and the number of times the ignition has been cycled since the problem was last detected. The minimum time shown for any code will be one minute, even if the code was actually present for less than one minute. Thus, the time shown for a code will be one minute, even if the code was actually present for less than one minute. Thus, the time shown for a code that was present for two minutes 13 seconds, for example, would be three minutes. If a malfunction is detected a diagnostic trouble code is stored and will remain stored. When and if the malfunction ceases to exist, an ignition cycle count will be initiated for that code. If the ignition cycle count reaches 100 without a reoccurrence of the same malfunction, the diagnostic trouble code is erased and that ignition cycle counter is reset to zero. If the malfunction reoccurs before the count reaches 100, then the ignition cycle counter will be reset and diagnostic trouble code will continue to be a stored code. If a malfunction is not active while performing a diagnostic test procedure, the active code diagnostic test will not locate the source of the problem. In this case, the stored code can indicate an area to inspect. If no obvious problems are found, erase stored codes, and with the ignition on wiggle the wire harness and connectors, rotate the steering wheel from stop to stop. Recheck for codes periodically as you work through the system. This procedure may uncover a malfunction that is difficult to locate.

3.2 AUDIO SYSTEM

Some of the radios are on the PCI Bus system. The PCI Bus inputs into the radio are used for VF dimming, remote steering wheel controls and cabin EQ preference. PCI Bus outputs from the radio are used for the Name Brand Speaker (NBS) relay activation, as well as cabin EQ preference.

The RBB and RBK radios have the capability of containing multiple vehicle unique equalization curves (cabin EQ preferences) within the radio. These curves will reside in the radio's flash memory. The radio is capable of storing up to 20 unique equalization curves. The latent curves can be selected via the Front Control Module transmitting a PCI Bus message to the radio in response to a radio request for equalization message. Upon receipt of a valid equalization select message response, the radio will switch to output the corresponding equalization curve.

All the radios, except the RAS, are capable of displaying faults and allowing certain actuation tests through the use of the DRBIII®. When attempting to perform PCI Bus diagnostics, the first step is to identify the radio in use in the vehicle.

When trouble shooting output shorts or "output" error messages, the following applies:

On radios without an external amplifier, the term output refers to the path between the radio and the speaker. This type of circuit can be monitored all the way through the speaker connections by the radio assembly. When the radio displays a shorted output DTC with this type of system, the speaker, radio, or wiring could be at fault.

On radios with an external amplifier, the term "output" refers to the circuit between the radio connector and the amplifier. The radio is capable of monitoring only this portion and can tell nothing about the circuit between the amplifier and the speakers. Consequently, a shorted output DTC on this type of system would only refer to this circuit. A faulty speaker could not cause this DTC.

3.2.1 REMOTE RADIO CONTROLS

These radios can be controlled via remote radio switches (optional). These switches are located on the back side of the steering wheel. They control mode, preset, seek up, seek down, volume up and volume down functions.

These functions are inputs to the Body Control Module and can be read with the DRBIII® under "body computer". The switches are a multiplexed signal to the BCM. The radio control MUX circuit is a 5 volt line that is pulled to ground through different value resistors built into the switches. This causes a voltage drop to be seen by the BCM and it sends a specific message to the radio on the PCI Bus circuit. The radio then responses to the message.

This circuit is fairly simple to troubleshoot. The circuit must be complete from the switches in the steering wheel to the BCM. The ground must be complete so that the switches can cause the voltage drop for the BCM to see. The circuit passes through the clockspring so continuity through this devise must be verified.

3.2.2 CD CHANGER

The new in-dash CD Changer is designed to fit into the existing cubby bin in the center stack. This new cartridge-less CD Changer is controlled by your radio, and allows you to individually load up to four discs at a time. However, due to its compact design, the CD Changer can only carry out one operation at a time. For example, you can not load a new disc while playing another at the same time. Each operation happens sequentially.

The radio unit installed with your system provides control over all features of the CD Changer with the exception of the CD load and eject functions, which are controlled by buttons located on the front of the CD Changer. The radio also supplies the power, ground, PCI Bus, left and right speaker output through a single DIN cable. All features you would expect, such as Disc Up/Down, Track Up/Down, Random and Scan are controlled by the radio, which also displays all relevant CD Changer information on the radio display.

The CD Changer contains a Load/Eject button and an indicator light for each of the four disc positions. The individual light indicates whether a CD is currently loaded in that particular chamber of the CD Changer. Pressing the individual Load/Eject button for a particular chamber will eject a disc currently present in that chamber. If the chamber is currently empty, actuating the Load/Eject button will position that chamber to receive and load a new disc in that chamber.

3.3 BODY CONTROL MODULE

The body control module (BCM) supplies vehicle occupants with visual and audible information and controls various vehicle functions. To provide and receive information, the module is interfaced to the vehicle's serial bus communications network (PCI). This network consists of the powertrain control module (PCM), the engine control module (ECM) diesel, the transmission control module (TCM), the mechanical instrument cluster (MIC), the front control module (FCM), the airbag control module (ACM), the compass/mini-trip (CMTC), the electronic vehicle information center (EVIC), the controller antilock brake (CAB), the HVAC control module (ATC & MTC), the power sliding door (Left & Right) modules (PSD), the adjustable pedals module (APM), the power liftgate module (PLG), the Audio system, the side impact airbag control (left & right) modules (SIACM), the memory seat/mirror module (MSMM), the RKE/thatcham alarm module (export) and the sentry key immobilizer module (SKIM). The BCM is operational when battery power is supplied to the module.

The body control module provides the following features:

- Power Door Locks
- Automatic Door Lock
- Door Lock Inhibit
- Central Locking (with VTSS Only)
- Battery Protection
- The BCM will automatically turn off all exterior lamps after 3 minutes and all interior lamps after

15 minutes after the ignition is turned off, if they are not turned off by the driver.

- Chime Driver
- Compass/Minitrip Support
- Interior Lighting (Courtesy/Reading Lamps)
- BCM Diagnostic Reporting
- Electronic Liftgate Release (with Power Door Locks)
- Exterior Lighting
- Headlamp Time Delay (with/without Autoheadlamps)
- Automatic Headlamps (with electrochromatic mirror)
- Illuminated Entry
- Fade to Off

This feature dims the interior lighting (courtesy lamps) gradually if the BCM does not receive any new inputs that would cause the interior lamps to remain on.

- PWM Instrument Panel Dimming
- Door Lock Inhibit

This feature disables the door lock functions if the key is in the ignition and either front door is ajar. Pressing the RKE lock/unlock button under these conditions, result in normal lock/unlock activation.

- Power Sliding Door Switch Inputs

The BCM has 4 switch inputs for the power sliding door feature: Located in the overhead console are the Left and Right side sliding door switches to activate either or both sliding doors under the proper conditions. Also there are B-Pillar switches located on the Left and Right B-pillar posts.

- Power Liftgate Switch Input

The BCM has 1 Liftgate switch input located in the overhead console

- Power Lockout Switch Input

The BCM has 1 Lockout switch that when enabled will disable the B-Pillar sliding door switches from activating either sliding door when depressed. When replacing a body control module there are 2 modules available, a Base and a Midline. The Midline controller is used on vehicles that have Power Door Locks. If a vehicle is equipped with the Vehicle Theft Security System, the midline controller becomes a premium when the theft feature is enabled.

NOTE: Do not swap the body control module between vehicles or body control modules off the shelf.

Engineering does not recommend that service, dealers or the plant swap Body Control Modules (BCM) between vehicles or off the shelf. The BCM has internal diagnostic capability that assists in diagnosing the system. When an “Open” or a “Short” circuit exists, the diagnostic tool can be used to read the BCM codes. The codes are very descriptive in identifying the appropriate feature that has faulted.

3.4 CHIME WARNING SYSTEM

The BCM monitors the door/liftgate ajar switches, multifunction switches, headlight switch, ignition switch, PCI bus, and the diagnostic tool to perform various chime operations. The BCM uses a low-side driver to control the chime located in the cluster.

The chime system provides the Driver with warning chimes for:

- Seat belt
- Exterior lights on
- Key-in Ignition
- Key-in Accessory
- Engine temperature critical
- Low washer fluid
- Turn signals on
- Dome light on
- Low oil pressure
- Any warning lamp announcement
- *High-speed warning Gulf Coast Countries (GCC) only*

The output sound intensity of the chime is approximately 72 decibels.

3.4.1 CHIME PRIORITY

The following list indicates the priority of the chime when more than one chime is active at the same time:

- Seat belt warning
- *High-speed warning Gulf Coast Countries (GCC) only*
- Turn signal on
- Chime request
- Warning lamp announcement

The cluster is responsible to set priority on all warning lamp announcement chimes.

3.4.2 CHIME ON CONDITIONS

The following is a list of the chime warnings and when they will sound.

Driver's Seat belt Unbuckled: Sounds for approximately 6±2 seconds when the igntion is turned on and driver's seat belt is not buckled, as a reminder to the driver to buckle the seat belt.

Exterior Lights On: Ignition is in the lock position, the driver door is ajar, and the headlight switch is left in any position, other than auto or off. The chime will sound as a warning to the driver until one of the above conditions is removed or until the battery protection time of 3 minutes has expired.

Key-In Ignition: Ignition is in the lock position, driver door is ajar and the key is in the ignition. The chime will sound until one of the above conditions is removed or until the battery protection time of 15 minutes has expired.

Turn Signal On: When the BCM detects a turn signal input continuously for 1.0mile/0.6km and the vehicle speed is greater than 15 mph/ 24kph, the chime will sound until the specific turn signal is cancelled.

Dome Lights On: Ignition is in the lock position, driver door ajar, and the dome light switch is left in the on position. The chime will sound until one of the above conditions is removed or until the battery protection time of 15 minutes has expired.

Low Oil Pressure: The chime will sound when the engine is operating and the oil pressure drops below 4psi/27.5kPa.

Engine Temperature Critical: The chime will sound when the engine is operating and the coolant temperature exceeds 252°F/ 122C *or 234°/112C(diesel)*. The chime is continuous at 257°F/ 125C and will chime for 4 minutes and stop if the temperature drops below 255°F/123C.

Low Washer Fluid The chime will sound when the washer fluid drops below a specific level.

Warning Lamp Announcement: A chime will sound to alert the driver to scan the instrument panel and overhead console to see which warning lamp is illuminated. The door/liftgate ajar warning lamp will appear without a chime if the vehicle is running and a door or the liftgate is opened. A chime will sound if the door or liftgate is still open and the vehicle speed is greater than 4mph/6kph.

High-speed warning Gulf Coast Countries (GCC) only *The chime will sound, acting as a warning to the driver that the vehicle speed has exceed 75mph±2/120kph±3.*

3.4.3 WARNING LAMP ANNOUNCEMENT

Low Fuel Lamp: The cluster will request a single chime after the indicator is illuminated.

Volt Lamp: The cluster will request a single chime after the indicator is illuminated.

Oil Pressure Lamp: The cluster will request a single chime after illuminating the indicator above 450rpm vehicle operation.

Headlight Out Lamp: The cluster will request a single chime after the indicator is illuminated.

Liftgate Ajar Lamp: The BCM determines when to chime for liftgate ajar.

Fasten Seat Belt Lamp: The BCM will request five chimes from the MIC when the ignition is turned to the unlock/run/start positions if the driver seat belt is not buckled.

Check Engine Lamp: The cluster will request a single chime after the indicator is illuminated.

Low Washer Fluid Lamp: The cluster will request a single chime after the indicator is illuminated.

Engine Temperature Lamp: The cluster will request a single chime when the indicator is first illuminated at 252°F/122C.

3.4.4 OTHER CHIME ON CONDITIONS

Bulb Check: The chime will sound three times during bulb check.

Programming of an Additional Key Fob: A double cluster chime will sound, which signals that the program mode has been initiated.

Bulb Check:	The chime will sound three times during bulb check.
Programming for Rolling Door Locks:	When the programming has been completed, a single tone from the chime system, will occur.

3.5 COMMUNICATION

The Programmable Communication Interface or PCI Bus is a single wire multiplexed network capable of supporting binary encoded messages shared between multiple modules. The PCI bus circuit is identified as D25 and is white with a violet tracer. Additional tracer colors may be added to the violet in order to distinguish between different module connections. The modules are wired in parallel. Connections are made in the harness using splices.

One splice called the Diagnostic Junction Port, serves as the "Hub" of the bus. The Diagnostic Junction Port provides an access point to isolate most of the modules on the bus in order to assist in diagnosing the circuit. The following modules are used on the RS/RG:

- Body Control Module
- Adjustable Pedals Module
- Front Control Module
- Airbag Control Module
- Left Side Impact Airbag Control Module
- Right Side Impact Airbag Control Module
- Controller Antilock Brake
- Powertrain Control Module (Gas)
- Engine Control Module (Diesel)
- Radio
- CD Changer
- Transmission Control Module
- Automatic Temperature Control Module
- A/C Heater Control Module (MTC)
- Sentry Key Immobilizer Module
- Memory Seat/Mirror Module
- Overhead Console
- Mechanical Instrument Cluster
- Left Sliding Door Control Module
- Right Sliding Door Control Module
- RKE/Thatcham Alarm Module (Export)
- Power Liftgate Module

Each module provides its own bias and termination in order to transmit and receive messages. The bus voltage is at zero volts when no modules are transmitting and is pulled up to about seven and a half volts when modules are transmitting.

The bus messages are transmitted at a rate averaging 10800 bits per second. Since there is only voltage present when the modules transmit and the message length is only about 500 milliseconds, it is ineffective to try and measure the bus activity with a conventional voltmeter. The preferred method is to use the DRBIII® lab scope. The 12v square wave selection on the 20-volt scale provides a good view of the bus activity. Voltage on the bus should pulse between zero and about seven and a half volts. Refer to the following figure for some typical displays.

The PCI Bus failure modes are broken down into two categories. Complete PCI Bus Communication Failure and individual module no response. Causes of complete PCI Bus Communication Failure include a short to ground or battery on the PCI circuit. Individual module no response can be caused by an open circuit at either the Diagnostic Junction Port or the module, or an open battery or ground circuit to the affected module.

Symptoms of a complete PCI Bus Communication Failure would include but are not limited to:

- All gauges on the MIC stay at zero
- All telltales on MIC illuminate
- MIC backlighting at full intensity
- Dashed lines in the overhead console ambient temperature display
- No response received from any module on the PCI bus (except the PCM/ECM)
- No start (if equipped with Sentry Key Immobilizer)

Symptoms of Individual module failure could include any one or more of the above. The difference would be that at least one or more modules would respond to the DRBIII®.

Diagnosis starts with symptom identification. If a complete PCI Bus Communication Failure is suspected, begin by identifying which modules the vehicle is equipped with and then attempt to get a response from the modules with the DRBIII®. If any modules are responding, the failure is not related to the total bus, but can be caused by one or more modules PCI circuit or power supply and ground circuits. The DRBIII® may display "BUS +/- SIGNAL OPEN" or "NO RESPONSE" to indicate a communication problem. These same messages will be displayed if the vehicle is not equipped with that particular module. The CCD error message is a default message used by the DRBIII® and in no way indicates whether or not the PCI bus is operational. The message is only an indication that a module is either not responding or the vehicle is not equipped.

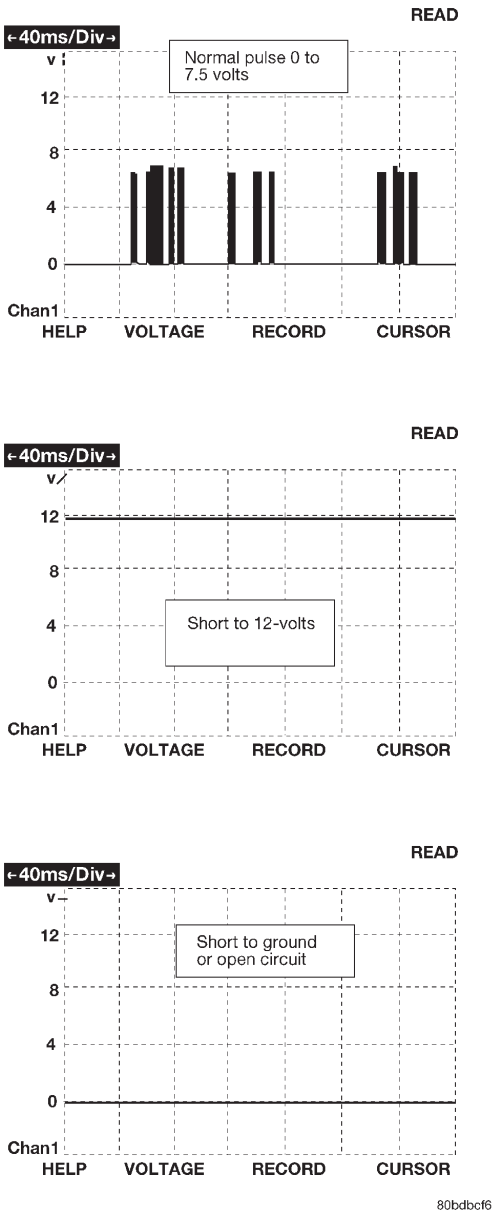

3.6 DOOR AJAR SYSTEM

The door ajar and liftgate ajar states are used as inputs for the Body Control Module (BCM). The BCM uses these inputs to determine exactly what position the doors and liftgate are in. The DRBIII® will display the state of the door ajar and the liftgate ajar switches in Inputs/Outputs. It's important to note, that when any door, or the liftgate is closed, the switch state on the DRBIII® will show OPEN. When any door, or the liftgate is open the switch state on the DRBIII® will show CLOSED. During diagnosis, if a door or the liftgate is closed and the DRBIII® displays the switch state as CLOSED, it indicates a shorted ajar circuit. If the door or the liftgate is open and the DRBIII® displays the switch state as OPEN, it indicates an open ajar circuit.

3.7 EXTERIOR LIGHTING SYSTEM

3.7.1 HEADLAMP POWER

The headlamp switch is a direct input to the BCM. The BCM sends a BUS message to the FCM informing it of a headlamp switch status change. The FCM then turns on power to the headlamps through four "fuseless" circuits. These circuits are electronically controlled and continuously monitored for malfunctions. Power is supplied to each filament in a separate circuit. For vehicles equipped with daytime running Lamps (DRL), the FCM electronically steps down the headlamp voltage to provide the desired illumination.

3.7.2 HEADLAMP SWITCH

The Headlamp Switch uses a multiplexed (MUX) circuit to the Body Control Module (BCM). The Headlamp Switch controls the Fog lamp relay, Park lamps and the Low and High headlamps. The BCM then sends a signal through the PCI Bus line to the FCM as to what state the switch has selected. The FCM energizes the high side output drivers to turn ON the desired lamps.

3.7.3 PARK LAMP RELAY

The park lamp switch is a direct input to the BCM. The BCM sends a BUS message to the FCM informing it to turn on the park lamp relay. The park lamp relay is then powered through low side control of the FCM. This circuit is electronically controlled and continuously monitored for malfunctions.

3.7.4 FOG LAMP RELAY

The fog lamp switch is a direct input to the BCM. The BCM sends a BUS message to the FCM informing it to turn on the fog lamp relay. The fog lamp relay is then powered through low side control of the FCM. This circuit is electronically controlled and continuously monitored for malfunctions. Fog lamp functionality is not equipped on all vehicles. The FCM "learns" that the vehicle is equipped with fog lamps by reading the BCM BUS message.

3.7.5 FOG LAMPS

The BCM controls the operation of the fog lamp relay that turns the fog lamps ON and OFF. The Fog lamps can only be ON when the park and low beams are ON. If the high beams are switched ON then the Fog lamps will be automatically turned OFF.

3.7.6 EXTERIOR LIGHTING BATTERY SAVER

The BCM monitors the status of, and controls, the Park Lamps, Headlamps and Fog Lamp relays. If any exterior lamps are left ON after the ignition is turned OFF, the BCM will turn them OFF after 3 minutes.

3.7.7 AUTO HEADLAMPS

This feature is available on vehicles equipped with both the Electrocromatic Mirror (ECM) and the Compass/Mini-Trip Computer (CMTC). When the BCM detects a day/night signal from the CMTC, an ECM is present and Auto Headlamp mode is selected.

3.8 FRONT CONTROL MODULE

The Front Control Module (FCM) is an electrical control and interface center located in the engine compartment. When it is mated to the Power Distribution Center (PDC), it is referred to as the Integrated Power Module (IPM). The IPM, with its fuses and relays provides power and signal distribution throughout most of the vehicle. The FCM receives both hard wire and digital electronic inputs from the vehicle electrical system through the PDC. Based on these inputs and the ignition switch position, it provides direct power feeds and relay control to some of the vehicles' most critical electrical systems.

The Front Control Module provides the following features:

Controlled power feeds:

- Front airbag system
- Side airbag system
- Headlamp power
- EATX module power (4 speed only)
- Front washer motor
- Rear washer motor
- Cabin Heater
- Brake shift interlock system

Relay controls:

- Fog lamp relay (when equipped)
- Park lamp relay
- Front wiper on relay
- Front wiper high/low relay
- Accessory relay
- Horn relay
- Front & rear blower relay
- Name brand speakers (NBS) relay
- Electronic back light (EBL) run only relay

Electrical inputs:

- Headlamp battery supplies 1 & 2
- Module battery supply
- Power ground
- Ignition switch RUN or START position status
- Ignition switch START only status
- PCI Bus
- Stop lamp switch
- Horn switch
- Back-up switch
- Wiper park switch
- Washer fluid level switch
- Brake fluid level switch
- Ambient temperature sensor
- Right park lamp outage
- Left park lamp outage
- Battery IOD
- Battery (+) connection detection
- Flash reprogramming voltage

3.8.1 CONTROLLED POWER FEEDS

Front airbag system

The FCM provides power to the Occupant Restraint Control (ORC) system through two "fuseless" circuits (ORC RUN/START, and ORC RUN only). These circuits are electronically controlled and continuously monitored for malfunctions. Power is supplied while the ignition switch is in the RUN and START positions on pin 48 of the FCM connector, and in the RUN only position on pin 29.

Side airbag system

The FCM provides power to the Side Impact Airbag Control Module (SIACM) system through one "fuseless" circuit. This circuit is electronically controlled and continuously monitored for malfunctions. Power is supplied in the ignition RUN and START positions on pin 28 of the FCM connector.

Headlamp power

The headlamp switch is a direct input to the BCM. The BCM sends a PCI Bus message to the FCM informing it of a headlamp switch status change. The FCM then turns on power to the headlamps through four "fuseless" circuits. These circuits are electronically controlled and continuously monitored for malfunctions. Power is supplied to each filament in a separate circuit (RH low on pin 6, RH high on pin 4, LH low on pin 3 and LH high on pin 5). For vehicles equipped with Daytime Running Lamps (DRL), the FCM electronically steps down the headlamp voltage to provide the desired illumination.

EATX power

The electronic automatic 4 speed transmission module is powered when the ignition switch is in the UNLOCK, RUN or START positions. This circuit is electronically controlled and continuously monitored for malfunctions. Power is supplied through pin 27 of the FCM connector.

Front washer motor

The front washer switch is a direct input to the BCM. The BCM sends a PCI Bus message to the FCM informing it of a request to wash. The front washer motor is then powered through low side control inside the FCM. This circuit is electronically controlled and continuously monitored for malfunctions. In addition, the FCM electronically protects the washer motor from system voltages higher than 16 volts by automatically switching off the low side circuit. The low side circuit is connected to pin 45 in the FCM connector.

Rear washer motor

The rear washer switch is a direct input to the BCM. The BCM sends a PCI Bus message to the FCM informing it of a request to wash. The rear washer motor is then powered through low side control inside the FCM. This circuit is electronically controlled and continuously monitored for malfunctions. In addition, the FCM electronically protects the washer motor from system voltages higher than 16 volts by automatically switching off the low side circuit. The low side circuit is connected to pin 46 in the FCM connector.

Cabin Heater

When the ignition is in Run, the FCM monitors the PCI bus for the Cabin Heater Activation request. The A/C - Heater Control Module initiates this request only when all conditions for the Cabin Heater activation are favorable. The request carries the status bit that the FCM requires to activate its Cabin Heater Assist Control output. This output is a low side driver (coming from FCM pin 15) which supplies a ground signal to the Cabin Heater (pin 5). When the Cabin Heater receives this ground signal input, it interprets this as an activation signal. The FCM low side driver is also capable of diagnostic sensing. The driver will sense an open circuit when the driver is off, and will sense a short to voltage when the driver is on. The FCM will set DTCs for both of these types of faults. For additional information, refer to Cabin Heater under General Information and Diagnostic Procedures in the manual.

Brake shift interlock system

The brake shift interlock solenoid receives power from both high side and low side controls inside the FCM. The high side control is on the same circuit as the EATX module power, and the low side control comes through pin 47 of the FCM connector. The solenoid is controlled by the low side driver when the brake pedal is pressed. Both circuits are continuously monitored for malfunctions.

3.8.2 RELAY CONTROLS

Fog lamp relay

The fog lamp switch is a direct input to the BCM. The BCM sends a PCI Bus message to the FCM informing it to turn on the fog lamp relay. The fog lamp relay is then powered through low side control on pin 33 of the FCM. This circuit is electronically controlled and continuously monitored for malfunctions. Fog lamp functionality is not equipped on all vehicles. The FCM “learns” that the vehicle is equipped with fog lamps by reading the BCM PCI Bus message.

Park lamp relay

The park lamp switch is a direct input to the BCM. The BCM sends a PCI Bus message to the FCM informing it to turn on the park lamp relay. The park lamp relay is then powered through low side control on pin 13 of the FCM. This circuit is electronically controlled and continuously monitored for malfunctions.

Front wiper on relay

The front wiper switch is a direct input to the BCM. The BCM sends a PCI Bus message to the FCM informing it to turn on the front wiper on relay. The front wiper on relay is then powered through low side control on pin 14 of the FCM. This circuit is electronically controlled and continuously monitored for malfunctions.

Front wiper high/low relay

The front wiper switch is a direct input to the BCM. The BCM sends a PCI Bus message to the FCM informing it to turn on the front wiper high/low relay. The relay switches power between the low speed and high speed windings of the wiper motor. The front wiper high/low relay is powered through low side control on pin 34 of the FCM. This circuit is electronically controlled and continuously monitored for malfunctions.

Accessory relay

The accessory relay works in conjunction with the FCM’s power accessory delay feature to control the operation of the radio, power windows, washer motors, wiper motors and power outlet. The accessory relay is turned on through low side control on pin 35 of the FCM. This circuit is electronically controlled and continuously monitored for malfunctions. Depending on the ignition switch position, the accessory relay will remain on or will time-out and turn off. The accessory relay remains on in the RUN and ACCY positions of the ignition switch. In the UNLK and OFF positions, the relay will remain

energized for 45 seconds then turn off. During this time-out period, if the driver or passenger doors are opened, the relay will turn off immediately. While the ignition switch is in the START position, the relay will also drop-out, then resume operation. Accessory relay operation is most noticeable by observing the operation of the radio or blower functions.

Horn relay

The horn relay operates through a direct wire input to the FCM from the horn switch (FCM pin 17) , or a PCI Bus message from the BCM. The relay responds to the horn switch, remote door lock and VTA alarm functions. The horn relay is powered through low side control on pin 10 of the FCM. Under normal operating conditions, if the horn is pressed for longer than 30 seconds, the FCM will automatically deactivate the horn to prevent damage to it. The FCM will re-activate control of the relay after a 25 second cool-down period. This circuit is electronically controlled and continuously monitored for malfunctions.

Front and rear blower relay

The blower control switch is part of the Automatic Temperature Control (ATC) or A/C-Heater Control Module, (Manual Temp). When the blower switch is turned on, the ATC or A/C-Heater Control Module sends a PCI Bus message to the FCM. The front and rear blower relay is then powered through low side control on pin 30 of the FCM. The relay provides the high side to the blower motor, and the blower speed is governed through low side control in the ATC or A/C-Heater Control Module. This circuit is electronically controlled and continuously monitored for malfunctions.

Name Brand Speakers (NBS) relay

The NBS relay operates through the vehicle bus interface between the radio and the FCM. When the radio is turned on, the radio sends a PCI Bus message to the FCM. The NBS relay is then powered on through low side control on pin 11 of the FCM. The relay supplies power to the amplified speaker, and ground is supplied through the radio. This circuit is electronically controlled and continuously monitored for malfunctions.

Electronic Back Light (EBL) relay

The rear defrost switch is part of the Automatic Temperature Control or A/C-Heater Control Module (Manual Temp). When the ignition switch is in the RUN position and the rear defrost switch is turned on, the ATC or A/C-Heater Control Module sends a PCI Bus message to the FCM. The EBL run only relay is then powered through low side control on pin 31 of the FCM. The relay provides the high side to the rear window defrost grid, and ground is attached to the vehicle body. The FCM will only allow the rear defrost to operate in the RUN position. This circuit is electronically controlled and continuously monitored for malfunctions.

3.8.3 ELECTRICAL INPUTS

Headlamp battery supplies 1 & 2 — 12 volt input on pins 1 and 2. Battery supply voltage for switching headlamp circuits only.

Module battery supply — 12 volt input on pin 9. Battery supply voltage for all other FCM operations.

Power ground — Ground source on pin 8 for all FCM operations.

Ignition switch RUN or START position status — 12 volt input on pin 37. Allows the FCM to determine the ignition switch status for related FCM operations.

Ignition switch START only status — 12 volt input on pin 19. Allows the FCM to discriminate between RUN/START input and START for related FCM operations.

PCI Bus — Approximately 7.5 volt input on pin 22. Allows the FCM to communicate with other modules on the vehicle bus.

Stop lamp Switch status — 12 volt input on pin 44. Provides for brake shift interlock function.

Horn Switch — Ground input on pin 17. Primary means for engaging the horn.

Back-up switch — Ground input on pin 39. Input is converted to a PCI Bus status message for use by other modules.

Wiper park switch — Ground input on pin 16. Used to determine park placement of wipers. Also used as feedback to FCM to determine correct operating mode of wipers.

Washer fluid level switch — Ground input to pull-up on pin 18. Ground is switched into the circuit when washer bottle fluid level is low.

Brake fluid level switch — Ground input to pull-up on pin 36. Ground is switched into the circuit when brake fluid level is low.

Ambient temperature sensor — Resistive input to pull-up on pin 25. Corresponding voltage level is converted to a PCI Bus message for use by other modules on the bus.

Right park lamp outage — 12 volt input on pin 21. Used to determine if right park lamp circuit is operating properly.

Left park lamp outage — 12 volt input on pin 41. Used to determine if left park lamp circuit is operating properly.

Battery IOD — 12 volt input on pin 20. The FCM enters a low power consumption mode when the ignition is turned OFF. This low current draw battery supply keeps the microprocessor functioning in the low power mode.

Battery (+) connection detection — 12 volt input on pin 38. The battery connection on the PDC incorporates the use of an internal switch to determine if the connector is properly mated and the Connector Positive Assurance (CPA) is engaged. If the CPA is not properly engaged, a voltage on pin 38 will be interpreted as an unseated connector and a fault will set.

Flash programming voltage — 20 volt input on pin 42. When a DRBIII® is connected and the proper flash reprogramming sequence is selected, the 20 volt signal will be applied through pin 42.

3.9 HEATING & A/C

3.9.1 AUTOMATIC TEMPERATURE CONTROL (ATC)

3.9.1.1 SYSTEM OPERATION

The Automatic Temperature Control (ATC) system provides fully adjustble three zone climate control; Driver front zone, Passenger Front zone and Rear zone. The following is a list of ATC controls and features.

3.9.1.2 SYSTEM OPERATION

The Automatic Temperature Control (ATC) system provides fully adjustable three zone climate control; Driver front zone, Passenger Front zone and Rear zone. The following is a list of ATC controls and features:

- a POWER button which allows the operator to turn the system completely off.
- AUTO HIGH/LOW switch allows the operator to select what rate (fan speed) the system will provide the selected comfort level.
- DRIVER, REAR and PASSENGER rocker switches to select desired temperature for each zone.
- Recirculation button allows cooling air to be recirculated which maximizes cooling ability.
- A/C select button allows the operator to turn the A/C compressor off.
- Defroster button allows the operator to turn on the defroster independently during automatic control.
- Fan control rotary switch for selecting fan speed.
- Mode rotary switch for selecting heating/ cooling direction.
- REAR SYSTEM rotary switch for activating the Rear ATC Switch allowing intermediate passenger control over rear climate control.

3.9.1.2 BLOWER MOTOR OPERATION

The Automatic Temperature Control (ATC) front and rear blower control provides continuously variable control of air flow rate to meet occupant comfort requirements. Pulse width modulation of the blower motor power allows the front and rear blower to operate at any speed from off to full speed. When front or rear blower operation is required, the ATC sends a PCI Bus message to the Front Control Module (FCM) requesting blower relay ON. The FCM provides a ground for the front and rear blower motor relay coils, activating both relays. The front and rear blower relays provide 12 volts to their respective blower motor power modules. Each module provides a 12 volt blower motor control signal to the ATC. The ATC provides a pulse width modulated (duty-cycle) ground signal to this circuit based on climate requirements. The higher voltage on the signal circuit (less duty-cycle ground) the lower the blower speed request. The lower voltage on the signal circuit (more duty-cycle ground) the higher the blower speed request.

3.9.1.3 INFRARED SENSORS

The ATC system uses infrared (I/R) sensors to monitor and control oocupant comfort levels. This sensing system replaces interior air temperature and solar sensors which required complex control programs to maintain occupant comfort levels. The front I/R sensor is located in the instrument panel center bezel outlet. The rear I/R sensor is located in the rear overhead mounted ATC switch.

3.9.1.4 REAR ATC SWITCH

The rear ATC switch is mounted in the headliner. The switch contains a rotary adjustment for fan speed, a rotary adjustment for mode selection, a push button switch for temperature selection and a digital display of the selected temperature.

3.9.1.5 COOLDOWN TESTING

The ATC provides a feature referred to as a Cooldown Test. This test is initiated using the DRBIII® and is designed to check the performance of the air conditioning system. The ATC will not perform this test if the ambient air temperature is below 12°C (53°F). During the test, the ATC compares the ambient air temperature to the evaporator temperature sensor. To pass the cooldown test, the evap temperature sensor must drop 6°C (20°F)

below ambient temperature within 2 minutes of start of test. At the completion of the cooldown test the DRBIII® will display one of the following messages indicating test outcome:

- Cooldown Test Passed
- Cooldown Test Failed
- Evap Temp Sensor Shorted
- Evap Temp Sensor Open
- A/C Pressure Too High
- Invalid Conditions for Cooldown Test, Evap Temperature Too Low

If a message other than Cooldown Test Passed occurs, refer to the appropriate symptom for diagnosis.

3.9.1.6 ACTIVE AND STORED TROUBLE CODES

The Automatic Temperature Control (ATC) is capable of storing Active and Stored trouble codes. Active codes indicate a current fault in the system. Stored codes indicate that a problem has occurred in the system, however is not currently present. Active codes cannot be erased until the problem causing the code has been repaired. At this time the Active code is converted to a Stored code, which can be erased using the DRBIII®.

3.9.2 MANUAL TEMPERATURE CONTROL

3.9.2.1 SYSTEM AVAILABILITY

Depending on the model, either a Single-Zone Air Conditioning System or a Dual-Zone Air Conditioning System is currently available in these vehicles. For domestic vehicles, a Three Zone Air Conditioning System is also available.

3.9.2.2 CABIN HEATER

For export vehicles equipped with a diesel engine, a Cabin Heater is used in conjunction with the HVAC system. The Cabin Heater is designed to supply the vehicle's occupants with heat prior to the engine reaching operating temperature. For additional information on this system, refer to Cabin Heater under General Information and Diagnostic Procedures in this manual.

3.9.2.3 ZONE CONTROL

The Single-Zone Air Conditioning System maintains incoming air temperature, airflow, fan speed, and fresh air intake for the entire vehicle from the instrument panel mounted A/C – Heater Control Module. The full range of temperature that the system can produce in any mode for the entire vehicle is available by positioning the blend control to the desired range.

The Dual- and Three-Zone Air Conditioning systems allow completely independent side-to-side control of incoming air temperature. The full range of temperature that the front system can produce in any mode is available on either side of the vehicle by positioning the independent driver and passenger blend controls to the desired range. The three-zone system also allows the front seat occupants to completely control the Rear A/C − Heater Unit from the instrument panel mounted A/C − Heater Control Module. The intermediate and rear seat occupants can also regulate the air temperature and the fan speed of the rear unit from the rotary controls on the headliner mounted Rear Blower Rear Control.

3.9.2.4 FRONT HVAC UNIT

The front compartment HVAC has five fully adjustable instrument panel outlets. Side-window demister outlets in the instrument panel eliminate door ducts and door-to-instrument panel seals. A single, central mounted outlet delivers air for defrosting the windshield. Air exhausters allow air entering at the front of the vehicle to flow out of the back to the rear occupants. Wide outlets under the front seats with directional dividers distributes the heated or cooled air across the floor to the intermediate seat occupants. Ducts in the center of the vehicle under the carpet deliver air from the front compartment HVAC unit to these outlets. Overhead outlets along the roof rails adjacent to each rear seat and three outlets in the right quarter panel near the floor distribute air to the intermediate and rear seat occupants. Models equipped with Dual-Zone and Three-Zone A/C systems include a dust and odor air filter.

3.9.2.5 REAR HVAC UNIT

The rear A/C − heating unit provides air temperature modulation by utilizing a temperature door to allow variable proportions of cooled and heated air to mix to achieve a desired ambient temperature. Also a variable mode control in the rear unit allows proportioned airflow between the floor and overhead outlets.

3.9.2.6 A/C – HEATER CONTROL MODULE, SWITCH OPERATION

Power Switch

The Power Switch is a momentary contact switch. The switch status indicator illuminates when the switch is on. The Power Switch setting is remembered during power down.

Rear Window Defogger Switch

The Rear Window Defogger Switch is a momentary contact switch. Toggling the switch results in the A/C – Heater Control Module sending a change of state message to the FCM to provide rear window defogger activation or deactivation respectively. The switch status indicator illuminates when the switch is on.

Recirculation Switch

The Recirculation Switch is a momentary contact switch. Toggling the switch on results in the A/C – Heater Control Module signaling the actuator to close the fresh-air door. Toggling the switch off results in the A/C – Heater Control Module signaling the actuator to open the fresh-air door. The switch status indicator illuminates when the switch is on. When the Power Switch is off, the A/C – Heater Control Module closes the fresh-air door to prevent outside air from entering the passenger compartment. The recirculation mode will cancel whenever defrost is requested. Pressing the Recirculation Switch while in defrost mode will illuminate the Recirculation Switch status indicator, but only while the button is pressed. Under this circumstance, the recirculation request will be denied and the fresh-air door will remain in the fresh position. All door positions are determined relative to the number of commutator pulses required to provide full travel of the door. On command, the A/C – Heater Control Module runs the actuator for the number of pulses corresponding to the desired door position.

A/C Switch

The A/C Switch is a momentary contact switch. Toggling the switch results in the A/C – Heater Control Module sending a change of state message to the PCM to provide A/C compressor clutch activation or deactivation respectively. The A/C – Heater Control Module will only provide this request if EVAP function is found acceptable. The Power Switch must be on to make the A/C switch active. The switch status indicator illuminates when the switch is on. The A/C Switch setting is remembered during power down.

Blower Switch − Front

The rotary Blower Switch has five positions, Low, M1, M2, M3, and High. The Power Switch must be on to make the Blower Switch active. Toggling the Power Switch results in the A/C – Heater Control Module sending a request to the FCM to provide blower motor activation or deactivation respectively.

Blower Switch − Rear Blower Front Control Switch

The rotary Blower Switch has five positions, Rear, Off, Low, Med, and High. The Power Switch must be on to make the Blower switch active. The Blower Switch must be in the Rear Position to make the Rear Blower Rear Control active. Toggling the Power Switch results in the A/C − Heater Control Module sending a request to the FCM to provide blower motor activation or deactivation respectively.

Blend Switch – Single Zone

The single rotary Blend Switch has multiple detents to control the full range of temperature that the system can produce in any mode. Rotating the switch results in the A/C – Heater Control Module signaling the actuator to move the blend door. All door positions are determined relative to the number of commutator pulses required to provide full travel of the door. On command, the A/C – Heater Control Module runs the actuator for the number of pulses corresponding to the desired door position.

Blend Switch – Dual and Three-Zone

The dual sliding Blend Switches have multiple detents to control the full range of temperature that the system can produce an any mode. On Dual-Zone systems, the upper slide pot controls the driver-side blend door, while the lower slide pot controls the passenger-side blend door. On Three-Zone systems, the upper slide pot controls the driver-side blend door and, when activated, the Rear A/C − Heater Unit Blend Door. The lower slide pot controls the passenger-side blend door. Sliding the switch results in the A/C − Heater Control Module signaling the actuator to move the blend door. All door positions are determined relative to the number of commutator pulses required to provide full travel of the door. On command, the A/C − Heater Control Module runs the actuator for the number of pulses Corresponding to the desired door position.

Mode Switch − Single- and Dual-Zone

The single rotary Mode Switch has 13 detents to either direct airflow to the panel outlets, a mix of floor and panel outlets, floor outlets, a mix of floor and defrost outlets, or defrost outlets. Rotating the switch results in the A/C – Heater Control Module signaling the actuator to move the mode door. All door positions are determined relative to the number of commutator pulses required to provide full travel of the door. On command, the A/C – Heater Control Module runs the actuator for the number of pulses corresponding to the desired door position.

Mode − Three-zone

The single, rotary Mode Switch has 13 detents to either direct airflow to the panel outlets, a mix of

floor and panel outlets, floor outlets, a mix of floor and defrost outlets, or defrost outlets. When the Rear A/C − Heater Unit is activated, the Mode Switch also controls its Mode Door to direct the rear airflow to the floor or overheard outlets. Rotating the switch results in the A/C − Heater Control Module signaling the actuator to move the mode door(s). All door positions are determined relative to the number of commutator pulses required to provide full travel of the door. On command, the A/C − Heater Control Module runs the actuator for the number of pulses corresponding to the desired door position.

3.9.2.7 REAR BLOWER REAR CONTROL

Switch Operation

The A/C− Heater Control Module's Power Switch must be on to make the Rear Blower Front Control Switch active. The Rear Blower Front Control Switch must be in the Rear position to make the Rear Blower Rear Control active.

Blower Switch

The rotary Blower Switch has three positions, Low, Med, and High. Toggling the A/C − Heater Control Module's Power Switch on and positioning the Rear Blower Front Control Switch in the Rear position results in the A/C − Heater Control Module sending a request to the FCM to provide blower motor activation. Toggling the A/C − Heater Control Module's Power Switch off or rotating the Rear Blower Front Control Switch off of the Rear position results in the A/C − Heater Control Module sending a request to the FCM to provide blower motor deactivation.

Blend Switch

The rotary Blend Switch controls the full range of temperature that the rear system can produce in any mode. Rotating the switch results in the A/C − Heater Control Module signaling the actuator to move the blend door. A low temperature setting directs airflow to the overhead outlets, while a high temperature setting directs airflow to the floor outlets. All door positions are determined relative to the number of commutator pulses required to provide full travel of the door. On command, the A/C − Heater Control Module runs the actuator for the number of pulses corresponding to the desired door position.

3.9.2.8 HVAC DIAGNOSTICS

The A/C – Heater Control Module is fully addressable with the DRBIII®. Two of the Control Module's diagnostic capabilities that the DRBIII® will actuate include the A/C Cooldown Test to test A/C system performance and the HVAC Door Recalibration Test to determine actuator travel span. After performing either test, the Control Module will display one or more messages on the DRBIII® screen. The message will indicate either that the HVAC system passed the test or that there is a fault currently active in the HVAC system. The DRBIII® can also extract active and stored Diagnostic Trouble Codes (DTCs) from the control module. Active DTCs are faults that currently exit in the HVAC system. Active DTCs will not clear until the condition causing the code is repaired. Stored DTCs are faults that occurred in the HVAC system since the control module received the last "clear diagnostic info" message.

3.10 CABIN HEATER

NOTE: The Cabin Heater, also known as the Diesel Cabin Heater Assist (DCHA), will be referred to as the DCHA throughout most of the General Information and the Diagnostic Procedures in this manual.

3.10.1 GENERAL SAFETY INFORMATION

WARNING: DO NOT OPERATE THE DCHA IN AN ENCLOSED AREA SUCH AS A GARAGE THAT DOES NOT HAVE EXHAUST VENTILATION FACILITIES. ALWAYS VENT THE DCHA's EXHAUST WHEN OPERATING THE DCHA. FAILURE TO FOLLOW THESE INSTRUCTIONS MAY RESULT IN PERSONAL INJURY OR DEATH.

WARNING: ALLOW THE DCHA ASSEMBLY TO COOL BEFORE PERFORMING A COMPONENT INSPECTION/REPAIR/REPLACEMENT. FAILURE TO FOLLOW THESE INSTRUCTIONS MAY RESULT IN PERSONAL INJURY.

WARNING: ALWAYS DISCONNECT THE VEHICLE'S BATTERY PRIOR TO PERFORMING ANY TYPE OF WORK ON THE DCHA. FAILURE TO FOLLOW THESE INSTRUCTIONS MAY RESULT IN PERSONAL INJURY OR DEATH.

WARNING: NEVER ATTEMPT TO REPAIR THE DCHA HEATER MODULE OR ANY OF ITS INTERNAL COMPONENTS. ALWAYS PERFORM DCHA COMPONENT REPLACEMENT IN ACCORDANCE WITH THE SERVICE INFORMATION. FAILURE TO FOLLOW THESE INSTRUCTIONS MAY RESULT IN PERSONAL INJURY OR DEATH.

CAUTION: Do not actuate the DCHA Field Mode Test with the engine off. Failure to follow these instructions may result in internal damage to the DCHA Heater Module.

CAUTION: Always Perform The Cabin Heater Pre-Test Prior To Performing Any Other Cabin Heater Test For The Test Result To Be Valid.

NOTE: Do not disconnect the vehicle's battery or the DCHA's main power-supply while the DCHA is in operation or in run-down mode. Failure to follow these instructions may result in excess emissions from the DCHA Heater Module.

NOTE: Failure to prime the Dosing Pump after draining the DCHA fuel line will prevent DCHA heater activation during the first attempt to start the heater. This will also set a Diagnostic Trouble Code (DTC) in the DCHA Control's memory. Do not perform the Dosing Pump Priming Procedure if an attempt was made to start the DCHA without priming the Dosing Pump first. This will put excess fuel in the DCHA Heater Module and cause smoke to emit from the DCHA exhaust pipe when heater activation occurs.

NOTE: Waxed fuel can obstruct the fuel line and reduce flow. Check for the appropriate winter grade fuel and replace as necessary.

3.10.2 COMPONENT DESCRIPTION AND OPERATION

3.10.2.1 DCHA ASSEMBLY

The DCHA is a supplemental heater designed to pre-heat the engine's coolant in order to supply the vehicle's occupants with heat prior to the engine reaching operating temperature. The DCHA assembly mounts underneath the vehicle on the left side floor pan near the front door opening. The DCHA assembly connects to the vehicle's heater hoses and has a fuel supply line that connects to the vehicle's fuel tank.

The DCHA assembly consists of a:

- combustion air fan assembly
- burner housing
- burner insert
- control unit/heat exchanger
- combustion chamber
- dosing pump

3.10.2.2 COMBUSTION AIR FAN

The combustion air fan assembly includes the:

- combustion air fan
- combustion air fan inlet
- fuel supply inlet

The combustion air fan delivers the air required for combustion from the combustion air inlet to the burner insert.

3.10.2.3 BURNER HOUSING

The burner housing includes the:

- coolant inlet
- coolant outlet
- exhaust outlet

The burner housing accommodates the burner insert and is combined with the control unit/heat exchanger as an assembly.

3.10.2.4 BURNER INSERT

The burner insert includes the:

- combustion pipe fuel cross section
- glow plug/flame sensor

Inside the burner insert fuel is distributed across the combustion pipe fuel cross section. Combustion of the fuel/air mixture takes place within the combustion pipe to heat the exchanger. The glow plug/flame sensor located in the burner insert ignites the fuel/air mixture during heater start up. After heater start up, the glow plug/flame sensor operates in the flame sensor function. The glow plug/flame sensor designed as an electrical resistor is located in the burner insert opposite the flame side.

3.10.2.5 CONTROL UNIT/HEAT EXCHANGER

The control unit/heat exchanger includes the:

- control unit
- temperature sensor
- overheat protection
- heat exchanger
- connector terminal

The control unit controls and monitors combustion operation. The control unit is ventilated by means of a ventilation hose routed from the combustion air collector compartment of the burner. The heat exchanger transfers the heat generated by combustion to the coolant circuit. The control unit/heat exchanger and the burner housing are an assembly and must not be disassembled.

The temperature sensor senses the coolant temperature in the heat exchanger as an electrical resistance. This signal is sent to the control unit for processing.

The overheat protection, controlled by the temperature resistor, protects the heater against undue operating temperatures. The overheat protection will switch the heater off if the water temperature exceeds 105°C (221°F).

3.10.2.6 DOSING PUMP

The dosing pump is a combined delivery, dosing, and shut-off system for the fuel supply of the heater. The dosing pump receives its supply of fuel from the vehicle's fuel tank.

3.10.3 OPERATION

3.10.3.1 ACTIVATION

When the ignition is in Run, the FCM monitors the PCI bus for the Cabin Heater Activation request. The A/C – Heater Control Module initiates this request only when all conditions for Cabin Heater activation are favorable (see below). The request carries the status bit that the FCM requires to activate its Cabin Heater Assist Control Output. This output is a low side driver (coming from FCM pin 15) which supplies a ground signal to the Cabin Heater (pin 5). When the Cabin Heater receives this ground signal input, it interprets this as an activation signal. The FCM low side driver is also capable of diagnostic sensing. The driver will sense an open circuit when the driver is off, and will sense a short to voltage when the driver is on. The FCM will set DTCs for both of these types of faults.

The DCHA will activate only when the:

- engine is running.
- coolant temperature is below 66°C (151°F).
- fuel tank has greater than 1/8 of a tank of fuel.
- Power switch on the A/C – Heater Control Module is on.
- Blend Control on the A/C – Heater Control Module is set above 80% reheat.
- Front Control Module (FCM) sees the Cabin Heater Activation request that is bussed from the A/C – Heater Control Module.

When the DCHA starting sequence begins, the glow plug and the combustion air fan are activated. After 30 seconds, the fuel dosing pump begins operating and the combustion air fan operation is suspended for 3 seconds. Subsequently, the combustion air fan speed is increased in two ramps within 56 seconds to nearly full load operation. After a stabilization phase of 15 seconds, the combustion air fan speed is again increased in a ramp within 50 seconds to nearly full load. After reaching full load fuel delivery, the glow plug is deactivated and the combustion air fan operation is increased to full load. During the subsequent 45 seconds, as well as in normal operation, the glow plug functions as a flame sensor to monitor the flame condition. After all these events, the automatically controlled heating operation starts.

In case of a no flame or a flame out condition, a restart is automatically initiated. If the no flame condition persists, fuel delivery is stopped and the heater enters an error lockout mode with a run-down of the combustion air fan. This will set one or more DTCs in the DCHA Control's memory. If six continuous attempts to start the heater fail due to one or more faults in the DCHA system, the heater enters a heater lockout mode. This will set DTC B1813 along with any other fault(s) that the DCHA Control identified.

3.10.3.2 HEATING

During the automatically controlled heating operation, when the coolant temperature reaches 76°C (169°F), the heater will switch to a part load operation. When the coolant temperature reaches 81°C (178°F) or if the heater runs for longer than 76 minutes the heater will switch to a control idle period. If the coolant temperature drops to 71°C (160°F) during a control idle period, the heater will perform a regular starting sequence into full load operation. A drop in coolant temperature to 65°C (149°F) during part load operation will cause the heater to switch to a full load operation.

3.10.3.3 DEACTIVATION

The DCHA will deactivate if the:

- engine is turned off.
- coolant temperature reaches 81°C (178°F).
- heater runs longer than 76 minutes.
- fuel tank has less than 1/8 of a tank of fuel.
- Power switch on the A/C – Heater Control Module is off.
- Blend Control on the A/C – Heater Control Module is set below 75% reheat.

When the heater is deactivated, the combustion stops and a run-down sequence begins. During the run-down sequence, the combustion air fan continues operation to cool down the heater. The fan is automatically switched off after the run-down sequence is complete. The run-down time and the combustion air fan speed depend on the heater operating condition at the time of deactivation. Run-down time is approximately 175 seconds when deactivated in full load operation and approximately 100 seconds when deactivated in part load operation.

3.10.4 DIAGNOSTICS

The DCHA is fully addressable with the DRBIII®. System tests include a Field Mode Test to activate the DCHA for diagnostic testing purposes. The DCHA Control will store up to three DTCs in its memory. If the Controller detects a new fault in the DCHA system, one that is not already stored in its memory, it will clear the oldest of the three stored DTCs, and it will store the new fault's DTC. If the Controller detects a reoccurrence of a stored fault, it will overwrite that fault's DTC with the most recent occurrence.

3.11 INSTRUMENT CLUSTER

The Instrument Cluster receives and sends messages to other modules via the PCI bus circuit. The indicator lamps will illuminate briefly for a bulb check when the ignition is turned from off to run. All of the gauges receive their information via the PCI bus from the powertrain control module and body control module.

The gauges and the LEDs are not individually replaceable thereby requiring complete replacement of the Instrument Cluster if a repair is necessary. In the event that the Instrument Cluster loses communication with other modules on the PCI bus, the cluster will display "no bus" in the VF display.

The Trip/Reset button is used to switch the display from trip to total mileage. Holding the button when the display is in the trip mode will reset the trip mileage. This button is also used to put the cluster into self-diagnostic mode. The odometer display uses blue-green vacuum fluorescent digital characters.

On base models, the Instrument Cluster has three gauges: Speedometer, fuel and temperature. A red dot moves transversely appears through openings in the Instrument Cluster face (P-R-N-D-2-1) to indicate the gear selected.

With other models, the Instrument Cluster may also include a tachometer and use a vacuum-fluorescent shift indicator.

The high-line Instrument Cluster features Electroluminescent Illumination of the gauge faces (EL Panel). This feature eliminates the use of bulbs for gauge/panel lighting. In a manner similar to fluorescent lights, a/c voltage from an inverter integrated circuit chip is applied to the phosphorescent material, causing it to glow. The phosphorescent material is screen-printed onto flexible Mylar sheets that form the gauge faces.

The odometer display and door/liftgate ajar indicators turn on when a door is opened to assist both the customer and service technician to view the odometer without turning the ignition on.

On models with AutoStick, the display includes an O/D OFF indicator that is illuminated when the driver presses the Overdrive Off button on the transaxle shifter.

For complete details of the Instrument Cluster, refer to the RS/RG Service Manual.

3.11.1 INSTRUMENT CLUSTER SELF TEST

1. Depress and hold the Odometer Reset button.
2. Turn the ignition switch to on.
3. Release the Odometer reset button.

The Instrument Cluster will illuminate all indicators and step the gauges through several calibration points. Also, the odometer will display any stored codes that may have set.

3.11.2 MESSAGE CENTER

The Message Center is above the brow of the Instrument Cluster. It houses the following warning indicators: Check Engine/Service Engine Soon, High Beam, Left and Right turn signals, Security Alarm Set, and Low Oil Pressure. On base models equipped with the three-speed transaxle, these indicators appear in the face of the cluster. The Security Alarm set indicator is now a large red circle symbol.

Activation of Instrument Cluster indicators is coordinated with indicators in the message center and EVIC where used to avoid redundancy. A revised safety standard now requires that the seat belt warning lamp in the Instrument Cluster remain lit if the driver seat belt is not buckled. A headlamp out indicator is used to alert the driver when a headlamp is not functioning.

3.12 INTERIOR LIGHTING

3.12.1 COURTESY LAMP CONTROL

The body controller has direct control over all of the vehicle's courtesy lamps. The body computer will illuminate the courtesy lamps under any of the following conditions:

1. Any door ajar and courtesy lamp switch on the headlamp switch is not in the dome off position.
2. The courtesy lamp switch on the headlamp switch is in the dome on position.
3. A Remote Keyless Entry unlock message is received.
4. Driver door unlocked with key (with VTSS only).

3.12.2 ILLUMINATED ENTRY

Illuminated entry will be initiated when the customer enters the vehicle by unlocking the doors with the key fob, or with the key if the vehicle is equipped with vehicle theft alarm. Upon exiting the vehicle, if the lock button is pressed with a door open, illuminated entry will cancel when the door closes. If the doors are closed and the ignition switch is turned on, the illuminated entry also cancels. The illuminated entry feature will not operate if the courtesy lamp switch is in the dome off position.

3.12.3 INTERIOR LIGHTING BATTERY SAVER

If any of the interior lamps are left on after the ignition is turned off, the BCM will turn them off after 8 minutes. To return to normal operation, the courtesy lamps will operate after the dome lamp switch or door ajar switch changes state. The glove box and switched reading lamps require that the ignition be turned to the on/acc position.

3.13 MEMORY SYSTEM

The memory system consists of power driver's seat, power mirrors and radio presets. The Memory Seat/Mirror Module (MSMM) is located under the driver's seat. It receives input from the following: driver's manual 8-way seat switch, driver's seat position sensors, PCI bus circuits, and the power mirror sensors. The module uses these inputs to perform the following functions: position the driver's memory seat, both exterior mirrors (during recalls), and send/receive the memory system information over the PCI bus.

The Memory Set Switch is wired to the Body Control Module (BCM). A button (either #1 or #2) pressed on the set switch causes the BCM send a message to the MSMM and to the Adjustable Pedals Module (APM) (if equipped) which in turn send a motion status message back to the BCM. If the message from the MSMM and APM indicates no current motion, the BCM will send a recal message to the modules. The MSMM will set the seat, exterior mirrors and radio to the presets for the indicated driver. The APM will set the adjustable pedals to the memory preset position.

If any one of the memory controlled systems is inoperative from its manual switch, use the schematics and diagnostic information to correct the concern. This manual addresses the memory problems only and it is assumed there is not a basic component failure.

3.13.1 POWER SEAT

The memory power seat provides the driver with 2 position settings for the driver's seat. Each power seat motor is connected to the MSMM with two motor drive circuits. Each circuit is switched between battery and ground. By being able to bi-directionally drive the circuits, the MSMM controls the movement of the motors based on input from the power seat switch or from the position sensors when performing a memory recall. Each motor contains a potentiometer to monitor the seat position. To monitor the position of the motor, the MSMM sends out a 5-volt reference on the sensor supply circuit. The sensor is grounded back to the module on a common ground circuit. Based on the position of the sensor, the MSMM monitors the voltage change through the sensor on a separate signal circuit.

The MSMM stores the input value of each of the four seat potentiometers in memory when the system requests a set. The driver can initiate a memory recall, using either the door mounted memory switch or the RKE transmitter (if the remote linked

to memory feature is enabled via the EVIC). When initiated, the MSMM adjusts the four seat sensors (by using the motors) to match the memorized seat position data.

For safety, the memory seat recall is disabled by the MSMM when the vehicle is out of park position or if the speed is not zero. Any obstruction to seat movement over a 2-second delay will cause the seat to stop moving in which case a stalled motor would be detected by the MSMM and the corresponding seat output would be deactivated. However, if the object obstructing the seat is removed, the seat will function normally again.

3.13.2 MEMORY MIRRORS

Each outside mirror contains vertical and horizontal bi-directional drive positioning motors and position sensors. The MSMM provides a 5-volt reference on the signal circuit to each position sensor. The sensors share a common ground circuit. The MSMM monitors the position of the mirror motors by measuring the voltage on each signal circuit. When a memory position is set, the MSMM monitors and stores the position of the outside mirrors. The MSMM adjusts the mirrors to the appropriate positions when a memory recall message is received from the RKE or is requested from the memory set switch.

The power mirror switch during non-memory operation operates both mirrors independently of the MSMM.

3.14 OVERHEAD CONSOLE

COMPASS/TEMPERATURE MODULE, COMPASS/MINI-TRIP COMPUTER or ELECTRONIC VEHICLE INFORMATION CENTER

The Compass/Temperature Module (CT), Compass/Mini-Trip Computer (CMTC) or Electronic Vehicle Information Center (EVIC) is located in the overhead console. The CT provides the vehicle operator with only outdoor temperature and the compass heading. The CMTC or EVIC supplements the standard vehicle instrumentation. The CMTC and EVIC use a vacuum fluorescent (VF) display to supply the vehicle operator with a compass heading, outdoor temperature, average fuel economy, distance to empty, instantaneous fuel economy, trip odometer, elapsed ignition on time, distance to service, warning messages, and service messages.

The difference between a CMTC and an EVIC is that only the EVIC provides additional memory, feature programming, and warning messages. The EVIC is capable of displaying warning messages and memory system messages when the vehicle is equipped with memory systems. The EVIC also provides the interface to enable and disable vehicle programmable features when the vehicle is equipped with certain features.

If equipped, the EVIC is also available with an integrated Universal Garage Door Opener (UGDO) known as HomeLink®. Also if equipped, the EVIC is available with a Tire Pressure Monitoring (TPM) System. The EVIC may also be equipped with up to 4 power door switches: ON/OFF, Left Sliding Door, Right Sliding Door, and Liftgate.

The CT function buttons are labeled C/T and US/M. The CMTC function buttons are labeled US/M, C/T, RESET, and STEP. The EVIC function buttons are labeled C/T, RESET, STEP, and MENU. The three UGDO buttons are labeled with dots to indicate the channel number.

The BCM supplies most of the information displayed by the CMTC/EVIC. Display information, except for the internal compass function, is received over the PCI bus. The FCM supplies the ambient temperature sensor information via the PCI bus. The CMTC/EVIC sends and receives data over the PCI bus, communicating with the BCM, PCM, FCM, and the Instrument Cluster. Tire Pressure Monitoring System information is received by the EVIC in the form of radio transmissions. The tire pressure sensors are mounted to the vehicle wheels. For complete information, refer to the Tire Pressure Monitoring System section in this publication.

3.14.1 VEHICLE INFORMATION DISPLAY

The CMTC/EVIC provides the following functions:

- Compass direction
- Outside temperature
- Elapsed ignition on time
- Distance to empty
- Average fuel economy
- Instantaneous fuel economy
- Trip odometer
- Distance to service

The EVIC will also display the following driver alert messages:

- TURN SIGNAL ON (with vehicle graphic)
- PERFORM SERVICE
- DOOR OPEN (individual or multiple doors, with graphic)
- LOW or HIGH TIRE(S) PRESSURE (when equipped)
- ADJUSTABLE PEDAL DISABLED CRUISE ENGAGED (when equipped)
- ADJUSTABLE PEDAL DISABLED VEHICLE IN REVERSE (when equipped)

An audible chime or chimes will accompany any displayed warning messages. Chime requests with an OPEN message are dependent upon vehicle speed.

The CT/CMTC/EVIC will not display information for any of the screens for which it did not receive the proper PCI bus data. Refer to the symptom list in the Overhead Console section for problems related to the CT/CMTC/EVIC.

The CMTC/EVIC receives the following messages from the Body Control Module (BCM):

- Verification of US/Metric status
- VF display dimming brightness and exterior lamp status
- Elapsed Ignition On Time data
- Fuel Economy (Average and Instantaneous)
- Distance to Empty
- Distance to service
- Driver warning messages

The CT/CMTC/EVIC receives the following messages from the Front Control Module (FCM):

- Outside Temperature

The CMTC/EVIC receives the following messages from the Powertrain Control Module (PCM):

- Trip Odometer data
- Vehicle Speed

The EVIC receives the following messages from the Adjustable Pedal System Module (APS):

- APS status warnings

The CMTC/EVIC transmits the following messages to the BCM:

- Status Request: Beep, Reset, US/M Toggle
- Current Display

STEP BUTTON

The STEP Button can be used in one of the following three ways:

1. To sequentially select one of seven displays or blank display in the following order:
   - Average Fuel Economy
   - Distance to Empty
   - Instantaneous Fuel Economy
   - Trip Odometer
   - Time Elapsed
   - Distance to Service Message
   - Off (Blank)
2. To set the magnetic variance zone when VARIANCE = X (X = 1 - 15) is indicated in the VF Display.
3. To select the displayed programmable feature setting. (When equipped.)

MENU BUTTON (EVIC only)

For complete information of the programmable features and memory messages, refer to the RS/RG Service Manual.

Use the MENU button to sequentially step the EVIC through the programmable features.

Use the MENU button to enter the Tire Pressure Monitoring (TPM) Training Procedure.

RESET BUTTON

The RESET Button has two different functions:

1. To clear the trip functions that may be reset
2. To enter and exit the diagnostic mode

Pressing the RESET button once will clear the trip function that is currently being displayed (except Distance to Service) and the CMTC/EVIC will send a PCI bus beep request to the BCM. If the RESET button is pressed again within 3 seconds, the CMTC/EVIC will reset ALL of the trip functions and an additional beep request is sent to the BCM. The trip functions that may be reset are:

- Average Fuel Economy
- Trip Odometer
- Elapsed Time

A reset will only occur if one of the trip functions that may be reset is currently being displayed. Pressing the RESET button for more than three (3) seconds resets the Distance to Service function while the Distance to Service message is being displayed. The CMTC/EVIC module will send a beep request to the BCM.

Simultaneously pressing the RESET button and the STEP button while turning the ignition from Off to On will enter the CMTC/EVIC into the self-diagnostic mode.

COMPASS/TEMPERATURE (C/T) BUTTON

Actuating the Compass/Temperature Button (C/T) will cause the CMTC/EVIC to display the compass and temperature information. This function will operate from another traveler display or from the programmable feature mode.

3.14.2 TRAVELER DISPLAY FUNCTIONS

Using the STEP button will change the CMTC/EVIC between modes of operation and display the appropriate information according to data received from the PCI Bus.

COMPASS/TEMPERATURE

The CMTC/EVIC simultaneously displays the compass reading and the outside temperature. Outside temperature information is received via the PCI bus from the FCM.

The CMTC/EVIC module internally senses and calculates the compass direction.

COMPASS OPERATION - ALL

Upon ignition on, if the calibration information stored in the CMTC memory is within the normal range, the CMTC will perform in slow Auto-Cal mode. In slow Auto-Cal mode, the CMTC continuously compensates for the slowly changing magnetic field of the vehicle. The compass module detects changes in the vehicle magnetism and makes appropriate internal corrections to ensure proper displayed direction.

However, if the calibration information stored in the CMTC memory is not within the normal range at ignition on, the CMTC will enter fast Auto-Cal. CAL is displayed along with the temperature.

Auto activation of the fast Auto-Cal mode will also occur when the CMTC is subjected to high magnetic field strength levels, which cause all compass readings to be erroneous for a continuous period of five (5) minutes. During fast Auto-Cal, CAL will be displayed along with the temperature.

Fast Auto-Cal can also be performed manually, by pressing and holding the RESET button for 10 seconds during the Compass/Temperature display mode.

3.14.3 SETTING MAGNETIC ZONE VARIANCE

Variance is the difference between magnetic North and geographic North. For proper compass function, the correct variance zone must be set. Refer to the Zone Variance map for the correct zone. Follow these steps to check or change the variance zone:

CMTC/EVIC:

- The ignition switch must be in the On position and the CMTC/EVIC display must not be blank.
- If the compass/temperature data is not currently being displayed, momentarily press and release the C/T button to display compass/temp information.
- Press and hold the RESET button (approximately 5 seconds) until VARIANCE = XX is displayed. The CMTC/EVIC will display the variance zone stored in memory and the word VARIANCE.
- Use the RESET button to select the proper variance zone number, 1 through 15.
- After selecting the proper zone number, momentarily press and release the RESET button. The variance zone is then stored in the memory and the CMTC/EVIC returns to normal operation.

CT:

- The ignition switch must be in the On position and the C/T display must not be blank.
- Press and hold the C/T and US/M buttons (approximately 5 seconds) until VARIANCE = XX is displayed. The C/T will display the variance zone stored in memory and the word VARIANCE.
- Use the US/M button to select the proper variance zone number, 1 through 15.
- After selecting the proper zone number, momentarily press and release the C/T button. The variance zone is then stored in the memory and the C/T returns to normal operation..

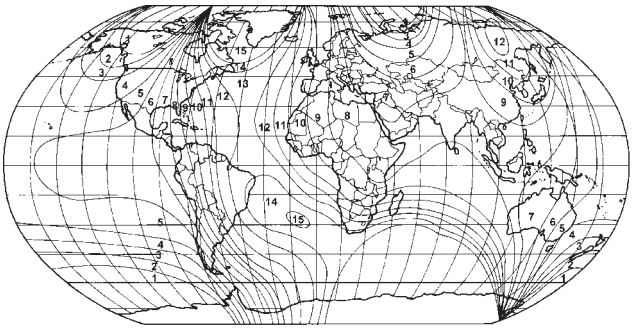

80a3863

3.14.4 COMPASS CALIBRATION

The compass module has 2 types of auto-calibration; slow-cal and fast-cal. Slow-cal ensures that during normal vehicle operation the compass performs auto-calibration functions to keep the compass sensors in their proper operating range. Whenever the ignition is On and the CT/CMTC/EVIC receives PCI bus data indicating that engine RPM is greater than zero, auto-calibration is performed continuously.

If the calibration information stored in the compass module memory is not within the normal range after a power-up cycle, the compass will display CAL. The CT/CMTC/EVIC will enter into the fast-cal mode until calibration is complete.

To enter the compass into Manual Calibration mode, perform the following steps:

- Drive the vehicle to an area away from any large metal objects or overhead power lines.
- Ensure that the proper variance zone is selected. See ″Setting Magnetic Zone Variance.″
- The ignition switch must be in the On position and the CMTC/EVIC display must not be blank.
- Press the C/T button to view the Compass/Temperature display.

- Press and hold the RESET button (approximately 10 seconds) until CAL is displayed, then release the button.
- Drive slowly, less than 5 MPH (8KPH) in at least 1 complete 360-degree circle.
- CAL will remain illuminated to alert the driver that the compass is in the calibration mode.
- After calibration is complete, CAL will turn off.

NOTE: For C/T Manual Calibration, perform the same procedure as above, but press and hold the C/T and US/M buttons until CAL is displayed.

If the compass appears blank, unable to be calibrated, or the compass displays false indications, the vehicle must be demagnetized. Refer to Compass Demagnetizing Procedure in the Service Manual.

3.14.5 SELF-CHECK DIAGNOSTICS

The CT/CMTC/EVIC is capable of performing a diagnostic self check on its internal functions. Diagnostics may be performed using a DRBIII® or by using the following procedure:

1. For CMTC/EVIC: With the ignition switch in the OFF position, depress and hold the RESET and the STEP buttons.
   For CT: With the ignition switch in the OFF position, depress and hold the C/T and the US/M buttons.
2. Turn the ignition switch to the ON position.
3. Continue to hold both buttons until the software versions are displayed, then release the buttons.
4. All of the VFD segments will illuminate for 2-4 seconds. Check for segments that do not illuminate or illuminate all the time.
5. When the self-check is complete the EVIC will display one of the following messages:

- PASS SELF TEST
- FAILED SELF TEST
- NOT RECEIVING J1850 MESSAGE
  When the self-check is complete the CT/CMTC will display one of the following messages:
- PASS
- FAIL
- BUS

1. To exit the self-check mode:

For the CMTC/EVIC: Depress the STEP or RESET button, or cycle the ignition switch and the CMTC/EVIC will return to normal operation.

For the C/T: Depress the C/T or US/M button, or cycle the ignition switch and the CT will return to normal operation.

If a Communication fault is displayed, refer to the symptom list. If a FAIL or FAILED is displayed, the CT/CMTC/EVIC must be replaced.

3.14.6 AMBIENT TEMPERATURE SENSOR

The ambient air temperature is monitored by the FCM and displayed by the CT/CMTC/EVIC. The FCM receives a hardwire input from the ambient temperature sensor (ATS).

The ATS is a variable resistor that operates on a 5-volt reference signal circuit hardwired from the FCM. The resistance in the ATS changes as the outside temperature rises or falls. The FCM senses the change in reference voltage through the ATS resistor. Based on the resistance of the ATS, the FCM is programmed to correspond to a specific temperature. The FCM stores and filters the ambient temperature data and transmits this data to the CMTC/EVIC via the PCI Bus. The ATS cannot be adjusted or repaired and, if faulty or damaged, it must be replaced.

3.14.7 AMBIENT TEMPERATURE SENSOR FAULT CODES

The outside temperature function is supported by the ambient temperature sensor (ATS), a signal and ground circuit hardwired to the FCM, and the CMTC/EVIC display.

If the CMTC/EVIC display indicates 54°C (130°F) or the ATS sense circuit is shorted to ground, the temp display will be 54°C (130°F) to indicate a SHORT circuit condition.

If the CMTC/EVIC display indicates -40°C (-40°F) or the ATS sense circuit is open, the temp display will be -40°C (-40°F) to indicate an OPEN circuit condition.

If there is an OPEN or SHORT circuit condition, it must be repaired before the CMTC/EVIC VFD can be tested.

The ATS is supported by the FCM. Ambient Temperature Sensor DTCs will be recorded in the FCM. The ATS can be diagnosed using the following Sensor Test. Test the ATS circuits using the diagnostics in the Body Diagnostic Procedures Manual. If the CMTC/EVIC passes the self-test, and the ATS, the circuits, and PCI bus communications are confirmed to be OK, but the CMTC/EVIC temperature display is inoperative or incorrect, replace the FCM.

AMBIENT TEMPERATURE SENSOR TEST

1. Turn the ignition OFF.
2. Disconnect the ATS harness connector.
3. Measure the resistance of the ATS using the following min/max values:

- 0° C (32° F) Sensor Resistance = 29.33 - 35.99 Kilohms
- 10° C (50° F) Sensor Resistance = 17.99 - 21.81 Kilohms
- 20° C (68° F) Sensor Resistance = 11.37 - 13.61 Kilohms
- 25° C (77° F) Sensor Resistance = 9.12 - 10.86 Kilohms
- 30° C (86° F) Sensor Resistance = 7.37 - 8.75 Kilohms
- 40° C (104° F) Sensor Resistance = 4.90 - 5.75 Kilohms

The sensor resistance should read between these min/max values. If the resistance values are not OK, replace the Sensor.

3.14.8 HOMELINK® UNIVERSAL TRANSMITTER

If equipped, the HomeLink® Universal Transmitter is integrated into the overhead console. For added security it will operate home security systems that use coded signals known generically as *Rolling Codes*. The overhead console display provides visual feedback to the driver, indicating which HomeLink® transmitter channel button is being pressed. The HomeLink® can learn and store up to three separate transmitter radio frequency codes to operate garage door openers, security gates, and security lighting. The HomeLink® buttons are marked with one, two, or three dots. For complete information, refer to Universal Transmitter in the Service Manual or the Owner's Manual.

3.14.9 TIRE PRESSURE MONITORING SYSTEM (TPM)

If equipped with the Tire Pressure Monitoring System (TPM), each of the vehicles four wheels will have a valve stem with a pressure sensor and radio transmitter built in. Signals from the tire pressure Sensor/Transmitters are received and interpreted by the Electronic Vehicle Information Center (EVIC).

A Sensor/Transmitter in a mounted wheel will broadcast its detected pressure once per minute when the vehicle is moving faster than 32 km/h (20 mph). Each Sensor/Transmitter's broadcast is uniquely coded so that the EVIC can determine the location.

3.14.9.1 TRAINING THE EVIC

The EVIC can be trained to recognize the source locations of the Sensor/Transmitter signals. The training procedure is given below:

1. From the Programmable Features List select ″RETRAIN TIRE SENSORS Y/N″ using the EVIC MENU button.

Use the STEP button to select and the MENU button to confirm ″YES″. The EVIC will initiate the following procedure:

2. A display will prompt the user to: ″TRAIN DRIVER FRONT SENSOR″. At this point the user must set the left front tire Sensor/Transmitter to learn mode by positioning a magnet (Relearn Magnet special tool 8821) over the valve stem for at least 5 seconds. The Sensor/Transmitter in the front left tire will transmit a message indicating to the EVIC that it is in learn mode. When the EVIC has received this message and is assured that it has learned an ID, the EVIC will request a horn chirp via a bus message and then display the next train request. Note: The EVIC will allow 60 seconds from the first train request display to the receipt of a unique learn ID message from the first Sensor/Transmitter and 30 seconds for each succeeding wheel. If either of these timers expires, the EVIC will abort the training procedure and revert to previous settings. The EVIC will not store one ID for multiple locations.
3. The EVIC will request the initiation of a training sequence for each tire, one-by-one in a clockwise direction around the vehicle (Left Front, Right Front, Right Rear, and Left Rear).

NOTE: 1. If one or all Sensor/Transmitters cannot be trained, move vehicle to avoid radio frequency interference.
2. If one Sensor/Transmitter still cannot be trained, replace it and retry.
3. If all Sensor/Transmitters still fail to train, replace the EVIC.
4. Once all tires are successfully learned, the previous set of stored IDs will be replaced by the new IDs, and the EVIC will display, ″TRAINING COMPLETE″ until a button is pressed.

If the vehicle is equipped with the HomeLink® feature and a HomeLink® button is pressed at any time during the training procedure, the EVIC module will immediately exit the training procedure, discard any IDs learned in the current session and perform the HomeLink® function. After the button is released, the module will display ″RETRAIN TIRE SENSORS? NO″.

The training procedure can be stopped at any time by pressing the C/T, STEP, RESET, or MENU button. When any of these buttons are pressed the EVIC will display ″TRAINING ABORTED″ until another button is pressed and then display ″RE-TRAIN TIRE SENSORS? NO″. Sensor/transmitter replacement or tire rotation will require retraining of the EVIC.

3.14.9.2 PRESSURE THRESHOLDS

The EVIC will monitor the tire pressure signals from the tire Sensor/Transmitters and determine if any tire has gone below the low pressure threshold or exceeded the high pressure threshold. Refer to the table below:

LOW TIRE PRESSURE THRESHOLDS	
SYSTEM STATUS INDICATOR	TIRE PRESSURE
On	179 kPa (26 PSI)
Off	214 kPa (31 PSI)
HIGH TIRE PRESSURE THRESHOLDS	
SYSTEM STATUS INDICATOR	TIRE PRESSURE
On	310 kPa (45 PSI)
Off	276 kPa (40 PSI)

3.14.9.3 CRITICAL AND NON-CRITICAL SYSTEM ALERTS

CRITICAL:

A critical alert will be triggered when a tire pressure has gone below or above a set threshold pressure. The EVIC will request a chime and then display ″X TIRE(S) LOW PRESSURE″ or ″X TIRE(S) HIGH PRESSURE″. ″X″ will be the number of tires reporting low or high pressure. The message will display for the duration of the current ignition cycle or until an EVIC button is pressed. If the display is removed without correcting the condition, it will reappear without a chime after 300 seconds to warn the driver of the low or high-pressure condition.

NON-CRITICAL:

A non-critical alert with no chime will be triggered when no signal is received from a Sensor/ Transmitter or when a Sensor/Transmitter low battery condition is detected. The EVIC will display ″SERVICE TIRE PRESS. SYSTEM″.

3.14.9.4 SYSTEM FAULTS

There are two conditions that will cause a Tire Pressure Monitoring System fault to be set. All fault codes are associated with a specific wheel location.

1. If the EVIC detects a non-transmitting Sensor/ Transmitter condition, it will:
   a. Store an active fault code.
   b. Request a chime
   c. Display ″SERVICE TIRE PRESS. SYSTEM″.
1. When the EVIC receives a Low Sensor/ Transmitter battery report from a Sensor/ Transmitter, it will:
   a. Store an active fault code.
   b. Request a chime.
   c. Display ″SERVICE TIRE PRESS. SYSTEM″.

Use the DRBIII® Inputs/Outputs function to further isolate the specific concern. The DRBIII® can be queried to determine the status and battery condition for each Sensor/Transmitter.

3.14.9.5 SPARE WHEEL AUTO-DETECT

If the spare tire is mounted on the vehicle, the EVIC will:

1. Detect the change after 15 minutes at or above 32 km/h (20 mph)
2. Query driver: ″SPARE TIRE IN USE?″ Use the MENU button for YES, and the STEP button for NO. For YES, the EVIC will revert to the previous display and wait five hours. After five hours the EVIC will proceed as in the NO response below.
3. For a NO response, after 15 minutes, the EVIC will display: ″ALL 5 TIRES W/ VEHICLE? Y″ Use the STEP button to select YES or NO, and the MENU button to confirm.
   For a ″YES″ response, the EVIC will display ″SERVICE TIRE PRESS. SYSTEM″.
   For a ″NO″ response, the EVIC will revert to previous display and display ″ ALL 5 TIRES W/ VEHICLE? Y″ every time the ignition is cycled to RUN and the missing tire ID is not received.

3.14.9.6 DIAGNOSING AND CLEARING SYSTEM FAULTS

All Tire Pressure Monitoring System Faults are specific to one location. If a no-transmit, ″LOW BATTERY″, ″LOW or HIGH PRESSURE″ fault is detected, the location can be determined by the DRBIII®. The appropriate Sensor/Transmitter can then be replaced or the out-of-specification pressure condition can be corrected.

- If a single Sensor/Transmitter cannot be detected by the EVIC, replace that Sensor/Transmitter.

- If none of the Sensor/Transmitters can be detected, refer to symptoms in the Tire Pressure Monitor section.
- If a BUCKET COUNTER test fails, and one or more Sensor/Transmitters does not transmit, replace the affected Sensor/Transmitter.
- If none of the Sensor/Transmitter causes the BUCKET COUNTER to advance, replace the EVIC.
- If the EVIC displays SERVICE TIRE PRESS. SYSTEM and the DRBIII® sees no Sensor/Transmitter fault or pressure out of specification;

1. Attempt the Retrain procedure. If the display reoccurs,
2. Replace the EVIC.

3.14.9.7 SYSTEM TEST

A test of the Tire Pressure Monitoring System can be initiated in the EVIC. The test sequence is as follows:

1. Perform the RETRAIN TIRE SENSORS procedure.
2. Press and hold the RESET and STEP buttons for five seconds.
3. The EVIC will display BUCKET COUNTERS.
4. Drive the vehicle at 32 km/h (20 mph) for at least 2 minutes.
5. The counters will increase by one each time a Sensor/Transmitter signal is received by the EVIC.
6. Observe that the COUNTERS register at least 3 receptions for each Sensor/Transmitter.
7. Replace any Sensor/Transmitter that does not meet this specification.

The test will continue until any EVIC button is pressed or until the ignition is cycled to OFF.

3.15 POWER DOOR LOCK SYSTEM

When the BCM receives input for a lock request from a door lock switch, RKE or cylinder lock switch (only with VTSS), it will turn the lock drivers on for a specified time of 375 msec. If the request is there beyond 375 msec, the BCM considers the door lock signal stuck. Once a door lock or unlock signal is stuck for longer than 10 seconds, the BCM will set a trouble code and the signal input is ignored until the stuck condition disappears. The door lock switches provide a variable amount of resistance thereby dropping the voltage of the multiplexed (MUX) circuit and the BCM will respond to that command.

3.15.1 DOOR LOCK INHIBIT

When the key is in the ignition and in any position and either front door is open, the door lock switches LOCK functions are disabled. The UNLOCK functions are still functional. This protects against locking the vehicle with the keys still in the ignition. The RKE key fob will still lock the doors as usual. After the key is removed from the ignition or the doors are closed, the power door locks will operate normally.

3.15.2 AUTOMATIC DOOR LOCKS

This feature can be enabled or disabled by using either the DRBIII® or the customer programming method. When enabled all the doors will lock when the vehicle reaches a speed of 16 MPH (25.7 KMH) and all the doors are closed. If a door is opened and the vehicle slows to below 16 MPH (25.7 KMH), the door locks will operate again once all doors are closed and the speed is above 16 MPH (25.7 KMH).

3.15.3 REMOTE KEYLESS ENTRY (RKE)

The body control module interfaces with the RKE module via a one-way serial bus interface. The RKE module is not on the PCI bus. The RKE module sends a 0-5 volt pulse width signal to the BCM depending on which button on the transmitter was pressed. The BCM controls the door lock/unlock functions and the arming/disarming of the Vehicle Theft Security System (if equipped) and the activation of illuminated entry. The BCM will also send the appropriate messages to the Power Sliding Doors and Power Liftgate modules. The Intergrated Power Module (IPM) activates the park lamps, headlamps, and horn for horn chirp when sent the appropriate message from the BCM as received from the RKE transmitter. When a one-button press is made for unlock, both driver side doors will unlock and the front and rear turn signals will flash. When a second press is initiated (within 5 seconds of the first) both passenger doors will unlock and all four turn signals will flash.

The RKE module is capable of retaining up to 4 individual access codes (4 transmitters). If the PRNDL is in any position except park, the BCM will ground the interface thereby disabling the RKE.

Both the 3 and 6 buttons transmitters will have 2-CR2016 batteries in series. The 2-button export transmitter will have 2-CR2016 batteries in series also but the 5-button will have one. The minimum battery life should be approximately 4.7 years based on 20 transmissions a day at 84°F (25°C). Using the DRBIII® and selecting RKE FOB Test can test the transmitter.

The RKE module can be programmed via the DRBIII® or the customer programming method. The BCM will only allow programming mode to be

entered when the ignition is in the on position, the PRNDL is in park position, and the VTSS (if equipped) is in the disarmed mode.

3.16 POWER FOLDING MIRRORS

The power folding mirrors are powered to two positions: folded and unfolded. The driver may choose fold or unfold with a switch that is located on the right side of the steering column. The folding mirror switch grounds a sense wire that comes from the Body Control Module when it is placed in the fold position. The mirrors will move to the position designated by the switch whether the ignition switch is the On or Off position and both front doors are closed. When the Power Folding Mirror switch is left in the fold position during a vehicle exit the mirrors will automatically unfold then refold after both front doors are closed. This is to prevent mirror contact with either front door when opened. When opening either front door, the Body Control Module will unfold the mirrors in the following manner depending on which front door is opened. If the driver door is opened, only the driver side mirror will unfold. If the passenger door is opened, both mirrors will unfold. The passenger mirror is prevented from unfolding when the driver's door is opened by the Passenger Folding Mirror Relay, which opens the driver circuit to the passenger side mirror.

3.17 POWER LIFTGATE SYSTEM

3.17.1 POWER LIFTGATE

The power liftgate (PLG) system is activated through the use of the following: remote keyless entry (RKE), overhead console switches, outside liftgate handle switch or the DRBIII®. These inputs are hardwired to the body control module (BCM) and can be monitored with a diagnostic tool. The BCM will send the message via PCI bus to the power liftgate module (PLGM). The liftgate must be in the full open or full closed position to operate. Once the BCM sends a button activation message to the PLGM, the module shall read all inputs, outputs and vehicle conditions to determine whether it shall open, close or inhibit the PLG operation. Once the PLGM determines the vehicle conditions are safe for operation, the PLGM will initiate a chime for 2 seconds prior to the liftgate activation and 2 seconds during the open or close cycle.

During an opening or closing cycle, the PLGM can detect an obstacle present should it meet sufficient resistance by the hall effect sensors (integrated in the gear motor assembly GMA).

During an open cycle, multiple liftgate activations (RKE, overhead console, B pillar) are ignored until the liftgate reaches the full open position. However, during a close cycle, a 2nd liftgate activation (RKE, overhead console, B pillar) will reverse the liftgate to the full open position.

If the engine is cranked during a power open/close the PLG will pause then resume after engine cranking. In addition, if the vehicle is placed in gear during an open cycle, the PLG shall reverse direction and begin closing. If the vehicle is placed in gear during a closing cycle, the PLG shall continue closing until fully closed. If the outside handle is activated during an open cycle, the PLG will become a full manual liftgate. If the outside handle is activated during a close cycle, the PLG shall reverse direction of travel to the full open position.

3.17.2 DIAGNOSTIC FEATURES

The PLG can be flashed on vehicle via PCI bus with a DRBIII® diagnostic tool. The DRBIII® can read all inputs, actuate all outputs, read module information, and read diagnostic trouble codes. As a reminder, some DTC's can be set during normal PLG operation.

3.17.3 SYSTEM INHIBITORS

1. Battery voltage too high or too low (above 16V, below 9.5V)
2. Vehicle in gear
3. Vehicle speed > 0 mph/km/h
4. Outside temperature too high, above 143°F (62°C) or too low, below -12°F (-24°C).
5. O/H console lockout will inhibit the B pillar switches only.
6. Liftgate locked will inhibit all interior switches from opening (overhead console). A locked liftgate can be power closed.
7. Pinch Sensor switch stuck shall inhibit the power close feature.

3.18 POWER SLIDING DOOR SYSTEM

3.18.1 POWER SLIDING DOOR

The Power Sliding Door (PSD) system is activated through the use of the following: Remote Keyless Entry (RKE), overhead console switches, B pillar switches or the DRBIII®. These inputs are hardwired to the body control module (BCM) and can be monitored with a diagnostic tool. The BCM will send the message via PCI bus to the power sliding door module (PSDM). The sliding door must be in the full open or full closed position to operate. Once the BCM sends a button activation message to the PSDM, the module shall read all inputs, outputs and vehicle conditions to determine whether it

shall open, close or inhibit the PSD operation. During an opening or closing cycle, the PSDM can detect an obstacle present should it meet sufficient resistance by the hall effect sensors (integrated in the drive motor).

During an open cycle, multiple door activations (RKE, overhead console, B pillar) are ignored until the door reaches the full open position. However, during a close cycle, a 2nd door activation (RKE, overhead console, B pillar) will reverse the door to the full open position.

If the engine is cranked during a power open/close the PSD will pause then resume after engine cranking. In addition, if the vehicle is placed in gear during an open cycle, the PSD shall reverse direction and begin closing. If the vehicle is placed in gear during a closing cycle, the PSD shall continue closing until fully closed.

If the inside or outside handle is activated during an open or close cycle, the PSD will become a full manual sliding door. When the child lockout switch is “on” or “enabled”, the B pillar switches are inhibited from opening a fully closed power sliding door. However, the B pillar switches are allowed to close a fully opened power sliding door.

There is only one part number for the power sliding door module (PSDM). The driver sliding door harness has an additional ground circuit which will identify it as the driver side. This eliminates the need for a left and a right side module.

3.18.2 DIAGNOSTIC FEATURES

The PSDM can be flashed on vehicle via PCI bus with a DRBIII® diagnostic tool. The DRBIII® can read all inputs, actuate all outputs, read module information, and read diagnostic trouble codes. As a reminder, some DTC’s can be set during normal PSD operation.

3.18.3 SYSTEM INHIBITORS

1. Battery voltage too high or too low (above 16V, below 9.5V)
2. Vehicle in gear
3. Vehicle speed > 0 mph/km/h
4. Child locks enabled inhibit the B pillar switch operation
5. O/H console lockout will inhibit the B pillar switches
6. Doors locked will inhibit all interior switches from opening (Overhead Console, B Pillar). A locked sliding door can be power closed.

3.19 REAR WINDOW DEFOG/HEATED MIRROR/FRONT WIPER DE-ICE

The defroster button located on the HVAC control controls the rear window defogger, heated side view mirrors and front wiper de-icer grid. In addition the front wiper de-ice function is turned on when front defog/defrost mode is selected.

When the defroster button is pushed, the HVAC control sends a bus message over the PCI bus to the Front Control Module (FCM) which controls the Rear Window Defogger relay. The defroster LED will illuminate when the defroster function is on. The defroster will function for 10 minutes or can be cycled off sooner by pressing the defroster button again. The front wiper de-icer grid receives its 12 volts from the accessory relay through fuse 11 and the HVAC control module supplies the grid ground.

3.20 VEHICLE THEFT SECURITY SYSTEM

The Vehicle Theft Security System (VTSS) is part of the Body Control Module (BCM). The BCM monitors the vehicle doors, liftgate (export only), hood, and the ignition for unauthorized operation. The alarm activates by sounding the horn, flashing the headlamps and the VTSS indicator lamp. The VTSS does not prevent engine operation, this is done with the Sentry Key Immobilizer Module (SKIM). The VTSS indicator lamp will flash for approximately 15 seconds during the arming process. If there is no interruption during the arming process, upon completion the VTSS indicator lamp will flash at a slower rate. When the BCM receives an input to trigger the alarm, the BCM will control the outputs of the headlamps, horn, and VTSS lamp for approximately 15 minutes.

Arming (Active and Passive)

Active arming occurs when the ignition key is removed, the RKE transmitter or door key cylinders are used to lock the vehicle doors, whether the doors are open or closed. The arming process is complete only after all doors are closed.

Passive arming occurs when the ignition key is removed, the driver door is opened, and the doors are locked with the power door lock switch, and the door is closed.

Disarming (Active and Passive)

Active disarming occurs when the RKE transmitter is used to unlock the vehicle doors. This disarming will also halt the alarm once it has been activated.

Passive disarming occurs upon normal vehicle entry (unlocking driver door with the key) or turning the ignition switch on with a valid skim key. This disarming will also halt the alarm once it has been activated.

Tamper Alert

The VTSS tamper alert will sound the horn three times upon disarming after an initial alarming has occurred to indicate a tamper condition has occurred.

Manual Override

The system will not arm if the doors are locked using the manual lock control or if the locks are actuated by an inside occupant after the doors are closed.

Diagnosis

For complaints about the Vehicle Theft Alarm triggering on its own, use the DRBIII® and read the Last VTSS Cause status.

3.20.1 THATCHAM ALARM SYSTEM (EXPORT ONLY)

The Thatcham Alarm Module monitors the vehicle doors, liftgate, hood and the interior of the vehicle for unauthorized operation. The vehicle doors, liftgate, and hood use ajar switches as inputs to the BCM to indicate their current status. The interior of the vehicle is secured by the use of Intrusion Sensors. The Intrusion Sensors are used as inputs to the RKE/Thatcham Alarm Module to report any motion in the interior of the vehicle. The alarm activates by sounding the siren, flashing the hazard lamps, and the VTSS Indicator Lamp.

Arming

Before arming, all doors, liftgate, and the hood must be completely closed. The system can only be armed by locking the doors with the RKE transmitter.

Disarming

To disarm the alarm system, use the RKE transmitter or turn the ignition on with a valid SKIM key. This will also halt the alarm once it has been activated.

NOTE: A powertrain control module from a vehicle equipped with a vehicle theft security system cannot be used in a vehicle that is not equipped with a vehicle theft security system if the VTSS indicator lamp comes on after ignition on and stays on, the PCI Bus Communication with the powertrain control module has possibly been lost.

3.21 WIPER SYSTEM

3.21.1 FRONT WIPER

The front wiper/washer system consists of the following features: lo-hi-speed, mist wipers, intermittent wipers and wipe after wash. The front wiper system is only active when the ignition switch is in the RUN/ACC position. The vehicle operator selects the front wiper function using the front wiper switch (a resistive multiplexed stalk switch) which is integral to the Multi-Function Switch. The front wiper switch is hardwired to the Body Control Module (BCM). Upon receiving a wiper switch signal, the BCM sends a PCI Bus message to the Front Control Module (FCM). The FCM controls the ON/OFF relay, the HIGH/LOW relay and the front and rear washer pump motors.

The Wiper system utilizes the BCM to control the on/off and hi/low relays for the low and hi speed wiper functions, intermittent wiper delay as the switch position changes, pulse wipe, wipe after wash mode and wiper motor functions. The BCM uses the vehicle speed input to double the usual delay time below 10 MPH (6 KPH).

3.21.2 SPEED SENSITIVE INTERMITTENT WIPE MODE

There are 5 individual delay time settings with a minimum delay of 1.7 seconds to a maximum of 18.4 seconds. When the vehicle speed is under 10 MPH (6 KPM), the delay time is doubled, providing a delay range of 3.4 seconds to 36.8 seconds.

3.21.3 PULSE WIPE

When the wiper is in the off position and the driver presses the wash button for more than .062 seconds, but less than .5 seconds, 2 wipe cycles in low speed mode will be provided.

3.21.4 PARK AFTER IGNITION OFF

Because the wiper relays are powered from the battery, the BCM can run the wipers to park after the ignition is turned off.

3.21.5 WIPE AFTER WASH

When the driver presses the wash button for over .5 seconds and releases it, the wiper will continue to run for 2 additional wipe cycles.

3.21.6 REAR WIPER

The rear wiper/washer system consists of the following features: mist wipers, intermittent wipers and wipe after wash. The rear wiper system is only active when the ignition switch is in the RUN/ACC position. The vehicle operator selects the rear wiper function using one of the three buttons on the dash mounted rear wiper switch. The rear wiper switch is hardwired to the Body Control Module (BCM). Upon receiving a wiper switch signal, the BCM provides 12 volts to the rear wiper motor. Rear washer occurs when the BCM receives a rear washer switch ON input. The BCM sends a PCI Bus message to the FCM requesting rear washer on.

The FCM activates the rear washer by providing a ground for the rear washer motor.

3.21.7 SPEED SENSITIVE INTERMITTENT WIPE MODE

The delay setting of the rear wiper system is based solely on the vehicle speed. The delay time is defined as the amount of time from the start of a wipe to the beginning of the next wipe. The rear wiper system delay time is based on the following:

7.75 - (MPH x .05) = Seconds delay

Examples:

At zero (0) MPH the delay is 7.75 seconds.

At 100 MPH the delay is 2.75 seconds.

3.21.8 WIPE AFTER WASH

When the driver presses the wash button for over 1.5 seconds and releases it, the wiper will continue to run for 2 additional wipe cycles.

3.22 USING THE DRBIII®

Refer to the DRBIII® user guide for instructions and assistance with reading trouble codes, erasing trouble codes, and other DRBIII® functions.

3.23 DRBIII® ERROR MESSAGES

Under normal operation, the DRBIII® will display one of only two error messages: user-requested WARM Boot or User-Requested COLD Boot. If the DRBIII® should display any other error message, record the entire display and call the STAR Center. This is a sample of such an error message display:

```
ver:2.14
date: 26 Jul93
file: key_iff.cc
date: Jul26 1993
line: 548
err: 0xi
User-Requested COLD Boot

Press MORE to switch between this display
and the application screen.
Press F4 when done noting information.
```

3.24 DRBIII® DOES NOT POWER UP (BLANK SCREEN)

If the LED's do not light or no sound is emitted at start up, check for loose cable connections or a bad cable. Check the vehicle battery voltage (data link connector cavity 16). A minimum of 11 volts is required to adequately power the DRBIII®. Check for proper grounds at DLC cavities 4 and 5.

If all connections are proper between the DRBIII® and the vehicle or other devices, and the vehicle battery is fully charged, an inoperative DRBIII® may be the result or a faulty cable or vehicle wiring.

3.25 DISPLAY IS NOT VISIBLE

Low temperatures will affect the visibility of the display. Adjust the contrast to compensate for this condition.

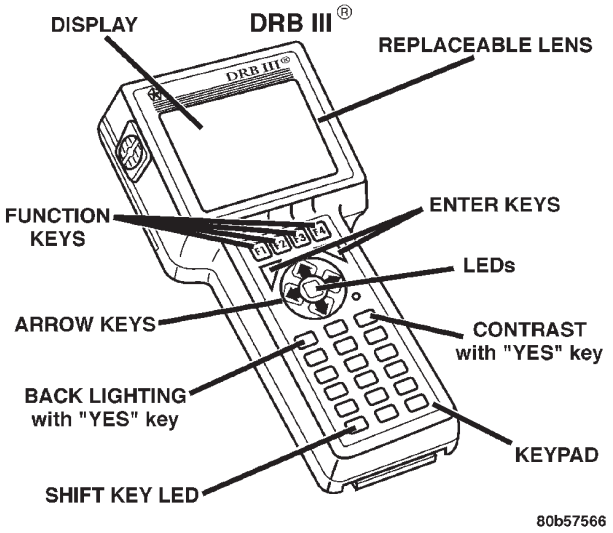

4.0 DISCLAIMERS, SAFETY, WARNINGS

4.1 DISCLAIMERS

All information, illustrations, and specifications contained in this manual are based on the latest information available at the time of publication. The right is reserved to make changes at any time without notice.

4.2 SAFETY

4.2.1 TECHNICIAN SAFETY INFORMATION

WARNING: ENGINES PRODUCE CARBON MONOXIDE THAT IS ODORLESS, CAUSES SLOWER REACTION TIME, AND CAN LEAD TO SERIOUS INJURY. WHEN THE ENGINE IS OPERATING, KEEP SERVICE AREAS WELL VENTILATED OR ATTACH THE VEHICLE EXHAUST SYSTEM TO THE SHOP EXHAUST REMOVAL SYSTEM.

Set the parking brake and block the wheel before testing or repairing the vehicle. It is especially important to block the wheels on front-wheel drive vehicles; the parking brake does not hold drive wheels.

When servicing a vehicle, always wear eye protection, and remove any metal jewelry such as rings, watchbands or bracelets that might make an inadvertent electrical contact.

When diagnosing a body system problem, it is important to follow approved procedures where applicable. These procedures can be found in this General Information Section or in the service manual procedures. Following these procedures is very important to safety of individuals performing diagnostic tests.

4.2.2 VEHICLE PREPARATION FOR TESTING

Make sure the vehicle being tested has a fully charged battery. If it does not, false diagnostic codes or error messages may occur.

4.2.3 SERVICING SUB-ASSEMBLIES

Some components of the body system are intended to be serviced as an assembly only. Attempting to remove or repair certain system subcomponents may result in personal injury and/or improper system operation. Only those components with approved repair and installation procedures in the service manual should be serviced.

4.2.4 DRBIII® SAFETY INFORMATION

WARNING: EXCEEDING THE LIMITS OF THE DRBIII® MULTIMETER IS DANGEROUS. IT CAN EXPOSE YOU TO SERIOUS OR POSSIBLY FATAL INJURY. CAREFULLY READ AND UNDERSTAND THE CAUTIONS AND THE SPECIFICATION LIMITS.

- Follow the vehicle manufacturer's service specifications at all times.
- Do not use the DRBIII® if it has been damaged.
- Do not use the test leads if the insulation is damaged or if metal is exposed.
- To avoid electrical shock, do not touch the test leads, tips, or the circuit being tested.
- Choose the proper range and functions for the measurement. Do not try voltage or current measurement that may exceed the rated capacity.
- Do not exceed the limits shown in the table below:

FUNCTION	INPUT LIMIT
Volts	0 - 500 peak volts AC 0 - 500 volts DC
Ohms (resistance)*	0 -1.12 megohms
Frequency Measured Frequency Generated	0 - 10 kHz
Temperature	-58 - 1100°F -50 - 600°C

* Ohms cannot be measured if voltage is present. Ohms can be measured only in a non-powered circuit.

- Voltage between any terminal and ground must not exceed 500v DC or 500v peak AC.
- Use caution when measuring voltage above 25v DC or 25v AC.
- Use the low current shunt to measure circuits up to 10A. Use the high current clamp to measure circuits exceeding 10A.
- When testing for the presence of voltage or current, make sure the meter is functioning correctly. Take a reading of a known voltage or current before accepting a zero reading.
- When measuring current, connect the meter in series with the load.
- Disconnect the live test lead before disconnecting the common test lead.
- When using the meter function, keep the DRBIII® away from spark plug or coil wires to avoid measuring error from outside interference.

4.3 WARNINGS

4.3.1 VEHICLE DAMAGE WARNINGS

Before disconnecting any control module, make sure the ignition is “off”. Failure to do so could damage the module.

When testing voltage or continuity at any control module, use the terminal side (not the wire end) of the connector. Do not probe a wire through the insulation; this will damage it and eventually cause it to fail because of corrosion. Be careful when performing electrical tests so as to prevent accidental shorting of terminals. Such mistakes can damage fuses or components. Also, a second code could be set, making diagnosis of the original problem more difficult.

4.3.2 ROAD TESTING A COMPLAINT VEHICLE

Some complaints will require a test drive as part of the repair verification procedure. The purpose of the test drive is to try to duplicate the diagnostic code or symptom condition.

WARNING: BEFORE ROAD TESTING A VEHICLE, BE SURE THAT ALL COMPONENTS ARE REASSEMBLED. DURING THE TEST DRIVE, DO NOT TRY TO READ THE DRBIII® SCREEN WHILE IN MOTION. DO NOT HANG THE DRBIII® FROM THE REAR VIEW MIRROR OR OPERATE IT YOURSELF. HAVE AN ASSISTANT AVAILABLE TO OPERATE THE DRBIII®.

5.0 REQUIRED TOOLS AND EQUIPMENT

DRBIII® (diagnostic read-out box)
Jumper wires
Ohmmeter
Voltmeter
Sentry Key Tester
Test Light
8310 Airbag System Load Tool
8443 SRS Airbag System Load Tool
Diagnostic Junction Port Tester 8339

6.0 GLOSSARY OF TERMS

ABS	antilock brake system
ACM	airbag control module
AECM	airbag electronic control module (ACM)
APM	adjustable pedals module
ASDM	airbag system diagnostic module (ACM)
ATC	automatic temperature control
BCM	body control module
CAB	controller antilock brake
CMTC	compass/mini-trip computer
CPA	connector positive assurance
DAB	driver airbag
DCHA	diesel cabin heater assist (cabin heater)
DLC	data link connector
DTC	diagnostic trouble code
DR	driver
EBL	electric back lite (rear window defogger)
ECM	engine control module
EVIC	electronic vehicle information center
FCM	front control module
GCC	Gulf Coast Countries
HE	hall effect
HVAC	heater ventilation, air conditioning
IPM	integrated power module
LDU	lower drive unit
LHD	left hand drive
MIC	mechanical instrument cluster
MTC	manual temperature control
MSMM	memory seat/mirror module
OBD	on board diagnostics
ODO	odometer
ORC	occupant restraint controller
PAB	passenger airbag
PASS	passenger
PCI	Programmable Communication Interface (vehicle communication bus)
PCM	powertrain control module
PDC	power distribution center
PLG	power liftgate
PLGM	power liftgate module
PSD	power sliding door
PSDM	power sliding door module
PWM	pulse width modulated
RHD	Right Hand Drive
RKE	remote keyless entry

SAB	seat airbag
SBT	seat belt tensioner
SIACM	side impact airbag control module
SKIM	sentry key immobilizer module
SKIS	sentry key immobilizer system
SQUIB	also called initiator (located inside airbag)
SRS	supplemental restraint system
TCM	transmission control module
TPM	tire pressure monitor
VFD	vacuum fluorescent display
VTSS	vehicle theft security system

NOTES

7.0

DIAGNOSTIC INFORMATION AND PROCEDURES

Symptom List:

ACCELEROMETER 1
ACCELEROMETER 2
INTERNAL 1
INTERNAL 2
OUTPUT DRIVER 1
OUTPUT DRIVER 2
STORED ENERGY FIRING 1

Test Note: All symptoms listed above are diagnosed using the same tests. The title for the tests will be INTERNAL MODULE TEST.

When Monitored and Set Condition:

ACCELEROMETER 1

When Monitored: With the ignition on, the module on board diagnostics continuously performs internal circuit tests.

Set Condition: This DTC will set if the module identifies an out of range internal circuit.

ACCELEROMETER 2

When Monitored: With the ignition on, the module on board diagnostics continuously performs internal circuit tests.

Set Condition: This DTC will set if the module identifies an out of range internal circuit.

INTERNAL 1

When Monitored: With the ignition on, the module on board diagnostics continuously performs internal circuit tests.

Set Condition: This DTC will set if the module identifies an out of range internal circuit.

INTERNAL 2

When Monitored: With the ignition on, the module on board diagnostics continuously performs internal circuit tests.

Set Condition: This DTC will set if the module identifies an out of range internal circuit.

OUTPUT DRIVER 1

When Monitored: With the ignition on the module on board diagnostics continuously performs internal circuit tests.

Set Condition: This DTC will set if the module identifies an out of range internal circuit.

OUTPUT DRIVER 2

When Monitored: With the ignition on the module on board diagnostics continuously performs internal circuit tests.

Set Condition: This DTC will set if the module identifies an out of range internal circuit.

ACCELEROMETER 1 — Continued

STORED ENERGY FIRING 1

When Monitored: With the ignition on the ACM on board diagnostics continuously performs internal circuit tests.

Set Condition: This DTC will set if the ACM identifies an out of range internal circuit.

POSSIBLE CAUSES
AIRBAG CONTROL MODULE - ACM
LEFT SIDE IMPACT AIRBAG CONTROL MODULE - LSIACM
RIGHT SIDE IMPACT AIRBAG CONTROL MODULE - RSIACM

TEST	ACTION	APPLICABILITY
1	Turn the ignition on. Ensure the battery is fully charged. **WARNING: IF THE MODULE IS DROPPED AT ANY TIME, IT MUST BE REPLACED.** **NOTE: For the purpose of this test, the AECM and ORC modules will be referred to as an ACM.** From the list below, select the appropriate module reporting this diagnostic trouble code. SELECT ONE: ACM - ACTIVE or STORED DTC WARNING: MAKE SURE THE BATTERY IS DISCONNECTED, THEN WAIT TWO MINUTES BEFORE PROCEEDING. Replace the Airbag Control Module in accordance with Service Instructions. Perform AIRBAG VERIFICATION TEST - VER 1. LEFT SIACM - ACTIVE or STORED DTC WARNING: MAKE SURE THE BATTERY IS DISCONNECTED, THEN WAIT TWO MINUTES BEFORE PROCEEDING. Replace the Left Side Impact Airbag Control Module in accordance with Service Instructions. Perform AIRBAG VERIFICATION TEST - VER 1. RIGHT SIACM - ACTIVE or STORED DTC WARNING: MAKE SURE THE BATTERY IS DISCONNECTED, THEN WAIT TWO MINUTES BEFORE PROCEEDING. Replace the Right Side Impact Airbag Control Module in accordance with Service information. Perform AIRBAG VERIFICATION TEST - VER 1. **NOTE: When reconnecting Airbag system components, the ignition must be turned off and the battery must be disconnected.**	All

Symptom List:

AIRBAG WARNING INDICATOR OPEN
AIRBAG WARNING INDICATOR SHORT

Test Note: All symptoms listed above are diagnosed using the same tests. The title for the tests will be AIRBAG WARNING INDICATOR TEST.

When Monitored and Set Condition:

AIRBAG WARNING INDICATOR OPEN

When Monitored: With ignition on the ACM monitors the PCI Bus for a message from the MIC containing the airbag warning indicator status. The MIC transmits the message one time at ignition on, upon lamp state change, or in response to the ACM lamp message.

Set Condition: This DTC will set immediately if the indicator status is OPEN .

AIRBAG WARNING INDICATOR SHORT

When Monitored: With ignition on the ACM monitors the PCI Bus for a message from the MIC containing the airbag warning indicator status. The MIC transmits the message one time at ignition on, upon lamp state change, or in response to the ACM lamp message.

Set Condition: This DTC will set immediately if the indicator status is SHORT.

POSSIBLE CAUSES
MIC, COMMUNICATION FAILURE
WARNING INDICATOR
ACM, WARNING INDICATOR
STORED CODE OR INTERMITTENT CONDITION
ACTIVE CODE PRESENT

TEST	ACTION	APPLICABILITY
1	Turn the ignition on. Ensure the battery is fully charged. **NOTE: For the purpose of this test, the AECM and ORC modules will be referred to as an ACM.** SELECT ACTIVE or STORED DTC: ACM - ACTIVE DTC Go To 2 ACM - STORED DTC Go To 5 **NOTE: When reconnecting Airbag system components, the ignition must be turned off and the battery must be disconnected.**	All

AIRBAG WARNING INDICATOR OPEN — Continued

TEST	ACTION	APPLICABILITY
2	With the DRBIII®, ensure PCI Bus communications with the Instrument Cluster. Is the Instrument Cluster communicating on the PCI Bus? Yes → Go To 3 No → Refer to category COMMUNICATION CATEGORY and select the related symptom INSTRUMENT CLUSTER BUS +/- SIGNAL OPEN.	All
3	With the DRBIII® select PASSIVE RESTRAINTS, AIRBAG and MONITOR DISPLAY. Using the DRBIII®, read the WARNING LAMP MONITOR screen. Select the LAMP STATUS displayed on the DRB monitors screen. Does the DRBIII® show the LAMP STATUS: OK? YES Go To 4 NO Replace Instrument Cluster. Perform BODY VERIFICATION TEST - VER 1.	All
4	**WARNING: TURN THE IGNITION OFF, DISCONNECT THE BATTERY AND WAIT TWO MINUTES BEFORE PROCEEDING.** If there are no possible causes remaining, view repair. Repair Replace the Airbag Control Module in accordance with Service Instructions. WARNING: IF THE AIRBAG CONTROL MODULE IS DROPPED AT ANY TIME, IT MUST BE REPLACED. Perform AIRBAG VERIFICATION TEST - VER 1.	All
5	**NOTE: Ensure the battery is fully charged.** With the DRBIII®, record and erase all DTCs from all modules. All active codes must be resolved before diagnosing any stored codes. Maintain a safe distance from all airbags while performing the following steps. With the DRBIII® monitor active codes as you work through the system. **NOTE: If equipped with Passenger Airbag On-Off switch, read the DTC's in all switch positions.** Wiggle the wiring harness and connectors of the appropriate airbag system and rotate the steering wheel from stop to stop. **NOTE: Check connectors - Clean and repair as necessary.** You have just attempted to simulate the condition that initially set the trouble code message. The following additional checks may assist you in identifying a possible intermittent problem: - Visually inspect related wire harness connectors. Look for broken, bent, pushed out, spread, corroded, or contaminated terminals. - Visually inspect the related harnesses. Look for chafed, pierced, pinched or partially broken wire. - Refer to Wiring Diagrams and Technical Service Bulletins that may apply. Did the DTC become active ? Yes → Select appropriate symptom from Symptom List. No → No problem found at this time. Erase all codes before returning vehicle to customer.	All

Symptom:
CALIBRATION MISMATCH

When Monitored and Set Condition:

CALIBRATION MISMATCH

When Monitored: With ignition on, the ACM monitors the PCI Bus for the VIN message containing the body style. Note: The VIN message should match the vehicle VIN plate.

Set Condition: If the Body style stored in ACM does not exactly match the vehicle body style indicated by the PCM for 2 consecutive VIN messages, then the fault shall be set.

POSSIBLE CAUSES
PCM, PCI COMMUNICATION FAILURE
COMPARE VEHICLE IDENTIFICATION NUMBERS
ORC CALIBRATION MISMATCH
STORED CODE OR INTERMITTENT CONDITION
ACTIVE CODE PRESENT

TEST	ACTION	APPLICABILITY
1	**NOTE: Ensure the battery is fully charged.** Turn the ignition on. **NOTE: For the purpose of this test, the AECM and ORC modules will be referred to as an ACM.** SELECT ACTIVE or STORED DTC: ACM - ACTIVE DTC Go To 2 ACM - STORED DTC Go To 5 **NOTE: When reconnecting Airbag system components, the ignition must be turned off and the battery must be disconnected.**	All
2	Turn the ignition on. Connect the DRB to the data link connector and select PASSIVE RESTRAINTS, AIRBAG, SYSTEM TEST. With the DRBIII®, read the system test. Does the DRB show PCM Active on the Bus:? Yes → Go To 3 No → Refer to category COMMUNICATION CATEGORY and select the related symptom. Perform AIRBAG VERIFICATION TEST - VER 1.	All

CALIBRATION MISMATCH — Continued

TEST	ACTION	APPLICABILITY
3	With the DRB select ENGINE MISCELLANEOUS, select MISC FUNCTION, and then CHECK VIN to read the Vehicle Identification Number in the Powertrain Control Module. Compare the VIN displayed on the DRB screen and the Vehicle VIN plate. Does the VIN plate and the PCM VIN match? Yes → Go To 4 No → Replace the Powertrain Control Module and program with the correct vehicle identification number. Perform AIRBAG VERIFICATION TEST - VER 1.	All
4	**WARNING: TURN THE IGNITION OFF, DISCONNECT THE BATTERY AND WAIT TWO MINUTES BEFORE PROCEEDING.** **WARNING: IF THE AIRBAG CONTROL MODULE IS DROPPED AT ANY TIME, IT MUST BE REPLACED.** If there are no possible causes remaining, view repair. Repair Replace the Airbag Control Module in accordance with Service Instructions. WARNING: make sure the battery is disconnected and wait 2 minutes before proceeding. Perform AIRBAG VERIFICATION TEST - VER 1.	All
5	**NOTE: Ensure the battery is fully charged.** With the DRBIII®, record and erase all DTCs from all modules. All active codes must be resolved before diagnosing any stored codes. Maintain a safe distance from all airbags while performing the following steps. With the DRBIII® monitor active codes as you work through the system. **NOTE: If equipped with Passenger Airbag On-Off switch, read the DTC's in all switch positions.** Wiggle the wiring harness and connectors of the appropriate airbag system and rotate the steering wheel from stop to stop. **NOTE: Check connectors - Clean and repair as necessary.** You have just attempted to simulate the condition that initially set the trouble code message. The following additional checks may assist you in identifying a possible intermittent problem: - Visually inspect related wire harness connectors. Look for broken, bent, pushed out, spread, corroded, or contaminated terminals. - Visually inspect the related harnesses. Look for chafed, pierced, pinched or partially broken wire. - Refer to Wiring Diagrams and Technical Service Bulletins that may apply. Did the DTC become active ? Yes → Select appropriate symptom from Symptom List. No → No problem found at this time. Erase all codes before returning vehicle to customer.	All

Symptom:
CLUSTER MESSAGE MISMATCH

When Monitored and Set Condition:

CLUSTER MESSAGE MISMATCH

When Monitored: After the MIC bulb test is completed, the ACM compares the Lamp Request by ACM, On or Off, and the Lamp on by MIC, On or Off, PCI Bus messages. Each message is transmitted one time per second or when a change in the lamp state occur.

Set Condition: If the Lamp Request by ACM, On or Off, and the Lamp on by MIC, On or Off, messages do not match, the code will set.

POSSIBLE CAUSES
MIC DIAGNOSTIC CODES
CLUSTER MESSAGE MISMATCH
STORED CODE OR INTERMITTENT CONDITION
ACM, CLUSTER MESSAGE MISMATCH
ACTIVE CODE PRESENT

TEST	ACTION	APPLICABILITY
1	Turn the ignition on. Ensure the battery is fully charged. **NOTE: For the purpose of this test, the AECM and ORC modules will be referred to as an ACM.** SELECT ACTIVE or STORED DTC: ACM - ACTIVE DTC Go To 2 ACM - STORED DTC Go To 5 **NOTE: When reconnecting Airbag system components, the ignition must be turned off and the battery must be disconnected.**	All
2	Turn the ignition on. With the DRBIII®, read the MIC DTCs. Does the DRBIII® display any active Diagnostic Codes? Yes → Refer to symptom list for problems related to Instrument Cluster. No → Go To 3	All

CLUSTER MESSAGE MISMATCH — Continued

TEST	ACTION	APPLICABILITY
3	With the DRBIII® select PASSIVE RESTRAINTS, AIRBAG, MONITOR DISPLAY and WARNING LAMP STATUS. Cycle the ignition key and observe the LAMP ON BY MIC and LAMP REQ BY ACM monitors after the 6 to 8 second indicator test. Does the LAMP ON BY MIC and LAMP REQ BY ACM monitors match? YES Go To 4 NO Replace Mechanical Instrument Cluster. Perform BODY VERIFICATION TEST - VER 1.	All
4	**WARNING: MAKE SURE THE BATTERY IS DISCONNECTED, THEN WAIT TWO MINUTES BEFORE PROCEEDING.** If there are no possible causes remaining, view repair. Repair Replace the Airbag Control Module in accordance with Service Instructions. WARNING: IF THE AIRBAG CONTROL MODULE IS DROPPED AT ANY TIME, IT MUST BE REPLACED. Perform AIRBAG VERIFICATION TEST - VER 1.	All
5	**NOTE: Ensure the battery is fully charged.** With the DRBIII®, record and erase all DTCs from all modules. All active codes must be resolved before diagnosing any stored codes. Maintain a safe distance from all airbags while performing the following steps. With the DRBIII® monitor active codes as you work through the system. **NOTE: If equipped with Passenger Airbag On-Off switch, read the DTC's in all switch positions.** Wiggle the wiring harness and connectors of the appropriate airbag system and rotate the steering wheel from stop to stop. **NOTE: Check connectors - Clean and repair as necessary.** You have just attempted to simulate the condition that initially set the trouble code message. The following additional checks may assist you in identifying a possible intermittent problem: - Visually inspect related wire harness connectors. Look for broken, bent, pushed out, spread, corroded, or contaminated terminals. - Visually inspect the related harnesses. Look for chafed, pierced, pinched or partially broken wire. - Refer to Wiring Diagrams and Technical Service Bulletins that may apply. Did the DTC become active ? Yes → Select appropriate symptom from Symptom List. No → No problem found at this time. Erase all codes before returning vehicle to customer.	All

Symptom:
CONFIGURATION ERROR

When Monitored and Set Condition:

CONFIGURATION ERROR

When Monitored: With ignition on the Side Impact Airbag Control Module monitors the unused squib terminals for the a valid squib circuit resistance.

Set Condition: When the SIACM detects a valid squib circuit resistance across the unused terminals.

POSSIBLE CAUSES
SELECT MODULE REPORTING DTC
MISS WIRED LEFT SIACM CONNECTOR
MISS WIRED RIGHT SIACM CONNECTOR
LEFT SIDE IMPACT AIRBAG CONTROL MODULE - LSIACM
RIGHT SIDE IMPACT AIRBAG CONTROL MODULE - LSIACM
STORED CODE OR INTERMITTENT CONDITION
ACTIVE CODE PRESENT

TEST	ACTION	APPLICABILITY
1	Turn the ignition on. **NOTE: Ensure that the battery is fully charged.** **NOTE: For the purpose of this test, the AECM and ORC modules will be referred to as an ACM.** SELECT ONE: LEFT SIACM - ACTIVE DTC Go To 2 LEFT SIACM - STORED DTC Go To 4 RIGHT SIACM - ACTIVE DTC Go To 3 RIGHT SIACM - STORED DTC Go To 4 **NOTE: When reconnecting Airbag system components, the ignition must be turned off and the battery must be disconnected.**	All

CONFIGURATION ERROR — Continued

TEST	ACTION	APPLICABILITY
2	**WARNING: TURN IGNITION OFF, DISCONNECT THE BATTERY AND WAIT TWO MINUTES BEFORE PROCEEDING.** Disconnect the Left SIACM connector. **NOTE: Check connectors - Clean and repair as necessary.** Using the wiring diagram/schematic as a guide, inspect the Left SIACM connector wiring. Is the connector correctly wired? Yes → Replace the Left Side Impact Airbag Control Module in accordance with Service Instructions. WARNING: IF THE SIDE IMPACT AIRBAG CONTROL MODULE IS DROPPED AT ANY TIME, IT MUST BE REPLACED. Perform AIRBAG VERIFICATION TEST - VER 1. No → Rewire the Left Side Impact Airbag Control Module connector. Perform AIRBAG VERIFICATION TEST - VER 1.	All
3	**WARNING: TURN IGNITION OFF, DISCONNECT THE BATTERY AND WAIT TWO MINUTES BEFORE PROCEEDING.** Disconnect the Right SIACM connector. **NOTE: Check connectors - Clean and repair as necessary.** Using the wiring diagram/schematic as a guide, inspect the Right SIACM connector wiring. Is the connector correctly wired? Yes → Replace the Right Side Impact Airbag Control Module in accordance with Service Instructions. WARNING: IF THE SIDE IMPACT AIRBAG CONTROL MODULE IS DROPPED AT ANY TIME, IT MUST BE REPLACED. Perform AIRBAG VERIFICATION TEST - VER 1. No → Rewire the Right Side Impact Airbag Control Module connector. Perform AIRBAG VERIFICATION TEST - VER 1.	All
4	**NOTE: Ensure the battery is fully charged.** With the DRBIII®, record and erase all DTCs from all modules. All active codes must be resolved before diagnosing any stored codes. Maintain a safe distance from all airbags while performing the following steps. With the DRBIII® monitor active codes as you work through the system. **NOTE: If equipped with Passenger Airbag On-Off switch, read the DTC's in all switch positions.** Wiggle the wiring harness and connectors of the appropriate airbag system and rotate the steering wheel from stop to stop. **NOTE: Check connectors - Clean and repair as necessary.** You have just attempted to simulate the condition that initially set the trouble code message. The following additional checks may assist you in identifying a possible intermittent problem: - Visually inspect related wire harness connectors. Look for broken, bent, pushed out, spread, corroded, or contaminated terminals. - Visually inspect the related harnesses. Look for chafed, pierced, pinched or partially broken wire. - Refer to Wiring Diagrams and Technical Service Bulletins that may apply. Did the DTC become active ? Yes → Select appropriate symptom from Symptom List. No → No problem found at this time. Erase all codes before returning vehicle to customer.	All

Symptom:
DRIVER SEAT BELT SWITCH OPEN

When Monitored and Set Condition:

DRIVER SEAT BELT SWITCH OPEN

When Monitored: The ORC monitors the Seat Belt Switch circuit for an open condition.

Set Condition: The code will set if the ORC does not detect the correct circuit voltage.

POSSIBLE CAUSES
DRIVER SBS OPEN
DRIVER SEAT BELT SWITCH CIRCUITS OPEN
ACM, DRIVER SEAT BELT SWITCH CIRCUIT OPEN
STORED CODE OR INTERMITTENT CONDITION
ACTIVE CODE PRESENT

TEST	ACTION	APPLICABILITY
1	**NOTE: Ensure that the battery is fully charged.** Turn the ignition on. **NOTE: For the purpose of this test, the AECM and ORC modules will be referred to as an ACM.** SELECT ACTIVE or STORED DTC: ACM - ACTIVE DTC Go To 2 ACM - STORED DTC Go To 4 **NOTE: When reconnecting Airbag system components, the ignition must be turned off and the battery must be disconnected.**	All
2	Turn the ignition off. Disconnect the Driver Seat Belt Switch. **NOTE: Check connectors - Clean and repair as necessary.** Turn the ignition on. Measure the voltage between Driver Seat Belt Switch Line 1 and Line 2 circuits and ground. Is there voltage present on both circuits? Yes → Replace the Driver Seat Belt Switch. Perform AIRBAG VERIFICATION TEST - VER 1. No → Go To 3	All

DRIVER SEAT BELT SWITCH OPEN — Continued

TEST	ACTION	APPLICABILITY
3	**WARNING: IF THE AIRBAG CONTROL MODULE IS DROPPED AT ANY TIME, IT MUST BE REPLACED.** **WARNING: TURN IGNITION OFF, DISCONNECT THE BATTERY AND WAIT TWO MINUTES BEFORE PROCEEDING.** Disconnect the Airbag Control Module connector. **NOTE: Check connectors - Clean and repair as necessary.** Measure the resistance of the Driver SBS Line 1 and line 2 circuits between the Driver SBS harness connector and ACM connector. Is the resistance of both circuits below 5.0 ohms? Yes → Replace the Airbag Control Module in accordance with the Service information. WARNING: Make sure the battery is disconnected and wait 2 minutes before proceeding. Perform AIRBAG VERIFICATION TEST - VER 1. No → Repair the open Driver Seat Belt Switch Line 1 or Line 2. Perform AIRBAG VERIFICATION TEST - VER 1.	All
4	**NOTE: Ensure the battery is fully charged.** With the DRBIII®, record and erase all DTCs from all modules. All active codes must be resolved before diagnosing any stored codes. Maintain a safe distance from all airbags while performing the following steps. With the DRBIII® monitor active codes as you work through the system. **NOTE: If equipped with Passenger Airbag On-Off switch, read the DTC's in all switch positions.** Wiggle the wiring harness and connectors of the appropriate airbag system and rotate the steering wheel from stop to stop. **NOTE: Check connectors - Clean and repair as necessary.** You have just attempted to simulate the condition that initially set the trouble code message. The following additional checks may assist you in identifying a possible intermittent problem: - Visually inspect related wire harness connectors. Look for broken, bent, pushed out, spread, corroded, or contaminated terminals. - Visually inspect the related harnesses. Look for chafed, pierced, pinched or partially broken wire. - Refer to Wiring Diagrams and Technical Service Bulletins that may apply. Did the DTC become active? Yes → Select the appropriate symptom from Symptom List. No → No problem found at this time. Erase all codes before returning vehicle to customer.	All

Symptom:
DRIVER SEAT BELT SWITCH SHORT TO BATTERY

When Monitored and Set Condition:

DRIVER SEAT BELT SWITCH SHORT TO BATTERY

When Monitored: The ORC monitors the Seat Belt Switch circuit for an short to battery.

Set Condition: The code will set if the ORC detects high circuit voltage.

POSSIBLE CAUSES
DRIVER SBS SHORT TO BATTERY
DRIVER SEAT BELT SWITCH CIRCUITS SHORTED TO BATTERY
ACM, DRIVER SEAT BELT SWITCH SHORT TO BATTERY
STORED CODE OR INTERMITTENT CONDITION
ACTIVE CODE PRESENT

TEST	ACTION	APPLICABILITY
1	**NOTE: Ensure that the battery is fully charged.** Turn the ignition on. **NOTE: For the purpose of this test, the AECM and ORC modules will be referred to as an ACM.** SELECT ACTIVE or STORED DTC: ACM - ACTIVE DTC Go To 2 ACM - STORED DTC Go To 4 **NOTE: When reconnecting Airbag system components, the ignition must be turned off and the battery must be disconnected.**	All
2	Turn the ignition off. Disconnect the Driver Seat Belt Switch. **NOTE: Check connectors - Clean and repair as necessary.** Turn the ignition on. With the DRBIII®, read the active Airbag DTCs. Does the DRB show DRIVER SBS CIRCUIT OPEN? Yes → Replace the Driver Seat Belt Switch. Perform AIRBAG VERIFICATION TEST - VER 1. No → Go To 3	All

DRIVER SEAT BELT SWITCH SHORT TO BATTERY — Continued

TEST	ACTION	APPLICABILITY
3	**WARNING: IF THE AIRBAG CONTROL MODULE IS DROPPED AT ANY TIME, IT MUST BE REPLACED.** **WARNING: TURN IGNITION OFF, DISCONNECT THE BATTERY AND WAIT TWO MINUTES BEFORE PROCEEDING.** Disconnect the Airbag Control Module connector **NOTE: Check connectors - Clean and repair as necessary.** Measure the voltage on the Driver SBS Line 1 and line 2 circuits at the Driver SBS connector. **WARNING: TURN THE IGNITION ON, THEN RECONNECT THE BATTERY.** Is the voltage above 4.0 volts on either circuit? Yes → Repair the Driver Seat Belt Switch line 1 or line 2 shorted to battery. Perform AIRBAG VERIFICATION TEST - VER 1. No → Replace the Airbag Control Module in accordance with the Service information. WARNING: Make sure the battery is disconnected and wait 2 minutes before proceeding. Perform AIRBAG VERIFICATION TEST - VER 1.	All
4	**NOTE: Ensure the battery is fully charged.** With the DRBIII®, record and erase all DTCs from all modules. All active codes must be resolved before diagnosing any stored codes. Maintain a safe distance from all airbags while performing the following steps. With the DRBIII® monitor active codes as you work through the system. **NOTE: If equipped with Passenger Airbag On-Off switch, read the DTC's in all switch positions.** Wiggle the wiring harness and connectors of the appropriate airbag system and rotate the steering wheel from stop to stop. **NOTE: Check connectors - Clean and repair as necessary.** You have just attempted to simulate the condition that initially set the trouble code message. The following additional checks may assist you in identifying a possible intermittent problem: - Visually inspect related wire harness connectors. Look for broken, bent, pushed out, spread, corroded, or contaminated terminals. - Visually inspect the related harnesses. Look for chafed, pierced, pinched or partially broken wire. - Refer to Wiring Diagrams and Technical Service Bulletins that may apply. Did the DTC become active? Yes → Select appropriate symptom from Symptom List. No → No problem found at this time. Erase all codes before returning vehicle to customer.	All

Symptom:
DRIVER SEAT BELT SWITCH SHORT TO GROUND

When Monitored and Set Condition:

DRIVER SEAT BELT SWITCH SHORT TO GROUND

When Monitored: The ORC monitors the Seat Belt Switch circuit for a shorted together or shorted to ground condition.

Set Condition: The code will set if the ORC detects low circuit voltage.

POSSIBLE CAUSES
DRIVER SEAT BELT SWITCH SHORT TOGETHER OR TO GROUND
DRIVER SEAT BELT SWITCH CIRCUITS SHORTED TOGETHER
DRIVER SEAT BELT SWITCH CIRCUITS SHORTED TO GROUND
ACM, DRIVER SEAT BELT SWITCH SHORT TO GROUND
STORED CODE OR INTERMITTENT CONDITION
ACTIVE CODE PRESENT

TEST	ACTION	APPLICABILITY
1	**NOTE: Ensure that the battery is fully charged.** Turn the ignition on. **NOTE: For the purpose of this test, the AECM and ORC modules will be referred to as an ACM.** SELECT ACTIVE or STORED DTC: ACM - ACTIVE DTC Go To 2 ACM - STORED DTC Go To 6 **NOTE: When reconnecting Airbag system components, the ignition must be turned off and the battery must be disconnected.**	All
2	Turn Ignition off. Disconnect the Driver Seat Belt Switch connector. **NOTE: Check connectors - Clean and repair as necessary.** Turn Ignition On. With the DRBIII®, read the active Airbag DTCs. Does the DRB show DRIVER SBS CIRCUIT OPEN? Yes → Replace the Driver Seat Belt Switch. Perform AIRBAG VERIFICATION TEST - VER 1. No → Go To 3	All

DRIVER SEAT BELT SWITCH SHORT TO GROUND — Continued

TEST	ACTION	APPLICABILITY
3	**WARNING: IF THE AIRBAG CONTROL MODULE IS DROPPED AT ANY TIME, IT MUST BE REPLACED.** **WARNING: TURN IGNITION OFF, DISCONNECT THE BATTERY AND WAIT TWO MINUTES BEFORE PROCEEDING.** Disconnect the Airbag Control Module connector **NOTE: Check connectors - Clean and repair as necessary.** Measure the resistance between the Driver SBS Line 1 and line 2 circuits at the Driver SBS connector. Is the resistance below 5.0 ohms? Yes → Repair the Driver Seat Belt Switch Line 1 and Line 2 shorted together. Perform AIRBAG VERIFICATION TEST - VER 1. No → Go To 4	All
4	Measure the resistance of the Driver SBS Line 1 and line 2 circuits between the Driver SBS connector and ground. Is the resistance below 5.0 ohms on either circuit? Yes → Repair the Driver Seat Belt Switch line 1 or line 2 shorted to ground. Perform AIRBAG VERIFICATION TEST - VER 1. No → Go To 5	All
5	**WARNING: IF THE AIRBAG CONTROL MODULE IS DROPPED AT ANY TIME, IT MUST BE REPLACED.** **WARNING: TURN IGNITION OFF, DISCONNECT THE BATTERY AND WAIT TWO MINUTES BEFORE PROCEEDING.** If there are no possible causes remaining, view repair. Repair Replace the Airbag Control Module in accordance with the Service information. WARNING: Make sure the battery is disconnected and wait 2 minutes before proceeding. Perform AIRBAG VERIFICATION TEST - VER 1.	All

DRIVER SEAT BELT SWITCH SHORT TO GROUND — Continued

TEST	ACTION	APPLICABILITY
6	**NOTE: Ensure the battery is fully charged.** With the DRBIII®, record and erase all DTCs from all modules. All active codes must be resolved before diagnosing any stored codes. Maintain a safe distance from all airbags while performing the following steps. With the DRBIII® monitor active codes as you work through the system. **NOTE: If equipped with Passenger Airbag On-Off switch, read the DTC's in all switch positions.** Wiggle the wiring harness and connectors of the appropriate airbag system and rotate the steering wheel from stop to stop. **NOTE: Check connectors - Clean and repair as necessary.** You have just attempted to simulate the condition that initially set the trouble code message. The following additional checks may assist you in identifying a possible intermittent problem: - Visually inspect related wire harness connectors. Look for broken, bent, pushed out, spread, corroded, or contaminated terminals. - Visually inspect the related harnesses. Look for chafed, pierced, pinched or partially broken wire. - Refer to Wiring Diagrams and Technical Service Bulletins that may apply. Did the DTC become active? Yes → Select appropriate symptom from Symptom List. No → No problem found at this time. Erase all codes before returning vehicle to customer.	All

Symptom:
DRIVER SEAT BELT TENSIONER CIRCUIT OPEN

When Monitored and Set Condition:

DRIVER SEAT BELT TENSIONER CIRCUIT OPEN

When Monitored: With the ignition on the ACM monitors the resistance of the Driver Seat Belt Tensioner circuits.

Set Condition: The ACM has detected an open circuit or high resistance on the Driver Seat Belt Tensioner circuits.

POSSIBLE CAUSES
DRIVER SBT CIRCUITS OPEN
DRIVER SEAT BELT TENSIONER LINE 1 OR LINE 2 CIRCUITS OPEN
ACM, DRIVER SEAT BELT TENSIONER CIRCUITS OPEN
STORED CODE OR INTERMITTENT CONDITION
ACTIVE CODE PRESENT

TEST	ACTION	APPLICABILITY
1	Ensure the battery is fully charged. Turn the ignition on. **NOTE: For the purpose of this test, the AECM and ORC modules will be referred to as an ACM.** SELECT ACTIVE or STORED DTC: ACM - ACTIVE DTC Go To 2 ACM - STORED DTC Go To 4 **NOTE: When reconnecting Airbag system components, the ignition must be turned off and the battery must be disconnected.**	All
2	**NOTE: Ensure the battery is fully charged.** **WARNING: TURN IGNITION OFF, DISCONNECT THE BATTERY AND WAIT TWO MINUTES BEFORE PROCEEDING.** Disconnect the Driver SBT. **NOTE: Check connectors - Clean and repair as necessary.** Connect the appropriate Load Tool to the Driver SBT connector. **WARNING: TURN IGNITION ON, THEN RECONNECT THE BATTERY.** With the DRBIII®, read the active DTC's. Does the DRBIII® display DRIVER SBT CIRCUIT OPEN? Yes → Go To 3 No → Replace Driver Seat Belt Tensioner in accordance with the Service Information. Perform AIRBAG VERIFICATION TEST - VER 1.	All

DRIVER SEAT BELT TENSIONER CIRCUIT OPEN — Continued

TEST	ACTION	APPLICABILITY
3	**WARNING: TURN IGNITION OFF, DISCONNECT THE BATTERY AND WAIT TWO MINUTES BEFORE PROCEEDING.** Disconnect the Airbag Control Module Connector. **NOTE: Check connectors - Clean and repair as necessary.** Connect the appropriate Load Tool adaptor to the Airbag Control Module connector. Disconnect the Load Tool Driver SBT connector. Measure the resistance of the Driver SBT Line 1 and Line 2 circuits between the Load Tool Adaptor and the Diver SBT connector. Is the resistance below 1.0 ohms on both circuit? Yes → Replace the Airbag Control Module in accordance with the Service information. WARNING: IF THE AIRBAG CONTROL MODULE IS DROPPED AT ANY TIME, IT MUST BE REPLACED. Perform AIRBAG VERIFICATION TEST - VER 1. No → Repair open or high resistance in Driver Seat Belt Tensioner Line 1 Line 2 circuits. Perform AIRBAG VERIFICATION TEST - VER 1.	All
4	**NOTE: Ensure the battery is fully charged.** With the DRBIII®, record and erase all DTCs from all modules. All active codes must be resolved before diagnosing any stored codes. Maintain a safe distance from all airbags while performing the following steps. With the DRBIII® monitor active codes as you work through the system. **NOTE: If equipped with Passenger Airbag On-Off switch, read the DTC's in all switch positions.** Wiggle the wiring harness and connectors of the appropriate airbag system and rotate the steering wheel from stop to stop. **NOTE: Check connectors - Clean and repair as necessary.** You have just attempted to simulate the condition that initially set the trouble code message. The following additional checks may assist you in identifying a possible intermittent problem: - Visually inspect related wire harness connectors. Look for broken, bent, pushed out, spread, corroded, or contaminated terminals. - Visually inspect the related harnesses. Look for chafed, pierced, pinched or partially broken wire. - Refer to Wiring Diagrams and Technical Service Bulletins that may apply. Did the DTC become active ? Yes → Select appropriate symptom from Symptom List. No → No problem found at this time. Erase all codes before returning vehicle to customer.	All

Symptom:
DRIVER SEAT BELT TENSIONER CIRCUIT SHORT

When Monitored and Set Condition:

DRIVER SEAT BELT TENSIONER CIRCUIT SHORT

When Monitored: With the ignition on the ACM monitors the resistance of the Driver Seat Belt Tensioner circuits

Set Condition: The ACM has detected low resistance in the Driver Seat Belt Tensioner circuits.

POSSIBLE CAUSES
DRIVER SEAT BELT TENSIONER SHORT
DRIVER SEAT BELT TENSIONER LINE 1 SHORT TO LINE 2
ACM, DRIVER SEAT BELT TENSIONER CIRCUIT SHORT
STORED CODE OR INTERMITTENT CONDITION
ACTIVE CODE PRESENT

TEST	ACTION	APPLICABILITY
1	**NOTE: Ensure the battery is fully charged.** Turn the ignition on. **NOTE: For the purpose of this test, the AECM and ORC modules will be referred to as an ACM.** SELECT ACTIVE or STORED DTC: ACM - ACTIVE DTC Go To 2 ACM - STORED DTC Go To 4 **NOTE: When reconnecting airbag system components the Ignition must be turned off and the Battery must be disconnected.**	All
2	**WARNING: TURN IGNITION OFF, DISCONNECT THE BATTERY AND WAIT TWO MINUTES BEFORE PROCEEDING.** Disconnect the Driver SBT connector. **NOTE: Check connectors - Clean and repair as necessary.** Connect the appropriate Load Tool to the Driver SBT connector. **WARNING: TURN IGNITION ON, THEN RECONNECT THE BATTERY.** With the DRBIII®, read the active DTC's. Does the DRBIII® display DRIVER SEAT BELT TENSIONER CIRCUIT SHORT? Yes → Go To 3 No → Replace Driver Seat Belt Tensioner in accordance with the Service Information. Perform AIRBAG VERIFICATION TEST - VER 1.	All

DRIVER SEAT BELT TENSIONER CIRCUIT SHORT — Continued

TEST	ACTION	APPLICABILITY
3	**WARNING: TURN IGNITION OFF, DISCONNECT THE BATTERY AND WAIT TWO MINUTES BEFORE PROCEEDING.** Disconnect the Airbag Control Module connector **NOTE: Check connectors - Clean and repair as necessary.** Connect the appropriate Load Tool adaptor to the Airbag Control Module connector. Disconnect the Load Tool from the Driver SBT connector. Measure the resistance between the Driver SBT Line 1 and Line 2 circuit at the Driver SBT connector. Is the resistance below 10K Ohms? Yes → Repair Driver Seat Belt Tensioner Line 1 circuit shorted to Driver Seat Belt Tensioner Line 2 circuit. Perform AIRBAG VERIFICATION TEST - VER 1. No → Replace the Airbag Control Module in accordance with the Service information. WARNING: IF THE AIRBAG CONTROL MODULE IS DROPPED AT ANY TIME, IT MUST BE REPLACED. Perform AIRBAG VERIFICATION TEST - VER 1.	All
4	**NOTE: Ensure the battery is fully charged.** With the DRBIII®, record and erase all DTCs from all modules. All active codes must be resolved before diagnosing any stored codes. Maintain a safe distance from all airbags while performing the following steps. With the DRBIII® monitor active codes as you work through the system. **NOTE: If equipped with Passenger Airbag On-Off switch, read the DTC's in all switch positions.** Wiggle the wiring harness and connectors of the appropriate airbag system and rotate the steering wheel from stop to stop. **NOTE: Check connectors - Clean and repair as necessary.** You have just attempted to simulate the condition that initially set the trouble code message. The following additional checks may assist you in identifying a possible intermittent problem: - Visually inspect related wire harness connectors. Look for broken, bent, pushed out, spread, corroded, or contaminated terminals. - Visually inspect the related harnesses. Look for chafed, pierced, pinched or partially broken wire. - Refer to Wiring Diagrams and Technical Service Bulletins that may apply. Did the DTC become active ? Yes → Select appropriate symptom from Symptom List. No → No problem found at this time. Erase all codes before returning vehicle to customer.	All

Symptom:
DRIVER SEAT BELT TENSIONER SHORT TO BATTERY

When Monitored and Set Condition:

DRIVER SEAT BELT TENSIONER SHORT TO BATTERY

When Monitored: With the ignition on the ACM monitors the voltage of the Driver Seat Belt Tensioner circuits.

Set Condition: The ACM has detected high voltage on the Driver Seat Belt Tensioner circuits.

POSSIBLE CAUSES
DRIVER SEAT BELT TENSIONER SHORT TO BATTERY
DRIVER SBT LINE 1 OR LINE 2 SHORT TO BATTERY
ACM, DRIVER SEAT BELT TENSIONER CIRCUITS SHORT TO BATTERY
STORED CODE OR INTERMITTENT CONDITION
ACTIVE CODE PRESENT

TEST	ACTION	APPLICABILITY
1	**NOTE: Ensure the battery is fully charged.** Turn the ignition on. **NOTE: For the purpose of this test, the AECM and ORC modules will be referred to as an ACM.** SELECT ACTIVE or STORED DTC: ACM - ACTIVE DTC Go To 2 ACM - STORED DTC Go To 4 **NOTE: When reconnecting airbag system components the Ignition must be turned off and the Battery must be disconnected.**	All
2	**WARNING: TURN IGNITION OFF, DISCONNECT THE BATTERY AND WAIT TWO MINUTES BEFORE PROCEEDING.** Disconnect the Driver Seat Belt Tensioner connector. **NOTE: Check connectors - Clean and repair as necessary.** Connect the appropriate Load Tool to the Driver SBT connector. **WARNING: TURN IGNITION ON, THEN RECONNECT THE BATTERY.** With the DRBIII®, read the active DTC's. Does the DRBIII® display DRIVER SEAT BELT TENSIONER SHORT TO BATTERY? Yes → Go To 3 No → Replace Driver Seat Belt Tensioner in accordance with the Service Information. Perform AIRBAG VERIFICATION TEST - VER 1.	All

DRIVER SEAT BELT TENSIONER SHORT TO BATTERY — Continued

TEST	ACTION	APPLICABILITY
3	**WARNING: TURN IGNITION OFF, DISCONNECT THE BATTERY AND WAIT TWO MINUTES BEFORE PROCEEDING.** Disconnect the Airbag Control Module Connector. **NOTE: Check connectors - Clean and repair as necessary.** Connect the appropriate Load Tool adaptor to the Airbag Control Module connector. **WARNING: TURN IGNITION ON, THEN RECONNECT THE BATTERY.** Disconnect the Load Tool from the Driver SBT connector. Measure the voltage of the Driver SBT Line 1 and Line 2 circuits between the Driver SBT connector and ground. Is there any voltage present? Yes → Repair Driver Seat Belt Tensioner Line 1 or Line 2 circuit shorted to battery. Perform AIRBAG VERIFICATION TEST - VER 1. No → Replace the Airbag Control Module in accordance with the Service information. WARNING: IF THE AIRBAG CONTROL MODULE IS DROPPED AT ANY TIME, IT MUST BE REPLACED. Perform AIRBAG VERIFICATION TEST - VER 1. **NOTE: When reconnecting airbag system components the Ignition must be turned off and the Battery must be disconnected.**	All
4	**NOTE: Ensure the battery is fully charged.** With the DRBIII®, record and erase all DTCs from all modules. All active codes must be resolved before diagnosing any stored codes. Maintain a safe distance from all airbags while performing the following steps. With the DRBIII® monitor active codes as you work through the system. **NOTE: If equipped with Passenger Airbag On-Off switch, read the DTC's in all switch positions.** Wiggle the wiring harness and connectors of the appropriate airbag system and rotate the steering wheel from stop to stop. **NOTE: Check connectors - Clean and repair as necessary.** You have just attempted to simulate the condition that initially set the trouble code message. The following additional checks may assist you in identifying a possible intermittent problem: - Visually inspect related wire harness connectors. Look for broken, bent, pushed out, spread, corroded, or contaminated terminals. - Visually inspect the related harnesses. Look for chafed, pierced, pinched or partially broken wire. - Refer to Wiring Diagrams and Technical Service Bulletins that may apply. Did the DTC become active ? Yes → Select appropriate symptom from Symptom List. No → No problem found at this time. Erase all codes before returning vehicle to customer.	All

Symptom:
DRIVER SEAT BELT TENSIONER SHORT TO GROUND

When Monitored and Set Condition:

DRIVER SEAT BELT TENSIONER SHORT TO GROUND

When Monitored: With the ignition on the ACM monitors the voltage of the Driver Seat Belt Tensioner circuits.

Set Condition: The ACM has detected a short to ground in the Driver Seat Belt Tensioner circuits.

POSSIBLE CAUSES
DRIVER SEAT BELT TENSIONER SHORT TO GROUND
DRIVER SEAT BELT LINE 1 OR LINE 2 SHORT TO GROUND
ACM, DRIVER SEAT BELT TENSIONER CIRCUITS SHORT TO GROUND
STORED CODE OR INTERMITTENT CONDITION
ACTIVE CODE PRESENT

TEST	ACTION	APPLICABILITY
1	**NOTE: Ensure the battery is fully charged.** Turn the ignition on. **NOTE: For the purpose of this test, the AECM and ORC modules will be referred to as an ACM.** SELECT ACTIVE or STORED DTC: ACM - ACTIVE DTC Go To 2 ACM - STORED DTC Go To 4 **NOTE: When reconnecting airbag system components the Ignition must be turned off and the Battery must be disconnected.**	All
2	**WARNING: TURN IGNITION OFF, DISCONNECT THE BATTERY AND WAIT TWO MINUTES BEFORE PROCEEDING.** Disconnect the Driver SBT connector. **NOTE: Check connectors - Clean and repair as necessary.** Connect the appropriate Load Tool to the Driver SBT connector. **WARNING: TURN IGNITION ON, THEN RECONNECT THE BATTERY.** With the DRBIII®, read the active DTC's. Does the DRBIII® display DRIVER SEAT BELT TENSIONER SHORT TO GROUND? Yes → Go To 3 No → Replace the Driver Seat Belt Tensioner in accordance with the Service Information. Perform AIRBAG VERIFICATION TEST - VER 1.	All

DRIVER SEAT BELT TENSIONER SHORT TO GROUND — Continued

TEST	ACTION	APPLICABILITY
3	**WARNING: TURN IGNITION OFF, DISCONNECT THE BATTERY AND WAIT TWO MINUTES BEFORE PROCEEDING.** Disconnect the Airbag Control Module Connector **NOTE: Check connectors - Clean and repair as necessary.** Connect the appropriate Load Tool adaptor to the Airbag Control Module connector. Disconnect the Load Tool from the Driver SBT connector. Measure the resistance of the Driver SBT Line 1 and Line 2 circuits between the Driver SBT connector and ground. Is the resistance below 10K ohms on either circuit? Yes → Repair Driver Seat Belt Tensioner Line 1 or Line 2 circuits shorted to ground. Perform AIRBAG VERIFICATION TEST - VER 1. No → Replace the Airbag Control Module in accordance with the Service information. WARNING: IF THE AIRBAG CONTROL MODULE IS DROPPED AT ANY TIME, IT MUST BE REPLACED. Perform AIRBAG VERIFICATION TEST - VER 1.	All
4	**NOTE: Ensure the battery is fully charged.** With the DRBIII®, record and erase all DTCs from all modules. All active codes must be resolved before diagnosing any stored codes. Maintain a safe distance from all airbags while performing the following steps. With the DRBIII® monitor active codes as you work through the system. **NOTE: If equipped with Passenger Airbag On-Off switch, read the DTC's in all switch positions.** Wiggle the wiring harness and connectors of the appropriate airbag system and rotate the steering wheel from stop to stop. **NOTE: Check connectors - Clean and repair as necessary.** You have just attempted to simulate the condition that initially set the trouble code message. The following additional checks may assist you in identifying a possible intermittent problem: - Visually inspect related wire harness connectors. Look for broken, bent, pushed out, spread, corroded, or contaminated terminals. - Visually inspect the related harnesses. Look for chafed, pierced, pinched or partially broken wire. - Refer to Wiring Diagrams and Technical Service Bulletins that may apply. Did the DTC become active ? Yes → Select appropriate symptom from Symptom List. No → No problem found at this time. Erase all codes before returning vehicle to customer.	All

Symptom:
DRIVER SQUIB 1 CIRCUIT OPEN

When Monitored and Set Condition:

DRIVER SQUIB 1 CIRCUIT OPEN

When Monitored: With the ignition on the ACM monitors the resistance of the Driver Squib 1 circuits.

Set Condition: The ACM detects an open circuit or high resistance in the Driver Squib 1 circuits.

POSSIBLE CAUSES
DRIVER AIRBAG OPEN
CLOCKSPRING SQUIB CIRCUITS OPEN
DRIVER SQUIB 1 LINE 1 OR LINE 2 CIRCUIT OPEN
ACM, DRIVER SQUIB 1 CIRCUIT OPEN
STORED CODE OR INTERMITTENT CONDITION
ACTIVE CODE PRESENT

TEST	ACTION	APPLICABILITY
1	Turn the ignition on. **NOTE: Ensure that the battery is fully charged.** **NOTE: For the purpose of this test, the AECM and ORC modules will be referred to as an ACM.** SELECT ACTIVE or STORED DTC: ACM - ACTIVE DTC Go To 2 ACM - STORED DTC Go To 5 **NOTE: When reconnecting Airbag system components, the ignition must be turned off and the battery must be disconnected.**	All

DRIVER SQUIB 1 CIRCUIT OPEN — Continued

TEST	ACTION	APPLICABILITY
2	**WARNING: TURN THE IGNITION OFF, DISCONNECT THE BATTERY AND WAIT TWO MINUTES BEFORE PROCEEDING.** **WARNING: DO NOT PLACE AN INTACT UNDEPLOYED AIRBAG FACE DOWN ON A HARD SURFACE, THE AIRBAG WILL PROPEL INTO THE AIR IF ACCIDENTALLY DEPLOYED, AND COULD RESULT IN SERIOUS OR FATAL INJURY.** Disconnect the Driver Airbag. **NOTE: Check connectors - Clean and repair as necessary.** Connect the appropriate Load Tool to the Driver Airbag connectors. **WARNING: TURN THE IGNITION ON, THEN RECONNECT THE BATTERY.** With the DRBIII®, read the active Airbag DTCs. Does the DRBIII® show DRIVER SQUIB 1 CIRCUIT OPEN? Yes → Go To 3 No → Replace the Driver Airbag in accordance with the Service Information. Perform AIRBAG VERIFICATION TEST - VER 1.	All
3	**WARNING: TURN THE IGNITION OFF, DISCONNECT THE BATTERY AND WAIT TWO MINUTES BEFORE PROCEEDING.** Disconnect the Clockspring connector. **NOTE: Check connectors - Clean and repair as necessary.** Connect the appropriate Load Tool to the Clockspring connector. **WARNING: TURN THE IGNITION ON, THEN RECONNECT THE BATTERY.** With the DRBIII®, read the active Airbag DTCs. Does the DRBIII® show DRIVER SQUIB 1 CIRCUIT OPEN? Yes → Go To 4 No → Replace the Clockspring in accordance with the Service Information. Perform AIRBAG VERIFICATION TEST - VER 1.	All
4	**WARNING: TURN THE IGNITION OFF, DISCONNECT THE BATTERY AND WAIT TWO MINUTES BEFORE PROCEEDING.** Disconnect the Airbag Control Module connector. **NOTE: Check connectors - Clean and repair as necessary.** Connect the appropriate Load Tool adaptor to the Airbag Control Module connector. Disconnect the Load Tool from the Clockspring connector. Measure the resistance of the Driver Squib 1 Line 1 and Line 2 circuit between the ACM adaptor and the Clockspring connector. Is the resistance below 1.0 ohms on both circuits? Yes → Replace the Airbag Control Module in accordance with Service Instructions. WARNING: IF THE AIRBAG CONTROL MODULE IS DROPPED AT ANY TIME, IT MUST BE REPLACED. Perform AIRBAG VERIFICATION TEST - VER 1. No → Repair open or high resistance in the Driver Squib 1 Line 1 or Line 2 circuit. Perform AIRBAG VERIFICATION TEST - VER 1.	All

DRIVER SQUIB 1 CIRCUIT OPEN — Continued

TEST	ACTION	APPLICABILITY
5	**NOTE: Ensure the battery is fully charged.** With the DRBIII®, record and erase all DTCs from all modules. All active codes must be resolved before diagnosing any stored codes. Maintain a safe distance from all airbags while performing the following steps. With the DRBIII® monitor active codes as you work through the system. **NOTE: If equipped with Passenger Airbag On-Off switch, read the DTC's in all switch positions.** Wiggle the wiring harness and connectors of the appropriate airbag system and rotate the steering wheel from stop to stop. **NOTE: Check connectors - Clean and repair as necessary.** You have just attempted to simulate the condition that initially set the trouble code message. The following additional checks may assist you in identifying a possible intermittent problem: - Visually inspect related wire harness connectors. Look for broken, bent, pushed out, spread, corroded, or contaminated terminals. - Visually inspect the related harnesses. Look for chafed, pierced, pinched or partially broken wire. - Refer to Wiring Diagrams and Technical Service Bulletins that may apply. Did the DTC become active ? Yes → Select appropriate symptom from Symptom List. No → No problem found at this time. Erase all codes before returning vehicle to customer.	All

Symptom:
DRIVER SQUIB 1 CIRCUIT SHORT

When Monitored and Set Condition:

DRIVER SQUIB 1 CIRCUIT SHORT

When Monitored: With the ignition on the ACM monitors the resistance of the Driver Squib 1 circuits.

Set Condition: The ACM has detected low resistance on the Driver Squib 1 circuits.

POSSIBLE CAUSES
DRIVER AIRBAG CIRCUIT SHORT
CLOCKSPRING, DRIVER SQUIB 1 CIRCUIT SHORT
DRIVER SQUIB 1 LINE 1 SHORT TO LINE 2
ACM, DRIVER SQUIB 1 CIRCUIT SHORT
STORED CODE OR INTERMITTENT CONDITION
ACTIVE CODE PRESENT

TEST	ACTION	APPLICABILITY
1	Turn the ignition on. **NOTE: Ensure that the battery is fully charged.** **NOTE: For the purpose of this test, the AECM and ORC modules will be referred to as an ACM.** SELECT ACTIVE or STORED DTC: ACM - ACTIVE DTC Go To 2 ACM - STORED DTC Go To 5 **NOTE: When reconnecting airbag system components the Ignition must be turned off and the Battery must be disconnected.**	All
2	**WARNING: TURN THE IGNITION OFF, DISCONNECT THE BATTERY AND WAIT TWO MINUTES BEFORE PROCEEDING.** Disconnect the Driver Airbag. **WARNING: DO NOT PLACE AN INTACT UNDEPLOYED AIRBAG FACE DOWN ON A HARD SURFACE, THE AIRBAG WILL PROPEL INTO THE AIR IF ACCIDENTALLY DEPLOYED, AND COULD RESULT IN SERIOUS OR FATAL INJURY.** **NOTE: Check connectors - Clean and repair as necessary.** Connect the appropriate Load Tool to the Driver Airbag connectors. **WARNING: TURN THE IGNITION ON, THEN RECONNECT THE BATTERY.** With the DRBIII®, read the active Airbag DTCs. Does the DRBIII® show DRIVER SQUIB 1 CIRCUIT SHORT? Yes → Go To 3 No → Replace Driver Airbag. Perform AIRBAG VERIFICATION TEST - VER 1.	All

DRIVER SQUIB 1 CIRCUIT SHORT — Continued

TEST	ACTION	APPLICABILITY
3	**WARNING: TURN THE IGNITION OFF, DISCONNECT THE BATTERY AND WAIT TWO MINUTES BEFORE PROCEEDING.** Disconnect the Clockspring connector. **NOTE: Check connectors - Clean and repair as necessary.** Connect the appropriate Load Tool to the Clockspring connector. **WARNING: TURN THE IGNITION ON, THEN RECONNECT THE BATTERY.** With the DRBIII®, read the active Airbag DTCs. Does the DRBIII® show DRIVER SQUIB 1 CIRCUIT SHORT? Yes → Go To 4 No → Replace Clockspring. Perform AIRBAG VERIFICATION TEST - VER 1.	All
4	**WARNING: TURN THE IGNITION OFF, DISCONNECT THE BATTERY AND WAIT TWO MINUTES BEFORE PROCEEDING.** Disconnect the Airbag Control Module connector. **NOTE: Check connectors - Clean and repair as necessary.** Connect the appropriate Load Tool adaptor to the Airbag Control Module connector. Disconnect the Load Tool from the Clockspring connector. Measure the resistance between the Driver Squib 1 Line 1 and Line 2 at the Clockspring connector. Is the resistance below 10K ohms? Yes → Repair the Driver Squib 1 Line 1 circuit shorted to Driver Squib 1 Line 2 circuit. Perform AIRBAG VERIFICATION TEST - VER 1. No → Replace the Airbag Control Module in accordance with Service Instructions. WARNING: IF THE AIRBAG CONTROL MODULE IS DROPPED AT ANY TIME, IT MUST BE REPLACED. Perform AIRBAG VERIFICATION TEST - VER 1.	All
5	**NOTE: Ensure the battery is fully charged.** With the DRBIII®, record and erase all DTCs from all modules. All active codes must be resolved before diagnosing any stored codes. Maintain a safe distance from all airbags while performing the following steps. With the DRBIII® monitor active codes as you work through the system. **NOTE: If equipped with Passenger Airbag On-Off switch, read the DTC's in all switch positions.** Wiggle the wiring harness and connectors of the appropriate airbag system and rotate the steering wheel from stop to stop. **NOTE: Check connectors - Clean and repair as necessary.** You have just attempted to simulate the condition that initially set the trouble code message. The following additional checks may assist you in identifying a possible intermittent problem: - Visually inspect related wire harness connectors. Look for broken, bent, pushed out, spread, corroded, or contaminated terminals. - Visually inspect the related harnesses. Look for chafed, pierced, pinched or partially broken wire. - Refer to Wiring Diagrams and Technical Service Bulletins that may apply. Did the DTC become active ? Yes → Select appropriate symptom from Symptom List. No → No problem found at this time. Erase all codes before returning vehicle to customer.	All

Symptom:
DRIVER SQUIB 1 SHORT TO BATTERY

When Monitored and Set Condition:

DRIVER SQUIB 1 SHORT TO BATTERY

When Monitored: With the ignition on the ACM monitors the voltage of the Driver Squib 1 circuits.

Set Condition: The ACM has detected high voltage on the Driver Squib 1 circuits.

POSSIBLE CAUSES
DRIVER AIRBAG CIRCUIT SHORT TO BATTERY
CLOCKSPRING, DRIVER SQUIB 1 CIRCUIT SHORT TO BATTERY
DRIVER SQUIB 1 LINE 1 OR LINE 2 SHORT TO BATTERY
ACM, DRIVER SQUIB 1 CIRCUITS SHORT TO BATTERY
STORED CODE OR INTERMITTENT CONDITION
ACTIVE CODE PRESENT

TEST	ACTION	APPLICABILITY
1	Turn the ignition on. **NOTE: Ensure that the battery is fully charged.** **NOTE: For the purpose of this test, the AECM and ORC modules will be referred to as an ACM.** SELECT ACTIVE or STORED ACM DTC: ACM - ACTIVE DTC Go To 2 ACM - STORED DTC Go To 5 **NOTE: When reconnecting Airbag system components, the ignition must be turned off and the battery must be disconnected.**	All

DRIVER SQUIB 1 SHORT TO BATTERY — Continued

TEST	ACTION	APPLICABILITY
2	**WARNING: TURN THE IGNITION OFF, DISCONNECT THE BATTERY AND WAIT TWO MINUTES BEFORE PROCEEDING.** **WARNING: DO NOT PLACE AN INTACT UNDEPLOYED AIRBAG FACE DOWN ON A HARD SURFACE, THE AIRBAG WILL PROPEL INTO THE AIR IF ACCIDENTALLY DEPLOYED, AND COULD RESULT IN SERIOUS OR FATAL INJURY.** Disconnect the Driver Airbag. **NOTE: Check connectors - Clean and repair as necessary.** Connect the appropriate Load Tool to the Driver Airbag connectors. **WARNING: TURN THE IGNITION ON, THEN RECONNECT THE BATTERY.** With the DRBIII®, read the active Airbag DTCs. Does the DRBIII® show DRIVER SQUIB 1 SHORT TO BATTERY? Yes → Go To 3 No → Replace the Driver Airbag in accordance with the Service Information. Perform AIRBAG VERIFICATION TEST - VER 1.	All
3	**WARNING: TURN THE IGNITION OFF, DISCONNECT THE BATTERY AND WAIT TWO MINUTES BEFORE PROCEEDING.** Disconnect the Clockspring connector. **NOTE: Check connectors - Clean and repair as necessary.** Connect the appropriate Load Tool to the Clockspring connector. **WARNING: TURN THE IGNITION ON, THEN RECONNECT THE BATTERY.** With the DRBIII®, read the active Airbag DTCs. Does the DRBIII® show DRIVER SQUIB 1 SHORT TO BATTERY ? Yes → Go To 4 No → Replace the Clockspring in accordance with the Service Information. Perform AIRBAG VERIFICATION TEST - VER 1.	All
4	**WARNING: TURN THE IGNITION OFF, DISCONNECT THE BATTERY AND WAIT TWO MINUTES BEFORE PROCEEDING.** **WARNING: IF THE AIRBAG CONTROL MODULE IS DROPPED AT ANY TIME, IT MUST BE REPLACED.** Disconnect the Airbag Control Module connector. **NOTE: Check connectors - Clean and repair as necessary.** Connect the appropriate Load Tool adaptor to the Airbag Control Module connector. **WARNING: TURN THE IGNITION ON, THEN RECONNECT THE BATTERY.** Disconnect the Load Tool from the Clockspring connector. Measure the voltage on the Driver Squib 1 Line 1 and Line 2 circuits between the Clockspring connector and ground. Is there any voltage present? Yes → Repair the Driver Squib 1 Line 1 or Line 2 circuits shorted to battery. Perform AIRBAG VERIFICATION TEST - VER 1. No → Replace the Airbag Control Module in accordance with Service Instructions. WARNING: IF THE AIRBAG CONTROL MODULE IS DROPPED AT ANY TIME, IT MUST BE REPLACED. Perform AIRBAG VERIFICATION TEST - VER 1.	All

DRIVER SQUIB 1 SHORT TO BATTERY — Continued

TEST	ACTION	APPLICABILITY
5	**NOTE: Ensure the battery is fully charged.** With the DRBIII®, record and erase all DTCs from all modules. All active codes must be resolved before diagnosing any stored codes. Maintain a safe distance from all airbags while performing the following steps. With the DRBIII® monitor active codes as you work through the system. **NOTE: If equipped with Passenger Airbag On-Off switch, read the DTC's in all switch positions.** Wiggle the wiring harness and connectors of the appropriate airbag system and rotate the steering wheel from stop to stop. **NOTE: Check connectors - Clean and repair as necessary.** You have just attempted to simulate the condition that initially set the trouble code message. The following additional checks may assist you in identifying a possible intermittent problem: - Visually inspect related wire harness connectors. Look for broken, bent, pushed out, spread, corroded, or contaminated terminals. - Visually inspect the related harnesses. Look for chafed, pierced, pinched or partially broken wire. - Refer to Wiring Diagrams and Technical Service Bulletins that may apply. Did the DTC become active ? Yes → Select appropriate symptom from Symptom List. No → No problem found at this time. Erase all codes before returning vehicle to customer.	All

Symptom:
DRIVER SQUIB 1 SHORT TO GROUND

When Monitored and Set Condition:

DRIVER SQUIB 1 SHORT TO GROUND

When Monitored: With the ignition on the ACM monitors the resistance of the Driver Squib 1 circuits.

Set Condition: The ACM has detected a short to ground in the Driver Squib 1 circuits.

POSSIBLE CAUSES
DRIVER AIRBAG CIRCUIT SHORT TO GROUND
CLOCKSPRING, DRIVER SQUIB 1 CIRCUIT SHORT TO GROUND
DRIVER SQUIB 1 LINE 1 OR LINE 2 SHORTED TO GROUND
ACM, DRIVER SQUIB 1 CIRCUITS SHORT TO GROUND
STORED CODE OR INTERMITTENT CONDITION
ACTIVE CODE PRESENT

TEST	ACTION	APPLICABILITY
1	Turn the ignition on. **NOTE: Ensure that the battery is fully charged.** **NOTE: For the purpose of this test, the AECM and ORC modules will be referred to as an ACM.** SELECT ACTIVE or STORED DTC: ACM - ACTIVE DTC Go To 2 ACM - STORED DTC Go To 5 **NOTE: When reconnecting Airbag system components, the ignition must be turned off and the battery must be disconnected.**	All

DRIVER SQUIB 1 SHORT TO GROUND — Continued

TEST	ACTION	APPLICABILITY
2	**WARNING: TURN THE IGNITION OFF, DISCONNECT THE BATTERY AND WAIT TWO MINUTES BEFORE PROCEEDING.** **WARNING: DO NOT PLACE AN INTACT UNDEPLOYED AIRBAG FACE DOWN ON A HARD SURFACE, THE AIRBAG WILL PROPEL INTO THE AIR IF ACCIDENTALLY DEPLOYED, AND COULD RESULT IN SERIOUS OR FATAL INJURY.** Disconnect the Driver Airbag Module. **NOTE: Check connectors - Clean and repair as necessary.** Connect the appropriate Load Tool to the Driver Airbag connectors. **WARNING: TURN THE IGNITION ON, THEN RECONNECT THE BATTERY.** With the DRBIII®, read the active Airbag DTCs. Does the DRBIII® show DRIVER SQUIB 1 SHORT TO GROUND? Yes → Go To 3 No → Replace the Driver Airbag in accordance with the Service Information. Perform AIRBAG VERIFICATION TEST - VER 1.	All
3	**WARNING: TURN THE IGNITION OFF, DISCONNECT THE BATTERY AND WAIT TWO MINUTES BEFORE PROCEEDING.** Disconnect the Clockspring connector. **NOTE: Check connectors - Clean and repair as necessary.** Connect the appropriate Load Tool to the Clockspring connector. **WARNING: TURN THE IGNITION ON, THEN RECONNECT THE BATTERY.** With the DRBIII®, read the active Airbag DTCs. Does the DRBIII® show DRIVER SQUIB 1 SHORT TO GROUND? Yes → Go To 4 No → Replace the Clockspring. Perform AIRBAG VERIFICATION TEST - VER 1.	All
4	**WARNING: TURN THE IGNITION OFF, DISCONNECT THE BATTERY AND WAIT TWO MINUTES BEFORE PROCEEDING.** Disconnect the Airbag Control Module connector. **NOTE: Check connectors - Clean and repair as necessary.** Connect the appropriate Load Tool adaptor to the Airbag Control Module connector. Disconnect the Load Tool from the Clockspring connector. Measure the resistance of the Driver Squib 1 Line 1 and Line 2 circuits between Clockspring connector and ground. Is the resistance below 10K ohms on either circuit? Yes → Repair Driver Squib 1 Line 1 or Line 2 circuits shorted to ground. Perform AIRBAG VERIFICATION TEST - VER 1. No → Replace the Airbag Control Module in accordance with Service Instructions. WARNING: IF THE AIRBAG CONTROL MODULE IS DROPPED AT ANY TIME, IT MUST BE REPLACED. Perform AIRBAG VERIFICATION TEST - VER 1.	All

DRIVER SQUIB 1 SHORT TO GROUND — Continued

TEST	ACTION	APPLICABILITY
5	**NOTE: Ensure the battery is fully charged.** With the DRBIII®, record and erase all DTCs from all modules. All active codes must be resolved before diagnosing any stored codes. Maintain a safe distance from all airbags while performing the following steps. With the DRBIII® monitor active codes as you work through the system. **NOTE: If equipped with Passenger Airbag On-Off switch, read the DTC's in all switch positions.** Wiggle the wiring harness and connectors of the appropriate airbag system and rotate the steering wheel from stop to stop. **NOTE: Check connectors - Clean and repair as necessary.** You have just attempted to simulate the condition that initially set the trouble code message. The following additional checks may assist you in identifying a possible intermittent problem: - Visually inspect related wire harness connectors. Look for broken, bent, pushed out, spread, corroded, or contaminated terminals. - Visually inspect the related harnesses. Look for chafed, pierced, pinched or partially broken wire. - Refer to Wiring Diagrams and Technical Service Bulletins that may apply. Did the DTC become active ? Yes → Select appropriate symptom from Symptom List. No → No problem found at this time. Erase all codes before returning vehicle to customer.	All

Symptom:
DRIVER SQUIB 2 CIRCUIT OPEN

When Monitored and Set Condition:

DRIVER SQUIB 2 CIRCUIT OPEN

When Monitored: With the ignition on the ACM monitors the resistance of the Driver Squib 2 circuits.

Set Condition: The ACM has detected an open circuit or high resistance in the Driver Squib 2 circuits.

POSSIBLE CAUSES
DRIVER AIRBAG CIRCUIT OPEN
CLOCKSPRING, DRIVER SQUIB 2 CIRCUIT OPEN
DRIVER SQUIB 2 LINE 1 OR LINE 2 CIRCUIT OPEN
ACM, DRIVER SQUIB 2 CIRCUIT OPEN
STORED CODE OR INTERMITTENT CONDITION
ACTIVE CODE PRESENT

TEST	ACTION	APPLICABILITY
1	Turn the ignition on. **NOTE: Ensure that the battery is fully charged.** **NOTE: For the purpose of this test, the AECM and ORC modules will be referred to as an ACM.** SELECT ACTIVE or STORED DTC: ACM - ACTIVE DTC Go To 2 ACM - STORED DTC Go To 5 **NOTE: When reconnecting airbag system components the Ignition must be turned off and the Battery must be disconnected.**	All

DRIVER SQUIB 2 CIRCUIT OPEN — Continued

TEST	ACTION	APPLICABILITY
2	**WARNING: TURN THE IGNITION OFF, DISCONNECT THE BATTERY AND WAIT TWO MINUTES BEFORE PROCEEDING.** **WARNING: DO NOT PLACE AN INTACT UNDEPLOYED AIRBAG FACE DOWN ON A HARD SURFACE, THE AIRBAG WILL PROPEL INTO THE AIR IF ACCIDENTALLY DEPLOYED, AND COULD RESULT IN SERIOUS OR FATAL INJURY.** Disconnect the Driver Airbag connector. **NOTE: Check connectors - Clean and repair as necessary.** Connect the appropriate Load Tool to the Driver Airbag connectors. **WARNING: TURN THE IGNITION ON, THEN RECONNECT THE BATTERY.** With the DRBIII®, read the active Airbag DTCs. Does the DRBIII® show DRIVER SQUIB 2 CIRCUIT OPEN? Yes → Go To 3 No → Replace the Driver Airbag in accordance with the Service Information. Perform AIRBAG VERIFICATION TEST - VER 1.	All
3	**WARNING: TURN THE IGNITION OFF, DISCONNECT THE BATTERY AND WAIT TWO MINUTES BEFORE PROCEEDING.** Disconnect the Clockspring connector. **NOTE: Check connectors - Clean and repair as necessary.** Connect the appropriate Load Tool to the Clockspring connector. **WARNING: TURN THE IGNITION ON, THEN RECONNECT THE BATTERY.** With the DRB, read the active Airbag DTCs. Does the DRB show DRIVER SQUIB 2 CIRCUIT OPEN? Yes → Go To 4 No → Replace the Clockspring in accordance with the Service Information. Perform AIRBAG VERIFICATION TEST - VER 1.	All
4	**WARNING: TURN THE IGNITION OFF, DISCONNECT THE BATTERY AND WAIT TWO MINUTES BEFORE PROCEEDING.** Disconnect the Airbag Control module connector. **NOTE: Check connectors - Clean and repair as necessary.** Connect the appropriate Load Tool adaptor to the Airbag Control module connector. Disconnect the Load Tool from the Clockspring connector. Measure the resistance of the Driver Squib 2 Line 1 and Line 2 circuits between the ACM adaptor and the Clockspring connector. Is the resistance below 1.0 ohms on both circuits? Yes → Replace the Airbag Control Module in accordance with the Service information. WARNING: IF THE AIRBAG CONTROL MODULE IS DROPPED AT ANY TIME, IT MUST BE REPLACED. Perform AIRBAG VERIFICATION TEST - VER 1. No → Repair the open or high resistance in the Driver Squib 2 Line 1 or Line 2 circuits. Perform AIRBAG VERIFICATION TEST - VER 1.	All

DRIVER SQUIB 2 CIRCUIT OPEN — Continued

TEST	ACTION	APPLICABILITY
5	**NOTE: Ensure the battery is fully charged.** With the DRBIII®, record and erase all DTCs from all modules. All active codes must be resolved before diagnosing any stored codes. Maintain a safe distance from all airbags while performing the following steps. With the DRBIII® monitor active codes as you work through the system. **NOTE: If equipped with Passenger Airbag On-Off switch, read the DTC's in all switch positions.** Wiggle the wiring harness and connectors of the appropriate airbag system and rotate the steering wheel from stop to stop. **NOTE: Check connectors - Clean and repair as necessary.** You have just attempted to simulate the condition that initially set the trouble code message. The following additional checks may assist you in identifying a possible intermittent problem: - Visually inspect related wire harness connectors. Look for broken, bent, pushed out, spread, corroded, or contaminated terminals. - Visually inspect the related harnesses. Look for chafed, pierced, pinched or partially broken wire. - Refer to Wiring Diagrams and Technical Service Bulletins that may apply. Did the DTC become active ? Yes → Select appropriate symptom from Symptom List. No → No problem found at this time. Erase all codes before returning vehicle to customer.	All

Symptom:
DRIVER SQUIB 2 CIRCUIT SHORT

When Monitored and Set Condition:

DRIVER SQUIB 2 CIRCUIT SHORT

When Monitored: With the ignition on the ACM monitors the resistance of the Driver Squib 2 circuits.

Set Condition: The ACM has detected low resistance on the Driver Squib 2 circuits.

POSSIBLE CAUSES
DRIVER AIRBAG CIRCUIT SHORT
CLOCKSPRING, DRIVER SQUIB 2 CIRCUIT SHORT
DRIVER SQUIB 2 LINE 1 SHORT TO LINE 2
ACM, DRIVER SQUIB 2 CIRCUIT SHORT
STORED CODE OR INTERMITTENT CONDITION
ACTIVE CODE PRESENT

TEST	ACTION	APPLICABILITY
1	Turn the ignition on. **NOTE: Ensure that the battery is fully charged.** **NOTE: For the purpose of this test, the AECM and ORC modules will be referred to as an ACM.** SELECT ACTIVE or STORED DTC: ACM - ACTIVE DTC Go To 2 ACM - STORED DTC Go To 5 **NOTE: When reconnecting Airbag system components, the ignition must be turned off and the battery must be disconnected.**	All

DRIVER SQUIB 2 CIRCUIT SHORT — Continued

TEST	ACTION	APPLICABILITY
2	**WARNING: TURN THE IGNITION OFF, DISCONNECT THE BATTERY AND WAIT TWO MINUTES BEFORE PROCEEDING.** **WARNING: DO NOT PLACE AN INTACT UNDEPLOYED AIRBAG FACE DOWN ON A HARD SURFACE, THE AIRBAG WILL PROPEL INTO THE AIR IF ACCIDENTALLY DEPLOYED, AND COULD RESULT IN SERIOUS OR FATAL INJURY.** Disconnect the Driver Airbag. **NOTE: Check connectors - Clean and repair as necessary.** Connect the appropriate Load Tool to the Driver Airbag connectors. **WARNING: TURN THE IGNITION ON, THEN RECONNECT THE BATTERY.** With the DRBIII®, read the active Airbag DTCs. Does the DRB show DRIVER SQUIB 2 CIRCUIT SHORT? Yes → Go To 3 No → Replace Driver Airbag in accordance with the Service Information. Perform AIRBAG VERIFICATION TEST - VER 1.	All
3	**WARNING: TURN THE IGNITION OFF, DISCONNECT THE BATTERY AND WAIT TWO MINUTES BEFORE PROCEEDING.** Disconnect the Clockspring connector. **NOTE: Check connectors - Clean and repair as necessary.** Connect the appropriate Load Tool to the Clockspring connector. **WARNING: TURN THE IGNITION ON, THEN RECONNECT THE BATTERY.** With the DRBIII®, read the active Airbag DTCs. Does the DRB show DRIVER SQUIB 2 CIRCUIT SHORT? Yes → Go To 4 No → Replace Clockspring in accordance with the Service Information. Perform AIRBAG VERIFICATION TEST - VER 1.	All
4	**WARNING: TURN THE IGNITION OFF, DISCONNECT THE BATTERY AND WAIT TWO MINUTES BEFORE PROCEEDING.** Disconnect the Airbag Control Module connector. **NOTE: Check connectors - Clean and repair as necessary.** Connect the appropriate Load Tool adaptor to the Airbag Control Module connector. Disconnect the Load Tool from the Clockspring connector. Measure the resistance between the Driver Squib 2 Line 1 and Line 2 at the Clockspring connector. Is the resistance below 10K ohms? Yes → Repair the Driver Squib 2 Line 1 circuit shorted to Driver Squib 2 Line 2 circuit. Perform AIRBAG VERIFICATION TEST - VER 1. No → Replace the Airbag Control Module in accordance with Service Instructions. WARNING: IF THE AIRBAG CONTROL MODULE IS DROPPED AT ANY TIME, IT MUST BE REPLACED. Perform AIRBAG VERIFICATION TEST - VER 1.	All

DRIVER SQUIB 2 CIRCUIT SHORT — Continued

TEST	ACTION	APPLICABILITY
5	**NOTE: Ensure the battery is fully charged.** With the DRBIII®, record and erase all DTCs from all modules. All active codes must be resolved before diagnosing any stored codes. Maintain a safe distance from all airbags while performing the following steps. With the DRBIII® monitor active codes as you work through the system. **NOTE: If equipped with Passenger Airbag On-Off switch, read the DTC's in all switch positions.** Wiggle the wiring harness and connectors of the appropriate airbag system and rotate the steering wheel from stop to stop. **NOTE: Check connectors - Clean and repair as necessary.** You have just attempted to simulate the condition that initially set the trouble code message. The following additional checks may assist you in identifying a possible intermittent problem: - Visually inspect related wire harness connectors. Look for broken, bent, pushed out, spread, corroded, or contaminated terminals. - Visually inspect the related harnesses. Look for chafed, pierced, pinched or partially broken wire. - Refer to Wiring Diagrams and Technical Service Bulletins that may apply. Did the DTC become active ? Yes → Select appropriate symptom from Symptom List. No → No problem found at this time. Erase all codes before returning vehicle to customer.	All

Symptom:
DRIVER SQUIB 2 SHORT TO BATTERY

When Monitored and Set Condition:

DRIVER SQUIB 2 SHORT TO BATTERY

When Monitored: With the ignition on the ACM monitors the voltage of the Driver Squib 2 circuits.

Set Condition: The ACM has detected high voltage on the Driver Squib 2 circuits.

POSSIBLE CAUSES
DRIVER AIRBAG CIRCUIT SHORT TO BATTERY
CLOCKSPRING, DRIVER SQUIB 2 CIRCUIT SHORT TO BATTERY
DRIVER SQUIB 2 LINE 1 OR LINE 2 SHORT TO BATTERY
ACM, DRIVER SQUIB 2 CIRCUIT SHORT TO BATTERY
STORED CODE OR INTERMITTENT CONDITION
ACTIVE CODE PRESENT

TEST	ACTION	APPLICABILITY
1	**NOTE: Ensure that the battery is fully charged.** Turn the ignition on. **NOTE: For the purpose of this test, the AECM and ORC modules will be referred to as an ACM.** SELECT ACTIVE or STORED DTC: ACM - ACTIVE DTC Go To 2 ACM - STORED DTC Go To 5 **NOTE: When reconnecting Airbag system components, the ignition must be turned off and the battery must be disconnected.**	All

DRIVER SQUIB 2 SHORT TO BATTERY — Continued

TEST	ACTION	APPLICABILITY
2	**WARNING: TURN THE IGNITION OFF, DISCONNECT THE BATTERY AND WAIT TWO MINUTES BEFORE PROCEEDING.** **WARNING: DO NOT PLACE AN INTACT UNDEPLOYED AIRBAG FACE DOWN ON A HARD SURFACE, THE AIRBAG WILL PROPEL INTO THE AIR IF ACCIDENTALLY DEPLOYED, AND COULD RESULT IN SERIOUS OR FATAL INJURY.** Disconnect the Driver Airbag. **NOTE: Check connectors - Clean and repair as necessary.** Connect the appropriate Load Tool to the Driver Airbag connectors. **WARNING: TURN THE IGNITION ON, THEN RECONNECT THE BATTERY.** With the DRBIII®, read the active Airbag DTC's. Does the DRB show DRIVER SQUIB 2 SHORT TO BATTERY? Yes → Go To 3 No → Replace the Driver Airbag in accordance with the Service Information. Perform AIRBAG VERIFICATION TEST - VER 1.	All
3	**WARNING: TURN THE IGNITION OFF, DISCONNECT THE BATTERY AND WAIT TWO MINUTES BEFORE PROCEEDING.** Disconnect the Clockspring connector. **NOTE: Check connectors - Clean and repair as necessary.** Connect the appropriate Load Tool to the Clockspring connector. **WARNING: TURN THE IGNITION ON, THEN RECONNECT THE BATTERY.** With the DRBIII®, read the active Airbag DTCs. Does the DRB show DRIVER SQUIB 2 SHORT TO BATTERY ? Yes → Go To 4 No → Replace the Clockspring in accordance with the Service Information. Perform AIRBAG VERIFICATION TEST - VER 1.	All
4	**WARNING: TURN THE IGNITION OFF, DISCONNECT THE BATTERY AND WAIT TWO MINUTES BEFORE PROCEEDING.** Disconnect the Airbag Control Module connector. **NOTE: Check connectors - Clean and repair as necessary.** Connect the appropriate Load Tool adaptor to the Airbag Control Module connector. **WARNING: TURN THE IGNITION ON, THEN RECONNECT THE BATTERY.** Disconnect the Load Tool from the Clockspring connector. Measure the voltage on the Driver Squib 2 Line 1 and Line 2 from the Clockspring connector to ground. Is there any voltage present? Yes → Repair the Driver Squib 2 Line 1 or Line 2 circuits shorted to battery. Perform AIRBAG VERIFICATION TEST - VER 1. No → Replace the Airbag Control Module in accordance with Service Instructions. WARNING: IF THE AIRBAG CONTROL MODULE IS DROPPED AT ANY TIME, IT MUST BE REPLACED. Perform AIRBAG VERIFICATION TEST - VER 1.	All

DRIVER SQUIB 2 SHORT TO BATTERY — Continued

TEST	ACTION	APPLICABILITY
5	**NOTE: Ensure the battery is fully charged.** With the DRBIII®, record and erase all DTCs from all modules. All active codes must be resolved before diagnosing any stored codes. Maintain a safe distance from all airbags while performing the following steps. With the DRBIII® monitor active codes as you work through the system. **NOTE: If equipped with Passenger Airbag On-Off switch, read the DTC's in all switch positions.** Wiggle the wiring harness and connectors of the appropriate airbag system and rotate the steering wheel from stop to stop. **NOTE: Check connectors - Clean and repair as necessary.** You have just attempted to simulate the condition that initially set the trouble code message. The following additional checks may assist you in identifying a possible intermittent problem: - Visually inspect related wire harness connectors. Look for broken, bent, pushed out, spread, corroded, or contaminated terminals. - Visually inspect the related harnesses. Look for chafed, pierced, pinched or partially broken wire. - Refer to Wiring Diagrams and Technical Service Bulletins that may apply. Did the DTC become active ? Yes → Select appropriate symptom from Symptom List. No → No problem found at this time. Erase all codes before returning vehicle to customer.	All

Symptom:
DRIVER SQUIB 2 SHORT TO GROUND

When Monitored and Set Condition:

DRIVER SQUIB 2 SHORT TO GROUND

When Monitored: With the ignition on the ACM monitors the resistance of the Driver Squib 2 circuits.

Set Condition: The ACM has detected a short to ground in the Driver Squib 2 circuits.

POSSIBLE CAUSES
DRIVER AIRBAG, CIRCUIT SHORT TO GROUND
CLOCKSPRING, DRIVER SQUIB 2 CIRCUIT SHORT TO GROUND
DRIVER SQUIB 2 LINE 1 OR LINE 2 SHORT TO GROUND
ACM, DRIVER SQUIB 2 CIRCUIT SHORT TO GROUND
STORED CODE OR INTERMITTENT CONDITION
ACTIVE CODE PRESENT

TEST	ACTION	APPLICABILITY
1	**NOTE: Ensure that the battery is fully charged.** Turn the ignition on. **NOTE: For the purpose of this test, the AECM and ORC modules will be referred to as an ACM.** SELECT ACTIVE or STORED DTC: ACM - ACTIVE DTC Go To 2 ACM - STORED DTC Go To 5 **NOTE: When reconnecting Airbag system components, the ignition must be turned off and the battery must be disconnected.**	All

DRIVER SQUIB 2 SHORT TO GROUND — Continued

TEST	ACTION	APPLICABILITY
2	**WARNING: TURN THE IGNITION OFF, DISCONNECT THE BATTERY AND WAIT TWO MINUTES BEFORE PROCEEDING.** **WARNING: DO NOT PLACE AN INTACT UNDEPLOYED AIRBAG FACE DOWN ON A HARD SURFACE, THE AIRBAG WILL PROPEL INTO THE AIR IF ACCIDENTALLY DEPLOYED, AND COULD RESULT IN SERIOUS OR FATAL INJURY.** Disconnect the Driver Airbag. **NOTE: Check connectors - Clean and repair as necessary.** Connect the appropriate Load Tool to the Driver Airbag connectors. **WARNING: TURN THE IGNITION ON, THEN RECONNECT THE BATTERY.** With the DRBIII®, read the active Airbag DTCs. Does the DRB show DRIVER SQUIB 2 SHORT TO GROUND? Yes → Go To 3 No → Replace the Driver Airbag in accordance with the Service Information. Perform AIRBAG VERIFICATION TEST - VER 1.	All
3	**WARNING: TURN THE IGNITION OFF, DISCONNECT THE BATTERY AND WAIT TWO MINUTES BEFORE PROCEEDING.** Disconnect the Clockspring connector. **NOTE: Check connectors - Clean and repair as necessary.** Connect the appropriate Load Tool to the Clockspring connector. **WARNING: TURN THE IGNITION ON, THEN RECONNECT THE BATTERY.** With the DRBIII®, read the active Airbag DTCs. Does the DRB show DRIVER SQUIB 2 SHORT TO GROUND? Yes → Go To 4 No → Replace the Clockspring in accordance with the Service Information. Perform AIRBAG VERIFICATION TEST - VER 1.	All
4	**WARNING: TURN THE IGNITION OFF, DISCONNECT THE BATTERY AND WAIT TWO MINUTES BEFORE PROCEEDING.** Disconnect the Airbag Control Module connector. **NOTE: Check connectors - Clean and repair as necessary.** Connect the appropriate Load Tool adaptor to the Airbag Control Module connector. Disconnect the Load Tool from the Clockspring connector. Measure the resistance of the Driver Squib 2 Line 1 and Line 2 circuits between Clockspring connector and ground. Is the resistance below 10K ohms on either circuit? Yes → Repair Driver Squib 2 Line 1 or Line 2 circuits shorted to ground. Perform AIRBAG VERIFICATION TEST - VER 1. No → Replace the Airbag Control Module in accordance with Service Instructions. WARNING: IF THE AIRBAG CONTROL MODULE IS DROPPED AT ANY TIME, IT MUST BE REPLACED. Perform AIRBAG VERIFICATION TEST - VER 1.	All

DRIVER SQUIB 2 SHORT TO GROUND — Continued

TEST	ACTION	APPLICABILITY
5	**NOTE: Ensure the battery is fully charged.** With the DRBIII®, record and erase all DTCs from all modules. All active codes must be resolved before diagnosing any stored codes. Maintain a safe distance from all airbags while performing the following steps. With the DRBIII® monitor active codes as you work through the system. **NOTE: If equipped with Passenger Airbag On-Off switch, read the DTC's in all switch positions.** Wiggle the wiring harness and connectors of the appropriate airbag system and rotate the steering wheel from stop to stop. **NOTE: Check connectors - Clean and repair as necessary.** You have just attempted to simulate the condition that initially set the trouble code message. The following additional checks may assist you in identifying a possible intermittent problem: - Visually inspect related wire harness connectors. Look for broken, bent, pushed out, spread, corroded, or contaminated terminals. - Visually inspect the related harnesses. Look for chafed, pierced, pinched or partially broken wire. - Refer to Wiring Diagrams and Technical Service Bulletins that may apply. Did the DTC become active ? Yes → Select appropriate symptom from Symptom List. No → No problem found at this time. Erase all codes before returning vehicle to customer.	All

Symptom:
INTERROGATE LEFT SIACM

When Monitored and Set Condition:

INTERROGATE LEFT SIACM

When Monitored: With ignition on, the ACM monitors the PCI Bus for a Left SIACM status message containing the airbag warning lamp ″On or OFF″ request. The status message is sent to the ACM once each second or upon any change in the active DTCs.

Set Condition: The Code will set, if the ACM receives an Lamp On status message from the Left SIACM. NOTE: This indicates that there was an active diagnostic trouble code in the Left SIACM.

POSSIBLE CAUSES
INTERROGATE LEFT SIACM
ACM, NO ACTIVE LEFT SIACM DTCS
STORED CODE OR INTERMITTENT CONDITION
ACTIVE CODE PRESENT

TEST	ACTION	APPLICABILITY
1	**NOTE: Ensure that the battery is fully charged.** Ensure the battery is fully charged. **NOTE: For the purpose of this test, the AECM and ORC modules will be referred to as an ACM.** SELECT ACTIVE or STORED DTC: ACM - ACTIVE DTC Go To 2 ACM - STORED DTC Go To 4 **NOTE: When reconnecting Airbag system components, the ignition must be turned off and the battery must be disconnected.**	All
2	Turn the ignition on. With the DRBIII® read the Left SIACM active DTCs. Did the DRBIII® show any active DTCs? Yes → Refer to symptom list for problems related to Left SIACM. Perform AIRBAG VERIFICATION TEST - VER 1. No → Go To 3	All

INTERROGATE LEFT SIACM — Continued

TEST	ACTION	APPLICABILITY
3	**WARNING: TURN THE IGNITION OFF, DISCONNECT THE BATTERY AND WAIT TWO MINUTES BEFORE PROCEEDING.** If there are no possible causes remaining, view repair. Repair Replace the Airbag Control Module in accordance with Service Instructions. WARNING: IF THE AIRBAG CONTROL MODULE IS DROPPED AT ANY TIME, IT MUST BE REPLACED. Perform AIRBAG VERIFICATION TEST - VER 1.	All
4	**NOTE: Ensure the battery is fully charged.** With the DRBIII®, record and erase all DTCs from all modules. All active codes must be resolved before diagnosing any stored codes. Maintain a safe distance from all airbags while performing the following steps. With the DRBIII® monitor active codes as you work through the system. **NOTE: If equipped with Passenger Airbag On-Off switch, read the DTC's in all switch positions.** Wiggle the wiring harness and connectors of the appropriate airbag system and rotate the steering wheel from stop to stop. **NOTE: Check connectors - Clean and repair as necessary.** You have just attempted to simulate the condition that initially set the trouble code message. The following additional checks may assist you in identifying a possible intermittent problem: - Visually inspect related wire harness connectors. Look for broken, bent, pushed out, spread, corroded, or contaminated terminals. - Visually inspect the related harnesses. Look for chafed, pierced, pinched or partially broken wire. - Refer to Wiring Diagrams and Technical Service Bulletins that may apply. Did the DTC become active ? Yes → Select appropriate symptom from Symptom List. No → No problem found at this time. Erase all codes before returning vehicle to customer.	All

Symptom:
INTERROGATE RIGHT SIACM

When Monitored and Set Condition:

INTERROGATE RIGHT SIACM

When Monitored: With ignition on, the ACM monitors the PCI Bus for a Right SIACM status message containing the airbag warning indicator On - OFF request. The status message is sent to the ACM once each second or upon any change in the active DTCs.

Set Condition: The Code will set, if the ACM receives an Lamp On status message from the Right SIACM. NOTE: This indicates that there is an active diagnostic trouble code in the Right SIACM.

POSSIBLE CAUSES
INTERROGATE RIGHT SIACM
NO ACTIVE RIGHT SIACM DTCS
STORED CODE OR INTERMITTENT CONDITION
ACTIVE CODE PRESENT

TEST	ACTION	APPLICABILITY
1	**NOTE: Ensure that the battery is fully charged.** Ensure the battery is fully charged. **NOTE: For the purpose of this test, the AECM and ORC modules will be referred to as an ACM.** SELECT ACTIVE or STORED DTC: ACM - ACTIVE DTC Go To 2 ACM - STORED DTC Go To 4 **NOTE: When reconnecting Airbag system components, the ignition must be turned off and the battery must be disconnected.**	All
2	Turn the ignition on. With the DRBIII® read the Right SIACM active DTCs. Did the DRBIII® show any active DTCs? Yes → Refer to symptom list for problems related to Right SIACM. Perform AIRBAG VERIFICATION TEST - VER 1. No → Go To 3	All

INTERROGATE RIGHT SIACM — Continued

TEST	ACTION	APPLICABILITY
3	**WARNING: TURN THE IGNITION OFF, DISCONNECT THE BATTERY AND WAIT TWO MINUTES BEFORE PROCEEDING.** If there are no possible causes remaining, view repair. Repair Replace the Airbag Control Module in accordance with Service Instructions. WARNING: IF THE AIRBAG CONTROL MODULE IS DROPPED AT ANY TIME, IT MUST BE REPLACED. Perform AIRBAG VERIFICATION TEST - VER 1.	All
4	**NOTE: Ensure the battery is fully charged.** With the DRBIII®, record and erase all DTCs from all modules. All active codes must be resolved before diagnosing any stored codes. Maintain a safe distance from all airbags while performing the following steps. With the DRBIII® monitor active codes as you work through the system. **NOTE: If equipped with Passenger Airbag On-Off switch, read the DTC's in all switch positions.** Wiggle the wiring harness and connectors of the appropriate airbag system and rotate the steering wheel from stop to stop. **NOTE: Check connectors - Clean and repair as necessary.** You have just attempted to simulate the condition that initially set the trouble code message. The following additional checks may assist you in identifying a possible intermittent problem: - Visually inspect related wire harness connectors. Look for broken, bent, pushed out, spread, corroded, or contaminated terminals. - Visually inspect the related harnesses. Look for chafed, pierced, pinched or partially broken wire. - Refer to Wiring Diagrams and Technical Service Bulletins that may apply. Did the DTC become active ? Yes → Select appropriate symptom from Symptom List. No → No problem found at this time. Erase all codes before returning vehicle to customer.	All

Symptom:
LOSS OF IGNITION RUN ONLY

When Monitored and Set Condition:

LOSS OF IGNITION RUN ONLY

When Monitored: With the ignition in the run only position the ORC monitors the ORC Run Only Driver circuit for proper system voltage.

Set Condition: If the voltage on the ORC Run Only Driver circuit drops below 4.5 volts, the code will set.

POSSIBLE CAUSES
ACTIVE FCM RUN ONLY DTCS
ORC, LOSS OF RUN - START
STORED CODE OR INTERMITTENT CONDITION
ACTIVE CODE PRESENT

TEST	ACTION	APPLICABILITY
1	Ensure the battery is fully charged. Turn the ignition on. **NOTE: For the purpose of this test, the AECM and ORC modules will be referred to as an ACM.** SELECT ONE: ACM - ACTIVE DTC Go To 2 ACM - STORED DTC Go To 3 **NOTE: When reconnecting Airbag system components, the ignition must be turned off and the battery must be disconnected.**	All
2	**WARNING: IF THE AIRBAG CONTROL MODULE IS DROPPED AT ANY TIME, IT MUST BE REPLACED.** With the DRBIII®, read the active FCM DTCs. Does the DRB show any active ORC RUN-START codes? Yes → Refer to symptom list for problems related to ORC RUN ONLY DRIVER. Perform AIRBAG VERIFICATION TEST - VER 1. No → Test Complete.	All

LOSS OF IGNITION RUN ONLY — Continued

TEST	ACTION	APPLICABILITY
3	**NOTE: Ensure the battery is fully charged.** With the DRBIII®, record and erase all DTCs from all modules. All active codes must be resolved before diagnosing any stored codes. Maintain a safe distance from all airbags while performing the following steps. With the DRBIII® monitor active codes as you work through the system. **NOTE: If equipped with Passenger Airbag On-Off switch, read the DTC's in all switch positions.** Wiggle the wiring harness and connectors of the appropriate airbag system and rotate the steering wheel from stop to stop. **NOTE: Check connectors - Clean and repair as necessary.** You have just attempted to simulate the condition that initially set the trouble code message. The following additional checks may assist you in identifying a possible intermittent problem: - Visually inspect related wire harness connectors. Look for broken, bent, pushed out, spread, corroded, or contaminated terminals. - Visually inspect the related harnesses. Look for chafed, pierced, pinched or partially broken wire. - Refer to Wiring Diagrams and Technical Service Bulletins that may apply. Did the DTC become active ? Yes → Select appropriate symptom from Symptom List. No → No problem found at this time. Erase all codes before returning vehicle to customer.	All

Symptom:
LOSS OF IGNITION RUN-START

When Monitored and Set Condition:

LOSS OF IGNITION RUN-START

When Monitored: With the ignition in the Run-Start position the module monitors the Run-Start Driver circuit for proper system voltage.

Set Condition: If the voltage on the Run-Start Driver circuit drops below 4.5 volts, the code will set.

POSSIBLE CAUSES
LEFT SIACM, SIACM RUN - START DRIVER
RIGHT SIACM, SIACM RUN - START DRIVER
ACTIVE FCM ORC RUN - START DTCS
ORC, LOSS OF RUN - START
STORED CODE OR INTERMITTENT CONDITION
ACTIVE CODE PRESENT

TEST	ACTION	APPLICABILITY
1	Ensure the battery is fully charged. Turn the ignition on. **NOTE: For the purpose of this test, the AECM and ORC modules will be referred to as an ACM.** SELECT ONE: ACM - ACTIVE DTC Go To 2 ACM - STORED DTC Go To 3 LEFT SIACM - ACTIVE DTC Test Complete. LEFT SIACM - STORED DTC Go To 3 RIGHT SIACM - ACTIVE DTC Test Complete. RIGHT SIACM - STORED DTC Go To 3 **NOTE: When reconnecting Airbag system components, the ignition must be turned off and the battery must be disconnected.**	All

LOSS OF IGNITION RUN-START — Continued

TEST	ACTION	APPLICABILITY
2	**WARNING: IF THE AIRBAG CONTROL MODULE IS DROPPED AT ANY TIME, IT MUST BE REPLACED.** With the DRBIII®, read the active FCM DTCs. Does the DRB show any active ORC RUN-START codes? Yes → Refer to symptom list for problems related to ORC RUN - START DRIVER. Perform AIRBAG VERIFICATION TEST - VER 1. No → WARNING: TURN THE IGNITION OFF, DISCONNECT THE BATTERY AND WAIT TWO MINUTES BEFORE PROCEEDING. Replace the Airbag Control Module in accordance with Service Instructions. Perform AIRBAG VERIFICATION TEST - VER 1.	All
3	**NOTE: Ensure the battery is fully charged.** With the DRBIII®, record and erase all DTCs from all modules. All active codes must be resolved before diagnosing any stored codes. Maintain a safe distance from all airbags while performing the following steps. With the DRBIII® monitor active codes as you work through the system. **NOTE: If equipped with Passenger Airbag On-Off switch, read the DTC's in all switch positions.** Wiggle the wiring harness and connectors of the appropriate airbag system and rotate the steering wheel from stop to stop. **NOTE: Check connectors - Clean and repair as necessary.** You have just attempted to simulate the condition that initially set the trouble code message. The following additional checks may assist you in identifying a possible intermittent problem: - Visually inspect related wire harness connectors. Look for broken, bent, pushed out, spread, corroded, or contaminated terminals. - Visually inspect the related harnesses. Look for chafed, pierced, pinched or partially broken wire. - Refer to Wiring Diagrams and Technical Service Bulletins that may apply. Did the DTC become active ? Yes → Select appropriate symptom from Symptom List. No → No problem found at this time. Erase all codes before returning vehicle to customer.	All

Symptom:
MODULE NOT CONFIGURED FOR SAB

When Monitored and Set Condition:

MODULE NOT CONFIGURED FOR SAB

When Monitored: With ignition on, the ORC monitors the PCI Bus for a message containing an ″A″ in the 4 th position of the VIN. This character identifies the type of safety equipment and should match the VIN. The PCM transmits the VIN every 13.76 seconds.

Set Condition: The code will set, if the ORC detects a Side Impact Airbag Module active on the PCI Bus and the 4 th character of the VIN message is not an ″A″.

POSSIBLE CAUSES
PCM, PCI COMMUNICATION FAILURE
CHECK PCM VIN
ACM, NOT CONFIGURED FOR SIDE AIRBAGS
STORED CODE OR INTERMITTENT CONDITION
ACTIVE CODE PRESENT

TEST	ACTION	APPLICABILITY
1	Turn the ignition on. Ensure the battery is fully charged. **NOTE: For the purpose of this test, the AECM and ORC modules will be referred to as an ACM.** SELECT ACTIVE or STORED DTC: ACM - ACTIVE DTC Go To 2 ACM - STORED DTC Go To 5 **NOTE: When reconnecting Airbag system components, the ignition must be turned off and the battery must be disconnected.**	All
2	Turn the ignition on. Connect the DRB to the data link connector and select PASSIVE RESTRAINTS, AIRBAG, SYSTEM TEST With the DRBIII®, read the PCM Active on the Bus Does the DRB show PCM Active on the Bus:? Yes → Go To 3 No → Refer to category COMMUNICATION and select the related symptom. Perform AIRBAG VERIFICATION TEST - VER 1.	All

MODULE NOT CONFIGURED FOR SAB — Continued

TEST	ACTION	APPLICABILITY
3	With the DRB read the Vehicle Identification Number in the Powertrain Control Module. Compare the VIN displayed on the DRB screen and the Vehicle VIN plate. Does the VIN plate and the PCM VIN match? Yes → Go To 4 No → Replace the Powertrain Control Module and program with the correct vehicle identification number. Perform AIRBAG VERIFICATION TEST - VER 1.	All
4	**WARNING: TURN THE IGNITION OFF, DISCONNECT THE BATTERY AND WAIT TWO MINUTES BEFORE PROCEEDING.** If there are no possible causes remaining, view repair. Repair Replace the Airbag Control Module in accordance with Service Instructions. WARNING: IF THE AIRBAG CONTROL MODULE IS DROPPED AT ANY TIME, IT MUST BE REPLACED. Perform AIRBAG VERIFICATION TEST - VER 1.	All
5	**NOTE: Ensure the battery is fully charged.** With the DRBIII®, record and erase all DTCs from all modules. All active codes must be resolved before diagnosing any stored codes. Maintain a safe distance from all airbags while performing the following steps. With the DRBIII® monitor active codes as you work through the system. **NOTE: If equipped with Passenger Airbag On-Off switch, read the DTC's in all switch positions.** Wiggle the wiring harness and connectors of the appropriate airbag system and rotate the steering wheel from stop to stop. **NOTE: Check connectors - Clean and repair as necessary.** You have just attempted to simulate the condition that initially set the trouble code message. The following additional checks may assist you in identifying a possible intermittent problem: - Visually inspect related wire harness connectors. Look for broken, bent, pushed out, spread, corroded, or contaminated terminals. - Visually inspect the related harnesses. Look for chafed, pierced, pinched or partially broken wire. - Refer to Wiring Diagrams and Technical Service Bulletins that may apply. Did the DTC become active ? Yes → Select appropriate symptom from Symptom List. No → No problem found at this time. Erase all codes before returning vehicle to customer.	All

Symptom:
NO CLUSTER MESSAGE

When Monitored and Set Condition:

NO CLUSTER MESSAGE

When Monitored: With ignition on, the ACM monitors the PCI Bus for a message from the MIC containing the airbag warning indicator status. The MIC transmits the message one time at ignition on, lamp state change, or in response to the ACM message.

Set Condition: If the MIC message is not received for 10 consecutive seconds, the code will set.

POSSIBLE CAUSES
MIC, COMMUNICATION FAILURE
ACM, NO CLUSTER MESSAGES
STORED CODE OR INTERMITTENT CONDITION
ACTIVE CODE PRESENT

TEST	ACTION	APPLICABILITY
1	**NOTE: Ensure that the battery is fully charged.** **NOTE: For the purpose of this test, the AECM and ORC modules will be referred to as an ACM.** Turn the ignition on. SELECT ACTIVE or STORED DTC: ACM - ACTIVE DTC Go To 2 ACM - STORED DTC Go To 4 **NOTE: When reconnecting Airbag system components, the ignition must be turned off and the battery must be disconnected.**	All
2	Turn the ignition on. With the DRBIII®, ensure PCI Bus communications with the Instrument Cluster. Is the Instrument Cluster communicating on the PCI Bus? Yes → Go To 3 No → Refer to category COMMUNICATION CATEGORY and select the related symptom INSTRUMENT CLUSTER BUS +/- SIGNAL OPEN.	All

NO CLUSTER MESSAGE — Continued

TEST	ACTION	APPLICABILITY
3	**WARNING: TURN THE IGNITION OFF, DISCONNECT THE BATTERY AND WAIT TWO MINUTES BEFORE PROCEEDING.** If there are no possible causes remaining, view repair. Repair Replace the Airbag Control Module in accordance with Service Instructions. WARNING: IF THE AIRBAG CONTROL MODULE IS DROPPED AT ANY TIME, IT MUST BE REPLACED. Perform AIRBAG VERIFICATION TEST - VER 1. **NOTE: When reconnecting airbag system components the Ignition must be turned off and the Battery must be disconnected.**	All
4	**NOTE: Ensure the battery is fully charged.** With the DRBIII®, record and erase all DTCs from all modules. All active codes must be resolved before diagnosing any stored codes. Maintain a safe distance from all airbags while performing the following steps. With the DRBIII® monitor active codes as you work through the system. **NOTE: If equipped with Passenger Airbag On-Off switch, read the DTC's in all switch positions.** Wiggle the wiring harness and connectors of the appropriate airbag system and rotate the steering wheel from stop to stop. **NOTE: Check connectors - Clean and repair as necessary.** You have just attempted to simulate the condition that initially set the trouble code message. The following additional checks may assist you in identifying a possible intermittent problem: - Visually inspect related wire harness connectors. Look for broken, bent, pushed out, spread, corroded, or contaminated terminals. - Visually inspect the related harnesses. Look for chafed, pierced, pinched or partially broken wire. - Refer to Wiring Diagrams and Technical Service Bulletins that may apply. Did the DTC become active ? Yes → Select appropriate symptom from Symptom List. No → No problem found at this time. Erase all codes before returning vehicle to customer.	All

Symptom:
NO LEFT SIACM MESSAGE

When Monitored and Set Condition:

NO LEFT SIACM MESSAGE

When Monitored: With ignition on, the ACM monitors the PCI Bus for the Left Side Impact Airbag Control Module status message. The Left SIACM transmits the status message to the ACM at 1 - second intervals.

Set Condition: If the ACM fails to see the Left SIACM status message on the PCI Bus for 10 seconds the code will set.

POSSIBLE CAUSES
NO LEFT SIACM MESSAGE
ACM, NO LEFT SIACM MESSAGE
STORED CODE OR INTERMITTENT CONDITION
ACTIVE CODE PRESENT

TEST	ACTION	APPLICABILITY
1	**NOTE: Ensure the battery is fully charged.** Turn the ignition on. **NOTE: For the purpose of this test, the AECM and ORC modules will be referred to as an ACM.** SELECT ACTIVE or STORED DTC: ACM - ACTIVE DTC Go To 2 ACM - STORED DTC Go To 4	All
2	With the DRBIII® select PASSIVE RESTRAINTS, SIDE AIRBAG then LEFT SIDE from the DRB menu. Does the DRBIII® show NO RESPONSE or BUS +/- SIGNAL OPEN? Yes → Refer to the Communication category for the related symptom. Perform AIRBAG VERIFICATION TEST - VER 1. No → Go To 3	All
3	**WARNING: TURN THE IGNITION OFF, DISCONNECT THE BATTERY AND WAIT TWO MINUTES BEFORE PROCEEDING.** If there are no possible causes remaining, view repair. Repair Replace the Airbag Control Module in accordance with Service Instructions. WARNING: IF THE AIRBAG CONTROL MODULE IS DROPPED AT ANY TIME, IT MUST BE REPLACED. Perform AIRBAG VERIFICATION TEST - VER 1.	All

NO LEFT SIACM MESSAGE — Continued

TEST	ACTION	APPLICABILITY
4	**NOTE: Ensure the battery is fully charged.** With the DRBIII®, record and erase all DTCs from all modules. All active codes must be resolved before diagnosing any stored codes. Maintain a safe distance from all airbags while performing the following steps. With the DRBIII® monitor active codes as you work through the system. **NOTE: If equipped with Passenger Airbag On-Off switch, read the DTC's in all switch positions.** Wiggle the wiring harness and connectors of the appropriate airbag system and rotate the steering wheel from stop to stop. **NOTE: Check connectors - Clean and repair as necessary.** You have just attempted to simulate the condition that initially set the trouble code message. The following additional checks may assist you in identifying a possible intermittent problem: - Visually inspect related wire harness connectors. Look for broken, bent, pushed out, spread, corroded, or contaminated terminals. - Visually inspect the related harnesses. Look for chafed, pierced, pinched or partially broken wire. - Refer to Wiring Diagrams and Technical Service Bulletins that may apply. Did the DTC become active ? Yes → Select appropriate symptom from Symptom List. No → No problem found at this time. Erase all codes before returning vehicle to customer.	All

Symptom:
NO ODOMETER MESSAGE

When Monitored and Set Condition:

NO ODOMETER MESSAGE

When Monitored: With ignition on, the ACM monitors the PCI Bus for the Odometer message from the Body Control Module. The BCM transmits the odometer message at 1 second intervals.

Set Condition: The code will set, if the ACM does not see the odometer message for 10 seconds.

POSSIBLE CAUSES
PCM, PCI COMMUNICATION FAILURE
NO ODOMETER MESSAGE
STORED CODE OR INTERMITTENT CONDITION
ACTIVE CODE PRESENT
ORC, NO ODOMETER MESSAGE

TEST	ACTION	APPLICABILITY
1	**NOTE: Ensure that the battery is fully charged.** **NOTE: For the purpose of this test, the AECM and ORC modules will be referred to as an ACM.** Turn the ignition on. SELECT ACTIVE or STORED DTC: ACM - ACTIVE DTC Go To 2 ACM - STORED DTC Go To 5 **NOTE: When reconnecting Airbag system components, the ignition must be turned off and the battery must be disconnected.**	All
2	Turn the ignition on. Connect the DRBIII® to the data link connector and select PASSIVE RESTRAINTS, AIRBAG, SYSTEM TEST. With the DRBIII®, read the PCM Active on the Bus:. Does the DRB show PCM ACTIVE ON THE BUS? Yes → Go To 3 No → Refer to category ″ COMMUNICATION CATEGORY″ and select the related symptom. Perform AIRBAG VERIFICATION TEST - VER 1.	All

NO ODOMETER MESSAGE — Continued

TEST	ACTION	APPLICABILITY
3	With the DRB select ENGINE, MISCELLANEOUS, SELECT MISC FUNCTION, and then CHECK VIN to read the Vehicle Identification Number in the Powertrain Control Module. Compare the VIN displayed on the DRB screen and the Vehicle VIN plate. Does the VIN plate and the PCM VIN match? Yes → Go To 4 No → Replace the Powertrain Control Module and program with the correct vehicle identification number. Perform AIRBAG VERIFICATION TEST - VER 1.	All
4	**WARNING: TURN THE IGNITION OFF, DISCONNECT THE BATTERY AND WAIT TWO MINUTES BEFORE PROCEEDING.** **WARNING: IF THE AIRBAG CONTROL MODULE IS DROPPED AT ANY TIME, IT MUST BE REPLACED.** If there are no possible causes remaining, view repair. Repair Replace the Airbag Control Module in accordance with Service Instructions. WARNING: make sure the battery is disconnected and wait 2 minutes before proceeding. Perform AIRBAG VERIFICATION TEST - VER 1. **NOTE: When reconnecting airbag system components the Ignition must be turned off and the Battery must be disconnected.**	All
5	**NOTE: Ensure the battery is fully charged.** With the DRBIII®, record and erase all DTCs from all modules. All active codes must be resolved before diagnosing any stored codes. Maintain a safe distance from all airbags while performing the following steps. With the DRBIII® monitor active codes as you work through the system. **NOTE: If equipped with Passenger Airbag On-Off switch, read the DTC's in all switch positions.** Wiggle the wiring harness and connectors of the appropriate airbag system and rotate the steering wheel from stop to stop. **NOTE: Check connectors - Clean and repair as necessary.** You have just attempted to simulate the condition that initially set the trouble code message. The following additional checks may assist you in identifying a possible intermittent problem: - Visually inspect related wire harness connectors. Look for broken, bent, pushed out, spread, corroded, or contaminated terminals. - Visually inspect the related harnesses. Look for chafed, pierced, pinched or partially broken wire. - Refer to Wiring Diagrams and Technical Service Bulletins that may apply. Did the DTC become active ? Yes → Select appropriate symptom from Symptom List. No → No problem found at this time. Erase all codes before returning vehicle to customer.	All

Symptom:

NO PCI TRANSMISSION

When Monitored and Set Condition:

NO PCI TRANSMISSION

When Monitored: With the ignition on and the module transmitting information on the PCI BUS.

Set Condition: The code will set if the onboard diagnostic cannot detect the module transmitting information on the PCI BUS for 4 consecutive seconds. NOTE: Any PCI Bus Failure will may cause a stored code to set.

POSSIBLE CAUSES
AIRBAG CONTROL MODULE - ACM
LEFT SIDE IMPACT AIRBAG CONTROL MODULE - LSIACM
RIGHT SIDE IMPACT AIRBAG CONTROL MODULE - RSIACM
STORED CODE OR INTERMITTENT CONDITION
ACTIVE CODE PRESENT

NO PCI TRANSMISSION — Continued

TEST	ACTION	APPLICABILITY
1	**NOTE: Ensure that the battery is fully charged.** IF THE MODULE IS DROPPED AT ANY TIME, IT MUST BE REPLACED. Turn the ignition on. From the list below, select the appropriate module and DTC type for the this diagnostic trouble code. **NOTE: For the purpose of this test, the AECM and ORC modules will be referred to as an ACM.** Select the appropriate module and type of DTC ACM - ACTIVE WARNING: TURN THE IGNITION OFF, DISCONNECT THE BATTERY AND WAIT TWO MINUTES BEFORE PROCEEDING. Replace the Airbag Control Module in accordance with Service Instructions. Perform AIRBAG VERIFICATION TEST - VER 1. ACM - STORED Go To 2 LEFT SIACM - ACTIVE WARNING: TURN THE IGNITION OFF, DISCONNECT THE BATTERY AND WAIT TWO MINUTES BEFORE PROCEEDING. Replace the Left Side Impact Airbag Control Module in accordance with Service Instructions. Perform AIRBAG VERIFICATION TEST - VER 1. LEFT SIACM - STORED Go To 2 RIGHT SIACM - ACTIVE WARNING: TURN THE IGNITION OFF, DISCONNECT THE BATTERY AND WAIT TWO MINUTES BEFORE PROCEEDING. Replace the Right Side Impact Airbag Control Module in accordance with Service information. Perform AIRBAG VERIFICATION TEST - VER 1. RIGHT SIACM - STORED Go To 2	All

NO PCI TRANSMISSION — Continued

TEST	ACTION	APPLICABILITY
2	**NOTE: Ensure the battery is fully charged.** With the DRBIII®, record and erase all DTCs from all modules. All active codes must be resolved before diagnosing any stored codes. Maintain a safe distance from all airbags while performing the following steps. With the DRBIII® monitor active codes as you work through the system. **NOTE: If equipped with Passenger Airbag On-Off switch, read the DTC's in all switch positions.** Wiggle the wiring harness and connectors of the appropriate airbag system and rotate the steering wheel from stop to stop. **NOTE: Check connectors - Clean and repair as necessary.** You have just attempted to simulate the condition that initially set the trouble code message. The following additional checks may assist you in identifying a possible intermittent problem: - Visually inspect related wire harness connectors. Look for broken, bent, pushed out, spread, corroded, or contaminated terminals. - Visually inspect the related harnesses. Look for chafed, pierced, pinched or partially broken wire. - Refer to Wiring Diagrams and Technical Service Bulletins that may apply. Did the DTC become active ? Yes → Select appropriate symptom from Symptom List. No → No problem found at this time. Erase all codes before returning vehicle to customer.	All

Symptom:
NO RIGHT SIACM MESSAGE

When Monitored and Set Condition:

NO RIGHT SIACM MESSAGE

When Monitored: With ignition on, the ACM monitors the PCI Bus for the Right Side Impact Airbag Control Module status message. The Right SIACM transmits the status message to the ACM at 1 - second intervals.

Set Condition: If the ACM fails to see the Right SIACM status message on the PCI Bus for 10 seconds the code will set.

POSSIBLE CAUSES
NO RIGHT SIACM MESSAGE
ACM, NO RIGHT SIACM MESSAGE
STORED CODE OR INTERMITTENT CONDITION
ACTIVE CODE PRESENT

TEST	ACTION	APPLICABILITY
1	**NOTE: Ensure the battery is fully charged.** Turn the ignition on. **NOTE: For the purpose of this test, the AECM and ORC modules will be referred to as an ACM.** SELECT ACTIVE or STORED DTC: ACM - ACTIVE DTC Go To 2 ACM - STORED DTC Go To 4 **NOTE: When reconnecting Airbag system components, the ignition must be turned off and the battery must be disconnected.**	All
2	With the DRBIII® select SIDE AIRBAG and the RIGHT SIDE AIRBAG from the DRBIII® menu. Does the DRBIII® show NO RESPONSE or BUS +/- SIGNAL OPEN? Yes → Refer to the COMMUNICATION category for the related symptom. Perform AIRBAG VERIFICATION TEST - VER 1. No → Go To 3	All

NO RIGHT SIACM MESSAGE — Continued

TEST	ACTION	APPLICABILITY
3	**WARNING: TURN THE IGNITION OFF, DISCONNECT THE BATTERY AND WAIT TWO MINUTES BEFORE PROCEEDING.** If there are no possible causes remaining, view repair. Repair Replace the Airbag Control Module in accordance with Service Instructions. WARNING: IF THE AIRBAG CONTROL MODULE IS DROPPED AT ANY TIME, IT MUST BE REPLACED. Perform AIRBAG VERIFICATION TEST - VER 1. **NOTE: When reconnecting airbag system components the Ignition must be turned off and the Battery must be disconnected.**	All
4	**NOTE: Ensure the battery is fully charged.** With the DRBIII®, record and erase all DTCs from all modules. All active codes must be resolved before diagnosing any stored codes. Maintain a safe distance from all airbags while performing the following steps. With the DRBIII® monitor active codes as you work through the system. **NOTE: If equipped with Passenger Airbag On-Off switch, read the DTC's in all switch positions.** Wiggle the wiring harness and connectors of the appropriate airbag system and rotate the steering wheel from stop to stop. **NOTE: Check connectors - Clean and repair as necessary.** You have just attempted to simulate the condition that initially set the trouble code message. The following additional checks may assist you in identifying a possible intermittent problem: - Visually inspect related wire harness connectors. Look for broken, bent, pushed out, spread, corroded, or contaminated terminals. - Visually inspect the related harnesses. Look for chafed, pierced, pinched or partially broken wire. - Refer to Wiring Diagrams and Technical Service Bulletins that may apply. Did the DTC become active ? Yes → Select appropriate symptom from Symptom List. No → No problem found at this time. Erase all codes before returning vehicle to customer.	All

Symptom List:

ORC RUN - START DRIVER OVER CURRENT
ORC RUN - START DRIVER OVER TEMP
ORC RUN - START DRIVER SHORT TO GROUND
ORC RUN - START DRIVER OPEN
ORC RUN - START DRIVER OVER VOLT

Test Note: All symptoms listed above are diagnosed using the same tests. The title for the tests will be ORC RUN - START DRIVER OVER CURRENT.

When Monitored and Set Condition:

ORC RUN - START DRIVER OVER CURRENT

When Monitored: The FCM uses a microprocessor controlled transistor (high side driver) to supply power to the ORC. The microprocessor monitors the high side driver (HSD) internal temperature when the ignition is in the Run or Start position.

Set Condition: The code will set within 1 second, if the microprocessor senses high HSD internal temperature. The high temperature is caused by over current.

ORC RUN - START DRIVER OVER TEMP

When Monitored: The FCM uses a microprocessor controlled transistor (high side driver) to supply power to the ORC. The microprocessor monitors the high side driver (HSD) internal temperature when the ignition is in the Run or Start position.

Set Condition: The code will set within 2.5 second, if the microprocessor senses high HSD internal temperature. The high temperature is caused by over current.

ORC RUN - START DRIVER SHORT TO GROUND

When Monitored: The FCM uses a microprocessor controlled transistor (high side driver) to supply power to the ORC. The microprocessor monitors the high side driver (HSD) circuit for short to ground when the ignition is in the Run or Start position.

Set Condition: The code will set within 1 second, if the microprocessor senses high HSD internal temperature. The high temperature is caused by short to ground.

ORC RUN - START DRIVER OPEN

When Monitored: When the ignition is turned OFF, the microprocessor controlled transistor (high side driver) places a diagnostic voltage on the ORC Run Only circuit for 60 seconds. An open high side driver (HSD) circuit voltage is between 2.4 and 5.0 volts.

Set Condition: This code will set within 10 second, if the microprocessor senses 2.4 to 5.0 volts on the HSD. Note: the diagnostic voltage will only last for 60 seconds after the ignition is turned off.

ORC RUN - START DRIVER OVER CURRENT — Continued

ORC RUN - START DRIVER OVER VOLT

When Monitored: The FCM uses a microprocessor controlled transistor (high side driver) to supply power to the ORC. The microprocessor monitors the high side driver (HSD) battery voltage when the ignition is in the Run or Start position.

Set Condition: The code will set if the microprocessor senses HSD battery voltage is over 30 volts.

POSSIBLE CAUSES
VERIFYING ORC RUN - START DRIVER CODES
CHECK BATTERY VOLTAGE
FCM, RUN - START DRIVER OVER VOLTAGE
ORC, RUN - START TEST
FCM RUN - START OPEN TEST
IPM, RUN - START DRIVER CIRCUIT OPEN
ORC RUN - START DRIVER CIRCUIT OPEN
FCM, RUN - START SHORT TEST
IPM, RUN - START SHORT TEST
ORC RUN - START DRIVER CIRCUIT SHORT
STORED CODE OR INTERMITTENT CONDITION
ACTIVE CODE PRESENT

TEST	ACTION	APPLICABILITY
1	Ensure the battery is fully charged. Turn the ignition on. **NOTE: For the purpose of this test, the AECM and ORC modules will be referred to as an ACM.** SELECT ONE: FCM - ACTIVE DTC Go To 2 FCM - STORED DTC Go To 9 **NOTE: When reconnecting Airbag system components, the ignition must be turned off and the battery must be disconnected.**	All

ORC RUN - START DRIVER OVER CURRENT — Continued

TEST	ACTION	APPLICABILITY
2	Ensure that the battery is fully charged. **WARNING: TURN THE IGNITION OFF, DISCONNECT THE BATTERY AND WAIT TWO MINUTES BEFORE PROCEEDING.** **WARNING: IF THE AIRBAG CONTROL MODULE IS DROPPED AT ANY TIME, IT MUST BE REPLACED.** Disconnect the Airbag Control Module Connector. **NOTE: Check connectors - Clean and repair as necessary.** **WARNING: TURN IGNITION ON, THEN RECONNECT THE BATTERY.** **NOTE: The ORC RUN-START DRIVER OPEN code may not set until the ignition key is turned off.** With the DRBIII®, read the active FCM DTCs. With the DRBIII®, read the active FCM DTCs. Select the active FCM DTC displayed on the DRB. 1. ORC RUN-START DRIVER OPEN Go To 3 2. ORC RUN-START DRIVER OVER VOLTAGE Go To 6 3. ORC RUN-START SHORT TO GROUND Go To 7 4. ORC RUN-START DRIVER OVER CURRENT Go To 7 5. ORC RUN-START DRIVER OVER TEMP Go To 7 6. None of the above. Replace the Front Control Module. Perform BODY VERIFICATION TEST - VER 1.	All
3	**WARNING: TURN THE IGNITION OFF, DISCONNECT THE BATTERY AND WAIT TWO MINUTES BEFORE PROCEEDING.** **WARNING: IF THE AIRBAG CONTROL MODULE IS DROPPED AT ANY TIME, IT MUST BE REPLACED.** Disconnect the Airbag Control Module connector. Connect the appropriate Load Tool Adaptor to the Airbag Control Module connector. Connect a test light to ground and the ORC Run-Start Driver circuit at the ACM adaptor. **WARNING: TURN THE IGNITION ON, THEN RECONNECT THE BATTERY.** Turn the ignition off. With the DRBIII®, read the active FCM DTCs. Does the DRB show an active ORC RUN-START DRIVER OPEN code? Yes → Go To 4 No → Replace the Airbag Control Module in accordance with Service Instructions. WARNING: make sure the battery is disconnected and wait 2 minutes before proceeding. Perform AIRBAG VERIFICATION TEST - VER 1.	All

ORC RUN - START DRIVER OVER CURRENT — Continued

TEST	ACTION	APPLICABILITY
4	Turn ignition off. Disconnect the Front Control Module. **NOTE: Check connectors - Clean and repair as necessary.** Measure the resistance of the ORC Run-Start Driver circuit between the Front Control Module connector and the Airbag Control Module adapter. Is the resistance below 1.0 ohms? Yes → Replace the Front Control Module. Perform AIRBAG VERIFICATION TEST - VER 1. No → Go To 5	All
5	Gain access to the connectors on the bottom of the IPM. Disconnect the IPM C7 connector. **NOTE: Check connectors - Clean and repair as necessary.** Measure the resistance of the ORC Run Only Driver circuit between the IPM C7 connector and the Airbag Control Module adaptor. Is the resistance below 1.0 ohms ? Yes → Replace the IPM. Perform AIRBAG VERIFICATION TEST - VER 1. No → Repair the open ORC Run-Start Driver circuit. Perform AIRBAG VERIFICATION TEST - VER 1.	All
6	Measure the battery voltage. Is the voltage above 30.0 volts? Yes → Refer to Charging Category for the P1594 Charging System Too High symptom. Perform AIRBAG VERIFICATION TEST - VER 1. No → Replace the Front Control Module. Perform AIRBAG VERIFICATION TEST - VER 1.	All
7	Disconnect the Front Control Module. Disconnect the Airbag Control Module connector. **NOTE: Check connectors - Clean and repair as necessary.** Measure the resistance of the ORC Run-Start Driver circuit between the Front Control Module connector and ground. Is the resistance below 500K ohms? Yes → Go To 8 No → Replace the Front Control Module. Perform AIRBAG VERIFICATION TEST - VER 1.	All
8	Gain access to the connectors on the bottom of the IPM. Disconnect the IPM C7 connector. **NOTE: Check connectors - Clean and repair as necessary.** Measure the resistance of the ORC Run-Start Driver circuit between the IPM C7 connector and ground. Is the resistance below 500K ohms? Yes → Repair the ORC Run-Start Driver circuit shorted to ground. Perform AIRBAG VERIFICATION TEST - VER 1. No → Replace the IPM. Perform AIRBAG VERIFICATION TEST - VER 1.	All

ORC RUN - START DRIVER OVER CURRENT — Continued

TEST	ACTION	APPLICABILITY
9	**NOTE: Ensure the battery is fully charged.** With the DRBIII®, record and erase all DTCs from all modules. All active codes must be resolved before diagnosing any stored codes. Maintain a safe distance from all airbags while performing the following steps. With the DRBIII® monitor active codes as you work through the system. **NOTE: If equipped with Passenger Airbag On-Off switch, read the DTC's in all switch positions.** Wiggle the wiring harness and connectors of the appropriate airbag system and rotate the steering wheel from stop to stop. **NOTE: Check connectors - Clean and repair as necessary.** You have just attempted to simulate the condition that initially set the trouble code message. The following additional checks may assist you in identifying a possible intermittent problem: - Visually inspect related wire harness connectors. Look for broken, bent, pushed out, spread, corroded, or contaminated terminals. - Visually inspect the related harnesses. Look for chafed, pierced, pinched or partially broken wire. - Refer to Wiring Diagrams and Technical Service Bulletins that may apply. Did the DTC become active ? Yes → Select appropriate symptom from Symptom List. No → No problem found at this time. Erase all codes before returning vehicle to customer.	All

Symptom List:

ORC RUN ONLY DRIVER OPEN
ORC RUN ONLY DRIVER OVER CURRENT
ORC RUN ONLY DRIVER OVER TEMP
ORC RUN ONLY DRIVER OVER VOLT
ORC RUN ONLY DRIVER SHORT TO GROUND

Test Note: All symptoms listed above are diagnosed using the same tests. The title for the tests will be ORC RUN ONLY DRIVER OPEN.

When Monitored and Set Condition:

ORC RUN ONLY DRIVER OPEN

When Monitored: When the ignition is turned OFF, the microprocessor controlled transistor (high side driver) places a diagnostic voltage on the ORC Run-Start circuit for 60 seconds. An open high side driver (HSD) circuit voltage is between 2.4 and 5.0 volts.

Set Condition: This code will set within 10 second, if the microprocessor senses 2.4 to 5.0 volts on the HSD. Note: the diagnostic voltage will only last for 60 seconds after the ignition is turned off.

ORC RUN ONLY DRIVER OVER CURRENT

When Monitored: The FCM uses a microprocessor controlled transistor (high side driver) to supply power to the ORC. The microprocessor monitors the high side driver (HSD) internal temperature when the ignition is in the Run Only position.

Set Condition: The code will set within 1 second, if the microprocessor senses HSD internal temperature. The high temperature is caused by over current.

ORC RUN ONLY DRIVER OVER TEMP

When Monitored: The FCM uses a microprocessor controlled transistor (high side driver) to supply power to the ORC. The microprocessor monitors the high side drivers (HSD) internal temperature when the ignition is in the Run position.

Set Condition: The code will set within 2.5 second, if the microprocessor senses high HSD internal temperature. The high temperature is caused by over current.

ORC RUN ONLY DRIVER OVER VOLT

When Monitored: The FCM uses a microprocessor controlled transistor (high side driver) to supply power to the ORC. The microprocessor monitors the high side driver (HSD) battery voltage when the ignition is in the run position.

Set Condition: The code will set if the microprocessor senses HSD battery voltage is over 30 volts.

ORC RUN ONLY DRIVER OPEN — Continued

ORC RUN ONLY DRIVER SHORT TO GROUND

When Monitored: When the ignition is turned OFF, the microprocessor controlled transistor (high side driver) places a diagnostic voltage on the ORC Run-Start circuit for 60 seconds. An open high side driver (HSD) circuit voltage is between 2.4 and 5.0 volts.

Set Condition: This code will set within 10 second, if the microprocessor senses 2.4 to 5.0 volts on the HSD. Note: the diagnostic voltage will only last for 60 seconds after the ignition is turned off.

POSSIBLE CAUSES
VERIFYING ORC RUN ONLY DRIVER CODES
CHECK BATTERY VOLTAGE
FCM, RUN ONLY DRIVER OVER VOLTAGE
ORC RUN ONLY OPEN CIRCUIT TEST
FCM, RUN ONLY OPEN TEST
IPM, RUN ONLY OPEN TEST
ORC RUN ONLY DRIVER CIRCUIT OPEN
FCM, RUN ONLY SHORT TEST
IPM, RUN ONLY SHORT TEST
ORC RUN ONLY DRIVER CIRCUIT SHORT
STORED CODE OR INTERMITTENT CONDITION
ACTIVE CODE PRESENT

TEST	ACTION	APPLICABILITY
1	Ensure the battery is fully charged. Turn the ignition on. **NOTE: For the purpose of this test, the AECM and ORC modules will be referred to as an ACM.** SELECT ONE: FCM - ACTIVE DTC Go To 2 FCM - STORED DTC Go To 9 **NOTE: When reconnecting Airbag system components, the ignition must be turned off and the battery must be disconnected.**	All

ORC RUN ONLY DRIVER OPEN — Continued

TEST	ACTION	APPLICABILITY
2	Ensure that the battery is fully charged. **WARNING: TURN THE IGNITION OFF, DISCONNECT THE BATTERY AND WAIT TWO MINUTES BEFORE PROCEEDING.** **WARNING: IF THE AIRBAG CONTROL MODULE IS DROPPED AT ANY TIME, IT MUST BE REPLACED.** Disconnect the Airbag Control Module Connector. **NOTE: Check connectors - Clean and repair as necessary.** **WARNING: TURN IGNITION ON, THEN RECONNECT THE BATTERY.** **NOTE: The ORC RUN ONLY DRIVER OPEN code may not set until the ignition key is turned off.** With the DRBIII®, read the active FCM DTCs. With the DRBIII®, read the active FCM DTCs. Select the active FCM DTC that was displayed on the DRB. 1. ORC RUN ONLY DRIVER OPEN Go To 3 2. ORC RUN ONLY DRIVER OVER VOLTAGE Go To 6 3. ORC RUN ONLY SHORT TO GROUND Go To 7 4. ORC RUN ONLY DRIVER OVER CURRENT Go To 7 5. ORC RUN ONLY DRIVER OVER TEMP Go To 7 6. None of the above. Replace the Front Control Module. Perform BODY VERIFICATION TEST - VER 1.	All
3	**WARNING: TURN THE IGNITION OFF, DISCONNECT THE BATTERY AND WAIT TWO MINUTES BEFORE PROCEEDING.** **WARNING: IF THE OCCUPANT RESTRAINT CONTROLLER IS DROPPED AT ANY TIME, IT MUST BE REPLACED.** Disconnect the Airbag Control Module connector. **NOTE: Check connectors - Clean and repair as necessary.** Connect the appropriate Load Tool Adaptor to the Airbag Control Module connector. Connect a test light to ground and the ORC Run Only Driver circuit at the Airbag Control Module connector. **WARNING: TURN THE IGNITION ON, THEN RECONNECT THE BATTERY.** With the DRBIII®, read the active FCM DTCs. Does the DRB show an active ORC RUN ONLY DRIVER OPEN code? Yes → Go To 4 No → Replace the Airbag Control Module in accordance with Service Instructions. WARNING: make sure the battery is disconnected and wait 2 minutes before proceeding. Perform AIRBAG VERIFICATION TEST - VER 1.	All

ORC RUN ONLY DRIVER OPEN — Continued

TEST	ACTION	APPLICABILITY
4	Disconnect the Front Control Module. **NOTE: Check connectors - Clean and repair as necessary.** Measure the resistance of the ORC Run Only Driver circuit between the Front Control Module connector and the Airbag Control Module adaptor. Is the resistance below 1.0 ohms ? Yes → Replace the Front Control Module. Perform AIRBAG VERIFICATION TEST - VER 1. No → Go To 5	All
5	Gain access to the connectors on the bottom of the IPM. Disconnect the IPM C7 connector. **NOTE: Check connectors - Clean/repair as necessary.** Measure the resistance of the ORC Run Only Driver circuit between the IPM C7 connector and the Airbag Control Module adaptor. Is the resistance below 1.0 ohms ? Yes → Replace the IPM. Perform AIRBAG VERIFICATION TEST - VER 1. No → Repair the open ORC Run Only Driver circuit. Perform AIRBAG VERIFICATION TEST - VER 1.	All
6	Measure the battery voltage. Is the voltage above 30.0 volts? Yes → Refer to Charging Category for the P1594 Charging System Too High symptom. Perform AIRBAG VERIFICATION TEST - VER 1. No → Replace the Front Control Module. Perform AIRBAG VERIFICATION TEST - VER 1.	All
7	**WARNING: TURN IGNITION OFF, DISCONNECT THE BATTERY AND WAIT TWO MINUTES BEFORE PROCEEDING.** Disconnect the Front Control Module connector. **NOTE: Check connectors - Clean and repair as necessary.** Measure the resistance of the ORC Run Only Driver circuit between the Front Control Module connector and ground. Is the resistance below 500K ohms? Yes → Go To 8 No → Replace the Front Control Module. Perform AIRBAG VERIFICATION TEST - VER 1.	All
8	Gain access to the connectors on the bottom of the IPM. Disconnect the IPM C7 connector. **NOTE: Check connectors - Clean and repair as necessary.** Measure the resistance of the ORC Run Only Driver circuit between the IPM C7 connector and ground. Is the resistance below 500K ohms? Yes → Repair the ORC Run Only Driver circuit shorted to ground. Perform AIRBAG VERIFICATION TEST - VER 1. No → Replace the IPM. Perform AIRBAG VERIFICATION TEST - VER 1.	All

ORC RUN ONLY DRIVER OPEN — Continued

TEST	ACTION	APPLICABILITY
9	**NOTE: Ensure the battery is fully charged.** With the DRBIII®, record and erase all DTCs from all modules. All active codes must be resolved before diagnosing any stored codes. Maintain a safe distance from all airbags while performing the following steps. With the DRBIII® monitor active codes as you work through the system. **NOTE: If equipped with Passenger Airbag On-Off switch, read the DTC's in all switch positions.** Wiggle the wiring harness and connectors of the appropriate airbag system and rotate the steering wheel from stop to stop. **NOTE: Check connectors - Clean and repair as necessary.** You have just attempted to simulate the condition that initially set the trouble code message. The following additional checks may assist you in identifying a possible intermittent problem: - Visually inspect related wire harness connectors. Look for broken, bent, pushed out, spread, corroded, or contaminated terminals. - Visually inspect the related harnesses. Look for chafed, pierced, pinched or partially broken wire. - Refer to Wiring Diagrams and Technical Service Bulletins that may apply. Did the DTC become active ? Yes → Select appropriate symptom from Symptom List. No → No problem found at this time. Erase all codes before returning vehicle to customer.	All

Symptom:
PASSENGER SEAT BELT SWITCH OPEN

When Monitored and Set Condition:

PASSENGER SEAT BELT SWITCH OPEN

When Monitored: The ORC monitors the Seat Belt Switch circuit for an open condition.

Set Condition: The code will set if the ORC does not detect the correct circuit voltage.

POSSIBLE CAUSES
PASSENGER SBS OPEN
PASSENGER SEAT BELT SWITCH CIRCUITS OPEN
ACM, PASSENGER SEAT BELT SWITCH CIRCUIT OPEN
STORED CODE OR INTERMITTENT CONDITION
ACTIVE CODE PRESENT

TEST	ACTION	APPLICABILITY
1	**NOTE: Ensure that the battery is fully charged.** Turn the ignition on. **NOTE: For the purpose of this test, the AECM and ORC modules will be referred to as an ACM.** SELECT ACTIVE or STORED DTC: ACM - ACTIVE DTC Go To 2 ACM - STORED DTC Go To 4 **NOTE: When reconnecting Airbag system components, the ignition must be turned off and the battery must be disconnected.**	All
2	Disconnect the Passenger Seat Belt Switch. **NOTE: Check connectors - Clean and repair as necessary.** Turn the ignition on. Measure the voltage between Passenger Seat Belt Switch Line 1 and Line 2 circuits and ground. Is there voltage present on both circuits? Yes → Replace the Passenger Seat Belt Switch. Perform AIRBAG VERIFICATION TEST - VER 1. No → Go To 3	All

PASSENGER SEAT BELT SWITCH OPEN — Continued

TEST	ACTION	APPLICABILITY
3	**WARNING: IF THE AIRBAG CONTROL MODULE IS DROPPED AT ANY TIME, IT MUST BE REPLACED.** **WARNING: TURN IGNITION OFF, DISCONNECT THE BATTERY AND WAIT TWO MINUTES BEFORE PROCEEDING.** Disconnect the Airbag Control Module connector **NOTE: Check connectors - Clean and repair as necessary.** Measure the resistance of the Driver SBS Line 1 and line 2 circuits between the Passenger SBS harness connector and ACM connector. Is the resistance of both circuits below 5.0 ohms? Yes → Replace the Airbag Control Module in accordance with the Service information. WARNING: Make sure the battery is disconnected and wait 2 minutes before proceeding. Perform AIRBAG VERIFICATION TEST - VER 1. No → Repair the open Passenger Seat Belt Switch Line 1 or Line 2. Perform AIRBAG VERIFICATION TEST - VER 1.	All
4	**NOTE: Ensure the battery is fully charged.** With the DRBIII®, record and erase all DTCs from all modules. All active codes must be resolved before diagnosing any stored codes. Maintain a safe distance from all airbags while performing the following steps. With the DRBIII® monitor active codes as you work through the system. **NOTE: If equipped with Passenger Airbag On-Off switch, read the DTC's in all switch positions.** Wiggle the wiring harness and connectors of the appropriate airbag system and rotate the steering wheel from stop to stop. **NOTE: Check connectors - Clean and repair as necessary.** You have just attempted to simulate the condition that initially set the trouble code message. The following additional checks may assist you in identifying a possible intermittent problem: - Visually inspect related wire harness connectors. Look for broken, bent, pushed out, spread, corroded, or contaminated terminals. - Visually inspect the related harnesses. Look for chafed, pierced, pinched or partially broken wire. - Refer to Wiring Diagrams and Technical Service Bulletins that may apply. Did the DTC become active? Yes → Select appropriate symptom from Symptom List. No → No problem found at this time. Erase all codes before returning vehicle to customer.	All

Symptom:
PASSENGER SEAT BELT SWITCH SHORT TO BATTERY

When Monitored and Set Condition:

PASSENGER SEAT BELT SWITCH SHORT TO BATTERY

When Monitored: The ORC monitors the Seat Belt Switch circuit for an short to battery.

Set Condition: The code will set if the ORC detects high circuit voltage.

POSSIBLE CAUSES
PASSENGER SBS SHORT TO BATTERY
PASSENGER SEAT BELT SWITCH CIRCUITS SHORTED TO BATTERY
ACM, PASSENGER SEAT BELT SWITCH SHORT TO BATTERY
STORED CODE OR INTERMITTENT CONDITION
ACTIVE CODE PRESENT

TEST	ACTION	APPLICABILITY
1	**NOTE: Ensure that the battery is fully charged.** Turn the ignition on. **NOTE: For the purpose of this test, the AECM and ORC modules will be referred to as an ACM.** SELECT ACTIVE or STORED DTC: ACM - ACTIVE DTC Go To 2 ACM - STORED DTC Go To 4 **NOTE: When reconnecting Airbag system components, the ignition must be turned off and the battery must be disconnected.**	All
2	Turn the ignition off. Disconnect the Passenger Seat Belt Switch. **NOTE: Check connectors - Clean and repair as necessary.** Turn the ignition on. With the DRBIII®, read the active Airbag DTCs. Does the DRB show PASSENGER SBS CIRCUIT OPEN? Yes → Replace the Passenger Seat Belt Tensioner. Perform AIRBAG VERIFICATION TEST - VER 1. No → Go To 3	All

PASSENGER SEAT BELT SWITCH SHORT TO BATTERY — Continued

TEST	ACTION	APPLICABILITY
3	**WARNING: IF THE AIRBAG CONTROL MODULE IS DROPPED AT ANY TIME, IT MUST BE REPLACED.** **WARNING: TURN IGNITION OFF, DISCONNECT THE BATTERY AND WAIT TWO MINUTES BEFORE PROCEEDING.** Disconnect the Airbag Control Module connector **NOTE: Check connectors - Clean and repair as necessary.** **WARNING: TURN THE IGNITION ON, THEN RECONNECT THE BATTERY.** Measure the voltage on the Passenger SBS Line 1 and line 2 circuits at the Passenger SBS connector. Is the voltage above 4.0 volts on either circuit? Yes → Repair the Passenger Seat Belt Switch line 1 or line 2 shorted to battery. Perform AIRBAG VERIFICATION TEST - VER 1. No → Replace the Airbag Control Module in accordance with the Service information. WARNING: Make sure the battery is disconnected and wait 2 minutes before proceeding. Perform AIRBAG VERIFICATION TEST - VER 1.	All
4	**NOTE: Ensure the battery is fully charged.** With the DRBIII®, record and erase all DTCs from all modules. All active codes must be resolved before diagnosing any stored codes. Maintain a safe distance from all airbags while performing the following steps. With the DRBIII® monitor active codes as you work through the system. **NOTE: If equipped with Passenger Airbag On-Off switch, read the DTC's in all switch positions.** Wiggle the wiring harness and connectors of the appropriate airbag system and rotate the steering wheel from stop to stop. **NOTE: Check connectors - Clean and repair as necessary.** You have just attempted to simulate the condition that initially set the trouble code message. The following additional checks may assist you in identifying a possible intermittent problem: - Visually inspect related wire harness connectors. Look for broken, bent, pushed out, spread, corroded, or contaminated terminals. - Visually inspect the related harnesses. Look for chafed, pierced, pinched or partially broken wire. - Refer to Wiring Diagrams and Technical Service Bulletins that may apply. Did the DTC become active? Yes → Select the appropriate symptom from Symptom List. No → No problem found at this time. Erase all codes before returning vehicle to customer.	All

Symptom:
PASSENGER SEAT BELT SWITCH SHORT TO GROUND

When Monitored and Set Condition:

PASSENGER SEAT BELT SWITCH SHORT TO GROUND

When Monitored: The ORC monitors the Seat Belt Switch circuit for a shorted together or shorted to ground condition.

Set Condition: The code will set if the ORC detects low circuit voltage.

POSSIBLE CAUSES
PASSENGER SEAT BELT SWITCH SHORT TOGETHER OR TO GROUND
PASSENGER SEAT BELT SWITCH CIRCUITS SHORTED TOGETHER
PASSENGER SEAT BELT SWITCH CIRCUITS SHORTED TO GROUND
ACM, PASSENGER SEAT BELT SWITCH SHORT TO GROUND
STORED CODE OR INTERMITTENT CONDITION
ACTIVE CODE PRESENT

TEST	ACTION	APPLICABILITY
1	**NOTE: Ensure that the battery is fully charged.** Turn the ignition on. **NOTE: For the purpose of this test, the AECM and ORC modules will be referred to as an ACM.** SELECT ACTIVE or STORED DTC: ACM - ACTIVE DTC Go To 2 ACM - STORED DTC Go To 6 **NOTE: When reconnecting Airbag system components, the ignition must be turned off and the battery must be disconnected.**	All
2	Turn Ignition off. Disconnect the Passenger Seat Belt Switch connector. **NOTE: Check connectors - Clean and repair as necessary.** Turn Ignition On. With the DRBIII®, read the active Airbag DTCs. Does the DRB show PASSENGER SBS CIRCUIT OPEN? Yes → Replace the Passenger Seat Belt Switch. Perform AIRBAG VERIFICATION TEST - VER 1. No → Go To 3	All

PASSENGER SEAT BELT SWITCH SHORT TO GROUND — Continued

TEST	ACTION	APPLICABILITY
3	**WARNING: IF THE AIRBAG CONTROL MODULE IS DROPPED AT ANY TIME, IT MUST BE REPLACED.** **WARNING: TURN IGNITION OFF, DISCONNECT THE BATTERY AND WAIT TWO MINUTES BEFORE PROCEEDING.** Disconnect the Airbag Control Module connector **NOTE: Check connectors - Clean and repair as necessary.** Measure the resistance between the Driver SBS Line 1 and line 2 circuit at the Passenger SBS connector. Is the resistance below 5.0 ohms? Yes → Go To 4 No → Repair the Passenger Seat Belt Switch Line 1 and Line 2 shorted together. Perform AIRBAG VERIFICATION TEST - VER 1.	All
4	Measure the resistance of the Driver SBS Line 1 and line 2 circuit between the Passenger SBS connector and ground. Is the resistance below 5.0 ohms on either circuit? Yes → Repair the Passenger Seat Belt Switch line 1 or line 2 shorted to ground. Perform AIRBAG VERIFICATION TEST - VER 1. No → Go To 5	All
5	**WARNING: IF THE AIRBAG CONTROL MODULE IS DROPPED AT ANY TIME, IT MUST BE REPLACED.** **WARNING: TURN IGNITION OFF, DISCONNECT THE BATTERY AND WAIT TWO MINUTES BEFORE PROCEEDING.** If there are no possible causes remaining, view repair. Repair Replace the Airbag Control Module in accordance with the Service information. WARNING: Make sure the battery is disconnected and wait 2 minutes before proceeding. Perform AIRBAG VERIFICATION TEST - VER 1.	All

PASSENGER SEAT BELT SWITCH SHORT TO GROUND — Continued

TEST	ACTION	APPLICABILITY
6	**NOTE: Ensure the battery is fully charged.** With the DRBIII®, record and erase all DTCs from all modules. All active codes must be resolved before diagnosing any stored codes. Maintain a safe distance from all airbags while performing the following steps. With the DRBIII® monitor active codes as you work through the system. **NOTE: If equipped with Passenger Airbag On-Off switch, read the DTC's in all switch positions.** Wiggle the wiring harness and connectors of the appropriate airbag system and rotate the steering wheel from stop to stop. **NOTE: Check connectors - Clean and repair as necessary.** You have just attempted to simulate the condition that initially set the trouble code message. The following additional checks may assist you in identifying a possible intermittent problem: - Visually inspect related wire harness connectors. Look for broken, bent, pushed out, spread, corroded, or contaminated terminals. - Visually inspect the related harnesses. Look for chafed, pierced, pinched or partially broken wire. - Refer to Wiring Diagrams and Technical Service Bulletins that may apply. Did the DTC become active? Yes → Select the appropriate symptom from Symptom List. No → No problem found at this time. Erase all codes before returning vehicle to customer.	All

Symptom:
PASSENGER SEAT BELT TENSIONER CIRCUIT OPEN

When Monitored and Set Condition:

PASSENGER SEAT BELT TENSIONER CIRCUIT OPEN

When Monitored: When the ignition is On, the ACM monitors the resistance of the Passenger Seat Belt Tensioner circuits.

Set Condition: The ACM has detected an open circuit or high resistance or open circuit in the Passenger Seat Belt Tensioner circuits.

POSSIBLE CAUSES
PASSENGER SEAT BELT TENSIONER OPEN
PASSENGER SEAT BELT TENSIONER LINE 1 OR LINE 2 CIRCUIT OPEN
ACM, PASSENGER SEAT BELT TENSIONER CIRCUIT OPEN
STORED CODE OR INTERMITTENT CONDITION
ACTIVE CODE PRESENT

TEST	ACTION	APPLICABILITY
1	Ensure the battery is fully charged. Turn the ignition on. **NOTE: For the purpose of this test, the AECM and ORC modules will be referred to as an ACM.** SELECT ACTIVE or STORED DTC: ACM - ACTIVE DTC Go To 2 ACM - STORED DTC Go To 4 **NOTE: When reconnecting Airbag system components, the ignition must be turned off and the battery must be disconnected.**	All
2	**NOTE: Ensure the battery is fully charged.** **WARNING: TURN IGNITION OFF, DISCONNECT THE BATTERY AND WAIT TWO MINUTES BEFORE PROCEEDING.** Disconnect the Passenger SBT connector. **NOTE: Check connectors - Clean and repair as necessary.** Connect the appropriate Load Tool and jumper to the Passenger SBT connector. **WARNING: TURN IGNITION ON, THEN RECONNECT THE BATTERY.** With the DRBIII®, read the active DTC's. Does the DRBIII® display PASSENGER SBT CIRCUIT OPEN? Yes → Go To 3 No → Replace the Passenger Seat Belt Tensioner in accordance with the Service Information. Perform AIRBAG VERIFICATION TEST - VER 1. **NOTE: When reconnecting Airbag system components, the ignition must be turned off and the battery must be disconnected.**	All

PASSENGER SEAT BELT TENSIONER CIRCUIT OPEN — Continued

TEST	ACTION	APPLICABILITY
3	**WARNING: TURN IGNITION OFF, DISCONNECT THE BATTERY AND WAIT TWO MINUTES BEFORE PROCEEDING.** Disconnect the Airbag control Module connector. **NOTE: Check connectors - Clean and repair as necessary.** Connect the appropriate Load Tool adaptor to the Airbag connector. Disconnect the Load Tool jumper from the Passenger SBT connector. Measure the resistance of the Passenger Seat Belt Tensioner Line 1 and Line 2 circuits between the Load Tool adaptor and the Passenger SBT connector. Is the resistance below 1.0 ohms on either circuit ? Yes → Replace the Airbag Control Module in accordance with the Service information. WARNING: IF THE AIRBAG CONTROL MODULE IS DROPPED AT ANY TIME, IT MUST BE REPLACED. Perform AIRBAG VERIFICATION TEST - VER 1. No → Repair open or high resistance in Passenger Seat Belt Tensioner Line 1 or Line 2 circuits. Perform AIRBAG VERIFICATION TEST - VER 1.	All
4	**NOTE: Ensure the battery is fully charged.** With the DRBIII®, record and erase all DTCs from all modules. All active codes must be resolved before diagnosing any stored codes. Maintain a safe distance from all airbags while performing the following steps. With the DRBIII® monitor active codes as you work through the system. **NOTE: If equipped with Passenger Airbag On-Off switch, read the DTC's in all switch positions.** Wiggle the wiring harness and connectors of the appropriate airbag system and rotate the steering wheel from stop to stop. **NOTE: Check connectors - Clean and repair as necessary.** You have just attempted to simulate the condition that initially set the trouble code message. The following additional checks may assist you in identifying a possible intermittent problem: - Visually inspect related wire harness connectors. Look for broken, bent, pushed out, spread, corroded, or contaminated terminals. - Visually inspect the related harnesses. Look for chafed, pierced, pinched or partially broken wire. - Refer to Wiring Diagrams and Technical Service Bulletins that may apply. Did the DTC become active ? Yes → Select appropriate symptom from Symptom List. No → No problem found at this time. Erase all codes before returning vehicle to customer.	All

Symptom:
PASSENGER SEAT BELT TENSIONER CIRCUIT SHORT

When Monitored and Set Condition:

PASSENGER SEAT BELT TENSIONER CIRCUIT SHORT

When Monitored: When the ignition is on, the ACM monitors the resistance of the Passenger Seat Belt Tensioner circuits.

Set Condition: The ACM has detected low resistance in the Passenger Seat Belt Tensioner circuits.

POSSIBLE CAUSES
PASSENGER SEAT BELT TENSIONER LINE 1 SHORT TO LINE 2
PASSENGER SEAT BELT TENSIONER CIRCUITS SHORT
ACM, PASSENGER SEAT BELT TENSIONER CIRCUIT SHORT
STORED CODE OR INTERMITTENT CONDITION
ACTIVE CODE PRESENT

TEST	ACTION	APPLICABILITY
1	Turn the ignition on. Ensure the battery is fully charged. **NOTE: For the purpose of this test, the AECM and ORC modules will be referred to as an ACM.** SELECT ACTIVE or STORED DTC: ACM - ACTIVE DTC Go To 2 ACM - STORED DTC Go To 4 **NOTE: When reconnecting Airbag system components, the ignition must be turned off and the battery must be disconnected.**	All
2	**WARNING: TURN IGNITION OFF, DISCONNECT THE BATTERY AND WAIT TWO MINUTES BEFORE PROCEEDING.** Disconnect the Passenger Seat Belt Tensioner connector. **NOTE: Check connectors - Clean and repair as necessary.** Connect the appropriate Load Tool to the Passenger Seat Belt Tensioner connector. **WARNING: TURN IGNITION ON, THEN RECONNECT THE BATTERY.** With the DRBIII®, read the active DTC's. Does the DRBIII® show PASSENGER SEAT BELT TENSIONER CIRCUIT SHORT? Yes → Go To 3 No → Replace the Passenger Seat Belt Tensioner in accordance with the Service Information. Perform AIRBAG VERIFICATION TEST - VER 1.	All

PASSENGER SEAT BELT TENSIONER CIRCUIT SHORT — Continued

TEST	ACTION	APPLICABILITY
3	**WARNING: TURN IGNITION OFF, DISCONNECT THE BATTERY AND WAIT TWO MINUTES BEFORE PROCEEDING.** Disconnect the Airbag Control Module connector. **NOTE: Check connectors - Clean and repair as necessary.** Connect the appropriate Load Tool Adaptor to the Airbag Control Module connector. Disconnect the Load Tool from the Passenger Seat Belt Tensioner connector. Measure the resistance between the Passenger SBT Line 1 and line 2 circuit at the Passenger SBT connector. Is the resistance below 10K ohms? Yes → Repair the Passenger SBT Line 1 circuit for a short to the Passenger SBT Line 2 circuit. Perform AIRBAG VERIFICATION TEST - VER 1. No → Replace the Airbag Control Module in accordance with the Service information. WARNING: IF THE AIRBAG CONTROL MODULE IS DROPPED AT ANY TIME, IT MUST BE REPLACED. Perform AIRBAG VERIFICATION TEST - VER 1.	All
4	**NOTE: Ensure the battery is fully charged.** With the DRBIII®, record and erase all DTCs from all modules. All active codes must be resolved before diagnosing any stored codes. Maintain a safe distance from all airbags while performing the following steps. With the DRBIII® monitor active codes as you work through the system. **NOTE: If equipped with Passenger Airbag On-Off switch, read the DTC's in all switch positions.** Wiggle the wiring harness and connectors of the appropriate airbag system and rotate the steering wheel from stop to stop. **NOTE: Check connectors - Clean and repair as necessary.** You have just attempted to simulate the condition that initially set the trouble code message. The following additional checks may assist you in identifying a possible intermittent problem: - Visually inspect related wire harness connectors. Look for broken, bent, pushed out, spread, corroded, or contaminated terminals. - Visually inspect the related harnesses. Look for chafed, pierced, pinched or partially broken wire. - Refer to Wiring Diagrams and Technical Service Bulletins that may apply. Did the DTC become active ? Yes → Select appropriate symptom from Symptom List. No → No problem found at this time. Erase all codes before returning vehicle to customer.	All

Symptom:
PASSENGER SEAT BELT TENSIONER SHORT TO BATTERY

When Monitored and Set Condition:

PASSENGER SEAT BELT TENSIONER SHORT TO BATTERY

When Monitored: When the ignition is on, the ACM monitors the voltage of the Passenger Seat Belt Tensioner circuits.

Set Condition: The ACM has detected high voltage on the Passenger Seat Belt Tensioner circuits.

POSSIBLE CAUSES
PASSENGER SBT CIRCUITS SHORT TO BATTERY
PASSENGER SEAT BELT TENSIONER LINE 1 OR LINE 2 SHORTED TO BATTERY
ACM, PASSENGER SBT SHORT TO BATTERY
STORED CODE OR INTERMITTENT CONDITION
ACTIVE CODE PRESENT

TEST	ACTION	APPLICABILITY
1	Ensure the battery is fully charged. Turn the ignition on. **NOTE: For the purpose of this test, the AECM and ORC modules will be referred to as an ACM.** SELECT ACTIVE or STORED DTC: ACM - ACTIVE DTC Go To 2 ACM - STORED DTC Go To 4 **NOTE: When reconnecting Airbag system components, the ignition must be turned off and the battery must be disconnected.**	All
2	**WARNING: TURN IGNITION OFF, DISCONNECT THE BATTERY AND WAIT TWO MINUTES BEFORE PROCEEDING.** Disconnect the Passenger SBT connector. **NOTE: Check connectors - Clean and repair as necessary.** Connect the appropriate Load Tool to the Passenger Seat Belt Tensioner connector. **WARNING: TURN IGNITION ON, THEN RECONNECT THE BATTERY.** With the DRBIII®, read the active DTC's. Does the DRBIII® display PASSENGER SBT SHORT TO BATTERY? Yes → Go To 3 No → Replace the Passenger Seat Belt Tensioner in accordance with the Service Information. Perform AIRBAG VERIFICATION TEST - VER 1.	All

PASSENGER SEAT BELT TENSIONER SHORT TO BATTERY — Continued

TEST	ACTION	APPLICABILITY
3	**WARNING: TURN IGNITION OFF, DISCONNECT THE BATTERY AND WAIT TWO MINUTES BEFORE PROCEEDING.** Disconnect the Airbag Control Module Connector. **NOTE: Check connectors - Clean and repair as necessary.** Connect the appropriate Load Tool adaptor to the Airbag Control Module connector. **WARNING: TURN IGNITION ON, THEN RECONNECT THE BATTERY.** Disconnect the Load Tool from the Passenger Seat Belt Tensioner connector. Measure the voltage of the Passenger SBT Line 1 and Line 2 circuits between the Passenger SBT connector and ground. Is there any voltage on either circuit? Yes → Repair the Passenger Seat Belt Tensioner Line 1 or Line 2 shorted to battery. Perform AIRBAG VERIFICATION TEST - VER 1. No → Replace the Airbag Control Module in accordance with the Service information. WARNING: IF THE AIRBAG CONTROL MODULE IS DROPPED AT ANY TIME, IT MUST BE REPLACED. Perform AIRBAG VERIFICATION TEST - VER 1.	All
4	**NOTE: Ensure the battery is fully charged.** With the DRBIII®, record and erase all DTCs from all modules. All active codes must be resolved before diagnosing any stored codes. Maintain a safe distance from all airbags while performing the following steps. With the DRBIII® monitor active codes as you work through the system. **NOTE: If equipped with Passenger Airbag On-Off switch, read the DTC's in all switch positions.** Wiggle the wiring harness and connectors of the appropriate airbag system and rotate the steering wheel from stop to stop. **NOTE: Check connectors - Clean and repair as necessary.** You have just attempted to simulate the condition that initially set the trouble code message. The following additional checks may assist you in identifying a possible intermittent problem: - Visually inspect related wire harness connectors. Look for broken, bent, pushed out, spread, corroded, or contaminated terminals. - Visually inspect the related harnesses. Look for chafed, pierced, pinched or partially broken wire. - Refer to Wiring Diagrams and Technical Service Bulletins that may apply. Did the DTC become active ? Yes → Select appropriate symptom from Symptom List. No → No problem found at this time. Erase all codes before returning vehicle to customer.	All

Symptom:
PASSENGER SEAT BELT TENSIONER SHORT TO GROUND

When Monitored and Set Condition:

PASSENGER SEAT BELT TENSIONER SHORT TO GROUND

When Monitored: When the ignition is on, the ACM monitors the voltage of the Passenger Seat Belt Tensioner circuits.

Set Condition: The ACM has detected a short to ground in the Passenger Seat Belt Tensioner circuits.

POSSIBLE CAUSES
PAS SEAT BELT TENSIONER SHORT TO GROUND
PASSENGER SEAT BELT TENSIONER LINE 1 OR LINE 2 SHORTED TO GROUND
ACM, PASSENGER SBT SHORT TO GROUND
STORED CODE OR INTERMITTENT CONDITION
ACTIVE CODE PRESENT

TEST	ACTION	APPLICABILITY
1	Turn the ignition on. Ensure the battery is fully charged. **NOTE: For the purpose of this test, the AECM and ORC modules will be referred to as an ACM.** SELECT ACTIVE or STORED DTC: ACM - ACTIVE DTC Go To 2 ACM - STORED DTC Go To 4 **NOTE: When reconnecting Airbag system components, the ignition must be turned off and the battery must be disconnected.**	All
2	**WARNING: TURN IGNITION OFF, DISCONNECT THE BATTERY AND WAIT TWO MINUTES BEFORE PROCEEDING.** Disconnect the Passenger SBT connector. **NOTE: Check connectors - Clean and repair as necessary.** Connect the appropriate Load Tool to the Passenger Seat Belt Tensioner connector. **WARNING: TURN IGNITION ON, THEN RECONNECT THE BATTERY.** With the DRBIII®, read the active DTC's. Does the DRBIII® display PASSENGER SBT SHORT TO GROUND? Yes → Go To 3 No → Replace the Passenger Seat Belt Tensioner in accordance with the Service Information. Perform AIRBAG VERIFICATION TEST - VER 1.	All

PASSENGER SEAT BELT TENSIONER SHORT TO GROUND — Continued

TEST	ACTION	APPLICABILITY
3	**WARNING: TURN IGNITION OFF, DISCONNECT THE BATTERY AND WAIT TWO MINUTES BEFORE PROCEEDING.** Disconnect the Airbag Control Module Connector **NOTE: Check connectors - Clean and repair as necessary.** Connect the appropriate Load Tool adaptor to the Airbag Control Module connector. Disconnect the Load Tool from the Passenger Seat Belt Tensioner connector. Measure the resistance of the Passenger SBT Line 1 and Line 2 circuits between the Passenger SBT connector and ground. Is the resistance below 10K Ohms on either circuit? Yes → Repair the Passenger SBT Line 1 or Line 2 shorted to ground. Perform AIRBAG VERIFICATION TEST - VER 1. No → Replace the Airbag Control Module in accordance with the Service information. WARNING: IF THE AIRBAG CONTROL MODULE IS DROPPED AT ANY TIME, IT MUST BE REPLACED. Perform AIRBAG VERIFICATION TEST - VER 1.	All
4	**NOTE: Ensure the battery is fully charged.** With the DRBIII®, record and erase all DTCs from all modules. All active codes must be resolved before diagnosing any stored codes. Maintain a safe distance from all airbags while performing the following steps. With the DRBIII® monitor active codes as you work through the system. **NOTE: If equipped with Passenger Airbag On-Off switch, read the DTC's in all switch positions.** Wiggle the wiring harness and connectors of the appropriate airbag system and rotate the steering wheel from stop to stop. **NOTE: Check connectors - Clean and repair as necessary.** You have just attempted to simulate the condition that initially set the trouble code message. The following additional checks may assist you in identifying a possible intermittent problem: - Visually inspect related wire harness connectors. Look for broken, bent, pushed out, spread, corroded, or contaminated terminals. - Visually inspect the related harnesses. Look for chafed, pierced, pinched or partially broken wire. - Refer to Wiring Diagrams and Technical Service Bulletins that may apply. Did the DTC become active ? Yes → Select appropriate symptom from Symptom List. No → No problem found at this time. Erase all codes before returning vehicle to customer.	All

Symptom:
PASSENGER SQUIB 1 CIRCUIT OPEN

When Monitored and Set Condition:

PASSENGER SQUIB 1 CIRCUIT OPEN

When Monitored: When the ignition is On, the ACM monitors the resistance of the Passenger Squib 1 circuits.

Set Condition: The ACM has detected an open circuit or high resistance on the Passenger Squib 1 circuits.

POSSIBLE CAUSES
PASSENGER AIRBAG OPEN
PASSENGER SQUIB 1 LINE 1 OR LINE 2 CIRCUIT OPEN
STORED CODE OR INTERMITTENT CONDITION
ACM, PASSENGER SQUIB 1 CIRCUIT OPEN
ACTIVE CODE PRESENT

TEST	ACTION	APPLICABILITY
1	**NOTE: Ensure the battery is fully charged.** Turn the ignition on. **NOTE: For the purpose of this test, the AECM and ORC modules will be referred to as an ACM.** SELECT ACTIVE or STORED DTC: ACM - ACTIVE DTC Go To 2 ACM - STORED DTC Go To 4 **NOTE: When reconnecting Airbag system components, the ignition must be turned off and the battery must be disconnected.**	All

PASSENGER SQUIB 1 CIRCUIT OPEN — Continued

TEST	ACTION	APPLICABILITY
2	**WARNING: TURN THE IGNITION OFF, DISCONNECT THE BATTERY AND WAIT TWO MINUTES BEFORE PROCEEDING.** **WARNING: DO NOT PLACE AN INTACT UNDEPLOYED AIRBAG FACE DOWN ON A HARD SURFACE, THE AIRBAG WILL PROPEL INTO THE AIR IF ACCIDENTALLY DEPLOYED, AND COULD RESULT IN SERIOUS OR FATAL INJURY.** Disconnect the Passenger Airbag. **NOTE: Check connectors - Clean and repair as necessary.** Connect the appropriate Load Tool to the Passenger Airbag connector. **WARNING: TURN IGNITION ON, THEN RECONNECT THE BATTERY.** With the DRBIII®, read the active Airbag DTCs. Does the DRBIII® show PASSENGER SQUIB 1 CIRCUIT OPEN? Yes → Go To 3 No → Replace the Passenger Airbag in accordance with the Service Information. Perform AIRBAG VERIFICATION TEST - VER 1.	All
3	**WARNING: TURN THE IGNITION OFF, DISCONNECT THE BATTERY AND WAIT TWO MINUTES BEFORE PROCEEDING.** Disconnect the Airbag Control module connector. **NOTE: Check connectors - Clean and repair as necessary.** Connect the appropriate Load Tool adaptor to the Airbag Control Module connector. Disconnect the Load Tool from the Passenger Airbag connector. Measure the resistance of the Passenger Squib 1 Line 1 and Line 2 circuit between the ACM Adaptor and the Passenger Airbag connector. Is the resistance below 1.0 ohms on both circuits? Yes → Replace the Airbag Control Module in accordance with Service Instructions. WARNING: IF THE AIRBAG CONTROL MODULE IS DROPPED AT ANY TIME, IT MUST BE REPLACED. Perform AIRBAG VERIFICATION TEST - VER 1. No → Repair open or high resistance in Passenger Squib 1 Line 1 or Line 2 circuits. Perform AIRBAG VERIFICATION TEST - VER 1. **NOTE: When reconnecting airbag system components the Ignition must be turned off and the Battery must be disconnected.**	All

PASSENGER SQUIB 1 CIRCUIT OPEN — Continued

TEST	ACTION	APPLICABILITY
4	**NOTE: Ensure the battery is fully charged.** With the DRBIII®, record and erase all DTCs from all modules. All active codes must be resolved before diagnosing any stored codes. Maintain a safe distance from all airbags while performing the following steps. With the DRBIII® monitor active codes as you work through the system. **NOTE: If equipped with Passenger Airbag On-Off switch, read the DTC's in all switch positions.** Wiggle the wiring harness and connectors of the appropriate airbag system and rotate the steering wheel from stop to stop. **NOTE: Check connectors - Clean and repair as necessary.** You have just attempted to simulate the condition that initially set the trouble code message. The following additional checks may assist you in identifying a possible intermittent problem: - Visually inspect related wire harness connectors. Look for broken, bent, pushed out, spread, corroded, or contaminated terminals. - Visually inspect the related harnesses. Look for chafed, pierced, pinched or partially broken wire. - Refer to Wiring Diagrams and Technical Service Bulletins that may apply. Did the DTC become active ? Yes → Select appropriate symptom from Symptom List. No → No problem found at this time. Erase all codes before returning vehicle to customer.	All

Symptom:
PASSENGER SQUIB 1 CIRCUIT SHORT

When Monitored and Set Condition:

PASSENGER SQUIB 1 CIRCUIT SHORT

When Monitored: When the ignition is on, the ACM monitors the resistance of the Passenger Squib 1 circuits.

Set Condition: The ACM has detected low resistance in the Passenger Squib 1 circuits.

POSSIBLE CAUSES
PASSENGER AIRBAG CIRCUIT SHORT
PASSENGER SQUIB 1 LINE 1 SHORT TO LINE 2
ACM, PASSENGER SQUIB 1 CIRCUIT SHORT
STORED CODE OR INTERMITTENT CONDITION
ACTIVE CODE PRESENT

TEST	ACTION	APPLICABILITY
1	**NOTE: Ensure that the battery is fully charged.** Turn the ignition on. **NOTE: For the purpose of this test, the AECM and ORC modules will be referred to as an ACM.** SELECT ACTIVE or STORED DTC: ACM - ACTIVE DTC Go To 2 ACM - STORED DTC Go To 4 **NOTE: When reconnecting Airbag system components, the ignition must be turned off and the battery must be disconnected.**	All
2	**WARNING: TURN THE IGNITION OFF, DISCONNECT THE BATTERY AND WAIT TWO MINUTES BEFORE PROCEEDING.** **WARNING: DO NOT PLACE AN INTACT UNDEPLOYED AIRBAG FACE DOWN ON A HARD SURFACE, THE AIRBAG WILL PROPEL INTO THE AIR IF ACCIDENTALLY DEPLOYED, AND COULD RESULT IN SERIOUS OR FATAL INJURY.** Disconnect the Passenger Airbag. **NOTE: Check connectors - Clean and repair as necessary.** Connect the appropriate Load Tool to the Passenger Airbag connector. **WARNING: TURN THE IGNITION ON, THEN RECONNECT THE BATTERY.** With the DRBIII®, read the active airbag DTCs. Does the DRBIII® show PASSENGER SQUIB 1 CIRCUIT SHORT? Yes → Go To 3 No → Replace Passenger Airbag in accordance with the Service Information. Perform AIRBAG VERIFICATION TEST - VER 1.	All

PASSENGER SQUIB 1 CIRCUIT SHORT — Continued

TEST	ACTION	APPLICABILITY
3	**WARNING: TURN THE IGNITION OFF, DISCONNECT THE BATTERY AND WAIT TWO MINUTES BEFORE PROCEEDING.** Disconnect the Airbag Control Module connector **NOTE: Check connectors - Clean and repair as necessary.** Connect the appropriate Load Tool adapter to the Airbag Control Module connector. Disconnect the Load Tool from the Passenger airbag connector. Measure the resistance between Passenger Squib 1 Line 1 and Squib 1 Line 2 circuit at the Passenger Airbag connector. Is the resistance below 10K ohms? Yes → Repair Passenger Squib 1 Line 1 circuit short to Passenger Squib 1 Line 2 circuit. Perform AIRBAG VERIFICATION TEST - VER 1. No → Replace the Airbag Control Module in accordance with Service Instructions. WARNING: IF THE AIRBAG CONTROL MODULE IS DROPPED AT ANY TIME, IT MUST BE REPLACED. Perform AIRBAG VERIFICATION TEST - VER 1. **NOTE: When reconnecting airbag system components the Ignition must be turned off and the Battery must be disconnected.**	All
4	**NOTE: Ensure the battery is fully charged.** With the DRBIII®, record and erase all DTCs from all modules. All active codes must be resolved before diagnosing any stored codes. Maintain a safe distance from all airbags while performing the following steps. With the DRBIII® monitor active codes as you work through the system. **NOTE: If equipped with Passenger Airbag On-Off switch, read the DTC's in all switch positions.** Wiggle the wiring harness and connectors of the appropriate airbag system and rotate the steering wheel from stop to stop. **NOTE: Check connectors - Clean and repair as necessary.** You have just attempted to simulate the condition that initially set the trouble code message. The following additional checks may assist you in identifying a possible intermittent problem: - Visually inspect related wire harness connectors. Look for broken, bent, pushed out, spread, corroded, or contaminated terminals. - Visually inspect the related harnesses. Look for chafed, pierced, pinched or partially broken wire. - Refer to Wiring Diagrams and Technical Service Bulletins that may apply. Did the DTC become active ? Yes → Select appropriate symptom from Symptom List. No → No problem found at this time. Erase all codes before returning vehicle to customer.	All

Symptom:
PASSENGER SQUIB 1 SHORT TO BATTERY

When Monitored and Set Condition:

PASSENGER SQUIB 1 SHORT TO BATTERY

When Monitored: When the ignition is on, the ACM monitors the voltage of the Passenger Squib 1 circuits.

Set Condition: The ACM has detected high voltage on the Passenger Squib 1 circuits.

POSSIBLE CAUSES
PASSENGER AIRBAG CIRCUIT SHORT TO BATTERY
PASSENGER SQUIB 1 LINE 1 OR LINE 2 SHORT TO BATTERY
ACM, PASSENGER SQUIB 1 CIRCUIT SHORT TO BATTERY
STORED CODE OR INTERMITTENT CONDITION
ACTIVE CODE PRESENT

TEST	ACTION	APPLICABILITY
1	**NOTE: Ensure that the battery is fully charged.** Turn the ignition on. **NOTE: For the purpose of this test, the AECM and ORC modules will be referred to as an ACM.** SELECT ACTIVE or STORED DTC: ACM - ACTIVE DTC Go To 2 ACM - STORED DTC Go To 4 **NOTE: When reconnecting Airbag system components, the ignition must be turned off and the battery must be disconnected.**	All
2	**WARNING: TURN THE IGNITION OFF, DISCONNECT THE BATTERY AND WAIT TWO MINUTES BEFORE PROCEEDING.** **WARNING: DO NOT PLACE AN INTACT UNDEPLOYED AIRBAG FACE DOWN ON A HARD SURFACE, THE AIRBAG WILL PROPEL INTO THE AIR IF ACCIDENTALLY DEPLOYED, AND COULD RESULT IN SERIOUS OR FATAL INJURY.** Disconnect the Passenger Airbag connector. **NOTE: Check connectors - Clean and repair as necessary.** Connect the appropriate Load Tool to the Passenger Airbag connector. **WARNING: TURN THE IGNITION ON, THEN RECONNECT THE BATTERY.** With the DRBIII®, read the active Airbag DTCs. Does the DRBIII® show PASSENGER SQUIB 1 CIRCUIT SHORT TO BATTERY? Yes → Go To 3 No → Replace Passenger Airbag in accordance with the Service Information. Perform AIRBAG VERIFICATION TEST - VER 1.	All

PASSENGER SQUIB 1 SHORT TO BATTERY — Continued

TEST	ACTION	APPLICABILITY
3	**WARNING: TURN THE IGNITION OFF, DISCONNECT THE BATTERY AND WAIT TWO MINUTES BEFORE PROCEEDING.** Disconnect the Airbag Control Module connector. **NOTE: Check connectors - Clean and repair as necessary.** Connect the appropriate Load Tool adaptor to the Airbag Control Module connector. **WARNING: TURN IGNITION ON, THEN RECONNECT THE BATTERY.** Disconnect the Load Tool from the Passenger Airbag connector. Measure the voltage on the Passenger Squib 1 Line 1 and Line 2 circuits between the Passenger Airbag connector and ground. Is there any voltage present? Yes → Repair Passenger Squib 1 Line 1 or Line 2 circuit short to battery. Perform AIRBAG VERIFICATION TEST - VER 1. No → Replace the Airbag Control Module in accordance with Service Instructions. WARNING: IF THE AIRBAG CONTROL MODULE IS DROPPED AT ANY TIME, IT MUST BE REPLACED. Perform AIRBAG VERIFICATION TEST - VER 1.	All
4	**NOTE: Ensure the battery is fully charged.** With the DRBIII®, record and erase all DTCs from all modules. All active codes must be resolved before diagnosing any stored codes. Maintain a safe distance from all airbags while performing the following steps. With the DRBIII® monitor active codes as you work through the system. **NOTE: If equipped with Passenger Airbag On-Off switch, read the DTC's in all switch positions.** Wiggle the wiring harness and connectors of the appropriate airbag system and rotate the steering wheel from stop to stop. **NOTE: Check connectors - Clean and repair as necessary.** You have just attempted to simulate the condition that initially set the trouble code message. The following additional checks may assist you in identifying a possible intermittent problem: - Visually inspect related wire harness connectors. Look for broken, bent, pushed out, spread, corroded, or contaminated terminals. - Visually inspect the related harnesses. Look for chafed, pierced, pinched or partially broken wire. - Refer to Wiring Diagrams and Technical Service Bulletins that may apply. Did the DTC become active ? Yes → Select appropriate symptom from Symptom List. No → No problem found at this time. Erase all codes before returning vehicle to customer.	All

Symptom:
PASSENGER SQUIB 1 SHORT TO GROUND

When Monitored and Set Condition:

PASSENGER SQUIB 1 SHORT TO GROUND

When Monitored: When the ignition is on, the ACM monitors the resistance of the Passenger Squib 1 circuits for low resistance.

Set Condition: The ACM has detected a short to ground in the Passenger Squib 1 circuits.

POSSIBLE CAUSES
PASSENGER AIRBAG CIRCUIT SHORT TO GROUND
PASSENGER SQUIB 1 LINE 1 AND LINE 2 SHORT TO GROUND
STORED CODE OR INTERMITTENT CONDITION
ACM, PASSENGER SQUIB 1 CIRCUIT SHORT TO GROUND
ACTIVE CODE PRESENT

TEST	ACTION	APPLICABILITY
1	**NOTE: Ensure that the battery is fully charged.** Turn the ignition on. **NOTE: Connect the appropriate Load Tool to the Passenger Airbag connector.** SELECT ACTIVE or STORED DTC: ACM - ACTIVE DTC Go To 2 ACM - STORED DTC Go To 4 **NOTE: When reconnecting Airbag system components, the ignition must be turned off and the battery must be disconnected.**	All
2	**WARNING: TURN THE IGNITION OFF, DISCONNECT THE BATTERY AND WAIT TWO MINUTES BEFORE PROCEEDING.** **WARNING: DO NOT PLACE AN INTACT UNDEPLOYED AIRBAG FACE DOWN ON A HARD SURFACE, THE AIRBAG WILL PROPEL INTO THE AIR IF ACCIDENTALLY DEPLOYED, AND COULD RESULT IN SERIOUS OR FATAL INJURY.** Disconnect the Passenger Airbag connector. **NOTE: Check connectors - Clean and repair as necessary.** Connect the appropriate Load Tool to the Passenger Airbag connector. **WARNING: TURN THE IGNITION ON, THEN RECONNECT THE BATTERY.** With the DRBIII®, read the active Airbag DTCs. Does the DRBIII® show PASSENGER SQUIB 1 CIRCUIT SHORT TO GROUND? Yes → Go To 3 No → Replace the Passenger Airbag in accordance with the Service Information. Perform AIRBAG VERIFICATION TEST - VER 1.	All

PASSENGER SQUIB 1 SHORT TO GROUND — Continued

TEST	ACTION	APPLICABILITY
3	**WARNING: TURN THE IGNITION OFF, DISCONNECT THE BATTERY AND WAIT TWO MINUTES BEFORE PROCEEDING.** Disconnect the Airbag Control Module connector **NOTE: Check connectors - Clean repair as necessary.** Connect the appropriate Load Tool adaptor to the Airbag Control Module connector. Disconnect the Load Tool from the Passenger Airbag connector. Measure the resistance of the Passenger Squib 1 Line 1 or Line 2 circuit between the Passenger Airbag Module Connector and ground. Is the resistance below 10K ohms on either circuit? Yes → Repair Passenger Squib 1 Line 1 and Line 2 circuits for a short to ground. Perform AIRBAG VERIFICATION TEST - VER 1. No → Replace the Airbag Control Module in accordance with Service Instructions. WARNING: IF THE AIRBAG CONTROL MODULE IS DROPPED AT ANY TIME, IT MUST BE REPLACED. Perform AIRBAG VERIFICATION TEST - VER 1.	All
4	**NOTE: Ensure the battery is fully charged.** With the DRBIII®, record and erase all DTCs from all modules. All active codes must be resolved before diagnosing any stored codes. Maintain a safe distance from all airbags while performing the following steps. With the DRBIII® monitor active codes as you work through the system. **NOTE: If equipped with Passenger Airbag On-Off switch, read the DTC's in all switch positions.** Wiggle the wiring harness and connectors of the appropriate airbag system and rotate the steering wheel from stop to stop. **NOTE: Check connectors - Clean and repair as necessary.** You have just attempted to simulate the condition that initially set the trouble code message. The following additional checks may assist you in identifying a possible intermittent problem: - Visually inspect related wire harness connectors. Look for broken, bent, pushed out, spread, corroded, or contaminated terminals. - Visually inspect the related harnesses. Look for chafed, pierced, pinched or partially broken wire. - Refer to Wiring Diagrams and Technical Service Bulletins that may apply. Did the DTC become active ? Yes → Select appropriate symptom from Symptom List. No → No problem found at this time. Erase all codes before returning vehicle to customer.	All

Symptom:
PASSENGER SQUIB 2 CIRCUIT OPEN

When Monitored and Set Condition:

PASSENGER SQUIB 2 CIRCUIT OPEN

When Monitored: When the ignition is On, the ACM monitors the resistance of the Passenger Squib 2 circuits.

Set Condition: The ACM has detected an open circuit or high resistance on the Passenger Squib 2 circuits.

POSSIBLE CAUSES
PASSENGER AIRBAG OPEN
PASSENGER SQUIB 2 LINE 1 OR LINE 2 CIRCUIT OPEN
ACM, PASSENGER SQUIB 2 CIRCUIT OPEN
STORED CODE OR INTERMITTENT CONDITION
ACTIVE CODE PRESENT

TEST	ACTION	APPLICABILITY
1	**NOTE: Ensure that the battery is fully charged.** Turn the ignition on. **NOTE: For the purpose of this test, the AECM and ORC modules will be referred to as an ACM.** SELECT ACTIVE or STORED DTC: ACM - ACTIVE DTC Go To 2 ACM - STORED DTC Go To 4 **NOTE: When reconnecting Airbag system components, the ignition must be turned off and the battery must be disconnected.**	All

PASSENGER SQUIB 2 CIRCUIT OPEN — Continued

TEST	ACTION	APPLICABILITY
2	**WARNING: TURN THE IGNITION OFF, DISCONNECT THE BATTERY AND WAIT TWO MINUTES BEFORE PROCEEDING.** **WARNING: DO NOT PLACE AN INTACT UNDEPLOYED AIRBAG FACE DOWN ON A HARD SURFACE, THE AIRBAG WILL PROPEL INTO THE AIR IF ACCIDENTALLY DEPLOYED, AND COULD RESULT IN SERIOUS OR FATAL INJURY.** Disconnect the Passenger Airbag connector. **NOTE: Check connectors - Clean and repair as necessary.** Connect the appropriate Load Tool to the Passenger Airbag connector. **WARNING: TURN THE IGNITION ON, THEN RECONNECT THE BATTERY.** With the DRBIII®, read the active Airbag DTCs. Does the DRB show PASSENGER SQUIB 2 CIRCUIT OPEN? Yes → Go To 3 No → Replace Passenger Airbag in accordance with the Service Information. Perform AIRBAG VERIFICATION TEST - VER 1.	All
3	**WARNING: TURN THE IGNITION OFF, DISCONNECT THE BATTERY AND WAIT TWO MINUTES BEFORE PROCEEDING.** Disconnect the Airbag Control Module connector. **NOTE: Check connectors - Clean and repair as necessary.** Connect the appropriate Load Tool adaptor to the Airbag Control Module connector. Disconnect the Load Tool from the Passenger Airbag connector. Measure the resistance of the Passenger Squib 2 Line 1 and Line 2 circuits between the ACM adaptor and the Passenger Airbag connector. Is the resistance below 1.0 ohms on both circuits? Yes → Replace the Airbag Control Module in accordance with Service Instructions. WARNING: IF THE AIRBAG CONTROL MODULE IS DROPPED AT ANY TIME, IT MUST BE REPLACED. Perform AIRBAG VERIFICATION TEST - VER 1. No → Repair open or high resistance in Passenger Squib 2 Line 1 or Line 2 circuits. Perform AIRBAG VERIFICATION TEST - VER 1.	All

PASSENGER SQUIB 2 CIRCUIT OPEN — Continued

TEST	ACTION	APPLICABILITY
4	**NOTE: Ensure the battery is fully charged.** With the DRBIII®, record and erase all DTCs from all modules. All active codes must be resolved before diagnosing any stored codes. Maintain a safe distance from all airbags while performing the following steps. With the DRBIII® monitor active codes as you work through the system. **NOTE: If equipped with Passenger Airbag On-Off switch, read the DTC's in all switch positions.** Wiggle the wiring harness and connectors of the appropriate airbag system and rotate the steering wheel from stop to stop. **NOTE: Check connectors - Clean and repair as necessary.** You have just attempted to simulate the condition that initially set the trouble code message. The following additional checks may assist you in identifying a possible intermittent problem: - Visually inspect related wire harness connectors. Look for broken, bent, pushed out, spread, corroded, or contaminated terminals. - Visually inspect the related harnesses. Look for chafed, pierced, pinched or partially broken wire. - Refer to Wiring Diagrams and Technical Service Bulletins that may apply. Did the DTC become active ? Yes → Select appropriate symptom from Symptom List. No → No problem found at this time. Erase all codes before returning vehicle to customer.	All

Symptom:
PASSENGER SQUIB 2 CIRCUIT SHORT

When Monitored and Set Condition:

PASSENGER SQUIB 2 CIRCUIT SHORT

When Monitored: When the ignition is on, the ACM monitors the resistance of the Passenger Squib 2 circuits.

Set Condition: The ACM has detected low resistance in the Passenger Squib 2 circuits.

POSSIBLE CAUSES
PASSENGER AIRBAG CIRCUIT SHORT
PASSENGER SQUIB 1 LINE 1 SHORT TO LINE 2
STORED CODE OR INTERMITTENT CONDITION
ACM, PASSENGER SQUIB 2 CIRCUIT SHORT
ACTIVE CODE PRESENT

TEST	ACTION	APPLICABILITY
1	**NOTE: Ensure that the battery is fully charged.** Turn the ignition on. **NOTE: For the purpose of this test, the AECM and ORC modules will be referred to as an ACM.** SELECT ACTIVE or STORED DTC: ACM - ACTIVE DTC Go To 2 ACM - STORED DTC Go To 4 **NOTE: When reconnecting Airbag system components, the ignition must be turned off and the battery must be disconnected.**	All
2	**WARNING: TURN THE IGNITION OFF, DISCONNECT THE BATTERY AND WAIT TWO MINUTES BEFORE PROCEEDING.** **WARNING: DO NOT PLACE AN INTACT UNDEPLOYED AIRBAG FACE DOWN ON A HARD SURFACE, THE AIRBAG WILL PROPEL INTO THE AIR IF ACCIDENTALLY DEPLOYED, AND COULD RESULT IN SERIOUS OR FATAL INJURY.** Disconnect the Passenger Airbag. **NOTE: Check connectors - Clean and repair as necessary.** Connect the appropriate Load Tool to the Passenger Airbag connector. **WARNING: TURN THE IGNITION ON, THEN RECONNECT THE BATTERY.** With the DRBIII®, read the active DTCs. Does the DRB show PASSENGER SQUIB 2 CIRCUIT SHORT? Yes → Go To 3 No → Replace Passenger Airbag in accordance with the Service Information. Perform AIRBAG VERIFICATION TEST - VER 1.	All

PASSENGER SQUIB 2 CIRCUIT SHORT — Continued

TEST	ACTION	APPLICABILITY
3	**WARNING: TURN THE IGNITION OFF, DISCONNECT THE BATTERY AND WAIT TWO MINUTES BEFORE PROCEEDING.** Disconnect the Airbag Control Module connector **NOTE: Check connectors - Clean and repair as necessary.** Connect the appropriate Load Tool adaptor to the Airbag Control Module connectors. Disconnect the Load Tool from the Passenger Airbag connector. Measure the resistance between the Passenger Squib 2 Line 1 and line 2 circuits at the Passenger Airbag connector. Is the resistance below 10K ohms? Yes → Repair Passenger Squib 2 Line 1 circuit short to Passenger Squib 2 Line 2 circuit. Perform AIRBAG VERIFICATION TEST - VER 1. No → Replace the Airbag Control Module in accordance with Service Instructions. WARNING: IF THE AIRBAG CONTROL MODULE IS DROPPED AT ANY TIME, IT MUST BE REPLACED. Perform AIRBAG VERIFICATION TEST - VER 1.	All
4	**NOTE: Ensure the battery is fully charged.** With the DRBIII®, record and erase all DTCs from all modules. All active codes must be resolved before diagnosing any stored codes. Maintain a safe distance from all airbags while performing the following steps. With the DRBIII® monitor active codes as you work through the system. **NOTE: If equipped with Passenger Airbag On-Off switch, read the DTC's in all switch positions.** Wiggle the wiring harness and connectors of the appropriate airbag system and rotate the steering wheel from stop to stop. **NOTE: Check connectors - Clean and repair as necessary.** You have just attempted to simulate the condition that initially set the trouble code message. The following additional checks may assist you in identifying a possible intermittent problem: - Visually inspect related wire harness connectors. Look for broken, bent, pushed out, spread, corroded, or contaminated terminals. - Visually inspect the related harnesses. Look for chafed, pierced, pinched or partially broken wire. - Refer to Wiring Diagrams and Technical Service Bulletins that may apply. Did the DTC become active ? Yes → Select appropriate symptom from Symptom List. No → No problem found at this time. Erase all codes before returning vehicle to customer.	All

Symptom:
PASSENGER SQUIB 2 SHORT TO BATTERY

When Monitored and Set Condition:

PASSENGER SQUIB 2 SHORT TO BATTERY

When Monitored: When the ignition is on, the ACM monitors the voltage of the Passenger Squib 2 circuits.

Set Condition: The ACM has detected high voltage on the Passenger Squib 2 circuits.

POSSIBLE CAUSES
PASSENGER AIRBAG CIRCUIT SHORT TO BATTERY
PASSENGER SQUIB 2 LINE 1 OR LINE 2 SHORTED TO BATTERY
ACM, PASSENGER SQUIB 2 CIRCUIT SHORT TO BATTERY
STORED CODE OR INTERMITTENT CONDITION
ACTIVE CODE PRESENT

TEST	ACTION	APPLICABILITY
1	**NOTE: Ensure that the battery is fully charged.** Turn the ignition on. **NOTE: For the purpose of this test, the AECM and ORC modules will be referred to as an ACM.** SELECT ACTIVE or STORED DTC: ACM - ACTIVE DTC Go To 2 ACM - STORED DTC Go To 4 **NOTE: When reconnecting Airbag system components, the ignition must be turned off and the battery must be disconnected.**	All
2	**WARNING: TURN THE IGNITION OFF, DISCONNECT THE BATTERY AND WAIT TWO MINUTES BEFORE PROCEEDING.** **WARNING: DO NOT PLACE AN INTACT UNDEPLOYED AIRBAG FACE DOWN ON A HARD SURFACE, THE AIRBAG WILL PROPEL INTO THE AIR IF ACCIDENTALLY DEPLOYED, AND COULD RESULT IN SERIOUS OR FATAL INJURY.** Disconnect the Passenger Airbag connector. **NOTE: Check connectors - Clean and repair as necessary.** Connect the appropriate Load Tool to the Passenger Airbag connector. **WARNING: TURN THE IGNITION ON, THEN RECONNECT THE BATTERY.** With the DRBIII®, read the active Airbag DTCs. Does the DRB show PASSENGER SQUIB 2 CIRCUIT SHORT TO BATTERY? Yes → Go To 3 No → Replace Passenger Airbag in accordance with the Service Information. Perform AIRBAG VERIFICATION TEST - VER 1.	All

PASSENGER SQUIB 2 SHORT TO BATTERY — Continued

TEST	ACTION	APPLICABILITY
3	**WARNING: TURN THE IGNITION OFF, DISCONNECT THE BATTERY AND WAIT TWO MINUTES BEFORE PROCEEDING.** Disconnect the Airbag Control Module connector. **NOTE: Check connectors - Clean and repair as necessary.** Connect the appropriate Load Tool adaptor to the Airbag Control Module connector. **WARNING: TURN THE IGNITION ON, THEN RECONNECT THE BATTERY.** Disconnect the Load Tool from the Passenger Airbag connector. Measure the voltage on the Passenger Squib 2 Line 1 and Line 2 circuits between the Passenger Airbag connector and ground. Is there any voltage present? Yes → Repair Passenger Squib 2 Line 1 or Line 2 circuit shorted to battery. Perform AIRBAG VERIFICATION TEST - VER 1. No → Replace the Airbag Control Module in accordance with Service Instructions. WARNING: IF THE AIRBAG CONTROL MODULE IS DROPPED AT ANY TIME, IT MUST BE REPLACED. Perform AIRBAG VERIFICATION TEST - VER 1.	All
4	**NOTE: Ensure the battery is fully charged.** With the DRBIII®, record and erase all DTCs from all modules. All active codes must be resolved before diagnosing any stored codes. Maintain a safe distance from all airbags while performing the following steps. With the DRBIII® monitor active codes as you work through the system. **NOTE: If equipped with Passenger Airbag On-Off switch, read the DTC's in all switch positions.** Wiggle the wiring harness and connectors of the appropriate airbag system and rotate the steering wheel from stop to stop. **NOTE: Check connectors - Clean and repair as necessary.** You have just attempted to simulate the condition that initially set the trouble code message. The following additional checks may assist you in identifying a possible intermittent problem: - Visually inspect related wire harness connectors. Look for broken, bent, pushed out, spread, corroded, or contaminated terminals. - Visually inspect the related harnesses. Look for chafed, pierced, pinched or partially broken wire. - Refer to Wiring Diagrams and Technical Service Bulletins that may apply. Did the DTC become active ? Yes → Select appropriate symptom from Symptom List. No → No problem found at this time. Erase all codes before returning vehicle to customer.	All

Symptom:
PASSENGER SQUIB 2 SHORT TO GROUND

When Monitored and Set Condition:

PASSENGER SQUIB 2 SHORT TO GROUND

When Monitored: When the ignition is on, the ACM monitors the resistance of the Passenger Squib 2 circuits for low resistance.

Set Condition: The ACM has detected a short to ground in the Passenger Squib 2 circuits.

POSSIBLE CAUSES
PASSENGER AIRBAG CIRCUIT SHORTED TO GROUND
PASSENGER SQUIB 2 LINE 1 OR LINE 2 SHORT TO GROUND
ACM, PASSENGER SQUIB 2 CIRCUIT SHORT TO GROUND
STORED CODE OR INTERMITTENT CONDITION
ACTIVE CODE PRESENT

TEST	ACTION	APPLICABILITY
1	**NOTE: Ensure that the battery is fully charged.** Turn the ignition on. **NOTE: For the purpose of this test, the AECM and ORC modules will be referred to as an ACM.** SELECT ACTIVE or STORED DTC: ACM - ACTIVE DTC Go To 2 ACM - STORED DTC Go To 4 **NOTE: When reconnecting Airbag system components, the ignition must be turned off and the battery must be disconnected.**	All
2	**WARNING: TURN THE IGNITION OFF, DISCONNECT THE BATTERY AND WAIT TWO MINUTES BEFORE PROCEEDING.** **WARNING: DO NOT PLACE AN INTACT UNDEPLOYED AIRBAG FACE DOWN ON A HARD SURFACE, THE AIRBAG WILL PROPEL INTO THE AIR IF ACCIDENTALLY DEPLOYED, AND COULD RESULT IN SERIOUS OR FATAL INJURY.** Disconnect the Passenger Airbag connector. **NOTE: Check connectors - Clean and repair as necessary.** Connect the appropriate Load Tool to the Passenger Airbag connector. **WARNING: TURN THE IGNITION ON, THEN RECONNECT THE BATTERY.** With the DRBIII®, read the active Airbag DTCs. Does the DRB show PASSENGER SQUIB 2 CIRCUIT SHORT TO GROUND? Yes → Go To 3 No → Replace the Passenger Airbag in accordance with the Service Information. Perform AIRBAG VERIFICATION TEST - VER 1.	All

PASSENGER SQUIB 2 SHORT TO GROUND — Continued

TEST	ACTION	APPLICABILITY
3	**WARNING: TURN THE IGNITION OFF, DISCONNECT THE BATTERY AND WAIT TWO MINUTES BEFORE PROCEEDING.** **WARNING: DO NOT PLACE AN INTACT UNDEPLOYED AIRBAG FACE DOWN ON A HARD SURFACE, THE AIRBAG WILL PROPEL INTO THE AIR IF ACCIDENTALLY DEPLOYED, AND COULD RESULT IN SERIOUS OR FATAL INJURY.** Disconnect the Airbag Control Module connector **NOTE: Check connectors - Clean repair as necessary.** Connect the appropriate Load Tool adaptor to the Airbag Control Module connector. Disconnect the Load Tool from the Passenger Airbag connector. Measure the resistance of the Passenger Squib 2 Line 1 and Line 2 circuits between the Passenger Airbag Module connector and ground. Is the resistance below 10K ohms on either circuit? Yes → Repair Passenger Squib 2 Line 1 or Line 2 circuit for a shorted to ground. Perform AIRBAG VERIFICATION TEST - VER 1. No → Replace the Airbag Control Module in accordance with Service Instructions. WARNING: IF THE AIRBAG CONTROL MODULE IS DROPPED AT ANY TIME, IT MUST BE REPLACED. Perform AIRBAG VERIFICATION TEST - VER 1.	All
4	**NOTE: Ensure the battery is fully charged.** With the DRBIII®, record and erase all DTCs from all modules. All active codes must be resolved before diagnosing any stored codes. Maintain a safe distance from all airbags while performing the following steps. With the DRBIII® monitor active codes as you work through the system. **NOTE: If equipped with Passenger Airbag On-Off switch, read the DTC's in all switch positions.** Wiggle the wiring harness and connectors of the appropriate airbag system and rotate the steering wheel from stop to stop. **NOTE: Check connectors - Clean and repair as necessary.** You have just attempted to simulate the condition that initially set the trouble code message. The following additional checks may assist you in identifying a possible intermittent problem: - Visually inspect related wire harness connectors. Look for broken, bent, pushed out, spread, corroded, or contaminated terminals. - Visually inspect the related harnesses. Look for chafed, pierced, pinched or partially broken wire. - Refer to Wiring Diagrams and Technical Service Bulletins that may apply. Did the DTC become active ? Yes → Select appropriate symptom from Symptom List. No → No problem found at this time. Erase all codes before returning vehicle to customer.	All

Symptom:
SEAT SQUIB CIRCUIT OPEN

When Monitored and Set Condition:

SEAT SQUIB CIRCUIT OPEN

When Monitored: With the ignition is On, the SIACM monitors the resistance of the Seat Squib circuits.

Set Condition: When the SIACM detects an open circuit or high resistance on the Seat Squib circuits.

POSSIBLE CAUSES
SEAT AIRBAG OPEN
SEAT SQUIB LINE 1 OR LINE 2 CIRCUIT OPEN
SIACM, SEAT SQUIB CIRCUIT OPEN
STORED CODE OR INTERMITTENT CONDITION
ACTIVE CODE PRESENT

TEST	ACTION	APPLICABILITY
1	Ensure the battery is fully charged. Turn the ignition on. **NOTE: For the purpose of this test, the AECM and ORC modules will be referred to as an ACM.** SELECT ONE: LEFT SIACM - ACTIVE DTC Go To 2 LEFT SIACM - STORED DTC Go To 4 RIGHT SIACM - ACTIVE DTC Go To 2 RIGHT SIACM - STORED DTC Go To 4 **NOTE: When reconnecting Airbag system components, the ignition must be turned off and the battery must be disconnected.**	All

SEAT SQUIB CIRCUIT OPEN — Continued

TEST	ACTION	APPLICABILITY
2	**WARNING: TURN IGNITION OFF, DISCONNECT THE BATTERY AND WAIT TWO MINUTES BEFORE PROCEEDING.** **WARNING: DO NOT PLACE AN INTACT UNDEPLOYED SEAT BACK PADDED SIDE DOWN ON A HARD SURFACE, THE AIRBAG WILL PROPEL INTO THE AIR IF ACCIDENTALLY DEPLOYED, AND COULD RESULT IN SERIOUS OR FATAL INJURY.** Disconnect the Seat Airbag connector. **NOTE: Check connectors - Clean and repair as necessary.** Connect the appropriate Load Tool to the Seat Airbag connector. **WARNING: TURN IGNITION ON, THEN RECONNECT THE BATTERY.** With the DRBIII®, read the SIACM active DTC's. Does the DRB show SEAT SQUIB CIRCUIT OPEN? Yes → Go To 3 No → Replace Seat Airbag in accordance with the Service Information. Perform AIRBAG VERIFICATION TEST - VER 1.	All
3	**WARNING: TURN IGNITION OFF, DISCONNECT THE BATTERY AND WAIT TWO MINUTES BEFORE PROCEEDING.** **WARNING: DO NOT PLACE AN INTACT UNDEPLOYED SEAT BACK PADDED SIDE DOWN ON A HARD SURFACE, THE AIRBAG WILL PROPEL INTO THE AIR IF ACCIDENTALLY DEPLOYED, AND COULD RESULT IN SERIOUS OR FATAL INJURY.** Disconnect the Airbag Load Tool Jumper. Disconnect the Side Impact Airbag Control Module Connector. **NOTE: Check connectors - Clean and repair as necessary.** Connect the appropriate Load Tool adaptor to the Side Impact Airbag Control Module connector. Measure the resistance of the Seat Squib Line 1 and Line 2 circuits between the Load Tool SIACM adaptor and the Seat Airbag connector. Is the resistance below 1.0 ohms on both circuits? Yes → Replace the Side Impact Airbag Control Module in accordance with the Service information. WARNING: IF THE SIDE IMPACT AIRBAG CONTROL MODULE IS DROPPED AT ANY TIME, IT MUST BE REPLACED. Perform AIRBAG VERIFICATION TEST - VER 1. No → Repair open or high resistance in the Seat Squib Line 1 or Line 2 circuits. Perform AIRBAG VERIFICATION TEST - VER 1.	All

SEAT SQUIB CIRCUIT OPEN — Continued

TEST	ACTION	APPLICABILITY
4	**NOTE: Ensure the battery is fully charged.** With the DRBIII®, record and erase all DTCs from all modules. All active codes must be resolved before diagnosing any stored codes. Maintain a safe distance from all airbags while performing the following steps. With the DRBIII® monitor active codes as you work through the system. **NOTE: If equipped with Passenger Airbag On-Off switch, read the DTC's in all switch positions.** Wiggle the wiring harness and connectors of the appropriate airbag system and rotate the steering wheel from stop to stop. **NOTE: Check connectors - Clean and repair as necessary.** You have just attempted to simulate the condition that initially set the trouble code message. The following additional checks may assist you in identifying a possible intermittent problem: - Visually inspect related wire harness connectors. Look for broken, bent, pushed out, spread, corroded, or contaminated terminals. - Visually inspect the related harnesses. Look for chafed, pierced, pinched or partially broken wire. - Refer to Wiring Diagrams and Technical Service Bulletins that may apply. Did the DTC become active ? Yes → Select appropriate symptom from Symptom List. No → No problem found at this time. Erase all codes before returning vehicle to customer.	All

Symptom:
SEAT SQUIB CIRCUIT SHORT

When Monitored and Set Condition:

SEAT SQUIB CIRCUIT SHORT

When Monitored: When the ignition is on, the SIACM monitors the resistance between the Seat Squib circuits.

Set Condition: When the SIACM detects a low resistance between the Seat Squib circuits.

POSSIBLE CAUSES
SEAT AIRBAG SHORT
SEAT SQUIB LINE 1 SHORT TO LINE 2
SIACM, SEAT SQUIB CIRCUIT SHORT
STORED CODE OR INTERMITTENT CONDITION
ACTIVE CODE PRESENT

TEST	ACTION	APPLICABILITY
1	Ensure the battery is fully charged. Turn the ignition on. **NOTE: For the purpose of this test, the AECM and ORC modules will be referred to as an ACM.** SELECT ONE: LEFT SIACM - ACTIVE DTC Go To 2 LEFT SIACM - STORED DTC Go To 4 RIGHT SIACM - ACTIVE DTC Go To 2 RIGHT SIACM - STORED DTC Go To 4 **NOTE: When reconnecting Airbag system components, the ignition must be turned off and the battery must be disconnected.**	All

SEAT SQUIB CIRCUIT SHORT — Continued

TEST	ACTION	APPLICABILITY
2	**WARNING: TURN THE IGNITION OFF, DISCONNECT THE BATTERY AND WAIT TWO MINUTES BEFORE PROCEEDING.** **WARNING: DO NOT PLACE AN INTACT UNDEPLOYED SEAT BACK PADDED SIDE DOWN ON A HARD SURFACE, THE AIRBAG WILL PROPEL INTO THE AIR IF ACCIDENTALLY DEPLOYED, AND COULD RESULT IN SERIOUS OR FATAL INJURY.** Disconnect the Seat Airbag connector. **NOTE: Check connectors - Clean repair as necessary.** Connect the appropriate Load Tool to the Seat Airbag connector. **WARNING: TURN IGNITION ON, THEN RECONNECT THE BATTERY.** With the DRB, read the SIACM active DTC's. Does the DRB show SEAT SQUIB CIRCUIT SHORT? Yes → Go To 3 No → Replace Seat Airbag in accordance with the Service Information. Perform AIRBAG VERIFICATION TEST - VER 1.	All
3	**WARNING: TURN THE IGNITION OFF, DISCONNECT THE BATTERY AND WAIT TWO MINUTES BEFORE PROCEEDING.** **WARNING: DO NOT PLACE AN INTACT UNDEPLOYED SEAT BACK PADDED SIDE DOWN ON A HARD SURFACE, THE AIRBAG WILL PROPEL INTO THE AIR IF ACCIDENTALLY DEPLOYED, AND COULD RESULT IN SERIOUS OR FATAL INJURY.** **NOTE: Check connectors - Clean and repair as necessary.** Connect the appropriate Load Tool adaptor to the SIACM connector. Disconnect the Side Impact Airbag Control Module connector Measure the resistance between the Seat Squib Line 1 and Line 2 circuits at the Seat Airbag connector. Is the resistance below 10K ohms? Yes → Repair Seat Squib Line 1 shorted to Line 2 circuit. Perform AIRBAG VERIFICATION TEST - VER 1. No → Replace the Side Impact Airbag Control Module in accordance with Service Instructions. WARNING: IF THE SIDE IMPACT AIRBAG CONTROL MODULE IS DROPPED AT ANY TIME, IT MUST BE REPLACED. Perform AIRBAG VERIFICATION TEST - VER 1.	All

SEAT SQUIB CIRCUIT SHORT — Continued

TEST	ACTION	APPLICABILITY
4	**NOTE: Ensure the battery is fully charged.** With the DRBIII®, record and erase all DTCs from all modules. All active codes must be resolved before diagnosing any stored codes. Maintain a safe distance from all airbags while performing the following steps. With the DRBIII® monitor active codes as you work through the system. **NOTE: If equipped with Passenger Airbag On-Off switch, read the DTC's in all switch positions.** Wiggle the wiring harness and connectors of the appropriate airbag system and rotate the steering wheel from stop to stop. **NOTE: Check connectors - Clean and repair as necessary.** You have just attempted to simulate the condition that initially set the trouble code message. The following additional checks may assist you in identifying a possible intermittent problem: - Visually inspect related wire harness connectors. Look for broken, bent, pushed out, spread, corroded, or contaminated terminals. - Visually inspect the related harnesses. Look for chafed, pierced, pinched or partially broken wire. - Refer to Wiring Diagrams and Technical Service Bulletins that may apply. Did the DTC become active ? Yes → Select appropriate symptom from Symptom List. No → No problem found at this time. Erase all codes before returning vehicle to customer.	All

Symptom:
SEAT SQUIB SHORT TO BATTERY

When Monitored and Set Condition:

SEAT SQUIB SHORT TO BATTERY

When Monitored: When the ignition is on, the SIACM monitors the voltage of the Seat Squib circuits.

Set Condition: When the SIACM detects high voltage on the Seat Squib circuits.

POSSIBLE CAUSES
SEAT AIRBAG SHORT TO BATTERY
SEAT SQUIB LINE 1 OR LINE 2 SHORTED TO BATTERY
SIACM, SEAT SQUIB SHORT TO BATTERY
STORED CODE OR INTERMITTENT CONDITION
ACTIVE CODE PRESENT

TEST	ACTION	APPLICABILITY
1	Turn the ignition on. Ensure the battery is fully charged. **NOTE: For the purpose of this test, the AECM and ORC modules will be referred to as an ACM.** SELECT ONE: LEFT SIACM - ACTIVE DTC Go To 2 LEFT SIACM - STORED DTC Go To 4 RIGHT SIACM - ACTIVE DTC Go To 2 RIGHT SIACM - STORED DTC Go To 4 **NOTE: When reconnecting Airbag system components, the ignition must be turned off and the battery must be disconnected.**	All

SEAT SQUIB SHORT TO BATTERY — Continued

TEST	ACTION	APPLICABILITY
2	**WARNING: TURN IGNITION OFF, DISCONNECT THE BATTERY AND WAIT TWO MINUTES BEFORE PROCEEDING.** **WARNING: DO NOT PLACE AN INTACT UNDEPLOYED SEAT BACK PADDED SIDE DOWN ON A HARD SURFACE, THE AIRBAG WILL PROPEL INTO THE AIR IF ACCIDENTALLY DEPLOYED, AND COULD RESULT IN SERIOUS OR FATAL INJURY.** Disconnect the Seat Airbag connector. **NOTE: Check connectors - Clean and repair as necessary.** Connect the appropriate Load Tool to the Seat Airbag connector. **WARNING: TURN IGNITION ON, THEN RECONNECT THE BATTERY.** With the DRBIII®, read SIACM active DTC's. Does the DRBIII® display SEAT SQUIB SHORT TO BATTERY? Yes → Go To 3 No → Replace Seat Airbag in accordance with the Service Information. Perform AIRBAG VERIFICATION TEST - VER 1.	All
3	**WARNING: TURN IGNITION OFF, DISCONNECT THE BATTERY AND WAIT TWO MINUTES BEFORE PROCEEDING.** **WARNING: DO NOT PLACE AN INTACT UNDEPLOYED SEAT BACK PADDED SIDE DOWN ON A HARD SURFACE, THE AIRBAG WILL PROPEL INTO THE AIR IF ACCIDENTALLY DEPLOYED, AND COULD RESULT IN SERIOUS OR FATAL INJURY.** Disconnect the Airbag Load Tool Jumper. Disconnect the Side Impact Airbag Control Module connector. **NOTE: Check connectors - Clean and repair as necessary.** Connect the appropriate Load Tool SIACM adaptor to the SIACM connector. **WARNING: TURN IGNITION ON, THEN RECONNECT THE BATTERY.** Measure the voltage of the Seat Squib Line 1 and Line 2 circuits between the Seat Airbag connector and ground. Is any voltage present on either circuit? Yes → Repair Seat Squib Line 1 or Line 2 shorted to battery. Perform AIRBAG VERIFICATION TEST - VER 1. No → Replace the Side Impact Airbag Control Module in accordance with Service Instructions. WARNING: IF THE SIDE IMPACT AIRBAG CONTROL MODULE IS DROPPED AT ANY TIME, IT MUST BE REPLACED. Perform AIRBAG VERIFICATION TEST - VER 1.	All

SEAT SQUIB SHORT TO BATTERY — Continued

TEST	ACTION	APPLICABILITY
4	**NOTE: Ensure the battery is fully charged.** With the DRBIII®, record and erase all DTCs from all modules. All active codes must be resolved before diagnosing any stored codes. Maintain a safe distance from all airbags while performing the following steps. With the DRBIII® monitor active codes as you work through the system. **NOTE: If equipped with Passenger Airbag On-Off switch, read the DTC's in all switch positions.** Wiggle the wiring harness and connectors of the appropriate airbag system and rotate the steering wheel from stop to stop. **NOTE: Check connectors - Clean and repair as necessary.** You have just attempted to simulate the condition that initially set the trouble code message. The following additional checks may assist you in identifying a possible intermittent problem: - Visually inspect related wire harness connectors. Look for broken, bent, pushed out, spread, corroded, or contaminated terminals. - Visually inspect the related harnesses. Look for chafed, pierced, pinched or partially broken wire. - Refer to Wiring Diagrams and Technical Service Bulletins that may apply. Did the DTC become active ? Yes → Select appropriate symptom from Symptom List. No → No problem found at this time. Erase all codes before returning vehicle to customer.	All

Symptom:
SEAT SQUIB SHORT TO GROUND

When Monitored and Set Condition:

SEAT SQUIB SHORT TO GROUND

When Monitored: When the ignition is on, the SIACM monitors the resistance of the Seat Squib circuits.

Set Condition: When the SIACM detects a short to ground on the Seat Squib circuits.

POSSIBLE CAUSES
SEAT AIRBAG SHORT TO GROUND
SEAT SQUIB LINE 1 OR LINE 2 SHORTED TO GROUND
SIACM, SEAT SQUIB SHORT TO GROUND
STORED CODE OR INTERMITTENT CONDITION
ACTIVE CODE PRESENT

TEST	ACTION	APPLICABILITY
1	Ensure the battery is fully charged. Turn the ignition on. **NOTE: For the purpose of this test, the AECM and ORC modules will be referred to as an ACM.** SELECT ONE: LEFT SIACM - ACTIVE DTC Go To 2 LEFT SIACM - STORED DTC Go To 4 RIGHT SIACM - ACTIVE DTC Go To 2 RIGHT SI ACM - STORED DTC Go To 4 **NOTE: When reconnecting Airbag system components, the ignition must be turned off and the battery must be disconnected.**	All

SEAT SQUIB SHORT TO GROUND — Continued

TEST	ACTION	APPLICABILITY
2	**WARNING: TURN IGNITION OFF, DISCONNECT THE BATTERY AND WAIT TWO MINUTES BEFORE PROCEEDING.** **WARNING: DO NOT PLACE AN INTACT UNDEPLOYED SEAT BACK PADDED SIDE DOWN ON A HARD SURFACE, THE AIRBAG WILL PROPEL INTO THE AIR IF ACCIDENTALLY DEPLOYED, AND COULD RESULT IN SERIOUS OR FATAL INJURY.** Disconnect the Seat Airbag connector. **NOTE: Check connectors - Clean and repair as necessary.** Connect the appropriate Load Tool to the Seat Airbag connector. **WARNING: TURN IGNITION ON, THEN RECONNECT THE BATTERY.** With the DRBIII®, read SIACM active DTC's. Does the DRBIII® display SEAT SQUIB SHORT TO GROUND? Yes → Go To 3 No → Replace the Seat Airbag in accordance with Service Instructions. Perform AIRBAG VERIFICATION TEST - VER 1.	All
3	**WARNING: TURN IGNITION OFF, DISCONNECT THE BATTERY AND WAIT TWO MINUTES BEFORE PROCEEDING.** **WARNING: DO NOT PLACE AN INTACT UNDEPLOYED SEAT BACK PADDED SIDE DOWN ON A HARD SURFACE, THE AIRBAG WILL PROPEL INTO THE AIR IF ACCIDENTALLY DEPLOYED, AND COULD RESULT IN SERIOUS OR FATAL INJURY.** Disconnect the Airbag Load Tool Jumper. Disconnect the Side Impact Airbag Control Module connector. **NOTE: Check connectors - Clean and repair as necessary.** Connect the appropriate Load Tool SIACM adaptor to the SIACM connector. Measure the resistance of the Seat Squib Line 1 and Line 2 circuits between the Curtain Squib connector and ground. Is the resistance below 10K ohms on either circuit? Yes → Repair Seat Squib Line 1 or Line 2 shorted to ground. Perform AIRBAG VERIFICATION TEST - VER 1. No → Replace the Side Impact Airbag Control Module in accordance with Service Instructions. WARNING: IF THE SIDE IMPACT AIRBAG CONTROL MODULE IS DROPPED AT ANY TIME, IT MUST BE REPLACED. Perform AIRBAG VERIFICATION TEST - VER 1.	All

SEAT SQUIB SHORT TO GROUND — Continued

TEST	ACTION	APPLICABILITY
4	**NOTE: Ensure the battery is fully charged.** With the DRBIII®, record and erase all DTCs from all modules. All active codes must be resolved before diagnosing any stored codes. Maintain a safe distance from all airbags while performing the following steps. With the DRBIII® monitor active codes as you work through the system. **NOTE: If equipped with Passenger Airbag On-Off switch, read the DTC's in all switch positions.** Wiggle the wiring harness and connectors of the appropriate airbag system and rotate the steering wheel from stop to stop. **NOTE: Check connectors - Clean and repair as necessary.** You have just attempted to simulate the condition that initially set the trouble code message. The following additional checks may assist you in identifying a possible intermittent problem: - Visually inspect related wire harness connectors. Look for broken, bent, pushed out, spread, corroded, or contaminated terminals. - Visually inspect the related harnesses. Look for chafed, pierced, pinched or partially broken wire. - Refer to Wiring Diagrams and Technical Service Bulletins that may apply. Did the DTC become active ? Yes → Select appropriate symptom from Symptom List. No → No problem found at this time. Erase all codes before returning vehicle to customer.	All

Symptom List:

SIACM RUN - START DRIVER OPEN
SIACM RUN - START DRIVER OVER CURRENT
SIACM RUN - START DRIVER OVER TEMP
SIACM RUN - START DRIVER SHORT TO GROUND
SIACM RUN - START DRIVER OVER VOLT

Test Note: All symptoms listed above are diagnosed using the same tests. The title for the tests will be SIACM RUN - START DRIVER OPEN.

When Monitored and Set Condition:

SIACM RUN - START DRIVER OPEN

When Monitored: When the ignition is turned OFF, the microprocessor controlled transistor (high side driver) places a diagnostic voltage on the SIACM Run-Start circuit for 60 seconds. An open high side driver (HSD) circuit voltage is between 2.4 and 5.0 volts.

Set Condition: This code will set within 10 second, if the microprocessor senses 2.4 to 5.0 volts on the HSD. Note: the diagnostic voltage will only last for 60 seconds after the ignition is turned off.

SIACM RUN - START DRIVER OVER CURRENT

When Monitored: The FCM uses a microprocessor controlled transistor (high side driver) to supply power to the SIACM. The microprocessor monitors the high side driver (HSD) internal temperature when the ignition is in the Run or Start position.

Set Condition: The code will set within 1 second, if the microprocessor senses high HSD internal temperature. The high temperature is caused by over current.

SIACM RUN - START DRIVER OVER TEMP

When Monitored: The FCM uses a microprocessor controlled transistor (high side driver) to supply power to the SIACM. The microprocessor monitors high side driver (HSD) internal temperature when the ignition is in the Run or Start position.

Set Condition: The code will set within 2.5 second, if the microprocessor senses high HSD internal temperature. The high temperature is caused by over current.

SIACM RUN - START DRIVER SHORT TO GROUND

When Monitored: The FCM uses a microprocessor controlled transistor (high side driver) to supply power to the SIACM. The microprocessor monitors high side driver (HSD) internal temperature when the ignition is in the Run or Start position.

Set Condition: The code will set within 1 second, if the microprocessor senses high HSD internal temperature. The high temperature is caused by over current.

SIACM RUN - START DRIVER OPEN — Continued

SIACM RUN-START DRIVER OVER VOLT

When Monitored: The FCM uses a microprocessor controlled transistor (high side driver) to supply power to the SIACM circuit. The microprocessor monitors the battery voltage when the ignition is in the run or start position.

Set Condition: The code will set if the microprocessor senses the battery voltage is over 30 volts.

POSSIBLE CAUSES
CHECK BATTERY VOLTAGE
FCM, SIACM RUN-START DR OVER VOLTAGE
FCM, SIACM RUN-START OPEN TEST
FCM, SIACM RUN-START OPEN TEST
FCM, SIACM RUN-START SHORT TEST
IPM, SIACM RUN-START OPEN TEST
RSIACM, RUN-START OPEN TEST
RUN-START OPEN TEST
SIACM RUN-START DRIVER CIRCUIT OPEN
IPM, SIACM RUN-START SHORT TEST
LSIACM, SIACM RUN-START SHORT TEST
RIGHT SIACM RUN-START DRIVER CIRCUIT OPEN
SIACM RUN-START DRIVER CIRCUIT SHORT
RIGHT SIACM, SIACM RUN-START SHORT TEST
STORED CODE OR INTERMITTENT CONDITION
ACTIVE CODE PRESENT

TEST	ACTION	APPLICABILITY
1	Ensure the battery is fully charged. Turn the ignition on. **NOTE: For the purpose of this test, the AECM and ORC modules will be referred to as an ACM.** SELECT ONE: FCM - ACTIVE DTC Go To 2 FCM SIACM - STORED DTC Go To 13 **NOTE: When reconnecting Airbag system components, the ignition must be turned off and the battery must be disconnected.**	All

SIACM RUN - START DRIVER OPEN — Continued

TEST	ACTION	APPLICABILITY
2	Select the active SIACM RUN - START code from the list below. Select one: 1. SIACM RUN-START DRIVER OPEN Go To 3 2. SIACM RUN-START DRIVER OVER VOLTAGE Go To 8 3. SIACM RUN-START SHORT TO GROUND Go To 9 4. SIACM RUN-START DRIVER OVER CURRENT Go To 11 5. SIACM RUN-START DRIVER OVER TEMP Go To 9	All
3	**WARNING: TURN THE IGNITION OFF, DISCONNECT THE BATTERY AND WAIT TWO MINUTES BEFORE PROCEEDING.** **WARNING: IF THE SIDE IMPACT AIRBAG CONTROL MODULE IS DROPPED AT ANY TIME, IT MUST BE REPLACED.** Disconnect the Left Side Impact Airbag Control Module. **NOTE: Check connectors - Clean and repair as necessary.** **WARNING: TURN THE IGNITION ON, THEN RECONNECT THE BATTERY.** **NOTE: When the ignition key is turned off, the FCM will supply a diagnostic voltage to the SIACM Run-Start Driver circuit for approximately 60 seconds.** Measure the voltage of the SIACM Run-Start Driver circuit between the Left Side Impact Airbag Control Module connector and ground. Turn the ignition switch ON and observe the diagnostic voltage on the SIACM Run-Start circuit. Select the results from the list below? Is the voltage between 1.0 and 2.2 volts Replace the Front Control Module. Perform BODY VERIFICATION TEST - VER 1. Is the voltage between 2.4 and 5.0 volts Go To 4 No Voltage present? Go To 5	All
4	**WARNING: TURN THE IGNITION OFF, DISCONNECT THE BATTERY AND WAIT TWO MINUTES BEFORE PROCEEDING.** Disconnect the Right Side Impact Airbag Control Module. **NOTE: Check connectors - Clean and repair as necessary.** **WARNING: TURN THE IGNITION ON, THEN RECONNECT THE BATTERY.** Measure the voltage of the SIACM Run-Start Driver circuit at the Right Side Impact Airbag Control Module connector. Is there any voltage present? Yes → Replace the Left and Right Side Impact airbag Control Modules. No → Replace the Left Side Impact Airbag Control Module and repair the open SIACM Run-Start Driver circuit between the splice and the Right Side Impact Airbag control Module connector.	All

SIACM RUN - START DRIVER OPEN — Continued

TEST	ACTION	APPLICABILITY
5	**WARNING: TURN THE IGNITION OFF, DISCONNECT THE BATTERY AND WAIT TWO MINUTES BEFORE PROCEEDING.** **WARNING: IF THE SIDE IMPACT AIRBAG CONTROL MODULE IS DROPPED AT ANY TIME, IT MUST BE REPLACED.** Disconnect the Right Side Airbag Control Module. **NOTE: Check connectors - Clean and repair as necessary.** **WARNING: TURN THE IGNITION ON, THEN RECONNECT THE BATTERY.** Measure the voltage of the SIACM Run-Start Driver circuit between the Right Side Impact Airbag Control Module connector and ground. Is there any voltage present? Yes → Replace the Right Side Impact Airbag Control Module and repair the open SIACM Run-Start Driver circuit between the splice and the Left Side Impact Airbag Control Module connector. Perform AIRBAG VERIFICATION TEST - VER 1. No → Go To 6	All
6	Turn Ignition off. Disconnect the Front Control Module. **NOTE: Check connectors - Clean and repair as necessary.** Measure the resistance of the SIACM Run-Start Driver circuit between the Front Control Module connector and the Right SIACM connector. Is the resistance below 1.0 ohms ? Yes → Replace the Front Control Module. Perform AIRBAG VERIFICATION TEST - VER 1. No → Go To 7	All
7	Gain access to the connectors on the bottom of the IPM. Disconnect the IPM C7 connector. **NOTE: Check connectors - Clean and repair as necessary.** Measure the resistance of the SIACM Run-Start Driver circuits between the IPM C7 connector and the Right SIACM connector. Is the resistance below 1.0 ohms ? Yes → Replace the IPM. Perform AIRBAG VERIFICATION TEST - VER 1. No → Repair the open SIACM Run-Start Driver circuit. Perform AIRBAG VERIFICATION TEST - VER 1.	All
8	Measure the battery voltage. Is the voltage above 30.0 volts? Yes → Refer to Charging Category for the P1594 Charging System Too High symptom. Perform AIRBAG VERIFICATION TEST - VER 1. No → Replace the Front Control Module.	All

SIACM RUN - START DRIVER OPEN — Continued

TEST	ACTION	APPLICABILITY
9	**WARNING: TURN THE IGNITION OFF, DISCONNECT THE BATTERY AND WAIT TWO MINUTES BEFORE PROCEEDING.** **WARNING: IF THE SIDE IMPACT AIRBAG CONTROL MODULE IS DROPPED AT ANY TIME, IT MUST BE REPLACED.** Disconnect the Right Side Impact Airbag Control Module. **NOTE: Check connectors - Clean and repair as necessary.** **WARNING: TURN THE IGNITION ON, THEN RECONNECT THE BATTERY.** Measure the resistance of the SIACM Run-Start Driver circuit between the Front Control Module connector and ground. Is the resistance below 500K ohms? Yes → Go To 10 No → Replace the Front Control Module. Perform AIRBAG VERIFICATION TEST - VER 1.	All
10	Gain access to the connectors on the bottom of the IPM. Disconnect the IPM C7 connector. **NOTE: Check connectors - Clean and repair as necessary.** Measure the resistance of the SIACM Run-Start Driver circuit between the IPM C7 connector and ground. Is the resistance below 500K ohms? Yes → Go To 11 No → Replace the IPM. Perform AIRBAG VERIFICATION TEST - VER 1.	All
11	**WARNING: TURN THE IGNITION OFF, DISCONNECT THE BATTERY AND WAIT TWO MINUTES BEFORE PROCEEDING.** **WARNING: IF THE SIDE IMPACT AIRBAG CONTROL MODULE IS DROPPED AT ANY TIME, IT MUST BE REPLACED.** Gain access to the connectors on the bottom of the IPM. Disconnect the IPM C7 connector. Disconnect the Left Side Impact Airbag Control Module. **NOTE: Check connectors - Clean and repair as necessary.** Measure the resistance of the SIACM Run-Start Driver circuit between the IPM C7 connector and ground. Is the resistance below 500K ohms? Yes → Go To 12 No → Replace the Left Side Impact Airbag Control Module.. Perform AIRBAG VERIFICATION TEST - VER 1.	All
12	Disconnect the Right Side Impact Airbag Control Module. **NOTE: Check connectors - Clean and repair as necessary.** Measure the resistance of the SIACM Run-Start Driver circuit between the IPM C7 connector and ground. Is the resistance below 500K ohms? Yes → Repair the SIACM Run-Start Driver circuit shorted to ground. Perform AIRBAG VERIFICATION TEST - VER 1. No → Replace the Right Side Impact Airbag Control Module. Perform AIRBAG VERIFICATION TEST - VER 1.	All

SIACM RUN - START DRIVER OPEN — Continued

TEST	ACTION	APPLICABILITY
13	**NOTE: Ensure the battery is fully charged.** With the DRBIII®, record and erase all DTCs from all modules. All active codes must be resolved before diagnosing any stored codes. Maintain a safe distance from all airbags while performing the following steps. With the DRBIII® monitor active codes as you work through the system. **NOTE: If equipped with Passenger Airbag On-Off switch, read the DTC's in all switch positions.** Wiggle the wiring harness and connectors of the appropriate airbag system and rotate the steering wheel from stop to stop. **NOTE: Check connectors - Clean and repair as necessary.** You have just attempted to simulate the condition that initially set the trouble code message. The following additional checks may assist you in identifying a possible intermittent problem: - Visually inspect related wire harness connectors. Look for broken, bent, pushed out, spread, corroded, or contaminated terminals. - Visually inspect the related harnesses. Look for chafed, pierced, pinched or partially broken wire. - Refer to Wiring Diagrams and Technical Service Bulletins that may apply. Did the DTC become active ? Yes → Select appropriate symptom from Symptom List. No → No problem found at this time. Erase all codes before returning vehicle to customer.	All

Symptom:
VEHICLE BODY STYLE UNKNOWN

When Monitored and Set Condition:

VEHICLE BODY STYLE UNKNOWN

When Monitored: When the ignition is on, the ACM monitors the PCI Bus for the VIN message containing the vehicle body style from the Powertrain Control Module. The PCM transmits the VIN message every 14 seconds.

Set Condition: With ignition on, If the ACM does not receive 2 consecutive matching (vehicle Body Style) VIN messages on the bus the code will set.

POSSIBLE CAUSES
PCM, PCI COMMUNICATION FAILURE
VEHICLE BODY STYLE UNKNOWN
ACM, VEHICLE BODY STYLE UNKNOWN
STORED CODE OR INTERMITTENT CONDITION
ACTIVE CODE PRESENT

TEST	ACTION	APPLICABILITY
1	Turn the ignition on. Ensure the battery is fully charged. **NOTE: For the purpose of this test, the AECM and ORC modules will be referred to as an ACM.** SELECT ACTIVE or STORED DTC: ACM - ACTIVE DTC Go To 2 ACM - STORED DTC Go To 5 **NOTE: When reconnecting Airbag system components, the ignition must be turned off and the battery must be disconnected.**	All
2	Turn the ignition on. Connect the DRBIII® to the data link connector and select PASSIVE RESTRAINTS, AIRBAG, SYSTEM TEST. With the DRBIII®, read the PCM Active on the Bus:. Does the DRB show PCM ACTIVE ON THE BUS:? Yes → Go To 3 No → Refer to category COMMUNICATION CATEGORY and select the related symptom. Perform AIRBAG VERIFICATION TEST - VER 1.	All

VEHICLE BODY STYLE UNKNOWN — Continued

TEST	ACTION	APPLICABILITY
3	With the DRB select ENGINE, MISCELLANEOUS, SELECT MISC FUNCTION, and then CHECK VIN to read the Vehicle Identification Number in the Powertrain Control Module. Compare the VIN displayed on the DRB screen and the Vehicle VIN plate. Does the VIN plate and the PCM VIN match? Yes → Go To 4 No → Replace the Powertrain Control Module and program with the correct vehicle identification number. Perform AIRBAG VERIFICATION TEST - VER 1.	All
4	**WARNING: TURN THE IGNITION OFF, DISCONNECT THE BATTERY AND WAIT TWO MINUTES BEFORE PROCEEDING.** **WARNING: IF THE AIRBAG CONTROL MODULE IS DROPPED AT ANY TIME, IT MUST BE REPLACED.** If there are no possible causes remaining, view repair. Repair Replace the Airbag Control Module in accordance with Service Instructions. WARNING: make sure the battery is disconnected and wait 2 minutes before proceeding. Perform AIRBAG VERIFICATION TEST - VER 1. **NOTE: When reconnecting airbag system components the Ignition must be turned off and the Battery must be disconnected.**	All
5	**NOTE: Ensure the battery is fully charged.** With the DRBIII®, record and erase all DTCs from all modules. All active codes must be resolved before diagnosing any stored codes. Maintain a safe distance from all airbags while performing the following steps. With the DRBIII® monitor active codes as you work through the system. **NOTE: If equipped with Passenger Airbag On-Off switch, read the DTC's in all switch positions.** Wiggle the wiring harness and connectors of the appropriate airbag system and rotate the steering wheel from stop to stop. **NOTE: Check connectors - Clean and repair as necessary.** You have just attempted to simulate the condition that initially set the trouble code message. The following additional checks may assist you in identifying a possible intermittent problem: - Visually inspect related wire harness connectors. Look for broken, bent, pushed out, spread, corroded, or contaminated terminals. - Visually inspect the related harnesses. Look for chafed, pierced, pinched or partially broken wire. - Refer to Wiring Diagrams and Technical Service Bulletins that may apply. Did the DTC become active ? Yes → Select appropriate symptom from Symptom List. No → No problem found at this time. Erase all codes before returning vehicle to customer.	All

Symptom:
*AIRBAG INDICATOR ON WITHOUT ACM TROUBLE CODES

POSSIBLE CAUSES
AIRBAG INDICATOR ON WITHOUT ACM TROUBLE CODES
INSTRUMENT CLUSTER PROBLEMS

TEST	ACTION	APPLICABILITY
1	Turn the ignition on. Make sure that all active DTC's have been repaired before performing this procedure. With the DRBIII® select PASSIVE RESTRAINTS, AIRBAG, MONITOR DISPLAY, WARNING LAMP STATUS and read the WARNING LAMP STATUS. Does the DRBIII® show LAMP REQ BY ACM: ON? Yes → WARNING: MAKE SURE THE BATTERY IS DISCONNECTED, THEN WAIT TWO MINUTES BEFORE PROCEEDING. Replace the Airbag Control Module in accordance with Service Instructions. Perform AIRBAG VERIFICATION TEST - VER 1. No → Refer to INSTRUMENT CLUSTER CATEGORY symptom list for problems related to Instrument Cluster. Perform AIRBAG VERIFICATION TEST - VER 1. **NOTE: When reconnecting Airbag system components, the ignition must be turned off and the battery must be disconnected.**	All

Symptom:
ALL OUTPUTS SHORT

When Monitored and Set Condition:

ALL OUTPUTS SHORT

When Monitored: Ignition in RUN and IOD fuse installed.

Set Condition: The radio has sensed a short on the output for more than 10 seconds.

POSSIBLE CAUSES
DETERMINE FAULT
FRONT SHORTED SPEAKER
REAR SHORTED SPEAKER
(+) CIRCUIT SHORTED TO GROUND
(-) CIRCUIT SHORTED TO GROUND
SPEAKER (+) & (-) CIRCUITS SHORTED TOGETHER
SPEAKER SECTION OF RADIO

TEST	ACTION	APPLICABILITY
1	Turn the ignition on. Turn the Radio on. With the DRBIII®, erase the audio DTC's. Cycle the ignition switch from off to on and wait 10 seconds. With the DRBIII®, read the audio DTC's. Does the DRBIII® display ALL OUTPUTS SHORT? Yes → Go To 2 No → Refer to the wiring diagrams located in the service information to help isolate a possible intermittent short. Perform BODY VERIFICATION TEST - VER 1.	All

ALL OUTPUTS SHORT — Continued

TEST	ACTION	APPLICABILITY
2	Turn the ignition off. **NOTE: Perform this procedure after disconnecting each front speaker connector.** Disconnect each front speaker harness connector one at a time. Turn the ignition on. Turn the radio on. With the DRBIII®, erase the audio DTCs. Cycle the ignition switch from off to on and wait 10 seconds. With the DRBIII®, read DTC's. Does the DRBIII® display ALL OUTPUTS SHORT with all the front speakers disconnected? Yes → Go To 3 No → Replace the Speaker that when disconnected the DTC did not reset. Note: On the premium system, check the I/P speaker circuits between the front door speaker and the I/P speaker for a short to ground or shorted together condition before replacing speaker. Perform BODY VERIFICATION TEST - VER 1.	All
3	Turn the ignition off. **NOTE: Perform this procedure after disconnecting each rear speaker connector.** Disconnect each rear speaker harness connector one at a time. Turn the ignition on. Turn the radio on. With the DRBIII®, erase the audio DTCs. Cycle the ignition switch from off to on and wait 10 seconds. With the DRBIII®, read DTC's. Does the DRBIII® display ALL OUTPUTS SHORT with all the rear speakers disconnected? Yes → Go To 4 No → Replace Speaker that when disconnected the DTC did not reset. Note: On the premium system, check the rear speaker ckts between the rear door speaker and the rear pillar speaker for a short to ground or shorted together condition before replacing speaker. Perform BODY VERIFICATION TEST - VER 1.	All
4	Turn the ignition off. Disconnect each front and rear speaker harness connector. Disconnect the Radio C1 harness connector. Measure the resistance between ground and each speaker (+) circuit. Is the resistance below 1000.0 (1K) ohms? Yes → Repair the speaker (+) circuit for a short to ground. Perform BODY VERIFICATION TEST - VER 1. No → Go To 5	All

ALL OUTPUTS SHORT — Continued

TEST	ACTION	APPLICABILITY
5	Turn the ignition off. Disconnect each front and rear speaker harness connector. Disconnect the Radio C1 harness connector. Measure the resistance between ground and each speaker (-) circuit. Is the resistance below 1000.0 (1K) ohms? Yes → Repair the speaker (-) circuit for a short to ground. Perform BODY VERIFICATION TEST - VER 1. No → Go To 6	All
6	Turn the ignition off. Disconnect each front and rear speaker harness connector. Disconnect the Radio C1 harness connector. Measure the resistance between each speaker (+) circuit and each speaker (-) circuit. Is the resistance below 1000.0 (1K) ohms for any of the measurements? Yes → Repair the speaker circuits shorted together. Perform BODY VERIFICATION TEST - VER 1. No → Go To 7	All
7	If there are no possible causes remaining, view repair. Repair Replace the Radio. Perform BODY VERIFICATION TEST - VER 1.	All

Symptom List:

CASSETTE PLAYER INOP
CD MECHANICAL FAILURE
REAR TRANSMITTER FAILURE
***AM/FM SWITCH INOPERATIVE**
***ANY STATION PRESET SWITCH INOPERATIVE**
***BALANCE INOPERATIVE**
***CD EJECT SWITCH INOPERATIVE**
***EQUALIZER INOPERATIVE**
***FADER INOPERATIVE**
***FF/RW SWITCH INOPERATIVE**
***HOUR/MINUTE SWITCHES INOPERATIVE**
***PAUSE/PLAY SWITCH INOPERATIVE**
***PWR SWITCH INOPERATIVE**
***SCAN SWITCH INOPERATIVE**
***SEEK SWITCH INOPERATIVE**
***SET SWITCH INOPERATIVE**
***TAPE EJECT SWITCH INOPERATIVE**
***TIME SWITCH INOPERATIVE**
***TUNE SWITCH INOPERATIVE**

Test Note: All symptoms listed above are diagnosed using the same tests. The title for the tests will be CASSETTE PLAYER INOP.

When Monitored and Set Condition:

CASSETTE PLAYER INOP

When Monitored: Continuously with the ignition and radio turned on.

Set Condition: The code will set if the radio detects a internal cassette failure.

CD MECHANICAL FAILURE

When Monitored: Continuously with the ignition and CD player turned on.

Set Condition: The code will set if the radio detects a CD mechanical failure.

REAR TRANSMITTER FAILURE

When Monitored: Continuously with the ignition and radio turned on.

Set Condition: The code will set if the radio detects a internal rear transmitter failure.

POSSIBLE CAUSES
INTERNAL FAILURE

CASSETTE PLAYER INOP — Continued

TEST	ACTION	APPLICABILITY
1	**NOTE: If a DTC is set, erase the DTC and attempt to reset the DTC. If DTC resets, follow this test.** This is an internal radio failure. View repair Repair Replace the Radio. Perform BODY VERIFICATION TEST - VER 1.	All

Symptom:
CD CHANGER MECHANICAL FAILURE

When Monitored and Set Condition:

CD CHANGER MECHANICAL FAILURE

When Monitored: Continuously with the ignition and CD Changer turned on.

Set Condition: The code will set if the CD Changer detects a mechanical failure.

POSSIBLE CAUSES
INTERNAL FAILURE

TEST	ACTION	APPLICABILITY
1	**NOTE: Erase DTC and attempt to reset. If DTC resets, follow this test.** This is an internal CD Changer failure. View repair Repair Replace the CD Changer. Perform BODY VERIFICATION TEST - VER 1.	All

Symptom:
CD CHANGER READ FAILURE

When Monitored and Set Condition:

CD CHANGER READ FAILURE

When Monitored: Continuously with the ignition and CD Changer turned on.

Set Condition: The code will set if a CD that is not formatted as a music CD is installed in the CD Changer.

POSSIBLE CAUSES
CD CHANGER READ FAILURE

TEST	ACTION	APPLICABILITY
1	Replace the problem CD with a good, clean, unscratched, music CD. Turn the radio on and select the good CD. With the DRBIII®, read DTC's. Does the DRBIII® display CD CHANGER READ FAILURE? Yes → Replace the CD Changer. Perform BODY VERIFICATION TEST - VER 1. No → Test Complete.	All

Symptom:
CD CHANGER TEMPERATURE HIGH

When Monitored and Set Condition:

CD CHANGER TEMPERATURE HIGH

When Monitored: Continuously with the ignition and CD Changer turned on.

Set Condition: The code will set if the temperature inside the CD Changer is above +65° C (+145° F).

POSSIBLE CAUSES
HIGH TEMPERATURE FAILURE

TEST	ACTION	APPLICABILITY
1	With the DRBIII®, erase the audio DTC's. Start the engine and allow the engine to reach normal operating temperature. If the vehicle has been in the hot sunlight or extreme cold move the vehicle indoors and open the doors to allow the inside temperature to stabilize. The CD Changer will operate between -23° C and 65° C (-10° F and +145° F). With the DRBIII®, read DTC's. Does the DRBIII® display CD CHANGER TEMPERATURE HIGH? Yes → Replace the CD Changer. Perform BODY VERIFICATION TEST - VER 1. No → Test Complete.	All

Symptom:
CD READ FAILURE

When Monitored and Set Condition:

CD READ FAILURE

When Monitored: Continuously with the ignition and the radio CD player turned on.

Set Condition: The code will set if a CD that is not formatted as a music CD is installed in the radio CD player.

POSSIBLE CAUSES
CD READ FAILURE

TEST	ACTION	APPLICABILITY
1	Replace the problem CD with a good, clean, unscratched, music CD. Turn the radio CD player on. With the DRBIII®, read DTC's. Does the DRBIII® display CD READ FAILURE? Yes → Replace the Radio. Perform BODY VERIFICATION TEST - VER 1. No → Test Complete.	All

Symptom:
CD TEMPERATURE HIGH

When Monitored and Set Condition:

CD TEMPERATURE HIGH

When Monitored: Continuously with the ignition and the radio CD player turned on.

Set Condition: The code will set if the temperature inside the radio CD player is above +70° C (+156° F).

POSSIBLE CAUSES
HIGH TEMPERATURE FAILURE

TEST	ACTION	APPLICABILITY
1	With the DRBIII®, erase the audio DTC's. Start the engine and allow the engine to reach normal operating temperature. If the vehicle has been in the hot sunlight or extreme cold move the vehicle indoors and open the doors to allow the inside temperature to stabilize. The radio CD player will operate between -23° C and 70° C (-10° F and +156° F). With the DRBIII®, read DTC's. Does the DRBIII® display CD TEMPERATURE HIGH? Yes → Replace the Radio. Perform BODY VERIFICATION TEST - VER 1. No → Test Complete.	All

Symptom List:

NBS OUTPUT 1 OPEN
NBS OUTPUT 2 OPEN

Test Note: All symptoms listed above are diagnosed using the same tests. The title for the tests will be NBS OUTPUT 1 OPEN.

When Monitored and Set Condition:

NBS OUTPUT 1 OPEN

When Monitored: Continuously.

Set Condition: If the FCM detects no voltage present on the NBS relay control circuit.

NBS OUTPUT 2 OPEN

When Monitored: Continuously.

Set Condition: If the FCM detects no voltage present on the NBS relay control circuit.

POSSIBLE CAUSES
CHECK DTCS
FUSED B+ CIRCUIT OPEN
NBS RELAY OPEN
NBS RELAY CONTROL CIRCUIT OPEN
FRONT CONTROL MODULE

TEST	ACTION	APPLICABILITY
1	Turn the ignition on. **NOTE: If neither DTC will reset or is active, refer to the wiring diagrams located in the service information to help isolate a possible intermittent condition.** With the DRB, read the FCM DTC's. Are both the NBS Output 1 Open and the NBS Output 2 Open DTC's set? Yes → Go To 2 No → Replace the Front Control Module in accordance with the Service Information. Perform BODY VERIFICATION TEST - VER 1.	All
2	Remove the NBS Relay from the IPM. Using a 12-volt test light connected to ground, probe cavity 86 of the NBS Relay connector. Is the test light illuminated? Yes → Go To 3 No → Check IPM Fuse #14 for an open. If OK, replace the Integrated Power Module (IPM). Perform BODY VERIFICATION TEST - VER 1.	All

NBS OUTPUT 1 OPEN — Continued

TEST	ACTION	APPLICABILITY
3	Turn the ignition off. Install a substitute relay in place of the NBS Relay. With the DRB, erase DTCs. Turn the ignition on. Turn the Radio on. With the DRB, read DTCs. Did these DTCs reset? Yes → Go To 4 No → Replace the original NBS Relay. Perform BODY VERIFICATION TEST - VER 1.	All
4	Turn the ignition off. Remove the Front Control Module from the IPM. Remove the NBS Relay from the IPM. Measure the resistance of the NBS Relay Control circuit between the FCM connector cavity 11 and the NBS Relay connector cavity 85. Is the resistance below 5.0 ohms? Yes → Replace the Front Control Module in accordance with the Service Information. Perform BODY VERIFICATION TEST - VER 1. No → Replace the power distribution center portion of the IPM in accordance with the service information. Perform BODY VERIFICATION TEST - VER 1.	All

Symptom List:

NBS OUTPUT 1 SHORT TO BATT
NBS OUTPUT 2 SHORT TO BATT

Test Note: All symptoms listed above are diagnosed using the same tests. The title for the tests will be NBS OUTPUT 1 SHORT TO BATT.

When Monitored and Set Condition:

NBS OUTPUT 1 SHORT TO BATT

When Monitored: With the ignition on and the Radio on.

Set Condition: The FCM detects excessive current when attempting to close the NBS relay.

NBS OUTPUT 2 SHORT TO BATT

When Monitored: With the ignition on and the Radio on.

Set Condition: The FCM detects excessive current when attempting to close the NBS relay.

POSSIBLE CAUSES
CHECK DTCS
NBS RELAY SHORTED
NBS RELAY CONTROL CIRCUIT SHORTED TO BATTERY
FRONT CONTROL MODULE

TEST	ACTION	APPLICABILITY
1	Turn the ignition on. Turn the Radio on. **NOTE: If neither DTC will reset or is active, refer to the wiring diagrams located in the service information to help isolate a possible intermittent condition.** With the DRB, read the FCM DTC's. Are both the NBS Output 1 Short to Batt and the NBS Output 2 Short to Batt DTC's set? Yes → Go To 2 No → Replace the Front Control Module in accordance with the Service Information. Perform BODY VERIFICATION TEST - VER 1.	All

NBS OUTPUT 1 SHORT TO BATT — Continued

TEST	ACTION	APPLICABILITY
2	Turn the ignition off. Install a substitute relay in place of the NBS Relay. With the DRB, erase DTCs. Turn the ignition on. Turn the Radio on. With the DRB, read DTCs. Did these DTCs reset? Yes → Go To 3 No → Replace the original NBS Relay. Perform BODY VERIFICATION TEST - VER 1.	All
3	Turn the ignition off. Remove the Front Control Module from the IPM. Remove the NBS Relay from the IPM. Turn the ignition on. Using a 12-volt test light connected to ground, probe the NBS Relay connector cavity 85. Is the test light illuminated? Yes → Replace the power distribution center portion of the IPM in accordance with the service information. Perform BODY VERIFICATION TEST - VER 1. No → Replace the Front Control Module in accordance with the Service Information. Perform BODY VERIFICATION TEST - VER 1.	All

Symptom:
NO ANTENNA CONNECTION

When Monitored and Set Condition:

NO ANTENNA CONNECTION

When Monitored: With the ignition on and the radio in seek up/down mode.

Set Condition: With the radio in seek or scan mode for two minutes and the radio does not detect an antenna connection or does not receive a radio station signal.

POSSIBLE CAUSES
BAD ANTENNA CONNECTION
TEST ANTENNA
RADIO

TEST	ACTION	APPLICABILITY
1	Turn the ignition off. Disconnect the Radio Antenna connector. Inspect the Radio Antenna connection. Was the Antenna connection clean and tight? Yes → Go To 2 No → Repair Antenna connection as needed. Perform BODY VERIFICATION TEST - VER 1.	All
2	Refer to the Audio System in the service information and test the Antenna in accordance with the service procedure. Is the Antenna ok? Yes → Go To 3 No → Repair or replace the Antenna assembly as necessary. Perform BODY VERIFICATION TEST - VER 1.	All
3	**Note: Reconnect all previously disconnected components.** Turn the ignition and Radio on. With the DRBIII®, erase the audio DTC's, put the radio in seek up and seek down mode for approximately 2 minutes before proceeding. With the DRBIII®, read the audio DTC's. Did this DTC reset? Yes → Replace the Radio. Perform BODY VERIFICATION TEST - VER 1. No → Test Complete.	All

Symptom:
POWER AMP SHUTDOWN

When Monitored and Set Condition:

POWER AMP SHUTDOWN

When Monitored: Ignition in RUN and IOD fuse installed.

Set Condition: The radio has sensed a short on the output for more than 10 seconds.

POSSIBLE CAUSES
DETERMINE FAULT
FRONT SHORTED SPEAKER
REAR SHORTED SPEAKER
(+) CIRCUIT SHORTED TO GROUND
(-) CIRCUIT SHORTED TO GROUND
SPEAKER (+) & (-) CIRCUITS SHORTED TOGETHER
SPEAKER SECTION OF RADIO

TEST	ACTION	APPLICABILITY
1	Turn the ignition on. Turn the Radio on. With the DRBIII®, erase the audio DTC's. Cycle the ignition switch from off to on and wait 10 seconds. With the DRBIII®, read the audio DTC's. Does the DRBIII® display POWER AMP SHUTDOWN? Yes → Go To 2 No → Refer to the wiring diagrams located in the service information to help isolate a possible intermittent short. Perform BODY VERIFICATION TEST - VER 1.	All

POWER AMP SHUTDOWN — Continued

TEST	ACTION	APPLICABILITY
2	Turn the ignition off. **NOTE: Perform this procedure after disconnecting each front speaker connector.** Disconnect each front speaker harness connector one at a time. Turn the ignition on. Turn the radio on. With the DRBIII®, erase the audio DTCs. Cycle the ignition switch from off to on and wait 10 seconds. With the DRBIII®, read DTC's. Does the DRBIII® display POWER AMP SHUTDOWN with all the front speakers disconnected? Yes → Go To 3 No → Replace the Speaker that when disconnected the DTC did not reset. Note: On the premium system, check the I/P speaker circuits between the front door speaker and the I/P speaker for a short to ground or shorted together condition before replacing speaker. Perform BODY VERIFICATION TEST - VER 1.	All
3	Turn the ignition off. **NOTE: Perform this procedure after disconnecting each rear speaker connector.** Disconnect each rear speaker harness connector one at a time. Turn the ignition on. Turn the radio on. With the DRBIII®, erase the audio DTCs. Cycle the ignition switch from off to on and wait 10 seconds. With the DRBIII®, read DTC's. Does the DRBIII® display POWER AMP SHUTDOWN with all the rear speakers disconnected? Yes → Go To 4 No → Replace Speaker that when disconnected the DTC did not reset. Note: On the premium system, check the rear speaker ckts between the rear door speaker and the rear pillar speaker for a short to ground or shorted together condition before replacing speaker. Perform BODY VERIFICATION TEST - VER 1.	All
4	Turn the ignition off. Disconnect each front and rear speaker harness connector. Disconnect the Radio C1 harness connector. Measure the resistance between ground and each speaker (+) circuit. Is the resistance below 1000.0 (1K) ohms? Yes → Repair the speaker (+) circuit for a short to ground. Perform BODY VERIFICATION TEST - VER 1. No → Go To 5	All

POWER AMP SHUTDOWN — Continued

TEST	ACTION	APPLICABILITY
5	Turn the ignition off. Disconnect each front and rear speaker harness connector. Disconnect the Radio C1 harness connector. Measure the resistance between ground and each speaker (-) circuit. Is the resistance below 1000.0 (1K) ohms? Yes → Repair the speaker (-) circuit for a short to ground. Perform BODY VERIFICATION TEST - VER 1. No → Go To 6	All
6	Turn the ignition off. Disconnect each front and rear speaker harness connector. Disconnect the Radio C1 harness connector. Measure the resistance between each speaker (+) circuit and each speaker (-) circuit. Is the resistance below 1000.0 (1K) ohms for any of the measurements? Yes → Repair the speaker circuits shorted together. Perform BODY VERIFICATION TEST - VER 1. No → Go To 7	All
7	If there are no possible causes remaining, view repair. Repair Replace the Radio. Perform BODY VERIFICATION TEST - VER 1.	All

Symptom:
REMOTE RADIO SWITCH STUCK

When Monitored and Set Condition:

REMOTE RADIO SWITCH STUCK

When Monitored: With the ignition on.

Set Condition: The code will set if the BCM detects a stuck switch or a short to ground on the Radio Control MUX circuit for more than 10 seconds.

POSSIBLE CAUSES
INTERMITTENT CONDITION
LEFT REMOTE RADIO SWITCH SHORTED TO GROUND
RIGHT REMOTE RADIO SWITCH SHORTED TO GROUND
RADIO CONTROL MUX CIRCUIT SHORTED TO GROUND AT THE SWITCH
RADIO CONTROL MUX CIRCUIT SHORTED TO THE RETURN CIRCUIT AT THE SWITCH
CLOCKSPRING SHORTED TO GROUND
RADIO CONTROL MUX CIRCUIT SHORTED TO GROUND
RADIO CONTROL MUX CKT SHORTED TO THE RADIO CONTROL MUX RETURN CKT
BODY CONTROL MODULE

TEST	ACTION	APPLICABILITY
1	With the DRB, erase DTC's. Cycle the ignition switch from off to on and wait approximately 1 minute. With the DRB, read DTC's. Did this DTC reset? Yes → Go To 2 No → Refer to the wiring diagrams located in the service information to help isolate a possible intermittent short. Perform BODY VERIFICATION TEST - VER 1.	All
2	**WARNING: Turn the ignition off, disconnect the battery and wait 2 minutes before proceeding.** **CAUTION: Do not place an intact undeployed airbag module face down on a hard surface, the airbag module will propel into the air if accidently deployed.** Remove the Driver Airbag Module. Disconnect the Left Remote Radio Switch harness connector. Turn the ignition on, reconnect the battery. With the DRB, enter Body Computer then Sensors and monitor the Radio Control SW voltage Is the voltage approximately 5.0 volts? Yes → Replace the Left Remote Radio Switch. Perform BODY VERIFICATION TEST - VER 1. No → Go To 3	All

REMOTE RADIO SWITCH STUCK — Continued

TEST	ACTION	APPLICABILITY
3	**WARNING: Turn the ignition off, disconnect the battery and wait 2 minutes before proceeding.** **CAUTION: Do not place an intact undeployed airbag module face down on a hard surface, the airbag module will propel into the air if accidently deployed.** Remove the Driver Airbag Module. Disconnect the Right Remote Radio Switch harness connector. Turn the ignition on, reconnect the battery. With the DRB, enter Body Computer then Sensors and monitor the Radio Control SW voltage Is the voltage approximately 5.0 volts? Yes → Replace the Right Remote Radio Switch. Perform BODY VERIFICATION TEST - VER 1. No → Go To 4	All
4	Turn the ignition off. Disconnect the Clockspring C4 harness connector. Turn the ignition on. With the DRB, enter Body Computer then Sensors and monitor the Radio Control SW voltage. Is the voltage approximately 5.0 volts? Yes → Go To 5 No → Go To 6	All
5	Turn the ignition off. Disconnect the Clockspring C4 harness connector. **NOTE: Ensure both remote radio switches are disconnected.** Measure the resistance between ground and each Radio Control MUX circuit at the clockspring C4 harness connector. Is the resistance below 5.0 ohms? Yes → Repair the Radio Control MUX circuit for a short to ground between the clockspring and the remote radio switches. Perform BODY VERIFICATION TEST - VER 1. No → Repair the Radio Control MUX circuit for a short to the Radio Control MUX Return circuit between the clockspring and the remote radio switches. Perform BODY VERIFICATION TEST - VER 1.	All
6	Turn the ignition off. Disconnect the Clockspring C1 harness connector. Turn the ignition on. With the DRB, enter Body Computer then Sensors and monitor the Radio Control SW voltage. Is the voltage approximately 5.0 volts? Yes → Replace the Clockspring in accordance with the service information. Perform BODY VERIFICATION TEST - VER 1. No → Go To 7	All

REMOTE RADIO SWITCH STUCK — Continued

TEST	ACTION	APPLICABILITY
7	Turn the ignition off. Disconnect the Clockspring C1 harness connector. Disconnect the BCM C5 harness connector. Measure the resistance between ground and the Radio Control MUX circuit. Is the resistance below 5.0 ohms? Yes → Repair the Radio Control MUX circuit for a short to ground between the clockspring and the BCM. Perform BODY VERIFICATION TEST - VER 1. No → Go To 8	All
8	Turn the ignition off. Disconnect the Clockspring C1 harness connector. Disconnect the BCM C4 and C5 harness connectors. Measure the resistance between the Radio Control MUX circuit and the Radio Control MUX Return circuit. Is the resistance below 5.0 ohms? Yes → Repair the Radio Control MUX circuit for a short to the Radio Control MUX Return circuit between the clockspring and the BCM. Perform BODY VERIFICATION TEST - VER 1. No → Go To 9	All
9	If there are no possible causes remaining, view repair. Repair Replace the Body Control Module in accordance with the service information. Perform BODY VERIFICATION TEST - VER 1.	All

Symptom:
*REMOTE RADIO CONTROLS INOPERATIVE

POSSIBLE CAUSES
OPEN RADIO CONTROL MUX CIRCUIT AT THE SWITCH
OPEN RADIO CONTROL MUX RETURN CIRCUIT AT THE SWITCH
REMOTE RADIO SWITCH
BODY CONTROL MODULE - INTERNAL SHORT
OPEN CLOCKSPRING
OPEN RADIO CONTROL MUX CIRCUIT
OPEN RADIO CONTROL MUX RETURN CIRCUIT
BODY CONTROL MODULE - OPEN INTERNAL

TEST	ACTION	APPLICABILITY
1	**NOTE: If any DTCs are set, diagnose the DTC before continuing.** Turn the ignition and radio on. Operate both remote radio switches. Are both remote radio control switches inoperative? Yes → Go To 2 No → Go To 7	All
2	Turn the ignition off. Disconnect the Clockspring C1 harness connector. Turn the ignition on. With the DRB, enter Body Computer then Sensors and monitor the Radio Control SW voltage. Is the voltage approximately 5.0 volts? Yes → Go To 3 No → Replace the Body Control Module in accordance with the service information. Perform BODY VERIFICATION TEST - VER 1.	All
3	Turn the ignition off. Disconnect the Clockspring C1 harness connector. Turn the ignition on. Connect a jumper wire between cavity 1 and cavity 2 at the Clockspring C1 connector. With the DRB, enter Body Computer then Sensors and monitor the Radio Control SW voltage. Is the voltage approximately 0.0 volts? Yes → Check the circuits between the clockspring connector and the splice for an open. If ok, replace the Clockspring. Perform BODY VERIFICATION TEST - VER 1. No → Go To 4	All

*REMOTE RADIO CONTROLS INOPERATIVE — Continued

TEST	ACTION	APPLICABILITY
4	Turn the ignition off. Disconnect the Clockspring C1 harness connector. Disconnect the BCM C5 harness connector. Measure the resistance of the Radio Control MUX circuit between the BCM connector and the Clockspring connector. Is the resistance below 5.0 ohms? Yes → Go To 5 No → Repair the Radio Control MUX circuit for an open between the clockspring and the BCM. Perform BODY VERIFICATION TEST - VER 1.	All
5	Turn the ignition off. Disconnect the Clockspring C1 harness connector. Disconnect the BCM C4 harness connector. Measure the resistance of the Radio Control MUX Return circuit between the BCM connector and the Clockspring connector. Is the resistance below 5.0 ohms? Yes → Go To 6 No → Repair the Radio Control MUX Return circuit for an open between the clockspring and the BCM. Perform BODY VERIFICATION TEST - VER 1.	All
6	If there are no possible causes remaining, view repair. Repair Replace the Body Control Module in accordance with the service information. Perform BODY VERIFICATION TEST - VER 1.	All
7	**WARNING: Turn the ignition off, disconnect the battery and wait 2 minutes before proceeding.** **CAUTION: Do not place an intact undeployed airbag module face down on a hard surface, the airbag module will propel into the air if accidently deployed.** Remove the Driver Airbag Module. Disconnect both remote radio switch harness connectors. Turn the ignition on, reconnect the battery. Measure the voltage of the Radio Control MUX circuit at the inoperative remote radio switch. Is the voltage approximately 5.0 volts? Yes → Go To 8 No → Repair the Radio Control MUX circuit for an open between the inoperative switch and the splice. Perform BODY VERIFICATION TEST - VER 1.	All

*REMOTE RADIO CONTROLS INOPERATIVE — Continued

TEST	ACTION	APPLICABILITY
8	**WARNING: Turn the ignition off, disconnect the battery and wait 2 minutes before proceeding.** **CAUTION: Do not place an intact undeployed airbag module face down on a hard surface, the airbag module will propel into the air if accidently deployed.** Remove the Driver Airbag Module. Disconnect both remote radio switch harness connectors. Disconnect the Clockspring C4 harness connector. Measure the resistance of the Radio Control MUX Return circuit between the inoperative remote radio switch and the clockspring connector. Is the resistance below 5.0 ohms? Yes → Go To 9 No → Repair the Radio Control MUX Return circuit for an open between the inoperative switch and the clockspring. Perform BODY VERIFICATION TEST - VER 1.	All
9	If there are no possible causes remaining, view repair. Repair Replace the inoperative Remote Radio Switch. Perform BODY VERIFICATION TEST - VER 1.	All

Symptom:
AC PRESSURE TOO HIGH (ACTIVE)

When Monitored and Set Condition:

AC PRESSURE TOO HIGH (ACTIVE)

When Monitored: With the ignition on and the IOD fuse installed. Also monitored during the Cooldown Test.

Set Condition: This DTC is set if the ATC reads the A/C Pressure Sensor value and it is above 250 A/D counts.

POSSIBLE CAUSES
PCM/ECM DTC(S) PRESENT
ATC

TEST	ACTION	APPLICABILITY
1	Turn the ignition on. With the DRBIII®, read PCM/ECM DTCs. Does the DRBIII® display any PCM/ECM DTCs? Yes → Refer to Powertrain Diagnostic information for the related symptom(s). With the DRBIII®, reset the ATC after repair/replacement is complete. Perform BODY VERIFICATION TEST - VER 1. No → Replace the ATC. With the DRBIII®, reset the ATC after repair/replacement is complete. Perform BODY VERIFICATION TEST - VER 1.	All

Symptom List:

AC PRESSURE TOO HIGH (STORED)
DRIVER BLEND DOOR NOT RESPONDING (STORED)
DRIVER BLEND DOOR RANGE TOO LARGE (STORED)
DRIVER BLEND DOOR TRAVEL TOO SMALL (STORED)
EVAP TEMP SENSOR OPEN (STORED)
EVAP TEMP SENSOR SHORTED (STORED)
FRONT IR SENSOR AND CONTROL HEAD MISMATCH (STORED)
FRONT IR SENSOR CHANGE TOO LARGE (STORED)
FRONT IR SENSOR HIGH (STORED)
FRONT IR SENSOR LOW (STORED)
FRONT IR SENSOR NOT CALIBRATED (STORED)
FRONT KEYBOARD COMMUNICATION FAULT (STORED)
FRONT KEYBOARD FAULT (STORED)
FRONT MODE DOOR NOT RESPONDING (STORED)
FRONT MODE DOOR TRAVEL TOO LARGE (STORED)
FRONT MODE DOOR TRAVEL TOO SMALL (STORED)
PASS BLEND DOOR NOT RESPONDING (STORED)
PASS BLEND DOOR TRAVEL TOO LARGE (STORED)
PASS BLEND DOOR TRAVEL TOO SMALL (STORED)
PCI BUS SHORTED HIGH (STORED)
PCI BUS SHORTED LOW (STORED)
REAR BLEND DOOR NOT RESPONDING (STORED)
REAR BLEND DOOR RANGE TOO LARGE (STORED)
REAR BLEND DOOR TRAVEL TOO SMALL (STORED)
REAR FAN POT OPEN (STORED)
REAR FAN POT SHORTED (STORED)
REAR IR SENSOR HIGH (STORED)
REAR IR SENSOR LOW (STORED)
REAR IR SENSOR NOT CALIBRATED (STORED)
REAR KEYBOARD FAULT (STORED)
REAR MODE DOOR NOT RESPONDING (STORED)
REAR MODE DOOR TRAVEL TOO LARGE (STORED)
REAR MODE DOOR TRAVEL TOO SMALL (STORED)
REAR MODE POT OPEN (STORED)
REAR MODE POT SHORTED (STORED)
RECIRC DOOR NOT RESPONDING (STORED)
RECIRC DOOR TRAVEL TOO LARGE (STORED)
RECIRC DOOR TRAVEL TOO SMALL (STORED)

Test Note: **All symptoms listed above are diagnosed using the same tests. The title for the tests will be AC PRESSURE TOO HIGH (STORED).**

AC PRESSURE TOO HIGH (STORED) — Continued

When Monitored and Set Condition:

AC PRESSURE TOO HIGH (STORED)

When Monitored: With the ignition on and the IOD fuse installed. Also monitored during the Cooldown Test.

Set Condition: This DTC is set if the ATC reads the A/C Pressure Sensor value and it is above 250 A/D counts.

DRIVER BLEND DOOR NOT RESPONDING (STORED)

When Monitored: With the ignition on and the IOD fuse installed.

Set Condition: This DTC is set if the ATC does not receive feedback pulses within 5 seconds of the drive voltage being applied.

DRIVER BLEND DOOR RANGE TOO LARGE (STORED)

When Monitored: With the ignition on and the IOD fuse installed.

Set Condition: This DTC is set when the ATC monitors the travel range during system initialization and the measured range is greater than expected.

DRIVER BLEND DOOR TRAVEL TOO SMALL (STORED)

When Monitored: With the ignition on and the IOD fuse installed.

Set Condition: This DTC is set when the ATC monitors the travel range during system initialization and the measured range is less than expected.

EVAP TEMP SENSOR OPEN (STORED)

When Monitored: With the ignition on and the IOD fuse installed.

Set Condition: This DTC is displayed if the ATC detects an abnormally high voltage on the evaporator temperature sensor signal.

EVAP TEMP SENSOR SHORTED (STORED)

When Monitored: With the ignition on and the IOD fuse installed.

Set Condition: This DTC is displayed if the ATC detects an abnormally low voltage on the evaporator temperature sensor signal.

FRONT IR SENSOR AND CONTROL HEAD MISMATCH (STORED)

When Monitored: With the ignition on and the IOD fuse installed.

Set Condition: This DTC is set if the correct ATC head is not paired with the correct IR module (i.e. left hand ATC head paired with right hand IR module).

FRONT IR SENSOR CHANGE TOO LARGE (STORED)

When Monitored: With the ignition on and the IOD fuse installed.

Set Condition: This DTC will set if the ATC head detects a temperature difference greater than 50 degrees between the front IR sensors.

AC PRESSURE TOO HIGH (STORED) — Continued

FRONT IR SENSOR HIGH (STORED)

When Monitored: With the ignition on and the IOD fuse installed.

Set Condition: This DTC is set if the ATC reads the Front IR Sensor value and it is above 250 A/D counts.

FRONT IR SENSOR LOW (STORED)

When Monitored: With the ignition on and the IOD fuse installed.

Set Condition: This DTC is set if the ATC reads the Front IR Sensor value and it is below 5 A/D counts.

FRONT IR SENSOR NOT CALIBRATED (STORED)

When Monitored: With the ignition on and the IOD fuse installed.

Set Condition: This DTC is set if the ATC cannot read the IR sensor values or the IR sensor values are not within a defined range of the HVAC air door motor counts.

FRONT KEYBOARD COMMUNICATION FAULT (STORED)

When Monitored: With the ignition on and the IOD fuse installed.

Set Condition: This DTC will set if there is an internal fault in the ATC head.

FRONT KEYBOARD FAULT (STORED)

When Monitored: With the ignition on and the IOD fuse installed.

Set Condition: This DTC will set if there is an internal fault in the ATC head.

FRONT MODE DOOR NOT RESPONDING (STORED)

When Monitored: With the ignition on and the IOD fuse installed.

Set Condition: This DTC is set if the ATC does not receive feedback pulses within 5 seconds of the drive voltage being applied.

FRONT MODE DOOR TRAVEL TOO LARGE (STORED)

When Monitored: With the ignition on and the IOD fuse installed.

Set Condition: This DTC is set when the ATC monitors the travel range during system initialization and the measured range is greater than expected.

FRONT MODE DOOR TRAVEL TOO SMALL (STORED)

When Monitored: With the ignition on and the IOD fuse installed.

Set Condition: This DTC is set when the ATC monitors the travel range during system initialization and the measured range is less than expected.

PASS BLEND DOOR NOT RESPONDING (STORED)

When Monitored: With the ignition on and the IOD fuse installed.

Set Condition: This DTC is set if the ATC does not receive feedback pulses within 5 seconds of the drive voltage being applied.

AC PRESSURE TOO HIGH (STORED) — Continued

PASS BLEND DOOR TRAVEL TOO LARGE (STORED)

When Monitored: With the ignition on and the IOD fuse installed.

Set Condition: This DTC is set when the ATC monitors the travel range during system initialization and the measured range is greater than expected.

PASS BLEND DOOR TRAVEL TOO SMALL (STORED)

When Monitored: With the ignition on and the IOD fuse installed.

Set Condition: This DTC is set when the ATC monitors the travel range during system initialization and the measured range is less than expected.

PCI BUS SHORTED HIGH (STORED)

When Monitored: With the ignition on.

Set Condition: This DTC is set if the ATC detects a short to voltage on the PCI Bus circuit.

PCI BUS SHORTED LOW (STORED)

When Monitored: With the ignition on.

Set Condition: This DTC is set if the ATC detects a short to ground on the PCI Bus circuit.

REAR BLEND DOOR NOT RESPONDING (STORED)

When Monitored: With the ignition on and the IOD fuse installed.

Set Condition: This DTC is set if the ATC does not receive feedback pulses within 5 seconds of the drive voltage being applied.

REAR BLEND DOOR RANGE TOO LARGE (STORED)

When Monitored: With the ignition on and the IOD fuse installed.

Set Condition: This DTC is set when the ATC monitors the travel range during system initialization and the measured range is greater than expected.

REAR BLEND DOOR TRAVEL TOO SMALL (STORED)

When Monitored: With the ignition on and the IOD fuse installed.

Set Condition: This DTC is set when the ATC monitors the travel range during system initialization and the measured range is less than expected.

REAR FAN POT OPEN (STORED)

When Monitored: With the ignition on and the IOD fuse installed.

Set Condition: This DTC is set if the ATC reads the rear blower switch value and it is above 250 A/D counts.

REAR FAN POT SHORTED (STORED)

When Monitored: With the ignition on and the IOD fuse installed.

Set Condition: This DTC is set if the ATC reads the rear fan switch value and it is below 5 A/D counts.

AC PRESSURE TOO HIGH (STORED) — Continued

REAR IR SENSOR HIGH (STORED)

When Monitored: With the ignition on and the IOD fuse installed.

Set Condition: This DTC is set if the ATC reads the Rear IR Sensor value and it is above 250 A/D counts.

REAR IR SENSOR LOW (STORED)

When Monitored: With the ignition on and the IOD fuse installed.

Set Condition: This DTC is set if the ATC reads the Rear IR Sensor value and it is below 5 A/D counts.

REAR IR SENSOR NOT CALIBRATED (STORED)

When Monitored: With the ignition on and the IOD fuse installed.

Set Condition: This DTC is set if the ATC cannot read the IR sensor values or the IR sensor values are not within a defined range of the HVAC air door motor counts.

REAR KEYBOARD FAULT (STORED)

When Monitored: With the ignition on and the IOD fuse installed.

Set Condition: This DTC will set if there is an internal fault in the ATC head.

REAR MODE DOOR NOT RESPONDING (STORED)

When Monitored: With the ignition on and the IOD fuse installed.

Set Condition: This DTC is set if the ATC does not receive feedback pulses within 5 seconds of the drive voltage being applied.

REAR MODE DOOR TRAVEL TOO LARGE (STORED)

When Monitored: With the ignition on and the IOD fuse installed.

Set Condition: This DTC is set when the ATC monitors the travel range during system initialization and the measured range is greater than expected.

REAR MODE DOOR TRAVEL TOO SMALL (STORED)

When Monitored: With the ignition on and the IOD fuse installed.

Set Condition: This DTC is set when the ATC monitors the travel range during system initialization and the measured range is less than expected.

REAR MODE POT OPEN (STORED)

When Monitored: With the ignition on and the IOD fuse installed.

Set Condition: This DTC is set if the ATC reads the rear mode select switch value and it is above 250 A/D counts.

AC PRESSURE TOO HIGH (STORED) — Continued

REAR MODE POT SHORTED (STORED)

When Monitored: With the ignition on and the IOD fuse installed.

Set Condition: This DTC is set if the ATC reads the rear mode select switch value and it is below 5 A/D counts.

RECIRC DOOR NOT RESPONDING (STORED)

When Monitored: Ignition in RUN and IOD fuse installed.

Set Condition: This DTC is set when the ATC does not receive feedback pulses within 5 seconds of the drive voltage being applied.

RECIRC DOOR TRAVEL TOO LARGE (STORED)

When Monitored: Ignition in RUN and IOD fuse installed.

Set Condition: This DTC is set when the ATC monitors the travel range during system initialization and the measured range is greater than expected.

RECIRC DOOR TRAVEL TOO SMALL (STORED)

When Monitored: Ignition in RUN and IOD fuse installed.

Set Condition: This DTC is set when the ATC monitors the travel range during system initialization and the measured range is less than expected.

POSSIBLE CAUSES
CHECK FOR ACTIVE ATC DTCS AND COOLDOWN TEST FAULT MESSAGES
STORED CODES TEST COMPLETE

AC PRESSURE TOO HIGH (STORED) — Continued

TEST	ACTION	APPLICABILITY
1	**CAUTION: The work area ambient temperature must be above 15.6°C (60°F) to test A/C system operation.** **NOTE: Active codes must be resolved before diagnosing stored codes.** **NOTE: Anytime a code becomes active, or a Cooldown Test fault message is displayed, proceed to the conclusion question.** **NOTE: If multiple codes appear, diagnose those that relate to a short circuit first.** Start the engine. Press the ATC Power switch on. Turn the mode control to the panel position. Verify that the front and rear blower motors operate correctly in all speeds from each control. Diagnose and repair all blower related faults before proceeding with this test. Turn the front blower control to the high speed position. **NOTE: Before actuating the AC Cooldown Test, verify that the A/C compressor is not running. If the compressor is running, turn the A/C off and allow the evaporator to warm up before proceeding with the test.** With the DRBIII® in ATC, System Tests, perform the AC Cooldown test. Turn the front blower control to the low speed position. Turn the rear blower control to the Rear Control position. Set the Driver, Rear, and Pass temperature controls to 60. Monitor the DRBIII® for active ATC DTCs while performing the following test steps. Press the recirculation mode switch on, wait 30 seconds, and then press it off. Press the A/C mode switch on, wait 30 seconds, and then press it off. Press the rear defogger switch on, wait 30 seconds, and then press it off. Set the Driver temperature control to the max heat setting, wait 30 seconds, and then set it to the max cool setting. Repeat this step for the Rear and Pass temperature controls. Turn the mode control to each position for 30 seconds and then turn it back to the panel position. Press the Auto HI switch, wait 30 seconds, and then press the Auto LO switch. When function is complete, turn the front blower control to the low speed position. On the Rear ATC Control, set the rear temperature control to the max heat setting, wait 30 seconds, and then set it to the max cool setting. On the Rear ATC Control, turn the mode control to each position for 30 seconds. With the DRBIII® in ATC, Miscellaneous, reset the ATC. Does the DRBIII® display any active ATC DTCs or Cooldown Test fault messages? Yes → Return to the symptom list and choose the symptom(s) Perform BODY VERIFICATION TEST - VER 1. No → No problem found at this time. Perform BODY VERIFICATION TEST - VER 1.	All

Symptom:
COOLDOWN TEST FAILED

When Monitored and Set Condition:

COOLDOWN TEST FAILED

When Monitored: When executing the Cooldown Test.

Set Condition: This DTC is set if the A/C system is unable to bring the evaporator temperature down 6.7°C (20°F) within two minutes.

POSSIBLE CAUSES
OTHER COOLDOWN TEST FAULT MESSAGES PRESENT
ATC DTC(S) PRESENT
CHECK THE PCM/ECM FOR DTCS
A/C SYSTEM TESTING

TEST	ACTION	APPLICABILITY
1	**CAUTION: The work area ambient temperature must be above 15.6°C (60°F) to test A/C system operation.** Are any other fault messages displayed with the Cooldown Test Failed message? Yes → Return to the symptom list and choose the symptom(s). After the repair is complete, rerun the Cooldown Test. Perform BODY VERIFICATION TEST - VER 1. No → Go To 2	All
2	**CAUTION: The work area ambient temperature must be above 15.6°C (60°F) to test A/C system operation.** Turn the ignition on. With the DRBIII®, read ATC DTCs. Does the DRBIII® display any ATC DTCs? Yes → Return to the symptom list and choose the symptom(s). After the repair is complete, rerun the Cooldown Test. Perform BODY VERIFICATION TEST - VER 1. No → Go To 3	All

COOLDOWN TEST FAILED — Continued

TEST	ACTION	APPLICABILITY
3	**CAUTION: The work area ambient temperature must be above 15.6°C (60°F) to test A/C system operation.** Turn the ignition on. With the DRBIII®, check the PCM/ECM for DTCs. Are any PCM/ECM DTCs present? Yes → Refer to Powertrain Diagnostic information for the related symptom(s). After the repair is complete, rerun the Cooldown Test. Perform BODY VERIFICATION TEST - VER 1. No → Refer to the Service Information for additional Cooldown Test related diagnostic information and testing procedures. After the repair is complete, rerun the Cooldown Test. Perform BODY VERIFICATION TEST - VER 1.	All

Symptom:
DRIVER BLEND DOOR NOT RESPONDING (ACTIVE)

When Monitored and Set Condition:

DRIVER BLEND DOOR NOT RESPONDING (ACTIVE)

When Monitored: With the ignition on and the IOD fuse installed.

Set Condition: This DTC is set if the ATC does not receive feedback pulses within 5 seconds of the drive voltage being applied.

POSSIBLE CAUSES
DRIVER BLEND DOOR DRIVER CIRCUIT (A) SHORTED TO GROUND
DRIVER BLEND DOOR DRIVER CIRCUIT (B) SHORTED TO GROUND
DRIVER BLEND DOOR DRIVER CIRCUITS (A) AND (B) SHORTED TOGETHER
DRIVER BLEND DOOR DRIVER CIRCUIT (A) OPEN
DRIVER BLEND DOOR DRIVER CIRCUIT (B) OPEN
ATC
DRIVER BLEND DOOR ACTUATOR

TEST	ACTION	APPLICABILITY
1	Turn the ignition off. Disconnect the Driver Blend Door Actuator harness connector. Disconnect the ATC C1 harness connector. Measure the resistance between ground and the Driver Blend Door Driver (A) circuit. Is the resistance above 100k ohms? Yes → Go To 2 No → Repair the Driver Blend Door Driver (A) circuit for a short to ground. With the DRBIII®, reset the ATC after repair/replacement is complete. Perform BODY VERIFICATION TEST - VER 1.	All
2	Turn the ignition off. Disconnect the Driver Blend Door Actuator harness connector. Disconnect the ATC C1 harness connector. Measure the resistance between ground and the Driver Blend Door Driver (B) circuit. Is the resistance above 100k ohms? Yes → Go To 3 No → Repair the Driver Blend Door Driver (B) circuit for a short to ground. With the DRBIII®, reset the ATC after repair/replacement is complete. Perform BODY VERIFICATION TEST - VER 1.	All

DRIVER BLEND DOOR NOT RESPONDING (ACTIVE) — Continued

TEST	ACTION	APPLICABILITY
3	Turn the ignition off. Disconnect the Driver Blend Door Actuator harness connector. Disconnect the ATC C1 harness connector. Measure the resistance between the Driver Blend Door Driver (A) and (B) circuits. Is the resistance above 100k ohms? Yes → Go To 4 No → Repair the Driver Blend Door Driver (A) and (B) circuits for a short together. With the DRBIII®, reset the ATC after repair/replacement is complete. Perform BODY VERIFICATION TEST - VER 1.	All
4	Turn the ignition off. Disconnect the Driver Blend Door Actuator harness connector. Disconnect the ATC C1 harness connector. Measure the resistance of the Driver Blend Door Driver (A) circuit. Is the resistance below 5.0 ohms? Yes → Go To 5 No → Repair the Driver Blend Door Driver (A) circuit for an open. With the DRBIII®, reset the ATC after repair/replacement is complete. Perform BODY VERIFICATION TEST - VER 1.	All
5	Turn the ignition off. Disconnect the Driver Blend Door Actuator harness connector. Disconnect the ATC C1 harness connector. Measure the resistance of the Driver Blend Door Driver (B) circuit. Is the resistance below 5.0 ohms? Yes → Go To 6 No → Repair the Driver Blend Door Driver (B) circuit for an open. With the DRBIII®, reset the ATC after repair/replacement is complete. Perform BODY VERIFICATION TEST - VER 1.	All
6	Turn the ignition off. Disconnect the ATC C1 harness connector. Measure the resistance between the Driver Blend Door Driver (A) and (B) circuits. Is the resistance between 26.0 and 46.0 ohms? Yes → Replace the ATC. With the DRBIII®, reset the ATC after repair/replacement is complete. Perform BODY VERIFICATION TEST - VER 1. No → Go To 7	All
7	If there are no possible causes remaining, view repair. Repair Replace the Driver Blend Door Actuator. With the DRBIII®, reset the ATC after repair/replacement is complete. Perform BODY VERIFICATION TEST - VER 1.	All

Symptom:
DRIVER BLEND DOOR TRAVEL TOO LARGE (ACTIVE)

When Monitored and Set Condition:

DRIVER BLEND DOOR TRAVEL TOO LARGE (ACTIVE)

When Monitored: With the ignition on and the IOD fuse installed.

Set Condition: This DTC is set when the ATC monitors the travel range during system initialization and the measured range is greater than expected.

POSSIBLE CAUSES
CHECK THE ATC FOR DTCS
DRIVER BLEND DOOR ACTUATOR
DRIVER BLEND DOOR LINKAGE
ATC

TEST	ACTION	APPLICABILITY
1	Turn the ignition on. With the DRB, read the active ATC DTCs. Is the DRIVER BLEND DOOR NOT RESPONDING DTC set? Yes → Return to the symptom list and choose the symptom. With the DRBIII®, reset the ATC after repair/replacement is complete. Perform BODY VERIFICATION TEST - VER 1. No → Go To 2	All
2	Turn the ignition off. Remove the Driver Blend Door Actuator. By hand, attempt to rotate the driver blend door motor in both directions. Did the blend door actuator turn in either direction? Yes → Replace the Driver Blend Door Actuator. With the DRBIII®, reset the ATC after repair/replacement is complete. Perform BODY VERIFICATION TEST - VER 1. No → Go To 3	All

DRIVER BLEND DOOR TRAVEL TOO LARGE (ACTIVE) — Continued

TEST	ACTION	APPLICABILITY
3	Remove the Driver Blend Door Actuator. Rotate the blend door (door only). Note: This should rotate approximately 45 degrees from stop to stop. Inspect the blend door linkage for excessive wear or missing linkage. Were any mechanical problems found? Yes → Repair or replace the driver blend door/linkage as necessary. With the DRBIII®, reset the ATC after repair/replacement is complete. Perform BODY VERIFICATION TEST - VER 1. No → Replace the ATC. With the DRBIII®, reset the ATC after repair/replacement is complete. Perform BODY VERIFICATION TEST - VER 1.	All

Symptom:
DRIVER BLEND DOOR TRAVEL TOO SMALL (ACTIVE)

When Monitored and Set Condition:

DRIVER BLEND DOOR TRAVEL TOO SMALL (ACTIVE)

When Monitored: With the ignition on and the IOD fuse installed.

Set Condition: This DTC is set when the ATC monitors the travel range during system initialization and the measured range is less than expected.

POSSIBLE CAUSES
CHECK THE ATC FOR DTCS
ATC
OBSTRUCTED BLEND DOOR
DRIVER BLEND DOOR ACTUATOR

TEST	ACTION	APPLICABILITY
1	Turn the ignition on. With the DRB, read the active ATC DTCs. Is the DRIVER BLEND DOOR NOT RESPONDING DTC set? Yes → Return to the symptom list and choose the symptom. With the DRBIII®, reset the ATC after repair/replacement is completed. Perform BODY VERIFICATION TEST - VER 1. No → Go To 2	All
2	Turn the ignition off. Disconnect the Driver Blend Door Actuator harness connector. Connect a 12-volt Test Light between the Driver Blend Door Actuator harness connector cavities. Turn the ignition on. While monitoring the test light, turn the driver blend control knob from lo to hi. **Note: Observe test light for approximately 30 seconds.** Does the test light start to flash and stay flashing? Yes → Go To 3 No → Replace the ATC. With the DRBIII®, reset the ATC after repair/replacement is completed. Perform BODY VERIFICATION TEST - VER 1.	All

DRIVER BLEND DOOR TRAVEL TOO SMALL (ACTIVE) — Continued

TEST	ACTION	APPLICABILITY
3	Remove the Driver Blend Door Actuator. Rotate the blend door (door only). Note: This should rotate approximately 45 degrees from stop to stop. Does the blend door move smoothly in both directions? Yes → Replace the Driver Blend Door Actuator. With the DRBIII®, reset the ATC after repair/replacement is completed. Perform BODY VERIFICATION TEST - VER 1. No → Repair or replace the driver blend door as necessary. With the DRBIII®, reset the ATC after repair/replacement is completed. Perform BODY VERIFICATION TEST - VER 1.	All

Symptom:

EEPROM CHECKSUM ERROR (ACTIVE)

When Monitored and Set Condition:

EEPROM CHECKSUM ERROR (ACTIVE)

When Monitored: Ignition in RUN and IOD fuse installed after a battery disconnect.

Set Condition: This DTC is set if the calibrated check sum does not match the stored value.

POSSIBLE CAUSES
ATC - EEPROM CHECKSUM ERROR

TEST	ACTION	APPLICABILITY
1	When this code is present, the ATC must be replaced. View repair. Repair Replace the ATC. With the DRBIII®, reset the ATC after repair/replacement is complete. Perform BODY VERIFICATION TEST - VER 1.	All

Symptom:

EVAP TEMP SENSOR OPEN (ACTIVE)

When Monitored and Set Condition:

EVAP TEMP SENSOR OPEN (ACTIVE)

When Monitored: With the ignition on and the IOD fuse installed. Also, during the Cooldown Test.

Set Condition: This DTC is displayed if the ATC detects an abnormally high voltage on the evaporator temperature sensor signal. Evap Temp Sensor Open is also displayed as a Cooldown Test Message if the ATC detects an abnormally high voltage on the evaporator temperature sensor signal during the Cooldown Test.

POSSIBLE CAUSES
EVAPORATOR TEMPERATURE SENSOR SIGNAL CIRCUIT SHORTED TO VOLTAGE
EVAPORATOR TEMP SENSOR SIGNAL CKT SHORTED TO BLOWER MOTOR CONTROL CKT
EVAP TEMP SENSOR SIGNAL CKT SHORTED TO REAR BLOWER MOTOR CONTROL CKT
ATC
EVAPORATOR TEMPERATURE SENSOR SIGNAL CIRCUIT OPEN
SENSOR GROUND CIRCUIT OPEN
EVAPORATOR TEMPERATURE SENSOR

TEST	ACTION	APPLICABILITY
1	Turn the ignition off. Disconnect the ATC C2 harness connector. Turn the ignition on. Measure the voltage of the Evaporator Temperature Sensor Signal circuit. Is there any voltage present? Yes → Repair the Evaporator Temperature Sensor Signal circuit for a short to voltage. With the DRBIII®, reset the ATC after repair/replacement is complete. Perform BODY VERIFICATION TEST - VER 1. No → Go To 2	All

EVAP TEMP SENSOR OPEN (ACTIVE) — Continued

TEST	ACTION	APPLICABILITY
2	Turn the ignition off. Disconnect the ATC C2 harness connector. Measure the resistance between the Evaporator Temperature Sensor Signal circuit and the Blower Motor Control circuit. Is the resistance below 10K ohms? Yes → Repair the Evaporator Temperature Sensor Signal circuit for a short to the Blower Motor Control circuit. With the DRBIII®, reset the ATC after repair/replacement is complete. Perform BODY VERIFICATION TEST - VER 1. No → Go To 3	All
3	Turn the ignition off. Disconnect the ATC C2 harness connector. Measure the resistance between the Evaporator Temperature Sensor Signal circuit and the Rear Blower Motor Control circuit. Is the resistance below 10K ohms? Yes → Repair the Evaporator Temperature Sensor Signal circuit for a short to the Rear Blower Motor Control circuit. With the DRBIII®, reset the ATC after repair/replacement is complete. Perform BODY VERIFICATION TEST - VER 1. No → Go To 4	All
4	Turn the ignition off. Disconnect the ATC C2 harness connector. Measure the resistance between the Evaporator Temperature Sensor Signal circuit and the Sensor Ground circuit. The approximate circuit resistance should be: 5,900 ohms @ 38°C (100°F). 6,600 ohms @ 35°C (95°F). 7,400 ohms @ 32°C (90°F). 8,300 ohms @ 29°C (85°F). 9,400 ohms @ 27°C (80°F). 10,600 ohms @ 24°C (75°F). 11,900 ohms @ 21°C (70°F). 13,500 ohms @ 18°C (65°F). 15,300 ohms @ 16°C (60°F). 17,500 ohms @ 13°C (55°F). 19,900 ohms @ 10°C (50°F). 22,800 ohms @ 7°C (45°F). 26,100 ohms @ 4°C (40°F). 30,000 ohms @ 2°C (35°F). 34,600 ohms @ -1°C (30°F). Is the resistance within the specifications? Yes → Replace the ATC in accordance with the Service Information. With the DRBIII®, reset the ATC after repair/replacement is complete. Perform BODY VERIFICATION TEST - VER 1. No → Go To 5	All

EVAP TEMP SENSOR OPEN (ACTIVE) — Continued

TEST	ACTION	APPLICABILITY
5	Turn the ignition off. Disconnect the ATC C2 harness connector. Disconnect the in-line C202 harness connector. Measure the resistance of the Evaporator Temperature Sensor Signal circuit between the ATC C2 harness connector and the in-line C202 harness connector. Is the resistance below 5.0 ohms? Yes → Go To 6 No → Repair the Evaporator Temperature Sensor Signal circuit between the ATC C2 harness connector and the in-line C202 harness connector (HVAC side) for an open. With the DRBIII®, reset the ATC after repair/replacement is complete. Perform BODY VERIFICATION TEST - VER 1.	All
6	Turn the ignition off. Disconnect the ATC C2 harness connector. Disconnect the in-line C202 harness connector. Measure the resistance of the Sensor Ground circuit between the ATC C2 harness connector and the in-line C202 harness connector. Is the resistance below 5.0 ohms? Yes → Check the wiring harness between the in-line C202 harness connector (plenum side) and the Evap Temp Sensor for an open. Repair as necessary. If Ok, replace the Evaporator Temperature Sensor. With the DRBIII®, reset the ATC after repair/replacement is complete. Perform BODY VERIFICATION TEST - VER 1. No → Repair the Sensor Ground circuit between the ATC C2 harness connector and the in-line C202 harness connector (HVAC side) for an open. With the DRBIII®, reset the ATC after repair/replacement is complete. Perform BODY VERIFICATION TEST - VER 1.	All

Symptom:

EVAP TEMP SENSOR SHORTED (ACTIVE)

When Monitored and Set Condition:

EVAP TEMP SENSOR SHORTED (ACTIVE)

When Monitored: With the ignition on and the IOD fuse installed. Also, during the Cooldown Test.

Set Condition: This DTC is displayed if the ATC detects an abnormally low voltage on the evaporator temperature sensor signal. Evap Temp Sensor Shorted is also displayed as a Cooldown Test Message if the ATC detects an abnormally low voltage on the evaporator temperature sensor signal during the Cooldown Test.

POSSIBLE CAUSES
EVAPORATOR TEMPERATURE SENSOR
EVAPORATOR TEMPERATURE SENSOR SIGNAL CIRCUIT SHORT TO GROUND
EVAPORATOR TEMPERATURE SENSOR SIGNAL CIRCUIT SHORT TO SENSOR GROUND CIRCUIT
ATC

TEST	ACTION	APPLICABILITY
1	Turn the ignition off. Disconnect the in-line C202 harness connector. Turn the ignition on. With the DRBIII® in Automatic Temperature Control, monitor Active DTCs. Does the DRBIII® display: Evap Sensor Open? Yes → Check the Evap Temp Sensor Signal circuit between the in-line C202 harness connector (plenum side) and the Evap Temp Sensor for a short to ground. Repair as necessary. If Ok, replace the Evaporator Temperature Sensor. With the DRBIII®, reset the ATC after repair/replacement is complete. Perform BODY VERIFICATION TEST - VER 1. No → Go To 2	All

EVAP TEMP SENSOR SHORTED (ACTIVE) — Continued

TEST	ACTION	APPLICABILITY
2	Turn the ignition off. Disconnect the ATC C2 harness connector. Disconnect the in-line C202 harness connector. Measure the resistance between ground and the Evaporator Temperature Sensor Signal circuit (HVAC side). Is the resistance above 100k ohms? Yes → Go To 3 No → Repair the Evaporator Temperature Sensor Signal circuit between the ATC C2 harness connector and the in-line C202 harness connector (HVAC side) for a short to ground. With the DRBIII®, reset the ATC after repair/replacement is complete. Perform BODY VERIFICATION TEST - VER 1.	All
3	Turn the ignition off. Disconnect the ATC C2 harness connector. Disconnect the in-line C202 harness connector. Measure the resistance between the Evaporator Temperature Sensor Signal circuit and the Sensor Ground circuit (HVAC side). Is the resistance above 100k ohms? Yes → Replace the ATC. With the DRBIII®, reset the ATC after repair/replacement is complete. Perform BODY VERIFICATION TEST - VER 1. No → Repair the Evaporator Temperature Sensor Signal circuit between the ATC C2 harness connector and the in-line C202 harness connector (HVAC side) for a short to Sensor Ground. With the DRBIII®, reset the ATC after repair/replacement is complete. Perform BODY VERIFICATION TEST - VER 1.	All

Symptom List:

FRONT IR SENSOR AND CONTROL HEAD MISMATCH (ACTIVE)
FRONT IR SENSOR CHANGE TOO LARGE (ACTIVE)
FRONT IR SENSOR HIGH (ACTIVE)
FRONT IR SENSOR LOW (ACTIVE)

Test Note: All symptoms listed above are diagnosed using the same tests. The title for the tests will be FRONT IR SENSOR AND CONTROL HEAD MISMATCH (ACTIVE).

When Monitored and Set Condition:

FRONT IR SENSOR AND CONTROL HEAD MISMATCH (ACTIVE)

When Monitored: With the ignition on and the IOD fuse installed.

Set Condition: This DTC is set if the correct ATC head is not paired with the correct IR module (i.e. left hand ATC head paired with right hand IR module).

FRONT IR SENSOR CHANGE TOO LARGE (ACTIVE)

When Monitored: With the ignition on and the IOD fuse installed.

Set Condition: This DTC will set if the ATC head detects a temperature difference greater than 50 degrees between the front IR sensors.

FRONT IR SENSOR HIGH (ACTIVE)

When Monitored: With the ignition on and the IOD fuse installed.

Set Condition: This DTC is set if the ATC reads the Front IR Sensor value and it is above 250 A/D counts.

FRONT IR SENSOR LOW (ACTIVE)

When Monitored: With the ignition on and the IOD fuse installed.

Set Condition: This DTC is set if the ATC reads the Front IR Sensor value and it is below 5 A/D counts.

POSSIBLE CAUSES
ATC REMOTE SENSOR

FRONT IR SENSOR AND CONTROL HEAD MISMATCH (ACTIVE) — Continued

TEST	ACTION	APPLICABILITY
1	This DTC indicates a fault in the ATC Remote Sensor. View repair. Repair Replace the ATC Remote Sensor. With the DRBIII®, reset the ATC after repair/replacement is complete. Perform BODY VERIFICATION TEST - VER 1.	All

Symptom List:

FRONT IR SENSOR NOT CALIBRATED (ACTIVE)
FRONT KEYBOARD FAULT (ACTIVE)

Test Note: All symptoms listed above are diagnosed using the same tests. The title for the tests will be FRONT IR SENSOR NOT CALIBRATED (ACTIVE).

When Monitored and Set Condition:

FRONT IR SENSOR NOT CALIBRATED (ACTIVE)

When Monitored: With the ignition on and the IOD fuse installed.

Set Condition: This DTC is set if the ATC cannot read the IR sensor values or the IR sensor values are not within a defined range of the HVAC air door motor counts.

FRONT KEYBOARD FAULT (ACTIVE)

When Monitored: With the ignition on and the IOD fuse installed.

Set Condition: This DTC will set if there is an internal fault in the ATC head.

POSSIBLE CAUSES
ATC - PROTECTED IGNITION CIRCUIT FAULT
KDB 2 CLOCK CIRCUIT SHORTED TO VOLTAGE
KDB 2 DATA CIRCUIT SHORTED TO GROUND
KDB 2 DATA CIRCUIT SHORTED TO VOLTAGE
PROTECTED IGNITION CIRCUIT OPEN
SENSOR RETURN CIRCUIT OPEN
KDB 2 CLOCK CIRCUIT SHORTED TO GROUND
KDB 2 DATA CIRCUIT OPEN
ATC - KDB 2 DATA CIRCUIT FAULT
ATC - SENSOR RETURN CIRCUIT FAULT
KDB 2 CLOCK CIRCUIT OPEN
ATC - KDB 2 CLOCK CIRCUIT FAULT
ATC REMOTE SENSOR

FRONT IR SENSOR NOT CALIBRATED (ACTIVE) — Continued

TEST	ACTION	APPLICABILITY
1	Turn the ignition off. Disconnect the ATC Remote Sensor harness connector. Turn the ignition on. Measure the voltage of the Protected Ignition circuit. Is the voltage above 10.0 volts? Yes → Go To 2 No → Go To 16	All
2	Turn the ignition off. Disconnect the ATC Remote Sensor harness connector. Turn the ignition on. Measure the voltage of the KDB 2 Data circuit. Is the voltage above 10.0 volts? Yes → Go To 3 No → Go To 13	All
3	Turn the ignition off. Disconnect the ATC Remote Sensor harness connector. Disconnect the ATC C3 harness connector. Turn the ignition on. Measure the voltage of the KDB 2 Data circuit. Is the voltage above 1.0 volt? Yes → Repair the KDB 2 Data circuit for a short to voltage. With the DRBIII®, reset the ATC after repair/replacement is complete. Perform BODY VERIFICATION TEST - VER 1. No → Go To 4	All
4	Turn the ignition off. Disconnect the ATC Remote Sensor harness connector. Use Scope input cable CH7058, Cable to Probe adapter CH7062, and the red and black test probes. Connect the scope input cable to the channel one connector on the DRB. Attach the red and black leads and the cable to probe adapter to the scope input cable. Select Lab Scope. Select Live. Select 12 volt square wave. Press F2 for Scope. Press F2 and use the arrows to set the voltage range to 20 volts, the Offset to 4.0, and the Probe to x10. Press F2 again and set the divisions to 40ms/Div, then press F2 again when complete. Connect the Black lead to the chassis ground. Connect the Red lead to the KDB 2 Clock circuit in the ATC Remote Sensor harness connector. Turn the ignition on. Observe the voltage display on the DRB Lab Scope. **NOTE: The lab scope pattern should look similar to the example given in the support material and cycle from approximately 0 volts to 8.0 volts.** Did the lab scope pattern and voltage react as noted above? Yes → Go To 5 No → Go To 9	All

FRONT IR SENSOR NOT CALIBRATED (ACTIVE) — Continued

TEST	ACTION	APPLICABILITY
5	Turn the ignition off. Disconnect the ATC Remote Sensor harness connector. Measure the resistance between ground and the Sensor Return circuit. Is the resistance below 10 ohms? Yes → Go To 6 No → Go To 7	All
6	If there are no possible causes remaining, view repair. Repair Replace the ATC Remote Sensor. With the DRBIII®, reset the ATC after repair/replacement is complete. Perform BODY VERIFICATION TEST - VER 1.	All
7	Turn the ignition off. Disconnect the ATC Remote Sensor harness connector. Measure the resistance of the Sensor Return circuit. Is the resistance below 5.0 ohms? Yes → Go To 8 No → Repair the Sensor Return circuit for an open. With the DRBIII®, reset the ATC after repair/replacement is complete. Perform BODY VERIFICATION TEST - VER 1.	All
8	If there are no possible causes remaining, view repair. Repair Replace the ATC. With the DRBIII®, reset the ATC after repair/replacement is complete. Perform BODY VERIFICATION TEST - VER 1.	All
9	Turn the ignition off. Disconnect the ATC Remote Sensor harness connector. Disconnect the ATC C3 harness connector. Turn the ignition on. Measure the voltage of the KDB 2 Clock circuit. Is the voltage above 1.0 volt? Yes → Repair the KDB 2 Clock circuit for a short to voltage. With the DRBIII®, reset the ATC after repair/replacement is complete. Perform BODY VERIFICATION TEST - VER 1. No → Go To 10	All

FRONT IR SENSOR NOT CALIBRATED (ACTIVE) — Continued

TEST	ACTION	APPLICABILITY
10	Turn the ignition off. Disconnect the ATC Remote Sensor harness connector. Disconnect the ATC C3 harness connector. Measure the resistance between ground and the KDB 2 Clock circuit. Is the resistance above 100k ohms? Yes → Go To 11 No → Repair the KDB 2 Clock circuit for a short to ground. With the DRBIII®, reset the ATC after repair/replacement is complete. Perform BODY VERIFICATION TEST - VER 1.	All
11	Turn the ignition off. Disconnect the ATC Remote Sensor harness connector. Disconnect the ATC C3 harness connector. Measure the resistance of the KDB 2 Clock circuit. Is the resistance below 5.0 ohms? Yes → Go To 12 No → Repair the KDB 2 Clock circuit for an open. With the DRBIII®, reset the ATC after repair/replacement is complete. Perform BODY VERIFICATION TEST - VER 1.	All
12	If there are no possible causes remaining, view repair. Repair Replace the ATC. With the DRBIII®, reset the ATC after repair/replacement is complete. Perform BODY VERIFICATION TEST - VER 1.	All
13	Turn the ignition off. Disconnect the ATC Remote Sensor harness connector. Disconnect the ATC C3 harness connector. Measure the resistance between ground and the KDB 2 Data circuit. Is the resistance above 100k ohms? Yes → Go To 14 No → Repair the KDB 2 Data circuit for a short to ground. With the DRBIII®, reset the ATC after repair/replacement is complete. Perform BODY VERIFICATION TEST - VER 1.	All
14	Turn the ignition off. Disconnect the ATC Remote Sensor harness connector. Disconnect the ATC C3 harness connector. Measure the resistance of the KDB 2 Data circuit. Is the resistance below 5.0 ohms? Yes → Go To 15 No → Repair the KDB 2 Data circuit for an open. With the DRBIII®, reset the ATC after repair/replacement is complete. Perform BODY VERIFICATION TEST - VER 1.	All

FRONT IR SENSOR NOT CALIBRATED (ACTIVE) — Continued

TEST	ACTION	APPLICABILITY
15	If there are no possible causes remaining, view repair. Repair Replace the ATC. With the DRBIII®, reset the ATC after repair/replacement is complete. Perform BODY VERIFICATION TEST - VER 1.	All
16	Turn the ignition off. Disconnect the ATC Remote Sensor harness connector. Disconnect the ATC C3 harness connector. Measure the resistance of the Protected Ignition circuit. Is the resistance below 5.0 ohms? Yes → Replace the ATC. With the DRBIII®, reset the ATC after repair/replacement is complete. Perform BODY VERIFICATION TEST - VER 1. No → Repair the Protected Ignition circuit for an open. With the DRBIII®, reset the ATC after repair/replacement is complete. Perform BODY VERIFICATION TEST - VER 1.	All

Symptom:
FRONT KEYBOARD COMMUNICATION FAULT (ACTIVE)

When Monitored and Set Condition:

FRONT KEYBOARD COMMUNICATION FAULT (ACTIVE)

When Monitored: With the ignition on and the IOD fuse installed.

Set Condition: This DTC will set if there is an internal fault in the ATC head.

POSSIBLE CAUSES
ATC

TEST	ACTION	APPLICABILITY
1	This DTC indicates a fault in the ATC. View repair. Repair Replace the ATC. With the DRBIII®, reset the ATC after repair/replacement is complete. Perform BODY VERIFICATION TEST - VER 1.	All

Symptom:
FRONT MODE DOOR NOT RESPONDING (ACTIVE)

When Monitored and Set Condition:

FRONT MODE DOOR NOT RESPONDING (ACTIVE)

When Monitored: With the ignition on and the IOD fuse installed.

Set Condition: This DTC is set if the ATC does not receive feedback pulses within 5 seconds of the drive voltage being applied.

POSSIBLE CAUSES
MODE DOOR DRIVER CIRCUIT (A) SHORTED TO GROUND
MODE DOOR DRIVER CIRCUIT (B) SHORTED TO GROUND
MODE DOOR DRIVER CIRCUITS (A) AND (B) SHORTED TOGETHER
MODE DOOR DRIVER CIRCUIT (A) OPEN
MODE DOOR DRIVER CIRCUIT (B) OPEN
ATC
MODE DOOR ACTUATOR

TEST	ACTION	APPLICABILITY
1	Turn the ignition off. Disconnect the Mode Door Actuator harness connector. Disconnect the ATC C1 harness connector. Measure the resistance between ground and the Mode Door Driver (A) circuit. Is the resistance above 100k ohms? Yes → Go To 2 No → Repair the Mode Door Driver (A) circuit for a short to ground. With the DRBIII®, reset the ATC after repair/replacement is complete. Perform BODY VERIFICATION TEST - VER 1.	All
2	Turn the ignition off. Disconnect the Mode Door Actuator harness connector. Disconnect the ATC C1 harness connector. Measure the resistance between ground and the Mode Door Driver (B) circuit. Is the resistance above 100k ohms? Yes → Go To 3 No → Repair the Mode Door Driver (B) circuit for a short to ground. With the DRBIII®, reset the ATC after repair/replacement is complete. Perform BODY VERIFICATION TEST - VER 1.	All

FRONT MODE DOOR NOT RESPONDING (ACTIVE) — Continued

TEST	ACTION	APPLICABILITY
3	Turn the ignition off. Disconnect the Mode Door Actuator harness connector. Disconnect the ATC C1 harness connector. Measure the resistance between the Mode Door Driver (B) circuit and the Mode Door Driver (A) circuit. Is the resistance above 100k ohms? Yes → Go To 4 No → Repair the Mode Door Driver (A) and (B) circuits for a short together. With the DRBIII®, reset the ATC after repair/replacement is complete. Perform BODY VERIFICATION TEST - VER 1.	All
4	Turn the ignition off. Disconnect the Mode Door Actuator harness connector. Disconnect the ATC C1 harness connector. Measure the resistance of the Mode Door Driver (A) circuit. Is the resistance below 5.0 ohms? Yes → Go To 5 No → Repair the Mode Door Driver (A) circuit for an open. With the DRBIII®, reset the ATC after repair/replacement is complete. Perform BODY VERIFICATION TEST - VER 1.	All
5	Turn the ignition off. Disconnect the Mode Door Actuator harness connector. Disconnect the ATC C1 harness connector. Measure the resistance of the Mode Door Driver (B) circuit. Is the resistance below 5.0 ohms? Yes → Go To 6 No → Repair the Mode Door Driver (B) circuit for an open. With the DRBIII®, reset the ATC after repair/replacement is complete. Perform BODY VERIFICATION TEST - VER 1.	All
6	Turn the ignition off. Disconnect the ATC C1 harness connector. Measure the resistance between the Mode Door Driver (A) circuit and the Mode Door Driver (B) circuit. Is the resistance between 26.0 and 46.0 ohms? Yes → Replace the ATC. With the DRBIII®, reset the ATC after repair/replacement is complete. Perform BODY VERIFICATION TEST - VER 1. No → Go To 7	All
7	If there are no possible causes remaining, view repair. Repair Replace the Mode Door Actuator. With the DRBIII®, reset the ATC after repair/replacement is complete. Perform BODY VERIFICATION TEST - VER 1.	All

Symptom:
FRONT MODE DOOR TRAVEL TOO LARGE (ACTIVE)

When Monitored and Set Condition:

FRONT MODE DOOR TRAVEL TOO LARGE (ACTIVE)

When Monitored: With the ignition on and the IOD fuse installed.

Set Condition: This DTC is set when the ATC monitors the travel range during system initialization and the measured range is greater than expected.

POSSIBLE CAUSES
CHECK THE ATC FOR DTCS
MODE DOOR ACTUATOR
MODE DOOR LINKAGE
ATC

TEST	ACTION	APPLICABILITY
1	Turn the ignition on. With the DRB, read the active ATC DTCs. Is the FRONT MODE DOOR NOT RESPONDING DTC set? Yes → Return to the symptom list and choose the symptom. With the DRBIII®, reset the ATC after repair/replacement is complete. Perform BODY VERIFICATION TEST - VER 1. No → Go To 2	All
2	Turn the ignition off. Remove the Mode Door Actuator. By hand, attempt to rotate the Mode Door Actuator in both directions. Did the Mode Door Actuator turn in either direction? Yes → Replace the Mode Door Actuator. With the DRBIII®, reset the ATC after repair/replacement is complete. Perform BODY VERIFICATION TEST - VER 1. No → Go To 3	All

FRONT MODE DOOR TRAVEL TOO LARGE (ACTIVE) — Continued

TEST	ACTION	APPLICABILITY
3	Remove the Mode Door Actuator. Rotate the mode doors (doors only). Note: These should rotate approximately 45 degrees from stop to stop. Inspect the mode door linkage for excessive wear or missing linkage. Were any mechanical problems found? Yes → Repair or replace the mode door/linkage as necessary. With the DRBIII®, reset the ATC after repair/replacement is complete. Perform BODY VERIFICATION TEST - VER 1. No → Replace the ATC. With the DRBIII®, reset the ATC after repair/replacement is complete. Perform BODY VERIFICATION TEST - VER 1.	All

Symptom:
FRONT MODE DOOR TRAVEL TOO SMALL (ACTIVE)

When Monitored and Set Condition:

FRONT MODE DOOR TRAVEL TOO SMALL (ACTIVE)

When Monitored: With the ignition on and the IOD fuse installed.

Set Condition: This DTC is set when the ATC monitors the travel range during system initialization and the measured range is less than expected.

POSSIBLE CAUSES
CHECK THE ATC FOR DTCS
ATC
OBSTRUCTED MODE DOOR
MODE DOOR ACTUATOR

TEST	ACTION	APPLICABILITY
1	Turn the ignition on. With the DRB, read the active ATC DTCs. Is the FRONT MODE DOOR NOT RESPONDING DTC set? Yes → Return to the symptom list and choose the symptom. With the DRBIII®, reset the ATC after repair/replacement is complete. Perform BODY VERIFICATION TEST - VER 1. No → Go To 2	All
2	Turn the ignition off. Disconnect the Mode Door Actuator harness connector. Connect a 12-volt Test Light between the Mode Door Actuator harness connector cavities. Turn the ignition on. While monitoring the test light, turn the mode control knob in each position. **Note: Observe test light for approximately 30 seconds.** Does the test light start to flash and stay flashing? Yes → Go To 3 No → Replace the ATC. With the DRBIII®, reset the ATC after repair/replacement is complete. Perform BODY VERIFICATION TEST - VER 1.	All

FRONT MODE DOOR TRAVEL TOO SMALL (ACTIVE) — Continued

TEST	ACTION	APPLICABILITY
3	Remove the Mode Door Actuator. Rotate the mode doors (doors only). Note: These should rotate approximately 45 degrees from stop to stop. Do the mode doors move smoothly in both directions? Yes → Replace the Mode Door Actuator. With the DRBIII®, reset the ATC after repair/replacement is complete. Perform BODY VERIFICATION TEST - VER 1. No → Repair or replace the mode door as necessary. With the DRBIII®, reset the ATC after repair/replacement is complete. Perform BODY VERIFICATION TEST - VER 1.	All

Symptom:

INVALID CONDITIONS FOR COOLDOWN TEST, EVAP TEMPERATURE TOO LOW

When Monitored and Set Condition:

INVALID CONDITIONS FOR COOLDOWN TEST, EVAP TEMPERATURE TOO LOW

When Monitored: When executing the Cooldown Test.

Set Condition: This message will be displayed if the A/C - Heater Control Module sees evaporator temperature below 12.7°C (55°F) when executing the Cooldown Test.

POSSIBLE CAUSES
EVAPORATOR TEMPERATURE TOO LOW
ATC DTC(S) PRESENT
CHECK THE PCM/ECM FOR DTCS
EVAPORATOR TEMPERATURE SENSOR
SENSOR GROUND CIRCUIT HIGH RESISTANCE
EVAPORATOR TEMPERATURE SENSOR SIGNAL CIRCUIT HIGH RESISTANCE
AUTOMATIC TEMPERATURE CONTROL

TEST	ACTION	APPLICABILITY
1	**CAUTION: The work area ambient temperature must be above 15.6°C (60°F) to test A/C system operation.** Start the engine. Turn the A/C off. Turn the Blower on high. Allow the blower to run for 5 minutes to ensure that the Evaporator Temperature Sensor temperature is above 12.7°C (55°F). With the DRBIII®, actuate the Cooldown Test. Does the DRBIII® display: Cooldown Test Too Cold To Start? Yes → Go To 2 No → Perform additional testing as necessary. Perform BODY VERIFICATION TEST - VER 1.	All
2	**CAUTION: The work area ambient temperature must be above 15.6°C (60°F) to test A/C system operation.** Turn the ignition on. With the DRBIII®, read ATC DTCs. Does the DRBIII® display any ATC DTCs? Yes → Return to the symptom list and choose the symptom(s). After the repair is complete, with the DRBIII®, erase the DTC(s). Cycle the ignition switch. With the DRBIII®, reset the ATC. With the DRBIII®, actuate the Cooldown Test. Perform BODY VERIFICATION TEST - VER 1. No → Go To 3	All

INVALID CONDITIONS FOR COOLDOWN TEST, EVAP TEMPERATURE TOO LOW — Continued

TEST	ACTION	APPLICABILITY
3	**CAUTION: The work area ambient temperature must be above 15.6°C (60°F) to test A/C system operation.** Turn the ignition on. With the DRBIII®, check the PCM/ECM for DTCs. Are any DTCs present? Yes → Refer to the Powertrain Diagnostic information for the related symptom(s). After the repair is complete, with the DRBIII®, erase the DTC(s). Cycle the ignition switch. With the DRBIII®, reset the ATC. With the DRBIII®, accuate the Cooldown Test. Perform BODY VERIFICATION TEST - VER 1. No → Go To 4	All
4	Turn the ignition off. Disconnect the Evaporator Temperature Sensor harness connector. Turn the ignition on. With the DRBIII® in Sensor Display, read the Evaporator Temperature Sensor voltage. Is the voltage above 4.9 volts? Yes → Go To 5 No → Go To 6	All
5	Turn the ignition off. Disconnect the Evaporator Temperature Sensor harness connector. Connect a jumper wire between the Evaporator Temperature Sensor Signal circuit and the Sensor Ground circuit at the Evaporator Temperature Sensor harness connector. Turn the ignition on. With the DRBIII® in Sensor Display, read the Evaporator Temperature Sensor voltage. Is the voltage 0.0 volts? Yes → Replace the Evaporator Temperature Sensor in accordance with the Service Information. After the repair is complete, with the DRBIII®, reset the ATC. With the DRBIII®, accuate the Cooldown Test. Perform BODY VERIFICATION TEST - VER 1. No → Go To 6	All
6	**NOTE: Ensure that the Evaporator Temperature Sensor harness connector is connected to the Evaporator Temperature Sensor.** **NOTE: Ensure that the voltmeter leads meet the terminals in the connector and that there is good terminal to wire connection.** **NOTE: Ensure the voltmeter leads are connected for positive polarity.** Back probe the Sensor Ground circuit between the Evaporator Temperature Sensor harness connector and the ATC harness connector. Turn the ignition on. Is the voltage below 0.10 volt? Yes → Go To 7 No → Repair the high resistance in the Sensor Ground circuit. After the repair is complete, with the DRBIII®, reset the ATC. With the DRBIII®, accuate the Cooldown Test. Perform BODY VERIFICATION TEST - VER 1.	All

INVALID CONDITIONS FOR COOLDOWN TEST, EVAP TEMPERATURE TOO LOW — Continued

TEST	ACTION	APPLICABILITY
7	**NOTE: Ensure that the Evaporator Temperature Sensor harness connector is connected to the Evaporator Temperature Sensor.** **NOTE: Ensure the voltmeter leads meet the terminals in the connector and that there is good terminal to wire connection.** **NOTE: Ensure the voltmeter leads are connected for positive polarity** Back probe the Evaporator Temperature Sensor Signal circuit between the Evaporator Temperature Sensor harness connector and the ATC harness connector. Turn the ignition on. Is the voltage below 0.10 volt? Yes → Replace the Automatic Temperature Control. After the repair is complete, with the DRBIII®, reset the ATC. With the DRBIII®, accuate the Cooldown Test. Perform BODY VERIFICATION TEST - VER 1. No → Repair the high resistance in the Evaporator Temperature Sensor Signal circuit. After the repair is complete, with the DRBIII®, reset the ATC. With the DRBIII®, accuate the Cooldown Test. Perform BODY VERIFICATION TEST - VER 1.	All

Symptom:
PASS BLEND DOOR NOT RESPONDING (ACTIVE)

When Monitored and Set Condition:

PASS BLEND DOOR NOT RESPONDING (ACTIVE)

When Monitored: With the ignition on and the IOD fuse installed.

Set Condition: This DTC is set if the ATC does not receive feedback pulses within 5 seconds of the drive voltage being applied.

POSSIBLE CAUSES
PASSENGER BLEND DOOR DRIVER CIRCUIT (A) SHORTED TO GROUND
PASSENGER BLEND DOOR DRIVER CIRCUIT (B) SHORTED TO GROUND
PASSENGER BLEND DOOR DRIVER CIRCUITS (A) AND (B) SHORTED TOGETHER
PASSENGER BLEND DOOR DRIVER CIRCUIT (A) OPEN
PASSENGER BLEND DOOR DRIVER CIRCUIT (B) OPEN
ATC
PASSENGER BLEND DOOR ACTUATOR

TEST	ACTION	APPLICABILITY
1	Turn the ignition off. Disconnect the ATC C1 harness connector. Measure the resistance between ground and the Passenger Blend Door Driver (A) circuit. Is the resistance above 100k ohms? Yes → Go To 2 No → Repair the Passenger Blend Door Driver (A) circuit for a short to ground. With the DRBIII®, reset the ATC after repair/replacement is complete. Perform BODY VERIFICATION TEST - VER 1.	All
2	Turn the ignition off. Disconnect the ATC C1 harness connector. Measure the resistance between ground and the Passenger Blend Door Driver (B) circuit. Is the resistance above 100k ohms? Yes → Go To 3 No → Repair the Passenger Blend Door Driver (B) circuit for a short to ground. With the DRBIII®, reset the ATC after repair/replacement is complete. Perform BODY VERIFICATION TEST - VER 1.	All

PASS BLEND DOOR NOT RESPONDING (ACTIVE) — Continued

TEST	ACTION	APPLICABILITY
3	Turn the ignition off. Disconnect the Passenger Blend Door Actuator harness connector. Disconnect the ATC C1 harness connector. Measure the resistance between the Passenger Blend Door Driver (A) and (B) circuits. Is the resistance above 100k ohms? Yes → Go To 4 No → Repair the Passenger Blend Door Driver (A) and (B) circuits for a short together. With the DRBIII®, reset the ATC after repair/replacement is complete. Perform BODY VERIFICATION TEST - VER 1.	All
4	Turn the ignition off. Disconnect the Passenger Blend Door Actuator harness connector. Disconnect the ATC C1 harness connector. Measure the resistance of the Passenger Blend Door Driver (A) circuit. Is the resistance below 5.0 ohms? Yes → Go To 5 No → Repair the Passenger Blend Door Driver (A) circuit for an open. With the DRBIII®, reset the ATC after repair/replacement is complete. Perform BODY VERIFICATION TEST - VER 1.	All
5	Turn the ignition off. Disconnect the Passenger Blend Door Actuator harness connector. Disconnect the ATC C1 harness connector. Measure the resistance of the Passenger Blend Door Driver (B) circuit. Is the resistance below 5.0 ohms? Yes → Go To 6 No → Repair the Passenger Blend Door Driver (B) circuit for an open. With the DRBIII®, reset the ATC after repair/replacement is complete. Perform BODY VERIFICATION TEST - VER 1.	All
6	Turn the ignition off. Disconnect the ATC C1 harness connector. Measure the resistance between the Passenger Blend Door Driver (A) and (B) circuits. Is the resistance between 26.0 and 46.0 ohms? Yes → Replace the ATC. With the DRBIII®, reset the ATC after repair/replacement is complete. Perform BODY VERIFICATION TEST - VER 1. No → Go To 7	All
7	If there are no possible causes remaining, view repair. Repair Replace the Passenger Blend Door Actuator. With the DRBIII®, reset the ATC after repair/replacement is complete. Perform BODY VERIFICATION TEST - VER 1.	All

Symptom:
PASS BLEND DOOR TRAVEL TOO LARGE (ACTIVE)

When Monitored and Set Condition:

PASS BLEND DOOR TRAVEL TOO LARGE (ACTIVE)

When Monitored: With the ignition on and the IOD fuse installed.

Set Condition: This DTC is set when the ATC monitors the travel range during system initialization and the measured range is greater than expected.

POSSIBLE CAUSES
CHECK THE ATC FOR DTCS
PASSENGER BLEND DOOR ACTUATOR
PASSENGER BLEND DOOR LINKAGE
ATC

TEST	ACTION	APPLICABILITY
1	Turn the ignition on. With the DRB, read the active ATC DTCs. Is the PASSENGER BLEND DOOR NOT RESPONDING DTC set? Yes → Return to the symptom list and choose the symptom. With the DRBIII®, reset the ATC after repair/replacement is complete. Perform BODY VERIFICATION TEST - VER 1. No → Go To 2	All
2	Turn the ignition off. Remove the Passenger Blend Door Actuator. By hand, attempt to rotate the Passenger Blend Door Actuator in both directions. Did the blend door actuator turn in either direction? Yes → Replace the Passenger Blend Door Actuator. With the DRBIII®, reset the ATC after repair/replacement is complete. Perform BODY VERIFICATION TEST - VER 1. No → Go To 3	All

PASS BLEND DOOR TRAVEL TOO LARGE (ACTIVE) — Continued

TEST	ACTION	APPLICABILITY
3	Remove the Passenger Blend Door Actuator. Rotate the blend door (door only). Note: This should rotate approximately 45 degrees from stop to stop. Inspect the blend door linkage for excessive wear or missing linkage. Were any mechanical problems found? Yes → Repair or replace the blend door/linkage as necessary. With the DRBIII®, reset the ATC after repair/replacement is complete. Perform BODY VERIFICATION TEST - VER 1. No → Replace the ATC. With the DRBIII®, reset the ATC after repair/replacement is complete. Perform BODY VERIFICATION TEST - VER 1.	All

Symptom:
PASS BLEND DOOR TRAVEL TOO SMALL (ACTIVE)

When Monitored and Set Condition:

PASS BLEND DOOR TRAVEL TOO SMALL (ACTIVE)

When Monitored: With the ignition on and the IOD fuse installed.

Set Condition: This DTC is set when the ATC monitors the travel range during system initialization and the measured range is less than expected.

POSSIBLE CAUSES
CHECK THE ATC FOR DTCS
ATC
OBSTRUCTED BLEND DOOR
PASSENGER BLEND DOOR ACTUATOR

TEST	ACTION	APPLICABILITY
1	Turn the ignition on. With the DRB, read the active ATC DTCs. Is the PASSENGER BLEND DOOR NOT RESPONDING DTC set? Yes → Return to the symptom list and choose the symptom. With the DRBIII®, reset the ATC after repair/replacement is complete. Perform BODY VERIFICATION TEST - VER 1. No → Go To 2	All
2	Turn the ignition off. Disconnect the Passenger Blend Door Actuator harness connector. Connect a 12-volt Test Light between the Passenger Blend Door Driver (A) and (B) circuits in the Passenger Blend Door Actuator harness connector. Turn the ignition on. While monitoring the test light, turn the passenger blend control knob from lo to hi. **Note: Observe test light for approximately 30 seconds.** Does the test light start to flash and stay flashing? Yes → Go To 3 No → Replace the ATC. With the DRBIII®, reset the ATC after repair/replacement is complete. Perform BODY VERIFICATION TEST - VER 1.	All

PASS BLEND DOOR TRAVEL TOO SMALL (ACTIVE) — Continued

TEST	ACTION	APPLICABILITY
3	Remove the Passenger Blend Door Actuator. Rotate the blend door (door only). Note: This should rotate approximately 45 degrees from stop to stop. Does the blend door move smoothly in both directions? Yes → Replace the Passenger Blend Door Actuator. With the DRBIII®, reset the ATC after repair/replacement is complete. Perform BODY VERIFICATION TEST - VER 1. No → Repair or replace the Passenger Blend Door as necessary. With the DRBIII®, reset the ATC after repair/replacement is complete. Perform BODY VERIFICATION TEST - VER 1.	All

Symptom List:

PCI BUS SHORTED HIGH (ACTIVE)
PCI BUS SHORTED LOW (ACTIVE)

Test Note: All symptoms listed above are diagnosed using the same tests. The title for the tests will be PCI BUS SHORTED HIGH (ACTIVE).

When Monitored and Set Condition:

PCI BUS SHORTED HIGH (ACTIVE)

When Monitored: With the ignition on.

Set Condition: This DTC is set if the ATC detects a short to voltage on the PCI Bus circuit.

PCI BUS SHORTED LOW (ACTIVE)

When Monitored: With the ignition on.

Set Condition: This DTC is set if the ATC detects a short to ground on the PCI Bus circuit.

POSSIBLE CAUSES
DTC CONDITION

TEST	ACTION	APPLICABILITY
1	**NOTE: For this code to be active, the DRB will not be able to communicate with any modules on the vehicle (except the PCM/ECM).** **NOTE: If this code is set and active it will be necessary to replace the Automatic Temperature Control Module for displaying a false DTC.** **NOTE: If this code is NOT active do not perform this test.** If there are no possible causes remaining, view repair. Repair Replace the ATC. With the DRBIII®, reset the ATC after repair/replacement is complete. Perform BODY VERIFICATION TEST - VER 1.	All

Symptom:
REAR BLEND DOOR NOT RESPONDING (ACTIVE)

When Monitored and Set Condition:

REAR BLEND DOOR NOT RESPONDING (ACTIVE)

When Monitored: With the ignition on and the IOD fuse installed.

Set Condition: This DTC is set if the ATC does not receive feedback pulses within 5 seconds of the drive voltage being applied.

POSSIBLE CAUSES
REAR BLEND DOOR DRIVER CIRCUIT (A) SHORTED TO GROUND
REAR BLEND DOOR DRIVER CIRCUIT (B) SHORTED TO GROUND
REAR BLEND DOOR DRIVER CIRCUITS (A) AND (B) SHORTED TOGETHER
REAR BLEND DOOR DRIVER CIRCUIT (A) OPEN
REAR BLEND DOOR DRIVER CIRCUIT (B) OPEN
ATC
REAR BLEND DOOR ACTUATOR

TEST	ACTION	APPLICABILITY
1	Turn the ignition off. Disconnect the Rear Blend Door Actuator harness connector. Disconnect the ATC C1 harness connector. Measure the resistance between ground and the Rear Blend Door Driver (A) circuit. Is the resistance above 100k ohms? Yes → Go To 2 No → Repair the Rear Blend Door Driver (A) circuit for a short to ground. With the DRBIII®, reset the ATC after repair/replacement is complete. Perform BODY VERIFICATION TEST - VER 1.	All
2	Turn the ignition off. Disconnect the Rear Blend Door Actuator harness connector. Disconnect the ATC C1 harness connector. Measure the resistance between ground and the Rear Blend Door Driver (B) circuit. Is the resistance above 100k ohms? Yes → Go To 3 No → Repair the Rear Blend Door Driver (B) circuit for a short to ground. With the DRBIII®, reset the ATC after repair/replacement is complete. Perform BODY VERIFICATION TEST - VER 1.	All

REAR BLEND DOOR NOT RESPONDING (ACTIVE) — Continued

TEST	ACTION	APPLICABILITY
3	Turn the ignition off. Disconnect the Rear Blend Door Actuator harness connector. Disconnect the ATC C1 harness connectors. Measure the resistance between the Rear Blend Door Driver (A) and (B) circuits. Is the resistance above 100k ohms? Yes → Go To 4 No → Repair the Rear Blend Door Driver (A) and (B) circuits for a short together. With the DRBIII®, reset the ATC after repair/replacement is complete. Perform BODY VERIFICATION TEST - VER 1.	All
4	Turn the ignition off. Disconnect the Rear Blend Door Actuator harness connector. Disconnect the ATC C1 harness connector. Measure the resistance of the Rear Blend Door Driver (A) circuit. Is the resistance below 5.0 ohms? Yes → Go To 5 No → Repair the Rear Blend Door Driver (A) circuit for an open. With the DRBIII®, reset the ATC after repair/replacement is complete. Perform BODY VERIFICATION TEST - VER 1.	All
5	Turn the ignition off. Disconnect the Rear Blend Door Actuator harness connector. Disconnect the ATC C1 harness connector. Measure the resistance of the Rear Blend Door Driver (B) circuit. Is the resistance below 5.0 ohms? Yes → Go To 6 No → Repair the Rear Blend Door Driver (B) circuit for an open. With the DRBIII®, reset the ATC after repair/replacement is complete. Perform BODY VERIFICATION TEST - VER 1.	All
6	Turn the ignition off. Disconnect the ATC C1 harness connector. Measure the resistance between the Rear Blend Door Driver (A) and (B) circuits. Is the resistance between 26.0 and 46.0 ohms? Yes → Replace the ATC. With the DRBIII®, reset the ATC after repair/replacement is complete. Perform BODY VERIFICATION TEST - VER 1. No → Go To 7	All
7	If there are no possible causes remaining, view repair. Repair Replace the Rear Blend Door Actuator. With the DRBIII®, reset the ATC after repair/replacement is complete. Perform BODY VERIFICATION TEST - VER 1.	All

Symptom:
REAR BLEND DOOR TRAVEL TOO LARGE (ACTIVE)

When Monitored and Set Condition:

REAR BLEND DOOR TRAVEL TOO LARGE (ACTIVE)

When Monitored: With the ignition on and the IOD fuse installed.

Set Condition: This DTC is set when the ATC monitors the travel range during system initialization and the measured range is greater than expected.

POSSIBLE CAUSES
CHECK THE ATC FOR DTCS
REAR BLEND DOOR ACTUATOR
REAR BLEND DOOR LINKAGE
ATC

TEST	ACTION	APPLICABILITY
1	Turn the ignition on. With the DRB, read the active ATC DTC's. Is the REAR BLEND DOOR NOT RESPONDING DTC set? Yes → Return to the symptom list and choose the symptom. With the DRBIII®, reset the ATC after repair/replacement is complete. Perform BODY VERIFICATION TEST - VER 1. No → Go To 2	All
2	Turn the ignition off. Remove the Rear Blend Door Actuator. By hand, attempt to rotate the Rear Blend Door Actuator in both directions. Did the blend door actuator turn in either direction? Yes → Replace the Rear Blend Door Actuator. With the DRBIII®, reset the ATC after repair/replacement is complete. Perform BODY VERIFICATION TEST - VER 1. No → Go To 3	All

REAR BLEND DOOR TRAVEL TOO LARGE (ACTIVE) — Continued

TEST	ACTION	APPLICABILITY
3	Remove the Rear Blend Door Actuator. Rotate the blend door (door only). Note: This should rotate approximately 45 degrees from stop to stop. Inspect the blend door linkage for excessive wear or missing linkage. Were any mechanical problems found? Yes → Repair or replace the rear blend door/linkage as necessary. With the DRBIII®, reset the ATC after repair/replacement is complete. Perform BODY VERIFICATION TEST - VER 1. No → Replace the ATC. With the DRBIII®, reset the ATC after repair/replacement is complete. Perform BODY VERIFICATION TEST - VER 1.	All

Symptom:
REAR BLEND DOOR TRAVEL TOO SMALL (ACTIVE)

When Monitored and Set Condition:

REAR BLEND DOOR TRAVEL TOO SMALL (ACTIVE)

When Monitored: With the ignition on and the IOD fuse installed.

Set Condition: This DTC is set when the ATC monitors the travel range during system initialization and the measured range is less than expected.

POSSIBLE CAUSES
CHECK THE ATC FOR DTCS
ATC
OBSTRUCTED BLEND DOOR
REAR BLEND DOOR ACTUATOR

TEST	ACTION	APPLICABILITY
1	Turn the ignition on. With the DRB, read the active ATC DTCs. Is the REAR BLEND DOOR NOT RESPONDING DTC set? Yes → Return to the symptom list and choose the symptom. With the DRBIII®, reset the ATC after repair/replacement is complete. Perform BODY VERIFICATION TEST - VER 1. No → Go To 2	All
2	Turn the ignition off. Disconnect the Rear Blend Door Actuator harness connector. Connect a 12-volt Test Light across the Rear Blend Door Actuator harness connector. Turn the ignition on. While monitoring the test light, turn the rear blend control knob from lo to hi. **Note: Observe test light for approximately 30 seconds.** Does the test light start to flash and stay flashing? Yes → Go To 3 No → Replace the ATC. With the DRBIII®, reset the ATC after repair/replacement is complete. Perform BODY VERIFICATION TEST - VER 1.	All

REAR BLEND DOOR TRAVEL TOO SMALL (ACTIVE) — Continued

TEST	ACTION	APPLICABILITY
3	Remove the Rear Blend Door Actuator. Rotate the blend door (door only). Note: This should rotate approximately 45 degrees from stop to stop. Does the rear blend door move smoothly in both directions? Yes → Replace the Rear Blend Door Actuator. With the DRBIII®, reset the ATC after repair/replacement is complete. Perform BODY VERIFICATION TEST - VER 1. No → Repair or replace the blend door as necessary. With the DRBIII®, reset the ATC after repair/replacement is complete. Perform BODY VERIFICATION TEST - VER 1.	All

Symptom List:

REAR FAN POT OPEN (ACTIVE)
REAR FAN POT SHORTED (ACTIVE)
REAR IR SENSOR HIGH (ACTIVE)
REAR IR SENSOR LOW (ACTIVE)
REAR MODE POT OPEN (ACTIVE)
REAR MODE POT SHORTED (ACTIVE)

Test Note: All symptoms listed above are diagnosed using the same tests. The title for the tests will be REAR FAN POT OPEN (ACTIVE).

When Monitored and Set Condition:

REAR FAN POT OPEN (ACTIVE)

When Monitored: With the ignition on and the IOD fuse installed.

Set Condition: This DTC is set if the ATC reads the rear blower switch value and it is above 250 A/D counts.

REAR FAN POT SHORTED (ACTIVE)

When Monitored: With the ignition on and the IOD fuse installed.

Set Condition: This DTC is set if the ATC reads the rear fan switch value and it is below 5 A/D counts.

REAR IR SENSOR HIGH (ACTIVE)

When Monitored: With the ignition on and the IOD fuse installed.

Set Condition: This DTC is set if the ATC reads the Rear IR Sensor value and it is above 250 A/D counts.

REAR IR SENSOR LOW (ACTIVE)

When Monitored: With the ignition on and the IOD fuse installed.

Set Condition: This DTC is set if the ATC reads the Rear IR Sensor value and it is below 5 A/D counts.

REAR MODE POT OPEN (ACTIVE)

When Monitored: With the ignition on and the IOD fuse installed.

Set Condition: This DTC is set if the ATC reads the rear mode select switch value and it is above 250 A/D counts.

REAR MODE POT SHORTED (ACTIVE)

When Monitored: With the ignition on and the IOD fuse installed.

Set Condition: This DTC is set if the ATC reads the rear mode select switch value and it is below 5 A/D counts.

REAR FAN POT OPEN (ACTIVE) — Continued

POSSIBLE CAUSES
REAR ATC SWITCH

TEST	ACTION	APPLICABILITY
1	This DTC indicates a fault in the Rear ATC Switch. View repair. Repair Replace the Rear ATC Switch. With the DRBIII®, reset the ATC after repair/replacement is complete. Perform BODY VERIFICATION TEST - VER 1.	All

Symptom:
REAR IR SENSOR NOT CALIBRATED (ACTIVE)

When Monitored and Set Condition:

REAR IR SENSOR NOT CALIBRATED (ACTIVE)

When Monitored: With the ignition on and the IOD fuse installed.

Set Condition: This DTC is set if the ATC cannot read the IR sensor values or the IR sensor values are not within a defined range of the HVAC air door motor counts.

POSSIBLE CAUSES
BCM
IGNITION SWITCH (RUN) CIRCUIT OPEN
KDB CLOCK CIRCUIT SHORTED TO VOLTAGE
KDB DATA CIRCUIT SHORTED TO GROUND
KDB DATA CIRCUIT SHORTED TO VOLTAGE
KDB CLOCK CIRCUIT SHORTED TO GROUND
KDB DATA CIRCUIT OPEN
ATC - KDB DATA CIRCUIT FAULT
KDB CLOCK CIRCUIT OPEN
ATC - KDB CLOCK CIRCUIT FAULT
REAR AUTOMATIC TEMPERATURE CONTROL SWITCH

TEST	ACTION	APPLICABILITY
1	Turn the ignition off. Disconnect the Rear Automatic Temperature Control Switch harness connector. Turn the ignition on. Measure the voltage of the Ignition Switch (Run) circuit. Is the voltage above 10.0 volts? Yes → Go To 2 No → Go To 13	All
2	Turn the ignition off. Disconnect the Rear Automatic Temperature Control Switch harness connector. Turn the ignition on. Measure the voltage of the KDB Data circuit. Is the voltage above 10.0 volts? Yes → Go To 3 No → Go To 10	All

REAR IR SENSOR NOT CALIBRATED (ACTIVE) — Continued

TEST	ACTION	APPLICABILITY
3	Turn the ignition off. Disconnect the Rear Automatic Temperature Control Switch harness connector. Disconnect the ATC C2 harness connector. Turn the ignition on. Measure the voltage of the KDB Data circuit. Is the voltage above 1.0 volt? Yes → Repair the KDB Data circuit for a short to voltage. With the DRBIII®, reset the ATC after repair/replacement is complete. Perform BODY VERIFICATION TEST - VER 1. No → Go To 4	All
4	Turn the ignition off. Disconnect the Rear Automatic Temperature Control Switch harness connector. Use Scope input cable CH7058, Cable to Probe adapter CH7062, and the red and black test probes. Connect the scope input cable to the channel one connector on the DRB. Attach the red and black leads and the cable to probe adapter to the scope input cable. Select Lab Scope. Select Live. Select 12 volt square wave. Press F2 for Scope. Press F2 and use the arrows to set the voltage range to 20 volts, the Offset to 4.0, and the Probe to x10. Press F2 again and set the divisions to 40ms/Div, then press F2 again when complete. Connect the Black lead to the chassis ground. Connect the Red lead to the KDB Clock circuit in the Rear Automatic Temperature Control Switch harness connector. Turn the ignition on. Observe the voltage display on the DRB Lab Scope. **NOTE: The lab scope pattern should look similar to the example given in the support material and cycle from approximately 0 volts to 8.0 volts.** Did the lab scope pattern and voltage react as noted above? Yes → Go To 5 No → Go To 6	All
5	If there are no possible causes remaining, view repair. Repair Replace the Rear Automatic Temperature Control Switch. With the DRBIII®, reset the ATC after repair/replacement is complete. Perform BODY VERIFICATION TEST - VER 1.	All
6	Turn the ignition off. Disconnect the Rear Automatic Temperature Control Switch harness connector. Disconnect the ATC C2 harness connector. Turn the ignition on. Measure the voltage of the KDB Clock circuit. Is the voltage above 1.0 volt? Yes → Repair the KDB Clock circuit for a short to voltage. With the DRBIII®, reset the ATC after repair/replacement is complete. Perform BODY VERIFICATION TEST - VER 1. No → Go To 7	All

REAR IR SENSOR NOT CALIBRATED (ACTIVE) — Continued

TEST	ACTION	APPLICABILITY
7	Turn the ignition off. Disconnect the Rear Automatic Temperature Control Switch harness connector. Disconnect the ATC C2 harness connector. Measure the resistance between ground and the KDB Clock circuit. Is the resistance above 100k ohms? Yes → Go To 8 No → Repair the KDB Clock circuit for a short to ground. With the DRBIII®, reset the ATC after repair/replacement is complete. Perform BODY VERIFICATION TEST - VER 1.	All
8	Turn the ignition off. Disconnect the Rear Automatic Temperature Control Switch harness connector. Disconnect the ATC C2 harness connector. Measure the resistance of the KDB Clock circuit. Is the resistance below 5.0 ohms? Yes → Go To 9 No → Repair the KDB Clock circuit for an open. With the DRBIII®, reset the ATC after repair/replacement is complete. Perform BODY VERIFICATION TEST - VER 1.	All
9	If there are no possible causes remaining, view repair. Repair Replace the ATC. With the DRBIII®, reset the ATC after repair/replacement is complete. Perform BODY VERIFICATION TEST - VER 1.	All
10	Turn the ignition off. Disconnect the Rear Automatic Temperature Control Switch harness connector. Disconnect the ATC C2 harness connector. Measure the resistance between ground and the KDB Data circuit. Is the resistance above 100k ohms? Yes → Go To 11 No → Repair the KDB Data circuit for a short to ground. With the DRBIII®, reset the ATC after repair/replacement is complete. Perform BODY VERIFICATION TEST - VER 1.	All
11	Turn the ignition off. Disconnect the Rear Automatic Temperature Control Switch harness connector. Disconnect the ATC C2 harness connector. Measure the resistance of the KDB Data circuit. Is the resistance below 5.0 ohms? Yes → Go To 12 No → Repair the KDB Data circuit for an open. With the DRBIII®, reset the ATC after repair/replacement is complete. Perform BODY VERIFICATION TEST - VER 1.	All

REAR IR SENSOR NOT CALIBRATED (ACTIVE) — Continued

TEST	ACTION	APPLICABILITY
12	If there are no possible causes remaining, view repair. Repair Replace the ATC. With the DRBIII®, reset the ATC after repair/replacement is complete. Perform BODY VERIFICATION TEST - VER 1.	All
13	Turn the ignition off. Disconnect the Rear Automatic Temperature Control Switch harness connector. Disconnect the BCM C4 harness connector. Measure the resistance of the Ignition Switch (Run) circuit. Is the resistance below 5.0 ohms? Yes → Replace the BCM. With the DRBIII®, reset the ATC after repair/replacement is complete. Perform BODY VERIFICATION TEST - VER 1. No → Repair the Ignition Switch (Run) circuit for an open. With the DRBIII®, reset the ATC after repair/replacement is complete. Perform BODY VERIFICATION TEST - VER 1.	All

Symptom:

REAR KEYBOARD FAULT (ACTIVE)

When Monitored and Set Condition:

REAR KEYBOARD FAULT (ACTIVE)

When Monitored: With the ignition on and the IOD fuse installed.

Set Condition: This DTC will set if there is an internal fault in the ATC head.

POSSIBLE CAUSES
BCM
IGNITION SWITCH (RUN) CIRCUIT OPEN
KDB CLOCK CIRCUIT SHORTED TO VOLTAGE
KDB DATA CIRCUIT SHORTED TO GROUND
KDB DATA CIRCUIT SHORTED TO VOLTAGE
KDB CLOCK CIRCUIT SHORTED TO GROUND
KDB DATA CIRCUIT OPEN
ATC - KDB DATA CIRCUIT FAULT
KDB CLOCK CIRCUIT OPEN
ATC - KDB CLOCK CIRCUIT FAULT
REAR ATC SWITCH GROUND CIRCUIT OPEN
REAR AUTOMATIC TEMPERATURE CONTROL SWITCH

TEST	ACTION	APPLICABILITY
1	Turn the ignition off. Disconnect the Rear Automatic Temperature Control Switch harness connector. Measure the resistance of the Rear ATC Switch Ground circuit. Is the resistance below 5.0 ohms? Yes → Go To 2 No → Repair the Rear ATC Switch Ground circuit for an open. With the DRBIII®, reset the ATC after repair/replacement is complete. Perform BODY VERIFICATION TEST - VER 1.	All
2	Turn the ignition off. Disconnect the Rear Automatic Temperature Control Switch harness connector. Turn the ignition on. Measure the voltage of the Ignition Switch (Run) circuit. Is the voltage above 10.0 volts? Yes → Go To 3 No → Go To 14	All

REAR KEYBOARD FAULT (ACTIVE) — Continued

TEST	ACTION	APPLICABILITY
3	Turn the ignition off. Disconnect the Rear Automatic Temperature Control Switch harness connector. Turn the ignition on. Measure the voltage of the KDB Data circuit. Is the voltage above 10.0 volts? Yes → Go To 4 No → Go To 11	All
4	Turn the ignition off. Disconnect the Rear Automatic Temperature Control Switch harness connector. Disconnect the ATC C2 harness connector. Turn the ignition on. Measure the voltage of the KDB Data circuit. Is the voltage above 1.0 volt? Yes → Repair the KDB Data circuit for a short to voltage. With the DRBIII®, reset the ATC after repair/replacement is complete. Perform BODY VERIFICATION TEST - VER 1. No → Go To 5	All
5	Turn the ignition off. Disconnect the Rear Automatic Temperature Control Switch harness connector. Use Scope input cable CH7058, Cable to Probe adapter CH7062, and the red and black test probes. Connect the scope input cable to the channel one connector on the DRB. Attach the red and black leads and the cable to probe adapter to the scope input cable. Select Lab Scope. Select Live. Select 12 volt square wave. Press F2 for Scope. Press F2 and use the arrows to set the voltage range to 20 volts, the Offset to 4.0, and the Probe to x10. Press F2 again and set the divisions to 40ms/Div, then press F2 again when complete. Connect the Black lead to the chassis ground. Connect the Red lead to the KDB Clock circuit in the Rear Automatic Temperature Control Switch harness connector. Turn the ignition on. Observe the voltage display on the DRB Lab Scope. **NOTE: The lab scope pattern should look similar to the example given in the support material and cycle from approximately 0 volts to 8.0 volts.** Did the lab scope pattern and voltage react as noted above? Yes → Go To 6 No → Go To 7	All
6	If there are no possible causes remaining, view repair. Repair Replace the Rear Automatic Temperature Control Switch. With the DRBIII®, reset the ATC after repair/replacement is complete. Perform BODY VERIFICATION TEST - VER 1.	All

REAR KEYBOARD FAULT (ACTIVE) — Continued

TEST	ACTION	APPLICABILITY
7	Turn the ignition off. Disconnect the Rear Automatic Temperature Control Switch harness connector. Disconnect the ATC C2 harness connector. Turn the ignition on. Measure the voltage of the KDB Clock circuit. Is the voltage above 1.0 volt? Yes → Repair the KDB Clock circuit for a short to voltage. With the DRBIII®, reset the ATC after repair/replacement is complete. Perform BODY VERIFICATION TEST - VER 1. No → Go To 8	All
8	Turn the ignition off. Disconnect the Rear Automatic Temperature Control Switch harness connector. Disconnect the ATC C2 harness connector. Measure the resistance between ground and the KDB Clock circuit. Is the resistance above 100k ohms? Yes → Go To 9 No → Repair the KDB Clock circuit for a short to ground. With the DRBIII®, reset the ATC after repair/replacement is complete. Perform BODY VERIFICATION TEST - VER 1.	All
9	Turn the ignition off. Disconnect the Rear Automatic Temperature Control Switch harness connector. Disconnect the ATC C2 harness connector. Measure the resistance of the KDB Clock circuit. Is the resistance below 5.0 ohms? Yes → Go To 10 No → Repair the KDB Clock circuit for an open. With the DRBIII®, reset the ATC after repair/replacement is complete. Perform BODY VERIFICATION TEST - VER 1.	All
10	If there are no possible causes remaining, view repair. Repair Replace the ATC. With the DRBIII®, reset the ATC after repair/replacement is complete. Perform BODY VERIFICATION TEST - VER 1.	All
11	Turn the ignition off. Disconnect the Rear Automatic Temperature Control Switch harness connector. Disconnect the ATC C2 harness connector. Measure the resistance between ground and the KDB Data circuit. Is the resistance above 100k ohms? Yes → Go To 12 No → Repair the KDB Data circuit for a short to ground. With the DRBIII®, reset the ATC after repair/replacement is complete. Perform BODY VERIFICATION TEST - VER 1.	All

REAR KEYBOARD FAULT (ACTIVE) — Continued

TEST	ACTION	APPLICABILITY
12	Turn the ignition off. Disconnect the Rear Automatic Temperature Control Switch harness connector. Disconnect the ATC C2 harness connector. Measure the resistance of the KDB Data circuit. Is the resistance below 5.0 ohms? Yes → Go To 13 No → Repair the KDB Data circuit for an open. With the DRBIII®, reset the ATC after repair/replacement is complete. Perform BODY VERIFICATION TEST - VER 1.	All
13	If there are no possible causes remaining, view repair. Repair Replace the ATC. With the DRBIII®, reset the ATC after repair/replacement is complete. Perform BODY VERIFICATION TEST - VER 1.	All
14	Turn the ignition off. Disconnect the Rear Automatic Temperature Control Switch harness connector. Disconnect the BCM C4 harness connector. Measure the resistance of the Ignition Switch (Run) circuit. Is the resistance below 5.0 ohms? Yes → Replace the BCM. With the DRBIII®, reset the ATC after repair/replacement is complete. Perform BODY VERIFICATION TEST - VER 1. No → Repair the Ignition Switch (Run) circuit for an open. With the DRBIII®, reset the ATC after repair/replacement is complete. Perform BODY VERIFICATION TEST - VER 1.	All

Symptom:
REAR MODE DOOR NOT RESPONDING (ACTIVE)

When Monitored and Set Condition:

REAR MODE DOOR NOT RESPONDING (ACTIVE)

When Monitored: With the ignition on and the IOD fuse installed.

Set Condition: This DTC is set if the ATC does not receive feedback pulses within 5 seconds of the drive voltage being applied.

POSSIBLE CAUSES
REAR MODE DOOR DRIVER CIRCUIT (A) SHORTED TO GROUND
REAR MODE DOOR DRIVER CIRCUIT (B) SHORTED TO GROUND
REAR MODE DOOR DRIVER CIRCUITS (A) AND (B) SHORTED TOGETHER
REAR MODE DOOR DRIVER CIRCUIT (A) OPEN
REAR MODE DOOR DRIVER CIRCUIT (B) OPEN
ATC
REAR MODE DOOR ACTUATOR

TEST	ACTION	APPLICABILITY
1	Turn the ignition off. Disconnect the ATC C1 harness connector. Measure the resistance between ground and the Rear Mode Door Driver (A) circuit. Is the resistance above 100k ohms? Yes → Go To 2 No → Repair the Rear Mode Door Driver (A) circuit for a short to ground. With the DRBIII®, reset the ATC after repair/replacement is complete. Perform BODY VERIFICATION TEST - VER 1.	All
2	Turn the ignition off. Disconnect the ATC C1 harness connector. Measure the resistance between ground and the Rear Mode Door Driver (B) circuit. Is the resistance above 100k ohms? Yes → Go To 3 No → Repair the Rear Mode Door Driver (B) circuit for a short to ground. With the DRBIII®, reset the ATC after repair/replacement is complete. Perform BODY VERIFICATION TEST - VER 1.	All

REAR MODE DOOR NOT RESPONDING (ACTIVE) — Continued

TEST	ACTION	APPLICABILITY
3	Turn the ignition off. Disconnect the ATC C1 harness connector. Measure the resistance between the Rear Mode Door Driver (A) and (B) circuits. Is the resistance above 100k ohms? Yes → Go To 4 No → Repair the Rear Mode Door Driver (A) and (B) circuits for a short together. With the DRBIII®, reset the ATC after repair/replacement is complete. Perform BODY VERIFICATION TEST - VER 1.	All
4	Turn the ignition off. Disconnect the ATC C1 harness connector. Disconnect the Rear Mode Door Actuator harness connector. Measure the resistance of the Rear Mode Door Driver (A) circuit. Is the resistance below 5.0 ohms? Yes → Go To 5 No → Repair the Rear Mode Door Driver (A) circuit for an open. With the DRBIII®, reset the ATC after repair/replacement is complete. Perform BODY VERIFICATION TEST - VER 1.	All
5	Turn the ignition off. Disconnect the ATC C1 harness connector. Disconnect the Rear Mode Door Actuator harness connector. Measure the resistance of the Rear Mode Door Driver (B) circuit. Is the resistance below 5.0 ohms? Yes → Go To 6 No → Repair the Rear Mode Door Driver (B) circuit for an open. With the DRBIII®, reset the ATC after repair/replacement is complete. Perform BODY VERIFICATION TEST - VER 1.	All
6	Turn the ignition off. Disconnect the ATC C1 harness connector. Measure the resistance between the Rear Mode Door Driver (A) and (B) circuits. Is the resistance between 26.0 and 46.0 ohms? Yes → Replace the ATC. With the DRBIII®, reset the ATC after repair/replacement is complete. Perform BODY VERIFICATION TEST - VER 1. No → Go To 7	All
7	If there are no possible causes remaining, view repair. Repair Replace the Rear Mode Door Actuator. With the DRBIII®, reset the ATC after repair/replacement is complete. Perform BODY VERIFICATION TEST - VER 1.	All

Symptom:
REAR MODE DOOR TRAVEL TOO LARGE (ACTIVE)

When Monitored and Set Condition:

REAR MODE DOOR TRAVEL TOO LARGE (ACTIVE)

When Monitored: With the ignition on and the IOD fuse installed.

Set Condition: This DTC is set when the ATC monitors the travel range during system initialization and the measured range is greater than expected.

POSSIBLE CAUSES
CHECK THE ATC FOR DTCS
REAR MODE DOOR ACTUATOR
REAR MODE DOOR LINKAGE
ATC

TEST	ACTION	APPLICABILITY
1	Turn the ignition on. With the DRB, read the active ATC DTCs. Is the REAR MODE DOOR NOT RESPONDING DTC set? Yes → Return to the symptom list and choose the symptom. With the DRBIII®, reset the ATC after repair/replacement is complete. Perform BODY VERIFICATION TEST - VER 1. No → Go To 2	All
2	Turn the ignition off. Remove the Rear Mode Door Actuator. By hand, attempt to rotate the Rear Mode Door Actuator in both directions. Did the mode door actuator turn in either direction? Yes → Replace the Rear Mode Door Actuator. With the DRBIII®, reset the ATC after repair/replacement is complete. Perform BODY VERIFICATION TEST - VER 1. No → Go To 3	All

REAR MODE DOOR TRAVEL TOO LARGE (ACTIVE) — Continued

TEST	ACTION	APPLICABILITY
3	Remove the Rear Mode Door Actuator. Rotate the mode door (door only). Note: This should rotate approximately 45 degrees from stop to stop. Inspect the rear mode door linkage for excessive wear or missing linkage. Were any mechanical problems found? Yes → Repair or replace the rear mode door/linkage as necessary. With the DRBIII®, reset the ATC after repair/replacement is complete. Perform BODY VERIFICATION TEST - VER 1. No → Replace the ATC. With the DRBIII®, reset the ATC after repair/replacement is complete. Perform BODY VERIFICATION TEST - VER 1.	All

Symptom:
REAR MODE DOOR TRAVEL TOO SMALL (ACTIVE)

When Monitored and Set Condition:

REAR MODE DOOR TRAVEL TOO SMALL (ACTIVE)

When Monitored: With the ignition on and the IOD fuse installed.

Set Condition: This DTC is set when the ATC monitors the travel range during system initialization and the measured range is less than expected.

POSSIBLE CAUSES
CHECK THE ATC FOR DTCS
ATC
OBSTRUCTED MODE DOOR
REAR MODE DOOR ACTUATOR

TEST	ACTION	APPLICABILITY
1	Turn the ignition on. With the DRB, read the active ATC DTCs. Is the REAR MODE DOOR NOT RESPONDING DTC set? Yes → Return to the symptom list and choose the symptom. With the DRBIII®, reset the ATC after repair/replacement is complete. Perform BODY VERIFICATION TEST - VER 1. No → Go To 2	All
2	Turn the ignition off. Disconnect the Rear Mode Door Actuator harness connector. Connect a 12-volt Test Light between the rear mode door driver (A) and (B) circuits in the Rear A/C Heater Unit harness connector. Turn the ignition on. While monitoring the test light, turn the rear mode control knob from lo to hi. **Note: Observe test light for approximately 30 seconds.** Does the test light start to flash and stay flashing? Yes → Go To 3 No → Replace the ATC. With the DRBIII®, reset the ATC after repair/replacement is complete. Perform BODY VERIFICATION TEST - VER 1.	All

REAR MODE DOOR TRAVEL TOO SMALL (ACTIVE) — Continued

TEST	ACTION	APPLICABILITY
3	Remove the Rear Mode Door Actuator. Rotate the blend door (door only). Note: This should rotate approximately 45 degrees from stop to stop. Does the rear mode door move smoothly in both directions? Yes → Replace the Rear Mode Door Actuator. With the DRBIII®, reset the ATC after repair/replacement is complete. Perform BODY VERIFICATION TEST - VER 1. No → Repair or replace the Rear Mode Door as necessary. With the DRBIII®, reset the ATC after repair/replacement is complete. Perform BODY VERIFICATION TEST - VER 1.	All

Symptom:
RECIRC DOOR NOT RESPONDING (ACTIVE)

When Monitored and Set Condition:

RECIRC DOOR NOT RESPONDING (ACTIVE)

When Monitored: Ignition in RUN and IOD fuse installed.

Set Condition: This DTC is set when the ATC does not receive feedback pulses within 5 seconds of the drive voltage being applied.

POSSIBLE CAUSES
RECIRC DOOR DRIVER CIRCUIT (A) SHORTED TO GROUND
RECIRC DOOR DRIVER CIRCUIT (B) SHORTED TO GROUND
RECIRC DOOR DRIVER CIRCUITS (A) AND (B) SHORTED TOGETHER
RECIRC DOOR DRIVER CIRCUIT (A) OPEN
RECIRC DOOR DRIVER CIRCUIT (B) OPEN
ATC
RECIRCULATION DOOR ACTUATOR

TEST	ACTION	APPLICABILITY
1	Turn the ignition off. Disconnect the Recirculation Door Actuator harness connector. Disconnect the ATC C1 harness connector. Measure the resistance between ground and the Recirculation Door Driver (A) circuit. Is the resistance above 100k ohms? Yes → Go To 2 No → Repair the Recirculation Door Driver (A) circuit for a short to ground. With the DRBIII®, reset the ATC after repair/replacement is complete. Perform BODY VERIFICATION TEST - VER 1.	All
2	Turn the ignition off. Disconnect the Recirculation Door Actuator harness connector. Disconnect the ATC C1 harness connector. Measure the resistance between ground and the Recirculation Door Driver (B) circuit. Is the resistance above 100k ohms? Yes → Go To 3 No → Repair the Recirculation Door Driver (B) circuit for a short to ground. With the DRBIII®, reset the ATC after repair/replacement is complete. Perform BODY VERIFICATION TEST - VER 1.	All

RECIRC DOOR NOT RESPONDING (ACTIVE) — Continued

TEST	ACTION	APPLICABILITY
3	Turn the ignition off. Disconnect the Recirculation Door Actuator harness connector. Disconnect the ATC C1 harness connector. Measure the resistance between the Recirculation Door Driver (A) and (B) circuits. Is the resistance above 100k ohms? Yes → Go To 4 No → Repair the Recirculation Door Driver (A) and (B) circuits for a short together. With the DRBIII®, reset the ATC after repair/replacement is complete. Perform BODY VERIFICATION TEST - VER 1.	All
4	Turn the ignition off. Disconnect the Recirculation Door Actuator harness connector. Disconnect the ATC C1 harness connector. Measure the resistance of the Recirculation Door Driver (A) circuit. Is the resistance below 5.0 ohms? Yes → Go To 5 No → Repair the Recirculation Door Driver (A) circuit for an open. With the DRBIII®, reset the ATC after repair/replacement is complete. Perform BODY VERIFICATION TEST - VER 1.	All
5	Turn the ignition off. Disconnect the Recirculation Door Actuator harness connector. Disconnect the ATC C1 harness connector. Measure the resistance of the Recirculation Door Driver (B) circuit. Is the resistance below 5.0 ohms? Yes → Go To 6 No → Repair the Recirculation Door Driver (B) circuit for an open. With the DRBIII®, reset the ATC after repair/replacement is complete. Perform BODY VERIFICATION TEST - VER 1.	All
6	Turn the ignition off. Disconnect the ATC C1 harness connector. Measure the resistance between the Recirculation Door Driver (A) and (B) circuits. Is the resistance between 26.0 and 46.0 ohms? Yes → Replace the ATC. With the DRBIII®, reset the ATC after repair/replacement is complete. Perform BODY VERIFICATION TEST - VER 1. No → Go To 7	All
7	If there are no possible causes remaining, view repair. Repair Replace the Recirculation Door Actuator. With the DRBIII®, reset the ATC after repair/replacement is complete. Perform BODY VERIFICATION TEST - VER 1.	All

Symptom:
RECIRC DOOR TRAVEL TOO LARGE (ACTIVE)

When Monitored and Set Condition:

RECIRC DOOR TRAVEL TOO LARGE (ACTIVE)

When Monitored: Ignition in RUN and IOD fuse installed.

Set Condition: This DTC is set when the ATC monitors the travel range during system initialization and the measured range is greater than expected.

POSSIBLE CAUSES
CHECK THE ATC FOR DTCS
RECIRCULATION DOOR ACTUATOR
RECIRCULATION DOOR LINKAGE
ATC

TEST	ACTION	APPLICABILITY
1	Turn the ignition on. With the DRB, read the active ATC DTCs. Is the RECIRC DOOR NOT RESPONDING DTC set? Yes → Return to the symptom list and choose the symptom. With the DRBIII®, reset the ATC after repair/replacement is complete. Perform BODY VERIFICATION TEST - VER 1. No → Go To 2	All
2	Turn the ignition off. Remove the Recirculation Door Actuator. By hand, attempt to rotate the Recirculation Door Actuator in both directions. Did the Recirculation Door Actuator turn in either direction? Yes → Replace the Recirculation Door Actuator. With the DRBIII®, reset the ATC after repair/replacement is complete. Perform BODY VERIFICATION TEST - VER 1. No → Go To 3	All

RECIRC DOOR TRAVEL TOO LARGE (ACTIVE) — Continued

TEST	ACTION	APPLICABILITY
3	Remove the Recirculation Door Actuator. Rotate the recirculation door (door only). Note: This should rotate approximately 45 degrees from stop to stop. Inspect the recirculation door linkage for excessive wear or missing linkage. Were any mechanical problems found? Yes → Repair or replace the recirculation door/linkage as necessary. With the DRBIII®, reset the ATC after repair/replacement is complete. Perform BODY VERIFICATION TEST - VER 1. No → Replace the ATC. With the DRBIII®, reset the ATC after repair/replacement is complete. Perform BODY VERIFICATION TEST - VER 1.	All

Symptom:
RECIRC DOOR TRAVEL TOO SMALL (ACTIVE)

When Monitored and Set Condition:

RECIRC DOOR TRAVEL TOO SMALL (ACTIVE)

When Monitored: Ignition in RUN and IOD fuse installed.

Set Condition: This DTC is set when the ATC monitors the travel range during system initialization and the measured range is less than expected.

POSSIBLE CAUSES
CHECK THE ATC FOR DTCS
ATC
OBSTRUCTED RECIRC DOOR
RECIRCULATION DOOR ACTUATOR

TEST	ACTION	APPLICABILITY
1	Turn the ignition on. With the DRB, read the active ATC DTCs. Is the RECIRC DOOR NOT RESPONDING DTC set? Yes → Return to the symptom list and choose the symptom. With the DRBIII®, reset the ATC after repair/replacement is complete. Perform BODY VERIFICATION TEST - VER 1. No → Go To 2	All
2	Turn the ignition off. Disconnect the Recirculation Door Actuator harness connector. Connect a 12-volt Test Light between the Recirculation Door Driver (A) and (B) circuits. Turn the ignition on. While monitoring the test light, press the recirculation control button from off to on. **Note: Observe test light for approximately 30 seconds.** Does the test light start to flash and stay flashing? Yes → Go To 3 No → Replace the ATC. With the DRBIII®, reset the ATC after repair/replacement is complete. Perform BODY VERIFICATION TEST - VER 1.	All

RECIRC DOOR TRAVEL TOO SMALL (ACTIVE) — Continued

TEST	ACTION	APPLICABILITY
3	Remove the Recirculation Door Actuator. Rotate the recirculation door (door only). Note: This should rotate approximately 45 degrees from stop to stop. Does the recirculation door move smoothly in both directions? Yes → Replace the Recirculation Door Actuator. With the DRBIII®, reset the ATC after repair/replacement is complete. Perform BODY VERIFICATION TEST - VER 1. No → Repair or replace the recirculation door as necessary. With the DRBIII®, reset the ATC after repair/replacement is complete. Perform BODY VERIFICATION TEST - VER 1.	All

Symptom:

*ATC HEAD LED(S)/BACK LIGHTING INOPERATIVE

POSSIBLE CAUSES
CHECK FOR ATC DTCS
CHECK FOR BCM DTCS
ATC - LED(S) INOPERATIVE
ATC - BACK LIGHTING INOPERATIVE
PANEL LAMPS DRIVER CIRCUIT OPEN
BODY CONTROL MODULE - PANEL LAMPS DRIVER OPEN

TEST	ACTION	APPLICABILITY
1	Turn the ignition on. With the DRBIII®, read ATC DTCs. Does the DRBIII® display any ATC DTCs? Yes → Return to the symptom list and choose the symptom(s). With the DRBIII®, reset the ATC after repair/replacement is complete. Perform BODY VERIFICATION TEST - VER 1. No → Go To 2	All
2	Turn the ignition on. With the DRBIII®, read the BCM DTCs. Does DRBIII® display Headlamp Switch: Mismatch; STG; Open; or Panel Dim Output Short? Yes → Refer to symptoms Headlamp Switch Mismatch, Headlamp Switch Shorted To Ground, and Headlamp Switch Open in the Exterior Lighting catagory. Refer to symptom Panel Dimming Output Short in the Instrument Cluster catagory. With the DRBIII®, reset the ATC after repair/replacement is complete. Perform BODY VERIFICATION TEST - VER 1. No → Go To 3	All
3	Turn the ignition on. Turn the ATC Power switch on. **NOTE: Compare with a known good ATC Head.** Operate all ATC switches (Front Fan, Rear System, Temp, Mode, A/C, Recirc, Rear Defog) while looking at the display and lights on the ATC Head. Are all of the LEDs operating properly? Yes → Go To 4 No → Replace the ATC in accordance with the Service Information. With the DRBIII®, reset the ATC after repair/replacement is complete. Perform BODY VERIFICATION TEST - VER 1.	All

*ATC HEAD LED(S)/BACK LIGHTING INOPERATIVE — Continued

TEST	ACTION	APPLICABILITY
4	Turn the ignition off. Rotate the Panel Lamps Dimmer switch to the off position. Disconnect the ATC C2 harness connector. Turn the park lamps on. Measure the voltage of the Panel Lamps Driver circuit while rotating the Panel Lamps Dimmer switch from the off position to the full brightness position. Does the voltage change from approximately 2.5 volts to 11.5 volts? Yes → Replace the ATC in accordance with the Service Information. With the DRBIII®, reset the ATC after repair/replacement is complete. Perform BODY VERIFICATION TEST - VER 1. No → Go To 5	All
5	Turn the ignition off. Disconnect the ATC C2 harness connector. Disconnect the Body Control Module C4 harness connector. Measure the resistance of the Panel Lamps Driver circuit between the ATC C2 harness connector and the Body Control Module C4 harness connector. Is the resistance below 5 ohms? Yes → Replace the Body Control Module in accordance with the Service Information. With the DRBIII®, reset the ATC after repair/replacement is complete. Perform BODY VERIFICATION TEST - VER 1. No → Repair the Panel Lamps Driver circuit for an open. With the DRBIII®, reset the ATC after repair/replacement is complete. Perform BODY VERIFICATION TEST - VER 1.	All

Symptom:

***FRONT BLOWER MOTOR INOPERATIVE**

POSSIBLE CAUSES
FRONT CONTROL MODULE (FCM) DTC(S) PRESENT
IPM FUSE #10
FUSED FRONT BLOWER MOTOR RELAY OUTPUT CIRCUIT SHORTED TO GROUND
BLOWER MOTOR SHORTED TO GROUND
FRONT BLOWER POWER MODULE SHORTRD TO GROUND
GROUND CIRCUIT OPEN
BLOWER MOTOR CONTROL CIRCUIT SHORTED TO VOLTAGE
BLOWER MOTOR CONTROL CIRCUIT OPEN
FRONT BLOWER POWER MODULE OPEN
AUTOMATIC TEMPERATURE CONTROL MODULE OPEN
CHECK BLOWER MOTOR OPERATION
FRONT BLOWER POWER MODULE OPEN
IPM - OPEN CIRCUIT
IPM - OPEN CIRCUIT
FRONT BLOWER MOTOR RELAY
IPM - OPEN CIRCUIT
FUSED FRONT BLOWER MOTOR RELAY OUTPUT CIRCUIT OPEN

TEST	ACTION	APPLICABILITY
1	With the DRBIII® in FCM, read the active DTCs. Are any active FCM DTCs present? Yes → For FCM DTCs related to the blower relay circuits, refer to the Heating & A/C catagory. For all other FCM DTCs, refer to the symptom list in the related catagory. With the DRBIII®, reset the ATC after repair/replacement is complete. Perform BODY VERIFICATION TEST - VER 1. No → Go To 2	All
2	Turn the ignition off. Remove and inspect Intelligent Power Module (IPM) Fuse #10. Is the fuse open? Yes → Go To 3 No → Go To 6	All

*FRONT BLOWER MOTOR INOPERATIVE — Continued

TEST	ACTION	APPLICABILITY
3	Replace IPM Fuse #10. Turn the ignition on. Operate the blower motor in all speeds. Start the engine and operate the ATC system in all modes and speeds. Does the blower motor operate properly without blowing the fuse? Yes → Refer to the wiring diagrams located in the service information to help isolate a possible intermittent short to ground condition. With the DRBIII®, reset the ATC after repair/replacement is complete. Perform BODY VERIFICATION TEST - VER 1. No → Go To 4	All
4	Turn the ignition off. Disconnect the Front Blower Power Module C1 harness connector. Measure the resistance between ground and the Fused Front Blower Motor Relay Output circuit. Is the resistance below 10K ohms? Yes → Repair the Fused Front Blower Motor Relay Output circuit for a short to ground. Replace IPM Fuse #10. With the DRBIII®, reset the ATC after repair/replacement is complete. Perform BODY VERIFICATION TEST - VER 1. No → Go To 5	All
5	Turn the ignition off. Replace IPM Fuse #10. Disconnect the Front Blower Power Module C1 harness connector. Disconnect the Front Blower Power Module C2 harness connector. Connect a jumper wire between the Fused Front Blower Motor Relay Output circuit in the Front Blower Power Module C1 harness connector and the DB wire in the Front Blower Power Module C2 harness connector. Connect a jumper wire between the Ground circuit in the Front Blower Power Module C1 harness connector and the DB/YL wire in the Front Blower Power Module C2 harness connector. Turn the ignition on. Does the Blower Motor operate at full speed without blowing the fuse? Yes → Replace the Front Blower Power Module in accordance with the Service Information. Replace IPM Fuse #10. With the DRBIII®, reset the ATC after repair/replacement is complete. Perform BODY VERIFICATION TEST - VER 1. No → Replace the Blower Motor in accordance with the Service Information. Replace IPM Fuse #10. With the DRBIII®, reset the ATC after repair/replacement is complete. Perform BODY VERIFICATION TEST - VER 1.	All

*FRONT BLOWER MOTOR INOPERATIVE — Continued

TEST	ACTION	APPLICABILITY
6	Ensure IPM Fuse #10 is installed. Disconnect the Front Blower Power Module C1 harness connector. Turn the ignition on. **NOTE: The test light must illuminate brightly. Compare the brightness to that of a direct connection to the battery.** Using a 12-volt test light connected to ground, back probe the Fused Front Blower Motor Relay Output circuit in the Front Blower Power Module C1 harness connector. Does the test light illuminate brightly? Yes → Go To 7 No → Go To 13	All
7	Turn the ignition off. Disconnect the Front Blower Power Module C1 harness connector. Measure the resistance between ground and the Ground circuit. Is the resistance below 5.0 ohms? Yes → Go To 8 No → Repair the Ground circuit for an open. With the DRBIII®, reset the ATC after repair/replacement is complete. Perform BODY VERIFICATION TEST - VER 1.	All
8	Turn the ignition off. Disconnect the Front Blower Power Module C1 harness connector. Disconnect the Automatic Temperature Control Module C2 harness connector. Turn the ignition on. Measure the voltage of the Blower Motor Control circuit. Is there any voltage present? Yes → Repair the Blower Motor Control circuit for a short to voltage. With the DRBIII®, reset the ATC after repair/replacement is complete. Perform BODY VERIFICATION TEST - VER 1. No → Go To 9	All
9	Turn the ignition off. Disconnect the Front Blower Power Module C1 harness connector. Disconnect the Automatic Temperature Control Module C2 harness connector. Measure the resistance of the Blower Motor Control circuit between the Front Blower Power Module C1 harness connector and the Automatic Temperature Control Module C2 harness connector. Is the resistance below 5.0 ohms? Yes → Go To 10 No → Repair the Blower Motor Control circuit for an open. With the DRBIII®, reset the ATC after repair/replacement is complete. Perform BODY VERIFICATION TEST - VER 1.	All

*FRONT BLOWER MOTOR INOPERATIVE — Continued

TEST	ACTION	APPLICABILITY
10	Turn the ignition off. Make sure that the Front Blower Power Module C1 harness connector is connected to the Front Blower Power Module. Make sure that the Automatic Temperature Control Module C2 harness connector is connected to the Automatic Temperature Control Module. Start the engine. Press the ATC Power Switch on. Set the blower switch to the LO speed position. While back probing, measure the voltage of the Blower Motor Control circuit in the Automatic Temperature Control Module C2 harness connector. Is the voltage above 10.0 volts? Yes → Go To 11 No → Replace the Front Blower Power Module in accordance with the Service Information. With the DRBIII®, reset the ATC after repair/replacement is complete. Perform BODY VERIFICATION TEST - VER 1.	All

*FRONT BLOWER MOTOR INOPERATIVE — Continued

TEST	ACTION	APPLICABILITY
11	Turn the ignition off. Reconnect all previously disconnected components. Connect the DRBIII® X10 Scope Probe CH7061 to Channel 1 on the DRBIII®. Select the following from the DRBIII® menu: PEP Module Tools; Lab Scope; Live Data; and Lab Scope. Press F2 and then press Enter. Using the left/right arrow keys, set the time to 10ms/Div. Press F2. Using the up/down arrow keys, set the voltage range to +20.0v. Press Enter to move the cursor to Probe. Using the up/down arrow keys, set the Probe to X10. Press F2. Start the engine. Press the ATC Power switch on. Using the X10 Scope Probe, back probe the Blower Motor Control circuit in the Front Blower Power Module C1 harness connector. **NOTE: The Blower Power Module provides a 10.0 volt signal to the ATC Module over the Blower Motor Control circuit. The ATC Module provides a variable duty cycle ground to the 10.0 volt signal based on input from the blower control switch.** **NOTE: When the blower control switch is set to LO speed, the ATC Module provides a short duty cycle (less time grounding the signal voltage).** **NOTE: As higher blower speeds are requested, the ATC Module increases the duty cycle (more time grounding the signal voltage).** **NOTE: When the blower control switch reaches HI speed, the duty cycle increases to where the signal pattern is almost a flat line (with brief voltage spikes).** Set the blower switch to LO speed then slowly move it to HI speed while observing the DRBIII® display. The voltage on the scope patten should cycle from approximately 2.0 volts (duty cycle on) to 10.0 volts (duty cycle off) for all blower speeds. The duty cycle pattern should change smoothly as the blower switch is turned from LO to HI. The duty cycle on time should change from approximately 8 ms at LO speed, to 15 ms at medium speed, and to 25 ms at HI speed. Does the DRBIII® display the voltage range and duty cycle as described above? Yes → Go To 12 No → Replace the Automatic Temperature Control Module in accordance with the Service Information. With the DRBIII®, reset the ATC after repair/replacement is complete. Perform BODY VERIFICATION TEST - VER 1.	All

*FRONT BLOWER MOTOR INOPERATIVE — Continued

TEST	ACTION	APPLICABILITY
12	Turn the ignition off. Disconnect the Front Blower Power Module C1 harness connector. Disconnect the Front Blower Power Module C2 harness connector. Connect a jumper wire between the Fused Front Blower Motor Relay Output circuit in the Front Blower Power Module C1 harness connector and the DB wire in the Front Blower Power Module C2 harness connector. Connect a jumper wire between the Ground circuit in the Front Blower Power Module C1 harness connector and the DB/YL wire in the Front Blower Power Module C2 harness connector. Turn the ignition on. Does the Blower Motor operate at full speed? Yes → Replace the Front Blower Power Module in accordance with the Service Information. With the DRBIII®, reset the ATC after repair/replacement is complete. Perform BODY VERIFICATION TEST - VER 1. No → Replace the Blower Motor in accordance with the Service Information. With the DRBIII®, reset the ATC after repair/replacement is complete. Perform BODY VERIFICATION TEST - VER 1.	All
13	Turn the ignition off. Remove the Front Blower Motor Relay from the IPM. **NOTE: The test light must illuminate brightly. Compare the brightness to that of a direct connection to the battery.** Using a 12-volt test light connected to ground, probe cavity 30 of the Front Blower Motor Relay connector. Does the test light illuminate brightly? Yes → Go To 14 No → Replace the IPM in accordance with the Service Information. With the DRBIII®, reset the ATC after repair/replacement is complete. Perform BODY VERIFICATION TEST - VER 1.	All
14	Turn the ignition off. Remove the Front Blower Motor Relay from the IPM. Remove IPM Fuse #10. Measure the resistance between cavity 87 of the Front Blower Motor Relay connector and IPM Fuse #10 (power input cavity). Is the resistance below 5 ohms? Yes → Go To 15 No → Replace the IPM in accordance with the Service Information. With the DRBIII®, reset the ATC after repair/replacement is complete. Perform BODY VERIFICATION TEST - VER 1.	All

*FRONT BLOWER MOTOR INOPERATIVE — Continued

TEST	ACTION	APPLICABILITY
15	Turn the ignition off. Make sure that the Front Blower Motor Relay is installed. Remove IPM Fuse #10. Turn the ignition on. **NOTE: The test light must illuminate brightly. Compare the brightness to that of a direct connection to the battery.** Using a 12-volt test light connected to ground, probe IPM Fuse #10 (power input cavity). Does the test light illuminate brightly? Yes → Go To 16 No → Replace the Front Blower Motor Relay in accordance with the Service Information. With the DRBIII®, reset the ATC after repair/replacement is complete. Perform BODY VERIFICATION TEST - VER 1.	All
16	Turn the ignition off. Remove IPM Fuse #10. Disconnect the IPM C6 harness connector. Measure the resistance between IPM Fuse #10 (power output cavity) and cavity 7 of the IPM C6 connector (IPM side). Is the resistance below 5 ohms? Yes → Repair the Fused Front Blower Motor Relay Output circuit for an open. With the DRBIII®, reset the ATC after repair/replacement is complete. Perform BODY VERIFICATION TEST - VER 1. No → Replace the IPM in accordance with the Service Information. With the DRBIII®, reset the ATC after repair/replacement is complete. Perform BODY VERIFICATION TEST - VER 1.	All

Symptom:

***FRONT BLOWER RUNS AT ONLY ONE SPEED**

POSSIBLE CAUSES
BLOWER MOTOR CONTROL CIRCUIT SHORTED TO GROUND
AUTOMATIC TEMPERATURE CONTROL MODULE
FRONT BLOWER POWER MODULE

TEST	ACTION	APPLICABILITY
1	Turn the ignition off. Disconnect the Front Blower Power Module C1 harness connector. Disconnect the Automatic Temperature Control Module C2 harness connector. Measure the resistance between ground and the Blower Motor Control circuit. Is the resistance below 10K ohms? Yes → Repair the Blower Motor Control circuit for a short to ground. With the DRBIII®, reset the ATC after repair/replacement is complete. Perform BODY VERIFICATION TEST - VER 1. No → Go To 2	All

*FRONT BLOWER RUNS AT ONLY ONE SPEED — Continued

TEST	ACTION	APPLICABILITY
2	Turn the ignition off. Reconnect all previously disconnected components. Connect the DRBIII® X10 Scope Probe CH7061 to Channel 1 on the DRBIII®. Select the following from the DRBIII® menu: PEP Module Tools; Lab Scope; Live Data; and Lab Scope. Press F2 and then press Enter. Using the left/right arrow keys, set the time to 10ms/Div. Press F2. Using the up/down arrow keys, set the voltage range to +20.0v. Press Enter to move the cursor to Probe. Using the up/down arrow keys, set the Probe to X10. Press F2. Start the engine. Press the ATC Power switch on. Using the X10 Scope Probe, back probe the Blower Motor Control circuit in the Front Blower Power Module C1 harness connector. **NOTE: The Blower Power Module provides a 10.0 volt signal to the ATC Module over the Blower Motor Control circuit. The ATC Module provides a variable duty cycle ground to the 10.0 volt signal based on input from the blower control switch.** **NOTE: When the blower control switch is set to LO speed, the ATC Module provides a short duty cycle (less time grounding the signal voltage).** **NOTE: As higher blower speeds are requested, the ATC Module increases the duty cycle (more time grounding the signal voltage).** **NOTE: When the blower control switch reaches HI speed, the duty cycle increases to where the signal pattern is almost a flat line (with brief voltage spikes).** Set the blower switch to LO speed then slowly move it to HI speed while observing the DRBIII® display. The voltage on the scope patten should cycle from approximately 2.0 volts (duty cycle on) to 10.0 volts (duty cycle off) for all blower speeds. The duty cycle pattern should change smoothly as the blower switch is turned from LO to HI. The duty cycle on time should change from approximately 8 ms at LO speed, to 15 ms at medium speed, and to 25 ms at HI speed. Does the DRBIII® display the voltage range and duty cycle as described above? Yes → Replace the Front Blower Power Module in accordance with the Service Information. With the DRBIII®, reset the ATC after repair/replacement is complete. Perform BODY VERIFICATION TEST - VER 1. No → Replace the Automatic Temperature Control Module in accordance with the Service Information. With the DRBIII®, reset the ATC after repair/replacement is complete. Perform BODY VERIFICATION TEST - VER 1.	All

Symptom:

***HVAC SYSTEM TEST**

POSSIBLE CAUSES
ATTEMPT TO COMMUNICATE WITH THE PCM/ECM, THE BCM, AND THE FCM
CHECK FOR HVAC RELATED DTCS IN THE PCM/ECM
CHECK FOR BCM DTCS
CHECK FOR FCM DTCS
CHECK FOR ACTIVE ATC DTCS AND COOLDOWN TEST FAULT MESSAGES
CHECK FOR HVAC RELATED DTCS IN THE PCM/ECM
MANUAL A/C SYSTEM TEST

TEST	ACTION	APPLICABILITY
1	Turn the ignition on. With the DRBIII®, attempt to communicate with the Powertrain/Engine Control Module. With the DRBIII®, attempt to communicate with the Body Control Module. With the DRBIII®, attempt to communicate with the Front Control Module. Was the DRBIII® able to communicate with the PCM/ECM, the BCM, and the FCM? Yes → Go To 2 No → Refer to the communication category for the related symptom(s). Perform BODY VERIFICATION TEST - VER 1.	All
2	With the DRBIII®, read Powertrain/Engine Computer DTC's. Are any HVAC related DTCs present? Yes → Refer to the Powertrain Diagnostic Procedures Manual for the related symptom(s). Perform BODY VERIFICATION TEST - VER 1. No → Go To 3	All
3	With the DRBIII®, read Body Computer DTC's. Are any DTCs present? Yes → Refer to the appropriate catagory for the related symptom(s). Perform BODY VERIFICATION TEST - VER 1. No → Go To 4	All
4	With the DRBIII®, read Front Control Module DTC's. Are any DTCs present? Yes → For FCM DTCs related to the blower relay circuits, refer to the Heating & A/C catagory. For all other FCM DTCs, refer to the symptom list in the related catagory. Perform BODY VERIFICATION TEST - VER 1. No → Go To 5	All

*HVAC SYSTEM TEST — Continued

TEST	ACTION	APPLICABILITY
5	**CAUTION: The work area ambient temperature must be above 15.6°C (60°F) to test A/C system operation.** **NOTE: Active codes must be resolved before diagnosing stored codes.** **NOTE: Anytime a code becomes active, or a Cooldown Test fault message is displayed, proceed to the conclusion question.** **NOTE: If multiple codes appear, diagnose those that relate to a short circuit first.** Start the engine. Press the ATC Power switch on. Turn the mode control to the panel position. Verify that the front and rear blower motors operate correctly in all speeds from each control. Diagnose and repair all blower related faults before proceeding with this test. Turn the front blower control to the high speed position. **NOTE: Before actuating the AC Cooldown Test, verify that the A/C compressor is not running. If the compressor is running, turn the A/C off and allow the evaporator to warm up before proceeding with the test.** With the DRBIII® in ATC, System Tests, perform the AC Cooldown test. Turn the front blower control to the low speed position. Turn the rear blower control to the Rear Control position. Set the Driver, Rear, and Pass temperature controls to 60. Monitor the DRBIII® for active ATC DTCs while performing the following test steps. Press the recirculation mode switch on, wait 30 seconds, and then press it off. Press the A/C mode switch on, wait 30 seconds, and then press it off. Press the rear defogger switch on, wait 30 seconds, and then press it off. Set the Driver temperature control to the max heat setting, wait 30 seconds, and then set it to the max cool setting. Repeat this step for the Rear and Pass temperature controls. Turn the mode control to each position for 30 seconds and then turn it back to the panel position. Press the Auto HI switch, wait 30 seconds, and then press the Auto LO switch. When function is complete, turn the front blower control to the low speed position. On the Rear ATC Control, set the rear temperature control to the max heat setting, wait 30 seconds, and then set it to the max cool setting. On the Rear ATC Control, turn the mode control to each position for 30 seconds. With the DRBIII® in ATC, Miscellaneous, reset the ATC. Does the DRBIII® display any active ATC DTCs or Cooldown Test fault messages? Yes → Return to the symptom list and choose the symptom(s) Perform BODY VERIFICATION TEST - VER 1. No → Go To 6	All
6	With the DRBIII®, read PCM/ECM DTC's. Are any HVAC related DTCs present? Yes → Refer to the Powertrain Diagnostic Procedures Manual for the related symptom(s). Perform BODY VERIFICATION TEST - VER 1. No → Recheck the climate control system performance. Refer to Service Information for additional information. Perform BODY VERIFICATION TEST - VER 1.	All

Symptom:

*REAR ATC SWITCH LED(S)/BACK LIGHTING INOPERATIVE

POSSIBLE CAUSES
CHECK FOR ATC DTCS
CHECK FOR BCM DTCS
REAR ATC SWITCH - LED(S) INOPERATIVE
REAR ATC SWITCH - BACK LIGHTING INOPERATIVE
PANEL LAMPS DRIVER CIRCUIT OPEN
BODY CONTROL MODULE - PANEL LAMPS DRIVER OPEN

TEST	ACTION	APPLICABILITY
1	Turn the ignition on. With the DRBIII®, read ATC DTCs. Does the DRBIII® display any ATC DTCs? Yes → Return to the symptom list and choose the symptom(s). With the DRBIII®, reset the ATC after repair/replacement is complete. Perform BODY VERIFICATION TEST - VER 1. No → Go To 2	All
2	Turn the ignition on. With the DRBIII®, read the BCM DTCs. Does DRBIII® display Headlamp Switch: Mismatch; STG; Open; or Panel Dim Output Short? Yes → Refer to symptoms Headlamp Switch Mismatch, Headlamp Switch Shorted To Ground, and Headlamp Switch Open in the Exterior Lighting catagory. Refer to symptom Panel Dimming Output Short in the Instrument Cluster catagory. With the DRBIII®, reset the ATC after repair/replacement is complete. Perform BODY VERIFICATION TEST - VER 1. No → Go To 3	All

*REAR ATC SWITCH LED(S)/BACK LIGHTING INOPERATIVE — Continued

TEST	ACTION	APPLICABILITY
3	Turn the ignition on. Turn the ATC Power switch on. Turn the Rear System switch on the ATC Head to the Rear Control position. Turn the Fan switch on the Rear ATC Switch to the Auto position. Set the Rear Temp to the HI setting. **NOTE: Compare with a known good Rear ATC Switch.** While looking at the display on the Rear ATC Switch, press and hold the Temp Up/Down control in the Down position. Are all segments of the LEDs operating properly as the temperature changes from HI to LO? Yes → Go To 4 No → Replace the Rear ATC Switch in accordance with the Service Information. With the DRBIII®, reset the ATC after repair/replacement is complete. Perform BODY VERIFICATION TEST - VER 1.	All
4	Turn the ignition off. Rotate the Panel Lamps Dimmer switch to the off position. Disconnect the Rear ATC Switch harness connector. Turn the park lamps on. Measure the voltage of the Panel Lamps Driver circuit while rotating the Panel Lamps Dimmer switch from the off position to the full brightness position. Does the voltage change from approximately 2.5 volts to 11.5 volts? Yes → Replace the Rear ATC Switch in accordance with the Service Information. With the DRBIII®, reset the ATC after repair/replacement is complete. Perform BODY VERIFICATION TEST - VER 1. No → Go To 5	All
5	Turn the ignition off. Disconnect the Rear ATC Switch harness connector. Disconnect the Body Control Module C3 harness connector. Measure the resistance of the Panel Lamps Driver circuit between the Rear ATC Switch harness connector and the Body Control Module C3 harness connector. Is the resistance below 5 ohms? Yes → Replace the Body Control Module in accordance with the Service Information. With the DRBIII®, reset the ATC after repair/replacement is complete. Perform BODY VERIFICATION TEST - VER 1. No → Repair the Panel Lamps Driver circuit for an open. With the DRBIII®, reset the ATC after repair/replacement is complete. Perform BODY VERIFICATION TEST - VER 1.	All

Symptom:

***REAR BLOWER MOTOR INOPERATIVE**

POSSIBLE CAUSES
FRONT CONTROL MODULE (FCM) DTC(S) PRESENT
IPM FUSE #12
FUSED REAR BLOWER RELAY OUTPUT CIRCUIT SHORTED TO GROUND
BLOWER MOTOR SHORTED TO GROUND
REAR BLOWER MOTOR POWER MODULE SHORTRD TO GROUND
GROUND CIRCUIT OPEN
REAR BLOWER MOTOR CONTROL CIRCUIT SHORTED TO VOLTAGE
REAR BLOWER MOTOR CONTROL CIRCUIT OPEN
REAR BLOWER MOTOR POWER MODULE OPEN
AUTOMATIC TEMPERATURE CONTROL MODULE OPEN
CHECK BLOWER MOTOR OPERATION
REAR BLOWER MOTOR POWER MODULE OPEN
IPM - OPEN CIRCUIT
IPM - OPEN CIRCUIT
REAR BLOWER MOTOR RELAY
IPM - OPEN CIRCUIT
FUSED REAR BLOWER MOTOR RELAY OUTPUT CIRCUIT OPEN

TEST	ACTION	APPLICABILITY
1	With the DRBIII® in FCM, read the active DTCs. Are any active FCM DTCs present? Yes → For FCM DTCs related to the blower relay circuits, refer to the Heating & A/C catagory. For all other FCM DTCs, refer to the symptom list in the related catagory. With the DRBIII®, reset the ATC after repair/replacement is complete. Perform BODY VERIFICATION TEST - VER 1. No → Go To 2	All
2	Turn the ignition off. Remove and inspect Intelligent Power Module (IPM) Fuse #12. Is the fuse open? Yes → Go To 3 No → Go To 6	All

*REAR BLOWER MOTOR INOPERATIVE — Continued

TEST	ACTION	APPLICABILITY
3	Replace IPM Fuse #12. Turn the ignition on. Operate the blower motor in all speeds. Start the engine and operate the ATC system in all modes and speeds. Does the blower motor operate properly without blowing the fuse? Yes → Refer to the wiring diagrams located in the service information to help isolate a possible intermittent short to ground condition. With the DRBIII®, reset the ATC after repair/replacement is complete. Perform BODY VERIFICATION TEST - VER 1. No → Go To 4	All
4	Turn the ignition off. Disconnect the Rear Blower Motor Power Module C1 harness connector. Measure the resistance between ground and the Fused Rear Blower Relay Output circuit. Is the resistance below 10K ohms? Yes → Repair the Fused Rear Blower Relay Output circuit for a short to ground. Replace IPM Fuse #12. With the DRBIII®, reset the ATC after repair/replacement is complete. Perform BODY VERIFICATION TEST - VER 1. No → Go To 5	All
5	Turn the ignition off. Replace IPM Fuse #12. Disconnect the Rear Blower Motor Power Module C1 harness connector. Disconnect the Rear Blower Motor Power Module C2 harness connector. Connect a jumper wire between the Fused Rear Blower Relay Output circuit in the Rear Blower Motor Power Module C1 harness connector and the Power Feed circuit in the Rear Blower Motor Power Module C2 harness connector. Connect a jumper wire between the Ground circuit in the Rear Blower Motor Power Module C1 harness connector and the Ground circuit in the Rear Blower Motor Power Module C2 harness connector. Turn the ignition on. Does the Blower Motor operate at full speed without blowing the fuse? Yes → Replace the Rear Blower Motor Power Module in accordance with the Service Information. Replace IPM Fuse #12. With the DRBIII®, reset the ATC after repair/replacement is complete. Perform BODY VERIFICATION TEST - VER 1. No → Replace the Blower Motor in accordance with the Service Information. Replace IPM Fuse #12. With the DRBIII®, reset the ATC after repair/replacement is complete. Perform BODY VERIFICATION TEST - VER 1.	All

*REAR BLOWER MOTOR INOPERATIVE — Continued

TEST	ACTION	APPLICABILITY
6	Ensure IPM Fuse #12 is installed. Disconnect the Rear Blower Motor Power Module C1 harness connector. Turn the ignition on. **NOTE: The test light must illuminate brightly. Compare the brightness to that of a direct connection to the battery.** Using a 12-volt test light connected to ground, back probe the Fused Rear Blower Relay Output circuit in the Rear Blower Motor Power Module C1 harness connector. Does the test light illuminate brightly? Yes → Go To 7 No → Go To 13	All
7	Turn the ignition off. Disconnect the Rear Blower Motor Power Module C1 harness connector. Measure the resistance between ground and the Ground circuit. Is the resistance below 5.0 ohms? Yes → Go To 8 No → Repair the Ground circuit for an open. With the DRBIII®, reset the ATC after repair/replacement is complete. Perform BODY VERIFICATION TEST - VER 1.	All
8	Turn the ignition off. Disconnect the Rear Blower Motor Power Module C1 harness connector. Disconnect the Automatic Temperature Control Module C2 harness connector. Turn the ignition on. Measure the voltage of the Rear Blower Motor Control circuit. Is there any voltage present? Yes → Repair the Rear Blower Motor Control circuit for a short to voltage. With the DRBIII®, reset the ATC after repair/replacement is complete. Perform BODY VERIFICATION TEST - VER 1. No → Go To 9	All
9	Turn the ignition off. Disconnect the Rear Blower Motor Power Module C1 harness connector. Disconnect the Automatic Temperature Control Module C2 harness connector. Measure the resistance of the Rear Blower Motor Control circuit between the Rear Blower Motor Power Module C1 harness connector and the Automatic Temperature Control Module C2 harness connector. Is the resistance below 5.0 ohms? Yes → Go To 10 No → Repair the Rear Blower Motor Control circuit for an open. With the DRBIII®, reset the ATC after repair/replacement is complete. Perform BODY VERIFICATION TEST - VER 1.	All

*REAR BLOWER MOTOR INOPERATIVE — Continued

TEST	ACTION	APPLICABILITY
10	Turn the ignition off. Make sure that the Rear Blower Motor Power Module C1 harness connector is connected to the Rear Blower Motor Power Module. Make sure that the Automatic Temperature Control Module C2 harness connector is connected to the Automatic Temperature Control Module. Start the engine. Press the ATC Power switch on. Set the Rear System switch on the ATC module to the Rear Control position. Set the blower switch on the Rear ATC Control panel to LO speed. While back probing, measure the voltage of the Rear Blower Motor Control circuit in the Automatic Temperature Control Module C2 harness connector. Is the voltage above 10.0 volts? Yes → Go To 11 No → Replace the Rear Blower Motor Power Module in accordance with the Service Information. With the DRBIII®, reset the ATC after repair/replacement is complete. Perform BODY VERIFICATION TEST - VER 1.	All

*REAR BLOWER MOTOR INOPERATIVE — Continued

TEST	ACTION	APPLICABILITY
11	Turn the ignition off. Reconnect all previously disconnected components. Connect the DRBIII® X10 Scope Probe CH7061 to Channel 1 on the DRBIII®. Select the following from the DRBIII® menu: PEP Module Tools; Lab Scope; Live Data; and Lab Scope. Press F2 and then press Enter. Using the left/right arrow keys, set the time to 10ms/Div. Press F2. Using the up/down arrow keys, set the voltage range to +20.0v. Press Enter to move the cursor to Probe. Using the up/down arrow keys, set the Probe to X10. Press F2. Start the engine. Press the ATC Power switch on. Set the Rear System switch on the ATC module to the Rear Control position. Using the X10 Scope Probe, back probe the Rear Blower Motor Control circuit in the Automatic Temperature Control Module C2 harness connector. **NOTE: The Rear Blower Motor Power Module provides a 10.0 volt signal to the ATC Module over the Rear Blower Motor Control circuit. The ATC Module provides a variable duty cycle ground to the 10.0 volt signal based on input from the Rear Blower switch.** **NOTE: When the Rear Blower switch is set to LO speed, the ATC Module provides a short duty cycle (less time grounding the signal voltage).** **NOTE: As higher blower speeds are requested, the ATC Module increases the duty cycle (more time grounding the signal voltage).** **NOTE: When the Rear Blower switch reaches HI speed, the duty cycle increases to where the signal pattern is almost a flat line (with brief voltage spikes).** Set the blower switch on the Rear ATC Control panel to LO speed then slowly move it to HI speed while observing the DRBIII® display. The voltage on the scope patten should cycle from approximately 2.0 volts (duty cycle on) to 10.0 volts (duty cycle off) for all blower speeds. The duty cycle pattern should change smoothly as the Rear Blower switch is turned from LO to HI. The duty cycle on time should change from approximately 8 ms at LO speed, to 15 ms at medium speed, and to 25 ms at HI speed. Does the DRBIII® display the voltage range and duty cycle as described above? Yes → Go To 12 No → Replace the Automatic Temperature Control Module in accordance with the Service Information. With the DRBIII®, reset the ATC after repair/replacement is complete. Perform BODY VERIFICATION TEST - VER 1.	All

*REAR BLOWER MOTOR INOPERATIVE — Continued

TEST	ACTION	APPLICABILITY
12	Turn the ignition off. Disconnect the Rear Blower Motor Power Module C1 harness connector. Disconnect the Rear Blower Motor Power Module C2 harness connector. Connect a jumper wire between the Fused Rear Blower Relay Output circuit in the Rear Blower Motor Power Module C1 harness connector and the Power Feed circuit in the Rear Blower Motor Power Module C2 harness connector. Connect a jumper wire between the Ground circuit in the Rear Blower Motor Power Module C1 harness connector and the Ground circuit in the Rear Blower Motor Power Module C2 harness connector. Turn the ignition on. Does the Blower Motor operate at full speed? Yes → Replace the Rear Blower Motor Power Module in accordance with the Service Information. With the DRBIII®, reset the ATC after repair/replacement is complete. Perform BODY VERIFICATION TEST - VER 1. No → Replace the Blower Motor in accordance with the Service Information. With the DRBIII®, reset the ATC after repair/replacement is complete. Perform BODY VERIFICATION TEST - VER 1.	All
13	Turn the ignition off. Remove the Rear Blower Motor Relay from the IPM. **NOTE: The test light must illuminate brightly. Compare the brightness to that of a direct connection to the battery.** Using a 12-volt test light connected to ground, probe cavity 30 of the Rear Blower Motor Relay connector. Does the test light illuminate brightly? Yes → Go To 14 No → Replace the IPM in accordance with the Service Information. With the DRBIII®, reset the ATC after repair/replacement is complete. Perform BODY VERIFICATION TEST - VER 1.	All
14	Turn the ignition off. Remove the Rear Blower Motor Relay from the IPM. Remove IPM Fuse #12. Measure the resistance between cavity 87 of the Rear Blower Motor Relay connector and IPM Fuse #12 (power input cavity). Is the resistance below 5 ohms? Yes → Go To 15 No → Replace the IPM in accordance with the Service Information. With the DRBIII®, reset the ATC after repair/replacement is complete. Perform BODY VERIFICATION TEST - VER 1.	All

*REAR BLOWER MOTOR INOPERATIVE — Continued

TEST	ACTION	APPLICABILITY
15	Turn the ignition off. Make sure that the Rear Blower Motor Relay is installed. Remove IPM Fuse #12. Turn the ignition on. **NOTE: The test light must illuminate brightly. Compare the brightness to that of a direct connection to the battery.** Using a 12-volt test light connected to ground, probe IPM Fuse #12 (power input cavity). Does the test light illuminate brightly? Yes → Go To 16 No → Replace the Rear Blower Motor Relay in accordance with the Service Information. With the DRBIII®, reset the ATC after repair/replacement is complete. Perform BODY VERIFICATION TEST - VER 1.	All
16	Turn the ignition off. Remove IPM Fuse #12. Disconnect the IPM C8 harness connector. Measure the resistance between IPM Fuse #12 (power output cavity) and cavity 7 of the IPM C8 connector (IPM side). Is the resistance below 5 ohms? Yes → Repair the Fused Rear Blower Motor Relay Output circuit for an open. With the DRBIII®, reset the ATC after repair/replacement is complete. Perform BODY VERIFICATION TEST - VER 1. No → Replace the IPM in accordance with the Service Information. With the DRBIII®, reset the ATC after repair/replacement is complete. Perform BODY VERIFICATION TEST - VER 1.	All

Symptom:

***REAR BLOWER RUNS AT ONLY ONE SPEED**

POSSIBLE CAUSES
REAR BLOWER MOTOR CONTROL CIRCUIT SHORTED TO GROUND
AUTOMATIC TEMPERATURE CONTROL MODULE
REAR BLOWER MOTOR POWER MODULE

TEST	ACTION	APPLICABILITY
1	Turn the ignition off. Disconnect the Rear Blower Motor Power Module C1 harness connector. Disconnect the Automatic Temperature Control Module C2 harness connector. Measure the resistance between ground and the Rear Blower Motor Control circuit. Is the resistance below 10K ohms? Yes → Repair the Rear Blower Motor Control circuit for a short to ground. With the DRBIII®, reset the ATC after repair/replacement is complete. Perform BODY VERIFICATION TEST - VER 1. No → Go To 2	All

*REAR BLOWER RUNS AT ONLY ONE SPEED — Continued

TEST	ACTION	APPLICABILITY
2	Turn the ignition off. Reconnect all previously disconnected components. Connect the DRBIII® X10 Scope Probe CH7061 to Channel 1 on the DRBIII®. Select the following from the DRBIII® menu: PEP Module Tools; Lab Scope; Live Data; and Lab Scope. Press F2 and then press Enter. Using the left/right arrow keys, set the time to 10ms/Div. Press F2. Using the up/down arrow keys, set the voltage range to +20.0v. Press Enter to move the cursor to Probe. Using the up/down arrow keys, set the Probe to X10. Press F2. Start the engine. Press the ATC Power switch on. Set the Rear System switch on the ATC module to the Rear Control position. Using the X10 Scope Probe, back probe the Rear Blower Motor Control circuit in the Automatic Temperature Control Module C2 harness connector. **NOTE: The Rear Blower Motor Power Module provides a 10.0 volt signal to the ATC Module over the Rear Blower Motor Control circuit. The ATC Module provides a variable duty cycle ground to the 10.0 volt signal based on input from the Rear Blower switch.** **NOTE: When the Rear Blower switch is set to LO speed, the ATC Module provides a short duty cycle (less time grounding the signal voltage).** **NOTE: As higher blower speeds are requested, the ATC Module increases the duty cycle (more time grounding the signal voltage).** **NOTE: When the Rear Blower switch reaches HI speed, the duty cycle increases to where the signal pattern is almost a flat line (with brief voltage spikes).** Set the blower switch on the Rear ATC Control panel to LO speed then slowly move it to HI speed while observing the DRBIII® display. The voltage on the scope patten should cycle from approximately 2.0 volts (duty cycle on) to 10.0 volts (duty cycle off) for all blower speeds. The duty cycle pattern should change smoothly as the Rear Blower switch is turned from LO to HI. The duty cycle on time should change from approximately 8 ms at LO speed, to 15 ms at medium speed, and to 25 ms at HI speed. Does the DRBIII® display the voltage range and duty cycle as described above? Yes → Replace the Rear Blower Motor Power Module in accordance with the Service Information. With the DRBIII®, reset the ATC after repair/replacement is complete. Perform BODY VERIFICATION TEST - VER 1. No → Replace the Automatic Temperature Control Module in accordance with the Service Information. With the DRBIII®, reset the ATC after repair/replacement is complete. Perform BODY VERIFICATION TEST - VER 1.	All

Symptom List:

CABIN HEATER PRE-TEST
CABIN HEATER CONTROL CIRCUIT OPEN (STORED)
CABIN HEATER CONTROL CIRCUIT SHORT TO BATTERY (STORED)

Test Note: All symptoms listed above are diagnosed using the same tests. The title for the tests will be CABIN HEATER PRE-TEST.

When Monitored and Set Condition:

CABIN HEATER CONTROL CIRCUIT OPEN (STORED)

When Monitored: When the DCHA system is off.

Set Condition: The DCHA Low Side Driver inside the FCM expects to see a system voltage of 13.8 volts through the DCHA relay coil when the DCHA system is off. This DTC will set if the FCM sees a voltage below 3.5 volts on the Cabin Heater Assist Control circuit during this time.

CABIN HEATER CONTROL CIRCUIT SHORT TO BATTERY (STORED)

When Monitored: During DCHA activation and operation.

Set Condition: This DTC will set if the FCM sees between 5.0 and 15.0 volts on the Cabin Heater Assist Control circuit.

POSSIBLE CAUSES
NO RESPONSE FROM CABIN HEATER MODULE
DTC(S) PRESENT
CABIN HEATER INOPERABLE FROM A/C - HEATER MODULE
STORED DCHA DTC(S) TEST COMPLETE

TEST	ACTION	APPLICABILITY
1	**WARNING: DO NOT OPERATE THE DCHA IN AN ENCLOSED AREA SUCH AS A GARAGE THAT DOES NOT HAVE EXHAUST VENTILATION FACILITIES. ALWAYS VENT THE DCHA's EXHAUST WHEN OPERATING THE DCHA. FAILURE TO FOLLOW THESE INSTRUCTIONS MAY RESULT IN PERSONAL INJURY OR DEATH.** Turn the ignition on. With the DRBIII®, attempt to communicate with the Cabin Heater Module. Does the DRBIII® display: No Response From Cabin Heater Module? Yes → Refer to Communication for the related symptom. Perform CABIN HEATER VERIFICATION TEST - VER 1. No → Go To 2	All

CABIN HEATER PRE-TEST — Continued

TEST	ACTION	APPLICABILITY
2	**WARNING: DO NOT OPERATE THE DCHA IN AN ENCLOSED AREA SUCH AS A GARAGE THAT DOES NOT HAVE EXHAUST VENTILATION FACILITIES. ALWAYS VENT THE DCHA's EXHAUST WHEN OPERATING THE DCHA. FAILURE TO FOLLOW THESE INSTRUCTIONS MAY RESULT IN PERSONAL INJURY OR DEATH.** Turn the ignition on. With the DRBIII®, read Cabin Heater DTCs. Is DTC B1813 Heater In Lockout Mode present? Yes → Go To 3 No → Go To 4	All
3	**WARNING: DO NOT OPERATE THE DCHA IN AN ENCLOSED AREA SUCH AS A GARAGE THAT DOES NOT HAVE EXHAUST VENTILATION FACILITIES. ALWAYS VENT THE DCHA's EXHAUST WHEN OPERATING THE DCHA. FAILURE TO FOLLOW THESE INSTRUCTIONS MAY RESULT IN PERSONAL INJURY OR DEATH.** Start the engine. Allow the engine to idle. Turn the A/C - Heater Control Module's Power switch on. Turn the Blower switch to the high speed position. Set the Blend Control to the max heat position. Remove Cabin Heater Fuse #15 from the IPM for a minimum of five seconds, then reinstall the fuse. The DCHA may attempt to start. Turn the Blower switch off and turn the A/C - Heater Control Module's Power switch off. Turn the engine off. View repair Repair Go To 4	All

CABIN HEATER PRE-TEST — Continued

TEST	ACTION	APPLICABILITY
4	**WARNING: DO NOT OPERATE THE DCHA IN AN ENCLOSED AREA SUCH AS A GARAGE THAT DOES NOT HAVE EXHAUST VENTILATION FACILITIES. ALWAYS VENT THE DCHA's EXHAUST WHEN OPERATING THE DCHA. FAILURE TO FOLLOW THESE INSTRUCTIONS MAY RESULT IN PERSONAL INJURY OR DEATH.** **WARNING: ALLOW THE DCHA ASSEMBLY TO COOL BEFORE PERFORMING A COMPONENT INSPECTION/REPAIR/REPLACEMENT. FAILURE TO FOLLOW THESE INSTRUCTIONS MAY RESULT IN PERSONAL INJURY.** **NOTE: The DCHA Control will store up to three DTCs in its memory.** **NOTE: If the DCHA Control detects a new fault in the DCHA system, one that is not already stored in its memory, the DCHA Control will clear the oldest of the three stored DTCs, and it will store the new fault's DTC.** **NOTE: If the DCHA control detects a reoccurrence of a stored fault, the DCHA control will overwrite that fault's DTC with the most recent occurrence.** Turn the ignition on. Set the Blend Control to the max cool position. Turn the A/C - Heater Control Module's Power switch off. With the DRBIII®, record and erase Cabin Heater and FCM DTCs. Start the engine. Allow the engine to idle. Turn the A/C - Heater Control Module's Power switch on. Turn the Blower switch to the high speed position. **CAUTION: Do not activate the DCHA Field Mode Test with the engine off. Failure to follow these instructions may result in internal damage to the DCHA Heater Module.** **NOTE: Do not disconnect the vehicle's battery or the DCHA's main power supply while the DCHA is in operation or in run-down mode. Failure to follow these instructions may result in excess emissions from the DCHA during heater operation.** With the DRBIII® in Cabin Heater, Systems Tests, select Field Mode and press Enter. Set the Blend Control to the max heat position. Upon completion of the Field Mode Test, proceed as follows: With the DRBIII®, read Cabin Heater and Active FCM DTCs. Turn the Blower switch off and turn the A/C - Heater Control Module's Power switch off. Turn the engine off. Are any DTCs present? Yes → Return to the symptom list and choose the DTC(s). Diagnose and repair all FCM faults prior to diagnosing DCHA faults. If DTC B1813 Heater In Lockout Mode reset with other DTC(s), reset the heater before diagnosing the other DTC(s). Perform CABIN HEATER VERIFICATION TEST - VER 1. No → Go To 5	All
5	Is the symptom Cabin Heater inoperable from the A/C - Heater Module? Yes → Refer to symptom *Cabin Heater Inoperable From A/C - Heater Module in the Cabin Heater category. Perform CABIN HEATER VERIFICATION TEST - VER 1. No → Let DCHA cool. Inspect fuel line, intake & exhaust, & coolant hoses for restrictions, obstructions, loose clamps, leakage, etc. Check connectors. Clean & repair as necessary. Refer to Service Manual for additional symptom based diagnosis, if necessary. Perform CABIN HEATER VERIFICATION TEST - VER 1.	All

Symptom:

B1000 CONTROL UNIT ERRONEOUS

When Monitored and Set Condition:

B1000 CONTROL UNIT ERRONEOUS

When Monitored: During DCHA activation.

Set Condition: This DTC will set if a fault occurs with the DCHA Control Unit's memory.

POSSIBLE CAUSES
DCHA CONTROL UNIT FAULT

TEST	ACTION	APPLICABILITY
1	**WARNING: DO NOT OPERATE THE DCHA IN AN ENCLOSED AREA SUCH AS A GARAGE THAT DOES NOT HAVE EXHAUST VENTILATION FACILITIES. ALWAYS VENT THE DCHA's EXHAUST WHEN OPERATING THE DCHA. FAILURE TO FOLLOW THESE INSTRUCTIONS MAY RESULT IN PERSONAL INJURY OR DEATH.** **WARNING: ALLOW THE DCHA ASSEMBLY TO COOL BEFORE PERFORMING A COMPONENT INSPECTION/REPAIR/REPLACEMENT. FAILURE TO FOLLOW THESE INSTRUCTIONS MAY RESULT IN PERSONAL INJURY.** **CAUTION: DO NOT PERFORM THIS TEST UNLESS DIRECTED HERE BY THE CABIN HEATER PRE-TEST. ALWAYS PERFORM THE CABIN HEATER PRE-TEST PRIOR TO PERFORMING ANY OTHER CABIN HEATER TEST FOR THE RESULT TO BE VALID.** Turn the ignition off. View repair Repair Replace the DCHA Heater Module in accordance with the Service Information. Perform CABIN HEATER VERIFICATION TEST - VER 1.	All

Symptom List:

B1800 NO START
B1801 FLAME OUT: DURING HEATING CYCLE
B1801 FLAME OUT: UNSTABLE OPERATION

Test Note: All symptoms listed above are diagnosed using the same tests. The title for the tests will be B1800 NO START.

When Monitored and Set Condition:

B1800 NO START

When Monitored: After DCHA activation.

Set Condition: This DTC will set if the Flame Sensor resistance is not within the expected parameters 160 sections after activation.

B1801 FLAME OUT: DURING HEATING CYCLE

When Monitored: After DCHA activation, and during subsequent start attempts.

Set Condition: This DTC will set if the Flame Sensor resistance is not within the expected parameters.

B1801 FLAME OUT: UNSTABLE OPERATION

When Monitored: After DCHA activation.

Set Condition: This DTC will set if the Flame Sensor resistance is not within the expected parameters.

POSSIBLE CAUSES
LOW FUEL LEVEL IN VEHICLE'S FUEL TANK
DOSING PUMP INOPERABLE, NO DOSING PUMP DTCS SET
DCHA FUEL LINE RESTRICTED/LEAKING/DAMAGED
DOSING PUMP
DCHA AIR INTAKE/EXHAUST RESTRICTED
DCHA HEATER MODULE FAULT

B1800 NO START — Continued

TEST	ACTION	APPLICABILITY
1	**WARNING: DO NOT OPERATE THE DCHA IN AN ENCLOSED AREA SUCH AS A GARAGE THAT DOES NOT HAVE EXHAUST VENTILATION FACILITIES. ALWAYS VENT THE DCHA's EXHAUST WHEN OPERATING THE DCHA. FAILURE TO FOLLOW THESE INSTRUCTIONS MAY RESULT IN PERSONAL INJURY OR DEATH.** **CAUTION: DO NOT PERFORM THIS TEST UNLESS DIRECTED HERE BY THE CABIN HEATER PRE-TEST. ALWAYS PERFORM THE CABIN HEATER PRE-TEST PRIOR TO PERFORMING ANY OTHER CABIN HEATER TEST FOR THE RESULT TO BE VALID.** Verify that there is more than an 1/8 of a tank of fuel in the vehicle's fuel tank. Is there more than an 1/8 of a tank of fuel in the vehicle's fuel tank? Yes → Go To 2 No → Add fuel to the vehicle's fuel tank to bring the fuel level above 1/8 of a tank. Perform CABIN HEATER VERIFICATION TEST - VER 1.	All
2	**WARNING: DO NOT OPERATE THE DCHA IN AN ENCLOSED AREA SUCH AS A GARAGE THAT DOES NOT HAVE EXHAUST VENTILATION FACILITIES. ALWAYS VENT THE DCHA's EXHAUST WHEN OPERATING THE DCHA. FAILURE TO FOLLOW THESE INSTRUCTIONS MAY RESULT IN PERSONAL INJURY OR DEATH.** **WARNING: ALLOW THE DCHA ASSEMBLY TO COOL BEFORE PERFORMING A COMPONENT INSPECTION/REPAIR/REPLACEMENT. FAILURE TO FOLLOW THESE INSTRUCTIONS MAY RESULT IN PERSONAL INJURY.** Turn the ignition on. **CAUTION: Do not actuate the Dosing Pump more than two times. Doing so will put excess fuel in the DCHA Heater Module and cause smoke to emit from the DCHA exhaust pipe when heater activation occurs.** With the DRBIII® in Actuators, select Dosing Pump. Listen for the pump to run. A clicking noise should be heard coming from the pump. Press Page Back and select No to stop the Dosing Pump actuation. Does the Dosing Pump run when actuated? Yes → Go To 3 No → Replace the Dosing Pump in accordance with the Service Information. Perform CABIN HEATER VERIFICATION TEST - VER 1.	All

B1800 NO START — Continued

TEST	ACTION	APPLICABILITY
3	**WARNING: DO NOT OPERATE THE DCHA IN AN ENCLOSED AREA SUCH AS A GARAGE THAT DOES NOT HAVE EXHAUST VENTILATION FACILITIES. ALWAYS VENT THE DCHA's EXHAUST WHEN OPERATING THE DCHA. FAILURE TO FOLLOW THESE INSTRUCTIONS MAY RESULT IN PERSONAL INJURY OR DEATH.** **WARNING: ALLOW THE DCHA ASSEMBLY TO COOL BEFORE PERFORMING A COMPONENT INSPECTION/REPAIR/REPLACEMENT. FAILURE TO FOLLOW THESE INSTRUCTIONS MAY RESULT IN PERSONAL INJURY.** Turn the ignition off. Inspect the DCHA fuel line exterior for restrictions, leakage, and damage. Verify that the DCHA fuel line is installed correctly. **NOTE: Waxed fuel can obstruct the fuel line and reduce flow. Check for the appropriate winter grade fuel and replace as necessary.** Check for obstructions in the fuel line. Refer to Fuel Line, Cleaning in the Service Information. Is the DCHA fuel line Ok? Yes → Go To 4 No → Repair the DCHA fuel line as necessary in accordance with the Service Information. Perform CABIN HEATER VERIFICATION TEST - VER 1.	All
4	**WARNING: DO NOT OPERATE THE DCHA IN AN ENCLOSED AREA SUCH AS A GARAGE THAT DOES NOT HAVE EXHAUST VENTILATION FACILITIES. ALWAYS VENT THE DCHA's EXHAUST WHEN OPERATING THE DCHA. FAILURE TO FOLLOW THESE INSTRUCTIONS MAY RESULT IN PERSONAL INJURY OR DEATH.** **WARNING: ALLOW THE DCHA ASSEMBLY TO COOL BEFORE PERFORMING A COMPONENT INSPECTION/REPAIR/REPLACEMENT. FAILURE TO FOLLOW THESE INSTRUCTIONS MAY RESULT IN PERSONAL INJURY.** Turn the ignition off. Disconnect the Dosing Pump rubber insulators from the splash shield. Disconnect the fuel line from the fuel outlet side of the Dosing Pump. Using a suitable length of fuel line, connect one end to the fuel outlet side of the Dosing Pump and place the other end in a suitable container. Turn the ignition on. **CAUTION: For the result of this test to be valid, actuate the Dosing Pump Prime twice if the DCHA fuel supply line was drained and then not primed prior to performing this test.** **NOTE: Allow the Dosing Pump Prime to run the full 45 seconds.** With the DRBIII® in System Tests, select Dosing Pump Prime. When the Dosing Pump Prime is complete, measure the amount of fuel in the container. Does the Dosing Pump output approx 14 ml (0.5 oz) of fuel in a single Dosing Pump Prime activation? Yes → Go To 5 No → Replace the Dosing Pump in accordance with the Service Information. Perform CABIN HEATER VERIFICATION TEST - VER 1.	All

B1800 NO START — Continued

TEST	ACTION	APPLICABILITY
5	**WARNING: DO NOT OPERATE THE DCHA IN AN ENCLOSED AREA SUCH AS A GARAGE THAT DOES NOT HAVE EXHAUST VENTILATION FACILITIES. ALWAYS VENT THE DCHA's EXHAUST WHEN OPERATING THE DCHA. FAILURE TO FOLLOW THESE INSTRUCTIONS MAY RESULT IN PERSONAL INJURY OR DEATH.** **WARNING: ALLOW THE DCHA ASSEMBLY TO COOL BEFORE PERFORMING A COMPONENT INSPECTION/REPAIR/REPLACEMENT. FAILURE TO FOLLOW THESE INSTRUCTIONS MAY RESULT IN PERSONAL INJURY.** Turn the ignition off. Inspect the DCHA air intake pipe and exhaust pipe for restrictions and obstructions. Is the DCHA air intake pipe and exhaust pipe Ok? Yes → Replace the DCHA Heater Module in accordance with the Service Information. Perform CABIN HEATER VERIFICATION TEST - VER 1. No → Repair the DCHA air intake/exhaust as necessary in accordance with the Service Information. Perform CABIN HEATER VERIFICATION TEST - VER 1.	All

Symptom:

B1802 POWER SUPPLY OUT OF RANGE: LOW VOLTAGE THRESHOLD

When Monitored and Set Condition:

B1802 POWER SUPPLY OUT OF RANGE: LOW VOLTAGE THRESHOLD

When Monitored: With the engine running.

Set Condition: This DTC will set if the DCHA's power supply voltage drops below 10.0 volts for longer than 20 seconds.

POSSIBLE CAUSES
FIELD MODE TEST RUN WITH THE ENGINE OFF
VEHICLE'S BATTERY SYSTEM
VEHICLE'S CHARGING SYSTEM NOT OPERATING PROPERLY
DCHA CONTROL UNIT FAULT
FUSED B+ CIRCUIT HIGH RESISTANCE
DCHA CONTROL UNIT FAULT

TEST	ACTION	APPLICABILITY
1	**WARNING: DO NOT OPERATE THE DCHA IN AN ENCLOSED AREA SUCH AS A GARAGE THAT DOES NOT HAVE EXHAUST VENTILATION FACILITIES. ALWAYS VENT THE DCHA's EXHAUST WHEN OPERATING THE DCHA. FAILURE TO FOLLOW THESE INSTRUCTIONS MAY RESULT IN PERSONAL INJURY OR DEATH.** **CAUTION: DO NOT PERFORM THIS TEST UNLESS DIRECTED HERE BY THE CABIN HEATER PRE-TEST. ALWAYS PERFORM THE CABIN HEATER PRE-TEST PRIOR TO PERFORMING ANY OTHER CABIN HEATER TEST FOR THE RESULT TO BE VALID.** Was the Field Mode Test run with the engine off? Yes → Rerun the Field Mode Test exactly as it is described in Test 4 of the Cabin Heater Pre-Test. If DTC B1802 resets, Go To Test #2 of this symptom. Otherwise, perform other diagnosis and testing as necessary. Perform CABIN HEATER VERIFICATION TEST - VER 1. No → Go To 2	All

B1802 POWER SUPPLY OUT OF RANGE: LOW VOLTAGE THRESHOLD — Continued

TEST	ACTION	APPLICABILITY
2	**WARNING: DO NOT OPERATE THE DCHA IN AN ENCLOSED AREA SUCH AS A GARAGE THAT DOES NOT HAVE EXHAUST VENTILATION FACILITIES. ALWAYS VENT THE DCHA's EXHAUST WHEN OPERATING THE DCHA. FAILURE TO FOLLOW THESE INSTRUCTIONS MAY RESULT IN PERSONAL INJURY OR DEATH.** Turn the ignition off. Inspect the vehicle's battery terminals, cable terminals, and cables for corrosion and damage in accordance with the Service Information. Test the vehicle's battery in accordance with the Service Information. Is the vehicle's battery system Ok? Yes → Go To 3 No → Clean/repair the vehicle's battery system in accordance with the Service Information. Perform CABIN HEATER VERIFICATION TEST - VER 1.	All
3	**WARNING: DO NOT OPERATE THE DCHA IN AN ENCLOSED AREA SUCH AS A GARAGE THAT DOES NOT HAVE EXHAUST VENTILATION FACILITIES. ALWAYS VENT THE DCHA's EXHAUST WHEN OPERATING THE DCHA. FAILURE TO FOLLOW THESE INSTRUCTIONS MAY RESULT IN PERSONAL INJURY OR DEATH.** Check the vehicle's charging system for proper operation in accordance with the Service Information. Is the vehicle's charging system operating properly? Yes → Go To 4 No → Repair the vehicle's charging system in accordance with the Service Information. Perform CABIN HEATER VERIFICATION TEST - VER 1.	All
4	**WARNING: DO NOT OPERATE THE DCHA IN AN ENCLOSED AREA SUCH AS A GARAGE THAT DOES NOT HAVE EXHAUST VENTILATION FACILITIES. ALWAYS VENT THE DCHA's EXHAUST WHEN OPERATING THE DCHA. FAILURE TO FOLLOW THESE INSTRUCTIONS MAY RESULT IN PERSONAL INJURY OR DEATH.** **WARNING: ALLOW THE DCHA ASSEMBLY TO COOL BEFORE PERFORMING A COMPONENT INSPECTION/REPAIR/REPLACEMENT. FAILURE TO FOLLOW THESE INSTRUCTIONS MAY RESULT IN PERSONAL INJURY.** Turn the ignition on. With the DRBIII® in Sensors, record the DCHA Operating Voltage. Disconnect the Cabin Heater Assist C1 harness connector. Measure the voltage between the Fused B+ circuit and ground. Is there more than 1.0 volt difference between the Operating Voltage and the Fused B+ voltage? Yes → Replace the DCHA Heater Module in accordance with the Service Information. Perform CABIN HEATER VERIFICATION TEST - VER 1. No → Go To 5	All

B1802 POWER SUPPLY OUT OF RANGE: LOW VOLTAGE THRESHOLD — Continued

TEST	ACTION	APPLICABILITY
5	**WARNING: DO NOT OPERATE THE DCHA IN AN ENCLOSED AREA SUCH AS A GARAGE THAT DOES NOT HAVE EXHAUST VENTILATION FACILITIES. ALWAYS VENT THE DCHA's EXHAUST WHEN OPERATING THE DCHA. FAILURE TO FOLLOW THESE INSTRUCTIONS MAY RESULT IN PERSONAL INJURY OR DEATH.** **WARNING: ALLOW THE DCHA ASSEMBLY TO COOL BEFORE PERFORMING A COMPONENT INSPECTION/REPAIR/REPLACEMENT. FAILURE TO FOLLOW THESE INSTRUCTIONS MAY RESULT IN PERSONAL INJURY.** Make sure that the Cabin Heater Assist C1 harness connector is connected to the DCHA. Connect a suitable voltmeter to the vehicle's battery. Position the voltmeter where it can be monitored while operating the DRBIII®. Turn the ignition on. Set the Blend Control to the max cool position. Turn the A/C - Heater Control Module's Power switch off. Start the engine. Allow the engine to idle. Turn the A/C - Heater Control Module's Power switch on. Turn the Blower switch to the high speed position. **CAUTION: Do not activate the DCHA Field Mode Test with the engine off. Failure to follow these instructions may result in internal damage to the DCHA Heater Module.** **NOTE: Do not disconnect the vehicle's battery or the DCHA's main power supply while the DCHA is in operation or in run-down mode. Failure to follow these instructions may result in excess emissions from the DCHA during heater operation.** With the DRBIII® in Cabin Heater, Systems Tests, select Field Mode and press Enter. Set the Blend Control to the max heat position. With the DRBIII® in Sensors, monitor the DCHA Operating Voltage and the voltmeter while the Field Mode Test is running. Upon completion of the Field Mode Test proceed as follows: Turn the Blower switch off and turn the A/C - Heater Control Module's Power switch off. Turn the engine off. Was there more than 1.5 volts difference between Operating & battery voltage during the test? Yes → Repair the high resistance in the Fused B+ circuit. Perform CABIN HEATER VERIFICATION TEST - VER 1. No → Replace the DCHA Heater Module in accordance with the Service Information. Perform CABIN HEATER VERIFICATION TEST - VER 1.	All

Symptom:

B1802 POWER SUPPLY OUT OF RANGE: VOLTAGE ABOVE 15.5 VOLTS

When Monitored and Set Condition:

B1802 POWER SUPPLY OUT OF RANGE: VOLTAGE ABOVE 15.5 VOLTS

When Monitored: With the engine running.

Set Condition: This DTC will set if the DCHA's power supply voltage exceeds 15.5 volts for longer than six seconds.

POSSIBLE CAUSES
VEHICLE'S CHARGING SYSTEM OVERCHARGING
DCHA CONTROL UNIT FAULT

TEST	ACTION	APPLICABILITY
1	**WARNING: DO NOT OPERATE THE DCHA IN AN ENCLOSED AREA SUCH AS A GARAGE THAT DOES NOT HAVE EXHAUST VENTILATION FACILITIES. ALWAYS VENT THE DCHA's EXHAUST WHEN OPERATING THE DCHA. FAILURE TO FOLLOW THESE INSTRUCTIONS MAY RESULT IN PERSONAL INJURY OR DEATH.** **WARNING: ALLOW THE DCHA ASSEMBLY TO COOL BEFORE PERFORMING A COMPONENT INSPECTION/REPAIR/REPLACEMENT. FAILURE TO FOLLOW THESE INSTRUCTIONS MAY RESULT IN PERSONAL INJURY.** **CAUTION: DO NOT PERFORM THIS TEST UNLESS DIRECTED HERE BY THE CABIN HEATER PRE-TEST. ALWAYS PERFORM THE CABIN HEATER PRE-TEST PRIOR TO PERFORMING ANY OTHER CABIN HEATER TEST FOR THE RESULT TO BE VALID.** Check the vehicle's charging system for proper operation in accordance with the Service Information. Is the vehicle's charging system operating properly? Yes → Replace the DCHA Heater Module in accordance with the Service Information. Perform CABIN HEATER VERIFICATION TEST - VER 1. No → Repair the vehicle's charging system in accordance with the Service Information. Perform CABIN HEATER VERIFICATION TEST - VER 1.	All

Symptom:
B1803 FLAME DETECTED PRIOR TO COMBUSTION

When Monitored and Set Condition:

B1803 FLAME DETECTED PRIOR TO COMBUSTION

When Monitored: During DCHA start up.

Set Condition: This DTC will set if the Flame Sensor resistance is not within the expected parameters.

POSSIBLE CAUSES
FLAME SENSOR FAULT

TEST	ACTION	APPLICABILITY
1	**WARNING: DO NOT OPERATE THE DCHA IN AN ENCLOSED AREA SUCH AS A GARAGE THAT DOES NOT HAVE EXHAUST VENTILATION FACILITIES. ALWAYS VENT THE DCHA's EXHAUST WHEN OPERATING THE DCHA. FAILURE TO FOLLOW THESE INSTRUCTIONS MAY RESULT IN PERSONAL INJURY OR DEATH.** **WARNING: ALLOW THE DCHA ASSEMBLY TO COOL BEFORE PERFORMING A COMPONENT INSPECTION/REPAIR/REPLACEMENT. FAILURE TO FOLLOW THESE INSTRUCTIONS MAY RESULT IN PERSONAL INJURY.** **CAUTION: DO NOT PERFORM THIS TEST UNLESS DIRECTED HERE BY THE CABIN HEATER PRE-TEST. ALWAYS PERFORM THE CABIN HEATER PRE-TEST PRIOR TO PERFORMING ANY OTHER CABIN HEATER TEST FOR THE RESULT TO BE VALID.** Turn the ignition off. View repair Repair Replace the DCHA Heater Module in accordance with the Service Information. Perform CABIN HEATER VERIFICATION TEST - VER 1.	All

Symptom:

B1811 HEATER OVERHEATED

When Monitored and Set Condition:

B1811 HEATER OVERHEATED

When Monitored: After DCHA activation, when the system is in a steady state of operation.

Set Condition: This DTC will set if the Coolant Temperature Sensor resistance is not within the expected parameters (coolant temperature in the Heater Module exceeds 125°C [257°F]).

POSSIBLE CAUSES
DCHA HEATER MODULE FAULT
DCHA COOLANT HOSES RESTRICTED/LEAKING/DAMAGED
ENGINE'S COOLING SYSTEM FAULT
DCHA CONTROL UNIT FAULT
B1811 CLEARED, ADDITIONAL DTC(S) PRESENT

TEST	ACTION	APPLICABILITY
1	**WARNING: DO NOT OPERATE THE DCHA IN AN ENCLOSED AREA SUCH AS A GARAGE THAT DOES NOT HAVE EXHAUST VENTILATION FACILITIES. ALWAYS VENT THE DCHA's EXHAUST WHEN OPERATING THE DCHA. FAILURE TO FOLLOW THESE INSTRUCTIONS MAY RESULT IN PERSONAL INJURY OR DEATH.** **WARNING: ALLOW THE DCHA ASSEMBLY TO COOL BEFORE PERFORMING A COMPONENT INSPECTION/REPAIR/REPLACEMENT. FAILURE TO FOLLOW THESE INSTRUCTIONS MAY RESULT IN PERSONAL INJURY.** **CAUTION: DO NOT PERFORM THIS TEST UNLESS DIRECTED HERE BY THE CABIN HEATER PRE-TEST. ALWAYS PERFORM THE CABIN HEATER PRE-TEST PRIOR TO PERFORMING ANY OTHER CABIN HEATER TEST FOR THE RESULT TO BE VALID.** Turn the ignition off. **NOTE: If there is an internal leak in the Heater Module, a continuous loud chunking or grinding noise may have been heard coming from the DCHA assembly during the Field Mode test.** Check for engine coolant continuously flowing out of the DCHA exhaust pipe. Is engine coolant coming out of the DCHA exhaust pipe? Yes → Replace the DCHA Heater Module in accordance with the Service Information. Perform CABIN HEATER VERIFICATION TEST - VER 1. No → Go To 2	All

B1811 HEATER OVERHEATED — Continued

TEST	ACTION	APPLICABILITY
2	**WARNING: DO NOT OPERATE THE DCHA IN AN ENCLOSED AREA SUCH AS A GARAGE THAT DOES NOT HAVE EXHAUST VENTILATION FACILITIES. ALWAYS VENT THE DCHA's EXHAUST WHEN OPERATING THE DCHA. FAILURE TO FOLLOW THESE INSTRUCTIONS MAY RESULT IN PERSONAL INJURY OR DEATH.** **WARNING: ALLOW THE DCHA ASSEMBLY TO COOL BEFORE PERFORMING A COMPONENT INSPECTION/REPAIR/REPLACEMENT. FAILURE TO FOLLOW THESE INSTRUCTIONS MAY RESULT IN PERSONAL INJURY.** Turn the ignition off. Inspect the DCHA coolant hoses for restrictions, leakage, and damage. Are the DCHA coolant hoses Ok? Yes → Go To 3 No → Repair the DCHA coolant hoses as necessary in accordance with the Service Information. Perform CABIN HEATER VERIFICATION TEST - VER 1.	All
3	**WARNING: DO NOT OPERATE THE DCHA IN AN ENCLOSED AREA SUCH AS A GARAGE THAT DOES NOT HAVE EXHAUST VENTILATION FACILITIES. ALWAYS VENT THE DCHA's EXHAUST WHEN OPERATING THE DCHA. FAILURE TO FOLLOW THESE INSTRUCTIONS MAY RESULT IN PERSONAL INJURY OR DEATH.** Check that the engine's cooling system is operating properly in accordance with the Service Information. Is the engine's cooling system operating properly? Yes → Go To 4 No → Repair the engine's cooling system in accordance with the Service Information. Perform CABIN HEATER VERIFICATION TEST - VER 1.	All
4	**WARNING: DO NOT OPERATE THE DCHA IN AN ENCLOSED AREA SUCH AS A GARAGE THAT DOES NOT HAVE EXHAUST VENTILATION FACILITIES. ALWAYS VENT THE DCHA's EXHAUST WHEN OPERATING THE DCHA. FAILURE TO FOLLOW THESE INSTRUCTIONS MAY RESULT IN PERSONAL INJURY OR DEATH.** Start the engine. Allow the engine to reach normal operating temperature. Turn the engine off. Allow the engine's coolant to cool down to a temperature of 50°C (122°F). Start the engine. Allow the engine to reach normal operating temperature. Turn the engine off. View repair Repair Go To 5	All

B1811 HEATER OVERHEATED — Continued

TEST	ACTION	APPLICABILITY
5	**WARNING: DO NOT OPERATE THE DCHA IN AN ENCLOSED AREA SUCH AS A GARAGE THAT DOES NOT HAVE EXHAUST VENTILATION FACILITIES. ALWAYS VENT THE DCHA's EXHAUST WHEN OPERATING THE DCHA. FAILURE TO FOLLOW THESE INSTRUCTIONS MAY RESULT IN PERSONAL INJURY OR DEATH.** Start the engine. Allow the engine to idle. Turn the A/C - Heater Control Module's Power switch on. Turn the Blower switch to the high speed position. Set the Blend Control to the max heat position. Remove the Cabin Heater fuse from the IPM for a minimum of five seconds, then reinstall the fuse. The DCHA may attempt to start. Turn the Blower switch off and turn the A/C - Heater Control Module's Power switch off. Turn the engine off. View repair Repair Go To 6	All

B1811 HEATER OVERHEATED — Continued

TEST	ACTION	APPLICABILITY
6	**WARNING: DO NOT OPERATE THE DCHA IN AN ENCLOSED AREA SUCH AS A GARAGE THAT DOES NOT HAVE EXHAUST VENTILATION FACILITIES. ALWAYS VENT THE DCHA's EXHAUST WHEN OPERATING THE DCHA. FAILURE TO FOLLOW THESE INSTRUCTIONS MAY RESULT IN PERSONAL INJURY OR DEATH.** **NOTE: The DCHA Control will store up to three DTCs in its memory.** **NOTE: If the DCHA Control detects a new fault in the DCHA system, one that is not already stored in its memory, the DCHA Control will clear the oldest of the three stored DTCs, and it will store the new fault's DTC.** **NOTE: If the DCHA control detects a reoccurrence of a stored fault, the DCHA control will overwrite that fault's DTC with the most recent occurrence.** Turn the ignition on. Set the Blend Control to the max cool position. Turn the A/C - Heater Control Module's Power switch off. With the DRBIII®, erase Cabin Heater DTCs. Start the engine. Allow the engine to idle. Turn the A/C - Heater Control Module's Power switch on. Turn the Blower switch to the high speed position. **CAUTION: Do not activate the DCHA Field Mode Test with the engine off. Failure to follow these instructions may result in internal damage to the DCHA Heater Module.** With the DRBIII® in Cabin Heater, Systems Tests, select Field Mode and press Enter. Set the Blend Control to the max heat position. Upon completion of the Field Mode Test, proceed as follows: With the DRBIII®, read Cabin Heater and Active FCM DTCs. Turn the Blower switch off and turn the A/C - Heater Control Module's Power switch off. Turn the engine off. Are any DTCs present? Yes, B1811 & B1813 reset Replace the DCHA Heater Module in accordance with the Service Information. Perform CABIN HEATER VERIFICATION TEST - VER 1. Yes, B1811 Cleared, Other DTC(s) Present Return to the symptom list and choose the DTC(s). Perform CABIN HEATER VERIFICATION TEST - VER 1. No → Test Complete.	All

Symptom:

B1813 HEATER IN LOCKOUT MODE

When Monitored and Set Condition:

B1813 HEATER IN LOCKOUT MODE

When Monitored: During DCHA activation.

Set Condition: This DTC will set if six continuous attempts to start heater operation fail due to one or more faults in the DCHA system.

POSSIBLE CAUSES
B1813 AND ADDITIONAL DTC(S) PRESENT
B1813 RESET, NO ADDITIONAL DTC(S) PRESENT
B1813 CLEARED, ADDITIONAL DTC(S) PRESENT
STORED DCHA DTC(S) TEST COMPLETE

TEST	ACTION	APPLICABILITY
1	**WARNING: DO NOT OPERATE THE DCHA IN AN ENCLOSED AREA SUCH AS A GARAGE THAT DOES NOT HAVE EXHAUST VENTILATION FACILITIES. ALWAYS VENT THE DCHA's EXHAUST WHEN OPERATING THE DCHA. FAILURE TO FOLLOW THESE INSTRUCTIONS MAY RESULT IN PERSONAL INJURY OR DEATH.** Start the engine. Allow the engine to idle. Turn the A/C - Heater Control Module's Power switch on. Turn the Blower Switch to the high speed position. Set the Blend Control to the max heat position. Remove Cabin Heater Fuse #15 from the IPM for a minimum of five seconds, then reinstall the fuse. The DCHA may attempt to start. Turn the Blower switch off and turn the A/C - Heater Control Module's Power switch off. Turn the engine off. View repair Repair Go To 2	All

B1813 HEATER IN LOCKOUT MODE — Continued

TEST	ACTION	APPLICABILITY
2	**WARNING: DO NOT OPERATE THE DCHA IN AN ENCLOSED AREA SUCH AS A GARAGE THAT DOES NOT HAVE EXHAUST VENTILATION FACILITIES. ALWAYS VENT THE DCHA's EXHAUST WHEN OPERATING THE DCHA. FAILURE TO FOLLOW THESE INSTRUCTIONS MAY RESULT IN PERSONAL INJURY OR DEATH.** **NOTE: The DCHA Control will store up to three DTCs in its memory.** **NOTE: If the DCHA Control detects a new fault in the DCHA system, one that is not already stored in its memory, the DCHA Control will clear the oldest of the three stored DTCs, and it will store the new fault's DTC.** **NOTE: If the DCHA control detects a reoccurrence of a stored fault, the DCHA control will overwrite that fault's DTC with the most recent occurrence.** Turn the ignition on. Set the Blend Control to the max cool position. Turn the A/C - Heater Control Module's Power switch off. With the DRBIII®, record and erase Cabin Heater DTCs. Start the engine. Allow the engine to idle. Turn the A/C - Heater Control Module's Power switch on. Turn the Blower switch to the high speed position. **CAUTION: Do not activate the DCHA Field Mode Test with the engine off. Failure to follow these instructions may result in internal damage to the DCHA Heater Module.** With the DRBIII® in Cabin Heater, Systems Tests, select Field Mode and press Enter. Set the Blend Control to the max heat position. Upon completion of the Field Mode Test, proceed as follows: With the DRBIII®, read Cabin Heater and Active FCM DTCs. Turn the Blower switch off and turn the A/C - Heater Control Module's Power switch off. Turn the engine off. Are any DTCs present? Yes, B1813 & Other DTC(s) Present Return to the symptom list and choose the additional DTC(s) first, then diagnose B1813. Perform CABIN HEATER VERIFICATION TEST - VER 1. Yes, B1813 Reset with No Other DTC(s) Allow DCHA to cool. Inspect DCHA intake & exhaust pipes for restrictions & obstructions. Repair as necessary. After repair, repeat Test 2 of this procedure. If intake & exhaust pipes are Ok, replace DCHA Heater Module in accordance with Service Info. Perform CABIN HEATER VERIFICATION TEST - VER 1. Yes, B1813 Cleared, Other DTC(s) Present Return to the symptom list and choose the DTC(s). Perform CABIN HEATER VERIFICATION TEST - VER 1. No → Allow DCHA to cool. Inspect fuel line & coolant hoses for restrictions, obstructions, loose clamps, leakage, etc. Repair as necessary. Check connectors. Clean & repair as necessary. Refer to Service Manual for additional symptom diagnosis, if necessary. Perform CABIN HEATER VERIFICATION TEST - VER 1.	All

Symptom:
B1820 DOSING PUMP CIRCUIT: OPEN OR SHORT TO BATTERY

When Monitored and Set Condition:

B1820 DOSING PUMP CIRCUIT: OPEN OR SHORT TO BATTERY

When Monitored: With the ignition on.

Set Condition: This DTC will set if the DCHA Control detects no-load voltage on the Dosing Pump circuit output pin.

POSSIBLE CAUSES
DOSING PUMP CONTROL CIRCUIT SHORTED HIGH
DOSING PUMP CONTROL CIRCUIT OPEN
GROUND CIRCUIT OPEN
DOSING PUMP
DCHA CONTROL UNIT FAULT

TEST	ACTION	APPLICABILITY
1	**WARNING: DO NOT OPERATE THE DCHA IN AN ENCLOSED AREA SUCH AS A GARAGE THAT DOES NOT HAVE EXHAUST VENTILATION FACILITIES. ALWAYS VENT THE DCHA's EXHAUST WHEN OPERATING THE DCHA. FAILURE TO FOLLOW THESE INSTRUCTIONS MAY RESULT IN PERSONAL INJURY OR DEATH.** **WARNING: ALLOW THE DCHA ASSEMBLY TO COOL BEFORE PERFORMING A COMPONENT INSPECTION/REPAIR/REPLACEMENT. FAILURE TO FOLLOW THESE INSTRUCTIONS MAY RESULT IN PERSONAL INJURY.** **CAUTION: DO NOT PERFORM THIS TEST UNLESS DIRECTED HERE BY THE CABIN HEATER PRE-TEST. ALWAYS PERFORM THE CABIN HEATER PRE-TEST PRIOR TO PERFORMING ANY OTHER CABIN HEATER TEST FOR THE RESULT TO BE VALID.** **NOTE: If present, diagnose and repair DTC B1811 Heater Overheated and any other conditions relating to overheating before diagnosing this DTC.** Turn the ignition off. **NOTE: Check connectors - Clean/repair as necessary.** Disconnect the Cabin Heater Assist C1 harness connector. Turn the ignition on. Measure the voltage between the Dosing Pump Control circuit and ground. Is there any voltage present? Yes → Repair the Dosing Pump Control circuit for a short to voltage. Perform CABIN HEATER VERIFICATION TEST - VER 1. No → Go To 2	All

B1820 DOSING PUMP CIRCUIT: OPEN OR SHORT TO BATTERY — Continued

TEST	ACTION	APPLICABILITY
2	**WARNING: DO NOT OPERATE THE DCHA IN AN ENCLOSED AREA SUCH AS A GARAGE THAT DOES NOT HAVE EXHAUST VENTILATION FACILITIES. ALWAYS VENT THE DCHA's EXHAUST WHEN OPERATING THE DCHA. FAILURE TO FOLLOW THESE INSTRUCTIONS MAY RESULT IN PERSONAL INJURY OR DEATH.** **WARNING: ALLOW THE DCHA ASSEMBLY TO COOL BEFORE PERFORMING A COMPONENT INSPECTION/REPAIR/REPLACEMENT. FAILURE TO FOLLOW THESE INSTRUCTIONS MAY RESULT IN PERSONAL INJURY.** Turn the ignition off. **NOTE: Check connectors - Clean/repair as necessary.** Disconnect the Cabin Heater Assist C1 harness connector. **NOTE: Check connectors - Clean/repair as necessary.** Disconnect the Dosing Pump harness connector. Measure the resistance of the Dosing Pump Control circuit between the Dosing Pump harness connector and the Cabin Heater Assist C1 harness connector. Is the resistance below 5.0 ohms? Yes → Go To 3 No → Repair the Dosing Pump Control circuit for an open. Perform CABIN HEATER VERIFICATION TEST - VER 1.	All
3	**WARNING: DO NOT OPERATE THE DCHA IN AN ENCLOSED AREA SUCH AS A GARAGE THAT DOES NOT HAVE EXHAUST VENTILATION FACILITIES. ALWAYS VENT THE DCHA's EXHAUST WHEN OPERATING THE DCHA. FAILURE TO FOLLOW THESE INSTRUCTIONS MAY RESULT IN PERSONAL INJURY OR DEATH.** **WARNING: ALLOW THE DCHA ASSEMBLY TO COOL BEFORE PERFORMING A COMPONENT INSPECTION/REPAIR/REPLACEMENT. FAILURE TO FOLLOW THESE INSTRUCTIONS MAY RESULT IN PERSONAL INJURY.** Turn the ignition off. **NOTE: Check connectors - Clean/repair as necessary.** Disconnect the Cabin Heater Assist C2 harness connector. **NOTE: Check connectors - Clean/repair as necessary.** Disconnect the Dosing Pump harness connector. Measure the resistance of the Ground circuit between the Dosing Pump harness connector and the Cabin Heater Assist C2 harness connector. Is the resistance below 5.0 ohms? Yes → Go To 4 No → Repair the Ground circuit for an open. Perform CABIN HEATER VERIFICATION TEST - VER 1.	All

B1820 DOSING PUMP CIRCUIT: OPEN OR SHORT TO BATTERY — Continued

TEST	ACTION	APPLICABILITY
4	**WARNING: DO NOT OPERATE THE DCHA IN AN ENCLOSED AREA SUCH AS A GARAGE THAT DOES NOT HAVE EXHAUST VENTILATION FACILITIES. ALWAYS VENT THE DCHA's EXHAUST WHEN OPERATING THE DCHA. FAILURE TO FOLLOW THESE INSTRUCTIONS MAY RESULT IN PERSONAL INJURY OR DEATH.** **WARNING: ALLOW THE DCHA ASSEMBLY TO COOL BEFORE PERFORMING A COMPONENT INSPECTION/REPAIR/REPLACEMENT. FAILURE TO FOLLOW THESE INSTRUCTIONS MAY RESULT IN PERSONAL INJURY.** Turn the ignition off. **NOTE: Check connectors - Clean/repair as necessary.** Disconnect the Dosing Pump harness connector. Disconnect the Dosing Pump rubber insulators from the splash shield. Measure the resistance of the Dosing Pump. Is the resistance between 3.0 and 10.0 ohms? Yes → Replace the DCHA Heater Module in accordance with the Service Information. Perform CABIN HEATER VERIFICATION TEST - VER 1. No → Replace the Dosing Pump in accordance with the Service Information. Perform CABIN HEATER VERIFICATION TEST - VER 1.	All

Symptom:

B1820 DOSING PUMP CIRCUIT: SHORT TO GROUND

When Monitored and Set Condition:

B1820 DOSING PUMP CIRCUIT: SHORT TO GROUND

When Monitored: During Dosing Pump activation.

Set Condition: This DTC will set if the DCHA Control detects a high current draw on the Dosing Pump circuit output pin.

POSSIBLE CAUSES
DOSING PUMP SHORTED TO GROUND
DOSING PUMP CONTROL CIRCUIT SHORTED TO THE GROUND CIRCUIT
DOSING PUMP CONTROL CIRCUIT SHORTED TO GROUND
DCHA CONTROL UNIT FAULT

B1820 DOSING PUMP CIRCUIT: SHORT TO GROUND — Continued

TEST	ACTION	APPLICABILITY
1	**WARNING: DO NOT OPERATE THE DCHA IN AN ENCLOSED AREA SUCH AS A GARAGE THAT DOES NOT HAVE EXHAUST VENTILATION FACILITIES. ALWAYS VENT THE DCHA's EXHAUST WHEN OPERATING THE DCHA. FAILURE TO FOLLOW THESE INSTRUCTIONS MAY RESULT IN PERSONAL INJURY OR DEATH.** **WARNING: ALLOW THE DCHA ASSEMBLY TO COOL BEFORE PERFORMING A COMPONENT INSPECTION/REPAIR/REPLACEMENT. FAILURE TO FOLLOW THESE INSTRUCTIONS MAY RESULT IN PERSONAL INJURY.** **CAUTION: DO NOT PERFORM THIS TEST UNLESS DIRECTED HERE BY THE CABIN HEATER PRE-TEST. ALWAYS PERFORM THE CABIN HEATER PRE-TEST PRIOR TO PERFORMING ANY OTHER CABIN HEATER TEST FOR THE RESULT TO BE VALID.** **NOTE: If present, diagnose and repair DTC B1811 Heater Overheated and any other conditions relating to overheating before diagnosing this DTC.** Turn the ignition off. **NOTE: Check connectors - Clean/repair as necessary.** Disconnect the Dosing Pump harness connector. Turn the ignition on. Set the Blend Control to the max cool position. Turn the A/C - Heater Control Module's Power switch off. With the DRBIII®, erase Cabin Heater DTCs. Start the engine. Allow the engine to idle. Turn the A/C - Heater Control Module's Power switch on. Turn the Blower switch to the high speed position. **CAUTION: Do not activate the DCHA Field Mode Test with the engine off. Failure to follow these instructions may result in internal damage to the DCHA Heater Module.** **NOTE: Do not disconnect the vehicle's battery or the DCHA's main power supply while the DCHA is in operation or in run-down mode. Failure to follow these instructions may result in excess emissions from the DCHA during heater operation.** With the DRBIII® in Cabin Heater, Systems Tests, select Field Mode and press Enter. Set the Blend Control to the max heat position. Upon completion of the Field Mode Test, proceed as follows: With the DRBIII®, read Cabin Heater DTCs. Turn the Blower switch off and turn the A/C - Heater Control Module's Power switch off. Turn the engine off. Is DTC B1820 Dosing Pump Circuit: Short to Ground present? Yes → Go To 2 No → Replace the Dosing Pump in accordance with the Service Information. Perform CABIN HEATER VERIFICATION TEST - VER 1.	All

B1820 DOSING PUMP CIRCUIT: SHORT TO GROUND — Continued

TEST	ACTION	APPLICABILITY
2	**WARNING: DO NOT OPERATE THE DCHA IN AN ENCLOSED AREA SUCH AS A GARAGE THAT DOES NOT HAVE EXHAUST VENTILATION FACILITIES. ALWAYS VENT THE DCHA's EXHAUST WHEN OPERATING THE DCHA. FAILURE TO FOLLOW THESE INSTRUCTIONS MAY RESULT IN PERSONAL INJURY OR DEATH.** **CAUTION: ALLOW THE DCHA ASSEMBLY TO COOL BEFORE PERFORMING A COMPONENT INSPECTION/REPAIR/REPLACEMENT. FAILURE TO FOLLOW THESE INSTRUCTIONS MAY RESULT IN PERSONAL INJURY.** Turn the ignition off. Disconnect the battery in accordance with the Service information. **NOTE: Check connectors - Clean/repair as necessary.** Disconnect the Dosing Pump harness connector. **NOTE: Check connectors - Clean/repair as necessary.** Disconnect the Cabin Heater Assist C1 and C2 harness connectors. Measure the resistance between the Dosing Pump Control circuit and the Ground circuit. Is the resistance below 10K ohms? Yes → Repair the Dosing Pump Control circuit for a short to the Ground circuit. Perform CABIN HEATER VERIFICATION TEST - VER 1. No → Go To 3	All
3	**WARNING: DO NOT OPERATE THE DCHA IN AN ENCLOSED AREA SUCH AS A GARAGE THAT DOES NOT HAVE EXHAUST VENTILATION FACILITIES. ALWAYS VENT THE DCHA's EXHAUST WHEN OPERATING THE DCHA. FAILURE TO FOLLOW THESE INSTRUCTIONS MAY RESULT IN PERSONAL INJURY OR DEATH.** **WARNING: ALLOW THE DCHA ASSEMBLY TO COOL BEFORE PERFORMING A COMPONENT INSPECTION/REPAIR/REPLACEMENT. FAILURE TO FOLLOW THESE INSTRUCTIONS MAY RESULT IN PERSONAL INJURY.** Turn the ignition off. Disconnect the battery in accordance with the Service information. **NOTE: Check connectors - Clean/repair as necessary.** Disconnect the Dosing Pump harness connector. **NOTE: Check connectors - Clean/repair as necessary.** Disconnect the Cabin Heater Assist C1 harness connector. Measure the resistance between ground and the Dosing Pump Control circuit. Is the resistance below 10K ohms? Yes → Repair the Dosing Pump Control circuit for a short to ground. Perform CABIN HEATER VERIFICATION TEST - VER 1. No → Replace the DCHA Heater Module in accordance with the Service Information. Perform CABIN HEATER VERIFICATION TEST - VER 1.	All

Symptom List:

B1821 COMBUSTION AIR FAN CIRCUIT: OPEN
B1821 COMBUSTION AIR FAN CIRCUIT: SHORT TO GROUND

Test Note: All symptoms listed above are diagnosed using the same tests. The title for the tests will be B1821 COMBUSTION AIR FAN CIRCUIT: OPEN.

When Monitored and Set Condition:

B1821 COMBUSTION AIR FAN CIRCUIT: OPEN

When Monitored: After DCHA activation, when the system is in a steady state of operation.

Set Condition: This DTC will set if the DCHA Control detects no-load voltage on the Combustion Air Fan circuit output pin.

B1821 COMBUSTION AIR FAN CIRCUIT: SHORT TO GROUND

When Monitored: After DCHA activation, when the system is in a steady state of operation.

Set Condition: This DTC will set if the DCHA Control detects a high current draw on the Combustion Air Fan circuit output pin.

POSSIBLE CAUSES
COMBUSTION AIR FAN/DCHA CONTROL UNIT FAULT

TEST	ACTION	APPLICABILITY
1	**WARNING: DO NOT OPERATE THE DCHA IN AN ENCLOSED AREA SUCH AS A GARAGE THAT DOES NOT HAVE EXHAUST VENTILATION FACILITIES. ALWAYS VENT THE DCHA's EXHAUST WHEN OPERATING THE DCHA. FAILURE TO FOLLOW THESE INSTRUCTIONS MAY RESULT IN PERSONAL INJURY OR DEATH.** **WARNING: ALLOW THE DCHA ASSEMBLY TO COOL BEFORE PERFORMING A COMPONENT INSPECTION/REPAIR/REPLACEMENT. FAILURE TO FOLLOW THESE INSTRUCTIONS MAY RESULT IN PERSONAL INJURY.** **CAUTION: DO NOT PERFORM THIS TEST UNLESS DIRECTED HERE BY THE CABIN HEATER PRE-TEST. ALWAYS PERFORM THE CABIN HEATER PRE-TEST PRIOR TO PERFORMING ANY OTHER CABIN HEATER TEST FOR THE RESULT TO BE VALID.** **NOTE: If present, diagnose and repair DTC B1801 Flame Out before diagnosing this DTC.** Turn the ignition off. View repair Repair Replace the DCHA Heater Module in accordance with the Service Information. Perform CABIN HEATER VERIFICATION TEST - VER 1.	All

Symptom List:

B1822 GLOW PIN/FLAME SENSOR: OPEN
B1822 GLOW PIN/FLAME SENSOR: SHORT TO GROUND

Test Note: All symptoms listed above are diagnosed using the same tests. The title for the tests will be B1822 GLOW PIN/FLAME SENSOR: OPEN.

When Monitored and Set Condition:

B1822 GLOW PIN/FLAME SENSOR: OPEN

When Monitored: After DCHA activation.

Set Condition: This DTC will set if the Glow Pin resistance is not within the expected parameters.

B1822 GLOW PIN/FLAME SENSOR: SHORT TO GROUND

When Monitored: After DCHA activation, when the system is in a steady state of operation.

Set Condition: This DTC will set if the Glow Pin resistance is not within the expected parameters.

POSSIBLE CAUSES
GLOW PIN/HEATER MODULE FAULT

TEST	ACTION	APPLICABILITY
1	**WARNING: DO NOT OPERATE THE DCHA IN AN ENCLOSED AREA SUCH AS A GARAGE THAT DOES NOT HAVE EXHAUST VENTILATION FACILITIES. ALWAYS VENT THE DCHA's EXHAUST WHEN OPERATING THE DCHA. FAILURE TO FOLLOW THESE INSTRUCTIONS MAY RESULT IN PERSONAL INJURY OR DEATH.** **WARNING: ALLOW THE DCHA ASSEMBLY TO COOL BEFORE PERFORMING A COMPONENT INSPECTION/REPAIR/REPLACEMENT. FAILURE TO FOLLOW THESE INSTRUCTIONS MAY RESULT IN PERSONAL INJURY.** **CAUTION: DO NOT PERFORM THIS TEST UNLESS DIRECTED HERE BY THE CABIN HEATER PRE-TEST. ALWAYS PERFORM THE CABIN HEATER PRE-TEST PRIOR TO PERFORMING ANY OTHER CABIN HEATER TEST FOR THE RESULT TO BE VALID.** Turn the ignition off. View repair Repair Replace the DCHA Heater Module in accordance with the Service Information. Perform CABIN HEATER VERIFICATION TEST - VER 1.	All

Symptom List:

B1823 WATER PUMP CIRCUIT: OPEN
B1823 WATER PUMP CIRCUIT: SHORT TO GROUND

Test Note: All symptoms listed above are diagnosed using the same tests. The title for the tests will be B1823 WATER PUMP CIRCUIT: OPEN.

When Monitored and Set Condition:

B1823 WATER PUMP CIRCUIT: OPEN

When Monitored: During DCHA activation and operation.

Set Condition: This fault is erroneous for this DCHA assembly.

B1823 WATER PUMP CIRCUIT: SHORT TO GROUND

When Monitored: During DCHA activation and operation.

Set Condition: This fault is erroneous for this DCHA assembly.

POSSIBLE CAUSES
DCHA CONTROL UNIT FAULT

TEST	ACTION	APPLICABILITY
1	**WARNING: DO NOT OPERATE THE DCHA IN AN ENCLOSED AREA SUCH AS A GARAGE THAT DOES NOT HAVE EXHAUST VENTILATION FACILITIES. ALWAYS VENT THE DCHA's EXHAUST WHEN OPERATING THE DCHA. FAILURE TO FOLLOW THESE INSTRUCTIONS MAY RESULT IN PERSONAL INJURY OR DEATH.** **WARNING: ALLOW THE DCHA ASSEMBLY TO COOL BEFORE PERFORMING A COMPONENT INSPECTION/REPAIR/REPLACEMENT. FAILURE TO FOLLOW THESE INSTRUCTIONS MAY RESULT IN PERSONAL INJURY.** **CAUTION: DO NOT PERFORM THIS TEST UNLESS DIRECTED HERE BY THE CABIN HEATER PRE-TEST. ALWAYS PERFORM THE CABIN HEATER PRE-TEST PRIOR TO PERFORMING ANY OTHER CABIN HEATER TEST FOR THE RESULT TO BE VALID.** Turn the ignition off. View repair Repair Replace the DCHA Heater Module in accordance with the Service Information. Perform CABIN HEATER VERIFICATION TEST - VER 1.	All

Symptom:
B1824 FAN SWITCH LINE SHORT TO GROUND

When Monitored and Set Condition:

B1824 FAN SWITCH LINE SHORT TO GROUND

When Monitored: During DCHA activation and operation.

Set Condition: This fault is erroneous for this DCHA assembly.

POSSIBLE CAUSES
DCHA CONTROL UNIT FAULT

TEST	ACTION	APPLICABILITY
1	**WARNING: DO NOT OPERATE THE DCHA IN AN ENCLOSED AREA SUCH AS A GARAGE THAT DOES NOT HAVE EXHAUST VENTILATION FACILITIES. ALWAYS VENT THE DCHA's EXHAUST WHEN OPERATING THE DCHA. FAILURE TO FOLLOW THESE INSTRUCTIONS MAY RESULT IN PERSONAL INJURY OR DEATH.** **WARNING: ALLOW THE DCHA ASSEMBLY TO COOL BEFORE PERFORMING A COMPONENT INSPECTION/REPAIR/REPLACEMENT. FAILURE TO FOLLOW THESE INSTRUCTIONS MAY RESULT IN PERSONAL INJURY.** **CAUTION: DO NOT PERFORM THIS TEST UNLESS DIRECTED HERE BY THE CABIN HEATER PRE-TEST. ALWAYS PERFORM THE CABIN HEATER PRE-TEST PRIOR TO PERFORMING ANY OTHER CABIN HEATER TEST FOR THE RESULT TO BE VALID.** Turn the ignition off. View repair Repair Replace the DCHA Heater Module in accordance with the Service Information. Perform CABIN HEATER VERIFICATION TEST - VER 1.	All

Symptom:

CABIN HEATER CONTROL CIRCUIT OPEN (ACTIVE)

When Monitored and Set Condition:

CABIN HEATER CONTROL CIRCUIT OPEN (ACTIVE)

When Monitored: When the DCHA system is off

Set Condition: The DCHA Low Side Driver inside the FCM expects to see a system voltage of 13.8 volts through the DCHA relay coil when the DCHA system is off. This DTC will set if the FCM sees a voltage below 3.5 volts on the Cabin Heater Assist Control circuit during this time.

POSSIBLE CAUSES
NO RESPONSE FROM CABIN HEATER MODULE
CABIN HEATER ASSIST CONTROL CIRCUIT OPEN TO IPM
IPM, OPEN CIRCUIT
FCM, OPEN CIRCUIT
FCM FAULT
CABIN HEATER ASSIST CONTROL CIRCUIT SHORTED TO THE GROUND CIRCUIT
CABIN HEATER ASSIST CONTROL CIRCUIT SHORTED TO GROUND
CABIN HEATER ASSIST CONTROL CIRCUIT OPEN
DCHA CONTROL UNIT FAULT

TEST	ACTION	APPLICABILITY
1	**WARNING: DO NOT OPERATE THE DCHA IN AN ENCLOSED AREA SUCH AS A GARAGE THAT DOES NOT HAVE EXHAUST VENTILATION FACILITIES. ALWAYS VENT THE DCHA's EXHAUST WHEN OPERATING THE DCHA. FAILURE TO FOLLOW THESE INSTRUCTIONS MAY RESULT IN PERSONAL INJURY OR DEATH.** Turn the ignition on. With the DRBIII®, attempt to communicate with the Cabin Heater Module. Does the DRBIII® display: No Response From Cabin Heater Module? Yes → Refer to Communication for the related symptom. Perform CABIN HEATER VERIFICATION TEST - VER 1. No → Go To 2	All

CABIN HEATER CONTROL CIRCUIT OPEN (ACTIVE) — Continued

TEST	ACTION	APPLICABILITY
2	**WARNING: DO NOT OPERATE THE DCHA IN AN ENCLOSED AREA SUCH AS A GARAGE THAT DOES NOT HAVE EXHAUST VENTILATION FACILITIES. ALWAYS VENT THE DCHA's EXHAUST WHEN OPERATING THE DCHA. FAILURE TO FOLLOW THESE INSTRUCTIONS MAY RESULT IN PERSONAL INJURY OR DEATH.** Turn the ignition off. **NOTE: Check connectors - Clean/repair as necessary.** While back probing, measure the voltage of the Cabin Heater Assist Control circuit in the In-Line C330 harness connector. Is battery voltage present? Yes → Go To 3 No → Go To 5	All
3	**WARNING: DO NOT OPERATE THE DCHA IN AN ENCLOSED AREA SUCH AS A GARAGE THAT DOES NOT HAVE EXHAUST VENTILATION FACILITIES. ALWAYS VENT THE DCHA's EXHAUST WHEN OPERATING THE DCHA. FAILURE TO FOLLOW THESE INSTRUCTIONS MAY RESULT IN PERSONAL INJURY OR DEATH.** Turn the ignition off. Disconnect the battery in accordance with the Service information. **NOTE: Check connectors - Clean/repair as necessary.** Disconnect the IPM C3 harness connector. **NOTE: Check connectors - Clean/repair as necessary.** Disconnect the In-Line C330 harness connector. Measure the resistance of the Cabin Heater Assist Control circuit between the In-Line C330 harness connector and the IPM C3 harness connector. Is the resistance below 5.0 ohms? Yes → Go To 4 No → Repair the Cabin Heater Assist Control circuit for an open. Perform CABIN HEATER VERIFICATION TEST - VER 1.	All
4	**WARNING: DO NOT OPERATE THE DCHA IN AN ENCLOSED AREA SUCH AS A GARAGE THAT DOES NOT HAVE EXHAUST VENTILATION FACILITIES. ALWAYS VENT THE DCHA's EXHAUST WHEN OPERATING THE DCHA. FAILURE TO FOLLOW THESE INSTRUCTIONS MAY RESULT IN PERSONAL INJURY OR DEATH.** Turn the ignition off. Disconnect the battery in accordance with the Service information. Remove the FCM in accordance with the Service Information. **NOTE: Check connectors - Clean/repair as necessary.** Disconnect the IPM C3 harness connector. Measure the resistance of the Cabin Heater Assist Control circuit in the IPM (between IPM Cavity 11 for the C3 harness connector and IPM Cavity 15 for the FCM connector). Is the resistance below 5.0 ohms? Yes → Replace the FCM in accordance with the Service Information. Perform CABIN HEATER VERIFICATION TEST - VER 1. No → Replace the IPM in accordance with the Service Information. Perform CABIN HEATER VERIFICATION TEST - VER 1.	All

CABIN HEATER CONTROL CIRCUIT OPEN (ACTIVE) — Continued

TEST	ACTION	APPLICABILITY
5	**WARNING: DO NOT OPERATE THE DCHA IN AN ENCLOSED AREA SUCH AS A GARAGE THAT DOES NOT HAVE EXHAUST VENTILATION FACILITIES. ALWAYS VENT THE DCHA's EXHAUST WHEN OPERATING THE DCHA. FAILURE TO FOLLOW THESE INSTRUCTIONS MAY RESULT IN PERSONAL INJURY OR DEATH.** Turn the ignition off. Disconnect the battery in accordance with the Service information. Remove the FCM in accordance with the Service Information. Ensure the IPM and Cabin Heater harness connectors are connected. Reconnect the battery in accordance with the Service information. While back probing, measure the voltage of the Cabin Heater Assist Control circuit in the In-Line C330 harness connector. Is battery voltage present? Yes → Replace the FCM in accordance with the Service Information. Perform CABIN HEATER VERIFICATION TEST - VER 1. No → Go To 6	All
6	**WARNING: DO NOT OPERATE THE DCHA IN AN ENCLOSED AREA SUCH AS A GARAGE THAT DOES NOT HAVE EXHAUST VENTILATION FACILITIES. ALWAYS VENT THE DCHA's EXHAUST WHEN OPERATING THE DCHA. FAILURE TO FOLLOW THESE INSTRUCTIONS MAY RESULT IN PERSONAL INJURY OR DEATH.** **WARNING: ALLOW THE DCHA ASSEMBLY TO COOL BEFORE PERFORMING A COMPONENT INSPECTION/REPAIR/REPLACEMENT. FAILURE TO FOLLOW THESE INSTRUCTIONS MAY RESULT IN PERSONAL INJURY.** Turn the ignition off. Disconnect the battery in accordance with the Service information. **NOTE: Check connectors - Clean/repair as necessary.** Disconnect the IPM C3 harness connector. **NOTE: Check connectors - Clean/repair as necessary.** Disconnect the Cabin Heater Assist C1, C2, and Dosing Pump harness connectors. Measure the resistance between the Cabin Heater Assist Control circuit and the Ground circuit. Is the resistance below 10K ohms? Yes → Repair the Cabin Heater Assist Control circuit for a short to the Ground circuit. Perform CABIN HEATER VERIFICATION TEST - VER 1. No → Go To 7	All

CABIN HEATER CONTROL CIRCUIT OPEN (ACTIVE) — Continued

TEST	ACTION	APPLICABILITY
7	**WARNING: DO NOT OPERATE THE DCHA IN AN ENCLOSED AREA SUCH AS A GARAGE THAT DOES NOT HAVE EXHAUST VENTILATION FACILITIES. ALWAYS VENT THE DCHA's EXHAUST WHEN OPERATING THE DCHA. FAILURE TO FOLLOW THESE INSTRUCTIONS MAY RESULT IN PERSONAL INJURY OR DEATH.** **WARNING: ALLOW THE DCHA ASSEMBLY TO COOL BEFORE PERFORMING A COMPONENT INSPECTION/REPAIR/REPLACEMENT. FAILURE TO FOLLOW THESE INSTRUCTIONS MAY RESULT IN PERSONAL INJURY.** Turn the ignition off. Disconnect the battery in accordance with the Service information. **NOTE: Check connectors - Clean/repair as necessary.** Disconnect the IPM C3 harness connector. **NOTE: Check connectors - Clean/repair as necessary.** Disconnect the Cabin Heater Assist C1 harness connector. Measure the resistance between ground and the Cabin Heater Assist Control circuit. Is the resistance below 10K ohms? Yes → Repair the Cabin Heater Assist Control circuit for a short to ground. Perform CABIN HEATER VERIFICATION TEST - VER 1. No → Go To 8	All
8	**WARNING: DO NOT OPERATE THE DCHA IN AN ENCLOSED AREA SUCH AS A GARAGE THAT DOES NOT HAVE EXHAUST VENTILATION FACILITIES. ALWAYS VENT THE DCHA's EXHAUST WHEN OPERATING THE DCHA. FAILURE TO FOLLOW THESE INSTRUCTIONS MAY RESULT IN PERSONAL INJURY OR DEATH.** **WARNING: ALLOW THE DCHA ASSEMBLY TO COOL BEFORE PERFORMING A COMPONENT INSPECTION/REPAIR/REPLACEMENT. FAILURE TO FOLLOW THESE INSTRUCTIONS MAY RESULT IN PERSONAL INJURY.** Turn the ignition off. Disconnect the battery in accordance with the Service information. **NOTE: Check connectors - Clean/repair as necessary.** Disconnect the IPM C3 harness connector. **NOTE: Check connectors - Clean/repair as necessary.** Disconnect the Cabin Heater Assist C1 harness connector. Measure the resistance of the Cabin Heater Assist Control circuit between the Cabin Heater Assist C1 harness connector and the IPM C3 harness connector. Is the resistance below 5.0 ohms? Yes → Replace the DCHA Heater Module in accordance with the Service Information. Perform CABIN HEATER VERIFICATION TEST - VER 1. No → Repair the Cabin Heater Assist Control circuit for an open. Perform CABIN HEATER VERIFICATION TEST - VER 1.	All

Symptom:

CABIN HEATER CONTROL CIRCUIT SHORT TO BATTERY (ACTIVE)

When Monitored and Set Condition:

CABIN HEATER CONTROL CIRCUIT SHORT TO BATTERY (ACTIVE)

When Monitored: During DCHA activation and operation.

Set Condition: This DTC will set if the FCM sees a voltage between 5.0 and 15.0 volts on the Cabin Heater Assist Control circuit.

POSSIBLE CAUSES
DCHA CONTROL UNIT FAULT
CABIN HEATER ASSIST CONTROL CIRCUIT SHORTED TO THE FUSED B(+) CIRCUIT
FCM FAULT
CABIN HEATER ASSIST CONTROL CIRCUIT SHORTED HIGH

TEST	ACTION	APPLICABILITY
1	**WARNING: DO NOT OPERATE THE DCHA IN AN ENCLOSED AREA SUCH AS A GARAGE THAT DOES NOT HAVE EXHAUST VENTILATION FACILITIES. ALWAYS VENT THE DCHA's EXHAUST WHEN OPERATING THE DCHA. FAILURE TO FOLLOW THESE INSTRUCTIONS MAY RESULT IN PERSONAL INJURY OR DEATH.** **WARNING: ALLOW THE DCHA ASSEMBLY TO COOL BEFORE PERFORMING A COMPONENT INSPECTION/REPAIR/REPLACEMENT. FAILURE TO FOLLOW THESE INSTRUCTIONS MAY RESULT IN PERSONAL INJURY.** Turn the ignition off. **NOTE: Check connectors - Clean/repair as necessary.** Disconnect the Cabin Heater Assist C1 harness connector. Turn the ignition on. With the DRBIII® in FCM, read the active DTCs. Is the Cabin Heater Relay Short To Battery DTC still active? Yes → Go To 2 No → Replace the DCHA Heater Module in accordance with the Service Information. Perform CABIN HEATER VERIFICATION TEST - VER 1.	All

CABIN HEATER CONTROL CIRCUIT SHORT TO BATTERY (ACTIVE) — Continued

TEST	ACTION	APPLICABILITY
2	**WARNING: DO NOT OPERATE THE DCHA IN AN ENCLOSED AREA SUCH AS A GARAGE THAT DOES NOT HAVE EXHAUST VENTILATION FACILITIES. ALWAYS VENT THE DCHA's EXHAUST WHEN OPERATING THE DCHA. FAILURE TO FOLLOW THESE INSTRUCTIONS MAY RESULT IN PERSONAL INJURY OR DEATH.** **WARNING: ALLOW THE DCHA ASSEMBLY TO COOL BEFORE PERFORMING A COMPONENT INSPECTION/REPAIR/REPLACEMENT. FAILURE TO FOLLOW THESE INSTRUCTIONS MAY RESULT IN PERSONAL INJURY.** Turn the ignition off. **NOTE: Check connectors - Clean/repair as necessary.** Disconnect the Cabin Heater Assist C1 harness connector. Turn the ignition on. Measure the voltage between the Cabin Heater Assist Control circuit and ground. Is there any voltage present? Yes → Go To 3 No → Replace the FCM in accordance with the Service Information. Perform CABIN HEATER VERIFICATION TEST - VER 1.	All
3	**WARNING: DO NOT OPERATE THE DCHA IN AN ENCLOSED AREA SUCH AS A GARAGE THAT DOES NOT HAVE EXHAUST VENTILATION FACILITIES. ALWAYS VENT THE DCHA's EXHAUST WHEN OPERATING THE DCHA. FAILURE TO FOLLOW THESE INSTRUCTIONS MAY RESULT IN PERSONAL INJURY OR DEATH.** **WARNING: ALLOW THE DCHA ASSEMBLY TO COOL BEFORE PERFORMING A COMPONENT INSPECTION/REPAIR/REPLACEMENT. FAILURE TO FOLLOW THESE INSTRUCTIONS MAY RESULT IN PERSONAL INJURY.** Turn the ignition off. Disconnect the battery in accordance with the Service information. **NOTE: Check connectors - Clean/repair as necessary.** Disconnect the IPM C3 harness connector. **NOTE: Check connectors - Clean/repair as necessary.** Disconnect the Cabin Heater Assist C1 and C2 harness connectors. Measure the resistance between the Cabin Heater Assist Control circuit and the Fused B(+) circuit. Is the resistance below 10K ohms? Yes → Repair the Cabin Heater Assist Control circuit for a short to the Fused B(+) circuit. Perform CABIN HEATER VERIFICATION TEST - VER 1. No → Go To 4	All

CABIN HEATER CONTROL CIRCUIT SHORT TO BATTERY (ACTIVE) — Continued

TEST	ACTION	APPLICABILITY
4	**WARNING: DO NOT OPERATE THE DCHA IN AN ENCLOSED AREA SUCH AS A GARAGE THAT DOES NOT HAVE EXHAUST VENTILATION FACILITIES. ALWAYS VENT THE DCHA's EXHAUST WHEN OPERATING THE DCHA. FAILURE TO FOLLOW THESE INSTRUCTIONS MAY RESULT IN PERSONAL INJURY OR DEATH.** **WARNING: ALLOW THE DCHA ASSEMBLY TO COOL BEFORE PERFORMING A COMPONENT INSPECTION/REPAIR/REPLACEMENT. FAILURE TO FOLLOW THESE INSTRUCTIONS MAY RESULT IN PERSONAL INJURY.** Turn the ignition off. Disconnect the battery in accordance with the Service Information. Remove the FCM in accordance with the Service Information. Reconnect the IPM C3 harness connector. Reconnect the battery in accordance with the Service Information. Turn the ignition on. **NOTE: Check connectors - Clean/repair as necessary.** Disconnect the Cabin Heater Assist C1 harness connector. Measure the voltage between the Cabin Heater Assist Control circuit and ground. Is there any voltage present? Yes → Repair the Cabin Heater Assist Control circuit for a short to voltage. Perform CABIN HEATER VERIFICATION TEST - VER 1. No → Replace the FCM in accordance with the Service Information. Perform CABIN HEATER VERIFICATION TEST - VER 1.	All

Symptom:

*CABIN HEATER INOPERABLE FROM A/C - HEATER MODULE

POSSIBLE CAUSES
DCHA ACTIVATION CRITERIA NOT MET
ATTEMPT TO COMMUNICATE WITH THE FCM AND THE HVAC MODULE
FCM OR HAVC DTCS PRESENT
VERIFY DCHA IS INOPERABLE FROM A/C - HEATER MODULE
A/C - HEATER CONTROL MODULE FAULT

TEST	ACTION	APPLICABILITY
1	**WARNING: DO NOT OPERATE THE DCHA IN AN ENCLOSED AREA SUCH AS A GARAGE THAT DOES NOT HAVE EXHAUST VENTILATION FACILITIES. ALWAYS VENT THE DCHA's EXHAUST WHEN OPERATING THE DCHA. FAILURE TO FOLLOW THESE INSTRUCTIONS MAY RESULT IN PERSONAL INJURY OR DEATH.** **CAUTION: DO NOT PERFORM THIS TEST UNLESS DIRECTED HERE BY THE CABIN HEATER PRE-TEST. ALWAYS PERFORM THE CABIN HEATER PRE-TEST PRIOR TO PERFORMING ANY OTHER CABIN HEATER TEST FOR THE RESULT TO BE VALID.** Verify that all of the following criteria was met during the attempt to activate the DCHA from the A/C - Heater Control Module. The engine was running. The engine coolant temperature was below 66°C (151°F). The vehicle's fuel tank had more than 1/8 of a tank of fuel. The A/C - Heater Control Module's Power switch was on. The Blend Control was set above 80% reheat. Was all criteria met during the attempt to activate the DCHA from the A/C - Heater Control Module? Yes → Go To 2 No → Attempt to activate the DCHA when all of the operating criteria are met. Perform CABIN HEATER VERIFICATION TEST - VER 1.	All
2	**WARNING: DO NOT OPERATE THE DCHA IN AN ENCLOSED AREA SUCH AS A GARAGE THAT DOES NOT HAVE EXHAUST VENTILATION FACILITIES. ALWAYS VENT THE DCHA's EXHAUST WHEN OPERATING THE DCHA. FAILURE TO FOLLOW THESE INSTRUCTIONS MAY RESULT IN PERSONAL INJURY OR DEATH.** Turn the ignition on. With the DRBIII®, attempt to communicate with the FCM and the HVAC Module. Was the DRBIII® able to communicate with the FCM and the HVAC Module? Yes → Go To 3 No → Refer to Communication for the related symptom(s) Perform CABIN HEATER VERIFICATION TEST - VER 1.	All

*CABIN HEATER INOPERABLE FROM A/C - HEATER MODULE — Continued

TEST	ACTION	APPLICABILITY
3	**WARNING: DO NOT OPERATE THE DCHA IN AN ENCLOSED AREA SUCH AS A GARAGE THAT DOES NOT HAVE EXHAUST VENTILATION FACILITIES. ALWAYS VENT THE DCHA's EXHAUST WHEN OPERATING THE DCHA. FAILURE TO FOLLOW THESE INSTRUCTIONS MAY RESULT IN PERSONAL INJURY OR DEATH.** Turn the ignition on. With the DRBIII®, check for FCM and HVAC DTCs. Does the DRBIII® display any FCM or HVAC DTCs? Yes → For FCM DTCs, return to the symptom list and choose the symptom(s). Also, refer to Intelligent Power Module for related symptom(s). For HVAC DTCs, refer to Heater & A/C for related symptom(s). Perform CABIN HEATER VERIFICATION TEST - VER 1. No → Go To 4	All
4	**WARNING: DO NOT OPERATE THE DCHA IN AN ENCLOSED AREA SUCH AS A GARAGE THAT DOES NOT HAVE EXHAUST VENTILATION FACILITIES. ALWAYS VENT THE DCHA's EXHAUST WHEN OPERATING THE DCHA. FAILURE TO FOLLOW THESE INSTRUCTIONS MAY RESULT IN PERSONAL INJURY OR DEATH.** Start the engine. Allow the engine to idle. Turn the A/C - Heater Control Module's Power switch on. Turn the Blower switch to the high speed position. **CAUTION: Do not activate the Diesel Cabin Heater Test with the engine off. Failure to follow these instructions may result in internal damage to the DCHA Heater Module.** **NOTE: Do not disconnect the vehicle's battery or the DCHA's main power supply while the DCHA is in operation or in run-down mode. Failure to follow these instructions may result in excess emissions from the DCHA during heater operation.** With the DRBIII® in HVAC, Systems Tests, select Diesel Cabin Heater Test and press #1. With the DRBIII® in HVAC, Systems Tests, Diesel Cabin Heater Test, read the Cabin Heater Status. Does the Status display: On? Yes → Replace the FCM in accordance with the Service Information. Perform CABIN HEATER VERIFICATION TEST - VER 1. No → Replace the A/C - Heater Control Module in accordance with the Service Information. Perform CABIN HEATER VERIFICATION TEST - VER 1.	All

Symptom:

***CHIME INOPERATIVE**

POSSIBLE CAUSES
CHIME DRIVER CIRCUIT - OPEN
CHIME DRIVER CIRCUIT - SHORT TO GROUND
CHIME DRIVER CIRCUIT - SHORT TO VOLTAGE
INSTRUMENT CLUSTER
BCM

TEST	ACTION	APPLICABILITY
1	With the DRBIII®, actuate the CHIME. (BCM actuator) Does chime sound a warning? Yes → Test Complete. No → Go To 2	All
2	Disconnect the Instrument Cluster harness connector(s). Disconnect the BCM harness connector(s). Using a 12-volt test light connected to 12-volts, check the chime driver circuit for a short to ground. Does the test light illuminate brightly? Yes → Repair the chime driver circuit for a short to ground. Perform BODY VERIFICATION TEST - VER 1. No → Go To 3	All
3	Disconnect the Instrument Cluster harness connector(s). Disconnect the BCM harness connector(s). Using a DVOM connected to ground, check the chime driver circuit for a short to voltage. Is the voltage above 5.0 volts? Yes → Repair the chime driver circuit for a short to voltage. Perform BODY VERIFICATION TEST - VER 1. No → Go To 4	All
4	Reconnect the BCM if disconnected in previous step. Disconnect the Instrument Cluster harness connectors. Using a 12-volt test light connected to 12-volts, check the chime driver circuit at the Instrument Cluster connector. With the DRBIII®, actuate the CHIME. (BCM actuator) Does the test light illuminate ON and OFF? Yes → Replace the Instrument Cluster. Perform BODY VERIFICATION TEST - VER 1. No → Go To 5	All

*CHIME INOPERATIVE — Continued

TEST	ACTION	APPLICABILITY
5	Disconnect the Instrument Cluster harness connectors. Disconnect the BCM harness connector(s). Measure the resistance of the chime driver circuit between the Instrument Cluster connector and the BCM connector. Is the resistance below 5.0 ohms? No → Repair the chime driver circuit for an open, between the Instrument Cluster and the BCM. Perform BODY VERIFICATION TEST - VER 1. Yes → Replace the BCM. Perform BODY VERIFICATION TEST - VER 1.	All

Symptom:

***KEY IN IGNITION AND DRIVER'S DOOR OPEN CHIME NOT OPERATING PROPERLY**

POSSIBLE CAUSES
DRIVER DOOR AJAR STATUS
IGNITION SWITCH
BODY CONTROL MODULE

TEST	ACTION	APPLICABILITY
1	Open the driver door. With the DRB, in Input/Outputs, read the ″DR DOOR AJAR SW″ state. Does the DRB display ″DR DOOR AJAR SW: CLOSED″? Yes → Go To 2 No → Refer to symptom list for problems related to Door Ajar. Perform BODY VERIFICATION TEST - VER 1.	All
2	With the DRBIII® in Inputs/Outputs, read the Key in Ign Sw state while inserting the key in and out of the ignition switch. Does the DRBIII® display change from open to closed? Yes → Replace and program the Body Control Module in accordance with the Service Information. Perform BODY VERIFICATION TEST - VER 1. No → Check the Ignition Lock Cylinder for damage. If OK replace the Ignition Switch. Perform BODY VERIFICATION TEST - VER 1.	All

Symptom:

***PROBLEM WITH THE VEHICLE SPEED WARNING CHIME**

POSSIBLE CAUSES
INCORRECT COUNTRY CODE PROGRAMMED IN BCM
BODY CONTROL MODULE

TEST	ACTION	APPLICABILITY
1	Note: The high speed warning chime is for Gulf Coast Countries only. With the DRBIII® in Miscellaneous check the Body Control Module country code setting. Is the country code incorrect? Yes → Program the correct country code setting. Perform BODY VERIFICATION TEST - VER 1. No → Replace and program the Body Control Module in accordance with the Service Information. Perform BODY VERIFICATION TEST - VER 1.	All

Symptom:
APM MESSAGES NOT RECEIVED

When Monitored and Set Condition:

APM MESSAGES NOT RECEIVED

When Monitored: With the ignition in run, and the IOD fuse installed.

Set Condition: The BCM does not receive any messages from the Adjustable Pedals Module (APM) for at least 0.125 seconds.

POSSIBLE CAUSES
ATTEMPT TO COMMUNICATE WITH THE ADJUSTABLE PEDALS MODULE
BODY CONTROL MODULE

TEST	ACTION	APPLICABILITY
1	Turn the ignition on. With the DRB, attempt to communicate with the Adjustable Pedals Module. Was the DRB able to I/D or communicate with the APM? Yes → Go To 2 No → Refer to the Communication category for the related symptom(s). Perform BODY VERIFICATION TEST - VER 1.	All
2	With the DRB, erase DTC's. Cycle the ignition switch from off to on and wait approximately 1 minute. With the DRB, read DTC's. Did this DTC reset? Yes → Replace the Body Control Module in accordance with the service information. Perform BODY VERIFICATION TEST - VER 1. No → Test Complete.	All

Symptom:
ATC MODULE MESSAGES NOT RECEIVED

When Monitored and Set Condition:

ATC MODULE MESSAGES NOT RECEIVED

When Monitored: With the ignition in run, and the IOD fuse installed.

Set Condition: The BCM does not receive any messages from the Automatic Temperature Control (ATC) module for at least 0.125 seconds.

POSSIBLE CAUSES
ATTEMPT TO COMMUNICATE WITH THE AUTOMATIC TEMPERATURE CONTROL MODULE
BODY CONTROL MODULE

TEST	ACTION	APPLICABILITY
1	Turn the ignition on. With the DRB, enter Body then Automatic Temp Control. Was the DRB able to I/D or communicate with the ATC? Yes → Go To 2 No → Refer to the Communication category for the related symptom(s). Perform BODY VERIFICATION TEST - VER 1.	All
2	With the DRB, erase DTC's. Cycle the ignition switch from off to on and wait approximately 1 minute. With the DRB, read DTC's. Did this DTC reset? Yes → Replace the Body Control Module in accordance with the service information. Perform BODY VERIFICATION TEST - VER 1. No → Test Complete.	All

Symptom:
AUDIO MESSAGES NOT RECEIVED

When Monitored and Set Condition:

AUDIO MESSAGES NOT RECEIVED

When Monitored: With the ignition in run, and the IOD fuse installed.

Set Condition: The BCM does not receive any messages from the radio for at least 5 seconds.

POSSIBLE CAUSES
ATTEMPT TO COMMUNICATE WITH THE RADIO
BODY CONTROL MODULE

TEST	ACTION	APPLICABILITY
1	Turn the ignition on. With the DRB, attempt to communicate with the Radio. Was the DRB able to I/D or communicate with the Radio? Yes → Go To 2 No → Refer to the Communication category for the related symptom(s). Perform BODY VERIFICATION TEST - VER 1.	All
2	With the DRB, erase DTC's. Cycle the ignition switch from off to on and wait approximately 1 minute. With the DRB, read DTC's. Did this DTC reset? Yes → Replace the Body Control Module in accordance with the service information. Perform BODY VERIFICATION TEST - VER 1. No → Test Complete.	All

Symptom List:

BCM, PCI BUS SHORTED TO BATTERY
BCM, PCI BUS SHORTED TO GROUND
FCM, PCI BUS SHORTED TO BATTERY
FCM, PCI BUS SHORTED TO GROUND

Test Note: All symptoms listed above are diagnosed using the same tests. The title for the tests will be BCM, PCI BUS SHORTED TO BATTERY.

When Monitored and Set Condition:

BCM, PCI BUS SHORTED TO BATTERY

When Monitored: Continuously

Set Condition: Anytime the BCM detects a short to battery on the PCI Bus circuit.

BCM, PCI BUS SHORTED TO GROUND

When Monitored: Continuously

Set Condition: Anytime the BCM detects a short to ground on the PCI Bus circuit.

FCM, PCI BUS SHORTED TO BATTERY

When Monitored: Continuously

Set Condition: Anytime the FCM detects a short to battery on the PCI Bus circuit.

FCM, PCI BUS SHORTED TO GROUND

When Monitored: Continuously

Set Condition: Anytime the FCM detects a short to ground on the PCI Bus circuit.

POSSIBLE CAUSES
INTERMITTENT CONDITION

BCM, PCI BUS SHORTED TO BATTERY — Continued

TEST	ACTION	APPLICABILITY
1	**NOTE: For this code to be active, the DRB will not be able to communicate with any modules on the vehicle (except the PCM).** **NOTE: Clear the code. If this code continues to set and the DRB can still communicate with the module, it will be necessary to replace the module.** **WARNING: WHEN THE ENGINE IS OPERATING, DO NOT STAND IN A DIRECT LINE WITH THE FAN. DO NOT PUT YOUR HANDS NEAR THE PULLEYS, BELTS OR FAN. DO NOT WEAR LOOSE CLOTHING.** **NOTE: The conditions that set the DTC are not present at this time. The following list may help in identifying the intermittent condition.** With the engine running at normal operating temperature, wiggle the wiring harnesses. This is to try and duplicate the complete bus failure condition. Refer to any Technical Service Bulletins (TSB) that may apply. Visually inspect the related wiring harness. Look for any chafed, pierced, pinched, or partially broken wires. Visually inspect the related wiring harness connectors. Look for broken, bent, pushed out, or corroded terminals. Were any of the above conditions present? Yes → Repair as necessary Perform BODY VERIFICATION TEST - VER 1. No → Test Complete.	All

Symptom:

COUNTRY CODE NOT PROGRAMMED

POSSIBLE CAUSES
SELECT CORRECT COUNTRY CODE

TEST	ACTION	APPLICABILITY
1	With the DRB, enter Body Computer, Miscellaneous then Change Country Code. Select the correct country code for the vehicle. With the DRB, erase BCM DTC's. Cycle the ignition switch from off to on and wait approximately 1 minute. With the DRB, read BCM DTC's. Did this DTC reset? Yes → Replace the Body Control Module in accordance with the service information. Perform BODY VERIFICATION TEST - VER 1. No → Test Complete.	All

Symptom:
FCM MESSAGES NOT RECEIVED

When Monitored and Set Condition:

FCM MESSAGES NOT RECEIVED

When Monitored: With the ignition in run, and the IOD fuse installed.

Set Condition: The BCM does not receive any messages from the Front Control Module (FCM) for at least 5 seconds.

POSSIBLE CAUSES
ATTEMPT TO COMMUNICATE WITH THE FRONT CONTROL MODULE
BODY CONTROL MODULE

TEST	ACTION	APPLICABILITY
1	Turn the ignition on. With the DRB, attempt to communicate with the FCM. Was the DRB able to I/D or communicate with the FCM? Yes → Go To 2 No → Refer to the Communication category for the related symptom(s). Perform BODY VERIFICATION TEST - VER 1.	All
2	With the DRB, erase DTC's. Cycle the ignition switch from off to on and wait approximately 1 minute. With the DRB, read DTC's. Did this DTC reset? Yes → Replace the Body Control Module in accordance with the service information. Perform BODY VERIFICATION TEST - VER 1. No → Test Complete.	All

Symptom:
FCM, BCM COMMUNICATION FAULT

When Monitored and Set Condition:

FCM, BCM COMMUNICATION FAULT

When Monitored: With the ignition in run, and the IOD fuse installed.

Set Condition: The FCM does not receive any messages from the Body Control Module (BCM) for at least 5 seconds.

POSSIBLE CAUSES
ATTEMPT TO COMMUNICATE WITH THE BCM
FRONT CONTROL MODULE

TEST	ACTION	APPLICABILITY
1	Turn the ignition on. With the DRB, attempt to communicate with the BCM. Was the DRB able to I/D or communicate with the BCM? Yes → Go To 2 No → Refer to the Communication category for the related symptom(s). Perform BODY VERIFICATION TEST - VER 1.	All
2	With the DRB, erase DTC's. Cycle the ignition switch from off to on and wait approximately 1 minute. With the DRB, read DTC's. Did this DTC reset? Yes → Replace the Front Control Module in accordance with the service information. Perform BODY VERIFICATION TEST - VER 1. No → Test Complete.	All

Symptom:
FCM, HVAC COMMUNICATION FAULT

When Monitored and Set Condition:

FCM, HVAC COMMUNICATION FAULT

When Monitored: With the ignition in run, and the IOD fuse installed.

Set Condition: The FCM does not receive any messages from the Automatic Temperature Control (ATC) module or the A/C Heater Control (MTC) for at least 20 seconds.

POSSIBLE CAUSES
ATTEMPT TO COMMUNICATE WITH THE HVAC
FRONT CONTROL MODULE

TEST	ACTION	APPLICABILITY
1	Turn the ignition on. With the DRB, attempt to communicate with the A/C Heater Control (MTC) or the Automatic Temp Control (ATC). Was the DRB able to I/D or communicate with the HVAC or the ATC? Yes → Go To 2 No → Refer to the Communication category for the related symptom(s). Perform BODY VERIFICATION TEST - VER 1.	All
2	With the DRB, erase DTC's. Cycle the ignition switch from off to on and wait approximately 1 minute. With the DRB, read DTC's. Did this DTC reset? Yes → Replace the Front Control Module in accordance with the service information. Perform BODY VERIFICATION TEST - VER 1. No → Test Complete.	All

Symptom:
FCM, PCI INTERNAL FAULT

When Monitored and Set Condition:

FCM, PCI INTERNAL FAULT

When Monitored: Continuously.

Set Condition: The DTC will set if the FCM detects an internal fault.

POSSIBLE CAUSES
FCM, PCI INTERNAL FAULT

TEST	ACTION	APPLICABILITY
1	Connect the DRB to the Data Link Connector. Turn the ignition on. With the DRB, erase FCM DTC's. Turn the ignition off then turn the ignition on. With the DRB, read FCM DTC's. Did this DTC reset? Yes → Replace the Front Control Module in accordance with the service information. Perform BODY VERIFICATION TEST - VER 1. No → Test Complete.	All

Symptom:
FCM, PCM COMMUNICATION FAULT

When Monitored and Set Condition:

FCM, PCM COMMUNICATION FAULT

When Monitored: With the ignition in run, and the IOD fuse installed.

Set Condition: The FCM does not receive any messages from the PCM for at least 5 seconds.

POSSIBLE CAUSES
PCM COMMUNICATION FAULT
ATTEMPT TO COMMUNICATE WITH THE PCM
PCI BUS CIRCUIT OPEN
POWERTRAIN CONTROL MODULE

TEST	ACTION	APPLICABILITY
1	Turn the ignition on. With the DRB, enter Instrument Cluster, System Tests then PCM Monitor. Does the DRB display: PCM is active on BUS? Yes → Erase the DTC, if DTC resets, replace the Front Control Module in accordance with the service information. Perform BODY VERIFICATION TEST - VER 1. No → Go To 2	All
2	Turn the ignition on. With the DRB, attempt to communicate with the PCM. Was the DRB able to communicate with the PCM? Yes → Go To 3 No → Refer to the communication category and perform the appropriate symptom. Perform BODY VERIFICATION TEST - VER 1.	All
3	Turn the ignition off. Disconnect the PCM harness connector. Connect the diagnostic junction port tester #8339 to the diagnostic junction port. **Note: Do not connect the tester to the DRB.** Measure the resistance of the PCI Bus circuit between the diagnostic junction port tester and the PCM connector. Is the resistance below 5.0 ohms? Yes → Replace and program the Powertrain Control Module in accordance with the Service Information. Perform BODY VERIFICATION TEST - VER 1. No → Repair the PCI Bus circuit for an open. Perform BODY VERIFICATION TEST - VER 1.	All

Symptom:
FCM, RADIO COMMUNICATION FAULT

When Monitored and Set Condition:

FCM, RADIO COMMUNICATION FAULT

When Monitored: With the ignition in run, and the IOD fuse installed.

Set Condition: The FCM does not receive any messages from the radio for at least 5 seconds.

POSSIBLE CAUSES
ATTEMPT TO COMMUNICATE WITH THE RADIO
FRONT CONTROL MODULE

TEST	ACTION	APPLICABILITY
1	Turn the ignition on. With the DRB, attempt to communicate with the Radio. Was the DRB able to I/D or communicate with the Radio? Yes → Go To 2 No → Refer to the Communication category for the related symptom(s). Perform BODY VERIFICATION TEST - VER 1.	All
2	With the DRB, erase DTC's. Cycle the ignition switch from off to on and wait approximately 1 minute. With the DRB, read DTC's. Did this DTC reset? Yes → Replace the Front Control Module in accordance with the service information. Perform BODY VERIFICATION TEST - VER 1. No → Test Complete.	All

Symptom:
FCM, TCM COMMUNICATION FAULT

When Monitored and Set Condition:

FCM, TCM COMMUNICATION FAULT

When Monitored: With the ignition in run, and the IOD fuse installed.

Set Condition: The FCM does not receive any messages from the Transmission Control Module (TCM) for at least 5 seconds.

POSSIBLE CAUSES
ATTEMPT TO COMMUNICATE WITH THE TCM
FRONT CONTROL MODULE

TEST	ACTION	APPLICABILITY
1	Turn the ignition on. With the DRB, attempt to communicate with the TCM. Was the DRB able to I/D or communicate with the TCM? Yes → Go To 2 No → Refer to the Communication category for the related symptom(s). Perform BODY VERIFICATION TEST - VER 1.	All
2	With the DRB, erase DTC's. Cycle the ignition switch from off to on and wait approximately 1 minute. With the DRB, read DTC's. Did this DTC reset? Yes → Replace the Front Control Module in accordance with the service information. Perform BODY VERIFICATION TEST - VER 1. No → Test Complete.	All

Symptom:
IGNITION MUX SWITCH INPUT OPEN

When Monitored and Set Condition:

IGNITION MUX SWITCH INPUT OPEN

When Monitored: With the ignition on and battery voltage greater than 10.4 volts.

Set Condition: The Ignition MUX sense circuit voltage at the BCM goes above 4.9 volts.

POSSIBLE CAUSES
IGNITION SWITCH
IGNITION SWITCH SENSE CIRCUIT OPEN
IGNITION SWITCH SENSE RETURN CIRCUIT OPEN
BODY CONTROL MODULE
BODY CONTROL MODULE

TEST	ACTION	APPLICABILITY
1	Turn the ignition off. Disconnect the Ignition Switch 5-way connector. Connect a jumper wire between the Ignition Switch Sense circuit and ground. With the DRBIII® in Sensors, read the IGNITION SW voltage. Does the DRBIII® display IGNITION SW 0.0 volts? Yes → Go To 3 No → Go To 2	All
2	Turn the ignition off. Gain access to the Body Control Module C5 connector. Backprobe a jumper wire between the Ignition Switch Sense circuit and ground. With the DRBIII® in Sensors, read the IGNITION SW voltage. Does the DRBIII® display IGNITION SW 0.0 volts? Yes → Repair the Ignition Switch Sense circuit for an open. Perform BODY VERIFICATION TEST - VER 1. No → Replace the Body Control Module in accordance with the service information. Perform BODY VERIFICATION TEST - VER 1.	All
3	Turn the ignition off. Disconnect the Ignition Switch 5-way connector. Connect a jumper wire between the Ignition Switch Sense circuit and the Ignition Switch Sense Return circuit. With the DRBIII® in Sensors, read the IGNITION SW voltage. Does the DRBIII® display IGNITION SW 0.0 volts? Yes → Replace the Ignition Switch in accordance with the service information. Perform BODY VERIFICATION TEST - VER 1. No → Go To 4	All

IGNITION MUX SWITCH INPUT OPEN — Continued

TEST	ACTION	APPLICABILITY
4	Turn the ignition off. Reconnect the Ignition Switch 5-way connector. Gain access to the Body Control Module C4 connector. Backprobe a jumper wire between the Ignition Switch Sense Return circuit and ground. With the DRBIII® in Sensors, read the IGNITION SW voltage. Does the DRBIII® display IGNITION SW 0.0 volts? Yes → Repair the Ignition Switch Sense Return circuit for an open. Perform BODY VERIFICATION TEST - VER 1. No → Replace the Body Control Module in accordance with the service information. Perform BODY VERIFICATION TEST - VER 1.	All

Symptom:
IGNITION MUX SWITCH INPUT SHORT

When Monitored and Set Condition:

IGNITION MUX SWITCH INPUT SHORT

When Monitored: With the ignition on and battery voltage greater than 10.4 volts.

Set Condition: The Ignition MUX Sense circuit voltage at the BCM goes below 0.5 volt for more than 2 seconds.

POSSIBLE CAUSES
IGNITION SWITCH SENSE CIRCUIT SHORTED TO GROUND
IGNITION SWITCH SENSE RETURN CIRCUIT SHORTED TO GROUND
IGNITION SWITCH SHORTED
IGNITION SWITCH SENSE CIRCUIT SHORTED TO IGNITION SWITCH SENSE RETURN CIRCUIT
BODY CONTROL MODULE

TEST	ACTION	APPLICABILITY
1	Turn the ignition off. Disconnect the Ignition Switch 5-way connector. With the DRBIII® in Sensors, read the IGNITION SW voltage. Does the DRBIII® display IGNITION SW 0.0 volts? Yes → Go To 2 No → Replace the Ignition Switch in accordance with the service information. Perform BODY VERIFICATION TEST - VER 1.	All
2	Turn the ignition off. Disconnect the Ignition Switch 5-way connector. Disconnect the Body Control Module C5 connector. Measure the resistance between ground and the Ignition Switch Sense circuit in the BCM C5 connector. Is the resistance below 10k ohms? Yes → Repair the Ignition Switch Sense circuit for a short to ground. Perform BODY VERIFICATION TEST - VER 1. No → Go To 3	All

IGNITION MUX SWITCH INPUT SHORT — Continued

TEST	ACTION	APPLICABILITY
3	Turn the ignition off. Gain access to the Body Control Module. Disconnect the Body Control Module C4 and C5 harness connectors. Disconnect the Ignition Switch 5-way harness connector. Measure the resistance between the Ignition Switch Sense circuit and the Ignition Switch Sense Return circuit. Is the resistance below 10k ohms? Yes → Repair the Ignition Switch Sense circuit for a short to the Ignition Switch Sense Return circuit. Perform BODY VERIFICATION TEST - VER 1. No → Go To 4	All
4	Turn the ignition off. Disconnect the Ignition Switch 5-way connector. Disconnect the Body Control Module C4 connector. Measure the resistance between ground and the Ignition Switch Sense Return circuit in the BCM C4 connector. Is the resistance below 10k ohms? Yes → Repair the Ignition Switch Sense Return circuit for a short to ground. Perform BODY VERIFICATION TEST - VER 1. No → Replace the Body Control Module in accordance with the service information. Perform BODY VERIFICATION TEST - VER 1.	All

Symptom:
IGNITION RUN OUTPUT SHORT

When Monitored and Set Condition:

IGNITION RUN OUTPUT SHORT

When Monitored: With the ignition on and battery voltage greater than 10.4 volts.

Set Condition: This DTC will set if the Body Control Module (BCM) sees voltage below 0.5 volt for more than two seconds on the Ignition Switch Output (Run) circuits.

POSSIBLE CAUSES
TEST FOR CURRENT DTCS
MODULE OR COMPONENT FAULT
FUSED IGNITION SWITCH OUTPUT (RUN) CIRCUIT SHORTED TO GROUND
BODY CONTROL MODULE

TEST	ACTION	APPLICABILITY
1	Turn the ignition on. With the DRBIII® in Body Computer, record and erase BCM DTCs. Cycle the ignition from ON to OFF. Start the engine. With the DRBIII® in Body Computer, read BCM DTCs. Does the DRBIII® display IGNITION RUN OUTPUT SHORT? Yes → Go To 2 No → The condition that caused this DTC is currently not present. Use the wiring diagram/schematic as a guide, and inspect the related wiring harness for a possible intermittent condition. Perform BODY VERIFICATION TEST - VER 1.	All

IGNITION RUN OUTPUT SHORT — Continued

TEST	ACTION	APPLICABILITY
2	**NOTE: Repeat this test until either the DTC is no longer present or all of the modules and components are disconnected from the Fused Ignition Switch Output (Run) circuit and the DTC is still present.** Turn the ignition off. Verify which of these modules and components are used on the vehicle you are diagnosing: HVAC (ATC or MTC); Rear ATC Control Switch; IP Switch Bank; Auto Daylight Mirror; Overhead Console; Heated Seat Module (Driver/Pass); Controller Antilock Brake. **NOTE: For the result of this test to be valid, disconnect only one module or component at a time and then verify if the DTC is still present.** Using the wiring diagram/schematic as a guide, disconnect the harness connector with the Fused Ignition Switch Output (Run) circuit from one module or component identified above. **NOTE: Check connectors - Clean/repair as necessary.** Turn the ignition on. With the DRBIII® in Body Computer, erase BCM DTCs. Cycle the ignition form ON to OFF. Start the engine. With the DRBIII® in Body Computer, read BCM DTCs. Does the DRBIII® display IGNITION RUN OUTPUT SHORT? Yes (All Modules/Components Disconnected) Go To 3 No → Replace the module or the component that when disconnected did not reset the DTC in accordance with the Service Information. Perform BODY VERIFICATION TEST - VER 1.	All
3	**NOTE: All modules and components identified in Test Number 2 must be disconnected from the BCM's Fused Ignition Switch Output (Run) circuit and the DTC must still be present for the result of this test to be valid.** Turn the ignition off. Disconnect the Body Control Module (BCM) C3 and C4 harness connectors. Measure the resistance between ground and the Fused Ignition Switch Output (Run) circuits in the BCM C3 harness connector. Measure the resistance between ground and the Fused Ignition Switch Output (Run) circuit in the BCM C4 harness connector. Is the resistance below 10K ohms on any of the circuits? Yes → Repair the Fused Ignition Switch Output (Run) circuit(s) with a resistance below 10K ohms for a short to ground. Perform BODY VERIFICATION TEST - VER 1. No → Replace the Body Control Module (BCM) in accordance with the service information. Perform BODY VERIFICATION TEST - VER 1.	All

Symptom:
INTERNAL BCM FAILURE

When Monitored and Set Condition:

INTERNAL BCM FAILURE

When Monitored: The BCM detects an internal fault for 10 seconds.

Set Condition: The DTC will set if the BCM detects an internal fault.

POSSIBLE CAUSES
INTERNAL BCM FAILURE

TEST	ACTION	APPLICABILITY
1	Connect the DRB to the Data Link Connector. Turn the ignition on. With the DRB, erase BCM DTC's. Turn the ignition off then turn the ignition on. With the DRB, read BCM DTC's. Did this DTC reset? Yes → Replace the Body Control Module in accordance with the service information. Perform BODY VERIFICATION TEST - VER 1. No → Test Complete.	All

Symptom:

LEFT PSD MESSAGES NOT RECEIVED

When Monitored and Set Condition:

LEFT PSD MESSAGES NOT RECEIVED

When Monitored: When the Body Control Module is awake.

Set Condition: The BCM does not sense a response from the Left Power Sliding Door Module.

POSSIBLE CAUSES
ATTEMPT TO COMMUNICATE WITH THE LEFT SLIDING DOOR CONTROL MODULE
BODY CONTROL MODULE

TEST	ACTION	APPLICABILITY
1	Turn the ignition on. With the DRB, attempt to communicate with the Left Sliding Door Control Module. Was the DRB able to I/D or communicate with the Left Sliding Door Control Module? Yes → Go To 2 No → Refer to the Communication category for the related symptom(s). Perform BODY VERIFICATION TEST - VER 1.	All
2	With the DRB, erase DTC's. Cycle the ignition switch from off to on and wait approximately 1 minute. With the DRB, read DTC's. Did this DTC reset? Yes → Replace the Body Control Module in accordance with the service information. Perform BODY VERIFICATION TEST - VER 1. No → Test Complete.	All

Symptom:
LIFTGATE MODULE MESSAGES NOT RECEIVED

When Monitored and Set Condition:

LIFTGATE MODULE MESSAGES NOT RECEIVED

When Monitored: When the Body Control Module is awake.

Set Condition: The BCM does not sense a response from the Power Liftgate Control Module.

POSSIBLE CAUSES
ATTEMPT TO COMMUNICATE WITH THE POWER LIFTGATE MODULE
BODY CONTROL MODULE

TEST	ACTION	APPLICABILITY
1	Turn the ignition on. With the DRB, attempt to communicate with the Power Liftgate Module. Was the DRB able to I/D or communicate with the Power Liftgate Module? Yes → Go To 2 No → Refer to the Communication category for the related symptom(s). Perform BODY VERIFICATION TEST - VER 1.	All
2	With the DRB, erase DTC's. Cycle the ignition switch from off to on and wait approximately 1 minute. With the DRB, read DTC's. Did this DTC reset? Yes → Replace the Body Control Module in accordance with the service information. Perform BODY VERIFICATION TEST - VER 1. No → Test Complete.	All

Symptom:
MIC MESSAGES NOT RECEIVED

When Monitored and Set Condition:

MIC MESSAGES NOT RECEIVED

When Monitored: With the ignition in run, and the IOD fuse installed.

Set Condition: The BCM does not receive any messages from the Instrument Cluster (MIC) for at least 5 seconds.

POSSIBLE CAUSES
ATTEMPT TO COMMUNICATE WITH THE MIC
BODY CONTROL MODULE

TEST	ACTION	APPLICABILITY
1	Turn the ignition on. With the DRB, attempt to communicate with the Instrument Cluster (MIC). Was the DRB able to I/D or communicate with the Instrument Cluster (MIC)? Yes → Go To 2 No → Refer to the Communication category for the related symptom(s). Perform BODY VERIFICATION TEST - VER 1.	All
2	With the DRB, erase DTC's. Cycle the ignition switch from off to on and wait approximately 1 minute. With the DRB, read DTC's. Did this DTC reset? Yes → Replace the Body Control Module in accordance with the service information. Perform BODY VERIFICATION TEST - VER 1. No → Test Complete.	All

Symptom:
MSM MESSAGES NOT RECEIVED

When Monitored and Set Condition:

MSM MESSAGES NOT RECEIVED

When Monitored: With the ignition in run, and the IOD fuse installed.

Set Condition: The BCM does not receive any messages from the Memory Seat Module (MSM) for at least 0.125 seconds.

POSSIBLE CAUSES
ATTEMPT TO COMMUNICATE WITH THE MEMORY SEAT MODULE
BODY CONTROL MODULE

TEST	ACTION	APPLICABILITY
1	Turn the ignition on. With the DRB, enter Body then Memory Seat Module. Was the DRB able to I/D or communicate with the MSM? Yes → Go To 2 No → Refer to the Communication category for the related symptom(s). Perform BODY VERIFICATION TEST - VER 1.	All
2	With the DRB, erase DTC's. Cycle the ignition switch from off to on and wait approximately 1 minute. With the DRB, read DTC's. Did this DTC reset? Yes → Replace the Body Control Module in accordance with the service information. Perform BODY VERIFICATION TEST - VER 1. No → Test Complete.	All

Symptom:
NO PCI MESSAGES FROM CD CHANGER

When Monitored and Set Condition:

NO PCI MESSAGES FROM CD CHANGER

When Monitored: With the ignition on and the radio on.

Set Condition: If the DRB interrogates the CD Changer and does not receive the proper response from the CD Changer.

POSSIBLE CAUSES
CD CHANGER (DIN) CABLE
CD CHANGER PCI BUS CIRCUIT OPEN
IGNITION SWITCH OUTPUT CIRCUIT OPEN
RADIO GROUND CKT OPEN
CD CHANGER

TEST	ACTION	APPLICABILITY
1	Turn the ignition off. Disconnect the Radio C2 connector (DIN cable) from the Radio and the CD Changer. Visually inspect the cable for damage. In the next step check for open wires in the DIN cable. Measure the resistance of the each DIN cable circuit between the Radio DIN cable connector and the CD Changer DIN cable connector. In the next step check for wires shorted to the DIN cable metal connectors. Measure the resistance between each Radio C2 connector (DIN cable) circuit and the Radio Din cable metal connector. Is the DIN cable circuits shorted together or open? Yes → Replace the CD Changer (DIN) cable. Perform BODY VERIFICATION TEST - VER 1. No → Go To 2	All

NO PCI MESSAGES FROM CD CHANGER — Continued

TEST	ACTION	APPLICABILITY
2	Use Scope input cable CH7058, Cable to Probe adapter CH7062, and the red and black test probes. Connect the scope input cable to the channel one connector on the DRB. Attach the red and black leads and the cable to probe adapter to the scope input cable. With the DRBIII® select Pep Module Tools. Select lab scope. Select Live Data. Select 12 volt square wave. Press F2 for Scope. Press F2 and use the down arrow to set voltage range to 20 volts. Set Probe to x10. Press F2 again when complete. Disconnect the CD Changer harness connector (DIN cable). Connect the Black lead to the chassis ground. Connect the Red lead to the PCI Bus circuit in the CD Changer DIN Cable connector. Reconnect the Radio C2 (DIN Cable) harness connector. Turn the ignition on. Turn the Radio and CD Changer on. Observe the voltage display on the DRB Lab Scope. Does the voltage pulse from 0 to approximately 7.5 volts? Yes → Go To 3 No → Replace the Radio. Perform BODY VERIFICATION TEST - VER 1.	All
3	Turn the ignition off. Disconnect the CD Changer harness connector (DIN cable). Turn the ignition on. Turn the Radio and the CD Changer on. Using a 12-volt test light connected to ground, probe the Ignition Switch Output circuit in the CD Changer DIN Cable connector. Is the test light illuminated? Yes → Go To 4 No → Replace the Radio. Perform BODY VERIFICATION TEST - VER 1.	All
4	Turn the ignition off. Disconnect the CD Changer harness connector (DIN cable). Using a 12-volt test light connected to 12-volts, probe each CD Changer ground circuit in the CD Changer connector (DIN cable). Is the test light illuminated for each circuit? Yes → Go To 5 No → Replace the Radio. Perform BODY VERIFICATION TEST - VER 1.	All
5	If there are no possible causes remaining, view repair. Repair Replace the CD Changer. Perform BODY VERIFICATION TEST - VER 1.	All

Symptom:
ORC MESSAGES NOT RECEIVED

When Monitored and Set Condition:

ORC MESSAGES NOT RECEIVED

When Monitored: With the ignition in run, and the IOD fuse installed.

Set Condition: The BCM does not receive any messages from the Occupant Restraint Controller (ORC) for at least 5 seconds.

POSSIBLE CAUSES
ATTEMPT TO COMMUNICATE WITH THE OCCUPANT RESTRAINT CONTROLLER
BODY CONTROL MODULE

TEST	ACTION	APPLICABILITY
1	Turn the ignition on. With the DRB, attempt to communicate with the ORC. Was the DRB able to I/D or communicate with the ORC? Yes → Go To 2 No → Refer to the Communication category for the related symptom(s). Perform BODY VERIFICATION TEST - VER 1.	All
2	With the DRB, erase DTC's. Cycle the ignition switch from off to on and wait approximately 1 minute. With the DRB, read DTC's. Did this DTC reset? Yes → Replace the Body Control Module in accordance with the service information. Perform BODY VERIFICATION TEST - VER 1. No → Test Complete.	All

Symptom:
OTIS MODULE MESSAGES NOT RECEIVED

When Monitored and Set Condition:

OTIS MODULE MESSAGES NOT RECEIVED

When Monitored: With the ignition in run, and the IOD fuse installed.

Set Condition: The BCM does not receive any messages from the overhead console for at least 5 seconds.

POSSIBLE CAUSES
ATTEMPT TO COMMUNICATE WITH THE OTIS
BODY CONTROL MODULE

TEST	ACTION	APPLICABILITY
1	Turn the ignition on. With the DRB, attempt to communicate with the overhead console. Was the DRB able to I/D or communicate with the overhead console? Yes → Go To 2 No → Refer to the Communication category for the related symptom(s). Perform BODY VERIFICATION TEST - VER 1.	All
2	With the DRB, erase DTC's. Cycle the ignition switch from off to on and wait approximately 1 minute. With the DRB, read DTC's. Did this DTC reset? Yes → Replace the Body Control Module in accordance with the service information. Perform BODY VERIFICATION TEST - VER 1. No → Test Complete.	All

Symptom:
PCI INTERNAL HARDWARE FAILURE

POSSIBLE CAUSES
PCI INTERNAL HARDWARE FAILURE

TEST	ACTION	APPLICABILITY
1	Connect the DRB to the Data Link Connector. Turn the ignition on. With the DRB, erase BCM DTC's. Turn the ignition off then turn the ignition on. With the DRB, read BCM DTC's. Did this DTC reset? Yes → Replace the Body Control Module in accordance with the service information. Perform BODY VERIFICATION TEST - VER 1. No → Test Complete.	All

Symptom:
PCM MESSAGES NOT RECEIVED

When Monitored and Set Condition:

PCM MESSAGES NOT RECEIVED

When Monitored: With the ignition in run, and the IOD fuse installed.

Set Condition: The BCM does not receive any messages from the PCM for at least 5 seconds.

POSSIBLE CAUSES
PCM MESSAGE NOT RECEIVED
ATTEMPT TO COMMUNICATE WITH THE PCM
PCI BUS CIRCUIT OPEN
POWERTRAIN CONTROL MODULE

TEST	ACTION	APPLICABILITY
1	Turn the ignition on. With the DRBIII®, enter Instrument Cluster, System Tests then PCM Monitor. Does the DRBIII® display: PCM is active on BUS? Yes → Erase the DTC, if DTC resets, replace the Body Control Module in accordance with the service information. Perform BODY VERIFICATION TEST - VER 1. No → Go To 2	All
2	Turn the ignition on. With the DRBIII®, attempt to communicate with the PCM. Was the DRBIII® able to communicate with the PCM? Yes → Go To 3 No → Refer to the communication category and perform the appropriate symptom. Perform BODY VERIFICATION TEST - VER 1.	All
3	Turn the ignition off. Disconnect the PCM harness connector. Connect the diagnostic junction port tester #8339 to the diagnostic junction port. **NOTE: Do not connect the tester to the DRBIII®.** Measure the resistance of the PCI Bus circuit between the diagnostic junction port tester and the PCM connector. Is the resistance below 5.0 ohms? Yes → Replace and program the Powertrain Control Module in accordance with the Service Information. Perform BODY VERIFICATION TEST - VER 1. No → Repair the PCI Bus circuit for an open. Perform BODY VERIFICATION TEST - VER 1.	All

Symptom:
RADIO MEM MSG NOT RECEIVED

When Monitored and Set Condition:

RADIO MEM MSG NOT RECEIVED

When Monitored: With the ignition in run, and the IOD fuse installed.

Set Condition: The BCM does not receive any radio memory messages.

POSSIBLE CAUSES
ATTEMPT TO COMMUNICATE WITH THE RADIO
CHECK THE MEMORY SYSTEM
BODY CONTROL MODULE

TEST	ACTION	APPLICABILITY
1	Turn the ignition on. With the DRB, attempt to communicate with the Radio. Was the DRB able to I/D or communicate with the Radio? Yes → Go To 2 No → Refer to the Communication category for the related symptom(s). Perform BODY VERIFICATION TEST - VER 1.	All
2	Turn the ignition on. Operate the memory seat system. Did the memory seat system operate properly? Yes → Go To 3 No → Refer to the Memory Seat category and perform the appropriate symptom. Perform BODY VERIFICATION TEST - VER 1.	All
3	With the DRB, erase DTC's. Cycle the ignition switch from off to on and wait approximately 1 minute. With the DRB, read DTC's. Did this DTC reset? Yes → Replace the Body Control Module in accordance with the service information. Perform BODY VERIFICATION TEST - VER 1. No → Test Complete.	All

Symptom:

RIGHT PSD MESSAGES NOT RECEIVED

When Monitored and Set Condition:

RIGHT PSD MESSAGES NOT RECEIVED

When Monitored: When the Body Control Module is awake.

Set Condition: The BCM does not sense a response from the Right Power Sliding Door Module.

POSSIBLE CAUSES
ATTEMPT TO COMMUNICATE WITH THE RIGHT SLIDING DOOR CONTROL MODULE
BODY CONTROL MODULE

TEST	ACTION	APPLICABILITY
1	Turn the ignition on. With the DRB, attempt to communicate with the Right Sliding Door Control Module. Was the DRB able to I/D or communicate with the Right Sliding Door Control Module? Yes → Go To 2 No → Refer to the Communication category for the related symptom(s). Perform BODY VERIFICATION TEST - VER 1.	All
2	With the DRB, erase DTC's. Cycle the ignition switch from off to on and wait approximately 1 minute. With the DRB, read DTC's. Did this DTC reset? Yes → Replace the Body Control Module in accordance with the service information. Perform BODY VERIFICATION TEST - VER 1. No → Test Complete.	All

Symptom:
RUN/START HARDWIRE INPUT FAILURE

When Monitored and Set Condition:

RUN/START HARDWIRE INPUT FAILURE

When Monitored: With the ignition on and battery voltage greater than 10.4 volts.

Set Condition: The Fused Ignition Switch Output circuit voltage at the BCM goes below 0.5 volts and the BCM detects a voltage mismatch between the two ignition switch inputs.

POSSIBLE CAUSES
TEST FOR CURRENT DTC'S
FUSED IGNITION SWITCH OUTPUT CIRCUIT OPEN
IGNITION SWITCH
BODY CONTROL MODULE

TEST	ACTION	APPLICABILITY
1	With the DRBIII®, record and erase DTC's. Cycle the ignition from ON to OFF. Start the vehicle and observe the DRBIII®. With the DRBIII®, read DTC's. Does the DRBIII® display RUN/START HARDWIRE INPUT FAILURE? Yes → Go To 2 No → The condition that caused this DTC is currently not present. Use the wiring diagram/schematic as a guide, and inspect the related wiring harness for a possible intermittent condition. Perform BODY VERIFICATION TEST - VER 1.	All
2	Turn the ignition off. Gain access to the Ignition Switch connector. Turn the ignition on. While back probing, measure the voltage of the Fused Ignition Switch Output (Run/Start) circuit. Is the voltage above 10.0 volts? Yes → Go To 3 No → Replace the Ignition Switch in accordance with the service information. Perform BODY VERIFICATION TEST - VER 1.	All

RUN/START HARDWIRE INPUT FAILURE — Continued

TEST	ACTION	APPLICABILITY
3	Turn the ignition off. Gain access to the Body Control Module C2 connector. While back probing, measure the voltage of the Fused Ignition Switch Output (Run/Start) circuit. Is the voltage above 10.0 volts? Yes → Repair the Fused Ignition Switch Output circuit for an open. Perform BODY VERIFICATION TEST - VER 1. No → Replace the Body Control Module in accordance with the service information. Perform BODY VERIFICATION TEST - VER 1.	All

Symptom:
SKIM MESSAGES NOT RECEIVED

When Monitored and Set Condition:

SKIM MESSAGES NOT RECEIVED

When Monitored: With the ignition in run, and the IOD fuse installed.

Set Condition: The BCM does not receive any messages from the Sentry Key Immobilizer Module (SKIM) for at least 5 seconds.

POSSIBLE CAUSES
ATTEMPT TO COMMUNICATE WITH THE SENTRY KEY IMMOBILIZER MODULE
BODY CONTROL MODULE

TEST	ACTION	APPLICABILITY
1	Turn the ignition on. With the DRB, attempt to communicate with the SKIM. Was the DRB able to I/D or communicate with the SKIM? Yes → Go To 2 No → Refer to the Communication category for the related symptom(s). Perform BODY VERIFICATION TEST - VER 1.	All
2	With the DRB, erase DTC's. Cycle the ignition switch from off to on and wait approximately 1 minute. With the DRB, read DTC's. Did this DTC reset? Yes → Replace the Body Control Module in accordance with the service information. Perform BODY VERIFICATION TEST - VER 1. No → Test Complete.	All

Symptom:
TCM MESSAGES NOT RECEIVED

When Monitored and Set Condition:

TCM MESSAGES NOT RECEIVED

When Monitored: With the ignition in run, and the IOD fuse installed.

Set Condition: The BCM does not receive any messages from the Transmission Control Module (TCM) for at least 5 seconds.

POSSIBLE CAUSES
ATTEMPT TO COMMUNICATE WITH THE TCM
BODY CONTROL MODULE

TEST	ACTION	APPLICABILITY
1	Turn the ignition on. With the DRBIII®, attempt to communicate with the Transmission Control Module. Was the DRBIII® able to I/D or communicate with the TCM? Yes → Go To 2 No → Refer to the Communication category for the related symptom(s). Perform BODY VERIFICATION TEST - VER 1.	All
2	With the DRBIII®, erase DTC's. Cycle the ignition switch from off to on and wait approximately 1 minute. With the DRBIII®, read DTC's. Did this DTC reset? Yes → Replace the Body Control Module in accordance with the service information. Perform BODY VERIFICATION TEST - VER 1. No → Test Complete.	All

Symptom:

***BUS +/- SIGNALS OPEN OR NO RESPONSE FROM AUTOMATIC TEMPERATURE CONTROL MODULE**

POSSIBLE CAUSES
ATTEMPT TO COMMUNICATE WITH THE BCM
GROUND CIRCUIT OPEN
FUSED (B+) CKT OPEN
FUSED IGNITION SWITCH OUTPUT CIRCUIT OPEN
OPEN PCI BUS CIRCUIT
AUTOMATIC TEMPERATURE CONTROL MODULE

TEST	ACTION	APPLICABILITY
1	Turn the ignition on. With the DRB, enter Body then Body Computer. Was the DRB able to I/D or communicate with the BCM? Yes → Go To 2 No → Refer to the symptom list for problems related to no communication with the BCM. Perform BODY VERIFICATION TEST - VER 1.	All
2	Turn the ignition off. Disconnect the ATC C2 harness connector. Using a 12-volt test light connected to 12-volts, probe the Ground circuit. Is the test light illuminated? Yes → Go To 3 No → Repair the Ground circuit for an open. Perform BODY VERIFICATION TEST - VER 1.	All
3	Turn the ignition off. Disconnect the ATC C2 harness connector. Using a 12-volt test light connected to ground, probe the Fused B+ circuit. Is the test light illuminated? Yes → Go To 4 No → Repair the Fused B+ circuit for an open or short. Refer to the wiring diagrams in the service information. Perform BODY VERIFICATION TEST - VER 1.	All
4	Turn the ignition off. Disconnect the ATC C2 harness connector. Turn the ignition on. Using a 12-volt test light connected to ground, probe the Fused Ignition Switch Output circuit. Is the test light illuminated? Yes → Go To 5 No → Repair the Fused Ignition Switch circuit for an open or short. Refer to the wiring diagrams in the service information. Perform BODY VERIFICATION TEST - VER 1.	All

*BUS +/- SIGNALS OPEN OR NO RESPONSE FROM AUTOMATIC TEMPERATURE CONTROL MODULE — Continued

TEST	ACTION	APPLICABILITY
5	**Note: Ensure there is PCI Bus communication with other modules on the vehicle before proceeding. If not, refer to the symptom list from the menu and repair as necessary.** Disconnect the ATC C2 harness connector. Use Scope input cable CH7058, Cable to Probe adapter CH7062, and the red and black test probes. Connect the scope input cable to the channel one connector on the DRB. Attach the red and black leads and the cable to probe adapter to the scope input cable. With the DRBIII® select Pep Module Tools. Select lab scope. Select Live Data. Select 12 volt square wave. Press F2 for Scope. Press F2 and use the down arrow to set voltage range to 20 volts. Set Probe to x10. Press F2 again when complete. Connect the Black lead to the chassis ground. Connect the Red lead to the PCI Bus circuit in the ATC connector. Turn the ignition on. Observe the voltage display on the DRB Lab Scope. Does the voltage pulse from 0 to approximately 7.5 volts? Yes → Go To 6 No → Repair the PCI Bus circuit for an open. Perform BODY VERIFICATION TEST - VER 1.	All
6	If there are no possible causes remaining, view repair. Repair Replace the Automatic Temperature Control Module in accordance with the service information. Perform BODY VERIFICATION TEST - VER 1.	All

Symptom:

***BUS +/- SIGNALS OPEN OR NO RESPONSE FROM BODY CONTROL MODULE**

POSSIBLE CAUSES
ATTEMPT TO COMMUNICATE WITH ANOTHER MODULE
FUSED (B+) CKT OPEN
OPEN GROUND CIRCUIT(S)
OPEN PCI BUS CIRCUIT
BODY CONTROL MODULE

TEST	ACTION	APPLICABILITY
1	Turn the ignition on. With the DRB, attempt to communicate with the Airbag Control Module (ACM). With the DRB, attempt to communicate with the Controller Antilock Brake (CAB) module. Was the DRB able to I/D or communicate with the ACM and the CAB? Yes → Go To 2 No → Refer to symptom list for problems related to the PCI Bus Communication Failure. Perform BODY VERIFICATION TEST - VER 1.	All
2	Turn the ignition off. Disconnect the BCM C2 harness connector. Using a 12-volt test light connected to ground, probe the Fused B+ circuit. Is the test light illuminated? Yes → Go To 3 No → Check fuse #14 in the IPM for an open. If ok, repair the Fused B+ circuit for an open or short. Refer to the wiring diagrams in the service information. Perform BODY VERIFICATION TEST - VER 1.	All
3	Turn the ignition off. Disconnect the BCM C2 harness connector. Using a 12-volt test light connected to 12-volts, probe both Ground circuits. Is the test light illuminated for each circuit? Yes → Go To 4 No → Repair the Ground circuit(s) for an open. Perform BODY VERIFICATION TEST - VER 1.	All

*BUS +/- SIGNALS OPEN OR NO RESPONSE FROM BODY CONTROL MODULE — Continued

TEST	ACTION	APPLICABILITY
4	**Note: Ensure there is PCI Bus communication with other modules on the vehicle before proceeding. If not, refer to the symptom list from the menu and repair as necessary.** Disconnect the BCM C3 harness connector. Use Scope input cable CH7058, Cable to Probe adapter CH7062, and the red and black test probes. Connect the scope input cable to the channel one connector on the DRB. Attach the red and black leads and the cable to probe adapter to the scope input cable. With the DRBIII® select Pep Module Tools. Select lab scope. Select Live Data. Select 12 volt square wave. Press F2 for Scope. Press F2 and use the down arrow to set voltage range to 20 volts. Set Probe to x10. Press F2 again when complete. Connect the Black lead to the chassis ground. Connect the Red lead to the PCI Bus circuit in the BCM connector. Turn the ignition on. Observe the voltage display on the DRB Lab Scope. Does the voltage pulse from 0 to approximately 7.5 volts? Yes → Go To 5 No → Repair the PCI Bus circuit for an open. Perform BODY VERIFICATION TEST - VER 1.	All
5	If there are no possible causes remaining, view repair. Repair Replace the Body Control Module in accordance with the service information. Perform BODY VERIFICATION TEST - VER 1.	All

Symptom:

***BUS +/- SIGNALS OPEN OR NO RESPONSE FROM HVAC**

POSSIBLE CAUSES
ATTEMPT TO COMMUNICATE WITH THE BCM
GROUND CIRCUIT OPEN
IGNITION SWITCH OUTPUT CIRCUIT OPEN
OPEN PCI BUS CIRCUIT
A/C HEATER CONTROL

TEST	ACTION	APPLICABILITY
1	Turn the ignition on. With the DRB, enter Body then Body Computer. Was the DRB able to I/D or communicate with the BCM? Yes → Go To 2 No → Refer to the symptom list for problems related to no communication with the BCM. Perform BODY VERIFICATION TEST - VER 1.	All
2	Turn the ignition off. Disconnect the A/C Heater Control C1 harness connector. Using a 12-volt test light connected to 12-volts, probe the ground circuit. Is the test light illuminated? Yes → Go To 3 No → Repair the Ground circuit for an open. Perform BODY VERIFICATION TEST - VER 1.	All
3	Turn the ignition off. Disconnect the A/C Heater Control C1 harness connector. Turn the ignition on. Using a 12-volt test light connected to ground, probe the Ignition Switch Output circuit. Is the test light illuminated? Yes → Go To 4 No → Repair the Ignition Switch Output circuit for an open or short. Perform BODY VERIFICATION TEST - VER 1.	All

*BUS +/- SIGNALS OPEN OR NO RESPONSE FROM HVAC — Continued

TEST	ACTION	APPLICABILITY
4	**Note: Ensure there is PCI Bus communication with other modules on the vehicle before proceeding. If not, refer to the symptom list from the menu and repair as necessary.** Disconnect the A/C Heater Control C1 harness connector. Use Scope input cable CH7058, Cable to Probe adapter CH7062, and the red and black test probes. Connect the scope input cable to the channel one connector on the DRB. Attach the red and black leads and the cable to probe adapter to the scope input cable. With the DRBIII® select Pep Module Tools. Select lab scope. Select Live Data. Select 12 volt square wave. Press F2 for Scope. Press F2 and use the down arrow to set voltage range to 20 volts. Set the probe to x10. Press F2 again when complete. Connect the Black lead to the chassis ground. Connect the Red lead to the PCI Bus circuit in the A/C Heater Control connector. Turn the ignition on. Observe the voltage display on the DRB Lab Scope. Does the voltage pulse from 0 to approximately 7.5 volts? Yes → Go To 5 No → Repair the PCI Bus circuit for an open. Perform BODY VERIFICATION TEST - VER 1.	All
5	If there are no possible causes remaining, view repair. Repair Replace the A/C Heater Control in accordance with the service information. Perform BODY VERIFICATION TEST - VER 1.	All

Symptom:

***BUS +/- SIGNALS OPEN OR NO RESPONSE FROM INSTRUMENT CLUSTER**

POSSIBLE CAUSES
ATTEMPT TO COMMUNICATE WITH THE BCM
OPEN GROUND CIRCUIT
OPEN FUSED B+ CIRCUIT
OPEN PCI BUS CIRCUIT
INSTRUMENT CLUSTER WAKE UP SENSE CKT OPEN
INSTRUMENT CLUSTER WAKE UP SENSE CKT INTERNALLY OPEN
INSTRUMENT CLUSTER WAKE UP SENSE CKT SHORTED TO VOLTAGE
INSTRUMENT CLUSTER WAKE UP SENSE CKT INTERNALLY SHORTED TO VOLTAGE
INSTRUMENT CLUSTER
BODY CONTROL MODULE

TEST	ACTION	APPLICABILITY
1	Turn the ignition on. With the DRB, enter Body then Body Computer. Was the DRB able to I/D or communicate with the BCM? Yes → Go To 2 No → Refer to the symptom list for problems related to no communication with the BCM. Perform BODY VERIFICATION TEST - VER 1.	All
2	Turn the ignition off. Disconnect the Instrument Cluster harness connector. Using a 12-volt test light connected to 12-volts, probe both ground circuits. Is the test light illuminated for each circuit? Yes → Go To 3 No → Repair the ground circuit for an open. Perform BODY VERIFICATION TEST - VER 1.	All
3	Turn the ignition off. Disconnect the Instrument Cluster harness connector. Using a 12-volt test light connected to ground, probe the Fused B+ circuit. Is the test light illuminated? Yes → Go To 4 No → Repair the Fused B+ circuit for an open. Perform BODY VERIFICATION TEST - VER 1.	All

*BUS +/- SIGNALS OPEN OR NO RESPONSE FROM INSTRUMENT CLUSTER — Continued

TEST	ACTION	APPLICABILITY
4	**Note: Ensure there is PCI Bus communication with other modules on the vehicle before proceeding. If not, refer to the symptom list from the menu and repair as necessary.** Disconnect the Instrument Cluster harness connector. Use Scope input cable CH7058, Cable to Probe adapter CH7062, and the red and black test probes. Connect the scope input cable to the channel one connector on the DRB. Attach the red and black leads and the cable to probe adapter to the scope input cable. With the DRBIII® select Pep Module Tools. Select lab scope. Select Live Data. Select 12 volt square wave. Press F2 for Scope. Press F2 and use the down arrow to set voltage range to 20 volts. Set Probe to x10. Press F2 again when complete. Connect the Black lead to the chassis ground. Connect the Red lead to the PCI Bus circuit in the Instrument Cluster connector. Turn the ignition on. Observe the voltage display on the DRB Lab Scope. Does the voltage pulse from 0 to approximately 7.5 volts? Yes → Go To 5 No → Repair the PCI Bus circuit for an open. Perform BODY VERIFICATION TEST - VER 1.	All
5	Turn the ignition off. Reconnect the Instrument Cluster harness connector. Disconnect the BCM C4 harness connector. Turn the ignition on. Measure the voltage of the Instrument Cluster Wake Up Sense circuit in the BCM C4 connector. Is the voltage above 10.0 volts? Yes → Go To 6 No → Go To 9	All
6	Turn the ignition off. Disconnect the BCM C4 harness connector. Turn the ignition on. Using a 12-volt test light connected to ground, probe the Instrument Cluster Wake Up Sense circuit. Is the test light illuminated? Yes → Go To 7 No → Go To 8	All

*BUS +/- SIGNALS OPEN OR NO RESPONSE FROM INSTRUMENT CLUSTER — Continued

TEST	ACTION	APPLICABILITY
7	Turn the ignition off. Disconnect the BCM C4 harness connector. Disconnect the Instrument Cluster harness connector. Turn the ignition on. Using a 12-volt test light connected to ground, probe the Instrument Cluster Wake Up Sense circuit. Is the test light illuminated? Yes → Repair the Instrument Cluster Wake Up Sense circuit for a short to voltage. Perform BODY VERIFICATION TEST - VER 1. No → Replace the Instrument Cluster in accordance with the service information. Perform BODY VERIFICATION TEST - VER 1.	All
8	Turn the ignition off. Reconnect the BCM C4 harness connector. Disconnect the Instrument Cluster harness connector. Measure the resistance between ground and the Instrument Cluster Wake Up Sense circuit at the Instrument Cluster connector. Open and close a door. This is done to ensure the BCM is awake. Is the resistance below 50.0 ohms? Yes → Replace the Instrument Cluster in accordance with the service information. Perform BODY VERIFICATION TEST - VER 1. No → Replace the Body Control Module in accordance with the service information. Perform BODY VERIFICATION TEST - VER 1.	All
9	Turn the ignition off. Disconnect the Instrument Cluster harness connector. Disconnect the BCM C4 harness connector. Measure the resistance of the Instrument Cluster Wake Up Sense circuit between the BCM C4 connector and the MIC connector. Is the resistance below 5.0 ohms? Yes → Replace the Instrument Cluster in accordance with the service information. Perform BODY VERIFICATION TEST - VER 1. No → Repair the Instrument Cluster Wake Up Sense circuit for an open. Perform BODY VERIFICATION TEST - VER 1.	All

Symptom:

***BUS +/- SIGNALS OPEN OR NO RESPONSE FROM LEFT SLIDING DOOR CONTROL MODULE**

POSSIBLE CAUSES
FUSED B(+) CIRCUIT OPEN
GROUND CIRCUIT OPEN
PCI BUS CIRCUIT OPEN
LEFT SLIDING DOOR WAKE UP SIGNAL WIRE OPEN
LEFT SLIDING DOOR WAKE UP SIGNAL WIRE SHORT TO VOLTAGE
LEFT SLIDING DOOR WAKE UP SIGNAL WIRE SHORT TO GROUND
BODY CONTROL MODULE - LEFT SLIDING DOOR WAKE UP GROUND OPEN
LEFT SLIDING DOOR CONTROL MODULE - OPEN

TEST	ACTION	APPLICABILITY
1	Turn the ignition off. Disconnect the Left Sliding Door Control Module C1 harness connector. Measure the voltage of the Fused B(+) circuit. Is the voltage above 10.0 volts? Yes → Go To 2 No → Repair the Fused B(+) circuit for an open. Perform BODY VERIFICATION TEST - VER 1.	All
2	Turn the ignition off. Disconnect the Left Sliding Door Control Module C1 harness connector. Using a 12-volt test light connected to 12-volts, check the Ground circuit. Does the test light illuminate brightly? Yes → Go To 3 No → Repair the Ground circuit for an open. Perform BODY VERIFICATION TEST - VER 1.	All

*BUS +/- SIGNALS OPEN OR NO RESPONSE FROM LEFT SLIDING DOOR CONTROL MODULE — Continued

TEST	ACTION	APPLICABILITY
3	**Note: Ensure there is PCI Bus communication with other modules on the vehicle before proceeding. If not, refer to the symptom list from the menu and repair as necessary.** Disconnect the Left Sliding Door Control Module C2 harness connector. Use Scope input cable CH7058, Cable to Probe adapter CH7062, and the red and black test probes. Connect the scope input cable to the channel one connector on the DRB. Attach the red and black leads and the cable to probe adapter to the scope input cable. With the DRBIII® select Pep Module Tools. Select lab scope. Select Live Data. Select 12 volt square wave. Press F2 for Scope. Press F2 and use the down arrow to set voltage range to 20 volts. Set Probe to x10. Press F2 again when complete. Connect the Black lead to the chassis ground. Connect the Red lead to the PCI Bus circuit in the Left Sliding Door Control Module C2 connector. Turn the ignition on. Observe the voltage display on the DRB Lab Scope. Does the voltage pulse from 0 to approximately 7.5 volts? Yes → Go To 4 No → Repair the PCI Bus circuit for an open. Perform BODY VERIFICATION TEST - VER 1.	All
4	Turn the ignition off. Disconnect the Left Sliding Door Control Module C2 harness connector. Turn the ignition on. Measure the resistance between ground and the Left Sliding Door Wake Up Signal circuit. Is the resistance below 50.0 ohms? Yes → Go To 5 No → Go To 8	All
5	Turn the ignition off. Disconnect the Body Control Module C3 harness connector. Disconnect the Left Sliding Door Module C2 harness connector. Turn the ignition on. Measure the voltage of the Left Sliding Door Wake Up Signal circuit. Is there any voltage present? Yes → Repair the Left Sliding Door Wake Up Signal wire for a short to voltage. Perform BODY VERIFICATION TEST - VER 1. No → Go To 6	All

*BUS +/- SIGNALS OPEN OR NO RESPONSE FROM LEFT SLIDING DOOR CONTROL MODULE — Continued

TEST	ACTION	APPLICABILITY
6	Turn the ignition off. Disconnect the Body Control Module C3 harness connector. Disconnect the Left Sliding Door Control Module C2 harness connector. Measure the resistance between ground and the Left Sliding Door Wake Up Signal circuit. Is the resistance below 100.0 ohms? Yes → Repair the Left Sliding Door Wake Up Signal wire for a short to ground. Perform BODY VERIFICATION TEST - VER 1. No → Go To 7	All
7	If there are no possible causes remaining, view repair. Repair Replace the Left Sliding Door Control Module in accordance with the service information. Perform BODY VERIFICATION TEST - VER 1.	All
8	Turn the ignition off. Disconnect the Body Control Module C3 harness connector. Disconnect the Left Sliding Door Control Module C2 harness connector. Measure the resistance of the Left Sliding Door Wake Up Signal circuit between the BCM C3 connector and the Left Sliding Door Control Module C2 connector. Is the resistance below 5.0 ohms? Yes → Replace the Body Control Module in accordance with the service information. Perform BODY VERIFICATION TEST - VER 1. No → Repair the Left Sliding Door Wake Up Signal wire for an open. Perform BODY VERIFICATION TEST - VER 1.	All

Symptom:

***BUS +/- SIGNALS OPEN OR NO RESPONSE FROM MEMORY SEAT/MIRROR MODULE**

POSSIBLE CAUSES
ATTEMPT TO COMMUNICATE WITH THE BCM
FUSED B+ CIRCUIT OPEN
GROUND CIRCUIT OPEN
OPEN PCI BUS CIRCUIT
MEMORY SEAT/MIRROR MODULE

TEST	ACTION	APPLICABILITY
1	Turn the ignition on. With the DRB, enter Body then Body Computer. Was the DRB able to I/D or communicate with the BCM? Yes → Go To 2 No → Refer to the symptom list for problems related to no communication with the BCM. Perform MEMORY SYSTEM VERIFICATION TEST - VER 1.	All
2	Turn the ignition off. Disconnect the Memory Seat/Mirror Module C4 harness connector. Using a 12-volt test light connected to ground, probe the Fused B(+) circuit. Is the test light illuminated? Yes → Go To 3 No → Check the Power Seat Circuit Breaker for an open or short. If ok, repair the Fused B(+) circuit for an open or short. Perform MEMORY SYSTEM VERIFICATION TEST - VER 1.	All
3	Turn the ignition off. Disconnect the Memory Seat/Mirror Module C4 harness connector. Using a 12-volt test light connected to 12-volts, probe the Ground circuit. Is the test light illuminated? Yes → Go To 4 No → Repair the ground circuit for an open. Perform MEMORY SYSTEM VERIFICATION TEST - VER 1.	All

*BUS +/- SIGNALS OPEN OR NO RESPONSE FROM MEMORY SEAT/ MIRROR MODULE — Continued

TEST	ACTION	APPLICABILITY
4	**Note: Ensure there is PCI Bus communication with other modules on the vehicle before proceeding. If not, refer to the symptom list from the menu and repair as necessary.** Turn the ignition off. Disconnect the Memory Seat/Mirror Module C1 harness connector. Use Scope input cable CH7058, Cable to Probe adapter CH7062, and the red and black test probes. Connect the scope input cable to the channel one connector on the DRB. Attach the red and black leads and the cable to probe adapter to the scope input cable. With the DRBIII® select Pep Module Tools. Select lab scope. Select Live Data. Select 12 volt square wave. Press F2 for Scope. Press F2 and use the down arrow to set voltage range to 20 volts. Set Probe to x10. Press F2 again when complete. Connect the Black lead to the chassis ground. Connect the Red lead to the PCI Bus circuit in the Memory Seat/Mirror Module connector. Turn the ignition on. Observe the voltage display on the DRB Lab Scope. Does the voltage pulse from 0 to approximately 7.5 volts? Yes → Go To 5 No → Repair the PCI Bus circuit for an open. Perform MEMORY SYSTEM VERIFICATION TEST - VER 1.	All
5	If there are no possible causes remaining, view repair. Repair Replace the Memory Seat/Mirror Module in accordance with the service information. Perform MEMORY SYSTEM VERIFICATION TEST - VER 1.	All

Symptom:

***BUS +/- SIGNALS OPEN OR NO RESPONSE FROM POWER LIFTGATE MODULE**

POSSIBLE CAUSES
FUSED B(+) CIRCUIT OPEN
GROUND CIRCUIT OPEN
BODY CONTROL MODULE - LIFTGATE WAKE UP GROUND OPEN
LIFTGATE MODULE WAKE UP SIGNAL WIRE OPEN
LIFTGATE MODULE WAKE UP SIGNAL WIRE SHORT TO VOLTAGE
LIFTGATE MODULE WAKE UP SIGNAL WIRE SHORT TO GROUND
PCI BUS CIRCUIT OPEN
POWER LIFTGATE MODULE - OPEN

TEST	ACTION	APPLICABILITY
1	Turn the ignition off. Disconnect the Power Liftgate Module C1 harness connector. Measure the voltage of the Fused B(+) circuit. Is the voltage above 10.0 volts? Yes → Go To 2 No → Repair the Fused B(+) circuit for an open. Perform BODY VERIFICATION TEST - VER 1.	All
2	Turn the ignition off. Disconnect the Power Liftgate Module C2 harness connector. Using a 12-volt test light connected to 12-volts, check the Ground circuit. Does the test light illuminate brightly? Yes → Go To 3 No → Repair the Ground circuit for an open. Perform BODY VERIFICATION TEST - VER 1.	All

*BUS +/- SIGNALS OPEN OR NO RESPONSE FROM POWER LIFTGATE MODULE — Continued

TEST	ACTION	APPLICABILITY
3	**Note: Ensure there is PCI Bus communication with other modules on the vehicle before proceeding. If not, refer to the symptom list from the menu and repair as necessary.** Disconnect the Power Liftgate Module C2 harness connector. Use Scope input cable CH7058, Cable to Probe adapter CH7062, and the red and black test probes. Connect the scope input cable to the channel one connector on the DRB. Attach the red and black leads and the cable to probe adapter to the scope input cable. With the DRBIII® select Pep Module Tools. Select lab scope. Select Live Data. Select 12 volt square wave. Press F2 for Scope. Press F2 and use the down arrow to set voltage range to 20 volts. Set Probe to x10. Press F2 again when complete. Connect the Black lead to the chassis ground. Connect the Red lead to the PCI Bus circuit in the Power Liftgate Module C2 connector. Turn the ignition on. Observe the voltage display on the DRB Lab Scope. Does the voltage pulse from 0 to approximately 7.5 volts? Yes → Go To 4 No → Repair the PCI Bus circuit for an open. Perform BODY VERIFICATION TEST - VER 1.	All
4	Turn the ignition off. Disconnect the Power Liftgate Module C2 harness connector. Turn the ignition on. Measure the resistance between ground and the Liftgate Module Wake Up Signal circuit. Is the resistance below 50.0 ohms? Yes → Go To 5 No → Go To 8	All
5	Turn the ignition off. Disconnect the Body Control Module C2 harness connector. Disconnect the Power Liftgate Module C2 harness connector. Turn the ignition on. Measure the voltage of the Liftgate Module Wake Up Signal circuit. Is there any voltage present? Yes → Repair the Liftgate Module Wake Up Signal wire for a short to voltage. Perform BODY VERIFICATION TEST - VER 1. No → Go To 6	All

*BUS +/- SIGNALS OPEN OR NO RESPONSE FROM POWER LIFTGATE MODULE — Continued

TEST	ACTION	APPLICABILITY
6	Turn the ignition off. Disconnect the Body Control Module C2 harness connector. Disconnect the Power Liftgate Module C2 harness connector. Measure the resistance between ground and the Liftgate Module Wake Up Signal circuit. Is the resistance below 100.0 ohms? Yes → Repair the Liftgate Module Wake Up Signal wire for a short to ground. Perform BODY VERIFICATION TEST - VER 1. No → Go To 7	All
7	If there are no possible causes remaining, view repair. Repair Replace the Power Liftgate Module in accordance with the service information. Perform BODY VERIFICATION TEST - VER 1.	All
8	Turn the ignition off. Disconnect the Body Control Module C2 harness connector. Disconnect the Power Liftgate Module C2 harness connector. Measure the resistance of the Liftgate Module Wake Up Signal circuit between the BCM C2 connector and the Power Liftgate Module C2 connector. Is the resistance below 5.0 ohms? Yes → Replace the Body Control Module in accordance with the service information. Perform BODY VERIFICATION TEST - VER 1. No → Repair the Liftgate Module Wake Up Signal wire for an open. Perform BODY VERIFICATION TEST - VER 1.	All

Symptom:

***BUS +/- SIGNALS OPEN OR NO RESPONSE FROM RIGHT SLIDING DOOR CONTROL MODULE**

POSSIBLE CAUSES
FUSED B(+) CIRCUIT OPEN
GROUND CIRCUIT OPEN
PCI BUS CIRCUIT OPEN
RIGHT SLIDING DOOR WAKE UP SIGNAL WIRE OPEN
RIGHT SLIDING DOOR WAKE UP SIGNAL WIRE SHORT TO VOLTAGE
RIGHT SLIDING DOOR WAKE UP SIGNAL WIRE SHORT TO GROUND
BODY CONTROL MODULE - RIGHT SLIDING DOOR WAKE UP GROUND OPEN
RIGHT POWER SLIDING DOOR MODULE - OPEN

TEST	ACTION	APPLICABILITY
1	Turn the ignition off. Disconnect the Right Sliding Door Control Module C1 harness connector. Measure the voltage of the Fused B(+) circuit. Is the voltage above 10.0 volts? Yes → Go To 2 No → Repair the Fused B(+) circuit for an open. Perform BODY VERIFICATION TEST - VER 1.	All
2	Turn the ignition off. Disconnect the Right Sliding Door Control Module C1 harness connector. Using a 12-volt test light connected to 12-volts, check the Ground circuit. Does the test light illuminate brightly? Yes → Go To 3 No → Repair the Ground circuit for an open. Perform BODY VERIFICATION TEST - VER 1.	All

*BUS +/- SIGNALS OPEN OR NO RESPONSE FROM RIGHT SLIDING DOOR CONTROL MODULE — Continued

TEST	ACTION	APPLICABILITY
3	**Note: Ensure there is PCI Bus communication with other modules on the vehicle before proceeding. If not, refer to the symptom list from the menu and repair as necessary.** Disconnect the Right Sliding Door Control Module C2 harness connector. Use Scope input cable CH7058, Cable to Probe adapter CH7062, and the red and black test probes. Connect the scope input cable to the channel one connector on the DRB. Attach the red and black leads and the cable to probe adapter to the scope input cable. With the DRBIII® select Pep Module Tools. Select lab scope. Select Live Data. Select 12 volt square wave. Press F2 for Scope. Press F2 and use the down arrow to set voltage range to 20 volts. Set Probe to x10. Press F2 again when complete. Connect the Black lead to the chassis ground. Connect the Red lead to the PCI Bus circuit in the Right Sliding Door Control Module C2 connector. Turn the ignition on. Observe the voltage display on the DRB Lab Scope. Does the voltage pulse from 0 to approximately 7.5 volts? Yes → Go To 4 No → Repair the PCI Bus circuit for an open. Perform BODY VERIFICATION TEST - VER 1.	All
4	Turn the ignition off. Disconnect the Right Sliding Door Control Module C2 harness connector. Turn the ignition on. Measure the resistance between ground and the Right Sliding Door Wake Up Signal circuit. Is the resistance below 50.0 ohms? Yes → Go To 5 No → Go To 8	All
5	Turn the ignition off. Disconnect the Body Control Module C3 harness connector. Disconnect the Right Sliding Door Module C2 harness connector. Turn the ignition on. Measure the voltage of the Right Sliding Door Wake Up Signal circuit. Is there any voltage present? Yes → Repair the Right Sliding Door Wake Up Signal wire for a short to voltage. Perform BODY VERIFICATION TEST - VER 1. No → Go To 6	All

*BUS +/- SIGNALS OPEN OR NO RESPONSE FROM RIGHT SLIDING DOOR CONTROL MODULE — Continued

TEST	ACTION	APPLICABILITY
6	Turn the ignition off. Disconnect the Body Control Module C3 harness connector. Disconnect the Right Sliding Door Control Module C2 harness connector. Measure the resistance between ground and the Right Sliding Door Wake Up Signal circuit. Is the resistance below 100.0 ohms? Yes → Repair the Right Sliding Door Wake Up Signal wire for a short to ground. Perform BODY VERIFICATION TEST - VER 1. No → Go To 7	All
7	If there are no possible causes remaining, view repair. Repair Replace the Right Sliding Door Control Module in accordance with the service information. Perform BODY VERIFICATION TEST - VER 1.	All
8	Turn the ignition off. Disconnect the Body Control Module C3 harness connector. Disconnect the Right Sliding Door Control Module C2 harness connector. Measure the resistance of the Right Sliding Door Wake Up Signal circuit between the BCM C3 connector and the Right Sliding Door Control Module C2 connector. Is the resistance below 5.0 ohms? Yes → Replace the Body Control Module in accordance with the service information. Perform BODY VERIFICATION TEST - VER 1. No → Repair the Right Sliding Door Wake Up Signal wire for an open. Perform BODY VERIFICATION TEST - VER 1.	All

Symptom:

***BUS +/- SIGNALS OPEN OR NO RESPONSE FROM SENTRY KEY IMMOBILIZER MODULE**

POSSIBLE CAUSES
ATTEMPT TO COMMUNICATE WITH THE BCM
GROUND CIRCUIT OPEN
FUSED IGNITION SWITCH OUTPUT CIRCUIT OPEN
FUSED B(+) CIRCUIT OPEN
OPEN PCI BUS CIRCUIT
SENTRY KEY IMMOBILIZER MODULE

TEST	ACTION	APPLICABILITY
1	Turn the ignition on. With the DRB, enter Body then Body Computer. Was the DRB able to I/D or communicate with the BCM? Yes → Go To 2 No → Refer to the symptom list for problems related to no communication with the BCM. Perform SKIS VERIFICATION.	All
2	Turn the ignition off. Disconnect the SKIM harness connector. Using a 12-volt test light connected to 12-volts, probe the Ground circuit. Is the test light illuminated? Yes → Go To 3 No → Repair the ground circuit for an open. Perform SKIS VERIFICATION.	All
3	Turn the ignition off. Disconnect the SKIM harness connector. Turn the ignition on. Using a 12-volt test light connected to ground, probe the Fused Ignition Switch Output circuit. Is the test light illuminated? Yes → Go To 4 No → Repair the Fused Ignition Switch Output circuit for an open. Perform SKIS VERIFICATION.	All
4	Turn the ignition off. Disconnect the SKIM harness connector. Using a 12-volt test light connected to ground, probe the Fused B(+) circuit. Is the test light illuminated? Yes → Go To 5 No → Repair the Fused B+ circuit for an open. Perform SKIS VERIFICATION.	All

*BUS +/- SIGNALS OPEN OR NO RESPONSE FROM SENTRY KEY IMMOBILIZER MODULE — Continued

TEST	ACTION	APPLICABILITY
5	**Note: Ensure there is PCI Bus communication with other modules on the vehicle before proceeding. If not, refer to the symptom list from the menu and repair as necessary.** Disconnect the SKIM harness connector. Use Scope input cable CH7058, Cable to Probe adapter CH7062, and the red and black test probes. Connect the scope input cable to the channel one connector on the DRBIII®. Attach the red and black leads and the cable to probe adapter to the scope input cable. With the DRBIII® select Pep Module Tools. Select lab scope. Select Live Data. Select 12 volt square wave. Press F2 for Scope. Press F2 and use the down arrow to set voltage range to 20 volts. Set Probe to x10. Press F2 again when complete. Connect the Black lead to the chassis ground. Connect the Red lead to the PCI Bus circuit in the SKIM connector. Turn the ignition on. Observe the voltage display on the DRBIII® Lab Scope. Does the voltage pulse from 0 to approximately 7.5 volts? Yes → Go To 6 No → Repair the PCI Bus circuit for an open. Perform SKIS VERIFICATION.	All
6	If there are no possible causes remaining, view repair. Repair Replace and program the Sentry Key Immobilizer Module in accordance with the Service Information. Perform SKIS VERIFICATION.	All

Symptom:

***BUS +/- SIGNALS OPEN OR NO RESPONSE FROM THATCHAM ALARM MODULE**

POSSIBLE CAUSES
ATTEMPT TO COMMUNICATE WITH THE BCM
GROUND CIRCUIT OPEN
FUSED IGNITION SWITCH OUTPUT CIRCUIT OPEN
OPEN PCI BUS CIRCUIT
THATCHAM ALARM MODULE

TEST	ACTION	APPLICABILITY
1	Turn the ignition on. With the DRB, enter Body then Body Computer. Was the DRB able to I/D or communicate with the BCM? Yes → Go To 2 No → Refer to the symptom list for problems related to no communication with the BCM. Perform BODY VERIFICATION TEST - VER 1.	All
2	Turn the ignition off. Disconnect the RKE Module 6-way harness connector. Using a 12-volt test light connected to 12-volts, probe the ground circuit. Is the test light illuminated? Yes → Go To 3 No → Repair the Ground circuit for an open. Perform BODY VERIFICATION TEST - VER 1.	All
3	Turn the ignition off. Disconnect the Thatcham Alarm Module C1 harness connector. Turn the ignition on. Using a 12-volt test light connected to ground, probe the Fused Ignition Switch Output circuit. Is the test light illuminated? Yes → Go To 4 No → Repair the Fused Ignition Switch Output circuit for an open or short. Perform BODY VERIFICATION TEST - VER 1.	All

*BUS +/- SIGNALS OPEN OR NO RESPONSE FROM THATCHAM ALARM MODULE — Continued

TEST	ACTION	APPLICABILITY
4	**Note: Ensure there is PCI Bus communication with other modules on the vehicle before proceeding. If not, refer to the symptom list from the menu and repair as necessary.** Disconnect the Thatcham Alarm Module C1 harness connector. Use Scope input cable CH7058, Cable to Probe adapter CH7062, and the red and black test probes. Connect the scope input cable to the channel one connector on the DRB. Attach the red and black leads and the cable to probe adapter to the scope input cable. With the DRBIII® select Pep Module Tools. Select lab scope. Select Live Data. Select 12 volt square wave. Press F2 for Scope. Press F2 and use the down arrow to set voltage range to 20 volts. Set Probe to x10. Press F2 again when complete. Connect the Black lead to the chassis ground. Connect the Red lead to the PCI Bus circuit in the Thatcham Alarm Module connector. Turn the ignition on. Observe the voltage display on the DRB Lab Scope. Does the voltage pulse from 0 to approximately 7.5 volts? Yes → Go To 5 No → Repair the PCI Bus circuit for an open. Perform BODY VERIFICATION TEST - VER 1.	All
5	If there are no possible causes remaining, view repair. Repair Replace the Thatcham Alarm Module in accordance with the service information. Perform BODY VERIFICATION TEST - VER 1.	All

Symptom:

*NO RESPONSE FROM ADJUSTABLE PEDAL MODULE

POSSIBLE CAUSES
FUSED B(+) CKT OPEN
OPEN GROUND CIRCUIT
OPEN PCI BUS CIRCUIT
ADJUSTABLE PEDAL MODULE

TEST	ACTION	APPLICABILITY
1	Turn the ignition off. Disconnect the APM harness connector. Using a 12-volt test light connected to ground, probe each Fused B+ circuit. Is the test light illuminated for each circuit? Yes → Go To 2 No → Repair the Fused B+ circuit for an open or short. Refer to the wiring diagrams in the service information. Perform ADJUSTABLE PEDALS VERIFICATION TEST - VER 1.	All
2	Turn the ignition off. Disconnect the APM harness connector. Using a 12-volt test light connected to 12-volts, probe the ground circuit. Is the test light illuminated? Yes → Go To 3 No → Repair the Ground circuit for an open. Perform ADJUSTABLE PEDALS VERIFICATION TEST - VER 1.	All

*NO RESPONSE FROM ADJUSTABLE PEDAL MODULE — Continued

TEST	ACTION	APPLICABILITY
3	**Note: Ensure there is PCI Bus communication with other modules on the vehicle before proceeding. If not, refer to the symptom list from the menu and repair as necessary.** Disconnect the APM harness connector. Use Scope input cable CH7058, Cable to Probe adapter CH7062, and the red and black test probes. Connect the scope input cable to the channel one connector on the DRB. Attach the red and black leads and the cable to probe adapter to the scope input cable. With the DRBIII® select Pep Module Tools. Select lab scope. Select Live Data. Select 12 volt square wave. Press F2 for Scope. Press F2 and use the down arrow to set voltage range to 20 volts. Set Probe to x10. Press F2 again when complete. Connect the Black lead to the chassis ground. Connect the Red lead to the PCI Bus circuit in the APM connector. Turn the ignition on. Observe the voltage display on the DRB Lab Scope. Does the voltage pulse from 0 to approximately 7.5 volts? Yes → Replace the Adjustable Pedal Module in accordance with the service information. Perform ADJUSTABLE PEDALS VERIFICATION TEST - VER 1. No → Repair the PCI Bus circuit for an open. Perform ADJUSTABLE PEDALS VERIFICATION TEST - VER 1.	All

Symptom:
*NO RESPONSE FROM AIRBAG CONTROL MODULE

POSSIBLE CAUSES
CHECKING FOR VOLTAGE AT ORC
GROUND CIRCUIT OPEN
PCI BUS CIRCUIT OPEN
AIRBAG CONTROL MODULE (ORC)

TEST	ACTION	APPLICABILITY
1	**NOTE: Check the FCM for DTC's. If DTC's are present, go to the appropriate category and perform the DTC.** Ensure that the battery is fully charged. **WARNING: TURN THE IGNITION OFF, DISCONNECT THE BATTERY AND WAIT TWO MINUTES BEFORE PROCEEDING.** Disconnect the Airbag Control Module (ORC) harness connector. Turn the ignition on and then reconnect the Battery. Using a 12-volt test light connected to ground, probe the ORC Run Only Driver Circuit and the ORC Run/Start Driver Circuit at the Airbag Control Module connector. NOTE: One open circuit will not cause a NO RESPONSE condition. Is the test light illuminated on both circuits? Yes → Go To 2 No → Repair the ORC Run Only Driver and the ORC Run/Start Driver circuits for an open. Perform AIRBAG VERIFICATION TEST - VER 1. **NOTE: When reconnecting airbag system components, the ignition must be turned off and the battery must be disconnected.**	All
2	**Ensure that the battery is fully charged.** **WARNING: TURN THE IGNITION OFF, DISCONNECT THE BATTERY AND WAIT TWO MINUTES BEFORE PROCEEDING.** Disconnect the Airbag Control Module (ORC) harness connector. Using a 12-volt test light connected to 12-volts, probe the ground circuit. **NOTE: Make sure test light is connected to the Battery positive terminal.** Is the test light illuminated? Yes → Go To 3 No → Repair the Ground circuit for an open. Perform AIRBAG VERIFICATION TEST - VER 1. **When reconnecting Airbag system components, the ignition must be turned off and the battery must be disconnected.**	All

*NO RESPONSE FROM AIRBAG CONTROL MODULE — Continued

TEST	ACTION	APPLICABILITY
3	**Note: Ensure there is PCI bus communication with other modules. If not, refer to the PCI Bus Communication Failure symptom and repair as necessary.** **WARNING: TURN THE IGNITION OFF, DISCONNECT THE BATTERY AND WAIT TWO MINUTES BEFORE PROCEEDING.** Disconnect the Airbag Control Module (ORC) harness connector. Turn the ignition on and then reconnect the Battery. Use Scope input cable CH7058, Cable to Probe adapter CH7062, and the red and black test probes. Connect the scope input cable to the channel one connector on the DRB. Attach the red and black leads and the cable to probe adapter to the scope input cable. With the DRBIII® select Pep Module Tools. Select lab scope. Select Live Data. Select 12 volt square wave. Press F2 for Scope. Press F2 and use the down arrow to set voltage range to 20 volts. Set Probe to x10. Press F2 again when complete. Connect the Black lead to the chassis ground. Connect the Red lead to the PCI Bus circuit in the Airbag Control Module connector. Observe the voltage display on the DRB Lab Scope. Does the voltage pulse from 0 to approximately 7.5 volts? Yes → Go To 4 No → Repair the PCI Bus circuit for an open. Perform AIRBAG VERIFICATION TEST - VER 1.	All
4	If there are no possible causes remaining, view repair. Repair Replace the Airbag Control Module (ORC) in accordance with the Service information. WARNING: Make sure the battery is disconnected and wait 2 minutes before proceeding. Perform AIRBAG VERIFICATION TEST - VER 1.	All

Symptom:

***NO RESPONSE FROM CABIN HEATER ASSIST - DIESEL ONLY**

POSSIBLE CAUSES
ATTEMPT TO COMMUNICATE WITH THE ECM
FUSED B+ CIRCUIT OPEN
GROUND CIRCUIT OPEN
SCI TRANSMIT CIRCUIT OPEN
CABIN HEATER ASSIST

TEST	ACTION	APPLICABILITY
1	Turn the ignition on. With the DRB, attempt to communicate with the ECM. Was the DRB able to I/D or communicate with the ECM? Yes → Go To 2 No → Refer to the symptom list for problems related to no communication with the ECM. Perform CABIN HEATER VERIFICATION TEST - VER 1.	All
2	Turn the ignition off. Disconnect the Cabin Heater Assist C2 harness connector. Using a 12-volt test light connected to ground, probe the Fused B+ circuit. Is the test light illuminated? Yes → Go To 3 No → Check the IPM Fuse #15 for an open. If open, check for a short to ground on the Fused B+ circuit. If not open, repair the Fused B+ circuit for an open. Perform CABIN HEATER VERIFICATION TEST - VER 1.	All
3	Turn the ignition off. Disconnect the Cabin Heater Assist C2 harness connector. Using a 12-volt test light connected to 12-volts, probe the ground circuit. Is the test light illuminated? Yes → Go To 4 No → Repair the ground circuit for an open. Perform CABIN HEATER VERIFICATION TEST - VER 1.	All
4	Turn the ignition off. Disconnect the Cabin Heater Assist C1 harness connector. Disconnect the DRB from the DLC. Measure the resistance of the SCI Transmit circuit between the Cabin Heater Assist connector and the DLC. Is the resistance below 5.0 ohms? Yes → Go To 5 No → Repair the SCI Transmit circuit for an open. Perform CABIN HEATER VERIFICATION TEST - VER 1.	All

*NO RESPONSE FROM CABIN HEATER ASSIST - DIESEL ONLY — Continued

TEST	ACTION	APPLICABILITY
5	If there are no possible causes remaining, view repair. Repair Replace the Cabin Heater Assist in accordance with the service information. Perform CABIN HEATER VERIFICATION TEST - VER 1.	All

Symptom:
*NO RESPONSE FROM CONTROLLER ANTILOCK BRAKE

POSSIBLE CAUSES
NO RESPONSE FROM CAB
GROUND CIRCUIT OPEN
OPEN FUSED IGNITION SWITCH OUTPUT CIRCUIT
OPEN PCI BUS CIRCUIT
CONTROLLER ANTILOCK BRAKE

TEST	ACTION	APPLICABILITY
1	Turn the ignition on. **Note: As soon as one or more module communicates with the DRB, answer the question.** With the DRB, attempt to communicate with the Airbag Control Module (ACM). With the DRB, attempt to communicate with the Body Control Module (BCM). Was the DRB able to I/D or establish communications with either of the modules? Yes → Go To 2 No → Refer to the Communications category and perform the symptom PCI Bus Communication Failure. Perform ABS VERIFICATION TEST - VER 1.	All
2	Turn the ignition off. Disconnect the CAB harness connector. Using a 12-volt test light connected to 12-volts, probe both ground circuits. Is the test light illuminated for each circuit? Yes → Go To 3 No → Repair the ground circuit(s) for an open. Perform ABS VERIFICATION TEST - VER 1.	All
3	Turn the ignition off. Disconnect the CAB harness connector. Turn the ignition on. Using a 12-volt test light connected to ground, probe the Fused Ignition Switch Output circuit. Is the test light illuminated? Yes → Go To 4 No → Repair the Fused Ignition Switch Output circuit for an open. Perform ABS VERIFICATION TEST - VER 1.	All

*NO RESPONSE FROM CONTROLLER ANTILOCK BRAKE — Continued

TEST	ACTION	APPLICABILITY
4	**Note: Ensure there is PCI Bus communication with other modules on the vehicle before proceeding. If not, refer to the symptom list from the menu and repair as necessary.** Disconnect the CAB harness connector. Use Scope input cable CH7058, Cable to Probe adapter CH7062, and the red and black test probes. Connect the scope input cable to the channel one connector on the DRB. Attach the red and black leads and the cable to probe adapter to the scope input cable. With the DRBIII® select Pep Module Tools. Select lab scope. Select Live Data. Select 12 volt square wave. Press F2 for Scope. Press F2 and use the down arrow to set voltage range to 20 volts. Set Probe to x10. Press F2 again when complete. Connect the Black lead to the chassis ground. Connect the Red lead to the PCI Bus circuit in the CAB connector. Turn the ignition on. Observe the voltage display on the DRB Lab Scope. Does the voltage pulse from 0 to approximately 7.5 volts? Yes → Go To 5 No → Repair the PCI Bus circuit for an open. Perform ABS VERIFICATION TEST - VER 1.	All
5	If there are no possible causes remaining, view repair. Repair Replace the Controller Antilock Brake in accordance with the Service Information. Perform ABS VERIFICATION TEST - VER 1.	All

Symptom:

*NO RESPONSE FROM ECM (PCI BUS) - DIESEL ONLY

POSSIBLE CAUSES
ECM PCI NO RESPONSE
PCI BUS CIRCUIT OPEN
ENGINE CONTROL MODULE

TEST	ACTION	APPLICABILITY
1	Turn the ignition on. **NOTE: As soon as one or more module communicates with the DRB, answer the question.** With the DRB, enter Body then Body Computer. With the DRB, enter Anti-Lock Brakes. With the DRB, enter Body then Electro/Mechanical Cluster (MIC). With the DRB, enter Passive Restraints then Airbag. Were you able to establish communications with any of the modules? Yes → Go To 2 No → Refer to symptom PCI Bus Communication Failure in the Communications category. Perform ROAD TEST VERIFICATION - VER-2.	All
2	With the DRB read ECM Diagnostic Trouble Codes. This is to ensure power and grounds to the ECM are operational. **NOTE: If the DRB will not read ECM DTCs, follow the NO RESPONSE TO ECM (SCI only) symptom path, if vehicle will start. For NO START Conditions follow the no start symptom in the powertrain diagnostic information.** Turn the ignition off. Disconnect the ECM harness connectors. Use Scope input cable CH7058, Cable to Probe adapter CH7062, and the red and black test probes. Connect the scope input cable to the channel one connector on the DRB. Attach the red and black leads and the cable to probe adapter to the scope input cable. With the DRBIII® select Pep Module Tools. Select lab scope. Select Live Data. Select 12 volt square wave. Press F2 for Scope. Press F2 and use the down arrow to set voltage range to 20 volts. Set Probe to x10. Press F2 again when complete. Connect the Black lead to ground. Connect the Red lead to the PCI Bus circuit in the ECM connector. Turn the ignition on. Observe the voltage display on the DRB Lab Scope. Does the voltage pulse from 0 to approximately 7.5 volts? Yes → Replace and program the Engine Control Module in accordance with the Service Information. Perform ROAD TEST VERIFICATION - VER-2. No → Repair the PCI Bus circuit for an open. Perform ROAD TEST VERIFICATION - VER-2.	All

Symptom:

***NO RESPONSE FROM ECM (SCI ONLY) - DIESEL ONLY**

POSSIBLE CAUSES
CHECK ECM POWERS AND GROUNDS
CABIN HEATER ASSIST
SCI TRANSMIT CIRCUIT SHORTED TO VOLTAGE
SCI TRANSMIT CIRCUIT SHORTED TO GROUND
SCI TRANSMIT CIRCUIT OPEN
ENGINE CONTROL MODULE

TEST	ACTION	APPLICABILITY
1	Perform the symptom Checking ECM Power and Ground Circuits in the Driveability category. Did the vehicle pass this test? Yes → Go To 2 No → Repair as necessary. Perform ROAD TEST VERIFICATION - VER-2.	All
2	Turn the ignition off. Disconnect the ECM harness connectors. Disconnect the DRB from the DLC. Measure the resistance between ground and the SCI Transmit circuit. Is the resistance below 5.0 ohms? Yes → Go To 3 No → Go To 4	All
3	Turn the ignition off. Disconnect the Cabin Heater Assist C1 harness connector. Measure the resistance between ground and the SCI Transmit circuit. Is the resistance below 5.0 ohms? Yes → Repair the SCI Transmit circuit for a short to ground. Perform ROAD TEST VERIFICATION - VER-2. No → Replace the Cabin Heater Assist in accordance with the service information. Perform ROAD TEST VERIFICATION - VER-2.	All
4	Turn the ignition off. Disconnect the DRB from the DLC. Disconnect the ECM harness connectors. Disconnect the Cabin Heater Assist C1 harness connector. Turn the ignition on. Measure the voltage of the SCI Transmit circuit at the DLC connector (cav 7). Is the voltage above 1.0 volt? Yes → Repair the SCI Transmit circuit for a short to voltage. Perform ROAD TEST VERIFICATION - VER-2. No → Go To 5	All

*NO RESPONSE FROM ECM (SCI ONLY) - DIESEL ONLY — Continued

TEST	ACTION	APPLICABILITY
5	Turn the ignition off. Disconnect the ECM harness connectors. Disconnect the DRB from the DLC. Measure the resistance of the SCI Transmit circuit between the ECM connector and the DLC. Is the resistance below 5.0 ohms? Yes → Go To 6 No → Repair the SCI Transmit circuit for an open. Perform ROAD TEST VERIFICATION - VER-2.	All
6	If there are no possible causes remaining, view repair. Repair Replace and program the Engine Control Module in accordance with the Service Information. Perform ROAD TEST VERIFICATION - VER-2.	All

Symptom:

***NO RESPONSE FROM FRONT CONTROL MODULE**

POSSIBLE CAUSES
ATTEMPT TO COMMUNICATE WITH ANOTHER MODULE
OPEN GROUND CIRCUIT(S)
OPEN PCI BUS CIRCUIT
FRONT CONTROL MODULE

TEST	ACTION	APPLICABILITY
1	Turn the ignition on. With the DRB, attempt to communicate with the Airbag Control Module (ACM). With the DRB, attempt to communicate with the Controller Antilock Brake (CAB) module. With the DRB, attempt to communicate with the Body Control Module (BCM). Was the DRB able to I/D or communicate with any of the modules? Yes → Go To 2 No → Refer to symptom list for problems related to the PCI Bus Communication Failure. Perform BODY VERIFICATION TEST - VER 1.	All
2	Turn the ignition off. Remove the Front Control Module from the IPM. Using a 12-volt test light connected to 12-volts, probe both Ground circuits. Is the test light illuminated for each circuit? Yes → Go To 3 No → Repair the Ground circuit(s) for an open. Perform BODY VERIFICATION TEST - VER 1.	All

*NO RESPONSE FROM FRONT CONTROL MODULE — Continued

TEST	ACTION	APPLICABILITY
3	**Note: Ensure there is PCI Bus communication with other modules on the vehicle before proceeding. If not, refer to the symptom list from the menu and repair as necessary.** Remove the Front Control Module from the IPM. Use Scope input cable CH7058, Cable to Probe adapter CH7062, and the red and black test probes. Connect the scope input cable to the channel one connector on the DRB. Attach the red and black leads and the cable to probe adapter to the scope input cable. With the DRBIII® select Pep Module Tools. Select lab scope. Select Live Data. Select 12 volt square wave. Press F2 for Scope. Press F2 and use the down arrow to set voltage range to 20 volts. Set the probe to x10. Press F2 again when complete. Connect the Black lead to the chassis ground. Connect the Red lead to the PCI Bus circuit in the FCM connector. Turn the ignition on. Observe the voltage display on the DRB Lab Scope. Does the voltage pulse from 0 to approximately 7.5 volts? Yes → Go To 4 No → Repair the PCI Bus circuit for an open. Perform BODY VERIFICATION TEST - VER 1.	All
4	If there are no possible causes remaining, view repair. Repair Replace the Front Control Module in accordance with the service information. Perform BODY VERIFICATION TEST - VER 1.	All

Symptom:
*NO RESPONSE FROM LEFT SIACM

POSSIBLE CAUSES
INTERROGATE FCM
GROUND CIRCUIT OPEN
SIACM RUN/START DRIVER CIRCUIT OPEN
PCI BUS CIRCUIT OPEN
LEFT SIDE IMPACT AIRBAG CONTROL MODULE

TEST	ACTION	APPLICABILITY
1	Turn the ignition on. With the DRBIII®, check the FCM for any DTC's. Are any FCM DTC's present? Yes → Refer to the appropriate category and perform the symptom. Perform AIRBAG VERIFICATION TEST - VER 1. No → Go To 2	All
2	**Ensure that the battery is fully charged.** **Warning: TURN IGNITION OFF, DISCONNECT THE BATTERY AND WAIT TWO MINUTES BEFORE PROCEEDING.** Disconnect the Left Side Impact Airbag Control Module harness connector. Using a 12-volt test light connected to 12-volts, probe both Ground circuits. **NOTE: Make sure test light is connected to the Battery positive terminal.** Is the test light illuminated for each circuit? Yes → Go To 3 No → Repair the Ground circuit for an open. Perform AIRBAG VERIFICATION TEST - VER 1. **Note: When reconnecting Airbag system components, the ignition must be turned off and the battery must be disconnected.**	All
3	**Warning: TURN IGNITION OFF, DISCONNECT THE BATTERY AND WAIT TWO MINUTES BEFORE PROCEEDING.** Disconnect the Left Side Impact Airbag Control Module harness connector. Turn the ignition on and then reconnect the Battery. Measure the voltage of the SIACM Run/Start Driver circuit. Is the voltage above 6.0 volts? Yes → Go To 4 No → Repair the SIACM Run/Start Driver circuit for an open. Perform AIRBAG VERIFICATION TEST - VER 1. **Note: When reconnecting Airbag system components, the ignition must be turned off and the battery must be disconnected.**	All

*NO RESPONSE FROM LEFT SIACM — Continued

TEST	ACTION	APPLICABILITY
4	**NOTE: Ensure there is PCI bus communication with other modules. If not, refer to the PCI Bus Communication Failure symptom and repair as necessary.** **WARNING: TURN THE IGNITION OFF, DISCONNECT THE BATTERY AND WAIT TWO MINUTES BEFORE PROCEEDING.** Disconnect the Left Side Impact Airbag Control Module harness connector. Turn the ignition on and then reconnect the Battery. Use Scope input cable CH7058, Cable to Probe adapter CH7062, and the red and black test probes. Connect the scope input cable to the channel one connector on the DRB. Attach the red and black leads and the cable to probe adapter to the scope input cable. With the DRBIII® select Pep Module Tools. Select lab scope. Select Live Data. Select 12 volt square wave. Press F2 for Scope. Press F2 and use the down arrow to set voltage range to 20 volts. Set Probe to x10. Press F2 again when complete. Connect the Black lead to the chassis ground. Connect the Red lead to the PCI Bus circuit in the Left Side Impact Airbag Control Module connector. Observe the voltage display on the DRB Lab Scope. Does the voltage pulse from 0 to approximately 7.5 volts? Yes → Go To 5 No → Repair the PCI Bus circuit for an open. Perform AIRBAG VERIFICATION TEST - VER 1.	All
5	If there are no possible causes remaining, view repair. Yes → Replace the Left Side Impact Airbag Control Module (LSIACM) in accordance with the Service Information. WARNING: Make sure the battery is disconnected and wait 2 minutes before proceeding. Perform AIRBAG VERIFICATION TEST - VER 1.	All

Symptom:

***NO RESPONSE FROM OVERHEAD CONSOLE**

POSSIBLE CAUSES
GROUND CIRCUIT OPEN
FUSED IGNITION SWITCH OUTPUT CIRCUIT OPEN
FUSED B+ CIRCUIT OPEN
OPEN PCI BUS CIRCUIT
OVERHEAD CONSOLE

TEST	ACTION	APPLICABILITY
1	Turn the ignition off. Disconnect the Overhead Console harness connector. Using a 12-volt test light connected to 12-volts, probe the ground circuit (cav 4). Is the test light illuminated? Yes → Go To 2 No → Repair the ground circuit for an open. Perform BODY VERIFICATION TEST - VER 1.	All
2	Turn the ignition off. Disconnect the Overhead Console harness connector. Turn the ignition on. Using a 12-volt test light connected to ground, probe the Fused Ignition Switch Output circuit. Is the test light illuminated? Yes → Go To 3 No → Repair the Fused Ignition Switch Output circuit for an open. Refer to the wiring diagrams located in the Service Information. Perform BODY VERIFICATION TEST - VER 1.	All
3	Turn the ignition off. Disconnect the Overhead Console harness connector. Using a 12-volt test light connected to ground, probe the Fused B+ circuit. Is the test light illuminated? Yes → Go To 4 No → Repair the Fused B+ circuit for an open. Refer to the wiring diagrams located in the Service Information. Perform BODY VERIFICATION TEST - VER 1.	All

*NO RESPONSE FROM OVERHEAD CONSOLE — Continued

TEST	ACTION	APPLICABILITY
4	**Note: Ensure there is PCI Bus communication with other modules on the vehicle before proceeding. If not, refer to the symptom list from the menu and repair as necessary.** Disconnect the Overhead Console harness connector. Use Scope input cable CH7058, Cable to Probe adapter CH7062, and the red and black test probes. Connect the scope input cable to the channel one connector on the DRB. Attach the red and black leads and the cable to probe adapter to the scope input cable. With the DRBIII® select Pep Module Tools. Select lab scope. Select Live Data. Select 12 volt square wave. Press F2 for Scope. Press F2 and use the down arrow to set voltage range to 20 volts. Set Probe to x10. Press F2 again when complete. Connect the Black lead to the chassis ground. Connect the Red lead to the PCI Bus circuit in the Overhead Console connector. Turn the ignition on. Observe the voltage display on the DRB Lab Scope. Does the voltage pulse from 0 to approximately 7.5 volts? Yes → Go To 5 No → Repair the PCI Bus circuit for an open. Perform BODY VERIFICATION TEST - VER 1.	All
5	If there are no possible causes remaining, view repair. Repair Replace the Overhead Console in accordance with the service information. Perform BODY VERIFICATION TEST - VER 1.	All

Symptom:
*NO RESPONSE FROM PCM (PCI BUS)

POSSIBLE CAUSES
PCM PCI NO RESPONSE
PCI BUS CIRCUIT OPEN
POWERTRAIN CONTROL MODULE

TEST	ACTION	APPLICABILITY
1	Turn the ignition on. **NOTE: As soon as one or more module communicates with the DRB, answer the question.** With the DRB, enter Body then Body Computer. With the DRB, enter Anti-Lock Brakes. With the DRB, enter Body then Electro/Mechanical Cluster (MIC). With the DRB, enter Passive Restraints then Airbag. Were you able to establish communications with any of the modules? Yes → Go To 2 No → Refer to symptom PCI Bus Communication Failure in the Communications category. Perform POWERTRAIN VERIFICATION TEST VER - 1.	All
2	With the DRB read PCM Diagnostic Trouble Codes. This is to ensure power and grounds to the PCM are operational. **NOTE: If the DRB will not read PCM DTC's, follow the NO RESPONSE TO PCM (SCI only) symptom path.** **NOTE: If the vehicle will not start and the DRBIII® displays a no response message, refer to the appropriate symptom in the powertrain diagnostic procedures.** Turn the ignition off. Disconnect the PCM C2 harness connector. Use Scope input cable CH7058, Cable to Probe adapter CH7062, and the red and black test probes. Connect the scope input cable to the channel one connector on the DRB. Attach the red and black leads and the cable to probe adapter to the scope input cable. With the DRBIII® select Pep Module Tools. Select lab scope. Select Live Data. Select 12 volt square wave. Press F2 for Scope. Press F2 and use the down arrow to set voltage range to 20 volts. Set Probe to x10. Press F2 again when complete. Connect the Black lead to the PCM ground. Connect the Red lead to the PCI Bus circuit in the PCM connector. Turn the ignition on. Observe the voltage display on the DRB Lab Scope. Does the voltage pulse from 0 to approximately 7.5 volts? Yes → Replace and program the Powertrain Control Module in accordance with the Service Information. Perform POWERTRAIN VERIFICATION TEST VER - 1. No → Repair the PCI Bus circuit for an open. Perform POWERTRAIN VERIFICATION TEST VER - 1.	All

Symptom:
*NO RESPONSE FROM PCM (SCI ONLY)

POSSIBLE CAUSES
CHECK PCM POWERS AND GROUNDS
SCI TRANSMIT CIRCUIT SHORTED TO VOLTAGE
TRANSMISSION CONTROL MODULE
SCI RECEIVE CIRCUIT SHORTED TO VOLTAGE
SCI CIRCUITS SHORTED TOGETHER
SCI TRANSMIT CIRCUIT SHORTED TO GROUND
SCI RECEIVE CIRCUIT SHORTED TO GROUND
SCI RECEIVE CIRCUIT OPEN
SCI TRANSMIT CIRCUIT OPEN
POWERTRAIN CONTROL MODULE

TEST	ACTION	APPLICABILITY
1	Perform the symptom Checking PCM Power and Ground Circuits in the Driveability category. **NOTE: With the DRBIII® in the generic scan tool mode, attempt to communicate with the PCM.** **NOTE: If the DRBIII® can communicate with the PCM in the generic scan tool mode, it may not be necessary to perform this step.** Did the vehicle pass this test? Yes → Go To 2 No → Repair as necessary. Perform POWERTRAIN VERIFICATION TEST VER - 1.	All
2	Turn the ignition off. Disconnect the PCM C2 harness connector. Disconnect the DRB from the DLC. Measure the resistance between ground and the SCI Transmit circuit. Is the resistance below 5.0 ohms? Yes → Go To 3 No → Go To 4	All
3	Turn the ignition off. Disconnect the TCM harness connector (if equipped). **NOTE: If vehicle is not equipped with a TCM, answer yes to the question.** Measure the resistance between ground and the SCI Transmit circuit. Is the resistance below 5.0 ohms? Yes → Repair the SCI Transmit circuit for a short to ground. Perform POWERTRAIN VERIFICATION TEST VER - 1. No → Replace the Transmission Control Module in accordance with the service information. Perform POWERTRAIN VERIFICATION TEST VER - 1.	All

*NO RESPONSE FROM PCM (SCI ONLY) — Continued

TEST	ACTION	APPLICABILITY
4	Turn the ignition off. Disconnect the DRB from the DLC. Disconnect the PCM harness connectors. Disconnect the TCM harness connector (if equipped). Turn the ignition on. Measure the voltage of the SCI Transmit circuit at the DLC connector (cav 7). Is the voltage above 1.0 volt? Yes → Repair the SCI Transmit circuit for a short to voltage. Perform POWERTRAIN VERIFICATION TEST VER - 1. No → Go To 5	All
5	Turn the ignition off. Disconnect the DRB from the DLC. Disconnect the PCM harness connectors. Turn the ignition on. Measure the voltage of the SCI Receive circuit at the DLC connector (cav 6). Is the voltage above 1.0 volt? Yes → Repair the SCI Receive circuit for a short to voltage. Perform POWERTRAIN VERIFICATION TEST VER - 1. No → Go To 6	All
6	Turn the ignition off. Disconnect the DRB from the DLC. Disconnect the PCM harness connectors. Measure the resistance between the SCI Transmit circuit and the SCI Receive circuit at the PCM connector. Is the resistance below 5.0 ohms? Yes → Repair the short between the SCI Transmit and the SCI Receive circuits. Perform POWERTRAIN VERIFICATION TEST VER - 1. No → Go To 7	All
7	Turn the ignition off. Disconnect the PCM C2 harness connector. Disconnect the DRB from the DLC. Measure the resistance between ground and the SCI Receive circuit. Is the resistance below 5.0 ohms? Yes → Repair the SCI Receive circuit for a short to ground. Perform POWERTRAIN VERIFICATION TEST VER - 1. No → Go To 8	All
8	Turn the ignition off. Disconnect the PCM C2 harness connector. Disconnect the DRB from the DLC. Measure the resistance of the SCI Receive circuit between the PCM C2 connector and the DLC. Is the resistance below 5.0 ohms? Yes → Go To 9 No → Repair the SCI Receive circuit for an open. Perform POWERTRAIN VERIFICATION TEST VER - 1.	All

*NO RESPONSE FROM PCM (SCI ONLY) — Continued

TEST	ACTION	APPLICABILITY
9	Turn the ignition off. Disconnect the PCM C2 harness connector. Disconnect the DRB from the DLC. Measure the resistance of the SCI Transmit circuit between the PCM C2 connector and the DLC. Is the resistance below 5.0 ohms? Yes → Go To 10 No → Repair the SCI Transmit circuit for an open. Perform POWERTRAIN VERIFICATION TEST VER - 1.	All
10	If there are no possible causes remaining, view repair. Repair Replace and program the Powertrain Control Module in accordance with the Service Information. Perform POWERTRAIN VERIFICATION TEST VER - 1.	All

Symptom:
*NO RESPONSE FROM RADIO

POSSIBLE CAUSES
NO RESPONSE FROM RADIO
OPEN FUSED ACCESSORY RELAY OUTPUT CIRCUIT
OPEN FUSED B+ CIRCUIT
GROUND CIRCUIT OPEN
OPEN PCI BUS CIRCUIT
RADIO

TEST	ACTION	APPLICABILITY
1	Turn the ignition on. **Note: As soon as one or more module communicates with the DRB, answer the question.** With the DRB, attempt to communicate with the Airbag Control Module (ACM). With the DRB, attempt to communicate with the Body Control Module (BCM). Was the DRB able to I/D or establish communications with either of the modules? Yes → Go To 2 No → Refer to the Communications category and perform the symptom PCI Bus Communication Failure. Perform BODY VERIFICATION TEST - VER 1.	All
2	Turn the ignition off. Disconnect the Radio C1 harness connector. Turn the ignition on. Using a 12-volt test light connected to ground, probe the Fused Accessory Relay Output circuit. Is the test light illuminated? Yes → Go To 3 No → Check fuse #5 in the IPM for an open. If ok, repair the Fused Accessory Relay Output circuit for an open or short. Refer to the wiring diagrams located in the Service Information. Perform BODY VERIFICATION TEST - VER 1.	All
3	Turn the ignition off. Disconnect the Radio C1 harness connector. Using a 12-volt test light connected to ground, probe both Fused B+ circuits. Is the test light illuminated for each circuit? Yes → Go To 4 No → Check fuse #14 in the IPM for an open. If ok, repair the Fused B+ circuit for an open or short. Refer to the wiring diagrams located in the Service Information. Perform BODY VERIFICATION TEST - VER 1.	All

*NO RESPONSE FROM RADIO — Continued

TEST	ACTION	APPLICABILITY
4	Turn the ignition off. Disconnect the Radio C1 harness connector. Using a 12-volt test light connected to 12-volts, probe both ground circuits. Is the test light illuminated for each circuit? Yes → Go To 5 No → Repair the ground circuit for an open. Perform BODY VERIFICATION TEST - VER 1.	All
5	**Note: Ensure there is PCI Bus communication with other modules on the vehicle before proceeding. If not, refer to the symptom list from the menu and repair as necessary.** Disconnect the Radio C1 harness connector. Use Scope input cable CH7058, Cable to Probe adapter CH7062, and the red and black test probes. Connect the scope input cable to the channel one connector on the DRB. Attach the red and black leads and the cable to probe adapter to the scope input cable. With the DRBIII® select Pep Module Tools. Select lab scope. Select Live Data. Select 12 volt square wave. Press F2 for Scope. Press F2 and use the down arrow to set voltage range to 20 volts. Set Probe to x10. Press F2 again when complete. Connect the Black lead to the chassis ground. Connect the Red lead to the PCI Bus circuit in the Radio connector. Turn the ignition on. Observe the voltage display on the DRB Lab Scope. Does the voltage pulse from 0 to approximately 7.5 volts? Yes → Go To 6 No → Repair the PCI Bus circuit for an open. Perform BODY VERIFICATION TEST - VER 1.	All
6	If there are no possible causes remaining, view repair. Repair Replace the Radio. Perform BODY VERIFICATION TEST - VER 1.	All

Symptom:
*NO RESPONSE FROM RIGHT SIACM

POSSIBLE CAUSES
INTERROGATE FCM
GROUND CIRCUIT OPEN
SIACM RUN/START DRIVER CIRCUIT OPEN
PCI BUS CIRCUIT OPEN
RIGHT SIDE IMPACT AIRBAG CONTROL MODULE

TEST	ACTION	APPLICABILITY
1	Turn the ignition on. With the DRBIII®, check the FCM for any DTC's. Are any FCM DTC's present? Yes → Refer to the appropriate category and perform the symptom. Perform AIRBAG VERIFICATION TEST - VER 1. No → Go To 2	All
2	**Ensure that the battery is fully charged.** **Warning: TURN IGNITION OFF, DISCONNECT THE BATTERY AND WAIT TWO MINUTES BEFORE PROCEEDING.** Disconnect the Right Side Impact Airbag Control Module harness connector. Using a 12-volt test light connected to 12-volts, probe the ground circuit. Is the test light illuminated? Yes → Go To 3 No → Repair the Ground circuit for an open. Perform AIRBAG VERIFICATION TEST - VER 1. **Note: When reconnecting Airbag system components, the ignition must be turned off and the battery must be disconnected.**	All
3	**Warning: TURN IGNITION OFF, DISCONNECT THE BATTERY AND WAIT TWO MINUTES BEFORE PROCEEDING.** Disconnect the Right Side Impact Airbag Control Module harness connector. Turn the ignition on and then reconnect the Battery. Measure the voltage of the SIACM Run/Start Driver circuit. Is the voltage above 6.0 volts? Yes → Go To 4 No → Repair the SIACM Run/Start Driver circuit for an open. Perform AIRBAG VERIFICATION TEST - VER 1. **Note: When reconnecting Airbag system components, the ignition must be turned off and the battery must be disconnected.**	All

*NO RESPONSE FROM RIGHT SIACM — Continued

TEST	ACTION	APPLICABILITY
4	**NOTE: Ensure there is PCI bus communication with other modules. If not, refer to the PCI Bus Communication Failure symptom and repair as necessary.** **WARNING: TURN THE IGNITION OFF, DISCONNECT THE BATTERY AND WAIT TWO MINUTES BEFORE PROCEEDING.** Disconnect the Right Side Impact Airbag Control Module harness connector. Turn the ignition on and then reconnect the Battery. Use Scope input cable CH7058, Cable to Probe adapter CH7062, and the red and black test probes. Connect the scope input cable to the channel one connector on the DRB. Attach the red and black leads and the cable to probe adapter to the scope input cable. With the DRBIII® select Pep Module Tools. Select lab scope. Select Live Data. Select 12 volt square wave. Press F2 for Scope, then enter to select channel. Press F2 and use the down arrow to set voltage range to 20 volts. Set Probe to x10. Press F2 again when complete. Connect the Black lead to the chassis ground. Connect the Red lead to the PCI Bus circuit in the Right Side Impact Airbag Control Module connector. Observe the voltage display on the DRB Lab Scope. Does the voltage pulse from 0 to approximately 7.5 volts? Yes → Go To 5 No → Repair the PCI Bus circuit for an open. Perform AIRBAG VERIFICATION TEST - VER 1.	All
5	If there are no possible causes remaining, view repair. Yes → Replace the Right Side Impact Airbag Control Module (RSIACM) in accordance with the Service Information. WARNING: Make sure the battery is disconnected and wait 2 minutes before proceeding. Perform AIRBAG VERIFICATION TEST - VER 1.	All

Symptom:

*NO RESPONSE FROM TRANSMISSION CONTROL MODULE

POSSIBLE CAUSES
NO RESPONSE FROM TRANSMISSION CONTROL MODULE
FCM OUTPUT (RUN/ST) CIRCUIT OPEN
FUSED IGNITION SWITCH OUTPUT (START) CIRCUIT OPEN
FUSED B(+) CIRCUIT OPEN
GROUND CIRCUIT(S) OPEN
OPEN PCI BUS CIRCUIT
TRANSMISSION CONTROL MODULE

TEST	ACTION	APPLICABILITY
1	Ignition on, engine not running. **Note: As soon as one or more module communicates with the DRB, answer the question.** With the DRB, attempt to communicate with the Airbag Control Module (ACM). With the DRB, attempt to communicate with the Body Control Module (BCM). Was the DRB able to I/D or establish communications with either of the modules? Yes → Go To 2 No → Refer to the Body Communication category and perform the symptom PCI Bus Communication Failure. Perform 41TE TRANSMISSION VERIFICATION TEST - VER 1.	All
2	Turn the ignition off to the lock position. Disconnect the TCM harness connector. Ignition on, engine not running. Using a 12-volt test light connected to ground, probe the FCM Output (Run/St) circuit. **NOTE: The test light must illuminate brightly. Compare the brightness to that of a direct connection to the battery.** Does the test light illuminate brightly? Yes → Go To 3 No → Repair the FCM Output (Run/St) circuit for an open. Refer to the wiring diagrams location in the Service Information. Perform 41TE TRANSMISSION VERIFICATION TEST - VER 1.	All

*NO RESPONSE FROM TRANSMISSION CONTROL MODULE — Continued

TEST	ACTION	APPLICABILITY
3	Turn the ignition off to the lock position. Disconnect the TCM harness connector. Remove the starter relay from the IPM. Using a 12-volt test light connected to ground, probe the Fused Ignition Switch Output (Start) circuit. **NOTE: The test light must illuminate brightly. Compare the brightness to that of a direct connection to the battery.** Observe the test light while momentarily turning the ignition switch to the Start position. Does the test light illuminate brightly? Yes → Go To 4 No → Repair the Fused Ignition Switch Output (Start) circuit for an open. Refer to the wiring diagrams located in the Service Information. Perform 41TE TRANSMISSION VERIFICATION TEST - VER 1. **Note: Reinstall the original Starter Relay.**	All
4	Turn the ignition off. Disconnect the TCM harness connector. Using a 12-volt test light connected to ground, check the Fused B(+) circuit. **NOTE: The test light must illuminate brightly. Compare the brightness to that of a direct connection to the battery.** Does the test light illuminate brightly? Yes → Go To 5 No → Check IPM fuse #15 for an open. If OK, repair the Fused B(+) circuit for an open. Refer to the wiring diagrams located in the Service Information. Perform 41TE TRANSMISSION VERIFICATION TEST - VER 1.	All
5	Turn the ignition off to the lock position. Disconnect the TCM harness connector. Using a 12-volt test light connected to 12-volts, check each ground circuit in the TCM harness connector. **NOTE: The test light must illuminate brightly. Compare the brightness to that of a direct connection to the battery.** Does the test light illuminate brightly at all the ground circuits? Yes → Go To 6 No → Repair the Ground circuit(s) for an open. Check the main ground connection to engine block and/or chassis. Refer to the wiring diagrams located in the Service Information. Perform 41TE TRANSMISSION VERIFICATION TEST - VER 1.	All

*NO RESPONSE FROM TRANSMISSION CONTROL MODULE — Continued

TEST	ACTION	APPLICABILITY
6	**Note: Ensure there is PCI Bus communication with other modules on the vehicle before proceeding. If not, refer to the symptom list from the menu and repair as necessary.** Disconnect the TCM harness connector. Use Scope input cable CH7058, Cable to Probe adapter CH7062, and the red and black test probes. Connect the scope input cable to the channel one connector on the DRB. Attach the red and black leads and the cable to probe adapter to the scope input cable. With the DRBIII® select Pep Module Tools. Select lab scope. Select Live Data. Select 12 volt square wave. Press F2 for Scope. Press F2 and use the down arrow to set voltage range to 20 volts. Set Probe to x10. Press F2 again when complete. Connect the Black lead to the chassis ground. Connect the Red lead to the PCI Bus circuit in the TCM connector. Turn the ignition on. Observe the voltage display on the DRB Lab Scope. Does the voltage pulse from 0 to approximately 7.5 volts? Yes → Go To 7 No → Repair the PCI Bus circuit for an open. Perform 41TE TRANSMISSION VERIFICATION TEST - VER 1.	All
7	If there are no possible causes remaining, view repair. Repair Replace the Transmission Control Module. WITH THE DRBIII® PERFORM QUICK LEARN. Perform 41TE TRANSMISSION VERIFICATION TEST - VER 1.	All

Symptom:
*PCI BUS COMMUNICATION FAILURE

POSSIBLE CAUSES
WITH THE DRB PERFORM A MODULE SCAN
OPEN PCI BUS CIRCUIT AT THE DATA LINK CONNECTOR
USING THE DRB, PERFORM THE PCI BUS CONTROL MODE
DISCONNECT THE MODULE(S) HARNESS CONNECTOR
PCI BUS CIRCUIT SHORTED TO VOLTAGE
DISCONNECT THE MODULE(S) HARNESS CONNECTOR
PCI BUS CIRCUIT SHORTED TO GROUND
WIRING HARNESS INTERMITTENT FAILURE

TEST	ACTION	APPLICABILITY
1	**Note: Determine which modules this vehicle is equipped with before beginning.** Connect the Diagnostic Junction Port Tester #8339 to the DRBIII® and to the Diagnostic Junction Port. Using the DRBIII®, along with the Diagnostic Junction Port Tester #8339, select Junction Port Tool then PCI Bus Module Scan and follow the instructions on the DRBIII®. Was the DRBIII® able to scan (I/D or communicate) with any modules? Yes → Refer to the Communication category for the related symptom(s). (Individual module no responses). Perform BODY VERIFICATION TEST - VER 1. No → Go To 2	All
2	Turn the ignition off. Measure the resistance of the PCI Bus circuit between the Data Link Connector and the Diagnostic Junction Port connector. Is the resistance below 5.0 ohms? Yes → Go To 3 No → Repair the PCI Bus circuit for an open between the DLC and the Diagnostic Junction Port. Perform BODY VERIFICATION TEST - VER 1.	All

*PCI BUS COMMUNICATION FAILURE — Continued

TEST	ACTION	APPLICABILITY
3	**Note: Determine which modules this vehicle is equipped with before beginning.** Connect the Diagnostic Junction Port Tester #8339 to the DRB and to the Diagnostic Junction Port. Using the DRB, along with the Diagnostic Junction Port Tester #8339, select Junction Port Tool then PCI Bus Control Mode and follow the instructions on the DRB. **Note: Perform this function on each pin that is equipped with a PCI Bus circuit.** Did the DRB display No Modules Responding from any of the pins that were scanned? Yes → Go To 4 No → Check the PCI Bus circuit between the DLC and the Diagnostic Junction Port connector for a short to voltage or to ground, repair as necessary. Perform BODY VERIFICATION TEST - VER 1.	All
4	Disconnect the Diagnostic Junction Port Tester cable from the DRB. Keep the tester connected to the Diagnostic Junction Port. Turn the ignition on. Measure the voltage of the PCI Bus circuit on the Diagnostic Junction Port Tester that the DRB displayed No Modules Responding. Is the voltage steadily above 7.0 volts? Yes → Go To 5 No → Go To 6	All
5	Measure the voltage of the PCI Bus circuit on the Diagnostic Junction Port tester that previously measured above 7.0 volts. **Note: Turn the ignition off before disconnecting any module harness connector then turn the ignition on.** Disconnect the module harness connector(s). **NOTE: If the problem occurred on a bus circuit that has more than one module on the same circuit, observe the voltmeter while disconnecting each module connector one at a time.** Is the voltage steadily above 7.0 volts with the module(s) disconnected? Yes → Repair the PCI Bus circuit that measured over 7.0 volts for a short to voltage. Perform BODY VERIFICATION TEST - VER 1. No → Replace the module that when disconnected the short to voltage was eliminated. Perform BODY VERIFICATION TEST - VER 1.	All
6	Disconnect the Diagnostic Junction Port Tester cable from the DRB. Keep the tester connected to the Diagnostic Junction Port. Turn the ignition off. Disconnect the negative battery cable. Measure the resistance between ground and the PCI Bus circuit on the Diagnostic Junction Port Tester that the DRB displayed No Modules Responding. Is the resistance below 100.0 ohms? Yes → Go To 7 No → Go To 8	All

*PCI BUS COMMUNICATION FAILURE — Continued

TEST	ACTION	APPLICABILITY
7	Disconnect the negative battery cable. Measure the resistance between ground and the PCI Bus circuit at the Diagnostic Junction Port tester that previously measured below 100.0 ohms. Disconnect the module harness connector(s). **NOTE: If the problem occurred on a bus circuit that has more than one module on the same circuit, observe the ohmmeter while disconnecting each module connector one at a time.** Is the resistance below 100.0 ohms with the module(s) disconnected? Yes → Repair the PCI Bus circuit that measured below 100.0 ohms for a short to ground. Perform BODY VERIFICATION TEST - VER 1. No → Replace the module that when disconnected the short to ground was eliminated. Perform BODY VERIFICATION TEST - VER 1.	All
8	Turn the ignition off. **Note: Visually inspect the related wiring harness. Look for any chafed, pierced, pinched, or partially broken wires.** **Note: Visually inspect the related wire harness connectors. Look for broken, bent, pushed out, or corroded terminals.** Were any problems found? Yes → Repair wiring harness/connectors as necessary. Perform BODY VERIFICATION TEST - VER 1. No → Test Complete.	All

Symptom:

***HOOD AJAR CIRCUIT OPEN (VTSS ONLY)**

POSSIBLE CAUSES
HOOD AJAR SWITCH GROUND CIRCUIT OPEN
INTERMITTENT CONDITION
HOOD AJAR SWITCH
HOOD AJAR SWITCH SENSE CIRCUIT OPEN
BODY CONTROL MODULE INTERNAL MALFUNCTION

TEST	ACTION	APPLICABILITY
1	Open the Hood. With the DRBIII® in Inputs/Outputs, read the HOOD AJAR SW state. Does the DRBIII® display CLOSED? Yes → The condition that caused this symptom is currently not present. Inspect the related wiring harness for a possible intermittent condition. Look for any chafed, pierced, pinched or partially broken wires. Perform BODY VERIFICATION TEST - VER 1. No → Go To 2	All
2	Disconnect the Hood Ajar switch connector. Using a 12-volt Test Light connected to 12-volts, test the Ground circuit for continuity. Does the light illuminate? Yes → Go To 3 No → Repair the Ground circuit for an open. Perform BODY VERIFICATION TEST - VER 1.	All
3	Disconnect the Hood Ajar Switch connector. With the DRBIII® in Inputs/Outputs, read the HOOD AJAR SW state. Connect a jumper wire between Sense circuit and the Ground circuit. Does the DRBIII® display HOOD AJAR SW: CLOSED? Yes → Replace the Hood Ajar Switch. Perform BODY VERIFICATION TEST - VER 1. No → Go To 4	All
4	Disconnect the Body Control Module C3 harness connector. Disconnect the Hood Ajar Switch harness connector. Measure the resistance of the Hood Ajar Switch Sense circuit between the BCM C3 connector and the Hood Ajar Switch connector. Is the resistance below 5.0 ohms? Yes → Replace the Body Control Module. Perform BODY VERIFICATION TEST - VER 1. No → Repair the Hood Ajar Switch Sense circuit for an open. Perform BODY VERIFICATION TEST - VER 1.	All

Symptom:

*HOOD AJAR CIRCUIT SHORTED TO GROUND (VTSS ONLY)

POSSIBLE CAUSES
HOOD AJAR SWITCH SHORTED TO GROUND
HOOD AJAR SWITCH SENSE CIRCUIT SHORTED TO GROUND
BODY CONTROL MODULE INTERNAL MALFUNCTION

TEST	ACTION	APPLICABILITY
1	With the DRBIII® in Inputs/Outputs, read the HOOD AJAR SW state. Disconnect the Hood Ajar Switch harness connector. With the DRBIII® in Inputs/Outputs, read the HOOD AJAR SW state. Does the Switch State change from CLOSED to OPEN? Yes → Replace the Hood Ajar Switch. Perform BODY VERIFICATION TEST - VER 1. No → Go To 2	All
2	Disconnect the Body Control Module C3 harness connector. Disconnect the Hood Ajar Switch harness connector. Using a 12-volt Test Light connected to 12-volts, test the Sense circuit for a short to ground. Does the Test Light illuminate? Yes → Repair the Hood Ajar Switch Sense circuit for a short to ground. Perform BODY VERIFICATION TEST - VER 1. No → Replace the Body Control Module. Perform BODY VERIFICATION TEST - VER 1.	All

Symptom:

***LEFT FRONT DOOR AJAR SWITCH SENSE CIRCUIT OPEN**

POSSIBLE CAUSES
INTERMITTENT CONDITION
LEFT FRONT DOOR AJAR SWITCH GROUND CIRCUIT OPEN
LEFT FRONT DOOR LOCK MOTOR/AJAR SWITCH
LEFT FRONT DOOR AJAR SWITCH SENSE CIRCUIT OPEN
BODY CONTROL MODULE INTERNAL MALFUNCTION

TEST	ACTION	APPLICABILITY
1	Open the driver door. With the DRBIII® in Inputs/Outputs, read the DR DOOR AJAR SW state. Does the DRBIII® display CLOSED? Yes → The condition that caused this symptom is currently not present. Inspect the related wiring harness for a possible intermittent condition. Look for any chafed, pierced, pinched or partially broken wires. Perform BODY VERIFICATION TEST - VER 1. No → Go To 2	All
2	Disconnect the Left Front Door Lock Motor/Ajar switch connector. Using a 12-volt Test Light connected to 12-volts, test the Ground circuit for continuity. Does the light illuminate? Yes → Go To 3 No → Repair the Ground circuit for an open. Perform BODY VERIFICATION TEST - VER 1.	All
3	Disconnect the Left Front Door Lock Motor/Ajar Switch connector. With the DRBIII® in Inputs/Outputs, read the DR DOOR AJAR SW state. Connect a jumper wire between Sense circuit and the Ground circuit. Does the DRBIII® display DR DOOR AJAR SW: CLOSED? Yes → Replace the Left Front Door Lock Motor/Ajar Switch. Perform BODY VERIFICATION TEST - VER 1. No → Go To 4	All
4	Disconnect the Body Control Module C3 harness connector. Disconnect the Left Front Door Lock Motor/Ajar Switch harness connector. Measure the resistance of the Sense circuit between the BCM C3 connector and the Door Ajar connector. Is the resistance below 5.0 ohms? Yes → Replace the Body Control Module. Perform BODY VERIFICATION TEST - VER 1. No → Repair the Left Front Door Ajar Switch Sense circuit for an open. Perform BODY VERIFICATION TEST - VER 1.	All

Symptom:

***LEFT FRONT DOOR AJAR SWITCH SENSE CIRCUIT SHORTED TO GROUND**

POSSIBLE CAUSES
LEFT FRONT DOOR LOCK MOTOR/AJAR SWITCH SHORTED TO GROUND
LEFT FRONT DOOR AJAR SWITCH SENSE CIRCUIT SHORTED TO GROUND
BODY CONTROL MODULE INTERNAL MALFUNCTION

TEST	ACTION	APPLICABILITY
1	With the DRBIII® in Inputs/Outputs, read the DR DOOR AJAR SW state. Disconnect the Left Front Door Lock Motor/Ajar Switch harness connector. With the DRBIII® in Inputs/Outputs, read the DR DOOR AJAR SW state. Did the Switch State change from CLOSED to OPEN? Yes → Replace the Left Front Door Lock Motor/Ajar Switch. Perform BODY VERIFICATION TEST - VER 1. No → Go To 2	All
2	Disconnect the Body Control Module C3 harness connector. Disconnect the Left Front Door Lock Motor/Ajar Switch harness connector. Using a 12-volt Test Light connected to 12-volts, test the Sense circuit for a short to ground. Does the Test Light illuminate? Yes → Repair the Left Front Door Ajar Switch Sense circuit for a short to ground. Perform BODY VERIFICATION TEST - VER 1. No → Replace the Body Control Module. Perform BODY VERIFICATION TEST - VER 1.	All

Symptom:

***LEFT SLIDING DOOR AJAR SWITCH SENSE CIRCUIT OPEN**

POSSIBLE CAUSES
GROUND CIRCUIT OPEN
LEFT SLIDING DOOR AJAR SWITCH SENSE CIRCUIT OPEN
LEFT SLIDING DOOR AJAR SWITCH SENSE CIRCUIT OPEN
BODY CONTROL MODULE INTERNAL MALFUNCTION
LEFT SLIDING DOOR LOCK MOTOR/AJAR SWITCH

TEST	ACTION	APPLICABILITY
1	Disconnect the Left Sliding Door Lock Motor/Ajar Switch harness connector at the bottom of the door. Connect a jumper wire between the Left Sliding Door Ajar Switch Sense circuit and ground. With the DRBIII® in Inputs/Outputs, read the LSLIDE DR AJAR SW state. Did the Switch State change from OPEN to CLOSED? Yes → Go To 2 No → Go To 4	All
2	Reconnect the Left Sliding Door Lock Motor/Ajar Switch connector at the bottom of the door. Remove the door panel from the sliding door. Disconnect the Left Sliding Door Lock Motor/Ajar Switch connector at the door mechanism. Connect a jumper wire between the Left Sliding Door Ajar Switch Sense circuit and ground. With the DRBIII® in Inputs/Outputs, read the LSLIDE DR AJAR SW state. Did the Switch State change from OPEN to CLOSED? Yes → Go To 3 No → Repair the Left Sliding Door Lock Motor/Ajar Switch harness for an open between the door mechanism and the intermediate harness connector at the bottom of the door. Perform BODY VERIFICATION TEST - VER 1.	All
3	Disconnect the Left Sliding Door Lock Motor/Ajar Switch connector at the door mechanism. Connect a jumper wire between the Left Sliding Door Ajar Switch Sense circuit and the Ground circuit. With the DRBIII® in Inputs/Outputs, read the LSLIDE DR AJAR SW state. Did the Switch State change from OPEN to CLOSED? Yes → Replace the Sliding Door Lock Motor/Ajar Switch. Perform BODY VERIFICATION TEST - VER 1. No → Repair the Ground circuit for an open. Perform BODY VERIFICATION TEST - VER 1.	All

*LEFT SLIDING DOOR AJAR SWITCH SENSE CIRCUIT OPEN — Continued

TEST	ACTION	APPLICABILITY
4	Disconnect the Left Sliding Door Lock Motor/Ajar Switch harness connector at the bottom of the sliding door. Gain access to the BCM C3 connector. Back probe a jumper wire from the Left Sliding Door Ajar Switch Sense circuit at the BCM to ground. With the DRBIII® in Inputs/Outputs, read the LSLIDE DR AJAR SW state. Did the Switch State change from OPEN to CLOSED? Yes → Repair the Left Sliding Door Ajar Switch Sense circuit for an open between the intermediate connector and the Body Control Module. Perform BODY VERIFICATION TEST - VER 1. No → Replace the Body Control Module. Perform BODY VERIFICATION TEST - VER 1.	All

Symptom:

***LEFT SLIDING DOOR AJAR SWITCH SENSE CIRCUIT SHORTED TO GROUND**

POSSIBLE CAUSES
LEFT SLIDING DOOR LOCK MOTOR/AJAR SWITCH SHORTED TO GROUND
LEFT SLIDING DOOR AJAR SWITCH SENSE CIRCUIT SHORTED TO GROUND
BODY CONTROL MODULE INTERNAL MALFUNCTION
LEFT SLIDING DOOR LOCK MOTOR/AJAR SWITCH

TEST	ACTION	APPLICABILITY
1	With the DRBIII® in Inputs/Outputs, read the LSLIDE DR AJAR SW state. Disconnect the Left Sliding Door Lock Motor/Ajar Switch harness connector at the bottom of the door. With the DRBIII® in Inputs/Outputs, read the LSLIDE DR AJAR SW state. Did the Switch State change from CLOSED to OPEN? Yes → Go To 2 No → Go To 3	All
2	Reconnect the Left Sliding Door Lock Motor/Ajar Switch connector at the bottom of the door. Remove the door panel from the sliding door. Disconnect the Left Sliding Door Lock Motor/Ajar Switch connector at the door mechanism. With the DRBIII® in Inputs/Outputs, read the LSLIDE DR AJAR SW state. Did the Switch State change from CLOSED to OPEN? Yes → Replace the Sliding Door Lock Motor/Ajar Switch. Perform BODY VERIFICATION TEST - VER 1. No → Repair the Left Sliding Door Lock Motor/Ajar Switch harness for a short to ground between the door mechanism and the intermediate harness connector at the bottom of the door. Perform BODY VERIFICATION TEST - VER 1.	All
3	Disconnect the Body Control Module C3 harness connector. Disconnect the Left Sliding Door Lock Motor/Ajar Switch harness connector at the bottom of the sliding door. Using a 12-volt Test Light connected to 12-volts, test the Sense circuit for a short to ground. Does the Test Light illuminate? Yes → Repair the Left Sliding Door Ajar Switch Sense circuit for a short to ground. Perform BODY VERIFICATION TEST - VER 1. No → Replace the Body Control Module. Perform BODY VERIFICATION TEST - VER 1.	All

Symptom:
*LIFTGATE AJAR CIRCUIT OPEN

POSSIBLE CAUSES
INTERMITTENT CONDITION
LIFTGATE AJAR SWITCH GROUND CIRCUIT OPEN
LIFTGATE AJAR SWITCH
LIFTGATE AJAR SWITCH SENSE CIRCUIT OPEN
BODY CONTROL MODULE INTERNAL MALFUNCTION

TEST	ACTION	APPLICABILITY
1	Open the Liftgate. With the DRBIII® in Inputs/Outputs, read the LIFTGATE AJAR SW state. Does the DRBIII® display CLOSED? Yes → The condition that caused this symptom is currently not present. Inspect the related wiring harness for a possible intermittent condition. Look for any chafed, pierced, pinched or partially broken wires. Perform BODY VERIFICATION TEST - VER 1. No → Go To 2	All
2	**NOTE: If Power Liftgate equipped the ajar switch is in the Liftgate Cinch/ Release Motor.** Disconnect the Liftgate Ajar switch connector. Using a 12-volt Test Light connected to 12-volts, test the Ground circuit for continuity. Does the light illuminate? Yes → Go To 3 No → Repair the Ground circuit for an open. Perform BODY VERIFICATION TEST - VER 1.	All
3	Disconnect the Liftgate Ajar Switch connector. With the DRBIII® in Inputs/Outputs, read the LIFTGATE AJAR SW state. Connect a jumper wire between Sense circuit and the Ground circuit. Does the DRBIII® display LIFTGATE AJAR SW: CLOSED? Yes → Replace the Liftgate Ajar Switch. Perform BODY VERIFICATION TEST - VER 1. No → Go To 4	All
4	Disconnect the Body Control Module C3 harness connector. Disconnect the Liftgate Ajar Switch harness connector. Measure the resistance of the Sense circuit between the BCM C3 connector and the Liftgate Ajar Switch connector.. Is the resistance below 5.0 ohms? Yes → Replace the Body Control Module. Perform BODY VERIFICATION TEST - VER 1. No → Repair the Liftgate Ajar Switch Sense circuit for an open. Perform BODY VERIFICATION TEST - VER 1.	All

Symptom:

***LIFTGATE AJAR CIRCUIT SHORTED TO GROUND**

POSSIBLE CAUSES
LIFTGATE AJAR SWITCH SHORTED TO GROUND
LIFTGATE AJAR SWITCH SENSE CIRCUIT SHORTED TO GROUND
BODY CONTROL MODULE INTERNAL MALFUNCTION

TEST	ACTION	APPLICABILITY
1	With the DRBIII® in Inputs/Outputs, read the LIFTGATE AJAR SW state. **NOTE: If Power Liftgate equipped the ajar switch is in the Liftgate Cinch/ Release Motor.** Disconnect the Liftgate Ajar Switch harness connector. With the DRBIII® in Inputs/Outputs, read the LIFTGATE AJAR SW state. Does the Switch State change from CLOSED to OPEN? Yes → Replace the Liftgate Ajar Switch. Perform BODY VERIFICATION TEST - VER 1. No → Go To 2	All
2	Disconnect the Body Control Module C3 harness connector. Disconnect the Liftgate Ajar Switch harness connector. Using a 12-volt Test Light connected to 12-volts, test the Sense circuit for a short to ground. Does the Test Light illuminate? Yes → Repair the Liftgate Ajar Switch Sense circuit for a short to ground. Perform BODY VERIFICATION TEST - VER 1. No → Replace the Body Control Module. Perform BODY VERIFICATION TEST - VER 1.	All

Symptom:

***RIGHT FRONT DOOR AJAR SWITCH SENSE CIRCUIT OPEN**

POSSIBLE CAUSES
INTERMITTENT CONDITION
RIGHT FRONT DOOR AJAR SWITCH GROUND CIRCUIT OPEN
RIGHT FRONT DOOR LOCK MOTOR/AJAR SWITCH
RIGHT FRONT DOOR AJAR SWITCH SENSE CIRCUIT OPEN
BODY CONTROL MODULE INTERNAL MALFUNCTION

TEST	ACTION	APPLICABILITY
1	Open the passenger door. With the DRBIII® in Inputs/Outputs, read the PASS DOOR AJAR SW state. Does the DRBIII® display CLOSED? Yes → The condition that caused this symptom is currently not present. Inspect the related wiring harness for a possible intermittent condition. Look for any chafed, pierced, pinched or partially broken wires. Perform BODY VERIFICATION TEST - VER 1. No → Go To 2	All
2	Disconnect the Right Front Door Lock Motor/Ajar switch connector. Using a 12-volt Test Light connected to 12-volts, test the Ground circuit for continuity. Does the light illuminate? Yes → Go To 3 No → Repair the Ground circuit for an open. Perform BODY VERIFICATION TEST - VER 1.	All
3	Disconnect the Right Front Door Lock Motor/Ajar Switch connector. With the DRBIII® in Inputs/Outputs, read the PASS DOOR AJAR SW state. Connect a jumper wire between Sense circuit and the Ground circuit. Does the DRBIII® display PASS DOOR AJAR SW: CLOSED? Yes → Replace the Right Front Door Lock Motor/Ajar Switch. Perform BODY VERIFICATION TEST - VER 1. No → Go To 4	All
4	Disconnect the Body Control Module C3 harness connector. Disconnect the Right Front Door Lock Motor/Ajar Switch harness connector. Measure the resistance of the Sense circuit between the BCM C3 connector and the Door Ajar connector. Is the resistance below 5.0 ohms? Yes → Replace the Body Control Module. Perform BODY VERIFICATION TEST - VER 1. No → Repair the Right Front Door Ajar Switch Sense circuit for an open. Perform BODY VERIFICATION TEST - VER 1.	All

Symptom:

***RIGHT FRONT DOOR AJAR SWITCH SENSE CIRCUIT SHORTED TO GROUND**

POSSIBLE CAUSES
RIGHT FRONT DOOR LOCK MOTOR/AJAR SWITCH SHORTED TO GROUND
RIGHT FRONT DOOR AJAR SWITCH SENSE CIRCUIT SHORTED TO GROUND
BODY CONTROL MODULE INTERNAL MALFUNCTION

TEST	ACTION	APPLICABILITY
1	With the DRBIII® in Inputs/Outputs, read the PASS DOOR AJAR SW state. Disconnect the Right Front Door Lock Motor/Ajar Switch harness connector. With the DRBIII® in Inputs/Outputs, read the PASS DOOR AJAR SW state. Did the Switch State change from CLOSED to OPEN? Yes → Replace the Right Front Door Lock Motor/Ajar Switch. Perform BODY VERIFICATION TEST - VER 1. No → Go To 2	All
2	Disconnect the Body Control Module C3 harness connector. Disconnect the Right Front Door Lock Motor/Ajar Switch harness connector. Using a 12-volt Test Light connected to 12-volts, test the Sense circuit for a short to ground. Does the Test Light illuminate? Yes → Repair the Right Front Door Ajar Switch Sense circuit for a short to ground. Perform BODY VERIFICATION TEST - VER 1. No → Replace the Body Control Module. Perform BODY VERIFICATION TEST - VER 1.	All

Symptom:

***RIGHT SLIDING DOOR AJAR CIRCUIT OPEN**

POSSIBLE CAUSES
GROUND CIRCUIT OPEN
RIGHT SLIDING DOOR AJAR SWITCH SENSE CIRCUIT OPEN
RIGHT SLIDING DOOR AJAR SWITCH SENSE CIRCUIT OPEN
BODY CONTROL MODULE INTERNAL MALFUNCTION
RIGHT SLIDING DOOR LOCK MOTOR/AJAR SWITCH

TEST	ACTION	APPLICABILITY
1	Disconnect the Right Sliding Door Lock Motor/Ajar Switch harness connector at the bottom of the door. Connect a jumper wire between the Right Sliding Door Ajar Switch Sense circuit and ground. With the DRBIII® in Inputs/Outputs, read the RSLIDE DR AJAR SW state. Did the Switch State change from OPEN to CLOSED? Yes → Go To 2 No → Go To 4	All
2	Reconnect the Right Sliding Door Lock Motor/Ajar Switch connector at the bottom of the door. Remove the door panel from the sliding door. Disconnect the Right Sliding Door Lock Motor/Ajar Switch connector at the door mechanism. Connect a jumper wire between the Right Sliding Door Ajar Switch Sense circuit and ground. With the DRBIII® in Inputs/Outputs, read the RSLIDE DR AJAR SW state. Did the Switch State change from OPEN to CLOSED? Yes → Go To 3 No → Repair the Right Sliding Door Lock Motor/Ajar Switch harness for an open between the door mechanism and the intermediate harness connector at the bottom of the door. Perform BODY VERIFICATION TEST - VER 1.	All
3	Disconnect the Right Sliding Door Lock Motor/Ajar Switch connector at the door mechanism. Connect a jumper wire between the Right Sliding Door Ajar Switch Sense circuit and the Ground circuit. With the DRBIII® in Inputs/Outputs, read the RSLIDE DR AJAR SW state. Did the Switch State change from OPEN to CLOSED? Yes → Replace the Sliding Door Lock Motor/Ajar Switch. Perform BODY VERIFICATION TEST - VER 1. No → Repair the Ground circuit for an open. Perform BODY VERIFICATION TEST - VER 1.	All

*RIGHT SLIDING DOOR AJAR CIRCUIT OPEN — Continued

TEST	ACTION	APPLICABILITY
4	Disconnect the Right Sliding Door Lock Motor/Ajar Switch harness connector at the bottom of the sliding door. Gain access to the BCM C3 connector. Back probe a jumper wire from the Right Sliding Door Ajar Switch Sense circuit at the BCM to ground. With the DRBIII® in Inputs/Outputs, read the RSLIDE DR AJAR SW state. Did the Switch State change from OPEN to CLOSED? Yes → Repair the Right Sliding Door Ajar Switch Sense circuit for an open between the intermediate connector and the Body Control Module. Perform BODY VERIFICATION TEST - VER 1. No → Replace the Body Control Module. Perform BODY VERIFICATION TEST - VER 1.	All

Symptom:

***RIGHT SLIDING DOOR AJAR CIRCUIT SHORTED TO GROUND**

POSSIBLE CAUSES
RIGHT SLIDING DOOR LOCK MOTOR/AJAR SWITCH SHORTED TO GROUND
RIGHT SLIDING DOOR AJAR SWITCH SENSE CIRCUIT SHORTED TO GROUND
BODY CONTROL MODULE INTERNAL MALFUNCTION
RIGHT SLIDING DOOR LOCK MOTOR/AJAR SWITCH

TEST	ACTION	APPLICABILITY
1	With the DRBIII® in Inputs/Outputs, read the RSLIDE DR AJAR SW state. Disconnect the Right Sliding Door Lock Motor/Ajar Switch harness connector at the bottom of the door. With the DRBIII® in Inputs/Outputs, read the RSLIDE DR AJAR SW state. Did the Switch State change from CLOSED to OPEN? Yes → Go To 2 No → Go To 3	All
2	Reconnect the Right Sliding Door Lock Motor/Ajar Switch connector at the bottom of the door. Remove the door panel from the sliding door. Disconnect the Right Sliding Door Lock Motor/Ajar Switch connector at the door mechanism. With the DRBIII® in Inputs/Outputs, read the RSLIDE DR AJAR SW state. Did the Switch State change from CLOSED to OPEN? Yes → Replace the Sliding Door Lock Motor/Ajar Switch. Perform BODY VERIFICATION TEST - VER 1. No → Repair the Right Sliding Door Lock Motor/Ajar Switch harness for a short to ground between the door mechanism and the intermediate harness connector at the bottom of the door. Perform BODY VERIFICATION TEST - VER 1.	All
3	Disconnect the Body Control Module C3 harness connector. Disconnect the Right Sliding Door Lock Motor/Ajar Switch harness connector at the bottom of the sliding door. Using a 12-volt Test Light connected to 12-volts, test the Sense circuit for a short to ground. Does the Test Light illuminate? Yes → Repair the Right Sliding Door Ajar Switch Sense circuit for a short to ground. Perform BODY VERIFICATION TEST - VER 1. No → Replace the Body Control Module. Perform BODY VERIFICATION TEST - VER 1.	All

Symptom:
EBL RUN ONLY RELAY OPEN

When Monitored and Set Condition:

EBL RUN ONLY RELAY OPEN

When Monitored: Continuously with the ignition on.

Set Condition: The FCM has detected an open in the Rear Defogger Relay control circuit.

POSSIBLE CAUSES
OPEN B+ TO RELAY
VERIFY ACTIVE DTC
MISSING RELAY
FRONT CONTROL MODULE
REAR WINDOW DEFOGGER RELAY
INTELLIGENT POWER MODULE

TEST	ACTION	APPLICABILITY
1	Turn the ignition on. With the DRBIII®, erase the current Front Control Module DTC's. Turn the ignition off, wait 10 seconds then turn the ignition on. With the DRBIII®, read the current Front Control Module DTC's. Does the DRBIII® display EBL RUN ONLY RELAY OPEN trouble code? Yes → Go To 2 No → The condition that caused this symptom is currently not present at this time. Perform BODY VERIFICATION TEST - VER 1.	All
2	Turn the ignition off. Check the IPM to make certain the Rear Window Defogger Relay is present. Is the Rear Window Defogger Relay present? Yes → Go To 3 No → Replace the missing Rear Defogger Relay. Perform BODY VERIFICATION TEST - VER 1.	All
3	Remove the Rear Window Defogger relay from the IPM. Measure the voltage of pin 86 in the Rear Defogger Relay socket. Is the voltage above 10.0 volts? Yes → Go To 4 No → Repair/replace open B+ to relay as necessary. Perform BODY VERIFICATION TEST - VER 1.	All

EBL RUN ONLY RELAY OPEN — Continued

TEST	ACTION	APPLICABILITY
4	Turn the ignition off. Install a known good relay in place of the Rear Window Defogger relay. Turn the ignition on. Attempt to operate the Rear Window Defogger. With the DRBIII®, read the current Front Control Module DTC's. Does the DTC reset? Yes → Go To 5 No → Replace the Rear Defogger Relay. Perform BODY VERIFICATION TEST - VER 1.	All
5	Turn the ignition off. Disconnect the Front Control Module from the Fuse and Relay Center. Remove the Rear Window Defogger Relay. Measure the resistance of the Rear Window Defogger Relay Control Circuit in the Fuse and Relay Center. Is the resistance below 5.0 ohms? Yes → Replace the Front Control Module. Perform BODY VERIFICATION TEST - VER 1. No → Replace the Fuse and Relay Center. Perform BODY VERIFICATION TEST - VER 1.	All

Symptom:
EBL RUN ONLY RELAY SHORTED TO BATTERY

When Monitored and Set Condition:

EBL RUN ONLY RELAY SHORTED TO BATTERY

When Monitored: Continuously with the ignition on.

Set Condition: The FCM has detected a short to battery voltage in the Rear Defogger Relay control circuit.

POSSIBLE CAUSES
VERIFY ACTIVE DTC
FRONT CONTROL MODULE
INTELLIGENT POWER MODULE
REAR WINDOW DEFOGGER RELAY

TEST	ACTION	APPLICABILITY
1	Turn the ignition on. With the DRBIII®, erase the current Front Control Module DTC's. Turn the ignition off, wait 10 seconds then turn the ignition on. With the DRBIII®, read the current Front Control Module DTC's. Does the DRBIII® display EBL RUN ONLY RELAY SHORTED TO BATTERY trouble code? Yes → Go To 2 No → The condition that caused this symptom is currently not present at this time. Perform BODY VERIFICATION TEST - VER 1.	All
2	Turn the ignition off. Install a known good relay in place of the Rear Window Defogger relay. Turn the ignition on. Attempt to operate the Rear Window Defogger. With the DRBIII®, read the current Front Control Module DTCs. Did the DTC reset? Yes → Go To 3 No → Replace the Rear Defogger Relay. Perform BODY VERIFICATION TEST - VER 1.	All
3	Turn the ignition off. Remove the Rear Window Defogger Relay from the IPM. Remove the Front Control Module from the IPM. Measure the voltage of the Rear Window Relay Control circuit. Is the voltage above 1.0 volts? Yes → Replace the Fuse and Relay Center. Perform BODY VERIFICATION TEST - VER 1. No → Replace the Front Control Module. Perform BODY VERIFICATION TEST - VER 1.	All

Symptom:
BACKUP LAMP OUTPUT OPEN

When Monitored and Set Condition:

BACKUP LAMP OUTPUT OPEN

When Monitored: Trans in reverse.

Set Condition: Voltage output status is Low.

POSSIBLE CAUSES
INTERMITTENT CONDITION
GROUND CIRCUIT
BACKUP LAMP OPEN
BACKUP LAMP DRIVER CIRCUIT OPEN
BODY CONTROL MODULE

TEST	ACTION	APPLICABILITY
1	Turn the ignition on. With the DRBIII®, clear all BCM, IPM DTC's. Actuate the Backup Lamps. With the DRBIII®, read the DTC information. Does the DRBIII® read: Backup Lamp Output Open? Yes → Go To 2 No → The condition that caused the symptom is currently not present. Inspect the related wiring for a possible intermittent condition. Look for terminal push out or any chafed, pierced, pinched, or partially broken wires. Perform BODY VERIFICATION TEST - VER 1.	All
2	Turn the ignition off Disconnect the inoperative rear tail lamp harness connector. Using a 12-volt test light connected to 12-volts, check the ground circuit. Does the test light illuminate brightly? Yes → Go To 3 No → Repair the Ground Circuit. Perform BODY VERIFICATION TEST - VER 1.	All

BACKUP LAMP OUTPUT OPEN — Continued

TEST	ACTION	APPLICABILITY
3	Turn the ignition off. Disconnect the inoperative rear tail lamp harness connector. Turn the ignition on. Engage the transmission to reverse. Using a 12-volt test light connected to ground, check the Backup Lamps Output circuit. Does the test light illuminate brightly? Yes → Replace the applicable Backup Lamp. Perform BODY VERIFICATION TEST - VER 1. No → Go To 4	All
4	Turn the ignition off. Disconnect the Body Control Module harness connector. Disconnect the inoperative rear tail lamp harness connector. Measure the resistance of the Backup Lamp Driver Circuit. Is the resistance above 5.0 ohms? Yes → Repair the Backup Lamp Driver Circuit for an open condition. Perform BODY VERIFICATION TEST - VER 1. No → Replace the Body Control Module. Perform BODY VERIFICATION TEST - VER 1.	All

Symptom:
BACKUP LAMP OUTPUT SHORT

When Monitored and Set Condition:

BACKUP LAMP OUTPUT SHORT

When Monitored: With the transmission in reverse.

Set Condition: When voltage output status is Low.

POSSIBLE CAUSES
INTERMITTENT CONDITION
BACKUP LAMP
BACKUP LAMP DRIVER CIRCUIT SHORT TO GROUND
BODY CONTROL MODULE

TEST	ACTION	APPLICABILITY
1	Turn the ignition on. With the DRBIII®, clear all BCM DTC's. Place the transmission in reverse. With the DRBIII®, read the DTC information. Does the DRBIII® read: Backup Lamp Output Short? Yes → Go To 2 No → The condition that caused the symptom is currently not present. Inspect the related wiring for a possible intermittent condition. Look for any chafed, pierced,pinched, or partially broken wires. Perform BODY VERIFICATION TEST - VER 1.	All
2	Turn the ignition off. Disconnect the rear tail lamp harness connector. Turn the ignition on. Place the transmission in reverse. Using a 12-volt test light connected to ground, check the Backup Lamp Output circuit. Does the test light illuminate brightly? Yes → Replace the Backup Lamp. Perform BODY VERIFICATION TEST - VER 1. No → Go To 3	All
3	Turn the ignition off. Disconnect the Body Control Module harness connector. Disconnect both rear tail lamp harness connector. Measure the resistance of the Backup Lamp Driver circuit and ground. Is the resistance below 5.0 ohms? Yes → Repair the Backup Lamp Driver circuit for a short to ground. Perform BODY VERIFICATION TEST - VER 1. No → Replace the Body Control Module. Perform BODY VERIFICATION TEST - VER 1.	All

Symptom:
FRONT FOG LAMP RELAY OPEN

When Monitored and Set Condition:

FRONT FOG LAMP RELAY OPEN

When Monitored: Ignition On.

Set Condition: The IPM detects high current from the fog lamp relay control circuit.

POSSIBLE CAUSES
MISSING RELAY
OPEN FUSE
FOG LAMP RELAY
INTERMITTENT CONDITION
FOG LAMP RELAY CONTROL CIRCUIT OPEN
FRONT CONTROL MODULE
INTELLIGENT POWER MODULE

TEST	ACTION	APPLICABILITY
1	Turn the ignition on. With the DRBIII®, clear all IPM DTC's. Turn the Fog Lamps on. With the DRBIII®, read the DTC information. Does the DRBIII® read: Front Fog Lamp Relay Open? Yes → Go To 2 No → Go To 5	All
2	Turn the ignition off. Check the IPM to make certain the Fog Lamp Relay is present. Is the Fog Lamp Relay present? Yes → Go To 3 No → Replace the missing Fog Lamp Relay. Perform BODY VERIFICATION TEST - VER 1.	All
3	Turn the ignition off. Install a known good relay in place of the fog lamp relay. Turn the Fog Lamps On. Do the Fog Lamps operate normally? Yes → Replace the Fog Lamp Relay. Perform BODY VERIFICATION TEST - VER 1. No → Go To 4	All

FRONT FOG LAMP RELAY OPEN — Continued

TEST	ACTION	APPLICABILITY
4	Turn the ignition off Remove the Fog Lamp Relay. Measure the voltage of the Fused B+ circuit of the fog lamp relay. Is the voltage above 10 volts? Yes → Replace the Front Control Module. Perform BODY VERIFICATION TEST - VER 1. No → Replace the Intelligent Power Module. Perform BODY VERIFICATION TEST - VER 1.	All
5	Turn the ignition off. Check the IPM Fog Lamp fuse #1. Is the fuse open? Yes → Replace the open fuse. Perform BODY VERIFICATION TEST - VER 1. No → Go To 6	All
6	Turn the ignition off. Disconnect the Front Control Module from the IPM. Remove the Fog Lamp Relay. Measure the resistance of the Fog Lamp Relay Control Circuit. Is the resistance below 5.0 ohms? Yes → The condition that caused the symptom is currently not present. Inspect the related wiring for a possible intermittent condition. Look for any chafed, pierced,pinched, or partially broken wires. Perform BODY VERIFICATION TEST - VER 1. No → Repair the Fog Lamp Relay Control Circuit. Perform BODY VERIFICATION TEST - VER 1.	All

Symptom:
FRONT FOG LAMP SHORTED TO BATTERY

When Monitored and Set Condition:

FRONT FOG LAMP SHORTED TO BATTERY

When Monitored: Ignition On.

Set Condition: When a battery fault condition is present.

POSSIBLE CAUSES
INTERMITTENT CONDITION
FOG LAMP RELAY
FRONT CONTROL MODULE
INTELLIGENT POWER MODULE

TEST	ACTION	APPLICABILITY
1	Turn the ignition on. With the DRBIII®, clear all IPM DTC's. Turn the Fog Lamps on. With the DRBIII®, read the DTC information. Does the DRBIII® read: Front Fog Lamp Shorted To Battery? Yes → Go To 2 No → The condition that caused the symptom is currently not present. Inspect the related wiring for a possible intermittent condition. Look for any chafed, pierced,pinched, or partially broken wires. Perform BODY VERIFICATION TEST - VER 1.	All
2	Turn the ignition off. Remove and install a known good relay in place of the Fog Lamp Relay. Do the Fog Lamps operate normally? Yes → Replace the Fog Lamp Relay. Perform BODY VERIFICATION TEST - VER 1. No → Go To 3	All
3	Turn the ignition off. Remove the Fog Lamp Relay from the IPM. Remove the Front Control Module from the IPM. Measure the voltage of the Fog Lamp Relay Control circuit and ground. Is the voltage above 1.0 volts? Yes → Replace the Intelligent Power Module. Perform BODY VERIFICATION TEST - VER 1. No → Replace the Front Control Module. Perform BODY VERIFICATION TEST - VER 1.	All

Symptom:
HEADLAMP SWITCH MISMATCH

When Monitored and Set Condition:

HEADLAMP SWITCH MISMATCH

When Monitored: Ignition ON

Set Condition: Headlamp switch is in Auto mode and the vehicle is not EC Mirror equipped.

POSSIBLE CAUSES
VERIFY AUTO HEADLAMP SWITCH
INTERMITTENT WIRING AND CONNECTORS
BODY CONTROL MODULE

TEST	ACTION	APPLICABILITY
1	Turn the ignition on. With the DRBIII®, record and erase DTC's. Turn the headlamps to the Auto position. With the DRBIII®, read DTCs. Does the DRBIII® display HEADLAMP SWITCH MISMATCH? Yes → Go To 2 No → Go To 4	All
2	Inspect the vehicles side view mirrors. Is this vehicle equipped with Electro chromatic mirrors? Yes → Go To 3 No → Replace the Auto Headlamp Switch with a non Auto Headlamp Switch. Perform BODY VERIFICATION TEST - VER 1.	All
3	If there are no possible causes remaining, view repair. Repair Replace and program the Body Control Module in accordance with the Service Information. Perform BODY VERIFICATION TEST - VER 1.	All
4	The conditions necessary to set this DTC are not present at this time. Using the schematics as a guide, inspect the wiring and connectors specific to this circuit. Wiggle the wiring while checking for shorts and open circuits. Were there any problems found? Yes → Repair as necessary. Perform BODY VERIFICATION TEST - VER 1. No → Test Complete.	All

Symptom:
HEADLAMP SWITCH OPEN

When Monitored and Set Condition:

HEADLAMP SWITCH OPEN

When Monitored: Ignition ON

Set Condition: A Sensor voltage is over 4.8 volts for more than .0625 seconds.

POSSIBLE CAUSES
INTERMITTENT WIRING AND CONNECTORS
HEADLAMP SWITCH MUX CIRCUIT OPEN
HEADLAMP SWITCH MUX RETURN CIRCUIT OPEN
HEADLAMP SWITCH OPEN
BODY CONTROL MODULE

TEST	ACTION	APPLICABILITY
1	Turn the ignition on. With the DRBIII®, record and erase DTC's. Turn the headlamps to the ON position. With the DRBIII®, read DTCs. Does the DRBIII® display HEADLAMP SWITCH OPEN? Yes → Go To 2 No → Go To 5	All
2	Turn the ignition off. Disconnect the Headlamp Switch harness connector. Connect a jumper wire between the Headlamp Switch MUX circuit and the Headlamp Switch MUX Return circuit in the Headlamp Switch harness connector. Turn the ignition on. With the DRBIII®, select Body, Body Controller and read the Headlamp Switch volts. Does the DRBIII® Headlamp Switch Sensor voltage read less than 0.5 Volts? Yes → Replace the Headlamp Switch in accordance with the Service Information. Perform BODY VERIFICATION TEST - VER 1. No → Go To 3	All

HEADLAMP SWITCH OPEN — Continued

TEST	ACTION	APPLICABILITY
3	Turn the ignition off to the lock position. Disconnect the Body Control Module harness connector. Disconnect the Headlamp Switch harness connector. **Note: Check connectors - Clean/repair as necessary.** Measure the resistance of the Headlamp Switch MUX circuit from the Body Control Module connector to the Headlamp Switch harness connector. Is the resistance above 5.0 ohms? Yes → Repair the Headlamp Switch MUX circuit for an open. Perform BODY VERIFICATION TEST - VER 1. No → Go To 4	All
4	Turn the ignition off to the lock position. Disconnect the Body Control Module harness connector. Disconnect the Headlamp Switch harness connector. **Note: Check connectors - Clean/repair as necessary.** Measure the resistance of the Headlamp Switch MUX Return circuit from the Body Control Module connector to the Headlamp Switch harness connector. Is the resistance above 5.0 ohms? Yes → Repair the Headlamp Switch MUX Return circuit for an open. Perform BODY VERIFICATION TEST - VER 1. No → Replace the Body Control Module in accordance with the Service Information. Perform BODY VERIFICATION TEST - VER 1.	All
5	The conditions necessary to set this DTC are not present at this time. Using the schematics as a guide, inspect the wiring and connectors specific to this circuit. Wiggle the wiring while checking for shorts and open circuits. Were there any problems found? Yes → Repair as necessary. Perform BODY VERIFICATION TEST - VER 1. No → Test Complete.	All

Symptom:
HEADLAMP SWITCH SHORT TO GROUND

When Monitored and Set Condition:

HEADLAMP SWITCH SHORT TO GROUND

When Monitored: Ignition ON

Set Condition: A Sensor voltage is below 0.488 volts for more than 0.0625 seconds.

POSSIBLE CAUSES
HEADLAMP SWITCH SHORTED
INTERMITTENT WIRING AND CONNECTORS
HEADLAMP SWITCH MUX CIRCUIT SHORT TO GROUND
HEADLAMP SWITCH MUX CIRCUIT SHORT TO MUX RETURN CIRCUIT
BODY CONTROL MODULE

TEST	ACTION	APPLICABILITY
1	Turn the ignition on. With the DRBIII®, record and erase DTC's. Turn the headlamps to the ON position. With the DRBIII®, read DTCs. Does the DRBIII® display HEADLAMP SWITCH SHORT TO GROUND? Yes → Go To 2 No → Go To 5	All
2	Turn the ignition off. Disconnect the Headlamp Switch harness connector. Turn the ignition on. With the DRBIII®, select Body, Body Control Module and read the Headlamp Switch Sensor voltage.. Does the DRB display a Headlamp Switch Voltage of more than 4.8 volts? Yes → Replace the Headlamp Switch in accordance with the Service Information. Perform BODY VERIFICATION TEST - VER 1. No → Go To 3	All
3	Turn the ignition off to the lock position. Disconnect the Body Control Module harness connector. Disconnect the Headlamp Switch harness connector. **Note: Check connectors - Clean/repair as necessary.** Measure the resistance between ground and the Headlamp Switch MUX circuit. Is the resistance less than 5.0 ohms? Yes → Repair the Headlamp Switch MUX Circuit for a short to ground. Perform BODY VERIFICATION TEST - VER 1. No → Go To 4	All

HEADLAMP SWITCH SHORT TO GROUND — Continued

TEST	ACTION	APPLICABILITY
4	Turn the ignition off to the lock position. Disconnect the Body Control Module harness connector. Disconnect the Headlamp Switch harness connector. **Note: Check connectors - Clean/repair as necessary.** Measure the resistance between the Headlamp Switch MUX Return circuit and the Headlamp Switch MUX circuit. Is the resistance less than 5.0 ohms? Yes → Repair the Headlamp Switch MUX circuit for a short to the Headlamp Switch MUX Return circuit. Perform BODY VERIFICATION TEST - VER 1. No → Replace the Body Control Module in accordance with the Service Information. Perform BODY VERIFICATION TEST - VER 1.	All
5	The conditions necessary to set this DTC are not present at this time. Using the schematics as a guide, inspect the wiring and connectors specific to this circuit. Wiggle the wiring while checking for shorts and open circuits. Were there any problems found? Yes → Repair as necessary. Perform BODY VERIFICATION TEST - VER 1. No → Test Complete.	All

Symptom:
HIGH BEAM SWITCH INPUT OPEN

When Monitored and Set Condition:

HIGH BEAM SWITCH INPUT OPEN

When Monitored: Ignition On.

Set Condition: When voltage is above 4.8 volts.

POSSIBLE CAUSES
INTERMITTENT CONDITION
MULTIFUNCTION SWITCH
HIGH BEAM SWITCH MUX CIRCUIT OPEN
MULTIFUNCTION SWITCH MUX RETURN CIRCUIT OPEN
BODY CONTROL MODULE

TEST	ACTION	APPLICABILITY
1	Turn the ignition on. With the DRBIII®, clear all BCM DTC's. Turn the Headlamps On. Actuate the High Beams. With the DRBIII®, read the DTC information. Does the DRBIII® read: High Beam Switch Input Open? Yes → Go To 2 No → The condition that caused the symptom is currently not present. Inspect the related wiring for a possible intermittent condition. Look for any chafed, pierced,pinched, or partially broken wires. Perform BODY VERIFICATION TEST - VER 1.	All
2	Turn the ignition off Disconnect the Multifunction Switch harness connector. Connect a jumper wire between the High Beam Switch MUX circuit and the Multifunction Switch MUX Return circuit in the Multifunction Switch connector. Turn the ignition on. With the DRBIII®, read the Multifunction Switch voltage. Is the display voltage below 0.5 volts? Yes → Replace the Multifunction Switch. Perform BODY VERIFICATION TEST - VER 1. No → Go To 3	All

HIGH BEAM SWITCH INPUT OPEN — Continued

TEST	ACTION	APPLICABILITY
3	Turn the ignition off. Disconnect the Body Control Module harness connector. Disconnect the Multifunction Switch harness connector. Measure the resistance of the High Beam Switch MUX circuit from the Body Control Module connector to the Multifunction Switch harness connector. Is the resistance above 5.0 ohms? Yes → Repair the High Beam Switch MUX circuit for an open. Perform BODY VERIFICATION TEST - VER 1. No → Go To 4	All
4	Turn the ignition off. Disconnect the Body Control Module harness connector. Disconnect the Multifunction Switch harness connector. Measure the resistance of the Multifunction Switch MUX Return circuit from the Body Control Module connector to the Multifunction Switch harness connector. Is the resistance above 5.0 ohms? Yes → Repair the Multifunction Switch MUX Return circuit for an open. Perform BODY VERIFICATION TEST - VER 1. No → Replace the Body Control Module. Perform BODY VERIFICATION TEST - VER 1.	All

Symptom:
HIGH BEAM SWITCH INPUT SHORT

When Monitored and Set Condition:

HIGH BEAM SWITCH INPUT SHORT

When Monitored: Ignition On.

Set Condition: When voltage is below 0.488 volts.

POSSIBLE CAUSES
INTERMITTENT CONDITION
MULTIFUNCTION SWITCH
HIGH BEAM SWITCH MUX CIRCUIT SHORT TO GROUND
HIGH BEAM SWITCH MUX SHORT TO MUX RETURN CIRCUIT
BODY CONTROL MODULE

TEST	ACTION	APPLICABILITY
1	Turn the ignition on. With the DRBIII®, clear all BCM DTC's. Actuate the High Beams. With the DRBIII®, read the DTC information. Does the DRBIII® read: High Beam Switch Input Short? Yes → Go To 2 No → The condition that caused the symptom is currently not present. Inspect the related wiring for a possible intermittent condition. Look for any chafed, pierced,pinched, or partially broken wires. Perform BODY VERIFICATION TEST - VER 1.	All
2	Turn the ignition off. Disconnect the Multifunction Switch harness connector. Turn the ignition on. With the DRBIII®, read the Multifunction Switch voltage. Is the voltage above 4.8 volts? Yes → Replace the Multifunction Switch. Perform BODY VERIFICATION TEST - VER 1. No → Go To 3	All
3	Turn the ignition off. Disconnect the Body Control Module harness connector. Disconnect the Multifunction Switch Harness connector. Measure the resistance between the High Beam Switch MUX circuit and ground. Is the resistance below 5.0 ohms? Yes → Repair the High Beam Switch MUX circuit for a short to ground. Perform BODY VERIFICATION TEST - VER 1. No → Go To 4	All

HIGH BEAM SWITCH INPUT SHORT — Continued

TEST	ACTION	APPLICABILITY
4	Turn the ignition off. Disconnect the Body Control Module harness connector. Disconnect the Multifunction Switch harness connector. Measure the resistance between the Multifunction Switch MUX Return circuit and the High Beam Switch MUX circuit. Is the resistance below 5.0 ohms? Yes → Repair the High Beam Switch MUX circuit for a short to the Multifunction Switch MUX Return circuit. Perform BODY VERIFICATION TEST - VER 1. No → Test Complete.	All

Symptom:
LEFT FRONT TURN SIGNAL OUTPUT OPEN

When Monitored and Set Condition:

LEFT FRONT TURN SIGNAL OUTPUT OPEN

When Monitored: Ignition On and left turn signal On.

Set Condition: When output voltage status is LOW.

POSSIBLE CAUSES
INTERMITTENT CONDITION
GROUND CIRCUIT OPEN
TURN SIGNAL LAMP OPEN
LEFT TURN SIGNAL OUTPUT CIRCUIT OPEN
BODY CONTROL MODULE

TEST	ACTION	APPLICABILITY
1	Turn the ignition on. With the DRBIII®, clear all BCM DTC's. Actuate the Turn Signals. With the DRBIII®, read the DTC information. Does the DRBIII® read: Left Front Turn Signal Output Open? Yes → Go To 2 No → The condition that caused the symptom is currently not present. Inspect the related wiring for a possible intermittent condition. Look for any chafed, pierced,pinched, or partially broken wires. Perform BODY VERIFICATION TEST - VER 1.	All
2	Turn the ignition off Disconnect the Left Front Turn Signal harness connector. Using a 12-volt test light connected to 12-volts, check the ground circuit. Does the test light illuminate brightly? Yes → Go To 3 No → Repair the Ground Circuit. Perform BODY VERIFICATION TEST - VER 1.	All
3	Turn the ignition off. Disconnect the Left Front Turn Signal Lamp connector. Turn the ignition on. Turn the Left Turn Signal on. Using a 12-volt test light connected to ground, check the Left Front Turn Signal Output circuit. Does the test light illuminate brightly? Yes → Replace the Turn Signal Lamp. Perform BODY VERIFICATION TEST - VER 1. No → Go To 4	All

LEFT FRONT TURN SIGNAL OUTPUT OPEN — Continued

TEST	ACTION	APPLICABILITY
4	Turn the ignition off. Disconnect the BCM C2 harness connector. Disconnect the left front turn signal lamp harness connector. Measure the resistance of the Left Front Turn Signal Output Circuit and ground. Is the resistance above 5.0 ohms? Yes → Repair the Left Front Turn Signal Output Circuit for an open condition. Perform BODY VERIFICATION TEST - VER 1. No → Replace the Body Control Module. Perform BODY VERIFICATION TEST - VER 1.	All

Symptom:
LEFT FRONT TURN SIGNAL OUTPUT SHORT

When Monitored and Set Condition:

LEFT FRONT TURN SIGNAL OUTPUT SHORT

When Monitored: Ignition and left turn signal On.

Set Condition: When output voltage status is Low.

POSSIBLE CAUSES
INTERMITTENT CONDITION
LEFT FRONT TURN SIGNAL OUTPUT SHORT TO GROUND
TURN SIGNAL LAMP
BODY CONTROL MODULE

TEST	ACTION	APPLICABILITY
1	Turn the ignition on. With the DRBIII®, clear all BCM DTC's. Actuate the Turn Signals. With the DRBIII®, read the DTC information. Does the DRBIII® read: Left Front Turn Signal Output Short? Yes → Go To 2 No → The condition that caused the symptom is currently not present. Inspect the related wiring for a possible intermittent condition. Look for any chafed, pierced,pinched, or partially broken wires. Perform BODY VERIFICATION TEST - VER 1.	All
2	Turn the ignition off. Disconnect the Left Front Turn Signal Lamp connector. Disconnect the BCM C2 harness connector. Measure the resistance between the Left Front Turn Signal Output circuit and ground. Is the resistance below 100.0 ohms? Yes → Repair the Left Front Turn Signal Output circuit for a short to ground. Perform BODY VERIFICATION TEST - VER 1. No → Go To 3	All

LEFT FRONT TURN SIGNAL OUTPUT SHORT — Continued

TEST	ACTION	APPLICABILITY
3	Turn the ignition off. Disconnect the Left Front Turn Signal Lamp connector. Turn the ignition on. Turn the Left Turn Signal on. Using a 12-volt test light connected to ground, check the Left Front Turn Signal Output circuit. Does the test light illuminate brightly? Yes → Replace the Turn Signal Lamp. Perform BODY VERIFICATION TEST - VER 1. No → Replace the Body Control Module. Perform BODY VERIFICATION TEST - VER 1.	All

Symptom:
LEFT HIGH BEAM HEADLAMP CIRCUIT OPEN

POSSIBLE CAUSES
FRONT CONTROL MODULE
GROUND CIRCUIT OPEN
LEFT HEADLAMP
LEFT HIGH BEAM DRIVER CIRCUIT OPEN
WIRING HARNESS INSPECTION

TEST	ACTION	APPLICABILITY
1	Turn the ignition on. With the DRB, erase the Front Control Module DTC's. Turn the headlamps on. Switch the headlamps between high beam and low beam several times, pausing for 5 seconds in each position. With the DRB, read Front Control Module DTC's. Is this DTC present? Yes → Go To 2 No → Go To 5	All
2	Turn the ignition off. Disconnect the Left Headlamp harness connector. Using a 12-volt test light connected to 12-volts, check the Ground circuit. **NOTE: The test light must illuminate brightly. Compare the brightness to that of a direct connection to the battery.** Does the test light illuminate brightly? Yes → Go To 3 No → Repair the Ground circuit for an open. Perform BODY VERIFICATION TEST - VER 1.	All
3	Turn the ignition off. Disconnect the Left Headlamp. Disconnect the Front Control Module from the Intelligent Power Module. Measure the resistance of the Left High Beam Driver circuit. Is the resistance below 10.0 ohms? Yes → Go To 4 No → Repair the Left High Beam Driver circuit for an open. Perform BODY VERIFICATION TEST - VER 1.	All

LEFT HIGH BEAM HEADLAMP CIRCUIT OPEN — Continued

TEST	ACTION	APPLICABILITY
4	Turn the ignition off. Disconnect the Left Headlamp harness connector. Using a 12-volt test light connected to ground, check the Left High Beam Driver circuit in the Left Headlamp harness connector. Turn the high beam headlamps on. **NOTE: The test light must illuminate brightly. Compare the brightness to that of a direct connection to the battery.** Does the test light illuminate brightly? Yes → Replace the Left Headlamp Bulb. Perform BODY VERIFICATION TEST - VER 1. No → Replace the Front Control Module. Perform BODY VERIFICATION TEST - VER 1.	All
5	Turn the ignition off. **NOTE: Visually inspect the related wiring harness and circuits. Look for any chafed, pierced, pinched, or partially broken wires.** **NOTE: Visually inspect the related wiring harness connectors. Look for broken, bent, pushed out, or corroded terminals.** **Note: Refer to any Technical Service Bulletins (TSB) that may apply.** Were any problems found? Yes → Repair as necessary. Perform BODY VERIFICATION TEST - VER 1. No → Test Complete.	All

Symptom:
LEFT HIGH BEAM HEADLAMP CIRCUIT SHORTED TO GROUND

POSSIBLE CAUSES
FRONT CONTROL MODULE
LEFT HEADLAMP
LEFT HIGH BEAM DRIVER CIRCUIT SHORTED TO GROUND
WIRING PROBLEM
WIRING HARNESS INSPECTION

TEST	ACTION	APPLICABILITY
1	Turn the ignition on. With the DRB, erase the Front Control Module DTC's. Turn the headlamps on. Switch the headlamps between high beam and low beam several times, pausing for 5 seconds in each position. With the DRB, read Front Control Module DTC's. Is this DTC present? Yes → Go To 2 No → Go To 5	All
2	Turn the ignition off. Disconnect the Left Headlamp. Disconnect the Front Control Module from the Intelligent Power Module. Measure the resistance between Ground and the Left High Beam Driver circuit. Is the resistance below 100.0 ohms? Yes → Repair the Left High Beam Driver circuit for a short to ground Perform BODY VERIFICATION TEST - VER 1. No → Go To 3	All
3	Turn the ignition off. Turn the Headlamps off. Install a substitute Headlamp Bulb in place of the Left Headlamp Bulb. Turn the ignition on. With the DRB, erase the Front Control Module DTC's. Turn the headlamps on. Switch the headlamps between high beam and low beam several times, pausing for 5 seconds in each position. With the DRB, read Front Control Module DTC's. Does the DRB display this DTC? Yes → Go To 4 No → Replace the original Left Headlamp Bulb. Perform BODY VERIFICATION TEST - VER 1.	All

LEFT HIGH BEAM HEADLAMP CIRCUIT SHORTED TO GROUND — Continued

TEST	ACTION	APPLICABILITY
4	Turn the ignition off. Inspect the wiring and connectors associated with the Left High Beam Driver circuit. Were any problems found? Yes → Repair as necessary. Perform BODY VERIFICATION TEST - VER 1. No → Replace the Front Control Module. Perform BODY VERIFICATION TEST - VER 1.	All
5	Turn the ignition off. **NOTE: Visually inspect the related wiring harness and circuits. Look for any chafed, pierced, pinched, or partially broken wires.** **NOTE: Visually inspect the related wiring harness connectors. Look for broken, bent, pushed out, or corroded terminals.** **Note: Refer to any Technical Service Bulletins (TSB) that may apply.** Were any problems found? Yes → Repair as necessary. Perform BODY VERIFICATION TEST - VER 1. No → Test Complete.	All

Symptom:
LEFT HIGH BEAM HEADLAMP CIRCUIT SHORTED TO VOLTAGE

POSSIBLE CAUSES
FRONT CONTROL MODULE
GROUND CIRCUIT OPEN
HIGH BEAM AND LOW BEAM DRIVERS CIRCUITS SHORTED TOGETHER
LEFT HEADLAMP
LEFT HIGH BEAM DRIVER CIRCUIT SHORTED TO VOLTAGE
WIRING PROBLEM
WIRING HARNESS INSPECTION

TEST	ACTION	APPLICABILITY
1	Turn the ignition on. With the DRB, erase the Front Control Module DTC's. Turn the headlamps on. Switch the headlamps between high beam and low beam several times, pausing for 5 seconds in each position. With the DRB, read Front Control Module DTC's. Is this DTC present? Yes → Go To 2 No → Go To 7	All
2	Turn the ignition off. Disconnect the Left Headlamp harness connector. Using a 12-volt test light connected to 12-volts, check the Ground circuit. **NOTE: The test light must illuminate brightly. Compare the brightness to that of a direct connection to the battery.** Does the test light illuminate brightly? Yes → Go To 3 No → Repair the Ground circuit for an open. Perform BODY VERIFICATION TEST - VER 1.	All
3	Turn the ignition off. Disconnect the Left Headlamp harness connector. Disconnect the Front Control Module. Measure the resistance between the Left High Beam Driver circuit and the Left Low Beam Driver circuit at the Left Headlamp harness connector. Is the resistance below 100.0 ohms? Yes → Repair the Left High Beam Driver circuit for a short to the Left Low Beam Driver circuit. Perform BODY VERIFICATION TEST - VER 1. No → Go To 4	All

LEFT HIGH BEAM HEADLAMP CIRCUIT SHORTED TO VOLTAGE — Continued

TEST	ACTION	APPLICABILITY
4	Turn the ignition off. Disconnect the Left Headlamp harness connector. Disconnect the Front Control Module. Turn the ignition on. Measure the voltage of the Left High Beam Driver circuit. Is the voltage below 1.0 volt? Yes → Go To 5 No → Repair the Left High Beam Driver circuit for a short to voltage. Perform BODY VERIFICATION TEST - VER 1.	All
5	Turn the ignition off. Turn the Headlamps off. Install a substitute Headlamp Bulb in place of the Left Headlamp Bulb. Turn the ignition on. With the DRB, erase the Front Control Module DTC's. Turn the headlamps on. Switch the headlamps between high beam and low beam several times, pausing for 5 seconds in each position. With the DRB, read Front Control Module DTC's. Does the DRB display this DTC? Yes → Go To 6 No → Replace the original Left Headlamp Bulb. Perform BODY VERIFICATION TEST - VER 1.	All
6	Turn the ignition off. Inspect the wiring and connectors associated with the Left High Beam Driver circuit. Were any problems found? Yes → Repair as necessary. Perform BODY VERIFICATION TEST - VER 1. No → Replace the Front Control Module. Perform BODY VERIFICATION TEST - VER 1.	All
7	Turn the ignition off. **NOTE: Visually inspect the related wiring harness and circuits. Look for any chafed, pierced, pinched, or partially broken wires.** **NOTE: Visually inspect the related wiring harness connectors. Look for broken, bent, pushed out, or corroded terminals.** **Note: Refer to any Technical Service Bulletins (TSB) that may apply.** Were any problems found? Yes → Repair as necessary. Perform BODY VERIFICATION TEST - VER 1. No → Test Complete.	All

Symptom:
LEFT LOW BEAM HEADLAMP CIRCUIT OPEN

POSSIBLE CAUSES
FRONT CONTROL MODULE
GROUND CIRCUIT OPEN
LEFT HEADLAMP
LEFT LOW BEAM DRIVER CIRCUIT OPEN
WIRING HARNESS INSPECTION

TEST	ACTION	APPLICABILITY
1	Turn the ignition on. With the DRB, erase the Front Control Module DTC's. Turn the headlamps on. Switch the headlamps between high beam and low beam several times, pausing for 5 seconds in each position. With the DRB, read Front Control Module DTC's. Is this DTC present? Yes → Go To 2 No → Go To 5	All
2	Turn the ignition off. Disconnect the Left Headlamp harness connector. Using a 12-volt test light connected to 12-volts, check the Ground circuit. **NOTE: The test light must illuminate brightly. Compare the brightness to that of a direct connection to the battery.** Does the test light illuminate brightly? Yes → Go To 3 No → Repair the Ground circuit for an open. Perform BODY VERIFICATION TEST - VER 1.	All
3	Turn the ignition off. Disconnect the Left Headlamp. Disconnect the Front Control Module from the Intelligent Power Module. Measure the resistance of the Left Low Beam Driver circuit. Is the resistance below 10.0 ohms? Yes → Go To 4 No → Repair the Left Low Beam Driver circuit for an open. Perform BODY VERIFICATION TEST - VER 1.	All

LEFT LOW BEAM HEADLAMP CIRCUIT OPEN — Continued

TEST	ACTION	APPLICABILITY
4	Turn the ignition off. Disconnect the Left Headlamp harness connector. Using a 12-volt test light connected to ground, check the Left Low Beam Driver circuit in the Left Headlamp harness connector. **NOTE: The test light must illuminate brightly. Compare the brightness to that of a direct connection to the battery.** Turn the low beam headlamps on. Does the test light illuminate brightly? Yes → Replace the Left Headlamp Bulb. Perform BODY VERIFICATION TEST - VER 1. No → Replace the Front Control Module. Perform BODY VERIFICATION TEST - VER 1.	All
5	Turn the ignition off. **NOTE: Visually inspect the related wiring harness and circuits. Look for any chafed, pierced, pinched, or partially broken wires.** **NOTE: Visually inspect the related wiring harness connectors. Look for broken, bent, pushed out, or corroded terminals.** **Note: Refer to any Technical Service Bulletins (TSB) that may apply.** Were any problems found? Yes → Repair as necessary. Perform BODY VERIFICATION TEST - VER 1. No → Test Complete.	All

Symptom:
LEFT LOW BEAM HEADLAMP CIRCUIT SHORTED TO GROUND

POSSIBLE CAUSES
FRONT CONTROL MODULE
LEFT HEADLAMP
LEFT LOW BEAM DRIVER CIRCUIT SHORTED TO GROUND
WIRING PROBLEM
WIRING HARNESS INSPECTION

TEST	ACTION	APPLICABILITY
1	Turn the ignition on. With the DRB, erase the Front Control Module DTC's. Turn the headlamps on. Switch the headlamps between high beam and low beam several times, pausing for 5 seconds in each position. With the DRB, read Front Control Module DTC's. Is this DTC present? Yes → Go To 2 No → Go To 5	All
2	Turn the ignition off. Disconnect the Left Headlamp. Disconnect the Front Control Module from the Intelligent Power Module. Measure the resistance between Ground and the Left Low Beam Driver circuit. Is the resistance below 100.0 ohms? Yes → Repair the Left Low Beam Driver circuit for a short to ground Perform BODY VERIFICATION TEST - VER 1. No → Go To 3	All
3	Turn the ignition off. Turn the Headlamps off. Install a substitute Headlamp Bulb in place of the Left Headlamp Bulb. Turn the ignition on. With the DRB, erase the Front Control Module DTC's. Turn the headlamps on. Switch the headlamps between high beam and low beam several times, pausing for 5 seconds in each position. With the DRB, read Front Control Module DTC's. Does the DRB display this DTC? Yes → Go To 4 No → Replace the original Left Headlamp Bulb. Perform BODY VERIFICATION TEST - VER 1.	All

LEFT LOW BEAM HEADLAMP CIRCUIT SHORTED TO GROUND — Continued

TEST	ACTION	APPLICABILITY
4	Turn the ignition off. Inspect the wiring and connectors associated with the Left Low Beam Driver circuit. Were any problems found? Yes → Repair as necessary. Perform BODY VERIFICATION TEST - VER 1. No → Test Complete.	All
5	Turn the ignition off. **NOTE: Visually inspect the related wiring harness and circuits. Look for any chafed, pierced, pinched, or partially broken wires.** **NOTE: Visually inspect the related wiring harness connectors. Look for broken, bent, pushed out, or corroded terminals.** **Note: Refer to any Technical Service Bulletins (TSB) that may apply.** Were any problems found? Yes → Repair as necessary. Perform BODY VERIFICATION TEST - VER 1. No → Test Complete.	All

Symptom:
LEFT LOW BEAM HEADLAMP CIRCUIT SHORTED TO VOLTAGE

POSSIBLE CAUSES
FRONT CONTROL MODULE
GROUND CIRCUIT OPEN
HIGH BEAM AND LOW BEAM DRIVERS CIRCUITS SHORTED TOGETHER
LEFT HEADLAMP
LEFT LOW BEAM DRIVER CIRCUIT SHORTED TO VOLTAGE
WIRING PROBLEM
WIRING HARNESS INSPECTION

TEST	ACTION	APPLICABILITY
1	Turn the ignition on. With the DRB, erase the Front Control Module DTC's. Turn the headlamps on. Switch the headlamps between high beam and low beam several times, pausing for 5 seconds in each position. With the DRB, read Front Control Module DTC's. Is this DTC present? Yes → Go To 2 No → Go To 7	All
2	Turn the ignition off. Disconnect the Left Headlamp harness connector. Using a 12-volt test light connected to 12-volts, check the Ground circuit. **NOTE: The test light must illuminate brightly. Compare the brightness to that of a direct connection to the battery.** Does the test light illuminate brightly? Yes → Go To 3 No → Repair the Ground circuit for an open. Perform BODY VERIFICATION TEST - VER 1.	All
3	Turn the ignition off. Disconnect the Left Headlamp harness connector. Disconnect the Front Control Module. Measure the resistance between the Left High Beam Driver circuit and the Left Low Beam Driver circuit at the Left Headlamp harness connector. Is the resistance below 100.0 ohms? Yes → Repair the Left High Beam Driver circuit for a short to the Left Low Beam Driver circuit. Perform BODY VERIFICATION TEST - VER 1. No → Go To 4	All

LEFT LOW BEAM HEADLAMP CIRCUIT SHORTED TO VOLTAGE — Continued

TEST	ACTION	APPLICABILITY
4	Turn the ignition off. Disconnect the Left Headlamp harness connector. Disconnect the Front Control Module. Turn the ignition on. Measure the voltage of the Left Low Beam Driver circuit. Is the voltage below 1.0 volt? Yes → Go To 5 No → Repair the Left Low Beam Driver circuit for a short to voltage. Perform BODY VERIFICATION TEST - VER 1.	All
5	Turn the ignition off. Turn the Headlamps off. Install a substitute Headlamp in place of the Left Headlamp. Turn the ignition on. With the DRB, erase the Front Control Module DTC's. Turn the headlamps on. Switch the headlamps between high beam and low beam several times, pausing for 5 seconds in each position. With the DRB, read Front Control Module DTC's. Does the DRB display this DTC? Yes → Go To 6 No → Replace the original Left Headlamp Bulb. Perform BODY VERIFICATION TEST - VER 1.	All
6	Turn the ignition off. Inspect the wiring and connectors associated with the Left Low Beam Driver circuit. Were any problems found? Yes → Repair as necessary. Perform BODY VERIFICATION TEST - VER 1. No → Replace the Front Control Module. Perform BODY VERIFICATION TEST - VER 1.	All
7	Turn the ignition off. **NOTE: Visually inspect the related wiring harness and circuits. Look for any chafed, pierced, pinched, or partially broken wires.** **NOTE: Visually inspect the related wiring harness connectors. Look for broken, bent, pushed out, or corroded terminals.** **Note: Refer to any Technical Service Bulletins (TSB) that may apply.** Were any problems found? Yes → Repair as necessary. Perform BODY VERIFICATION TEST - VER 1. No → Test Complete.	All

Symptom:
LEFT REAR TURN SIGNAL OUTPUT OPEN

When Monitored and Set Condition:

LEFT REAR TURN SIGNAL OUTPUT OPEN

When Monitored: Ignition and left turn signal On.

Set Condition: When Output voltage status is LOW.

POSSIBLE CAUSES
INTERMITTENT CONDITION
GROUND CIRCUIT OPEN
TURN SIGNAL LAMP OPEN
LEFT REAR TURN SIGNAL OUTPUT CIRCUIT OPEN
BODY CONTROL MODULE

TEST	ACTION	APPLICABILITY
1	Turn the ignition on. With the DRBIII®, clear all BCM DTC's. Actuate the Turn Signals. With the DRBIII®, read the DTC information. Does the DRBIII® read: Left Rear Turn Signal Output Open? Yes → Go To 2 No → The condition that caused the symptom is currently not present. Inspect the related wiring for a possible intermittent condition. Look for any chafed, pierced,pinched, or partially broken wires. Perform BODY VERIFICATION TEST - VER 1.	All
2	Turn the ignition off. Disconnect the Left Rear Turn Signal harness connector. Using a 12-volt test light connected to 12-volts, check the ground circuit. Does the test light illuminate brightly? Yes → Go To 3 No → Repair the Ground Circuit. Perform BODY VERIFICATION TEST - VER 1.	All
3	Turn the ignition off. Disconnect the Left Rear Turn Signal Lamp connector. Turn the ignition on. Turn the Left Turn Signal on. Using a 12-volt test light connected to ground, check the Left Rear Turn Signal Output circuit. Does the test light illuminate brightly? Yes → Replace the Turn Signal Lamp. Perform BODY VERIFICATION TEST - VER 1. No → Go To 4	All

LEFT REAR TURN SIGNAL OUTPUT OPEN — Continued

TEST	ACTION	APPLICABILITY
4	Turn the ignition off. Disconnect the Body Control Module C2 connector. Disconnect the left rear tail lamp connector. Measure the resistance of the Left Rear Turn Signal Driver Circuit to ground. Is the resistance above 5.0 ohms? Yes → Repair the Left Rear Turn Signal Driver Circuit for an open condition. Perform BODY VERIFICATION TEST - VER 1. No → Replace the Body Control Module. Perform BODY VERIFICATION TEST - VER 1.	All

Symptom:
LEFT REAR TURN SIGNAL OUTPUT SHORT

When Monitored and Set Condition:

LEFT REAR TURN SIGNAL OUTPUT SHORT

When Monitored: Ignition and left turn signal On.

Set Condition: When output voltage status is Low.

POSSIBLE CAUSES
INTERMITTENT CONDITION
LEFT REAR TURN SIGNAL DRIVER CIRCUIT SHORT TO GROUND
TURN SIGNAL LAMP
BODY CONTROL MODULE

TEST	ACTION	APPLICABILITY
1	Turn the ignition on. With the DRBIII®, clear all BCM DTC's. Actuate the Turn Signals. With the DRBIII®, read the DTC information. Does the DRBIII® read: Left Rear Turn Signal Output Short? Yes → Go To 2 No → The condition that caused the symptom is currently not present. Inspect the related wiring for a possible intermittent condition. Look for any chafed, pierced,pinched, or partially broken wires. Perform BODY VERIFICATION TEST - VER 1.	All
2	Turn the ignition off. Disconnect the Left Rear Turn Signal Lamp connector. Disconnect the BCM harness connector. Measure the resistance between the Left Rear Turn Signal Driver circuit and ground. Is the resistance below 100.0 ohms? Yes → Repair the Left Rear Turn Signal Driver circuit for a short to ground. Perform BODY VERIFICATION TEST - VER 1. No → Go To 3	All

LEFT REAR TURN SIGNAL OUTPUT SHORT — Continued

TEST	ACTION	APPLICABILITY
3	Turn the ignition off. Disconnect the Left Rear Turn Signal Lamp connector. Turn the ignition on. Turn the Left Turn Signal on. Using a 12-volt test light connected to ground, check the Left Rear Turn Signal Driver circuit. Does the test light illuminate brightly? Yes → Replace the Turn Signal Lamp. Perform BODY VERIFICATION TEST - VER 1. No → Replace the Body Control Module. Perform BODY VERIFICATION TEST - VER 1.	All

Symptom:
LEFT SIDE PARK LAMP OPEN

When Monitored and Set Condition:

LEFT SIDE PARK LAMP OPEN

When Monitored: Anytime the FCM is active.

Set Condition: When B+ voltage is below 10.0 volts.

POSSIBLE CAUSES
INTERMITTENT CONDITION
GROUND CIRCUIT
PARK LAMP
PARK LAMP FUSE #2
PARK LAMP RELAY
PARK LAMP OUTPUT CIRCUIT OPEN
FRONT CONTROL MODULE
INTELLIGENT POWER MODULE

TEST	ACTION	APPLICABILITY
1	Turn the ignition on. With the DRBIII®, clear all FCM DTC's. Turn the Park Lamps on. With the DRBIII®, read the DTC information. Does the DRBIII® read: Left Side Park Lamp Fuse Outage? Yes → Go To 2 No → The condition that caused the symptom is currently not present. Inspect the related wiring for a possible intermittent condition. Look for any chafed, pierced,pinched, or partially broken wires. Perform BODY VERIFICATION TEST - VER 1.	All
2	Turn the ignition off Disconnect the left front Park Lamp harness connector. Using a 12-volt test light connected to 12-volts, check the ground circuit. Does the test light illuminate brightly? Yes → Go To 3 No → Repair the Ground Circuit. Perform BODY VERIFICATION TEST - VER 1.	All

LEFT SIDE PARK LAMP OPEN — Continued

TEST	ACTION	APPLICABILITY
3	Turn the ignition off. Disconnect the left front park lamp connector. Turn the ignition on. Turn the Park Lamps on. Using a 12-volt test light connected to ground, check the Park Lamp Output circuit. Does the test light illuminate brightly? Yes → Replace the Park Lamp. Perform BODY VERIFICATION TEST - VER 1. No → Go To 4	All
4	Turn the ignition off. Check the IPM Park Lamp Fuse #2. Is the Fuse open? Yes → Replace the Park Lamp Fuse #2. Perform BODY VERIFICATION TEST - VER 1. No → Go To 5	All
5	Turn the ignition off. Install a known good relay in place of the Park Lamp Relay. Turn the Park Lamps on. Do the Park Lamps operate normally? Yes → Replace the Park Lamp Relay. Perform BODY VERIFICATION TEST - VER 1. No → Go To 6	All
6	Turn the ignition off. Disconnect the IPM harness connector. Measure the resistance of the Park Lamp Output Circuit to ground. Is the resistance below 5.0 ohms? Yes → Repair the Park Lamp Output Circuit for an open condition. Perform BODY VERIFICATION TEST - VER 1. No → Go To 7	All
7	Turn the ignition off. Remove the Park Lamp Relay. Measure the voltage of the Fused B+ circuit of the Park Lamp Relay. Is the voltage above 10.0 volts? Yes → Replace the Front Control Module. Perform BODY VERIFICATION TEST - VER 1. No → Replace the Intelligent Power Module. Perform BODY VERIFICATION TEST - VER 1.	All

Symptom:

PARK LAMP OUTPUT 1 OPEN

When Monitored and Set Condition:

PARK LAMP OUTPUT 1 OPEN

When Monitored: Ignition on.

Set Condition: The IPM detects high current from the Park Lamp Relay Control circuit.

POSSIBLE CAUSES
MISSING RELAY
OPEN FUSE
PARK LAMP RELAY
INTERMITTENT CONDITION
RIGHT FRONT FUSED PARK LAMP RELAY OUTPUT CIRCUIT OPEN
FRONT CONTROL MODULE
INTELLIGENT POWER MODULE

TEST	ACTION	APPLICABILITY
1	Turn the ignition on. With the DRBIII®, clear all IPM DTC's. Turn the Park Lamps on. With the DRBIII®, read the DTC information. Does the DRBIII® read: Park Lamp Output 1 Open? Yes → Go To 2 No → Go To 6	All
2	Turn the ignition off. Check the IPM to make certain the Park Lamp Relay is present. Is the Park Lamp Relay present? Yes → Go To 3 No → Replace the missing Park Lamp Relay. Perform BODY VERIFICATION TEST - VER 1.	All
3	Turn the ignition off. Check the IPM Park Lamp fuse #3. Is the fuse open? Yes → Replace the open fuse. Perform BODY VERIFICATION TEST - VER 1. No → Go To 4	All

PARK LAMP OUTPUT 1 OPEN — Continued

TEST	ACTION	APPLICABILITY
4	Turn the ignition off. Install a known good relay in place of the park lamp relay. Turn the Park Lamps On. Do the Park Lamps operate normally? Yes → Replace the Park Lamp Relay. Perform BODY VERIFICATION TEST - VER 1. No → Go To 5	All
5	Turn the ignition off Remove the Park Lamp Relay. Measure the voltage of the Fused B+ circuit of the park lamp relay. Is the voltage above 10 volts? Yes → Replace the Front Control Module. Perform BODY VERIFICATION TEST - VER 1. No → Replace the Intelligent Power Module. Perform BODY VERIFICATION TEST - VER 1.	All
6	Turn the ignition off. Disconnect the Front Control Module from the IPM. Remove the Park Lamp Relay. Measure the resistance of the Park Lamp Relay Control Circuit. Is the resistance below 5.0 ohms? Yes → The condition that caused the symptom is currently not present. Inspect the related wiring for a possible intermittent condition. Look for any chafed, pierced,pinched, or partially broken wires. Perform BODY VERIFICATION TEST - VER 1. No → Repair the Right Front Fused Park Lamp Relay Output circuit for an open condition. Perform BODY VERIFICATION TEST - VER 1.	All

Symptom:
PARK LAMP OUTPUT 1 SHORT TO BATTERY

When Monitored and Set Condition:

PARK LAMP OUTPUT 1 SHORT TO BATTERY

When Monitored: Ignition on.

Set Condition: When a battery fault condition is present.

POSSIBLE CAUSES
INTERMITTENT CONDITION
PARK LAMP RELAY
FRONT CONTROL MODULE
INTELLIGENT POWER MODULE

TEST	ACTION	APPLICABILITY
1	Turn the ignition on. With the DRBIII®, clear all FCM DTC's. Turn the Park Lamps on. With the DRBIII®, read the DTC information. Does the DRBIII® read: Park Lamp Output 1 Short to BATT? Yes → Go To 2 No → The condition that caused the symptom is currently not present. Inspect the related wiring for a possible intermittent condition. Look for any chafed, pierced,pinched, or partially broken wires. Perform BODY VERIFICATION TEST - VER 1.	All
2	Turn the ignition off. Remove and install a known good relay in place of the Park Lamp Relay. Do the Park Lamps operate normally? Yes → Replace the Park Lamp Relay. Perform BODY VERIFICATION TEST - VER 1. No → Go To 3	All
3	Turn the ignition off. Remove the Park Lamp Relay from the IPM. Remove the Front Control Module from the IPM. Measure the voltage of the Park Lamp Relay Control circuit and ground. Is the voltage above 1.0 volts? Yes → Replace the Intelligent Power Module. Perform BODY VERIFICATION TEST - VER 1. No → Replace the Front Control Module. Perform BODY VERIFICATION TEST - VER 1.	All

Symptom:

PARK LAMP OUTPUT 2 OPEN

When Monitored and Set Condition:

PARK LAMP OUTPUT 2 OPEN

When Monitored: Ignition on.

Set Condition: The IPM detects high current from the Park Lamp Relay Control circuit.

POSSIBLE CAUSES
MISSING RELAY
OPEN FUSE
PARK LAMP RELAY
INTERMITTENT CONDITION
LEFT FRONT FUSED PARK LAMP RELAY OUTPUT CIRCUIT OPEN
FRONT CONTROL MODULE
INTELLIGENT POWER MODULE

TEST	ACTION	APPLICABILITY
1	Turn the ignition on. With the DRBIII®, clear all IPM DTC's. Turn the Park Lamps on. With the DRBIII®, read the DTC information. Does the DRBIII® read: Park Lamp Output 2 Open Yes → Go To 2 No → Go To 6	All
2	Turn the ignition off. Check the IPM to make certain the Park Lamp Relay is present. Is the Park Lamp Relay present? Yes → Go To 3 No → Replace the missing Park Lamp Relay. Perform BODY VERIFICATION TEST - VER 1.	All
3	Turn the ignition off. Check the IPM Park Lamp fuse #2. Is the fuse open? Yes → Replace the open fuse. Perform BODY VERIFICATION TEST - VER 1. No → Go To 4	All

PARK LAMP OUTPUT 2 OPEN — Continued

TEST	ACTION	APPLICABILITY
4	Turn the ignition off. Install a known good relay in place of the park lamp relay. Turn the Park Lamps On. Do the Park Lamps operate normally? Yes → Replace the Park Lamp Relay. Perform BODY VERIFICATION TEST - VER 1. No → Go To 5	All
5	Turn the ignition off Remove the Park Lamp Relay. Measure the voltage of the Fused B+ circuit of the park lamp relay. Is the voltage above 10 volts? Yes → Replace the Front Control Module. Perform BODY VERIFICATION TEST - VER 1. No → Replace the Intelligent Power Module. Perform BODY VERIFICATION TEST - VER 1.	All
6	Turn the ignition off. Disconnect the Front Control Module from the IPM. Remove the Park Lamp Relay. Measure the resistance of the Park Lamp Relay Control Circuit. Is the resistance below 5.0 ohms? Yes → The condition that caused the symptom is currently not present. Inspect the related wiring for a possible intermittent condition. Look for any chafed, pierced,pinched, or partially broken wires. Perform BODY VERIFICATION TEST - VER 1. No → Repair the Left Front Fused Park Lamp Relay Output Circuit for an open condition. Perform BODY VERIFICATION TEST - VER 1.	All

Symptom:
PARK LAMP OUTPUT 2 SHORT TO BATTERY

When Monitored and Set Condition:

PARK LAMP OUTPUT 2 SHORT TO BATTERY

When Monitored: Ignition on.

Set Condition: When a battery fault condition is present.

POSSIBLE CAUSES
INTERMITTENT CONDITION
PARK LAMP RELAY
FRONT CONTROL MODULE
INTELLIGENT POWER MODULE

TEST	ACTION	APPLICABILITY
1	Turn the ignition on. With the DRBIII®, clear all FCM DTC's. Turn the Park Lamps on. With the DRBIII®, read the DTC information. Does the DRBIII® read: Park Lamp Output 2 Short to BATT Yes → Go To 2 No → The condition that caused the symptom is currently not present. Inspect the related wiring for a possible intermittent condition. Look for any chafed, pierced,pinched, or partially broken wires. Perform BODY VERIFICATION TEST - VER 1.	All
2	Turn the ignition off. Remove and install a known good relay in place of the Park Lamp Relay. Do the Park Lamps operate normally? Yes → Replace the Park Lamp Relay. Perform BODY VERIFICATION TEST - VER 1. No → Go To 3	All
3	Turn the ignition off. Remove the Park Lamp Relay from the IPM. Remove the Front Control Module from the IPM. Measure the voltage of the Park Lamp Relay Control circuit and ground. Is the voltage above 1.0 volts? Yes → Replace the Intelligent Power Module. Perform BODY VERIFICATION TEST - VER 1. No → Replace the Front Control Module. Perform BODY VERIFICATION TEST - VER 1.	All

Symptom:
RIGHT FRONT TURN SIGNAL OUTPUT OPEN

When Monitored and Set Condition:

RIGHT FRONT TURN SIGNAL OUTPUT OPEN

When Monitored: Ignition and right turn signal On.

Set Condition: When the output voltage status is LOW.

POSSIBLE CAUSES
INTERMITTENT CONDITION
GROUND CIRCUIT OPEN
TURN SIGNAL LAMP OPEN
RIGHT FRONT TURN SIGNAL DRIVER CIRCUIT OPEN
BODY CONTROL MODULE
INTELLIGENT POWER MODULE

TEST	ACTION	APPLICABILITY
1	Turn the ignition on. With the DRBIII®, clear all BCM DTC's. Actuate the Turn Signals. With the DRBIII®, read the DTC information. Does the DRBIII® read: Right Front Turn Signal Output Open? Yes → Go To 2 No → The condition that caused the symptom is currently not present. Inspect the related wiring for a possible intermittent condition. Look for any chafed, pierced,pinched, or partially broken wires. Perform BODY VERIFICATION TEST - VER 1.	All
2	Turn the ignition off. Disconnect the Right Front Turn Signal harness connector. Using a 12-volt test light connected to 12-volts, check the ground circuit. Does the test light illuminate brightly? Yes → Go To 3 No → Repair the Ground Circuit. Perform BODY VERIFICATION TEST - VER 1.	All

RIGHT FRONT TURN SIGNAL OUTPUT OPEN — Continued

TEST	ACTION	APPLICABILITY
3	Turn the ignition off. Disconnect the Right Front Turn Signal Lamp connector. Turn the ignition on. Turn the Right Turn Signal on. Using a 12-volt test light connected to ground, check the Right Front Turn Signal Output circuit. Does the test light illuminate brightly? Yes → Replace the Turn Signal Lamp. Perform BODY VERIFICATION TEST - VER 1. No → Go To 4	All
4	Turn the ignition off. Disconnect the Body Control Module C2 connector. Measure the resistance of the Right Front Turn Signal Driver Circuit to ground. Is the resistance above 5.0 ohms? Yes → Repair the Right Front Turn Signal Driver Circuit for an open condition. Perform BODY VERIFICATION TEST - VER 1. No → Go To 5	All
5	Turn the ignition off. Disconnect the Body Control Module C2 harness connector. Disconnect the IPM C8 harness connector. Measure the resistance of the Right Front Turn Signal Driver Circuit and ground. Is the resistance below 5.0 ohms? Yes → Replace the Body Control Module. Perform BODY VERIFICATION TEST - VER 1. No → Replace the Intelligent Power Module. Perform BODY VERIFICATION TEST - VER 1.	All

Symptom:
RIGHT FRONT TURN SIGNAL OUTPUT SHORT

When Monitored and Set Condition:

RIGHT FRONT TURN SIGNAL OUTPUT SHORT

When Monitored: Anytime the IPM is active.

Set Condition: When output voltage status is Low.

POSSIBLE CAUSES
INTERMITTENT CONDITION
RIGHT FRONT TURN SIGNAL OUTPUT SHORT TO GROUND
TURN SIGNAL LAMP
INTELLIGENT POWER MODULE

TEST	ACTION	APPLICABILITY
1	Turn the ignition on. With the DRBIII®, clear all IPM DTC's. Actuate the Turn Signals. With the DRBIII®, read the DTC information. Does the DRBIII® read: Right Front Turn Signal Output Short? Yes → Go To 2 No → The condition that caused the symptom is currently not present. Inspect the related wiring for a possible intermittent condition. Look for any chafed, pierced,pinched, or partially broken wires. Perform BODY VERIFICATION TEST - VER 1.	All
2	Turn the ignition off. Disconnect the Right Front Turn Signal Lamp connector. Disconnect the IPM harness connector. Measure the resistance between the Right Front Turn Signal Output circuit and ground. Is the resistance below 100.0 ohms? Yes → Repair the Right Front Turn Signal Output circuit for a short to ground. Perform BODY VERIFICATION TEST - VER 1. No → Go To 3	All

RIGHT FRONT TURN SIGNAL OUTPUT SHORT — Continued

TEST	ACTION	APPLICABILITY
3	Turn the ignition off. Disconnect the Right Front Turn Signal Lamp connector. Turn the ignition on. Turn the Right Turn Signal on. Using a 12-volt test light connected to ground, check the Right Front Turn Signal Output circuit. Does the test light illuminate brightly? Yes → Replace the Turn Signal Lamp. Perform BODY VERIFICATION TEST - VER 1. No → Replace the Intelligent Power Module. Perform BODY VERIFICATION TEST - VER 1.	All

Symptom:
RIGHT HIGH BEAM HEADLAMP CIRCUIT OPEN

POSSIBLE CAUSES
FRONT CONTROL MODULE
GROUND CIRCUIT OPEN
RIGHT HEADLAMP
RIGHT HIGH BEAM DRIVER CIRCUIT OPEN
WIRING HARNESS INSPECTION

TEST	ACTION	APPLICABILITY
1	Turn the ignition on. With the DRB, erase the Front Control Module DTC's. Turn the headlamps on. Switch the headlamps between high beam and low beam several times, pausing for 5 seconds in each position. With the DRB, read Front Control Module DTC's. Is this DTC present? Yes → Go To 2 No → Go To 5	All
2	Turn the ignition off. Disconnect the Right Headlamp harness connector. Using a 12-volt test light connected to 12-volts, check the Ground circuit. **NOTE: The test light must illuminate brightly. Compare the brightness to that of a direct connection to the battery.** Does the test light illuminate brightly? Yes → Go To 3 No → Repair the Ground circuit for an open. Perform BODY VERIFICATION TEST - VER 1.	All
3	Turn the ignition off. Disconnect the Right Headlamp. Disconnect the Front Control Module from the Intelligent Power Module. Measure the resistance of the Right High Beam Driver circuit. Is the resistance below 10.0 ohms? Yes → Go To 4 No → Repair the Right High Beam Driver circuit for an open. Perform BODY VERIFICATION TEST - VER 1.	All

RIGHT HIGH BEAM HEADLAMP CIRCUIT OPEN — Continued

TEST	ACTION	APPLICABILITY
4	Turn the ignition off. Disconnect the Right Headlamp harness connector. Using a 12-volt test light connected to ground, check the Right High Beam Driver circuit in the Right Headlamp harness connector. **NOTE: The test light must illuminate brightly. Compare the brightness to that of a direct connection to the battery.** Turn the high beam headlamps on. Does the test light illuminate brightly? Yes → Replace the Right Headlamp Bulb. Perform BODY VERIFICATION TEST - VER 1. No → Replace the Front Control Module. Perform BODY VERIFICATION TEST - VER 1.	All
5	Turn the ignition off. **NOTE: Visually inspect the related wiring harness and circuits. Look for any chafed, pierced, pinched, or partially broken wires.** **NOTE: Visually inspect the related wiring harness connectors. Look for broken, bent, pushed out, or corroded terminals.** **Note: Refer to any Technical Service Bulletins (TSB) that may apply.** Were any problems found? Yes → Repair as necessary. Perform BODY VERIFICATION TEST - VER 1. No → Test Complete.	All

Symptom:
RIGHT HIGH BEAM HEADLAMP CIRCUIT SHORTED TO GROUND

POSSIBLE CAUSES
FRONT CONTROL MODULE
RIGHT HEADLAMP
RIGHT HIGH BEAM DRIVER CIRCUIT SHORTED TO GROUND
WIRING PROBLEM
WIRING HARNESS INSPECTION

TEST	ACTION	APPLICABILITY
1	Turn the ignition on. With the DRB, erase the Front Control Module DTC's. Turn the headlamps on. Switch the headlamps between high beam and low beam several times, pausing for 5 seconds in each position. With the DRB, read Front Control Module DTC's. Is this DTC present? Yes → Go To 2 No → Go To 5	All
2	Turn the ignition off. Disconnect the Right Headlamp. Disconnect the Front Control Module from the Intelligent Power Module. Measure the resistance between Ground and the Right High Beam Driver circuit. Is the resistance below 100.0 ohms? Yes → Repair the Right High Beam Driver circuit for a short to ground Perform BODY VERIFICATION TEST - VER 1. No → Go To 3	All
3	Turn the ignition off. Turn the Headlamps off. Install a substitute Headlamp Bulb in place of the Right Headlamp Bulb. Turn the ignition on. With the DRB, erase the Front Control Module DTC's. Turn the headlamps on. Switch the headlamps between high beam and low beam several times, pausing for 5 seconds in each position. With the DRB, read Front Control Module DTC's. Does the DRB display this DTC? Yes → Go To 4 No → Replace the original Right Headlamp Bulb. Perform BODY VERIFICATION TEST - VER 1.	All

RIGHT HIGH BEAM HEADLAMP CIRCUIT SHORTED TO GROUND — Continued

TEST	ACTION	APPLICABILITY
4	Turn the ignition off. Inspect the wiring and connectors associated with the Right High Beam Driver circuit. Were any problems found? Yes → Repair as necessary. Perform BODY VERIFICATION TEST - VER 1. No → Replace the Front Control Module. Perform BODY VERIFICATION TEST - VER 1.	All
5	Turn the ignition off. **NOTE: Visually inspect the related wiring harness and circuits. Look for any chafed, pierced, pinched, or partially broken wires.** **NOTE: Visually inspect the related wiring harness connectors. Look for broken, bent, pushed out, or corroded terminals.** **Note: Refer to any Technical Service Bulletins (TSB) that may apply.** Were any problems found? Yes → Repair as necessary. Perform BODY VERIFICATION TEST - VER 1. No → Test Complete.	All

Symptom:

RIGHT HIGH BEAM HEADLAMP CIRCUIT SHORTED TO VOLTAGE

POSSIBLE CAUSES
FRONT CONTROL MODULE
GROUND CIRCUIT OPEN
HIGH BEAM AND LOW BEAM DRIVERS CIRCUITS SHORTED TOGETHER
RIGHT HEADLAMP
RIGHT HIGH BEAM DRIVER CIRCUIT SHORTED TO VOLTAGE
WIRING PROBLEM
WIRING HARNESS INSPECTION

TEST	ACTION	APPLICABILITY
1	Turn the ignition on. With the DRB, erase the Front Control Module DTC's. Turn the headlamps on. Switch the headlamps between high beam and low beam several times, pausing for 5 seconds in each position. With the DRB, read Front Control Module DTC's. Is this DTC present? Yes → Go To 2 No → Go To 7	All
2	Turn the ignition off. Disconnect the Right Headlamp harness connector. Using a 12-volt test light connected to 12-volts, check the Ground circuit. Does the test light illuminate brightly? Yes → Go To 3 No → Repair the Ground circuit for an open. Perform BODY VERIFICATION TEST - VER 1.	All
3	Turn the ignition off. Disconnect the Right Headlamp harness connector. Disconnect the Front Control Module. Measure the resistance between the Right High Beam Driver circuit and the Right Low Beam Driver circuit at the Right Headlamp harness connector. Is the resistance below 100.0 ohms? Yes → Repair the Right High Beam Driver circuit for a short to the Right Low Beam Driver circuit. Perform BODY VERIFICATION TEST - VER 1. No → Go To 4	All

RIGHT HIGH BEAM HEADLAMP CIRCUIT SHORTED TO VOLTAGE — Continued

TEST	ACTION	APPLICABILITY
4	Turn the ignition off. Disconnect the Right Headlamp harness connector. Disconnect the Front Control Module. Turn the ignition on. Measure the voltage of the Right High Beam Driver circuit. Is the voltage below 1.0 volt? Yes → Go To 5 No → Repair the Right High Beam Driver circuit for a short to voltage. Perform BODY VERIFICATION TEST - VER 1.	All
5	Turn the ignition off. Turn the Headlamps off. Install a substitute Headlamp Bulb in place of the Right Headlamp Bulb. Turn the ignition on. With the DRB, erase the Front Control Module DTC's. Turn the headlamps on. Switch the headlamps between high beam and low beam several times, pausing for 5 seconds in each position. With the DRB, read Front Control Module DTC's. Does the DRB display this DTC? Yes → Go To 6 No → Replace the original Right Headlamp Bulb. Perform BODY VERIFICATION TEST - VER 1.	All
6	Turn the ignition off. Inspect the wiring and connectors associated with the Right High Beam Driver circuit. Were any problems found? Yes → Repair as necessary. Perform BODY VERIFICATION TEST - VER 1. No → Replace the Front Control Module. Perform BODY VERIFICATION TEST - VER 1.	All
7	Turn the ignition off. **NOTE: Visually inspect the related wiring harness and circuits. Look for any chafed, pierced, pinched, or partially broken wires.** **NOTE: Visually inspect the related wiring harness connectors. Look for broken, bent, pushed out, or corroded terminals.** **Note: Refer to any Technical Service Bulletins (TSB) that may apply.** Were any problems found? Yes → Repair as necessary. Perform BODY VERIFICATION TEST - VER 1. No → Test Complete.	All

Symptom:
RIGHT LOW BEAM HEADLAMP CIRCUIT OPEN

POSSIBLE CAUSES
FRONT CONTROL MODULE
GROUND CIRCUIT OPEN
RIGHT HEADLAMP
RIGHT LOW BEAM DRIVER CIRCUIT OPEN
WIRING HARNESS INSPECTION

TEST	ACTION	APPLICABILITY
1	Turn the ignition on. With the DRB, erase the Front Control Module DTC's. Turn the headlamps on. Switch the headlamps between high beam and low beam several times, pausing for 5 seconds in each position. With the DRB, read Front Control Module DTC's. Is this DTC present? Yes → Go To 2 No → Go To 5	All
2	Turn the ignition off. Disconnect the Right Headlamp harness connector. Using a 12-volt test light connected to 12-volts, check the Ground circuit. **NOTE: The test light must illuminate brightly. Compare the brightness to that of a direct connection to the battery.** Does the test light illuminate brightly? Yes → Go To 3 No → Repair the Ground circuit for an open. Perform BODY VERIFICATION TEST - VER 1.	All
3	Turn the ignition off. Disconnect the Right Headlamp. Disconnect the Front Control Module from the Intelligent Power Module. Measure the resistance of the Right Low Beam Driver circuit. Is the resistance below 10.0 ohms? Yes → Go To 4 No → Repair the Right Low Beam Driver circuit for an open. Perform BODY VERIFICATION TEST - VER 1.	All

RIGHT LOW BEAM HEADLAMP CIRCUIT OPEN — Continued

TEST	ACTION	APPLICABILITY
4	Turn the ignition off. Disconnect the Right Headlamp harness connector. Using a 12-volt test light connected to ground, check the Right Low Beam Driver circuit in the Right Headlamp harness connector. **NOTE: The test light must illuminate brightly. Compare the brightness to that of a direct connection to the battery.** Turn the low beam headlamps on. Does the test light illuminate brightly? Yes → Replace the Right Headlamp Bulb. Perform BODY VERIFICATION TEST - VER 1. No → Replace the Front Control Module. Perform BODY VERIFICATION TEST - VER 1.	All
5	Turn the ignition off. **NOTE: Visually inspect the related wiring harness and circuits. Look for any chafed, pierced, pinched, or partially broken wires.** **NOTE: Visually inspect the related wiring harness connectors. Look for broken, bent, pushed out, or corroded terminals.** **Note: Refer to any Technical Service Bulletins (TSB) that may apply.** Were any problems found? Yes → Repair as necessary. Perform BODY VERIFICATION TEST - VER 1. No → Test Complete.	All

Symptom:

RIGHT LOW BEAM HEADLAMP CIRCUIT SHORTED TO GROUND

POSSIBLE CAUSES
FRONT CONTROL MODULE
RIGHT HEADLAMP
RIGHT LOW BEAM DRIVER CIRCUIT SHORTED TO GROUND
WIRING PROBLEM
WIRING HARNESS INSPECTION

TEST	ACTION	APPLICABILITY
1	Turn the ignition on. With the DRB, erase the Front Control Module DTC's. Turn the headlamps on. Switch the headlamps between high beam and low beam several times, pausing for 5 seconds in each position. With the DRB, read Front Control Module DTC's. Is this DTC present? Yes → Go To 2 No → Go To 5	All
2	Turn the ignition off. Disconnect the Right Headlamp. Disconnect the Front Control Module from the Intelligent Power Module. Measure the resistance between Ground and the Right Low Beam Driver circuit. Is the resistance below 100.0 ohms? Yes → Repair the Right Low Beam Driver circuit for a short to ground Perform BODY VERIFICATION TEST - VER 1. No → Go To 3	All
3	Turn the ignition off. Turn the Headlamps off. Install a substitute Headlamp Bulb in place of the Right Headlamp Bulb. Turn the ignition on. With the DRB, erase the Front Control Module DTC's. Turn the headlamps on. Switch the headlamps between high beam and low beam several times, pausing for 5 seconds in each position. With the DRB, read Front Control Module DTC's. Does the DRB display this DTC? Yes → Go To 4 No → Replace the original Right Headlamp Bulb. Perform BODY VERIFICATION TEST - VER 1.	All

RIGHT LOW BEAM HEADLAMP CIRCUIT SHORTED TO GROUND — Continued

TEST	ACTION	APPLICABILITY
4	Turn the ignition off. Inspect the wiring and connectors associated with the Right Low Beam Driver circuit. Were any problems found? Yes → Repair as necessary. Perform BODY VERIFICATION TEST - VER 1. No → Replace the Front Control Module. Perform BODY VERIFICATION TEST - VER 1.	All
5	Turn the ignition off. **NOTE: Visually inspect the related wiring harness and circuits. Look for any chafed, pierced, pinched, or partially broken wires.** **NOTE: Visually inspect the related wiring harness connectors. Look for broken, bent, pushed out, or corroded terminals.** **Note: Refer to any Technical Service Bulletins (TSB) that may apply.** Were any problems found? Yes → Repair as necessary. Perform BODY VERIFICATION TEST - VER 1. No → Test Complete.	All

Symptom:
RIGHT LOW BEAM HEADLAMP CIRCUIT SHORTED TO VOLTAGE

POSSIBLE CAUSES
FRONT CONTROL MODULE
GROUND CIRCUIT OPEN
HIGH BEAM AND LOW BEAM DRIVERS CIRCUITS SHORTED TOGETHER
RIGHT HEADLAMP
RIGHT LOW BEAM DRIVER CIRCUIT SHORTED TO VOLTAGE
WIRING PROBLEM
WIRING HARNESS INSPECTION

TEST	ACTION	APPLICABILITY
1	Turn the ignition on. With the DRB, erase the Front Control Module DTC's. Turn the headlamps on. Switch the headlamps between high beam and low beam several times, pausing for 5 seconds in each position. With the DRB, read Front Control Module DTC's. Is this DTC present? Yes → Go To 2 No → Go To 7	All
2	Turn the ignition off. Disconnect the Right Headlamp harness connector. Using a 12-volt test light connected to 12-volts, check the Ground circuit. Does the test light illuminate brightly? Yes → Go To 3 No → Repair the Ground circuit for an open. Perform BODY VERIFICATION TEST - VER 1.	All
3	Turn the ignition off. Disconnect the Right Headlamp harness connector. Disconnect the Front Control Module. Measure the resistance between the Right High Beam Driver circuit and the Right Low Beam Driver circuit at the Right Headlamp harness connector. Is the resistance below 100.0 ohms? Yes → Repair the Right High Beam Driver circuit for a short to the Right Low Beam Driver circuit. Perform BODY VERIFICATION TEST - VER 1. No → Go To 4	All

RIGHT LOW BEAM HEADLAMP CIRCUIT SHORTED TO VOLTAGE — Continued

TEST	ACTION	APPLICABILITY
4	Turn the ignition off. Disconnect the Right Headlamp harness connector. Disconnect the Front Control Module. Turn the ignition on. Measure the voltage of the Right Low Beam Driver circuit. Is the voltage below 1.0 volt? Yes → Go To 5 No → Repair the Right Low Beam Driver circuit for a short to voltage. Perform BODY VERIFICATION TEST - VER 1.	All
5	Turn the ignition off. Turn the Headlamps off. Install a substitute Headlamp Bulb in place of the Right Headlamp Bulb. Turn the ignition on. With the DRB, erase the Front Control Module DTC's. Turn the headlamps on. Switch the headlamps between high beam and low beam several times, pausing for 5 seconds in each position. With the DRB, read Front Control Module DTC's. Does the DRB display this DTC? Yes → Go To 6 No → Replace the original Right Headlamp Bulb. Perform BODY VERIFICATION TEST - VER 1.	All
6	Turn the ignition off. Inspect the wiring and connectors associated with the Right Low Beam Driver circuit. Were any problems found? Yes → Repair as necessary. Perform BODY VERIFICATION TEST - VER 1. No → Replace the Front Control Module. Perform BODY VERIFICATION TEST - VER 1.	All
7	Turn the ignition off. **NOTE: Visually inspect the related wiring harness and circuits. Look for any chafed, pierced, pinched, or partially broken wires.** **NOTE: Visually inspect the related wiring harness connectors. Look for broken, bent, pushed out, or corroded terminals.** **Note: Refer to any Technical Service Bulletins (TSB) that may apply.** Were any problems found? Yes → Repair as necessary. Perform BODY VERIFICATION TEST - VER 1. No → Test Complete.	All

Symptom:
RIGHT REAR TURN SIGNAL OUTPUT OPEN

When Monitored and Set Condition:

RIGHT REAR TURN SIGNAL OUTPUT OPEN

When Monitored: Ignition On.

Set Condition: When output voltage status is LOW.

POSSIBLE CAUSES
INTERMITTENT CONDITION
GROUND CIRCUIT
TURN SIGNAL LAMP
RIGHT REAR TURN SIGNAL DRIVER CIRCUIT OPEN
BODY CONTROL MODULE

TEST	ACTION	APPLICABILITY
1	Turn the ignition on. With the DRBIII®, clear all BCM DTC's. Actuate the Turn Signals. With the DRBIII®, read the DTC information. Does the DRBIII® read: Right Rear Turn Signal Output Open? Yes → Go To 2 No → The condition that caused the symptom is currently not present. Inspect the related wiring for a possible intermittent condition. Look for any chafed, pierced,pinched, or partially broken wires. Perform BODY VERIFICATION TEST - VER 1.	All
2	Turn the ignition off. Disconnect the Right Rear Turn Signal harness connector. Using a 12-volt test light connected to 12-volts, check the ground circuit. Does the test light illuminate brightly? Yes → Go To 3 No → Repair the Ground Circuit. Perform BODY VERIFICATION TEST - VER 1.	All
3	Turn the ignition off. Disconnect the Right Rear Turn Signal Lamp connector. Turn the ignition on. Turn the Right Turn Signal on. Using a 12-volt test light connected to ground, check the Right Rear Turn Signal Output circuit. Does the test light illuminate brightly? Yes → Replace the Turn Signal Lamp. Perform BODY VERIFICATION TEST - VER 1. No → Go To 4	All

RIGHT REAR TURN SIGNAL OUTPUT OPEN — Continued

TEST	ACTION	APPLICABILITY
4	Turn the ignition off. Disconnect the Body Control Module C2 connector. Measure the resistance of the Right Rear Turn Signal Driver Circuit to ground. Is the resistance above 5.0 ohms? Yes → Repair the Right Rear Turn Signal Driver Circuit for an open condition. Perform BODY VERIFICATION TEST - VER 1. No → Replace the Body Control Module. Perform BODY VERIFICATION TEST - VER 1.	All

Symptom:
RIGHT REAR TURN SIGNAL OUTPUT SHORT

When Monitored and Set Condition:

RIGHT REAR TURN SIGNAL OUTPUT SHORT

When Monitored: Anytime the BCM is active.

Set Condition: When output voltage status is Low.

POSSIBLE CAUSES
INTERMITTENT CONDITION
RIGHT REAR TURN SIGNAL DRIVER CIRCUIT SHORT TO GROUND
TURN SIGNAL LAMP
BODY CONTROL MODULE

TEST	ACTION	APPLICABILITY
1	Turn the ignition on. With the DRBIII®, clear all BCM DTC's. Actuate the Turn Signals. With the DRBIII®, read the DTC information. Does the DRBIII® read: Right Rear Turn Signal Output Short? Yes → Go To 2 No → The condition that caused the symptom is currently not present. Inspect the related wiring for a possible intermittent condition. Look for any chafed, pierced,pinched, or partially broken wires. Perform BODY VERIFICATION TEST - VER 1.	All
2	Turn the ignition off. Disconnect the Right Rear Turn Signal Lamp connector. Disconnect the BCM harness connector. Measure the resistance between the Right Rear Turn Signal Driver circuit and ground. Is the resistance below 100.0 ohms? Yes → Repair the Right Rear Turn Signal Driver circuit for a short to ground. Perform BODY VERIFICATION TEST - VER 1. No → Go To 3	All

RIGHT REAR TURN SIGNAL OUTPUT SHORT — Continued

TEST	ACTION	APPLICABILITY
3	Turn the ignition off. Disconnect the Right Rear Turn Signal Lamp connector. Turn the ignition on. Turn the Right Turn Signal on. Using a 12-volt test light connected to ground, check the Right Rear Turn Signal Driver circuit. Does the test light illuminate brightly? Yes → Replace the Turn Signal Lamp. Perform BODY VERIFICATION TEST - VER 1. No → Replace the Body Control Module. Perform BODY VERIFICATION TEST - VER 1.	All

Symptom:
RIGHT SIDE PARK LAMP OPEN

When Monitored and Set Condition:

RIGHT SIDE PARK LAMP OPEN

When Monitored: Anytime the FCM is active.

Set Condition: When B+ voltage is below 10.0 volts.

POSSIBLE CAUSES
INTERMITTENT CONDITION
GROUND CIRCUIT
PARK LAMP
PARK LAMP FUSE #3
PARK LAMP OUTPUT CIRCUIT OPEN
PARK LAMP RELAY
FRONT CONTROL MODULE
INTELLIGENT POWER MODULE

TEST	ACTION	APPLICABILITY
1	Turn the ignition on. With the DRBIII®, clear all IPM DTC's. Turn the Park Lamps on. With the DRBIII®, read the DTC information. Does the DRBIII® read: Right Side Park Lamp Fuse Outage? Yes → Go To 2 No → The condition that caused the symptom is currently not present. Inspect the related wiring for a possible intermittent condition. Look for any chafed, pierced,pinched, or partially broken wires. Perform BODY VERIFICATION TEST - VER 1.	All
2	Turn the ignition off Disconnect the right front Park Lamp harness connector. Using a 12-volt test light connected to 12-volts, check the ground circuit. Does the test light illuminate brightly? Yes → Go To 3 No → Repair the Ground Circuit. Perform BODY VERIFICATION TEST - VER 1.	All

RIGHT SIDE PARK LAMP OPEN — Continued

TEST	ACTION	APPLICABILITY
3	Turn the ignition off. Disconnect the right front park lamp connector. Turn the ignition on. Turn the Park Lamps on. Using a 12-volt test light connected to ground, check the Park Lamp Output circuit. Does the test light illuminate brightly? Yes → Replace the Park Lamp. Perform BODY VERIFICATION TEST - VER 1. No → Go To 4	All
4	Turn the ignition off. Check the IPM Park Lamp Fuse #3. Is the Fuse open? Yes → Replace the Park Lamp Fuse #3. Perform BODY VERIFICATION TEST - VER 1. No → Go To 5	All
5	Turn the ignition off. Install a known good relay in place of the Park Lamp Relay. Turn the Park Lamps on. Do the Park Lamps operate normally? Yes → Replace the Park Lamp Relay. Perform BODY VERIFICATION TEST - VER 1. No → Go To 6	All
6	Turn the ignition off. Disconnect the IPM harness connector. Measure the resistance of the Park Lamp Output circuit to ground. Is the resistance above 5.0 ohms? Yes → Repair the Park Lamp Output circuit for an open condition. Perform BODY VERIFICATION TEST - VER 1. No → Go To 7	All
7	Turn the ignition off. Remove the Park Lamp Relay. Measure the voltage of the Fused B+ circuit of the Park Lamp Relay. Is the voltage above 10.0 volts? Yes → Replace the Front Control Module. Perform BODY VERIFICATION TEST - VER 1. No → Replace the Intelligent Power Module. Perform BODY VERIFICATION TEST - VER 1.	All

Symptom:
TURN SIGNAL SWITCH INPUT OPEN

When Monitored and Set Condition:

TURN SIGNAL SWITCH INPUT OPEN

When Monitored: Ignition on.

Set Condition: When voltage is below 4.8 volts.

POSSIBLE CAUSES
INTERMITTENT CONDITION
MULTIFUNCTION SWITCH
TURN SIGNAL SWITCH MUX CIRCUIT OPEN
MULTIFUNCTION SWITCH MUX RETURN CIRCUIT OPEN
BODY CONTROL MODULE

TEST	ACTION	APPLICABILITY
1	Turn the ignition on. With the DRBIII®, clear all BCM DTC's. Actuate the turn signals. With the DRBIII®, read the DTC information. Does the DRBIII® read: Turn Signal Switch Input Open? Yes → Go To 2 No → The condition that caused the symptom is currently not present. Inspect the related wiring for a possible intermittent condition. Look for any chafed, pierced,pinched, or partially broken wires. Perform BODY VERIFICATION TEST - VER 1.	All
2	Turn the ignition off. Disconnect the Multifunction Switch harness connector. Connect a jumper wire between the Turn Signal Switch MUX circuit and the Multifunction Switch MUX Return circuit in the Multifunction Switch connector. Turn the ignition on. With the DRBIII®, read the Multifunction Switch voltage. Is the display voltage below 0.5 volts? Yes → Replace the Multifunction Switch. Perform BODY VERIFICATION TEST - VER 1. No → Go To 3	All

TURN SIGNAL SWITCH INPUT OPEN — Continued

TEST	ACTION	APPLICABILITY
3	Turn the ignition off. Disconnect the Body Control Module harness connector. Disconnect the Multifunction Switch harness connector. Measure the resistance of the Turn Signal Switch MUX circuit from the Body Control Module connector to the Multifunction Switch harness connector. Is the resistance above 5.0 ohms? Yes → Repair the Turn Signal Switch MUX circuit for an open. Perform BODY VERIFICATION TEST - VER 1. No → Go To 4	All
4	Turn the ignition off. Disconnect the Body Control Module harness connector. Disconnect the Multifunction Switch harness connector. Measure the resistance of the Multifunction Switch MUX Return circuit from the Body Control Module connector to the Multifunction Switch harness connector. Is the resistance above 5.0 ohms? Yes → Repair the Multifunction Switch MUX Return circuit for an open. Perform BODY VERIFICATION TEST - VER 1. No → Replace the Body Control Module. Perform BODY VERIFICATION TEST - VER 1.	All

Symptom:
TURN SIGNAL SWITCH INPUT SHORT

When Monitored and Set Condition:

TURN SIGNAL SWITCH INPUT SHORT

When Monitored: Ignition on.

Set Condition: When Input voltage falls below 0.196 volts for 62.5 msec..

POSSIBLE CAUSES
INTERMITTENT CONDITION
MULTIFUNCTION SWITCH
TURN SIGNAL SWITCH MUX CIRCUIT SHORT TO GROUND
TURN SIGNAL SWITCH MUX SHORT TO MUX RETURN CIRCUIT.
MULTIFUNCTION SWITCH MUX RETURN CIRCUIT SHORT TO GROUND
BODY CONTROL MODULE

TEST	ACTION	APPLICABILITY
1	Turn the ignition on. With the DRBIII®, clear all BCM DTC's. Actuate the Turn Signals on. With the DRBIII®, read the DTC information. Does the DRBIII® read: Turn Signal Switch Input Short? Yes → Go To 2 No → The condition that caused the symptom is currently not present. Inspect the related wiring for a possible intermittent condition. Look for any chafed, pierced,pinched, or partially broken wires. Perform BODY VERIFICATION TEST - VER 1.	All
2	Turn the ignition off. Disconnect the Multifunction Switch harness connector. Turn the ignition on. With the DRBIII®, read the Multifunction Switch voltage. Is the voltage above 4.8 volts? Yes → Replace the Multifunction Switch. Perform BODY VERIFICATION TEST - VER 1. No → Go To 3	All
3	Turn the ignition off. Disconnect the Body Control Module harness connector. Disconnect the Multifunction Switch harness connector. Measure the resistance between the Turn Signal Switch MUX circuit and ground. Is the resistance below 5.0 ohms? Yes → Repair the Turn Signal Switch MUX circuit for a short to ground. Perform BODY VERIFICATION TEST - VER 1. No → Go To 4	All

TURN SIGNAL SWITCH INPUT SHORT — Continued

TEST	ACTION	APPLICABILITY
4	Turn the ignition off. Disconnect the Body Control Module harness connector. Disconnect the Multifunction Switch harness connector. Measure the resistance between the Multifunction Switch MUX Return circuit and the Turn Signal Switch MUX circuit. Is the resistance below 5.0 ohms? Yes → Repair the Turn Signal Switch MUX circuit for a short to the Multifunction Switch MUX Return circuit. Perform BODY VERIFICATION TEST - VER 1. No → Go To 5	All
5	Turn the ignition off. Disconnect the Body Control Module harness connector. Disconnect the Multifunction Switch harness connector. Measure the resistance between the Multifunction Switch MUX Return circuit and ground. Is the resistance below 5.0 ohms? Yes → Repair the Multifunction Switch MUX Return circuit for a short to ground. Perform BODY VERIFICATION TEST - VER 1. No → Replace the Body Control Module. Perform BODY VERIFICATION TEST - VER 1.	All

Symptom List:

A/C FAULT (ACTIVE) - MTC
CHECKSUM FAILURE (ACTIVE) - MTC
POWER FAULT (ACTIVE) - MTC
REAR DEFOG FAILURE (ACTIVE) - MTC
RECIRCULATION FAULT (ACTIVE) - MTC
UNKNOWN FAULT DETECTED (ACTIVE) - MTC

Test Note: All symptoms listed above are diagnosed using the same tests. The title for the tests will be A/C FAULT (ACTIVE) - MTC.

When Monitored and Set Condition:

A/C FAULT (ACTIVE) - MTC

When Monitored: With the ignition on.

Set Condition: This DTC will set if the A/C switch stays closed for 10 minutes.

CHECKSUM FAILURE (ACTIVE) - MTC

When Monitored: With the ignition on.

Set Condition: This DTC will set if the calibrated check sum does not match the stored value.

POWER FAULT (ACTIVE) - MTC

When Monitored: With the ignition on.

Set Condition: This DTC will set if the Power switch stays closed for 10 minutes.

REAR DEFOG FAILURE (ACTIVE) - MTC

When Monitored: With the ignition on.

Set Condition: This DTC will set if the Rear Window Defogger switch stays closed for 10 minutes.

RECIRCULATION FAULT (ACTIVE) - MTC

When Monitored: With the ignition on.

Set Condition: This DTC will set if the Recirc switch stays closed for 10 minutes.

UNKNOWN FAULT DETECTED (ACTIVE) - MTC

When Monitored: With the ignition on.

Set Condition: This DTC will set if the A/C - Heater Control Module detects an internal fault.

A/C FAULT (ACTIVE) - MTC — Continued

POSSIBLE CAUSES
A/C - HEATER CONTROL MODULE

TEST	ACTION	APPLICABILITY
1	View repair Repair Replace the A/C - Heater Control Module in accordance with the Service Information. Perform BODY VERIFICATION TEST - VER 1.	All

Symptom List:

A/C FAULT (STORED) - MTC
BACKLIGHT DIMMING RX FAILURE (STORED) - MTC
BLEND OVERCURRENT (STORED) - MTC
CHECKSUM FAILURE (STORED) - MTC
EVAPORATOR TEMPERATURE SENSOR CIRCUIT OPEN (STORED) - MTC
EVAPORATOR TEMPERATURE SENSOR CIRCUIT SHORT (STORED) - MTC
LOOPBACK TEST FAILURE (STORED) - MTC
MODE OVERCURRENT (STORED) - MTC
NO BCM MESSAGE RECEIVED (STORED) - MTC
NO PCM MESSAGE RECEIVED (STORED) - MTC
PCM COMMUNICATION FAILURE (STORED) - MTC
POWER FAULT (STORED) - MTC
REAR BLEND OVERCURRENT (STORED) - MTC
REAR BLEND POT CIRCUIT OPEN (STORED) - MTC
REAR BLEND POT CIRCUIT SHORT (STORED) - MTC
REAR DEFOG FAILURE (STORED) - MTC
REAR MODE OVERCURRENT (STORED) - MTC
RECIRC OVERCURRENT (STORED) - MTC
RECIRCULATION FAULT (STORED) - MTC
TX FAILURE (STORED) - MTC
UNKNOWN FAULT DETECTED (STORED) - MTC
VEHICLE ODOMETER FAILURE (STORED) - MTC
ZONE OVERCURRENT (STORED) - MTC

Test Note: All symptoms listed above are diagnosed using the same tests. The title for the tests will be A/C FAULT (STORED) - MTC.

When Monitored and Set Condition:

A/C FAULT (STORED) - MTC

When Monitored: With the ignition on.

Set Condition: This DTC will set if the A/C switch stays closed for 10 minutes.

BACKLIGHT DIMMING RX FAILURE (STORED) - MTC

When Monitored: With the ignition on.

Set Condition: If the A/C - Heater Control Module does not receive the dimming function message from the BCM for more than 5 seconds, then the A/C - Heater Control Module LEDs will default to full brightness and the DTC will set.

A/C FAULT (STORED) - MTC — Continued

BLEND OVERCURRENT (STORED) - MTC

When Monitored: When actuator movement is requested.

Set Condition: All (Blend, Mode, Recirc, and Zone) Overcurrent DTCs may set if the A/C - Heater Control Module detects an excessive current draw on the door driver circuit(s).

CHECKSUM FAILURE (STORED) - MTC

When Monitored: With the ignition on.

Set Condition: This DTC will set if the calibrated check sum does not match the stored value.

EVAPORATOR TEMPERATURE SENSOR CIRCUIT OPEN (STORED) - MTC

When Monitored: With the ignition on.

Set Condition: This DTC will set if the A/C - Heater Control Module sees abnormally high voltage on the Evaporator Temperature Sensor Signal circuit.

EVAPORATOR TEMPERATURE SENSOR CIRCUIT SHORT (STORED) - MTC

When Monitored: With the ignition on.

Set Condition: This DTC will set if the A/C - Heater Control Module sees abnormally low voltage on the Evaporator Temperature Sensor Signal circuit.

LOOPBACK TEST FAILURE (STORED) - MTC

When Monitored: When the A/C - Heater Control Module executes an internal loopback test.

Set Condition: If the A/C - Heater Control Module fails to send a message, or none of the expected messages arrive for 5 seconds, an internal loopback test is executed. If the internal loopback test fails, the DTC will set.

MODE OVERCURRENT (STORED) - MTC

When Monitored: When actuator movement is requested.

Set Condition: All (Blend, Mode, Recirc, and Zone) Overcurrent DTCs may set if the A/C - Heater Control Module detects an excessive current draw on the door driver circuit(s).

NO BCM MESSAGE RECEIVED (STORED) - MTC

When Monitored: With the ignition on.

Set Condition: If the A/C - Heater Control Module does not receive the dimming function message from the BCM for more than 5 seconds, then the A/C - Heater Control Module LEDs will default to full brightness and the DTC will set.

NO PCM MESSAGE RECEIVED (STORED) - MTC

When Monitored: With the ignition on.

Set Condition: This DTC will set if the A/C - Heater Control Module does not see any messages from the PCM for more than 5 seconds.

A/C FAULT (STORED) - MTC — Continued

PCM COMMUNICATION FAILURE (STORED) - MTC

When Monitored: With the ignition on.

Set Condition: This DTC will set if the A/C - Heater Control Module does not receive the Fuel message from the PCM for more than 5 seconds.

POWER FAULT (STORED) - MTC

When Monitored: With the ignition on.

Set Condition: This DTC will set if the Power switch stays closed for 10 minutes.

REAR BLEND OVERCURRENT (STORED) - MTC

When Monitored: When actuator movement is requested.

Set Condition: All (Blend, Mode, Recirc, and Zone) Overcurrent DTCs may set if the A/C - Heater Control Module detects an excessive current draw on the door driver circuit(s).

REAR BLEND POT CIRCUIT OPEN (STORED) - MTC

When Monitored: With the ignition on.

Set Condition: This DTC will set if the A/C - Heater Control Module sees voltage above 4.88 volts on the Rear Temperature Feedback Signal circuit.

REAR BLEND POT CIRCUIT SHORT (STORED) - MTC

When Monitored: When the ignition is on.

Set Condition: This DTC will set if the A/C - Heater Control Module sees voltage below 0.25 volts on the Rear Temperature Feedback Signal circuit.

REAR DEFOG FAILURE (STORED) - MTC

When Monitored: With the ignition on.

Set Condition: This DTC will set if the Rear Window Defogger switch stays closed for 10 minutes.

REAR MODE OVERCURRENT (STORED) - MTC

When Monitored: When actuator movement is requested.

Set Condition: All (Blend, Mode, Recirc, and Zone) Overcurrent DTCs may set if the A/C - Heater Control Module detects an excessive current draw on the door driver circuit(s).

RECIRC OVERCURRENT (STORED) - MTC

When Monitored: When actuator movement is requested.

Set Condition: All (Blend, Mode, Recirc, and Zone) Overcurrent DTCs may set if the A/C - Heater Control Module detects an excessive current draw on the door driver circuit(s).

RECIRCULATION FAULT (STORED) - MTC

When Monitored: With the ignition on.

Set Condition: This DTC will set if the Recirc switch stays closed for 10 minutes.

A/C FAULT (STORED) - MTC — Continued

TX FAILURE (STORED) - MTC

When Monitored: When the ignition is on.

Set Condition: This DTC will set if the A/C - Heater Control Module is unable to send a message.

UNKNOWN FAULT DETECTED (STORED) - MTC

When Monitored: With the ignition on.

Set Condition: This DTC will set if the A/C - Heater Control Module detects an internal fault.

VEHICLE ODOMETER FAILURE (STORED) - MTC

When Monitored: With the ignition on.

Set Condition: This DTC will set if the A/C - Heater Control Module does not receive the Vehicle Odometer message from the PCM for more than 5 seconds.

ZONE OVERCURRENT (STORED) - MTC

When Monitored: When actuator movement is requested.

Set Condition: All (Blend, Mode, Recirc, and Zone) Overcurrent DTCs may set if the A/C - Heater Control Module detects an excessive current draw on the door driver circuit(s).

POSSIBLE CAUSES
CHECK FOR ACTIVE HVAC DTCS AND SYSTEM TESTS FAULT MESSAGES
STORED CODE(S) TEST COMPLETE

A/C FAULT (STORED) - MTC — Continued

TEST	ACTION	APPLICABILITY
1	**CAUTION: The evaporator temperature must be above 12.7°C (55°F) and the work area ambient temperature must be above 21.1°C (70°F) to test the A/C system operation.** **NOTE: Active codes must be resolved before diagnosing stored codes.** **NOTE: Anytime a DTC becomes active, or a Cooldown Test or HVAC Door Recalibration fault message is displayed, proceed to the conclusion question.** **NOTE: If multiple codes appear, diagnose those that relate to a short circuit first.** Start the engine. Press the A/C - Heater Control power switch on. Turn the mode select control to the panel position. Verify that the front blower motor and, if equipped, rear blower motor operates correctly in all speeds from each control. Diagnose and repair all blower related faults before proceeding with this test. Turn the front blower motor control to the high speed position. **NOTE: Before actuating the AC Cooldown Test, verify that the A/C compressor is not running. If the compressor is running, turn the A/C off and allow the evaporator to warm up before proceeding with the test.** With the DRBIII® in HVAC, System Tests, actuate the AC Cooldown Test. Turn the front blower motor control to the low speed position. If equipped, turn the rear blower motor control to the rear position. Set the passenger blend control to the full cold position. If equipped, set the zone/driver blend control to the full cold position. If equipped, on the Rear Blower Rear Control, set the rear blend/mode control to the full cold position. Monitor the DRBIII® for active HVAC DTCs while performing the following test steps. Turn the mode select control to the defrost position, wait 30 seconds, and then turn it back to the panel position. Press the recirculation mode switch on, wait 30 seconds, and then press it off. Press the A/C mode switch on, wait 30 seconds, and then press it off. Press the rear window defogger switch on, wait 30 seconds, and then press it off. Move the passenger blend control from full cold to full hot, wait 30 seconds, and then move it back to full cold. If equipped, move the zone/driver blend control from full cold to full hot, wait 30 seconds, and then move it back to full cold. If equipped, on the Rear Blower Rear Control, move the rear blend/mode control from full cold to full hot, wait 30 seconds, and then move it back to full cold. With the DRBIII® in HVAC, System Tests, actuate the HVAC Door Recalibration Test. Does the DRBIII® display any active HVAC DTC(s) or System Tests fault message(s)? Yes → Return to the symptom list and choose the symptom(s). Perform BODY VERIFICATION TEST - VER 1. No → No problem found at this time. Perform BODY VERIFICATION TEST - VER 1.	All

Symptom List:

BACKLIGHT DIMMING RX FAILURE (ACTIVE) - MTC
NO BCM MESSAGE RECEIVED (ACTIVE) - MTC

Test Note: All symptoms listed above are diagnosed using the same tests. The title for the tests will be BACKLIGHT DIMMING RX FAILURE (ACTIVE) - MTC.

When Monitored and Set Condition:

BACKLIGHT DIMMING RX FAILURE (ACTIVE) - MTC

When Monitored: With the ignition on.

Set Condition: If the A/C - Heater Control Module does not receive the dimming function message from the BCM for more than 5 seconds, then the A/C - Heater Control Module LEDs will default to full brightness and the DTC will set.

NO BCM MESSAGE RECEIVED (ACTIVE) - MTC

When Monitored: With the ignition on.

Set Condition: If the A/C - Heater Control Module does not receive the dimming function message from the BCM for more than 5 seconds, then the A/C - Heater Control Module LEDs will default to full brightness and the DTC will set.

POSSIBLE CAUSES
ADDITIONAL CODE(S) PRESENT
A/C - HEATER CONTROL MODULE
BODY CONTROL MODULE - NO DIM MESSAGE TO A/C - HEATER CONTROL MODULE

TEST	ACTION	APPLICABILITY
1	Turn the ignition on. With the DRBIII®, read the BCM codes. Does DRBIII® display Headlamp Switch: Mismatch; STG; Open; or Panel Dim Output Short? Yes → Refer to symptoms Headlamp Switch Mismatch, Headlamp Switch Shorted To Ground, and Headlamp Switch Open in the Exterior Lighting category. Refer to symptom Panel Dimming Output Short in the Instrument Cluster category. Perform BODY VERIFICATION TEST - VER 1. No → Go To 2	All

BACKLIGHT DIMMING RX FAILURE (ACTIVE) - MTC — Continued

TEST	ACTION	APPLICABILITY
2	Turn the ignition on. With the DRBIII® in Monitor Display, PCI Bus Messages, look for the VF DIM Msg Present. Does the DRB display: VF DIM Msg present: Yes? Yes → Replace the A/C - Heater Control Module in accordance with the Service Information. Perform BODY VERIFICATION TEST - VER 1. No → Replace the Body Control Module in accordance with the Service Information. Perform BODY VERIFICATION TEST - VER 1.	All

Symptom List:

BLEND CALIBRATION FAULT - MTC
MODE CALIBRATION FAULT - MTC
RECIRCULATION CALIBRATION FAULT - MTC
ZONE CALIBRATION FAULT - MTC

Test Note: All symptoms listed above are diagnosed using the same tests. The title for the tests will be BLEND CALIBRATION FAULT - MTC.

When Monitored and Set Condition:

BLEND CALIBRATION FAULT - MTC

When Monitored: When the HVAC Door Recalibration is executed.

Set Condition: If the passenger blend door's span is found outside the tolerance due to: open door actuator electrical circuits; a bad door actuator; broken door linkage; a bound up door; door actuator electrical circuits shorted to voltage; door actuator electrical circuits shorted to ground. A short to voltage or ground on the door actuator electrical circuits will also set door actuator overcurrent faults.

MODE CALIBRATION FAULT - MTC

When Monitored: When the HVAC Door Recalibration is executed.

Set Condition: If the mode door's span is found outside the tolerance due to: open door actuator electrical circuits; a bad door actuator; broken door linkage; a bound up door; door actuator electrical circuits shorted to voltage; door actuator electrical circuits shorted to ground. A short to voltage or ground on the door actuator electrical circuits will also set door actuator overcurrent faults.

RECIRCULATION CALIBRATION FAULT - MTC

When Monitored: When the HVAC Door Recalibration is executed.

Set Condition: If the recirculation door's span is found outside the tolerance due to: open door actuator electrical circuits; a bad door actuator; broken door linkage; a bound up door; door actuator electrical circuits shorted to voltage; door actuator electrical circuits shorted to ground. A short to voltage or ground on the door actuator electrical circuits will also set door actuator overcurrent faults.

ZONE CALIBRATION FAULT - MTC

When Monitored: When the HVAC Door Recalibration is executed.

Set Condition: If the driver (zone) blend door's span is found outside the tolerance due to: open door actuator electrical circuits; a bad door actuator; broken door linkage; a bound up door; door actuator electrical circuits shorted to voltage; door actuator electrical circuits shorted to ground. A short to voltage or ground on the door actuator electrical circuits will also set door actuator overcurrent faults.

BLEND CALIBRATION FAULT - MTC — Continued

POSSIBLE CAUSES
HVAC DTC(S) PRESENT
DOOR ACTUATOR
BLEND ACTUATOR/LINKAGE/DOOR
RECIRCULATION ACTUATOR/LINKAGE/DOOR
MODE ACTUATOR/LINKAGE/DOOR
DOOR ACTUATOR DRIVER CIRCUIT OPEN
COMMON DOOR DRIVER CIRCUIT OPEN
A/C - HEATER CONTROL MODULE

TEST	ACTION	APPLICABILITY
1	**NOTE: All Overcurrent DTCs must be repaired before diagnosing Calibration fault messages.** Turn the ignition on. With the DRBIII®, read HVAC DTCs. Does the DRBIII® display any HVAC DTCs? Yes → Return to the symptom list and choose the symptom(s). Perform BODY VERIFICATION TEST - VER 1. No → Go To 2	All
2	Turn the ignition off. Remove the applicable door actuator (Blend [Driver (Zone), Passenger], Recirculation, Mode) from the A/C - Heater Housing Assembly. Disconnect the door actuator harness connector. By hand, attempt to rotate the door actuator in both directions. Did the door actuator turn in either direction? Yes → Replace the door actuator in accordance with the Service Information. Perform BODY VERIFICATION TEST - VER 1. No: Blend Actuator (Driver [Zone], Pass) Go To 3 No: Recirculation Door Actuator Go To 4 No: Mode Door Actuator Go To 5	All

BLEND CALIBRATION FAULT - MTC — Continued

TEST	ACTION	APPLICABILITY
3	Turn the ignition off. Remove the applicable blend door actuator (Driver [Zone], Passenger) from the A/C - Heater Housing Assembly. Disconnect the blend door actuator harness connector. Set the applicable blend control (Driver [Zone], Passenger) to the full cold position. Connect a 12-volt Test Light across the blend door actuator harness connector. Turn the ignition on. While monitoring the test light, manually sweep the applicable blend control (Driver [Zone], Passenger) very slowly from full cold to full hot. While monitoring the test light, manually sweep the applicable blend control (Driver [Zone], Passenger) very slowly from full hot to full cold. Does the test light start to flash and stay flashing through the entire range? Yes → Inspect A/C - Heater Housing for missing & broken actuator linkage. Inspect linkage & actuator for broken & missing teeth. Check doors for binding & loss of full range. Repair as necessary. If Ok, replace the actuator in accordance with the Service Info. Perform BODY VERIFICATION TEST - VER 1. No → Go To 6	All
4	Turn the mode control to the Panel, Bi-level, or Floor position. Turn the ignition off. Remove the Recirculation Door Actuator from the A/C - Heater Housing Assembly. Disconnect the Recirculation Door Actuator harness connector. Connect a 12-volt Test Light across the Recirculation Door Actuator harness connector. Turn the ignition on. If the LED on the recirculation mode switch is illuminated, manually press the recirculation mode switch to turn the recirculation mode off. While monitoring the test light, manually press the recirculation mode switch on (LED on). While monitoring the test light, manually press the recirculation mode switch off (LED off). Does the test light flash 4 times after pressing the switch on and 2 times after pressing it off? Yes → Inspect the linkage and the actuator for broken and missing teeth. Check the door for binding and loss of full range. Repair as necessary. If Ok, replace the door actuator in accordance with the Service Information. Perform BODY VERIFICATION TEST - VER 1. No → Go To 6	All

BLEND CALIBRATION FAULT - MTC — Continued

TEST	ACTION	APPLICABILITY
5	Turn the ignition off. Remove the Mode Door Actuator from the A/C - Heater Housing Assembly. Disconnect the Mode Door Actuator harness connector. Turn the mode select control to the panel position, and then to the defrost position, and then back to the panel position. Connect a 12-volt Test Light across the Mode Door Actuator harness connector. Turn the ignition on. While monitoring the test light, turn the mode select control to the first detent after the panel position. Repeat the previous step for each detent, until reaching the defrost mode position. Does the test light flash four times after turning the mode select control to each detent? Yes → Inspect A/C - Heater Housing for missing & broken actuator linkage. Inspect linkage & actuator for broken & missing teeth. Check doors for binding & loss of full range. Repair as necessary. If Ok, replace the actuator in accordance with the Service Info. Perform BODY VERIFICATION TEST - VER 1. No → Go To 6	All
6	Turn the ignition off. Disconnect the A/C - Heater Control Module C1 harness connector. Remove the applicable door actuator (Blend [Driver (Zone), Passenger], Recirculation, Mode) from the A/C - Heater Housing Assembly. Disconnect the door actuator harness connector. Measure the resistance of the applicable door driver circuit (Blend [Driver (Zone), Passenger], Recirculation, Mode) between the A/C - Heater Control Module C1 harness connector and the door actuator harness connector. Is the resistance below 5.0 ohms? Yes → Go To 7 No → Repair the applicable door driver circuit (Blend [Driver (Zone), Passenger], Recirculation, Mode) for an open. Perform BODY VERIFICATION TEST - VER 1.	All
7	Turn the ignition off. Disconnect the A/C - Heater Control Module C1 harness connector. Remove the applicable door actuator (Blend [Driver (Zone), Passenger], Recirculation, Mode) from the A/C - Heater Housing Assembly. Disconnect the door actuator harness connector. Measure the resistance of the Common Door Driver circuit between the applicable door actuator harness connector (Blend [Driver (Zone), Passenger], Recirculation, Mode) and the A/C - Heater Control Module C1 harness connector. Is the resistance below 5.0 ohms? Yes → Replace the A/C - Heater Control Module in accordance with the Service Information. Perform BODY VERIFICATION TEST - VER 1. No → Repair the Common Door Driver circuit for an open. Perform BODY VERIFICATION TEST - VER 1.	All

Symptom List:

BLEND OVERCURRENT (ACTIVE) - MTC
MODE OVERCURRENT (ACTIVE) - MTC
REAR BLEND OVERCURRENT (ACTIVE) - MTC
REAR MODE OVERCURRENT (ACTIVE) - MTC
RECIRC OVERCURRENT (ACTIVE) - MTC
ZONE OVERCURRENT (ACTIVE) - MTC

Test Note: All symptoms listed above are diagnosed using the same tests. The title for the tests will be BLEND OVERCURRENT (ACTIVE) - MTC.

When Monitored and Set Condition:

BLEND OVERCURRENT (ACTIVE) - MTC

When Monitored: When actuator movement is requested.

Set Condition: All (Blend, Mode, Recirc, and Zone) Overcurrent DTCs may set if the A/C - Heater Control Module detects an excessive current draw on the door driver circuit(s).

MODE OVERCURRENT (ACTIVE) - MTC

When Monitored: When actuator movement is requested.

Set Condition: All (Blend, Mode, Recirc, and Zone) Overcurrent DTCs may set if the A/C - Heater Control Module detects an excessive current draw on the door driver circuit(s).

REAR BLEND OVERCURRENT (ACTIVE) - MTC

When Monitored: When actuator movement is requested.

Set Condition: All (Blend, Mode, Recirc, and Zone) Overcurrent DTCs may set if the A/C - Heater Control Module detects an excessive current draw on the door driver circuit(s).

REAR MODE OVERCURRENT (ACTIVE) - MTC

When Monitored: When actuator movement is requested.

Set Condition: All (Blend, Mode, Recirc, and Zone) Overcurrent DTCs may set if the A/C - Heater Control Module detects an excessive current draw on the door driver circuit(s).

RECIRC OVERCURRENT (ACTIVE) - MTC

When Monitored: When actuator movement is requested.

Set Condition: All (Blend, Mode, Recirc, and Zone) Overcurrent DTCs may set if the A/C - Heater Control Module detects an excessive current draw on the door driver circuit(s).

ZONE OVERCURRENT (ACTIVE) - MTC

When Monitored: When actuator movement is requested.

Set Condition: All (Blend, Mode, Recirc, and Zone) Overcurrent DTCs may set if the A/C - Heater Control Module detects an excessive current draw on the door driver circuit(s).

BLEND OVERCURRENT (ACTIVE) - MTC — Continued

POSSIBLE CAUSES
MODE DOOR ACTUATOR SHORTED
RECIRCULATION DOOR ACTUATOR SHORTED
PASSENGER BLEND DOOR ACTUATOR SHORTED
DRIVER BLEND DOOR ACTUATOR SHORTED
DOOR DRIVER CIRCUIT SHORTED TO GROUND
DOOR DRIVER CIRCUITS SHORTED TOGETHER
A/C - HEATER CONTROL MODULE
REAR BLEND DOOR ACTUATOR SHORTED
REAR MODE DOOR ACTUATOR SHORTED
REAR A/C HEATER UNIT WIRING HARNESS SHORTED

TEST	ACTION	APPLICABILITY
1	Turn the ignition off. Disconnect the Mode Door Actuator harness connector. Turn the ignition on. With the DRB, erase the HVAC DTCs. Cycle the ignition switch from off to on and monitor the HVAC DTCs. Note: make sure the active DTCs are erased at this time. Slowly turn the mode door knob through each of it's different positions. Perform this step a few times. Turn the mode door knob to the Panel, Bi-level, or Floor position. Press and release the recirculation button. Perform this step a few times. Slowly slide the front temperature control levers (if equipped with dual or three zone, slide all front levers) from hot to cold and back to hot. Perform this step a few times. Slowly turn the rear blend/mode door knob from hot to cold and back to hot (if equipped with rear A/C). Perform this step a few times. With the DRB, read the active HVAC DTCs. Did the overcurrent DTCs reset? Yes → Go To 2 No → Replace the Mode Door Actuator in accordance with the Service Information. Perform BODY VERIFICATION TEST - VER 1.	All

BLEND OVERCURRENT (ACTIVE) - MTC — Continued

TEST	ACTION	APPLICABILITY
2	Turn the ignition off. Disconnect the Recirculation Door Actuator harness connector. Turn the ignition on. With the DRB, erase the HVAC DTCs. Cycle the ignition switch from off to on and monitor the HVAC DTCs. Note: make sure the active DTCs are erased at this time. Slowly turn the mode door knob through each of it's different positions. Perform this step a few times. Turn the mode door knob to the Panel, Bi-level, or Floor position. Press and release the recirculation button. Perform this step a few times. Slowly slide the front temperature control levers (if equipped with dual or three zone, slide all front levers) from hot to cold and back to hot. Perform this step a few times. Slowly turn the rear blend/mode door knob from hot to cold and back to hot (if equipped with rear A/C). Perform this step a few times. With the DRB, read the active HVAC DTCs. Did the overcurrent DTCs reset? Yes → Go To 3 No → Replace the Recirculation Door Actuator in accordance with the Service Information. Perform BODY VERIFICATION TEST - VER 1.	All
3	Turn the ignition off. Disconnect the Passenger Blend Door Actuator harness connector. Turn the ignition on. With the DRB, erase the HVAC DTCs. Cycle the ignition switch from off to on and monitor the HVAC DTCs. Note: make sure the active DTCs are erased at this time. Slowly turn the mode door knob through each of it's different positions. Perform this step a few times. Turn the mode door knob to the Panel, Bi-level, or Floor position. Press and release the recirculation button. Perform this step a few times. Slowly slide the front temperature control levers (if equipped with dual or three zone, slide all front levers) from hot to cold and back to hot. Perform this step a few times. Slowly turn the rear blend/mode door knob from hot to cold and back to hot (if equipped with rear A/C). Perform this step a few times. With the DRB, read the active HVAC DTCs. Did the overcurrent DTCs reset? Yes → Go To 4 No → Replace the Passenger Blend Door Actuator in accordance with the Service Information. Perform BODY VERIFICATION TEST - VER 1.	All

BLEND OVERCURRENT (ACTIVE) - MTC — Continued

TEST	ACTION	APPLICABILITY
4	**NOTE: If vehicle is equipped with a base HVAC system, answer yes to the question.** Turn the ignition off. Disconnect the Driver (zone) Blend Door Actuator harness connector. Turn the ignition on. With the DRB, erase the HVAC DTCs. Cycle the ignition switch from off to on and monitor the HVAC DTCs. Note: make sure the active DTCs are erased at this time. Slowly turn the mode door knob through each of it's different positions. Perform this step a few times. Turn the mode door knob to the Panel, Bi-level, or Floor position. Press and release the recirculation button. Perform this step a few times. Slowly slide the front temperature control levers (if equipped with dual or three zone, slide all front levers) from hot to cold and back to hot. Perform this step a few times. Slowly turn the rear blend/mode door knob from hot to cold and back to hot (if equipped with rear A/C). Perform this step a few times. With the DRB, read the active HVAC DTCs. Did the overcurrent DTCs reset? Yes → Go To 5 No → Replace the Driver Blend Door Actuator in accordance with the Service Information. Perform BODY VERIFICATION TEST - VER 1.	All
5	**NOTE: If vehicle is equipped with a base HVAC or dual zone system, answer yes to the question.** Turn the ignition off. Disconnect the Rear A/C Heater Unit harness connector. Turn the ignition on. With the DRB, erase the HVAC DTCs. Cycle the ignition switch from off to on and monitor the HVAC DTCs. Note: make sure the active DTCs are erased at this time. Slowly turn the mode door knob through each of it's different positions. Perform this step a few times. Turn the mode door knob to the Panel, Bi-level, or Floor position. Press and release the recirculation button. Perform this step a few times. Slowly slide the front temperature control levers (if equipped with dual or three zone, slide all front levers) from hot to cold and back to hot. Perform this step a few times. Slowly turn the rear blend/mode door knob from hot to cold and back to hot. Perform this step a few times. With the DRB, read the active HVAC DTCs. Did the overcurrent DTCs reset? Yes → Go To 6 No → Go To 8	All
6	Turn the ignition off. Disconnect each door actuator harness connector (front actuators only). Disconnect the A/C - Heater Control Module C1 harness connector. Disconnect the Rear A/C Heater Unit harness connector (if equipped with rear A/C). Measure the resistance between ground and each HVAC door driver circuit. Is the resistance below 10K ohms for any of the measurements? Yes → Repair all door driver circuits with a resistance below 10K ohms for a short to ground. Perform BODY VERIFICATION TEST - VER 1. No → Go To 7	All

BLEND OVERCURRENT (ACTIVE) - MTC — Continued

TEST	ACTION	APPLICABILITY
7	Turn the ignition off. Disconnect each door actuator harness connector (front actuators only). Disconnect the A/C - Heater Control Module C1 harness connector. Disconnect the Rear A/C Heater Unit harness connector (if equipped with rear A/C). Measure the resistance between the Common Door Driver circuit and each other door driver circuit. Measure the resistance between the Recirculation Door Driver circuit and each other door driver circuit. Measure the resistance between the Mode Door Driver circuit and each other door driver circuit. Measure the resistance between the Passenger Blend Air Door Driver circuit and each other door driver circuit. Measure the resistance between the Driver Blend Door Driver circuit and each other door driver circuit (if equipped with dual or 3 zone). Measure the resistance between the Rear Common Door Driver circuit and each other door driver circuit (if equipped with rear A/C). Measure the resistance between the Rear Blend Door Driver circuit and each other door driver circuit (if equipped with rear A/C). Measure the resistance between the Rear Mode Door Driver circuit and each other door driver circuit (if equipped with rear A/C). Is the resistance below 10K ohms for any of the measurements? Yes → Repair the door driver circuits that measured below 10K ohms for a short to each other. Perform BODY VERIFICATION TEST - VER 1. No → Replace the A/C - Heater Control Module in accordance with the Service Information. Perform BODY VERIFICATION TEST - VER 1.	All
8	Turn the ignition off. Reconnect the Rear A/C Heater Unit harness connector. Disconnect the Rear Blend Door Actuator harness connector. Turn the ignition on. With the DRB, erase the HVAC DTCs. Cycle the ignition switch from off to on and monitor the HVAC DTCs. Note: make sure the active DTCs are erased at this time. Slowly turn the mode door knob through each of it's different positions. Perform this step a few times. Turn the mode door knob to the Panel, Bi-level, or Floor position. Press and release the recirculation button. Perform this step a few times. Slowly slide the front temperature control levers (if equipped with dual or three zone, slide all front levers) from hot to cold and back to hot. Perform this step a few times. Slowly turn the rear blend/mode door knob from hot to cold and back to hot. Perform this step a few times. With the DRB, read the active HVAC DTCs. Did the overcurrent DTCs reset? Yes → Go To 9 No → Replace the Rear Blend Door Actuator in accordance with the Service Information. Perform BODY VERIFICATION TEST - VER 1.	All

BLEND OVERCURRENT (ACTIVE) - MTC — Continued

TEST	ACTION	APPLICABILITY
9	Turn the ignition off. Reconnect the Rear A/C Heater Unit harness connector. Disconnect the Rear Mode Door Actuator harness connector. Turn the ignition on. With the DRB, erase the HVAC DTCs. Cycle the ignition switch from off to on and monitor the HVAC DTCs. Note: make sure the active DTCs are erased at this time. Slowly turn the mode door knob through each of it's different positions. Perform this step a few times. Turn the mode door knob to the Panel, Bi-level, or Floor position. Press and release the recirculation button. Perform this step a few times. Slowly slide the front temperature control levers (if equipped with dual or three zone, slide all front levers) from hot to cold and back to hot. Perform this step a few times. Slowly turn the rear blend/mode door knob from hot to cold and back to hot. Perform this step a few times. With the DRB, read the active HVAC DTCs. Did the overcurrent DTCs reset? Yes → Repair the Rear A/C Heater Unit wiring harness for a short to ground or shorted together door driver circuits between the Rear A/C Heater Unit and the rear mode and blend doors. Perform BODY VERIFICATION TEST - VER 1. No → Replace the Rear Mode Door Actuator in accordance with the Service Information. Perform BODY VERIFICATION TEST - VER 1.	All

Symptom List:

COOLDOWN TEST EXCESSIVE FAULT - MTC
COOLDOWN TEST SENSOR FAILURE - MTC

Test Note: All symptoms listed above are diagnosed using the same tests. The title for the tests will be COOLDOWN TEST EXCESSIVE FAULT - MTC.

When Monitored and Set Condition:

COOLDOWN TEST EXCESSIVE FAULT - MTC

When Monitored: When executing the Cooldown Test.

Set Condition: This message will be displayed if the A/C system is unable to bring the evaporator temperature down 6.7°C (20°F) within two minutes.

COOLDOWN TEST SENSOR FAILURE - MTC

When Monitored: When executing the Cooldown Test.

Set Condition: This message will be displayed if a fault is detected with the Evaporator Temperature Sensor/circuit when executing the Cooldown Test.

POSSIBLE CAUSES
HVAC DTC(S) PRESENT
CHECK THE PCM/ECM FOR DTCS
A/C SYSTEM TESTING

TEST	ACTION	APPLICABILITY
1	**CAUTION: The evaporator temperature must be above 12.7°C (55°F) and the work area ambient temperature must be above 21.1°C (70°F) to test A/C system operation.** Turn the ignition on. With the DRBIII®, read HVAC DTCs. Does the DRBIII® display any HVAC DTCs? Yes → Return to the symptom list and choose the symptom(s). After repair is complete, rerun the Cooldown Test. Perform BODY VERIFICATION TEST - VER 1. No → Go To 2	All

COOLDOWN TEST EXCESSIVE FAULT - MTC — Continued

TEST	ACTION	APPLICABILITY
2	**CAUTION: The evaporator temperature must be above 12.7°C (55°F) and the work area ambient temperature must be above 21.1°C (70°F) to test A/C system operation.** Turn the ignition on. With the DRBIII®, check the PCM/ECM for DTCs. Are any DTCs present? Yes → Refer to Powertrain Diagnostic information for the related symptom(s). After repair is complete, rerun the Cooldown Test. Perform BODY VERIFICATION TEST - VER 1. No → Refer to the Service Information for additional Cooldown Test related diagnostic information and testing procedures. After repair is complete, rerun the Cooldown Test. Perform BODY VERIFICATION TEST - VER 1.	All

Symptom:
COOLDOWN TEST SET UP FAULT - MTC

When Monitored and Set Condition:

COOLDOWN TEST SET UP FAULT - MTC

When Monitored: When executing the Cooldown Test.

Set Condition: This message will be displayed if the front blower is not operating at high speed when executing the Cooldown Test.

POSSIBLE CAUSES
HVAC DTC(S) PRESENT
TEST SET UP CONDITIONS NOT MET
FRONT BLOWER/RELATED CIRCUITS

TEST	ACTION	APPLICABILITY
1	Turn the ignition on. With the DRBIII®, read HVAC DTCs. Does the DRBIII® display any HVAC DTCs? Yes → Return to the symptom list and choose the symptom(s). After the repair is complete, with the DRBIII®, erase the DTC(s). Cycle the ignition switch. With the DRBIII®, actuate the Cooldown Test. Perform BODY VERIFICATION TEST - VER 1. No → Go To 2	All
2	Was the front blower control set to high speed the entire time the Cooldown Test was actuated? Yes → Check the front blower motor and related circuits for front blower operation problems. Repair as necessary. After repair is complete, with the DRBIII®, actuate the Cooldown Test. Perform BODY VERIFICATION TEST - VER 1. No → Start the engine. Set the Front Blower Front Control switch to high speed. With the DRBIII®, actuate the Cooldown Test. Perform BODY VERIFICATION TEST - VER 1.	All

Symptom:
COOLDOWN TEST TOO COLD TO START - MTC

When Monitored and Set Condition:

COOLDOWN TEST TOO COLD TO START - MTC

When Monitored: When executing the Cooldown Test.

Set Condition: This message will be displayed if the A/C - Heater Control Module sees evaporator temperature below 12.7°C (55°F) when executing the Cooldown Test.

POSSIBLE CAUSES
EVAPORATOR TEMPERATURE TOO LOW
HVAC DTC(S) PRESENT
CHECK THE PCM/ECM FOR DTCS
EVAPORATOR TEMPERATURE SENSOR
SENSOR GROUND CIRCUIT HIGH RESISTANCE
EVAPORATOR TEMPERATURE SENSOR SIGNAL CIRCUIT HIGH RESISTANCE
A/C - HEATER CONTROL MODULE

TEST	ACTION	APPLICABILITY
1	**CAUTION: The evaporator temperature must be above 12.7°C (55°F) and the work area ambient temperature must be above 21.1°C (70°F) to test A/C system operation.** Start the engine. Turn the A/C off. Turn the Blower on high. Allow the blower to run for 5 minutes to ensure that the Evaporator Temperature Sensor temperature is above 12.7°C (55°F). With the DRBIII®, actuate the Cooldown Test. Does the DRBIII® display: Cooldown Test Too Cold To Start? Yes → Go To 2 No → Perform additional testing as necessary. Perform BODY VERIFICATION TEST - VER 1.	All
2	**CAUTION: The evaporator temperature must be above 12.7°C (55°F) and the work area ambient temperature must be above 21.1°C (70°F) to test A/C system operation.** Turn the ignition on. With the DRBIII®, read HVAC DTCs. Does the DRBIII® display any HVAC DTCs? Yes → Return to the symptom list and choose the symptom(s). After the repair is complete, with the DRBIII®, erase the DTC(s). Cycle the ignition switch. With the DRBIII®, actuate the Cooldown Test. Perform BODY VERIFICATION TEST - VER 1. No → Go To 3	All

COOLDOWN TEST TOO COLD TO START - MTC — Continued

TEST	ACTION	APPLICABILITY
3	**CAUTION: The evaporator temperature must be above 12.7°C (55°F) and the work area ambient temperature must be above 21.1°C (70°F) to test A/C system operation.** Turn the ignition on. With the DRBIII®, check the PCM/ECM for DTCs. Are any DTCs present? Yes → Refer to Powertrain Diagnostic information for the related symptom(s). After the repair is complete, with the DRBIII®, erase the DTC(s). Cycle the ignition switch. With the DRBIII®, actuate the Cooldown Test. Perform BODY VERIFICATION TEST - VER 1. No → Go To 4	All
4	Turn the ignition off. Disconnect the Evaporator Temperature Sensor harness connector. Turn the ignition on. With the DRBIII® in Sensor Display, read the Evaporator Temperature Sensor voltage. Is the voltage above 4.9 volts? Yes → Go To 5 No → Go To 6	All
5	Turn the ignition off. Disconnect the Evaporator Temperature Sensor harness connector. Connect a jumper wire between the Evaporator Temperature Sensor Signal circuit and the Sensor Ground circuit at the Evaporator Temperature Sensor harness connector. Turn the ignition on. With the DRBIII® in Sensor Display, read the Evaporator Temperature Sensor voltage. Is the voltage 0.0 volts? Yes → Replace the Evaporator Temperature Sensor in accordance with the Service Information. After repair is complete, rerun the Cooldown Test. Perform BODY VERIFICATION TEST - VER 1. No → Go To 6	All
6	**NOTE: Ensure that the Evaporator Temperature Sensor harness connector is connected to the Evaporator Temperature Sensor.** **NOTE: Ensure that the voltmeter leads meet the terminals in the connector and that there is good terminal to wire connection.** **NOTE: Ensure the voltmeter leads are connected for positive polarity.** Back probe the Sensor Ground circuit between the Evaporator Temperature Sensor harness connector and the A/C - Heater Control Module C1 harness connector. Turn the ignition on. Is the voltage below 0.10 volt? Yes → Go To 7 No → Repair the high resistance in the Sensor Ground circuit. After repair is complete, rerun the Cooldown Test. Perform BODY VERIFICATION TEST - VER 1.	All

COOLDOWN TEST TOO COLD TO START - MTC — Continued

TEST	ACTION	APPLICABILITY
7	**NOTE: Ensure that the Evaporator Temperature Sensor harness connector is connected to the Evaporator Temperature Sensor.** **NOTE: Ensure the voltmeter leads meet the terminals in the connector and that there is good terminal to wire connection.** **NOTE: Ensure the voltmeter leads are connected for positive polarity** Back probe the Evaporator Temperature Sensor Signal circuit between the Evaporator Temperature Sensor harness connector and the A/C - Heater Control Module C1 harness connector. Turn the ignition on. Is the voltage below 0.10 volt? Yes → Replace the A/C - Heater Control Module in accordance with the Service Information. After repair is complete, rerun the Cooldown Test. Perform BODY VERIFICATION TEST - VER 1. No → Repair the high resistance in the Evaporator Temperature Sensor Signal circuit. After repair is complete, rerun the Cooldown Test. Perform BODY VERIFICATION TEST - VER 1.	All

Symptom:

EVAPORATOR TEMPERATURE SENSOR CIRCUIT OPEN (ACTIVE) - MTC

When Monitored and Set Condition:

EVAPORATOR TEMPERATURE SENSOR CIRCUIT OPEN (ACTIVE) - MTC

When Monitored: With the ignition on.

Set Condition: This DTC will set if the A/C - Heater Control Module sees abnormally high voltage on the Evaporator Temperature Sensor Signal circuit.

POSSIBLE CAUSES
EVAPORATOR TEMPERATURE SENSOR SIGNAL CIRCUIT SHORTED HIGH
A/C - HEATER CONTROL MODULE
EVAPORATOR TEMPERATURE SENSOR SIGNAL CIRCUIT OPEN
SENSOR GROUND CIRCUIT OPEN
EVAPORATOR TEMPERATURE SENSOR

TEST	ACTION	APPLICABILITY
1	Turn the ignition off. Disconnect the A/C - Heater Control Module C1 harness connector. Turn the ignition on. Measure the voltage between the Evaporator Temperature Sensor Signal circuit and ground. Is there any voltage present? Yes → Repair the Evaporator Temperature Sensor Signal circuit for a short to voltage. Perform BODY VERIFICATION TEST - VER 1. No → Go To 2	All

EVAPORATOR TEMPERATURE SENSOR CIRCUIT OPEN (ACTIVE) - MTC — Continued

TEST	ACTION	APPLICABILITY
2	Turn the ignition off. Disconnect the A/C - Heater Control Module C1 harness connector. Measure the resistance between the Evaporator Temperature Sensor Signal circuit and the Sensor Ground circuit. The approximate circuit resistance should be: 5,900 ohms @ 38°C (100°F). 6,600 ohms @ 35°C (95°F). 7,400 ohms @ 32°C (90°F). 8,300 ohms @ 29°C (85°F). 9,400 ohms @ 27°C (80°F). 10,600 ohms @ 24°C (75°F). 11,900 ohms @ 21°C (70°F). 13,500 ohms @ 18°C (65°F). 15,300 ohms @ 16°C (60°F). 17,500 ohms @ 13°C (55°F). 19,900 ohms @ 10°C (50°F). 22,800 ohms @ 7°C (45°F). 26,100 ohms @ 4°C (40°F). 30,000 ohms @ 2°C (35°F). 34,600 ohms @ -1°C (30°F). Is the resistance within the specifications? Yes → Replace the A/C - Heater Control Module in accordance with the Service Information. Perform BODY VERIFICATION TEST - VER 1. No → Go To 3	All
3	Turn the ignition off. Disconnect the A/C - Heater Control Module C1 harness connector. Open the glove box door. Disconnect the glove box door roller latch from each side of the glove box. Roll the glove box downward toward the floor. Disconnect the in-line C202 harness connector. Measure the resistance of the Evaporator Temperature Sensor Signal circuit between the A/C - Heater Control Module C1 harness connector and the in-line C202 harness connector. Is the resistance below 5.0 ohms? Yes → Go To 4 No → Repair the Evaporator Temperature Sensor Signal circuit between the A/C - Heater Control Module C1 harness connector and the in-line C202 harness connector (HVAC side) for an open. Perform BODY VERIFICATION TEST - VER 1.	All

EVAPORATOR TEMPERATURE SENSOR CIRCUIT OPEN (ACTIVE) - MTC — Continued

TEST	ACTION	APPLICABILITY
4	Turn the ignition off. Disconnect the A/C - Heater Control Module C1 harness connector. Open the glove box door. Disconnect the glove box door roller latch from each side of the glove box. Roll the glove box downward toward the floor. Disconnect the in-line C202 harness connector. Measure the resistance of the Sensor Ground circuit between the A/C - Heater Control Module C1 harness connector and the in-line C202 harness connector. Is the resistance below 5.0 ohms? Yes → Check the wiring harness between the in-line C202 harness connector (plenum side) and the Evaporator Temperature Sensor for an open. Repair as necessary. If Ok, replace the Evaporator Temperature Sensor in accordance with the Service Information. Perform BODY VERIFICATION TEST - VER 1. No → Repair the Sensor Ground circuit between the A/C - Heater Control Module C1 harness connector and the in-line C202 harness connector (HVAC side) for an open. Perform BODY VERIFICATION TEST - VER 1.	All

Symptom:

EVAPORATOR TEMPERATURE SENSOR CIRCUIT SHORT (ACTIVE) - MTC

When Monitored and Set Condition:

EVAPORATOR TEMPERATURE SENSOR CIRCUIT SHORT (ACTIVE) - MTC

When Monitored: With the ignition on.

Set Condition: This DTC will set if the A/C - Heater Control Module sees abnormally low voltage on the Evaporator Temperature Sensor Signal circuit.

POSSIBLE CAUSES
EVAPORATOR TEMPERATURE SENSOR
EVAPORATOR TEMPERATURE SENSOR SIGNAL CIRCUIT SHORT TO GROUND
EVAPORATOR TEMPERATURE SENSOR SIGNAL CIRCUIT SHORT TO SENSOR GROUND CIRCUIT
A/C - HEATER CONTROL MODULE

TEST	ACTION	APPLICABILITY
1	Turn the ignition off. Open the glove box door. Disconnect the glove box door roller latch from each side of the glove box. Roll the glove box downward toward the floor. Disconnect the in-line C202 harness connector. Turn the ignition on. With the DRBIII® in Sensor Display, read the Evaporator Temperature Sensor voltage. Does the DRBIII® display: 5.0 volts or greater? Yes → Check the Evap Temp Sensor Signal circuit between the in-line C202 harness connector (plenum side) and the Evap Temp Sensor for a short to ground. Repair as necessary. If Ok, replace the Evaporator Temperature Sensor in accordance with the Service Info. Perform BODY VERIFICATION TEST - VER 1. No → Go To 2	All

EVAPORATOR TEMPERATURE SENSOR CIRCUIT SHORT (ACTIVE) - MTC — Continued

TEST	ACTION	APPLICABILITY
2	Turn the ignition off. Disconnect the A/C - Heater Control Module C1 harness connector. Open the glove box door. Disconnect the glove box door roller latch from each side of the glove box. Roll the glove box downward toward the floor. Disconnect the in-line C202 harness connector. Measure the resistance between ground and the Evaporator Temperature Sensor Signal circuit (HVAC side). Is the resistance above 10K ohms? Yes → Go To 3 No → Repair the Evaporator Temperature Sensor Signal circuit between the A/C - Heater Control Module C1 harness connector and the in-line C202 harness connector (HVAC side) for a short to ground. Perform BODY VERIFICATION TEST - VER 1.	All
3	Turn the ignition off. Disconnect the A/C - Heater Control Module C1 harness connector. Open the glove box door. Disconnect the glove box door roller latch from each side of the glove box. Roll the glove box downward toward the floor. Disconnect the in-line C202 harness connector. Measure the resistance between the Evaporator Temperature Sensor Signal circuit and the Sensor Ground circuit (HVAC side). Is the resistance above 10K ohms? Yes → Replace the A/C - Heater Control Module in accordance with the Service Information. Perform BODY VERIFICATION TEST - VER 1. No → Repair the Evaporator Temperature Sensor Signal circuit between the A/C - Heater Control Module C1 harness connector and the in-line C202 harness connector (HVAC side) for a short to Sensor Ground. Perform BODY VERIFICATION TEST - VER 1.	All

Symptom List:

FRONT AND REAR BLOWER OUTPUT 1 OPEN
FRONT AND REAR BLOWER OUTPUT 2 OPEN

Test Note: All symptoms listed above are diagnosed using the same tests. The title for the tests will be FRONT AND REAR BLOWER OUTPUT 1 OPEN.

When Monitored and Set Condition:

FRONT AND REAR BLOWER OUTPUT 1 OPEN

When Monitored: Continuously.

Set Condition: If the FCM detects no voltage present on the Front/Rear Blower Motor Relay Control circuit.

FRONT AND REAR BLOWER OUTPUT 2 OPEN

When Monitored: Continuously.

Set Condition: If the FCM detects no voltage present on the Front/Rear Blower Motor Relay Control circuit.

POSSIBLE CAUSES
CHECK DTCS
B+ CIRCUIT OPEN
FRONT AND REAR BLOWER RELAYS OPEN
FRONT/REAR BLOWER MOTOR RELAY CONTROL CIRCUIT SHORTED TO GROUND
FRONT/REAR BLOWER MOTOR RELAY CONTROL CIRCUIT OPEN
FRONT CONTROL MODULE

TEST	ACTION	APPLICABILITY
1	Turn the ignition on. **NOTE: If neither DTC will reset or is active, refer to the wiring diagrams located in the service information to help isolate a possible intermittent condition.** With the DRB, read the FCM DTCs. Are both the Front/Rear Blower Output 1 Open and the Front/Rear Blower Output 2 Open DTCs set? Yes → Go To 2 No → Replace the Front Control Module (FCM) in accordance with the Service Information. Perform BODY VERIFICATION TEST - VER 1.	All

FRONT AND REAR BLOWER OUTPUT 1 OPEN — Continued

TEST	ACTION	APPLICABILITY
2	Remove either the Front Blower Motor Relay or the Rear Blower Motor Relay, if equipped, from the IPM. Using a 12-volt test light connected to ground, probe cavity 86 of the blower relay connector. Is the test light illuminated? Yes → Go To 3 No → Check the B+ feed to the Intelligent Power Module (IPM) for an open. If OK, replace the IPM in accordance with the Service Information. Perform BODY VERIFICATION TEST - VER 1.	All
3	Turn the ignition off. Install a substitute relay in place of the existing Front Blower Motor Relay and the existing Rear Blower Motor Relay, if equipped. With the DRB, erase DTCs. Turn the ignition off, wait 30 seconds, then turn the ignition on. With the DRB, read DTCs. Did these DTCs reset? Yes → Go To 4 No → Replace the Front Blower Motor Relay and the Rear Blower Motor Relay, if equipped. Perform BODY VERIFICATION TEST - VER 1.	All
4	Turn the ignition off. Remove the Front Control Module from the IPM. Remove the Front Blower Motor Relay and the Rear Blower Motor Relay, if equipped, from the IPM. Measure the resistance between ground and the Front/Rear Blower Motor Relay Control circuit (FCM connector cavity 30). Is the resistance below 5.0 ohms? Yes → Replace the Intelligent Power Module (IPM) in accordance with the Service Information. Perform BODY VERIFICATION TEST - VER 1. No → Go To 5	All
5	Turn the ignition off. Remove the Front Control Module from the IPM. Remove the Front Blower Motor Relay from the IPM. Measure the resistance of the Front/Rear Blower Motor Relay Control circuit between the FCM connector cavity 30 and the Front Blower Motor Relay connector cavity 85. Is the resistance below 5.0 ohms? Yes → Replace the Front Control Module (FCM) in accordance with the Service Information. Perform BODY VERIFICATION TEST - VER 1. No → Replace the Intelligent Power Module (IPM) in accordance with the Service Information. Perform BODY VERIFICATION TEST - VER 1.	All

Symptom List:

FRONT AND REAR BLOWER OUTPUT 1 SHORT TO BATT
FRONT AND REAR BLOWER OUTPUT 2 SHORT TO BATT

Test Note: All symptoms listed above are diagnosed using the same tests. The title for the tests will be FRONT AND REAR BLOWER OUTPUT 1 SHORT TO BATT.

When Monitored and Set Condition:

FRONT AND REAR BLOWER OUTPUT 1 SHORT TO BATT

When Monitored: With the ignition on.

Set Condition: The FCM detects excessive current when attempting to close the Front/ Rear Blower Motor Relays.

FRONT AND REAR BLOWER OUTPUT 2 SHORT TO BATT

When Monitored: With the ignition on.

Set Condition: The FCM detects excessive current when attempting to close the Front/ Rear Blower Motor Relays.

POSSIBLE CAUSES
CHECK DTCS
FRONT BLOWER MOTOR RELAY SHORTED
REAR BLOWER MOTOR RELAY SHORTED
FRONT/REAR BLOWER MOTOR RELAY CONTROL CIRCUIT SHORTED TO BATTERY
FRONT CONTROL MODULE

TEST	ACTION	APPLICABILITY
1	Turn the ignition on. **NOTE: If neither DTC will reset or is active, refer to the wiring diagrams located in the service information to help isolate a possible intermittent condition.** With the DRB, read the FCM DTCs. Are both of these DTCs set? Yes → Go To 2 No → Replace the Front Control Module (FCM) in accordance with the Service Information. Perform BODY VERIFICATION TEST - VER 1.	All

FRONT AND REAR BLOWER OUTPUT 1 SHORT TO BATT — Continued

TEST	ACTION	APPLICABILITY
2	Turn the ignition off. Install a substitute relay in place of the existing Front Blower Motor Relay. With the DRB, erase DTCs. Turn the ignition on. With the DRB, read DTCs. Did these DTCs reset? Yes, equipped with rear blower motor Go To 3 Yes, not equipped with rear blower motor Go To 4 No → Replace the original Front Blower Motor Relay. Perform BODY VERIFICATION TEST - VER 1.	All
3	Turn the ignition off. Install a substitute relay in place of the existing Rear Blower Motor Relay. With the DRB, erase DTCs. Turn the ignition on. With the DRB, read DTCs. Did these DTCs reset? Yes → Go To 4 No → Replace the original Rear Blower Motor Relay. Perform BODY VERIFICATION TEST - VER 1.	All
4	Turn the ignition off. Remove the Front Control Module from the IPM. Remove the Front Blower Motor Relay and the Rear Blower Motor Relay, if equipped, from the IPM. Turn the ignition on. Using a 12-volt test light connected to ground, probe the Front Blower Motor Relay connector cavity 85. Is the test light illuminated? Yes → Replace the Intelligent Power Module (IPM) in accordance with the Service Information. Perform BODY VERIFICATION TEST - VER 1. No → Replace the Front Control Module (FCM) in accordance with the Service Information. Perform BODY VERIFICATION TEST - VER 1.	All

Symptom:
LOOPBACK TEST FAILURE (ACTIVE) - MTC

When Monitored and Set Condition:

LOOPBACK TEST FAILURE (ACTIVE) - MTC

When Monitored: When the A/C - Heater Control Module executes an internal loopback test.

Set Condition: If the A/C - Heater Control Module fails to send a message, or none of the expected messages arrive for 5 seconds, an internal loopback test is executed. If the internal loopback test fails, the DTC will set.

POSSIBLE CAUSES
ADDITIONAL CODE(S) PRESENT
A/C - HEATER CONTROL MODULE

TEST	ACTION	APPLICABILITY
1	Turn the ignition on. With the DRBIII®, read HVAC DTCs. Does the DRBIII® display any additional HVAC DTCs? Yes → Return to the symptom list and choose the symptom(s). Perform BODY VERIFICATION TEST - VER 1. No → Replace the A/C - Heater Control Module in accordance with the Service Information. Perform BODY VERIFICATION TEST - VER 1.	All

Symptom List:

NO PCM MESSAGE RECEIVED (ACTIVE) - MTC
PCM COMMUNICATION FAILURE (ACTIVE) - MTC
VEHICLE ODOMETER FAILURE (ACTIVE) - MTC

Test Note: All symptoms listed above are diagnosed using the same tests. The title for the tests will be NO PCM MESSAGE RECEIVED (ACTIVE) - MTC.

When Monitored and Set Condition:

NO PCM MESSAGE RECEIVED (ACTIVE) - MTC

When Monitored: With the ignition on.

Set Condition: This DTC will set if the A/C - Heater Control Module does not see any messages from the PCM for more than 5 seconds.

PCM COMMUNICATION FAILURE (ACTIVE) - MTC

When Monitored: With the ignition on.

Set Condition: This DTC will set if the A/C - Heater Control Module does not receive the Fuel message from the PCM for more than 5 seconds.

VEHICLE ODOMETER FAILURE (ACTIVE) - MTC

When Monitored: With the ignition on.

Set Condition: This DTC will set if the A/C - Heater Control Module does not receive the Vehicle Odometer message from the PCM for more than 5 seconds.

POSSIBLE CAUSES
MESSAGE NOT RECEIVED
ATTEMPT TO COMMUNICATE WITH THE PCM/ECM
PCI BUS CIRCUIT OPEN
POWERTRAIN/ENGINE CONTROL MODULE

TEST	ACTION	APPLICABILITY
1	Turn the ignition on. With the DRBIII®, enter HVAC, System Tests then PCM Monitor. Does the DRBIII® display: PCM is active on BUS? Yes → Replace the A/C - Heater Control Module in accordance with the Service Information. Perform BODY VERIFICATION TEST - VER 1. No → Go To 2	All

NO PCM MESSAGE RECEIVED (ACTIVE) - MTC — Continued

TEST	ACTION	APPLICABILITY
2	Turn the ignition on. With the DRBIII®, attempt to communicate with the PCM/ECM. Was the DRBIII® able to communicate with the PCM/ECM? Yes → Go To 3 No → Refer to Communication for the related symptom(s) Perform BODY VERIFICATION TEST - VER 1.	All
3	Turn the ignition off. Disconnect the PCM C2/ECM C1 harness connector. Connect the diagnostic junction port tester #8339 to the diagnostic junction port. **NOTE: Do not connect the tester to the DRB.** Measure the resistance of the PCI Bus circuit between the diagnostic junction port tester and the PCM C2/ECM C1 connector. Is the resistance below 5.0 ohms? Yes → Replace and program the Powertrain/Engine Control Module in accordance with the Service Information. Perform BODY VERIFICATION TEST - VER 1. No → Repair the PCI Bus circuit for an open. Perform BODY VERIFICATION TEST - VER 1.	All

Symptom List:

REAR BLEND CALIBRATION FAULT - MTC
REAR MODE CALIBRATION FAULT - MTC

Test Note: All symptoms listed above are diagnosed using the same tests. The title for the tests will be REAR BLEND CALIBRATION FAULT - MTC.

When Monitored and Set Condition:

REAR BLEND CALIBRATION FAULT - MTC

When Monitored: When the HVAC Door Recalibration is executed.

Set Condition: If the rear blend door's span is found outside the tolerance due to: open door actuator electrical circuits; a bad door actuator; broken door linkage; a bound up door; door actuator electrical circuits shorted to voltage; door actuator electrical circuits shorted to ground. A short to voltage or ground on the door actuator electrical circuits will also set door actuator overcurrent faults.

REAR MODE CALIBRATION FAULT - MTC

When Monitored: When the HVAC Door Recalibration is executed.

Set Condition: If the rear mode door's span is found outside the tolerance due to: open door actuator electrical circuits; a bad door actuator; broken door linkage; a bound up door; door actuator electrical circuits shorted to voltage; door actuator electrical circuits shorted to ground. A short to voltage or ground on the door actuator electrical circuits will also set door actuator overcurrent faults.

POSSIBLE CAUSES
HVAC DTC(S) PRESENT
REAR BLEND DOOR ACTUATOR DRIVER CIRCUIT(S) OPEN
REAR MODE DOOR ACTUATOR DRIVER CIRCUIT(S) OPEN
DOOR ACTUATOR
ACTUATOR/LINKAGE/DOOR
DOOR ACTUATOR DRIVER CIRCUIT OPEN
COMMON DOOR DRIVER CIRCUIT OPEN
A/C - HEATER CONTROL MODULE

REAR BLEND CALIBRATION FAULT - MTC — Continued

TEST	ACTION	APPLICABILITY
1	Turn the ignition on. **NOTE: All Overcurrent DTCs must be repaired before diagnosing Calibration messages.** With the DRBIII®, read HVAC DTCs. Does the DRBIII® display any HVAC DTCs? Yes → Return to the symptom list and choose the symptom(s). Perform BODY VERIFICATION TEST - VER 1. No: Rear Blend Calibration message set. Go To 2 No: Rear Mode Calibration message set. Go To 4	All
2	Turn the ignition off. Turn the A/C - Heater Control, rear blower control to the Rear position. Set the Rear Blower Rear Control, blend control to the full cold position. Disconnect the Rear A/C - Heater Unit harness connector. Connect a 12-volt Test Light between the Rear Blend Door Driver circuit and the Rear Common Door Driver circuit (Cavity 8) at the Rear A/C - Heater Unit harness connector (HVAC side). Turn the ignition on. While monitoring the test light, manually sweep the Rear Blower Rear Control, rear blend control very slowly from full cold to full hot. While monitoring the test light, manually sweep the Rear Blower Rear Control, rear blend control very slowly from full hot to full cold. Does the test light start to flash and stay flashing through the entire range? Yes → Go To 3 No → Go To 7	All
3	Turn the ignition off. Disconnect the Rear A/C - Heater Unit harness connector. Remove the Rear Blend Door Actuator from the Rear A/C - Heater Housing. Disconnect the Rear Blend Door Actuator harness connector. Measure the resistance of the Rear Blend Door Driver circuit between the Rear Blend Door Actuator harness connector and the Rear A/C - Heater Unit harness connector (plenum side). Measure the resistance of the Rear Common Door Driver circuit between the Rear Blend Door Actuator harness connector and the Rear A/C - Heater Unit harness connector (Cavity 8) (plenum side). Is the resistance below 5.0 ohms for both circuits? Yes → Go To 6 No → Repair the circuit with the resistance above 5 ohms for an open. Perform BODY VERIFICATION TEST - VER 1.	All

REAR BLEND CALIBRATION FAULT - MTC — Continued

TEST	ACTION	APPLICABILITY
4	Turn the ignition off. Turn the A/C - Heater Control, rear blower control switch knob to the Rear position. Set the Rear Blower Rear Control, blend control switch knob to the full cold position. Disconnect the Rear A/C - Heater Unit harness connector. Connect a 12-volt Test Light between the Rear Mode Door Driver circuit and the Rear Common Door Driver circuit (Cavity 2) at the Rear A/C - Heater Unit harness connector (HVAC side). Turn the ignition on. While monitoring the test light, manually sweep the Rear Blower Rear Control, rear blend control very slowly from full cold to full hot. While monitoring the test light, manually sweep the Rear Blower Rear Control, rear blend control very slowly from full hot to full cold. Does the test light start to flash and stay flashing through the entire range? Yes → Go To 5 No → Go To 7	All
5	Turn the ignition off. Disconnect the Rear A/C - Heater Unit harness connector. Remove the Rear Mode Door Actuator from the Rear A/C - Heater Housing. Disconnect the Rear Mode Door Actuator harness connector. Measure the resistance of the Rear Mode Door Driver circuit between the Rear Mode Door Actuator harness connector and the Rear A/C - Heater Unit harness connector (plenum side). Measure the resistance of the Rear Common Door Driver circuit between the Rear Mode Door Actuator harness connector and the Rear A/C - Heater Unit harness connector (Cavity 2) (plenum side). Is the resistance below 5.0 ohms for both circuits? Yes → Go To 6 No → Repair the circuit with the resistance above 5 ohms for an open. Perform BODY VERIFICATION TEST - VER 1.	All
6	Turn the ignition off. Remove the applicable door actuator (Rear Blend, Rear Mode) from the Rear A/C - Heater Housing. Disconnect the door actuator harness connector. By hand, attempt to rotate the door actuator in both directions. Did the door actuator turn in either direction? Yes → Replace the door actuator in accordance with the Service Information. Perform BODY VERIFICATION TEST - VER 1. No → Inspect the Rear A/C - Heater Housing for missing and broken actuator linkage. Inspect the linkage and the actuator for broken and missing teeth. Check the doors for binding and loss of full range. Repair as necessary. Perform BODY VERIFICATION TEST - VER 1.	All

REAR BLEND CALIBRATION FAULT - MTC — Continued

TEST	ACTION	APPLICABILITY
7	Turn the ignition off. Disconnect the A/C - Heater Control Module C1 harness connector. Remove the applicable door actuator (Rear Blend, Rear Mode) from the Rear A/C - Heater Housing. Disconnect the door actuator harness connector. Measure the resistance of the applicable door driver circuit (Rear Blend, Rear Mode) between the A/C - Heater Control Module C1 harness connector and the door actuator harness connector. Is the resistance below 5.0 ohms? Yes → Go To 8 No → Repair the applicable door driver circuit (Rear Blend, Rear Mode) for an open. Perform BODY VERIFICATION TEST - VER 1.	All
8	Turn the ignition off. Disconnect the A/C - Heater Control Module C1 harness connector. Remove the applicable door actuator (Rear Blend, Rear Mode) from the Rear A/C - Heater Housing. Disconnect the door actuator harness connector. Measure the resistance of the Common Door Driver circuit between the applicable door actuator harness connector (Rear Blend, Rear Mode) and the A/C - Heater Control Module C1 harness connector. Is the resistance below 5.0 ohms? Yes → Replace the A/C - Heater Control Module in accordance with the Service Information. Perform BODY VERIFICATION TEST - VER 1. No → Repair the Common Door Driver circuit for an open. Perform BODY VERIFICATION TEST - VER 1.	All

Symptom:
REAR BLEND POT CIRCUIT OPEN (ACTIVE) - MTC

When Monitored and Set Condition:

REAR BLEND POT CIRCUIT OPEN (ACTIVE) - MTC

When Monitored: With the ignition on.

Set Condition: This DTC will set if the A/C - Heater Control Module sees voltage above 4.88 volts on the Rear Temperature Feedback Signal circuit.

POSSIBLE CAUSES
5 VOLT SUPPLY CIRCUIT SHORTED TO VOLTAGE
CHECK REAR TEMPERATURE FEEDBACK SIGNAL CIRCUIT VOLTAGE
REAR TEMPERATURE FEEDBACK SIGNAL CIRCUIT OPEN
A/C - HEATER CONTROL MODULE
5 VOLT SUPPLY CIRCUIT SHORTED TO REAR TEMPERATURE FEEDBACK SIGNAL CIRCUIT
REAR TEMPERATURE RETURN CIRCUIT OPEN
REAR BLEND POTENTIOMETER
A/C - HEATER CONTROL MODULE

TEST	ACTION	APPLICABILITY
1	Turn the ignition off. Disconnect the Rear Blower Rear Control Switch C2 harness connector. Turn the ignition on. Measure the voltage of the 5 Volt Supply circuit. Is the voltage above 5.3 volts? Yes → Repair the 5 Volt Supply circuit for a short to voltage. Perform BODY VERIFICATION TEST - VER 1. No → Go To 2	All
2	Turn the ignition off. Disconnect the Rear Blower Rear Control Switch C2 harness connector. Turn the ignition on. Measure the voltage of the Rear Temperature Feedback Signal circuit. What voltage is present? Above 5.1 Volts Repair the Rear Temperature Feedback Signal circuit for a short to voltage. Perform BODY VERIFICATION TEST - VER 1. Below 0.25 Volts Go To 3 Between 0.25 & 5.1 Volts Go To 4	All

REAR BLEND POT CIRCUIT OPEN (ACTIVE) - MTC — Continued

TEST	ACTION	APPLICABILITY
3	Turn the ignition off. Disconnect the A/C - Heater Control Module C1 harness connector. Disconnect the Rear Blower Rear Control Switch C2 harness connector. Measure the resistance of the Rear Temperature Feedback Signal circuit between the A/C - Heater Control Module C1 harness connector and the Rear Blower Rear Control Switch C2 harness connector. Is the resistance below 5.0 ohms? Yes → Replace the A/C - Heater Control Module in accordance with the Service Information. Perform BODY VERIFICATION TEST - VER 1. No → Repair the Rear Temperature Feedback Signal circuit for an open. Perform BODY VERIFICATION TEST - VER 1.	All
4	Turn the ignition off. Disconnect the A/C - Heater Control Module C1 harness connector. Disconnect the Rear Blower Rear Control Switch C2 harness connector. Measure the resistance between the 5 Volt Supply circuit and the Rear Temperature Feedback Signal circuit. Is the resistance above 100K ohms? Yes → Go To 5 No → Repair the 5 Volt Supply circuit for a short to the Rear Temperature Feedback Signal circuit. Perform BODY VERIFICATION TEST - VER 1.	All
5	Turn the ignition off. Disconnect the A/C - Heater Control Module C1 harness connector. Disconnect the Rear Blower Rear Control Switch C2 harness connector. Measure the resistance of the Rear Temperature Return circuit between the A/C - Heater Control Module C1 harness connector and the Rear Blower Rear Control Switch C2 harness connector. Is the resistance below 5.0 ohms? Yes → Go To 6 No → Repair the Rear Temperature Return circuit for an open. Perform BODY VERIFICATION TEST - VER 1.	All

REAR BLEND POT CIRCUIT OPEN (ACTIVE) - MTC — Continued

TEST	ACTION	APPLICABILITY
6	Turn the ignition off. Disconnect the A/C - Heater Control Module C1 harness connector. **NOTE: Make sure that the Rear Blower Rear Control Switch C2 harness connector is connected to the Rear Blower Rear Control Switch.** Measure the resistance of the Rear Blower Rear Control Switch, Rear Blend Potentiometer as follows: Turn the Rear Blend knob to full hot. Measure the resistance between the 5 Volt Supply circuit and the Rear Temperature Feedback Signal circuit at the A/C - Heater Control Module C1 harness connector. The resistance should be approximately 800 ohms. Slowly rotate the Rear Blend knob from full hot to full cold while viewing the DVOM. The reading should change fluidly from approximately 800 to 10.5K ohms. Turn the Rear Blend knob to full hot. Measure the resistance between the 5 Volt Supply circuit and the Rear Temperature Return circuit at the A/C - Heater Control Module C1 harness connector. The resistance should be approximately 10.9K ohms. Slowly rotate the Rear Blend knob from full hot to full cold while viewing the DVOM. The reading should stay steady at approximately 10.9K ohms. Turn the Rear Blend knob to full hot. Measure the resistance between the Rear Temperature Return circuit and the Rear Temperature Feedback Signal circuit at the A/C - Heater Control Module C1 harness connector. The resistance should be approximately 10.2K ohms. Slowly rotate the Rear Blend knob from full hot to full cold while viewing the DVOM. The reading should change fluidly from approximately 10.2K to 800 ohms. Are all of the resistance measurements as specified? Yes → Replace the A/C - Heater Control Module in accordance with the Service Information. Perform BODY VERIFICATION TEST - VER 1. No → Replace the Rear Blower Rear Control Switch in accordance with the Service Information. Perform BODY VERIFICATION TEST - VER 1.	All

Symptom:
REAR BLEND POT CIRCUIT SHORT (ACTIVE) - MTC

When Monitored and Set Condition:

REAR BLEND POT CIRCUIT SHORT (ACTIVE) - MTC

When Monitored: When the ignition is on.

Set Condition: This DTC will set if the A/C - Heater Control Module sees voltage below 0.25 volts on the Rear Temperature Feedback Signal circuit.

POSSIBLE CAUSES
5 VOLT SUPPLY CIRCUIT SHORTED TO GROUND
5 VOLT SUPPLY CIRCUIT OPEN
5 VOLT SUPPLY CIRCUIT SHORTED TO REAR TEMPERATURE RETURN CIRCUIT
REAR TEMPERATURE FEEDBACK SIGNAL CIRCUIT SHORTED TO GROUND
REAR TEMPERATURE FEEDBACK SIGNAL CKT SHORTED TO REAR TEMPERATURE RETURN CKT
REAR BLEND POTENTIOMETER SHORTED
A/C - HEATER CONTROL MODULE

TEST	ACTION	APPLICABILITY
1	Turn the ignition off. Disconnect the A/C - Heater Control Module C1 harness connector. Disconnect the Rear Blower Rear Control Switch C2 harness connector. Measure the resistance between ground and the 5 Volt Supply circuit. Is the resistance above 100K ohms? Yes → Go To 2 No → Repair the 5 Volt Supply circuit for a short to ground. Perform BODY VERIFICATION TEST - VER 1.	All
2	Turn the ignition off. Disconnect the A/C - Heater Control Module C1 harness connector. Disconnect the Rear Blower Rear Control Switch C2 harness connector. Measure the resistance between the 5 Volt Supply circuit and the Rear Temperature Return circuit. Is the resistance above 100K ohms? Yes → Go To 3 No → Repair the 5 Volt Supply circuit for a short to the Rear Temperature Return circuit. Perform BODY VERIFICATION TEST - VER 1.	All

REAR BLEND POT CIRCUIT SHORT (ACTIVE) - MTC — Continued

TEST	ACTION	APPLICABILITY
3	Turn the ignition off. Disconnect the A/C - Heater Control Module C1 harness connector. Disconnect the Rear Blower Rear Control Switch C2 harness connector. Measure the resistance of the 5 Volt Supply circuit between the A/C - Heater Control Module C1 harness connector and the Rear Blower Rear Control Switch C2 harness connector. Is the resistance below 5.0 ohms? Yes → Go To 4 No → Repair the 5 Volt Supply circuit for an open. Perform BODY VERIFICATION TEST - VER 1.	All
4	Turn the ignition off. Disconnect the A/C - Heater Control Module C1 harness connector. Disconnect the Rear Blower Rear Control Switch C2 harness connector. Measure the resistance between ground and the Rear Temperature Feedback Signal circuit. Is the resistance above 100K ohms? Yes → Go To 5 No → Repair the Rear Temperature Feedback Signal circuit for a short to ground. Perform BODY VERIFICATION TEST - VER 1.	All
5	Turn the ignition off. Disconnect the A/C - Heater Control Module C1 harness connector. Disconnect the Rear Blower Rear Control Switch C2 harness connector. Measure the resistance between the Rear Temperature Feedback Signal circuit and the Rear Temperature Return circuit. Is the resistance above 100K ohms? Yes → Go To 6 No → Repair the Rear Temperature Feedback Signal circuit for a short to the Rear Temperature Return circuit. Perform BODY VERIFICATION TEST - VER 1.	All
6	Turn the ignition off. Make sure that the A/C - Heater Control Module C1 harness connector is connected to the A/C - Heater Control Module. Disconnect the Rear Blower Rear Control Switch C2 harness connector. Turn the ignition on. With the DRBIII®, read active HVAC DTCs. Does the DRBIII® display: Rear Blend Pot Circuit Short? Yes → Replace the A/C - Heater Control Module in accordance with the Service Information. Perform BODY VERIFICATION TEST - VER 1. No → Replace the Rear Blower Rear Control Switch in accordance with the Service Information. Perform BODY VERIFICATION TEST - VER 1.	All

Symptom:
TX FAILURE (ACTIVE) - MTC

When Monitored and Set Condition:

TX FAILURE (ACTIVE) - MTC

When Monitored: When the ignition is on.

Set Condition: This DTC will set if the A/C - Heater Control Module is unable to send a message.

POSSIBLE CAUSES
ATTEMPT TO COMMUNICATE WITH THE HVAC MODULE
ADDITIONAL CODE(S) PRESENT
ATTEMPT TO COMMUNICATE WITH THE PCM/ECM, BCM, AND FCM
A/C - HEATER CONTROL MODULE

TEST	ACTION	APPLICABILITY
1	Turn the ignition on. With the DRBIII®, attempt to communicate with the HVAC Module. Was the DRBIII® able to I/D or communicate with the HVAC Module? Yes → Go To 2 No → Refer to Communication for the related symptom(s). Perform BODY VERIFICATION TEST - VER 1.	All
2	Turn the ignition on. With the DRBIII®, read HVAC DTCs. Does the DRBIII® display any additional HVAC DTCs? Yes → Return to the symptom list and choose the symptom(s). Perform BODY VERIFICATION TEST - VER 1. No → Go To 3	All
3	Turn the ignition on. With the DRBIII®, attempt to communicate with the PCM/ECM. With the DRBIII®, attempt to communicate with the BCM. With the DRBIII®, attempt to communicate with the FCM. Was the DRBIII® able to I/D or communicate with the PCM/ECM, BCM and FCM? Yes → Go To 4 No → Refer to Communication for the related symptom(s). Perform BODY VERIFICATION TEST - VER 1.	All

TX FAILURE (ACTIVE) - MTC — Continued

TEST	ACTION	APPLICABILITY
4	Turn the ignition on. With the DRBIII®, erase HVAC DTCs. Cycle the ignition switch and wait approximately 1 minute. With the DRBIII®, read HVAC DTCs. Did this DTC reset? Yes → Replace the A/C - Heater Control Module in accordance with the Service Information. Perform BODY VERIFICATION TEST - VER 1. No → Test Complete.	All

Symptom List:

***A/C STATUS INDICATOR FLASHING - MTC**
***RECIRC STATUS INDICATOR FLASHING - MTC**

Test Note: All symptoms listed above are diagnosed using the same tests. The title for the tests will be *A/C STATUS INDICATOR FLASHING - MTC.

POSSIBLE CAUSES
AC COOLDOWN TEST NEEDS TO BE RUN
HVAC DOOR RECALIBRATION NEEDS TO BE RUN

TEST	ACTION	APPLICABILITY
1	Turn the ignition on. Which status indicator is flashing on the A/C-Heater Control Module? A/C Status Indicator Go To 2 RECIRC Status Indicator Go To 3	All
2	**CAUTION: The evaporator temperature must be above 12.7°C (55°F) and the work area ambient temperature must be above 21.1°C (70°F) to test A/C operation.** **NOTE: The A/C status indicator will flash twice per second to indicate that the AC Cooldown Test needs to be run.** **NOTE: The A/C status indicator will stop flashing twice per second if either the AC Cooldown Test returns passed, or if any button on the control is pressed, or by driving the vehicle more than eight miles during the current ignition cycle.** **NOTE: The Power and A/C status indicators will flash alternately while the AC Cooldown Test is running.** Start the engine. Turn the Blower control to the high speed position. With the DRBIII® in HVAC, System Tests, actuate the AC Cooldown Test. Does the DRBIII® display: Cooldown Test Passed? Yes → Test Complete. No → Return to the symptom list and choose the symptom(s). Perform BODY VERIFICATION TEST - VER 1.	All

*A/C STATUS INDICATOR FLASHING - MTC — Continued

TEST	ACTION	APPLICABILITY
3	**NOTE: The RECIRC status indicator will flash twice per second to indicate that the HVAC Door Recalibration Test needs to be run.** **NOTE: The RECIRC status indicator will stop flashing twice per second if either the HVAC Door Recalibration Test returns passed, or any button on the control is pressed, or by driving the vehicle more than eight miles during the current ignition cycle.** **NOTE: The Power and RECIRC status indicators will flash alternately while the HVAC Door Recalibration Test is running.** With the DRBIII® in HVAC, System Tests, actuate the HVAC Door Recalibration Test. Does the DRBIII® display: Recalibration Test Passed? Yes → Test Complete. No → Return to the symptom list and choose the symptom(s). Perform BODY VERIFICATION TEST - VER 1.	All

Symptom:

*BLEND/MODE/RECIRC DOOR OPERATION IMPROPER -- DUAL & THREE-ZONE MTC

POSSIBLE CAUSES
CHECK FOR ACTIVE HVAC DTCS
CHECK FOR HVAC DO0R RECALIBRATION FAULT MESSAGES
MODE DOOR ACTUATOR/LINKAGE/DOOR
PASSENGER BLEND DOOR ACTUATOR/LINKAGE/DOOR
DRIVER BLEND DOOR ACTUATOR/LINKAGE/DOOR
RECIRCULATION DOOR ACTUATOR/LINKAGE/DOOR
REAR MODE DOOR ACTUATOR/LINKAGE/DOOR
REAR BLEND DOOR ACTUATOR/LINKAGE/DOOR

TEST	ACTION	APPLICABILITY
1	**NOTE: All Overcurrent DTCs must be repaired before diagnosing Calibration fault messages.** Turn the ignition on. With the DRBIII®, read active HVAC DTCs. Does the DRBIII® display any active HVAC DTCs? Yes → Return to the symptom list and choose the symptom(s). Perform BODY VERIFICATION TEST - VER 1. No → Go To 2	All
2	**NOTE: All Overcurrent DTCs must be repaired before diagnosing Calibration fault messages.** Turn the ignition on. With the DRBIII® in HVAC, System Tests, actuate the HVAC Door Recalibration Test. Does the DRBIII® display any HVAC Door Recalibration fault messages? Yes → Return to the symptom list and choose the symptom(s). Perform BODY VERIFICATION TEST - VER 1. No → Go To 3	All

*BLEND/MODE/RECIRC DOOR OPERATION IMPROPER -- DUAL & THREE-ZONE MTC — Continued

TEST	ACTION	APPLICABILITY
3	For which door was fault reported? Mode Door Go To 4 Passenger Blend Door Go To 5 Driver Blend Door Go To 6 Recirculation Door Go To 7 Rear Mode Door Go To 8 Rear Blend Door Go To 9	All
4	Start the engine. Turn the blower control to the high speed position. Turn the mode control to each door position for a minimum of 30 seconds and check for airflow from the corresponding vents. Does air flow from the correct vents for each door position? Yes → Test Complete. No → Remove door actuator from A/C Heater Housing Assy. By hand, attempt to rotate door actuator in both directions. Also, inspect for disconnected, missing, or broken door actuator linkage. Repair as necessary in accordance with the Service Information. Perform BODY VERIFICATION TEST - VER 1.	All
5	Start the engine. Turn the blower control to the high speed position. Turn the mode control to the panel position. Move the passenger blend control to the full hot position. Move the passenger blend control to the full cold position, in 25% increments, while checking for a change in airflow air temperature coming from the passenger's panel vents. Does the airflow air temperature change with respect to the position of the blend control? Yes → Test Complete. No → Remove door actuator from A/C-Heater Housing Assy. By hand, attempt to rotate the door actuator in both directions. Also, inspect for disconnected, missing, or broken door actuator linkage. Repair as necessary in accordance with the Service Information. Perform BODY VERIFICATION TEST - VER 1.	All

*BLEND/MODE/RECIRC DOOR OPERATION IMPROPER -- DUAL & THREE-ZONE MTC — Continued

TEST	ACTION	APPLICABILITY
6	Start the engine. Turn the blower control to the high speed position. Turn the mode control to the panel position. Move the driver blend control to the full hot position. Move the driver blend control to the full cold position, in 25% increments, while checking for a change in airflow air temperature coming from the driver's panel vents. Does the airflow air temperature change with respect to the position of the blend control? Yes → Test Complete. No → Remove door actuator from A/C-Heater Housing Assy. By hand, attempt to rotate the door actuator in both directions. Also, inspect for disconnected, missing, or broken door actuator linkage. Repair as necessary in accordance with the Service Information. Perform BODY VERIFICATION TEST - VER 1.	All
7	Start the engine. Turn the blower control to the high speed position. Turn the mode control to the panel position. Make sure that recirc is switched off (status indicator not illuminated). Press the recirc switch on (status indicator illuminated). The sound of the air flowing through the ducts should get louder as the recirculation door opens to bring in recirc air. Does the sound of the airflow get louder after pressing the recirc switch on? Yes → Test Complete. No → Remove door actuator from A/C-Heater Housing Assy. By hand, attempt to rotate the door actuator in both directions. Also, inspect for disconnected, missing, or broken door actuator linkage. Repair as necessary in accordance with the Service Information. Perform BODY VERIFICATION TEST - VER 1.	All
8	Start the engine. Turn the rear blower control on the A/C-Heater Control Module to the rear control position. Turn the rear blower control on the Rear A/C-Heater Control to the high speed position. Turn the rear blend control to the full cold position and check for airflow from the corresponding vents. Turn the rear blend control to the full hot position and check for airflow from the corresponding vents. Does air flow from the correct vents for each door position? Yes → Test Complete. No → Remove door actuator from Rear A/C-Heater Housing Assy. By hand, attempt to rotate door actuator in both directions. Also, inspect for disconnected, missing, or broken door actuator linkage. Repair as necessary in accordance with the Service Information. Perform BODY VERIFICATION TEST - VER 1.	All

*BLEND/MODE/RECIRC DOOR OPERATION IMPROPER -- DUAL & THREE-ZONE MTC — Continued

TEST	ACTION	APPLICABILITY
9	Start the engine. Turn the rear blower control on the A/C-Heater Control Module to the rear control position. Turn the rear blower control on the Rear A/C-Heater Control to the high speed position. Turn the rear blend control to the full cold position. Turn the rear blend control to the full hot position, in 25% increments, while checking for a change in airflow air temperature coming from the vents. Does the airflow air temperature change with respect to the position of the blend control? Yes → Test Complete. No → Remove door actuator from Rear A/C-Heater Housing Assy. By hand, attempt to rotate door actuator in both directions. Also, inspect for disconnected, missing, or broken door actuator linkage. Repair as necessary in accordance with the Service Information. Perform BODY VERIFICATION TEST - VER 1.	All

Symptom:

***BLEND/MODE/RECIRC DOOR OPERATION IMPROPER -- SINGLE-ZONE MTC**

POSSIBLE CAUSES
CHECK FOR ACTIVE HVAC DTCS
CHECK FOR HVAC DO0R RECALIBRATION FAULT MESSAGES
MODE DOOR ACTUATOR/LINKAGE/DOOR
BLEND DOOR ACTUATOR/LINKAGE/DOOR
RECIRCULATION DOOR ACTUATOR/LINKAGE/DOOR

TEST	ACTION	APPLICABILITY
1	**NOTE: All Overcurrent DTCs must be repaired before diagnosing Calibration fault messages.** Turn the ignition on. With the DRBIII®, read active HVAC DTCs. Does the DRBIII® display any active HVAC DTCs? Yes → Return to the symptom list and choose the symptom(s). Perform BODY VERIFICATION TEST - VER 1. No → Go To 2	All
2	**NOTE: All Overcurrent DTCs must be repaired before diagnosing Calibration fault messages.** Turn the ignition on. With the DRBIII® in HVAC, System Tests, actuate the HVAC Door Recalibration Test. Does the DRBIII® display any HVAC Door Recalibration fault messages? Yes → Return to the symptom list and choose the symptom(s). Perform BODY VERIFICATION TEST - VER 1. No → Go To 3	All
3	For which door was fault reported? Mode Door Go To 4 Blend Door Go To 5 Recirculation Door Go To 6	All

*BLEND/MODE/RECIRC DOOR OPERATION IMPROPER -- SINGLE-ZONE MTC — Continued

TEST	ACTION	APPLICABILITY
4	Start the engine. Turn the blower control to the high speed position. Turn the mode control to each door position for a minimum of 30 seconds and check for airflow from the corresponding vents. Does air flow from the correct vents for each door position? Yes → Test Complete. No → Remove door actuator from A/C Heater Housing Assy. By hand, attempt to rotate door actuator in both directions. Also, inspect for disconnected, missing, or broken door actuator linkage. Repair as necessary in accordance with the Service Information. Perform BODY VERIFICATION TEST - VER 1.	All
5	Start the engine. Turn the blower control to the high speed position. Turn the mode control to the panel position. Turn the blend control to the full hot position. Turn the blend control to the full cold position, in 25% increments, while checking for a change in airflow air temperature coming from the panel vents. Does the airflow air temperature change with respect to the position of the blend control? Yes → Test Complete. No → Remove door actuator from A/C-Heater Housing Assy. By hand, attempt to rotate the door actuator in both directions. Also, inspect for disconnected, missing, or broken door actuator linkage. Repair as necessary in accordance with the Service Information. Perform BODY VERIFICATION TEST - VER 1.	All
6	Start the engine. Turn the blower control to the high speed position. Turn the mode control to the panel position. Make sure that recirc is switched off (status indicator not illuminated). Press the recirc switch on (status indicator illuminated). The sound of the air flowing through the ducts should get louder as the recirculation door opens to bring in recirc air. Does the sound of the airflow get louder after pressing the recirc switch on? Yes → Test Complete. No → Remove door actuator from A/C-Heater Housing Assy. By hand, attempt to rotate the door actuator in both directions. Also, inspect for disconnected, missing, or broken door actuator linkage. Repair as necessary in accordance with the Service Information. Perform BODY VERIFICATION TEST - VER 1.	All

Symptom:

***FRONT A/C - HEATER CONTROL ILLUMINATION INOPERATIVE - MTC**

POSSIBLE CAUSES
CHECK FOR HVAC DTCS
CHECK FOR BCM DTCS
A/C - HEATER CONTROL MODULE
PANEL LAMPS DRIVER CIRCUIT OPEN
BODY CONTROL MODULE - PANEL LAMPS DRIVER OPEN

TEST	ACTION	APPLICABILITY
1	Turn the ignition on. With the DRBIII®, read HVAC DTCs. Does the DRBIII® display any HVAC DTCs? Yes → Return to the symptom list and choose the symptom(s). Perform BODY VERIFICATION TEST - VER 1. No → Go To 2	All
2	Turn the ignition on. With the DRBIII®, read the BCM DTCs. Does DRBIII® display Headlamp Switch: Mismatch; STG; Open; or Panel Dim Output Short? Yes → Refer to symptoms Headlamp Switch Mismatch, Headlamp Switch Shorted To Ground, and Headlamp Switch Open in the Exterior Lighting catagory. Refer to symptom Panel Dimming Output Short in the Instrument Cluster catagory. Perform BODY VERIFICATION TEST - VER 1. No → Go To 3	All
3	Turn the ignition off. Rotate the Panel Lamps Dimmer switch to the off position. Disconnect the A/C - Heater Control C1 harness connector. Turn the Headlamp switch on. Measure the voltage of the Panel Lamps Driver circuit while rotating the Panel Lamps Dimmer switch from the off position to the full brightness position. Does the voltage change from approximately 2.5 volts to 11.5 volts? Yes → Replace the A/C - Heater Control Module in accordance with the Service Information. Perform BODY VERIFICATION TEST - VER 1. No → Go To 4	All

*FRONT A/C - HEATER CONTROL ILLUMINATION INOPERATIVE - MTC

— Continued

TEST	ACTION	APPLICABILITY
4	Turn the ignition off. Disconnect the A/C - Heater Control C1 harness connector. Disconnect the Body Control Module C4 harness connector. Measure the resistance of the Panel Lamps Driver circuit between the A/C - Heater Control C1 harness connector and the Body Control Module C4 harness connector. Is the resistance below 5 ohms? Yes → Replace the Body Control Module in accordance with the Service Information. Perform BODY VERIFICATION TEST - VER 1. No → Repair the Panel Lamps Driver circuit for an open. Perform BODY VERIFICATION TEST - VER 1.	All

Symptom:

***FRONT BLOWER MOTOR INOPERATIVE - MTC**

POSSIBLE CAUSES
FRONT CONTROL MODULE (FCM) DTC(S) PRESENT
IPM FUSE #10
FUSED FRONT BLOWER MOTOR RELAY OUTPUT CIRCUIT SHORTED TO GROUND
FRONT BLOWER MOTOR RESISTOR BLOCK SHORTED TO GROUND
FRONT BLOWER MOTOR RESISTOR BLOCK SHORTED TO GROUND
BLOWER MOTOR
BLOWER MOTOR
A/C - HEATER CONTROL MODULE
GROUND CIRCUIT OPEN
BLOWER MOTOR HIGH DRIVER CIRCUIT OPEN
FRONT BLOWER MOTOR RESISTOR BLOCK OPEN
FRONT BLOWER MOTOR RESISTOR BLOCK OPEN
IPM - OPEN CIRCUIT
IPM - OPEN CIRCUIT
FRONT BLOWER MOTOR RELAY
IPM - OPEN CIRCUIT
FUSED FRONT BLOWER MOTOR RELAY OUTPUT CIRCUIT OPEN

TEST	ACTION	APPLICABILITY
1	With the DRBIII® in Front Control Module, read the active DTCs. Are any active FCM DTCs present? Yes → For FCM DTCs related to the blower relay circuits, refer to the Heating & A/C catagory. For all other FCM DTCs, refer to the symptom list in the related catagory. Perform BODY VERIFICATION TEST - VER 1. No → Go To 2	All
2	Turn the ignition off. Remove and inspect Intelligent Power Module (IPM) Fuse #10. Is the fuse open? Yes → Go To 3 No → Go To 7	All

*FRONT BLOWER MOTOR INOPERATIVE - MTC — Continued

TEST	ACTION	APPLICABILITY
3	Replace IPM Fuse #10. Turn the ignition on. Turn the Power switch on the A/C - Heater Control Module on. Operate the front blower in all speeds and modes. Does the blower motor operate properly without blowing the fuse? Yes → Check the Fused Front Blower Motor Relay Output circuit and the High Speed Blower Motor circuit for an intermittent short to ground. Repair as necessary. Perform BODY VERIFICATION TEST - VER 1. No → Go To 4	All
4	Turn the ignition off. Disconnect the Front Blower Motor Resistor Block C1 harness connector. Measure the resistance between ground and the Fused Front Blower Motor Relay Output circuit. Is the resistance below 10K ohms? Yes → Repair the Fused Front Blower Motor Relay Output circuit for a short to ground. Replace IPM Fuse #10. Perform BODY VERIFICATION TEST - VER 1. No → Go To 5	All
5	Turn the ignition off. Disconnect the Front Blower Motor Resistor Block C1 harness connector. Disconnect the Front Blower Motor Resistor Block C2 harness connector. Measure the resistance between Front Blower Motor Resistor Block pin C2-2 and pins C2-1, C1-1, C1-2, C1-3, C1-5, and C1-6. Is there continuity between pin C2-2 and any other pin? Yes → Replace the Front Blower Motor Resistor Block in accordance with the Service Information. Replace IPM Fuse #10. Perform BODY VERIFICATION TEST - VER 1. No → Go To 6	All
6	Turn the ignition off. Disconnect the Front Blower Motor Resistor Block C1 harness connector. Disconnect the Front Blower Motor Resistor Block C2 harness connector. Measure the resistance between Front Blower Motor Resistor Block pin C1-4 and pins C2-1, C1-1, C1-2, C1-3, C1-5, and C1-6. Is there continuity between pin C1-4 and any other pin? Yes → Replace the Front Blower Motor Resistor Block in accordance with the Service Information. Replace IPM Fuse #10. Perform BODY VERIFICATION TEST - VER 1. No → Replace the Blower Motor in accordance with the Service Information. Replace IPM Fuse #10. Perform BODY VERIFICATION TEST - VER 1.	All

*FRONT BLOWER MOTOR INOPERATIVE - MTC — Continued

TEST	ACTION	APPLICABILITY
7	Ensure IPM Fuse #10 is installed. Turn the ignition on. Turn the Power switch on the A/C - Heater Control Module on. **NOTE: The test light must illuminate brightly. Compare the brightness to that of a direct connection to the battery.** Using a 12-volt test light connected to ground, back probe the High Speed Blower Motor circuit in the Front Blower Motor Resistor Block C2 harness connector. Does the test light illuminate brightly? Yes → Go To 8 No → Go To 12	All
8	Turn the Power switch on the A/C - Heater Control Module off. Turn the ignition off. Using a jumper wire connected to ground, back probe the Rear Blower High Speed circuit in the Front Blower Motor Resistor Block C2 harness connector. Turn the ignition on. Turn the Power switch on the A/C - Heater Control Module on. Does the blower motor run at high speed? Yes → Go To 9 No → Replace the Blower Motor in accordance with the Service Information. Perform BODY VERIFICATION TEST - VER 1.	All
9	Turn the Power switch on the A/C - Heater Control Module off. Turn the ignition off. Disconnect the A/C - Heater Control Module C2 harness connector. Using a jumper wire connected to ground, back probe the Blower Motor High Driver circuit in the A/C - Heater Control Module C2 harness connector. Turn the ignition on. Turn the Power switch on the A/C - Heater Control Module on. Does the blower motor run at high speed? Yes → Go To 10 No → Go To 11	All
10	Turn the ignition off. Disconnect the A/C - Heater Control Module C2 harness connector. Measure the resistance of the Ground circuit between the A/C - Heater Control Module C2 harness connector and ground. Is the resistance below 5.0 ohms? Yes → Replace the A/C - Heater Control Module in accordance with the Service Information. Perform BODY VERIFICATION TEST - VER 1. No → Repair the Ground circuit for an open. Perform BODY VERIFICATION TEST - VER 1.	All

*FRONT BLOWER MOTOR INOPERATIVE - MTC — Continued

TEST	ACTION	APPLICABILITY
11	Turn the ignition off. Disconnect the A/C - Heater Control Module C2 harness connector. Disconnect the Front Blower Motor Resistor Block C1 harness connector. Measure the resistance of the Blower Motor High Driver circuit between the A/C - Heater Control Module C2 harness connector and the Front Blower Motor Resistor Block C1 harness connector. Is the resistance below 5 ohms? Yes → Replace the Front Blower Motor Resistor Block in accordance with the Service Information. Perform BODY VERIFICATION TEST - VER 1. No → Repair the Blower Motor High Driver circuit for an open. Perform BODY VERIFICATION TEST - VER 1.	All
12	Turn the ignition on. Turn the Power switch on the A/C - Heater Control Module on. **NOTE: The test light must illuminate brightly. Compare the brightness to that of a direct connection to the battery.** Using a 12-volt test light connected to ground, back probe the Fused Front Blower Motor Relay Output circuit in the Front Blower Motor Resistor Block C1 harness connector. Does the test light illuminate brightly? Yes → Replace the Front Blower Motor Resistor Block in accordance with the Service Information. Perform BODY VERIFICATION TEST - VER 1. No → Go To 13	All
13	Turn the ignition off. Remove the Front Blower Motor Relay from the IPM. **NOTE: The test light must illuminate brightly. Compare the brightness to that of a direct connection to the battery.** Using a 12-volt test light connected to ground, probe cavity 30 of the Front Blower Motor Relay connector. Does the test light illuminate brightly? Yes → Go To 14 No → Replace the IPM in accordance with the Service Information. Perform BODY VERIFICATION TEST - VER 1.	All
14	Turn the ignition off. Remove the Front Blower Motor Relay from the IPM. Remove IPM Fuse #10. Measure the resistance between cavity 87 of the Front Blower Motor Relay connector and IPM Fuse #10 (power input cavity). Is the resistance below 5 ohms? Yes → Go To 15 No → Replace the IPM in accordance with the Service Information. Perform BODY VERIFICATION TEST - VER 1.	All

*FRONT BLOWER MOTOR INOPERATIVE - MTC — Continued

TEST	ACTION	APPLICABILITY
15	Turn the ignition off. Make sure that the Front Blower Motor Relay is installed. Remove IPM Fuse #10. Turn the ignition on. **NOTE: The test light must illuminate brightly. Compare the brightness to that of a direct connection to the battery.** Using a 12-volt test light connected to ground, probe IPM Fuse #10 (power input cavity). Does the test light illuminate brightly? Yes → Go To 16 No → Replace the Front Blower Motor Relay in accordance with the Service Information. Perform BODY VERIFICATION TEST - VER 1.	All
16	Turn the ignition off. Remove IPM Fuse #10. Disconnect the IPM C6 harness connector. Measure the resistance between IPM Fuse #10 (power output cavity) and cavity 7 of the IPM C6 connector (IPM side). Is the resistance below 5 ohms? Yes → Repair the Fused Front Blower Motor Relay Output circuit for an open. Perform BODY VERIFICATION TEST - VER 1. No → Replace the IPM in accordance with the Service Information. Perform BODY VERIFICATION TEST - VER 1.	All

Symptom:
*FRONT BLOWER MOTOR SPEEDS INCORRECT - MTC

POSSIBLE CAUSES
BLOWER MOTOR DRIVER CIRCUIT(S) SHORTED TO GROUND
BLOWER MOTOR DRIVER CIRCUIT(S) SHORTED TO VOLTAGE
BLOWER MOTOR DRIVER CIRCUITS SHORTED TOGETHER
A/C - HEATER CONTROL MODULE - SPEEDS INCORRECT
BLOWER MOTOR DRIVER CIRCUIT(S) OPEN
BLOWER MOTOR RESISTOR BLOCK - OPEN SPEED

TEST	ACTION	APPLICABILITY
1	Turn the ignition off. Disconnect the A/C - Heater Control Module C2 harness connector. Disconnect the Front Blower Motor Resistor Block C1 harness connector. Measure the resistance between ground and each of the Blower Motor Driver circuits. Is the resistance below 10K ohms on any of the circuits? Yes → Repair all Blower Motor Driver circuits with a resistance below 10K ohms for a short to ground. Perform BODY VERIFICATION TEST - VER 1. No → Go To 2	All
2	Turn the ignition off. Ensure that the Front Blower Motor Resistor Block C1 harness connector is connected to the Front Blower Motor Resistor Block. Disconnect the A/C - Heater Control Module C2 harness connector. Turn the ignition on. Turn the Power switch on the A/C - Heater Control Module on. **NOTE: The test light must illuminate brightly. Compare the brightness to that of a direct connection to the battery.** Using a 12-volt test light connected to ground, back probe each of the Blower Motor Driver circuits (cavities 2, 3, 5, 9, and 10). Does the test light illuminate brightly on each circuit? Yes → Go To 3 No → Go To 5	All
3	Turn the Power switch on the A/C - Heater Control Module off. Turn the ignition off. Disconnect the A/C - Heater Control Module C2 harness connector. Disconnect the Front Blower Motor Resistor Block C1 harness connector. Turn the ignition on. Measure the voltage of each of the Blower Motor Driver circuits (cavities 2, 3, 5, 9, and 10) in the A/C - Heater Control Module C2 harness connector. Is there any voltage present? Yes → Repair all Blower Motor Driver circuits with voltage present for a short to voltage. Perform BODY VERIFICATION TEST - VER 1. No → Go To 4	All

*FRONT BLOWER MOTOR SPEEDS INCORRECT - MTC — Continued

TEST	ACTION	APPLICABILITY
4	Turn the ignition off. Disconnect the A/C - Heater Control Module C2 harness connector. Disconnect the Front Blower Motor Resistor Block C1 harness connector. Measure the resistance between the Blower Motor Low Driver circuit and the M1, M2, M3 and Blower Motor High Driver circuits. Measure the resistance between the Blower Motor M1 Driver circuit and the M2, M3, and Blower Motor High Driver circuits. Measure the resistance between the Blower Motor M2 Driver circuit and the M3 and Blower Motor High Driver circuit. Measure the resistance between the Blower Motor M3 Driver circuit and the Blower Motor High Driver circuit. Is the resistance below 10K ohms between any of the circuits? Yes → Repair the shorted Blower Motor Driver circuits. Perform BODY VERIFICATION TEST - VER 1. No → Replace the A/C - Heater Control Module in accordance with the Service Information. Perform BODY VERIFICATION TEST - VER 1.	All
5	Turn the ignition off. Disconnect the A/C - Heater Control Module C2 harness connector. Disconnect the Front Blower Motor Resistor Block C1 harness connector. Measure the resistance of each Blower Motor Driver circuit between the Front Blower Motor Resistor Block C1 harness connector and the A/C - Heater Control Module C2 harness connector. Is the resistance below 5.0 ohms on each of the circuits? Yes → Replace the Front Blower Motor Resistor Block in accordance with the Service Information. Perform BODY VERIFICATION TEST - VER 1. No → Repair all Blower Motor Driver circuits with a resistance above 5 ohms for an open. Perform BODY VERIFICATION TEST - VER 1.	All

Symptom:

***HVAC SYSTEM TEST - MTC**

POSSIBLE CAUSES
ATTEMPT TO COMMUNICATE WITH THE PCM/ECM, THE BCM, AND THE FCM
CHECK FOR HVAC RELATED DTCS IN THE PCM/ECM
CHECK FOR BCM DTCS
CHECK FOR FCM DTCS
CHECK FOR ACTIVE HVAC DTCS AND SYSTEM TESTS FAULT MESSAGES
CHECK FOR HVAC RELATED DTCS IN THE PCM/ECM
MANUAL A/C SYSTEM TEST

TEST	ACTION	APPLICABILITY
1	Turn the ignition on. With the DRBIII®, attempt to communicate with the Powertrain/Engine Control Module. With the DRBIII®, attempt to communicate with the Body Control Module. With the DRBIII®, attempt to communicate with the Front Control Module. Was the DRBIII® able to communicate with the PCM/ECM, the BCM, and the FCM? Yes → Go To 2 No → Refer to the communication category for the related symptom(s). Perform BODY VERIFICATION TEST - VER 1.	All
2	With the DRBIII®, read Powertrain/Engine Computer DTCs. Are any HVAC related DTCs present? Yes → Refer to the Powertrain Diagnostic Procedures Manual for the related symptom(s). Perform BODY VERIFICATION TEST - VER 1. No → Go To 3	All
3	With the DRBIII®, read Body Computer DTCs. Are any DTCs present? Yes → Refer to the appropriate catagory for the related symptom(s). Perform BODY VERIFICATION TEST - VER 1. No → Go To 4	All
4	With the DRBIII®, read Front Control Module DTCs. Are any DTCs present? Yes → For FCM DTCs related to the blower relay circuits, refer to the Heating & A/C catagory. For all other FCM DTCs, refer to the symptom list in the related catagory. Perform BODY VERIFICATION TEST - VER 1. No → Go To 5	All

*HVAC SYSTEM TEST - MTC — Continued

TEST	ACTION	APPLICABILITY
5	**CAUTION: The evaporator temperature must be above 12.7°C (55°F) and the work area ambient temperature must be above 21.1°C (70°F) to test the A/C system operation.** **NOTE: Active codes must be resolved before diagnosing stored codes.** **NOTE: Anytime a DTC becomes active, or a Cooldown Test or HVAC Door Recalibration fault message is displayed, proceed to the conclusion question.** **NOTE: If multiple codes appear, diagnose those that relate to a short circuit first.** Start the engine. Press the A/C - Heater Control power switch on. Turn the mode select control to the panel position. Verify that the front blower motor and, if equipped, rear blower motor operates correctly in all speeds from each control. Diagnose and repair all blower related faults before proceeding with this test. Turn the front blower motor control to the high speed position. **NOTE: Before actuating the AC Cooldown Test, verify that the A/C compressor is not running. If the compressor is running, turn the A/C off and allow the evaporator to warm up before proceeding with the test.** With the DRBIII® in HVAC, System Tests, actuate the AC Cooldown Test. Turn the front blower motor control to the low speed position. If equipped, turn the rear blower motor control to the rear position. Set the passenger blend control to the full cold position. If equipped, set the zone/driver blend control to the full cold position. If equipped, on the Rear Blower Rear Control, set the rear blend/mode control to the full cold position. Monitor the DRBIII® for active HVAC DTCs while performing the following test steps. Turn the mode select control to the defrost position, wait 30 seconds, and then turn it back to the panel position. Press the recirculation mode switch on, wait 30 seconds, and then press it off. Press the A/C mode switch on, wait 30 seconds, and then press it off. Press the rear window defogger switch on, wait 30 seconds, and then press it off. Move the passenger blend control from full cold to full hot, wait 30 seconds, and then move it back to full cold. If equipped, move the zone/driver blend control from full cold to full hot, wait 30 seconds, and then move it back to full cold. If equipped, on the Rear Blower Rear Control, move the rear blend/mode control from full cold to full hot, wait 30 seconds, and then move it back to full cold. With the DRBIII® in HVAC, System Tests, actuate the HVAC Door Recalibration Test. Does the DRBIII® display any active HVAC DTC(s) or System Tests fault message(s)? Yes → Return to the symptom list and choose the symptom(s). Perform BODY VERIFICATION TEST - VER 1. No → Go To 6	All
6	With the DRBIII®, read PCM/ECM DTCs. Are any HVAC related DTCs present? Yes → Refer to the Powertrain Diagnostic Procedures Manual for the related symptom(s). Perform BODY VERIFICATION TEST - VER 1. No → Recheck the climate control system performance. Refer to Service Information for additional information. Perform BODY VERIFICATION TEST - VER 1.	All

Symptom:

***REAR A/C - HEATER CONTROL ILLUMINATION INOPERATIVE - MTC**

POSSIBLE CAUSES
CHECK FOR HVAC DTCS
CHECK FOR BCM DTCS
INOPERATIVE BULB
GROUND CIRCUIT OPEN
REAR BLOWER REAR CONTROL SWITCH
PANEL LAMPS DRIVER CIRCUIT OPEN
BODY CONTROL MODULE - PANEL LAMPS DRIVER OPEN

TEST	ACTION	APPLICABILITY
1	Turn the ignition on. With the DRBIII®, read HVAC DTCs. Does the DRBIII® display any HVAC DTCs? Yes → Return to the symptom list and choose the symptom(s). Perform BODY VERIFICATION TEST - VER 1. No → Go To 2	All
2	Turn the ignition on. With the DRBIII®, read the BCM DTCs. Does DRBIII® display Headlamp Switch: Mismatch; STG; Open; or Panel Dim Output Short? Yes → Refer to symptoms Headlamp Switch Mismatch, Headlamp Switch Shorted To Ground, and Headlamp Switch Open in the Exterior Lighting catagory. Refer to symptom Panel Dimming Output Short in the Instrument Cluster catagory. Perform BODY VERIFICATION TEST - VER 1. No → Go To 3	All
3	Turn the ignition off. Remove the bulb from the Rear Blower Rear Control Switch. **NOTE: Hold the bulb in front of a lamp to see the filament.** Inspect the bulb. Is the bulb Ok? Yes → Go To 4 No → Replace the bulb. Perform BODY VERIFICATION TEST - VER 1.	All

*REAR A/C - HEATER CONTROL ILLUMINATION INOPERATIVE - MTC

— Continued

TEST	ACTION	APPLICABILITY
4	Turn the ignition off. Rotate the Panel Lamps Dimmer switch to the off position. Disconnect the Rear Blower Rear Control Switch C2 harness connector. Turn the Headlamp switch on. Measure the voltage of the Panel Lamps Driver circuit while rotating the Panel Lamps Dimmer switch from the off position to the full brightness position. Does the voltage change from approximately 2.5 volts to 11.5 volts? Yes → Go To 5 No → Go To 6	All
5	Turn the Headlamp switch off. Turn the ignition off. Disconnect the Rear Blower Rear Control Switch C2 harness connector. Measure the resistance of the Ground circuit between the Rear Blower Rear Control switch C2 harness connector and ground. Is the resistance below 5 ohms? Yes → Replace the Rear Blower Rear Control Switch in accordance with the Service Information. Perform BODY VERIFICATION TEST - VER 1. No → Repair the Ground circuit for an open. Perform BODY VERIFICATION TEST - VER 1.	All
6	Turn the ignition off. Disconnect the Rear Blower Rear Control Switch C2 harness connector. Disconnect the Body Control Module C3 harness connector. Measure the resistance of the Panel Lamps Driver circuit between the Rear Blower Rear Control Switch C2 harness connector and the Body Control Module C3 harness connector. Is the resistance below 5 ohms? Yes → Replace the Body Control Module in accordance with the Service Information. Perform BODY VERIFICATION TEST - VER 1. No → Repair the Panel Lamps Driver circuit for an open. Perform BODY VERIFICATION TEST - VER 1.	All

Symptom:

*REAR BLOWER MOTOR INOPERATIVE - MTC

POSSIBLE CAUSES
FRONT CONTROL MODULE (FCM) DTC(S) PRESENT
IPM FUSE #12
FUSED REAR BLOWER MOTOR RELAY OUTPUT CIRCUIT SHORTED TO GROUND
BLOWER MOTOR
GROUND CIRCUIT OPEN
A/C - HEATER CONTROL MODULE
CHECK FOR POWER TO REAR BLOWER MOTOR
BLOWER MOTOR
REAR BLOWER HIGH SPEED CIRCUIT OPEN
REAR BLOWER MOTOR HIGH CIRCUIT OPEN
REAR BLOWER MOTOR RESISTOR BLOCK
IPM - OPEN CIRCUIT
IPM - OPEN CIRCUIT
REAR BLOWER MOTOR RELAY
IPM - OPEN CIRCUIT
FUSED REAR BLOWER MOTOR RELAY OUTPUT CIRCUIT OPEN

TEST	ACTION	APPLICABILITY
1	With the DRBIII® in Front Control Module, read the active DTCs. Are any active FCM DTCs present? Yes → For FCM DTCs related to the blower relay circuits, refer to the Heating & A/C catagory. For all other FCM DTCs, refer to the symptom list in the related catagory. Perform BODY VERIFICATION TEST - VER 1. No → Go To 2	All
2	Turn the ignition off. Remove and inspect Intelligent Power Module (IPM) Fuse #12. Is the fuse open? Yes → Go To 3 No → Go To 5	All

*REAR BLOWER MOTOR INOPERATIVE - MTC — Continued

TEST	ACTION	APPLICABILITY
3	Replace IPM Fuse #12. Turn the ignition on. Turn the Power switch on the A/C - Heater Control Module on. Turn the rear blower on and operate it in all speeds and modes. Does the blower motor operate properly without blowing the fuse? Yes → Check the Fused Rear Blower Motor Relay Output circuit for an intermittent short to ground. Repair as necessary. Perform BODY VERIFICATION TEST - VER 1. No → Go To 4	All
4	Turn the ignition off. Disconnect the Rear Blower Motor 2-pin harness connector. Measure the resistance between ground and the Fused Rear Blower Motor Relay Output circuit. Is the resistance below 10K ohms? Yes → Repair the Fused Rear Blower Motor Relay Output circuit for a short to ground. Replace IPM Fuse #12. Perform BODY VERIFICATION TEST - VER 1. No → Replace the Rear Blower Motor in accordance with the Service Information. Replace IPM Fuse #12 Perform BODY VERIFICATION TEST - VER 1.	All
5	Ensure IPM Fuse #12 is installed. Disconnect the Rear Blower Front Control Switch harness connector. Turn the ignition on. Turn the Power switch on the A/C - Heater Control Module on. **NOTE: The test light must illuminate brightly. Compare the brightness to that of a direct connection to the battery.** Using a 12-volt test light connected to ground, back probe the Rear Blower Motor High circuit in the Rear Blower Front Control Switch harness connector. Does the test light illuminate brightly? Yes → Go To 6 No → Go To 7	All
6	Turn the ignition off. Disconnect the Rear Blower Front Control Switch harness connector. Measure the resistance of the Ground circuit between the Rear Blower Front Control Switch harness connector and ground. Is the resistance below 5.0 ohms? Yes → Replace the A/C - Heater Control Module in accordance with the Service Information. Perform BODY VERIFICATION TEST - VER 1. No → Repair the Ground circuit for an open. Perform BODY VERIFICATION TEST - VER 1.	All

*REAR BLOWER MOTOR INOPERATIVE - MTC — Continued

TEST	ACTION	APPLICABILITY
7	Turn the ignition on. Turn the Power switch on the A/C - Heater Control Module on. **NOTE: The test light must illuminate brightly. Compare the brightness to that of a direct connection to the battery.** Using a 12-volt test light connected to ground, back probe the Fused Rear Blower Motor Relay Output circuit in the Rear Blower Motor 2-pin harness connector. Does the test light illuminate brightly? Yes → Go To 8 No → Go To 11	All
8	Turn the Power switch on the A/C - Heater Control Module off. Turn the ignition off. Using a jumper wire connected to ground, back probe the DB/OR wire in the Rear Blower Motor 2-pin harness connector. Turn the ignition on. Turn the Power switch on the A/C - Heater Control Module on. Does the blower motor run at high speed? Yes → Go To 9 No → Replace the Rear Blower Motor in accordance with the Service Information. Perform BODY VERIFICATION TEST - VER 1.	All
9	Turn the ignition off. Disconnect the Rear Blower Motor 2-pin harness connector. Disconnect the Rear Blower Motor Resistor Block harness connector. Measure the resistance of the DB/OR wire between the Rear Blower Motor 2-pin harness connector and the Rear Blower Motor Resistor Block harness connector. Is the resistance below 5 ohms? Yes → Go To 10 No → Repair the DB/OR wire between the Rear Blower Motor 2-pin harness connector and the Rear Blower Motor Resistor Block harness connector for an open. Perform BODY VERIFICATION TEST - VER 1.	All
10	Turn the ignition off. Disconnect the Rear Blower Motor Resistor Block harness connector. Disconnect the Rear Blower Front Control Switch harness connector. Measure the resistance of the Rear Blower Motor High circuit between the Rear Blower Motor Resistor Block harness connector and the Rear Blower Front Control Switch harness connector. Is the resistance below 5 ohms? Yes → Replace the Rear Blower Motor Resistor Block in accordance with the Service Information. Perform BODY VERIFICATION TEST - VER 1. No → Repair the Rear Blower Motor High circuit for an open. Perform BODY VERIFICATION TEST - VER 1.	All

*REAR BLOWER MOTOR INOPERATIVE - MTC — Continued

TEST	ACTION	APPLICABILITY
11	Turn the ignition off. Remove the Rear Blower Motor Relay from the IPM. **NOTE: The test light must illuminate brightly. Compare the brightness to that of a direct connection to the battery.** Using a 12-volt test light connected to ground, probe cavity 30 of the Rear Blower Motor Relay connector. Does the test light illuminate brightly? Yes → Go To 12 No → Replace the IPM in accordance with the Service Information. Perform BODY VERIFICATION TEST - VER 1.	All
12	Turn the ignition off. Remove the Rear Blower Motor Relay from the IPM. Remove IPM Fuse #12. Measure the resistance between cavity 87 of the Rear Blower Motor Relay connector and IPM Fuse #12 (power input cavity). Is the resistance below 5 ohms? Yes → Go To 13 No → Replace the IPM in accordance with the Service Information. Perform BODY VERIFICATION TEST - VER 1.	All
13	Turn the ignition off. Make sure that the Rear Blower Motor Relay is installed. Remove IPM Fuse #12. Turn the ignition on. **NOTE: The test light must illuminate brightly. Compare the brightness to that of a direct connection to the battery.** Using a 12-volt test light connected to ground, probe IPM Fuse #12 (power input cavity). Does the test light illuminate brightly? Yes → Go To 14 No → Replace the Rear Blower Motor Relay in accordance with the Service Information. Perform BODY VERIFICATION TEST - VER 1.	All
14	Turn the ignition off. Remove IPM Fuse #12. Disconnect the IPM C8 harness connector. Measure the resistance between IPM Fuse #12 (power output cavity) and cavity 7 of the IPM C8 connector (IPM side). Is the resistance below 5 ohms? Yes → Repair the Fused Rear Blower Motor Relay Output circuit for an open. Perform BODY VERIFICATION TEST - VER 1. No → Replace the IPM in accordance with the Service Information. Perform BODY VERIFICATION TEST - VER 1.	All

Symptom:

*REAR BLOWER MOTOR SPEEDS INCORRECT - MTC

POSSIBLE CAUSES
REAR BLOWER REAR CONTROL SWITCH
REAR BLOWER MOTOR DRIVER CIRCUIT(S) SHORTED TO GROUND
A/C - HEATER CONTROL MODULE
REAR BLOWER REAR CONTROL SWITCH
REAR BLOWER MOTOR DRIVER CIRCUIT(S) SHORTED TO VOLTAGE
REAR BLOWER MOTOR FRONT CONTROL FEED CIRCUIT SHORTED TO VOLTAGE
REAR BLOWER DRIVER CKT(S) SHORTED TO REAR BLOWER FRONT CONTROL FEED CKT
REAR BLOWER MOTOR DRIVER CIRCUITS SHORTED TOGETHER
A/C - HEATER CONTROL MODULE
REAR BLOWER MOTOR DRIVER CIRCUIT(S) OPEN
REAR BLOWER MOTOR RESISTOR BLOCK

TEST	ACTION	APPLICABILITY
1	Turn the Rear Blower switch on the A/C - Heater Control Module off. Turn the ignition on. Turn the Power switch on the A/C - Heater Control Module on. Does the rear blower run? Yes → Go To 2 No → Go To 4	All
2	Turn the Rear Blower switch on the A/C - Heater Control Module off. Turn the Power switch on the A/C - Heater Control Module off. Turn the ignition off. Disconnect the Rear Blower Rear Control Switch C1 harness connector. Turn the ignition on. Turn the Power switch on the A/C - Heater Control Module on. Does the rear blower run? Yes → Go To 3 No → Replace the Rear Blower Rear Control Switch in accordance with the Service Information. Perform BODY VERIFICATION TEST - VER 1.	All

*REAR BLOWER MOTOR SPEEDS INCORRECT - MTC — Continued

TEST	ACTION	APPLICABILITY
3	Turn the ignition off. Disconnect the Rear Blower Front Control Switch harness connector. Disconnect the Rear Blower Rear Control Switch C1 harness connector. Measure the resistance between ground and each of the Rear Blower Motor Driver circuits (Low, Medium, and High) in the Rear Blower Front Control Switch harness connector. Is the resistance below 10K ohms on any of the circuits? Yes → Repair all Rear Blower Motor Driver circuits with a resistance below 10K ohms for a short to ground. Perform BODY VERIFICATION TEST - VER 1. No → Replace the A/C - Heater Control Module in accordance with the Service Information. Perform BODY VERIFICATION TEST - VER 1.	All
4	Turn the Rear Blower switch on the A/C - Heater Control Module off. Turn the Power switch on the A/C - Heater Control Module off. Turn the ignition off. Disconnect the Rear Blower Rear Control Switch C1 harness connector. Turn the ignition on. Turn the Power switch on the A/C - Heater Control Module on. Turn the Rear Blower switch on the A/C - Heater Control Module to the Low, Medium, and High speed positions while listening for the rear blower motor to change speed accordingly. Does the rear blower speed change accordingly? Yes → Replace the Rear Blower Rear Control Switch in accordance with the Service Information. Perform BODY VERIFICATION TEST - VER 1. No → Go To 5	All
5	Turn the Power switch on the A/C - Heater Control Module off. Turn the ignition off. Disconnect the Rear Blower Front Control Switch harness connector. Disconnect the Rear Blower Rear Control Switch C1 harness connector. Turn the ignition on. Turn the Power switch on the A/C - Heater Control Module on. **NOTE: The test light must illuminate brightly. Compare the brightness to that of a direct connection to the battery.** Using a 12-volt test light connect to ground, back probe each of the Rear Blower Motor Driver circuits (Low, Medium, and High) in the Rear Blower Front Control Switch harness connector and in the Rear Blower Rear Control Switch C1 harness connector. Does the test light illuminate brightly on each circuit? Yes → Go To 6 No → Go To 10	All

*REAR BLOWER MOTOR SPEEDS INCORRECT - MTC — Continued

TEST	ACTION	APPLICABILITY
6	Turn the Power switch on the A/C - Heater Control Module off. Turn the ignition off. Disconnect the Rear Blower Front Control Switch harness connector. Disconnect the Rear Blower Rear Control Switch C1 harness connector. Turn the ignition on Measure the voltage of each of the Rear Blower Motor Driver circuits (Low, Medium, and High). Is there voltage present on any of the circuits? Yes → Repair all Rear Blower Motor Driver circuits with voltage present for a short to voltage. Perform BODY VERIFICATION TEST - VER 1. No → Go To 7	All
7	Turn the Power switch on the A/C - Heater Control Module off. Turn the ignition off. Disconnect the Rear Blower Front Control Switch harness connector. Disconnect the Rear Blower Rear Control Switch C1 harness connector. Turn the ignition on Measure the voltage of the Rear Blower Motor Front Control Feed circuit. Is there any voltage present? Yes → Repair the Rear Blower Motor Front Control Feed circuit for a short to voltage. Perform BODY VERIFICATION TEST - VER 1. No → Go To 8	All
8	Turn the ignition off. Disconnect the Rear Blower Front Control Switch harness connector. Disconnect the Rear Blower Rear Control Switch C1 harness connector. Measure the resistance between the Rear Blower Motor Front Control Feed circuit and each of the Rear Blower Motor Driver circuits (Low, Medium, and High). Is the resistance below 10K ohms on any of the circuits? Yes → Repair all Rear Blower Motor Driver circuits with a resistance below 10K ohms for a short to the Rear Blower Motor Front Control Feed circuit. Perform BODY VERIFICATION TEST - VER 1. No → Go To 9	All
9	Turn the ignition off. Disconnect the Rear Blower Front Control Switch harness connector. Disconnect the Rear Blower Rear Control Switch C1 harness connector. Disconnect the Rear Blower Motor Resistor Block harness connector. Measure the resistance between the Rear Blower Motor Low circuit and the Rear Blower Motor Medium and High circuits. Measure the resistance between the Rear Blower Motor Medium circuit and the Rear Blower Motor High circuit. Is the resistance below 10K ohms between any of the circuits? Yes → Repair the shorted Rear Blower Motor Driver circuits. Perform BODY VERIFICATION TEST - VER 1. No → Replace the A/C - Heater Control Module in accordance with the Service Information. Perform BODY VERIFICATION TEST - VER 1.	All

*REAR BLOWER MOTOR SPEEDS INCORRECT - MTC — Continued

TEST	ACTION	APPLICABILITY
10	Turn the ignition off. Disconnect the Rear Blower Front Control Switch harness connector. Disconnect the Rear Blower Rear Control Switch C1 harness connector. Disconnect the Rear Blower Motor Resistor Block harness connector. Measure the resistance of each of the Rear Blower Motor Driver circuits (Low, Medium, and High) between the Rear Blower Motor Resistor Block harness connector and the Rear Blower Motor Front Control Switch harness connector. Measure the resistance of each of the Rear Blower Motor Driver circuits (Low, Medium, and High) between the Rear Blower Motor Resistor Block harness connector and the Rear Blower Rear Control Switch C1 harness connector. Is the resistance below 5.0 ohms on each of the circuits? Yes → Replace the Rear Blower Motor Resistor Block in accordance with the Service Information. Perform BODY VERIFICATION TEST - VER 1. No → Repair all Rear Blower Motor Driver circuit(s) with a resistance above 5 ohms for an open. Perform BODY VERIFICATION TEST - VER 1.	All

Symptom:

***REAR BLOWER REAR CONTROL SWITCH INOP IN ONE OR MORE SPEEDS - MTC**

POSSIBLE CAUSES
REAR BLOWER MOTOR DRIVER CIRCUIT(S) OPEN
REAR BLOWER REAR CONTROL SWITCH
REAR BLOWER MOTOR FRONT CONTROL FEED CIRCUIT OPEN
A/C - HEATER CONTROL MODULE

TEST	ACTION	APPLICABILITY
1	Turn the ignition off. Disconnect the Rear Blower Rear Control Switch C1 harness connector. Turn the ignition on. Turn the Power switch on the A/C - Heater Control Module on. **NOTE: The test light must illuminate brightly. Compare the brightness to that of a direct connection to the battery.** Using a 12-volt test light connected to ground, back probe each of the Rear Blower Motor Driver circuits (Low, Medium, and High). Does the test light illuminate brightly on each circuit? Yes → Go To 2 No → Repair all Rear Blower Motor Driver circuits that failed to illuminate the test light brightly for an open. Perform BODY VERIFICATION TEST - VER 1.	All
2	Turn the Power switch on the A/C - Heater Control Module off. Turn the ignition off. Make sure that the Rear Blower Rear Control C1 harness connector is connected to the Rear Blower Rear Control Switch. Using a jumper wire connected to ground, back probe the Rear Blower Motor Front Control Feed circuit in the Rear Blower Rear Control Switch C1 harness connector. Turn the ignition on. Turn the Power switch on the A/C - Heater Control Module on. Turn the Blower switch on the Rear Blower Rear Control Switch to each speed position. Does the rear blower run in all speeds? Yes → Go To 3 No → Replace the Rear Blower Rear Control Switch in accordance with the Service Information. Perform BODY VERIFICATION TEST - VER 1.	All

*REAR BLOWER REAR CONTROL SWITCH INOP IN ONE OR MORE SPEEDS - MTC — Continued

TEST	ACTION	APPLICABILITY
3	Turn the ignition off. Disconnect the Rear Blower Front Control Switch harness connector. Disconnect the Rear Blower Rear Control Switch C1 harness connector. Measure the resistance of the Rear Blower Motor Front Control Feed circuit between the Rear Blower Front Control Switch harness connector and the Rear Blower Rear Control Switch C1 harness connector. Is the resistance below 5.0 ohms? Yes → Replace the A/C - Heater Control Module in accordance with the Service Information. Perform BODY VERIFICATION TEST - VER 1. No → Repair the Rear Blower Motor Front Control Feed circuit for an open. Perform BODY VERIFICATION TEST - VER 1.	All

Symptom List:

ABS LAMP CKT SHORT
ABS LAMP OPEN
AIRBAG LAMP CKT SHORT
AIRBAG LAMP OPEN

Test Note: All symptoms listed above are diagnosed using the same tests. The title for the tests will be ABS LAMP CKT SHORT.

POSSIBLE CAUSES
INSTRUMENT CLUSTER

TEST	ACTION	APPLICABILITY
1	**NOTE: The Instrument Cluster performs internal tests on the ABS and Airbag indicator lamps during each ignition cycle. Instrument cluster LEDs are not replaceable.** Turn the ignition on. With the DRBIII®, record and erase DTC's. Turn the ignition off, wait 15 seconds, then turn the ignition on. With the DRBIII®, read DTCs. Did the DTC reset? Yes → Replace the Instrument Cluster in accordance with the Service Information. Perform BODY VERIFICATION TEST - VER 1. No → Test Complete.	All

Symptom:
EL PANEL SHORT

POSSIBLE CAUSES
CHECK EXTERIOR ILLUMINATION
CHECK OPERATION OF ALL GAUGES
VERIFY CONCERN
PANEL LAMP DRIVER CIRCUIT SHORT TO GROUND
PANEL LAMP DRIVER OPEN CIRCUIT
OPEN GROUND CIRCUIT
BCM PANEL LAMP DRIVER CIRCUIT INTERNAL FAILURE
INSTRUMENT CLUSTER PANEL LAMPS DRIVER INTERNAL FAILURE

TEST	ACTION	APPLICABILITY
1	Ignition on, engine not running. Turn the Headlamp Switch to the ON position. Monitor the Instrument Cluster gauges for illumination. Are any Instrument Cluster gauges illuminated? Yes → Go To 3 No → Go To 2	All
2	Ignition on, engine not running. Turn the Headlamp Switch to the ON position. Monitor the Instrument Cluster gauges for illumination. Are all of the Instrument Cluster gauges illuminated? Yes → Go To 3 No → Replace the Instrument Cluster. Perform BODY VERIFICATION TEST - VER 1.	All
3	Ignition on, engine not running. Turn the headlamp switch to the ON position. Monitor the Headlamps for illumination. Are the Headlamps illuminated? Yes → Go To 4 No → Refer to EXTERIOR ILLUMINATION for the related symptom(s). Perform BODY VERIFICATION TEST - VER 1.	All
4	Ignition on, engine not running. With the DRBIII®, erase DTCs. Cycle the ignition switch from OFF to ON. Wait 1 to 2 minutes for the system to cycle. With the DRBIII®, read DTCs. Did the DTC reset? Yes → Go To 5 No → Perform the Instrument Cluster Self-Test and verify the concern. Perform BODY VERIFICATION TEST - VER 1.	All

EL PANEL SHORT — Continued

TEST	ACTION	APPLICABILITY
5	Turn the ignition off. Disconnect the Instrument Cluster harness connector. Measure the resistance between ground and the Panel Lamps Driver circuit (Instrument Cluster harness). Disconnect the BCM C2 harness connector. Is the resistance above 10,000 ohms? Yes → Go To 6 No → Repair the Panel Lamps Driver Circuit for a Short to Ground. Perform BODY VERIFICATION TEST - VER 1.	All
6	Turn the ignition off. Disconnect the BCM C2 harness connector. Disconnect the Instrument Cluster harness connector. Measure the resistance of the Panel Lamps Driver circuit between the BCM C2 connector and the Instrument Cluster connector. Is the resistance below 5.0 ohms? Yes → Go To 7 No → Repair the Panel Lamp Driver Circuit for an open. Perform BODY VERIFICATION TEST - VER 1.	All
7	Turn the ignition off. Disconnect the Instrument Cluster harness connector. Measure the resistance of the Instrument Cluster harness ground circuits. Are the resistances below 5.0 ohms? Yes → Go To 8 No → Repair Instrument Cluster ground circuit for an open. Perform BODY VERIFICATION TEST - VER 1.	All
8	Turn the ignition off. Disconnect the BCM C2 harness connector. Connect a jumper wire between Panel Lamps Driver circuit (BCM C2 harness) and B(+). Turn the ignition on. Monitor the Instrument Cluster gauges for illumination. Did the Instrument Cluster gauges illuminate? Yes → Replace the Body Control Module. With the DRBIII, erase DTC's. Perform BODY VERIFICATION TEST - VER 1. No → Test Complete.	All

Symptom:
FRONT FOG LAMP INDICATOR OPEN

POSSIBLE CAUSES
INTERMITTENT WIRING AND CONNECTORS
FRONT FOG LAMP INDICATOR CIRCUIT OPEN
FRONT FOG LAMP INDICATOR GROUND CIRCUIT OPEN
FRONT FOG LAMP INDICATOR CIRCUIT SHORT TO VOLTAGE
HEADLAMP SWITCH
BODY CONTROL MODULE

TEST	ACTION	APPLICABILITY
1	Turn the ignition on. With the DRBIII®, record and erase Body Control Module DTC's. Turn the ignition off, wait 15 seconds, then turn the ignition on. Turn on the Front Fog Lamps. With the DRBIII®, read DTCs. Does the DRBIII® display FRONT FOG LAMP INDICATOR OPEN? Yes → Go To 2 No → Go To 8	All
2	Turn the ignition off to the lock position. **Note: Check connectors - Clean/repair as necessary.** Ignition on, engine not running. Turn ON the Front Fog Lamps. Using a 12-volt test light connected to ground, back probe the Front Fog Lamp Indicator circuit in the Headlamp Switch harness connector. **NOTE: The test light must illuminate brightly. Compare the brightness to that of a direct connection to the battery.** Does the test light illuminate brightly? Yes → Go To 3 No → Go To 6	All
3	Turn the ignition off to the lock position. Disconnect the Body Control Module harness connector. Disconnect the Headlamp Switch harness connector. **Note: Check connectors - Clean/repair as necessary.** Measure the resistance of the Front Fog Lamp Indicator Ground circuit from the Body Control Module harness connector to the Headlamp Switch harness connector. Is the resistance above 5.0 ohms? Yes → Repair the Front Fog Lamp Indicator Ground circuit for an open. Perform BODY VERIFICATION TEST - VER 1. No → Go To 4	All

FRONT FOG LAMP INDICATOR OPEN — Continued

TEST	ACTION	APPLICABILITY
4	Turn the ignition off to the lock position. Disconnect the Body Control Module harness connector. Disconnect the Headlamp Switch harness connector. **Note: Check connectors - Clean/repair as necessary.** Ignition on, engine not running. Measure the voltage of the Front Fog Lamp Indicator circuit in the Headlamp Switch harness connector. Is the voltage above 0.5 volt? Yes → Repair the Front Fog Lamp Indicator circuit for a short to voltage. Perform BODY VERIFICATION TEST - VER 1. No → Go To 5	All
5	If there are no possible causes remaining, view repair. Repair Replace the Headlamp Switch. Perform BODY VERIFICATION TEST - VER 1.	All
6	Turn the ignition off to the lock position. Disconnect the Body Control Module harness connector. Disconnect the Headlamp Switch harness connector. **Note: Check connectors - Clean/repair as necessary.** Measure the resistance of the Front Fog Lamp Indicator circuit from the Body Control Module harness connector to the Headlamp Switch harness connector. Is the resistance above 5.0 ohms? Yes → Repair the Front Fog Lamp Indicator circuit for an open. Perform BODY VERIFICATION TEST - VER 1. No → Go To 7	All
7	If there are no possible causes remaining, view repair. Repair Replace the Body Control Module. Perform BODY VERIFICATION TEST - VER 1.	All
8	The conditions necessary to set this DTC are not present at this time. Using the schematics as a guide, inspect the wiring and connectors specific to this circuit. Wiggle the wiring while checking for shorts and open circuits. Were there any problems found? Yes → Repair as necessary. Perform BODY VERIFICATION TEST - VER 1. No → Test Complete.	All

Symptom:
FRONT FOG LAMP INDICATOR SHORT TO GROUND

POSSIBLE CAUSES
INTERMITTENT WIRING AND CONNECTORS
FRONT FOG LAMP INDICATOR CIRCUIT SHORT TO GROUND
HEADLAMP SWITCH
BODY CONTROL MODULE

TEST	ACTION	APPLICABILITY
1	Turn the ignition on. With the DRBIII®, record and erase Body Control Module DTC's. Turn the ignition off, wait 15 seconds, then turn the ignition on. With the DRBIII®, read DTCs. Does the DRBIII® display FRONT FOG LAMP INDICATOR SHORT TO GROUND? Yes → Go To 2 No → Go To 6	All
2	Turn the ignition off to the lock position. **Note: Check connectors - Clean/repair as necessary.** Ignition on, engine not running. Turn ON the Front Fog Lamps. Using a 12-volt test light connected to ground, back probe the Rear Fog Lamp Indicator circuit in the Headlamp Switch harness connector. **NOTE: The test light must illuminate brightly. Compare the brightness to that of a direct connection to the battery.** Does the test light illuminate brightly? Yes → Go To 3 No → Go To 4	All
3	If there are no possible causes remaining, view repair. Repair Replace the Headlamp Switch. Perform BODY VERIFICATION TEST - VER 1.	All
4	Turn the ignition off to the lock position. Disconnect the Body Control Module harness connector. Disconnect the Headlamp Switch harness connector. **Note: Check connectors - Clean/repair as necessary.** Measure the resistance between ground and the Front Fog Lamp Indicator circuit. Is the resistance below 5.0 ohms? Yes → Repair the Front Fog Lamp Indicator circuit for a short to ground. Perform BODY VERIFICATION TEST - VER 1. No → Go To 5	All
5	If there are no possible causes remaining, view repair. Repair Replace the Body Control Module. Perform BODY VERIFICATION TEST - VER 1.	All

FRONT FOG LAMP INDICATOR SHORT TO GROUND — Continued

TEST	ACTION	APPLICABILITY
6	The conditions necessary to set this DTC are not present at this time. Using the schematics as a guide, inspect the wiring and connectors specific to this circuit. Wiggle the wiring while checking for shorts and open circuits. Were there any problems found? Yes → Repair as necessary. Perform BODY VERIFICATION TEST - VER 1. No → Test Complete.	All

Symptom List:

FUEL GAUGE CHECKSUM FAILURE
SPEEDOMETER CHECKSUM FAILURE
TACHOMETER CHECKSUM FAILURE
TEMPERATURE GAUGE CHECKSUM FAILURE

Test Note: All symptoms listed above are diagnosed using the same tests. The title for the tests will be FUEL GAUGE CHECKSUM FAILURE.

POSSIBLE CAUSES
INSTRUMENT CLUSTER

TEST	ACTION	APPLICABILITY
1	Turn the ignition on. With the DRBIII®, record and erase DTC's. Turn the ignition off, wait 15 seconds, then turn the ignition on. With the DRBIII®, read DTCs. Did the Checksum DTC reset? Yes → Replace the Instrument Cluster in accordance with the Service Information. Perform BODY VERIFICATION TEST - VER 1. No → Test Complete.	All

Symptom:
FUEL LEVEL SENDING UNIT INPUT OPEN

When Monitored and Set Condition:

FUEL LEVEL SENDING UNIT INPUT OPEN

When Monitored: With the ignition on.

Set Condition: Fuel Level Input to the BCM is greater than 9.8 volts for greater than 62.5 milliseconds.

POSSIBLE CAUSES
INTERMITTENT CONDITION
FUEL LEVEL SENSOR SIGNAL SHORTED TO B+
GROUND CIRCUIT OPEN
FUEL LEVEL SENDING UNIT OPERATION
FUEL LEVEL SENSOR SIGNAL CIRCUIT OPEN
BCM

TEST	ACTION	APPLICABILITY
1	Turn the ignition on. With the DRBIII®, erase DTCs. Cycle the ignition off and on, leaving ignition key on for at least 15 seconds. With the DRBIII® in Body Computer, read DTCs. Does the DTC reset? Yes → Go To 2 No → Go To 7	All
2	Turn the ignition off. Disconnect the Fuel Tank Module harness connector. Turn the ignition on. **NOTE: The BCM sends out a low current 12 volt signal on the Fuel Level Sensor Signal circuit. This low current should not illuminate a 12 volt test light.** Using a 12-volt test light connected to ground, probe the Fuel Level Sensor Signal circuit in the Fuel Tank Module harness connector. Does the test light illuminate? Yes → Repair the Fuel Level Sensor Signal circuit shorted to battery voltage. Perform BODY VERIFICATION TEST - VER 1. No → Go To 3	All

FUEL LEVEL SENDING UNIT INPUT OPEN — Continued

TEST	ACTION	APPLICABILITY
3	Turn the ignition on. Disconnect the Fuel Tank Module harness connector. Measure the resistance of the Ground circuits in the Fuel Tank Module harness connector. Is the resistance below 5.0 ohms for both measurements? Yes → Go To 4 No → Repair the Ground circuit for an open. Perform BODY VERIFICATION TEST - VER 1.	All
4	Turn the ignition off. Disconnect the Fuel Tank Module harness connector. Turn the ignition on. With the DRBIII® in Body Computer then Sensors, monitor the Fuel Sensor. Using a jumper wire, jumper the Fuel Level Sensor Signal circuit to the ground circuit in the Fuel Tank Module harness connector. Does the DRB display below 0.5 volt? Yes → Replace the Fuel Level Sending Unit. Perform BODY VERIFICATION TEST - VER 1. No → Go To 5	All
5	Turn the ignition off. Disconnect the Fuel Tank Module harness connector. Disconnect the BCM C3 harness connector. Measure the resistance of the Fuel Level Sensor Signal circuit between the Fuel Tank Module harness connector and the BCM harness connector. Is the resistance below 5.0 ohms? Yes → Go To 6 No → Repair the Fuel Level Sensor Signal for an open. Perform BODY VERIFICATION TEST - VER 1.	All
6	If there are no possible causes remaining, view repair. Repair Replace the Body Control Module. Perform BODY VERIFICATION TEST - VER 1.	All
7	**WARNING: WHEN THE ENGINE IS OPERATING, DO NOT STAND IN A DIRECT LINE WITH THE FAN. DO NOT PUT YOUR HANDS NEAR THE PULLEYS, BELTS OR FAN. DO NOT WEAR LOOSE CLOTHING.** **NOTE: The conditions that set the DTC are not present at this time. The following list may help in identifying the intermittent condition.** With the engine running at normal operating temperature, monitor the DRB parameters related to the DTC while wiggling the wiring harness. Look for parameter values to change and/or a DTC to set. Refer to any Technical Service Bulletins (TSB) that may apply. Visually inspect the related wiring harness. Look for any chafed, pierced, pinched, or partially broken wires. Visually inspect the related wiring harness connectors. Look for broken, bent, pushed out, or corroded terminals. Were any of the above conditions present? Yes → Repair as necessary Perform BODY VERIFICATION TEST - VER 1. No → Test Complete.	All

Symptom:
FUEL LEVEL SENDING UNIT INPUT SHORT

When Monitored and Set Condition:

FUEL LEVEL SENDING UNIT INPUT SHORT

When Monitored: With the ignition on.

Set Condition: Fuel Level Input to the BCM is less than 2 volts for greater than 62.5 milliseconds.

POSSIBLE CAUSES
INTERMITTENT CONDITION
FUEL LEVEL SENDING UNIT OPERATION
FUEL LEVEL SENSOR SIGNAL SHORTED TO GROUND
BCM

TEST	ACTION	APPLICABILITY
1	Turn the ignition on. With the DRBIII®, erase DTCs. Cycle the ignition off and on, leaving ignition key on for at least 15 seconds. With the DRBIII® in Body Computer, read DTCs. Does the DTC reset? Yes → Go To 2 No → Go To 5	All
2	Turn the ignition on. With the DRBIII® in Body Computer and then Sensors, monitor the Fuel Sensor. Disconnect the Fuel Tank Module harness connector. Does the Fuel Sensor voltage go above 9.5 volts? Yes → Replace the Fuel Level Sending Unit. Perform BODY VERIFICATION TEST - VER 1. No → Go To 3	All
3	Turn the ignition off. Disconnect the BCM C3 harness connector. Disconnect Fuel Tank Module harness connector. Measure the resistance of the Fuel Level Sensor Signal circuit in the BCM harness connector to ground. Is the resistance below 5.0 ohms? Yes → Repair the Fuel Level Sensor Signal circuit for a short to ground. Perform BODY VERIFICATION TEST - VER 1. No → Go To 4	All

FUEL LEVEL SENDING UNIT INPUT SHORT — Continued

TEST	ACTION	APPLICABILITY
4	If there are no possible causes remaining, view repair. Repair Replace the Body Control Module. Perform BODY VERIFICATION TEST - VER 1.	All
5	**WARNING: WHEN THE ENGINE IS OPERATING, DO NOT STAND IN A DIRECT LINE WITH THE FAN. DO NOT PUT YOUR HANDS NEAR THE PULLEYS, BELTS OR FAN. DO NOT WEAR LOOSE CLOTHING.** **NOTE: The conditions that set the DTC are not present at this time. The following list may help in identifying the intermittent condition.** With the engine running at normal operating temperature, monitor the DRB parameters related to the DTC while wiggling the wiring harness. Look for parameter values to change and/or a DTC to set. Refer to any Technical Service Bulletins (TSB) that may apply. Visually inspect the related wiring harness. Look for any chafed, pierced, pinched, or partially broken wires. Visually inspect the related wiring harness connectors. Look for broken, bent, pushed out, or corroded terminals. Were any of the above conditions present? Yes → Repair as necessary Perform BODY VERIFICATION TEST - VER 1. No → Test Complete.	All

Symptom:
IOD WAKEUP CLUSTER OUTPUT OPEN

When Monitored and Set Condition:

IOD WAKEUP CLUSTER OUTPUT OPEN

When Monitored: With the ignition on.

Set Condition: The BCM is active and the Instrument Cluster does not responed on the Instrument Cluster Wake Up Sense circuit.

POSSIBLE CAUSES
INTERMITTENT CONDITION
INSTRUMENT CLUSTER WAKE UP SENSE CKT OPEN
INSTRUMENT CLUSTER WAKE UP SENSE CKT SHORT TO GROUND
INSTRUMENT CLUSTER
BODY CONTROL MODULE

TEST	ACTION	APPLICABILITY
1	Turn the ignition on. With the DRBIII®, erase DTCs. Cycle the ignition off and on several times, leaving ignition key on for at least 15 seconds. With the DRBIII® in Body Computer, read DTCs. Does the DTC reset? Yes → Go To 2 No → Go To 5	All
2	Turn the ignition off. Disconnect the BCM C4 harness connector. Turn the ignition on. Measure the voltage of the Instrument Cluster Wake Up Sense circuit in the BCM C4 harness connector. Is the voltage above 10.0 volts? Yes → Replace the Body Control Module. Perform BODY VERIFICATION TEST - VER 1. No → Go To 3	All
3	Turn the ignition off. Disconnect the Instrument Cluster harness connector. Disconnect the BCM C4 harness connector. Measure the resistance of the Instrument Cluster Wake Up Sense circuit between the BCM C4 harness connector and the MIC harness connector. Is the resistance below 5.0 ohms? Yes → Go To 4 No → Repair the Instrument Cluster Wake Up Sense circuit for an open. Perform BODY VERIFICATION TEST - VER 1.	All

IOD WAKEUP CLUSTER OUTPUT OPEN — Continued

TEST	ACTION	APPLICABILITY
4	Turn the ignition off. Disconnect the Instrument Cluster harness connector. Disconnect the BCM C4 harness connector. Measure the resistance of the Instrument Cluster Wake Up Sense circuit in the MIC harness connector to ground. Is the resistance below 5.0 ohms? Yes → Repair the Instrument Cluster Wake Up Sense circuit for a shorted to ground. Perform BODY VERIFICATION TEST - VER 1. No → Replace the Instrument Cluster. Perform BODY VERIFICATION TEST - VER 1.	All
5	**WARNING: WHEN THE ENGINE IS OPERATING, DO NOT STAND IN A DIRECT LINE WITH THE FAN. DO NOT PUT YOUR HANDS NEAR THE PULLEYS, BELTS OR FAN. DO NOT WEAR LOOSE CLOTHING.** **NOTE: The conditions that set the DTC are not present at this time. The following list may help in identifying the intermittent condition.** With the engine running at normal operating temperature, monitor the DRB parameters related to the DTC while wiggling the wiring harness. Look for parameter values to change and/or a DTC to set. Refer to any Technical Service Bulletins (TSB) that may apply. Visually inspect the related wiring harness. Look for any chafed, pierced, pinched, or partially broken wires. Visually inspect the related wiring harness connectors. Look for broken, bent, pushed out, or corroded terminals. Were any of the above conditions present? Yes → Repair as necessary Perform BODY VERIFICATION TEST - VER 1. No → Test Complete.	All

Symptom:

IOD WAKEUP CLUSTER OUTPUT SHORT

When Monitored and Set Condition:

IOD WAKEUP CLUSTER OUTPUT SHORT

When Monitored: With the ignition on.

Set Condition: The BCM is active and senses the Instrument Cluster Wake Up Sense circuit shorted high.

POSSIBLE CAUSES
INTERMITTENT CONDITION
INSTRUMENT CLUSTER WAKE UP SENSE CKT SHORTED TO VOLTAGE
INSTRUMENT CLUSTER
BODY CONTROL MODULE

TEST	ACTION	APPLICABILITY
1	Turn the ignition on. With the DRBIII®, erase DTCs. Cycle the ignition off and on several times, leaving the ignition key on for at least 15 seconds. With the DRBIII® in Body Computer, read DTCs. Does the DTC reset? Yes → Go To 2 No → Go To 4	All
2	Turn the ignition off. Disconnect the BCM C4 harness connector. Turn the ignition on. Using a 12-volt test light connected to ground, probe the Instrument Cluster Wake Up Sense circuit. Is the test light illuminated? Yes → Go To 3 No → Replace the Body Control Module. Perform BODY VERIFICATION TEST - VER 1.	All

IOD WAKEUP CLUSTER OUTPUT SHORT — Continued

TEST	ACTION	APPLICABILITY
3	Turn the ignition off. Disconnect the BCM C4 harness connector. Disconnect the Instrument Cluster harness connector. Turn the ignition on. Using a 12-volt test light connected to ground, probe the Instrument Cluster Wake Up Sense circuit. Is the test light illuminated? Yes → Repair the Instrument Cluster Wake Up Sense circuit for a short to voltage. Perform BODY VERIFICATION TEST - VER 1. No → Replace the Instrument Cluster. Perform BODY VERIFICATION TEST - VER 1.	All
4	**WARNING: WHEN THE ENGINE IS OPERATING, DO NOT STAND IN A DIRECT LINE WITH THE FAN. DO NOT PUT YOUR HANDS NEAR THE PULLEYS, BELTS OR FAN. DO NOT WEAR LOOSE CLOTHING.** **NOTE: The conditions that set the DTC are not present at this time. The following list may help in identifying the intermittent condition.** With the engine running at normal operating temperature, monitor the DRB parameters related to the DTC while wiggling the wiring harness. Look for parameter values to change and/or a DTC to set. Refer to any Technical Service Bulletins (TSB) that may apply. Visually inspect the related wiring harness. Look for any chafed, pierced, pinched, or partially broken wires. Visually inspect the related wiring harness connectors. Look for broken, bent, pushed out, or corroded terminals. Were any of the above conditions present? Yes → Repair as necessary Perform BODY VERIFICATION TEST - VER 1. No → Test Complete.	All

Symptom:
LEFT TURN SIGNAL INDICATOR OPEN (HIGHLINE)

When Monitored and Set Condition:

LEFT TURN SIGNAL INDICATOR OPEN (HIGHLINE)

When Monitored: With the ignition on.

Set Condition: The BCM detects an open in the Left Turn Indicator Driver.

POSSIBLE CAUSES
INTERMITTENT CONDITION
FUSED B+ CIRCUIT
MESSAGE CENTER OPERATION
LEFT TURN INDICATOR DRIVER SHORTED TO GROUND
LEFT TURN INDICATOR DRIVER OPEN
BCM

TEST	ACTION	APPLICABILITY
1	Turn the ignition on. Monitor the Left Turn Signal Indicator. Operate the Left Turn Signal. Is the Indicator lamp operating correctly? Yes → Go To 2 No → Go To 3	All
2	**WARNING: WHEN THE ENGINE IS OPERATING, DO NOT STAND IN A DIRECT LINE WITH THE FAN. DO NOT PUT YOUR HANDS NEAR THE PULLEYS, BELTS OR FAN. DO NOT WEAR LOOSE CLOTHING.** **NOTE: The conditions that set the DTC are not present at this time. The following list may help in identifying the intermittent condition.** With the engine running at normal operating temperature, monitor the DRB parameters related to the DTC while wiggling the wiring harness. Look for parameter values to change and/or a DTC to set. Refer to any Technical Service Bulletins (TSB) that may apply. Visually inspect the related wiring harness. Look for any chafed, pierced, pinched, or partially broken wires. Visually inspect the related wiring harness connectors. Look for broken, bent, pushed out, or corroded terminals. Were any of the above conditions present? Yes → Repair as necessary Perform BODY VERIFICATION TEST - VER 1. No → Test Complete.	All

LEFT TURN SIGNAL INDICATOR OPEN (HIGHLINE) — Continued

TEST	ACTION	APPLICABILITY
3	Turn the ignition off. Disconnect the Message Center harness connector. Turn the ignition on. Using a 12-volt test light connected to ground, probe the Fused B+ circuit in the Message Center harness connector. Does the test light illuminate brightly? Yes → Go To 4 No → Repair the Fused B+ circuit. Perform BODY VERIFICATION TEST - VER 1.	All
4	Turn the ignition off. Disconnect the Message Center harness connector. Turn the ignition on. Using a 12-volt test light connected to 12-volts, probe the Left Indicator Driver circuit in the Message Center harness connector. Operate the Multi-Function Switch and turn the Left Indication on. Does the test light flash on and off? Yes → Remove and inspect the Bulb. If OK, replace the Message Center. Perform BODY VERIFICATION TEST - VER 1. No → Go To 5	All
5	Turn the ignition off. Disconnect the Message Center harness connector. Disconnect the BCM C4 harness connector. Measure the resistance of the Left Turn Indicator Driver circuit at the Message Center harness connector to ground. Is the resistance below 5.0 ohms? Yes → Repair the Left Turn Indicator for a short to ground. Perform BODY VERIFICATION TEST - VER 1. No → Go To 6	All
6	Turn the ignition off. Disconnect the Message Center harness connector. Disconnect the BCM C4 harness connector. Measure the resistance of the Left Turn Indicator Driver circuit between the BCM harness connector and the Message Center harness connector. Is the resistance below 5.0 ohms? Yes → Go To 7 No → Repair the Left Turn Indicator for an open. Perform BODY VERIFICATION TEST - VER 1.	All
7	If there are no possible causes remaining, view repair? Repair Replace the Body Control Module. Perform BODY VERIFICATION TEST - VER 1.	All

Symptom:
LEFT TURN SIGNAL INDICATOR OPEN (LOWLINE)

When Monitored and Set Condition:

LEFT TURN SIGNAL INDICATOR OPEN (LOWLINE)

When Monitored: With the ignition on.

Set Condition: The BCM detects an open in the Left Turn Indicator Driver.

POSSIBLE CAUSES
INTERMITTENT CONDITION
FUSED B+ CIRCUIT
INSTRUMENT CLUSTER OPERATION
LEFT TURN INDICATOR DRIVER SHORTED TO GROUND
LEFT TURN INDICATOR DRIVER OPEN
BCM

TEST	ACTION	APPLICABILITY
1	Turn the ignition on. Monitor the Left Turn Signal Indicator. Operate the Left Turn Signal. Is the Indicator lamp operating correctly? Yes → Go To 2 No → Go To 3	All
2	**WARNING: WHEN THE ENGINE IS OPERATING, DO NOT STAND IN A DIRECT LINE WITH THE FAN. DO NOT PUT YOUR HANDS NEAR THE PULLEYS, BELTS OR FAN. DO NOT WEAR LOOSE CLOTHING.** **NOTE: The conditions that set the DTC are not present at this time. The following list may help in identifying the intermittent condition.** With the engine running at normal operating temperature, monitor the DRB parameters related to the DTC while wiggling the wiring harness. Look for parameter values to change and/or a DTC to set. Refer to any Technical Service Bulletins (TSB) that may apply. Visually inspect the related wiring harness. Look for any chafed, pierced, pinched, or partially broken wires. Visually inspect the related wiring harness connectors. Look for broken, bent, pushed out, or corroded terminals. Were any of the above conditions present? Yes → Repair as necessary Perform BODY VERIFICATION TEST - VER 1. No → Test Complete.	All

LEFT TURN SIGNAL INDICATOR OPEN (LOWLINE) — Continued

TEST	ACTION	APPLICABILITY
3	Turn the ignition off. Disconnect the Instrument Cluster harness connector. Turn the ignition on. Using a 12-volt test light connected to ground, probe the Fused B+ circuit in the Instrument Cluster harness connector. Does the test light illuminate brightly? Yes → Go To 4 No → Repair the Fused B+ circuit. Perform BODY VERIFICATION TEST - VER 1.	All
4	Turn the ignition off. Disconnect the Instrument Cluster harness connector. Turn the ignition on. Using a 12-volt test light connected to 12-volts, probe the Left Indicator Driver circuit in the Instrument Cluster harness connector. Operate the Multi-Function Switch and turn the Left Indication on. Does the test light flash on and off? Yes → Remove and inspect the Bulb. If OK, replace the Instrument Cluster printed circuit board. Perform BODY VERIFICATION TEST - VER 1. No → Go To 5	All
5	Turn the ignition off. Disconnect the Instrument Cluster harness connector. Disconnect the BCM C4 harness connector. Measure the resistance of the Left Turn Indicator Driver circuit at the Instrument Cluster harness connector to ground. Is the resistance below 5.0 ohms? Yes → Repair the Left Turn Indicator for a short to ground. Perform BODY VERIFICATION TEST - VER 1. No → Go To 6	All
6	Turn the ignition off. Disconnect the Instrument Cluster harness connector. Disconnect the BCM C4 harness connector. Measure the resistance of the Left Turn Indicator Driver circuit between the BCM harness connector and the Instrument Cluster harness connector. Is the resistance below 5.0 ohms? Yes → Go To 7 No → Repair the Left Turn Indicator for an open. Perform BODY VERIFICATION TEST - VER 1.	All
7	If there are no possible causes remaining, view repair? Repair Replace the Body Control Module. Perform BODY VERIFICATION TEST - VER 1.	All

Symptom:
LEFT TURN SIGNAL INDICATOR SHORT (HIGHLINE)

When Monitored and Set Condition:

LEFT TURN SIGNAL INDICATOR SHORT (HIGHLINE)

When Monitored: With the ignition on.

Set Condition: The BCM detects a short to voltage in the Left Turn Indicator Driver.

POSSIBLE CAUSES
INTERMITTENT CONDITION
FUSED B+ CIRCUIT
MESSAGE CENTER OPERATION
LEFT TURN INDICATOR DRIVER SHORTED TO VOLTAGE
BCM

TEST	ACTION	APPLICABILITY
1	Turn the ignition on. Monitor the Left Turn Signal Indicator. Operate the Left Turn Signal. Is the Indicator lamp operating correctly? Yes → Go To 2 No → Go To 3	All
2	**WARNING: WHEN THE ENGINE IS OPERATING, DO NOT STAND IN A DIRECT LINE WITH THE FAN. DO NOT PUT YOUR HANDS NEAR THE PULLEYS, BELTS OR FAN. DO NOT WEAR LOOSE CLOTHING.** **NOTE: The conditions that set the DTC are not present at this time. The following list may help in identifying the intermittent condition.** With the engine running at normal operating temperature, monitor the DRB parameters related to the DTC while wiggling the wiring harness. Look for parameter values to change and/or a DTC to set. Refer to any Technical Service Bulletins (TSB) that may apply. Visually inspect the related wiring harness. Look for any chafed, pierced, pinched, or partially broken wires. Visually inspect the related wiring harness connectors. Look for broken, bent, pushed out, or corroded terminals. Were any of the above conditions present? Yes → Repair as necessary Perform BODY VERIFICATION TEST - VER 1. No → Test Complete.	All

LEFT TURN SIGNAL INDICATOR SHORT (HIGHLINE) — Continued

TEST	ACTION	APPLICABILITY
3	Turn the ignition off. Disconnect the Message Center harness connector. Turn the ignition on. Using a 12-volt test light connected to ground, probe the Fused B+ circuit in the Message Center harness connector. Does the test light illuminate brightly? Yes → Go To 4 No → Repair the Fused B+ circuit. Perform BODY VERIFICATION TEST - VER 1.	All
4	Turn the ignition off. Disconnect the Message Center harness connector. Turn the ignition on. Using a 12-volt test light connected to 12-volts, probe the Left Indicator Driver circuit in the Message Center harness connector. Operate the Multi-Function Switch and turn the Left Indication on. Does the test light flash on and off? Yes → Remove and inspect the bulb. If OK, replace the Message Center. Perform BODY VERIFICATION TEST - VER 1. No → Go To 5	All
5	Turn the ignition off. Disconnect the Message Center harness connector. Disconnect the BCM C4 harness connector. Turn the ignition on. Measure the voltage of the Left Turn Indicator Driver circuit at the Message Center harness connector. Is the voltage above 1.0 volts? Yes → Repair the Left Turn Indicator for a short to voltage. Perform BODY VERIFICATION TEST - VER 1. No → Go To 6	All
6	If there are no possible causes remaining, view repair? Repair Replace the Body Control Module. Perform BODY VERIFICATION TEST - VER 1.	All

Symptom:
LEFT TURN SIGNAL INDICATOR SHORT (LOWLINE)

When Monitored and Set Condition:

LEFT TURN SIGNAL INDICATOR SHORT (LOWLINE)

When Monitored: With the ignition on.

Set Condition: The BCM detects a short to voltage in the Left Turn Indicator Driver.

POSSIBLE CAUSES
INTERMITTENT CONDITION
FUSED B+ CIRCUIT
INSTRUMENT CLUSTER OPERATION
LEFT TURN INDICATOR DRIVER SHORTED TO VOLTAGE
BCM

TEST	ACTION	APPLICABILITY
1	Turn the ignition on. Monitor the Left Turn Signal Indicator. Operate the Left Turn Signal. Is the Indicator lamp operating correctly? Yes → Go To 2 No → Go To 3	All
2	**WARNING: WHEN THE ENGINE IS OPERATING, DO NOT STAND IN A DIRECT LINE WITH THE FAN. DO NOT PUT YOUR HANDS NEAR THE PULLEYS, BELTS OR FAN. DO NOT WEAR LOOSE CLOTHING.** **NOTE: The conditions that set the DTC are not present at this time. The following list may help in identifying the intermittent condition.** With the engine running at normal operating temperature, monitor the DRB parameters related to the DTC while wiggling the wiring harness. Look for parameter values to change and/or a DTC to set. Refer to any Technical Service Bulletins (TSB) that may apply. Visually inspect the related wiring harness. Look for any chafed, pierced, pinched, or partially broken wires. Visually inspect the related wiring harness connectors. Look for broken, bent, pushed out, or corroded terminals. Were any of the above conditions present? Yes → Repair as necessary Perform BODY VERIFICATION TEST - VER 1. No → Test Complete.	All

LEFT TURN SIGNAL INDICATOR SHORT (LOWLINE) — Continued

TEST	ACTION	APPLICABILITY
3	Turn the ignition off. Disconnect the Instrument Cluster harness connector. Turn the ignition on. Using a 12-volt test light connected to ground, probe the Fused B+ circuit in the Instrument Cluster harness connector. Does the test light illuminate brightly? Yes → Go To 4 No → Repair the Fused B+ circuit. Perform BODY VERIFICATION TEST - VER 1.	All
4	Turn the ignition off. Disconnect the Instrument Cluster harness connector. Turn the ignition on. Using a 12-volt test light connected to 12-volts, probe the Left Indicator Driver circuit in the Instrument Cluster harness connector. Operate the Multi-Function Switch and turn the Left Indication on. Does the test light flash on and off? Yes → Remove and inspect the bulb. If OK, replace the Instrument Cluster printed circuit board. Perform BODY VERIFICATION TEST - VER 1. No → Go To 5	All
5	Turn the ignition off. Disconnect the Instrument Cluster harness connector. Disconnect the BCM C4 harness connector. Measure the voltage of the Left Turn Indicator Driver circuit at the Instrument Cluster harness connector. Is the voltage above 1.0 volts? Yes → Repair the Left Turn Indicator for a short to voltage. Perform BODY VERIFICATION TEST - VER 1. No → Go To 6	All
6	If there are no possible causes remaining, view repair? Repair Replace the Body Control Module. Perform BODY VERIFICATION TEST - VER 1.	All

Symptom:

LOOPBACK FAILURE

POSSIBLE CAUSES
INSTRUMENT CLUSTER

TEST	ACTION	APPLICABILITY
1	Turn the ignition on. With the DRBIII®, record and erase DTC's. Turn the ignition off, wait 15 seconds, then turn the ignition on. With the DRBIII®, read DTCs. Did the DTC reset? Yes → Replace the Instrument Cluster in accordance with the Service Information. Perform BODY VERIFICATION TEST - VER 1. No → Test Complete.	All

Symptom List:

NO ABS BUS MESSAGES RECEIVED
NO BCM BUS MESSAGES RECEIVED
NO FCM BUS MESSAGES RECEIVED
NO ORC BUS MESSAGES RECEIVED
NO TCM BUS MESSAGES RECEIVED

Test Note: All symptoms listed above are diagnosed using the same tests. The title for the tests will be NO ABS BUS MESSAGES RECEIVED.

POSSIBLE CAUSES
NO COMMUNICATION WITH THE ABS, BCM, FCM, ORC, OR TCM MODULE
INTERMITTENT CONDITION
INSTRUMENT CLUSTER

TEST	ACTION	APPLICABILITY
1	Turn the ignition on. With the DRB, attempt to communicate with the ABS, BCM, FCM, ORC, or TCM module. Was the DRB able to I/D or communicate with the module in question? Yes → Go To 2 No → Refer to the Communication category for the related symptom(s). Perform BODY VERIFICATION TEST - VER 1.	All
2	With the DRB, erase DTC's. Turn the ignition on and wait approximately 1 minute. With the DRB, read DTC's. Did this DTC reset? Yes → Replace the Instrument Cluster in accordance with the Service Information. Perform BODY VERIFICATION TEST - VER 1. No → The condition is not present at this time. Monitor DRBIII® parameters while wiggling the related wire harness. Refer to any Technical Service Bulletins (TSB) that may apply. Visually inspect the related wiring harness and connector terminals. Perform BODY VERIFICATION TEST - VER 1.	All

Symptom:
NO PCM BUS MESSAGES RECEIVED

POSSIBLE CAUSES
PCM MESSAGE NOT RECEIVED
NO COMMUNICATION WITH THE PCM
PCI BUS CIRCUIT OPEN
POWERTRAIN CONTROL MODULE

TEST	ACTION	APPLICABILITY
1	Turn the ignition on. With the DRBIII®, enter Instrument Cluster, System Tests then PCM Monitor. Does the DRBIII® display: PCM is active on the BUS? Yes → Erase the DTC, if DTC resets, replace the Instrument Cluster in accordance with the Service Information.. Perform BODY VERIFICATION TEST - VER 1. No → Go To 2	All
2	Turn the ignition on. With the DRBIII®, attempt to communicate with the PCM. Was the DRBIII® able to communicate with the PCM? Yes → Go To 3 No → Refer to the Communication category and perform the appropriate symptom. Perform BODY VERIFICATION TEST - VER 1.	All
3	Turn the ignition off. Disconnect the PCM C2 harness connector. Connect the diagnostic junction port tester #8339 to the diagnostic junction port. **NOTE: Do not connect the tester to the DRBIII®.** Measure the resistance of the PCI Bus circuit between the diagnostic junction port tester and the PCM C2 connector. Is the resistance below 5.0 ohms? Yes → Replace and program the Powertrain Control Module in accordance with the Service Information. Perform BODY VERIFICATION TEST - VER 1. No → Repair the PCI Bus circuit for an open. Perform BODY VERIFICATION TEST - VER 1.	All

Symptom:

PANEL DIMMING OUTPUT SHORT

POSSIBLE CAUSES
INTERMITTENT WIRING AND CONNECTORS
EMIC DIMMING CIRCUIT SHORT TO GROUND
HEADLAMP SWITCH DIMMING CIRCUIT SHORT TO GROUND
HVAC MODULE DIMMING CIRCUIT SHORT TO GROUND
I/P MULTI-FUNCTION SWITCH DIMMING CIRCUIT SHORT TO GROUND
MIRROR SWITCH DIMMING CIRCUIT SHORT TO GROUND
RADIO DIMMING CIRCUIT SHORT TO GROUND
REAR BLOWER CONTROL SWITCH DIMMING CIRCUIT SHORT TO GROUND
EMIC
HEADLAMP SWITCH
I/P MULTI-FUNCTION SWITCH
MIRROR SWITCH
RADIO
REAR BLOWER CONTROL SWITCH
BODY CONTROL MODULE
HVAC MODULE

TEST	ACTION	APPLICABILITY
1	Turn the ignition on. With the DRBIII®, record and erase Body Control Module DTC's. Turn the ignition off, wait 15 seconds, then turn the ignition on. Turn on the Headlamps. With the DRBIII®, read DTCs. Does the DRBIII® display PANEL DIMMING OUTPUT SHORT? Yes → Go To 2 No → Go To 17	All
2	Turn the ignition on. With the DRBIII®, erase Body Control Module DTCs. Turn the ignition off to the lock position. Disconnect the EMIC harness connector. Turn the ignition on. Turn the Headlamps on. With the DRBIII®, read DTCs. Does the DRBIII® display PANEL DIMMING OUTPUT SHORT? Yes → Go To 3 No → Replace the EMIC in accordance with the Service Information. Perform BODY VERIFICATION TEST - VER 1.	All

PANEL DIMMING OUTPUT SHORT — Continued

TEST	ACTION	APPLICABILITY
3	Turn the ignition on. With the DRBIII®, erase Body Control Module DTCs. Turn the ignition off to the lock position. Disconnect the Headlamp Switch harness connector. Turn the ignition on. With the DRBIII®, read DTCs. Does the DRBIII® display PANEL DIMMING OUTPUT SHORT? Yes → Go To 4 No → Replace the Headlamp Switch in accordance with the Service Information. Perform BODY VERIFICATION TEST - VER 1.	All
4	Turn the ignition on. With the DRBIII®, erase Body Control Module DTCs. Turn the ignition off to the lock position. Disconnect the I/P Multi-Function Switch harness connector. Turn the ignition on. Turn the Headlamps on. With the DRBIII®, read DTCs. Does the DRBIII® display PANEL DIMMING OUTPUT SHORT? Yes → Go To 5 No → Replace the I/P Multi-Function Switch in accordance with the Service Information. Perform BODY VERIFICATION TEST - VER 1.	All
5	Turn the ignition on. With the DRBIII®, erase Body Control Module DTCs. Turn the ignition off to the lock position. Disconnect the Mirror Switch harness connector. Turn the ignition on. Turn the Headlamps on. With the DRBIII®, read DTCs. Does the DRBIII® display PANEL DIMMING OUTPUT SHORT? Yes → Go To 6 No → Replace the Mirror Switch in accordance with the Service Information. Perform BODY VERIFICATION TEST - VER 1.	All
6	Turn the ignition on. With the DRBIII®, erase Body Control Module DTCs. Turn the ignition off to the lock position. Disconnect the Rear Blower Control Switch harness connector. Turn the ignition on. Turn the Headlamps on. With the DRBIII®, read DTCs. Does the DRBIII® display PANEL DIMMING OUTPUT SHORT? Yes → Go To 7 No → Replace the Rear Blower Control Switch in accordance with the Service Information. Perform BODY VERIFICATION TEST - VER 1.	All

PANEL DIMMING OUTPUT SHORT — Continued

TEST	ACTION	APPLICABILITY
7	Turn the ignition on. With the DRBIII®, erase Body Control Module DTCs. Turn the ignition off to the lock position. Disconnect the HVAC Module harness connector. Turn the ignition on. Turn the Headlamps on. With the DRBIII®, read DTCs. Does the DRBIII® display PANEL DIMMING OUTPUT SHORT? Yes → Go To 8 No → Replace the HVAC Module in accordance with the Service Information. Perform BODY VERIFICATION TEST - VER 1.	All
8	Turn the ignition on. With the DRBIII®, erase Body Control Module DTCs. Turn the ignition off to the lock position. Disconnect the Radio harness connector. Turn the ignition on. Turn the Headlamps on. With the DRBIII®, read DTCs. Does the DRBIII® display PANEL DIMMING OUTPUT SHORT? Yes → Go To 9 No → Replace the Radio in accordance with the Service Information. Perform BODY VERIFICATION TEST - VER 1.	All
9	Turn the ignition off to the lock position. Disconnect the Body Control Module harness connector. Disconnect the EMIC harness connector. **Note: Check connectors - Clean/repair as necessary.** Measure the resistance between ground and the EMIC Dimming circuit. Is the resistance below 5.0 ohms? Yes → Repair the EMIC Dimming circuit for a short to ground. Perform BODY VERIFICATION TEST - VER 1. No → Go To 10	All
10	Turn the ignition off to the lock position. Disconnect the Body Control Module harness connector. Disconnect the Headlamp Switch harness connector. **Note: Check connectors - Clean/repair as necessary.** Measure the resistance between ground and the Headlamp Switch Dimming circuit. Is the resistance below 5.0 ohms? Yes → Repair the Headlamp Switch Dimming circuit for a short to ground. Perform BODY VERIFICATION TEST - VER 1. No → Go To 11	All

PANEL DIMMING OUTPUT SHORT — Continued

TEST	ACTION	APPLICABILITY
11	Turn the ignition off to the lock position. Disconnect the Body Control Module harness connector. Disconnect the HVAC Module harness connector. **Note: Check connectors - Clean/repair as necessary.** Measure the resistance between ground and the HVAC Module Dimming circuit. Is the resistance below 5.0 ohms? Yes → Repair the HVAC Module Dimming circuit for a short to ground. Perform BODY VERIFICATION TEST - VER 1. No → Go To 12	All
12	Turn the ignition off to the lock position. Disconnect the Body Control Module harness connector. Disconnect the I/P Multi-Function Switch harness connector. **Note: Check connectors - Clean/repair as necessary.** Measure the resistance between ground and the I/P Multi-Function Switch Dimming circuit. Is the resistance below 5.0 ohms? Yes → Repair the I/P Multi-Function Switch Dimming circuit for a short to ground. Perform BODY VERIFICATION TEST - VER 1. No → Go To 13	All
13	Turn the ignition off to the lock position. Disconnect the Body Control Module harness connector. Disconnect the Mirror Switch harness connector. **Note: Check connectors - Clean/repair as necessary.** Measure the resistance between ground and the Mirror Switch Dimming circuit. Is the resistance below 5.0 ohms? Yes → Repair the Mirror Switch Dimming circuit for a short to ground. Perform BODY VERIFICATION TEST - VER 1. No → Go To 14	All
14	Turn the ignition off to the lock position. Disconnect the Body Control Module harness connector. Disconnect the Rear Blower Control Switch harness connector. **Note: Check connectors - Clean/repair as necessary.** Measure the resistance between ground and the Rear Blower Control Switch Dimming circuit. Is the resistance below 5.0 ohms? Yes → Repair the Rear Blower Control Switch Dimming circuit for a short to ground. Perform BODY VERIFICATION TEST - VER 1. No → Go To 15	All

PANEL DIMMING OUTPUT SHORT — Continued

TEST	ACTION	APPLICABILITY
15	Turn the ignition off to the lock position. Disconnect the Body Control Module harness connector. Disconnect the Radio harness connector. **Note: Check connectors - Clean/repair as necessary.** Measure the resistance between ground and the Radio Dimming circuit. Is the resistance below 5.0 ohms? Yes → Repair the Radio Dimming circuit for a short to ground. Perform BODY VERIFICATION TEST - VER 1. No → Go To 16	All
16	If there are no possible causes remaining, view repair. Repair Replace the Body Control Module. Perform BODY VERIFICATION TEST - VER 1.	All
17	The conditions necessary to set this DTC are not present at this time. Using the schematics as a guide, inspect the wiring and connectors specific to this circuit. Wiggle the wiring while checking for shorts and open circuits. Were there any problems found? Yes → Repair as necessary. Perform BODY VERIFICATION TEST - VER 1. No → Test Complete.	All

Symptom:
REAR FOG INDICATOR OUTPUT OPEN

POSSIBLE CAUSES
INTERMITTENT WIRING AND CONNECTORS
REAR FOG LAMP INDICATOR CIRCUIT OPEN
REAR FOG LAMP INDICATOR GROUND CIRCUIT OPEN
REAR FOG LAMP INDICATOR CIRCUIT SHORT TO VOLTAGE
HEADLAMP SWITCH
BODY CONTROL MODULE

TEST	ACTION	APPLICABILITY
1	Turn the ignition on. With the DRBIII®, record and erase Body Control Module DTC's. Turn the ignition off, wait 15 seconds, then turn the ignition on. Turn on the Rear Fog Lamps. With the DRBIII®, read DTCs. Does the DRBIII® display REAR FOG LAMP INDICATOR OPEN? Yes → Go To 2 No → Go To 8	All
2	Turn the ignition off to the lock position. **Note: Check connectors - Clean/repair as necessary.** Ignition on, engine not running. Turn ON the Rear Fog Lamps. Using a 12-volt test light connected to ground, back probe the Rear Fog Lamp Indicator circuit in the Headlamp Switch harness connector. **NOTE: The test light must illuminate brightly. Compare the brightness to that of a direct connection to the battery.** Does the test light illuminate brightly? Yes → Go To 3 No → Go To 6	All
3	Turn the ignition off to the lock position. Disconnect the Body Control Module harness connector. Disconnect the Headlamp Switch harness connector. **Note: Check connectors - Clean/repair as necessary.** Measure the resistance of the Rear Fog Lamp Indicator Ground circuit from the Body Control Module harness connector to the Headlamp Switch harness connector. Is the resistance above 5.0 ohms? Yes → Repair the Rear Fog Lamp Indicator Ground circuit for an open. Perform BODY VERIFICATION TEST - VER 1. No → Go To 4	All

REAR FOG INDICATOR OUTPUT OPEN — Continued

TEST	ACTION	APPLICABILITY
4	Turn the ignition off to the lock position. Disconnect the Body Control Module harness connector. Disconnect the Headlamp Switch harness connector. **Note: Check connectors - Clean/repair as necessary.** Ignition on, engine not running. Measure the voltage of the Rear Fog Lamp Indicator circuit in the Headlamp Switch harness connector. Is the voltage above 0.5 volt? Yes → Repair the Rear Fog Lamp Indicator circuit for a short to voltage. Perform BODY VERIFICATION TEST - VER 1. No → Go To 5	All
5	If there are no possible causes remaining, view repair. Repair Replace the Headlamp Switch. Perform BODY VERIFICATION TEST - VER 1.	All
6	Turn the ignition off to the lock position. Disconnect the Body Control Module harness connector. Disconnect the Headlamp Switch harness connector. **Note: Check connectors - Clean/repair as necessary.** Measure the resistance of the Rear Fog Lamp Indicator circuit from the Body Control Module harness connector to the Headlamp Switch harness connector. Is the resistance above 5.0 ohms? Yes → Repair the Rear Fog Lamp Indicator circuit for an open. Perform BODY VERIFICATION TEST - VER 1. No → Go To 7	All
7	If there are no possible causes remaining, view repair. Repair Replace the Body Control Module. Perform BODY VERIFICATION TEST - VER 1.	All
8	The conditions necessary to set this DTC are not present at this time. Using the schematics as a guide, inspect the wiring and connectors specific to this circuit. Wiggle the wiring while checking for shorts and open circuits. Were there any problems found? Yes → Repair as necessary. Perform BODY VERIFICATION TEST - VER 1. No → Test Complete.	All

Symptom:
REAR FOG INDICATOR OUTPUT SHORT

POSSIBLE CAUSES
INTERMITTENT WIRING AND CONNECTORS
REAR FOG LAMP INDICATOR CIRCUIT SHORT TO GROUND
HEADLAMP SWITCH
BODY CONTROL MODULE

TEST	ACTION	APPLICABILITY
1	Turn the ignition on. With the DRBIII®, record and erase Body Control Module DTC's. Turn the ignition off, wait 15 seconds, then turn the ignition on. With the DRBIII®, read DTCs. Does the DRBIII® display REAR FOG LAMP INDICATOR SHORT TO GROUND? Yes → Go To 2 No → Go To 6	All
2	Turn the ignition off to the lock position. **Note: Check connectors - Clean/repair as necessary.** Ignition on, engine not running. Turn ON the Rear Fog Lamps. Using a 12-volt test light connected to ground, back probe the Rear Fog Lamp Indicator circuit in the Headlamp Switch harness connector. **NOTE: The test light must illuminate brightly. Compare the brightness to that of a direct connection to the battery.** Does the test light illuminate brightly? Yes → Go To 3 No → Go To 4	All
3	If there are no possible causes remaining, view repair. Repair Replace the Headlamp Switch. Perform BODY VERIFICATION TEST - VER 1.	All
4	Turn the ignition off to the lock position. Disconnect the Body Control Module harness connector. Disconnect the Headlamp Switch harness connector. **Note: Check connectors - Clean/repair as necessary.** Measure the resistance between ground and the Rear Fog Lamp Indicator circuit. Is the resistance below 5.0 ohms? Yes → Repair the Rear Fog Lamp Indicator circuit for a short to ground. Perform BODY VERIFICATION TEST - VER 1. No → Go To 5	All
5	If there are no possible causes remaining, view repair. Repair Replace the Body Control Module. Perform BODY VERIFICATION TEST - VER 1.	All

REAR FOG INDICATOR OUTPUT SHORT — Continued

TEST	ACTION	APPLICABILITY
6	The conditions necessary to set this DTC are not present at this time. Using the schematics as a guide, inspect the wiring and connectors specific to this circuit. Wiggle the wiring while checking for shorts and open circuits. Were there any problems found? Yes → Repair as necessary. Perform BODY VERIFICATION TEST - VER 1. No → Test Complete.	All

Symptom:
RIGHT TURN SIGNAL INDICATOR OPEN (HIGHLINE)

When Monitored and Set Condition:

RIGHT TURN SIGNAL INDICATOR OPEN (HIGHLINE)

When Monitored: With the ignition on.

Set Condition: The BCM detects an open in the Right Turn Indicator Driver.

POSSIBLE CAUSES
INTERMITTENT CONDITION
FUSED B+ CIRCUIT
MESSAGE CENTER OPERATION
RIGHT TURN INDICATOR DRIVER SHORTED TO GROUND
RIGHT TURN INDICATOR DRIVER OPEN
BCM

TEST	ACTION	APPLICABILITY
1	Turn the ignition on. Monitor the Right Turn Signal Indicator. Operate the Right Turn Signal. Is the Indicator lamp operating correctly? Yes → Go To 2 No → Go To 3	All
2	**WARNING: WHEN THE ENGINE IS OPERATING, DO NOT STAND IN A DIRECT LINE WITH THE FAN. DO NOT PUT YOUR HANDS NEAR THE PULLEYS, BELTS OR FAN. DO NOT WEAR LOOSE CLOTHING.** **NOTE: The conditions that set the DTC are not present at this time. The following list may help in identifying the intermittent condition.** With the engine running at normal operating temperature, monitor the DRB parameters related to the DTC while wiggling the wiring harness. Look for parameter values to change and/or a DTC to set. Refer to any Technical Service Bulletins (TSB) that may apply. Visually inspect the related wiring harness. Look for any chafed, pierced, pinched, or partially broken wires. Visually inspect the related wiring harness connectors. Look for broken, bent, pushed out, or corroded terminals. Were any of the above conditions present? Yes → Repair as necessary Perform BODY VERIFICATION TEST - VER 1. No → Test Complete.	All

RIGHT TURN SIGNAL INDICATOR OPEN (HIGHLINE) — Continued

TEST	ACTION	APPLICABILITY
3	Turn the ignition off. Disconnect the Message Center harness connector. Turn the ignition on. Using a 12-volt test light connected to ground, probe the Fused B+ circuit in the Message Center harness connector. Does the test light illuminate brightly? Yes → Go To 4 No → Repair the Fused B+ circuit. Perform BODY VERIFICATION TEST - VER 1.	All
4	Turn the ignition off. Disconnect the Message Center harness connector. Turn the ignition on. Using a 12-volt test light connected to 12-volts, probe the Right Indicator Driver circuit in the Message Center harness connector. Operate the Multi-Function Switch and turn the Right Indication on. Does the test light flash on and off? Yes → Remove and inspect the Bulb. If OK, replace the Message Center. Perform BODY VERIFICATION TEST - VER 1. No → Go To 5	All
5	Turn the ignition off. Disconnect the Message Center harness connector. Disconnect the BCM C4 harness connector. Measure the resistance of the Right Turn Indicator Driver circuit at the Message Center harness connector to ground. Is the resistance below 5.0 ohms? Yes → Repair the Right Turn Indicator for a short to ground. Perform BODY VERIFICATION TEST - VER 1. No → Go To 6	All
6	Turn the ignition off. Disconnect the Message Center harness connector. Disconnect the BCM C4 harness connector. Measure the resistance of the Right Turn Indicator Driver circuit between the BCM harness connector and the Message Center harness connector. Is the resistance below 5.0 ohms? Yes → Go To 7 No → Repair the Right Turn Indicator for an open. Perform BODY VERIFICATION TEST - VER 1.	All
7	If there are no possible causes remaining, view repair? Repair Replace the Body Control Module. Perform BODY VERIFICATION TEST - VER 1.	All

Symptom:
RIGHT TURN SIGNAL INDICATOR OPEN (LOWLINE)

When Monitored and Set Condition:

RIGHT TURN SIGNAL INDICATOR OPEN (LOWLINE)

When Monitored: With the ignition on.

Set Condition: The BCM detects an open in the Right Turn Indicator Driver.

POSSIBLE CAUSES
RIGHT TURN INDICATOR DRIVER SHORTED TO GROUND
INTERMITTENT CONDITION
FUSED B+ CIRCUIT
INSTRUMENT CLUSTER OPERATION
RIGHT TURN INDICATOR DRIVER OPEN
BCM

TEST	ACTION	APPLICABILITY
1	Turn the ignition on. Monitor the Right Turn Signal Indicator. Operate the Right Turn Signal. Is the Indicator lamp operating correctly? Yes → Go To 2 No → Go To 3	All
2	**WARNING: WHEN THE ENGINE IS OPERATING, DO NOT STAND IN A DIRECT LINE WITH THE FAN. DO NOT PUT YOUR HANDS NEAR THE PULLEYS, BELTS OR FAN. DO NOT WEAR LOOSE CLOTHING.** **NOTE: The conditions that set the DTC are not present at this time. The following list may help in identifying the intermittent condition.** With the engine running at normal operating temperature, monitor the DRB parameters related to the DTC while wiggling the wiring harness. Look for parameter values to change and/or a DTC to set. Refer to any Technical Service Bulletins (TSB) that may apply. Visually inspect the related wiring harness. Look for any chafed, pierced, pinched, or partially broken wires. Visually inspect the related wiring harness connectors. Look for broken, bent, pushed out, or corroded terminals. Were any of the above conditions present? Yes → Repair as necessary Perform BODY VERIFICATION TEST - VER 1. No → Test Complete.	All

RIGHT TURN SIGNAL INDICATOR OPEN (LOWLINE) — Continued

TEST	ACTION	APPLICABILITY
3	Turn the ignition off. Disconnect the Instrument Cluster harness connector. Turn the ignition on. Using a 12-volt test light connected to ground, probe the Fused B+ circuit in the Instrument Cluster harness connector. Does the test light illuminate brightly? Yes → Go To 4 No → Repair the Fused B+ circuit. Perform BODY VERIFICATION TEST - VER 1.	All
4	Turn the ignition off. Disconnect the Instrument Cluster harness connector. Turn the ignition on. Using a 12-volt test light connected to 12-volts, probe the Right Indicator Driver circuit in the Instrument Cluster harness connector. Operate the Multi-Function Switch and turn the Right Indication on. Does the test light flash on and off? Yes → Remove and inspect the Bulb. If OK, replace the Instrument Cluster printed circuit board. Perform BODY VERIFICATION TEST - VER 1. No → Go To 5	All
5	Turn the ignition off. Disconnect the Instrument Cluster harness connector. Disconnect the BCM C4 harness connector. Measure the resistance of the Right Turn Indicator Driver circuit between the BCM harness connector and the Instrument Cluster harness connector. Is the resistance below 5.0 ohms? Yes → Go To 6 No → Repair the Right Turn Indicator for an open. Perform BODY VERIFICATION TEST - VER 1.	All
6	Turn the ignition off. Disconnect the Instrument Cluster harness connector. Disconnect the BCM C4 harness connector. Measure the resistance of the Right Turn Indicator Driver circuit at the Instrument Cluster harness connector to ground. Is the resistance below 5.0 ohms? Yes → Repair the Right Turn Indicator for a short to ground. Perform BODY VERIFICATION TEST - VER 1. No → Go To 7	All
7	If there are no possible causes remaining, view repair? Repair Replace the Body Control Module. Perform BODY VERIFICATION TEST - VER 1.	All

Symptom:
RIGHT TURN SIGNAL INDICATOR SHORT (HIGHLINE)

When Monitored and Set Condition:

RIGHT TURN SIGNAL INDICATOR SHORT (HIGHLINE)

When Monitored: With the ignition on.

Set Condition: The BCM detects a short to voltage in the Right Turn Indicator Driver.

POSSIBLE CAUSES
INTERMITTENT CONDITION
FUSED B+ CIRCUIT
MESSAGE CENTER OPERATION
RIGHT TURN INDICATOR DRIVER SHORTED TO VOLTAGE
BCM

TEST	ACTION	APPLICABILITY
1	Turn the ignition on. Monitor the Right Turn Signal Indicator. Operate the Right Turn Signal. Is the Indicator lamp operating correctly? Yes → Go To 2 No → Go To 3	All
2	**WARNING: WHEN THE ENGINE IS OPERATING, DO NOT STAND IN A DIRECT LINE WITH THE FAN. DO NOT PUT YOUR HANDS NEAR THE PULLEYS, BELTS OR FAN. DO NOT WEAR LOOSE CLOTHING.** **NOTE: The conditions that set the DTC are not present at this time. The following list may help in identifying the intermittent condition.** With the engine running at normal operating temperature, monitor the DRB parameters related to the DTC while wiggling the wiring harness. Look for parameter values to change and/or a DTC to set. Refer to any Technical Service Bulletins (TSB) that may apply. Visually inspect the related wiring harness. Look for any chafed, pierced, pinched, or partially broken wires. Visually inspect the related wiring harness connectors. Look for broken, bent, pushed out, or corroded terminals. Were any of the above conditions present? Yes → Repair as necessary Perform BODY VERIFICATION TEST - VER 1. No → Test Complete.	All

RIGHT TURN SIGNAL INDICATOR SHORT (HIGHLINE) — Continued

TEST	ACTION	APPLICABILITY
3	Turn the ignition off. Disconnect the Message Center harness connector. Turn the ignition on. Using a 12-volt test light connected to ground, probe the Fused B+ circuit in the Message Center harness connector. Does the test light illuminate brightly? Yes → Go To 4 No → Repair the Fused B+ circuit. Perform BODY VERIFICATION TEST - VER 1.	All
4	Turn the ignition off. Disconnect the Message Center harness connector. Turn the ignition on. Using a 12-volt test light connected to 12-volts, probe the Right Indicator Driver circuit in the Message Center harness connector. Operate the Multi-Function Switch and turn the Right Indication on. Does the test light flash on and off? Yes → Remove and inspect the bulb. If OK, replace the Message Center. Perform BODY VERIFICATION TEST - VER 1. No → Go To 5	All
5	Turn the ignition off. Disconnect the Message Center harness connector. Disconnect the BCM C4 harness connector. Turn the ignition on. Measure the voltage of the Right Turn Indicator Driver circuit at the Message Center harness connector. Is the voltage above 1.0 volts? Yes → Repair the Right Turn Indicator for a short to voltage. Perform BODY VERIFICATION TEST - VER 1. No → Go To 6	All
6	If there are no possible causes remaining, view repair? Repair Replace the Body Control Module. Perform BODY VERIFICATION TEST - VER 1.	All

Symptom:
RIGHT TURN SIGNAL INDICATOR SHORT (LOWLINE)

When Monitored and Set Condition:

RIGHT TURN SIGNAL INDICATOR SHORT (LOWLINE)

When Monitored: With the ignition on.

Set Condition: The BCM detects a short to voltage in the Left Turn Indicator Driver.

POSSIBLE CAUSES
INTERMITTENT CONDITION
FUSED B+ CIRCUIT
INSTRUMENT CLUSTER OPERATION
RIGHT TURN INDICATOR DRIVER SHORTED TO VOLTAGE
BCM

TEST	ACTION	APPLICABILITY
1	Turn the ignition on. Monitor the Right Turn Signal Indicator. Operate the Right Turn Signal. Is the Indicator lamp operating correctly? Yes → Go To 2 No → Go To 3	All
2	**WARNING: WHEN THE ENGINE IS OPERATING, DO NOT STAND IN A DIRECT LINE WITH THE FAN. DO NOT PUT YOUR HANDS NEAR THE PULLEYS, BELTS OR FAN. DO NOT WEAR LOOSE CLOTHING.** **NOTE: The conditions that set the DTC are not present at this time. The following list may help in identifying the intermittent condition.** With the engine running at normal operating temperature, monitor the DRB parameters related to the DTC while wiggling the wiring harness. Look for parameter values to change and/or a DTC to set. Refer to any Technical Service Bulletins (TSB) that may apply. Visually inspect the related wiring harness. Look for any chafed, pierced, pinched, or partially broken wires. Visually inspect the related wiring harness connectors. Look for broken, bent, pushed out, or corroded terminals. Were any of the above conditions present? Yes → Repair as necessary Perform BODY VERIFICATION TEST - VER 1. No → Test Complete.	All

RIGHT TURN SIGNAL INDICATOR SHORT (LOWLINE) — Continued

TEST	ACTION	APPLICABILITY
3	Turn the ignition off. Disconnect the Instrument Cluster harness connector. Turn the ignition on. Using a 12-volt test light connected to ground, probe the Fused B+ circuit in the Instrument Cluster harness connector. Does the test light illuminate brightly? Yes → Go To 4 No → Repair the Fused B+ circuit. Perform BODY VERIFICATION TEST - VER 1.	All
4	Turn the ignition off. Disconnect the Instrument Cluster harness connector. Turn the ignition on. Using a 12-volt test light connected to 12-volts, probe the Right Indicator Driver circuit in the Instrument Cluster harness connector. Operate the Multi-Function Switch and turn the Right Indication on. Does the test light flash on and off? Yes → Remove and inspect the bulb. If OK, replace the Instrument Cluster printed circuit board. Perform BODY VERIFICATION TEST - VER 1. No → Go To 5	All
5	Turn the ignition off. Disconnect the Instrument Cluster harness connector. Disconnect the BCM C4 harness connector. Turn the ignition on. Measure the voltage of the Right Turn Indicator Driver circuit at the Instrument Cluster harness connector. Is the voltage above 1.0 volts? Yes → Repair the Right Turn Indicator for a short to voltage. Perform BODY VERIFICATION TEST - VER 1. No → Go To 6	All
6	If there are no possible causes remaining, view repair? Repair Replace the Body Control Module. Perform BODY VERIFICATION TEST - VER 1.	All

Symptom:
TCM MESSAGE MISMATCH

POSSIBLE CAUSES
TCM COMMUNICATION FAILURE
INSTRUMENT CLUSTER

TEST	ACTION	APPLICABILITY
1	**NOTE: Diagnose and repair any TCM DTCs before proceeding with this test.** Turn the ignition on. With the DRBIII®, ensure PCI Bus communications with the TCM. Is the TCM communicating on the PCI Bus? Yes → Replace the Instrument Cluster in accordance with the Service Information. Perform BODY VERIFICATION TEST - VER 1. No → Refer to COMMUNICATION category for the related symptom. Perform BODY VERIFICATION TEST - VER 1.	All

Symptom:
*ANY PCI BUS INDICATOR INOPERATIVE

POSSIBLE CAUSES
NO RESPONSE - PCI BUS
NO RESPONSE - INSTRUMENT CLUSTER
NO RESPONSE - ECM / PCM
INDICATOR INOPERATIVE
INSTRUMENT CLUSTER

TEST	ACTION	APPLICABILITY
1	Turn the ignition on. With the DRBIII®, select J1850 Module Scan. Does the DRBIII® display MIC PRESENT on the BUS? Yes → Go To 2 No → Refer to the COMMUNICATION category and perform the appropriate symptom. Perform BODY VERIFICATION TEST - VER 1.	All
2	Turn the ignition on. With the DRBIII®, Select Body, MIC, the MODULE DISPLAY. Does the DRBIII® display NO RESPONSE from MIC? Yes → Refer to the symptom list for problems related to *NO RESPONSE FROM THE INSTRUMENT CLUSTER. Perform BODY VERIFICATION TEST - VER 1. No → Go To 3	All
3	Turn the ignition on. With the DRBIII®, select Body, MIC, SYSTEM TESTS, PCM MONITOR. Does the DRBIII® display PCM INACTIVE on the BUS? Yes → Refer to the symptom list for problems related to *NO RESPONSE FROM THE POWERTRAIN CONTROL MODULE (Gas) / or *NO RESPONSE FROM THE ENGINE CONTROL MODULE (Diesel) Perform BODY VERIFICATION TEST - VER 1. No → Go To 4	All
4	**NOTE: Diagnose and repair any PCM (gas) or ECM (diesel) DTCs before proceeding with this test.** Perform the Instrument Cluster diagnostic Self Test. Observe the indicator in question during the Self Test. Did the indicator illuminate? Yes → Refer to the appropriate Servic Information category to diagnose the related system. Perform BODY VERIFICATION TEST - VER 1. No → Replace the Instrument Cluster in accordance with the Service Information. Perform BODY VERIFICATION TEST - VER 1.	All

Symptom:
*SEAT BELT INDICATOR ALWAYS ON

POSSIBLE CAUSES
ACM SEAT BELT INDICATOR COMMAND PRESENT
INSTRUMENT CLUSTER

TEST	ACTION	APPLICABILITY
1	**NOTE: Ensure that the Driver seat belt buckle is not damaged and is buckled.** With the DRBIII®, select Airbag, then Monitors. Does the DRBIII® display ″S Belt Lamp On by ACM″? Yes → Refer to Airbag for the related symptom(s). Perform BODY VERIFICATION TEST - VER 1. No → Replace the Instrument Cluster in accordance with the Service Information. Perform BODY VERIFICATION TEST - VER 1.	All

Symptom:

ACCESSORY POWER OUTPUT #1 OPEN

When Monitored and Set Condition:

ACCESSORY POWER OUTPUT #1 OPEN

When Monitored: Continuously with the ignition on.

Set Condition: The FCM has detected an open in the Accessory Relay control circuit.

POSSIBLE CAUSES
FRONT CONTROL MODULE
FUSE & RELAY CENTER INTERNAL MALFUNCTION
ACCESSORY RELAY
FRONT CONTROL MODULE
INTERMITTENT CONDITION

TEST	ACTION	APPLICABILITY
1	Turn the ignition on. With the DRBIII®, erase the current Front Control Module DTC's. Turn the ignition off, wait 10 seconds then turn the ignition on. With the DRBIII®, read the current Front Control Module DTC's. Does the DRBIII® display both the ACCESSORY POWER OUTPUT OPEN trouble codes? Yes → Go To 2 No → Go To 3	All
2	Turn the ignition off. Disconnect the Accessory Relay from the Fuse & Relay Center. Connect a known good relay to the Accessory Relay location in the Fuse & Relay Center. Turn the ignition on. With the DRBIII®, erase the current Front Control Module DTC's. Turn the ignition off, wait 10 seconds then turn the ignition on. With the DRBIII®, read the current Front Control Module DTC's. Does the DRBIII® display both the ACCESSORY POWER OUTPUT OPEN trouble codes? Yes → Replace the Fuse and Relay Center. Perform BODY VERIFICATION TEST - VER 1. No → Replace the original Accessory Relay. Perform BODY VERIFICATION TEST - VER 1.	All

ACCESSORY POWER OUTPUT #1 OPEN — Continued

TEST	ACTION	APPLICABILITY
3	Turn the ignition on. With the DRBIII®, read the current Front Control Module DTC's. Does the DRBIII® display the ACCESSORY POWER OUTPUT 1 OPEN trouble code? Yes → Replace the Front Control Module. Perform BODY VERIFICATION TEST - VER 1. No → Go To 4	All
4	Turn the ignition on. With the DRBIII®, read the current Front Control Module DTC's. Does the DRBIII® display the ACCESSORY POWER OUTPUT #2 OPEN trouble code? Yes → Replace the Front Control Module. Perform BODY VERIFICATION TEST - VER 1. No → This symptom represents an internal malfunction in the Front Control Module. The condition that caused this symptom is currently not present. Perform BODY VERIFICATION TEST - VER 1.	All

Symptom:

ACCESSORY POWER OUTPUT #1 SHORTED TO BATTERY

When Monitored and Set Condition:

ACCESSORY POWER OUTPUT #1 SHORTED TO BATTERY

When Monitored: Continuously with the ignition on.

Set Condition: The FCM has detected a short to battery voltage in the Accessory Relay control circuit.

POSSIBLE CAUSES
FRONT CONTROL MODULE
FUSE & RELAY CENTER INTERNAL MALFUNCTION
ACCESSORY RELAY
FRONT CONTROL MODULE
INTERMITTENT CONDITION

TEST	ACTION	APPLICABILITY
1	Turn the ignition on. With the DRBIII®, erase the current Front Control Module DTC's. Turn the ignition off, wait 10 seconds then turn the ignition on. With the DRBIII®, read the current Front Control Module DTC's. Does the DRBIII® display both ACCESSORY POWER OUTPUT SHORTED TO BATTERY trouble codes? Yes → Go To 2 No → Go To 3	All
2	Turn the ignition off. Disconnect the Accessory Relay from the Fuse & Relay Center. Connect a known good relay to the Accessory Relay location in the Fuse & Relay Center. Turn the ignition on. With the DRBIII®, erase the current Front Control Module DTC's. Turn the ignition off, wait 10 seconds then turn the ignition on. With the DRBIII®, read the current Front Control Module DTC's. Does the DRBIII® display both ACCESSORY POWER OUTPUT SHORTED TO BATTERY trouble codes? Yes → Replace the Fuse and Relay Center. Perform BODY VERIFICATION TEST - VER 1. No → Replace the original Accessory Relay. Perform BODY VERIFICATION TEST - VER 1.	All

ACCESSORY POWER OUTPUT #1 SHORTED TO BATTERY — Continued

TEST	ACTION	APPLICABILITY
3	Turn the ignition on. With the DRBIII®, read the current Front Control Module DTC's. Does the DRBIII® display the ACCESSORY POWER OUTPUT #1 SHORTED TO BATTERY trouble code? Yes → Replace the Front Control Module. Perform BODY VERIFICATION TEST - VER 1. No → Go To 4	All
4	Turn the ignition on. With the DRBIII®, read the current Front Control Module DTC's. Does the DRBIII® display the ACCESSORY POWER OUTPUT #2 OPEN trouble code? Yes → Replace the Front Control Module. Perform BODY VERIFICATION TEST - VER 1. No → This symptom represents an internal malfunction in the Front Control Module. The condition that caused this symptom is currently not present. Perform BODY VERIFICATION TEST - VER 1.	All

Symptom:

ACCESSORY POWER OUTPUT #2 OPEN

When Monitored and Set Condition:

ACCESSORY POWER OUTPUT #2 OPEN

When Monitored: Continuously with the ignition on.

Set Condition: The FCM has detected an open in the Accessory Relay control circuit.

POSSIBLE CAUSES
FRONT CONTROL MODULE
FUSE & RELAY CENTER INTERNAL MALFUNCTION
ACCESSORY RELAY
FCM
INTERMITTENT CONDITION

TEST	ACTION	APPLICABILITY
1	Turn the ignition on. With the DRBIII®, erase the current Front Control Module DTC's. Turn the ignition off, wait 10 seconds then turn the ignition on. With the DRBIII®, read the current Front Control Module DTC's. Does the DRBIII® display both ACCESSORY POWER OUTPUT OPEN trouble codes? Yes → Go To 2 No → Go To 3	All
2	Turn the ignition off. Disconnect the Accessory Relay from the Fuse & Relay Center. Connect a known good relay to the Accessory Relay location in the Fuse & Relay Center. Turn the ignition on. With the DRBIII®, erase the current Front Control Module DTC's. Turn the ignition off, wait 10 seconds then turn the ignition on. With the DRBIII®, read the current Front Control Module DTC's. Does the DRBIII® display both ACCESSORY POWER OUTPUT OPEN trouble codes? Yes → Replace the Fuse and Relay Center. Perform BODY VERIFICATION TEST - VER 1. No → Replace the Accessory Relay. Perform BODY VERIFICATION TEST - VER 1.	All

ACCESSORY POWER OUTPUT #2 OPEN — Continued

TEST	ACTION	APPLICABILITY
3	Turn the ignition on. With the DRBIII®, read the current Front Control Module DTC's. Does the DRBIII® display the ACCESSORY POWER OUTPUT #1 OPEN trouble code? Yes → Replace the Front Control Module. Perform BODY VERIFICATION TEST - VER 1. No → Go To 4	All
4	Turn the ignition on. With the DRBIII®, read the current Front Control Module DTC's. Does the DRBIII® display the ACCESSORY POWER OUTPUT #2 OPEN trouble code? Yes → Replace the Front Control Module. Perform BODY VERIFICATION TEST - VER 1. No → This symptom represents an internal malfunction in the Front Control Module. The condition that caused this symptom is currently not present. Perform BODY VERIFICATION TEST - VER 1.	All

Symptom:

ACCESSORY POWER OUTPUT #2 SHORTED TO BATTERY

When Monitored and Set Condition:

ACCESSORY POWER OUTPUT #2 SHORTED TO BATTERY

When Monitored: Continuously with the ignition on.

Set Condition: The FCM has detected a short to battery voltage in the Accessory Relay control circuit.

POSSIBLE CAUSES
FRONT CONTROL MODULE
FUSE & RELAY CENTER INTERNAL MALFUNCTION
ACCESSORY RELAY
FRONT CONTROL MODULE
INTERMITTENT CONDITION

TEST	ACTION	APPLICABILITY
1	Turn the ignition on. With the DRBIII®, erase the current Front Control Module DTC's. Turn the ignition off, wait 10 seconds then turn the ignition on. With the DRBIII®, read the current Front Control Module DTC's. Does the DRBIII® display both ACCESSORY POWER OUTPUT SHORTED TO BATTERY trouble codes? Yes → Go To 2 No → Go To 3	All
2	Turn the ignition off. Disconnect the Accessory Relay from the Fuse & Relay Center. Connect a known good relay to the Accessory Relay location in the Fuse & Relay Center. Turn the ignition on. With the DRBIII®, erase the current Front Control Module DTC's. Turn the ignition off, wait 10 seconds then turn the ignition on. With the DRBIII®, read the current Front Control Module DTC's. Does the DRBIII® display both ACCESSORY POWER OUTPUT SHORTED TO BATTERY trouble codes? Yes → Replace the Fuse and Relay Center. Perform BODY VERIFICATION TEST - VER 1. No → Replace the original Accessory Relay. Perform BODY VERIFICATION TEST - VER 1.	All

ACCESSORY POWER OUTPUT #2 SHORTED TO BATTERY — Continued

TEST	ACTION	APPLICABILITY
3	Turn the ignition on. With the DRBIII®, read the current Front Control Module DTC's. Does the DRBIII® display the ACCESSORY POWER OUTPUT #1 SHORTED TO BATTERY trouble code? Yes → Replace the Front Control Module. Perform BODY VERIFICATION TEST - VER 1. No → Go To 4	All
4	Turn the ignition on. With the DRBIII®, read the current Front Control Module DTC's. Does the DRBIII® display the ACCESSORY POWER OUTPUT #2 SHORTED TO BATTERY trouble code? Yes → Replace the Front Control Module. Perform BODY VERIFICATION TEST - VER 1. No → This symptom represents an internal malfunction in the Front Control Module. The condition that caused this symptom is currently not present. Perform BODY VERIFICATION TEST - VER 1.	All

Symptom:

CPA NOT ENGAGED

When Monitored and Set Condition:

CPA NOT ENGAGED

When Monitored: Continuously with the ignition on.

Set Condition: If the connector positive assurance lock is not fully engaged, the Front Control Module will detect battery voltage on the B(+) Sense circuit. With voltage present, the FCM determines that there is a poor connection at connector C5 of the Fuse and Relay Center.

POSSIBLE CAUSES
FRONT CONTROL MODULE INTERNAL MALFUNCTION
FUSE AND RELAY CENTER INTERNAL MALFUNCTION
INTERMITTENT CONDITION
CONNECTOR POSITIVE ASSURANCE LOCK

TEST	ACTION	APPLICABILITY
1	Turn the ignition on. With the DRBIII®, erase the current Front Control Module DTC's. Turn the ignition off, wait 10 seconds then turn the ignition on. With the DRBIII®, read the current Front Control Module DTC's. Does the DRBIII® display: CPA NOT ENGAGED? Yes → Go To 2 No → The condition that caused this symptom is currently not present. Inspect the related wiring harness for a possible intermittent condition. Perform BODY VERIFICATION TEST - VER 1.	All
2	Turn the ignition off. Disconnect the Front Control Module from the Fuse and Relay Center. Measure the voltage of the B(+) Sense circuit at the Fuse and Relay Center side of the FCM connector. Is the voltage above 10.0 volts? Yes → Go To 3 No → Replace the Front Control Module. Perform BODY VERIFICATION TEST - VER 1.	All

CPA NOT ENGAGED — Continued

TEST	ACTION	APPLICABILITY
3	Turn the ignition off. Inspect connector C5 on the Fuse and Relay Center, ensure the connector lock is properly seated into the connector. Measure the voltage of the B(+) Sense circuit at the Fuse and Relay Center side of the FCM connector. Is the voltage above 10.0 volts? Yes → Replace the Fuse and Relay Center. Perform BODY VERIFICATION TEST - VER 1. No → Verify the Connector Positive Assurance lock is correctly seated. Perform BODY VERIFICATION TEST - VER 1.	All

Symptom:
IGN RUN/START INPUT WIRING

When Monitored and Set Condition:

IGN RUN/START INPUT WIRING

When Monitored: With the ignition on and battery voltage greater than 10.4 volts.

Set Condition: The Fused Ignition Switch Output circuit voltage at the FCM goes below 0.5 volts.

POSSIBLE CAUSES
TEST FOR CURRENT DTC'S
FRONT CONTROL MODULE INTERNAL MALFUNCTION
FUSE AND RELAY CENTER INTERNAL MALFUNCTION
FUSED IGNITION SWITCH OUTPUT CIRCUIT OPEN

TEST	ACTION	APPLICABILITY
1	With the DRBIII®, record and erase the current Front Control Module DTC's. Cycle the ignition from ON to OFF. Start the vehicle and observe the DRBIII®. With the DRBIII®, read DTC's. Does the DRBIII® display: IGNITION RUN-START INPUT WIRING? Yes → Go To 2 No → The condition that caused this DTC is currently not present. Use the wiring diagram/schematic as a guide, and inspect the related wiring harness for a possible intermittent condition. Perform BODY VERIFICATION TEST - VER 1.	All
2	Turn the ignition off. Disconnect the Front Control Module from the Fuse and Relay Center. Measure the voltage of the Fused Ignition Switch Output circuit (cavity 37) at the Fuse and Relay Center side of the FCM connector. Turn the ignition on. Is the voltage above 10.0 volts? Yes → Replace the Front Control Module. Perform BODY VERIFICATION TEST - VER 1. No → Go To 3	All

IGN RUN/START INPUT WIRING — Continued

TEST	ACTION	APPLICABILITY
3	Turn the ignition off. Gain access to the bottom of the Fuse and Relay Center. Disconnect connector C9 from the Fuse and Relay Center. Measure the resistance of the Fused Ignition Switch Output circuit between the FCM connector cavity 37 and the Fuse and Relay Center connector C9 cavity 2. Is the resistance below 5.0 ohms? Yes → Repair the Fused Ignition Switch Output circuit for an open between the Fuse and Relay Center and the ignition switch. Perform BODY VERIFICATION TEST - VER 1. No → Replace the Fuse and Relay Center. Perform BODY VERIFICATION TEST - VER 1.	All

Symptom:
IGNITION START INPUT WIRING

When Monitored and Set Condition:

IGNITION START INPUT WIRING

When Monitored: With the ignition on and battery voltage greater than 10.4 volts.

Set Condition: The Fused Ignition Switch Output (Start) circuit voltage at the FCM goes below 0.5 volts.

POSSIBLE CAUSES
TEST FOR CURRENT DTC'S
FRONT CONTROL MODULE INTERNAL MALFUNCTION
FUSE AND RELAY CENTER INTERNAL MALFUNCTION
FUSED IGNITION SWITCH OUTPUT CIRCUIT OPEN

TEST	ACTION	APPLICABILITY
1	With the DRBIII®, record and erase the current Front Control Module DTC's. Cycle the ignition from ON to OFF. Start the vehicle and observe the DRBIII®. With the DRBIII®, read DTC's. Does the DRBIII® display: IGNITION START INPUT WIRING? Yes → Go To 2 No → The condition that caused this DTC is currently not present. Use the wiring diagram/schematic as a guide, and inspect the related wiring harness for a possible intermittent condition. Perform BODY VERIFICATION TEST - VER 1.	All
2	Turn the ignition off. Disconnect the Front Control Module from the Fuse and Relay Center. Measure the voltage of the Fused Ignition Switch Output circuit (cavity 37) at the Fuse and Relay Center side of the FCM connector. Turn the ignition on. Is the voltage above 10.0 volts? Yes → Replace the Front Control Module. Perform BODY VERIFICATION TEST - VER 1. No → Go To 3	All

IGNITION START INPUT WIRING — Continued

TEST	ACTION	APPLICABILITY
3	Turn the ignition off. Gain access to the bottom of the Fuse and Relay Center. Disconnect connector C9 from the Fuse and Relay Center. Measure the resistance of the Fused Ignition Switch Output circuit between the FCM connector cavity 37 and the Fuse and Relay Center connector C9 cavity 2. Is the resistance below 5.0 ohms? Yes → Repair the Fused Ignition Switch Output circuit for an open between the Fuse and Relay Center and the ignition switch. Perform BODY VERIFICATION TEST - VER 1. No → Replace the Fuse and Relay Center. Perform BODY VERIFICATION TEST - VER 1.	All

Symptom:

INTERNAL DRIVER FAULT #1

When Monitored and Set Condition:

INTERNAL DRIVER FAULT #1

When Monitored: Continuously with the ignition on.

Set Condition: The Front Control Module has detected an internal malfunction of the module.

POSSIBLE CAUSES
FRONT CONTROL MODULE INTERNAL MALFUNCTION
INTERMITTENT CONDITION

TEST	ACTION	APPLICABILITY
1	Turn the ignition on. With the DRBIII®, erase the current Front Control Module DTC's. Turn the ignition off, wait 10 seconds then turn the ignition on. With the DRBIII®, read the current Front Control Module DTC's. Does the DRBIII® display: INTERNAL DRIVER FAULT #1? Yes → Replace the Front Control Module. Perform BODY VERIFICATION TEST - VER 1. No → This symptom represents an internal malfunction in the Front Control Module. The condition that caused this symptom is currently not present. Perform BODY VERIFICATION TEST - VER 1.	All

Symptom:

INTERNAL DRIVER FAULT #2

When Monitored and Set Condition:

INTERNAL DRIVER FAULT #2

When Monitored: Continuously with the ignition on.

Set Condition: The Front Control Module has detected an internal malfunction of the module.

POSSIBLE CAUSES
FRONT CONTROL MODULE INTERNAL MALFUNCTION
INTERMITTENT CONDITION

TEST	ACTION	APPLICABILITY
1	Turn the ignition on. With the DRBIII®, erase the current Front Control Module DTC's. Turn the ignition off, wait 10 seconds then turn the ignition on. With the DRBIII®, read the current Front Control Module DTC's. Does the DRBIII® display: INTERNAL DRIVER FAULT #2? Yes → Replace the Front Control Module. Perform BODY VERIFICATION TEST - VER 1. No → This symptom represents an internal malfunction in the Front Control Module. The condition that caused this symptom is currently not present. Perform BODY VERIFICATION TEST - VER 1.	All

Symptom:

INTERNAL DRIVER FAULT #3

When Monitored and Set Condition:

INTERNAL DRIVER FAULT #3

When Monitored: Continuously with the ignition on.

Set Condition: The Front Control Module has detected an internal malfunction of the module.

POSSIBLE CAUSES
FRONT CONTROL MODULE INTERNAL MALFUNCTION
INTERMITTENT CONDITION

TEST	ACTION	APPLICABILITY
1	Turn the ignition on. With the DRBIII®, erase the current Front Control Module DTC's. Turn the ignition off, wait 10 seconds then turn the ignition on. With the DRBIII®, read the current Front Control Module DTC's. Does the DRBIII® display: INTERNAL DRIVER FAULT #3? Yes → Replace the Front Control Module. Perform BODY VERIFICATION TEST - VER 1. No → This symptom represents an internal malfunction in the Front Control Module. The condition that caused this symptom is currently not present. Perform BODY VERIFICATION TEST - VER 1.	All

Symptom:
DOME LAMP OUTPUT SHORT

When Monitored and Set Condition:

DOME LAMP OUTPUT SHORT

When Monitored: Anytime the Body Control Module is active.

Set Condition: When output voltage status is LOW.

POSSIBLE CAUSES
INTERMITTENT CONDITION
DOME/RAIL LAMP ASSEMBLY SWITCH
BODY CONTROL MODULE
DOME CIRCUIT SHORT TO GROUND

TEST	ACTION	APPLICABILITY
1	Turn the ignition on. With the DRBIII®, clear all BCM DTC's. Turn the Dome Lamps on. With the DRBIII®, read the DTC information. Does the DRBIII® read: Dome Lamp Output Short? Yes → Go To 2 No → The condition that caused the symptom is currently not present. Inspect the related wiring for a possible intermittent condition. Look for any chafed, pierced, pinched, or partially broken wires. Perform BODY VERIFICATION TEST - VER 1.	All
2	Turn the ignition off. Disconnect the Dome/Rail Lamp assembly switch. Measure the resistance of the Dome Lamp Circuit in the assembly switch. Is the resistance below 5.0 ohms? Yes → Replace the Dome/Rail Lamp Assembly Switch. Perform BODY VERIFICATION TEST - VER 1. No → Go To 3	All
3	Turn the ignition off. Disconnect the Body Control Module C2 harness connector. Measure the resistance of the Dome Circuit in the C2 connector. Is the resistance below 5.0 ohms? Yes → Replace the Body Control Module. Perform BODY VERIFICATION TEST - VER 1. No → Repair the Dome Circuit for a short condition. Perform BODY VERIFICATION TEST - VER 1.	All

Symptom:
DOME SWITCH INPUT OPEN

When Monitored and Set Condition:

DOME SWITCH INPUT OPEN

When Monitored: Dome Lamps OFF

Set Condition: When voltage is below 4.8 volts for 62.5 msec.

POSSIBLE CAUSES
INTERMITTENT CONDITION
PANEL LAMPS DIMMER SIGNAL CIRCUIT OPEN
BODY CONTROL MODULE
HEADLAMP SWITCH

TEST	ACTION	APPLICABILITY
1	Turn the ignition on. With the DRBIII®, clear all BCM DTC's. Turn the Dome Lamps on. With the DRBIII®, read the DTC information. Does the DRBIII® display: Dome Switch Input Open? Yes → Go To 2 No → The condition that caused the symptom is currently not present. Inspect the related wiring for a possible intermittent condition. Look for any chafed, pierced, pinched, or partially broken wires. Perform BODY VERIFICATION TEST - VER 1.	All
2	Turn the ignition off. Disconnect the Body Control Module C5 harness connector. Disconnect the Headlamp Switch harness connector. Measure the resistance of the Panel Lamps Dimmer Signal Circuit. Is the resistance below 5.0 ohms? Yes → Go To 3 No → Repair the Panel Lamps Dimmer Signal Circuit for an open condition. Perform BODY VERIFICATION TEST - VER 1.	All
3	Turn the ignition off. Disconnect the Body Control Module C5 harness connector. Measure the voltage of the Panel Lamps Dimmer Signal circuit. Is the voltage below 4.8 volts? Yes → Replace the Body Control Module. Perform BODY VERIFICATION TEST - VER 1. No → Replace the Headlamp Switch. Perform BODY VERIFICATION TEST - VER 1.	All

Symptom:
DOME SWITCH INPUT SHORT

When Monitored and Set Condition:

DOME SWITCH INPUT SHORT

When Monitored: Dome Lamps Off.

Set Condition: When Voltage has gone below 0.196 volts for 62.5 msec.

POSSIBLE CAUSES
INTERMITTENT CONDITION
PANEL LAMPS DIMMER SIGNAL CIRCUIT SHORT TO GROUND
HEADLAMP SWITCH
BODY CONTROL MODULE

TEST	ACTION	APPLICABILITY
1	Turn the ignition on. With the DRBIII®, clear all BCM DTC's. Turn the Dome Lamps on. With the DRBIII®, read the DTC information. Does the DRBIII® display: Dome Switch Input Short? Yes → Go To 2 No → The condition that caused the symptom is currently not present. Inspect the related wiring for a possible intermittent condition. Look for any chafed, pierced, pinched, or partially broken wires. Perform BODY VERIFICATION TEST - VER 1.	All
2	Turn the ignition off. Disconnect the Headlamp Switch harness connector. Disconnect the Body Control Module C5 connector. Measure the resistance of the Panel Lamps Dimmer Signal Circuit to ground. Is the resistance below 1000 ohms? Yes → Repair the Panel Lamps Dimmer Signal Circuit for a short to ground. Perform BODY VERIFICATION TEST - VER 1. No → Go To 3	All
3	Turn the ignition off. Disconnect the Headlamp Switch harness connector. Measure the resistance of the Panel Lamps Dimmer Signal Circuit and the Headlamp Switch MUX Return Circuit to ground. Is the resistance below 1000 ohms? Yes → Replace the Headlamp Switch. Perform BODY VERIFICATION TEST - VER 1. No → Replace the Body Control Module. Perform BODY VERIFICATION TEST - VER 1.	All

Symptom:
DOOR/LIFTGATE LAMP OUTPUT SHORT

POSSIBLE CAUSES
INTERMITTENT CONDITION
COURTESY LAMPS DRIVER - LIFTGATE CIRCUIT SHORT TO GROUND
COURTESY LAMPS DRIVER - DOOR CIRCUIT SHORT TO GROUND
BODY CONTROL MODULE

TEST	ACTION	APPLICABILITY
1	Turn the ignition on. With the DRBIII®, clear all BCM DTC's. With the DRBIII®, read the DTC information. Does the DRBIII® read: Door/Liftgate Lamp Output Short? Yes → Go To 2 No → The condition that caused the symptom is currently not present. Inspect the related wiring for a possible intermittent condition. Look for any chafed, pierced, pinched, or partially broken wires. Perform BODY VERIFICATION TEST - VER 1.	All
2	Turn the ignition off. Disconnect the Liftgate Door Harness. Open the Liftgate. Measure the resistance of the Liftgate Output circuit. Is the resistance below 5.0 ohms? Yes → Repair the Courtesy Lamps Driver - Liftgate Circuit for a short condition. Perform BODY VERIFICATION TEST - VER 1. No → Go To 3	All
3	Disconnect the BCM C3 harness connector. Disconnect the Drivers and Front Passenger door harness connectors one at a time. Measure the resistance of each Door Lamp Driver circuit to ground. Is the resistance below 5.0 ohms? Yes → Replace the Body Control Module. Perform BODY VERIFICATION TEST - VER 1. No → Repair the Applicable Courtesy Lamps Driver - Door Circuit for a short to ground. Perform BODY VERIFICATION TEST - VER 1.	All

Symptom:
FRONT COURTESY LAMPS OUTPUT SHORT

When Monitored and Set Condition:

FRONT COURTESY LAMPS OUTPUT SHORT

When Monitored: Anytime the BCM is active.

Set Condition: When the voltage of the Headlamp Switch MUX Return circuit falls below 5.0 volts for 10 seconds.

POSSIBLE CAUSES
INTERMITTENT CONDITION
FRONT COURTESY LAMP OUTPUT CIRCUIT SHORT
BODY CONTROL MODULE
OVERHEAD CONSOLE

TEST	ACTION	APPLICABILITY
1	Turn the ignition on. With the DRBIII®, clear all BCM DTC's. Turn the courtesy lamps on. With the DRBIII®, read the DTC information. Does the DRBIII® read: Front Courtesy Lamps Output Short? Yes → Go To 2 No → The condition that caused the symptom is currently not present. Inspect the related wiring for a possible intermittent condition. Look for any chafed, pierced, pinched, or partially broken wires. Perform BODY VERIFICATION TEST - VER 1.	All
2	Turn the ignition off. Disconnect the Headlamp Switch harness connector. Disconnect the Body Control Module C5 harness connector. Measure the resistance of the Front Courtesy Lamp Output circuit. Is the resistance below 5.0 ohms? Yes → Repair the Front Courtesy Lamp Output circuit for a short condition. Perform BODY VERIFICATION TEST - VER 1. No → Go To 3	All
3	Turn the ignition off. Disconnect the Body Control Module C2 harness connector. Measure the resistance of the Front Courtesy Lamp Output circuit. Is the resistance below 5.0 ohms? Yes → Replace the Overhead Console. Perform BODY VERIFICATION TEST - VER 1. No → Replace the Body Control Module. Perform BODY VERIFICATION TEST - VER 1.	All

Symptom:
READING LAMP OUTPUT SHORT

When Monitored and Set Condition:

READING LAMP OUTPUT SHORT

When Monitored: Anytime the Body Control Module is active.

Set Condition: When output voltage status is LOW.

POSSIBLE CAUSES
INTERMITTENT CONDITION
READING LAMPS DRIVER CIRCUIT SHORT
GLOVE BOX LAMP CIRCUIT SHORT TO GROUND
BODY CONTROL MODULE

TEST	ACTION	APPLICABILITY
1	Turn the ignition on. With the DRBIII®, clear all BCM DTC's. Turn the Reading Lamps on. With the DRBIII®, read the DTC information. Does the DRBIII® display: Reading Lamp Output Short? Yes → Go To 2 No → The condition that caused the symptom is currently not present. Inspect the related wiring for a possible intermittent condition. Look for any chafed, pierced, pinched, or partially broken wires. Perform BODY VERIFICATION TEST - VER 1.	All
2	Turn the ignition off. Disconnect the BCM C2 harness connector. Turn the reading lamps on. Measure the resistance of the Reading Lamps circuit. Is the resistance below 5.0 ohms? Yes → Go To 3 No → Repair the Reading Lamps Driver Circuit for a short condition. Perform BODY VERIFICATION TEST - VER 1.	All
3	Turn the ignition off. Disconnect the Body Control Module C2 and C4 harness connectors. Measure the resistance of the Glove Box and Reading Lamps Circuits. Is the resistance below 5.0 ohms in any of the circuits? Yes → Repair the Glove Box Lamp Driver/ Reading Lamps Circuit for a short to ground. Perform BODY VERIFICATION TEST - VER 1. No → Replace the Body Control Module. Perform BODY VERIFICATION TEST - VER 1.	All

Symptom:
BCM MESSAGE NOT RECEIVED

When Monitored and Set Condition:

BCM MESSAGE NOT RECEIVED

When Monitored: Continuously when the PCI bus is active.

Set Condition: If the Memory Seat Mirror Module does receive this Bus message from the BCM. Code will remain for 50 ignition cycles.

POSSIBLE CAUSES
BCM RESPONSE
STORED CODE/PCI BUS COMMUNICATION PROBLEMS
MEMORY SEAT MIRROR MODULE
INTERMITTENT PROBLEM

TEST	ACTION	APPLICABILITY
1	Turn ignition on. With the DRBIII® select Body Control Module. Is there a response from the Body Control Module? Yes → Go To 2 No → Refer to symptom *NO RESPONSE FROM BODY CONTROL MODULE in the COMMUNICATION category Perform MEMORY SYSTEM VERIFICATION TEST - VER 1.	All
2	With the DRBIII®, erase the DTC from Memory Seat Mirror Module. Turn the ignition switch to the Off position then start the engine and let run for one minute. Now be sure that there is still communication with the Body Control module, if not repair as necessary. With the DRB check for the same DTC to reset in the MSMM. Did the same DTC reset? Yes → Go To 3 No → Test complete. Perform MEMORY SYSTEM VERIFICATION TEST - VER 1.	All
3	**NOTE: Visually inspect the related wiring harness including the PCI bus wire. Look for any chafed, pierced, pinched, or partially broken wires.** **Note: Visually inspect the related wiring harness connectors. Look for broken, bent, pushed out, or corroded terminals.** **Note: Refer to any technical service bulletins that may apply.** Were any problems found? No → Replace the Memory Seat Mirror Module. Perform MEMORY SYSTEM VERIFICATION TEST - VER 1. Yes → Repair as necessary. Perform MEMORY SYSTEM VERIFICATION TEST - VER 1.	All

Symptom:
CHARGING VOLTAGE HIGH MESSAGE

When Monitored and Set Condition:

CHARGING VOLTAGE HIGH MESSAGE

When Monitored: During cranking or with the engine running.

Set Condition: When the Memory Seat Mirror Module receives three high charging system voltage messages above 15.94 volts over the PCI Bus. Code will remain for 50 ignition cycles.

POSSIBLE CAUSES
PCM TROUBLE CODES
STORED CODE COMMUNICATION PROBLEMS
MEMORY SEAT MIRROR MODULE
INTERMITTENT PROBLEM

TEST	ACTION	APPLICABILITY
1	Turn ignition on. With the DRBIII® read Engine DTCs. Is the DTC P1594 Charging System Voltage Too High set in the Power Control Module? Yes → Refer to symptom *P1594-CHARGING SYSTEM VOLTAGE TOO HIGH in the CHARGING category Perform MEMORY SYSTEM VERIFICATION TEST - VER 1. No → Go To 2	All
2	With the DRBIII®, erase the DTC from Memory Seat Mirror Module. Turn the ignition switch to the Off position then start the engine and let run for one minute. With the DRB check for the same DTC to reset in the MSMM. Did the same DTC reset? Yes → Go To 3 No → Test complete. Perform MEMORY SYSTEM VERIFICATION TEST - VER 1.	All
3	**Note: Visually inspect the related wiring harness. Look for any chafed, pierced, pinched, or partially broken wires.** **Note: Visually inspect the related wiring harness connectors. Look for broken, bent, pushed out, or corroded terminals.** **Note: Refer to any technical service bulletins that may apply.** Were any problems found? No → Replace the Memory Seat Mirror Module. Perform MEMORY SYSTEM VERIFICATION TEST - VER 1. Yes → Repair as necessary. Perform MEMORY SYSTEM VERIFICATION TEST - VER 1.	All

Symptom:
CHARGING VOLTAGE LOW MESSAGE

When Monitored and Set Condition:

CHARGING VOLTAGE LOW MESSAGE

When Monitored: During cranking or with the engine running.

Set Condition: When the Memory Seat Mirror Module receives three low charging system voltage messages below 9 volts over the PCI Bus. Code will remain for 50 ignition cycles.

POSSIBLE CAUSES
PCM TROUBLE CODES
STORED CODE COMMUNICATION PROBLEMS
MEMORY SEAT MIRROR MODULE
INTERMITTENT PROBLEM

TEST	ACTION	APPLICABILITY
1	Turn ignition on. With the DRBIII® read Engine DTCs. Is the DTC P1682 Charging System Voltage Too Low set in the Power Control Module? Yes → Refer to symptom *P1682-CHARGING SYSTEM VOLTAGE TOO LOW in the CHARGING category Perform MEMORY SYSTEM VERIFICATION TEST - VER 1. No → Go To 2	All
2	With the DRBIII®, erase the DTC from Memory Seat Mirror Module. Turn the ignition switch to the Off position then start the engine and let run for one minute. With the DRB check for the same DTC to reset in the MSMM. Did the same DTC reset? Yes → Go To 3 No → Test complete. Perform MEMORY SYSTEM VERIFICATION TEST - VER 1.	All
3	**Note: Visually inspect the related wiring harness. Look for any chafed, pierced, pinched, or partially broken wires.** **Note: Visually inspect the related wiring harness connectors. Look for broken, bent, pushed out, or corroded terminals.** **Note: Refer to any technical service bulletins that may apply.** Were any problems found? No → Replace the Memory Seat Mirror Module. Perform MEMORY SYSTEM VERIFICATION TEST - VER 1. Yes → Repair as necessary. Perform MEMORY SYSTEM VERIFICATION TEST - VER 1.	All

Symptom:
EEPROM REFRESH FAILURE

When Monitored and Set Condition:

EEPROM REFRESH FAILURE

When Monitored: With the ignition in the on position.

Set Condition: The Memory Seat Mirror Module has a internal EEPROM failure.

POSSIBLE CAUSES
EEPROM REFRESH FAILURE

TEST	ACTION	APPLICABILITY
1	If there are no possible causes remaining, view repair. Repair Replace the Memory Seat Mirror Module. Perform MEMORY SYSTEM VERIFICATION TEST - VER 1.	All

Symptom:
FRONT RISER DOWN POSITION STUCK

When Monitored and Set Condition:

FRONT RISER DOWN POSITION STUCK

When Monitored: Continuously when the PCI bus is active.

Set Condition: If the seat switch is active for 30 seconds, this code will set and the Memory Seat Mirror Module will ignore the input until the state has changed. Three seconds after the stuck condition is removed, the seat will resume to normal operation. Code will remain for 50 ignition cycles.

POSSIBLE CAUSES
STORED DIAGNOSTIC TROUBLE CODE
POWER SEAT SWITCH
SEAT FRONT DOWN SWITCH SENSE WIRE SHORT TO VOLTAGE
MEMORY SEAT MIRROR MODULE

TEST	ACTION	APPLICABILITY
1	With the DRBIII®, erase the DTC from Memory Seat Mirror Module. Operate the driver's power seat and memory system. Turn the ignition switch to the Off position then start the engine and let run for one minute. With the DRB check for the same DTC to reset in the MSMM. Did the same DTC reset? Yes → Go To 2 No → Using the wiring diagram/schematic as a guide, inspect the wiring and connectors for an intermittent condition. Perform MEMORY SYSTEM VERIFICATION TEST - VER 1.	All
2	Disconnect the Power Seat Switch connector. Measure the voltage of the Seat Front Down Switch Sense circuit. Is there any voltage present? Yes → Go To 3 No → Replace the Power Seat Switch. Perform MEMORY SYSTEM VERIFICATION TEST - VER 1.	All
3	Disconnect the Power Seat Switch connector. Disconnect the Memory Seat Mirror Module C1 connector. Turn the ignition on. Measure the voltage of the Seat Front Down Switch Sense circuit to ground.. Is there any voltage present? Yes → Repair the Seat Front Down Switch Sense wire for a short to voltage. Perform MEMORY SYSTEM VERIFICATION TEST - VER 1. No → Go To 4	All

FRONT RISER DOWN POSITION STUCK — Continued

TEST	ACTION	APPLICABILITY
4	If there are no possible causes remaining, view repair. Repair Replace the Memory Seat Mirror Module. Perform MEMORY SYSTEM VERIFICATION TEST - VER 1.	All

Symptom:
FRONT RISER SENSOR OUT OF RANGE HIGH

When Monitored and Set Condition:

FRONT RISER SENSOR OUT OF RANGE HIGH

When Monitored: Continuously when the PCI bus is active.

Set Condition: This condition is immediately set when the seat motor potentiometer feeds a value higher than the Memory Seat Mirror Module has stored in EEPROM. Code will remain for 50 ignition cycles.

POSSIBLE CAUSES
MEMORY SEAT MIRROR MODULE SENSOR GROUND OPEN
SEAT POSITION SENSOR GROUND WIRE OPEN
5 VOLT SUPPLY SHORTED HIGH
CHECK VOLTAGE ON FRONT RISER POSITION SIGNAL CIRCUIT
FRONT RISER SENSOR HIGH
FRONT RISER SENSOR SHORT TO MOTOR
MEMORY SEAT MIRROR MODULE FRONT RISER HIGH
STORED DIAGNOSTIC TROUBLE CODE

TEST	ACTION	APPLICABILITY
1	With the DRBIII®, erase the DTC from Memory Seat Mirror Module. Operate the driver's power seat and memory system. Turn the ignition switch to the Off position then start the engine and let run for one minute. With the DRB check for the same DTC to reset in the MSMM. Did the same DTC reset? Yes → Go To 2 No → Using the wiring diagram/schematic as a guide, inspect the wiring and connectors for an intermittent condition. Perform MEMORY SYSTEM VERIFICATION TEST - VER 1.	All
2	Turn ignition off. Disconnect the Driver Power Seat Front Riser Position Sensor connector. Measure the resistance of the Seat Position Sensor Ground circuit at the Driver Power Seat Front Riser Position Sensor connector. Is the resistance below 5.0 ohms? Yes → Go To 3 No → Go To 8	All

FRONT RISER SENSOR OUT OF RANGE HIGH — Continued

TEST	ACTION	APPLICABILITY
3	Disconnect the Driver Power Seat Front Riser Position Sensor connector. Measure the voltage between Seat Sensor 5 volt supply circuit and ground. Turn ignition on. Is the voltage above 5.5 volts? Yes → Repair the Seat Sensor 5 Volt Supply circuit for a short to battery. Perform MEMORY SYSTEM VERIFICATION TEST - VER 1. No → Go To 4	All
4	Turn ignition off. Disconnect the Driver Power Seat Front Riser Position Sensor Connector. Disconnect the Memory Seat Mirror Module C1 Connector. Turn ignition on. Measure the voltage between Front Riser Position Signal circuit and ground. Is the voltage above 0.2 volts? Yes → Repair the Front Riser Position Signal circuit for a short to voltage. Perform MEMORY SYSTEM VERIFICATION TEST - VER 1. No → Go To 5	All
5	Turn ignition off. Disconnect the Driver Power Seat Front Riser Position Sensor Connector. Ensure the Memory Seat Mirror Module is fully connected before proceeding. Turn ignition on. With the DRBIII® in Body Memory Seat Sensors Read the Front Riser Position Sensor voltage. Is the voltage above 0.2 volts? Yes → Go To 6 No → Replace the Seat Track Assembly. Perform MEMORY SYSTEM VERIFICATION TEST - VER 1.	All
6	Ensure all seat and sensor connectors are connected and front riser motor is operational. With the DRBIII® in Body Memory Seat Sensors monitor the Front Riser Position Sensor while operating the front riser motor to both limits. Did the voltage ever go above 7.0 volts only when the motor was in operation? Yes → Replace the Seat Track Assembly. Perform MEMORY SYSTEM VERIFICATION TEST - VER 1. No → Go To 7	All
7	If there are no possible causes remaining, view repair. Repair Replace the Memory Seat Mirror Module. Perform MEMORY SYSTEM VERIFICATION TEST - VER 1.	All

FRONT RISER SENSOR OUT OF RANGE HIGH — Continued

TEST	ACTION	APPLICABILITY
8	Turn ignition off. Disconnect the Memory Seat Mirror Module C2 connector. Disconnect the Driver Power Seat Front Riser Position Sensor connector. Measure the resistance of the Seat Position Sensor Ground wire between the Driver Power Seat Front Riser Position Sensor connector and the MSMM C2 connector. Is the resistance below 5.0 ohms? Yes → Replace the Memory Seat Mirror Module. Perform MEMORY SYSTEM VERIFICATION TEST - VER 1. No → Repair the open Seat Position Sensor Ground wire. Perform MEMORY SYSTEM VERIFICATION TEST - VER 1.	All

Symptom:

FRONT RISER SENSOR OUT OF RANGE LOW

When Monitored and Set Condition:

FRONT RISER SENSOR OUT OF RANGE LOW

When Monitored: Continuously when the PCI bus is active.

Set Condition: This code is immediately set when the seat motor potentiometer feeds a value lower than the Memory Seat Mirror Module has stored in EEPROM. Code will remain for 50 ignition cycles.

POSSIBLE CAUSES
MEMORY SEAT MIRROR MODULE 5 VOLT SUPPLY
SEAT 5 VOLT SUPPLY WIRE SHORT TO GROUND
SEAT SENSOR 5 VOLT SUPPLY WIRE OPEN
FRONT RISER POSITION SIGNAL CIRCUIT OPEN
FRONT RISER POSITION SIGNAL CIRCUIT SHORT TO GROUND
FRONT RISER SENSOR LOW
MEMORY SEAT MIRROR MODULE FRONT RISER LOW
STORED DIAGNOSTIC TROUBLE CODE

TEST	ACTION	APPLICABILITY
1	With the DRBIII®, erase the DTC from Memory Seat Mirror Module. Operate the driver's power seat and memory system. Turn the ignition switch to the Off position then start the engine and let run for one minute. With the DRB check for the same DTC to reset in the MSMM. Did the same DTC reset? Yes → Go To 2 No → Using the wiring diagram/schematic as a guide, inspect the wiring and connectors for an intermittent condition. Perform MEMORY SYSTEM VERIFICATION TEST - VER 1.	All
2	Ensure the Memory Seat Mirror Module is fully connected before proceeding. Disconnect the Driver Power Seat Front Riser Position Sensor connector. Turn ignition on. Measure the voltage of the Seat Sensor 5 Volt Supply circuit at front riser connector. Is the voltage above 4.5 volts? Yes → Go To 3 No → Go To 7	All

FRONT RISER SENSOR OUT OF RANGE LOW — Continued

TEST	ACTION	APPLICABILITY
3	Turn ignition off. Disconnect the Driver Power Seat Front Riser Position Sensor Connector. Disconnect the Memory Seat Mirror Module C1 Connector. Measure the resistance of the Front Riser Position Signal circuit between the front riser sensor and the Memory Seat Mirror Module connector. Is the resistance below 5.0 ohms? Yes → Go To 4 No → Repair the Front Riser Position Signal circuit for an open. Perform MEMORY SYSTEM VERIFICATION TEST - VER 1.	All
4	Turn ignition off. Disconnect the Memory Seat Mirror Module C1 connector. Disconnect the Driver Power Seat Front Riser Position Sensor connector. Measure the resistance of the Front Riser Position Signal circuit to ground. Is the resistance below 1000 ohms? Yes → Repair the Front Riser Position Signal circuit a short to ground. Perform MEMORY SYSTEM VERIFICATION TEST - VER 1. No → Go To 5	All
5	Turn ignition off. Ensure the Memory Seat Mirror Module is fully connected before proceeding. Disconnect the Driver Power Seat Front Riser Position Sensor Connector. Connect a jumper wire between Seat Sensor 5 volt Supply and Front Riser Position Signal circuits. Turn ignition on. With the DRBIII® select Body Memory Seat Sensors. Read the Front Riser Position Sensor voltage. Is the voltage above 4.5 volts? Yes → Replace the Seat Track Assembly. Perform MEMORY SYSTEM VERIFICATION TEST - VER 1. No → Go To 6	All
6	If there are no possible causes remaining, view repair. Repair Replace the Memory Seat Mirror Module. Perform MEMORY SYSTEM VERIFICATION TEST - VER 1.	All
7	Turn ignition off. Disconnect the Memory Seat Mirror Module C2 connector. Measure the resistance of the Seat Sensor 5 volt supply circuit to body ground. Is the resistance below 100.0 ohms? Yes → Repair the Seat 5 Volt Supply circuit for a short to ground. Perform MEMORY SYSTEM VERIFICATION TEST - VER 1. No → Go To 8	All

FRONT RISER SENSOR OUT OF RANGE LOW — Continued

TEST	ACTION	APPLICABILITY
8	Turn ignition off. Disconnect the Memory Seat Mirror Module C2 connector. Disconnect the Driver Power Seat Front Riser Position Sensor connector. Measure the resistance of the Seat Sensor 5 Volt Supply wire between the Front Riser Sensor connector and the C2 connector. Is the resistance below 5.0 ohms? Yes → Go To 9 No → Repair the Seat Sensor 5 Volt Supply circuit for an open. Perform MEMORY SYSTEM VERIFICATION TEST - VER 1.	All
9	If there are no possible cause remaining, view repair. Repair Replace the Memory Seat Mirror Module. Perform MEMORY SYSTEM VERIFICATION TEST - VER 1.	All

Symptom:
FRONT RISER UP POSITION STUCK

When Monitored and Set Condition:

FRONT RISER UP POSITION STUCK

When Monitored: Continuously when the PCI bus is active.

Set Condition: If the seat switch is active for 30 seconds, this code will set and the MSMM will ignore the input until the state has changed. Three seconds after the stuck condition is removed, the seat will resume to normal operation. Code will remain for 50 ignition cycles.

POSSIBLE CAUSES
STORED DIAGNOSTIC TROUBLE CODE
POWER SEAT SWITCH
SEAT FRONT UP SWITCH SENSE WIRE SHORT TO VOLTAGE
MEMORY SEAT MIRROR MODULE

TEST	ACTION	APPLICABILITY
1	With the DRBIII®, erase the DTC from Memory Seat Mirror Module. Operate the driver's power seat and memory system. Turn the ignition switch to the Off position then start the engine and let run for one minute. With the DRB check for the same DTC to reset in the MSMM. Did the same DTC reset? Yes → Go To 2 No → Using the wiring diagram/schematic as a guide, inspect the wiring and connectors for an intermittent condition. Perform MEMORY SYSTEM VERIFICATION TEST - VER 1.	All
2	Disconnect the Power Seat Switch connector. Measure the voltage of the Seat Front Up Switch Sense circuit. Is there any voltage present? Yes → Go To 3 No → Replace the Power Seat Switch. Perform MEMORY SYSTEM VERIFICATION TEST - VER 1.	All
3	Disconnect the Power Seat Switch connector. Disconnect the Memory Seat Mirror Module C1 connector. Turn the ignition on. Measure the voltage of the Seat Front Up Switch Sense circuit to ground.. Is there any voltage present? Yes → Repair the Seat Front Up Switch Sense wire for a short to voltage. Perform MEMORY SYSTEM VERIFICATION TEST - VER 1. No → Go To 4	All

FRONT RISER UP POSITION STUCK — Continued

TEST	ACTION	APPLICABILITY
4	If there are no possible causes remaining, view repair. Repair Replace the Memory Seat Mirror Module. Perform MEMORY SYSTEM VERIFICATION TEST - VER 1.	All

Symptom:
HORIZONTAL FORWARD POSITION STUCK

When Monitored and Set Condition:

HORIZONTAL FORWARD POSITION STUCK

When Monitored: Continuously when the PCI bus is active.

Set Condition: If the seat switch is active for 30 seconds, this code will set and the Memory Seat Mirror Module will ignore the input until the state has changed. Three seconds after the stuck condition is removed, the seat will resume to normal operation. Code will remain for 50 ignition cycles.

POSSIBLE CAUSES
STORED DIAGNOSTIC TROUBLE CODE
DRIVER POWER SEAT SWITCH
HORIZONTAL FORWARD SWITCH SENSE WIRE SHORT TO VOLTAGE
MEMORY SEAT MIRROR MODULE

TEST	ACTION	APPLICABILITY
1	With the DRBIII®, erase the DTC from Memory Seat Mirror Module. Operate the driver's power seat and memory system. Turn the ignition switch to the Off position then start the engine and let run for one minute. With the DRB check for the same DTC to reset in the MSMM. Did the same DTC reset? Yes → Go To 2 No → Using the wiring diagram/schematic as a guide, inspect the wiring and connectors for an intermittent condition. Perform MEMORY SYSTEM VERIFICATION TEST - VER 1.	All
2	Disconnect the Power Seat Switch connector. Measure the voltage of the Seat Horizontal Forward Switch Sense circuit. Is there any voltage present? Yes → Go To 3 No → Replace the Power Seat Switch. Perform MEMORY SYSTEM VERIFICATION TEST - VER 1.	All
3	Disconnect the Power Seat Switch connector. Disconnect the Memory Seat Mirror Module C1 connector. Turn the ignition on. Measure the voltage of the Horizontal Forward Switch Sense circuit to ground.. Is there any voltage present? Yes → Repair the Horizontal Forward Switch Sense wire for a short to voltage. Perform MEMORY SYSTEM VERIFICATION TEST - VER 1. No → Go To 4	All

HORIZONTAL FORWARD POSITION STUCK — Continued

TEST	ACTION	APPLICABILITY
4	If there are no possible causes remaining, view repair. Repair Replace the Memory Seat Mirror Module. Perform MEMORY SYSTEM VERIFICATION TEST - VER 1.	All

Symptom:
HORIZONTAL REARWARD POSITION STUCK

When Monitored and Set Condition:

HORIZONTAL REARWARD POSITION STUCK

When Monitored: Continuously when the PCI bus is active.

Set Condition: If the seat switch is active for 30 seconds, this code will set and the Memory Seat Mirror Module will ignore the input until the state has changed. Once the stuck condition is removed, the seat will resume to normal operation. Code will remain for 50 ignition cycles.

POSSIBLE CAUSES
STORED DIAGNOSTIC TROUBLE CODE
DRIVER POWER SEAT SWITCH
SEAT HORIZONTAL REARWARD SWITCH SENSE WIRE SHORT TO VOLTAGE
MEMORY SEAT MIRROR MODULE

TEST	ACTION	APPLICABILITY
1	With the DRBIII®, erase the DTC from Memory Seat Mirror Module. Operate the driver's power seat and memory system. Turn the ignition switch to the Off position then start the engine and let run for one minute. With the DRB check for the same DTC to reset in the MSMM. Did the same DTC reset? Yes → Go To 2 No → Using the wiring diagram/schematic as a guide, inspect the wiring and connectors for an intermittent condition. Perform MEMORY SYSTEM VERIFICATION TEST - VER 1.	All
2	Disconnect the Power Seat Switch connector. Measure the voltage of the Seat Horizontal Rearward Switch Sense circuit. Is there any voltage present? Yes → Go To 3 No → Replace the Power Seat Switch. Perform MEMORY SYSTEM VERIFICATION TEST - VER 1.	All

HORIZONTAL REARWARD POSITION STUCK — Continued

TEST	ACTION	APPLICABILITY
3	Disconnect the Power Seat Switch connector. Disconnect the Memory Seat Mirror Module C1 connector. Turn the ignition on. Measure the voltage of the Seat Horizontal Rearward Switch Sense circuit to ground.. Is there any voltage present? Yes → Repair the Seat Horizontal Rearward Switch Sense wire for a short to voltage. Perform MEMORY SYSTEM VERIFICATION TEST - VER 1. No → Go To 4	All
4	If there are no possible causes remaining, view repair. Repair Replace the Memory Seat Mirror Module. Perform MEMORY SYSTEM VERIFICATION TEST - VER 1.	All

Symptom:
HORIZONTAL SENSOR OUT OF RANGE HIGH

When Monitored and Set Condition:

HORIZONTAL SENSOR OUT OF RANGE HIGH

When Monitored: Continuously when the PCI bus is active.

Set Condition: This condition is immediately set when the seat motor potentiometer feeds a value higher than the Memory Seat Mirror Module has stored in EEPROM. Code will remain for 50 ignition cycles.

POSSIBLE CAUSES
MEMORY SEAT MIRROR MODULE SENSOR GROUND OPEN
SEAT SENSOR GROUND WIRE OPEN
5 VOLT SUPPLY SHORTED HIGH
CHECK VOLTAGE ON HORIZONTAL POSITION SIGNAL CIRCUIT
HORIZONTAL SENSOR HIGH
CHECK HORIZONTAL SENSOR SHORT TO MOTOR
MEMORY SEAT MIRROR MODULE HORIZONTAL SENSOR HIGH
STORED DIAGNOSTIC TROUBLE CODE

TEST	ACTION	APPLICABILITY
1	With the DRBIII®, erase the DTC from Memory Seat Mirror Module. Operate the driver's power seat and memory system. Turn the ignition switch to the Off position then start the engine and let run for one minute. With the DRB check for the same DTC to reset in the MSMM. Did the same DTC reset? Yes → Go To 2 No → Using the wiring diagram/schematic as a guide, inspect the wiring and connectors for an intermittent condition. Perform MEMORY SYSTEM VERIFICATION TEST - VER 1.	All
2	Turn ignition off. Disconnect the Driver Power Seat Horizontal Position Sensor connector. Measure the resistance of the Seat Position Sensor Ground circuit at the driver power seat Horizontal connector. Is the resistance below 5.0 ohms? Yes → Go To 3 No → Go To 8	All

HORIZONTAL SENSOR OUT OF RANGE HIGH — Continued

TEST	ACTION	APPLICABILITY
3	Disconnect the Driver Power Seat Horizontal Position Sensor connector. Measure the voltage between Seat Sensor 5 volt supply circuit and ground. Turn ignition on. Is the voltage above 5.5 volts? Yes → Repair the Seat Sensor 5 Volt Supply circuit for a short to battery. Perform MEMORY SYSTEM VERIFICATION TEST - VER 1. No → Go To 4	All
4	Turn ignition off. Disconnect the Driver Power Seat Horizontal Position Sensor Connector. Disconnect the Memory Seat Mirror Module C1 Connector. Turn ignition on. Measure the voltage between Horizontal Position Signal circuit and ground. Is the voltage above 0.2 volts? Yes → Repair the Horizontal Position Signal circuit for a short to voltage. Perform MEMORY SYSTEM VERIFICATION TEST - VER 1. No → Go To 5	All
5	Turn ignition off. Disconnect the Driver Power Seat Horizontal Position Sensor Connector. Ensure the Memory Seat Mirror Module is fully connected before proceeding. Turn ignition on. With the DRBIII® in Body Memory Seat Sensors Read the Horizontal Position Sensor voltage. Is the voltage above 0.2 volts? Yes → Go To 6 No → Replace the Seat Track Assembly. Perform MEMORY SYSTEM VERIFICATION TEST - VER 1.	All
6	Ensure all seat and sensor connectors are connected and Horizontal motor is operational. With the DRBIII® in Body Memory Seat Sensors monitor the Horizontal Position sensor while operating the seat Horizontal motor to both limits. Did the voltage ever go above 7.0 volts only when the motor was in operation? Yes → Replace the Seat Track Assembly. Perform MEMORY SYSTEM VERIFICATION TEST - VER 1. No → Go To 7	All
7	If there are no possible causes remaining, view repair. Repair Replace the Memory Seat Mirror Module. Perform MEMORY SYSTEM VERIFICATION TEST - VER 1.	All

HORIZONTAL SENSOR OUT OF RANGE HIGH — Continued

TEST	ACTION	APPLICABILITY
8	Turn ignition off. Disconnect the Memory Seat Mirror Module C2 connector. Disconnect the Driver Power Seat Horizontal Position Sensor connector. Measure the resistance of the Seat Position Sensor Ground wire between the Horizontal Sensor connector and the C2 connector. Is the resistance below 5.0 ohms? Yes → Replace the Memory Seat Mirror Module. Perform MEMORY SYSTEM VERIFICATION TEST - VER 1. No → Repair the open Seat Sensor Ground wire. Perform MEMORY SYSTEM VERIFICATION TEST - VER 1.	All

Symptom:
HORIZONTAL SENSOR OUT OF RANGE LOW

When Monitored and Set Condition:

HORIZONTAL SENSOR OUT OF RANGE LOW

When Monitored: Continuously when the PCI bus is active.

Set Condition: This condition is immediately set when the seat motor potentiometer feeds a value lower than the Memory Seat Mirror Module has stored in EEPROM. Code will remain for 50 ignition cycles.

POSSIBLE CAUSES
SEAT 5 VOLT SUPPLY WIRE SHORT TO GROUND
SEAT SENSOR 5 VOLT SUPPLY WIRE OPEN
HORIZONTAL POSITION SIGNAL CIRCUIT OPEN
HORIZONTAL POSITION SIGNAL CIRCUIT SHORT TO GROUND
MEMORY SEAT MIRROR MODULE 5 VOLT SUPPLY
HORIZONTAL SENSOR LOW
MEMORY SEAT MIRROR MODULE HORIZONTAL LOW
STORED DIAGNOSTIC TROUBLE CODE

TEST	ACTION	APPLICABILITY
1	With the DRBIII®, erase the DTC from Memory Seat Mirror Module. Operate the driver's power seat and memory system. Turn the ignition switch to the Off position then start the engine and let run for one minute. With the DRB check for the same DTC to reset in the MSMM. Did the same DTC reset? Yes → Go To 2 No → Using the wiring diagram/schematic as a guide, inspect the wiring and connectors for an intermittent condition. Perform MEMORY SYSTEM VERIFICATION TEST - VER 1.	All
2	Ensure the Memory Seat Mirror Module is fully connected before proceeding. Disconnect the Driver Power Seat Horizontal Position Sensor connector. Turn ignition on. Measure the voltage of the Seat Sensor 5 Volt Supply circuit at Horizontal sensor connector. Is the voltage above 4.5 volts? Yes → Go To 3 No → Go To 7	All

HORIZONTAL SENSOR OUT OF RANGE LOW — Continued

TEST	ACTION	APPLICABILITY
3	Turn ignition off. Disconnect the Driver Power Seat Horizontal Position Sensor Connector. Disconnect the Memory Seat Mirror Module C1 Connector. Measure the resistance of the Horizontal Position Signal circuit between the Horizontal sensor and the Memory Seat Mirror Module connector. Is the resistance below 5.0 ohms? Yes → Go To 4 No → Repair the Horizontal Position Signal circuit for an open. Perform MEMORY SYSTEM VERIFICATION TEST - VER 1.	All
4	Turn ignition off. Disconnect the Memory Seat Mirror Module C1 connector. Disconnect the Driver Power Seat Horizontal Position Sensor connector. Measure the resistance of the Horizontal Position Signal circuit to ground. Is the resistance below 1000 ohms? Yes → Repair the Horizontal Position Signal circuit a short to ground. Perform MEMORY SYSTEM VERIFICATION TEST - VER 1. No → Go To 5	All
5	Turn ignition off. Ensure the Memory Seat Mirror Module is fully connected before proceeding. Disconnect the Driver Power Seat Horizontal Position Sensor Connector. Connect a jumper wire between Seat Sensor 5 volt Supply and Horizontal Position Signal circuits. Turn ignition on. With the DRBIII® select Body Memory Seat Sensors. Read the Horizontal Position Sensor voltage. Is the voltage above 4.5 volts? Yes → Replace the Seat Track Assembly. Perform MEMORY SYSTEM VERIFICATION TEST - VER 1. No → Go To 6	All
6	If there are no possible causes remaining, view repair. Repair Replace the Memory Seat Mirror Module. Perform MEMORY SYSTEM VERIFICATION TEST - VER 1.	All
7	Turn ignition off. Disconnect the Memory Seat Mirror Module C2 connector. Measure the resistance of the Seat Sensor 5 volt supply circuit to body ground. Is the resistance below 100.0 ohms? Yes → Repair the Seat 5 Volt Supply circuit for a short to ground. Perform MEMORY SYSTEM VERIFICATION TEST - VER 1. No → Go To 8	All

HORIZONTAL SENSOR OUT OF RANGE LOW — Continued

TEST	ACTION	APPLICABILITY
8	Turn ignition off. Disconnect the Memory Seat Mirror Module C2 connector. Disconnect the Driver Power Seat Horizontal Position Sensor connector. Measure the resistance of the Seat Sensor 5 Volt Supply wire between the Horizontal Sensor connector and the C2 connector. Is the resistance below 5.0 ohms? Yes → Go To 9 No → Repair the Seat Sensor 5 Volt Supply circuit for an open. Perform MEMORY SYSTEM VERIFICATION TEST - VER 1.	All
9	If there are no possible cause remaining, view repair. Repair Replace the Memory Seat Mirror Module. Perform MEMORY SYSTEM VERIFICATION TEST - VER 1.	All

Symptom:
LEFT MIRROR HORIZONTAL SENSOR OUT OF RANGE HIGH

When Monitored and Set Condition:

LEFT MIRROR HORIZONTAL SENSOR OUT OF RANGE HIGH

When Monitored: Continuously when the PCI bus is active

Set Condition: This code is set when the mirror sensor feedback to the Memory Seat Mirror Module is greater than the mirror out of range high value stored in EEPROM. Code will remain for 50 ignition cycles.

POSSIBLE CAUSES
LEFT MIRROR HORIZONTAL POSITION WIRE SHORTED TO VOLTAGE
LEFT MIRROR SENSOR GROUND WIRE OPEN
STORED DIAGNOSTIC TROUBLE CODE
LEFT MIRROR HORIZONTAL POSITION SIGNAL OPEN
LEFT POWER MIRROR
MEMORY SEAT MIRROR MODULE HORIZONTAL POSITION SIGNAL
MEMORY SEAT MIRROR MODULE SENSOR GROUND

TEST	ACTION	APPLICABILITY
1	With the DRBIII®, erase the DTC from Memory Seat Mirror Module. Operate the driver's power seat and memory system. Turn the ignition switch to the Off position then start the engine and let run for one minute. With the DRB check for the same DTC to reset in the MSMM. Did the same DTC reset? Yes → Go To 2 No → Using the wiring diagram/schematic as a guide, inspect the wiring and connectors for an intermittent condition. Perform MEMORY SYSTEM VERIFICATION TEST - VER 1.	All
2	Turn the ignition off. Disconnect the Left Power Mirror connector. Turn the ignition on. Measure the voltage of the Left Mirror Horizontal Position Signal circuit in the Left Power Mirror harness connector. Is the voltage between 4.5 and 5.5 volts? Yes → Go To 3 No → Go To 6	All

LEFT MIRROR HORIZONTAL SENSOR OUT OF RANGE HIGH — Continued

TEST	ACTION	APPLICABILITY
3	Turn the ignition off. Disconnect the Left Power Mirror connector. Measure the resistance of the Left Mirror Sensor Ground circuit in the harness connector to ground. Is the resistance below 5.0 ohms? Yes → Go To 4 No → Go To 5	All
4	If there are no possible causes remaining, view repair. Repair Replace the Left Power Mirror. Perform MEMORY SYSTEM VERIFICATION TEST - VER 1.	All
5	Turn the ignition off. Disconnect the Left Power Mirror connector. Disconnect the Memory Seat Mirror Module C1 connector. Measure the resistance of Left Mirror Sensor Ground circuit between the Memory Seat Mirror Module connector and the Left Power Mirror connector. Is the resistance below 5.0 ohms? Yes → Replace the Memory Seat Mirror Module. Perform MEMORY SYSTEM VERIFICATION TEST - VER 1. No → Repair the open Sensor Ground circuit. Perform MEMORY SYSTEM VERIFICATION TEST - VER 1.	All
6	Turn the ignition off. Disconnect the Left Power Mirror connector. Disconnect the Memory Seat Mirror Module C1 connector. Turn the ignition on. Measure the voltage of Left Mirror Horizontal Position Signal circuit. Is there any voltage present? Yes → Repair the Left Mirror Horizontal Position Signal circuit for a short to voltage. Perform MEMORY SYSTEM VERIFICATION TEST - VER 1. No → Go To 7	All
7	Turn the ignition off. Disconnect the Memory Seat Mirror Module C1 connector. Disconnect the Left Power Mirror connector. Measure the resistance of the Left Mirror Horizontal Position Signal circuit from the Left Power Mirror connector to the Memory Seat Mirror Module connector. Is the resistance below 5.0 ohms? Yes → Replace the Memory Seat Mirror Module. Perform MEMORY SYSTEM VERIFICATION TEST - VER 1. No → Repair the open Left Mirror Horizontal Position Signal wire. Perform MEMORY SYSTEM VERIFICATION TEST - VER 1.	All

Symptom:
LEFT MIRROR HORIZONTAL SENSOR OUT OF RANGE LOW

When Monitored and Set Condition:

LEFT MIRROR HORIZONTAL SENSOR OUT OF RANGE LOW

When Monitored: Continuously when the PCI bus is active.

Set Condition: This code is set when the mirror sensor feedback to the MSMM is less than the mirror out of range low value stored in EEPROM. Code will remain for 50 ignition cycles.

POSSIBLE CAUSES
MSMM HORIZONTAL POSITION LOW
STORED DIAGNOSTIC TROUBLE CODE
LEFT MIRROR HORIZONTAL POSITION SIGNAL WIRE SHORT TO GROUND
LEFT POWER MIRROR

TEST	ACTION	APPLICABILITY
1	With the DRBIII®, erase the DTC from Memory Seat Mirror Module. Operate the driver's power seat and memory system. Turn the ignition switch to the Off position then start the engine and let run for one minute. With the DRB check for the same DTC to reset in the MSMM. Did the same DTC reset? Yes → Go To 2 No → Using the wiring diagram/schematic as a guide, inspect the wiring and connectors for an intermittent condition. Perform MEMORY SYSTEM VERIFICATION TEST - VER 1.	All
2	Turn the ignition off. Disconnect the Left Power Mirror connector. Turn the ignition on. Measure the voltage of the Left Mirror Horizontal Position Signal circuit in the Left Power Mirror harness connector. Is the voltage between 4.5 and 5.5 volts? Yes → Replace the Left Power Mirror. Perform MEMORY SYSTEM VERIFICATION TEST - VER 1. No → Go To 3	All

LEFT MIRROR HORIZONTAL SENSOR OUT OF RANGE LOW — Continued

TEST	ACTION	APPLICABILITY
3	Turn the ignition off. Disconnect the Memory Seat Mirror Module C1 connector. Disconnect the Left Power Mirror connector. Measure the resistance of the Left Mirror Horizontal Position Signal circuit to ground at the Left Power Mirror harness side connector. Is the resistance below 1000.0 ohms? Yes → Repair the Left Mirror Horizontal Position Signal wire for a short to ground. Perform MEMORY SYSTEM VERIFICATION TEST - VER 1. No → Replace the Memory Seat Mirror Module. Perform MEMORY SYSTEM VERIFICATION TEST - VER 1.	All

Symptom:
LEFT MIRROR VERTICAL SENSOR OUT OF RANGE HIGH

When Monitored and Set Condition:

LEFT MIRROR VERTICAL SENSOR OUT OF RANGE HIGH

When Monitored: Continuously when the PCI bus is active.

Set Condition: This code is set when the mirror sensor feedback to the Memory Seat Mirror Module is greater than the mirror out of range high value stored in EEPROM. Code will remain for 50 ignition cycles.

POSSIBLE CAUSES
LEFT MIRROR SENSOR GROUND WIRE OPEN
LEFT MIRROR VERTICAL POSITION WIRE SHORTED TO VOLTAGE
STORED DIAGNOSTIC TROUBLE CODE
LEFT MIRROR VERTICAL POSITION SIGNAL OPEN
LEFT POWER MIRROR
MEMORY SEAT MIRROR MODULE SENSOR GROUND
MEMORY SEAT MIRROR MODULE VERTICAL POSITION SIGNAL

TEST	ACTION	APPLICABILITY
1	With the DRBIII®, erase the DTC from Memory Seat Mirror Module. Operate the driver's power seat and memory system. Turn the ignition switch to the Off position then start the engine and let run for one minute. With the DRB check for the same DTC to reset in the MSMM. Did the same DTC reset? Yes → Go To 2 No → Using the wiring diagram/schematic as a guide, inspect the wiring and connectors for an intermittent condition. Perform MEMORY SYSTEM VERIFICATION TEST - VER 1.	All
2	Turn the ignition off. Disconnect the Left Power Mirror connector. Turn the ignition on. Measure the voltage of the Left Mirror Vertical Position Signal circuit in the Left Power Mirror harness connector. Is the voltage between 4.5 and 5.5 volts? Yes → Go To 3 No → Go To 6	All

LEFT MIRROR VERTICAL SENSOR OUT OF RANGE HIGH — Continued

TEST	ACTION	APPLICABILITY
3	Turn the ignition off. Disconnect the Left Power Mirror connector. Measure the resistance of the Left Mirror Sensor Ground circuit in the harness connector to ground. Is the resistance below 5.0 ohms? Yes → Go To 4 No → Go To 5	All
4	If there are no possible causes remaining, view repair. Repair Replace the Left Power Mirror. Perform MEMORY SYSTEM VERIFICATION TEST - VER 1.	All
5	Turn the ignition off. Disconnect the Left Power Mirror connector. Disconnect the Memory Seat Mirror Module C1 connector. Measure the resistance of Left Mirror Sensor Ground circuit between the Memory Seat Mirror Module connector and the Left Power Mirror connector. Is the resistance below 5.0 ohms? Yes → Replace the Memory Seat Mirror Module. Perform MEMORY SYSTEM VERIFICATION TEST - VER 1. No → Repair the open Sensor Ground circuit. Perform MEMORY SYSTEM VERIFICATION TEST - VER 1.	All
6	Turn the ignition off. Disconnect the Left Power Mirror connector. Disconnect the Memory Seat Mirror Module C1 connector. Turn the ignition on. Measure the voltage of Left Mirror Vertical Position Signal circuit. Is there any voltage present? Yes → Repair the Left Mirror Vertical Position Signal circuit for a short to voltage. Perform MEMORY SYSTEM VERIFICATION TEST - VER 1. No → Go To 7	All
7	Turn the ignition off. Disconnect the Memory Seat Mirror Module C1 connector. Disconnect the Left Power Mirror connector. Measure the resistance of the Left Mirror Vertical Position Signal circuit from the left power mirror connector to the Memory Seat Mirror Module connector. Is the resistance below 5.0 ohms? Yes → Replace the Memory Seat Mirror Module. Perform MEMORY SYSTEM VERIFICATION TEST - VER 1. No → Repair the open Left Mirror Vertical Position Signal wire. Perform MEMORY SYSTEM VERIFICATION TEST - VER 1.	All

Symptom:

LEFT MIRROR VERTICAL SENSOR OUT OF RANGE LOW

When Monitored and Set Condition:

LEFT MIRROR VERTICAL SENSOR OUT OF RANGE LOW

When Monitored: Continuously when the PCI bus is active.

Set Condition: This code is set when the mirror sensor feedback to the Memory Seat Mirror Module is less than the mirror out of range low value stored in EEPROM. Code will remain for 50 ignition cycles

POSSIBLE CAUSES
MSMM VERTICAL POSITION LOW
STORED DIAGNOSTIC TROUBLE CODE
LEFT MIRROR VERTICAL POSITION SIGNAL WIRE SHORT TO GROUND
LEFT POWER MIRROR

TEST	ACTION	APPLICABILITY
1	With the DRBIII®, erase the DTC from Memory Seat Mirror Module. Operate the driver's power seat and memory system. Turn the ignition switch to the Off position then start the engine and let run for one minute. With the DRB check for the same DTC to reset in the MSMM. Did the same DTC reset? Yes → Go To 2 No → Using the wiring diagram/schematic as a guide, inspect the wiring and connectors for an intermittent condition. Perform MEMORY SYSTEM VERIFICATION TEST - VER 1.	All
2	Turn the ignition off. Disconnect the Left Power Mirror connector. Turn the ignition on. Measure the voltage of the Left Mirror Vertical Position Signal circuit in the Left Power Mirror harness connector. Is the voltage between 4.5 and 5.5 volts? Yes → Replace the Left Power Mirror. Perform MEMORY SYSTEM VERIFICATION TEST - VER 1. No → Go To 3	All

LEFT MIRROR VERTICAL SENSOR OUT OF RANGE LOW — Continued

TEST	ACTION	APPLICABILITY
3	Turn the ignition off. Disconnect the Memory Seat Mirror Module C1 connector. Disconnect the Left Power Mirror connector. Measure the resistance of the Left Mirror Vertical Position Signal circuit to ground at the Left Power Mirror harness side connector. Is the resistance below 1000.0 ohms? Yes → Repair the Left Mirror Vertical Position Signal wire for a short to ground. Perform MEMORY SYSTEM VERIFICATION TEST - VER 1. No → Replace the Memory Seat Mirror Module. Perform MEMORY SYSTEM VERIFICATION TEST - VER 1.	All

Symptom:
MEMORY POSITION SWITCH STUCK

When Monitored and Set Condition:

MEMORY POSITION SWITCH STUCK

When Monitored: Anytime the Body Control Module is awake.

Set Condition: If the Memory switch is active for over 10 seconds.

POSSIBLE CAUSES
DTC PRESENT
MEMORY SET SWITCH STUCK
MEMORY SELECT SWITCH MUX SHORT TO GROUND
BODY CONTROL MODULE

TEST	ACTION	APPLICABILITY
1	With the DRBIII®, record and erase DTC's. Cycle the ignition OFF then back ON. With the DRBIII®, read DTCs. Operate the Memory Set switch several times while monitoring the DRBIII. Does the DRBIII® display MEMORY SWITCH INPUT STUCK? Yes → Go To 2 No → Using the wiring diagram/schematic as a guide, inspect the wiring and connectors for an intermittent condition. Perform MEMORY SYSTEM VERIFICATION TEST - VER 1.	All
2	Disconnect the Memory Set Switch connector Turn the ignition on. With the DRBIII® in Sensors, read the Memory Select SW Volts. Is the voltage above 4.8 volts? Yes → Replace the Memory Set Switch. Perform MEMORY SYSTEM VERIFICATION TEST - VER 1. No → Go To 3	All
3	Turn the ignition off. Disconnect the Memory Set switch connector. Disconnect the BCM C1 harness connector. Measure the resistance between ground and the Memory Select Switch MUX circuit. Is the resistance above 1000.0 ohms? Yes → Go To 4 No → Repair the Memory Select Switch MUX circuit for a short to ground. Perform MEMORY SYSTEM VERIFICATION TEST - VER 1.	All

MEMORY POSITION SWITCH STUCK — Continued

TEST	ACTION	APPLICABILITY
4	If there are no possible causes remaining, view repair. Repair Replace the Body Control Module. Perform MEMORY SYSTEM VERIFICATION TEST - VER 1.	All

Symptom:

MEMORY SWITCH INPUT OPEN

When Monitored and Set Condition:

MEMORY SWITCH INPUT OPEN

When Monitored: Continuously when the PCI bus is active.

Set Condition: If the Memory Set switch voltage is greater than 4.8 volts for over 10 seconds.

POSSIBLE CAUSES
DTC PRESENT
MEMORY SET SWITCH OPEN
MEMORY SELECT SWITCH MUX OPEN
MEMORY SELECT SWITCH RETURN OPEN
BODY CONTROL MODULE

TEST	ACTION	APPLICABILITY
1	With the DRBIII®, record and erase DTC's. Cycle the ignition OFF then back ON. With the DRBIII®, read DTCs. Operate the Memory Set switch several times while monitoring the DRBIII. Does the DRBIII® display MEMORY SWITCH INPUT OPEN? Yes → Go To 2 No → Using the wiring diagram/schematic as a guide, inspect the wiring and connectors for an intermittent condition. Perform MEMORY SYSTEM VERIFICATION TEST - VER 1.	All
2	Disconnect the Memory Set Switch connector Turn the ignition on. Connect a jumper wire between Memory Select Switch MUX and Memory Select Switch Return. With the DRBIII® in Sensors, read the Memory Select SW Volts. Is the voltage below 1.0 volt? Yes → Replace the Memory Set Switch. Perform MEMORY SYSTEM VERIFICATION TEST - VER 1. No → Go To 3	All

MEMORY SWITCH INPUT OPEN — Continued

TEST	ACTION	APPLICABILITY
3	Turn the ignition off. Disconnect the Memory Set switch connector. Disconnect the BCM C1 harness connector. Measure the resistance of the Memory Select Switch MUX circuit between the Memory Set Switch connector and the BCM C1 connector. Is the resistance below 5.0 ohms? Yes → Go To 4 No → Repair the Memory Select Switch MUX circuit for an open. Perform MEMORY SYSTEM VERIFICATION TEST - VER 1.	All
4	Turn the ignition off. Disconnect the Memory Set switch connector. Disconnect the BCM C1 harness connector. Measure the resistance of the Memory Select Switch Return circuit between the Memory Set Switch connector and the BCM C1 connector. Is the resistance below 5.0 ohms? Yes → Go To 5 No → Repair the Memory Select Switch Return circuit for an open. Perform MEMORY SYSTEM VERIFICATION TEST - VER 1.	All
5	If there are no possible causes remaining, view repair. Repair Replace the Body Control Module. Perform MEMORY SYSTEM VERIFICATION TEST - VER 1.	All

Symptom:
MEMORY SWITCH INPUT SHORT

When Monitored and Set Condition:

MEMORY SWITCH INPUT SHORT

When Monitored: Anytime the Body Control Module is awake.

Set Condition: If the Memory Set switch voltage is less than 1.35 volts for over 10 seconds.

POSSIBLE CAUSES
DTC PRESENT
MEMORY SET SWITCH SHORTED
MEMORY SELECT SWITCH MUX SHORTED
BODY CONTROL MODULE

TEST	ACTION	APPLICABILITY
1	With the DRBIII®, record and erase DTC's. Cycle the ignition OFF then back ON. With the DRBIII®, read DTCs. Operate the Memory Set switch several times while monitoring the DRBIII. Does the DRBIII® display MEMORY SWITCH INPUT SHORT? Yes → Go To 2 No → Using the wiring diagram/schematic as a guide, inspect the wiring and connectors for an intermittent condition. Perform MEMORY SYSTEM VERIFICATION TEST - VER 1.	All
2	Disconnect the Memory Set Switch connector Turn the ignition on. With the DRBIII® in Sensors, read the Memory Select SW Volts. Is the voltage above 4.8 volts? Yes → Replace the Memory Set Switch. Perform MEMORY SYSTEM VERIFICATION TEST - VER 1. No → Go To 3	All
3	Turn the ignition off. Disconnect the Memory Set switch connector. Disconnect the BCM C1 harness connector. Measure the resistance between ground and the Memory Select Switch MUX circuit. Is the resistance above 5.0 ohms? Yes → Go To 4 No → Repair the Memory Select Switch MUX circuit for a short to ground. Perform MEMORY SYSTEM VERIFICATION TEST - VER 1.	All

MEMORY SWITCH INPUT SHORT — Continued

TEST	ACTION	APPLICABILITY
4	If there are no possible causes remaining, view repair. Repair Replace the Body Control Module. Perform MEMORY SYSTEM VERIFICATION TEST - VER 1.	All

Symptom:

REAR RISER DOWN POSITION STUCK

When Monitored and Set Condition:

REAR RISER DOWN POSITION STUCK

When Monitored: Continuously when the PCI bus is active.

Set Condition: If the seat switch is active for 30 seconds, this code will set and the Memory Seat Mirror Module will ignore the input until the state has changed. Three seconds after the stuck condition is removed, the seat will resume to normal operation. Code will remain for 50 ignition cycles.

POSSIBLE CAUSES
STORED DIAGNOSTIC TROUBLE CODE
DRIVER POWER SEAT SWITCH
SEAT REAR DOWN SWITCH SENSE WIRE SHORT TO VOLTAGE
MEMORY SEAT MIRROR MODULE

TEST	ACTION	APPLICABILITY
1	With the DRBIII®, erase the DTC from Memory Seat Mirror Module. Operate the driver's power seat and memory system. Turn the ignition switch to the Off position then start the engine and let run for one minute. With the DRB check for the same DTC to reset in the MSMM. Did the same DTC reset? Yes → Go To 2 No → Using the wiring diagram/schematic as a guide, inspect the wiring and connectors for an intermittent condition. Perform MEMORY SYSTEM VERIFICATION TEST - VER 1.	All
2	Disconnect the Power Seat Switch connector. Measure the voltage of the Seat Rear Down Switch Sense circuit. Is there any voltage present? Yes → Go To 3 No → Replace the Power Seat Switch. Perform MEMORY SYSTEM VERIFICATION TEST - VER 1.	All
3	Disconnect the Power Seat Switch connector. Disconnect the Memory Seat Mirror Module C1 connector. Turn the ignition on. Measure the voltage of the Seat Rear Down Switch Sense circuit to ground.. Is there any voltage present? Yes → Repair the Seat Rear Down Switch Sense wire for a short to voltage. Perform MEMORY SYSTEM VERIFICATION TEST - VER 1. No → Go To 4	All

REAR RISER DOWN POSITION STUCK — Continued

TEST	ACTION	APPLICABILITY
4	If there are no possible causes remaining, view repair. Repair Replace the Memory Seat Mirror Module. Perform MEMORY SYSTEM VERIFICATION TEST - VER 1.	All

Symptom:
REAR RISER SENSOR OUT OF RANGE HIGH

When Monitored and Set Condition:

REAR RISER SENSOR OUT OF RANGE HIGH

When Monitored: Continuously when the PCI bus is active.

Set Condition: This condition is immediately set when the seat motor potentiometer feeds a value higher than the Memory Seat Mirror Module has stored in EEPROM. Code will remain for 50 ignition cycles.

POSSIBLE CAUSES
MEMORY SEAT MIRROR MODULE SENSOR GROUND OPEN
SEAT SENSOR GROUND WIRE OPEN
5 VOLT SUPPLY SHORTED HIGH
CHECK VOLTAGE ON REAR RISER POSITION SIGNAL CIRCUIT
REAR RISER SENSOR HIGH
CHECK REAR RISER SHORT TO MOTOR
MEMORY SEAT MIRROR MODULE REAR RISER HIGH
STORED DIAGNOSTIC TROUBLE CODE

TEST	ACTION	APPLICABILITY
1	With the DRBIII®, erase the DTC from Memory Seat Mirror Module. Operate the driver's power seat and memory system. Turn the ignition switch to the Off position then start the engine and let run for one minute. With the DRB check for the same DTC to reset in the MSMM. Did the same DTC reset? Yes → Go To 2 No → Using the wiring diagram/schematic as a guide, inspect the wiring and connectors for an intermittent condition. Perform MEMORY SYSTEM VERIFICATION TEST - VER 1.	All
2	Turn ignition off. Disconnect the Driver Power Seat Rear Riser Position Sensor connector. Measure the resistance of the Seat Position Sensor Ground circuit at the driver power seat rear riser connector. Is the resistance below 5.0 ohms? Yes → Go To 3 No → Go To 8	All

REAR RISER SENSOR OUT OF RANGE HIGH — Continued

TEST	ACTION	APPLICABILITY
3	Disconnect the Rear Riser Position Sensor connector. Measure the voltage between Seat Sensor 5 volt supply circuit and ground. Turn ignition on. Is the voltage above 5.5 volts? Yes → Repair the Seat Sensor 5 Volt Supply circuit for a short to battery. Perform MEMORY SYSTEM VERIFICATION TEST - VER 1. No → Go To 4	All
4	Turn ignition off. Disconnect the Driver Power Seat Rear Riser Position Sensor Connector. Disconnect the Memory Seat Mirror Module C1 Connector. Turn ignition on. Measure the voltage between Rear Riser Position Signal circuit and ground. Is the voltage above 0.2 volts? Yes → Repair the Rear Riser Position Signal circuit for a short to voltage. Perform MEMORY SYSTEM VERIFICATION TEST - VER 1. No → Go To 5	All
5	Turn ignition off. Disconnect the Driver Power Seat Rear Riser Position Sensor Connector. Ensure the Memory Seat Mirror Module is fully connected before proceeding. Turn ignition on. With the DRBIII® in Body Memory Seat Sensors Read the Rear Riser Position Sensor voltage. Is the voltage above 0.2 volts? Yes → Go To 6 No → Replace the Seat Track Assembly. Perform MEMORY SYSTEM VERIFICATION TEST - VER 1.	All
6	Ensure all seat and sensor connectors are connected and rear riser motor is operational. With the DRBIII® in Body Memory Seat Sensors monitor the Rear Riser Position sensor while operating the seat rear riser to both limits. Did the voltage ever go above 7.0 volts only when the motor was in operation? Yes → Replace the Seat Track Assembly. Perform MEMORY SYSTEM VERIFICATION TEST - VER 1. No → Go To 7	All
7	If there are no possible causes remaining, view repair. Repair Replace the Memory Seat Mirror Module. Perform MEMORY SYSTEM VERIFICATION TEST - VER 1.	All

REAR RISER SENSOR OUT OF RANGE HIGH — Continued

TEST	ACTION	APPLICABILITY
8	Turn ignition off. Disconnect the Memory Seat Mirror Module C2 connector. Disconnect the Driver Power Seat Rear Riser Position Sensor connector. Measure the resistance of the Seat Position Sensor Ground wire between the Rear Riser Sensor connector and the C2 connector. Is the resistance below 5.0 ohms? Yes → Replace the Memory Seat Mirror Module. Perform MEMORY SYSTEM VERIFICATION TEST - VER 1. No → Repair the open Seat Sensor Ground wire. Perform MEMORY SYSTEM VERIFICATION TEST - VER 1.	All

Symptom:

REAR RISER SENSOR OUT OF RANGE LOW

When Monitored and Set Condition:

REAR RISER SENSOR OUT OF RANGE LOW

When Monitored: Continuously when the PCI bus is active.

Set Condition: This condition is immediately set when the seat motor potentiometer feeds a value lower than the Memory Seat Mirror Module has stored in EEPROM. Code will remain for 50 ignition cycles.

POSSIBLE CAUSES
MEMORY SEAT MIRROR MODULE 5 VOLT SUPPLY
SEAT 5 VOLT SUPPLY WIRE SHORT TO GROUND
SEAT SENSOR 5 VOLT SUPPLY WIRE OPEN
REAR RISER POSITION SIGNAL CIRCUIT OPEN
REAR RISER POSITION SIGNAL CIRCUIT SHORT TO GROUND
REAR RISER SENSOR LOW
MEMORY SEAT MIRROR MODULE REAR RISER LOW
STORED DIAGNOSTIC TROUBLE CODE

TEST	ACTION	APPLICABILITY
1	With the DRBIII®, erase the DTC from Memory Seat Mirror Module. Operate the driver's power seat and memory system. Turn the ignition switch to the Off position then start the engine and let run for one minute. With the DRB check for the same DTC to reset in the MSMM. Did the same DTC reset? Yes → Go To 2 No → Using the wiring diagram/schematic as a guide, inspect the wiring and connectors for an intermittent condition. Perform MEMORY SYSTEM VERIFICATION TEST - VER 1.	All
2	Ensure the Memory Seat Mirror Module is fully connected before proceeding. Disconnect the Driver Power Seat Rear Riser Sensor connector. Turn ignition on. Measure the voltage of the Seat Sensor 5 Volt Supply circuit at rear riser connector. Is the voltage above 4.5 volts? Yes → Go To 3 No → Go To 7	All

REAR RISER SENSOR OUT OF RANGE LOW — Continued

TEST	ACTION	APPLICABILITY
3	Turn ignition off. Disconnect the Driver Power Seat Rear Riser Position Sensor Connector. Disconnect the Memory Seat Mirror Module C1 Connector. Measure the resistance of the Rear Riser Position Signal circuit between the rear riser sensor and the Memory Seat Mirror Module connector. Is the resistance below 5.0 ohms? Yes → Go To 4 No → Repair the Rear Riser Position Signal circuit for an open. Perform MEMORY SYSTEM VERIFICATION TEST - VER 1.	All
4	Turn ignition off. Disconnect the Memory Seat Mirror Module C1 connector. Disconnect the Driver Power Seat Rear Riser Position Sensor connector. Measure the resistance of the Rear Riser Position Signal circuit to ground. Is the resistance below 1000 ohms? Yes → Repair the Rear Riser Position Signal circuit a short to ground. Perform MEMORY SYSTEM VERIFICATION TEST - VER 1. No → Go To 5	All
5	Turn ignition off. Ensure the Memory Seat Mirror Module is fully connected before proceeding. Disconnect the Driver Power Seat Rear Riser Position Sensor Connector. Connect a jumper wire between Seat Sensor 5 volt Supply and Rear Riser Position Signal circuits. Turn ignition on. With the DRBIII® select Body Memory Seat Sensors. Read the Rear Riser Position Sensor voltage. Is the voltage above 4.5 volts? Yes → Replace the Seat Track Assembly. Perform MEMORY SYSTEM VERIFICATION TEST - VER 1. No → Go To 6	All
6	If there are no possible causes remaining, view repair. Repair Replace the Memory Seat Mirror Module. Perform MEMORY SYSTEM VERIFICATION TEST - VER 1.	All
7	Turn ignition off. Disconnect the Memory Seat Mirror Module C2 connector. Measure the resistance of the Seat Sensor 5 volt supply circuit to body ground. Is the resistance below 100.0 ohms? Yes → Repair the Seat 5 Volt Supply circuit for a short to ground. Perform MEMORY SYSTEM VERIFICATION TEST - VER 1. No → Go To 8	All

REAR RISER SENSOR OUT OF RANGE LOW — Continued

TEST	ACTION	APPLICABILITY
8	Turn ignition off. Disconnect the Memory Seat Mirror Module C2 connector. Disconnect the Driver Power Seat Rear Riser Position Sensor connector. Measure the resistance of the Seat Sensor 5 Volt Supply wire between the Rear Riser Sensor connector and the C2 connector. Is the resistance below 5.0 ohms? Yes → Go To 9 No → Repair the Seat Sensor 5 Volt Supply circuit for an open. Perform MEMORY SYSTEM VERIFICATION TEST - VER 1.	All
9	If there are no possible cause remaining, view repair. Repair Replace the Memory Seat Mirror Module. Perform MEMORY SYSTEM VERIFICATION TEST - VER 1.	All

Symptom:

REAR RISER UP POSITION STUCK

When Monitored and Set Condition:

REAR RISER UP POSITION STUCK

When Monitored: Continuously when the PCI bus is active.

Set Condition: If the seat switch is active for 30 seconds, this code will set and the MSMM will ignore the input until the state has changed. Three seconds after the stuck condition is removed, the seat will resume to normal operation. Code will remain for 50 ignition cycles.

POSSIBLE CAUSES
STORED DIAGNOSTIC TROUBLE CODE
DRIVER POWER SEAT SWITCH
SEAT REAR UP SWITCH SENSE WIRE SHORT TO VOLTAGE
MEMORY SEAT MIRROR MODULE

TEST	ACTION	APPLICABILITY
1	With the DRBIII®, erase the DTC from Memory Seat Mirror Module. Operate the driver's power seat and memory system. Turn the ignition switch to the Off position then start the engine and let run for one minute. With the DRB check for the same DTC to reset in the MSMM. Did the same DTC reset? Yes → Go To 2 No → Using the wiring diagram/schematic as a guide, inspect the wiring and connectors for an intermittent condition. Perform MEMORY SYSTEM VERIFICATION TEST - VER 1.	All
2	Disconnect the Power Seat Switch connector. Measure the voltage of the Seat Rear Up Switch Sense circuit. Is there any voltage present? Yes → Go To 3 No → Replace the Power Seat Switch. Perform MEMORY SYSTEM VERIFICATION TEST - VER 1.	All
3	Disconnect the Power Seat Switch connector. Disconnect the Memory Seat Mirror Module C1 connector. Turn the ignition on. Measure the voltage of the Seat Rear Up Switch Sense circuit to ground.. Is there any voltage present? Yes → Repair the Seat Rear Up Switch Sense wire for a short to voltage. Perform MEMORY SYSTEM VERIFICATION TEST - VER 1. No → Go To 4	All

REAR RISER UP POSITION STUCK — Continued

TEST	ACTION	APPLICABILITY
4	If there are no possible causes remaining, view repair. Repair Replace the Memory Seat Mirror Module. Perform MEMORY SYSTEM VERIFICATION TEST - VER 1.	All

Symptom:
RECLINER DOWN POSITION STUCK

When Monitored and Set Condition:

RECLINER DOWN POSITION STUCK

When Monitored: Continuously when the PCI bus is active.

Set Condition: If the seat switch is active for 30 seconds, this code will set and the MSMM will ignore the input until the state has changed. Three seconds after the stuck condition is removed, the seat will resume to normal operation. Code will remain for 50 ignition cycles.

POSSIBLE CAUSES
STORED DIAGNOSTIC TROUBLE CODE
DRIVER POWER SEAT SWITCH
SEAT RECLINER DOWN SWITCH SENSE WIRE SHORT TO VOLTAGE
MEMORY SEAT MIRROR MODULE

TEST	ACTION	APPLICABILITY
1	With the DRBIII®, erase the DTC from Memory Seat Mirror Module. Operate the driver's power seat and memory system. Turn the ignition switch to the Off position then start the engine and let run for one minute. With the DRB check for the same DTC to reset in the MSMM. Did the same DTC reset? Yes → Go To 2 No → Using the wiring diagram/schematic as a guide, inspect the wiring and connectors for an intermittent condition. Perform MEMORY SYSTEM VERIFICATION TEST - VER 1.	All
2	Disconnect the Power Seat Switch connector. Measure the voltage of the Recliner Down Switch Sense circuit. Is there any voltage present? Yes → Go To 3 No → Replace the Power Seat Switch. Perform MEMORY SYSTEM VERIFICATION TEST - VER 1.	All
3	Disconnect the Power Seat Switch connector. Disconnect the Memory Seat Mirror Module C1 connector. Turn the ignition on. Measure the voltage of the Recliner Down Switch Sense circuit to ground.. Is there any voltage present? Yes → Repair the Recliner Down Switch Sense wire for a short to voltage. Perform MEMORY SYSTEM VERIFICATION TEST - VER 1. No → Go To 4	All

RECLINER DOWN POSITION STUCK — Continued

TEST	ACTION	APPLICABILITY
4	If there are no possible causes remaining, view repair. Repair Replace the Memory Seat Mirror Module. Perform MEMORY SYSTEM VERIFICATION TEST - VER 1.	All

Symptom:
RECLINER SENSOR OUT OF RANGE HIGH

When Monitored and Set Condition:

RECLINER SENSOR OUT OF RANGE HIGH

When Monitored: Continuously when the PCI bus is active.

Set Condition: This condition is immediately set when the seat motor potentiometer feeds a value higher than the Memory Seat Mirror Module has stored in EEPROM. Code will remain for 50 ignition cycles.

POSSIBLE CAUSES
MEMORY SEAT MIRROR MODULE SENSOR GROUND OPEN
SEAT SENSOR GROUND WIRE OPEN
5 VOLT SUPPLY SHORTED HIGH
CHECK VOLTAGE ON RECLINER POSITION SIGNAL CIRCUIT
RECLINER SENSOR HIGH
CHECK RECLINER SENSOR SHORT TO MOTOR
MEMORY SEAT MIRROR MODULE RECLINER SENSOR HIGH
STORED DIAGNOSTIC TROUBLE CODE

TEST	ACTION	APPLICABILITY
1	With the DRBIII®, erase the DTC from Memory Seat Mirror Module. Operate the driver's power seat and memory system. Turn the ignition switch to the Off position then start the engine and let run for one minute. With the DRB check for the same DTC to reset in the MSMM. Did the same DTC reset? Yes → Go To 2 No → Using the wiring diagram/schematic as a guide, inspect the wiring and connectors for an intermittent condition. Perform MEMORY SYSTEM VERIFICATION TEST - VER 1.	All
2	Turn ignition off. Disconnect the Driver Power Seat Recliner Position Sensor connector. Measure the resistance of the Seat Position Sensor Ground circuit at the driver power seat Recliner connector to ground. Is the resistance below 5.0 ohms? Yes → Go To 3 No → Go To 8	All

RECLINER SENSOR OUT OF RANGE HIGH — Continued

TEST	ACTION	APPLICABILITY
3	Disconnect the Driver Power Seat Recliner Position Sensor connector. Measure the voltage between Seat Sensor 5 volt supply circuit and ground. Turn ignition on. Is the voltage above 5.5 volts? Yes → Repair the Seat Sensor 5 Volt Supply circuit for a short to battery. Perform MEMORY SYSTEM VERIFICATION TEST - VER 1. No → Go To 4	All
4	Turn ignition off. Disconnect the Driver Power Seat Recliner Position Sensor Connector. Disconnect the Memory Seat Mirror Module C1 Connector. Turn ignition on. Measure the voltage between Recliner Position Signal circuit and ground. Is the voltage above 0.2 volts? Yes → Repair the Recliner Position Signal circuit for a short to voltage. Perform MEMORY SYSTEM VERIFICATION TEST - VER 1. No → Go To 5	All
5	Turn ignition off. Disconnect the Driver Power Seat Recliner Position Sensor Connector. Ensure the Memory Seat Mirror Module is fully connected before proceeding. Turn ignition on. With the DRBIII® in Body Memory Seat Sensors Read the Recliner Position Sensor voltage. Is the voltage above 0.2 volts? Yes → Go To 6 No → Replace the Seat Track Assembly. Perform MEMORY SYSTEM VERIFICATION TEST - VER 1.	All
6	Ensure all seat and sensor connectors are connected and Recliner motor is operational. With the DRBIII® in Body Memory Seat Sensors monitor the Recliner Position sensor while operating the seat Recliner motor to both limits. Did the voltage ever go above 7.0 volts only when the motor was in operation? Yes → Replace the Seat Track Assembly. Perform MEMORY SYSTEM VERIFICATION TEST - VER 1. No → Go To 7	All
7	If there are no possible causes remaining, view repair. Repair Replace the Memory Seat Mirror Module. Perform MEMORY SYSTEM VERIFICATION TEST - VER 1.	All

RECLINER SENSOR OUT OF RANGE HIGH — Continued

TEST	ACTION	APPLICABILITY
8	Turn ignition off. Disconnect the Memory Seat Mirror Module C2 connector. Disconnect the Driver Power Seat Recliner Position Sensor connector. Measure the resistance of the Seat Position Sensor Ground wire between the Recliner Sensor connector and the C2 connector. Is the resistance below 5.0 ohms? Yes → Replace the Memory Seat Mirror Module. Perform MEMORY SYSTEM VERIFICATION TEST - VER 1. No → Repair the open Seat Sensor Ground wire. Perform MEMORY SYSTEM VERIFICATION TEST - VER 1.	All

Symptom:
RECLINER SENSOR OUT OF RANGE LOW

When Monitored and Set Condition:

RECLINER SENSOR OUT OF RANGE LOW

When Monitored: Continuously when the PCI bus is active.

Set Condition: This condition is immediately set when the seat motor potentiometer feeds a value lower than the Memory Seat Mirror Module has stored in EEPROM. Code will remain for 50 ignition cycles.

POSSIBLE CAUSES
SEAT 5 VOLT SUPPLY WIRE SHORT TO GROUND
SEAT SENSOR 5 VOLT SUPPLY WIRE OPEN
RECLINER POSITION SIGNAL CIRCUIT OPEN
RECLINER POSITION SIGNAL CIRCUIT SHORT TO GROUND
MEMORY SEAT MIRROR MODULE 5 VOLT SUPPLY
RECLINER SENSOR LOW
MEMORY SEAT MIRROR MODULE RECLINER LOW
STORED DIAGNOSTIC TROUBLE CODE

TEST	ACTION	APPLICABILITY
1	With the DRBIII®, erase the DTC from Memory Seat Mirror Module. Operate the driver's power seat and memory system. Turn the ignition switch to the Off position then start the engine and let run for one minute. With the DRB check for the same DTC to reset in the MSMM. Did the same DTC reset? Yes → Go To 2 No → Using the wiring diagram/schematic as a guide, inspect the wiring and connectors for an intermittent condition. Perform MEMORY SYSTEM VERIFICATION TEST - VER 1.	All
2	Ensure the Memory Seat Mirror Module is fully connected before proceeding. Disconnect the Driver Power Seat Recliner Position Sensor connector. Turn ignition on. Measure the voltage of the Seat Sensor 5 Volt Supply circuit at Recliner sensor connector. Is the voltage above 4.5 volts? Yes → Go To 3 No → Go To 7	All

RECLINER SENSOR OUT OF RANGE LOW — Continued

TEST	ACTION	APPLICABILITY
3	Turn ignition off. Disconnect the Driver Power Seat Recliner Position Sensor Connector. Disconnect the Memory Seat Mirror Module C1 Connector. Measure the resistance of the Recliner Position Signal circuit between the Recliner sensor and the Memory Seat Mirror Module connector. Is the resistance below 5.0 ohms? Yes → Go To 4 No → Repair the Recliner Position Signal circuit for an open. Perform MEMORY SYSTEM VERIFICATION TEST - VER 1.	All
4	Turn ignition off. Disconnect the Memory Seat Mirror Module C1 connector. Disconnect the Driver Power Seat Recliner Position Sensor connector. Measure the resistance of the Recliner Position Signal circuit to ground. Is the resistance below 1000 ohms? Yes → Repair the Recliner Position Signal circuit a short to ground. Perform MEMORY SYSTEM VERIFICATION TEST - VER 1. No → Go To 5	All
5	Turn ignition off. Ensure the Memory Seat Mirror Module is fully connected before proceeding. Disconnect the Driver Power Seat Recliner Position Sensor Connector. Connect a jumper wire between Seat Sensor 5 volt Supply and Recliner Position Signal circuits. Turn ignition on. With the DRBIII® select Body Memory Seat Sensors. Read the Recliner Position Sensor voltage. Is the voltage above 4.5 volts? Yes → Replace the Seat Track Assembly. Perform MEMORY SYSTEM VERIFICATION TEST - VER 1. No → Go To 6	All
6	If there are no possible causes remaining, view repair. Repair Replace the Memory Seat Mirror Module. Perform MEMORY SYSTEM VERIFICATION TEST - VER 1.	All
7	Turn ignition off. Disconnect the Memory Seat Mirror Module C2 connector. Measure the resistance of the Seat Sensor 5 volt supply circuit to body ground. Is the resistance below 100.0 ohms? Yes → Repair the Seat 5 Volt Supply circuit for a short to ground. Perform MEMORY SYSTEM VERIFICATION TEST - VER 1. No → Go To 8	All

RECLINER SENSOR OUT OF RANGE LOW — Continued

TEST	ACTION	APPLICABILITY
8	Turn ignition off. Disconnect the Memory Seat Mirror Module C2 connector. Disconnect the Driver Power Seat Recliner Position Sensor connector. Measure the resistance of the Seat Sensor 5 Volt Supply wire between the Recliner Sensor connector and the C2 connector. Is the resistance below 5.0 ohms? Yes → Go To 9 No → Repair the Seat Sensor 5 Volt Supply circuit for an open. Perform MEMORY SYSTEM VERIFICATION TEST - VER 1.	All
9	If there are no possible cause remaining, view repair. Repair Replace the Memory Mirror Module. Perform MEMORY SYSTEM VERIFICATION TEST - VER 1.	All

Symptom:
RECLINER UP POSITION STUCK

When Monitored and Set Condition:

RECLINER UP POSITION STUCK

When Monitored: Continuously when the PCI bus is active.

Set Condition: If the seat switch is active for 30 seconds, this code will set and the Memory Seat Mirror Module will ignore the input until the state has changed. Three seconds after the stuck condition is removed, the seat will resume to normal operation. Code will remain for 50 ignition cycles.

POSSIBLE CAUSES
STORED DIAGNOSTIC TROUBLE CODE
DRIVER POWER SEAT SWITCH
RECLINER UP SWITCH SENSE WIRE SHORT TO VOLTAGE
MEMORY SEAT MIRROR MODULE

TEST	ACTION	APPLICABILITY
1	With the DRBIII®, erase the DTC from Memory Seat Mirror Module. Operate the driver's power seat and memory system. Turn the ignition switch to the Off position then start the engine and let run for one minute. With the DRB check for the same DTC to reset in the MSMM. Did the same DTC reset? Yes → Go To 2 No → Using the wiring diagram/schematic as a guide, inspect the wiring and connectors for an intermittent condition. Perform MEMORY SYSTEM VERIFICATION TEST - VER 1.	All
2	Disconnect the Power Seat Switch connector. Measure the voltage of the Recliner Up Switch Sense circuit. Is there any voltage present? Yes → Go To 3 No → Replace the Power Seat Switch. Perform MEMORY SYSTEM VERIFICATION TEST - VER 1.	All
3	Disconnect the Power Seat Switch connector. Disconnect the Memory Seat Mirror Module C1 connector. Turn the ignition on. Measure the voltage of the Recliner Up Switch Sense circuit to ground.. Is there any voltage present? Yes → Repair the Recliner Up Switch Sense wire for a short to voltage. Perform MEMORY SYSTEM VERIFICATION TEST - VER 1. No → Go To 4	All

RECLINER UP POSITION STUCK — Continued

TEST	ACTION	APPLICABILITY
4	If there are no possible causes remaining, view ″Repair″. Repair Replace the Memory Seat Mirror Module. Perform MEMORY SYSTEM VERIFICATION TEST - VER 1.	All

Symptom:
RIGHT MIRROR HORIZONTAL SENSOR OUT OF RANGE HIGH

When Monitored and Set Condition:

RIGHT MIRROR HORIZONTAL SENSOR OUT OF RANGE HIGH

When Monitored: Continuously when the PCI bus is active.

Set Condition: This code is set when the mirror sensor feedback to the Memory Seat Mirror Module is greater than the mirror out of range high value stored in EEPROM. Code will remain for 50 ignition cycles.

POSSIBLE CAUSES
RIGHT MIRROR HORIZONTAL POSITION WIRE SHORTED TO VOLTAGE
RIGHT MIRROR SENSOR GROUND WIRE OPEN
STORED DIAGNOSTIC TROUBLE CODE
RIGHT MIRROR HORIZONTAL POSITION SIGNAL OPEN
RIGHT POWER MIRROR
MEMORY SEAT MIRROR MODULE HORIZONTAL POSITION SIGNAL
MEMORY SEAT MIRROR MODULE SENSOR GROUND

TEST	ACTION	APPLICABILITY
1	With the DRBIII®, erase the DTC from Memory Seat Mirror Module. Operate the driver's power seat and memory system. Turn the ignition switch to the Off position then start the engine and let run for one minute. With the DRB check for the same DTC to reset in the MSMM. Did the same DTC reset? Yes → Go To 2 No → Using the wiring diagram/schematic as a guide, inspect the wiring and connectors for an intermittent condition. Perform MEMORY SYSTEM VERIFICATION TEST - VER 1.	All
2	Turn the ignition off. Disconnect the Right Power Mirror connector. Turn the ignition on. Measure the voltage of the Right Mirror Horizontal Position Signal circuit in the Right Power Mirror harness connector. Is the voltage between 4.5 and 5.5 volts? Yes → Go To 3 No → Go To 6	All

RIGHT MIRROR HORIZONTAL SENSOR OUT OF RANGE HIGH — Continued

TEST	ACTION	APPLICABILITY
3	Turn the ignition off. Disconnect the Right Power Mirror connector. Measure the resistance of the Right Mirror Sensor Ground circuit in the harness connector to ground. Is the resistance below 5.0 ohms? Yes → Go To 4 No → Go To 5	All
4	If there are no possible causes remaining, view repair. Repair Replace the Right Power Mirror. Perform MEMORY SYSTEM VERIFICATION TEST - VER 1.	All
5	Turn the ignition off. Disconnect the Right Power Mirror connector. Disconnect the Memory Seat Mirror Module C1 connector. Measure the resistance of Right Mirror Sensor Ground circuit between the Memory Seat Mirror Module connector and the Right Power Mirror connector. Is the resistance below 5.0 ohms? Yes → Replace the Memory Seat Mirror Module. Perform MEMORY SYSTEM VERIFICATION TEST - VER 1. No → Repair the open Sensor Ground circuit. Perform MEMORY SYSTEM VERIFICATION TEST - VER 1.	All
6	Turn the ignition off. Disconnect the Right Power Mirror connector. Disconnect the Memory Seat Mirror Module C1 connector. Turn the ignition on. Measure the voltage of Right Mirror Horizontal Position Signal circuit. Is there any voltage present? Yes → Repair the Right Mirror Horizontal Position Signal circuit for a short to voltage. Perform MEMORY SYSTEM VERIFICATION TEST - VER 1. No → Go To 7	All
7	Turn the ignition off. Disconnect the Memory Seat Mirror Module C1 connector. Disconnect the Right Power Mirror connector. Measure the resistance of the Right Mirror Horizontal Position Signal circuit from the Right power mirror connector to the Memory Seat Mirror Module connector. Is the resistance below 5.0 ohms? Yes → Replace the Memory Seat Mirror Module. Perform MEMORY SYSTEM VERIFICATION TEST - VER 1. No → Repair the open Right Mirror Horizontal Position Signal wire. Perform MEMORY SYSTEM VERIFICATION TEST - VER 1.	All

Symptom:

RIGHT MIRROR HORIZONTAL SENSOR OUT OF RANGE LOW

When Monitored and Set Condition:

RIGHT MIRROR HORIZONTAL SENSOR OUT OF RANGE LOW

When Monitored: Continuously when the PCI bus is active.

Set Condition: This code is set when the mirror sensor feedback to the Memory Seat Mirror Module is less than the mirror out of range low value stored in EEPROM. Code will remain for 50 ignition cycles.

POSSIBLE CAUSES
MSMM HORIZONTAL POSITION LOW
STORED DIAGNOSTIC TROUBLE CODE
RIGHT MIRROR HORIZONTAL POSITION SIGNAL WIRE SHORT TO GROUND
RIGHT POWER MIRROR

TEST	ACTION	APPLICABILITY
1	With the DRBIII®, erase the DTC from Memory Seat Mirror Module. Operate the driver's power seat and memory system. Turn the ignition switch to the Off position then start the engine and let run for one minute. With the DRB check for the same DTC to reset in the MSMM. Did the same DTC reset? Yes → Go To 2 No → Using the wiring diagram/schematic as a guide, inspect the wiring and connectors for an intermittent condition. Perform MEMORY SYSTEM VERIFICATION TEST - VER 1.	All
2	Turn the ignition off. Disconnect the Right Power Mirror connector. Turn the ignition on. Measure the voltage of the Right Mirror Horizontal Position Signal circuit in the Right Power Mirror harness connector. Is the voltage between 4.5 and 5.5 volts? Yes → Replace the Right Power Mirror. Perform MEMORY SYSTEM VERIFICATION TEST - VER 1. No → Go To 3	All

RIGHT MIRROR HORIZONTAL SENSOR OUT OF RANGE LOW — Continued

TEST	ACTION	APPLICABILITY
3	Turn the ignition off. Disconnect the Memory Seat Mirror Module C1 connector. Disconnect the Right Power Mirror connector. Measure the resistance of the Right Mirror Horizontal Position Signal circuit to ground at the Right Power Mirror harness side connector. Is the resistance below 1000.0 ohms? Yes → Repair the Right Mirror Horizontal Position Signal wire for a short to ground. Perform MEMORY SYSTEM VERIFICATION TEST - VER 1. No → Replace the Memory Seat Mirror Module. Perform MEMORY SYSTEM VERIFICATION TEST - VER 1.	All

Symptom:
RIGHT MIRROR VERTICAL SENSOR OUT OF RANGE HIGH

When Monitored and Set Condition:

RIGHT MIRROR VERTICAL SENSOR OUT OF RANGE HIGH

When Monitored: Continuously when the PCI bus is active.

Set Condition: This code is set when the mirror sensor feedback to the Memory Seat Mirror Module is greater than the mirror out of range high value stored in EEPROM. Code will remain for 50 ignition cycles.

POSSIBLE CAUSES
RIGHT MIRROR SENSOR GROUND WIRE OPEN
RIGHT MIRROR VERTICAL POSITION WIRE SHORTED TO VOLTAGE
STORED DIAGNOSTIC TROUBLE CODE
RIGHT MIRROR VERTICAL POSITION SIGNAL OPEN
RIGHT POWER MIRROR
MEMORY SEAT MIRROR MODULE SENSOR GROUND
MEMORY SEAT MIRROR MODULE VERTICAL POSITION SIGNAL

TEST	ACTION	APPLICABILITY
1	With the DRBIII®, erase the DTC from Memory Seat Mirror Module. Operate the driver's power seat and memory system. Turn the ignition switch to the Off position then start the engine and let run for one minute. With the DRB check for the same DTC to reset in the MSMM. Did the same DTC reset? Yes → Go To 2 No → Using the wiring diagram/schematic as a guide, inspect the wiring and connectors for an intermittent condition. Perform MEMORY SYSTEM VERIFICATION TEST - VER 1.	All
2	Turn the ignition off. Disconnect the Right Power Mirror connector. Turn the ignition on. Measure the voltage of the Right Mirror Vertical Position Signal circuit in the Right Power Mirror harness connector. Is the voltage between 4.5 and 5.5 volts? Yes → Go To 3 No → Go To 6	All

RIGHT MIRROR VERTICAL SENSOR OUT OF RANGE HIGH — Continued

TEST	ACTION	APPLICABILITY
3	Turn the ignition off. Disconnect the Right Power Mirror connector. Measure the resistance of the Right Mirror Sensor Ground circuit in the harness connector to ground. Is the resistance below 5.0 ohms? Yes → Go To 4 No → Go To 5	All
4	If there are no possible causes remaining, view repair. Repair Replace the Right Power Mirror. Perform MEMORY SYSTEM VERIFICATION TEST - VER 1.	All
5	Turn the ignition off. Disconnect the Right Power Mirror connector. Disconnect the Memory Seat Mirror Module C1 connector. Measure the resistance of Right Mirror Sensor Ground circuit between the Memory Seat Mirror Module connector and the Right Power Mirror connector. Is the resistance below 5.0 ohms? Yes → Replace the Memory Seat Mirror Module. Perform MEMORY SYSTEM VERIFICATION TEST - VER 1. No → Repair the open Sensor Ground circuit. Perform MEMORY SYSTEM VERIFICATION TEST - VER 1.	All
6	Turn the ignition off. Disconnect the Right Power Mirror connector. Disconnect the Memory Seat Mirror Module C1 connector. Turn the ignition on. Measure the voltage of Right Mirror Vertical Position Signal circuit. Is there any voltage present? Yes → Repair the Right Mirror Vertical Position Signal circuit for a short to voltage. Perform MEMORY SYSTEM VERIFICATION TEST - VER 1. No → Go To 7	All
7	Turn the ignition off. Disconnect the Memory Seat Mirror Module C1 connector. Disconnect the Right Power Mirror connector. Measure the resistance of the Right Mirror Vertical Position Signal circuit from the Right power mirror connector to the Memory Seat Mirror Module connector. Is the resistance below 5.0 ohms? Yes → Replace the Memory Seat Mirror Module. Perform MEMORY SYSTEM VERIFICATION TEST - VER 1. No → Repair the open Right Mirror Vertical Position Signal wire. Perform MEMORY SYSTEM VERIFICATION TEST - VER 1.	All

Symptom:

RIGHT MIRROR VERTICAL SENSOR OUT OF RANGE LOW

When Monitored and Set Condition:

RIGHT MIRROR VERTICAL SENSOR OUT OF RANGE LOW

When Monitored: Continuously when the PCI bus is active.

Set Condition: This code is set when the mirror sensor feedback to the Memory Seat Mirror Module is less than the mirror out of range low value stored in EEPROM. Code will remain for 50 ignition cycles.

POSSIBLE CAUSES
MSMM VERTICAL POSITION LOW
STORED DIAGNOSTIC TROUBLE CODE
RIGHT MIRROR VERTICAL POSITION SIGNAL WIRE SHORT TO GROUND
RIGHT POWER MIRROR

TEST	ACTION	APPLICABILITY
1	With the DRBIII®, erase the DTC from Memory Seat Mirror Module. Operate the driver's power seat and memory system. Turn the ignition switch to the Off position then start the engine and let run for one minute. With the DRB check for the same DTC to reset in the MSMM. Did the same DTC reset? Yes → Go To 2 No → Using the wiring diagram/schematic as a guide, inspect the wiring and connectors for an intermittent condition. Perform MEMORY SYSTEM VERIFICATION TEST - VER 1.	All
2	Turn the ignition off. Disconnect the Right Power Mirror connector. Turn the ignition on. Measure the voltage of the Right Mirror Vertical Position Signal circuit in the Right Power Mirror harness connector. Is the voltage between 4.5 and 5.5 volts? Yes → Replace the Right Power Mirror. Perform MEMORY SYSTEM VERIFICATION TEST - VER 1. No → Go To 3	All

RIGHT MIRROR VERTICAL SENSOR OUT OF RANGE LOW — Continued

TEST	ACTION	APPLICABILITY
3	Turn the ignition off. Disconnect the Memory Seat Mirror Module C1 connector. Disconnect the Right Power Mirror connector. Measure the resistance of the Right Mirror Vertical Position Signal circuit to ground at the Right Power Mirror harness side connector. Is the resistance below 1000.0 ohms? Yes → Repair the Right Mirror Vertical Position Signal wire for a short to ground. Perform MEMORY SYSTEM VERIFICATION TEST - VER 1. No → Replace the Memory Seat Mirror Module. Perform MEMORY SYSTEM VERIFICATION TEST - VER 1.	All

Symptom:
BUS MESSAGES MISSING

When Monitored and Set Condition:

BUS MESSAGES MISSING

When Monitored: While the EVIC is performing a series of tests on the microprocessor, compass coil, and internal circuitry.

Set Condition: The code will be set, if during the self test the EVIC does not receive messages from the BCM, FCM, EATX or PCM.

POSSIBLE CAUSES
BCM COMMUNICATION
PCM COMMUNICATION
FCM COMMUNICATION
EATX COMMUNICATION
EVIC

TEST	ACTION	APPLICABILITY
1	Turn the ignition on. With the DRBIII®, attempt to communicate with BCM. Can communication be established with the BCM? Yes → Go To 2 No → Refer to Communication Category and perform the appropriate system. Perform BODY VERIFICATION TEST - VER 1.	All
2	Turn the ignition on. With the DRBIII®, access Body Control Module. Select Body Controller and System test. Does the DRBIII® display PCM Active on the Bus? Yes → Go To 3 No → Refer to Communication Category and perform the appropriate system. Perform BODY VERIFICATION TEST - VER 1.	All
3	Turn the ignition on. With the DRBIII®, attempt to communicate with the FCM. Can communication be established with the FCM? Yes → Go To 4 No → Refer to Communication Category and perform the appropriate system. Perform BODY VERIFICATION TEST - VER 1.	All

BUS MESSAGES MISSING — Continued

TEST	ACTION	APPLICABILITY
4	Turn the ignition on. With the DRBIII®, attempt to communicate with the EATX. Can communication be established with the EATX? Yes → Replace the EVIC Module. Perform BODY VERIFICATION TEST - VER 1. No → Refer to Communication Category and perform the appropriate system. Perform BODY VERIFICATION TEST - VER 1.	All

Symptom:

COMPASS TEST FAILURE

When Monitored and Set Condition:

COMPASS TEST FAILURE

When Monitored: During the EVIC self test.

Set Condition:

POSSIBLE CAUSES
CMTC/EVIC MODULE

TEST	ACTION	APPLICABILITY
1	Perform the CMTC/EVIC self test. Turn the ignition off. Depress and hold the RESET and STEP buttons while turning the ignition on. **NOTE: This test may also be performed using the DRBIII®.** Does the CMTC/EVIC or DRBIII® display ″FAILED SELF TEST″? Yes → Replace the CMTC or EVIC in accordance with the Service Information. Perform BODY VERIFICATION TEST - VER 1. No → Test Complete.	All

Symptom:

DEMAGNETIZE COMPASS AS PER SERVICE MANUAL

When Monitored and Set Condition:

DEMAGNETIZE COMPASS AS PER SERVICE MANUAL

When Monitored: During the EVIC self test.

Set Condition: Compass has been magnetized.

POSSIBLE CAUSES
DEMAGNETIZE COMPASS

TEST	ACTION	APPLICABILITY
1	Refer to the Service Information for the Demagnetizing Procedure. View Repair for Verification Test. Repair When the Demagnetiizing Procedure is complete perform the Verification Test. Perform BODY VERIFICATION TEST - VER 1.	All

Symptom:

EC MIRROR DAY/NIGHT LINE FAULT

When Monitored and Set Condition:

EC MIRROR DAY/NIGHT LINE FAULT

When Monitored: With the ignition on.

Set Condition: The EVIC Module does not receive any messages from the EC Mirror.

POSSIBLE CAUSES
INTERMITTENT CONDITION
AUTOMATIC DAY/NIGHT MIRROR
AUTOMATIC HEADLAMP SWITCH SENSOR CIRCUIT OPEN
AUTOMATIC HEADLAMP SWITCH SENSOR CIRCUIT SHORTED TO GROUND
AUTOMATIC HEADLAMP SWITCH SENSOR CIRCUIT SHORTED TO VOLTAGE
CMTC/EVIC MODULE

TEST	ACTION	APPLICABILITY
1	With the DRBIII®, erase the DTC. Cycle the ignition on and off several times, leaving the ignition on for at least 15 seconds. With the DRBIII®, read DTCs. Did the DTC reset? Yes → Go To 2 No → The condition is not present at this time. Monitor DRBIII® parameters while wiggling the related wire harness. Refer to any Technical Service Bulletins (TSB) that may apply. Visually inspect the related wiring harness and connector terminals. Perform BODY VERIFICATION TEST - VER 1.	All
2	Turn the ignition off. Disconnect the Automatic Day/Night Mirror harness connector. Turn the ignition on. Measure the voltage of the Automatic Headlamp Switch Sensor circuit in the Automatic Day/Night Mirror harness connector. Is the voltage 4.9 volts? Yes → Replace the Automatic Day/Night Mirror in accordance with the Service Information. Perform BODY VERIFICATION TEST - VER 1. No → Go To 3	All

EC MIRROR DAY/NIGHT LINE FAULT — Continued

TEST	ACTION	APPLICABILITY
3	Turn the ignition off. Disconnect the EVIC harness connector. Disconnect the Automatic Day/Night Mirror harness connector. Measure the resistance of the Automatic Headlamp Switch Sensor circuit between the Automatic Day/Night Mirror harness connector and the EVIC harness connector. Is the resistance below 5.0 ohms? Yes → Go To 4 No → Repair the Automatic Headlamp Switch Sensor circuit for an open. Perform BODY VERIFICATION TEST - VER 1.	All
4	Turn the ignition off. Disconnect the EVIC harness connector. Disconnect the Automatic Day/Night Mirror harness connector. Measure the resistance of the Automatic Headlamp Switch Sensor circuit in the EVIC harness connector to ground. Is the resistance below 5.0 ohms? Yes → Repair the Automatic Headlamp Switch Sensor circuit for a short to ground. Perform BODY VERIFICATION TEST - VER 1. No → Go To 5	All
5	Turn the ignition off. Disconnect the Automatic Day/Night Mirror harness connector. Disconnect the EVIC harness connector. Using a 12 volt test light connected to ground, probe the Automatic Headlamp Switch Sensor circuit in the Automatic Day/Night Mirror harness connector. Does the test illuminate brightly? Yes → Repair the Automatic Headlamp Switch Sensor circuit for a shorted to voltage. Perform BODY VERIFICATION TEST - VER 1. No → Replace the CMTC/EVIC Module. Perform BODY VERIFICATION TEST - VER 1.	All

Symptom:
EVIC INTERNAL FAILURE

When Monitored and Set Condition:

EVIC INTERNAL FAILURE

When Monitored: When a SELF TEST command is received from the DRBIII, the EVIC performs a series of tests on the microprocessor, compass coil, and internal circuitry.

Set Condition: The code will be set, if during the self test the EVIC detects a problem the microprocessor, compass coil, and internal circuitry.

POSSIBLE CAUSES
EVIC INTERNAL FAILURE

TEST	ACTION	APPLICABILITY
1	Turn the ignition on. With the DRBIII®, erase the DTC. Cycle the ignition on and off several times leaving the ignition in the on position for at least 15 second each time. With the DRBIII®, read DTCs. Does the DTC reset? Yes → Replace Electronic Vehicle Information Center. Perform BODY VERIFICATION TEST - VER 1. No → Test Complete.	All

Symptom:

LOOPBACK FAILURE

POSSIBLE CAUSES
CMTC/EVIC MODULE

TEST	ACTION	APPLICABILITY
1	Turn the ignition on. With the DRBIII®, erase DTCs. Turn the ignition off, and wait approximately 15 seconds. With the DRBIII®, read DTCs. Did this DTC reset? Yes → Replace the CMTC or EVIC in accordance with the Service Information. Perform BODY VERIFICATION TEST - VER 1. No → Test Complete.	All

Symptom:
NO BCM MESSAGES RECEIVED

POSSIBLE CAUSES
DTC PRESENT
NO RESPONSE - PCI BUS - BCM
CMTC/EVIC MODULE

TEST	ACTION	APPLICABILITY
1	With the DRBIII®, erase DTCs. Cycle the ignition and wait approximately 1 minute. With the DRBIII®, read DTCs. Did this DTC reset? Yes → Go To 2 No → The condition is not present at this time. Monitor DRBIII® parameters while wiggling the related wire harness. refer to any Technical Service Bulletins (TSB) that may apply. Visually inspect the related wiring harness and connector terminals. Perform BODY VERIFICATION TEST - VER 1.	All
2	Turn the ignition on. With the DRBIII®, attempt to I/D or communicate with the BCM. Was the DRBIII® able to communicate with the BCM? Yes → Replace the CMTC or EVIC in accordance with the Service Information. Perform BODY VERIFICATION TEST - VER 1. No → Refer to the COMMUNICATION category and perform the appropriate symptom. Perform BODY VERIFICATION TEST - VER 1.	All

Symptom:
NO FCM MESSAGES RECEIVED

POSSIBLE CAUSES
DTC PRESENT
NO RESPONSE - PCI BUS - FCM
CMTC/EVIC MODULE

TEST	ACTION	APPLICABILITY
1	With the DRBIII®, erase DTCs. Cycle the ignition and wait approximately 1 minute. With the DRBIII®, read DTCs. Did this DTC reset? Yes → Go To 2 No → The condition is not present at this time. Monitor DRBIII® parameters while wiggling the related wire harness. refer to any Technical Service Bulletins (TSB) that may apply. Visually inspect the related wiring harness and connector terminals. Perform BODY VERIFICATION TEST - VER 1.	All
2	Turn the ignition on. With the DRBIII®, attempt to I/D or communicate with the FCM. Was the DRBIII® able to communicate with the FCM? Yes → Replace the CMTC or EVIC in accordance with the Service Information. Perform BODY VERIFICATION TEST - VER 1. No → Refer to the COMMUNICATION category and perform the appropriate symptom. Perform BODY VERIFICATION TEST - VER 1.	All

Symptom:
NO PCM MESSAGES RECEIVED

POSSIBLE CAUSES
DTC PRESENT
NO RESPONSE - PCI BUS - PCM
CMTC/EVIC MODULE

TEST	ACTION	APPLICABILITY
1	With the DRBIII®, erase DTCs. Cycle the ignition and wait approximately 15 seconds. With the DRBIII®, read DTCs. Did this DTC reset? Yes → Go To 2 No → The condition is not present at this time. Monitor DRBIII® parameters while wiggling the related wire harness. Refer to any Technical Service Bulletins (TSB) that may apply. Visually inspect the related wiring harness and connector terminals. Perform BODY VERIFICATION TEST - VER 1.	All
2	Turn the ignition on. With the DRBIII®, enter Body Computer, System Tests, then PCM Monitor. Does the DRBIII® display PCM Active on the Bus? Yes → Replace the CMTC or EVIC in accordance with the Service Information. Perform BODY VERIFICATION TEST - VER 1. No → Refer to the COMMUNICATION category and perform the appropriate symptom. Perform BODY VERIFICATION TEST - VER 1.	All

Symptom:
NO TCM MESSAGES RECEIVED

POSSIBLE CAUSES
DTC PRESENT
NO RESPONSE - PCI BUS - TCM
CMTC/EVIC MODULE

TEST	ACTION	APPLICABILITY
1	With the DRBIII®, erase DTCs. Cycle the ignition and wait approximately 1 minute. With the DRBIII®, read DTCs. Did this DTC reset? Yes → Go To 2 No → The condition is not present at this time. Monitor DRBIII® parameters while wiggling the related wire harness. Refer to any Technical Service Bulletins (TSB) that may apply. Visually inspect the related wiring harness and connector terminals. Perform BODY VERIFICATION TEST - VER 1.	All
2	Turn the ignition on. With the DRBIII®, attempt to I/D or communicate with the TCM. Was the DRBIII® able to communicate with the TCM? Yes → Replace the CMTC or EVIC in accordance with the Service Information. Perform BODY VERIFICATION TEST - VER 1. No → Refer to the COMMUNICATION category and perform the appropriate symptom. Perform BODY VERIFICATION TEST - VER 1.	All

Symptom:
OTIS MODULE MESSAGE MISMATCH

When Monitored and Set Condition:

OTIS MODULE MESSAGE MISMATCH

When Monitored: With the ignition on.

Set Condition: BCM has learned EC Mirror but the vehicle is Not equipped with EC Mirror.

POSSIBLE CAUSES
INTERMITTENT CONDITION
EVIC COMMUNICATION
CMTC/EVIC MODULE
BODY CONTROL MODULE

TEST	ACTION	APPLICABILITY
1	**NOTE: All communication DTC(s) that may have set along with this DTC must be diagnosed before continuing.** **NOTE: If the DTC EC Mirror Day/Night Line Fault is present in the EVIC along with this DTC, diagnose the EC Mirror Day/Night Line Fault first before continuing.** With the DRBIII®, erase the DTC. Cycle the ignition on and off several times, leaving the ignition on for at least 15 seconds. With the DRBIII®, read DTCs. Did the DTC OTIS Module Message Mismatch reset? Yes → Go To 2 No → Go To 4	All
2	Turn the ignition on. With the DRBIII®, attempt to communicate with the CMTC/EVIC Module. Can communication be established with the CMTC/EVIC Module? Yes → Go To 3 No → Refer to the Communication Category and perform the appropriate symptom. Perform BODY VERIFICATION TEST - VER 1.	All

OTIS MODULE MESSAGE MISMATCH — Continued

TEST	ACTION	APPLICABILITY
3	Turn the ignition off. Install a substitute CMTC/EVIC Module in place of the original module. With the DRBIII®, erase DTCs. Turn the ignition on. Cycle the ignition on and off, leaving the ignition in the on position for at least 15 seconds each time. With the DRBIII®, read DTCs. Did the DTC reset? Yes → Replace the Body Control Module. Perform BODY VERIFICATION TEST - VER 1. No → Replace the CMTC/EVIC Module. Perform BODY VERIFICATION TEST - VER 1.	All
4	**WARNING: WHEN THE ENGINE IS OPERATING, DO NOT STAND IN A DIRECT LINE WITH THE FAN. DO NOT PUT YOUR HANDS NEAR THE PULLEYS, BELTS OR FAN. DO NOT WEAR LOOSE CLOTHING.** **NOTE: The conditions that set the DTC are not present at this time. The following list may help in identifying the intermittent condition.** With the engine running at normal operating temperature, monitor the DRB parameters related to the DTC while wiggling the wiring harness. Look for parameter values to change and/or a DTC to set. Refer to any Technical Service Bulletins (TSB) that may apply. Visually inspect the related wiring harness. Look for any chafed, pierced, pinched, or partially broken wires. Visually inspect the related wiring harness connectors. Look for broken, bent, pushed out, or corroded terminals. Were any of the above conditions present? Yes → Repair as necessary Perform BODY VERIFICATION TEST - VER 1. No → Test Complete.	All

Symptom:
OTIS MODULE MESSAGE MISMATCH (DIESEL)

When Monitored and Set Condition:

OTIS MODULE MESSAGE MISMATCH (DIESEL)

When Monitored: With the ignition on.

Set Condition: FCM has learned EC Mirror but the vehicle is Not equipped with EC Mirror.

POSSIBLE CAUSES
INTERMITTENT CONDITION
CMTC/EVIC COMMUNICATION
CMTC/EVIC MODULE
FRONT CONTROL MODULE

TEST	ACTION	APPLICABILITY
1	**NOTE: All communication DTC(s) that may have set along with this DTC must diagnosed before continuing.** **NOTE: If the DTC EC Mirror Day/Night Line Fault is present in the EVIC along with this DTC, diagnose the EC Mirror Day/Night Line Fault first before continuing.** With the DRBIII®, erase the DTC. Cycle the ignition on and off several times, leaving the ignition on for at least 15 seconds. With the DRBIII®, read DTCs. Did the DTC OTIS Module Message Mismatch reset? Yes → Go To 2 No → Go To 4	All
2	Turn the ignition on. With the DRBIII®, attempt to communicate with the CMTC/EVIC Module. Can communication be established with the CMTC/EVIC Module? Yes → Go To 3 No → Refer to the Communication Category and perform the appropriate symptom. Perform BODY VERIFICATION TEST - VER 1.	All

OTIS MODULE MESSAGE MISMATCH (DIESEL) — Continued

TEST	ACTION	APPLICABILITY
3	Turn the ignition off. Install a substitute CMTC/EVIC Module in place of the original module. With the DRBIII®, erase DTCs. Turn the ignition on. Cycle the ignition on and off, leaving the ignition in the on position for at least 15 seconds each time. With the DRBIII®, read DTCs. Did the DTC reset? Yes → Replace the Front Control Module. Perform BODY VERIFICATION TEST - VER 1. No → Replace the CMTC/EVIC Module. Perform BODY VERIFICATION TEST - VER 1.	All
4	**WARNING: WHEN THE ENGINE IS OPERATING, DO NOT STAND IN A DIRECT LINE WITH THE FAN. DO NOT PUT YOUR HANDS NEAR THE PULLEYS, BELTS OR FAN. DO NOT WEAR LOOSE CLOTHING.** **NOTE: The conditions that set the DTC are not present at this time. The following list may help in identifying the intermittent condition.** With the engine running at normal operating temperature, monitor the DRB parameters related to the DTC while wiggling the wiring harness. Look for parameter values to change and/or a DTC to set. Refer to any Technical Service Bulletins (TSB) that may apply. Visually inspect the related wiring harness. Look for any chafed, pierced, pinched, or partially broken wires. Visually inspect the related wiring harness connectors. Look for broken, bent, pushed out, or corroded terminals. Were any of the above conditions present? Yes → Repair as necessary Perform BODY VERIFICATION TEST - VER 1. No → Test Complete.	All

Symptom:

***REPAIRING CMTC DISPLAYS DOUBLE DASH (- -) IN TEMP DISPLAY**

POSSIBLE CAUSES
NO RESPONSE - PCI BUS - FRONT CONTROL MODULE
CMTC BUS MESSAGE FAILURE
COMPASS MINI-TRIP COMPUTER
AMBIENT TEMPERATURE SENSOR
AMBIENT TEMPERATURE SENSOR SIGNAL CIRCUIT SHORT TO SENSOR CIRCUIT
AMBIENT TEMPERATURE SENSOR SIGNAL CIRCUIT SHORT TO GROUND
AMBIENT TEMPERATURE SENSOR SIGNAL CIRCUIT OPEN
AMBIENT TEMPERATURE SENSOR RETURN CIRCUIT OPEN
INTELLIGENT POWER MODULE
FRONT CONTROL MODULE

TEST	ACTION	APPLICABILITY
1	Turn the ignition on. With the DRBIII®, select System Monitors, J1850 Module Scan. Does the DRBIII® display FCM on the BUS? Yes → Go To 2 No → Refer to the COMMUNICATIONS category and perform the appropriate symptom.	All
2	Turn the ignition on. With the DRBIII®, select Body, Compass Mini-Trip, System Tests, then Auto Self Test. Does the DRBIII® display TEST FAILED: Bus Message Failure? Yes → Refer to the COMMUNICATIONS category and perform the appropriate symptom. No → Go To 3	All
3	Turn the ignition on. With the DRBIII®, select Body, Compass Mini-Trip, System Tests, then Auto Self Test. Does the DRBIII® display TEST FAILED: Internal EVIC Failure? Yes → Replace the Compass Mini-Trip Computer in accordance with the Service Information. Perform BODY VERIFICATION TEST - VER 1. No → Go To 4	All

*REPAIRING CMTC DISPLAYS DOUBLE DASH (- -) IN TEMP DISPLAY — Continued

TEST	ACTION	APPLICABILITY
4	Turn the ignition off. Disconnect the Ambient Temperature Sensor harness connector. Check connectors - Clean/repair as necessary. Measure the resistance of the Ambient Temperature Sensor. 0°C (32°F) Sensor Resistance = 29.33 - 35.99 kilohms 10°C (50°F) Sensor Resistance = 17.99 - 21.81 kilohms 20°C (68°F) Sensor Resistance = 11.37 - 13.61 kilohms 30°C (86°F) Sensor Resistance = 7.37 - 8.75 kilohms 40°C (104°F) Sensor Resistance = 4.90 - 5.75 kilohms Does the Ambient Temperature Sensor measure within specifications? Yes → Go To 5 No → Replace the Ambient Temperature Sensor in accordance with the Service Information. Perform BODY VERIFICATION TEST - VER 1.	All
5	Turn the ignition off. Disconnect the Ambient Temperature Sensor harness connector. Disconnect the IPM C1 harness connector. Check connectors - Clean/repair as necessary. Measure the resistance of the Ambient Temperature Sensor Signal circuit to the Sensor Return circuit. Does the resistance measure less than 5.0 ohms? Yes → Repair the Ambient Temperature Sensor Signal circuit for a short to the Sensor Return circuit. Perform BODY VERIFICATION TEST - VER 1. No → Go To 6	All
6	Turn the ignition off. Disconnect the Ambient Temperature Sensor harness connector. Disconnect the IPM C1 harness connector. Check connectors - Clean/repair as necessary. Measure the resistance of the Ambient Temperature Sensor Signal circuit to ground. Does the resistance measure less than 5.0 ohms? Yes → Repair the Ambient Temperature Sensor Signal circuit for a short to ground. Perform BODY VERIFICATION TEST - VER 1. No → Go To 7	All
7	Turn the ignition off. Disconnect the Ambient Temperature Sensor harness connector. Disconnect the IPM C1 harness connector. Check connectors - Clean/repair as necessary. Measure the resistance of the Ambient Temperature Sensor Signal circuit. Does the resistance measure less than 5.0 ohms? Yes → Go To 8 No → Repair the Ambient Temperature Sensor Signal circuit for an open. Perform BODY VERIFICATION TEST - VER 1.	All

*REPAIRING CMTC DISPLAYS DOUBLE DASH (- -) IN TEMP DISPLAY

— Continued

TEST	ACTION	APPLICABILITY
8	Turn the ignition off. Disconnect the Ambient Temperature Sensor harness connector. Disconnect the IPM C1 harness connector. Check connectors - Clean/repair as necessary. Measure the resistance of the Ambient Temperature Sensor Return circuit. Does the resistance measure less than 5.0 ohms? Yes → Go To 9 No → Repair the Ambient Temperature Sensor Return circuit for an open. Perform BODY VERIFICATION TEST - VER 1.	All
9	Turn the ignition off. Disconnect and isolate the battery negative cable. Disconnect the IPM C1 harness connector. Disconnect the FCM from the IPM. Check connectors - Clean/repair as necessary. Measure the resistance of the Ambient Temperature Sensor Signal circuit and the Return circuit through the IPM. Does each circuit resistance measure less than 5.0 ohms? Yes → Replace the Front Control Module in accordance with the Service Information. Perform BODY VERIFICATION TEST - VER 1. No → Replace the Intelligent Power Module in accordance with the Service Information. Perform BODY VERIFICATION TEST - VER 1.	All

Symptom:

DRIVER DOOR LOCK SWITCH INPUT OPEN OR SHORT TO VOLTAGE

When Monitored and Set Condition:

DRIVER DOOR LOCK SWITCH INPUT OPEN OR SHORT TO VOLTAGE

When Monitored: At all times when battery power is supplied to the Body Control Module.

Set Condition: When the BCM senses voltage to the door lock switch above 4.6 volts for over 10 seconds.

POSSIBLE CAUSES
DTC PRESENT
BODY CONTROL MODULE - DRIVER DOOR LOCK SWITCH VOLTAGE LOW
DOOR LOCK SWITCH GROUND OPEN
DOOR LOCK SWITCH MUX CIRCUIT OPEN
DOOR LOCK SWITCH OPEN
DOOR LOCK SWITCH MUX CIRCUIT SHORT TO VOLTAGE
BODY CONTROL MODULE - DOOR LOCK SWITCH MUX SHORT TO VOLTAGE

TEST	ACTION	APPLICABILITY
1	With the DRBIII®, record and erase DTC's. Cycle the ignition switch from ON to OFF to ON. With the DRBIII®, read DTC's. Remove the key and operate the door locks from the Driver Door Lock Switch while monitoring the DRBIII®. Wait 10 seconds. Does the DRBIII® display DR DOOR LOCK SW INPUT OPEN OR SHORT TO VOLTAGE? Yes → Go To 2 No → Using the wiring diagram/schematic as a guide, inspect the wiring and connectors. Perform BODY VERIFICATION TEST - VER 1.	All
2	With the DRBIII® in Sensors, read the DR DOOR LOCK SW voltage. Does the DRBIII® display 4.0 volts or greater? Yes → Go To 3 No → Disconnect the BCM harness connector(s). Check connectors - Clean/repair as necessary. If okay, replace the Body Control Module. Perform BODY VERIFICATION TEST - VER 1.	All

DRIVER DOOR LOCK SWITCH INPUT OPEN OR SHORT TO VOLTAGE — Continued

TEST	ACTION	APPLICABILITY
3	Disconnect the Driver Door Lock Switch connector. Using a 12-volt test light connected to 12-volts, check the Ground circuit. Does the test light illuminate brightly? Yes → Go To 4 No → Repair the Ground circuit for an open. Perform BODY VERIFICATION TEST - VER 1.	All
4	Disconnect the Driver Door Lock Switch connector. Measure the voltage between Door Lock Switch Mux circuit and ground. Select the voltage present. Below 4.0 volts.. Repair the Door Lock Switch Mux circuit for an open. Perform BODY VERIFICATION TEST - VER 1. Between 4.1volts and 5.2 volts. Replace the Door Lock Switch. Perform BODY VERIFICATION TEST - VER 1. Above 5.3 volts. Go To 5	All
5	Disconnect the Driver Door Lock Switch connector. Disconnect the Body Control Module C3 connector. **NOTE: Check connectors - Clean/repair as necessary.** Turn the ignition on. Turn the park lamps on. Measure the voltage between Door Lock Switch Mux circuit and ground. Is there any voltage present? Yes → Repair the Door Lock Switch Mux circuit for a short to voltage. Perform BODY VERIFICATION TEST - VER 1. No → Replace the Body Control Module. Perform BODY VERIFICATION TEST - VER 1.	All

Symptom:
DRIVER DOOR LOCK SWITCH INPUT SHORT

When Monitored and Set Condition:

DRIVER DOOR LOCK SWITCH INPUT SHORT

When Monitored: At all times when battery power is supplied to the Body Control Module.

Set Condition: When the BCM senses voltage to the door lock switch below .5 volts for over 10 seconds.

POSSIBLE CAUSES
DTC PRESENT
DOOR LOCK SWITCH SHORTED
DOOR LOCK SWITCH MUX SHORTED
BODY CONTROL MODULE - DOOR LOCK SWITCH VOLTAGE SHORTED

TEST	ACTION	APPLICABILITY
1	Turn the ignition on. With the DRBIII®, record and erase DTC's. With the DRBIII®, read DTC's. Remove the key and operate the door locks several times from the Driver Door Lock Switch while monitoring the DRBIII®. Wait 10 seconds. Does the DRBIII® display DR DOOR LOCK SW INPUT SHORT? Yes → Go To 2 No → Using the wiring diagram/schematic as a guide, inspect the wiring and connectors. Perform BODY VERIFICATION TEST - VER 1.	All
2	Disconnect the Door Lock Switch connector. With the DRBIII® in Sensors, read the DR DOOR SW MUX circuit Is the voltage above 4.6 volts? Yes → Replace the Door Lock Switch. Perform BODY VERIFICATION TEST - VER 1. No → Go To 3	All
3	Disconnect the Driver Door Lock Switch connector. Disconnect the Body Control Module C3 connector. **NOTE: Check connectors - Clean/repair as necessary.** Measure the resistance between Door Lock Switch Mux circuit and ground. Is the resistance below 1000.0 ohms? Yes → Repair the Door Lock Switch Mux circuit for a short to ground. Perform BODY VERIFICATION TEST - VER 1. No → Go To 4	All

DRIVER DOOR LOCK SWITCH INPUT SHORT — Continued

TEST	ACTION	APPLICABILITY
4	If there are no possible causes remaining, view repair. Repair Replace the Body Control Module. Perform BODY VERIFICATION TEST - VER 1.	All

Symptom:
DRIVER DOOR LOCK SWITCH INPUT STUCK

When Monitored and Set Condition:

DRIVER DOOR LOCK SWITCH INPUT STUCK

When Monitored: At all times when battery power is supplied to the Body Control Module.

Set Condition: When the BCM senses voltage to the door lock switch between 1.3 and 3.25 for over 10 seconds.

POSSIBLE CAUSES
DTC PRESENT
BODY CONTROL MODULE - DOOR LOCK SWITCH VOLTAGE INCORRECT
DOOR LOCK SWITCH GROUND OPEN
DOOR LOCK SWITCH MUX OPEN
DOOR LOCK SWITCH STUCK

TEST	ACTION	APPLICABILITY
1	Turn the ignition on. With the DRBIII®, record and erase DTC's. With the DRBIII®, read DTC's. Remove the key and operate the door lock several times from the Driver Door Lock Switch while monitoring the DRBIII®. Wait 10 seconds. Does the DRBIII® display DR DOOR LOCK SW INPUT STUCK? Yes → Go To 2 No → Using the wiring diagram/schematic as a guide, inspect the wiring and connectors. Perform BODY VERIFICATION TEST - VER 1.	All
2	With the DRBIII® in Sensors, read the DR DOOR LOCK SW voltage. Does the DRBIII® display voltage between 1.3 and 3.25 volts? Yes → Go To 3 No → Disconnect the BCM harness connector(s). Check connectors - Clean/repair as necessary. If okay, replace the Body Control Module. Perform BODY VERIFICATION TEST - VER 1.	All
3	Disconnect the Driver Door Lock Switch connector. Using a 12-volt test light connected to 12-volts, check the Ground circuit. Does the test light illuminate brightly? Yes → Go To 4 No → Repair the Ground circuit for an open. Perform BODY VERIFICATION TEST - VER 1.	All

DRIVER DOOR LOCK SWITCH INPUT STUCK — Continued

TEST	ACTION	APPLICABILITY
4	Disconnect the Driver Door Lock Switch connector. Measure the voltage between Door Lock Switch Mux circuit and ground. Is the voltage above 4.6 volts? Yes → Go To 5 No → Repair the Door Lock Switch Mux circuit for an open. Perform BODY VERIFICATION TEST - VER 1.	All
5	If there are no possible causes remaining, view repair. Repair Replace the Door Lock Switch. Perform BODY VERIFICATION TEST - VER 1.	All

Symptom:

LEFT CYLINDER LOCK SWITCH INPUT OPEN OR SHORT TO VOLTAGE

When Monitored and Set Condition:

LEFT CYLINDER LOCK SWITCH INPUT OPEN OR SHORT TO VOLTAGE

When Monitored: At all times when battery power is supplied to the Body Control Module.

Set Condition: When the BCM senses voltage to the cylinder lock switch above 4.6 volts for over 10 seconds.

POSSIBLE CAUSES
DTC PRESENT
BODY CONTROL MODULE - LEFT CYLINDER LOCK SWITCH VOLTAGE LOW
CYLINDER LOCK SWITCH GROUND OPEN
CYLINDER LOCK SWITCH MUX OPEN
CYLINDER LOCK SWITCH OPEN
CYLINDER LOCK SWITCH MUX SHORT TO VOLTAGE
BODY CONTROL MODULE - LEFT CYLINDER LOCK SWITCH MUX SHORT TO VOLTAGE

TEST	ACTION	APPLICABILITY
1	NOTE: When this code is present, the VTSS indicator will illuminate solid during the arming process. With the DRBIII®, record and erase DTC's. Cycle the ignition switch from ON to OFF to ON. With the DRBIII®, read DTC's. Remove the key and operate the door locks several times from the Left Cylinder Lock Switch while monitoring the DRBIII®. Wait 10 seconds. Does the DRBIII® display LEFT CYL LOCK SW INPUT OPEN OR SHORT TO VOLTAGE? Yes → Go To 2 No → Using the wiring diagram/schematic as a guide, inspect the wiring and connectors. Perform BODY VERIFICATION TEST - VER 1.	All
2	With the DRBIII® in Sensors, read the LEFT CYL LOCK SW voltage. Does the DRBIII® display 4.0 volts or greater? Yes → Go To 3 No → Disconnect the BCM harness connector(s). Check connectors - Clean/repair as necessary. If okay, replace the Body Control Module. Perform BODY VERIFICATION TEST - VER 1.	All

LEFT CYLINDER LOCK SWITCH INPUT OPEN OR SHORT TO VOLTAGE — Continued

TEST	ACTION	APPLICABILITY
3	Disconnect the Left Cylinder Lock Switch connector. Using a 12-volt test light connected to 12-volts, check the Ground circuit. Does the test light illuminate brightly? Yes → Go To 4 No → Repair the Ground circuit for an open. Perform BODY VERIFICATION TEST - VER 1.	All
4	Disconnect the Left Cylinder Lock Switch connector. Measure the voltage between Cylinder Lock Switch Mux circuit and ground. Select the voltage present. Below 4.0 volts. Repair the Cylinder Lock Switch Mux circuit for an open. Perform BODY VERIFICATION TEST - VER 1. Between 4.1 volts and 5.2 volts. Replace the Cylinder Lock Switch. Perform BODY VERIFICATION TEST - VER 1. Above 5.3 volts. Go To 5	All
5	Disconnect the Left Cylinder Door Lock Switch connector. Disconnect the Body Control Module C3 connector. **NOTE: Check connectors - Clean/repair as necessary.** Turn the ignition on. Turn the park lamps on. Measure the voltage between Left Cylinder Lock Switch Mux circuit and ground. Is there any voltage present? Yes → Repair the Cylinder Lock Switch Mux circuit for a short to voltage. Perform BODY VERIFICATION TEST - VER 1. No → Replace the Body Control Module. Perform BODY VERIFICATION TEST - VER 1.	All

Symptom:

LEFT CYLINDER LOCK SWITCH INPUT SHORT

When Monitored and Set Condition:

LEFT CYLINDER LOCK SWITCH INPUT SHORT

When Monitored: At all times when battery power is supplied to the Body Control Module.

Set Condition: When the BCM senses voltage to the cylinder lock switch below .5 volts for over 10 seconds.

POSSIBLE CAUSES
DTC PRESENT
CYLINDER LOCK SWITCH SHORTED
CYLINDER LOCK SWITCH MUX CIRCUIT SHORTED
BODY CONTROL MODULE - LEFT CYLINDER LOCK SWITCH VOLTAGE SHORTED

TEST	ACTION	APPLICABILITY
1	NOTE: When this code is present, the VTSS indicator will stay on solid during the arming process. With the DRBIII®, record and erase DTC's. Cycle the ignition switch from ON to OFF to ON. With the DRBIII®, read DTC's. Remove the key and operate the door locks several times from the Left Cylinder Lock Switch while monitoring the DRBIII®. Wait 10 seconds. Does the DRBIII® display LEFT CYL LOCK SW INPUT SHORT? Yes → Go To 2 No → Using the wiring diagram/schematic as a guide, inspect the wiring and connectors. Perform BODY VERIFICATION TEST - VER 1.	All
2	Disconnect the Left Cylinder Lock Switch connector. With the DRBIII® in Sensors, read the LEFT CYL SW MUX circuit Is the voltage above 4.6 volts? Yes → Replace the Cylinder Lock Switch. Perform BODY VERIFICATION TEST - VER 1. No → Go To 3	All

LEFT CYLINDER LOCK SWITCH INPUT SHORT — Continued

TEST	ACTION	APPLICABILITY
3	Disconnect the Right Cylinder Lock Switch connector. Disconnect the Body Control Module C3 connector. Measure the resistance between Cylinder Lock Switch Mux circuit and ground. Is the resistance below 1000.0 ohms? Yes → Repair the Cylinder Lock Switch Mux circuit for a short to ground. Perform BODY VERIFICATION TEST - VER 1. No → Go To 4	All
4	If there are no possible causes remaining, view repair. Repair Disconnect the BCM harness connector(s). Check connectors - Clean/repair as necessary. If okay, replace the Body Control Module. Perform BODY VERIFICATION TEST - VER 1.	All

Symptom:
LEFT CYLINDER LOCK SWITCH INPUT STUCK

When Monitored and Set Condition:

LEFT CYLINDER LOCK SWITCH INPUT STUCK

When Monitored: At all times when battery power is supplied to the Body Control Module.

Set Condition: When the BCM senses voltage to the cylinder lock switch between 1.3 and 3.25 for over 10 seconds.

POSSIBLE CAUSES
DTC PRESENT
BODY CONTROL MODULE - LEFT CYLINDER LOCK SWITCH VOLTAGE INCORRECT
LEFT CYLINDER LOCK SWITCH GROUND OPEN
LEFT CYLINDER LOCK SWITCH MUX OPEN
CYLINDER LOCK SWITCH STUCK

TEST	ACTION	APPLICABILITY
1	NOTE: When this code is present, the VTSS indicator will stay on solid during the arming process. With the DRBIII®, record and erase DTC's. Cycle the ignition switch from ON to OFF to ON. With the DRBIII®, read DTC's. Remove the key and operate the door lock several times from the Left Cylinder Lock Switch while monitoring the DRBIII®. Wait 10 seconds. Does the DRBIII® display LEFT CYL LOCK SW INPUT STUCK? Yes → Go To 2 No → Using the wiring diagram/schematic as a guide, inspect the wiring and connectors. Perform BODY VERIFICATION TEST - VER 1.	All
2	With the DRBIII® in Sensors, read the LEFT CYL LOCK SW voltage. Does the DRBIII® display voltage between 1.3 and 3.25 volts? Yes → Go To 3 No → Replace the Body Control Module. Perform BODY VERIFICATION TEST - VER 1.	All
3	Disconnect the Left Cylinder Lock Switch connector. Using a 12-volt test light connected to 12-volts, check the Ground circuit. Does the test light illuminate brightly? Yes → Go To 4 No → Repair the Ground circuit for an open. Perform BODY VERIFICATION TEST - VER 1.	All

LEFT CYLINDER LOCK SWITCH INPUT STUCK — Continued

TEST	ACTION	APPLICABILITY
4	Disconnect the Left Cylinder Lock Switch connector. Measure the voltage between Cylinder Lock Switch Mux circuit and ground. Is the voltage above 4.6 volts? Yes → Go To 5 No → Repair the Left Cylinder Lock Switch Mux circuit for an open. Perform BODY VERIFICATION TEST - VER 1.	All
5	If there are no possible causes remaining, view repair. Repair Replace the Cylinder Lock Switch. Perform BODY VERIFICATION TEST - VER 1.	All

Symptom:

LEFT UNLOCK OUTPUT FAILURE

When Monitored and Set Condition:

LEFT UNLOCK OUTPUT FAILURE

When Monitored: At all times when battery power is supplied to the Body Control Module.

Set Condition: When the BCM senses a short condition on the left side door unlock circuits for over 125 milliseconds.

POSSIBLE CAUSES
DTC PRESENT
BODY CONTROL MODULE - LEFT DOOR UNLOCK DRIVER SHORT TO GROUND
LEFT FRONT DOOR UNLOCK DRIVER SHORT TO GROUND
LEFT SLIDING DOOR UNLOCK DRIVER SHORT TO GROUND
LEFT FRONT DOOR LOCK MOTOR - SHORT TO GROUND
LEFT SLIDING DOOR LOCK MOTOR - SHORT TO GROUND

TEST	ACTION	APPLICABILITY
1	NOTE: When this code is present all unlock outputs may be turned off. With the DRBIII®, record and erase DTC's. With the DRBIII®, read DTC's. Operate the door locks several times from the Driver Door Lock Switch while monitoring the DRBIII®. Does the DRBIII® display LEFT UNLOCK OUTPUT FAILURE? Yes → Go To 2 No → Using the wiring diagram/schematic as a guide, inspect the wiring and connectors. Perform BODY VERIFICATION TEST - VER 1.	All
2	Disconnect the Body Control Module C2 connector. Measure the resistance between ground and the Left Front Door Unlock Driver circuit and then the Left Sliding Door Unlock Driver circuit. Select the appropriate reading. Left Front Door Unlock under 1000.0 ohms Go To 3 Left Sliding Door Unlk under 1000.0 ohms Go To 4 Neither circuit under 1000.0 ohms. Replace the Body Control Module. Perform BODY VERIFICATION TEST - VER 1.	All

LEFT UNLOCK OUTPUT FAILURE — Continued

TEST	ACTION	APPLICABILITY
3	Disconnect the Body Control Module C2 connector. Disconnect the Left Front Door Lock Motor/Ajar Switch connector. Measure the resistance between ground and the Left Front Door Unlock Driver circuit. Is the resistance below 1000.0 ohms? Yes → Repair the Left Front Door Unlock Driver circuit for a short to ground. Perform BODY VERIFICATION TEST - VER 1. No → Replace the Door Lock Motor. Perform BODY VERIFICATION TEST - VER 1.	All
4	Disconnect the Body Control Module C2 connector. Disconnect the Left Sliding Door Lock Motor connector. Measure the resistance between ground and the Left Sliding Door Unlock Driver circuit. Is the resistance below 1000.0 ohms? Yes → Repair the Left Sliding Door Unlock Driver circuit for a short to ground. Perform BODY VERIFICATION TEST - VER 1. No → Replace the Sliding Door Lock Motor (latch assembly). Perform BODY VERIFICATION TEST - VER 1.	All

Symptom:

LIFTGATE CYLINDER LOCK SWITCH INPUT OPEN OR SHORT TO VOLTAGE - (EXPORT ONLY)

When Monitored and Set Condition:

LIFTGATE CYLINDER LOCK SWITCH INPUT OPEN OR SHORT TO VOLTAGE - (EXPORT ONLY)

When Monitored: At all times when battery power is supplied to the Body Control Module.

Set Condition: When the BCM senses voltage to the cylinder lock switch above 4.6 volts for over 10 seconds.

POSSIBLE CAUSES
DTC PRESENT
BODY CONTROL MODULE - LIFTGATE CYLINDER SWITCH VOLTAGE LOW
LIFTGATE CYLINDER SWITCH GROUND OPEN
LIFTGATE CYLINDER SWITCH MUX OPEN
LIFTGATE CYLINDER SWITCH OPEN
CYLINDER LOCK SWITCH MUX SHORT TO VOLTAGE
BODY CONTROL MODULE - LIFTGATE CYLINDER LOCK SWITCH MUX SHORT TO VOLTAGE

TEST	ACTION	APPLICABILITY
1	NOTE: When this code is present, the VTSS indicator will stay on solid during the arming process. With the DRBIII®, record and erase DTC's. With the DRBIII®, read DTC's. Remove the key and operate the Liftgate Cylinder Switch several times while monitoring the DRBIII®. Wait 10 seconds. Does the DRBIII® display LGATE CYL SW INPUT OPEN OR SHORT TO VOLTAGE? Yes → Go To 2 No → Using the wiring diagram/schematic as a guide, inspect the wiring and connectors. Perform BODY VERIFICATION TEST - VER 1.	All
2	With the DRBIII® in Sensors, read the LGATE CYL SW voltage. Does the DRBIII® display 3.8 volts or greater? Yes → Go To 3 No → Disconnect the BCM harness connector(s). Check connectors - Clean/repair as necessary. If okay, replace the Body Control Module. Perform BODY VERIFICATION TEST - VER 1.	All

LIFTGATE CYLINDER LOCK SWITCH INPUT OPEN OR SHORT TO VOLTAGE - (EXPORT ONLY) — Continued

TEST	ACTION	APPLICABILITY
3	Disconnect the Liftgate Cylinder Switch connector. Using a 12-volt test light connected to 12-volts, check the Ground circuit. Does the test light illuminate brightly? Yes → Go To 4 No → Repair the Ground circuit for an open. Perform BODY VERIFICATION TEST - VER 1.	All
4	Disconnect the Liftgate Cylinder Switch connector. Measure the voltage between Cylinder Lock Switch Mux circuit and ground. Select the voltage present. Below 3.8 volts. Repair the Liftgate Cylinder Lock Switch Mux circuit for an open. Perform BODY VERIFICATION TEST - VER 1. Between 3.9 volts and 5.2 volts. Replace the Liftgate Cylinder Switch. Perform BODY VERIFICATION TEST - VER 1. Above 5.3 volts. Go To 5	All
5	Disconnect the Liftgate Cylinder Door Lock Switch connector. Disconnect the Body Control Module C3 connector. **NOTE: Check connectors - Clean/repair as necessary.** Turn the ignition on. Turn the park lamps on. Measure the voltage between Liftgate Cylinder Lock Switch Mux circuit and ground. Is there any voltage present? Yes → Repair the Cylinder Lock Switch Mux circuit for a short to voltage. Perform BODY VERIFICATION TEST - VER 1. No → Replace the Body Control Module. Perform BODY VERIFICATION TEST - VER 1.	All

Symptom:

LIFTGATE CYLINDER LOCK SWITCH INPUT SHORT - (EXPORT ONLY)

When Monitored and Set Condition:

LIFTGATE CYLINDER LOCK SWITCH INPUT SHORT - (EXPORT ONLY)

When Monitored: At all times when battery power is supplied to the Body Control Module.

Set Condition: When the BCM senses voltage to the cylinder lock switch is below .5 volts for over 10 seconds.

POSSIBLE CAUSES
DTC PRESENT
LIFTGATE CYLINDER SWITCH SHORTED
LIFTGATE CYLINDER LOCK SWITCH MUX CIRCUIT SHORTED
BODY CONTROL MODULE - LIFTGATE CYLINDER LOCK SWITCH MUX SHORTED

TEST	ACTION	APPLICABILITY
1	NOTE: When this code is present, the VTSS indicator will stay on solid during the arming process. With the DRBIII®, record and erase DTC's. With the DRBIII®, read DTC's. Remove the key and operate the Liftgate Cylinder Switch several times while monitoring the DRBIII®. Wait 10 seconds. Does the DRBIII® display LGATE CYL LOCK SW INPUT SHORT? Yes → Go To 2 No → Using the wiring diagram/schematic as a guide, inspect the wiring and connectors. Perform BODY VERIFICATION TEST - VER 1.	All
2	Disconnect the Liftgate Cylinder Switch connector. With the DRBIII® in Sensors, read the LGATE CYL SW voltage. Is the voltage above 4.6 volts? Yes → Replace the Liftgate Cylinder Switch. Perform BODY VERIFICATION TEST - VER 1. No → Go To 3	All

LIFTGATE CYLINDER LOCK SWITCH INPUT SHORT - (EXPORT ONLY) — Continued

TEST	ACTION	APPLICABILITY
3	Disconnect the Liftgate Cylinder Switch connector. Disconnect the Body Control Module C3 connector. Measure the resistance between Cylinder Lock Switch Mux circuit and ground. Is the resistance below 1000.0 ohms? Yes → Repair the Liftgate Cylinder Lock Switch Mux circuit for a short to ground. Perform BODY VERIFICATION TEST - VER 1. No → Go To 4	All
4	If there are no possible causes remaining, view repair. Repair Disconnect the BCM harness connector(s). Check connectors - Clean/repair as necessary. If okay, replace the Body Control Module. Perform BODY VERIFICATION TEST - VER 1.	All

Symptom:

LIFTGATE CYLINDER LOCK SWITCH INPUT STUCK - (EXPORT ONLY)

When Monitored and Set Condition:

LIFTGATE CYLINDER LOCK SWITCH INPUT STUCK - (EXPORT ONLY)

When Monitored: At all times when battery power is supplied to the Body Control Module.

Set Condition: When the BCM senses voltage to the cylinder lock switch between 1.3 and 3.25 volts for over 10 seconds.

POSSIBLE CAUSES
DTC PRESENT
BODY CONTROL MODULE - LIFTGATE CYLINDER SWITCH VOLTAGE INCORRECT
LIFTGATE CYLINDER SWITCH GROUND OPEN
LIFTGATE CYLINDER LOCK SWITCH MUX OPEN
CYLINDER LOCK SWITCH STUCK

TEST	ACTION	APPLICABILITY
1	NOTE: When this code is present, the VTSS indicator will stay on solid during the arming process. With the DRBIII®, record and erase DTC's. With the DRBIII®, read DTC's. Remove the key and operate the Liftgate Cylinder Switch several times while monitoring the DRBIII®. Wait 10 seconds. Does the DRBIII® display LGATE CYL SW INPUT STUCK? Yes → Go To 2 No → Using the wiring diagram/schematic as a guide, inspect the wiring and connectors. Perform BODY VERIFICATION TEST - VER 1.	All
2	With the DRBIII® in Sensors, read the LGATE CYL LOCK SW voltage. Does the DRBIII® display voltage between 1.3 and 3.25 volts? Yes → Go To 3 No → Replace the Body Control Module. Perform BODY VERIFICATION TEST - VER 1.	All
3	Disconnect the Liftgate Cylinder Switch connector. Using a 12-volt test light connected to 12-volts, check the Ground circuit. Does the test light illuminate brightly? Yes → Go To 4 No → Repair the Ground circuit for an open. Perform BODY VERIFICATION TEST - VER 1.	All

LIFTGATE CYLINDER LOCK SWITCH INPUT STUCK - (EXPORT ONLY)

— Continued

TEST	ACTION	APPLICABILITY
4	Disconnect the Liftgate Cylinder Lock Switch connector. Measure the voltage between Cylinder Lock Switch Mux circuit and ground. Is the voltage above 4.6 volts? Yes → Go To 5 No → Repair the Liftgate Cylinder Lock Switch Mux circuit for an open. Perform BODY VERIFICATION TEST - VER 1.	All
5	If there are no possible causes remaining, view repair. Repair Replace the Cylinder Lock Switch. Perform BODY VERIFICATION TEST - VER 1.	All

Symptom:
LIFTGATE POWER RELEASE OUTPUT SHORT

When Monitored and Set Condition:

LIFTGATE POWER RELEASE OUTPUT SHORT

When Monitored: Continuously for non power liftgate vehicles

Set Condition: When the Body Control Module senses a low output on the Liftgate Release Driver circuit for longer than 125 ms during a liftgate release actuation.

POSSIBLE CAUSES
DTC PRESENT
BODY CONTROL MODULE - LIFTGATE RELEASE DRIVER SHORTED
LIFTGATE RELEASE DRIVER WIRE SHORT TO GROUND
LIFTGATE RELEASE MOTOR SHORTED

TEST	ACTION	APPLICABILITY
1	Ensure vehicle is unlocked before proceeding. Turn the ignition on. With the DRBIII®, record and erase DTC's. With the DRBIII®, read DTC's. Operate the Liftgate Release several times from the Liftgate Handle Switch while monitoring the DRBIII®. Does the DRBIII® display LIFTGATE POWER RELEASE OUTPUT SHORT? Yes → Go To 2 No → Using the wiring diagram/schematic as a guide, inspect the wiring and connectors for an intermittent condition. Perform BODY VERIFICATION TEST - VER 1.	All
2	Disconnect the Body Control Module C3 connector. Measure the resistance between ground and the Liftgate Release Driver circuit. Is the resistance below 3.5 ohms? Yes → Go To 3 No → Disconnect the BCM harness connector(s). Check connectors - Clean/repair as necessary. If okay, replace the Body Control Module. Perform BODY VERIFICATION TEST - VER 1.	All
3	Disconnect the Liftgate Ajar Switch connector. Disconnect the Body Control Module C3 connector. **NOTE: Check connectors - Clean/repair as necessary.** Measure the resistance between Liftgate Release Driver circuit and ground. Is the resistance below 100.0 ohms? Yes → Repair the Liftgate Release Driver circuit for a short to ground. Perform BODY VERIFICATION TEST - VER 1. No → Go To 4	All

LIFTGATE POWER RELEASE OUTPUT SHORT — Continued

TEST	ACTION	APPLICABILITY
4	If there are no possible causes remaining, view repair. Repair Replace the Liftgate Release Motor. Perform BODY VERIFICATION TEST - VER 1.	All

Symptom:

LOCK OUTPUT FAILURE

When Monitored and Set Condition:

LOCK OUTPUT FAILURE

When Monitored: At all times when battery power is supplied to the Body Control Module.

Set Condition: When the BCM senses a short condition on the door lock circuits for over 125 milliseconds.

POSSIBLE CAUSES
DTC PRESENT
DOOR LOCK DRIVER SHORT TO GROUND
LEFT FRONT DOOR LOCK DRIVER SHORT GROUND
LEFT SLIDING DOOR LOCK DRIVER WIRE SHORT TO GROUND
RIGHT FRONT DOOR LOCK DRIVER WIRE SHORT TO GROUND
RIGHT SLIDING DOOR LOCK DRIVER WIRE SHORT TO GROUND
LEFT FRONT DOOR LOCK MOTOR - SHORT TO GROUND
LEFT SLIDING DOOR LOCK MOTOR - SHORT TO GROUND
RIGHT FRONT DOOR LOCK MOTOR - SHORT TO GROUND
RIGHT SLIDING DOOR LOCK MOTOR - SHORT TO GROUND

TEST	ACTION	APPLICABILITY
1	With the DRBIII®, record and erase DTC's. Cycle the ignition switch from ON to OFF. With the DRBIII®, read DTC's. Remove the key and operate the door locks several times from the Driver Door Lock Switch while monitoring the DRBIII® Does the DRBIII® display LOCK OUTPUT FAILURE? Yes → Go To 2 No → Using the wiring diagram/schematic as a guide, inspect the wiring and connectors for an intermittent problem. Perform BODY VERIFICATION TEST - VER 1.	All

LOCK OUTPUT FAILURE — Continued

TEST	ACTION	APPLICABILITY
2	Disconnect the Body Control Module C2 connector. **NOTE: Check connectors - Clean/repair as necessary.** Measure the resistance between ground and each of the Door Lock Driver circuits. Select the appropriate reading. Right Front Door Lock under 1000.0 ohm Go To 3 Right Sliding Door Lock under 1000.0 ohm Go To 4 Left Front Door Lock under 1000.0 ohm Go To 5 Left Sliding Door Lock under 1000.0 ohm Go To 6 None of the circuits under 1000.0 ohms. Replace the Body Control Module. Perform BODY VERIFICATION TEST - VER 1.	All
3	Disconnect the Body Control Module C2 connector. Disconnect the Right Front Door Lock Motor/Ajar Switch connector. Measure the resistance between ground and the Right Front Door Lock Driver circuit. Is the resistance below 1000.0 ohms? Yes → Repair the Right Front Door Lock Driver wire for a short to ground. Perform BODY VERIFICATION TEST - VER 1. No → Replace the Door Lock Motor. Perform BODY VERIFICATION TEST - VER 1.	All
4	Disconnect the Body Control Module C2 connector. Disconnect the Right Sliding Door Lock Motor connector. Measure the resistance between ground and the Right Sliding Door Lock Driver circuit. Is the resistance below 1000.0 ohms? Yes → Repair the Right Sliding Door Lock Driver wire for a short to ground. Perform BODY VERIFICATION TEST - VER 1. No → Replace the Right Sliding Door Lock Motor (Latch assy.) Perform BODY VERIFICATION TEST - VER 1.	All
5	Disconnect the Body Control Module C2 connector. Disconnect the Left Front Door Lock Motor connector. Measure the resistance between ground and the Left Front Door Lock Driver circuit. Is the resistance below 1000.0 ohms? Yes → Repair the Left Front Door Lock Driver circuit for a short to ground. Perform BODY VERIFICATION TEST - VER 1. No → Replace the Door Lock Motor. Perform BODY VERIFICATION TEST - VER 1.	All

LOCK OUTPUT FAILURE — Continued

TEST	ACTION	APPLICABILITY
6	Disconnect the Body Control Module C2 connector. Disconnect the Left Sliding Door Lock Motor connector. Measure the resistance between ground and the Left Sliding Door Lock Driver circuit. Is the resistance below 1000.0 ohms? Yes → Repair the Left Sliding Door Lock Driver wire for a short to ground. Perform BODY VERIFICATION TEST - VER 1. No → Replace the Left Sliding Door Lock Motor (Latch assy.) Perform BODY VERIFICATION TEST - VER 1.	All

Symptom:

PASSENGER DOOR LOCK SWITCH INPUT OPEN OR SHORT TO VOLTAGE

When Monitored and Set Condition:

PASSENGER DOOR LOCK SWITCH INPUT OPEN OR SHORT TO VOLTAGE

When Monitored: At all times when battery power is supplied to the Body Control Module.

Set Condition: When the BCM senses voltage to the door lock switch above 4.6 volts for over 10 seconds.

POSSIBLE CAUSES
DTC PRESENT
BODY CONTROL MODULE - PASSENGER DOOR LOCK SWITCH VOLTAGE LOW
DOOR LOCK SWITCH GROUND OPEN
DOOR LOCK SWITCH MUX OPEN
DOOR LOCK SWITCH OPEN
DOOR LOCK SWITCH MUX SHORT TO VOLTAGE
BODY CONTROL MODULE - DOOR LOCK SWITCH MUX SHORT TO VOLTAGE

TEST	ACTION	APPLICABILITY
1	With the DRBIII®, record and erase DTC's. Cycle the ignition from ON to OFF to ON. With the DRBIII®, read DTC's. Remove the key and operate the door locks several times from the Passenger Door Lock Switch while monitoring the DRBIII®. Does the DRBIII® display PASS DOOR LOCK SW INPUT OPEN OR SHORT TO VOLTAGE? Yes → Go To 2 No → Using the wiring diagram/schematic as a guide, inspect the wiring and connectors. Perform BODY VERIFICATION TEST - VER 1.	All
2	With the DRBIII® in Sensors, read the PASS DOOR LOCK SW voltage. Does the DRBIII® display 4.0 volts or greater? Yes → Go To 3 No → Disconnect the BCM harness connector(s). Check connectors - Clean/repair as necessary. If okay, replace the Body Control Module. Perform BODY VERIFICATION TEST - VER 1.	All

PASSENGER DOOR LOCK SWITCH INPUT OPEN OR SHORT TO VOLTAGE — Continued

TEST	ACTION	APPLICABILITY
3	Disconnect the Passenger Door Lock Switch connector. Using a 12-volt test light connected to 12-volts, check the Ground circuit. Does the test light illuminate brightly? Yes → Go To 4 No → Repair the Ground circuit for an open. Perform BODY VERIFICATION TEST - VER 1.	All
4	Disconnect the Passenger Door Lock Switch connector. Measure the voltage between Door Lock Switch Mux circuit and ground. Select the voltage present. Below 4.0 volts. Repair the Door Lock Switch Mux circuit for an open. Perform BODY VERIFICATION TEST - VER 1. Between 4.1 volts and 5.2 volts. Replace the Door Lock Switch. Perform BODY VERIFICATION TEST - VER 1. Above 5.3 volts Go To 5	All
5	Disconnect the Passenger Door Lock Switch connector. Disconnect the Body Control Module C3 connector. **NOTE: Check connectors - Clean/repair as necessary.** Turn the ignition on. Turn the park lamps on. Measure the voltage between Door Lock Switch Mux circuit and ground. Is there any voltage present? Yes → Repair the Door Lock Switch Mux circuit for a short to voltage. Perform BODY VERIFICATION TEST - VER 1. No → Replace the Body Control Module. Perform BODY VERIFICATION TEST - VER 1.	All

Symptom:
PASSENGER DOOR LOCK SWITCH INPUT SHORT

When Monitored and Set Condition:

PASSENGER DOOR LOCK SWITCH INPUT SHORT

When Monitored: At all times when battery power is supplied to the Body Control Module.

Set Condition: When the BCM senses voltage to the door lock switch below .5 volts for over 10 seconds.

POSSIBLE CAUSES
DTC PRESENT
PASSENGER DOOR LOCK SWITCH SHORTED
DOOR LOCK SWITCH MUX SHORTED
BODY CONTROL MODULE - PASSENGER DOOR LOCK SWITCH VOLTAGE SHORTED

TEST	ACTION	APPLICABILITY
1	With the DRBIII®, record and erase DTC's. Cycle ignition ON to OFF to ON. With the DRBIII®, read DTCs. Remove the key and operate the door locks several times from the Driver Door Lock Switch while monitoring the DRBIII. Does the DRBIII® display DR DOOR LOCK SW INPUT SHORT? Yes → Go To 2 No → Using the wiring diagram/schematic as a guide, inspect the wiring and connectors. Perform BODY VERIFICATION TEST - VER 1.	All
2	Disconnect the Passenger Door Lock Switch connector. With the DRBIII® in Sensors, read the PASS DOOR SW MUX circuit Is the voltage above 4.6 volts? Yes → Replace the Door Lock Switch. Perform BODY VERIFICATION TEST - VER 1. No → Go To 3	All
3	Disconnect the Passenger Door Lock Switch connector. Disconnect the Body Control Module C3 connector. Measure the resistance between Door Lock Switch Mux circuit and ground. Is the resistance below 1000.0 ohms? Yes → Repair the Door Lock Switch Mux circuit for a short to ground. Perform BODY VERIFICATION TEST - VER 1. No → Go To 4	All

PASSENGER DOOR LOCK SWITCH INPUT SHORT — Continued

TEST	ACTION	APPLICABILITY
4	If there are no possible causes remaining, view repair. Repair Disconnect the BCM harness connector(s). Check connectors - Clean/repair as necessary. If okay, replace the Body Control Module. Perform BODY VERIFICATION TEST - VER 1.	All

Symptom:
PASSENGER DOOR LOCK SWITCH INPUT STUCK

When Monitored and Set Condition:

PASSENGER DOOR LOCK SWITCH INPUT STUCK

When Monitored: At all times when battery power is supplied to the Body Control Module.

Set Condition: When the BCM senses voltage to the door lock switch between 1.3 and 3.25 for over 10 seconds.

POSSIBLE CAUSES
DTC PRESENT
BODY CONTROL MODULE - PASSENGER DOOR LOCK SWITCH VOLTAGE INCORRECT
DOOR LOCK SWITCH GROUND OPEN
DOOR LOCK SWITCH MUX OPEN
DOOR LOCK SWITCH STUCK

TEST	ACTION	APPLICABILITY
1	With the DRBIII®, record and erase DTC's. Cycle the ignition ON to OFF to ON. With the DRBIII®, read DTCs. Remove the key and operate the door lock several times from the Passenger Door Lock Switch while monitoring the DRBIII. Does the DRBIII® display PASS DOOR LOCK SW INPUT STUCK? Yes → Go To 2 No → Using the wiring diagram/schematic as a guide, inspect the wiring and connectors. Perform BODY VERIFICATION TEST - VER 1.	All
2	With the DRBIII® in Sensors, read the PASS DOOR LOCK SW voltage. Does the DRBIII® display voltage between 1.3 and 3.25 volts? Yes → Go To 3 No → Disconnect the BCM harness connector(s). Check connectors - Clean/repair as necessary. If okay, replace the Body Control Module. Perform BODY VERIFICATION TEST - VER 1.	All
3	Disconnect the Passenger Door Lock Switch connector. Using a 12-volt test light connected to 12-volts, check the Ground circuit. Does the test light illuminate brightly? Yes → Go To 4 No → Repair the Ground circuit for an open. Perform BODY VERIFICATION TEST - VER 1.	All

PASSENGER DOOR LOCK SWITCH INPUT STUCK — Continued

TEST	ACTION	APPLICABILITY
4	Disconnect the Passenger Door Lock Switch connector. Measure the voltage between Door Lock Switch Mux circuit and ground. Is the voltage above 4.6 volts? Yes → Go To 5 No → Repair the Door Lock Switch Mux circuit for an open. Perform BODY VERIFICATION TEST - VER 1.	All
5	If there are no possible causes remaining, view repair. Repair Replace the Door Lock Switch. Perform BODY VERIFICATION TEST - VER 1.	All

Symptom:

RIGHT CYLINDER LOCK SWITCH INPUT OPEN OR SHORT TO VOLTAGE

When Monitored and Set Condition:

RIGHT CYLINDER LOCK SWITCH INPUT OPEN OR SHORT TO VOLTAGE

When Monitored: At all times when battery power is supplied to the Body Control Module.

Set Condition: When the BCM senses voltage to the cylinder lock switch above 4.6 volts for over 10 seconds.

POSSIBLE CAUSES
DTC PRESENT
BODY CONTROL MODULE - RIGHT CYLINDER LOCK SWITCH VOLTAGE LOW
CYLINDER LOCK SWITCH GROUND OPEN
CYLINDER LOCK SWITCH MUX OPEN
CYLINDER LOCK SWITCH OPEN
CYLINDER LOCK SWITCH MUX SHORT TO VOLTAGE
BODY CONTROL MODULE - RIGHT CYLINDER LOCK SWITCH MUX SHORT TO VOLTAGE

TEST	ACTION	APPLICABILITY
1	NOTE: When this code is present, the VTSS indicator will stay on solid during the arming process. With the DRBIII®, record and erase DTC's. With the DRBIII®, read DTCs. Remove the key and operate the door locks several times from the Right Cylinder Lock Switch while monitoring the DRBIII®. Wait 10 seconds. Does the DRBIII® display RIGHT CYL LOCK SW INPUT OPEN OR SHORT TO VOLTAGE? Yes → Go To 2 No → Using the wiring diagram/schematic as a guide, inspect the wiring and connectors. Perform BODY VERIFICATION TEST - VER 1.	All
2	With the DRBIII® in Sensors, read the RIGHT CYL LOCK SW voltage. Does the DRBIII® display 4.0 volts or greater? Yes → Go To 3 No → Disconnect the BCM harness connector(s). Check connectors - Clean/repair as necessary. If okay, replace the Body Control Module. Perform BODY VERIFICATION TEST - VER 1.	All

RIGHT CYLINDER LOCK SWITCH INPUT OPEN OR SHORT TO VOLTAGE — Continued

TEST	ACTION	APPLICABILITY
3	Disconnect the Right Cylinder Lock Switch connector. Using a 12-volt test light connected to 12-volts, check the Ground circuit. Does the test light illuminate brightly? Yes → Go To 4 No → Repair the Ground circuit for an open. Perform BODY VERIFICATION TEST - VER 1.	All
4	Disconnect the Right Cylinder Lock Switch connector. Measure the voltage between Cylinder Lock Switch Mux circuit and ground. Select the voltage present. Below 4.0 volts. Repair the Cylinder Lock Switch Mux circuit for an open. Perform BODY VERIFICATION TEST - VER 1. Between 4.1 and 5.2 volts. Replace the Cylinder Lock Switch. Perform BODY VERIFICATION TEST - VER 1. Above 5.3 volts. Go To 5	All
5	Disconnect the Right Cylinder Door Lock Switch connector. Disconnect the Body Control Module C3 connector. **NOTE: Check connectors - Clean/repair as necessary.** Turn the ignition on. Turn the park lamps on. Measure the voltage between Right Cylinder Lock Switch Mux circuit and ground. Is there any voltage present? Yes → Repair the Cylinder Lock Switch Mux circuit for a short to voltage. Perform BODY VERIFICATION TEST - VER 1. No → Replace the Body Control Module. Perform BODY VERIFICATION TEST - VER 1.	All

Symptom:
RIGHT CYLINDER LOCK SWITCH INPUT SHORT

When Monitored and Set Condition:

RIGHT CYLINDER LOCK SWITCH INPUT SHORT

When Monitored: At all times when battery power is supplied to the Body Control Module.

Set Condition: When the BCM senses voltage to the cylinder lock switch below .5 volts for over 10 seconds.

POSSIBLE CAUSES
DTC PRESENT
CYLINDER LOCK SWITCH SHORTED
CYLINDER LOCK SWITCH MUX CIRCUIT SHORTED
BODY CONTROL MODULE - RIGHT CYLINDER LOCK SWITCH VOLTAGE SHORTED

TEST	ACTION	APPLICABILITY
1	NOTE: When this code is present, the VTSS indicator will stay on solid during the arming process. With the DRBIII®, record and erase DTC's. With the DRBIII®, read DTC's. Remove the key and operate the door locks several times from the Right Cylinder Lock Switch while monitoring the DRBIII®. Wait 10 seconds. Does the DRBIII® display RIGHT CYL LOCK SW INPUT SHORT? Yes → Go To 2 No → Using the wiring diagram/schematic as a guide, inspect the wiring and connectors. Perform BODY VERIFICATION TEST - VER 1.	All
2	Disconnect the Right Cylinder Lock Switch connector. With the DRBIII® in Sensors, read the RIGHT CYL SW MUX circuit Is the voltage above 4.6 volts? Yes → Replace the Cylinder Lock Switch. Perform BODY VERIFICATION TEST - VER 1. No → Go To 3	All
3	Disconnect the Right Cylinder Lock Switch connector. Disconnect the Body Control Module C3 connector. Measure the resistance between Cylinder Lock Switch Mux circuit and ground. Is the resistance below 1000.0 ohms? Yes → Repair the Cylinder Lock Switch Mux circuit for a short to ground. Perform BODY VERIFICATION TEST - VER 1. No → Go To 4	All

RIGHT CYLINDER LOCK SWITCH INPUT SHORT — Continued

TEST	ACTION	APPLICABILITY
4	If there are no possible causes remaining, view repair. Repair Replace the Body Control Module. Perform BODY VERIFICATION TEST - VER 1.	All

Symptom:
RIGHT CYLINDER LOCK SWITCH INPUT STUCK

When Monitored and Set Condition:

RIGHT CYLINDER LOCK SWITCH INPUT STUCK

When Monitored: At all times when battery power is supplied to the Body Control Module.

Set Condition: When the BCM senses voltage to the cylinder lock switch between 1.3 and 3.25 for over 10 seconds.

POSSIBLE CAUSES
DTC PRESENT
BODY CONTROL MODULE - RIGHT CYLINDER LOCK SWITCH VOLTAGE INCORRECT
RIGHT CYLINDER LOCK SWITCH GROUND OPEN
RIGHT CYLINDER LOCK SWITCH MUX OPEN
CYLINDER LOCK SWITCH STUCK

TEST	ACTION	APPLICABILITY
1	NOTE: When this code is present, the VTSS indicator will stay on solid during the arming process. With the DRBIII®, record and erase DTC's. With the DRBIII®, read DTCs. Remove the key and operate the door lock several times from the Right Cylinder Lock Switch while monitoring the DRBIII®. Wait 10 seconds. Does the DRBIII® display RIGHT CYL LOCK SW INPUT STUCK? Yes → Go To 2 No → Using the wiring diagram/schematic as a guide, inspect the wiring and connectors. Perform BODY VERIFICATION TEST - VER 1.	All
2	With the DRBIII® in Sensors, read the RIGHT CYL LOCK SW voltage. Does the DRBIII® display voltage between 1.3 and 3.25 volts? Yes → Go To 3 No → Disconnect the BCM harness connector(s). Check connectors - Clean/repair as necessary. If okay, replace the Body Control Module. Perform BODY VERIFICATION TEST - VER 1.	All
3	Disconnect the Right Cylinder Lock Switch connector. Using a 12-volt test light connected to 12-volts, check the Ground circuit. Does the test light illuminate brightly? Yes → Go To 4 No → Repair the Ground circuit for an open. Perform BODY VERIFICATION TEST - VER 1.	All

RIGHT CYLINDER LOCK SWITCH INPUT STUCK — Continued

TEST	ACTION	APPLICABILITY
4	Disconnect the Right Cylinder Lock Switch connector. Measure the voltage between Cylinder Lock Switch Mux circuit and ground. Is the voltage above 4.6 volts? Yes → Go To 5 No → Repair the Right Cylinder Lock Switch Mux circuit for an open. Perform BODY VERIFICATION TEST - VER 1.	All
5	If there are no possible causes remaining, view repair. Repair Replace the Cylinder Lock Switch. Perform BODY VERIFICATION TEST - VER 1.	All

Symptom:

RIGHT UNLOCK OUTPUT FAILURE

When Monitored and Set Condition:

RIGHT UNLOCK OUTPUT FAILURE

When Monitored: At all times when battery power is supplied to the Body Control Module.

Set Condition: When the BCM senses a short condition on the right side door unlock circuits for over 125 milliseconds.

POSSIBLE CAUSES
DTC PRESENT
BODY CONTROL MODULE - RIGHT DOOR UNLOCK DRIVER SHORT TO GROUND
RIGHT FRONT DOOR UNLOCK DRIVER SHORT TO GROUND
RIGHT SLIDING DOOR UNLOCK DRIVER SHORT TO GROUND
RIGHT FRONT DOOR LOCK MOTOR - SHORT TO GROUND
RIGHT SLIDING DOOR LOCK MOTOR - SHORT TO GROUND

TEST	ACTION	APPLICABILITY
1	With the DRBIII®, record and erase DTC's. Cycle the ignition ON to OFF. With the DRBIII®, read DTCs. Operate the door locks several times from the Right Door Lock Switch while monitoring the DRBIII®. Does the DRBIII® display RIGHT UNLOCK OUTPUT FAILURE? Yes → Go To 2 No → Using the wiring diagram/schematic as a guide, inspect the wiring and connectors. Perform BODY VERIFICATION TEST - VER 1.	All
2	Disconnect the Body Control Module C2 connector. **NOTE: Check connectors - Clean/repair as necessary.** Measure the resistance between ground and the Right Front Door Unlock Driver circuit and then the Right Sliding Door Unlock Driver circuit. Select the appropriate reading. Right Front Door Unlock under 1000.0 ohm Go To 3 Right Sliding Door Unlk under 1000.0 ohm Go To 4 Neither circuit under 1000.0 ohms. Replace the Body Control Module. Perform BODY VERIFICATION TEST - VER 1.	All

RIGHT UNLOCK OUTPUT FAILURE — Continued

TEST	ACTION	APPLICABILITY
3	Disconnect the Body Control Module C2 connector. Disconnect the Right Front Door Lock Motor/Ajar Switch connector. Measure the resistance between ground and the Right Front Door Unlock Driver circuit. Is the resistance below 1000.0 ohms? Yes → Repair the Right Front Door Unlock Driver circuit for a short to ground. Perform BODY VERIFICATION TEST - VER 1. No → Replace the Door Lock Motor. Perform BODY VERIFICATION TEST - VER 1.	All
4	Disconnect the Body Control Module C2 connector. Disconnect the Right Sliding Door Lock Motor connector. Measure the resistance between ground and the Right Sliding Door Unlock Driver circuit. Is the resistance below 1000.0 ohms? Yes → Repair the Right Sliding Door Unlock Driver circuit for a short to ground. Perform BODY VERIFICATION TEST - VER 1. No → Replace the Sliding Door Lock Motor (latch assembly). Perform BODY VERIFICATION TEST - VER 1.	All

Symptom:

RKE PROGRAM LINE OUTPUT OPEN

When Monitored and Set Condition:

RKE PROGRAM LINE OUTPUT OPEN

When Monitored: With ignition in the RUN position.

Set Condition: When the BCM senses an open or short to ground signal on the RKE Module Program Enable circuit for longer than 0.125 msec.

POSSIBLE CAUSES
DTC PRESENT
BODY CONTROL MODULE - RKE MODULE PROGRAM ENABLE CIRCUIT OPEN OR SHORT TO GROUND
RKE MODULE PROGRAM ENABLE WIRE OPEN
RKE MODULE PROGRAM ENABLE WIRE SHORT TO GROUND
RKE MODULE - PROGRAM ENABLE CIRCUIT OPEN

TEST	ACTION	APPLICABILITY
1	Turn the ignition on. With the DRBIII®, record and erase DTC's. With the DRBIII®, read DTCs. Operate the RKE transmitter while monitoring the DRBIII. Does the DRBIII® display RKE PROGRAM LINE OUTPUT OPEN? Yes → Go To 2 No → Using the wiring diagram/schematic as a guide, inspect the wiring and connectors for an intermittent condition. Perform BODY VERIFICATION TEST - VER 1.	All
2	Disconnect the Body Control Module C4 connector. Measure the voltage of the RKE Module Program Enable circuit between ground and the BCM C4 connector. Is the voltage between 10.2 and 11.8 volts? Yes → Disconnect the BCM harness connector(s). Check connectors - Clean/repair as necessary. If okay, replace the Body Control Module. Perform BODY VERIFICATION TEST - VER 1. No → Go To 3	All

RKE PROGRAM LINE OUTPUT OPEN — Continued

TEST	ACTION	APPLICABILITY
3	Turn the ignition off. Disconnect the Remote Keyless Entry Module connector. Disconnect the Body Control Module C4 connector. Measure the resistance of the RKE Module Program Enable circuit between the RKE Module connector and the BCM C4 connector. Is the resistance below 5.0 ohms? Yes → Go To 4 No → Repair the RKE Module Program Enable wire for an open Perform BODY VERIFICATION TEST - VER 1.	All
4	Turn the ignition off. Disconnect the Remote Keyless Entry Module connector. Disconnect the Body Control Module C4 connector. Measure the resistance of the RKE Module Program Enable circuit to ground. Is the resistance below 1000.0 ohms? Yes → Repair the RKE Module Program Enable wire for a short to ground. Perform BODY VERIFICATION TEST - VER 1. No → Go To 5	All
5	If there are no possible causes remaining, view repair. Repair Replace the Remote Keyless Entry Module. Perform BODY VERIFICATION TEST - VER 1.	All

Symptom:

RKE PROGRAM LINE OUTPUT SHORT

When Monitored and Set Condition:

RKE PROGRAM LINE OUTPUT SHORT

When Monitored: With ignition in the RUN position.

Set Condition: When the BCM senses an over current on the RKE Module Program Enable circuit and the RKE is in PROGRAM or DIAGNOSTIC mode.

POSSIBLE CAUSES
DTC PRESENT
REMOTE KEYLESS ENTRY MODULE - RKE MODULE PROGRAM ENABLE CIRCUIT SHORT TO VOLTAGE
RKE MODULE PROGRAM ENABLE WIRE SHORT TO VOLTAGE
BODY CONTROL MODULE - SHORT TO VOLTAGE

TEST	ACTION	APPLICABILITY
1	Turn the ignition on. With the DRBIII®, record and erase DTC's. With the DRBIII®, enter PROGRAM RKE. With the DRBIII®, read DTCs. Does the DRBIII® display RKE PROGRAM LINE OUTPUT SHORT? Yes → Go To 2 No → Using the wiring diagram/schematic as a guide, inspect the wiring and connectors for an intermittent condition. Perform BODY VERIFICATION TEST - VER 1.	All
2	Disconnect the Remote Keyless Entry Module connector. With the DRBIII®, erase DTCs. Cycle the ignition key and wait 30 seconds. With the DRBIII®, read DTCs. Does the DRBIII® display RKE PROGRAM LINE OUTPUT OPEN? No → Go To 3 Yes → Replace the Remote Keyless Entry Module. Perform BODY VERIFICATION TEST - VER 1.	All
3	Disconnect the Remote Keyless Entry Module connector. Disconnect the Body Control Module C4 connector. Turn the ignition on. Measure the voltage between RKE Module Program Enable circuit and ground. Is there any voltage present? Yes → Repair the RKE Module Program Enable wire for a short to voltage. Perform BODY VERIFICATION TEST - VER 1. No → Replace the Body Control Module. Perform BODY VERIFICATION TEST - VER 1.	All

Symptom:

AMBIENT TEMPERATURE SENSOR CIRCUIT OPEN

When Monitored and Set Condition:

AMBIENT TEMPERATURE SENSOR CIRCUIT OPEN

When Monitored: Whenever the Power Liftgate Module is awake.

Set Condition: If the module senses a resistance above 382K ohms on the Liftgate Temperature Sensor Signal circuit, this code will set. The normal range for the sensor is 1.2K to 382K ohms. At room temperature (68° F) the resistance will be between 11.2 K and 13.5K ohms.

POSSIBLE CAUSES
DTC PRESENT
POWER LIFTGATE MODULE - TEMPERATURE SENSE OPEN
LIFTGATE TEMPERATURE SENSOR SIGNAL WIRE OPEN
GROUND WIRE OPEN
LIFTGATE TEMPERATURE SENSOR

TEST	ACTION	APPLICABILITY
1	With the DRBIII®, record and erase DTC's. Turn the ignition off, wait 10 seconds, then turn the ignition on. Operate the liftgate several times. With the DRBIII®, read DTCs. Does the DRBIII® display AMBIENT TEMPERATURE SENSOR CIRCUIT OPEN? Yes → Go To 2 No → Using the wiring diagram/schematic as a guide, inspect the wiring and connectors for an intermittent condition. Perform BODY VERIFICATION TEST - VER 1.	All
2	Remove the power liftgate motor trim panel. Disconnect the Power Liftgate Module C2 connector. Measure the resistance of the liftgate Temperature Sensor Signal circuit to the Ground circuit (cavity 20) in the PLG C2 connector. Is the resistance between 1.2k and 382K ohms? Yes → Replace the Power Liftgate Module. Perform BODY VERIFICATION TEST - VER 1. No → Go To 3	All

AMBIENT TEMPERATURE SENSOR CIRCUIT OPEN — Continued

TEST	ACTION	APPLICABILITY
3	Remove the power liftgate motor trim panel. Disconnect the Power Liftgate Module C2 connector. Disconnect the License Lamp (light bar) connector. Measure the resistance of the liftgate Temperature Sensor Signal circuit between the License Lamp connector and the PLG C2 connector. Is the resistance below 5.0 ohms? Yes → Go To 4 No → Repair the Liftgate Temperature Sensor Signal circuit for an open. Perform BODY VERIFICATION TEST - VER 1.	All
4	Remove the power liftgate motor trim panel. Disconnect the Power Liftgate Module C2 connector. Disconnect the License Lamp (light bar) connector. Measure the resistance of the Ground circuit between the PLG C2 connector (cavity 20) and the License Lamp connector (cavity 8). Is the resistance below 5.0 ohms Yes → Go To 5 No → Repair the Liftgate Temperature Sensor Ground wire for an open. Perform BODY VERIFICATION TEST - VER 1.	All
5	If there are no possible causes remaining, view repair. Repair Replace the Liftgate Temperature Sensor (light bar). Perform BODY VERIFICATION TEST - VER 1.	All

Symptom:

AMBIENT TEMPERATURE SENSOR CIRCUIT SHORT TO GROUND

When Monitored and Set Condition:

AMBIENT TEMPERATURE SENSOR CIRCUIT SHORT TO GROUND

When Monitored: Whenever the Power Liftgate Module is awake.

Set Condition: If the module senses a resistance below 1000 ohms on the Liftgate Temperature Sensor Signal circuit, this code will set. The normal range for the sensor is 1.2K to 382K ohms. At room temperature (68° F) the resistance will be between 11.2 K and 13.5K ohms.

POSSIBLE CAUSES
DTC PRESENT
LIFTGATE TEMPERATURE SENSOR SIGNAL CIRCUIT SHORT TO GROUND.
POWER LIFTGATE MODULE - TEMP SENSE SHORT TO GROUND
LIFTGATE TEMPERATURE SENSOR SIGNAL WIRE SHORT TO GROUND WIRE
LIFTGATE TEMPERATURE SENSOR

TEST	ACTION	APPLICABILITY
1	With the DRBIII®, record and erase DTC's. Turn the ignition off, wait 10 seconds, then turn the ignition on. Operate the liftgate several times. With the DRBIII®, read DTCs. Does the DRBIII® display AMBIENT TEMPERATURE SENSOR CIRCUIT SHORT TO GROUND? Yes → Go To 2 No → Using the wiring diagram/schematic as a guide, inspect the wiring and connectors for an intermittent condition. Perform BODY VERIFICATION TEST - VER 1.	All
2	Remove the power liftgate motor trim panel. Disconnect the Power Liftgate Module C2 connector. Measure the resistance between ground and the liftgate Temperature Sensor Signal circuit. Is the resistance below 5000.0 ohms? Yes → Repair the Liftgate Temperature Sensor Signal circuit for a short to ground. Perform BODY VERIFICATION TEST - VER 1. No → Go To 3	All

AMBIENT TEMPERATURE SENSOR CIRCUIT SHORT TO GROUND — Continued

TEST	ACTION	APPLICABILITY
3	Remove the power liftgate motor trim panel. Disconnect the Power Liftgate Module C2 connector. Measure the resistance of the liftgate Temperature Sensor Signal circuit to the Ground circuit (cavity 20) in the PLG C2 connector. Is the resistance below 1000.0 ohms? Yes → Go To 4 No → Replace the Power Liftgate Module. Perform BODY VERIFICATION TEST - VER 1.	All
4	Remove the power liftgate motor trim panel. Disconnect the Power Liftgate Module C2 connector. Disconnect the License Lamp (light bar) connector. Measure the resistance of the liftgate Temperature Sensor Signal circuit to the Ground circuit (cavity 20) in the PLG C2 connector. Is the resistance below 1000.0 ohms Yes → Repair the Liftgate Temperature Sensor Signal wire for a short to the Ground wire. Perform BODY VERIFICATION TEST - VER 1. No → Replace the Liftgate Temperature Sensor (light bar). Perform BODY VERIFICATION TEST - VER 1.	All

Symptom:
CONTROL MODULE FAILURE - INTERNAL FAILURE

When Monitored and Set Condition:

CONTROL MODULE FAILURE - INTERNAL FAILURE

When Monitored: Anytime the module is awake.

Set Condition: Whenever the module senses an internal failure (EEPROM, ROM, ADC) this code will set. The module must be replaced.

POSSIBLE CAUSES
POWER LIFTGATE MODULE - INTERNAL FAILURE

TEST	ACTION	APPLICABILITY
1	View repair. Repair Replace the Power Liftgate Module. Perform BODY VERIFICATION TEST - VER 1.	All

Symptom:
INCOMPLETE LATCH CINCH - NO PAWL TRANSITION

When Monitored and Set Condition:

INCOMPLETE LATCH CINCH - NO PAWL TRANSITION

When Monitored: Whenever the power liftgate in performing a cinching operation.

Set Condition: The pawl switch was not detected as returning to ground during the transition between secondary and primary cinch operation. NOTE: The liftgate may not be fully cinched during this condition. The liftgate may cinch to primary but not be fully seated and may pop off back to secondary.

POSSIBLE CAUSES
DTC PRESENT
BINDING LIFTGATE
GROUND WIRE OPEN
LIFTGATE PAWL SWITCH SENSE WIRE OPEN
LIFTGATE PAWL SWITCH SENSE WIRE SHORT TO GROUND
PAWL SWITCH

TEST	ACTION	APPLICABILITY
1	**NOTE: This DTC will only set after the cinching operation. This may make it difficult to reproduce.** With the DRBIII®, record and erase DTC's. Turn the ignition off, wait 10 seconds, then turn the ignition on. Operate the power liftgate several times if possible. With the DRBIII®, read ACTIVE DTCs. Does the DRBIII® display INCOMPLETE LATCH CINCH - NO PAWL TRANSITION? Yes → Go To 2 No → Using the wiring diagram/schematic as a guide, inspect the wiring and connectors for an intermittent condition. Operate the door several times and check for any binding or other obstructions. Perform BODY VERIFICATION TEST - VER 1.	All
2	Examine the liftgate for proper fit and alignment, lose/hard or torn seals, misaligned latch striker or anything that would cause an obstruction to proper operation. Manually operate the liftgate of a known good vehicle and notice the effort needed to open and close. Compare the effort needed on the disabled liftgate. Does it take more effort to operate the liftgate than it should? Yes → Refer to Service information for the related symptom(s). Perform BODY VERIFICATION TEST - VER 1. No → Go To 3	All

INCOMPLETE LATCH CINCH - NO PAWL TRANSITION — Continued

TEST	ACTION	APPLICABILITY
3	Disconnect the Power Liftgate C2 connector. Disconnect the Liftgate Cinch/Release Motor connector. Measure the resistance of the Ground wire between the PLG C2 connector (cavity 20) and the Liftgate Cinch/Release Motor connector (cavity 1). Wiggle the harness while observing the ohmmeter. Is the resistance below 5.0 ohms? Yes → Go To 4 No → Repair the Ground wire for an open. Perform BODY VERIFICATION TEST - VER 1.	All
4	Disconnect the Power Liftgate Module C2 connector. Disconnect the Liftgate Cinch/Release Motor connector. Measure the resistance of the Liftgate Pawl Switch Sense wire between the PLG C2 connector and the Liftgate Cinch/Release Motor connector. Wiggle the harness while observing the ohmmeter. Is the resistance below 5.0 ohms? Yes → Go To 5 No → Repair the Liftgate Pawl Switch Sense wire for an open. Perform BODY VERIFICATION TEST - VER 1.	All
5	Disconnect the Power Liftgate Module C2 connector. Disconnect the Liftgate Cinch/Release Motor connector. Measure the resistance between ground and the Liftgate Pawl Switch Sense circuit. Wiggle the harness while observing the ohmmeter. Is the resistance below 1000.0 ohms? Yes → Repair the Liftgate Pawl Switch Sense wire for a short to ground. Perform BODY VERIFICATION TEST - VER 1. No → Go To 6	All
6	If there are no possible causes remaining, view repair. Repair Replace the Pawl Switch (latch assembly). Perform BODY VERIFICATION TEST - VER 1.	All

Symptom:
INCOMPLETE LATCH CINCH - OVERCURRENT

When Monitored and Set Condition:

INCOMPLETE LATCH CINCH - OVERCURRENT

When Monitored: Whenever the power liftgate is performing a cinching operation.

Set Condition: The latch motor stall current of 6.2 amps has been detected, with no pawl or ratchet failure. This code is set during the first stage of the power cinching operation.

POSSIBLE CAUSES
DTC PRESENT
BINDING DOOR
LIFTGATE LATCH CINCH DRIVER WIRE OPEN
LIFTGATE LATCH RELEASE DRIVER OPEN
LIFTGATE LATCH CINCH DRIVER WIRE SHORT TO GROUND
LIFTGATE LATCH CINCH DRIVER WIRE SHORT TO HARNESS GROUND
LIFTGATE LATCH RELEASE DRIVER WIRE SHORT TO GROUND
LIFTGATE LATCH RELEASE DRIVER WIRE SHORT TO HARNESS GROUND
LATCH ASSEMBLY

TEST	ACTION	APPLICABILITY
1	With the DRBIII®, record and erase DTC's. Turn the ignition off, wait 10 seconds, then turn the ignition on. Operate the power liftgate several times if possible. With the DRBIII®, read ACTIVE DTCs. Does the DRBIII® display INCOMPLETE LATCH CINCH - OVERCURRENT? Yes → Go To 2 No → Using the wiring diagram/schematic as a guide, inspect the wiring and connectors for an intermittent condition. Operate the liftgate several times and check for any binding or other obstructions. Perform BODY VERIFICATION TEST - VER 1.	All
2	Examine the liftgate for proper alignment, worn or binding hinges, weak liftgate prop assembly, loose/ hard weatherstrip, and gear teeth on the power liftgate motor assembly for wear or anything that would cause an obstruction to proper operation. If necessary manually operate the power liftgate on a known good vehicle and notice the effort needed to open and close for comparison. Especially notice the effort needed to unlatch and close the liftgate. Were there any mechanical problems found? Yes → Refer to Service information for the related symptom(s). Perform BODY VERIFICATION TEST - VER 1. No → Go To 3	All

INCOMPLETE LATCH CINCH - OVERCURRENT — Continued

TEST	ACTION	APPLICABILITY
3	Turn the ignition off. Disconnect the Power Liftgate Module C2 connector. Disconnect the Liftgate Cinch/Release Motor connector. Measure the resistance of the Liftgate Latch Cinch Driver circuit between the Power Liftgate Module C2 connector and the Liftgate Cinch/Release Motor connector. Wiggle the harness and check for an intermittent open condition. Is the resistance below 5.0 ohms? Yes → Go To 4 No → Repair the Liftgate Latch Cinch Driver wire for an open. Perform BODY VERIFICATION TEST - VER 1.	All
4	Turn the ignition off. Disconnect the Power Liftgate Module C2 connector. Disconnect the Liftgate Cinch/Release Motor connector. Measure the resistance of the Liftgate Latch Release Driver circuit between the Power Liftgate Module C2 connector and the Liftgate Cinch/Release Motor connector. Wiggle the harness and check for an intermittent open condition. Is the resistance below 5.0 ohms? Yes → Go To 5 No → Repair the Liftgate Latch Release Driver wire for an open. Perform BODY VERIFICATION TEST - VER 1.	All
5	Turn the ignition off. Disconnect the Power Liftgate Module C2 connector. Disconnect the Liftgate Cinch/Release Motor connector. Measure the resistance between ground and the Liftgate Latch Cinch Driver circuit. Wiggle the harness and check for an intermittent short condition. Is the resistance below 1000.0 ohms? Yes → Go To 6 No → Repair the Liftgate Latch Cinch Driver wire for a short to ground. Perform BODY VERIFICATION TEST - VER 1.	All
6	Turn the ignition off. Disconnect the Power Liftgate Module C2 connector. Disconnect the Liftgate Cinch/Release Motor connector. Measure the resistance between the Ground circuit (cavity 20) and the Liftgate Latch Cinch Driver circuit. Wiggle the harness and check for an intermittent short condition. Is the resistance below 1000.0 ohms? Yes → Go To 7 No → Repair the Liftgate Latch Cinch Driver wire for a short to the Ground circuit. Perform BODY VERIFICATION TEST - VER 1.	All

INCOMPLETE LATCH CINCH - OVERCURRENT — Continued

TEST	ACTION	APPLICABILITY
7	Turn the ignition off. Disconnect the Power Liftgate Module C2 connector. Disconnect the Liftgate Cinch/Release Motor connector. Measure the resistance between ground and the Liftgate Latch Release Driver circuit. Wiggle the harness and check for an intermittent short condition. Is the resistance below 1000.0 ohms? Yes → Go To 8 No → Repair the Liftgate Latch Release Driver wire for a short to ground. Perform BODY VERIFICATION TEST - VER 1.	All
8	Turn the ignition off. Disconnect the Power Liftgate Module C2 connector. Disconnect the Liftgate Cinch/Release Motor connector. Measure the resistance between the Ground circuit (cavity 20) and the Liftgate Latch Release Driver circuit. Wiggle the harness and check for an intermittent short condition. Is the resistance below 1000.0 ohms? Yes → Go To 9 No → Repair the Liftgate Latch Release Driver wire for a short to the Ground circuit. Perform BODY VERIFICATION TEST - VER 1.	All
9	If there are no possible causes remaining, view repair. Repair Replace the Latch Assembly. Perform BODY VERIFICATION TEST - VER 1.	All

Symptom:
INCOMPLETE LATCH RELEASE - RATCHET SWITCH FAILURE

When Monitored and Set Condition:

INCOMPLETE LATCH RELEASE - RATCHET SWITCH FAILURE

When Monitored: Whenever the power liftgate is performing a release operation.

Set Condition: The pawl switch was grounded but the ratchet switch remained open. This code will set only in the release operation.

POSSIBLE CAUSES
DTC PRESENT
BINDING DOOR
POWER LIFTGATE MODULE - RATCHET CIRCUIT
GROUND WIRE OPEN
LIFTGATE AJAR SWITCH SENSE WIRE OPEN
RATCHET SWITCH

TEST	ACTION	APPLICABILITY
1	**NOTE: This DTC will only set during the releasing operation after the 4 second time out. This may make it difficult to reproduce.** With the DRBIII®, record and erase DTC's. Turn the ignition off, wait 10 seconds, then turn the ignition on. Operate the power liftgate several times if possible. With the DRBIII®, read ACTIVE DTCs. Does the DRBIII® display INCOMPLETE LATCH RELEASE - RATCHET SWITCH FAILURE? Yes → Go To 2 No → Using the wiring diagram/schematic as a guide, inspect the wiring and connectors for an intermittent condition. Operate the door several times and check for any binding or other obstructions. Perform BODY VERIFICATION TEST - VER 1.	All
2	Examine the liftgate for proper fit and alignment, loose/ hard or torn seals, worn teeth on the gears or anything that would cause an obstruction to proper operation. Manually operate the liftgate of a known good vehicle and notice the effort needed to open and close. Compare the effort needed on the disabled liftgate. Especially notice the effort needed to unlatch and close the liftgate. Does it take more effort to operate the liftgate than it should? Yes → Refer to Service information for the related symptom(s). Perform BODY VERIFICATION TEST - VER 1. No → Go To 3	All

INCOMPLETE LATCH RELEASE - RATCHET SWITCH FAILURE — Continued

TEST	ACTION	APPLICABILITY
3	With the DRBIII® in Inputs/Outputs, read the RATCHET state. Open the liftgate to full open position. Using a screwdriver, click the latch to the second detent while observing the DRBIII®. Unlatch the latch by pressing the handle switch or using the key and observe the DRBIII® for a state change. Repeat this step several times while moving the liftgate in different positions and wiggling the wiring harness to check for an intermittent short. Did the DRB111® show the switch state changes correctly every time? Yes → Replace the Power Liftgate Module. Perform BODY VERIFICATION TEST - VER 1. No → Go To 4	All
4	Disconnect the Power Liftgate C2 connector. Disconnect the Liftgate Cinch/Release Motor connector. Measure the resistance of the Ground wire between the PLG C2 connector (cavity 20) and the Liftgate Cinch/Release Motor connector (cavity 1). Wiggle the harness while observing the ohmmeter. Is the resistance below 5.0 ohms? Yes → Go To 5 No → Repair the Ground wire for an open. Perform BODY VERIFICATION TEST - VER 1.	All
5	Disconnect the Power Liftgate Module C2 connector. Disconnect the Liftgate Cinch/Release Motor connector (latch assembly). Measure the resistance of the Liftgate Ajar Switch Sense wire between the PLG C2 connector and the Liftgate Cinch/Release Motor connector. Wiggle the harness and move the liftgate in different positions while observing the ohmmeter. Is the resistance below 5.0 ohms? Yes → Go To 6 No → Repair the Liftgate Ajar Switch Sense wire for an open. Perform BODY VERIFICATION TEST - VER 1.	All
6	If there are no possible causes remaining, view repair. Repair Replace the Ratchet Switch (latch assembly). Perform BODY VERIFICATION TEST - VER 1.	All

Symptom:
INCOMPLETE LATCH RELEASE- PAWL SWITCH FAILURE

When Monitored and Set Condition:

INCOMPLETE LATCH RELEASE- PAWL SWITCH FAILURE

When Monitored: Whenever the power liftgate is operating in an opening direction.

Set Condition: The release operation was not completed due to the non-transition of the pawl switch during the power release operation. The ratchet switch was detected as grounded but the pawl remained open. This code is set during the power releasing operation from a fully closed liftgate.

POSSIBLE CAUSES
DTC PRESENT
BINDING DOOR
POWER LIFTGATE MODULE - PAWL CIRCUIT
GROUND WIRE OPEN
PAWL SWITCH SENSE WIRE OPEN
PAWL SWITCH

TEST	ACTION	APPLICABILITY
1	**NOTE: This DTC will only set during the cinching operation after the 4 second time out. This may make it difficult to reproduce.** With the DRBIII®, record and erase DTC's. Turn the ignition off, wait 10 seconds, then turn the ignition on. Operate the power liftgate several times if possible. With the DRBIII®, read ACTIVE DTCs. Does the DRBIII® display INCOMPLETE LATCH RELEASE - PAWL SWITCH FAILURE? Yes → Go To 2 No → Using the wiring diagram/schematic as a guide, inspect the wiring and connectors for an intermittent condition. Operate the door several times and check for any binding or other obstructions. Perform BODY VERIFICATION TEST - VER 1.	All
2	Examine the liftgate for proper fit and alignment, loose/ hard or torn seals, worn teeth on the gears or anything that would cause an obstruction to proper operation. Manually operate the liftgate of a known good vehicle and notice the effort needed to open and close. Compare the effort needed on the disabled liftgate. Especially notice the effort needed to unlatch and close the liftgate. Does it take more effort to operate the liftgate than it should? Yes → Refer to Service information for the related symptom(s). Perform BODY VERIFICATION TEST - VER 1. No → Go To 3	All

INCOMPLETE LATCH RELEASE- PAWL SWITCH FAILURE — Continued

TEST	ACTION	APPLICABILITY
3	With the DRBIII® in Inputs/Outputs, read the PAWL state. Open the liftgate to full open position. Using a screwdriver, click the latch to the first detent while observing the DRB111®. Unlatch the latch by pressing the handle switch or using the key and observe the DRB111® for a state change. Repeat this step several times while moving the liftgate in different positions and wiggling the wiring harness to check for an intermittent open.. Did the DRB111® show the switch state changes correctly every time? Yes → Replace the Power Liftgate Module. Perform BODY VERIFICATION TEST - VER 1. No → Go To 4	All
4	Disconnect the Power Liftgate C2 connector. Disconnect the Liftgate Cinch/Release Motor connector. Measure the resistance of the Ground wire between the PLG C2 connector (cavity 20) and the Liftgate Cinch/Release Motor connector (cavity 1). Wiggle the harness while observing the ohmmeter. Is the resistance below 5.0 ohms? Yes → Go To 5 No → Repair the Ground wire for an open. Perform BODY VERIFICATION TEST - VER 1.	All
5	Disconnect the Sliding Door Control Module C2 connector. Disconnect the Liftgate Cinch/Release Motor connector (latch assembly). Measure the resistance of the Liftgate Pawl Switch Sense circuit between the PLG C2 connector and the Liftgate Cinch/Release Motor connector. Wiggle the harness while observing the ohmmeter. Is the resistance below 5.0 ohms? Yes → Go To 6 No → Repair the Liftgate Pawl Switch Sense wire for an open. Perform BODY VERIFICATION TEST - VER 1.	All
6	If there are no possible causes remaining, view repair. Repair Replace the Liftgate Pawl Switch (latch assembly). Perform BODY VERIFICATION TEST - VER 1.	All

Symptom:

INCOMPLETE LATCH RELEASE- SECTOR GEAR RETURN FAILURE

When Monitored and Set Condition:

INCOMPLETE LATCH RELEASE- SECTOR GEAR RETURN FAILURE

When Monitored: Whenever the power liftgate is operating.

Set Condition: If the cinch release motor takes longer than 700 ms to perform a release operation this code will set. The main causes of this code setting is some type of sticking situation preventing the sector gear in the cinch release motor assembly to return to its neutral position.

POSSIBLE CAUSES
DTC PRESENT
BINDING LIFTGATE
LIFTGATE CINCH RELEASE MOTOR ASSEMBLY

TEST	ACTION	APPLICABILITY
1	With the DRBIII®, record and erase DTC's. Turn the ignition off, wait 10 seconds, then turn the ignition on. Operate the power liftgate several times if possible. With the DRBIII®, read ACTIVE DTCs. Does the DRBIII® display INCOMPLETE LATCH RELEASE - SECTOR GEAR RETURN FAILURE? Yes → Go To 2 No → Using the wiring diagram/schematic as a guide, inspect the wiring and connectors for an intermittent condition. Operate the door several times and check for any binding or other obstructions. Perform BODY VERIFICATION TEST - VER 1.	All
2	Examine the liftgate for proper fit and alignment, loose/hard or torn seals, struts or anything that would cause an obstruction to proper operation. Manually operate the liftgate of a known good vehicle and notice the effort needed to open and close. Compare the effort needed on the disabled liftgate. Especially notice the effort needed to unlatch and close the liftgate. Does it take more effort to operate the liftgate than it should? Yes → Refer to Service information for the related symptom(s). Perform BODY VERIFICATION TEST - VER 1. No → Replace the Liftgate Cinch Release Motor Assembly.. Perform BODY VERIFICATION TEST - VER 1.	All

Symptom:

INCOMPLETE POWER CLOSE - FULL OPEN SWITCH FAILURE/ NON ENGAGEMENT

When Monitored and Set Condition:

INCOMPLETE POWER CLOSE - FULL OPEN SWITCH FAILURE/NON ENGAGEMENT

When Monitored: Whenever the power liftgate is closing.

Set Condition: The Full Open Switch was detected as closed before 200 hall effect pulses were counted since the start of the close operation. May be triggered by an intermittent full open switch failure, or non gear engagement

POSSIBLE CAUSES
DTC PRESENT
OBSTRUCTION OR STICKING FULL OPEN SWITCH
FULL OPEN SWITCH SHORT TO GROUND
POWER LIFTGATE MOTOR ASSEMBLY - FULL OPEN SWITCH

TEST	ACTION	APPLICABILITY
1	With the DRBIII®, record and erase DTC's. Turn the ignition off, wait 10 seconds, then turn the ignition on. Operate the power liftgate several times if possible. With the DRBIII®, read ACTIVE DTCs. Does the DRBIII® display INCOMPLETE POWER CLOSE - FULL OPEN SWITCH FAILURE? Yes → Go To 2 No → Using the wiring diagram/schematic as a guide, inspect the wiring and connectors for an intermittent condition. Operate the liftgate several times and check for any binding cables or other obstructions. Perform BODY VERIFICATION TEST - VER 1.	All
2	Examine the liftgate for proper fit and alignment, foreign material in the drive unit or anything that would cause an obstruction to proper operation of the Full Open Switch. With the DRBIII® in Inputs/Outputs, read the FULL OPEN SWITCH state. Manually operate the liftgate while monitoring the DRBIII®. Does the switch status change smoothly as the liftgate is pulled down from the full open position. Yes → Go To 3 No → Refer to Service information for the related symptom(S). Perform BODY VERIFICATION TEST - VER 1.	All

INCOMPLETE POWER CLOSE - FULL OPEN SWITCH FAILURE/NON ENGAGEMENT — Continued

TEST	ACTION	APPLICABILITY
3	With the DRBIII® in Inputs/Outputs, read the FULL OPEN SWITCH state. Open the liftgate to mid position. While monitoring the DRBIII®, wiggle the wiring harness from the Power Liftgate Module to the Full Open Switch on the Power Liftgate Motor assembly. Did the switch status ever change? Yes → Repair the Liftgate Full Open Switch Sense circuit for a short to ground. Perform BODY VERIFICATION TEST - VER 1. No → Go To 4	All
4	If there are no possible causes remaining, view repair. Repair Replace the Power Liftgate Motor assembly. Perform BODY VERIFICATION TEST - VER 1.	All

Symptom:

INCOMPLETE POWER CLOSE - EXCESSIVE H.E. COUNTS/NON ENGAGEMENT

When Monitored and Set Condition:

INCOMPLETE POWER CLOSE - EXCESSIVE H.E. COUNTS/NON ENGAGEMENT

When Monitored: During Power Liftgate closing cycle.

Set Condition: If the PLG Module detects that the Power Liftgate Motor has generated more than 700 hall effect pulses during a full power cycle, this code will set.

POSSIBLE CAUSES
DTC PRESENT
POWER LIFTGATE MODULE - HALL EFFECT OPEN
BINDING LIFTGATE
LIFTGATE GEAR ENGAGE DRIVER WIRE OPEN
LIFTGATE GEAR ENGAGE DRIVER WIRE SHORT TO GROUND
LIFTGATE GEAR ENGAGE DRIVER WIRE SHORT TO THE LIFTGATE GEAR DISENGAGE WIRE.
LIFTGATE GEAR DISENGAGE DRIVER WIRE OPEN
LIFTGATE GEAR DISENGAGE DRIVER WIRE SHORT TO GROUND
POWER LIFTGATE MODULE - GEAR ENGAGE CIRCUIT OPEN
POWER LIFTGATE MOTOR
POWER LIFTGATE MOTOR - GEAR ENGAGE OPEN
POWER LIFTGATE MOTOR - GEAR ENGAGE SHORT TO GROUND
POWER LIFTGATE MOTOR - GEAR ENGAGE SHORTED

TEST	ACTION	APPLICABILITY
1	With the DRBIII®, record and erase DTC's. Turn the ignition off, wait 10 seconds, then turn the ignition on. Operate the Power Liftgate several times from stop to stop if possible. With the DRBIII®, read ACTIVE DTCs. Does the DRBIII® display INCOMPLETE POWER CLOSE - EXCESSIVE H.E. COUNTS/NON ENGAGEMENT? Yes → Go To 2 No → Using the wiring diagram/schematic as a guide, inspect the wiring and connectors for an intermittent condition. Operate the liftgate several times and check for any binding conditions. Perform BODY VERIFICATION TEST - VER 1.	All

INCOMPLETE POWER CLOSE - EXCESSIVE H.E. COUNTS/NON ENGAGEMENT — Continued

TEST	ACTION	APPLICABILITY
2	Examine the liftgate for proper alignment, worn or binding hinges, weak liftgate prop assembly, loose/ hard weatherstrip, and gear teeth on the Power Liftgate Motor assembly for wear or anything that would cause an obstruction to proper operation. If necessary manually operate the power liftgate on a known good vehicle and notice the effort needed to open and close for comparison. Especially notice the effort needed to unlatch and close the liftgate. Were there any mechanical problems found? Yes → Refer to Service information for the related symptom(s). Perform BODY VERIFICATION TEST - VER 1. No → Go To 3	All
3	Operate the liftgate from the full closed position and put an obstacle in it's path to make it reverse. Did the door reverse back to the closed position? Yes → Go To 4 No → Replace the Power Liftgate Module. Perform BODY VERIFICATION TEST - VER 1.	All
4	Disconnect the Power Liftgate Module C2 connector. Measure the resistance between the Liftgate Gear Engage Driver circuit and the Liftgate Gear Disengage Driver circuit in the PLG Module connector. Select the resistance found. Below 5.0 ohms. Go To 5 Between 5.1 and 8.0 ohms. Go To 7 Above 8.1 ohms Go To 12	All
5	Disconnect the Power Liftgate Motor connector. Disconnect the Power Liftgate Control Module C2 connector. Measure the resistance between the Liftgate Gear Engage Driver circuit and the Liftgate Gear Disengage Driver circuit in the PLG Module connector. Is the resistance below 10000.0 ohms? Yes → Repair the Liftgate Gear Engage Driver wire for a short to the Liftgate Gear Disengage Driver wire. Perform BODY VERIFICATION TEST - VER 1. No → Go To 6	All
6	If there are no possible causes remaining, view repair. Repair Replace the Power Liftgate Motor Assembly. Perform BODY VERIFICATION TEST - VER 1.	All
7	Disconnect the Power Liftgate Module C2 connector. Measure the resistance between Ground and the Liftgate Gear Engage Driver circuit. Is the resistance below 10000.0 ohms? Yes → Go To 8 No → Go To 11	All

INCOMPLETE POWER CLOSE - EXCESSIVE H.E. COUNTS/NON ENGAGEMENT — Continued

TEST	ACTION	APPLICABILITY
8	Disconnect the Power Liftgate Motor connector. Disconnect the Power Liftgate Module C2 connector. Measure the resistance between ground and the Liftgate Gear Engage Driver circuit. Is the resistance below 10000.0 ohms? Yes → Repair the Liftgate Gear Engage Driver wire for a short to ground. Perform BODY VERIFICATION TEST - VER 1. No → Go To 9	All
9	Disconnect the Power Liftgate Motor connector. Disconnect the Power Liftgate Module C2 connector. Measure the resistance between ground and the Liftgate Gear Disengage Driver circuit. Is the resistance below 10000.0 ohms? Yes → Repair the Liftgate Gear Disengage Driver wire for a short to ground. Perform BODY VERIFICATION TEST - VER 1. No → Go To 10	All
10	If there are no possible causes remaining, view repair. Repair Replace the Power Liftgate Motor Assembly. Perform BODY VERIFICATION TEST - VER 1.	All
11	**NOTE: Ensure all connectors are connected before proceeding.** While back probing, measure the Voltage between the Liftgate Gear Engage Driver circuit and the Liftgate Gear Disengage Driver circuit at the PLG Module connector.. Operate the Power liftgate and observe the voltmeter Did the voltmeter read above 11.0 volts for at least 1 second while the liftgate was operating? Yes → Test Complete. No → Replace the Power Liftgate Module. Perform BODY VERIFICATION TEST - VER 1.	All
12	Disconnect the Power Liftgate Motor connector. Disconnect the Power Liftgate Module C2 connector. Measure the resistance of the Liftgate Gear Engage Driver circuit between the Power Liftgate Motor connector and the Power Liftgate Module C2 connector. Is the resistance below 5.0 ohms? Yes → Go To 13 No → Repair the Liftgate Gear Engage Driver wire for an open. Perform BODY VERIFICATION TEST - VER 1.	All
13	Disconnect the Power Liftgate Motor connector. Disconnect the Power Liftgate Module C2 connector. Measure the resistance of Liftgate Gear Disengage Driver circuit from the Motor connector to the PLG Module connector. Is the resistance below 5.0 ohms? Yes → Go To 14 No → Repair the Liftgate Gear Disengage Driver wire for an open. Perform BODY VERIFICATION TEST - VER 1.	All

INCOMPLETE POWER CLOSE - EXCESSIVE H.E. COUNTS/NON ENGAGEMENT — Continued

TEST	ACTION	APPLICABILITY
14	If there are no possible causes remaining, view repair. Repair Replace the Power Liftgate Motor Assembly. Perform BODY VERIFICATION TEST - VER 1.	All

Symptom:

INCOMPLETE POWER CLOSE - HALL EFFECT SIGNAL MISSING

When Monitored and Set Condition:

INCOMPLETE POWER CLOSE - HALL EFFECT SIGNAL MISSING

When Monitored: Whenever the power liftgate is performing a power close operation.

Set Condition: The PLG Module detects that the motor is rotating (monitors hall effect pulses) but no hall effect pulses are being detected. This code is set during the power close (2 second chime period, prior to liftgate movement) operation.

POSSIBLE CAUSES
DTC PRESENT
POWER LIFTGATE MODULE - HALL EFFECT OPEN
BINDING LIFTGATE
HALL EFFECT GROUND CIRCUIT OPEN
LIFTGATE HALL EFFECT SUPPLY WIRE OPEN
LIFTGATE HALL EFFECT SUPPLY WIRE SHORT TO GROUND
LIFTGATE HALL EFFECT SUPPLY WIRE SHORT TO HARNESS GROUND
LIFTGATE HALL EFFECT SIGNAL WIRE OPEN
LIFTGATE HALL EFFECT SIGNAL WIRE SHORT TO GROUND
LIFTGATE HALL EFFECT SIGNAL WIRE SHORT TO HARNESS GROUND
POWER LIFTGATE MOTOR ASSEMBLY

TEST	ACTION	APPLICABILITY
1	With the DRBIII®, record and erase DTC's. Turn the ignition off, wait 10 seconds, then turn the ignition on. Operate the power liftgate several times from stop to stop if possible. With the DRBIII®, read ACTIVE DTCs. Does the DRBIII® display INCOMPLETE POWER CLOSE - HALL EFFECT SIGNAL MISSING? Yes → Go To 2 No → Using the wiring diagram/schematic as a guide, inspect the wiring and connectors for an intermittent condition. Operate the liftgate several times and check for any binding conditions. Perform BODY VERIFICATION TEST - VER 1.	All

INCOMPLETE POWER CLOSE - HALL EFFECT SIGNAL MISSING — Continued

TEST	ACTION	APPLICABILITY
2	Examine the liftgate for proper alignment, worn or binding hinges, weak liftgate prop assembly, loose/ hard weatherstrip, and gear teeth on the power liftgate motor assembly for wear or anything that would cause an obstruction to proper operation. If necessary manually operate the power liftgate on a known good vehicle and notice the effort needed to open and close for comparison. Especially notice the effort needed to unlatch and close the liftgate. Does it take more effort to operate the liftgate than it should? Yes → Refer to Service information for the related symptom(s). Perform BODY VERIFICATION TEST - VER 1. No → Go To 3	All
3	Operate the liftgate from the full open position and put an obstacle in its path to make it reverse. Did the liftgate reverse back to the open position? Yes → Go To 4 No → Replace the Power Liftgate Module. Perform BODY VERIFICATION TEST - VER 1.	All
4	Disconnect the Power Liftgate Motor connector. Using a 12-volt test light connected to 12-volts, check the Ground circuit. Does the test light illuminate brightly? Yes → Go To 5 No → Repair the hall effect ground circuit for an open. Perform BODY VERIFICATION TEST - VER 1.	All
5	Disconnect the Power Liftgate Motor connector. Disconnect the Power Liftgate Module C2 connector. Measure the resistance of the Liftgate Hall Effect Supply circuit between the Power Liftgate Motor connector and the Power Liftgate Module C2 connector. Is the resistance below 5.0 ohms? Yes → Go To 6 No → Repair the Liftgate Hall Effect Supply wire for an open. Perform BODY VERIFICATION TEST - VER 1.	All
6	Disconnect the Power Liftgate Motor connector. Disconnect the Power Liftgate Module C2 connector. Measure the resistance between ground and the Liftgate Hall Effect Supply circuit. Is the resistance below 100.0 ohms? Yes → Repair the Liftgate Hall Effect Supply wire for a short to ground. Perform BODY VERIFICATION TEST - VER 1. No → Go To 7	All
7	Disconnect the Power Liftgate Motor connector. Disconnect the Power Liftgate Module C2 connector. Measure the resistance between the Ground circuit (cavity 20) and the Liftgate Hall Effect Supply circuit. Is the resistance below 1000.0 ohms? Yes → Repair the Liftgate Hall Effect Supply wire for a short to the Ground circuit. Perform BODY VERIFICATION TEST - VER 1. No → Go To 8	All

INCOMPLETE POWER CLOSE - HALL EFFECT SIGNAL MISSING — Continued

TEST	ACTION	APPLICABILITY
8	Disconnect the Power Liftgate Motor connector. Disconnect the Power Liftgate Module C2 connector. Measure the resistance of the Liftgate Hall Effect Signal circuit between the Power Liftgate Motor connector and the Power Liftgate Module C2 connector. Is the resistance below 5.0 ohms? Yes → Go To 9 No → Repair the Liftgate Hall Effect Signal wire for an open. Perform BODY VERIFICATION TEST - VER 1.	All
9	Disconnect the Power Liftgate Motor connector. Disconnect the Power Liftgate Module C2 connector. Measure the resistance between ground and the Liftgate Hall Effect Signal circuit. Is the resistance below 100.0 ohms? Yes → Repair the Liftgate Hall Effect Signal wire for a short to ground. Perform BODY VERIFICATION TEST - VER 1. No → Go To 10	All
10	Disconnect the Power Liftgate Motor connector. Disconnect the Power Liftgate Module C2 connector. Measure the resistance between the Ground circuit (cavity 20) and the Liftgate Hall Effect Signal circuit. Is the resistance below 1000.0 ohms? Yes → Repair the Liftgate Hall Effect Signal wire for a short to the Ground circuit. Perform BODY VERIFICATION TEST - VER 1. No → Go To 11	All
11	If there are no possible causes remaining, view repair. Repair Replace the Power Liftgate Motor Assembly (hall effect switch). Perform BODY VERIFICATION TEST - VER 1.	All

Symptom:
INCOMPLETE POWER CLOSE - OVER CURRENT

When Monitored and Set Condition:

INCOMPLETE POWER CLOSE - OVER CURRENT

When Monitored: Anytime the liftgate is in a closing operation.

Set Condition: The drive motor stall current of over 24 amps has been detected for over 500 ms. or during the initial gear engagement the drive transistor is shorted, during a power close operation.

POSSIBLE CAUSES
DTC PRESENT
BINDING LIFTGATE
GROUND CIRCUIT OPEN
LIFTGATE CLOSE DRIVER CIRCUIT SHORT TO GROUND
LIFTGATE LATCH RELEASE DRIVER CIRCUIT SHORT TO GROUND
LIFTGATE LATCH RELEASE DRIVER CIRCUIT SHORT TO HARNESS GROUND
LIFTGATE GEAR ENGAGE DRIVER CIRCUIT SHORT TO GROUND
LIFTGATE GEAR ENGAGE DRIVER CIRCUIT SHORT TO HARNESS GROUND
LIFTGATE MODULE
POWER LIFTGATE MOTOR

TEST	ACTION	APPLICABILITY
1	With the DRBIII®, record and erase DTC's. Turn the ignition off, wait 10 seconds, then turn the ignition on. Operate the power liftgate several times (if possible). With the DRBIII®, read DTCs. Does the DRBIII® display INCOMPLETE POWER CLOSE- OVERCURRENT? Yes → Go To 2 No → Using the wiring diagram/schematic as a guide, inspect the wiring and connectors for an intermittent condition. Operate the liftgate several times and check for any binding conditions. Perform BODY VERIFICATION TEST - VER 1.	All

INCOMPLETE POWER CLOSE - OVER CURRENT — Continued

TEST	ACTION	APPLICABILITY
2	Examine the liftgate for proper alignment, worn or binding hinges, weak or binding liftgate prop rods, loose/ hard weatherstrip, and gear teeth on the power liftgate motor assembly for wear or anything that would cause an obstruction to proper operation. Compare the effort needed on the disabled vehicle. Especially notice the effort needed to unlatch and close the liftgate. Does it take more effort to operate the liftgate than it should? Yes → Refer to Service information for the related symptom(s). Perform BODY VERIFICATION TEST - VER 1. No → Go To 3	All
3	Turn the ignition off. Disconnect the Power Liftgate Module C1 connector. Using a 12-volt test light connected to 12-volts, check the Ground circuit. Wiggle the harness and check for an intermittent open condition. Does the test light illuminate brightly? Yes → Go To 4 No → Repair the Ground circuit for an open. Perform BODY VERIFICATION TEST - VER 1.	All
4	Turn the ignition off. Disconnect the Power Liftgate Module C1 connector. Measure the resistance between ground and the Liftgate Close Driver circuit. Wiggle the harness and check for an intermittent short circuit condition. Is the resistance below 1000.0 ohms? Yes → Repair the Liftgate Close Driver circuit for a short to ground. Perform BODY VERIFICATION TEST - VER 1. No → Go To 5	All
5	Turn the ignition off. Disconnect the Power Liftgate Module C2 connector. Measure the resistance between ground and the Liftgate Latch Release Driver circuit. Wiggle the harness and check for an intermittent short condition. Is the resistance below 1000.0 ohms? Yes → Repair the Liftgate Latch Release Driver circuit for a short to ground. Perform BODY VERIFICATION TEST - VER 1. No → Go To 6	All
6	Turn the ignition off. Disconnect the Power Liftgate Module C2 connector. Measure the resistance between the Ground circuit (cavity 20) and the Liftgate Latch Release Driver circuit. Wiggle the harness and check for an intermittent short condition. Is the resistance below 1000.0 ohms? Yes → Repair the Liftgate Latch Release Driver circuit for a short to the Ground circuit. Perform BODY VERIFICATION TEST - VER 1. No → Go To 7	All

INCOMPLETE POWER CLOSE - OVER CURRENT — Continued

TEST	ACTION	APPLICABILITY
7	Turn the ignition off. Disconnect the Power Liftgate Module C2 connector. Measure the resistance between ground and the Liftgate Gear Engage Driver circuit. Wiggle the harness and check for an intermittent short condition. Is the resistance below 1000.0 ohms? Yes → Repair the Liftgate Gear Engage Driver circuit for a short to ground. Perform BODY VERIFICATION TEST - VER 1. No → Go To 8	All
8	Turn the ignition off. Disconnect the Power Liftgate Module C2 connector. Measure the resistance between the Ground circuit (cavity 20) and the Liftgate Gear Engage Driver circuit. Wiggle the harness and check for an intermittent short condition. Is the resistance below 1000.0 ohms? Yes → Repair the Liftgate Gear Engage Driver circuit for a short to the Ground circuit. Perform BODY VERIFICATION TEST - VER 1. No → Go To 9	All
9	Ensure all module and motor connectors are connected at this time. Try to operate the liftgate in the close position. Did the motor start to close the liftgate but was very slow and labored extensively? Yes → Replace the Power Liftgate Motor assembly. Perform BODY VERIFICATION TEST - VER 1. No → Replace the Power Liftgate Module Perform BODY VERIFICATION TEST - VER 1.	All

Symptom:

INCOMPLETE POWER CLOSE - TIME OUT

When Monitored and Set Condition:

INCOMPLETE POWER CLOSE - TIME OUT

When Monitored: During Power Liftgate close cycle.

Set Condition: The power close operation was not completed within 20 seconds. This may be caused by very high closing effort. A weak hall effect signal, low motor output or high prop rod pressure could also set this code.

POSSIBLE CAUSES
DTC PRESENT
BINDING DOOR
POWER LIFTGATE MOTOR ASSEMBLY

TEST	ACTION	APPLICABILITY
1	With the DRBIII®, record and erase DTC's. Turn the ignition off, wait 10 seconds, then turn the ignition on. Operate the power liftgate several times from stop to stop - if possible. With the DRBIII®, read ACTIVE DTCs. Does the DRBIII® display INCOMPLETE POWER CLOSE - TIME-OUT? Yes → Go To 2 No → Using the wiring diagram/schematic as a guide, inspect the wiring and connectors for an intermittent condition. Operate the liftgate several times and check for any binding or other obstructions. Perform BODY VERIFICATION TEST - VER 1.	All
2	Examine the liftgate for proper alignment, worn or binding hinges, weak liftgate prop assembly, loose/ hard weatherstrip, and gear teeth on the power liftgate motor assembly for wear or anything that would cause an obstruction to proper operation. If necessary manually operate the power liftgate on a known good vehicle and notice the effort needed to open and close for comparison. Especially notice the effort needed to unlatch and close the liftgate. Does it take more effort to operate the liftgate than it should? Yes → Refer to Service information for the related symptom(s). Perform BODY VERIFICATION TEST - VER 1. No → Replace the Power Liftgate Motor Assembly. Perform BODY VERIFICATION TEST - VER 1.	All

Symptom:

INCOMPLETE POWER CLOSE - TRANSISTOR SHORTED

When Monitored and Set Condition:

INCOMPLETE POWER CLOSE - TRANSISTOR SHORTED

When Monitored: Whenever the power liftgate is performing a power close operation.

Set Condition: The Power Liftgate Module detects that the motor is rotating (monitors hall effect pulses) even though the controlled PWM rate is 0 percent. This DTC is set during the power close (2 second chime period, prior to movement of the liftgate) operation.

POSSIBLE CAUSES
DTC PRESENT
POWER LIFTGATE MODULE

TEST	ACTION	APPLICABILITY
1	With the DRBIII®, record and erase DTC's. Turn the ignition off, wait 10 seconds, then turn the ignition on. Operate the power liftgate several times if possible. With the DRBIII®, read ACTIVE DTCs. Does the DRBIII® display INCOMPLETE POWER CLOSE - TRANSISTOR SHORTED? Yes → Replace the Power Liftgate Module. Perform BODY VERIFICATION TEST - VER 1. No → Using the wiring diagram/schematic as a guide, inspect the wiring and connectors for an intermittent condition. Operate the liftgate several times and check for any binding conditions. Perform BODY VERIFICATION TEST - VER 1.	All

Symptom:

INCOMPLETE POWER CLOSE - VOLTAGE BELOW MINIMUM LEVEL

When Monitored and Set Condition:

INCOMPLETE POWER CLOSE - VOLTAGE BELOW MINIMUM LEVEL

When Monitored: Whenever the power liftgate is performing a power close operation.

Set Condition: The PLG Module detects that the voltage is below 9.5 volts during the power close operation.

POSSIBLE CAUSES
DTC PRESENT
MODULE VOLTAGE LOW
BINDING LIFTGATE
DRB OPERATING VOLTAGE LOW
PLG MODULE - HIGH RESISTANCE
POWER LIFTGATE MOTOR

TEST	ACTION	APPLICABILITY
1	With the DRBIII®, record and erase DTC's. Turn the ignition off, wait 10 seconds, then turn the ignition on. Operate the power liftgate several times if possible. With the DRBIII®, read DTCs. Does the DRBIII® display INCOMPLETE POWER CLOSE - VOLTAGE BELOW MINIMUM LEVEL? Yes → Go To 2 No → Using the wiring diagram/schematic as a guide, inspect the wiring and connectors for an intermittent condition. Operate the door several times and check for any binding conditions. Perform BODY VERIFICATION TEST - VER 1.	All
2	Examine the liftgate for proper fit and alignment, or anything that would cause an obstruction to proper operation. Check the prop rods to ensure liftgate will fall closed from the approximately 3/4 closed position. Does it take more effort to operate the liftgate than it should? Yes → Refer to Service information for the related symptom(s). Perform BODY VERIFICATION TEST - VER 1. No → Go To 3	All

INCOMPLETE POWER CLOSE - VOLTAGE BELOW MINIMUM LEVEL — Continued

TEST	ACTION	APPLICABILITY
3	**NOTE: Test the battery to ensure it is fully charged and in good condition before proceeding.** Turn the ignition off. Turn all lights and accessories off. With the DRBIII® in ″Power Liftgate″ ″Monitor Display″ ″PCI Bus Info″ read the ″Battery Voltage″ and compare it to the ″PLG Bat Volts Input″. **NOTE: If the difference is greater than 0.5 volts, backprobe the Fused B(+) at the module to verify.** Does the voltage vary more than 0.5 volts? Yes → Using the wiring diagram/schematic as a guide, inspect the wiring and connectors. Locate and repair the reason for the voltage drop. Perform BODY VERIFICATION TEST - VER 1. No → Go To 4	All
4	Turn the ignition off. Turn all lights and accessories off. With the DRBIII® in ″Power Liftgate″″ ″Monitor Display″ ″PCI Bus Info″ read the ″Battery Voltage″ and compare it to the ″PLG Bat Volts Input″. Operate the power liftgate and observe the voltage difference. **NOTE: If the difference is greater than 1.6 volts, backprobe the Fused B(+) at the module to verify.** Does the voltage vary more than 1.6 volts when the liftgate is operating?? Yes → Using the wiring diagram/schematic as a guide, inspect the wiring and connectors. Locate and repair the reason for the voltage drop. Perform BODY VERIFICATION TEST - VER 1. No → Go To 5	All
5	Turn the ignition off. Turn all lights and accessories off. Open the Liftgate. Remove the left rear trim panel to gain access to the Power Liftgate Module. Remove the PLG module but leave it connected. Backprobe voltmeter leads between the Fused B(+) and the Liftgate Close Driver circuits in the PLG C1 connector. Operate the power liftgate in the CLOSED position and observe the voltage difference. Does the voltage vary more than 0.2 volts when the liftgate is operating?? Yes → Replace the Power Liftgate Module. Perform BODY VERIFICATION TEST - VER 1. No → Go To 6	All
6	If there are no possible causes remaining, view repair. Repair Check the wiring and connections from the module to the motor for high resistance. If the wiring is okay, replace the Power Liftgate Motor assembly. Perform BODY VERIFICATION TEST - VER 1.	All

Symptom:

INCOMPLETE POWER OPEN - FULL OPEN SWITCH FAILURE/ NON ENGAGEMENT

When Monitored and Set Condition:

INCOMPLETE POWER OPEN - FULL OPEN SWITCH FAILURE/NON ENGAGEMENT

When Monitored: During the Power Liftgate open cycle.

Set Condition: The Full Open Switch was detected as closed before 200 hall effect pulses were counted since the start of the open operation. May be triggered by an intermittent full open switch failure or a non gear engagement.

POSSIBLE CAUSES
DTC PRESENT
OBSTRUCTION OR STICKING FULL OPEN SWITCH
FULL OPEN SWITCH SHORT TO GROUND
POWER LIFTGATE MOTOR ASSEMBLY - FULL OPEN SWITCH

TEST	ACTION	APPLICABILITY
1	With the DRBIII®, record and erase DTC's. Turn the ignition off, wait 10 seconds, then turn the ignition on. Operate the power liftgate several times if possible. With the DRBIII®, read ACTIVE DTCs. Does the DRBIII® display INCOMPLETE POWER OPEN - FULL OPEN SWITCH FAILURE? Yes → Go To 2 No → Using the wiring diagram/schematic as a guide, inspect the wiring and connectors for an intermittent condition. Operate the liftgate several times and check for any binding or obstructions. Perform BODY VERIFICATION TEST - VER 1.	All
2	Examine the liftgate for proper fit and alignment, foreign material in the drive unit or anything that would cause an obstruction to proper operation of the Full Open Switch. With the DRBIII® in Inputs/Outputs, read the FULL OPEN SWITCH state. Manually operate the liftgate while monitoring the DRBIII®. Does the switch status change smoothly as the liftgate is pulled down from the full open position. Yes → Go To 3 No → Refer to Service information for the related symptom(S). Perform BODY VERIFICATION TEST - VER 1.	All

INCOMPLETE POWER OPEN - FULL OPEN SWITCH FAILURE/NON ENGAGEMENT — Continued

TEST	ACTION	APPLICABILITY
3	With the DRBIII® in Inputs/Outputs, read the FULL OPEN SWITCH state. Open the liftgate to mid position. While monitoring the DRBIII®, wiggle the wiring harness from the Power Liftgate Module to the Full Open Switch on the Power Liftgate Motor assembly. Did the switch status ever change? Yes → Repair the Full Open Switch Sense circuit for a short to ground. Perform BODY VERIFICATION TEST - VER 1. No → Go To 4	All
4	If there are no possible causes remaining, view repair. Repair Replace the Power Liftgate Motor assembly. Perform BODY VERIFICATION TEST - VER 1.	All

Symptom:

INCOMPLETE POWER OPEN - EXCESSIVE H.E. COUNTS/NON ENGAGEMENT

When Monitored and Set Condition:

INCOMPLETE POWER OPEN - EXCESSIVE H.E. COUNTS/NON ENGAGEMENT

When Monitored: During Power Liftgate opening cycle.

Set Condition: If the PLG Module detects that the Power Liftgate Motor has generated more than 700 hall effect pulses during a full power cycle, this code will set.

POSSIBLE CAUSES
DTC PRESENT
POWER LIFTGATE MODULE - HALL EFFECT OPEN
BINDING LIFTGATE
LIFTGATE GEAR ENGAGE DRIVER WIRE OPEN
LIFTGATE GEAR ENGAGE DRIVER WIRE SHORT TO GROUND
LIFTGATE GEAR ENGAGE DRIVER WIRE SHORT TO THE LIFTGATE GEAR DISENGAGE WIRE.
LIFTGATE GEAR DISENGAGE DRIVER WIRE OPEN
LIFTGATE GEAR DISENGAGE DRIVER WIRE SHORT TO GROUND
POWER LIFTGATE MODULE - GEAR ENGAGE CIRCUIT OPEN
POWER LIFTGATE MOTOR
POWER LIFTGATE MOTOR - GEAR ENGAGE OPEN
POWER LIFTGATE MOTOR - GEAR ENGAGE SHORT TO GROUND
POWER LIFTGATE MOTOR - GEAR ENGAGE SHORTED

TEST	ACTION	APPLICABILITY
1	With the DRBIII®, record and erase DTC's. Turn the ignition off, wait 10 seconds, then turn the ignition on. Operate the Power Liftgate several times from stop to stop if possible. With the DRBIII®, read ACTIVE DTCs. Does the DRBIII® display INCOMPLETE POWER OPEN - EXCESSIVE H.E. COUNTS/NON ENGAGEMENT? Yes → Go To 2 No → Using the wiring diagram/schematic as a guide, inspect the wiring and connectors for an intermittent condition. Operate the liftgate several times and check for any binding conditions. Perform BODY VERIFICATION TEST - VER 1.	All

INCOMPLETE POWER OPEN - EXCESSIVE H.E. COUNTS/NON ENGAGEMENT — Continued

TEST	ACTION	APPLICABILITY
2	Examine the liftgate for proper alignment, worn or binding hinges, weak liftgate prop assembly, loose/ hard weatherstrip, and gear teeth on the Power Liftgate Motor assembly for wear or anything that would cause an obstruction to proper operation. If necessary manually operate the power liftgate on a known good vehicle and notice the effort needed to open and close for comparison. Especially notice the effort needed to unlatch and close the liftgate. Were there any mechanical problems found? Yes → Refer to Service information for the related symptom(s). Perform BODY VERIFICATION TEST - VER 1. No → Go To 3	All
3	Operate the liftgate from the full closed position and put an obstacle in it's path to make it reverse. Did the door reverse back to the closed position? Yes → Go To 4 No → Replace the Power Liftgate Module. Perform BODY VERIFICATION TEST - VER 1.	All
4	Disconnect the Power Liftgate Module C2 connector. Measure the resistance between the Liftgate Gear Engage Driver circuit and the Liftgate Gear Disengage Driver circuit in the PLG Module connector. Select the resistance found. Below 5.0 ohms. Go To 5 Between 5.1 and 8.0 ohms. Go To 7 Above 8.1 ohms Go To 12	All
5	Disconnect the Power Liftgate Motor connector. Disconnect the Power Liftgate Control Module C2 connector. Measure the resistance between the Liftgate Gear Engage Driver circuit and the Liftgate Gear Disengage Driver circuit in the PLG Module connector. Is the resistance below 10000.0 ohms? Yes → Repair the Liftgate Gear Engage Driver wire for a short to the Liftgate Gear Disengage Driver wire. Perform BODY VERIFICATION TEST - VER 1. No → Go To 6	All
6	If there are no possible causes remaining, view repair. Repair Replace the Power Liftgate Motor Assembly. Perform BODY VERIFICATION TEST - VER 1.	All
7	Disconnect the Power Liftgate Module C2 connector. Measure the resistance between Ground and the Liftgate Gear Engage Driver circuit. Is the resistance below 10000.0 ohms? Yes → Go To 8 No → Go To 11	All

INCOMPLETE POWER OPEN - EXCESSIVE H.E. COUNTS/NON ENGAGEMENT — Continued

TEST	ACTION	APPLICABILITY
8	Disconnect the Power Liftgate Motor connector. Disconnect the Power Liftgate Module C2 connector. Measure the resistance between ground and the Liftgate Gear Engage Driver circuit. Is the resistance below 10000.0 ohms? Yes → Repair the Liftgate Gear Engage Driver wire for a short to ground. Perform BODY VERIFICATION TEST - VER 1. No → Go To 9	All
9	Disconnect the Power Liftgate Motor connector. Disconnect the Power Liftgate Module C2 connector. Measure the resistance between ground and the Liftgate Gear Disengage Driver circuit. Is the resistance below 10000.0 ohms? Yes → Repair the Liftgate Gear Disengage Driver wire for a short to ground. Perform BODY VERIFICATION TEST - VER 1. No → Go To 10	All
10	If there are no possible causes remaining, view repair. Repair Replace the Power Liftgate Motor Assembly. Perform BODY VERIFICATION TEST - VER 1.	All
11	**NOTE: Ensure all connectors are connected before proceeding.** While back probing, measure the Voltage between the Liftgate Gear Engage Driver circuit and the Liftgate Gear Disengage Driver circuit at the PLG Module connector.. Operate the Power liftgate and observe the voltmeter Did the voltmeter read above 11.0 volts for at least 1 second while the liftgate was operating? Yes → Replace the Power Liftgate Motor assembly. Perform BODY VERIFICATION TEST - VER 1. No → Replace the Power Liftgate Module. Perform BODY VERIFICATION TEST - VER 1.	All
12	Disconnect the Power Liftgate Motor connector. Disconnect the Power Liftgate Module C2 connector. Measure the resistance of the Liftgate Gear Engage Driver circuit between the Power Liftgate Motor connector and the Power Liftgate Module C2 connector. Is the resistance below 5.0 ohms? Yes → Go To 13 No → Repair the Liftgate Gear Engage Driver wire for an open. Perform BODY VERIFICATION TEST - VER 1.	All
13	Disconnect the Power Liftgate Motor connector. Disconnect the Power Liftgate Module C2 connector. Measure the resistance of Liftgate Gear Disengage Driver circuit from the Motor connector to the PLG Module connector. Is the resistance below 5.0 ohms? Yes → Go To 14 No → Repair the Liftgate Gear Disengage Driver wire for an open. Perform BODY VERIFICATION TEST - VER 1.	All

INCOMPLETE POWER OPEN - EXCESSIVE H.E. COUNTS/NON ENGAGEMENT — Continued

TEST	ACTION	APPLICABILITY
14	If there are no possible causes remaining, view repair. Repair Replace the Power Liftgate Motor Assembly. Perform BODY VERIFICATION TEST - VER 1.	All

Symptom:

INCOMPLETE POWER OPEN - HALL EFFECT SIGNAL MISSING

When Monitored and Set Condition:

INCOMPLETE POWER OPEN - HALL EFFECT SIGNAL MISSING

When Monitored: Whenever the power liftgate is performing a power open operation.

Set Condition: The PLG Module detects that the motor is rotating (monitors hall effect pulses) but no hall effect pulses are being detected. This code is set during the power open (2 second chime period, prior to liftgate movement) operation.

POSSIBLE CAUSES
DTC PRESENT
POWER LIFTGATE MODULE - HALL EFFECT OPEN
BINDING LIFTGATE
HALL EFFECT GROUND CIRCUIT OPEN
LIFTGATE HALL EFFECT SUPPLY WIRE OPEN
LIFTGATE HALL EFFECT SUPPLY WIRE SHORT TO GROUND
LIFTGATE HALL EFFECT SUPPLY WIRE SHORT TO HARNESS GROUND
LIFTGATE HALL EFFECT SIGNAL WIRE OPEN
LIFTGATE HALL EFFECT SIGNAL WIRE SHORT TO GROUND
LIFTGATE HALL EFFECT SIGNAL WIRE SHORT TO HARNESS GROUND
POWER LIFTGATE MOTOR

TEST	ACTION	APPLICABILITY
1	With the DRBIII®, record and erase DTC's. Turn the ignition off, wait 10 seconds, then turn the ignition on. Operate the Power Liftgate several times from stop to stop if possible. With the DRBIII®, read ACTIVE DTCs. Does the DRBIII® display INCOMPLETE POWER OPEN - HALL EFFECT SIGNAL MISSING? Yes → Go To 2 No → Using the wiring diagram/schematic as a guide, inspect the wiring and connectors for an intermittent condition. Operate the liftgate several times and check for any binding conditions. Perform BODY VERIFICATION TEST - VER 1.	All

INCOMPLETE POWER OPEN - HALL EFFECT SIGNAL MISSING — Continued

TEST	ACTION	APPLICABILITY
2	Examine the liftgate for proper alignment, worn or binding hinges, weak liftgate prop assembly, loose/ hard weatherstrip, and gear teeth on the Power Liftgate Motor assembly for wear or anything that would cause an obstruction to proper operation. If necessary manually operate the power liftgate on a known good vehicle and notice the effort needed to open and close for comparison. Especially notice the effort needed to unlatch and close the liftgate. Were there any mechanical problems found? Yes → Refer to Service information for the related symptom(s). Perform BODY VERIFICATION TEST - VER 1. No → Go To 3	All
3	Operate the liftgate from the full closed position and put an obstacle in it's path to make it reverse. Did the door reverse back to the closed position? Yes → Go To 4 No → Replace the Power Liftgate Module. Perform BODY VERIFICATION TEST - VER 1.	All
4	Disconnect the Power Liftgate Motor connector. Using a 12-volt test light connected to 12-volts, check the Ground circuit. Does the test light illuminate brightly? Yes → Go To 5 No → Repair the hall effect ground circuit for an open. Perform BODY VERIFICATION TEST - VER 1.	All
5	Disconnect the Power Liftgate Motor connector. Disconnect the Power Liftgate Module C2 connector. Measure the resistance of the Liftgate Hall Effect Supply circuit between the Power Liftgate Motor connector and the Power Liftgate Module C2 connector. Is the resistance below 5.0 ohms? Yes → Go To 6 No → Repair the Liftgate Hall Effect Supply wire for an open. Perform BODY VERIFICATION TEST - VER 1.	All
6	Disconnect the Power Liftgate Motor connector. Disconnect the Power Liftgate Module C2 connector. Measure the resistance between ground and the Liftgate Hall Effect Supply circuit. Is the resistance below 100.0 ohms? Yes → Repair the Door Motor Hall Effect Supply wire for a short to ground. Perform BODY VERIFICATION TEST - VER 1. No → Go To 7	All

INCOMPLETE POWER OPEN - HALL EFFECT SIGNAL MISSING — Continued

TEST	ACTION	APPLICABILITY
7	Disconnect the Power Liftgate Motor connector. Disconnect the Power Liftgate Module C2 connector. Measure the resistance between the Ground circuit (cavity 20) and the Liftgate Hall Effect Supply circuit. Is the resistance below 1000.0 ohms? Yes → Repair the Door Motor Hall Effect Supply wire for a short to the Ground circuit. Perform BODY VERIFICATION TEST - VER 1. No → Go To 8	All
8	Disconnect the Power Liftgate Motor connector. Disconnect the Power Liftgate Module C2 connector. Measure the resistance of the Power Liftgate Hall Effect Signal circuit between the Power Liftgate Motor connector and the Power Liftgate Module C2 connector. Is the resistance below 5.0 ohms? Yes → Go To 9 No → Repair the Liftgate Hall Effect Signal wire for an open. Perform BODY VERIFICATION TEST - VER 1.	All
9	Disconnect the Power Liftgate Motor connector. Disconnect the Power Liftgate Control Module C2 connector. Measure the resistance between ground and the Liftgate Hall Effect Signal circuit. Is the resistance below 100.0 ohms? Yes → Repair the Liftgate Hall Effect Signal wire for a short to ground. Perform BODY VERIFICATION TEST - VER 1. No → Go To 10	All
10	Disconnect the Power Liftgate Motor connector. Disconnect the Power Liftgate Control Module C2 connector. Measure the resistance between the Ground circuit (cavity 20) and the Liftgate Hall Effect Signal circuit. Is the resistance below 1000.0 ohms? Yes → Repair the Liftgate Hall Effect Signal wire for a short to the Ground circuit. Perform BODY VERIFICATION TEST - VER 1. No → Go To 11	All
11	If there are no possible causes remaining, view repair. Repair Replace the Power Liftgate Motor assembly. Perform BODY VERIFICATION TEST - VER 1.	All

Symptom:

INCOMPLETE POWER OPEN - LATCH FAILURE

When Monitored and Set Condition:

INCOMPLETE POWER OPEN - LATCH FAILURE

When Monitored: During the Power Liftgate open cycle.

Set Condition: The power open operation was not completed due to latch failure. This DTC is set during a power open cycle.

POSSIBLE CAUSES
DTC PRESENT
BINDING LIFTGATE
LIFTGATE LATCH CINCH DRIVER CIRCUIT SHORT TO HARNESS GROUND
LIFTGATE LATCH CINCH DRIVER CIRCUIT SHORT TO GROUND
LIFTGATE LATCH CINCH DRIVER WIRE OPEN
LIFTGATE LATCH RELEASE DRIVER WIRE OPEN
POWER LIFTGATE MODULE - FULL OPEN CIRCUIT OPEN
POWER LIFTGATE MODULE - PAWL CIRCUIT OPEN
POWER LIFTGATE MODULE - RATCHET CIRCUIT OPEN
GROUND WIRE OPEN
GROUND WIRE OPEN
GROUND WIRE OPEN
LIFTGATE AJAR SWITCH SENSE WIRE OPEN
LIFTGATE FULL OPEN SWITCH SENSE WIRE OPEN
LIFTGATE PAWL SWITCH SENSE WIRE OPEN
LIFTGATE FULL OPEN SWITCH SENSE WIRE SHORT TO GROUND
LIFTGATE FULL OPEN SWITCH SENSE WIRE SHORT TO HARNESS GROUND
LIFTGATE CINCH/RELEASE MOTOR
LIFTGATE CINCH/RELEASE MOTOR
LIFTGATE FULL OPEN SWITCH
LIFTGATE PAWL SWITCH
RATCHET SWITCH

INCOMPLETE POWER OPEN - LATCH FAILURE — Continued

TEST	ACTION	APPLICABILITY
1	With the DRBIII®, record and erase DTC's. Turn the ignition off, wait 10 seconds, then turn the ignition on. Operate the power liftgate several times if possible. With the DRBIII®, read ACTIVE DTCs. Does the DRBIII® display INCOMPLETE POWER OPEN - LATCH FAILURE? Yes → Go To 2 No → Using the wiring diagram/schematic as a guide, inspect the wiring and connectors for an intermittent condition. Operate the liftgate several times and check for any binding or other obstructions. Perform BODY VERIFICATION TEST - VER 1.	All
2	Examine the liftgate for proper alignment, worn or binding hinges, weak liftgate prop assembly, loose/ hard weatherstrip, and gear teeth on the Power Liftgate Motor assembly for wear or anything that would cause an obstruction to proper operation. If necessary manually operate the power liftgate on a known good vehicle and notice the effort needed to open and close for comparison. Especially notice the effort needed to unlatch and close the liftgate. Were there any mechanical problems found? Yes → Refer to Service information for the related symptom(s). Perform BODY VERIFICATION TEST - VER 1. No → Go To 3	All
3	With the DRBIII® in Inputs/Outputs, read the PAWL, RATCHET and FULL OPEN switch state. While observing the FULL OPEN switch state, manually lower the liftgate from full open to part open. The switch should toggle from CLOSED to OPEN. Open the Liftgate to full open position. While observing the PAWL switch state, click the latch with a screwdriver to the first detent. The PAWL should toggle from CLOSED to OPEN. Open the Liftgate to the full open position. While observing the RATCHET switch state, click the latch with a screwdriver to the second detent. The RATCHET should toggle from CLOSED to OPEN. Repeat the above steps several times. Select which switch failed: FULL OPEN Switch Go To 4 PAWL Switch Go To 10 RATCHET Switch Go To 14 All switches operated properly. Go To 18	All

INCOMPLETE POWER OPEN - LATCH FAILURE — Continued

TEST	ACTION	APPLICABILITY
4	Disconnect the Power Liftgate Module C2 connector. Measure the resistance between ground and the Liftgate Full Open Switch Sense circuit. Open the liftgate completely then partially close it. Repeat this step while observing the ohmmeter. Did the resistance change from below 15 ohms to above 1000.0 ohms when door was partially closed? Yes → Replace the Power Liftgate Module. Perform BODY VERIFICATION TEST - VER 1. No → Go To 5	All
5	Disconnect the Power Liftgate C2 connector. Disconnect the Full Open Switch connector. Measure the resistance of the Ground wire between the PLG C2 connector (cavity 20) and the Full Open Switch connector. Wiggle the harness while observing the ohmmeter. Is the resistance below 5.0 ohms? Yes → Go To 6 No → Repair the Ground wire for an open. Perform BODY VERIFICATION TEST - VER 1.	All
6	Disconnect the Power Liftgate Module C2 connector. Disconnect the Power Liftgate Motor connector. Measure the resistance of the Liftgate Full Open Switch Sense wire between the Power Liftgate Module C2 connector and the Power Liftgate Motor connector. Is the resistance below 5.0 ohms? Yes → Go To 7 No → Repair the Liftgate Full Open Switch Sense wire for an open. Perform BODY VERIFICATION TEST - VER 1.	All
7	Disconnect the Power Liftgate Module C2 connector. Disconnect the Power Liftgate Motor connector. Measure the resistance between ground and the Liftgate Full Open Switch Sense circuit. Is the resistance below 1000.0 ohms? Yes → Repair the Liftgate Full Open Switch Sense wire for a short to ground. Perform BODY VERIFICATION TEST - VER 1. No → Go To 8	All
8	Disconnect the Power Liftgate Module C2 connector. Disconnect the Power Liftgate Motor connector. Measure the resistance between the Ground circuit and the Liftgate Full Open Switch Sense circuit. Is the resistance below 1000.0 ohms? Yes → Repair the Liftgate Full Open Switch Sense wire for a short to the Ground circuit. Perform BODY VERIFICATION TEST - VER 1. No → Go To 9	All

INCOMPLETE POWER OPEN - LATCH FAILURE — Continued

TEST	ACTION	APPLICABILITY
9	If there are no possible causes remaining, view repair. Repair Replace the Power Liftgate Motor assembly. Perform BODY VERIFICATION TEST - VER 1.	All
10	Disconnect the Power Liftgate Module C2 connector. Measure the resistance between the Ground circuit (cavity 20) and the Pawl Switch Sense circuit. Open the Liftgate. Using a screwdriver, close the liftgate latch to the first detent while observing the ohmmeter. Release the liftgate latch. Repeat this step while observing the ohmmeter. Did the resistance change from below 15 ohms to above 1000.0 ohms when the latch changed states? Yes → Replace the Power Liftgate Module. Perform BODY VERIFICATION TEST - VER 1. No → Go To 11	All
11	Disconnect the Power Liftgate C2 connector. Disconnect the Liftgate Cinch/Release Motor connector. Measure the resistance of the Ground wire between the PLG C2 connector (cavity 20) and the Liftgate Cinch/Release Motor connector (cavity 1). Wiggle the harness while observing the ohmmeter. Is the resistance below 5.0 ohms? Yes → Go To 12 No → Repair the Ground wire for an open. Perform BODY VERIFICATION TEST - VER 1.	All
12	Disconnect the Power Liftgate Module C2 connector. Disconnect the Liftgate Cinch/Release Motor connector. Measure the resistance of the Liftgate Pawl Switch Sense wire between the Power Liftgate Module C2 connector and the Liftgate Cinch/Release Motor connector. Is the resistance below 5.0 ohms? Yes → Go To 13 No → Repair the Liftgate Pawl Switch Sense wire for an open. Perform BODY VERIFICATION TEST - VER 1.	All
13	If there are no possible causes remaining, view repair. Repair Replace the Liftgate Cinch Release Motor. Perform BODY VERIFICATION TEST - VER 1.	All

INCOMPLETE POWER OPEN - LATCH FAILURE — Continued

TEST	ACTION	APPLICABILITY
14	Disconnect the Power Liftgate Module C2 connector. **NOTE: The Liftgate Ajar Switch Sense circuit is also the Ratchet Switch Sense circuit for the liftgate.** Measure the resistance between the Ground circuit and the Liftgate Ajar Switch Sense circuit. Open the Liftgate completely. Using a screwdriver, close the latch to the second detent while observing the ohmmeter. Release the latch with the handle. Repeat this step while observing the ohmmeter. Did the resistance change from below 15 ohms to above 1000.0 ohms when the latch changed states? Yes → Replace the Power Liftgate Module. Perform BODY VERIFICATION TEST - VER 1. No → Go To 15	All
15	Disconnect the Power Liftgate C2 connector. Disconnect the Liftgate Cinch/Release Motor connector. Measure the resistance of the Ground wire between the PLG C2 connector (cavity 20) and the Liftgate Cinch/Release Motor connector (cavity 1). Wiggle the harness while observing the ohmmeter. Is the resistance below 5.0 ohms? Yes → Go To 16 No → Repair the Ground wire for an open. Perform BODY VERIFICATION TEST - VER 1.	All
16	Disconnect the Power Liftgate Module C2 connector. Disconnect the Liftgate Cinch/Release Motor connector. Measure the resistance of the Liftgate Ajar Switch Sense wire between the Power Liftgate Module C2 connector and the Liftgate Cinch/Release Motor connector. Is the resistance below 5.0 ohms? Yes → Go To 17 No → Repair the Liftgate Ajar Switch Sense wire for an open. Perform BODY VERIFICATION TEST - VER 1.	All
17	If there are no possible causes remaining, view repair. Repair Replace the Liftgate Cinch Release Motor. Perform BODY VERIFICATION TEST - VER 1.	All
18	Turn the ignition off. Disconnect the Power Liftgate Module C2 connector. Measure the resistance between the Liftgate Latch Cinch Driver circuit and the Liftgate Latch Release Driver circuit. Wiggle the harness and check for an intermittent open condition. Is the resistance below 2.0 ohms? Yes → Go To 19 No → Go To 21	All

INCOMPLETE POWER OPEN - LATCH FAILURE — Continued

TEST	ACTION	APPLICABILITY
19	Turn the ignition off. Disconnect the Power Liftgate Module C2 connector. Measure the resistance between the Ground circuit and the Liftgate Latch Cinch Driver circuit. Wiggle the harness and check for an intermittent short to the Ground circuit condition. Is the resistance below 100.0 ohms? Yes → Repair the Liftgate Latch Cinch Driver circuit for a short to the Ground circuit. This could be the Liftgate Latch Cinch Driver or Liftgate Latch Release Driver or the motor itself. Perform BODY VERIFICATION TEST - VER 1. No → Go To 20	All
20	Turn the ignition off. Disconnect the Power Liftgate Module C2 connector. Measure the resistance between ground and the Liftgate Latch Cinch Driver circuit. Wiggle the harness and check for an intermittent short to ground condition. Is the resistance below 100.0 ohms? Yes → Repair the Liftgate Latch Cinch Driver circuit for a short to ground. This could be the Liftgate Latch Cinch Driver or Liftgate Latch Release Driver or the motor itself. Perform BODY VERIFICATION TEST - VER 1. No → Replace the Liftgate Cinch Release Motor. Perform BODY VERIFICATION TEST - VER 1.	All
21	Turn the ignition off. Disconnect the Power Liftgate Module C2 connector. Disconnect the Liftgate Cinch/Release Motor connector. Measure the resistance of the Liftgate Latch Cinch Driver circuit between the Power Liftgate Module C2 connector and the Liftgate Cinch/Release Motor connector. Wiggle the harness and check for an intermittent open condition. Is the resistance below 5.0 ohms? Yes → Go To 22 No → Repair the Liftgate Latch Cinch Driver wire for an open. Perform BODY VERIFICATION TEST - VER 1.	All
22	Turn the ignition off. Disconnect the Power Liftgate Module C2 connector. Disconnect the Liftgate Cinch/Release Motor connector. Measure the resistance of the Liftgate Latch Release Driver circuit between the Power Liftgate Module C2 connector and the Liftgate Cinch/Release Motor connector. Wiggle the harness and check for an intermittent open condition. Is the resistance below 5.0 ohms? Yes → Go To 23 No → Repair the Liftgate Latch Release Driver wire for an open. Perform BODY VERIFICATION TEST - VER 1.	All
23	If there are no possible causes remaining, view repair. Repair Replace the Liftgate Cinch Release Motor. Perform BODY VERIFICATION TEST - VER 1.	All

Symptom:
INCOMPLETE POWER OPEN - LINK ROD FAILURE

When Monitored and Set Condition:

INCOMPLETE POWER OPEN - LINK ROD FAILURE

When Monitored: Whenever the power liftgate is performing a power open operation.

Set Condition: The PLG Module detects that the number of Hall Effect pulses beyond the Full Open switch in the opening direction are excessive.

POSSIBLE CAUSES
DTC - EXCESSIVE HALL EFFECT COUNTS/NON ENGAGEMENT
DTC PRESENT
BINDING LIFTGATE
LIFTGATE MOTOR

TEST	ACTION	APPLICABILITY
1	**CAUTION: Ensure the Link Rod is connected to the Liftgate before proceeding.** With the DRBIII®, record and erase DTC's. Turn the ignition off, wait 10 seconds, then turn the ignition on. Operate the power liftgate several times from stop to stop if possible. With the DRBIII®, read ACTIVE DTCs. Does the DRBIII® display INCOMPLETE POWER OPEN - LINK ROD FAILURE? Yes → Go To 2 No → Using the wiring diagram/schematic as a guide, inspect the wiring and connectors for an intermittent condition. Operate the liftgate several times and check for any binding conditions. Perform BODY VERIFICATION TEST - VER 1.	All
2	With the DRBIII®, read ACTIVE DTCs. Does the DRBIII® display INCOMPLETE POWER OPEN - EXCESSIVE HALL EFFECT COUNTS/NON ENGAGEMENT? Yes → Refer to symptom INCOMPLETE POWER OPEN - EXCESSIVE HALL EFFECT COUNTS/NON ENGAGEMENT in the POWER DOORS - LIFTGATE category. Perform BODY VERIFICATION TEST - VER 1. No → Go To 3	All

INCOMPLETE POWER OPEN - LINK ROD FAILURE — Continued

TEST	ACTION	APPLICABILITY
3	Examine the liftgate for proper alignment, worn or binding hinges, weak liftgate prop assembly, loose/ hard weatherstrip, and gear teeth on the power liftgate motor assembly for wear or anything that would cause an obstruction to proper operation. If necessary manually operate the power liftgate on a known good vehicle and notice the effort needed to open and close for comparison. Does it take more effort to operate the liftgate than it should? Yes → Refer to Service information for the related symptom(s). Perform BODY VERIFICATION TEST - VER 1. No → Replace the Liftgate Motor Assembly. Perform BODY VERIFICATION TEST - VER 1.	All

Symptom:

INCOMPLETE POWER OPEN - OVERCURRENT

When Monitored and Set Condition:

INCOMPLETE POWER OPEN - OVERCURRENT

When Monitored: Anytime the Power Liftgate is in a power open operation.

Set Condition: The drive motor stall current of over 24 amps has been detected for over 500 ms. or during the initial gear engagement the drive transistor is shorted, during a power opening operation.

POSSIBLE CAUSES
DTC PRESENT
BINDING LIFTGATE
GROUND CIRCUIT OPEN
LIFTGATE LATCH CINCH DRIVER CIRCUIT SHORT TO GROUND
LIFTGATE LATCH CINCH DRIVER CIRCUIT SHORT TO HARNESS GROUND
LIFTGATE GEAR ENGAGE DRIVER CIRCUIT SHORT TO GROUND
LIFTGATE OPEN DRIVER CIRCUIT SHORT TO GROUND
LIFTGATE GEAR ENGAGE DRIVER CIRCUIT SHORT TO HARNESS GROUND
LIFTGATE MODULE
POWER LIFTGATE MOTOR

TEST	ACTION	APPLICABILITY
1	With the DRBIII®, record and erase DTC's. Turn the ignition off, wait 10 seconds, then turn the ignition on. Operate the power liftgate several times if possible. With the DRBIII®, read DTCs. Does the DRBIII® display INCOMPLETE POWER OPEN - OVERCURRENT? Yes → Go To 2 No → Using the wiring diagram/schematic as a guide, inspect the wiring and connectors for an intermittent condition. Operate the liftgate several times and check for any binding conditions. Perform BODY VERIFICATION TEST - VER 1.	All

INCOMPLETE POWER OPEN - OVERCURRENT — Continued

TEST	ACTION	APPLICABILITY
2	Examine the liftgate for proper alignment, worn or binding hinges, weak liftgate prop assembly, loose/ hard weatherstrip, and gear teeth on the Power Liftgate Motor assembly for wear or anything that would cause an obstruction to proper operation. If necessary manually operate the liftgate of a known good vehicle and notice the effort needed. Compare the effort needed on the disabled vehicle. Were there any mechanical problems found? Yes → Refer to Service information for the related symptom(s). Perform BODY VERIFICATION TEST - VER 1. No → Go To 3	All
3	Turn the ignition off. Disconnect the Power Liftgate Control Module C1 connector. Using a 12-volt test light connected to 12-volts, check the Ground circuit. Wiggle the harness and check for an intermittent open condition. Does the test light illuminate brightly? Yes → Go To 4 No → Repair the Ground circuit for an open. Perform BODY VERIFICATION TEST - VER 1.	All
4	Turn the ignition off. Disconnect the Power Liftgate Module C2 connector. Measure the resistance between ground and the Liftgate Latch Cinch Driver circuit. Wiggle the harness and check for an intermittent shorted condition. Is the resistance below 100.0 ohms? Yes → Repair the Liftgate Latch Cinch Driver circuit for a short to ground. Perform BODY VERIFICATION TEST - VER 1. No → Go To 5	All
5	Turn the ignition off. Disconnect the Power Liftgate Module C2 connector. Measure the resistance between the Ground circuit and the Liftgate Latch Cinch Driver circuit. Wiggle the harness and check for an intermittent shorted condition. Is the resistance below 100.0 ohms? Yes → Repair the Liftgate Latch Cinch Driver circuit for a short to the Ground circuit. Perform BODY VERIFICATION TEST - VER 1. No → Go To 6	All
6	Turn the ignition off. Disconnect the Power Liftgate Module C2 connector. Measure the resistance between ground and the Liftgate Gear Engage Driver circuit. Wiggle the harness and check for an intermittent short to ground condition. Is the resistance below 100.0 ohms? Yes → Repair the Liftgate Gear Engage Driver circuit for a short to ground. Perform BODY VERIFICATION TEST - VER 1. No → Go To 7	All

INCOMPLETE POWER OPEN - OVERCURRENT — Continued

TEST	ACTION	APPLICABILITY
7	Turn the ignition off. Disconnect the Power Liftgate Module C1 connector. Measure the resistance between ground and the Liftgate Open Driver circuit. Wiggle the harness and check for an intermittent short circuit condition. Is the resistance below 1000.0 ohms? Yes → Repair the Liftgate Open Driver circuit for a short to ground. Perform BODY VERIFICATION TEST - VER 1. No → Go To 8	All
8	Turn the ignition off. Disconnect the Power Liftgate Module C2 connector. Measure the resistance between the Ground circuit and the Liftgate Gear Engage Driver circuit. Wiggle the harness and check for an intermittent short to ground condition. Is the resistance below 100.0 ohms? Yes → Repair the Liftgate Gear Engage Driver circuit for a short to the Ground circuit. Perform BODY VERIFICATION TEST - VER 1. No → Go To 9	All
9	Ensure all connections to the module and liftgate motor are connected at this time. Operate the Power Liftgate in both directions if possible. Does the motor start to lift the liftgate but is very slow and labors extensively? Yes → Replace the Power Liftgate Motor assembly. Perform BODY VERIFICATION TEST - VER 1. No → Replace the Power Liftgate Module Perform BODY VERIFICATION TEST - VER 1.	All

Symptom:

INCOMPLETE POWER OPEN - TIME OUT

When Monitored and Set Condition:

INCOMPLETE POWER OPEN - TIME OUT

When Monitored: Anytime the Power Liftgate is operating.

Set Condition: The power open operation was not completed within 20 seconds.

POSSIBLE CAUSES
DTC PRESENT
BINDING LIFTGATE
POWER LIFTGATE MOTOR

TEST	ACTION	APPLICABILITY
1	With the DRBIII®, record and erase DTC's. Turn the ignition off, wait 10 seconds, then turn the ignition on. Operate the power liftgate several times if possible. With the DRBIII®, read ACTIVE DTCs. Does the DRBIII® display INCOMPLETE POWER OPEN - TIME-OUT? Yes → Go To 2 No → Using the wiring diagram/schematic as a guide, inspect the wiring and connectors for an intermittent condition. Operate the liftgate several times and check for any binding conditions. Perform BODY VERIFICATION TEST - VER 1.	All
2	Examine the liftgate for proper alignment, worn or binding hinges, weak liftgate prop assembly, loose/ hard weatherstrip, and gear teeth on the Power Liftgate Motor assembly for wear or anything that would cause an obstruction to proper operation. If necessary manually operate the power liftgate on a known good vehicle and notice the effort needed to open and close for comparison. Especially notice the effort needed to unlatch and close the liftgate. Were there any mechanical problems found? Yes → Refer to Service information for the related symptom(s). Perform BODY VERIFICATION TEST - VER 1. No → Replace the Power Liftgate Motor assembly. Perform BODY VERIFICATION TEST - VER 1.	All

Symptom:

INCOMPLETE POWER OPEN - TRANSISTOR SHORTED

When Monitored and Set Condition:

INCOMPLETE POWER OPEN - TRANSISTOR SHORTED

When Monitored: Whenever the power liftgate is performing a power open operation.

Set Condition: The Power Liftgate Module detects that the motor is rotating (monitors hall effect pulses) even though the controlled PWM rate is 0 percent. This DTC is set during the power open (2 second chime period, prior to movement of the liftgate) operation.

POSSIBLE CAUSES
DTC PRESENT
POWER LIFTGATE MODULE

TEST	ACTION	APPLICABILITY
1	With the DRBIII®, record and erase DTC's. Turn the ignition off, wait 10 seconds, then turn the ignition on. Operate the power liftgate several times if possible. With the DRBIII®, read ACTIVE DTCs. Does the DRBIII® display INCOMPLETE POWER OPEN - TRANSISTOR SHORTED? Yes → Replace the Power Liftgate Module. Perform BODY VERIFICATION TEST - VER 1. No → Using the wiring diagram/schematic as a guide, inspect the wiring and connectors for an intermittent condition. Operate the liftgate several times and check for any binding conditions. Perform BODY VERIFICATION TEST - VER 1.	All

Symptom:

INCOMPLETE POWER OPEN - VOLTAGE BELOW MINIMUM LEVEL

When Monitored and Set Condition:

INCOMPLETE POWER OPEN - VOLTAGE BELOW MINIMUM LEVEL

When Monitored: Whenever the power liftgate is performing a power open operation.

Set Condition: The PLG Module detects that the voltage is below 9.5 volts during the power open operation.

POSSIBLE CAUSES
DTC PRESENT
MODULE VOLTAGE LOW
BINDING LIFTGATE
DRB OPERATING VOLTAGE LOW
PLG MODULE - HIGH RESISTANCE
POWER LIFTGATE MOTOR

TEST	ACTION	APPLICABILITY
1	With the DRBIII®, record and erase DTC's. Turn the ignition off, wait 10 seconds, then turn the ignition on. Operate the power liftgate several times if possible. With the DRBIII®, read DTCs. Does the DRBIII® display INCOMPLETE POWER OPEN - VOLTAGE BELOW MINIMUM LEVEL? Yes → Go To 2 No → Using the wiring diagram/schematic as a guide, inspect the wiring and connectors for an intermittent condition. Operate the door several times and check for any binding conditions. Perform BODY VERIFICATION TEST - VER 1.	All
2	Examine the liftgate for proper fit and alignment, or anything that would cause an obstruction to proper operation. Check the prop rods to ensure liftgate will self rise from approximately 1/4 open position. Does it take more effort to operate the liftgate than it should? Yes → Refer to Service information for the related symptom(s). Perform BODY VERIFICATION TEST - VER 1. No → Go To 3	All

INCOMPLETE POWER OPEN - VOLTAGE BELOW MINIMUM LEVEL — Continued

TEST	ACTION	APPLICABILITY
3	**NOTE: Test the battery to ensure it is fully charged and in good condition before proceeding.** Turn the ignition off. Turn all lights and accessories off. With the DRBIII® in ″Power Liftgate″ ″Monitor Display″ ″PCI Bus Info″ read the ″Battery Voltage″ and compare it to the ″PLG Bat Volts Input″. **NOTE: If the difference is greater than 0.5 volts, backprobe the Fused B(+) at the module to verify.** Does the voltage vary more than 0.5 volts? Yes → Using the wiring diagram/schematic as a guide, inspect the wiring and connectors. Locate and repair the reason for the voltage drop. Perform BODY VERIFICATION TEST - VER 1. No → Go To 4	All
4	Turn the ignition off. Turn all lights and accessories off. With the DRBIII® in ″Power Liftgate″″ ″Monitor Display″ ″PCI Bus Info″ read the BATTERY VOLTAGE and compare it to the MODULE VOLTAGE. Operate the power liftgate and observe the voltage difference. **NOTE: If the difference is greater than 1.6 volts, backprobe the Fused B(+) at the module to verify.** Does the voltage vary more than 1.6 volts when the liftgate is operating?? Yes → Using the wiring diagram/schematic as a guide, inspect the wiring and connectors. Locate and repair the reason for the voltage drop. Perform BODY VERIFICATION TEST - VER 1. No → Go To 5	All
5	Turn the ignition off. Turn all lights and accessories off. Open the Liftgate. Remove the left rear trim panel to gain access to the Power Liftgate Module. Remove the PLG module but leave it connected. Backprobe voltmeter leads between the Fused B(+) and the Liftgate Open Driver circuits in the PLG C1 connector. Close the Liftgate. Operate the power liftgate in the OPEN position and observe the voltage difference. Does the voltage vary more than 0.2 volts when the liftgate is operating?? Yes → Replace the Power Liftgate Module. Perform BODY VERIFICATION TEST - VER 1. No → Go To 6	All
6	If there are no possible causes remaining, view repair. Repair Check the wiring and connections from the module to the motor for high resistance. If the wiring is okay, replace the Power Liftgate Motor assembly. Perform BODY VERIFICATION TEST - VER 1.	All

Symptom:

IOD WAKE UP OPEN - PLG

When Monitored and Set Condition:

IOD WAKE UP OPEN - PLG

When Monitored: Anytime the Body Control Module is awake.

Set Condition: If the BCM does not sense a signal circuit from the Liftgate Module this code will set.

POSSIBLE CAUSES
DTC PRESENT
BODY CONTROL MODULE - IOD WAKE UP OPEN
LIFTGATE MODULE WAKE UP SIGNAL WIRE OPEN
LIFTGATE MODULE WAKE UP SIGNAL WIRE SHORT TO GROUND
POWER LIFTGATE MODULE

TEST	ACTION	APPLICABILITY
1	With the DRBIII®, record and erase DTC's. Turn the ignition off, wait 10 seconds, then turn the ignition on. Wait 10 seconds. With the DRBIII®, read DTCs. Does the DRBIII® display IOD WAKE UP OPEN? Yes → Go To 2 No → Using the wiring diagram/schematic as a guide, inspect the wiring and connectors for an intermittent condition. Perform BODY VERIFICATION TEST - VER 1.	All
2	Disconnect the BCM C2 connector. Measure the voltage between the Liftgate Module Wake Up Signal circuit and ground. Is the voltage above 10.0 volts? Yes → Replace the Body Control Module. Perform BODY VERIFICATION TEST - VER 1. No → Go To 3	All
3	Disconnect the Body Control Module C2 connector. Disconnect the Power Liftgate Module C2 connector. Measure the resistance of the Liftgate Module Wake Up Signal circuit between the BCM C2 connector and the Power Liftgate Module C2 connector. Is the resistance below 5.0 ohms? Yes → Go To 4 No → Repair the Liftgate Module Wake Up Signal wire for an open. Perform BODY VERIFICATION TEST - VER 1.	All

IOD WAKE UP OPEN - PLG — Continued

TEST	ACTION	APPLICABILITY
4	Disconnect the Body Control Module C2 connector. Disconnect the Power Liftgate Module C2 connector. Measure the resistance between the Liftgate Module Wake Up Signal circuit and ground. Is the resistance below 100.0 ohms? Yes → Repair the Liftgate Module Wake Up Signal wire for a short to ground. Perform BODY VERIFICATION TEST - VER 1. No → Go To 5	All
5	If there are no possible causes remaining, view repair. Repair Replace the Power Liftgate Module. Perform BODY VERIFICATION TEST - VER 1.	All

Symptom:

LOOPBACK TEST FAILURE

When Monitored and Set Condition:

LOOPBACK TEST FAILURE

When Monitored: Anytime the Power Liftgate Module is awake.

Set Condition: The Power Liftgate Module did not receive its own transmitted message on the PCI bus back (loopback) for longer than 1 second.

POSSIBLE CAUSES
DTC PRESENT
POWER LIFTGATE MODULE

TEST	ACTION	APPLICABILITY
1	With the DRBIII®, record and erase DTC's. Turn the ignition off, wait 10 seconds, then turn the ignition on. Operate the power liftgate several times from stop to stop if possible. With the DRBIII®, read ACTIVE DTCs. Does the DRBIII® display LOOPBACK TEST FAILURE? Yes → Replace the Power Liftgate Module. Perform BODY VERIFICATION TEST - VER 1. No → Using the wiring diagram/schematic as a guide, inspect the wiring and connectors for an intermittent condition. Operate the door several times and check for any binding conditions. Perform BODY VERIFICATION TEST - VER 1.	All

Symptom:

LOSS OF BCM MESSAGES

When Monitored and Set Condition:

LOSS OF BCM MESSAGES

When Monitored: Whenever the ignition is on.

Set Condition: If the PLG Module losses communication with the BCM for over 5 seconds, this code will set.

POSSIBLE CAUSES
ATTEMPT TO COMMUNICATE WITH THE BODY CONTROL MODULE
POWER LIFTGATE MODULE - LOSS OF BCM MESSAGES

TEST	ACTION	APPLICABILITY
1	Turn the ignition on. With the DRBIII®, enter Body then Body Computer. Was the DRBIII® able to I/D or communicate with the BCM? Yes → Go To 2 No → Refer to the Communication category for the related symptom(s).	All
2	With the DRBIII®, erase DTC's. Cycle the ignition switch from off to on and wait approximately 1 minute. With the DRBIII®, read DTC's. Did this DTC reset? Yes → Replace the Power Liftgate Module. Perform BODY VERIFICATION TEST - VER 1. No → Test Complete.	All

Symptom:

LOSS OF EATX MESSAGES

When Monitored and Set Condition:

LOSS OF EATX MESSAGES

When Monitored: Whenever the ignition is in the UNLOCK or RUN position.

Set Condition: If the PLG Module does not receive a PRNDL message for over 5 seconds, this code will set.

POSSIBLE CAUSES
ATTEMPT TO COMMUNICATE WITH THE TRANSMISSION CONTROL MODULE
POWER LIFTGATE MODULE - LOSS OF EATX MESSAGES

TEST	ACTION	APPLICABILITY
1	Turn the ignition on. With the DRBIII® select Transmission. Was the DRBIII® able to I/D or communicate with the Transmission? Yes → Go To 2 No → Refer to the Communication category for the related symptom(S).	All
2	With the DRBIII®, erase DTC's. Cycle the ignition switch from off to on and wait approximately 1 minute. With the DRBIII®, read DTC's. Did this DTC reset? Yes → Replace the Power Liftgate Module. Perform BODY VERIFICATION TEST - VER 1. No → Test Complete.	All

Symptom:

LOSS OF FCM MESSAGES

When Monitored and Set Condition:

LOSS OF FCM MESSAGES

When Monitored: Whenever the ignition is in the RUN position.

Set Condition: If the PLG Module does not receive a temperature message from the Front Control Module for over 5 seconds, this code will set.

POSSIBLE CAUSES
ATTEMPT TO COMMUNICATE WITH THE FRONT CONTROL MODULE
POWER LIFTGATE MODULE - LOSS OF FCM MESSAGES

TEST	ACTION	APPLICABILITY
1	Turn the ignition on. With the DRBIII®, enter Body then Front Control Module. Was the DRBIII® able to I/D or communicate with the FCM? Yes → Go To 2 No → Refer to the Communication category for the related symptom(S).	All
2	With the DRBIII®, erase DTC's. Cycle the ignition switch from off to on and wait approximately 1 minute. With the DRBIII®, read DTC's. Did this DTC reset? Yes → Replace the Power Liftgate Module. Perform BODY VERIFICATION TEST - VER 1. No → Test Complete.	All

Symptom:

LOSS OF SBEC MESSAGES

When Monitored and Set Condition:

LOSS OF SBEC MESSAGES

When Monitored: Whenever the ignition is in the RUN position.

Set Condition: If the PLG Module does not receive a speed message from the Powertrain Control Module for over 5 seconds, this code will set.

POSSIBLE CAUSES
ATTEMPT TO COMMUNICATE WITH THE POWERTRAIN CONTROL MODULE
POWER LIFTGATE MODULE - LOSS OF SBEC MESSAGES

TEST	ACTION	APPLICABILITY
1	Turn the ignition on. With the DRBIII®, select Engine. Was the DRBIII® able to I/D or communicate with the Powertrain Control Module? Yes → Go To 2 No → Refer to the Communication category for the related symptom(S).	All
2	With the DRBIII®, erase DTC's. Cycle the ignition switch from off to on and wait approximately 1 minute. With the DRBIII®, read DTC's. Did this DTC reset? Yes → Replace the Power Liftgate Module. Perform BODY VERIFICATION TEST - VER 1. No → Test Complete.	All

Symptom:
OUTSIDE LIFTGATE HANDLE INPUT SHORT

When Monitored and Set Condition:

OUTSIDE LIFTGATE HANDLE INPUT SHORT

When Monitored: Whenever the Body Control Module is awake.

Set Condition: When the BCM senses a voltage of less than 1.0 volts on the Liftgate Handle Switch Sense circuit for longer than 10 seconds this code will set.

POSSIBLE CAUSES
LIFTGATE HANDLE SWITCH SHORTED
LIFTGATE HANDLE SWITCH SENSE CIRCUIT SHORT TO GROUND
BODY CONTROL MODULE - LIFTGATE HANDLE SWITCH SHORT TO GROUND

TEST	ACTION	APPLICABILITY
1	Disconnect the License Lamp connector (light bar). With the DRBIII®, read DTC's. Does the DRBIII® display Outside Liftgate Handle Input Short? Yes → Go To 2 No → Replace the Liftgate Handle Switch. Perform BODY VERIFICATION TEST - VER 1.	All
2	Disconnect the License Lamp connector. Disconnect the Body Control Module C2 connector. Measure the resistance between ground and the Liftgate Handle Switch Sense circuit. Is the resistance below 1000.0 ohms? Yes → Repair the Liftgate Handle Switch Sense circuit for a short to ground. Perform BODY VERIFICATION TEST - VER 1. No → Go To 3	All
3	If there are no possible causes remaining, view repair. Repair Replace the Body Control Module. Perform BODY VERIFICATION TEST - VER 1.	All

Symptom:
OUTSIDE LIFTGATE HANDLE INPUT STUCK

When Monitored and Set Condition:

OUTSIDE LIFTGATE HANDLE INPUT STUCK

When Monitored: Whenever the Body Control Module is awake.

Set Condition: When the BCM senses a liftgate handle input on the Liftgate Handle Switch Sense circuit for longer than 10 seconds this code will set.

POSSIBLE CAUSES
LIFTGATE HANDLE SWITCH STUCK
LIFTGATE HANDLE SWITCH SENSE CIRCUIT SHORT TO GROUND
BODY CONTROL MODULE - LIFTGATE HANDLE SWITCH SHORT TO GROUND

TEST	ACTION	APPLICABILITY
1	Disconnect the License Lamp connector (light bar). With the DRBIII®, erase DTCs. Turn the ignition off, wait 10 seconds, then turn the ignition on. Wait 10 seconds. With the DRBIII®, read DTCs. Does the DRBIII® display Outside Liftgate Handle Input Stuck? Yes → Go To 2 No → Replace the Liftgate Handle Switch. Perform BODY VERIFICATION TEST - VER 1.	All
2	Disconnect the License Lamp connector. Disconnect the Body Control Module C2 connector. Measure the resistance between ground and the Liftgate Handle Switch Sense circuit. Is the resistance below 10000.0 ohms? Yes → Repair the Liftgate Handle Switch Sense circuit for a short to ground. Perform BODY VERIFICATION TEST - VER 1. No → Go To 3	All
3	If there are no possible causes remaining, view repair. Repair Replace the Body Control Module. Perform BODY VERIFICATION TEST - VER 1.	All

Symptom:

OVERHEAD LIFTGATE SWITCH INPUT STUCK

When Monitored and Set Condition:

OVERHEAD LIFTGATE SWITCH INPUT STUCK

When Monitored: Whenever the BCM is awake.

Set Condition: When the BCM senses a overhead liftgate switch input for over 10 seconds, this code will set.

POSSIBLE CAUSES
DTC PRESENT
OVERHEAD LIFTGATE SWITCH SHORTED
LIFTGATE SWITCH MUX WIRE SHORT TO GROUND
BODY CONTROL MODULE - OVERHEAD LIFTGATE SWITCH MUX SHORTED

TEST	ACTION	APPLICABILITY
1	With the DRBIII®, record and erase DTC's. Turn the ignition off, wait 10 seconds, then turn the ignition on. Operate the Liftgate from the Overhead Console Switch. With the DRBIII®, read DTCs. Does the DRBIII® display OVERHEAD LIFTGATE SWITCH INPUT STUCK? Yes → Go To 2 No → Using the wiring diagram/schematic as a guide, inspect the wiring and connectors for an intermittent condition. Perform BODY VERIFICATION TEST - VER 1.	All
2	With the DRBIII®, erase DTCs. Disconnect the Overhead Console Switch connector. Turn the ignition off, wait 10 seconds, then turn the ignition on. Wait 10 seconds. With the DRBIII®, read DTCs. Does the DRBIII® display OVERHEAD LIFTGATE SWITCH INPUT STUCK? No → Replace the Power Sliding Door Button Module. Perform BODY VERIFICATION TEST - VER 1. Yes → Go To 3	All
3	Disconnect the Body Control Module C2 connector. Disconnect the Overhead Console Switch connector. Measure the resistance of the Liftgate Switch Mux circuit to ground. Is the resistance below 4000.0 ohms? Yes → Repair the Liftgate Switch Mux wire for a short to ground. Perform BODY VERIFICATION TEST - VER 1. No → Replace the Body Control Module. Perform BODY VERIFICATION TEST - VER 1.	All

Symptom:

OVERHEAD LIFTGATE/LOCKOUT SWITCHES OPEN OR SHT TO VOLTAGE

When Monitored and Set Condition:

OVERHEAD LIFTGATE/LOCKOUT SWITCHES OPEN OR SHT TO VOLTAGE

When Monitored: Whenever the BCM is awake.

Set Condition: When the BCM senses a overhead liftgate switch input that is greater than 4.8 volts for over 10 seconds, this code will set.

POSSIBLE CAUSES
DTC PRESENT
SLIDING DOORS OVERHEAD SWITCH MUX CIRCUIT SHORT TO VOLTAGE
LIFTGATE SWITCH MUX WIRE OPEN
BODY CONTROL MODULE - OVERHEAD SWITCH OPEN
OVERHEAD SWITCH OPEN
LIFTGATE SWITCH MUX SHORT TO VOLTAGE
POWER SLIDING DOOR BUTTON MODULE - SHORT TO VOLTAGE

TEST	ACTION	APPLICABILITY
1	With the DRBIII®, record and erase DTC's. Turn the ignition off, wait 10 seconds, then turn the ignition on. Operate the power sliding door from the Overhead Console Switch. With the DRBIII®, read DTCs. Does the DRBIII® display OVERHEAD LIFTGATE/LOCKOUT SWITCHES OPEN OR SHT TO VOLTAGE? Yes → Go To 2 No → Using the wiring diagram/schematic as a guide, inspect the wiring and connectors for an intermittent condition. Perform BODY VERIFICATION TEST - VER 1.	All
2	Disconnect the Body Control Module C3 connector. **NOTE: Check connectors - Clean/repair as necessary.** Measure the voltage of the Sliding Doors Overhead Switch Mux circuit to ground. Is there any voltage present? Yes → Repair the Sliding Doors Overhead Switch Mux circuit for a short to voltage. Perform BODY VERIFICATION TEST - VER 1. No → Go To 3	All

OVERHEAD LIFTGATE/LOCKOUT SWITCHES OPEN OR SHT TO VOLTAGE — Continued

TEST	ACTION	APPLICABILITY
3	Disconnect the Body Control Module C2 connector. **NOTE: Check connectors - Clean/repair as necessary.** Turn the ignition on. Turn the park lamps on. Measure the voltage between ground and the Liftgate Switch Mux circuit. Is there any voltage present? Yes → Go To 4 No → Go To 5	All
4	Disconnect the Overhead Console connector. Disconnect the Body Control Module C2 connector. **NOTE: Check connectors - Clean/repair as necessary.** Turn the ignition on. Turn the park lamps on. Measure the voltage between Liftgate Switch Mux circuit and ground. Is there any voltage present? Yes → Repair the Liftgate Switch Mux circuit for a short to voltage. Perform BODY VERIFICATION TEST - VER 1. No → Replace the Power Sliding Door Button Module. Perform BODY VERIFICATION TEST - VER 1.	All
5	Disconnect the Body Control Module C2 connector. Measure the resistance between ground and the Liftgate Switch Mux circuit. Is the resistance below 25000.0 ohms? Yes → Go To 6 No → Go To 7	All
6	If there are no possible causes remaining, view repair. Repair Replace the Body Control Module. Perform BODY VERIFICATION TEST - VER 1.	All
7	Disconnect the Body Control Module C2 connector. Disconnect the Overhead Console connector. Measure the resistance of the Liftgate Switch Mux circuit between the BCM connector and the Overhead Console connector. Is the resistance below 5.0 ohms? Yes → Replace the Power Sliding Door Button Module. Perform BODY VERIFICATION TEST - VER 1. No → Repair the Liftgate Switch Mux circuit for an open. Perform BODY VERIFICATION TEST - VER 1.	All

Symptom:
OVERHEAD LIFTGATE/LOCKOUT SWITCHES SHORT

When Monitored and Set Condition:

OVERHEAD LIFTGATE/LOCKOUT SWITCHES SHORT

When Monitored: Whenever the BCM is awake.

Set Condition: When the BCM senses a overhead liftgate switch input that drops to below 0.24 volts for over 10 seconds, this code will set.

POSSIBLE CAUSES
DTC PRESENT
OVERHEAD LIFTGATE SWITCH SHORTED
LIFTGATE SWITCH MUX WIRE SHORT TO GROUND
BODY CONTROL MODULE - OVERHEAD LIFTGATE SWITCH MUX SHORTED

TEST	ACTION	APPLICABILITY
1	With the DRBIII®, record and erase DTC's. Turn the ignition off, wait 10 seconds, then turn the ignition on. Operate the Liftgate from the Overhead Console Switch. With the DRBIII®, read DTCs. Does the DRBIII® display OVERHEAD SWITCH #1 SHORT? Yes → Go To 2 No → Using the wiring diagram/schematic as a guide, inspect the wiring and connectors for an intermittent condition. Perform BODY VERIFICATION TEST - VER 1.	All
2	With the DRBIII®, erase DTCs. Disconnect the Overhead Console Switch connector. Turn the ignition off, wait 10 seconds, then turn the ignition on. Wait 10 seconds. With the DRBIII®, read DTCs. Does the DRBIII® display OVERHEAD SWITCH #1 SHORT? No → Replace the Power Sliding Door Button Module. Perform BODY VERIFICATION TEST - VER 1. Yes → Go To 3	All
3	Disconnect the Body Control Module C2 connector. Disconnect the Overhead Console Switch connector. Measure the resistance of the Liftgate Switch Mux circuit to ground. Is the resistance below 500.0 ohms? Yes → Repair the Liftgate Switch Mux wire for a short to ground. Perform BODY VERIFICATION TEST - VER 1. No → Replace the Body Control Module. Perform BODY VERIFICATION TEST - VER 1.	All

Symptom:

PINCH SENSOR CIRCUIT OPEN

When Monitored and Set Condition:

PINCH SENSOR CIRCUIT OPEN

When Monitored: Whenever the Power Liftgate is operating.

Set Condition: The power liftgate module has detected the pinch sensor circuit voltage is above 4.6 volts.

POSSIBLE CAUSES
DTC PRESENT
POWER LIFTGATE MODULE - PINCH SENSOR OPEN
RIGHT PINCH SENSOR SIGNAL WIRE OPEN
PINCH SENSOR GROUND OPEN
RIGHT PINCH SENSOR OPEN
LEFT PINCH SENSOR OPEN
RIGHT PINCH SENSOR SIGNAL WIRE OPEN

TEST	ACTION	APPLICABILITY
1	With the DRBIII®, record and erase DTC's. Turn the ignition off, wait 10 seconds, then turn the ignition on. Operate the liftgate several times. With the DRBIII®, read DTCs. Does the DRBIII® display PINCH SENSOR CIRCUIT OPEN? Yes → Go To 2 No → Using the wiring diagram/schematic as a guide, inspect the wiring and connectors for an intermittent condition. Perform BODY VERIFICATION TEST - VER 1.	All
2	Disconnect the Power Liftgate Module C2 connector. Measure the resistance of the Pinch Sensor Signal circuit between the Pinch Sensor Signal and the Ground circuit (cavity 20) in the C2 connector. Is the resistance below 22000.0 ohms? No → Go To 3 Yes → Replace the Power Liftgate Module. Perform BODY VERIFICATION TEST - VER 1.	All

PINCH SENSOR CIRCUIT OPEN — Continued

TEST	ACTION	APPLICABILITY
3	Remove the Liftgate trim panel. Disconnect the Liftgate Right Pinch Sensor connector. Disconnect the Liftgate Left Pinch Sensor connector. Measure the resistance of the Right Pinch Sensor Signal circuit between the Liftgate Left Pinch Sensor connector and the Liftgate Right Pinch Sensor connector. Is the resistance below 5.0 ohms? Yes → Go To 4 No → Repair the Right Pinch Sensor Signal wire for an open. Perform BODY VERIFICATION TEST - VER 1.	All
4	Remove the Power Liftgate Motor trim panel. Remove the Liftgate trim panel. Disconnect the Liftgate Right Pinch Sensor connector. Disconnect the Power Liftgate Module C2 connector. Measure the resistance of the Ground circuit between the Liftgate Right Pinch Sensor connector and the PLG C2 connector. Is the resistance below 20.0 ohms? Yes → Go To 5 No → Repair the ground circuit for an open. Perform BODY VERIFICATION TEST - VER 1.	All
5	Remove the Power Liftgate Motor trim panel. Remove the Liftgate trim panel. Disconnect the Power Liftgate Module C2 connector. Disconnect the Liftgate Right Pinch Sensor connector. Connect a jumper wire between the Right Pinch Sensor Signal circuit and the Ground circuit in the Liftgate Right Pinch Sensor connector. Measure the resistance of the Pinch Sensor Signal circuit between the Pinch Sensor Signal and the Ground circuit (cav 20) in the C2 connector. Is the resistance below 11000.0 ohms? Yes → Replace the Right Pinch Sensor. Perform BODY VERIFICATION TEST - VER 1. No → Go To 6	All
6	Remove the Power Liftgate Motor trim panel. Remove the liftgate trim panel. Disconnect the Power Liftgate Module C2 connector. Disconnect the Liftgate Left Pinch Sensor connector. Connect a jumper wire between the Pinch Sensor Signal circuit and the Right Pinch Sensor Signal circuit in the Liftgate Left Pinch Sensor connector. Measure the resistance of the Pinch Sensor Signal circuit between the Pinch Sensor Signal and the Ground circuit (cav 20) in the C2 connector. Is the resistance below 11000.0 ohms? Yes → Replace the Left Pinch Sensor. Perform BODY VERIFICATION TEST - VER 1. No → Go To 7	All

PINCH SENSOR CIRCUIT OPEN — Continued

TEST	ACTION	APPLICABILITY
7	Remove the Power Liftgate Motor trim panel. Remove the liftgate trim panel. Disconnect the Power Liftgate Module C2 connector. Disconnect the Liftgate Left Pinch Sensor connector. Measure the resistance of the Pinch Sensor Signal circuit between the PLG C2 connector and the Liftgate Left Pinch Sensor connector. Is the resistance below 5.0 ohms? Yes → Test Complete. No → Repair the Pinch Sensor Signal wire for an open. Perform BODY VERIFICATION TEST - VER 1.	All

Symptom:
PINCH SENSOR SIGNAL CIRCUIT SHORT TO GROUND

When Monitored and Set Condition:

PINCH SENSOR SIGNAL CIRCUIT SHORT TO GROUND

When Monitored: Whenever the Power Liftgate is operating.

Set Condition: The power liftgate module has detected the pinch sensor circuit voltage is shorted to ground.

POSSIBLE CAUSES
DTC PRESENT
PINCH SENSOR SIGNAL CIRCUIT SHORT TO GROUND CIRCUIT
POWER LIFTGATE MODULE - SHORT TO GROUND
RIGHT PINCH SENSOR - SHORT TO GROUND
RIGHT PINCH SENSOR SIGNAL WIRE - SHORT TO GROUND
LEFT PINCH SENSOR - SHORT TO GROUND
RIGHT PINCH SENSOR SIGNAL WIRE SHORT TO GROUND

TEST	ACTION	APPLICABILITY
1	With the DRBIII®, record and erase DTC's. Turn the ignition off, wait 10 seconds, then turn the ignition on. Operate the liftgate several times. With the DRBIII®, read DTCs. Does the DRBIII® display PINCH SENSOR CIRCUIT SHORT TO GROUND? Yes → Go To 2 No → Using the wiring diagram/schematic as a guide, inspect the wiring and connectors for an intermittent condition. Perform BODY VERIFICATION TEST - VER 1.	All
2	Disconnect the Power Liftgate Module C2 connector. Measure the resistance of the Pinch Sensor Signal circuit between the Pinch Sensor Signal and the Ground circuits in the C2 connector. Is the resistance below 20.0 ohms? Yes → Repair the Pinch Sensor Signal circuit for a short to the Ground circuit. Perform BODY VERIFICATION TEST - VER 1. No → Go To 3	All
3	Disconnect the Power Liftgate Module C2 connector. Measure the resistance between ground and the Pinch Sensor Signal circuit. Is the resistance below 100.0 ohms? Yes → Go To 4 No → Replace the Power Liftgate Module. Perform BODY VERIFICATION TEST - VER 1.	All

PINCH SENSOR SIGNAL CIRCUIT SHORT TO GROUND — Continued

TEST	ACTION	APPLICABILITY
4	Remove the Power Liftgate Motor trim panel. Remove the Liftgate trim panel. Disconnect the Power Liftgate Module C2 connector. Disconnect the Right Pinch Sensor connector Measure the resistance between ground and the Pinch Sensor Signal circuit. Is the resistance below 100.0 ohms? Yes → Go To 5 No → Replace the Right Pinch Sensor. Perform BODY VERIFICATION TEST - VER 1.	All
5	Remove the Liftgate trim panel. Disconnect the Right Pinch Sensor connector. Disconnect the Left Pinch Sensor connector. Measure the resistance between ground and the Right Pinch Sensor Signal circuit. Is the resistance below 1000.0 ohms? Yes → Repair the Right Pinch Sensor Signal wire for a short to ground. Perform BODY VERIFICATION TEST - VER 1. No → Go To 6	All
6	Remove the Power Liftgate Motor trim panel. Remove the liftgate trim panel. Disconnect the Power Liftgate Module C2 connector. Disconnect the Left Pinch Sensor connector Measure the resistance between ground and the Pinch Sensor Signal circuit. Is the resistance below 100.0 ohms? Yes → Go To 7 No → Replace the Left Pinch Sensor. Perform BODY VERIFICATION TEST - VER 1.	All
7	If there are no possible causes remaining, view repair. Repair Repair the Pinch Sensor Signal wire for a short to ground. Perform BODY VERIFICATION TEST - VER 1.	All

Symptom:

***POWER LIFTGATE INOPERATIVE**

POSSIBLE CAUSES
DTC'S PRESENT
MODULE RESPONSE
INTERMITTENT PROBLEM
SYSTEM TESTS

TEST	ACTION	APPLICABILITY
1	With the DRBIII® check for response from the Body Computer and the Power Liftgate Modules Is there response from both modules? Yes → Go To 2 No → Refer to symptom list for problems related to COMMUNICATION.	All
2	With the DRBIII®, read DTCs in POWER LIFTGATE and BODY COMPUTER. Are any Power Liftgate related codes present? Yes → Refer to symptom list for problems related to POWER LIFTGATE. No → Go To 3	All
3	This test will determine what inhibited the Power Liftgate from operating properly. With the DRBIII®, select POWER LIFTGATE, MISCELLANEOUS, LAST INHIBIT MONITOR. Does the DRBIII® display any INHIBIT REASONS? Yes → Check for any binding conditions or other restrictions that may prevent proper operation. Using the wiring diagram/schematic as a guide, inspect the wiring and connectors. No → Go To 4	All
4	Ensure Liftgate is fully closed before proceeding. With the DRBIII® select SYSTEM TEST. Perform the Open, Close, Latch Cinch, Latch Release and Relay tests. Did any test fail? Yes → Using the wiring diagram/schematic as a guide, inspect the wiring and connectors. No → Test Complete.	All

Symptom:

AMBIENT TEMPERATURE SENSOR CIRCUIT OPEN

When Monitored and Set Condition:

AMBIENT TEMPERATURE SENSOR CIRCUIT OPEN

When Monitored: Anytime the Power Sliding Door Module is awake.

Set Condition: If the Power Sliding Door Modules internal thermistor becomes open, this code will set.

POSSIBLE CAUSES
DTC PRESENT
POWER SLIDING DOOR MODULE

TEST	ACTION	APPLICABILITY
1	With the DRBIII®, record and erase DTC's. Turn the ignition off, wait 10 seconds, then turn the ignition on. Operate the power sliding door several times from stop to stop if possible. With the DRBIII®, read ACTIVE DTCs. Does the DRBIII® display AMBIENT TEMPERATURE SENSOR CIRCUIT HIGH? Yes → Replace the Power Sliding Door Module. Perform BODY VERIFICATION TEST - VER 1. No → No problem found at this time. Perform BODY VERIFICATION TEST - VER 1.	All

Symptom:

AMBIENT TEMPERATURE SENSOR CIRCUIT SHORT TO GROUND

When Monitored and Set Condition:

AMBIENT TEMPERATURE SENSOR CIRCUIT SHORT TO GROUND

When Monitored: Anytime the Power Sliding Door Module is awake.

Set Condition: If the Power Sliding Door Modules internal thermistor is shorted, this code will set.

POSSIBLE CAUSES
DTC PRESENT
POWER SLIDING DOOR MODULE

TEST	ACTION	APPLICABILITY
1	With the DRBIII®, record and erase DTC's. Turn the ignition off, wait 10 seconds, then turn the ignition on. Operate the power sliding door several times from stop to stop if possible. With the DRBIII®, read ACTIVE DTCs. Does the DRBIII® display AMBIENT TEMPERATURE SENSOR CIRCUIT LOW? Yes → Replace the Power Sliding Door Module. Perform BODY VERIFICATION TEST - VER 1. No → No problem found at this time. Perform BODY VERIFICATION TEST - VER 1.	All

Symptom:
CONTROL MODULE FAILURE - INTERNAL FAILURE

When Monitored and Set Condition:

CONTROL MODULE FAILURE - INTERNAL FAILURE

When Monitored: Anytime the module is awake.

Set Condition: Whenever the module senses an internal failure (EEPROM, ROM, ADC) this code will set. The module must be replaced.

POSSIBLE CAUSES
SLIDING DOOR CONTROL MODULE - INTERNAL FAILURE

TEST	ACTION	APPLICABILITY
1	View repair. Repair Replace the Sliding Control Module. Perform BODY VERIFICATION TEST - VER 1.	All

Symptom:
INCOMPLETE LATCH CINCH - NO PAWL TRANSITION

When Monitored and Set Condition:

INCOMPLETE LATCH CINCH - NO PAWL TRANSITION

When Monitored: Whenever the power sliding door in operating.

Set Condition: The pawl switch was not detected as returning to ground during the transition between secondary and primary cinch operation. NOTE: The door may not be fully cinched during this condition. The door may cinch to primary but not be fully seated and may pop off back to secondary.

POSSIBLE CAUSES
DTC PRESENT
BINDING DOOR
GROUND WIRE OPEN
PAWL SWITCH SENSE WIRE OPEN
PAWL SWITCH SENSE WIRE SHORT TO GROUND
PAWL SWITCH

TEST	ACTION	APPLICABILITY
1	**NOTE: This DTC will only set during the cinching operation after the 4 second time out. This may make it difficult to reproduce.** With the DRBIII®, record and erase DTC's. Turn the ignition off, wait 10 seconds, then turn the ignition on. Operate the power sliding door several times if possible. With the DRBIII®, read ACTIVE DTCs. Does the DRBIII® display INCOMPLETE LATCH CINCH - NO PAWL TRANSITION? Yes → Go To 2 No → Using the wiring diagram/schematic as a guide, inspect the wiring and connectors for an intermittent condition. Operate the door several times and check for any binding or other obstructions. Perform BODY VERIFICATION TEST - VER 1.	All
2	Examine the door for proper fit and alignment, loose/ hard or torn seals, worn teeth on the rack and gear (lower drive unit) or anything that would cause an obstruction to proper operation. Manually operate the other sliding door or of a known good vehicle and notice the effort needed to open and close. Compare the effort needed on the disabled door. Does it take more effort to operate the door than it should? Yes → Refer to Service information for the related symptom(s). Perform BODY VERIFICATION TEST - VER 1. No → Go To 3	All

INCOMPLETE LATCH CINCH - NO PAWL TRANSITION — Continued

TEST	ACTION	APPLICABILITY
3	Disconnect the Sliding Door Control Module C2 connector. Disconnect the Sliding Door Latch Sensing Switch connector (latch assembly). Measure the resistance of the Ground wires (both) between the PSD C2 connector (cavity 20) and the Sliding Door Latch Sensing Switch connector. Wiggle the harness while observing the ohmmeter. Is the resistance below 5.0 ohms on both ground wires? Yes → Go To 4 No → Repair the Ground wire for an open. Perform BODY VERIFICATION TEST - VER 1.	All
4	Disconnect the Sliding Door Control Module C2 connector. Disconnect the Sliding Door Latch Sensing Switch connector (latch assembly). Measure the resistance of the Pawl Switch Sense wire between the PSD C2 connector and the Sliding Door Latch Sensing Switch connector. Wiggle the harness while observing the ohmmeter. Is the resistance below 5.0 ohms? Yes → Go To 5 No → Repair the Pawl Switch Sense wire for an open. Perform BODY VERIFICATION TEST - VER 1.	All
5	Disconnect the Sliding Door Control Module C2 connector. Disconnect the Sliding Door Latch Sensing Switch connector (latch assembly). Measure the resistance between ground and the Pawl Switch Sense circuit. Wiggle the harness while observing the ohmmeter. Is the resistance below 1000.0 ohms? Yes → Repair the Pawl Switch Sense wire for a short to ground. Perform BODY VERIFICATION TEST - VER 1. No → Go To 6	All
6	If there are no possible causes remaining, view repair. Repair Replace the Pawl Switch (latch assembly). Perform BODY VERIFICATION TEST - VER 1.	All

Symptom:
INCOMPLETE LATCH CINCH - OVERCURRENT

When Monitored and Set Condition:

INCOMPLETE LATCH CINCH - OVERCURRENT

When Monitored: Whenever the power sliding door is operating in the closing direction.

Set Condition: The latch motor stall current of 6.2 amps has been detected, with no pawl or ratchet failure. This code is set during the first stage of the power cinching operation.

POSSIBLE CAUSES
DTC PRESENT
BINDING DOOR
CINCH/RELEASE MOTOR LATCH DRIVER WIRE OPEN
CINCH/RELEASE MOTOR UNLATCH DRIVER WIRE OPEN
CINCH/RELEASE MOTOR LATCH DRIVER WIRE SHORT TO GROUND
CINCH/RELEASE MOTOR UNLATCH DRIVER WIRE SHORT TO GROUND
LATCH ASSEMBLY

TEST	ACTION	APPLICABILITY
1	With the DRBIII®, record and erase DTC's. Turn the ignition off, wait 10 seconds, then turn the ignition on. Operate the power sliding door several times if possible. With the DRBIII®, read ACTIVE DTCs. Does the DRBIII® display INCOMPLETE LATCH CINCH-OVERCURRENT? Yes → Go To 2 No → Using the wiring diagram/schematic as a guide, inspect the wiring and connectors for an intermittent condition. Operate the door several times and check for any binding or other obstructions. Perform BODY VERIFICATION TEST - VER 1.	All
2	Examine the door for proper fit and alignment, loose/ hard or torn seals, worn teeth on the rack and gear (lower drive unit) or anything that would cause an obstruction to proper operation. Manually operate the other sliding door or of a known good vehicle and notice the effort needed to open and close. Compare the effort needed on the disabled door. Does it take more effort to operate the door than it should? Yes → Refer to Service information for the related symptom(s). Perform BODY VERIFICATION TEST - VER 1. No → Go To 3	All

INCOMPLETE LATCH CINCH - OVERCURRENT — Continued

TEST	ACTION	APPLICABILITY
3	Turn the ignition off. Disconnect the Sliding Door Control Module C2 connector. Disconnect the Cinch/Release Motor connector. Measure the resistance of the Cinch/Release Motor Latch Driver circuit between the Sliding Door Control Module C2 connector and the Cinch/Release Motor connector. Wiggle the harness and check for an intermittent open condition. Is the resistance below 5.0 ohms? Yes → Go To 4 No → Repair the Cinch/Release Motor Latch Driver wire for an open. Perform BODY VERIFICATION TEST - VER 1.	All
4	Turn the ignition off. Disconnect the Sliding Door Control Module C2 connector. Disconnect the Cinch/Release Motor connector. Measure the resistance of the Cinch/Release Motor Unlatch Driver circuit between the Sliding Door Control Module C2 connector and the Cinch/Release Motor connector. Wiggle the harness and check for an intermittent open condition. Is the resistance below 5.0 ohms? Yes → Go To 5 No → Repair the Cinch/Release Motor Unlatch Driver wire for an open. Perform BODY VERIFICATION TEST - VER 1.	All
5	Turn the ignition off. Disconnect the Sliding Door Control Module C2 connector. Disconnect the Cinch/Release Motor connector. Measure the resistance between ground and the Cinch/Release Motor Latch Driver circuit. Wiggle the harness and check for an intermittent open condition. Is the resistance below 1000.0 ohms? Yes → Go To 6 No → Repair the Cinch/Release Motor Latch Driver wire for a short to ground. Perform BODY VERIFICATION TEST - VER 1.	All
6	Turn the ignition off. Disconnect the Sliding Door Control Module C2 connector. Disconnect the Cinch/Release Motor connector. Measure the resistance between ground and the Cinch/Release Motor Unlatch Driver circuit. Wiggle the harness and check for an intermittent open condition. Is the resistance below 1000.0 ohms? Yes → Go To 7 No → Repair the Cinch/Release Motor Unlatch Driver wire for a short to ground. Perform BODY VERIFICATION TEST - VER 1.	All
7	If there are no possible causes remaining, view repair. Repair Replace the Latch Assembly. Perform BODY VERIFICATION TEST - VER 1.	All

Symptom:

INCOMPLETE LATCH RELEASE - FULL OPEN SWITCH FAILURE

When Monitored and Set Condition:

INCOMPLETE LATCH RELEASE - FULL OPEN SWITCH FAILURE

When Monitored: Whenever the power sliding door is operating in the closing direction.

Set Condition: The release operation had stalled or the current was exceeded before the full open switch had changed state during the release. This code will set only in power closing operation.

POSSIBLE CAUSES
DTC PRESENT
FULL OPEN SWITCH GROUND OPEN
STICKING CABLES OR LATCH
FULL OPEN SWITCH WIRE OPEN
FULL OPEN SWITCH WIRE SHORT TO GROUND
LATCH ASSEMBLY - HOLD OPEN RELEASE
POWER SLIDING DOOR MODULE - FULL OPEN SWITCH
FULL OPEN SW ITCH

TEST	ACTION	APPLICABILITY
1	With the DRBIII®, record and erase DTC's. Turn the ignition off, wait 10 seconds, then turn the ignition on. Operate the power sliding door several times if possible. With the DRBIII®, read ACTIVE DTCs. Does the DRBIII® display INCOMPLETE LATCH RELEASE- FULL OPEN SWITCH FAILURE? Yes → Go To 2 No → Using the wiring diagram/schematic as a guide, inspect the wiring and connectors for an intermittent condition. Operate the door several times and check for any binding cables or other obstructions. Perform BODY VERIFICATION TEST - VER 1.	All

INCOMPLETE LATCH RELEASE - FULL OPEN SWITCH FAILURE — Continued

TEST	ACTION	APPLICABILITY
2	Examine the door for proper fit and alignment, foreign material in the lower drive unit or anything that would cause an obstruction to proper operation of the Full Open Switch. Open the sliding door to the full open position. Hold the door in the full open position and observe the hold open latch in the lower drive unit. Manually operate the door handle (pull and release) while observing the hold open latch. Repeat this step several times while observing the latch. Does the latch work smoothly as the handle is pulled and released? Yes → Go To 3 No → Determine if the problem is a sticking cable or hold open latch (lower drive unit). Refer to Service information for the related symptom(s). Perform BODY VERIFICATION TEST - VER 1.	All
3	Hold the door in the full open position and observe the hold open latch in the lower drive unit. With the DRBIII® in SYSTEM TEST, perform the SLIDING DOOR LATCH RELEASE TEST. Repeat this step several times while observing the latch. Does the latch work smoothly as the latch is activated? Yes → Go To 4 No → Replace the Latch Assembly (hold open release actuator). Perform BODY VERIFICATION TEST - VER 1.	All
4	With the DRBIII® in Inputs/Outputs, read the FULL OPEN SWITCH state. While observing the FULL OPEN switch state, manually move the door from full open to part open. The switch should toggle from CLOSED to OPEN. Did the switch status change as the door was moved from full open to part open? Yes → Replace the Power Sliding Door Module. Perform BODY VERIFICATION TEST - VER 1. No → Go To 5	All
5	Disconnect the Full Open Switch connector. Using a 12-volt test light connected to 12-volts, check the Ground circuit. Does the test light illuminate brightly? Yes → Go To 6 No → Repair the ground wire for an open. Perform BODY VERIFICATION TEST - VER 1.	All
6	Disconnect the Power Sliding Door C2 connector. Disconnect the Full Open Switch connector. Measure the resistance of the Full Open Switch circuit from the Power Sliding Door Module C2 connector to the Full Open Switch connector on the lower drive unit. Is the resistance below 5.0 ohms? Yes → Go To 7 No → Repair the Full Open Switch Sense wire for an open. Perform BODY VERIFICATION TEST - VER 1.	All

INCOMPLETE LATCH RELEASE - FULL OPEN SWITCH FAILURE — Continued

TEST	ACTION	APPLICABILITY
7	Disconnect the Power Sliding Door C2 connector. Disconnect the Full Open Switch connector. Measure the resistance between ground and the Full Open Switch circuit. Is the resistance below 1000.0 ohms? Yes → Repair the Full Open Switch Sense wire for a short to ground. Perform BODY VERIFICATION TEST - VER 1. No → Go To 8	All
8	If there are no possible causes remaining, view repair. Repair Replace the Full Open Switch (Lower Drive Unit). Perform BODY VERIFICATION TEST - VER 1.	All

Symptom:
INCOMPLETE LATCH RELEASE - RATCHET SWITCH FAILURE

When Monitored and Set Condition:

INCOMPLETE LATCH RELEASE - RATCHET SWITCH FAILURE

When Monitored: Whenever the power sliding door is operating in an opening direction.

Set Condition: The pawl switch was grounded but the ratchet switch remained open. This code will set only in the release operation.

POSSIBLE CAUSES
DTC PRESENT
BINDING DOOR
POWER SLIDING DOOR MODULE - RATCHET CIRCUIT
GROUND WIRE OPEN
SLIDING DOOR AJAR SWITCH SENSE WIRE OPEN
RATCHET SWITCH

TEST	ACTION	APPLICABILITY
1	**NOTE: This DTC will only set during the cinching operation after the 4 second time out. This may make it difficult to reproduce** With the DRBIII®, record and erase DTC's. Turn the ignition off, wait 10 seconds, then turn the ignition on. Operate the power sliding door several times if possible. With the DRBIII®, read ACTIVE DTCs. Does the DRBIII® display INCOMPLETE LATCH RELEASE - RATCHET SWITCH FAILURE? Yes → Go To 2 No → Using the wiring diagram/schematic as a guide, inspect the wiring and connectors for an intermittent condition. Operate the door several times and check for any binding or other obstructions. Perform BODY VERIFICATION TEST - VER 1.	All
2	Examine the door for proper fit and alignment, loose/ hard or torn seals, worn teeth on the rack and gear (lower drive unit) or anything that would cause an obstruction to proper operation. Manually operate the other sliding door or of a known good vehicle and notice the effort needed to open and close. Compare the effort needed on the disabled door. Especially notice the effort needed to unlatch and close the door. Does it take more effort to operate the door than it should? Yes → Refer to Service information for the related symptom(s). Perform BODY VERIFICATION TEST - VER 1. No → Go To 3	All

INCOMPLETE LATCH RELEASE - RATCHET SWITCH FAILURE — Continued

TEST	ACTION	APPLICABILITY
3	With the DRBIII® in Inputs/Outputs, read the RATCHET state. Open the sliding door to full open position. Using a screwdriver, click the latch to the second detent while observing the DRB111®. Unlatch the latch by pulling the handle switch and observe the DRB111® for a state change. Repeat this step several times while moving the door in different positions and wiggling the wiring harness to check for an intermittent short. Did the DRB111® show the switch state changes correctly every time? Yes → Replace the Power Sliding Door Module. Perform BODY VERIFICATION TEST - VER 1. No → Go To 4	All
4	Disconnect the Sliding Door Control Module C2 connector. Disconnect the Sliding Door Latch Sensing Switch connector (latch assembly). Measure the resistance of the Ground wires (both) between the PSD C2 connector (cavity 20) and the Sliding Door Latch Sensing Switch connector. Wiggle the harness while observing the ohmmeter. Is the resistance below 5.0 ohms on both ground wires? Yes → Go To 5 No → Repair the Ground wire for an open. Perform BODY VERIFICATION TEST - VER 1.	All
5	Disconnect the Sliding Door Control Module C2 connector. Disconnect the Sliding Door Latch Sensing Switch connector (latch assembly). Measure the resistance of the Sliding Door Ajar Switch Sense wire between the PSD C2 connector and the Sliding Door Latch Sensing Switch connector. Wiggle the harness and move the door in different positions while observing the ohmmeter. Is the resistance below 5.0 ohms? Yes → Go To 6 No → Repair the Sliding Door Ajar Switch Sense wire for an open. Perform BODY VERIFICATION TEST - VER 1.	All
6	If there are no possible causes remaining, view repair. Repair Replace the Ratchet Switch (latch assembly). Perform BODY VERIFICATION TEST - VER 1.	All

Symptom:

INCOMPLETE LATCH RELEASE- NO REVERSE TO UNLOAD CLUTCH

When Monitored and Set Condition:

INCOMPLETE LATCH RELEASE- NO REVERSE TO UNLOAD CLUTCH

When Monitored: Whenever the power sliding door is operating.

Set Condition: If the cinch release motor takes longer than 700 ms to perform a release operation this code will set. The main causes of this code setting is some type of sticking situation preventing the sector gear in the cinch release motor assembly to return to its neutral position.

POSSIBLE CAUSES
DTC PRESENT
BINDING LATCH
CINCH RELEASE MOTOR ASSEMBLY

TEST	ACTION	APPLICABILITY
1	With the DRBIII®, record and erase DTC's. Turn the ignition off, wait 10 seconds, then turn the ignition on. Operate the power sliding door several times if possible. With the DRBIII®, read ACTIVE DTCs. Does the DRBIII® display INCOMPLETE LATCH RELEASE - NO REVERSE TO UNLOAD CLUTCH? Yes → Go To 2 No → Operate the door several times and check for any binding or other obstructions. To test the reverse action, open the sliding door part way and continue holding the handle for 4 seconds. The motor should run for approximately 100ms. Perform BODY VERIFICATION TEST - VER 1.	All
2	Examine the sliding door for proper fit and alignment, loose/hard or torn seals or anything that would cause an obstruction to proper operation. Manually operate the sliding door of a known good vehicle and notice the effort needed to open and close. Compare the effort needed on the disabled sliding door. Especially notice the effort needed to unlatch and latch the door. Does it take more effort to operate the door than it should? Yes → Refer to Service information for the related symptom(s). Perform BODY VERIFICATION TEST - VER 1. No → Replace the Cinch Release Motor Assembly.. Perform BODY VERIFICATION TEST - VER 1.	All

Symptom:
INCOMPLETE LATCH RELEASE- OVERCURRENT

When Monitored and Set Condition:

INCOMPLETE LATCH RELEASE- OVERCURRENT

When Monitored: Whenever the power sliding door is operating in the closing direction.

Set Condition: The latch motor stall current of 6.2 amps was detected during a non-redundant release. The main causes of this code setting is some type of blockage during the release. This code is set during the power closing operation.

POSSIBLE CAUSES
DTC PRESENT
BINDING DOOR
FULL OPEN SWITCH STUCK
LATCH ASSEMBLY

TEST	ACTION	APPLICABILITY
1	With the DRBIII®, record and erase DTC's. Turn the ignition off, wait 10 seconds, then turn the ignition on. Operate the power sliding door several times if possible. With the DRBIII®, read ACTIVE DTCs. Does the DRBIII® display INCOMPLETE LATCH RELEASE - OVER CURRENT? Yes → Go To 2 No → Using the wiring diagram/schematic as a guide, inspect the wiring and connectors for an intermittent condition. Operate the door several times and check for any binding or other obstructions. Perform BODY VERIFICATION TEST - VER 1.	All
2	Examine the door for proper fit and alignment, lose/ hard or torn seals, worn teeth on the rack and gear (lower drive unit) or anything that would cause an obstruction to proper operation. Manually operate the other sliding door or of a known good vehicle and notice the effort needed to open and close. Compare the effort needed on the disabled door. Especially notice the effort needed to unlatch and close the door. Does it take more effort to operate the door than it should? Yes → Refer to Service information for the related symptom(S). Perform BODY VERIFICATION TEST - VER 1. No → Go To 3	All

INCOMPLETE LATCH RELEASE- OVERCURRENT — Continued

TEST	ACTION	APPLICABILITY
3	With the DRBIII® in Inputs/Outputs, read the FULL OPEN SWITCH state. Open and close the door manually and observe the Full Open Switch. Did the switch toggle from open to close? Yes → Replace the Latch Assembly. Perform BODY VERIFICATION TEST - VER 1. No → Replace the Full Open Switch. Perform BODY VERIFICATION TEST - VER 1.	All

Symptom:
INCOMPLETE LATCH RELEASE- PAWL SWITCH FAILURE

When Monitored and Set Condition:

INCOMPLETE LATCH RELEASE- PAWL SWITCH FAILURE

When Monitored: Whenever the power sliding door is operating in an opening direction.

Set Condition: The release operation was not completed due to non-transition of the pawl switch during the power release operation. The ratchet switch was detected as grounded but the pawl remained open. This code is set during the power releasing operation from a fully closed door.

POSSIBLE CAUSES
DTC PRESENT
BINDING DOOR
POWER SLIDING DOOR MODULE - PAWL CIRCUIT
GROUND WIRE OPEN
PAWL SWITCH SENSE WIRE OPEN
PAWL SWITCH

TEST	ACTION	APPLICABILITY
1	**NOTE: This DTC will only set during the cinching operation after the 4 second time out. This may make it difficult to reproduce.** With the DRBIII®, record and erase DTC's. Turn the ignition off, wait 10 seconds, then turn the ignition on. Operate the power sliding door several times if possible. With the DRBIII®, read ACTIVE DTCs. Does the DRBIII® display INCOMPLETE LATCH RELEASE - PAWL SWITCH FAILURE? Yes → Go To 2 No → Using the wiring diagram/schematic as a guide, inspect the wiring and connectors for an intermittent condition. Operate the door several times and check for any binding or other obstructions. Perform BODY VERIFICATION TEST - VER 1.	All

INCOMPLETE LATCH RELEASE- PAWL SWITCH FAILURE — Continued

TEST	ACTION	APPLICABILITY
2	Examine the door for proper fit and alignment, loose/ hard or torn seals, worn teeth on the rack and gear (lower drive unit) or anything that would cause an obstruction to proper operation. Manually operate the other sliding door or of a known good vehicle and notice the effort needed to open and close. Compare the effort needed on the disabled door. Especially notice the effort needed to unlatch and close the door. Does it take more effort to operate the door than it should? Yes → Refer to Service information for the related symptom(s). Perform BODY VERIFICATION TEST - VER 1. No → Go To 3	All
3	With the DRBIII® in Inputs/Outputs, read the PAWL state. Open the sliding door to full open position. Using a screwdriver, click the latch to the first detent while observing the DRB111®. Unlatch the latch by pulling the handle switch and observe the DRB111® for a state change. Repeat this step several times while moving the door in different positions and wiggling the wiring harness to check for an intermittent open. Did the DRB111® show the switch state changes correctly every time? Yes → Replace the Power Sliding Door Module. Perform BODY VERIFICATION TEST - VER 1. No → Go To 4	All
4	Disconnect the Sliding Door Control Module C2 connector. Disconnect the Sliding Door Latch Sensing Switch connector (latch assembly). Measure the resistance of the Ground wires (both) between the PSD C2 connector (cavity 20) and the Sliding Door Latch Sensing Switch connector. Wiggle the harness while observing the ohmmeter. Is the resistance below 5.0 ohms on both ground wires? Yes → Go To 5 No → Repair the Ground wire for an open. Perform BODY VERIFICATION TEST - VER 1.	All
5	Disconnect the Sliding Door Control Module C2 connector. Disconnect the Sliding Door Latch Sensing Switch connector (latch assembly). Measure the resistance of the Pawl Switch Sense circuit between the PSD C2 connector and the Sliding Door Latch Sensing Switch connector. Wiggle the harness while observing the ohmmeter. Is the resistance below 5.0 ohms? Yes → Go To 6 No → Repair the Pawl Switch Sense wire for an open. Perform BODY VERIFICATION TEST - VER 1.	All
6	If there are no possible causes remaining, view repair. Repair Replace the Pawl Switch (latch assembly). Perform BODY VERIFICATION TEST - VER 1.	All

Symptom:

INCOMPLETE LATCH RELEASE- SECTOR GEAR RETURN FAILURE

When Monitored and Set Condition:

INCOMPLETE LATCH RELEASE- SECTOR GEAR RETURN FAILURE

When Monitored: Whenever the power sliding door is operating.

Set Condition: If the cinch release motor takes longer than 700 ms to perform a release operation this code will set. The main causes of this code setting is some type of sticking situation preventing the sector gear in the cinch release motor assembly to return to its neutral position.

POSSIBLE CAUSES
DTC PRESENT
BINDING SLIDING DOOR
CINCH RELEASE MOTOR ASSEMBLY

TEST	ACTION	APPLICABILITY
1	With the DRBIII®, record and erase DTC's. Turn the ignition off, wait 10 seconds, then turn the ignition on. Operate the power sliding door several times if possible. With the DRBIII®, read ACTIVE DTCs. Does the DRBIII® display INCOMPLETE LATCH RELEASE - SECTOR GEAR RETURN FAILURE? Yes → Go To 2 No → Using the wiring diagram/schematic as a guide, inspect the wiring and connectors for an intermittent condition. Operate the door several times and check for any binding or other obstructions. Perform BODY VERIFICATION TEST - VER 1.	All
2	Examine the sliding door for proper fit and alignment, loose/hard or torn seals or anything that would cause an obstruction to proper operation. Manually operate the sliding door of a known good vehicle and notice the effort needed to open and close. Compare the effort needed on the disabled sliding door. Especially notice the effort needed to unlatch and close the door. Does it take more effort to operate the door than it should? Yes → Refer to Service information for the related symptom(s). Perform BODY VERIFICATION TEST - VER 1. No → Replace the Cinch Release Motor Assembly.. Perform BODY VERIFICATION TEST - VER 1.	All

Symptom:

INCOMPLETE POWER CLOSE - FULL OPEN SWITCH FAILURE

When Monitored and Set Condition:

INCOMPLETE POWER CLOSE - FULL OPEN SWITCH FAILURE

When Monitored: Whenever the power sliding door is operating in the closing direction.

Set Condition: The Full Open Switch was detected as closed before 100 hall effect pulses were counted since the start of the close operation.

POSSIBLE CAUSES
DTC PRESENT
STICKING CABLES OR SWITCH
FULL OPEN SWITCH SHORT TO GROUND
FULL OPEN SWITCH

TEST	ACTION	APPLICABILITY
1	With the DRBIII®, record and erase DTC's. Turn the ignition off, wait 10 seconds, then turn the ignition on. Operate the power sliding door several times if possible. With the DRBIII®, read ACTIVE DTCs. Does the DRBIII® display INCOMPLETE POWER CLOSE - FULL OPEN SWITCH FAILURE? Yes → Go To 2 No → Using the wiring diagram/schematic as a guide, inspect the wiring and connectors for an intermittent condition. Operate the door several times and check for any binding cables or other obstructions. Perform BODY VERIFICATION TEST - VER 1.	All
2	Examine the door for proper fit and alignment, foreign material in the lower drive unit or anything that would cause an obstruction to proper operation of the Full Open Switch. With the DRBIII® in Inputs/Outputs, read the FULL OPEN SWITCH state. Manually operate the door handle while monitoring the DRBIII®. Does the switch status change smoothly as the handle is pulled and released? Yes → Go To 3 No → Refer to Service information for the related symptom(S). Perform BODY VERIFICATION TEST - VER 1.	All

INCOMPLETE POWER CLOSE - FULL OPEN SWITCH FAILURE — Continued

TEST	ACTION	APPLICABILITY
3	With the DRBIII® in Inputs/Outputs, read the FULL OPEN SWITCH state. Open the Sliding Door to mid position. While monitoring the DRBIII®, wiggle the wiring harness from the Power Sliding Door Module to the Full Open Switch on the lower drive unit. Did the switch status ever change? Yes → Repair the Full Open Switch Sense circuit for a short to ground. Perform BODY VERIFICATION TEST - VER 1. No → Go To 4	All
4	If there are no possible causes remaining, view repair. Repair Replace the Full Open Switch (lower drive unit). Perform BODY VERIFICATION TEST - VER 1.	All

Symptom:

INCOMPLETE POWER CLOSE - EXCESSIVE HALL EFFECT SIGNAL

When Monitored and Set Condition:

INCOMPLETE POWER CLOSE - EXCESSIVE HALL EFFECT SIGNAL

When Monitored: Anytime the power sliding door is in the closing cycle.

Set Condition: If the PSD Module detects an excessive hall effect signal count or a missing hall effect signal for longer than 300 ms. during a closing operation, this code will set. This is a redundant safety feature in the software and will set if the obstacle detection feature becomes inoperative due to a hall effect sensor or connection malfunction.

POSSIBLE CAUSES
DTC PRESENT
POWER SLIDING DOOR MODULE - HALL EFFECT OPEN
LOWER DRIVE UNIT
BINDING DOOR
HALL EFFECT GROUND CIRCUIT OPEN
DOOR MOTOR HALL EFFECT SUPPLY WIRE OPEN
DOOR MOTOR HALL EFFECT SUPPLY WIRE SHORT TO GROUND
DOOR MOTOR HALL EFFECT SIGNAL WIRE OPEN
DOOR MOTOR HALL EFFECT SIGNAL WIRE SHORT TO GROUND
DOOR MOTOR ASSEMBLY

TEST	ACTION	APPLICABILITY
1	With the DRBIII®, record and erase DTC's. Turn the ignition off, wait 10 seconds, then turn the ignition on. Operate the power sliding door several times from stop to stop if possible. With the DRBIII®, read ACTIVE DTCs. Does the DRBIII® display INCOMPLETE POWER CLOSE - EXCESSIVE HALL EFFECT SIGNAL? Yes → Go To 2 No → Using the wiring diagram/schematic as a guide, inspect the wiring and connectors for an intermittent condition. Operate the door several times and check for any binding conditions. Perform BODY VERIFICATION TEST - VER 1.	All

INCOMPLETE POWER CLOSE - EXCESSIVE HALL EFFECT SIGNAL — Continued

TEST	ACTION	APPLICABILITY
2	Examine the door for proper fit and alignment, loose/ hard or torn seals, worn teeth on the track and gear (lower drive unit) or anything that would cause an obstruction to proper operation. Manually operate the sliding door on the other side or of a known good vehicle and notice the effort needed to open and close. Compare the effort needed on the disabled door. Does it take more effort to operate the door than it should? Yes → Refer to Service information for the related symptom(s). Perform BODY VERIFICATION TEST - VER 1. No → Go To 3	All
3	Examine the Lower Drive Unit for alignment and gear condition. Manually operate the sliding door and observe the gear and track. Is the Lower Drive Unit and Track in good condition? Yes → Go To 4 No → Replace the Lower Drive Unit or Track as necessary.. Perform BODY VERIFICATION TEST - VER 1.	All
4	Operate the door from the full open position and put an obstacle in its path to make it reverse. Did the door reverse back to the open position? Yes → Go To 5 No → Replace the Power Sliding Door Module. Perform BODY VERIFICATION TEST - VER 1.	All
5	Disconnect the Sliding Door Motor connector. Using a 12-volt test light connected to 12-volts, check the Ground circuit. Does the test light illuminate brightly? Yes → Go To 6 No → Repair the hall effect ground circuit for an open. Perform BODY VERIFICATION TEST - VER 1.	All
6	Disconnect the Sliding Door Motor connector. Disconnect the Sliding Door Control Module C2 connector. Measure the resistance of the Door Motor Hall Effect Supply circuit between the Sliding Door Motor connector and the PSD Module C2 connector. Is the resistance below 5.0 ohms? Yes → Go To 7 No → Repair the Door Motor Hall Effect Supply wire for an open. Perform BODY VERIFICATION TEST - VER 1.	All
7	Disconnect the Sliding Door Motor connector. Disconnect the Sliding Door Control Module C2 connector. Measure the resistance between ground and the Door Motor Hall Effect Supply circuit. Is the resistance below 100.0 ohms? Yes → Repair the Door Motor Hall Effect Supply wire for a short to ground. Perform BODY VERIFICATION TEST - VER 1. No → Go To 8	All

INCOMPLETE POWER CLOSE - EXCESSIVE HALL EFFECT SIGNAL — Continued

TEST	ACTION	APPLICABILITY
8	Disconnect the Sliding Door Motor connector. Disconnect the Sliding Door Control Module C2 connector. Measure the resistance of the Door Motor Hall Effect Signal circuit between the Sliding Door Motor connector and the PSD Module C2 connector. Is the resistance below 5.0 ohms? Yes → Go To 9 No → Repair the Door Motor Hall Effect Signal wire for an open. Perform BODY VERIFICATION TEST - VER 1.	All
9	Disconnect the Sliding Door Motor connector. Disconnect the Sliding Door Control Module C2 connector. Measure the resistance between ground and the Door Motor Hall Effect Signal circuit. Is the resistance below 100.0 ohms? Yes → Repair the Door Motor Hall Effect Signal wire for a short to ground. Perform BODY VERIFICATION TEST - VER 1. No → Go To 10	All
10	If there are no possible causes remaining, view repair. Repair Replace the Power Sliding Door Motor Assembly (hall effect switch). Perform BODY VERIFICATION TEST - VER 1.	All

Symptom:
INCOMPLETE POWER CLOSE - LATCH FAILURE

When Monitored and Set Condition:

INCOMPLETE POWER CLOSE - LATCH FAILURE

When Monitored: Whenever the power sliding door is operating in the closing direction.

Set Condition: The power close operation was not completed due to latch failure. This DTC is set during a power close cycle.

POSSIBLE CAUSES
DTC PRESENT
BINDING DOOR
CINCH/RELEASE MOTOR LATCH DRIVER CIRCUIT SHORT TO GROUND
CINCH/RELEASE MOTOR LATCH DRIVER WIRE OPEN
CINCH/RELEASE MOTOR UNLATCH DRIVER WIRE OPEN
POWER SLIDING DOOR MODULE - FULL OPEN CIRCUIT OPEN
POWER SLIDING DOOR MODULE - PAWL CIRCUIT OPEN
POWER SLIDING DOOR MODULE - RATCHET CIRCUIT OPEN
GROUND WIRE OPEN - FULL OPEN SWITCH
GROUND WIRE OPEN - PAWL SWITCH
GROUND WIRE OPEN - RATCHET SWITCH
FULL OPEN SWITCH SENSE WIRE OPEN
PAWL SWITCH SENSE WIRE OPEN
SLIDING DOOR AJAR SWITCH SENSE WIRE OPEN
FULL OPEN SWITCH SENSE WIRE SHORT TO GROUND
FULL OPEN SWITCH
LATCH ASSEMBLY
LATCH ASSEMBLY
PAWL SWITCH
RATCHET SWITCH

INCOMPLETE POWER CLOSE - LATCH FAILURE — Continued

TEST	ACTION	APPLICABILITY
1	With the DRBIII®, record and erase DTC's. Turn the ignition off, wait 10 seconds, then turn the ignition on. Operate the power sliding door several times if possible. With the DRBIII®, read ACTIVE DTCs. Does the DRBIII® display INCOMPLETE POWER OPEN - LATCH FAILURE? Yes → Go To 2 No → Using the wiring diagram/schematic as a guide, inspect the wiring and connectors for an intermittent condition. Operate the door several times and check for any binding or other obstructions. Perform BODY VERIFICATION TEST - VER 1.	All
2	Examine the door for proper fit and alignment, lose/ hard or torn seals, worn teeth on the rack and gear (lower drive unit) or anything that would cause an obstruction to proper operation. Manually operate the other sliding door or of a known good vehicle and notice the effort needed to open and close. Compare the effort needed on the disabled door. Does it take more effort to operate the door than it should? Yes → Refer to Service information for the related symptom(s). Perform BODY VERIFICATION TEST - VER 1. No → Go To 3	All
3	With the DRBIII® in Inputs/Outputs, read the PAWL, RATCHET and FULL OPEN switch state. While observing the FULL OPEN switch state, manually move the door from full open to part open. The switch should toggle from CLOSED to OPEN. Move the door to the full open position. While observing the PAWL switch state, click the latch with a screwdriver to the first detent. The PAWL should toggle from CLOSED to OPEN. Move the door to the full open position. While observing the RATCHET switch state, click the latch with a screwdriver to the second detent. The RATCHET should toggle from CLOSED to OPEN. Repeat the above steps several times. Select which switch failed: FULL OPEN Switch Go To 4 PAWL Switch Go To 9 RATCHET Switch Go To 13 All switches operated properly. Go To 17	All

INCOMPLETE POWER CLOSE - LATCH FAILURE — Continued

TEST	ACTION	APPLICABILITY
4	Disconnect the Sliding Door Control Module C2 connector. Measure the resistance between the Ground circuit (cavity 20) and the Full Open Switch Sense circuit. Open the sliding door completely then partially close it. Repeat this step while observing the ohmmeter. Did the resistance change from below 15 ohms to above 1000.0 ohms when the door was moved. Yes → Replace the Power Sliding Door Module. Perform BODY VERIFICATION TEST - VER 1. No → Go To 5	All
5	Disconnect the Sliding Door Control Module C2 connector. Disconnect the Full open Switch Sense wire at the lower drive unit. Measure the resistance of the Ground wires between the PSD C2 connector (cavity 20) and the Full Open Switch connector. Wiggle the harness while observing the ohmmeter. Is the resistance below 5.0 ohms? Yes → Go To 6 No → Repair the Ground wire for an open. Perform BODY VERIFICATION TEST - VER 1.	All
6	Disconnect the Sliding Door Control Module C2 connector. Disconnect the Full open Switch Sense wire at the lower drive unit. Measure the resistance of the Full Open Switch Sense wire between the PSD C2 connector and the Full Open Switch connector. Is the resistance below 5.0 ohms? Yes → Go To 7 No → Repair the Full Open Switch Sense wire for an open. Perform BODY VERIFICATION TEST - VER 1.	All
7	Disconnect the Sliding Door Control Module C2 connector. Disconnect the Full open Switch Sense wire at the lower drive unit. Measure the resistance between ground and the Full Open Switch Sense circuit. Is the resistance below 1000.0 ohms? Yes → Repair the Full Open Switch Sense wire for a short to ground. Perform BODY VERIFICATION TEST - VER 1. No → Go To 8	All
8	If there are no possible causes remaining, view repair. Repair Replace the Full Open Switch (lower drive unit). Perform BODY VERIFICATION TEST - VER 1.	All

INCOMPLETE POWER CLOSE - LATCH FAILURE — Continued

TEST	ACTION	APPLICABILITY
9	Disconnect the Sliding Door Control Module C2 connector. Measure the resistance between ground and the Pawl Switch Sense circuit. Open the sliding door completely. Using a screwdriver, close the latch to the first detent while observing the ohmmeter. Release the latch with the handle. Repeat this step while observing the ohmmeter. Did the resistance change from below 15 ohms to above 1000.0 ohms when the latch was closed. Yes → Replace the Power Sliding Door Module. Perform BODY VERIFICATION TEST - VER 1. No → Go To 10	All
10	Disconnect the Sliding Door Control Module C2 connector. Disconnect the Sliding Door Latch Sensing Switch connector. Measure the resistance of the both Ground wires between the PSD C2 connector (cavity 20) and the Sliding Door Latch Sensing Switch connector. Wiggle the harness while observing the ohmmeter. Is the resistance below 5.0 ohms in both ground wires at the switch connector? Yes → Go To 11 No → Repair the Ground wire for an open. Perform BODY VERIFICATION TEST - VER 1.	All
11	Disconnect the Sliding Door Control Module C2 connector. Disconnect the Sliding Door Latch Sensing Switch connector (latch assembly). Measure the resistance of the Pawl Switch Sense wire between the PSD C2 connector and the Sliding Door Latch Sensing Switch connector. Is the resistance below 5.0 ohms? Yes → Go To 12 No → Repair the Pawl Switch Sense wire for an open. Perform BODY VERIFICATION TEST - VER 1.	All
12	If there are no possible causes remaining, view repair. Repair Replace the Pawl Switch (latch assembly). Perform BODY VERIFICATION TEST - VER 1.	All
13	Disconnect the Sliding Door Control Module C2 connector. **NOTE: The Sliding Door Ajar Switch Sense circuit is also the Ratchet Switch Sense circuit on power doors.** Disconnect the Sliding Door Latch Sensing Switch connector. Measure the resistance between the Ground circuit (cavity 20) and the Sliding Door Ajar Switch Sense circuit. Open the sliding door completely. Using a screwdriver, close the latch to the second detent while observing the ohmmeter. Release the latch with the handle. Repeat this step while observing the ohmmeter. Did the resistance change from below 15 ohms to above 1000.0 ohms when the latch was closed. Yes → Replace the Power Sliding Door Module. Perform BODY VERIFICATION TEST - VER 1. No → Go To 14	All

INCOMPLETE POWER CLOSE - LATCH FAILURE — Continued

TEST	ACTION	APPLICABILITY
14	Disconnect the Sliding Door Control Module C2 connector. Disconnect the Sliding Door Latch Sensing Switch connector. Measure the resistance of the both Ground wires between the PSD C2 connector (cavity 20) and the Sliding Door Latch Sensing Switch connector. Wiggle the harness while observing the ohmmeter. Is the resistance below 5.0 ohms in both ground wires at the switch connector? Yes → Go To 15 No → Repair the Ground wire for an open. Perform BODY VERIFICATION TEST - VER 1.	All
15	Disconnect the Sliding Door Control Module C2 connector. Disconnect the Sliding Door Latch Sensing Switch connector (latch assembly). Measure the resistance of the Sliding Door Ajar Switch Sense wire between the PSD C2 connector and the Sliding Door Latch Sensing Switch connector. Is the resistance below 5.0 ohms? Yes → Go To 16 No → Repair the Sliding Door Ajar Switch Sense wire for an open. Perform BODY VERIFICATION TEST - VER 1.	All
16	If there are no possible causes remaining, view repair. Repair Replace the Ratchet Switch (latch assembly). Perform BODY VERIFICATION TEST - VER 1.	All
17	Turn the ignition off. Disconnect the Sliding Door Control Module C2 connector. Measure the resistance between the Cinch/Release Motor Latch Driver circuit and the Cinch/Release Motor Unlatch Driver circuit. Wiggle the harness and check for an intermittent open condition. Is the resistance below 2.0 ohms? Yes → Go To 18 No → Go To 19	All
18	Turn the ignition off. Disconnect the Sliding Door Control Module C2 connector. Measure the resistance between ground and the Cinch/Release Motor Latch Driver circuit. Wiggle the harness and check for an intermittent open condition. Is the resistance below 100.0 ohms? Yes → Repair the Cinch/Release Motor Latch Driver circuit for a short to ground. This could be the Cinch/Release Motor Latch Driver or Unlatch Driver or the motor itself. Perform BODY VERIFICATION TEST - VER 1. No → Test Complete.	All

INCOMPLETE POWER CLOSE - LATCH FAILURE — Continued

TEST	ACTION	APPLICABILITY
19	Turn the ignition off. Disconnect the Sliding Door Control Module C2 connector. Disconnect the Cinch/Release Motor connector. Measure the resistance of the Cinch/Release Motor Latch Driver circuit between the Sliding Door Control Module C2 connector and the Cinch/Release Motor connector. Wiggle the harness and check for an intermittent open condition. Is the resistance below 5.0 ohms? Yes → Go To 20 No → Repair the Cinch/Release Motor Latch Driver wire for an open. Perform BODY VERIFICATION TEST - VER 1.	All
20	Turn the ignition off. Disconnect the Sliding Door Control Module C2 connector. Disconnect the Cinch/Release Motor connector. Measure the resistance of the Cinch/Release Motor Unlatch Driver circuit between the Sliding Door Control Module C2 connector and the Cinch/Release Motor connector. Wiggle the harness and check for an intermittent open condition. Is the resistance below 5.0 ohms? Yes → Go To 21 No → Repair the Cinch/Release Motor Unlatch Driver wire for an open. Perform BODY VERIFICATION TEST - VER 1.	All
21	If there are no possible causes remaining, view repair. Repair Replace the Latch Assembly. Perform BODY VERIFICATION TEST - VER 1.	All

Symptom:
INCOMPLETE POWER CLOSE - OVERCURRENT

When Monitored and Set Condition:

INCOMPLETE POWER CLOSE - OVERCURRENT

When Monitored: Anytime the Power Sliding Door is operating in the closing direction.

Set Condition: The drive motor stall current of over 16 amps has been detected for over 500 ms. during a close operation.

POSSIBLE CAUSES
DTC PRESENT
BINDING DOOR
GROUND CIRCUIT OPEN
SLIDING DOOR CLOSE DRIVER CIRCUIT SHORT TO GROUND
CINCH/RELEASE MOTOR UNLATCH DRIVER CIRCUIT SHORT TO GROUND
DOOR MOTOR CLUTCH DRIVER CIRCUIT SHORT TO GROUND
POWER SLIDING DOOR MOTOR/CLUTCH

TEST	ACTION	APPLICABILITY
1	With the DRBIII®, record and erase DTC's. Turn the ignition off, wait 10 seconds, then turn the ignition on. Operate the power sliding door several times if possible. With the DRBIII®, read DTCs. Does the DRBIII® display INCOMPLETE POWER CLOSE - OVERCURRENT? Yes → Go To 2 No → Using the wiring diagram/schematic as a guide, inspect the wiring and connectors for an intermittent condition. Operate the door several times and check for any binding conditions. Perform BODY VERIFICATION TEST - VER 1.	All
2	Examine the door for proper fit and alignment, loose/ hard or torn seals, worn teeth on the rack and gear (lower drive unit) or anything that would cause an obstruction to proper operation. Manually operate the other sliding door or one of a known good vehicle and notice the effort needed. Compare the effort needed on the disabled vehicle. Does it take more effort to operate the door than it should? Yes → Refer to Service information for the related symptom(s). Perform BODY VERIFICATION TEST - VER 1. No → Go To 3	All

INCOMPLETE POWER CLOSE - OVERCURRENT — Continued

TEST	ACTION	APPLICABILITY
3	Turn the ignition off. Disconnect the Sliding Door Control Module C1 connector. Using a 12-volt test light connected to 12-volts, check the Ground circuit. Wiggle the harness and check for an intermittent open condition. Does the test light illuminate brightly? Yes → Go To 4 No → Repair the Ground circuit for an open. Perform BODY VERIFICATION TEST - VER 1.	All
4	Turn the ignition off. Disconnect the Sliding Door Control Module C1 connector. Measure the resistance between ground and the Sliding Door Close Driver circuit. Wiggle the harness and check for an intermittent short circuit condition. Is the resistance below 1000.0 ohms? Yes → Repair the Sliding Door Close Driver circuit for a short to ground. Perform BODY VERIFICATION TEST - VER 1. No → Go To 5	All
5	Turn the ignition off. Disconnect the Sliding Door Control Module C2 connector. Measure the resistance between ground and the Cinch/Release Motor Unlatch Driver circuit. Wiggle the harness and check for an intermittent open condition. Is the resistance below 1000.0 ohms? Yes → Repair the Cinch/Release Motor Unlatch Driver circuit for a short to ground. Perform BODY VERIFICATION TEST - VER 1. No → Go To 6	All
6	Turn the ignition off. Disconnect the Sliding Door Control Module C2 connector. Measure the resistance between ground and the Door Motor Clutch Driver circuit. Wiggle the harness and check for an intermittent open condition. Is the resistance below 5.0 ohms? Yes → Repair the Door Motor Clutch Driver circuit for a short to ground. Perform BODY VERIFICATION TEST - VER 1. No → Go To 7	All
7	If there are no possible causes remaining, view repair. Repair Replace the Power Sliding Door Motor/Clutch assembly. Perform BODY VERIFICATION TEST - VER 1.	All

Symptom:
INCOMPLETE POWER CLOSE - TIME OUT

When Monitored and Set Condition:

INCOMPLETE POWER CLOSE - TIME OUT

When Monitored: Anytime the Power Sliding Door is operating in the closing direction.

Set Condition: The power close operation was not completed within 20 seconds. This may be caused by very high opening effort. A weak hall effect signal, low motor output or defective clutch could also set this code.

POSSIBLE CAUSES
DTC PRESENT
BINDING DOOR
MOTOR/CLUTCH ASSEMBLY

TEST	ACTION	APPLICABILITY
1	With the DRBIII®, record and erase DTC's. Turn the ignition off, wait 10 seconds, then turn the ignition on. Operate the power sliding door several times from stop to stop - if possible. With the DRBIII®, read ACTIVE DTCs. Does the DRBIII® display INCOMPLETE POWER CLOSE - TIME-OUT? Yes → Go To 2 No → Using the wiring diagram/schematic as a guide, inspect the wiring and connectors for an intermittent condition. Operate the door several times and check for any binding or other obstructions. Perform BODY VERIFICATION TEST - VER 1.	All
2	Examine the door for proper fit and alignment, loose/ hard or torn seals, worn teeth on the rack and gear (lower drive unit) or anything that would cause an obstruction to proper operation. Manually operate the sliding door of a known good vehicle or the other sliding door and notice the effort needed. Compare the effort needed on the disabled door. Does it take more effort to operate the door than it should? Yes → Refer to Service information for the related symptom(s). Perform BODY VERIFICATION TEST - VER 1. No → Replace the Motor/Clutch Assembly. Perform BODY VERIFICATION TEST - VER 1.	All

Symptom:

INCOMPLETE POWER CLOSE- VOLTAGE BELOW MINIMUM LEVEL

When Monitored and Set Condition:

INCOMPLETE POWER CLOSE- VOLTAGE BELOW MINIMUM LEVEL

When Monitored: Whenever the power sliding door is performing a power close operation.

Set Condition: The PSD Module detects that the voltage is below 9.5 volts during the power close operation.

POSSIBLE CAUSES
DTC PRESENT
MODULE VOLTAGE LOW
BINDING SLIDING DOOR
DRB OPERATING VOLTAGE LOW
POWER SLIDING DOOR MODULE - HIGH RESISTANCE
POWER SLIDING DOOR MOTOR

TEST	ACTION	APPLICABILITY
1	With the DRBIII®, record and erase DTC's. Turn the ignition off, wait 10 seconds, then turn the ignition on. Operate the power sliding door several times if possible. With the DRBIII®, read DTCs. Does the DRBIII® display INCOMPLETE POWER CLOSE - VOLTAGE BELOW MINIMUM LEVEL? Yes → Go To 2 No → Using the wiring diagram/schematic as a guide, inspect the wiring and connectors for an intermittent condition. Operate the door several times and check for any binding conditions. Perform BODY VERIFICATION TEST - VER 1.	All
2	Examine the door for proper fit and alignment, loose/ hard or torn seals, worn teeth on the track and gear (lower drive unit) or anything that would cause an obstruction to proper operation. Manually operate the other sliding door or of a known good vehicle and notice the effort needed to open and close. Compare the effort needed on the disabled door. Does it take more effort to operate the sliding door than it should? Yes → Refer to Service information for the related symptom(s). Perform BODY VERIFICATION TEST - VER 1. No → Go To 3	All

INCOMPLETE POWER CLOSE- VOLTAGE BELOW MINIMUM LEVEL — Continued

TEST	ACTION	APPLICABILITY
3	**NOTE: Test the battery to ensure it is fully charged and in good condition before proceeding.** Turn the ignition off. Turn all lights and accessories off. With the DRBIII® in ″Sliding Door″ ″Monitor Display″ ″PCI Bus Info″ read the ″Battery Voltage″ and compare it to the ″PSD Bat Volts Input″. **NOTE: If the difference is greater than 0.5 volts, backprobe the Fused B(+) at the module to verify.** Does the voltage vary more than 0.5 volts? Yes → Using the wiring diagram/schematic as a guide, inspect the wiring and connectors. Locate and repair the reason for the voltage drop. Perform BODY VERIFICATION TEST - VER 1. No → Go To 4	All
4	Turn the ignition off. Turn all lights and accessories off. With the DRBIII® in ″Sliding Door″ ″Monitor Display″ ″PCI Bus Info″ read the ″Battery Voltage″ and compare it to the ″PSD Bat Volts Input″. Operate the power sliding door and observe the voltage difference. **NOTE: If the difference is greater than 1.6 volts, backprobe the Fused B(+) at the module to verify.** Does the voltage vary more than 1.6 volts when the liftgate is operating?? Yes → Using the wiring diagram/schematic as a guide, inspect the wiring and connectors. Locate and repair the reason for the voltage drop. Perform BODY VERIFICATION TEST - VER 1. No → Go To 5	All
5	Turn the ignition off. Turn all lights and accessories off. Remove the sliding door trim panel to gain access to the Power Sliding Door Module. Backprobe voltmeter leads between the Fused B(+) and the Sliding Door Close Driver circuits in the PSD C1 connector. Open the sliding door. Operate the power sliding door in the CLOSE position and observe the voltage difference. Does the voltage vary more than 0.2 volts when the sliding door is closing? Yes → Replace the Power Sliding Door Module. Perform BODY VERIFICATION TEST - VER 1. No → Go To 6	All
6	If there are no possible causes remaining, view repair. Repair Check the wiring and connections from the module to the motor for high resistance. If the wiring is okay, replace the Power Sliding Door Motor assembly. Perform BODY VERIFICATION TEST - VER 1.	All

Symptom:
INCOMPLETE POWER OPEN - FULL OPEN SWITCH FAILURE

When Monitored and Set Condition:

INCOMPLETE POWER OPEN - FULL OPEN SWITCH FAILURE

When Monitored: Whenever the power sliding door is operating in the opening direction.

Set Condition: The Full Open Switch was detected as closed before 200 hall effect pulses were counted since the start of the open operation.

POSSIBLE CAUSES
DTC PRESENT
STICKING CABLES OR SWITCH
FULL OPEN SWITCH SENSE CIRCUIT SHORT TO GROUND
FULL OPEN SWITCH

TEST	ACTION	APPLICABILITY
1	With the DRBIII®, record and erase DTC's. Turn the ignition off, wait 10 seconds, then turn the ignition on. Operate the power sliding door several times if possible. With the DRBIII®, read ACTIVE DTCs. Does the DRBIII® display INCOMPLETE POWER OPEN - FULL OPEN SWITCH FAILURE? Yes → Go To 2 No → Using the wiring diagram/schematic as a guide, inspect the wiring and connectors for an intermittent condition. Operate the door several times and check for any binding cables or other obstructions. Perform BODY VERIFICATION TEST - VER 1.	All
2	Examine the door for proper fit and alignment, foreign material in the lower drive unit or anything that would cause an obstruction to proper operation of the Full Open Switch. With the DRBIII® in Inputs/Outputs, read the FULL OPEN SWITCH state. Manually operate the door handle while monitoring the DRBIII®. Does the switch status change smoothly as the handle is pulled and released? Yes → Go To 3 No → Refer to Service information for the related symptom(S). Perform BODY VERIFICATION TEST - VER 1.	All

INCOMPLETE POWER OPEN - FULL OPEN SWITCH FAILURE — Continued

TEST	ACTION	APPLICABILITY
3	With the DRBIII® in Inputs/Outputs, read the FULL OPEN SWITCH state. Open the Sliding Door to mid position. While monitoring the DRBIII®, wiggle the wiring harness from the Power Sliding Door Module to the Full Open Switch on the lower drive unit. Did the switch status ever change? Yes → Repair the Full Open Switch Sense circuit for a short to ground. Perform BODY VERIFICATION TEST - VER 1. No → Go To 4	All
4	If there are no possible causes remaining, view repair. Repair Replace the Full Open Switch (lower drive unit). Perform BODY VERIFICATION TEST - VER 1.	All

Symptom:

INCOMPLETE POWER OPEN - EXCESSIVE HALL EFFECT SIGNAL

When Monitored and Set Condition:

INCOMPLETE POWER OPEN - EXCESSIVE HALL EFFECT SIGNAL

When Monitored: Anytime the power sliding door is in the opening cycle.

Set Condition: If the PSD Module detects an excessive hall effect signal or a missing hall effect signal for longer than 300 ms. during an opening operation, this code will set. This is a redundant safety feature in the software and will set if the obstacle detection feature becomes inoperative due to a hall effect sensor or connector malfunction.

POSSIBLE CAUSES
DTC PRESENT
POWER SLIDING DOOR MODULE - HALL EFFECT OPEN
LOWER DRIVE UNIT
BINDING DOOR
HALL EFFECT GROUND CIRCUIT OPEN
DOOR MOTOR HALL EFFECT SUPPLY WIRE OPEN
DOOR MOTOR HALL EFFECT SUPPLY WIRE SHORT TO GROUND
DOOR MOTOR HALL EFFECT SIGNAL WIRE OPEN
DOOR MOTOR HALL EFFECT SIGNAL WIRE SHORT TO GROUND
DOOR MOTOR ASSEMBLY

TEST	ACTION	APPLICABILITY
1	With the DRBIII®, record and erase DTC's. Turn the ignition off, wait 10 seconds, then turn the ignition on. Operate the power sliding door several times from stop to stop if possible. With the DRBIII®, read ACTIVE DTCs. Does the DRBIII® display INCOMPLETE POWER OPEN - EXCESSIVE HALL EFFECT SIGNAL? Yes → Go To 2 No → Using the wiring diagram/schematic as a guide, inspect the wiring and connectors for an intermittent condition. Operate the door several times and check for any binding conditions. Perform BODY VERIFICATION TEST - VER 1.	All

INCOMPLETE POWER OPEN - EXCESSIVE HALL EFFECT SIGNAL — Continued

TEST	ACTION	APPLICABILITY
2	Examine the door for proper fit and alignment, loose/ hard or torn seals, worn teeth on the track and gear (lower drive unit) or anything that would cause an obstruction to proper operation. Manually operate the sliding door on the other side or of a known good vehicle and notice the effort needed to open and close. Compare the effort needed on the disabled door. Does it take more effort to operate the door than it should? Yes → Refer to Service information for the related symptom(s). Perform BODY VERIFICATION TEST - VER 1. No → Go To 3	All
3	Examine the Lower Drive Unit for alignment and gear condition. Manually operate the sliding door and observe the gear and track. Is the Lower Drive Unit and Track in good condition? Yes → Go To 4 No → Replace the Lower Drive Unit and Track as necessary. Perform BODY VERIFICATION TEST - VER 1.	All
4	Operate the door from the full closed position and put an obstacle in it's path to make it reverse. Did the door reverse back to the closed position? Yes → Go To 5 No → Replace the Power Sliding Door Module. Perform BODY VERIFICATION TEST - VER 1.	All
5	Disconnect the Sliding Door Motor connector. Using a 12-volt test light connected to 12-volts, check the Ground circuit. Does the test light illuminate brightly? Yes → Go To 6 No → Repair the hall effect ground circuit for an open. Perform BODY VERIFICATION TEST - VER 1.	All
6	Disconnect the Sliding Door Motor connector. Disconnect the Sliding Door Control Module C2 connector. Measure the resistance of the Door Motor Hall Effect Supply circuit between the Sliding Door Motor connector and the PSD Module C2 connector. Is the resistance below 5.0 ohms? Yes → Go To 7 No → Repair the Door Motor Hall Effect Supply wire for an open. Perform BODY VERIFICATION TEST - VER 1.	All
7	Disconnect the Sliding Door Motor connector. Disconnect the Sliding Door Control Module C2 connector. Measure the resistance between ground and the Door Motor Hall Effect Supply circuit. Is the resistance below 100.0 ohms? Yes → Repair the Door Motor Hall Effect Supply wire for a short to ground. Perform BODY VERIFICATION TEST - VER 1. No → Go To 8	All

INCOMPLETE POWER OPEN - EXCESSIVE HALL EFFECT SIGNAL — Continued

TEST	ACTION	APPLICABILITY
8	Disconnect the Sliding Door Motor connector. Disconnect the Sliding Door Control Module C2 connector. Measure the resistance of the Door Motor Hall Effect Signal circuit between the Sliding Door Motor connector and the PSD Module C2 connector. Is the resistance below 5.0 ohms? Yes → Go To 9 No → Repair the Door Motor Hall Effect Signal wire for an open. Perform BODY VERIFICATION TEST - VER 1.	All
9	Disconnect the Sliding Door Motor connector. Disconnect the Sliding Door Control Module C2 connector. Measure the resistance between ground and the Door Motor Hall Effect Signal circuit. Is the resistance below 100.0 ohms? Yes → Repair the Door Motor Hall Effect Signal wire for a short to ground. Perform BODY VERIFICATION TEST - VER 1. No → Go To 10	All
10	If there are no possible causes remaining, view repair. Repair Replace the Power Sliding Door Motor Assembly (hall effect switch). Perform BODY VERIFICATION TEST - VER 1.	All

Symptom:
INCOMPLETE POWER OPEN - LATCH FAILURE

When Monitored and Set Condition:

INCOMPLETE POWER OPEN - LATCH FAILURE

When Monitored: Whenever the power sliding door is operating in the opening direction.

Set Condition: The power open operation was not completed due to latch failure. This DTC is set during a power open cycle.

POSSIBLE CAUSES
DTC PRESENT
BINDING DOOR
CINCH/RELEASE MOTOR LATCH DRIVER CIRCUIT SHORT TO GROUND
CINCH/RELEASE MOTOR LATCH DRIVER WIRE OPEN
CINCH/RELEASE MOTOR UNLATCH DRIVER WIRE OPEN
POWER SLIDING DOOR MODULE - FULL OPEN CIRCUIT OPEN
POWER SLIDING DOOR MODULE - PAWL CIRCUIT OPEN
POWER SLIDING DOOR MODULE - RATCHET CIRCUIT OPEN
FULL OPEN SWITCH SENSE WIRE OPEN
PAWL SWITCH SENSE WIRE OPEN
SLIDING DOOR AJAR SWITCH SENSE WIRE OPEN
FULL OPEN SWITCH SENSE WIRE SHORT TO GROUND
FULL OPEN SWITCH
LATCH ASSEMBLY
LATCH ASSEMBLY
PAWL SWITCH
RATCHET SWITCH

TEST	ACTION	APPLICABILITY
1	With the DRBIII®, record and erase DTC's. Turn the ignition off, wait 10 seconds, then turn the ignition on. Operate the power sliding door several times if possible. With the DRBIII®, read ACTIVE DTCs. Does the DRBIII® display INCOMPLETE POWER OPEN - LATCH FAILURE? Yes → Go To 2 No → Using the wiring diagram/schematic as a guide, inspect the wiring and connectors for an intermittent condition. Operate the door several times and check for any binding or other obstructions. Perform BODY VERIFICATION TEST - VER 1.	All

INCOMPLETE POWER OPEN - LATCH FAILURE — Continued

TEST	ACTION	APPLICABILITY
2	Examine the door for proper fit and alignment, loose/ hard or torn seals, worn teeth on the rack and gear (lower drive unit) or anything that would cause an obstruction to proper operation. Manually operate the other sliding door or of a known good vehicle and notice the effort needed to open and close. Compare the effort needed on the disabled door. Does it take more effort to operate the door than it should? Yes → Refer to Service information for the related symptom(s). Perform BODY VERIFICATION TEST - VER 1. No → Go To 3	All
3	With the DRBIII® in Inputs/Outputs, read the PAWL, RATCHET and FULL OPEN switch state. While observing the FULL OPEN switch state, manually move the door from full open to part open. The switch should toggle from CLOSED to OPEN. Move the door to the full open position. While observing the PAWL switch state, click the latch with a screwdriver to the first detent. The PAWL should toggle from CLOSED to OPEN. Move the door to the full open position. While observing the RATCHET switch state, click the latch with a screwdriver to the second detent. The RATCHET should toggle from CLOSED to OPEN. Repeat the above steps several times. Select which switch failed: FULL OPEN Switch Go To 4 PAWL Switch Go To 8 RATCHET Switch Go To 11 All switches operated properly. Go To 14	All
4	Disconnect the Sliding Door Control Module C2 connector. Measure the resistance between ground and the Full Open Switch Sense circuit. Open the sliding door completely then partially close it. Repeat this step while observing the ohmmeter. Did the resistance change from below 15 ohms to above 1000.0 ohms while moving the door? Yes → Replace the Power Sliding Door Module. Perform BODY VERIFICATION TEST - VER 1. No → Go To 5	All
5	Disconnect the Sliding Door Control Module C2 connector. Disconnect the Full open Switch Sense wire at the lower drive unit. Measure the resistance of the Full Open Switch Sense wire between the PSD C2 connector and the Full Open Switch connector. Is the resistance below 5.0 ohms? Yes → Go To 6 No → Repair the Full Open Switch Sense wire for an open. Perform BODY VERIFICATION TEST - VER 1.	All

INCOMPLETE POWER OPEN - LATCH FAILURE — Continued

TEST	ACTION	APPLICABILITY
6	Disconnect the Sliding Door Control Module C2 connector. Disconnect the Full open Switch Sense wire at the lower drive unit. Measure the resistance between ground and the Full Open Switch Sense circuit. Is the resistance below 1000.0 ohms? Yes → Repair the Full Open Switch Sense wire for a short to ground. Perform BODY VERIFICATION TEST - VER 1. No → Go To 7	All
7	If there are no possible causes remaining, view repair. Repair Replace the Full Open Switch (lower drive unit). Perform BODY VERIFICATION TEST - VER 1.	All
8	Disconnect the Sliding Door Control Module C2 connector. Measure the resistance between ground and the Pawl Switch Sense circuit. Open the sliding door completely. Using a screwdriver, close the latch to the first detent while observing the ohmmeter. Release the latch with the handle. Repeat this step while observing the ohmmeter. Did the resistance change from below 15 ohms to above 1000.0 ohms while moving the door? Yes → Replace the Power Sliding Door Module. Perform BODY VERIFICATION TEST - VER 1. No → Go To 9	All
9	Disconnect the Sliding Door Control Module C2 connector. Disconnect the Sliding Door Latch Sensing Switch connector (latch assembly). Measure the resistance of the Pawl Switch Sense wire between the PSD C2 connector and the Sliding Door Latch Sensing Switch connector. Is the resistance below 5.0 ohms? Yes → Go To 10 No → Repair the Pawl Switch Sense wire for an open. Perform BODY VERIFICATION TEST - VER 1.	All
10	If there are no possible causes remaining, view repair. Repair Replace the Pawl Switch (latch assembly). Perform BODY VERIFICATION TEST - VER 1.	All
11	Disconnect the Sliding Door Control Module C2 connector. **NOTE: The Sliding Door Ajar Switch Sense circuit is also the Ratchet Switch Sense circuit on power doors.** Measure the resistance between ground and the Sliding Door Ajar Switch Sense circuit. Open the sliding door completely. Using a screwdriver, close the latch to the second detent while observing the ohmmeter. Release the latch with the handle. Repeat this step while observing the ohmmeter. Did the resistance change from below 15 ohms to above 1000.0 ohms when the latch changed states? Yes → Replace the Power Sliding Door Module. Perform BODY VERIFICATION TEST - VER 1. No → Go To 12	All

INCOMPLETE POWER OPEN - LATCH FAILURE — Continued

TEST	ACTION	APPLICABILITY
12	Disconnect the Sliding Door Control Module C2 connector. Disconnect the Sliding Door Latch Sensing Switch connector (latch assembly). Measure the resistance of the Sliding Door Ajar Switch Sense wire between the PSD C2 connector and the Sliding Door Latch Sensing Switch connector. Is the resistance below 5.0 ohms? Yes → Go To 13 No → Repair the Sliding Door Ajar Switch Sense wire for an open. Perform BODY VERIFICATION TEST - VER 1.	All
13	If there are no possible causes remaining, view repair. Repair Replace the Ratchet Switch (latch assembly). Perform BODY VERIFICATION TEST - VER 1.	All
14	Turn the ignition off. Disconnect the Sliding Door Control Module C2 connector. Measure the resistance between the Cinch/Release Motor Latch Driver circuit and the Cinch/Release Motor Unlatch Driver circuit. Wiggle the harness and check for an intermittent open condition. Is the resistance below 2.0 ohms? Yes → Go To 15 No → Go To 16	All
15	Turn the ignition off. Disconnect the Sliding Door Control Module C2 connector. Measure the resistance between ground and the Cinch/Release Motor Latch Driver circuit. Wiggle the harness and check for an intermittent open condition. Is the resistance below 100.0 ohms? Yes → Repair the Cinch/Release Motor Latch Driver circuit for a short to ground. This could be the Cinch/Release Motor Latch Driver or Unlatch Driver or the motor itself. Perform BODY VERIFICATION TEST - VER 1. No → Replace the Latch Assembly. Perform BODY VERIFICATION TEST - VER 1.	All
16	Turn the ignition off. Disconnect the Sliding Door Control Module C2 connector. Disconnect the Cinch/Release Motor connector. Measure the resistance of the Cinch/Release Motor Latch Driver circuit between the Sliding Door Control Module C2 connector and the Cinch/Release Motor connector. Wiggle the harness and check for an intermittent open condition. Is the resistance below 5.0 ohms? Yes → Go To 17 No → Repair the Cinch/Release Motor Latch Driver wire for an open. Perform BODY VERIFICATION TEST - VER 1.	All

INCOMPLETE POWER OPEN - LATCH FAILURE — Continued

TEST	ACTION	APPLICABILITY
17	Turn the ignition off. Disconnect the Sliding Door Control Module C2 connector. Disconnect the Cinch/Release Motor connector. Measure the resistance of the Cinch/Release Motor Unlatch Driver circuit between the Sliding Door Control Module C2 connector and the Cinch/Release Motor connector. Wiggle the harness and check for an intermittent open condition. Is the resistance below 5.0 ohms? Yes → Go To 18 No → Repair the Cinch/Release Motor Unlatch Driver wire for an open. Perform BODY VERIFICATION TEST - VER 1.	All
18	If there are no possible causes remaining, view repair. Repair Replace the Latch Assembly. Perform BODY VERIFICATION TEST - VER 1.	All

Symptom:
INCOMPLETE POWER OPEN - OVERCURRENT

When Monitored and Set Condition:

INCOMPLETE POWER OPEN - OVERCURRENT

When Monitored: Anytime the Power Sliding Door is in a power open operation.

Set Condition: The drive motor stall current of over 16 amps has been detected for over 500 ms. during an open operation.

POSSIBLE CAUSES
DTC PRESENT
BINDING DOOR
GROUND CIRCUIT OPEN
SLIDING DOOR OPEN DRIVER CIRCUIT SHORT TO GROUND
CINCH/RELEASE MOTOR LATCH DRIVER CIRCUIT OPEN
CINCH/RELEASE MOTOR LATCH DRIVER CIRCUIT SHORT TO GROUND
DOOR MOTOR CLUTCH DRIVER CIRCUIT SHORT TO GROUND
POWER SLIDING DOOR MOTOR/CLUTCH

TEST	ACTION	APPLICABILITY
1	With the DRBIII®, record and erase DTC's. Turn the ignition off, wait 10 seconds, then turn the ignition on. Operate the power sliding door several times if possible. With the DRBIII®, read DTCs. Does the DRBIII® display INCOMPLETE POWER OPEN - OVERCURRENT? Yes → Go To 2 No → Using the wiring diagram/schematic as a guide, inspect the wiring and connectors for an intermittent condition. Operate the door several times and check for any binding conditions. Perform BODY VERIFICATION TEST - VER 1.	All
2	Examine the door for proper fit and alignment, loose/ hard or torn seals, worn teeth on the rack and gear (lower drive unit) or anything that would cause an obstruction to proper operation. Manually operate the sliding door of a known good vehicle and notice the effort needed. Compare the effort needed on the disabled vehicle. Does it take more effort to operate the door than it should? Yes → Refer to Service information for the related symptom(s). Perform BODY VERIFICATION TEST - VER 1. No → Go To 3	All

INCOMPLETE POWER OPEN - OVERCURRENT — Continued

TEST	ACTION	APPLICABILITY
3	Turn the ignition off. Disconnect the Sliding Door Control Module C1 connector. Using a 12-volt test light connected to 12-volts, check the Ground circuit. Wiggle the harness and check for an intermittent open condition. Does the test light illuminate brightly? Yes → Go To 4 No → Repair the Ground circuit for an open. Perform BODY VERIFICATION TEST - VER 1.	All
4	Turn the ignition off. Disconnect the Sliding Door Control Module C1 connector. Measure the resistance between ground and the Sliding Door Open Driver circuit. Wiggle the harness and check for an intermittent short circuit condition. Is the resistance below 1000.0 ohms? Yes → Repair the Sliding Door Open Driver circuit for a short to ground. Perform BODY VERIFICATION TEST - VER 1. No → Go To 5	All
5	Turn the ignition off. Disconnect the Sliding Door Control Module C2 connector. Measure the resistance between the Cinch/Release Motor Latch Driver circuit and the Cinch/Release Motor Unlatch Driver circuit. Wiggle the harness and check for an intermittent open condition. Is the resistance below 2.0 ohms? Yes → Go To 6 No → Repair the Cinch/Release Motor Latch Driver circuit for an open. Perform BODY VERIFICATION TEST - VER 1.	All
6	Turn the ignition off. Disconnect the Sliding Door Control Module C2 connector. Measure the resistance between ground and the Cinch/Release Motor Latch Driver circuit. Wiggle the harness and check for an intermittent short condition. Is the resistance below 100.0 ohms? Yes → Repair the Cinch/Release Motor Latch Driver circuit for a short to ground. Perform BODY VERIFICATION TEST - VER 1. No → Go To 7	All
7	Turn the ignition off. Disconnect the Sliding Door Control Module C2 connector. Measure the resistance between ground and the Door Motor Clutch Driver circuit. Wiggle the harness and check for an intermittent short condition. Is the resistance below 100.0 ohms? Yes → Repair the Door Motor Clutch Driver circuit for a short to ground. Perform BODY VERIFICATION TEST - VER 1. No → Go To 8	All
8	If there are no possible causes remaining, view repair. Repair Replace the Power Sliding Door Motor/Clutch assembly. Perform BODY VERIFICATION TEST - VER 1.	All

Symptom:

INCOMPLETE POWER OPEN - TIME OUT

When Monitored and Set Condition:

INCOMPLETE POWER OPEN - TIME OUT

When Monitored: Anytime the Power Sliding Door is operating in an opening operation.

Set Condition: The power open operation was not completed within 20 seconds. This may be caused by very high opening effort. A weak hall effect signal, low motor output or defective clutch could also set this code.

POSSIBLE CAUSES
DTC PRESENT
BINDING DOOR
MOTOR/CLUTCH ASSEMBLY

TEST	ACTION	APPLICABILITY
1	With the DRBIII®, record and erase DTC's. Turn the ignition off, wait 10 seconds, then turn the ignition on. Operate the power sliding door several times if possible. With the DRBIII®, read ACTIVE DTCs. Does the DRBIII® display INCOMPLETE POWER OPEN - TIME-OUT? Yes → Go To 2 No → Using the wiring diagram/schematic as a guide, inspect the wiring and connectors for an intermittent condition. Operate the door several times and check for any binding conditions. Perform BODY VERIFICATION TEST - VER 1.	All
2	Examine the door for proper fit and alignment, loose/ hard or torn seals, worn teeth on the rack and gear (lower drive unit) or anything that would cause an obstruction to proper operation. Manually operate the sliding door of a known good vehicle and notice the effort needed. Compare the effort needed on the disabled vehicle. Does it take more effort to operate the door than it should? Yes → Refer to Service information for the related symptom(s). Perform BODY VERIFICATION TEST - VER 1. No → Replace the Motor/Clutch Assembly. Perform BODY VERIFICATION TEST - VER 1.	All

Symptom:

INCOMPLETE POWER OPEN - VOLTAGE BELOW MINIMUM LEVEL

When Monitored and Set Condition:

INCOMPLETE POWER OPEN - VOLTAGE BELOW MINIMUM LEVEL

When Monitored: Whenever the power sliding door is performing a power open operation.

Set Condition: The PSD Module detects that the voltage is below 9.5 volts during the power open operation.

POSSIBLE CAUSES
DTC PRESENT
MODULE VOLTAGE LOW
BINDING SLIDING DOOR
DRB OPERATING VOLTAGE LOW
POWER SLIDING DOOR MODULE - HIGH RESISTANCE
POWER SLIDING DOOR MOTOR

TEST	ACTION	APPLICABILITY
1	With the DRBIII®, record and erase DTC's. Turn the ignition off, wait 10 seconds, then turn the ignition on. Operate the power sliding door several times if possible. With the DRBIII®, read DTCs. Does the DRBIII® display INCOMPLETE POWER OPEN - VOLTAGE BELOW MINIMUM LEVEL? Yes → Go To 2 No → Using the wiring diagram/schematic as a guide, inspect the wiring and connectors for an intermittent condition. Operate the door several times and check for any binding conditions. Perform BODY VERIFICATION TEST - VER 1.	All
2	Examine the door for proper fit and alignment, loose/ hard or torn seals, worn teeth on the track and gear (lower drive unit) or anything that would cause an obstruction to proper operation. Manually operate the other sliding door or of a known good vehicle and notice the effort needed to open and close. Compare the effort needed on the disabled door. Does it take more effort to operate the sliding door than it should? Yes → Refer to Service information for the related symptom(s). Perform BODY VERIFICATION TEST - VER 1. No → Go To 3	All

INCOMPLETE POWER OPEN - VOLTAGE BELOW MINIMUM LEVEL — Continued

TEST	ACTION	APPLICABILITY
3	**NOTE: Test the battery to ensure it is fully charged and in good condition before proceeding.** Turn the ignition off. Turn all lights and accessories off. With the DRBIII® in ″Sliding Door″ ″Monitor Display″ ″PCI Bus Info″ read the ″Battery Voltage″ and compare it to the ″PSD Bat Volts Input″. **NOTE: If the difference is greater than 0.5 volts, backprobe the Fused B(+) at the module to verify.** Does the voltage vary more than 0.5 volts? Yes → Using the wiring diagram/schematic as a guide, inspect the wiring and connectors. Locate and repair the reason for the voltage drop. Perform BODY VERIFICATION TEST - VER 1. No → Go To 4	All
4	Turn the ignition off. Turn all lights and accessories off. With the DRBIII® in ″Sliding Door″ ″Monitor Display″ ″PCI Bus Info″ read the ″Battery Voltage″ and compare it to the ″PSD Bat Volts Input″. Operate the power sliding door and observe the voltage difference. **NOTE: If the difference is greater than 1.6 volts, backprobe the Fused B(+) at the module to verify.** Does the voltage vary more than 1.6 volts when the liftgate is operating?? Yes → Using the wiring diagram/schematic as a guide, inspect the wiring and connectors. Locate and repair the reason for the voltage drop. Perform BODY VERIFICATION TEST - VER 1. No → Go To 5	All
5	Turn the ignition off. Turn all lights and accessories off. Remove the sliding door trim panel to gain access to the Power Sliding Door Module. Backprobe voltmeter leads between the Fused B(+) and the Sliding Door Open Driver circuits in the PSD C1 connector. Close the sliding door. Operate the power sliding door in the OPEN position and observe the voltage difference. Does the voltage vary more than 0.2 volts when the sliding door is opening? Yes → Replace the Power Sliding Door Module. Perform BODY VERIFICATION TEST - VER 1. No → Go To 6	All
6	If there are no possible causes remaining, view repair. Repair Check the wiring and connections from the module to the motor for high resistance. If the wiring is okay, replace the Power Sliding Door Motor assembly. Perform BODY VERIFICATION TEST - VER 1.	All

Symptom:

IOD WAKE UP OPEN - PSD

When Monitored and Set Condition:

IOD WAKE UP OPEN - PSD

When Monitored: Anytime the Body Control Module is awake.

Set Condition: If the BCM does not sense a signal circuit from the Sliding Door Module this code will set.

POSSIBLE CAUSES
DTC PRESENT
BODY CONTROL MODULE - IOD WAKE UP OPEN
SLIDING DOOR WAKE UP SIGNAL WIRE OPEN
LIFTGATE MODULE WAKE UP SIGNAL WIRE SHORT TO GROUND
SLIDING DOOR WAKE UP SIGNAL WIRE SHORT TO GROUND
SLIDING DOOR MODULE - IOD WAKE UP OPEN

TEST	ACTION	APPLICABILITY
1	With the DRBIII®, record and erase DTC's. Turn the ignition off, wait 10 seconds, then turn the ignition on. Wait 10 seconds. With the DRBIII®, read DTCs. Does the DRBIII® display IOD WAKE UP OPEN? Yes → Go To 2 No → Using the wiring diagram/schematic as a guide, inspect the wiring and connectors for an intermittent condition. Perform BODY VERIFICATION TEST - VER 1.	All
2	Disconnect the BCM C3 connector. Measure the voltage between the appropriate Sliding Door Wake Up Signal circuit and ground. Is the voltage above 10.0 volts? Yes → Replace the Body Control Module. Perform BODY VERIFICATION TEST - VER 1. No → Go To 3	All

IOD WAKE UP OPEN - PSD — Continued

TEST	ACTION	APPLICABILITY
3	Disconnect the Body Control Module C3 connector. Disconnect the appropriate Sliding Door Control Module C2 connector. Measure the resistance of the appropriate Sliding Door Wake Up Signal circuit between the BCM C3 connector and the Sliding Door Control Module C2 connector. Is the resistance below 5.0 ohms? Yes → Go To 4 No → Repair the appropriate Sliding Door Wake Up Signal wire for an open. Perform BODY VERIFICATION TEST - VER 1.	All
4	Disconnect the Body Control Module C2 connector. Disconnect the Power Liftgate Module C2 connector. Measure the resistance between the Liftgate Module Wake Up Signal circuit and ground. Is the resistance below 100.0 ohms? Yes → Repair the Liftgate Module Wake Up Signal wire for a short to ground. Perform BODY VERIFICATION TEST - VER 1. No → Go To 5	All
5	**NOTE: If this vehicle is equipped with 2 power sliding doors, this test must be repeated for each door.** Disconnect the Body Control Module C3 connector. Disconnect the appropriate Sliding Door Control Module C2 connector. Measure the resistance between the appropriate Sliding Door Wake Up Signal circuit and ground. Is the resistance below 100.0 ohms? Yes → Repair the appropriate Sliding Door Wake Up Signal wire for a short to ground. Perform BODY VERIFICATION TEST - VER 1. No → Go To 6	All
6	If there are no possible causes remaining, view repair. Repair Replace the Sliding Door Module. Perform BODY VERIFICATION TEST - VER 1.	All

Symptom:

IOD WAKE UP PSD & PLG SHORT

When Monitored and Set Condition:

IOD WAKE UP PSD & PLG SHORT

When Monitored: Anytime the Body Control Module is awake.

Set Condition: If the BCM senses an over current signal on any of the Wake Up Signal circuits this code will set.

POSSIBLE CAUSES
DTC PRESENT
BODY CONTROL MODULE - IOD WAKE UP SHORT
LEFT SLIDING DOOR WAKE UP SIGNAL WIRE SHORT TO VOLTAGE
LIFTGATE MODULE WAKE UP SIGNAL WIRE SHORT TO VOLTAGE
RIGHT SLIDING DOOR WAKE UP SIGNAL WIRE SHORT TO VOLTAGE
LEFT SLIDING DOOR MODULE - IOD WAKE UP SHORT TO VOLTAGE
POWER LIFTGATE MODULE - IOD WAKE UP SHORT TO VOLTAGE
RIGHT SLIDING DOOR MODULE - IOD WAKE UP SHORT TO VOLTAGE

TEST	ACTION	APPLICABILITY
1	With the DRBIII®, record and erase DTC's. Turn the ignition off, wait 1 minute then turn the ignition on. Wait 10 seconds. With the DRBIII®, read DTCs. Does the DRBIII® display IOD WAKE UP SHORT? Yes → Go To 2 No → Using the wiring diagram/schematic as a guide, inspect the wiring and connectors for an intermittent condition. Perform BODY VERIFICATION TEST - VER 1.	All
2	Disconnect the BCM C2 and C3 connectors. Using a 12-volt test light connected to ground, check each Wake Up Signal circuit. On which circuit did the test light illuminate? Left Sliding Door Wake Up Signal. Go To 3 Right Sliding Door Wake Up Signal. Go To 4 Liftgate Module Wake Up Signal. Go To 5 Did not illuminate. Replace the Body Control Module. Perform BODY VERIFICATION TEST - VER 1.	All

IOD WAKE UP PSD & PLG SHORT — Continued

TEST	ACTION	APPLICABILITY
3	Disconnect the Body Control Module C3 connector. Disconnect the Left Sliding Door Control Module C2 connector. Measure the voltage between the Left Sliding Door Wake Up Signal circuit and ground. Is there any voltage present? Yes → Repair the Left Sliding Door Wake Up Signal wire for a short to voltage. Perform BODY VERIFICATION TEST - VER 1. No → Replace the Sliding Door Module. Perform BODY VERIFICATION TEST - VER 1.	All
4	Disconnect the Body Control Module C3 connector. Disconnect the Right Sliding Door Control Module C2 connector. Measure the voltage between the Right Sliding Door Wake Up Signal circuit and ground. Is there any voltage present? Yes → Repair the Right Sliding Door Wake Up Signal wire for a short to voltage. Perform BODY VERIFICATION TEST - VER 1. No → Replace the Sliding Door Module. Perform BODY VERIFICATION TEST - VER 1.	All
5	Disconnect the Body Control Module C2 connector. Disconnect the Power Liftgate Module C2 connector. Measure the voltage between the Liftgate Module Wake Up Signal circuit and ground. Is there any voltage present? Yes → Repair the Liftgate Module Wake Up Signal wire for a short to voltage. Perform BODY VERIFICATION TEST - VER 1. No → Replace the Power Liftgate Module. Perform BODY VERIFICATION TEST - VER 1.	All

Symptom:

LEFT B-PILLAR SWITCH INPUT OPEN OR SHORT TO VOLTAGE

When Monitored and Set Condition:

LEFT B-PILLAR SWITCH INPUT OPEN OR SHORT TO VOLTAGE

When Monitored: Continuously when the BCM is awake.

Set Condition: When the BCM senses an input greater than 4.8 volts for over 10 seconds.

POSSIBLE CAUSES
DTC PRESENT
LEFT SLIDING DOOR PILLAR SWITCH MUX CIRCUIT SHORT TO VOLTAGE
GROUND CIRCUIT OPEN
LEFT SLIDING DOOR PILLAR SWITCH MUX WIRE OPEN
LEFT B-PILLAR SWITCH OPEN
BODY CONTROL MODULE - LEFT SLIDING DOOR PILLAR SWITCH OPEN

TEST	ACTION	APPLICABILITY
1	With the DRBIII®, record and erase DTC's. Turn the ignition off, wait 10 seconds, then turn the ignition on. Operate the left power sliding door from the Left B-Pillar Switch. With the DRBIII®, read DTCs. Does the DRBIII® display LEFT B-PILLAR SWITCH INPUT OPEN OR SHORT TO VOLTAGE? Yes → Go To 2 No → Using the wiring diagram/schematic as a guide, inspect the wiring and connectors for an intermittent condition. Perform BODY VERIFICATION TEST - VER 1.	All
2	Disconnect the Body Control Module C3 connector. Measure the voltage between Left Sliding Door Pillar Switch Mux circuit and ground. Is there any voltage present? Yes → Repair the Left Sliding Door Pillar Switch Mux circuit for a short to voltage. Perform BODY VERIFICATION TEST - VER 1. No → Go To 3	All
3	Disconnect the Body Control Module C3 connector. Measure the resistance between Left Sliding Door Pillar Switch Mux circuit and ground. Is the resistance below 20500.0 ohms? Yes → Replace the Body Control Module. Perform BODY VERIFICATION TEST - VER 1. No → Go To 4	All

LEFT B-PILLAR SWITCH INPUT OPEN OR SHORT TO VOLTAGE — Continued

TEST	ACTION	APPLICABILITY
4	Disconnect the B-Pillar Switch connector. Using a 12-volt test light connected to 12-volts, check the Ground circuit in the B-Pillar Switch connector. Does the test light illuminate brightly? Yes → Go To 5 No → Repair the Ground circuit for an open. Perform BODY VERIFICATION TEST - VER 1.	All
5	Disconnect the Body Control Module C3 connector. Disconnect the Left B-Pillar Switch connector. Measure the resistance of the Left Sliding Door Pillar Switch Mux circuit between the BCM C3 connector and the Left B-Pillar Switch connector. Is the resistance below 5.0 ohms? Yes → Go To 6 No → Repair the Left Sliding Door Pillar Switch Mux wire for an open. Perform BODY VERIFICATION TEST - VER 1.	All
6	If there are no possible causes remaining, view repair. Repair Replace the B-Pillar Switch. Perform BODY VERIFICATION TEST - VER 1.	All

Symptom:
LEFT B-PILLAR SWITCH INPUT SHORT

When Monitored and Set Condition:

LEFT B-PILLAR SWITCH INPUT SHORT

When Monitored: Continuously when the BCM is awake.

Set Condition: When the BCM senses a B-pillar switch input less than .24 volts for over 10 seconds.

POSSIBLE CAUSES
DTC PRESENT
LEFT B-PILLAR SWITCH SHORTED
LEFT SLIDING DOOR PILLAR SWITCH MUX WIRE SHORT TO GROUND
BODY CONTROL MODULE - LEFT SLIDING DOOR PILLAR SWITCH CIRCUIT SHORTED

TEST	ACTION	APPLICABILITY
1	With the DRBIII®, record and erase DTC's. Turn the ignition off, wait 10 seconds, then turn the ignition on. Operate the left power sliding door from the Left B-Pillar Switch. With the DRBIII®, read DTCs. Does the DRBIII® display LEFT B-PILLAR SWITCH INPUT SHORT? Yes → Go To 2 No → Using the wiring diagram/schematic as a guide, inspect the wiring and connectors for an intermittent condition. Perform BODY VERIFICATION TEST - VER 1.	All
2	Disconnect the Left B-Pillar Switch connector. With the DRBIII®, erase DTCs. Turn the ignition off, wait 10 seconds, then turn the ignition on. Wait 10 seconds. With the DRBIII®, read DTCs. Does the DRBIII® display LEFT B-PILLAR SWITCH INPUT OPEN? Yes → Replace the B-Pillar Switch. Perform BODY VERIFICATION TEST - VER 1. No → Go To 3	All
3	Disconnect the Body Control Module C3 connector. Disconnect the Left B-Pillar Switch connector. Measure the resistance of the Left Sliding Door Pillar Switch Mux circuit to ground. Is the resistance below 1000.0 ohms? Yes → Repair the Left Sliding Door Pillar Switch Mux wire for a short to ground. Perform BODY VERIFICATION TEST - VER 1. No → Replace the Body Control Module. Perform BODY VERIFICATION TEST - VER 1.	All

Symptom:

LEFT B-PILLAR SWITCH INPUT STUCK

When Monitored and Set Condition:

LEFT B-PILLAR SWITCH INPUT STUCK

When Monitored: Continuously when the BCM is awake.

Set Condition: When the BCM senses an active B-pillar switch input for over 10 seconds.

POSSIBLE CAUSES
DTC PRESENT
LEFT B-PILLAR SWITCH SHORTED
LEFT SLIDING DOOR PILLAR SWITCH MUX WIRE SHORT TO GROUND
BODY CONTROL MODULE - LEFT SLIDING DOOR PILLAR SWITCH CIRCUIT SHORTED

TEST	ACTION	APPLICABILITY
1	With the DRBIII®, record and erase DTC's. Turn the ignition off, wait 10 seconds, then turn the ignition on. Operate the left power sliding door from the Left B-Pillar Switch. With the DRBIII®, read DTCs. Does the DRBIII® display LEFT B-PILLAR SWITCH INPUT STUCK? Yes → Go To 2 No → Using the wiring diagram/schematic as a guide, inspect the wiring and connectors for an intermittent condition. Perform BODY VERIFICATION TEST - VER 1.	All
2	Disconnect the Left B-Pillar Switch connector. With the DRBIII®, erase DTCs. Turn the ignition off, wait 10 seconds, then turn the ignition on. Wait 10 seconds. With the DRBIII®, read DTCs. Does the DRBIII® display LEFT B-PILLAR SWITCH INPUT OPEN? Yes → Replace the B-Pillar Switch. Perform BODY VERIFICATION TEST - VER 1. No → Go To 3	All
3	Disconnect the Body Control Module C3 connector. Disconnect the Left B-Pillar Switch connector. Measure the resistance of the Left Sliding Door Pillar Switch Mux circuit to ground. Is the resistance below 10000.0 ohms? Yes → Repair the Left Sliding Door Pillar Switch Mux wire for a short to ground. Perform BODY VERIFICATION TEST - VER 1. No → Replace the Body Control Module. Perform BODY VERIFICATION TEST - VER 1.	All

Symptom:

LOOPBACK TEST FAILURE

When Monitored and Set Condition:

LOOPBACK TEST FAILURE

When Monitored: Anytime the Power Sliding Door Module is awake.

Set Condition: The Power Sliding Door Module did not receive its own transmitted message on the PCI bus back (loopback) for longer than 1 second.

POSSIBLE CAUSES
DTC PRESENT
POWER SLIDING DOOR MODULE

TEST	ACTION	APPLICABILITY
1	With the DRBIII®, record and erase DTC's. Turn the ignition off, wait 10 seconds, then turn the ignition on. Operate the power sliding door several times from stop to stop if possible. With the DRBIII®, read ACTIVE DTCs. Does the DRBIII® display LOOPBACK TEST FAILURE? Yes → Replace the Power Sliding Door Module. Perform BODY VERIFICATION TEST - VER 1. No → Using the wiring diagram/schematic as a guide, inspect the wiring and connectors for an intermittent condition. Operate the door several times and check for any binding conditions. Perform BODY VERIFICATION TEST - VER 1.	All

Symptom:

LOSS OF BCM MESSAGES

When Monitored and Set Condition:

LOSS OF BCM MESSAGES

When Monitored: Whenever the ignition is on.

Set Condition: If the PSD Module losses communication with the BCM for over 5 seconds, this code will set.

POSSIBLE CAUSES
ATTEMPT TO COMMUNICATE WITH THE BODY CONTROL MODULE
POWER SLIDING DOOR MODULE - LOSS OF BCM MESSAGES

TEST	ACTION	APPLICABILITY
1	Turn the ignition on. With the DRBIII®, enter Body then Body Computer. Was the DRBIII® able to I/D or communicate with the BCM? Yes → Go To 2 No → Refer to the Communication category for the related symptom(s).	All
2	With the DRBIII®, erase DTC's. Cycle the ignition switch from off to on and wait approximately 1 minute. With the DRBIII®, read DTC's. Did this DTC reset? Yes → Replace the Power Sliding Door Module. Perform BODY VERIFICATION TEST - VER 1. No → Test Complete.	All

Symptom:

LOSS OF EATX MESSAGES

When Monitored and Set Condition:

LOSS OF EATX MESSAGES

When Monitored: Whenever the ignition is on.

Set Condition: If the PSD Module does not receive a PRNDL message for over 5 seconds, this code will set.

POSSIBLE CAUSES
ATTEMPT TO COMMUNICATE WITH THE TRANSMISSION CONTROL MODULE
POWER SLIDING DOOR MODULE - LOSS OF EATX MESSAGES

TEST	ACTION	APPLICABILITY
1	Turn the ignition on. With the DRBIII®, select Transmission. Was the DRBIII® able to I/D or communicate with the Transmission? Yes → Go To 2 No → Refer to the Communication category for the related symptom(s).	All
2	With the DRBIII®, erase DTC's. Cycle the ignition switch from off to on and wait approximately 1 minute. With the DRBIII®, read DTC's. Did this DTC reset? Yes → Replace the Power Sliding Door Module. Perform BODY VERIFICATION TEST - VER 1. No → Test Complete.	All

Symptom:

LOSS OF FCM MESSAGES

When Monitored and Set Condition:

LOSS OF FCM MESSAGES

When Monitored: Whenever the ignition is in the RUN position and the PRNDL is not in PARK position.

Set Condition: If the PSD Module does not receive a temperature message from the Front Control Module for over 5 seconds, this code will set.

POSSIBLE CAUSES
ATTEMPT TO COMMUNICATE WITH THE FRONT CONTROL MODULE
POWER SLIDING DOOR MODULE - LOSS OF FCM MESSAGES

TEST	ACTION	APPLICABILITY
1	Turn the ignition on. With the DRBIII®, enter Body then Front Control Module. Was the DRBIII® able to I/D or communicate with the FCM? Yes → Go To 2 No → Refer to the Communication category for the related symptom(S).	All
2	With the DRBIII®, erase DTC's. Cycle the ignition switch from off to on and wait approximately 1 minute. With the DRBIII®, read DTC's. Did this DTC reset? Yes → Replace the Power Sliding Door Module. Perform BODY VERIFICATION TEST - VER 1. No → Test Complete.	All

Symptom:

LOSS OF SBEC MESSAGES

When Monitored and Set Condition:

LOSS OF SBEC MESSAGES

When Monitored: Whenever the ignition is in RUN position and the PRNDL is not in PARK position.

Set Condition: If the PSD Module does not receive a speed message from the Powertrain Control Module for over 5 seconds, this code will set.

POSSIBLE CAUSES
ATTEMPT TO COMMUNICATE WITH THE POWERTRAIN CONTROL MODULE
POWER SLIDING DOOR MODULE - LOSS OF SBEC MESSAGES

TEST	ACTION	APPLICABILITY
1	Turn the ignition on. With the DRBIII®, select Engine. Was the DRBIII® able to I/D or communicate with the Transmission? Yes → Go To 2 No → Refer to the Communication category for the related symptom(s).	All
2	With the DRBIII®, erase DTC's. Cycle the ignition switch from OFF to RUN and wait approximately 1 minute. With the DRBIII®, read DTC's. Did this DTC reset? Yes → Replace the Power Sliding Door Module. Perform BODY VERIFICATION TEST - VER 1. No → Test Complete.	All

Symptom:

OVERHEAD LEFT SWITCH INPUT STUCK

When Monitored and Set Condition:

OVERHEAD LEFT SWITCH INPUT STUCK

When Monitored: Continuously when the BCM is awake.

Set Condition: When the BCM senses an active switch input for over 10 seconds.

POSSIBLE CAUSES
DTC PRESENT
OVERHEAD LEFT SWITCH SHORTED
SLIDING DOORS OVERHEAD SWITCH MUX WIRE SHORT TO GROUND
BODY CONTROL MODULE - SLIDING DOORS OVERHEAD SWITCH CIRCUIT SHORTED

TEST	ACTION	APPLICABILITY
1	With the DRBIII®, record and erase DTC's. Turn the ignition off, wait 10 seconds, then turn the ignition on. Operate the left power sliding door from the Overhead Console Switch. With the DRBIII®, read DTCs. Does the DRBIII® display OVERHEAD LEFT SWITCH INPUT STUCK? Yes → Go To 2 No → Using the wiring diagram/schematic as a guide, inspect the wiring and connectors for an intermittent condition. Perform BODY VERIFICATION TEST - VER 1.	All
2	Disconnect the Overhead Console connector. With the DRBIII®, erase DTCs. Turn the ignition off, wait 10 seconds, then turn the ignition on. Wait 10 seconds. With the DRBIII®, read DTCs. Does the DRBIII® display OVERHEAD LEFT SWITCH INPUT STUCK? Yes → Go To 3 No → Replace the Power Sliding Door Button Module. Perform BODY VERIFICATION TEST - VER 1.	All
3	Disconnect the Body Control Module C3 connector. Disconnect the Overhead Console Switch connector. Measure the resistance of the Sliding Doors Overhead Switch Mux circuit to ground. Is the resistance below 10000.0 ohms? Yes → Repair the Sliding Doors Overhead Switch Mux wire for a short to ground. Perform BODY VERIFICATION TEST - VER 1. No → Replace the Body Control Module. Perform BODY VERIFICATION TEST - VER 1.	All

Symptom:
OVERHEAD RIGHT SWITCH INPUT STUCK

When Monitored and Set Condition:

OVERHEAD RIGHT SWITCH INPUT STUCK

When Monitored: Continuously when the BCM is awake.

Set Condition: When the BCM senses an active switch input for over 10 seconds.

POSSIBLE CAUSES
DTC PRESENT
OVERHEAD RIGHT SWITCH SHORTED
SLIDING DOORS OVERHEAD SWITCH MUX WIRE SHORT TO GROUND
BODY CONTROL MODULE - SLIDING DOORS OVERHEAD SWITCH CIRCUIT SHORTED

TEST	ACTION	APPLICABILITY
1	With the DRBIII®, record and erase DTC's. Turn the ignition off, wait 10 seconds, then turn the ignition on. Operate the right power sliding door from the Overhead Console Switch. With the DRBIII®, read DTCs. Does the DRBIII® display OVERHEAD RIGHT SWITCH INPUT STUCK? Yes → Go To 2 No → Using the wiring diagram/schematic as a guide, inspect the wiring and connectors for an intermittent condition. Perform BODY VERIFICATION TEST - VER 1.	All
2	Disconnect the Overhead Console Switch connector. Turn the ignition off, wait 10 seconds, then turn the ignition on. Wait 10 seconds. With the DRBIII®, read DTCs. Does the DRBIII® display OVERHEAD RIGHT SWITCH INPUT STUCK? No → Replace the Power Sliding Door Button Module. Perform BODY VERIFICATION TEST - VER 1. Yes → Go To 3	All
3	Disconnect the Body Control Module C3 connector. Disconnect the Overhead Console Switch connector. Measure the resistance of the Sliding Doors Overhead Switch Mux circuit to ground. Is the resistance below 2000.0 ohms? Yes → Repair the Sliding Doors Overhead Switch Mux wire for a short to ground. Perform BODY VERIFICATION TEST - VER 1. No → Replace the Body Control Module. Perform BODY VERIFICATION TEST - VER 1.	All

Symptom:
OVERHEAD RIGHT/LEFT SWITCHES SHORT

When Monitored and Set Condition:

OVERHEAD RIGHT/LEFT SWITCHES SHORT

When Monitored: Continuously when the BCM is awake.

Set Condition: When the BCM senses less than 1.0 volts on the Sliding Doors Overhead Switch Mux circuit for over 10 seconds.

POSSIBLE CAUSES
DTC PRESENT
OVERHEAD SWITCH SHORTED
SLIDING DOORS OVERHEAD SWITCH MUX WIRE SHORT TO GROUND
BODY CONTROL MODULE - SLIDING DOORS OVERHEAD SWITCH INPUT SHORTED

TEST	ACTION	APPLICABILITY
1	With the DRBIII®, record and erase DTC's. Turn the ignition off, wait 10 seconds, then turn the ignition on. Operate the power sliding door from the Overhead Console Switch. With the DRBIII®, read DTCs. Does the DRBIII® display OVERHEAD RIGHT/LEFT SWITCHES SHORT? Yes → Go To 2 No → Using the wiring diagram/schematic as a guide, inspect the wiring and connectors for an intermittent condition. Perform BODY VERIFICATION TEST - VER 1.	All
2	Disconnect the Overhead Console Switch connector. Turn the ignition off, wait 10 seconds, then turn the ignition on. Wait 10 seconds. With the DRBIII®, read DTCs. Does the DRBIII® display OVERHEAD SWITCH #2 INPUT SHORT? No → Replace the Power Sliding Door Button Module. Perform BODY VERIFICATION TEST - VER 1. Yes → Go To 3	All
3	Disconnect the Body Control Module C3 connector. Disconnect the Overhead Console Switch connector. Measure the resistance of the Sliding Doors Overhead Switch Mux circuit to ground. Is the resistance below 100.0 ohms? Yes → Repair the Sliding Doors Overhead Switch Mux wire for a short to ground. Perform BODY VERIFICATION TEST - VER 1. No → Replace the Body Control Module. Perform BODY VERIFICATION TEST - VER 1.	All

Symptom:

RIGHT B-PILLAR SWITCH INPUT OPEN OR SHORT TO VOLTAGE

When Monitored and Set Condition:

RIGHT B-PILLAR SWITCH INPUT OPEN OR SHORT TO VOLTAGE

When Monitored: Continuously when the BCM is awake.

Set Condition: When the BCM senses an input greater than 4.8 volts for over 10 seconds.

POSSIBLE CAUSES
DTC PRESENT
RIGHT SLIDING DOOR PILLAR SWITCH MUX CIRCUIT SHORT TO VOLTAGE
GROUND CIRCUIT OPEN
RIGHT SLIDING DOOR PILLAR SWITCH MUX WIRE OPEN
RIGHT B-PILLAR SWITCH OPEN
BODY CONTROL MODULE - RIGHT SLIDING DOOR PILLAR SWITCH OPEN

TEST	ACTION	APPLICABILITY
1	With the DRBIII®, record and erase DTC's. Turn the ignition off, wait 10 seconds, then turn the ignition on. Operate the right power sliding door from the Right B-Pillar Switch. With the DRBIII®, read DTCs. Does the DRBIII® display RIGHT B-PILLAR SWITCH INPUT OPEN? Yes → Go To 2 No → Using the wiring diagram/schematic as a guide, inspect the wiring and connectors for an intermittent condition. Perform BODY VERIFICATION TEST - VER 1.	All
2	Disconnect the Body Control Module C3 connector. Measure the voltage between Right Sliding Door Pillar Switch Mux circuit and ground. Is there any voltage present? Yes → Repair the Right Sliding Door Pillar Switch Mux circuit for a short to voltage. Perform BODY VERIFICATION TEST - VER 1. No → Go To 3	All
3	Disconnect the B-Pillar Switch connector. Using a 12-volt test light connected to 12-volts, check the Ground circuit in the B-Pillar Switch connector. Does the test light illuminate brightly? Yes → Go To 4 No → Repair the Ground circuit for an open. Perform BODY VERIFICATION TEST - VER 1.	All

RIGHT B-PILLAR SWITCH INPUT OPEN OR SHORT TO VOLTAGE — Continued

TEST	ACTION	APPLICABILITY
4	Disconnect the Body Control Module C3 connector. Disconnect the Right B-Pillar Switch connector. Measure the resistance of the Right Sliding Door Pillar Switch Mux circuit between the BCM C3 connector and the Right B-Pillar Switch connector. Is the resistance below 5.0 ohms? Yes → Go To 5 No → Repair the Right Sliding Door Pillar Switch Mux wire for an open. Perform BODY VERIFICATION TEST - VER 1.	All
5	Disconnect the Body Control Module C3 connector. Measure the resistance between Right Sliding Door Pillar Switch Mux circuit and ground. Is the resistance below 20500.0 ohms? Yes → Replace the Body Control Module. Perform BODY VERIFICATION TEST - VER 1. No → Go To 6	All
6	If there are no possible causes remaining, view repair. Repair Replace the B-Pillar Switch. Perform BODY VERIFICATION TEST - VER 1.	All

Symptom:
RIGHT B-PILLAR SWITCH INPUT SHORT

When Monitored and Set Condition:

RIGHT B-PILLAR SWITCH INPUT SHORT

When Monitored: Continuously when the BCM is awake.

Set Condition: When the BCM senses a switch input less than .24 volts for over 10 seconds.

POSSIBLE CAUSES
DTC PRESENT
RIGHT B-PILLAR SWITCH SHORTED
RIGHT SLIDING DOOR PILLAR SWITCH MUX WIRE SHORT TO GROUND
BODY CONTROL MODULE - RIGHT SLIDING DOOR PILLAR SWITCH CIRCUIT SHORTED

TEST	ACTION	APPLICABILITY
1	With the DRBIII®, record and erase DTC's. Turn the ignition off, wait 10 seconds, then turn the ignition on. Operate the right power sliding door from the Right B-Pillar Switch. With the DRBIII®, read DTCs. Does the DRBIII® display RIGHT B-PILLAR SWITCH INPUT SHORT? Yes → Go To 2 No → Using the wiring diagram/schematic as a guide, inspect the wiring and connectors for an intermittent condition. Perform BODY VERIFICATION TEST - VER 1.	All
2	Disconnect the Right B-Pillar Switch connector. With the DRBIII®, erase DTCs. Turn the ignition off, wait 10 seconds, then turn the ignition on. Wait 10 seconds. With the DRBIII®, read DTCs. Does the DRBIII® display RIGHT B-PILLAR SWITCH INPUT OPEN? Yes → Replace the B-Pillar Switch. Perform BODY VERIFICATION TEST - VER 1. No → Go To 3	All
3	Disconnect the Body Control Module C3 connector. Disconnect the Right B-Pillar Switch connector. Measure the resistance of the Right Sliding Door Pillar Switch Mux circuit to ground. Is the resistance below 1000.0 ohms? Yes → Repair the Right Sliding Door Pillar Switch Mux wire for a short to ground. Perform BODY VERIFICATION TEST - VER 1. No → Replace the Body Control Module. Perform BODY VERIFICATION TEST - VER 1.	All

Symptom:

RIGHT B-PILLAR SWITCH INPUT STUCK

When Monitored and Set Condition:

RIGHT B-PILLAR SWITCH INPUT STUCK

When Monitored: Continuously when the BCM is awake.

Set Condition: When the BCM senses an active switch input for over 10 seconds.

POSSIBLE CAUSES
DTC PRESENT
RIGHT B-PILLAR SWITCH SHORTED
RIGHT SLIDING DOOR PILLAR SWITCH MUX WIRE SHORT TO GROUND
BODY CONTROL MODULE - RIGHT SLIDING DOOR PILLAR SWITCH CIRCUIT SHORTED

TEST	ACTION	APPLICABILITY
1	With the DRBIII®, record and erase DTC's. Turn the ignition off, wait 10 seconds, then turn the ignition on. Operate the right power sliding door from the Right B-Pillar Switch. With the DRBIII®, read DTCs. Does the DRBIII® display RIGHT B-PILLAR SWITCH INPUT STUCK? Yes → Go To 2 No → Using the wiring diagram/schematic as a guide, inspect the wiring and connectors for an intermittent condition. Perform BODY VERIFICATION TEST - VER 1.	All
2	Disconnect the Right B-Pillar Switch connector. With the DRBIII®, read DTCs. Does the DRBIII® display RIGHT B-PILLAR SWITCH INPUT OPEN? Yes → Replace the B-Pillar Switch. Perform BODY VERIFICATION TEST - VER 1. No → Go To 3	All
3	Disconnect the Body Control Module C3 connector. Disconnect the Right B-Pillar Switch connector. Measure the resistance of the Right Sliding Door Pillar Switch Mux circuit to ground. Is the resistance below 10000.0 ohms? Yes → Repair the Right Sliding Door Pillar Switch Mux wire for a short to ground. Perform BODY VERIFICATION TEST - VER 1. No → Replace the Body Control Module. Perform BODY VERIFICATION TEST - VER 1.	All

Symptom:

***POWER SLIDING DOOR INOPERATIVE**

POSSIBLE CAUSES
DTC'S PRESENT
MODULE RESPONSE
INTERMITTENT PROBLEM
SYSTEM TESTS

TEST	ACTION	APPLICABILITY
1	With the DRBIII® check for response from the Body Computer and the Power Sliding Door Modules Is there response from both modules? Yes → Go To 2 No → Refer to symptom list for problems related to COMMUNICATION.	All
2	With the DRBIII®, read DTCs in POWER SLIDING DOOR and BODY COMPUTER. Are any Power Sliding Door related codes present? Yes → Refer to symptom list for problems related to POWER SLIDING DOORS. No → Go To 3	All
3	This test will determine what inhibited the Power Sliding Door from operating properly. With the DRBIII®, select POWER SLIDING DOOR, MISCELLANEOUS, LAST INHIBIT MONITOR. Does the DRBIII® display any INHIBIT REASONS? Yes → Check for any binding conditions or other restrictions that may prevent proper operation. Using the wiring diagram/schematic as a guide, inspect the wiring and connectors. No → Go To 4	All
4	Ensure the sliding door is fully closed before proceeding. With the DRBIII® select SYSTEM TEST. Perform the Open, Close, Latch Cinch, Latch Release and Relay tests. Did any test fail? Yes → Using the wiring diagram/schematic as a guide, inspect the wiring and connectors. No → Test Complete.	All

Symptom:

FOLD MIRROR OUTPUT FAILURE (EXPORT ONLY)

POSSIBLE CAUSES
INTERMITTENT CONDITION
LEFT POWER MIRROR
RIGHT POWER MIRROR
LEFT FOLDING MIRROR UNFOLD DRIVER SHORT TO VOLTAGE
RIGHT FOLDING MIRROR UNFOLD DRIVER SHORT TO VOLTAGE
LEFT FOLDING MIRROR UNFOLD DRIVER SHORT TO GROUND
RIGHT FOLDING MIRROR UNFOLD DRIVER SHORT TO GROUND
BODY CONTROL MODULE

TEST	ACTION	APPLICABILITY
1	With the DRBIII®, record and erase DTC's. NOTE: Doors must be closed to allow the mirrors to fold with the power folding mirror switch. Attempt to operate the power folding mirror system with the power folding mirror switch and by opening and closing both front doors with mirrors folded. With the DRBIII®, read DTCs. Does the same DTC reset? Yes → Go To 2 No → The condition that caused this DTC is currently not present. Use the wiring diagram/schematic as a guide, and inspect the related wiring harness for a possible intermittent condition. Perform BODY VERIFICATION TEST - VER 1.	All
2	Disconnect the Left Power Mirror connector. NOTE: Check connectors - Clean/repair as necessary. With the DRBIII®, erase DTC's. Operate the Power Folding Mirror switch. With the DRBIII®, read DTCs. Does the same DTC reset? Yes → Go To 3 No → Replace the Left Power Mirror. Perform BODY VERIFICATION TEST - VER 1.	All
3	Disconnect the Right Power Mirror connector. NOTE: Check connectors - Clean/repair as necessary. With the DRBIII®, erase DTC's. Operate the Power Folding Mirror switch. With the DRBIII®, read DTCs. Does the same DTC reset? Yes → Go To 4 No → Replace the Right Power Mirror. Perform BODY VERIFICATION TEST - VER 1.	All

FOLD MIRROR OUTPUT FAILURE (EXPORT ONLY) — Continued

TEST	ACTION	APPLICABILITY
4	Disconnect the Left and Right Power Mirror connectors. Disconnect the Body Control Module C2 connector. NOTE: Check connectors - Clean/repair as necessary. Measure for unwanted voltage on the Left Folding Mirror Unfold Driver circuit in the BCM C2 connector. Is there any voltage present? Yes → Repair the Left Folding Mirror Unfold Driver circuit for a short to voltage. Perform BODY VERIFICATION TEST - VER 1. No → Go To 5	All
5	Disconnect the Left and Right Power Mirror connectors. Disconnect the Body Control Module C2 connector. NOTE: Check connectors - Clean/repair as necessary. Measure for unwanted voltage on the Right Folding Mirror Unfold Driver circuit in the relay connector. Is there any voltage present? Yes → Repair the Right Folding Mirror Unfold Driver circuit for a short to voltage. Perform BODY VERIFICATION TEST - VER 1. No → Go To 6	All
6	Disconnect the Left and Right Power Mirror connectors. Disconnect the Body Control Module C2 connector. NOTE: Check connectors - Clean/repair as necessary. Measure the resistance between ground and the Left Folding Mirror Unfold Driver circuit in the BCM C2 connector. Is the resistance below 5.0 ohms? Yes → Repair the Left Folding Mirror Unfold Driver circuit for a short to ground. Perform BODY VERIFICATION TEST - VER 1. No → Go To 7	All
7	Disconnect the Left and Right Power Mirror connectors. Disconnect the Body Control Module C2 connector. NOTE: Check connectors - Clean/repair as necessary. Measure the resistance between ground and the Right Folding Mirror Unfold Driver circuit in the relay connector. Is the resistance below 5.0 ohms? Yes → Repair the Right Folding Mirror Unfold Driver circuit for a short to ground. Perform BODY VERIFICATION TEST - VER 1. No → Replace the Body Control Module. Perform BODY VERIFICATION TEST - VER 1.	All

Symptom:

PASSENGER MIRROR RELAY OUTPUT OPEN (EXPORT ONLY)

POSSIBLE CAUSES
INTERMITTENT CONDITION
FUSED B+ CIRCUIT OPEN
PASSENGER FOLDING MIRROR RELAY
PASSENGER FOLDING MIRROR RELAY CONTROL CIRCUIT SHORTED TO GROUND
PASSENGER FOLDING MIRROR RELAY CONTROL CIRCUIT OPEN
BODY CONTROL MODULE

TEST	ACTION	APPLICABILITY
1	With the DRBIII®, record and erase DTC's. NOTE: Doors must be closed to allow the mirrors to fold with the power folding mirror switch. Attempt to operate the power folding mirror system with the power folding mirror switch and by opening and closing both front doors with mirrors folded. With the DRBIII®, read DTCs. Does the same DTC reset? Yes → Go To 2 No → The condition that caused this DTC is currently not present. Use the wiring diagram/schematic as a guide, and inspect the related wiring harness for a possible intermittent condition. Perform BODY VERIFICATION TEST - VER 1.	All
2	Disconnect the Passenger Folding Mirror Relay connector. NOTE: Check connectors - Clean/repair as necessary. Using a 12-volt test light connected to ground, check the Fused B+ circuit in the relay connector. The test light must illuminate brightly. Compare the brightness to that of a direct connection to the battery. Does the test light illuminate brightly? Yes → Go To 3 No → Repair the Fused B+ circuit for an open. Perform BODY VERIFICATION TEST - VER 1.	All
3	Remove the Passenger Folding Mirror Relay. Check connectors - Clean/repair as necessary. Install a substitute relay in place of the Passenger Folding Mirror Relay. With the DRBIII®, erase DTC's. NOTE: Doors must be closed to allow the mirrors to fold with the power folding mirror switch. Attempt to operate the power folding mirror system with the power folding mirror switch and by opening and closing both front doors with mirrors folded. With the DRBIII®, read DTCs. Does the same DTC reset? Yes → Go To 4 No → Replace the Passenger Folding Mirror Relay. Perform BODY VERIFICATION TEST - VER 1.	All

PASSENGER MIRROR RELAY OUTPUT OPEN (EXPORT ONLY) — Continued

TEST	ACTION	APPLICABILITY
4	Disconnect the Passenger Folding Mirror Relay connector. Disconnect the Body Control Module C4 connector. NOTE: Check connectors - Clean/repair as necessary. Measure the resistance between ground and the Passenger Folding Mirror Relay Control circuit in the relay connector. Is the resistance below 5.0 ohms? Yes → Repair the Passenger Folding Mirror Relay Control circuit for a short to ground. Perform BODY VERIFICATION TEST - VER 1. No → Go To 5	All
5	Disconnect the Passenger Folding Mirror Relay connector. Disconnect the Body Control Module C4 connector. NOTE: Check connectors - Clean/repair as necessary. Measure the resistance of the Passenger Folding Mirror Relay Control circuit between the relay connector and the BCM C4 connector. Is the resistance below 5.0 ohms? Yes → Replace the Body Control Module. Perform BODY VERIFICATION TEST - VER 1. No → Repair the Passenger Folding Mirror Relay Control circuit for an open. Perform BODY VERIFICATION TEST - VER 1.	All

Symptom:
PASSENGER MIRROR RELAY OUTPUT SHORT (EXPORT ONLY)

POSSIBLE CAUSES
INTERMITTENT CONDITION
PASSENGER FOLDING MIRROR RELAY
PASSENGER FOLDING MIRROR RELAY CONTROL CIRCUIT SHORTED TO VOLTAGE
BODY CONTROL MODULE

TEST	ACTION	APPLICABILITY
1	With the DRBIII®, record and erase DTC's. NOTE: Doors must be closed to allow the mirrors to fold with the power folding mirror switch. Attempt to operate the power folding mirror system with the power folding mirror switch and by opening and closing both front doors with mirrors folded. With the DRBIII®, read DTCs. Does the same DTC reset? Yes → Go To 2 No → The condition that caused this DTC is currently not present. Use the wiring diagram/schematic as a guide, and inspect the related wiring harness for a possible intermittent condition. Perform BODY VERIFICATION TEST - VER 1.	All
2	Remove the Passenger Folding Mirror Relay. Check connectors - Clean/repair as necessary. Install a substitute relay in place of the Passenger Folding Mirror Relay. With the DRBIII®, erase DTC's. NOTE: Doors must be closed to allow the mirrors to fold with the power folding mirror switch. Attempt to operate the power folding mirror system with the power folding mirror switch and by opening and closing both front doors with mirrors folded. With the DRBIII®, read DTCs. Does the same DTC reset? Yes → Go To 3 No → Replace the Passenger Folding Mirror Relay. Perform BODY VERIFICATION TEST - VER 1.	All
3	Disconnect the Passenger Folding Mirror Relay connector. Disconnect the Body Control Module C4 connector. NOTE: Check connectors - Clean/repair as necessary. Measure the voltage of the Passenger Folding Mirror Relay Control circuit in the relay connector. Is the voltage above 1.0 volts? Yes → Repair the Passenger Folding Mirror Relay Control circuit for a short to voltage. Perform BODY VERIFICATION TEST - VER 1. No → Replace the Body Control Module. Perform BODY VERIFICATION TEST - VER 1.	All

Symptom:

UNFOLD MIRROR OUTPUT FAILURE (EXPORT ONLY)

POSSIBLE CAUSES
INTERMITTENT CONDITION
PASSENGER FOLDING MIRROR RELAY
LEFT POWER MIRROR
RIGHT POWER MIRROR
DRIVER FOLDING MIRROR FOLD DRIVER SHORT TO VOLTAGE
PASSENGER FOLDING MIRROR RELAY OUTPUT SHORT TO VOLTAGE
PASSENGER FOLDING MIRROR RELAY INPUT SHORT TO VOLTAGE
DRIVER FOLDING MIRROR FOLD DRIVER SHORT TO GROUND
PASSENGER FOLDING MIRROR RELAY OUTPUT SHORT TO GROUND
PASSENGER FOLDING MIRROR RELAY INPUT SHORT TO GROUND
BODY CONTROL MODULE

TEST	ACTION	APPLICABILITY
1	With the DRBIII®, record and erase DTC's. NOTE: Doors must be closed to allow the mirrors to fold with the power folding mirror switch. Attempt to operate the power folding mirror system with the power folding mirror switch and by opening and closing both front doors with mirrors folded. With the DRBIII®, read DTCs. Does the same DTC reset? Yes → Go To 2 No → The condition that caused this DTC is currently not present. Use the wiring diagram/schematic as a guide, and inspect the related wiring harness for a possible intermittent condition. Perform BODY VERIFICATION TEST - VER 1.	All
2	Install a substitute relay in place of the Passenger Folding Mirror Relay. With the DRBIII®, erase DTC's. NOTE: Doors must be closed to allow the mirrors to fold with the power folding mirror switch. Attempt to operate the power folding mirror system with the power folding mirror switch and by opening and closing both front doors with mirrors folded. With the DRBIII®, read DTCs. Does the same DTC reset? Yes → Go To 3 No → Replace the Passenger Folding Mirror Relay. Perform BODY VERIFICATION TEST - VER 1.	All

UNFOLD MIRROR OUTPUT FAILURE (EXPORT ONLY) — Continued

TEST	ACTION	APPLICABILITY
3	Disconnect the Left Power Mirror connector. NOTE: Check connectors - Clean/repair as necessary. With the DRBIII®, erase DTC's. Operate the Power Folding Mirror switch. With the DRBIII®, read DTCs. Does the same DTC reset? Yes → Go To 4 No → Replace the Left Power Mirror. Perform BODY VERIFICATION TEST - VER 1.	All
4	Disconnect the Right Power Mirror connector. NOTE: Check connectors - Clean/repair as necessary. With the DRBIII®, erase DTC's. Operate the Power Folding Mirror switch. With the DRBIII®, read DTCs. Does the same DTC reset? Yes → Go To 5 No → Replace the Right Power Mirror. Perform BODY VERIFICATION TEST - VER 1.	All
5	Disconnect the Left and Right Power Mirror connectors. Disconnect the Body Control Module C2 connector. NOTE: Check connectors - Clean/repair as necessary. Measure for unwanted voltage on the Driver Folding Mirror Fold Driver circuit in the BCM C2 connector. Is there any voltage present? Yes → Repair the Driver Folding Mirror Fold Driver circuit for a short to voltage. Perform BODY VERIFICATION TEST - VER 1. No → Go To 6	All
6	Disconnect the Left and Right Power Mirror connectors. Disconnect the Passenger Folding Mirror Relay. NOTE: Check connectors - Clean/repair as necessary. Measure for unwanted voltage on the Passenger Folding Mirror Relay Output circuit in the relay connector. Is there any voltage present? Yes → Repair the Passenger Folding Mirror Relay Output circuit for a short to voltage. Perform BODY VERIFICATION TEST - VER 1. No → Go To 7	All
7	Disconnect the Body Control Module C2 connector. Disconnect the Passenger Folding Mirror Relay. NOTE: Check connectors - Clean/repair as necessary. Measure for unwanted voltage on the Passenger Folding Mirror Relay Input circuit in the relay connector. Is there any voltage present? Yes → Repair the Passenger Folding Mirror Relay Input circuit for a short to voltage. Perform BODY VERIFICATION TEST - VER 1. No → Go To 8	All

UNFOLD MIRROR OUTPUT FAILURE (EXPORT ONLY) — Continued

TEST	ACTION	APPLICABILITY
8	Disconnect the Left and Right Power Mirror connectors. Disconnect the Body Control Module C2 connector. NOTE: Check connectors - Clean/repair as necessary. Measure the resistance between ground and the Driver Folding Mirror Fold Driver circuit in the BCM C2 connector. Is the resistance below 5.0 ohms? Yes → Repair the Driver Folding Mirror Fold Driver circuit for a short to ground. Perform BODY VERIFICATION TEST - VER 1. No → Go To 9	All
9	Disconnect the Left and Right Power Mirror connectors. Disconnect the Passenger Folding Mirror Relay. NOTE: Check connectors - Clean/repair as necessary. Measure the resistance between ground and the Passenger Folding Mirror Relay Output circuit in the relay connector. Is the resistance below 5.0 ohms? Yes → Repair the Passenger Folding Mirror Relay Output circuit for a short to ground. Perform BODY VERIFICATION TEST - VER 1. No → Go To 10	All
10	Disconnect the Body Control Module C2 connector. Disconnect the Passenger Folding Mirror Relay. NOTE: Check connectors - Clean/repair as necessary. Measure the resistance between ground and the Passenger Folding Mirror Relay Input circuit in the relay connector. Is the resistance below 5.0 ohms? Yes → Repair the Passenger Folding Mirror Relay Input circuit for a short to ground. Perform BODY VERIFICATION TEST - VER 1. No → Replace the Body Control Module. Perform BODY VERIFICATION TEST - VER 1.	All

Symptom:

***BOTH MIRRORS DO NOT UNFOLD EXCEPT WITH EITHER FRONT DOOR (EXPORT ONLY)**

POSSIBLE CAUSES
RELATED DIAGNOSTIC TROUBLE CODES
POWER FOLDING MIRROR SWITCH
FOLDING MIRROR SWITCH SIGNAL SHORT TO GROUND
BODY CONTROL MODULE

TEST	ACTION	APPLICABILITY
1	With the DRBIII®, read DTCs. Does the DRBIII® display any related DTC's? Yes → Refer to symptom list for problems related to Power Folding Mirrors. Perform BODY VERIFICATION TEST - VER 1. No → Go To 2	All
2	Disconnect the Power Folding Mirror Switch connector. Check connectors - Clean/repair as necessary. Did the mirrors unfold? Yes → Replace the Power Folding Mirror Switch. Perform BODY VERIFICATION TEST - VER 1. No → Go To 3	All
3	Disconnect the Power Folding Mirror Switch connector. Disconnect the BCM C4 harness connector. Check connectors - Clean/repair as necessary. Measure the resistance of the Folding Mirror Switch Signal circuit at the Power Folding Mirror Switch connector to ground. Is the resistance below 5.0 ohms? Yes → Repair the Folding Mirror Switch Signal circuit for a short to ground. Perform BODY VERIFICATION TEST - VER 1. No → Replace the Body Control Module. Perform BODY VERIFICATION TEST - VER 1.	All

Symptom:

***BOTH POWER FOLDING MIRRORS DO NOT FOLD (EXPORT ONLY)**

POSSIBLE CAUSES
RELATED DIAGNOSTIC TROUBLE CODES
GROUND CIRCUIT OPEN
POWER FOLDING MIRROR SWITCH
FOLDING MIRROR SWITCH SIGNAL OPEN
BODY CONTROL MODULE

TEST	ACTION	APPLICABILITY
1	With the DRBIII®, read DTCs. Does the DRBIII® display any related DTC's? Yes → Refer to symptom list for problems related to Power Folding Mirrors. Perform BODY VERIFICATION TEST - VER 1. No → Go To 2	All
2	Disconnect the Power Folding Mirror switch connector Check connectors - Clean/repair as necessary. Measure the resistance of the ground circuit. Is the resistance below 5.0 ohms? Yes → Go To 3 No → Repair the ground circuit for an open. Perform BODY VERIFICATION TEST - VER 1.	All
3	Disconnect the Power Folding Mirror Switch connector. Check connectors - Clean/repair as necessary. With the DRBIII® in Inputs/Outputs, read the Foldaway Switch state. Connect a jumper wire between the Folding Mirror Switch Signal circuit and ground. Does the DRBIII® display change? Yes → Replace the Power Folding Mirror Switch. Perform BODY VERIFICATION TEST - VER 1. No → Go To 4	All
4	Disconnect the Power Folding Mirror Switch connector. Disconnect the BCM C4 harness connector. Check connectors - Clean/repair as necessary. Measure the resistance of the Folding Mirror Switch Signal circuit between the BCM C4 connector and the Power Folding Mirror Switch connector. Is the resistance below 5.0 ohms? Yes → Replace the Body Control Module. Perform BODY VERIFICATION TEST - VER 1. No → Repair the Folding Mirror Switch Signal circuit for an open. Perform BODY VERIFICATION TEST - VER 1.	All

Symptom:

*DRIVER FOLDING MIRROR DOES NOT FOLD (EXPORT ONLY)

POSSIBLE CAUSES
RELATED DIAGNOSTIC TROUBLE CODES
POWER MIRROR
FOLDING MIRROR UNFOLD DRIVER CIRCUIT OPEN
DRIVER FOLDING MIRROR FOLD DRIVER CIRCUIT OPEN
BODY CONTROL MODULE

TEST	ACTION	APPLICABILITY
1	With the DRBIII®, read Body Computer DTCs. Does the DRBIII® display any related DTC's? Yes → Refer to symptom list for problems related to Power Folding Mirrors. Perform BODY VERIFICATION TEST - VER 1. No → Go To 2	All
2	Disconnect the inoperative Power Mirror connector. NOTE: Check connectors - Clean/repair as necessary. Connect one lead of a test light to the Passenger Folding Mirror Relay Output circuit and the other lead to the appropriate Folding Mirror Unfold Driver in the power mirror harness connector. With the DRBIII®, actuate the Folding Mirrors. Does the test light illuminate brightly? Yes → Replace the appropriate Power Mirror. Perform BODY VERIFICATION TEST - VER 1. No → Go To 3	All
3	Disconnect the inoperative Power Mirror connector. Disconnect the Body Control Module C2 connector. NOTE: Check connectors - Clean/repair as necessary. Measure the appropriate Folding Mirror Unfold Driver circuit from the BCM C2 connector to the power mirror harness connector. Is the resistance below 5.0 ohms? Yes → Go To 4 No → Repair the appropriate Folding Mirror Unfold Driver circuit for an open. Perform BODY VERIFICATION TEST - VER 1.	All

*DRIVER FOLDING MIRROR DOES NOT FOLD (EXPORT ONLY) — Continued

TEST	ACTION	APPLICABILITY
4	Disconnect the inoperative Power Mirror connector. Disconnect the Body Control Module C2 connector. NOTE: Check connectors - Clean/repair as necessary. Measure the Driver Folding Mirror Fold Driver circuit from the BCM C2 connector to the mirror harness connector. Is the resistance below 5.0 ohms? Yes → Replace the Body Control Module. Perform BODY VERIFICATION TEST - VER 1. No → Repair the Driver Folding Mirror Fold Driver circuit for an open. Perform BODY VERIFICATION TEST - VER 1.	All

Symptom:

***PASSENGER FOLDING MIRROR DOES NOT FOLD (EXPORT ONLY)**

POSSIBLE CAUSES
RELATED DIAGNOSTIC TROUBLE CODES
PASSENGER FOLDING MIRROR RELAY
POWER MIRROR
FOLDING MIRROR UNFOLD DRIVER CIRCUIT OPEN
PASSENGER FOLDING MIRROR RELAY OUTPUT CIRCUIT OPEN
PASSENGER FOLDING MIRROR RELAY INPUT CIRCUIT OPEN
BODY CONTROL MODULE

TEST	ACTION	APPLICABILITY
1	With the DRBIII®, read Body Computer DTCs. Does the DRBIII® display any related DTC's? Yes → Refer to symptom list for problems related to Power Folding Mirrors. Perform BODY VERIFICATION TEST - VER 1. No → Go To 2	All
2	Disconnect the Passenger Folding Mirror Relay. Check connectors - Clean/repair as necessary. Connect a substitute relay in place of the Passenger Folding Mirror Relay. NOTE: Doors must be closed to allow the mirrors to fold with the power folding mirror switch. Attempt to operate the power folding mirror system with the power folding mirror switch and by opening and closing both front doors with mirrors folded. Does the system now operate properly? Yes → Replace the Passenger Folding Mirror Relay. Perform BODY VERIFICATION TEST - VER 1. No → Go To 3	All
3	Connect Passenger Folding Mirror Relay if disconnected in previous step. Disconnect the inoperative Power Mirror connector. NOTE: Check connectors - Clean/repair as necessary. Connect one lead of a test light to the Passenger Folding Mirror Relay Output circuit and the other lead to the appropriate Folding Mirror Unfold Driver in the power mirror harness connector. With the DRBIII®, actuate the Folding Mirrors. Does the test light illuminate brightly? Yes → Replace the appropriate Power Mirror. Perform BODY VERIFICATION TEST - VER 1. No → Go To 4	All

*PASSENGER FOLDING MIRROR DOES NOT FOLD (EXPORT ONLY) — Continued

TEST	ACTION	APPLICABILITY
4	Disconnect the inoperative Power Mirror connector. Disconnect the Body Control Module C2 connector. NOTE: Check connectors - Clean/repair as necessary. Measure the appropriate Folding Mirror Unfold Driver circuit from the BCM C2 connector to the power mirror harness connector. Is the resistance below 5.0 ohms? Yes → Go To 5 No → Repair the appropriate Folding Mirror Unfold Driver circuit for an open. Perform BODY VERIFICATION TEST - VER 1.	All
5	Disconnect the inoperative Power Mirror connector. Disconnect the Passenger Folding Mirror Relay. NOTE: Check connectors - Clean/repair as necessary. Measure the Passenger Folding Mirror Relay Output circuit from the relay connector to the mirror harness connector. Is the resistance below 5.0 ohms? Yes → Go To 6 No → Repair the Passenger Folding Mirror Relay Output circuit for an open. Perform BODY VERIFICATION TEST - VER 1.	All
6	Disconnect the Body Control Module C2 connector. Disconnect the Passenger Folding Mirror Relay. NOTE: Check connectors - Clean/repair as necessary. Measure the Passenger Folding Mirror Relay Input circuit from the relay connector to the BCM C2 connector. Is the resistance below 5.0 ohms? Yes → Replace the Body Control Module. Perform BODY VERIFICATION TEST - VER 1. No → Repair the Passenger Folding Mirror Relay Input circuit for an open. Perform BODY VERIFICATION TEST - VER 1.	All

Symptom List:

LF TIRE PRESSURE SENSOR BATTERY LOW
LF TIRE PRESSURE SENSOR FAILURE
LR TIRE PRESSURE SENSOR BATTERY LOW
LR TIRE PRESSURE SENSOR FAILURE
RF TIRE PRESSURE SENSOR BATTERY LOW
RF TIRE PRESSURE SENSOR FAILURE
RR TIRE PRESSURE SENSOR BATTERY LOW
RR TIRE PRESSURE SENSOR FAILURE

Test Note: All symptoms listed above are diagnosed using the same tests. The title for the tests will be LF TIRE PRESSURE SENSOR BATTERY LOW.

When Monitored and Set Condition:

LF TIRE PRESSURE SENSOR BATTERY LOW

When Monitored: Key ON.

Set Condition: When the EVIC detects a low battery condition from the LF Sensor/ Transmitter.

LF TIRE PRESSURE SENSOR FAILURE

When Monitored: Key ON.

Set Condition: When the EVIC detects a no-transmit condition from the LF Sensor/ Transmitter.

LR TIRE PRESSURE SENSOR BATTERY LOW

When Monitored: Key ON.

Set Condition: When the EVIC detects a low battery condition from the LR Sensor/ Transmitter.

LR TIRE PRESSURE SENSOR FAILURE

When Monitored: Key ON.

Set Condition: When the EVIC detects a no transmit condition from the LR Sensor/ Transmitter.

RF TIRE PRESSURE SENSOR BATTERY LOW

When Monitored: Key ON.

Set Condition: When the EVIC detects a low battery condition from the RF Sensor/ Transmitter.

LF TIRE PRESSURE SENSOR BATTERY LOW — Continued

RF TIRE PRESSURE SENSOR FAILURE

When Monitored: Key ON.

Set Condition: When the EVIC detects a no transmit condition from the RF Sensor/Transmitter.

RR TIRE PRESSURE SENSOR BATTERY LOW

When Monitored: Key ON.

Set Condition: When the EVIC detects a low battery condition from the RR Sensor/Transmitter.

RR TIRE PRESSURE SENSOR FAILURE

When Monitored: Key ON.

Set Condition: When the EVIC detects a no transmit condition from the RR Sensor/Transmitter.

POSSIBLE CAUSES
EVIC INTERNAL FAULT
SENSOR/TRANSMITTER INTERNAL FAULT

TEST	ACTION	APPLICABILITY
1	With the DRBIII®, record and erase DTC's. Drive the vehicle for 10 minutes at 32 km/h (20 mph). With the DRBIII®, read DTCs. Does the DRBIII® display a Sensor Failure or Sensor Low Battery message? Yes → Replace the indicated Tire Pressure Sensor/Transmitter. Perform TIRE PRESSURE VERIFICATION TEST. No → Go To 2	All
2	Observe the EVIC display. Does the EVIC display SERVICE TIRE PRESS. SYSTEM? Yes → Replace the EVIC in accordance with the Service Information. Perform TIRE PRESSURE VERIFICATION TEST. No → Test Complete.	All

Symptom:
BCM MESSAGES NOT RECEIVED (EXPORT ONLY)

When Monitored and Set Condition:

BCM MESSAGES NOT RECEIVED (EXPORT ONLY)

When Monitored: Continuously with the ignition on.

Set Condition: The RKE/Thatcham Alarm Module does not receive any messages from the BCM for at least 5 seconds.

POSSIBLE CAUSES
INTERMITTENT CONDITION
BCM COMMUNICATION FAILURE
PCI BUS CIRCUIT OPEN
RKE/THATCHAM ALARM MODULE - INTERNAL MALFUNCTION

TEST	ACTION	APPLICABILITY
1	Turn the ignition on. With the DRBIII®, attempt to communicate with the BCM. Was the DRBIII® able to communicate with the BCM? Yes → Go To 2 No → Refer to the Communication category and perform the appropriate symptom. Perform VTSS VERIFICATION TEST - 1A.	All
2	Turn the ignition on. With the DRBIII®, attempt to communicate with the RKE/Thatcham Alarm Module. Was the DRBIII® able to communicate with the RKE/Thatcham Alarm Module? Yes → The condition that caused this symptom is currently not present. Inspect the related wiring harness for a possible intermittent condition. Perform VTSS VERIFICATION TEST - 1A. No → Go To 3	All
3	Turn the ignition off. Disconnect the RKE/Thatcham Alarm Module C1 harness connector. Connect the diagnostic junction port tester #8339 to the diagnostic junction port. **NOTE: Do not connect the tester to the DRBIII®.** Measure the resistance of the PCI Bus circuit between the diagnostic junction port tester and the RKE/Thatcham Alarm Module C1 connector (cavity 13). Is the resistance below 5.0 ohms? Yes → Replace the RKE/Thatcham Alarm Module. Perform VTSS VERIFICATION TEST - 1A. No → Repair the PCI Bus circuit for an open. Perform VTSS VERIFICATION TEST - 1A.	All

Symptom:
HORN INPUT STUCK

When Monitored and Set Condition:

HORN INPUT STUCK

When Monitored: Continuously with the ignition on.

Set Condition: The FCM has detected a fault in the Horn Switch Sense circuit.

POSSIBLE CAUSES
FRONT CONTROL MODULE INTERNAL MALFUNCTION
FUSE AND RELAY CENTER INTERNAL MALFUNCTION
INTERMITTENT CONDITION
HORN SWITCH SENSE CIRCUIT SHORTED TO GROUND

TEST	ACTION	APPLICABILITY
1	Turn the ignition on. With the DRBIII®, erase the current Front Control Module DTC's. Turn the ignition off, wait 10 seconds then turn the ignition on. With the DRBIII®, read the current Front Control Module DTC's. Does the DRBIII® display: HORN INPUT STUCK? Yes → Go To 2 No → The condition that caused this symptom is currently not present. Inspect the related wiring harness for a possible intermittent condition. Perform VTSS VERIFICATION TEST - 1A.	All
2	Turn the ignition off. Disconnect the Front Control Module from the Fuse and Relay Center. Measure the resistance between ground and the Horn Switch Sense circuit at the Fuse and Relay Center side of the FCM connector. Is the resistance below 5.0 ohms? Yes → Go To 3 No → Replace the Front Control Module. Perform VTSS VERIFICATION TEST - 1A.	All
3	Turn the ignition off. Disconnect connector C7 on the Fuse and Relay Center. Measure the resistance between ground and the Horn Switch Sense circuit at the Fuse and Relay Center C7 connector. Is the resistance below 5.0 ohms? Yes → Repair the Horn Switch Sense circuit for a short to ground. Perform VTSS VERIFICATION TEST - 1A. No → Replace the Fuse and Relay Center. Perform VTSS VERIFICATION TEST - 1A.	All

Symptom:
HORN RELAY OPEN

When Monitored and Set Condition:

HORN RELAY OPEN

When Monitored: Continuously with the ignition on.

Set Condition: The FCM has detected an open in the Horn Relay Control circuit.

POSSIBLE CAUSES
FRONT CONTROL MODULE INTERNAL MALFUNCTION
FUSE AND RELAY CENTER INTERNAL MALFUNCTION
INTERMITTENT CONDITION
HORN RELAY

TEST	ACTION	APPLICABILITY
1	Turn the ignition on. With the DRBIII®, erase the current Front Control Module DTC's. Turn the ignition off, wait 10 seconds then turn the ignition on. With the DRBIII®, read the current Front Control Module DTC's. Does the DRBIII® display: HORN RELAY OPEN? Yes → Go To 2 No → The condition that caused this symptom is currently not present. Inspect the related wiring harness for a possible intermittent condition. Perform VTSS VERIFICATION TEST - 1A.	All
2	Turn the ignition off. Disconnect the Front Control Module from the Fuse and Relay Center. Measure the voltage of the Horn Relay Control circuit at the Fuse and Relay Center side of the FCM connector. Is the voltage above 10.0 volts? Yes → Replace the Front Control Module. Perform VTSS VERIFICATION TEST - 1A. No → Go To 3	All
3	Turn the ignition off. Disconnect the Horn Relay from the Fuse and Relay Center. Measure the resistance of the Horn Relay Control circuit between the FCM connector cavity 10 and the Horn Relay connector cavity 85. Is the resistance below 5.0 ohms? Yes → Replace the Horn Relay. Perform VTSS VERIFICATION TEST - 1A. No → Replace the Fuse and Relay Center. Perform VTSS VERIFICATION TEST - 1A.	All

Symptom:
HORN RELAY SHORTED TO BATTERY

When Monitored and Set Condition:

HORN RELAY SHORTED TO BATTERY

When Monitored: Continuously with the ignition on.

Set Condition: The FCM has detected a short to battery in the Horn Relay Control circuit.

POSSIBLE CAUSES
FUSE AND RELAY CENTER INTERNAL MALFUNCTION
HORN RELAY
INTERMITTENT CONDITION
FRONT CONTROL MODULE

TEST	ACTION	APPLICABILITY
1	Turn the ignition on. With the DRBIII®, erase the current Front Control Module DTC's. Turn the ignition off, wait 10 seconds then turn the ignition on. With the DRBIII®, read the current Front Control Module DTC's. Does the DRBIII® display: HORN RELAY SHORTED TO BATTERY? Yes → Go To 2 No → The condition that caused this symptom is currently not present. Inspect the related wiring harness for a possible intermittent condition. Perform VTSS VERIFICATION TEST - 1A.	All
2	Turn the ignition off. Disconnect the Horn Relay from the Fuse and Relay Center. Substitute the original Horn Relay with a known good relay. Turn the ignition on. Attempt to operate the horn. With the DRBIII®, read the current Front Control Module DTC's. Does the DRBIII® display: HORN RELAY SHORTED TO BATTERY? Yes → Go To 3 No → Replace the Horn Relay. Perform VTSS VERIFICATION TEST - 1A.	All

HORN RELAY SHORTED TO BATTERY — Continued

TEST	ACTION	APPLICABILITY
3	Turn the ignition off. Disconnect the Front Control Module from the Fuse and Relay Center. Disconnect the Horn Relay from the Fuse and Relay Center. Measure the voltage of the Horn Relay Control circuit at the Fuse and Relay Center side of the FCM connector. Is the voltage above 10.0 volts? Yes → Replace the Fuse and Relay Center. Perform VTSS VERIFICATION TEST - 1A. No → Replace the Front Control Module. Perform VTSS VERIFICATION TEST - 1A.	All

Symptom:
INTERNAL EEPROM WRITE ERROR (EXPORT ONLY)

When Monitored and Set Condition:

INTERNAL EEPROM WRITE ERROR (EXPORT ONLY)

When Monitored: During a EEPROM write event.

Set Condition: If the EEPROM write time exceeds 16ms.

POSSIBLE CAUSES
INTERMITTENT CONDITION
RKE/THATCHAM ALARM MODULE - INTERNAL MALFUNCTION

TEST	ACTION	APPLICABILITY
1	Turn the ignition on. With the DRBIII®, erase the current RKE/Thatcham Alarm Module DTC's. Turn the ignition off, wait 10 seconds then turn the ignition on. With the DRBIII®, read the current RKE/Thatcham Alarm Module DTC's. Does the DRBIII® display: INTERNAL EEPROM WRITE ERROR? Yes → Replace the RKE/Thatcham Alarm Module. Perform VTSS VERIFICATION TEST - 1A. No → The condition that caused this symptom is currently not present. Perform VTSS VERIFICATION TEST - 1A.	All

Symptom:
INTERNAL TRANSMIT FAILURE (EXPORT ONLY)

When Monitored and Set Condition:

INTERNAL TRANSMIT FAILURE (EXPORT ONLY)

When Monitored: Continuously with the ignition on during a message transmission.

Set Condition: After 8 internal attempts to transmit the RKE/Thatcham Alarm Module Bus messages.

POSSIBLE CAUSES
INTERMITTENT CONDITION
RKE/THATCHAM ALARM MODULE - INTERNAL MALFUNCTION

TEST	ACTION	APPLICABILITY
1	Turn the ignition on. With the DRBIII®, erase the current RKE/Thatcham Alarm Module DTC's. Turn the ignition off, wait 10 seconds then turn the ignition on. With the DRBIII®, read the current RKE/Thatcham Alarm Module DTC's. Does the DRBIII® display: INTERNAL TRANSMIT FAILURE? Yes → Replace the RKE/Thatcham Alarm Module. Perform VTSS VERIFICATION TEST - 1A. No → The condition that caused this symptom is currently not present. Inspect the related wiring harness for a possible intermittent condition. Perform VTSS VERIFICATION TEST - 1A.	All

Symptom:
INTERNAL ULTRASONIC FAULT (EXPORT ONLY)

When Monitored and Set Condition:

INTERNAL ULTRASONIC FAULT (EXPORT ONLY)

When Monitored: During the initial 6 seconds of an ignition on cycle.

Set Condition: After 5 consecutive ignition cycles without detecting any ultrasonic movement.

POSSIBLE CAUSES
FRONT INTRUSION SENSOR
FRONT INTRUSION SENSOR SIGNAL CIRCUIT OPEN
FRONT SENSOR GROUND CIRCUIT OPEN
INTRUSION SENSOR DETECTION
REAR INTRUSION SENSOR
REAR INTRUSION SENSOR SIGNAL CIRCUIT OPEN
REAR SENSOR GROUND CIRCUIT OPEN
RKE/THATCHAM ALARM MODULE - FRONT SENSOR GROUND
RKE/THATCHAM ALARM MODULE - FRONT SENSOR SIGNAL
RKE/THATCHAM ALARM MODULE - INTERNAL
RKE/THATCHAM ALARM MODULE - REAR SENSOR GROUND
RKE/THATCHAM ALARM MODULE - REAR SENSOR SIGNAL

TEST	ACTION	APPLICABILITY
1	Turn the ignition on. With the DRBIII®, erase the current RKE/Thatcham Alarm Module DTC's. Perform the following step 5 times. Turn the ignition off, wait 10 seconds then turn the ignition on. With the DRBIII®, read the current RKE/Thatcham Alarm Module DTC's. Does the DRBIII® display: INTERNAL ULTRASONIC FAULT? Yes → Go To 3 No → Go To 2	All

INTERNAL ULTRASONIC FAULT (EXPORT ONLY) — Continued

TEST	ACTION	APPLICABILITY
2	Turn the ignition off. **NOTE: The Intrusion Sensors will only detect movement during initial ignition on.** With the DRBIII®, select Intrusion Sensor Test. Turn the ignition on then wave arm inside the vehicle to simulate an intrusion. Does the DRBIII® show INTRUSION DETECTED when the ignition is initially turned on? Yes → The condition that caused this symptom is currently not present. Inspect the related wiring harness for a possible intermittent condition. Perform VTSS VERIFICATION TEST - 1A. No → Go To 3	All
3	Turn the ignition off. Disconnect the Front Intrusion Sensor connector. Connect a voltmeter to the Front Intrusion Sensor Signal circuit at the Intrusion Sensor connector. Turn the ignition on while observing the voltmeter. **NOTE: Voltage will only be present during the first 6 seconds when the ignition is turned on.** Is the voltage above 10.0 volts when the ignition is initially turned on? Yes → Go To 4 No → Go To 12	All
4	Turn the ignition off. Measure the resistance of the Sensor Ground circuit at the Front Intrusion Sensor connector. Is the resistance below 5.0 ohms? Yes → Go To 5 No → Go To 11	All
5	Replace the Front Intrusion Sensor with a known good sensor. With the DRBIII®, select Intrusion Sensor Test. Turn the ignition on then wave arm inside the vehicle to simulate an intrusion. Does the DRBIII® show: INTRUSION DETECTED? Yes → Replace the Front Intrusion Sensor. Perform VTSS VERIFICATION TEST - 1A. No → Go To 6	All
6	Turn the ignition off. Disconnect the Rear Intrusion Sensor connector. Connect a voltmeter to the Rear Intrusion Sensor Signal circuit at the Intrusion Sensor connector. Turn the ignition on while observing the voltmeter. **NOTE: Voltage will only be present during the first 6 seconds when the ignition is turned on.** Is the voltage above 10.0 volts when the ignition is initially turned on? Yes → Go To 7 No → Go To 10	All

INTERNAL ULTRASONIC FAULT (EXPORT ONLY) — Continued

TEST	ACTION	APPLICABILITY
7	Turn the ignition off. Measure the resistance of the Sensor Ground circuit at the Rear Intrusion Sensor connector. Is the resistance below 5.0 ohms? Yes → Go To 8 No → Go To 9	All
8	Replace the Rear Intrusion Sensor with a known good sensor. With the DRBIII®, select Intrusion Sensor Test. Turn the ignition on then wave arm inside the vehicle to simulate an intrusion. Does the DRBIII® show INTRUSION DETECTED? Yes → Replace the Rear Intrusion Sensor. Perform VTSS VERIFICATION TEST - 1A. No → Replace the RKE/Thatcham Alarm Module. Perform VTSS VERIFICATION TEST - 1A.	All
9	Gain access to the RKE/Thatcham Alarm Module. Disconnect the RKE/Thatcham Alarm Module C1 connector. Measure the resistance of the Sensor Ground circuit between the RKE/Thatcham Alarm Module C1 connector and the Intrusion Sensor connector. Is the resistance below 5.0 ohms? Yes → Replace the RKE/Thatcham Alarm Module. Perform VTSS VERIFICATION TEST - 1A. No → Repair the Rear Sensor Ground circuit for an open. Perform VTSS VERIFICATION TEST - 1A.	All
10	Turn the ignition off. Gain access to the RKE/Thatcham Alarm Module C1 connector. While back probing, measure the voltage of the Rear Intrusion Sensor Signal circuit. Turn the ignition on while observing the voltmeter. **NOTE: Voltage will only be present during the first 6 seconds when the ignition is turned on.** Is the voltage above 10.0 volts when the ignition is initially turned on? Yes → Repair the Rear Intrusion Sensor Signal circuit for an open. Perform VTSS VERIFICATION TEST - 1A. No → Replace the RKE/Thatcham Alarm Module. Perform VTSS VERIFICATION TEST - 1A.	All
11	Gain access to the RKE/Thatcham Alarm Module. Disconnect the RKE/Thatcham Alarm Module C1 connector. Measure the resistance of the Sensor Ground circuit between the RKE/Thatcham Alarm Module C1 connector and the Intrusion Sensor connector. Is the resistance below 5.0 ohms? Yes → Replace the RKE/Thatcham Alarm Module. Perform VTSS VERIFICATION TEST - 1A. No → Repair the Front Sensor Ground circuit for an open. Perform VTSS VERIFICATION TEST - 1A.	All

INTERNAL ULTRASONIC FAULT (EXPORT ONLY) — Continued

TEST	ACTION	APPLICABILITY
12	Turn the ignition off. Gain access to the RKE/Thatcham Alarm Module C1 connector. While back probing, measure the voltage of the Front Intrusion Sensor Signal circuit. Turn the ignition on while observing the voltmeter. **NOTE: Voltage will only be present during the first 6 seconds when the ignition is turned on.** Is the voltage above 10.0 volts when the ignition is initially turned on? Yes → Repair the Front Intrusion Sensor Signal circuit for an open. Perform VTSS VERIFICATION TEST - 1A. No → Replace the RKE/Thatcham Alarm Module. Perform VTSS VERIFICATION TEST - 1A.	All

Symptom:
LOOPBACK ERROR (EXPORT ONLY)

When Monitored and Set Condition:

LOOPBACK ERROR (EXPORT ONLY)

When Monitored: During power up, following detection of any other Bus errors.

Set Condition: Internally transmitted message on the PCI Bus is not received correctly.

POSSIBLE CAUSES
INTERMITTENT CONDITION
RKE/THATCHAM ALARM MODULE - INTERNAL MALFUNCTION

TEST	ACTION	APPLICABILITY
1	Turn the ignition on. With the DRBIII®, erase the current RKE/Thatcham Alarm Module DTC's. Turn the ignition off, wait 10 seconds then turn the ignition on. With the DRBIII®, read the current RKE/Thatcham Alarm Module DTC's. Does the DRBIII® display: LOOPBACK ERROR? Yes → Replace the RKE/Thatcham Alarm Module. Perform VTSS VERIFICATION TEST - 1A. No → The condition that caused this symptom is currently not present. Perform VTSS VERIFICATION TEST - 1A.	All

Symptom:
NO VALID MESSAGES RECEIVED (EXPORT ONLY)

When Monitored and Set Condition:

NO VALID MESSAGES RECEIVED (EXPORT ONLY)

When Monitored: Continuously with the ignition on.

Set Condition: The RKE/Thatcham Alarm Module does not receive any valid messages on the PCI Bus for a minimum of 5 seconds.

POSSIBLE CAUSES
INTERMITTENT CONDITION
RKE/THATCHAM ALARM MODULE - INTERNAL MALFUNCTION

TEST	ACTION	APPLICABILITY
1	Turn the ignition on. With the DRBIII®, erase the current RKE/Thatcham Alarm Module DTC's. Turn the ignition off, wait 10 seconds then turn the ignition on. With the DRBIII®, read the current RKE/Thatcham Alarm Module DTC's. Does the DRBIII® display: NO VALID MESSAGES RECEIVED? Yes → Replace the RKE/Thatcham Alarm Module. Perform VTSS VERIFICATION TEST - 1A. No → The condition that caused this symptom is currently not present. Inspect the related wiring harness for a possible intermittent condition. Perform VTSS VERIFICATION TEST - 1A.	All

Symptom:
PCI BUS SHORTED TO BATTERY (EXPORT ONLY)

When Monitored and Set Condition:

PCI BUS SHORTED TO BATTERY (EXPORT ONLY)

When Monitored: Continuously with the ignition on.

Set Condition: The RKE/Thatcham Alarm Module has detected a short to battery voltage on the PCI Bus.

POSSIBLE CAUSES
PCI BUS MALFUNCTION
INTERMITTENT CONDITION

TEST	ACTION	APPLICABILITY
1	**NOTE: If this code is set and active it will be necessary to perform the PCI Bus Communication Failure symptom.** **NOTE: The conditions that set the DTC are not present at this time. The following list may help in identifying the intermittent condition.** Refer to any Technical Service Bulletins (TSB) that may apply. Visually inspect the related wiring harness. Look for any chafed, pierced, pinched, or partially broken wires. Visually inspect the related wiring harness connectors. Look for broken, bent, pushed out, or corroded terminals. Were any of the above conditions present? Yes → Repair as necessary. Perform VTSS VERIFICATION TEST - 1A. No → The condition that caused this symptom is currently not present. Inspect the related wiring harness for a possible intermittent condition. Look for any chafed, pierced, pinched or partially broken wires. Perform VTSS VERIFICATION TEST - 1A.	All

Symptom:
PCI BUS SHORTED TO GROUND (EXPORT ONLY)

When Monitored and Set Condition:

PCI BUS SHORTED TO GROUND (EXPORT ONLY)

When Monitored: Continuously with the ignition on.

Set Condition: The RKE/Thatcham Alarm Module has detected a short to ground on the PCI Bus.

POSSIBLE CAUSES
PCI BUS MALFUNCTION
INTERMITTENT CONDITION

TEST	ACTION	APPLICABILITY
1	**NOTE: If this code is set and active it will be necessary to perform the PCI Bus Communication Failure symptom.** **NOTE: The conditions that set the DTC are not present at this time. The following list may help in identifying the intermittent condition.** Refer to any Technical Service Bulletins (TSB) that may apply. Visually inspect the related wiring harness. Look for any chafed, pierced, pinched, or partially broken wires. Visually inspect the related wiring harness connectors. Look for broken, bent, pushed out, or corroded terminals. Were any of the above conditions present? Yes → Repair as necessary. Perform VTSS VERIFICATION TEST - 1A. No → The condition that caused this symptom is currently not present. Inspect the related wiring harness for a possible intermittent condition. Look for any chafed, pierced, pinched or partially broken wires. Perform VTSS VERIFICATION TEST - 1A.	All

Symptom:
PCM MESSAGES NOT RECEIVED (EXPORT ONLY)

When Monitored and Set Condition:

PCM MESSAGES NOT RECEIVED (EXPORT ONLY)

When Monitored: Continuously with the ignition on.

Set Condition: The RKE/Thatcham Alarm Module does not receive any messages from the PCM for at least 5 seconds.

POSSIBLE CAUSES
INTERMITTENT CONDITION
PCM COMMUNICATION FAILURE
PCI BUS CIRCUIT OPEN
RKE/THATCHAM ALARM MODULE - INTERNAL MALFUNCTION

TEST	ACTION	APPLICABILITY
1	Turn the ignition on. With the DRBIII®, attempt to communicate with the PCM. Was the DRBIII® able to communicate with the PCM? Yes → Go To 2 No → Refer to the Communication category and perform the appropriate symptom. Perform VTSS VERIFICATION TEST - 1A.	All
2	Turn the ignition on. With the DRBIII®, attempt to communicate with the RKE/Thatcham Alarm Module. Was the DRBIII® able to communicate with the RKE/Thatcham Alarm Module? Yes → The condition that caused this symptom is currently not present. Inspect the related wiring harness for a possible intermittent condition. Perform VTSS VERIFICATION TEST - 1A. No → Go To 3	All
3	Turn the ignition off. Disconnect the RKE/Thatcham Alarm Module C1 harness connector. Connect the diagnostic junction port tester #8339 to the diagnostic junction port. **NOTE: Do not connect the tester to the DRBIII®.** Measure the resistance of the PCI Bus circuit between the diagnostic junction port tester and the RKE/Thatcham Alarm Module C1 connector (cavity 13). Is the resistance below 5.0 ohms? Yes → Replace the RKE/Thatcham Alarm Module. Perform VTSS VERIFICATION TEST - 1A. No → Repair the PCI Bus circuit for an open. Perform VTSS VERIFICATION TEST - 1A.	All

Symptom:
VEHICLE THEFT ALARM INDICATOR OUTPUT OPEN

When Monitored and Set Condition:

VEHICLE THEFT ALARM INDICATOR OUTPUT OPEN

When Monitored: Continuously with the ignition on.

Set Condition: The BCM has detected an open in the VTSS Indicator Driver circuit.

POSSIBLE CAUSES
INTERMITTENT CONDITION
VTSS INDICATOR DRIVER CIRCUIT OPEN
BODY CONTROL MODULE INTERNAL MALFUNCTION

TEST	ACTION	APPLICABILITY
1	Turn the ignition on. With the DRBIII®, erase the current Body Control Module DTC's. Turn the ignition off, wait 10 seconds then turn the ignition on. With the DRBIII®, read the current Body Control Module DTC's. Does the DRBIII® display: VTA INDICATOR OUTPUT OPEN? Yes → Go To 2 No → The condition that caused this symptom is currently not present. Inspect the related wiring harness for a possible intermittent condition. Perform VTSS VERIFICATION TEST - 1A.	All
2	Disconnect the Message Center harness connector. Disconnect the Body Control Module C4 harness connector. Measure the resistance of the VTSS Indicator Driver circuit. Is the resistance below 5.0 ohms? Yes → Replace the Body Control Module. Perform VTSS VERIFICATION TEST - 1A. No → Repair the VTSS Indicator Driver circuit for an open. Perform VTSS VERIFICATION TEST - 1A.	All

Symptom:
VEHICLE THEFT ALARM INDICATOR OUTPUT SHORT

When Monitored and Set Condition:

VEHICLE THEFT ALARM INDICATOR OUTPUT SHORT

When Monitored: Continuously with the ignition on.

Set Condition: The BCM has detected a short to ground in the VTSS Indicator Driver circuit.

POSSIBLE CAUSES
INTERMITTENT CONDITION
MESSAGE CENTER INTERNAL MALFUNCTION
BODY CONTROL MODULE INTERNAL MALFUNCTION
VTSS INDICATOR DRIVER CIRCUIT SHORTED TO GROUND

TEST	ACTION	APPLICABILITY
1	Turn the ignition on. With the DRBIII®, erase the current Body Control Module DTC's. Turn the ignition off, wait 10 seconds then turn the ignition on. With the DRBIII®, read the current Body Control Module DTC's. Does the DRBIII® display: VTA INDICATOR OUTPUT OPEN? Yes → Go To 2 No → The condition that caused this symptom is currently not present. Inspect the related wiring harness for a possible intermittent condition. Perform VTSS VERIFICATION TEST - 1A.	All
2	Disconnect the Body Control Module C4 connector. Measure the resistance between ground and the VTSS Indicator Driver circuit. Is the resistance below 5.0 ohms? Yes → Go To 3 No → Replace the Body Control Module. Perform VTSS VERIFICATION TEST - 1A.	All
3	Disconnect the Body Control Module C4 connector. Disconnect the Message Center connector. Measure the resistance of the VTSS Indicator Driver circuit to ground. Is the resistance below 5.0 ohms? Yes → Repair the VTSS Indicator Driver circuit for a short to ground. Perform VTSS VERIFICATION TEST - 1A. No → Replace the Message Center assembly. Perform VTSS VERIFICATION TEST - 1A.	All

Symptom:

***ALARM TRIPS ON ITS OWN**

POSSIBLE CAUSES
ALARM TRIPPED BY
INTERMITTENT CONDITION

TEST	ACTION	APPLICABILITY
1	With the DRBIII®, read the Alarm Tripped By status. Were there any causes displayed? Yes → Refer to Symptom List for problems related to the component indicated by the DRBIII®. Perform VTSS VERIFICATION TEST - 1A. No → The condition that caused this symptom is currently not present. Inspect the related wiring harness for a possible intermittent condition. Look for any chafed, pierced, pinched or partially broken wires. Perform VTSS VERIFICATION TEST - 1A.	All

Symptom:

***HOOD DOES NOT TRIP VTSS**

POSSIBLE CAUSES
CHECK DRBIII® FOR HOOD AJAR SWITCH RESPONSE
BODY CONTROL MODULE

TEST	ACTION	APPLICABILITY
1	**NOTE: For the results of this test to be valid, the security system must arm and flash the VTSS indicator properly.** With the DRBIII®, read the HOOD AJAR SW status. Open the hood. Does the DRBIII® display CLOSED? Yes → Replace the Body Control Module. Perform VTSS VERIFICATION TEST - 1A. No → Refer to symptom HOOD AJAR CKT OPEN in the DOOR AJAR category. Perform VTSS VERIFICATION TEST - 1A.	All

Symptom:

***LEFT FRONT DOOR DOES NOT TRIP VTSS**

POSSIBLE CAUSES
BODY CONTROL MODULE
CHECK DRBIII® FOR DRIVER DOOR AJAR RESPONSE

TEST	ACTION	APPLICABILITY
1	**NOTE: For the results of this test to be valid, the security system must arm and flash the VTSS indicator properly.** With the DRBIII®, read the DRVR DOOR AJAR SW status. Open the driver door. Does the DRBIII® display CLOSED? Yes → Replace the Body Control Module. Perform VTSS VERIFICATION TEST - 1A. No → Refer to symptom DRIVER DOOR AJAR CKT OPEN in the DOOR AJAR category. Perform VTSS VERIFICATION TEST - 1A.	All

Symptom:

*LEFT SLIDING DOOR DOES NOT TRIP VTSS

POSSIBLE CAUSES
MONITOR DRBIII® FOR LEFT SLIDING DOOR AJAR STATUS
BODY CONTROL MODULE

TEST	ACTION	APPLICABILITY
1	**NOTE: For the results of this test to be valid, the security system must arm and flash the VTSS indicator properly.** With the DRBIII®, read the LSLIDE DR AJAR SW status. Open the left sliding door. Does the DRBIII® display the switch state as CLOSED? Yes → Replace the Body Control Module. Perform VTSS VERIFICATION TEST - 1A. No → Refer to symptom LEFT SLIDING DOOR AJAR CKT OPEN in the DOOR AJAR category. Perform VTSS VERIFICATION TEST - 1A.	All

Symptom:

***LIFTGATE DOES NOT TRIP VTSS (EXPORT ONLY)**

POSSIBLE CAUSES
CHECK DRBIII® FOR LIFTGATE SW RESPONSE
BODY CONTROL MODULE

TEST	ACTION	APPLICABILITY
1	**NOTE: For the results of this test to be valid, the security system must arm and flash the VTSS indicator properly.** With the DRBIII®, read the LIFTGATE AJAR SW status. Open the liftgate. Does the DRBIII® display CLOSED? Yes → Replace the Body Control Module. Perform VTSS VERIFICATION TEST - 1A. No → Refer to symptom LIFTGATE AJAR CKT OPEN in the DOOR AJAR category. Perform VTSS VERIFICATION TEST - 1A.	All

Symptom:

***REPEATER LAMPS INOPERATIVE WITH ALARM (EXPORT ONLY)**

POSSIBLE CAUSES
HAZARD SWITCH SENSE CIRCUIT OPEN
REPEATER LAMPS INOPERATIVE
HAZARD SWITCH SENSE CIRCUIT OPEN
RKE/THATCHAM ALARM MODULE - INTERNAL MALFUNCTION

TEST	ACTION	APPLICABILITY
1	With the DRBIII®, actuate the Hazard Lamps. Do the Hazard Lamps light while actuating? Yes → Go To 2 No → Refer to the appropriate Service Information to repair the Hazard Lamps. Perform VTSS VERIFICATION TEST - 1A.	All
2	Turn the hazard lamp switch on. Do the Hazard Lamps operate? Yes → Go To 3 No → Repair the Hazard Switch Sense circuit for an open between the BCM and the splice. Perform VTSS VERIFICATION TEST - 1A.	All
3	Gain access to the RKE/Thatcham Alarm Module. Disconnect the RKE/Thatcham Alarm Module C1 connector. Connect a jumper wire between cavity 15 of the RKE/Thatcham Alarm Module C1 connector and ground. Do the hazard lamps light with the jumper wire connected? Yes → Replace the RKE/Thatcham Alarm Module. Perform VTSS VERIFICATION TEST - 1A. No → Repair the Hazard Switch Sense circuit for an open between the RKE/Thatcham Alarm Module and the splice. Perform VTSS VERIFICATION TEST - 1A.	All

Symptom:
*RIGHT FRONT DOOR DOES NOT TRIP VTSS

POSSIBLE CAUSES
CHECK DRBIII® FOR PASSENGER DOOR AJAR RESPONSE
BODY CONTROL MODULE

TEST	ACTION	APPLICABILITY
1	**NOTE: For the results of this test to be valid, the security system must arm and flash the VTSS indicator properly.** With the DRBIII®, read the PASS DOOR AJAR SW status. Open the passenger door. Does the DRBIII® display CLOSED? Yes → Replace the Body Control Module. Perform VTSS VERIFICATION TEST - 1A. No → Refer to symptom PASSENGER DOOR AJAR CKT OPEN in the DOOR AJAR category. Perform VTSS VERIFICATION TEST - 1A.	All

Symptom:

***RIGHT SLIDING DOOR DOES NOT TRIP VTSS**

POSSIBLE CAUSES
CHECK DRBIII® FOR RIGHT REAR DOOR AJAR RESPONSE
BODY CONTROL MODULE

TEST	ACTION	APPLICABILITY
1	**NOTE: For the results of this test to be valid, the security system must arm and flash the VTSS indicator properly.** With the DRBIII®, read the RSLIDE DR AJAR SW status. Open the right sliding door. Does the DRBIII® display CLOSED? Yes → Replace the Body Control Module. Perform VTSS VERIFICATION TEST - 1A. No → Refer to symptom RIGHT SLIDING DOOR AJAR CKT OPEN in the DOOR AJAR category. Perform VTSS VERIFICATION TEST - 1A.	All

Symptom:
*VTSS INDICATOR INOPERATIVE

POSSIBLE CAUSES
OPEN VTSS INDICATOR FUSED B(+) SUPPLY
OPEN VTSS LED
VTSS INDICATOR DRIVER CIRCUIT OPEN
BODY CONTROL MODULE INTERNAL MALFUNCTION

TEST	ACTION	APPLICABILITY
1	Disconnect the Message Center harness connector. Measure the voltage of the Fused B+ circuit. Is the voltage above 10.0 volts? Yes → Go To 2 No → Repair the Fused B(+) (Hazard) circuit for an open. Perform VTSS VERIFICATION TEST - 1A.	All
2	Disconnect the Message Center harness connector. With a 12-volt test light connected to 12-volts, connect the test light probe to the VTSS Indicator Driver circuit. Turn the ignition on. With the DRBIII® in Vehicle Theft, actuate the VTSS Indicator lamp. Does the test light illuminate when the VTSS Indicator lamp is actuated? Yes → Replace the Message Center assembly. Perform VTSS VERIFICATION TEST - 1A. No → Go To 3	All
3	Disconnect the Message Center harness connector. Disconnect the Body Control Module C4 harness connector. Measure the resistance of the VTSS Indicator Driver circuit. Is the resistance below 5.0 ohms? Yes → Replace the Body Control Module. Perform VTSS VERIFICATION TEST - 1A. No → Repair the VTSS Indicator Driver circuit for an open. Perform VTSS VERIFICATION TEST - 1A.	All

Symptom:

*VTSS INDICATOR LAMP INOPERATIVE (EXPORT ONLY)

POSSIBLE CAUSES
RKE/THATCHAM ALARM MODULE - INTERNAL MALFUNCTION
VTSS INDICATOR SUPPLY CIRCUIT OPEN
OPEN VTSS LED
VTSS INDICATOR DRIVER CIRCUIT OPEN
RKE/THATCHAM ALARM MODULE - INTERNAL MALFUNCTION

TEST	ACTION	APPLICABILITY
1	With the DRBIII®, actuate the VTSS INDICATOR LAMP. Does the VTSS Indicator Lamp flash while actuating. Yes → Replace the RKE/Thatcham Alarm Module. Perform VTSS VERIFICATION TEST - 1A. No → Go To 2	All
2	Disconnect the VTSS Indicator Lamp harness connector. Measure the voltage of the VTSS Indicator Supply circuit. Is the voltage above 10.0 volts? Yes → Go To 3 No → Repair the VTSS Indicator Supply circuit for an open. Perform VTSS VERIFICATION TEST - 1A.	All
3	Disconnect the VTSS Indicator Lamp harness connector. With a 12-volt test light connected to 12-volts, connect the test light probe to the VTSS Indicator Driver circuit. Turn the ignition on. With the DRBIII® in Vehicle Theft, actuate the VTSS Indicator lamp. Does the test light illuminate when the VTSS Indicator lamp is actuated? Yes → Replace the VTSS Indicator LED Lamp. Perform VTSS VERIFICATION TEST - 1A. No → Go To 4	All
4	Disconnect the VTSS Indicator Lamp harness connector. Disconnect the RKE/Thatcham Alarm Module C1 harness connector. Measure the resistance of the VTSS Indicator Driver circuit. Is the resistance below 5.0 ohms? Yes → Replace the RKE/Thatcham Alarm Module. Perform VTSS VERIFICATION TEST - 1A. No → Repair the VTSS Indicator Driver circuit for an open. Perform VTSS VERIFICATION TEST - 1A.	All

Symptom:

***VTSS SIREN INOP (EXPORT ONLY)**

POSSIBLE CAUSES
INTERMITTENT CONDITION
SIREN SIGNAL CONTROL CIRCUIT OPEN
SIREN SIGNAL RETURN CIRCUIT OPEN
SIREN SUPPLY CIRCUIT OPEN
VTSS SIREN
RKE/THATCHAM ALARM MODULE - INTERNAL MALFUNCTION
RKE/THATCHAM ALARM MODULE - INTERNAL MALFUNCTION
RKE/THATCHAM ALARM MODULE - INTERNAL MALFUNCTON
VTSS SIREN - INTERNAL MALFUNCTION
VTSS SIREN - INTERNAL MALFUNCTION
VTSS SIREN - INTERNAL MALFUNCTION

TEST	ACTION	APPLICABILITY
1	With the DRBIII®, actuate the VTSS Siren. Does the Siren sound while actuating? Yes → The condition that caused this symptom is currently not present. Inspect the related wiring harness for a possible intermittent condition. Look for any chafed, pierced, pinched or partially broken wires. Perform VTSS VERIFICATION TEST - 1A. No → Go To 2	All
2	Gain access to the VTSS Siren. Disconnect the VTSS Siren connector. Turn the ignition on. Measure the voltage of the Siren Supply circuit (cavity 3) in the VTSS Siren connector. Is the voltage above 10.0 volts? Yes → Go To 3 No → Go To 9	All
3	With the VTSS Siren connector disconnected. Measure the resistance of the Siren Signal Return circuit to ground. Is the resistance below 5.0 ohms? Yes → Go To 4 No → Go To 7	All

*VTSS SIREN INOP (EXPORT ONLY) — Continued

TEST	ACTION	APPLICABILITY
4	With the VTSS Siren connector disconnected. Turn the ignition on. Measure the voltage of the Siren Signal Control circuit (cavity 2) in the VTSS Siren connector. Is the voltage approximately 5.0 volts +/- 1.0 volt? Yes → Replace the VTSS Siren. Perform VTSS VERIFICATION TEST - 1A. No → Go To 5	All
5	Gain access to the RKE/Thatcham Alarm Module C1 harness connector. While back probing, measure the voltage of the Siren Signal Control circuit. Turn the ignition on. Is the voltage approximately 5.0 volts? Yes → Go To 6 No → Replace the RKE/Thatcham Alarm Module. Perform VTSS VERIFICATION TEST - 1A.	All
6	Disconnect the RKE/Thatcham Alarm Module C1 harness connector. Measure the resistance of the Siren Signal Control circuit between the RKE/Thatcham Alarm Module and the VTSS Siren connector. Is the resistance below 5.0 ohms? Yes → Replace the VTSS Siren. Perform VTSS VERIFICATION TEST - 1A. No → Repair the Siren Signal Control circuit for an open. Perform VTSS VERIFICATION TEST - 1A.	All
7	Gain access to the RKE/Thatcham Alarm Module C1 harness connector. While back probing, measure the resistance of the Siren Signal Return circuit. Is the resistance below 5.0 ohms? Yes → Go To 8 No → Replace the RKE/Thatcham Alarm Module. Perform VTSS VERIFICATION TEST - 1A.	All
8	Disconnect the RKE/Thatcham Alarm Module C1 harness connector. Measure the resistance of the Siren Signal Return circuit between the RKE/Thatcham Alarm Module and the VTSS Siren connector. Is the resistance below 5.0 ohms? Yes → Replace the VTSS Siren. Perform VTSS VERIFICATION TEST - 1A. No → Repair the Siren Signal Return circuit for an open. Perform VTSS VERIFICATION TEST - 1A.	All
9	Gain access to the RKE/Thatcham Alarm Module C1 harness connector. While back probing, measure the voltage of the Siren Supply circuit. Turn the ignition on. Is the voltage above 10.0 volts? Yes → Go To 10 No → Replace the RKE/Thatcham Alarm Module. Perform VTSS VERIFICATION TEST - 1A.	All

*VTSS SIREN INOP (EXPORT ONLY) — Continued

TEST	ACTION	APPLICABILITY
10	Disconnect the RKE/Thatcham Alarm Module C1 harness connector. Measure the resistance of the Siren Supply circuit between the RKE/Thatcham Alarm Module and the VTSS Siren connector. Is the resistance below 5.0 ohms? Yes → Replace the VTSS Siren. Perform VTSS VERIFICATION TEST - 1A. No → Repair the Siren Supply circuit for an open. Perform VTSS VERIFICATION TEST - 1A.	All

Symptom:

***VTSS WILL NOT ARM**

POSSIBLE CAUSES
CHECK THE VTSS STATUS
CHECK FOR DTCS AND VTSS ARMING INHIBITORS
BODY CONTROL MODULE

TEST	ACTION	APPLICABILITY
1	With the DRBIII®, check that the Theft Alarm is enabled. Was the Theft Alarm enabled? Yes → Go To 2 No → With the DRBIII®, enable the Vehicle Theft Security System (VTSS). Perform VTSS VERIFICATION TEST - 1A.	All
2	Ensure the liftgate, and all doors are closed. With the DRBIII®, read the active DTC's and the ajar switch states. Does the DRBIII® display any closed switches or VTSS related DTC's? Yes → Refer to the Symptom List and diagnose the appropriate symptom in the DOOR AJAR or VTSS category. Perform VTSS VERIFICATION TEST - 1A. No → Replace the Body Control Module. Perform VTSS VERIFICATION TEST - 1A.	All

Symptom:
FR WIPER HI-LO RELAY OPEN

POSSIBLE CAUSES
FUSED B(+) CIRCUIT
COMMON CIRCUIT OPEN
WIPER HI/LOW RELAY
WIPER ON/OFF RELAY
WIPER HI/LOW RELAY CONTROL CIRCUIT OPEN
FCM-ON/OFF RELAY DRIVER OPEN

TEST	ACTION	APPLICABILITY
1	Turn the ignition off. Remove the Wiper On/Off Relay from the PDC. Using a 12-volt test light connected to ground, probe both Fused B(+) circuits in the PDC. **NOTE: The test light must illuminate brightly. Compare the brightness to that of a direct connection to the battery.** Does the test light illuminate brightly at each terminal? Yes → Go To 2 No → Repair the Fused B(+) circuit(s) for an open. Perform BODY VERIFICATION TEST - VER 1.	All
2	Install a substitute relay in place of the Wiper On/Off Relay. Turn the ignition on. Turn the wipers on. Does the system operate correctly? Yes → Replace the Wiper On/Off Relay. Perform BODY VERIFICATION TEST - VER 1. No → Go To 3	All
3	Turn the ignition off. Remove the wiper High/Low Relay from the PDC. Remove the wiper On/Off Relay from the PDC. Measure the resistance of the Common circuit between the High/Low Relay and the On/Off relay in the PDC. Is the resistance below 10.0 ohms? Yes → Go To 4 No → Repair the Common circuit for an open. Perform BODY VERIFICATION TEST - VER 1.	All
4	Install a substitute relay in place of the Wiper Hi/Low Relay. Turn the ignition on. Turn the wipers on. Does the system operate correctly? Yes → Replace the Wiper Hi/Low Relay. Perform BODY VERIFICATION TEST - VER 1. No → Go To 5	All

FR WIPER HI-LO RELAY OPEN — Continued

TEST	ACTION	APPLICABILITY
5	Turn the ignition off. Remove the Wiper Hi/Low Relay from the PDC. Disconnect the FCM from the IPM. Connect a jumper wire between the Wiper Hi/Low Relay Control circuit at the IPM connector to ground. Measure the resistance between ground and the Wiper Hi/Low Relay Control circuit in the PDC. Is the resistance below 5.0 ohms? Yes → Replace the Front Control Module. Perform BODY VERIFICATION TEST - VER 1. No → Repair the Wiper Hi/Low Relay Control circuit for an open. Perform BODY VERIFICATION TEST - VER 1.	All

Symptom:

FR WIPER HI-LO RELAY SHORT TO BATT

POSSIBLE CAUSES
WIPER HI/LOW RELAY
WIPER HI/LOW RELAY CONTROL CIRCUIT SHORTED TO VOLTAGE
FCM

TEST	ACTION	APPLICABILITY
1	Turn the ignition off. Remove the Wiper Hi/Low Relay from the PDC. Disconnect the FCM from the IPM. Turn the ignition on. Measure the voltage of the Wiper Hi/Low Relay Control circuit at the PDC connector. Is the voltage above 1.0 volt? Yes → Repair the Wiper Hi/Low Relay Control circuit for a short to voltage. Perform BODY VERIFICATION TEST - VER 1. No → Go To 2	All
2	Install a substitute relay in place of the Wiper Hi/Low Relay. Turn the ignition on. Turn the wipers on. Does the system operate correctly? Yes → Replace the Wiper Hi/Low Relay. Perform BODY VERIFICATION TEST - VER 1. No → Replace the Front Control Module. Perform BODY VERIFICATION TEST - VER 1.	All

Symptom:

FRONT WASH SWITCH INPUT STUCK

POSSIBLE CAUSES
HIGH BEAM/FRONT WASHER SWITCH MUX CIRCUIT SHORTED TO GROUND
MULTI-FUNCTION SWITCH
WIRING HARNESS INSPECTION
FCM

TEST	ACTION	APPLICABILITY
1	Turn the ignition on. With the DRB, select Body, Body Control Module and read the F Washer Switch state. Does the DRB display switch state as Closed? Yes → Go To 2 No → Go To 4	All
2	Turn the ignition off. Disconnect the Multi-Function Switch harness connector. Turn the ignition on. With the DRB, select Body, Body Control Module and read the F Washer Switch state. Does the DRB display switch state as Open? Yes → Replace the Multi-Function Switch. Perform BODY VERIFICATION TEST - VER 1. No → Go To 3	All
3	Turn the ignition off. Disconnect the Multi-Function Switch harness connector. Disconnect the BCM C5 harness connector. Measure the resistance between ground and the High Beam/Front Washer Switch MUX circuit. Is the resistance below 1000.0 ohms? Yes → Repair the High Beam/Front Washer Switch MUX circuit for a short to ground. Perform BODY VERIFICATION TEST - VER 1. No → Replace the Front Control Module. Perform BODY VERIFICATION TEST - VER 1.	All

FRONT WASH SWITCH INPUT STUCK — Continued

TEST	ACTION	APPLICABILITY
4	Turn the ignition on. With the DRBIII®, erase all BCM and FCM DTCs. Turn the ignition off. **NOTE: Visually inspect the related wiring harness and circuits. Look for any chafed, pierced, pinched, or partially broken wires.** **NOTE: Visually inspect the related wiring harness connectors. Look for broken, bent, pushed out, or corroded terminals.** **Note: Refer to any Technical Service Bulletins (TSB) that may apply.** Were any problems found? Yes → Repair as necessary. Perform BODY VERIFICATION TEST - VER 1. No → Test Complete.	All

Symptom:

FRONT WASHER OUTPUT OPEN

POSSIBLE CAUSES
INTERMITTENT WIRING AND CONNECTORS
FRONT WASHER MOTOR CONTROL CIRCUIT OPEN
FUSED ACCESSORY RELAY OUTPUT CIRCUIT
FRONT WASHER MOTOR CONTROL CIRCUIT SHORT TO VOLTAGE
FRONT WASHER PUMP MOTOR
FRONT CONTROL MODULE

TEST	ACTION	APPLICABILITY
1	Ignition on, engine off. Press the Front Washer Switch. Does the Front Washer Motor Function? Yes → Go To 2 No → Go To 3	All
2	Turn the ignition on. With the DRBIII®, erase all BCM and FCM DTCs. Turn the ignition off. The conditions necessary to set this DTC are not present at this time. Using the schematics as a guide, inspect the wiring and connectors specific to this circuit. Wiggle the wiring while checking for shorts and open circuits. Were there any problems found? Yes → Repair as necessary. Perform BODY VERIFICATION TEST - VER 1. No → Test Complete.	All
3	Turn the ignition off to the lock position. Disconnect the Front Washer Pump Motor harness connector. **Note: Check connectors - Clean/repair as necessary.** Ignition on, engine off. Using a 12-volt test light connected to ground, check the Fused Accessory Relay Output circuit in the Front Washer Pump Motor harness connector. Does the test light illuminate brightly? Yes → Go To 4 No → Repair the Fused Accessory Relay Output circuit for an open. Perform BODY VERIFICATION TEST - VER 1.	All

FRONT WASHER OUTPUT OPEN — Continued

TEST	ACTION	APPLICABILITY
4	Turn the ignition off to the lock position. Disconnect the Front Washer Pump Motor harness connector. Ignition on, engine off. Using a 12-volt test light connected to 12 Volts, check the Front Washer Pump Motor Control circuit in the Front Washer Pump Motor harness connector while pressing the Front Washer Switch. Does the test light illuminate brightly? Yes → Replace the Front Washer Pump Motor in accordance with the Service Information. Perform BODY VERIFICATION TEST - VER 1. No → Go To 5	All
5	Turn the ignition off to the lock position. Disconnect the Front Control Module harness connector. Disconnect the Front Washer Pump Motor harness connector. **Note: Check connectors - Clean/repair as necessary.** Measure the resistance of the Rear Washer Pump Motor Control Circuit from the Front Control Module connector to the Rear Washer Pump Motor harness connector. Is the resistance above 5.0 ohms? Yes → Repair the Front Washer Pump Motor Control Circuit for an open. Perform BODY VERIFICATION TEST - VER 1. No → Go To 6	All
6	Turn the ignition off to the lock position. Disconnect the Front Control Module connector. Disconnect the Front Washer Pump Motor harness connector. **Note: Check connectors - Clean/repair as necessary.** Turn the ignition on. Using a 12-volt test light connected to ground, check the Front Washer Pump Motor Control circuit. Does the test light illuminate brightly? Yes → Repair the Front Washer Pump Motor Control Circuit for a short to voltage. Perform BODY VERIFICATION TEST - VER 1. No → Replace the Front Control Module in accordance with the Service Information. Perform BODY VERIFICATION TEST - VER 1.	All

Symptom:

FRONT WIPER NOT PARKED

POSSIBLE CAUSES
FRONT CONTROL MODULE
FRONT WIPER MODULE
MECHANICAL PROBLEM
WIRING HARNESS INSPECTION
FRONT WIPER PARK SWITCH SENSE CIRCUIT OPEN

TEST	ACTION	APPLICABILITY
1	Turn the ignition on. With the DRB, select Body, Front Control Module, Inputs/Outputs and read the Wiper Park Sw state. Does the DRB display Closed? Yes → Go To 2 No → Go To 3	All
2	Turn the ignition on. With the DRBIII®, erase all BCM and FCM DTCs. Turn the ignition off. **NOTE: Visually inspect the related wiring harness and circuits. Look for any chafed, pierced, pinched, or partially broken wires.** **NOTE: Visually inspect the related wiring harness connectors. Look for broken, bent, pushed out, or corroded terminals.** **Note: Refer to any Technical Service Bulletins (TSB) that may apply.** Were any problems found? Yes → Repair as necessary. Perform BODY VERIFICATION TEST - VER 1. No → Test Complete.	All
3	Turn the ignition off. Inspect all of the moving components associated with the Front Wiper system. Look for broken or damaged components which may prevent the wipers from parking properly. Are the any mechanical problems? Yes → Repair as necessary. Perform BODY VERIFICATION TEST - VER 1. No → Go To 4	All

FRONT WIPER NOT PARKED — Continued

TEST	ACTION	APPLICABILITY
4	Turn the ignition off. Disconnect the Front Wiper Module harness connector. Turn the ignition on. With the DRB, select Body, Body Computer then Inputs/Outputs and read the Wiper Park Sw state. Connect one end of a jumper wire to the Front Wiper Park Switch Sense circuit at the Front Wiper Module harness connector. Momentarily connect the other end of the jumper wire to ground. Repeat this several times. Did the Switch state change between Open and Closed when connecting and disconnecting the jumper? Yes → Replace the Front Wiper Module. Perform BODY VERIFICATION TEST - VER 1. No → Go To 5	All
5	Turn the ignition off. Disconnect the Front Wiper Module harness connector. Disconnect the FCM from the IPM. Measure the resistance of the Front Wiper Park Switch Sense circuit. Is the resistance below 10.0 ohms? Yes → Replace the Front Control Module. Perform BODY VERIFICATION TEST - VER 1. No → Repair the Front Wiper Park Switch Sense circuit for an open. Perform BODY VERIFICATION TEST - VER 1.	All

Symptom:
FRONT WIPER ON RELAY OPEN

POSSIBLE CAUSES
FUSED B(+) CIRCUIT
WIPER ON/OFF RELAY
WIPER ON/OFF RELAY CONTROL CIRCUIT OPEN
FCM-ON/OFF RELAY DRIVER OPEN

TEST	ACTION	APPLICABILITY
1	Turn the ignition off. Remove the Wiper On/Off Relay from the PDC. Using a 12-volt test light connected to ground, probe both Fused B(+) circuits in the PDC. **NOTE: The test light must illuminate brightly. Compare the brightness to that of a direct connection to the battery.** Does the test light illuminate brightly at each terminal? Yes → Go To 2 No → Repair the Fused B(+) circuit(s) for an open. Perform BODY VERIFICATION TEST - VER 1.	All
2	Install a substitute relay in place of the Wiper On/Off Relay. Turn the ignition on. Turn the wipers on. Does the system operate correctly? Yes → Replace the Wiper On/Off Relay. Perform BODY VERIFICATION TEST - VER 1. No → Go To 3	All
3	Turn the ignition off. Remove the Wiper On/Off Relay from the PDC. Disconnect the FCM from the IPM. Connect a jumper wire between the Wiper On/Off Relay Control circuit at the IPM connector to ground. Measure the resistance between ground and the Wiper On/Off Relay Control circuit in the PDC. Is the resistance below 5.0 ohms? Yes → Replace the Front Control Module. Perform BODY VERIFICATION TEST - VER 1. No → Repair the Wiper On/Off Relay Control circuit for an open. Perform BODY VERIFICATION TEST - VER 1.	All

Symptom:

FRONT WIPER ON RELAY SHORT TO BATT

POSSIBLE CAUSES
WIPER ON/OFF RELAY
WIPER ON/OFF RELAY CONTROL CIRCUIT SHORTED TO VOLTAGE
FCM

TEST	ACTION	APPLICABILITY
1	Turn the ignition off. Remove the Wiper On/Off Relay from the PDC. Disconnect the FCM from the IPM. Turn the ignition on. Measure the voltage of the Wiper On/Off Relay Control circuit at the PDC connector. Is the voltage above 1.0 volt? Yes → Repair the Wiper On/Off Relay Control circuit for a short to voltage. Perform BODY VERIFICATION TEST - VER 1. No → Go To 2	All
2	Install a substitute relay in place of the Wiper On/Off Relay. Turn the ignition on. Turn the wipers on. Does the system operate correctly? Yes → Replace the Wiper On/Off Relay. Perform BODY VERIFICATION TEST - VER 1. No → Replace the Front Control Module. Perform BODY VERIFICATION TEST - VER 1.	All

Symptom:
FRONT WIPER PARK SWITCH SHORT TO GND

POSSIBLE CAUSES
FRONT CONTROL MODULE
FRONT WIPER MODULE
WIRING HARNESS INSPECTION
FRONT WIPER PARK SWITCH SENSE CIRCUIT SHORTED TO GROUND

TEST	ACTION	APPLICABILITY
1	Turn the ignition on. Turn the Wipers on one of the intermittent settings. With the DRB, select Body, Front Control Module, Inputs/Outputs and read the Wiper Park Sw state. Does the switch state change from Open to Closed during wiper operation? Yes → Go To 2 No → Go To 3	All
2	Turn the ignition on. With the DRBIII®, erase all BCM and FCM DTCs. Turn the ignition off. **NOTE: Visually inspect the related wiring harness and circuits. Look for any chafed, pierced, pinched, or partially broken wires.** **NOTE: Visually inspect the related wiring harness connectors. Look for broken, bent, pushed out, or corroded terminals.** **Note: Refer to any Technical Service Bulletins (TSB) that may apply.** Were any problems found? Yes → Repair as necessary. Perform BODY VERIFICATION TEST - VER 1. No → Test Complete.	All
3	Turn the ignition off. Disconnect the Front Wiper Module harness connector. Disconnect the FCM from the IPM. Measure the resistance between ground and the Front Wiper Park Switch Sense circuit. Is the resistance below 1000.0 ohms? Yes → Repair the Front Wiper Park Switch Sense circuit for a short to ground. Perform BODY VERIFICATION TEST - VER 1. No → Go To 4	All

FRONT WIPER PARK SWITCH SHORT TO GND — Continued

TEST	ACTION	APPLICABILITY
4	Turn the ignition on. Turn the front wipers to an intermittent setting. Using a 12-volt test light connected to 12-volts, back probe the Front Wiper Park Switch Sense circuit at the Front Wiper Module harness connector. **NOTE: The test light should illuminate when the wipers are parked, then turn off when the wipers move off of the parked position.** Does the test light turn on and off properly? Yes → Replace the Front Control Module. Perform BODY VERIFICATION TEST - VER 1. No → Replace the Front Wiper Module. Perform BODY VERIFICATION TEST - VER 1.	All

Symptom:

FRONT WIPER SWITCH MUX INPUT OPEN

POSSIBLE CAUSES
WIRING HARNESS INSPECTION
WINDSHIELD WIPER SWITCH MUX CIRCUIT OPEN
MULTIFUNCTION SWITCH MUX RETURN CIRCUIT OPEN
WIPER MUX CIRCUIT SHORTED TO VOLTAGE
BCM
MULTI-FUNCTION SWITCH

TEST	ACTION	APPLICABILITY
1	Turn the ignition on. With the DRB, select Body, Body Controller and read the Front Wiper Sw volts. Is the voltage above 4.8 volts? Yes → Go To 2 No → Go To 6	All
2	Turn the ignition off. Disconnect the Multi-Function Switch harness connector. Disconnect the BCM C5 harness connector. Measure the resistance of the Front Wiper Switch MUX circuit between the BCM C5 harness connector and the Multi-Function Switch harness connector. Is the resistance below 5.0 ohms? Yes → Go To 3 No → Repair the Front Wiper Switch MUX circuit for an open. Perform BODY VERIFICATION TEST - VER 1.	All
3	Turn the ignition off. Disconnect the Multi-Function Switch harness connector. Disconnect the BCM C4 harness connector. Measure the resistance of the Multi-Function Switch MUX Return circuit between the BCM C4 harness connector and the Multi-Function Switch harness connector. Is the resistance below 5.0 ohms? Yes → Go To 4 No → Repair the Multi-Function Switch MUX Return circuit for an open. Perform BODY VERIFICATION TEST - VER 1.	All
4	Turn the ignition off. Disconnect the Multi-Function Switch harness connector. Disconnect the BCM C5 harness connector. Turn the ignition on. Measure the voltage of the Front Wiper MUX Switch Signal circuit. Is the voltage above 1.0 volt? Yes → Repair the Front Wiper Switch MUX circuit for a short to voltage. Perform BODY VERIFICATION TEST - VER 1. No → Go To 5	All

FRONT WIPER SWITCH MUX INPUT OPEN — Continued

TEST	ACTION	APPLICABILITY
5	Turn the ignition off. Disconnect the Multi-Function Switch harness connector. Turn the ignition on. Connect a jumper wire between the Front Wiper Switch MUX circuit and the Mulit-Function Switch MUX Return circuit. With the DRB, read the Front Wiper Sw volts? Is the voltage below 0.5 volt? Yes → Replace the Multi-Function Switch. Perform BODY VERIFICATION TEST - VER 1. No → Replace the Body Control Module. Perform BODY VERIFICATION TEST - VER 1.	All
6	Turn the ignition on. With the DRBIII®, erase all BCM and FCM DTCs. Turn the ignition off. **NOTE: Visually inspect the related wiring harness and circuits. Look for any chafed, pierced, pinched, or partially broken wires.** **NOTE: Visually inspect the related wiring harness connectors. Look for broken, bent, pushed out, or corroded terminals.** **Note: Refer to any Technical Service Bulletins (TSB) that may apply.** Were any problems found? Yes → Repair as necessary. Perform BODY VERIFICATION TEST - VER 1. No → Test Complete.	All

Symptom:

FRONT WIPER SWITCH MUX INPUT SHORT TO GROUND

POSSIBLE CAUSES
BCM
WIRING HARNESS INSPECTION
FRONT WIPER SWITCH MUX CIRCUIT SHORTED TO GROUND
FRONT WIPER SWITCH MUX CIRCUIT SHORTED TO M/F MUX RETURN CIRCUIT
MULTI-FUNCTION SWITCH

TEST	ACTION	APPLICABILITY
1	Turn the ignition on. With the DRB, select Body, Body Controller and read the Front Wiper Sw volts? Is the voltage above 0.3 volt? Yes → Go To 2 No → Go To 3	All
2	Turn the ignition on. With the DRBIII®, erase all BCM and FCM DTCs. Turn the ignition off. **NOTE: Visually inspect the related wiring harness and circuits. Look for any chafed, pierced, pinched, or partially broken wires.** **NOTE: Visually inspect the related wiring harness connectors. Look for broken, bent, pushed out, or corroded terminals.** **Note: Refer to any Technical Service Bulletins (TSB) that may apply.** Were any problems found? Yes → Repair as necessary. Perform BODY VERIFICATION TEST - VER 1. No → Test Complete.	All
3	Turn the ignition off. Disconnect the Multi-Function Switch harness connector. Disconnect the BCM C5 harness connector. Measure the resistance of the Front Wiper Switch MUX circuit between the BCM C5 harness connector and ground. Is the resistance below 1000.0 ohms? Yes → Repair the Front Wiper Switch MUX circuit for a short to ground. Perform BODY VERIFICATION TEST - VER 1. No → Go To 4	All

FRONT WIPER SWITCH MUX INPUT SHORT TO GROUND — Continued

TEST	ACTION	APPLICABILITY
4	Turn the ignition off. Disconnect the Multi-Function Switch harness connector. Disconnect the BCM C5 harness connector. Measure the between the Front Wiper Switch MUX circuit and the Multi-Function Switch MUX Return circuit. Is the resistance below 1000.0 ohms? Yes → Repair the Front Wiper Switch MUX circuit for a short to the Multi-Function Switch MUX Return circuit. Perform BODY VERIFICATION TEST - VER 1. No → Go To 5	All
5	Turn the ignition off. Disconnect the Multi-Function Switch harness connector. Turn the ignition on. With the DRB, read the Front Wiper Sw volts? Is the voltage above 4.5 volts? Yes → Replace the Multi-Function Switch. Perform BODY VERIFICATION TEST - VER 1. No → Replace the Body Control Module. Perform BODY VERIFICATION TEST - VER 1.	All

Symptom:

HEADLAMP WASHER RELAY OPEN

POSSIBLE CAUSES
OPEN GROUND CIRCUIT
FUSED B+ CIRCUIT OPEN
HEADLAMP WASHER RELAY CONTROL CIRCUIT OPEN
HEADLAMP WASHER RELAY OUTPUT CIRCUIT OPEN
HEADLAMP WASHER PUMP MOTOR
HEADLAMP WASHER RELAY
FRONT CONTROL MODULE

TEST	ACTION	APPLICABILITY
1	Turn the ignition off. Disconnect the Washer Pump connector. Measure the resistance of the Washer Pump ground circuit. Is the resistance below 5.0 ohms? Yes → Go To 2 No → Repair the open Washer Pump ground circuit. Perform BODY VERIFICATION TEST - VER 1.	All
2	Turn the ignition on. Disconnect the Headlamp Washer Relay. Measure the voltage of the Fused B+ Circuit. Is the voltage above 10.0 volts? Yes → Go To 3 No → Repair the Fused B+ Circuit for an open condition. Perform BODY VERIFICATION TEST - VER 1.	All
3	Turn the ignition off. Disconnect the Headlamp Washer Relay. Disconnect the FCM harness connector. Measure the resistance of the Headlamp Washer Relay Control Circuit. Is the resistance below 5.0 ohms? Yes → Go To 4 No → Repair the Headlamp Washer Relay Control Circuit for an open. Perform BODY VERIFICATION TEST - VER 1.	All
4	Disconnect the Headlamp Washer Relay. Disconnect the Headlamp Washer Pump Motor. Measure the resistance of the Headlamp Washer Relay Output Circuit. Is the resistance below 5.0 ohms? Yes → Go To 5 No → Repair the Headlamp Washer Relay Output Circuit for an open. Perform BODY VERIFICATION TEST - VER 1.	All

HEADLAMP WASHER RELAY OPEN — Continued

TEST	ACTION	APPLICABILITY
5	Turn the ignition on. Disconnect the Headlamp Washer Pump Motor connector. Actuate the washers. Measure the voltage of the Washer Pump Output Circuit. Is the voltage above 10.0 volts? Yes → Replace the Headlamp Washer Pump Motor. Perform BODY VERIFICATION TEST - VER 1. No → Go To 6	All
6	Turn the ignition off. Install a known good relay in place of the Headlamp Washer Relay. Turn the Washers on. Do the Headlamp Washers operate normally? Yes → Replace the Headlamp Washer Relay. Perform BODY VERIFICATION TEST - VER 1. No → Replace the Front Control Module. Perform BODY VERIFICATION TEST - VER 1.	All

Symptom:

HEADLAMP WASHER RELAY SHORT TO BATT

POSSIBLE CAUSES
FUSED B+ CIRCUIT OPEN
HEADLAMP WASHER RELAY CONTROL CIRCUIT OPEN
HEADLAMP WASHER PUMP MOTOR
HEADLAMP WASHER RELAY
FRONT CONTROL MODULE

TEST	ACTION	APPLICABILITY
1	Turn the ignition on. Disconnect the Headlamp Washer Relay. Measure the voltage of the Fused B+ Circuit. Is the voltage above 10.0 volts? Yes → Go To 2 No → Repair the Fused B+ Circuit for an open condition. Perform BODY VERIFICATION TEST - VER 1.	All
2	Turn the ignition off. Disconnect the Headlamp Washer Relay. Disconnect the FCM harness connector. Measure the resistance of the Headlamp Washer Relay Control Circuit. Is the resistance below 5.0 ohms? Yes → Go To 3 No → Repair the Headlamp Washer Relay Control Circuit for an open. Perform BODY VERIFICATION TEST - VER 1.	All
3	Turn the ignition on. Disconnect the Headlamp Washer Pump Motor connector. Actuate the washers. Measure the voltage of the Washer Pump Output Circuit. Is the voltage above 10.0 volts? Yes → Replace the Headlamp Washer Pump Motor. Perform BODY VERIFICATION TEST - VER 1. No → Go To 4	All
4	Turn the ignition off. Install a known good relay in place of the Headlamp Washer Relay. Turn the Washers on. Do the Headlamp Washers operate normally? Yes → Replace the Headlamp Washer Relay. Perform BODY VERIFICATION TEST - VER 1. No → Replace the Front Control Module. Perform BODY VERIFICATION TEST - VER 1.	All

Symptom:

REAR WASH SWITCH INPUT STUCK

When Monitored and Set Condition:

REAR WASH SWITCH INPUT STUCK

When Monitored: Ignition ON

Set Condition: Switch is applied for more than 10 seconds.

POSSIBLE CAUSES
REAR WASHER SWITCH STUCK
INTERMITTENT WIRING AND CONNECTORS
REAR WASHER SWITCH MUX CIRCUIT SHORT TO GROUND
BODY CONTROL MODULE

TEST	ACTION	APPLICABILITY
1	Turn the ignition on. With the DRB, select Body, Front Control Module and read the R Washer Switch state. Does the DRB display switch state as Closed? Yes → Go To 2 No → Go To 4	All
2	Turn the ignition off. Disconnect the Rear Washer Switch harness connector. Turn the ignition on. With the DRB, select Body, Front Control Module and read the R Washer Switch state. Does the DRB display switch state as Open? Yes → Replace the Rear Washer Switch in accordance with the Service Information. Perform BODY VERIFICATION TEST - VER 1. No → Go To 3	All
3	Turn the ignition off. Disconnect the Rear Washer Switch harness connector. Disconnect the BCM harness connector. Measure the resistance between ground and the Rear Washer Switch MUX circuit. Is the resistance below 1000.0 ohms? Yes → Repair the Rear Washer Switch MUX circuit for a short to ground. Perform BODY VERIFICATION TEST - VER 1. No → Replace the Body Control Module in accordance with the Service Information. Perform BODY VERIFICATION TEST - VER 1.	All

REAR WASH SWITCH INPUT STUCK — Continued

TEST	ACTION	APPLICABILITY
4	Turn the ignition on. With the DRBIII®, erase all BCM and FCM DTCs. Turn the ignition off. The conditions necessary to set this DTC are not present at this time. Using the schematics as a guide, inspect the wiring and connectors specific to this circuit. Wiggle the wiring while checking for shorts and open circuits. Were there any problems found? Yes → Repair as necessary. Perform BODY VERIFICATION TEST - VER 1. No → Test Complete.	All

Symptom:

REAR WASHER OUTPUT OPEN

When Monitored and Set Condition:

REAR WASHER OUTPUT OPEN

When Monitored: Ignition on.

Set Condition:

POSSIBLE CAUSES
INTERMITTENT WIRING AND CONNECTORS
FUSED ACCESSORY RELAY OUTPUT CIRCUIT
REAR WASHER MOTOR CONTROL CIRCUIT OPEN
REAR WASHER MOTOR CONTROL CIRCUIT SHORT TO VOLTAGE
REAR WASHER PUMP MOTOR
FRONT CONTROL MODULE

TEST	ACTION	APPLICABILITY
1	Ignition on, engine not running. Press the Rear Washer Switch. Does the Rear Washer Motor Function? Yes → Go To 2 No → Go To 3	All
2	Turn the ignition on. With the DRBIII®, erase all BCM and FCM DTCs. Turn the ignition off. The conditions necessary to set this DTC are not present at this time. Using the schematics as a guide, inspect the wiring and connectors specific to this circuit. Wiggle the wiring while checking for shorts and open circuits. Were there any problems found? Yes → Repair as necessary. Perform BODY VERIFICATION TEST - VER 1. No → Test Complete.	All

REAR WASHER OUTPUT OPEN — Continued

TEST	ACTION	APPLICABILITY
3	Turn the ignition off to the lock position. Disconnect the Rear Washer Pump Motor harness connector. **Note: Check connectors - Clean/repair as necessary.** Ignition on, engine not running. Using a 12-volt test light connected to ground, check the Fused Accessory Relay Output circuit in the Rear Washer Pump Motor harness connector. **NOTE: The test light must illuminate brightly. Compare the brightness to that of a direct connection to the battery.** Does the test light illuminate brightly? Yes → Go To 4 No → Repair the Fused Accessory Relay Output circuit for an open. Perform BODY VERIFICATION TEST - VER 1.	All
4	Turn the ignition off to the lock position. Disconnect the Rear Washer Pump Motor harness connector. **Note: Check connectors - Clean/repair as necessary.** Ignition on, engine not running. Using a 12-volt test light connected to 12 Volts, check the Rear Washer Pump Motor Control circuit in the Rear Washer Pump Motor harness connector while pressing the Rear Washer Switch. **NOTE: The test light must illuminate brightly. Compare the brightness to that of a direct connection to the battery.** Does the test light illuminate brightly? Yes → Replace the Rear Washer Pump Motor in accordance with the Service Information. Perform BODY VERIFICATION TEST - VER 1. No → Go To 5	All
5	Turn the ignition off to the lock position. Disconnect the Front Control Module harness connector. Disconnect the Rear Washer Pump Motor harness connector. **Note: Check connectors - Clean/repair as necessary.** Measure the resistance of the Rear Washer Pump Motor Control Circuit from the Front Control Module connector to the Rear Washer Pump Motor harness connector. Is the resistance above 5.0 ohms? Yes → Repair the Rear Washer Pump Motor Control Circuit for an open. Perform BODY VERIFICATION TEST - VER 1. No → Go To 6	All
6	Turn the ignition off to the lock position. Disconnect the Front Control Module connector. Disconnect the Rear Washer Pump Motor harness connector. **Note: Check connectors - Clean/repair as necessary.** Turn the ignition on. Using a 12-volt test light connected to ground, check the Rear Washer Pump Motor Control circuit. Does the test light illuminate brightly? Yes → Repair the Rear Washer Pump Motor Control Circuit for a short to voltage. Perform BODY VERIFICATION TEST - VER 1. No → Replace the Front Control Module in accordance with the Service Information. Perform BODY VERIFICATION TEST - VER 1.	All

Symptom:

REAR WIPER OUTPUT OPEN

When Monitored and Set Condition:

REAR WIPER OUTPUT OPEN

When Monitored: Ignition on.

Set Condition: The Output is ON, the Output Driver Status is LOW and there is no Park signal.

POSSIBLE CAUSES
INTERMITTENT WIRING AND CONNECTORS
REAR WIPER MOTOR CONTROL CIRCUIT OPEN
REAR WIPER MOTOR GROUND OPEN
REAR WIPER MOTOR CONTROL CIRCUIT SHORT TO VOLTAGE
REAR WIPER MOTOR
BODY CONTROL MODULE

TEST	ACTION	APPLICABILITY
1	Ignition on, engine not running. Turn on the Rear Wiper. Does the Rear Wiper Function? Yes → Go To 2 No → Go To 3	All
2	Turn the ignition on. With the DRBIII®, erase all BCM and FCM DTCs. Turn the ignition off. The conditions necessary to set this DTC are not present at this time. Using the schematics as a guide, inspect the wiring and connectors specific to this circuit. Wiggle the wiring while checking for shorts and open circuits. Were there any problems found? Yes → Repair as necessary. Perform BODY VERIFICATION TEST - VER 1. No → Test Complete.	All

REAR WIPER OUTPUT OPEN — Continued

TEST	ACTION	APPLICABILITY
3	Turn the ignition off to the lock position. Disconnect the Rear Wiper Motor harness connector. **Note: Check connectors - Clean/repair as necessary.** Ignition on, engine not running. Using a 12-volt test light connected to ground, check the Rear Wiper Motor Control circuit in the Rear Wiper Motor harness connector. **NOTE: The test light must illuminate brightly. Compare the brightness to that of a direct connection to the battery.** Turn ON the Rear Wiper Motor. Does the test light illuminate brightly? Yes → Go To 4 No → Go To 5	All
4	Turn the ignition off to the lock position. Disconnect the Rear Wiper Motor harness connector. **Note: Check connectors - Clean/repair as necessary.** Ignition on, engine not running. Using a 12-volt test light connected to 12 Volts, check the Rear Wiper Motor ground circuit in the Rear Wiper Motor harness connector. **NOTE: The test light must illuminate brightly. Compare the brightness to that of a direct connection to the battery.** Does the test light illuminate brightly? Yes → Replace the Rear Wiper Motor in accordance with the Service Information. Perform BODY VERIFICATION TEST - VER 1. No → Repair the Rear Wiper Motor ground circuit for an open. Perform BODY VERIFICATION TEST - VER 1.	All
5	Turn the ignition off to the lock position. Disconnect the Body Control Module harness connector. Disconnect the Rear Wiper Motor harness connector. **Note: Check connectors - Clean/repair as necessary.** Measure the resistance of the Rear Wiper Motor Control Circuit from the Body Control Module harness connector to the Rear Wiper Motor harness connector. Is the resistance above 5.0 ohms? Yes → Repair the Rear Wiper Motor Control Circuit for an open. Perform BODY VERIFICATION TEST - VER 1. No → Go To 6	All
6	Turn the ignition off to the lock position. Disconnect the Body Control Module harness connector. Disconnect the Rear Wiper Motor harness connector. **Note: Check connectors - Clean/repair as necessary.** Turn the ignition on. Using a 12-volt test light connected to ground, check the Rear Wiper Motor Control circuit. Is the test light on? Yes → Repair the Rear Wiper Motor Control Circuit for a short to voltage. Perform BODY VERIFICATION TEST - VER 1. No → Replace the Body Control Module in accordance with the Service Information. Perform BODY VERIFICATION TEST - VER 1.	All

Symptom:

REAR WIPER OUTPUT SHORT TO GROUND

When Monitored and Set Condition:

REAR WIPER OUTPUT SHORT TO GROUND

When Monitored: Ignition ON

Set Condition:

POSSIBLE CAUSES
REAR WIPER MOTOR FUNCTION
INTERMITTENT WIRING AND CONNECTORS
REAR WIPER MOTOR CONTROL CIRCUIT SHORT TO GROUND
BODY CONTROL MODULE

TEST	ACTION	APPLICABILITY
1	Ignition on, engine not running. Turn on the Rear Wiper. Does the Rear Wiper Function? Yes → Go To 2 No → Go To 3	All
2	Turn the ignition on. With the DRBIII®, erase all BCM and FCM DTCs. Turn the ignition off. The conditions necessary to set this DTC are not present at this time. Using the schematics as a guide, inspect the wiring and connectors specific to this circuit. Wiggle the wiring while checking for shorts and open circuits. Were there any problems found? Yes → Repair as necessary. Perform BODY VERIFICATION TEST - VER 1. No → Test Complete.	All
3	Turn the ignition off to the lock position. Disconnect the Body Control Module harness connector. Disconnect the Rear Wiper Motor harness connector. **Note: Check connectors - Clean/repair as necessary.** Measure the resistance between ground and the Rear Wiper Motor Control circuit. Is the resistance less than 5.0 ohms? Yes → Repair the Rear Wiper Motor Control Circuit for a short to ground. Perform BODY VERIFICATION TEST - VER 1. No → Go To 4	All

REAR WIPER OUTPUT SHORT TO GROUND — Continued

TEST	ACTION	APPLICABILITY
4	Turn the ignition off to the lock position. Disconnect the Body Control Module harness connector. Connect a 20A Fused jumper wire between B+ and the Rear Wiper Motor Signal circuit in the Body Control Module connector harness. **NOTE: An internal short in the Wiper Motor may cause the fuse to open.** Does the Wiper Motor function? Yes → Replace the Body Control Module in accordance with the Service Information. Perform BODY VERIFICATION TEST - VER 1. No → Replace the Rear Wiper Motor in accordance with the Service Information. Perform BODY VERIFICATION TEST - VER 1.	All

Symptom:

REAR WIPER SWITCH MUX INPUT OPEN

When Monitored and Set Condition:

REAR WIPER SWITCH MUX INPUT OPEN

When Monitored: Ignition ON

Set Condition: A Sensor voltage is over 4.76 volts for more than .125 seconds.

POSSIBLE CAUSES
INTERMITTENT WIRING AND CONNECTORS
REAR WIPER SWITCH MUX CIRCUIT OPEN
REAR WIPER SWITCH MUX RETURN CIRCUIT OPEN
REAR WIPER SWITCH OPEN
BODY CONTROL MODULE

TEST	ACTION	APPLICABILITY
1	Turn the ignition on. With the DRB, select Body, Body Control Module and read the R Wiper Switch Sensor voltage. Does the DRB display a Switch voltage greater than 4.5 volts? Yes → Go To 2 No → Go To 5	All
2	Turn the ignition off. Disconnect the Rear Wiper Switch harness connector. Connect a jumper wire between the Rear Wiper Switch MUX circuit and the Rear Wiper Switch MUX Return circuit in the Rear Wiper Switch harness connector. Turn the ignition on. With the DRB, select Body, Body Controller and read the Rear Wiper SW volts. Does the DRB R Wiper Switch Sensor voltage read less than 0.3 Volts? Yes → Replace the Rear Wiper Switch in accordance with the Service Information. Perform BODY VERIFICATION TEST - VER 1. No → Go To 3	All
3	Turn the ignition off to the lock position. Disconnect the Body Control Module harness connector. Disconnect the Rear Wiper Switch harness connector. **Note: Check connectors - Clean/repair as necessary.** Measure the resistance of the Rear Wiper Switch MUX circuit from the Body Control Module connector to the Rear Wiper Switch harness connector. Is the resistance above 5.0 ohms? Yes → Repair the Rear Wiper Switch MUX circuit for an open. Perform BODY VERIFICATION TEST - VER 1. No → Go To 4	All

REAR WIPER SWITCH MUX INPUT OPEN — Continued

TEST	ACTION	APPLICABILITY
4	Turn the ignition off to the lock position. Disconnect the Body Control Module harness connector. Disconnect the Rear Wiper Switch harness connector. **Note: Check connectors - Clean/repair as necessary.** Measure the resistance of the Rear Wiper Switch MUX Return circuit from the Body Control Module connector to the Rear Wiper Switch harness connector. Is the resistance above 5.0 ohms? Yes → Repair the Rear Wiper Switch MUX Return circuit for an open. Perform BODY VERIFICATION TEST - VER 1. No → Replace the Body Control Module in accordance with the Service Information. Perform BODY VERIFICATION TEST - VER 1.	All
5	Turn the ignition on. With the DRBIII®, erase all BCM and FCM DTCs. Turn the ignition off. The conditions necessary to set this DTC are not present at this time. Using the schematics as a guide, inspect the wiring and connectors specific to this circuit. Wiggle the wiring while checking for shorts and open circuits. Were there any problems found? Yes → Repair as necessary. Perform BODY VERIFICATION TEST - VER 1. No → Test Complete.	All

Symptom:

REAR WIPER SWITCH MUX INPUT SHORT TO GROUND

When Monitored and Set Condition:

REAR WIPER SWITCH MUX INPUT SHORT TO GROUND

When Monitored: Ignition ON

Set Condition: A Sensor voltage is below 0.24 volts for more than 0.125 seconds.

POSSIBLE CAUSES
REAR WIPER SWITCH SHORTED
INTERMITTENT WIRING AND CONNECTORS
REAR WIPER SWITCH MUX CIRCUIT SHORT TO GROUND
REAR WIPER SWITCH MUX RETURN CIRCUIT SHORT TO GROUND
REAR WIPER SWITCH MUX CIRCUIT SHORT TO MUX RETURN CIRCUIT
BODY CONTROL MODULE

TEST	ACTION	APPLICABILITY
1	Turn the ignition on. With the DRB, select Body, Body Control Module and read the R Wiper Switch Sensor voltage. Does the DRB display a Switch voltage less than 0.4 volts? Yes → Go To 2 No → Go To 6	All
2	Turn the ignition off. Disconnect the Rear Wiper Switch harness connector. Turn the ignition on. With the DRB, select Body, Body Control Module and read the R Wiper Switch Sensor voltage.. Does the DRB display more than 4.8 volts? Yes → Replace the Rear Wiper Switch in accordance with the Service Information. Perform BODY VERIFICATION TEST - VER 1. No → Go To 3	All
3	Turn the ignition off to the lock position. Disconnect the Body Control Module harness connector. Disconnect the Rear Wiper Switch harness connector. **Note: Check connectors - Clean/repair as necessary.** Measure the resistance between ground and the Rear Wiper Switch MUX circuit. Is the resistance less than 5.0 ohms? Yes → Repair the Rear Wiper Switch MUX Circuit for a short to ground. Perform BODY VERIFICATION TEST - VER 1. No → Go To 4	All

REAR WIPER SWITCH MUX INPUT SHORT TO GROUND — Continued

TEST	ACTION	APPLICABILITY
4	Turn the ignition off to the lock position. Disconnect the Body Control Module harness connector. Disconnect the Rear Wiper Switch harness connector. **Note: Check connectors - Clean/repair as necessary.** Measure the resistance between the Rear Wiper Switch MUX Return circuit and the Rear Wiper Switch MUX circuit. Is the resistance less than 5.0 ohms? Yes → Repair the Rear Wiper Switch MUX Circuit for a short to the Rear Wiper Switch MUX Return circuit. Perform BODY VERIFICATION TEST - VER 1. No → Go To 5	All
5	Turn the ignition off to the lock position. Disconnect the Body Control Module harness connector. Disconnect the Rear Wiper Switch harness connector. **Note: Check connectors - Clean/repair as necessary.** Measure the resistance between ground and the Rear Wiper Switch MUX Return circuit. Is the resistance less than 5.0 ohms? Yes → Repair the Rear Wiper Switch MUX Return Circuit for a short to ground. Perform BODY VERIFICATION TEST - VER 1. No → Replace the Body Control Module in accordance with the Service Information. Perform BODY VERIFICATION TEST - VER 1.	All
6	Turn the ignition on. With the DRBIII®, erase all BCM and FCM DTCs. Turn the ignition off. The conditions necessary to set this DTC are not present at this time. Using the schematics as a guide, inspect the wiring and connectors specific to this circuit. Wiggle the wiring while checking for shorts and open circuits. Were there any problems found? Yes → Repair as necessary. Perform BODY VERIFICATION TEST - VER 1. No → Test Complete.	All

Verification Tests

41TE TRANSMISSION VERIFICATION TEST - VER 1	APPLICABILITY
1. Connect the DRBIII® to the Data Link Connector (DLC). 2. Reconnect any disconnected components. 3. With the DRBIII®, erase all Transmission DTC's, also erase the PCM DTC's. **4. NOTE: Erase DTC P0700 in the PCM to turn the Malfunction Indicator Lamp (MIL) off after making Transmission repairs.** 5. With the DRBIII®, display Transmission Temperature. Start and run the engine until the Transmission Temperature is HOT - above 43° C or 110° F. 6. Check the Transmission Fluid and adjust if necessary. Refer to the Service information for the Fluid Fill procedure. **7. NOTE: If the Transmission Control Module or the Transmission has been repaired or replaced it is necessary to perform the DRBIII® Quick Learn Procedure and reset the "Pinion Factor"** 8. Road test the vehicle. With the DRBIII®, monitor the engine RPM. Make 15 to 20 1-2, 2-3, 3-4 upshifts. Perform these shifts from a standing start to 45 MPH with a constant throttle opening of 20 to 25 degrees. 9. Below 25 MPH, make 5 to 8 wide open throttle kickdowns to 1st gear. Allow at least 5 seconds each in 2nd and 3rd gear between each kickdown. 10. For a specific DTC, drive the vehicle to the Symptom's When Monitored/When Set conditions to verify the DTC repair. 11. If equipped with AutoStick®, up-shift and down-shift several times using the AutoStick® feature during the road test. **12. NOTE: Use the EATX OBDII Task Manager to run Good Trip time in each gear, this will confirm the repair and to ensure that the DTC has not re-matured.** 13. Check for Diagnostic Trouble Codes (DTC's) during the road test. If a DTC sets during the road test , return to the Symptom list and perform the appropriate Symptom. Were there any Diagnostic Trouble Codes (DTCs) set during the road test? Yes → Refer to the Symptom List for appropriate Symptom(s). No → Repair is complete.	All

ABS VERIFICATION TEST - VER 1	APPLICABILITY
1. Turn the ignition off. 2. Connect all previously disconnected components and connectors. 3. Ensure all accessories are turned off and the battery is fully charged. 4. Ensure that the Ignition is on, and with the DRBIII®, erase all Diagnostic Trouble Codes from ALL modules. Start the engine and allow it to run for 2 minutes and fully operate the system that was malfunctioning. 5. Turn the ignition off and wait 5 seconds. Turn the ignition on and using the DRBIII, read DTC's from ALL modules. 6. If any Diagnostic Trouble Codes are present, return to Symptom list and troubleshoot new or recurring symptom. 7. If there are no DTC's present after turning ignition on, road test the vehicle for at least 5 minutes. Perform several antilock braking stops. **8. Caution: Ensure braking capability is available before road testing.** 9. Again, with the DRBIII® read DTC's. If any DTC's are present, return to Symptom list. 10. If there are no Diagnostic Trouble Codes (DTC's) present, and the customer's concern can no longer be duplicated, the repair is complete. Are any DTC's present or is the original concern still present? Yes → Repair is not complete, refer to appropriate symptom. No → Repair is complete.	All

Verification Tests — Continued

ADJUSTABLE PEDALS VERIFICATION TEST - VER 1	APPLICABILITY
1. If the Adjustable Pedals Module was replaced, program two pedal positions if equipped with memory function. 2. Activate the Adjustable Pedals through the full range of movement. 3. Verify that the Adjustable Pedals system is disabled with the vehicle in Reverse. 4. Verify that the Adjustable Pedals system is disabled with Speed Control activated. 5. With the DRBIII®, erase DTCs. 6. With the DRBIII®, read DTCs. Are any DTC's present or is the original complaint still present? Yes → Repair is not complete, refer to appropriate symptom. No → Repair is complete.	All

AIRBAG VERIFICATION TEST - VER 1	APPLICABILITY
1. Remove any special tools or jumper wires and reconnect all previously disconnected components - except the Battery. **2. WARNING: TURN THE IGNITION ON, THEN RECONNECT THE BATTERY.** 3. Connect the DRBIII® to the Data Link Connector - use the most current software available. 4. Use the DRBIII® and erase the stored codes in all airbag system modules. 5. Turn the Ignition Off, and wait 15 seconds before turning the Ignition On. 6. Wait one minute, and read active codes and if there are none present read the stored codes. 7. Note: If equipped with Airbag On-Off switch, read the DTC's in all switch positions. 8. Note: Read the DTC's in all airbag system related modules. 9. If the DRBIII® shows any active or stored codes, return to the Symptom list and follow path specified for that trouble code. If no active or stored codes are present, the repair is complete. Are any DTC's present or is the original condition still present? YES Repair is not complete, refer to appropriate symptom list. NO Repair is complete.	All

Verification Tests — Continued

BODY VERIFICATION TEST - VER 1	APPLICABILITY
1. Disconnect all jumper wires and reconnect all previously disconnected components and connectors. 2. With the DRBIII®, record and erase all DTCs from ALL modules. Cycle the ignition on then off. 3. If the Sentry Key Immobilizer Module (SKIM), the Powertrain Control Module (PCM), or the Engine Control Module (ECM) was replaced, proceed to number 12. If the SKIM, PCM, or ECM was not replaced, continue to the next number. 4. If the Body Control Module (BCM) was replaced, turn the ignition on for 15 seconds (to allow the new BCM to learn VIN) or engine may not start (if VTSS equipped). If the vehicle is equipped with VTSS, use the DRBIII® and enable VTSS. 5. Program all other options as needed. 6. If any actuators were replaced in the HVAC System, with the DRBIII® in HVAC, select System Tests then select HVAC Door Recalibration (manual temperature system only). 7. If any actuators were replaced in the ATC System, with the DRBIII® in Automatic Temp Control, select Miscellaneous then select Reset ATC Head. 8. For Three-Zone HVAC Systems, if HVAC Control/Rear Blower Rear Control was replaced/ Rear Blend Pot Circuit Open/Short DTC was set/any rear blend pot circuit was repaired, proceed to Number 9 & 10. Otherwise, proceed to Number 11. 9. With DRBIII® in HVAC, select System Tests then select HVAC Door Recalibration. Door Recalibration must pass before proceeding to next step. 10. With DRBIII® in HVAC, select System Tests then select Reset Rear Blend Switch Span. Rotate Rear Blend/Mode control on Rear Blower Rear Control to full cold. Wait five seconds, then rotate control to full hot. 11. If any repairs were made to the power sliding door or power liftgate, use the DRBIII® and perform the open and close system tests. Observe the instructions on the DRBIII® screen. Proceed to number 16. 12. Obtain the vehicle's unique PIN assigned to it's original SKIM from either the vehicle's invoice or from Chrysler's Customer Assistance Center (1-800-992-1997). 13. NOTE: Once Secured Access Mode is active, the SKIM will remain in that mode for 60 seconds. 14. With the DRBIII®, select THEFT ALARM, SKIM, MISCELLANEOUS and select SKIM REPLACED. Enter the 4 digit PIN to put the SKIM in Secured Access Mode. 15. The DRBIII® will prompt for the following steps. (1) Program the country code into the SKIM's memory. (2) Program the vehicle's VIN into the SKIM memory. (3) Transfer the vehicle's Secret Key data from the PCM. 16. Using the DRBIII®, program all customer keys into the SKIM memory. This requires that the SKIM be in Secured Access Mode, using the 4 digit PIN. 17. Note: If the PCM or ECM is replaced, the VIN and the unique Secret Key data must be transferred from the SKIM to the PCM or ECM. This procedure requires the SKIM to be placed in Secured Access Mode using the 4-digit PIN. 18. Note: If 3 attempts are made to enter Secured Access Mode using an incorrect PIN, Secured Access Mode will be locked out for 1 hour which causes the DRBIII® to display ″No Resp from SKIM″. To exit this mode, turn ignition to Run for 1 hour. 19. Ensure that all accessories are turned off and the battery is fully charged. 20. Start and run the engine for 2 minutes. Operate all functions of the system that caused the original concern. 21. Turn the ignition off and wait 5 seconds. Turn the ignition on and using the DRBIII®, read DTCs from ALL modules. Are any DTC's present or is the original condition still present? Yes → Repair is not complete, refer to the appropriate symptom. No → Repair is complete.	All

Verification Tests — Continued

CABIN HEATER VERIFICATION TEST - VER 1	APPLICABILITY
1. WARNING: DO NOT OPERATE THE DCHA IN AN ENCLOSED AREA SUCH AS A GARAGE THAT DOES NOT HAVE EXHAUST VENTILATION FACILITIES. ALWAYS VENT THE DCHA's EXHAUST WHEN OPERATING THE DCHA. FAILURE TO FOLLOW THESE INSTRUCTIONS MAY RESULT IN PERSONAL INJURY OR DEATH. **2. WARNING: ALLOW THE DCHA ASSEMBLY TO COOL BEFORE PERFORMING A COMPONENT INSPECTION/REPAIR/REPLACEMENT. FAILURE TO FOLLOW THESE INSTRUCTIONS MAY RESULT IN PERSONAL INJURY.** **3. NOTE: The DCHA Control will store up to three DTCs in its memory.** **4. NOTE: If the DCHA Control detects a new fault in the DCHA system, one that is not already stored in its memory, the DCHA Control will clear the oldest of the three stored DTCs, and it will store the new fault's DTC.** **5. NOTE: If the DCHA control detects a reoccurrence of a stored fault, the DCHA control will overwrite that fault's DTC with the most recent occurrence.** 6. Verify that the vehicle's battery is fully charged. 7. Verify that there is more than 1/8 of a tank of fuel in the vehicle's fuel tank. Add fuel, if necessary. 8. Verify that all DCHA coolant hoses and fuel lines are securely fastened to their respective components. 9. Disconnect all jumper wires and reconnect all previously disconnected components and connectors. 10. If a heater installation/cooling system service was performed, purge the coolant circuit of air in accordance with the Service Information. 11. Turn the ignition on. 12. Set the Blend Control to the max cool position. 13. Ensure that all accessories are turned off. 14. If a fuel system service requiring fuel to drain out of the DCHA fuel line was performed, prime the DCHA Dosing Pump in accordance with the Service Information. 15. With the DRBIII®, record and erase all DTCs from the Diesel Cabin Heater Assist (DCHA) Control and the Front Control Module (FCM). Cycle the ignition off then on. 16. Start the engine. 17. Allow the engine to idle. 18. Turn the A/C - Heater Control Module's Power switch on. 19. Turn the Blower switch to the high speed position. **20. CAUTION: Do not activate the Diesel Cabin Heater Test with the engine off. Failure to follow these instructions may result in internal damage to the DCHA Heater Module.** **21. NOTE: Do not disconnect the vehicle's battery or the DCHA's main power supply while the DCHA is in operation or in run-down mode. Failure to follow these instructions may result in excess emissions from the DCHA during heater operation.** **22. NOTE: While performing the Diesel Cabin Heater Test, inspect the coolant and fuel connections for leakage.** 23. With the DRBIII® in HVAC, Systems Tests, select Diesel Cabin Heater Test and press #1. 24. Set the Blend Control to the max heat position. Allow the Diesel Cabin Heater Test to run for five minutes. Upon completion of the test, proceed as follows: 25. Set the Blend Control to the max cool position. 26. Press #2 on the DRBIII® keyboard. 27. Turn the Blower switch off. 28. Turn the A/C - Heater Control Module's Power switch off. 29. Turn the ignition off, wait 5 seconds, then turn the ignition on. 30. Using the DRBIII®, read the Cabin Heater and Active FCM DTCs. Are any DTC's present or is the original condition still present? Yes → Repair is not complete, refer to the appropriate symptom. No → Repair is complete.	All

Verification Tests — Continued

MEMORY SYSTEM VERIFICATION TEST - VER 1	APPLICABILITY
1. Reconnect all previously disconnected components and connectors. 2. If any Memory Seat Memory Module Trouble Codes are present, erase at this time. 3. With the Memory Switch on the Driver's Door, program the Driver's Seat #1 Button to a desired position and Driver #2 Button to a different position. 4. Remove the Ignition Key and close all Doors to allow the Body Control Module to time out, about 30 seconds. 5. Verify that both Memory positions can be recalled from the RKE transmitter and the Memory Switch on the Driver's Door. 6. Turn the ignition on, and with the DRBIII, erase all Diagnostic Trouble Codes from ALL modules. Start the engine and allow it to run for 2 minutes and fully operate the system that was malfunctioning. 7. Turn the ignition off and wait 5 seconds. Turn the ignition on and using the DRBIII, read DTC's from ALL modules. Are any DTC's present or is the original complaint still present? Yes → Repair is not complete, refer to appropriate symptom. No → Repair is complete.	All

POWERTRAIN VERIFICATION TEST VER - 1	APPLICABILITY
1. NOTE: If the PCM has been replaced and the correct VIN and mileage have not been programmed, a DTC will be set in the ABS Module, Airbag Module and the SKIM. **2. NOTE: If the vehicle is equipped with a Sentry Key Immobilizer System, Secret Key data must be updated. Refer to the Service Information for the PCM, SKIM and the Transponder (ignition key) for programming information.** 3. Inspect the vehicle to ensure that all components related to the repair are connected properly. 4. Inspect the engine oil for fuel contamination. Replace the oil and filter as necessary. 5. Attempt to start the engine. 6. If the No Start condition is still present, refer to the symptom list and perform the diagnostic testing as necessary. refer to and Technical Service Bulletins that may apply. 7. Run the engine for one warm-up cycle to verify operation. 8. With the DRBIII®, confirm that no DTCs or Secondary Indicators are present and that all components are functioning properly. 9. If a DTC is present, refer to the appropriate category and select the corresponding symptom. Are any DTCs present? Yes → Repair is not complete, refer to appropriate symptom. No → Repair is complete.	All

Verification Tests — Continued

ROAD TEST VERIFICATION - VER-2	APPLICABILITY
1. Inspect the vehicle to ensure that all engine components are properly installed and connected. Reassemble and reconnect components as necessary. 2. If this verification procedure is being performed after a non-DTC test, perform steps 3 and 4. 3. Check to see if the initial symptom still exists. If there are no trouble codes and the symptom no longer exists, the repair was successful and testing is now complete. 4. If the initial or another symptom exists, the repair is not complete. Check all pertinent Technical Service Bulletins (TSBs) and return to the Symptom List if necessary. 5. For previously read DTCs that have not been dealt with, return to the Symptom List and follow the diagnostic path for that DTC; otherwise, continue. 6. If the Engine Control Module (ECM) has not been changed, perform steps 7 and 8, otherwise, continue with step 9. 7. With the DRB, erase all diagnostic trouble codes (DTCs), then disconnect the DRB. 8. Turn the ignition off for at least 10 seconds. 9. If equipped with a Transfer Case Position Switch, perform step 10, otherwise, continue with step 11. 10. With the ignition switch on, place the Transfer Case Shift Lever in each gear position, stopping for 15 seconds in each position. 11. Ensure no DTCs remain by performing steps 12 through 15. 12. Road test the vehicle. For some of the road test, go at least 64 km/h (40 MPH). If this test is for an A/C Relay Control Circuit, drive the vehicle for at least 5 minutes with the A/C on. 13. At some point, stop the vehicle and turn the engine off for at least 10 seconds, then restart the engine and continue. 14. Upon completion of the road test, turn the engine off and check for DTCs with the DRB. 15. If the repaired DTC has reset, the repair is not complete. Check for any pertinent Technical Service Bulletins (TSBs) and return to the Symptom List. If there are no DTCs, the repair was successful and is now complete. Are any DTCs or symptoms remaining? Yes → Repair is not complete, refer to appropriate symptom. No → Repair is complete.	All

SKIS VERIFICATION	APPLICABILITY
1. Reconnect all previously disconnected components and connectors. 2. Obtain the vehicle's unique Personal Identification Number (PIN) assigned to it's original SKIM. This number can be obtained from the vehicle's invoice or Chrysler's Customer Center (1-800-992-1997). **3. NOTE: When entering the PIN, care should be taken because the SKIM will only allow 3 consecutive attempts to enter the correct PIN. If 3 consecutive incorrect PIN's are entered the SKIM will Lock Out the DRB III for 1 hour.** 4. To exit Lock Out mode, the ignition key must remain in the Run position continually for 1 hour. Turn off all accessories and connect a battery charger if necessary. 5. With the DRB III, select Theft Alarm, SKIM and Miscellaneous. Then select desired procedure and follow the steps that will be displayed. 6. If the SKIM has been replaced, ensure all of the vehicle ignition keys are programmed to the new SKIM. **7. NOTE: Prior to returning vehicle to the costumer, perform a module scan to be sure that all DTC's are erased. Erase any DTC's that are found.** 8. With the DRB III erase all DTC's. Perform 5 ignition key cycles leaving the key on for at least 90 seconds per cycle. 9. With the DRB III, read the SKIM DTC's. Are there any SKIM DTC's? Yes → Repair is not complete, refer to appropriate symptom. No → Repair is complete.	All

Verification Tests — Continued

TIRE PRESSURE VERIFICATION TEST	APPLICABILITY
1. Perform the EVIC training as instructed in the System Description. 2. Using the DRBIII® or RESET and STEP buttons, set the EVIC to Diagnostics mode. **3. NOTE: The RESET and STEP buttons must be applied and held simultaneously.** 4. Set the EVIC to display BUCKET COUNTERS. 5. Drive the vehicle at 32 km/h (20 mph) for at least 2 minutes. 6. Observe that the counters increment at least 3 sensor/transmitter receptions for each wheel. Can the EVIC be trained and do the counters show Sensor/Transmitter receptions? Yes → Repair is complete. No → Refer to Diagnosing System Faults in the Description and Operation for this system.	All

VTSS VERIFICATION TEST - 1A	APPLICABILITY
1. Ensure all doors, hood, and liftgate are closed. 2. Open the driver's door. 3. Remove the ignition key (but keep in hand). 4. Lower the driver door window and lock the doors with the RKE transmitter. 5. Close the driver's door. 6. Observe the VTSS Indicator. 7. The VTSS Indicator will flash rapidly for approximately 15 seconds and then begin to flash slowly. If the VTSS Indicator is not performing as described, this indicates a system fault. Refer to symptom list for problems related to THEFT ALARM WILL NOT ARM. 8. Perform a system test on the VTSS by duplicating the original complaint. 9. Disarm the system and with the DRBIII®, read DTC's. 10. If the original complaint is corrected and there are no DTC's the repair is complete. Are any DTC's present or is the original complaint still present? Yes → Repair is not complete, refer to the appropriate symptom. No → Repair is complete.	All

8.0 COMPONENT LOCATIONS

8.1 AIRBAG SYSTEM

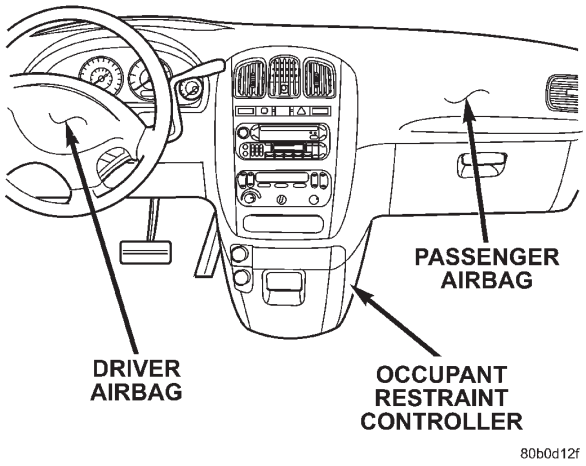

80b0d12f

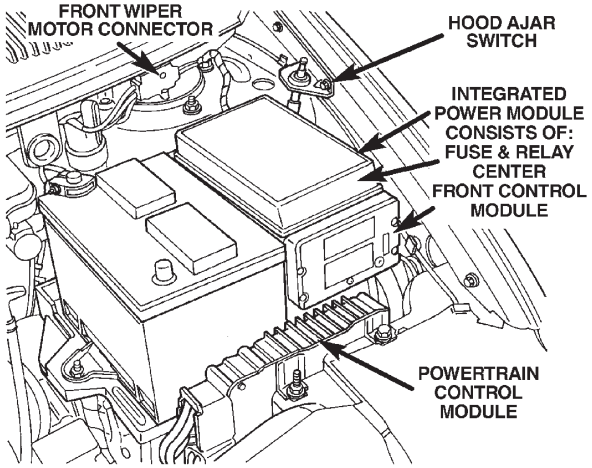

80964236

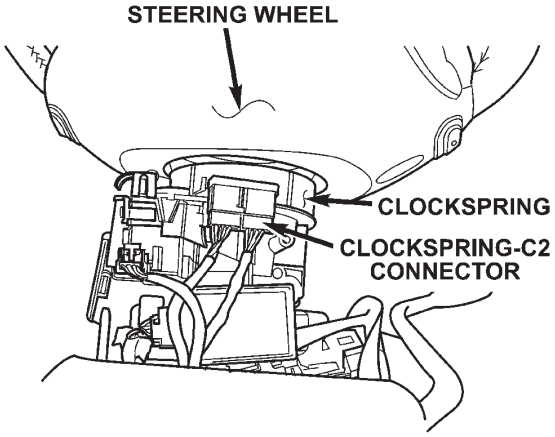

80b0d128

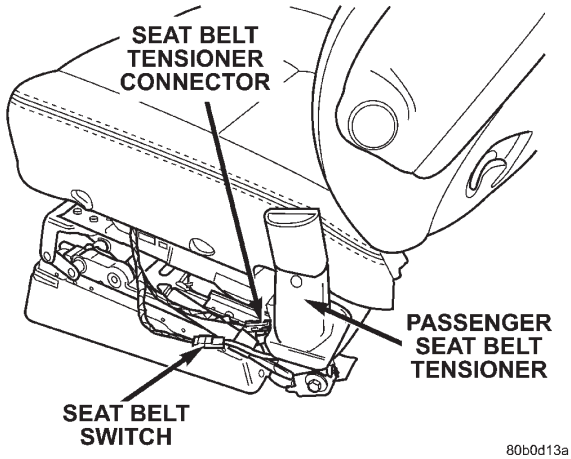

80b0d13a

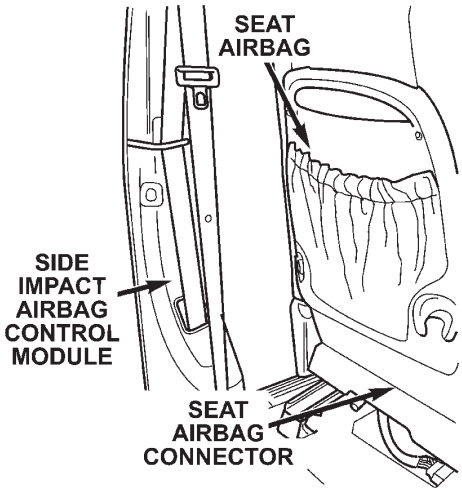

80b0d142

8.2 BODY CONTROL MODULE

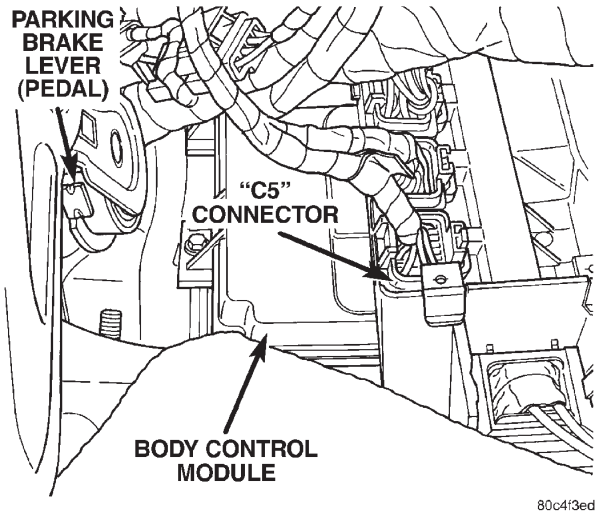

8.3 ENGINE CONTROL MODULE - DIESEL

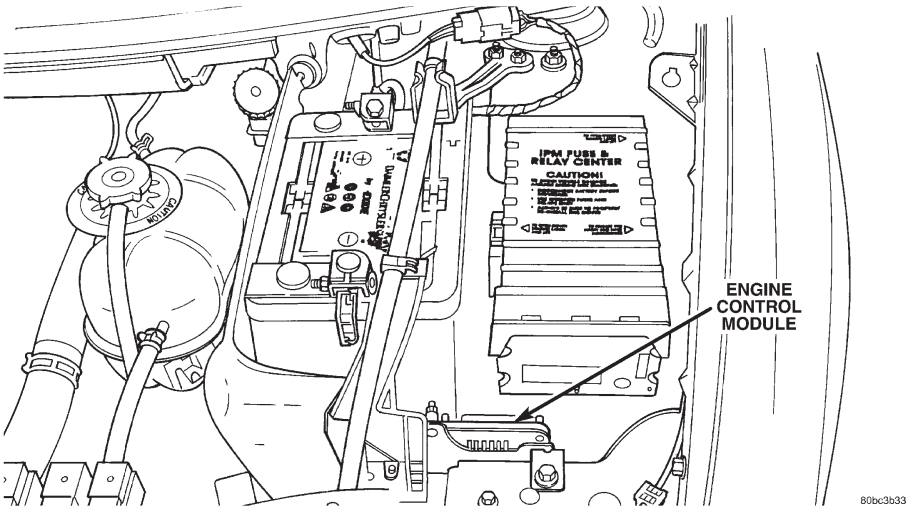

8.4 HEATING & A/C

8.4.1 ACTUATORS – FRONT, LHD

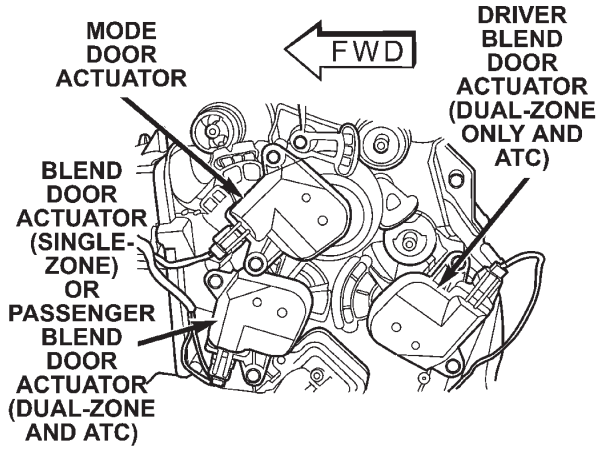

8.4.2 ACTUATOR – FRONT, LHD

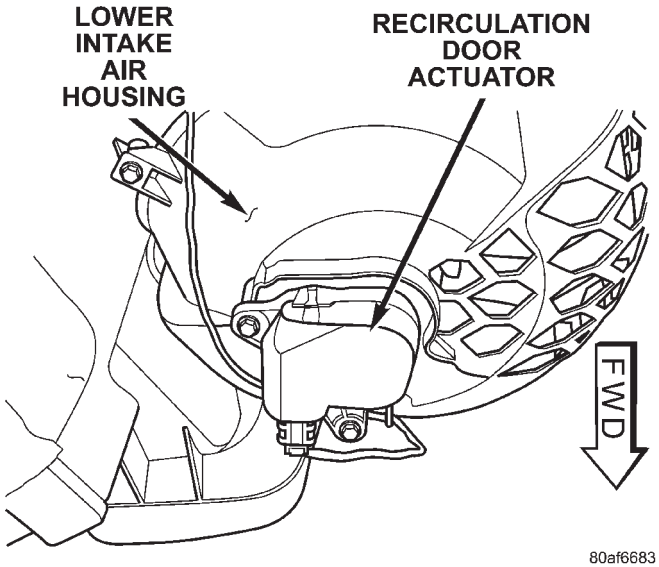

80af6683

8.4.3 ACTUATORS – FRONT, RHD

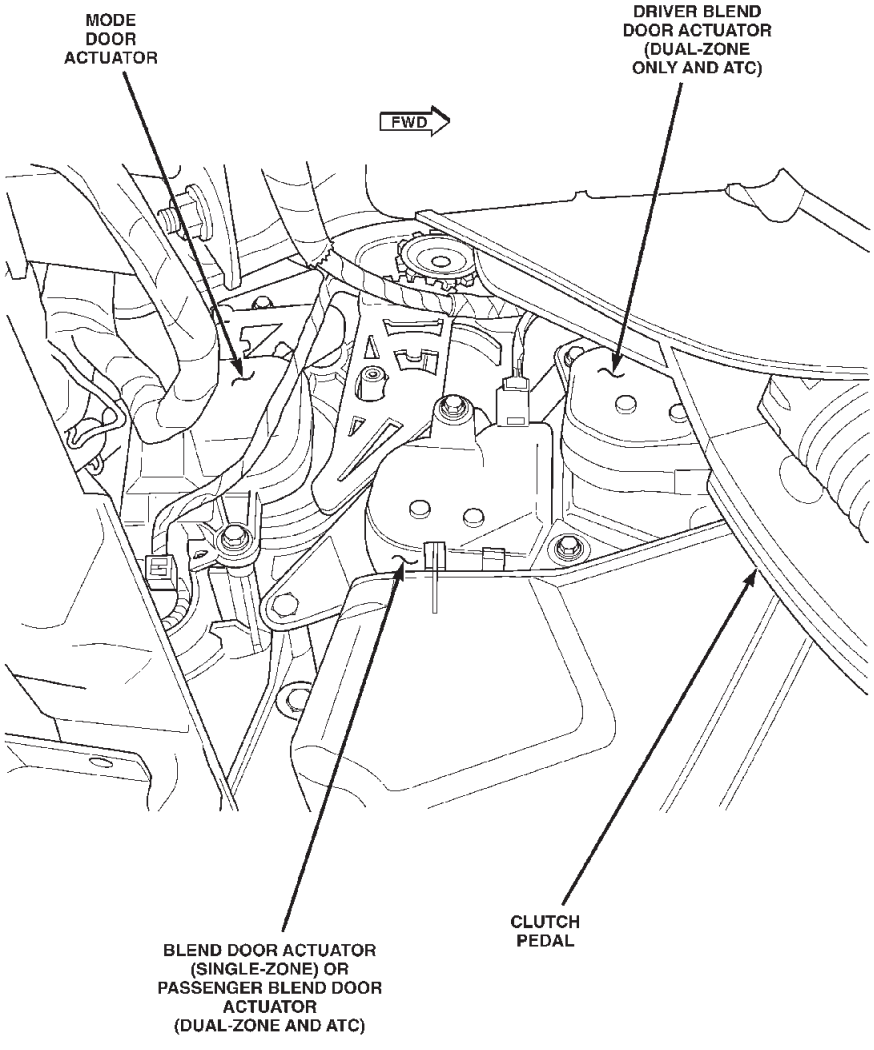

80c02ae2

8.4 HEATING & A/C (Continued)

8.4.4 ACTUATOR – FRONT, RHD

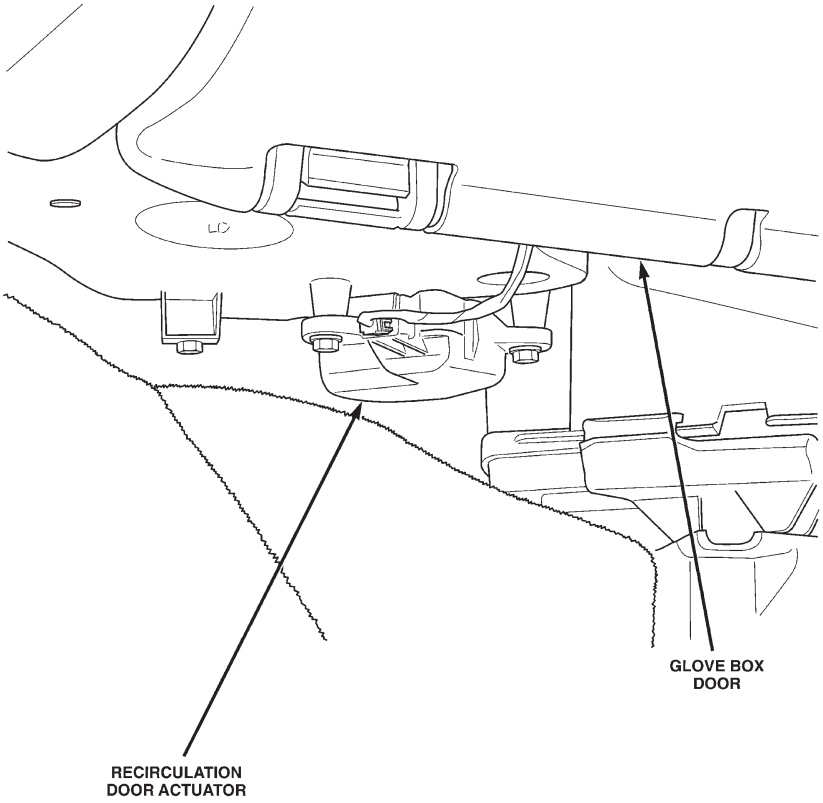

8.4.5 EVAPORATOR TEMPERATURE SENSOR, LHD

80bfa798

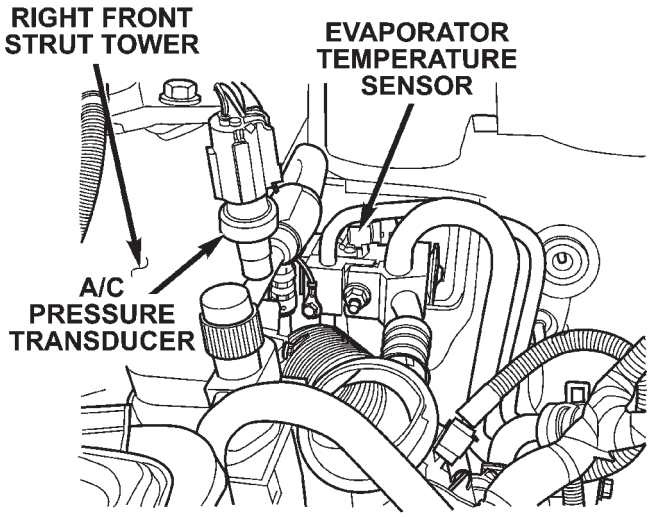

80af6663

8.4.6 EVAPORATOR TEMPERATURE SENSOR, RHD

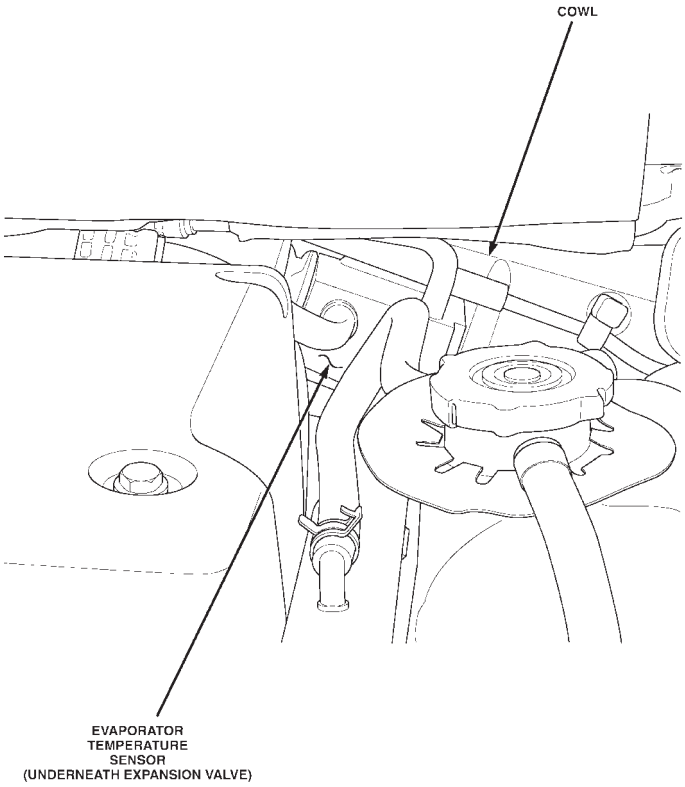

8.4.7 C202 CONNECTOR

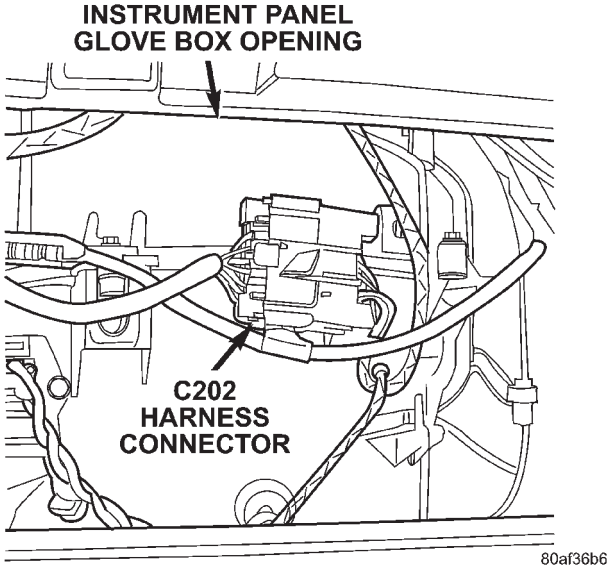

8.4 HEATING & A/C (Continued)

8.4.8 ACTUATORS – REAR

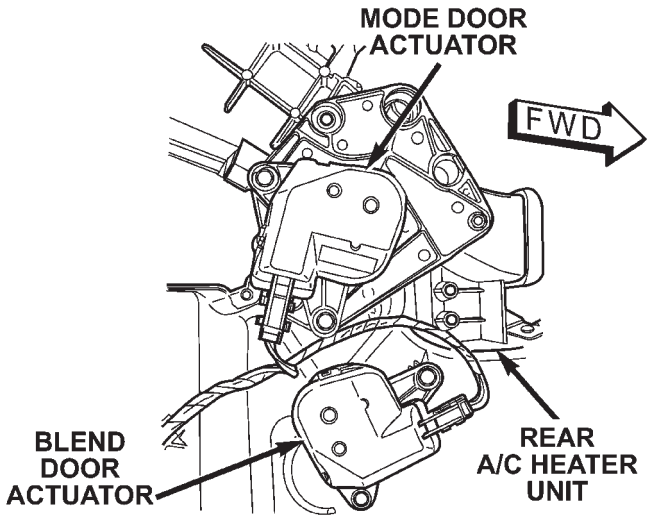

8.4.9 REAR A/C HEATER UNIT CONNECTOR

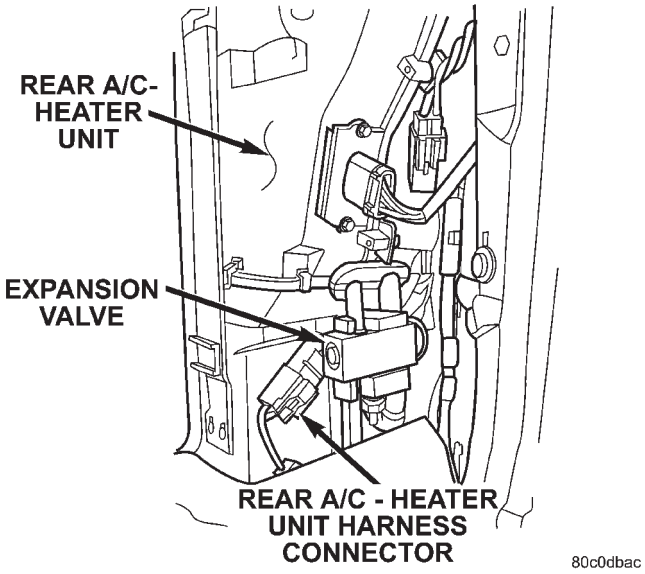

8.4.10 DIESEL CABIN HEATER ASSIST (DCHA) ASSEMBLY

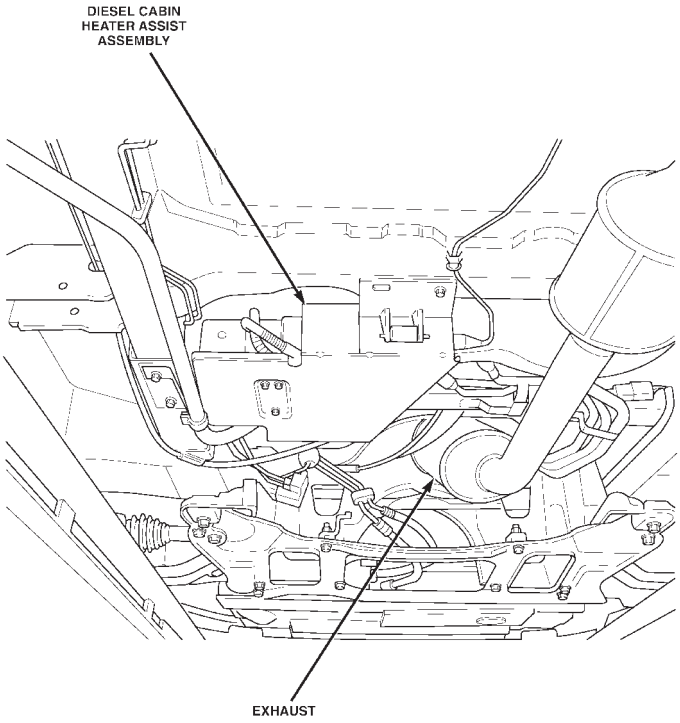

8.4.11 C330 HARNESS CONNECTOR (DCHA)

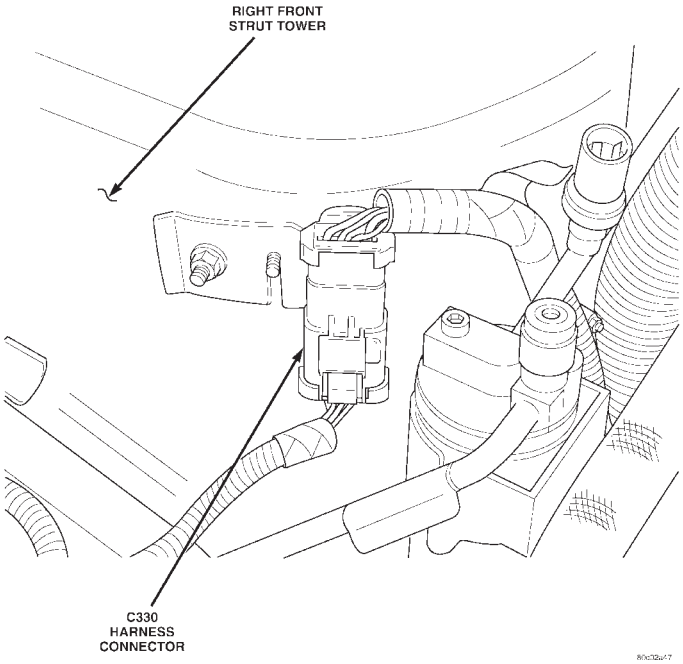

8.4 HEATING & A/C (Continued)

8.4.12 C331 HARNESS CONNECTOR (DCHA)

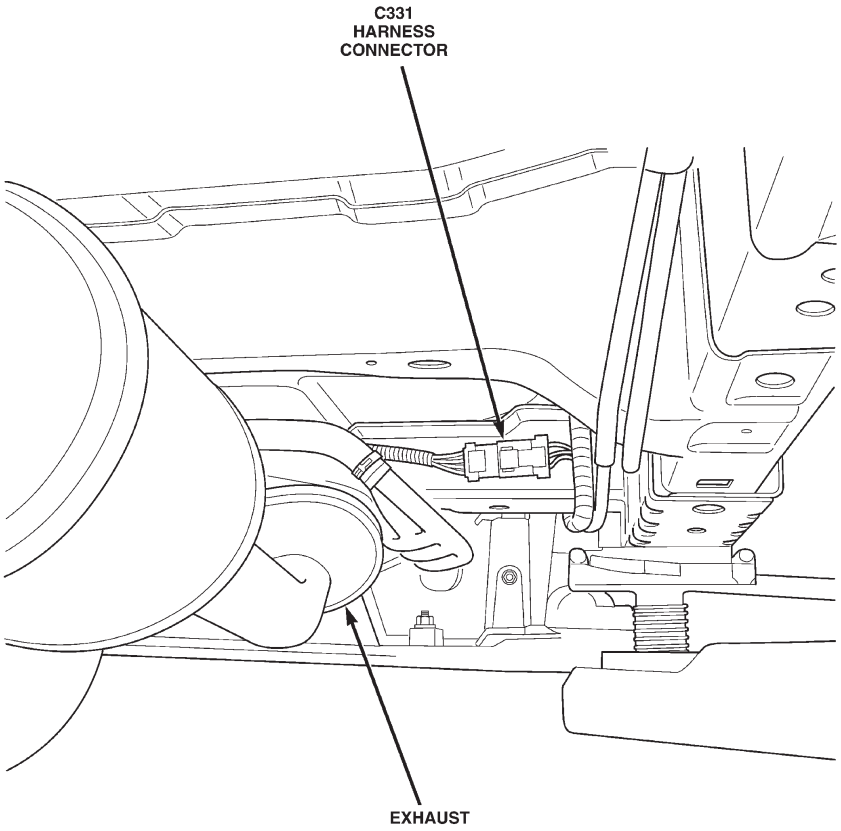

80c02a19

8.5 INTEGRATED POWER MODULE & FRONT CONTROL MODULE

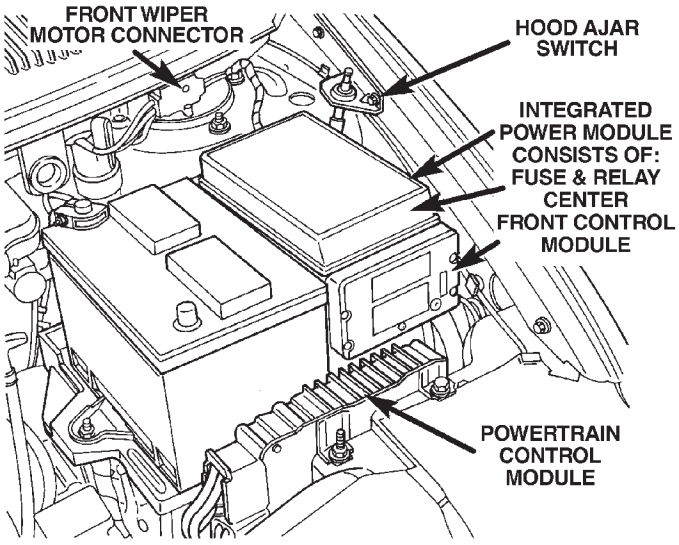

80964236

8.6 MEMORY SYSTEM

8.6.1 MEMORY SEAT MIRROR MODULE/SEAT MOTORS

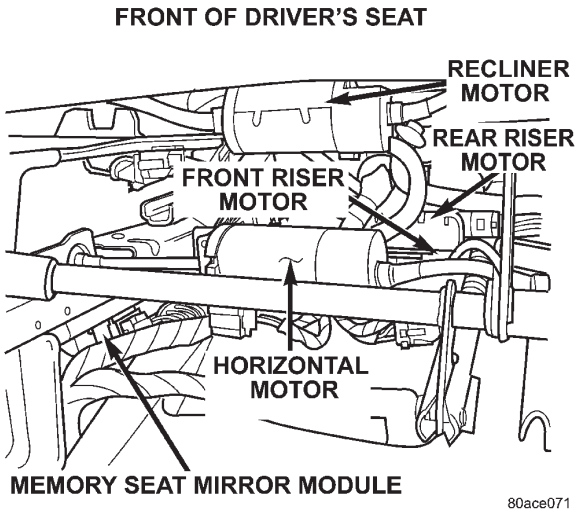

80ace071

8.6.2 MEMORY SEAT MIRROR MODULE CIRCUIT BREAKER

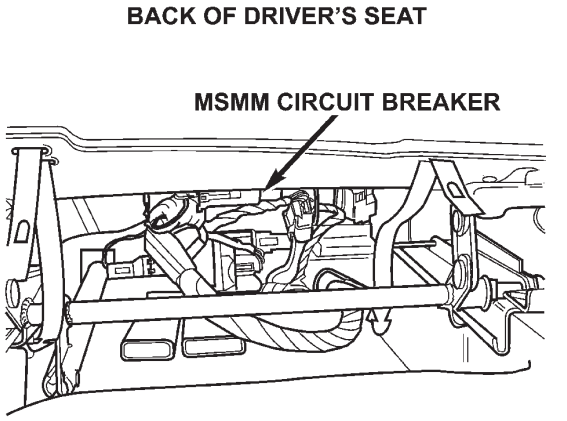

80acde43

8.7 OVERHEAD SWITCHES

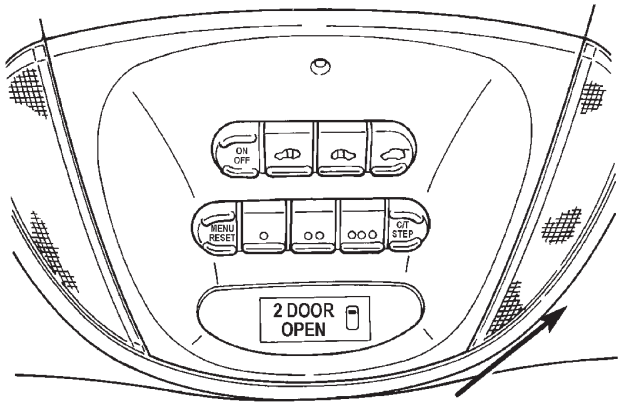

80c4f3eb

8.8 POWER FOLDING MIRRORS

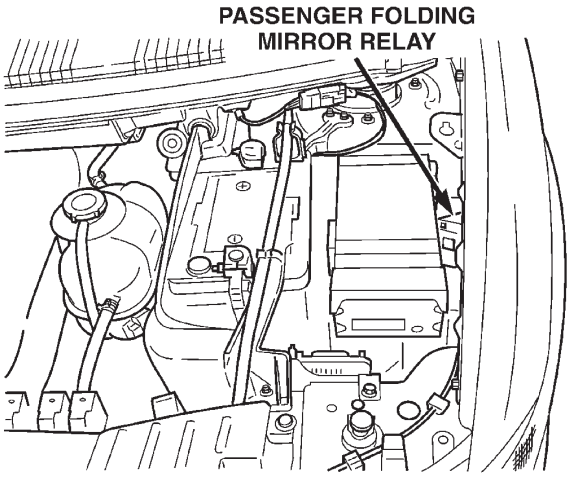

8.9 POWER LIFTGATE SYSTEM

8.9.1 MODULE

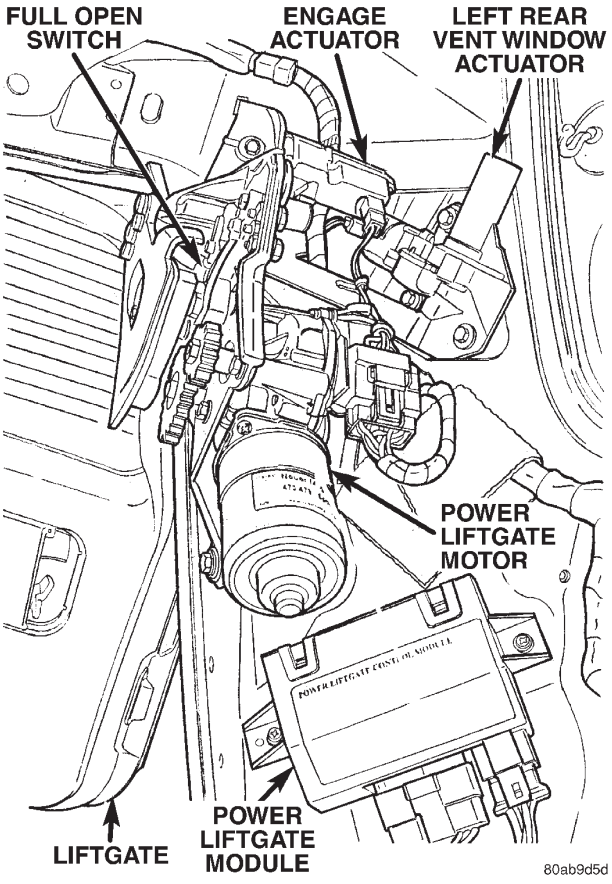

8.9.2 PINCH SENSORS (TAPE SWITCH)

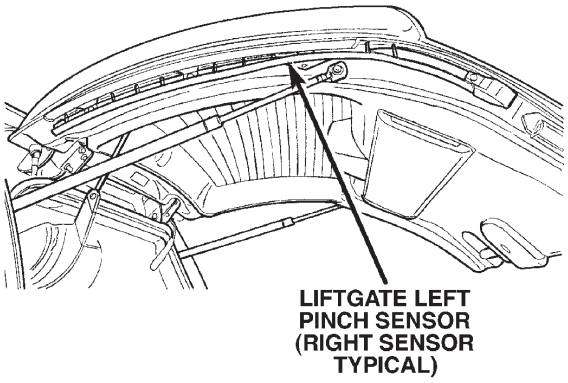

80ab9f6f

8.9.3 LATCH ASSEMBLY

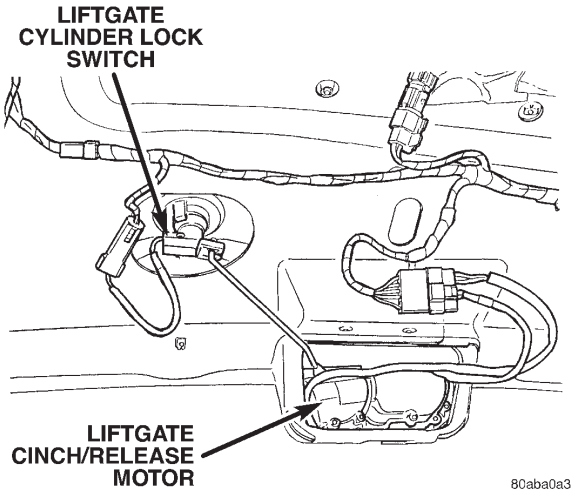

80aba0a3

8.10 POWER DOOR LOCK/RKE SYSTEM

8.10.1 DOOR LOCK MOTOR/AJAR SWITCH

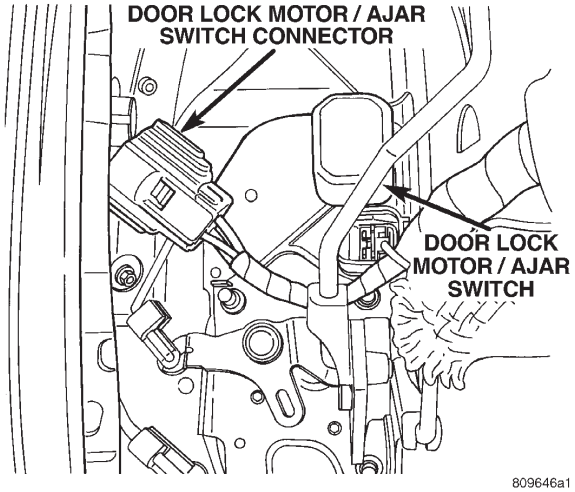

809646a1

8.10 POWER DOOR LOCK/RKE SYSTEM (Continued)

8.10.2 CYLINDER LOCK SWITCH

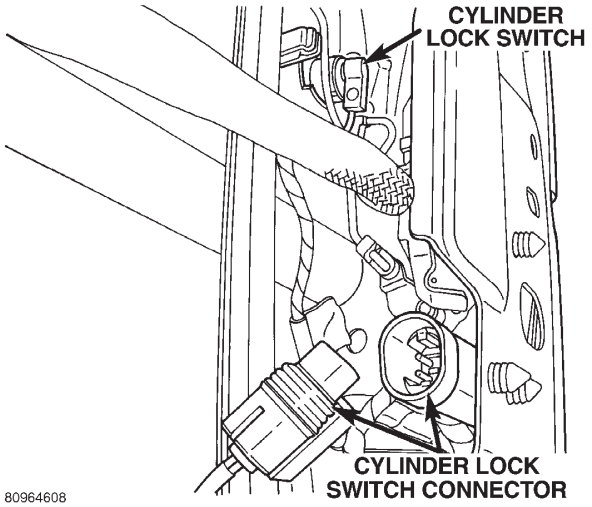

8.10.3 REMOTE KEYLESS ENTRY MODULE

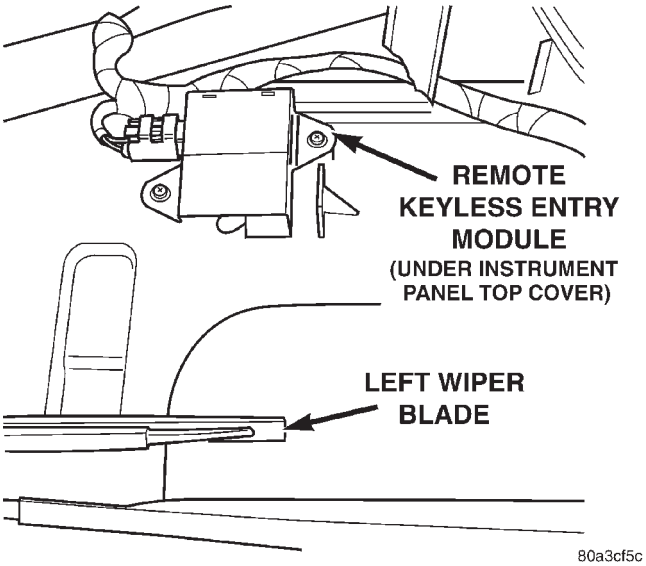

8.11 POWER SLIDING DOOR

8.11.1 MODULE

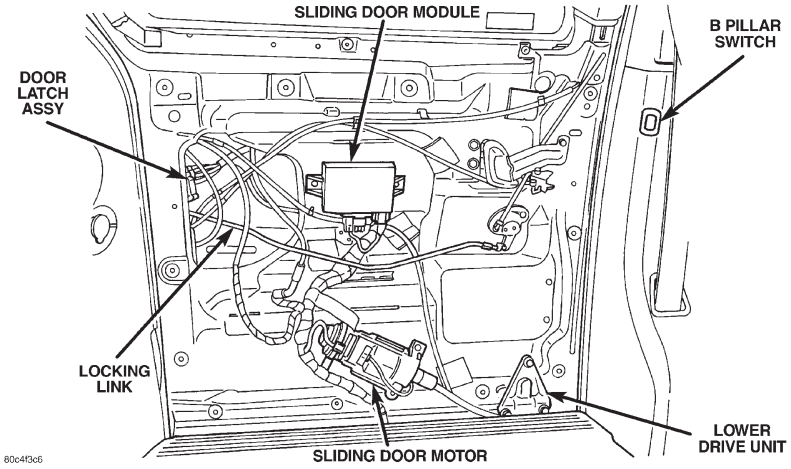

8.11.2 LOWER DRIVE UNIT

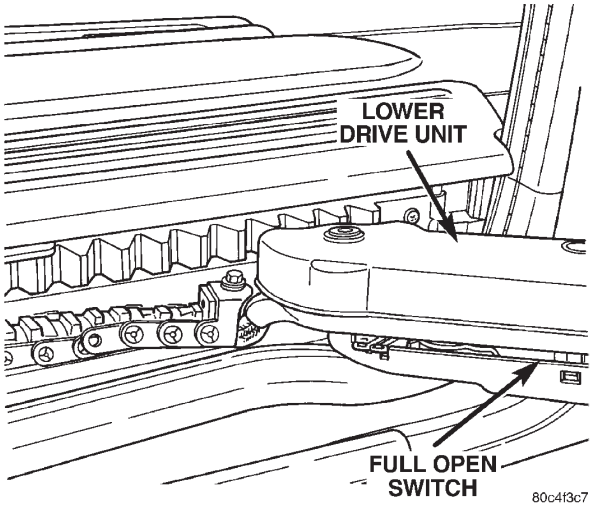

8.11.3 LATCH ASSEMBLY

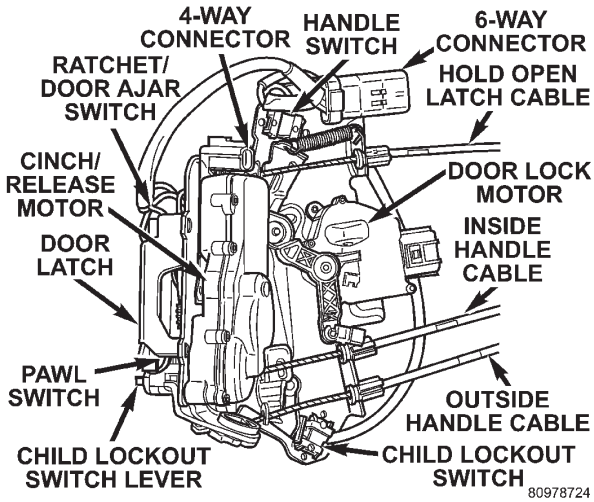

8.12 VEHICLE THEFT SECURITY SYSTEM

8.12.1 RKE/THATCHAM ALARM MODULE (EXPORT ONLY)

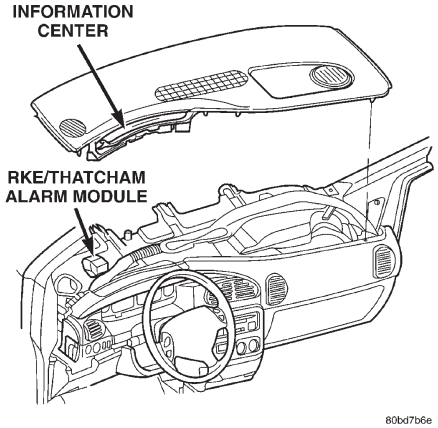

8.12 VEHICLE THEFT SECURITY SYSTEM (Continued)

8.12.2 RKE/THATCHAM ALARM MODULE CONNECTORS (EXPORT ONLY)

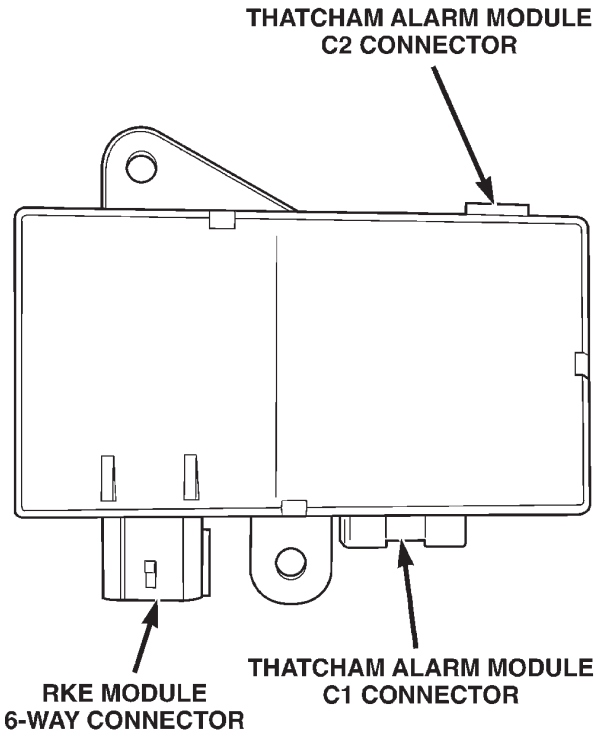

80bf0dfd

8.12.3 VTSS LED (EXPORT ONLY)

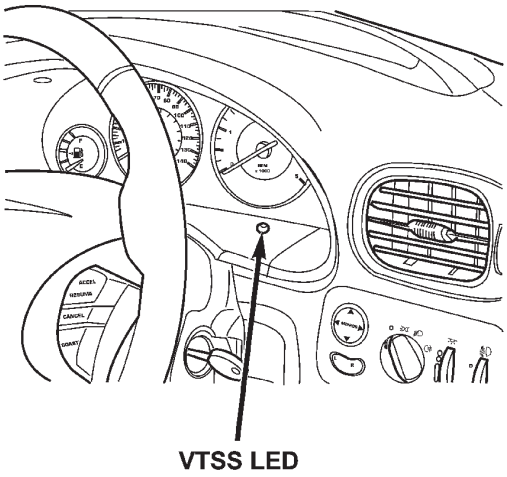

80bc5fd9

8.12.4 VTSS SIREN (EXPORT ONLY)

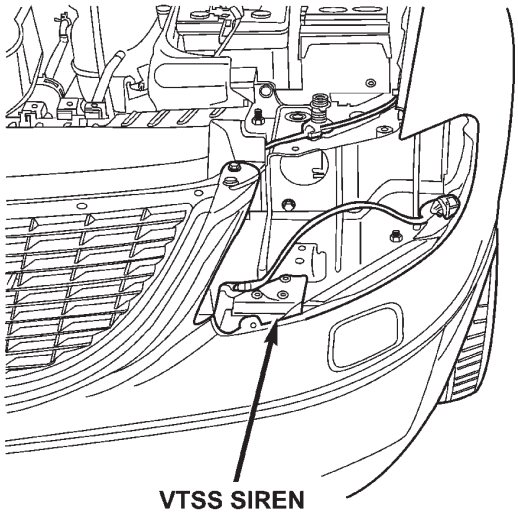

80bc5fae

8.12.5 FRONT INTRUSION SENSOR (EXPORT ONLY)

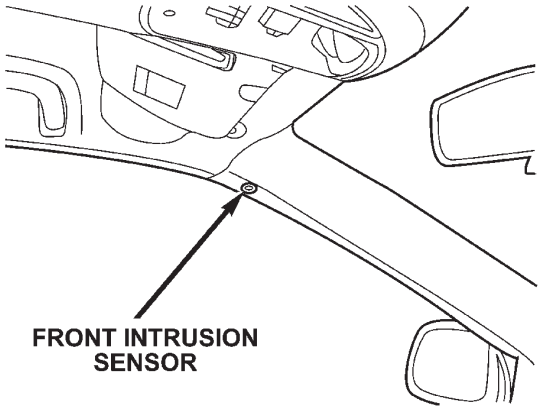

80bc5f9a

8.12 VEHICLE THEFT SECURITY SYSTEM (Continued)

8.12.6 REAR INTRUSION SENSOR (EXPORT ONLY)

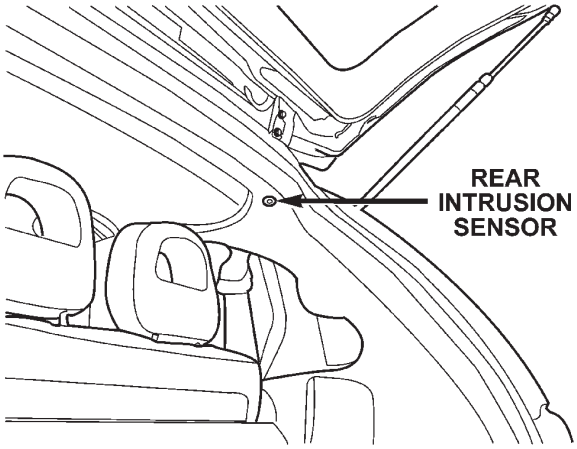

80bc5f84

9.0 CONNECTOR PINOUTS

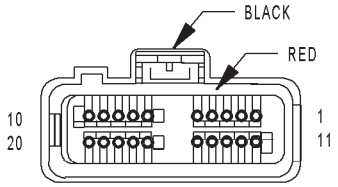

A/C-HEATER CONTROL C1 (MTC)

A/C-HEATER CONTROL C1 (MTC) - BLACK/RED 20 WAY

CAV	CIRCUIT	FUNCTION
1	Z24 18BK/OR	GROUND
2	C121 20DB/DG	SENSOR GROUND
3	C22 20LB/WT (3 ZONE HVAC)	REAR TEMPERATURE FEEDBACK SIGNAL
4	-	-
5	F850 20LB/PK (3 ZONE HVAC)	5 VOLT SUPPLY
6	C900 18LB/VT	WIPER DE-ICER DRIVER
7	C32 20DB/TN	RECIRCULATION DOOR DRIVER (A)
8	C54 20LB/YL (3 ZONE HVAC)	REAR BLEND DOOR DRIVER
9	C34 20DB/LB	COMMON DOOR DRIVER (B)
10	D25 20WT/VT	PCI BUS
11	-	-
12	C121 20DB/DG (3 ZONE HVAC)	REAR TEMPERATURE RETURN
13	F504 20GY/PK	IGNITION SWITCH OUTPUT (RUN)
14	E12 20OR/GY	PANEL LAMPS DRIVER
15	C21 20DB/LG	EVAPORATOR TEMPERATURE SENSOR SIGNAL
16	C33 20LB/BR	PASSENGER BLEND DOOR DRIVER (A)
17	C61 20DB/LG	DRIVER BLEND DOOR DRIVER (A)
18	C35 20LB/OR	MODE DOOR DRIVER (A)
19	C53 20LB (3 ZONE HVAC)	REAR MODE DOOR DRIVER
20	C154 20LB/OR (3 ZONE HVAC)	REAR COMMON DOOR DRIVER

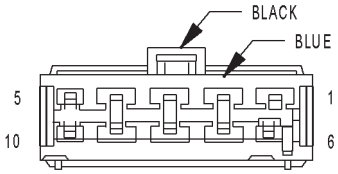

A/C-HEATER CONTROL C2 (MTC)

A/C-HEATER CONTROL C2 (MTC) - BLACK/BLUE 10 WAY

CAV	CIRCUIT	FUNCTION
1	-	-
2	C75 12DB/GY	BLOWER MOTOR HIGH DRIVER
3	C74 12DB/WT	BLOWER MOTOR M3 DRIVER
4	Z134 12BK/OR	GROUND
5	C71 16DB/BR	BLOWER MOTOR LOW DRIVER
6	-	-
7	-	-
8	-	-
9	C73 14DB/VT	BLOWER MOTOR M2 DRIVER
10	C72 16DB/OR	BLOWER MOTOR M1 DRIVER

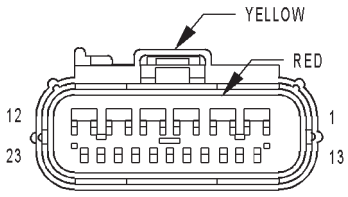

AIRBAG CONTROL MODULE (ORC)

AIRBAG CONTROL MODULE (ORC) - YELLOW/RED 23 WAY

CAV	CIRCUIT	FUNCTION
1	R54 18LB/YL	PASSENGER SEAT BELT TENSIONER LINE 2
2	R56 18LB/DG	PASSENGER SEAT BELT TENSIONER LINE 1
3	R62 18LB/PK	PASSENGER SQUIB 2 LINE 2
4	R64 18LB/WT	PASSENGER SQUIB 2 LINE 1
5	R42 18LB/BR	PASSENGER SQUIB 1 LINE 2
6	R44 18LB/OR	PASSENGER SQUIB 1 LINE 1
7	R53 18LG/YL	DRIVER SEAT BELT TENSIONER LINE 2
8	R55 18LG/DG	DRIVER SEAT BELT TENSIONER LINE 1
9	R61 18LG/PK	DRIVER SQUIB 2 LINE 1
10	R63 18LG/WT	DRIVER SQUIB 2 LINE 2
11	R43 18LG/BR	DRIVER SQUIB 1 LINE 1
12	R45 18LG/OR	DRIVER SQUIB 1 LINE 2
13	-	-
14	F201 18PK/OR	FCM OUTPUT (ORC RUN-START DRIVER)
15	F100 18PK/VT	FCM OUTPUT (ORC RUN ONLY DRIVER)
16	Z12 18BK/OR	GROUND
17	R59 18LG/TN	DRIVER SEAT BELT SWITCH LINE 1
18	R57 18LG/GY	DRIVER SEAT BELT SWITCH LINE 2
19	R60 18DB/LB	PASSENGER SEAT BELT SWITCH LINE 1
20	R58 18LB/GY	PASSENGER SEAT BELT SWITCH LINE 2
21	D25 18WT/VT	PCI BUS
22	-	-
23	-	-

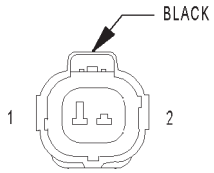

AMBIENT TEMP SENSOR (EXCEPT BASE)

AMBIENT TEMP SENSOR (EXCEPT BASE) - BLACK 2 WAY

CAV	CIRCUIT	FUNCTION
1	G31 18VT/LG	AMBIENT TEMPERATURE SENSOR SIGNAL
2	G931 18VT/BR	AMBIENT TEMPERATURE SENSOR RETURN

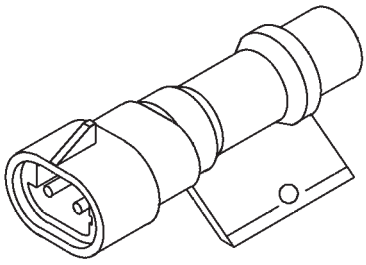

AMBIENT TEMPERATURE SENSOR (SENSOR SIDE)

AMBIENT TEMP SENSOR (SENSOR SIDE)

CAV	CIRCUIT	FUNCTION
1	-	AMBIENT TEMPERATURE SENSOR SIGNAL
2	-	AMBIENT TEMPERATURE SENSOR RETURN

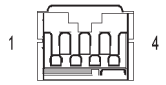

ATC
REMOTE
SENSOR
(ATC)

ATC REMOTE SENSOR (ATC) - 4 WAY

CAV	CIRCUIT	FUNCTION
1	F600 20LB/PK	PROTECTED IGNITION
2	D40 20WT/LB	KDB NO. 2 CLOCK
3	C905 20BR/LB	SENSOR RETURN
4	D18 20WT/YL	KDB NO. 2 DATA

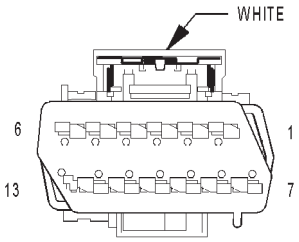

AUTO TEMP
CONTROL C1

AUTO TEMP CONTROL C1 - WHITE 13 WAY

CAV	CIRCUIT	FUNCTION
1	C161 20LB/WT	DRIVER BLEND DOOR DRIVER (B)
2	C61 20DB/LG	DRIVER BLEND DOOR DRIVER (A)
3	C133 20DB/WT	PASSENGER BLEND DOOR DRIVER (B)
4	C33 20LB/BR	PASSENGER BLEND DOOR DRIVER (A)
5	C132 20DB/YL	RECIRCULATION DOOR DRIVER (B)
6	C32 20DB/TN	RECIRCULATION DOOR DRIVER (A)
7	C135 20DB/GY	MODE DOOR DRIVER (B)
8	C35 20LB/OR	MODE DOOR DRIVER (A)
9	C53 20LB	REAR MODE DOOR DRIVER (A)
10	C154 20LB/OR	REAR MODE DOOR DRIVER (B)
11	C54 20LB/YL	REAR BLEND DOOR DRIVER (A)
12	C169 20DB/OR	REAR BLEND DOOR DRIVER (B)
13	-	-

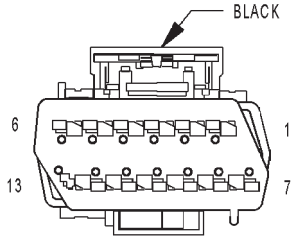

AUTO TEMP
CONTROL C2

AUTO TEMP CONTROL C2 - BLACK 13 WAY

CAV	CIRCUIT	FUNCTION
1	C21 20DB/LG	EVAPORATOR TEMPERATURE SENSOR SIGNAL
2	C121 20DB/DG	SENSOR GROUND
3	E12 20OR/GY	PANEL LAMPS DRIVER
4	A114 20GY/RD	FUSED B(+) (I.O.D.)
5	F504 20GY/PK	FUSED IGNITION SWITCH OUTPUT (RUN)
6	D25 20WT/VT	PCI BUS
7	C56 20DB/LB	BLOWER MOTOR CONTROL
8	C59 20DB/LB	REAR BLOWER MOTOR CONTROL
9	D22 20WT/TN	KDB CLOCK
10	D17 20WT/DG	KDB DATA
11	Z24 18BK/OR	GROUND
12	C200 20LB/DG	TXV SOLENOID FEED
13	C900 18LB/VT	WIPER DE-ICER DRIVER

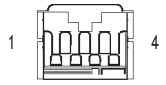

AUTO TEMP
CONTROL C3

AUTO TEMP CONTROL C3 - 4 WAY

CAV	CIRCUIT	FUNCTION
1	F600 20LB/PK	PROTECTED IGNITION
2	D40 20WT/LB	KDB NO. 2 CLOCK
3	C905 20BR/LB	SENSOR RETURN
4	D18 20WT/YL	KDB NO. 2 DATA

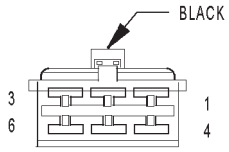

BLOWER MOTOR
RESISTOR C1
(MTC)

BLOWER MOTOR RESISTOR C1 (MTC) - BLACK 6 WAY

CAV	CIRCUIT	FUNCTION
1	C75 12DB/GY	BLOWER MOTOR HIGH DRIVER
2	C74 12DB/WT	BLOWER MOTOR M3 DRIVER
3	C73 14DB/VT	BLOWER MOTOR M2 DRIVER
4	C7 12DB	FUSED FRONT BLOWER MOTOR RELAY OUTPUT
5	C72 16DB/OR	BLOWER MOTOR M1 DRIVER
6	C71 16DB/BR	BLOWER MOTOR LOW DRIVER

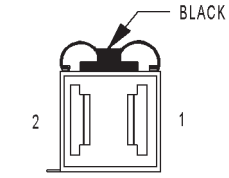

BLOWER MOTOR
RESISTOR C2
(MTC)

BLOWER MOTOR RESISTOR C2 (MTC) - BLACK 2 WAY

CAV	CIRCUIT	FUNCTION
1	C70 12DG	REAR BLOWER HIGH SPEED
2	C7 12BK	HIGH SPEED BLOWER MOTOR

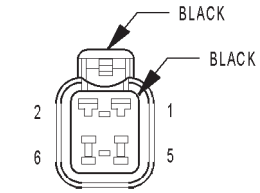

BODY CONTROL
MODULE C1

BODY CONTROL MODULE C1 - BLACK/BLACK 6 WAY

CAV	CIRCUIT	FUNCTION
1	A102 12WT/RD	FUSED B(+)
2	A701 16BR/RD	FUSED B(+) (HAZARD)
3	Z100 12BK/TN	GROUND
4	-	-
5	A101 12VT/RD	FUSED B(+)
6	-	-

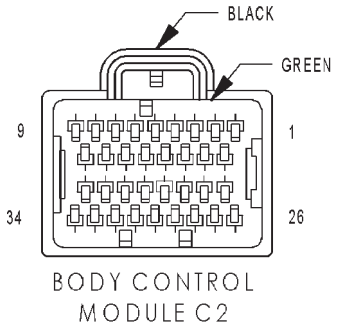

BODY CONTROL MODULE C2

BODY CONTROL MODULE C2 - BLACK/GREEN 34 WAY

CAV	CIRCUIT	FUNCTION
1	L61 18WT/LB (BUILT-UP-EXPORT)	LEFT FRONT TURN SIGNAL DRIVER
1	L61 18WT/LG (EXCEPT BUILT-UP-EXPORT)	LEFT FRONT TURN SIGNAL DRIVER
2	L63 18WT/DG	LEFT REAR TURN SIGNAL DRIVER
3	L60 18WT/TN	RIGHT FRONT TURN SIGNAL DRIVER
4	L62 18WT/BR	RIGHT REAR TURN SIGNAL DRIVER
5	F20 20PK/WT	FUSED IGNITION SWITCH OUTPUT (RUN-START)
6	G25 20VT/TN (HIGH LINE)	LIFTGATE SWITCH MUX
7	A114 20GY/RD	FUSED B(+) (I.O.D.)
8	-	-
9	L1 18WT/LG	BACK-UP LAMP DRIVER
10	P3 20TN/WT	LEFT FRONT DOOR LOCK DRIVER
11	P2 20TN/GY	RIGHT FRONT DOOR LOCK DRIVER
12	P38 20TN/DB	RIGHT SLIDING DOOR LOCK DRIVER
13	-	-
14	-	-
15	Z15 18BK/TN	GROUND
16	G920 20VT/YL (MEMORY)	MEMORY SELECT SWITCH RETURN
17	G153 20VT/YL (POWER LIFTGATE)	LIFTGATE MODULE WAKE UP SIGNAL
18	P32 20TN/VT	LEFT SLIDING DOOR LOCK DRIVER
19	Z10 18BK/TN	GROUND
20	P5 20TN/OR	LEFT SLIDING DOOR UNLOCK DRIVER
21	P164 18LG/DB (BUILT-UP-EXPORT)	PASSENGER FOLDING MIRROR RELAY INPUT
22	P30 20TN/DG	LIFTGATE HANDLE SWITCH SENSE
23	-	-
24	G200 20VT/BR (MEMORY)	MEMORY SELECT SWITCH MUX
25	M22 20YL/OR	COURTESY LAMPS DRIVER
26	P4 20TN/BR	RIGHT FRONT DOOR UNLOCK DRIVER
27	P34 20TN/LB	RIGHT SLIDING DOOR UNLOCK DRIVER
28	P1 20TN/LG	LEFT FRONT DOOR UNLOCK DRIVER
29	P159 20TN/DG (BUILT-UP-EXPORT)	DRIVER FOLDING MIRROR FOLD DRIVER
30	P174 20TN/LB (BUILT-UP-EXPORT)	RIGHT FOLDING MIRROR UNFOLD DRIVER
31	P171 20TN/YL (BUILT-UP-EXPORT)	LEFT FOLDING MIRROR UNFOLD DRIVER
32	W13 18BR/LG	REAR WIPER MOTOR CONTROL
33	M24 20YL/WT	COURTESY LAMPS DRIVER
34	L38 20WT/YL (BUILT-UP-EXPORT)	REAR FOG LAMP SWITCH OUTPUT

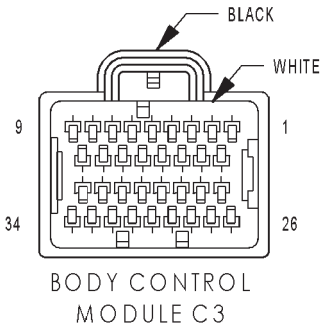

BODY CONTROL MODULE C3

BODY CONTROL MODULE C3 - BLACK/WHITE 34 WAY

CAV	CIRCUIT	FUNCTION
1	G23 20VT/DB (POWER SLIDING DOOR)	SLIDING DOORS OVERHEAD SWITCH MUX
2	D23 20WT/BR	FLASH PROGRAM ENABLE
3	G152 20VT/GY (POWER SLIDING DOOR)	RIGHT SLIDING DOOR WAKE UP SIGNAL
4	G151 20VT/BR (POWER SLIDING DOOR)	LEFT SLIDING DOOR WAKE UP SIGNAL
5	G76 20VT/YL	RIGHT SLIDING DOOR AJAR SWITCH SENSE
6	G74 20VT/WT (RHD)	RIGHT FRONT DOOR AJAR SWITCH SENSE
6	G75 20VT (LHD)	LEFT FRONT DOOR AJAR SWITCH SENSE
7	G75 20VT (RHD)	LEFT FRONT DOOR AJAR SWITCH SENSE
7	G74 20VT/WT (LHD)	RIGHT FRONT DOOR AJAR SWITCH SENSE
8	G77 20VT/GY	LEFT SLIDING DOOR AJAR SWITCH SENSE
9	E10 20OR/DG (ATC) (3 ZONE HVAC)	PANEL LAMPS DRIVER (REAR BLOWER SWITCH)
10	-	-
11	L162 20WT/VT (BUILT-UP-EXPORT)	RIGHT SIDE REPEATER LAMP FEED
12	G42 20VT/YL (POWER SLIDING DOOR) (EXCEPT TOWN & COUNTRY)	RIGHT SLIDING DOOR PILLAR SWITCH MUX
12	G42 20VT/WT (POWER SLIDING DOOR) (TOWN & COUNTRY)	RIGHT SLIDING DOOR PILLAR SWITCH MUX
13	G165 20VT/GY	LIFTGATE CYLINDER LOCK SWITCH MUX
14	G163 20VT/LB	LEFT CYLINDER LOCK SWITCH MUX
15	G162 20VT/WT (EXCEPT BUILT-UP-EXPORT)	RIGHT CYLINDER LOCK SWITCH MUX
15	G162 20VT/TN (BUILT-UP-EXPORT)	RIGHT CYLINDER LOCK SWITCH MUX
16	-	-
17	F503 20WT/PK	FUSED IGNITION SWITCH OUTPUT (RUN)
18	G41 20VT/DG (POWER SLIDING DOOR)	LEFT SLIDING DOOR PILLAR SWITCH MUX
19	L163 20WT/BR (BUILT-UP-EXPORT)	LEFT SIDE REPEATER LAMP FEED
20	N4 18DB/WT	FUEL LEVEL SENSOR SIGNAL
21	G161 20VT/DG (LHD)	LEFT DOOR LOCK SWITCH MUX
21	G160 20VT/LG (RHD)	RIGHT DOOR LOCK SWITCH MUX
22	G160 20VT/LG (LHD)	RIGHT DOOR LOCK SWITCH MUX
22	G161 20VT/DG (RHD)	LEFT DOOR LOCK SWITCH MUX
23	D25 20WT/VT	PCI BUS
24	-	-
25	M11 20YL/VT	COURTESY LAMPS DRIVER
26	P31 20TN/YL (POWER RELEASE) (EXCEPT BUILT-UP-EXPORT LHD SWB GAS)	LIFTGATE RELEASE DRIVER
26	P31 20TN/DG (POWER RELEASE) (BUILT-UP-EXPORT LHD SWB GAS)	LIFTGATE RELEASE DRIVER
27	-	-
28	-	-
29	G78 20VT/OR	LIFTGATE AJAR SWITCH SENSE
30	G70 20VT/LB	HOOD AJAR SWITCH SENSE
31	F500 18DG/PK	FUSED IGNITION SWITCH OUTPUT (RUN)
32	-	-
33	M21 20YL/BR	COURTESY LAMPS DRIVER
34	M27 20YL/LB	READING LAMPS DRIVER

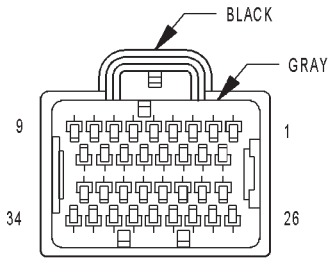

BODY CONTROL
MODULE C4

BODY CONTROL MODULE C4 - BLACK/GRAY 34 WAY

CAV	CIRCUIT	FUNCTION
1	E18 20OR/LB (POWER MIRRORS)	PANEL LAMPS DRIVER (MIRROR SWITCH)
2	E12 20OR/GY	PANEL LAMPS DRIVER (HVAC)
3	E19 20OR/BR	PANEL LAMPS DRIVER (HEADLAMP SWITCH)
4	D9 20WT/GY	RKE MODULE PROGRAM ENABLE
5	G150 20VT/BR	INSTRUMENT CLUSTER WAKE UP SENSE
6	-	-
7	P162 20LG/DG (BUILT-UP-EXPORT)	PASSENGER FOLDING MIRROR RELAY CONTROL
8	G69 20VT/WT (VTSS)	VTSS INDICATOR DRIVER
9	L161 20WT/LG	LEFT TURN INDICATOR DRIVER
10	F504 20GY/PK	FUSED IGNITION SWITCH OUTPUT (RUN)
11	E14 20OR/TN	PANEL LAMPS DRIVER (RADIO)
12	E13 20OR/YL	PANEL LAMPS DRIVER (INSTRUMENT CLUSTER)
13	X920 20GY/OR	RADIO CONTROL MUX RETURN
14	G900 20VT/OR	IGNITION SWITCH SENSE RETURN
15	-	-
16	-	-
17	L160 20WT/TN	RIGHT TURN INDICATOR DRIVER
18	M26 20YL/DB	HALO LAMP DRIVER
19	-	-
20	-	-
21	-	-
22	G902 20VT/OR	MULTI-FUNCTION SWITCH MUX RETURN
23	-	-
24	-	-
25	-	-
26	M28 20YL/TN	GLOVE BOX LAMP DRIVER
27	-	-
28	-	-
29	-	-
30	-	-
31	G96 20VT/DG	REMOTE KEYLESS ENTRY INTERFACE
32	B27 20DG/WT	TRACTION CONTROL SWITCH SENSE
33	P136 20TN/YL (BUILT-UP-EXPORT)	FOLDING MIRROR SWITCH SENSE
34	G26 20VT/OR	CHIME DRIVER

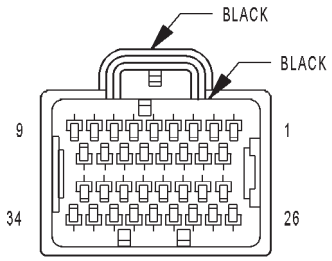

BODY CONTROL MODULE C5

BODY CONTROL MODULE C5 - BLACK/BLACK 34 WAY

CAV	CIRCUIT	FUNCTION
1	L91 20WT/DB	HAZARD SWITCH SENSE
2	-	-
3	-	-
4	-	-
5	-	-
6	-	-
7	-	-
8	-	-
9	-	-
10	G20 20VT/BR	IGNITION SWITCH SENSE
11	-	-
12	-	-
13	-	-
14	-	-
15	-	-
16	G926 20VT/WT	REAR WIPER SWITCH MUX RETURN
17	L900 20WT/YL	HEADLAMP SWITCH MUX RETURN
18	L307 20WT/BR	HEADLAMP SWITCH MUX
19	-	-
20	-	-
21	-	-
22	-	-
23	-	-
24	-	-
25	L36 20WT/DB (BUILT-UP-EXPORT)	REAR FOG LAMP INDICATOR DRIVER
26	X20 20GY/WT	RADIO CONTROL MUX
27	G194 20VT/LG	HIGH BEAM/FRONT WASHER SWITCH MUX
28	W26 20BR/DB	REAR WIPER SWITCH MUX
29	W52 20BR/YL	FRONT WIPER SWITCH MUX
30	E2 20OR/BR	PANEL LAMPS DIMMER SIGNAL
31	L305 20WT/LB	TURN SIGNAL SWITCH MUX
32	-	-
33	-	-
34	L39 20WT/OR (HIGH LINE)	FRONT FOG LAMP INDICATOR DRIVER

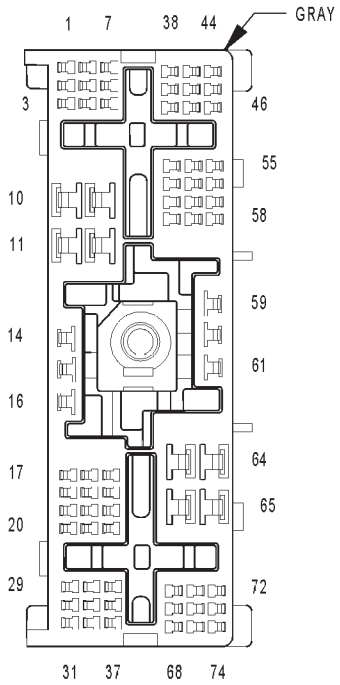

C200

C200 - GRAY (BODY SIDE)

CAV	CIRCUIT
1	C151 18LB/DG (3 ZONE HVAC)
1	C200 20LB/DG (BUILT-UP-EXPORT) (AUTOMATIC TEMPERATURE CONTROL)
2	A106 20LB/RD
3	A108 18LG/RD
4	C152 16LB/LG (3 ZONE HVAC)
4	C59 20DB/LB (AUTOMATIC TEMPERATURE CONTROL)
5	P159 20TN/DG (BUILT-UP-EXPORT)
5	C200 20LB/DG (EXCEPT BUILT-UP-EXPORT) (AUTOMATIC TEMPERATURE CONTROL)
6	K32 18DB/YL (GAS)
7	C53 20LB (AUTOMATIC TEMPERATURE CONTROL) (3 ZONE HVAC)
8	C16 18DB/GY (BUILT-UP-EXPORT)
8	C16 20DB/GY (EXCEPT BUILT-UP-EXPORT)
9	D17 20WT/DG (AUTOMATIC TEMPERATURE CONTROL)
9	C22 20LB/WT (3 ZONE HVAC)
10	L13 20WT/YL (BUILT-UP-EXPORT)
10	C50 12DB/OR (3 ZONE HVAC)
11	C7 12DB
12	Z135 12BK/LB (EXCEPT BUILT-UP-EXPORT) (AUTOMATIC TEMPERATURE CONTROL)
12	D22 20WT/TN (BUILT-UP-EXPORT) (AUTOMATIC TEMPERATURE CONTROL)
12	C153 12DB/BR (3 ZONE HVAC)
13	Z849 12BK/OR
14	A105 16DB/RD (BUILT-UP-EXPORT)
14	A105 18DB/RD (EXCEPT BUILT-UP-EXPORT)
15	A114 16GY/RD
16	F306 16DB/PK
17	C154 20LB/OR (3 ZONE HVAC)
17	C169 20DB/OR (AUTOMATIC TEMPERATURE CONTROL)
18	C121 20DB/DG (3 ZONE HVAC)
18	D22 20WT/TN (EXCEPT BUILT-UP-EXPORT) (AUTOMATIC TEMPERATURE CONTROL)
18	P171 20TN/YL (BUILT-UP-EXPORT)
19	P160 18TN/LG (BUILT-UP-EXPORT)
20	F302 18GY/PK
21	F2 18PK/WT (GAS)
22	L78 18WT/OR (BUILT-UP-EXPORT)
22	Q900 20OR/BK (EXCEPT BUILT-UP-EXPORT)
23	P174 20TN/LB (BUILT-UP-EXPORT)
23	Q100 20OR/WT (EXCEPT BUILT-UP-EXPORT)
24	D25 20WT/VT
25	D25 20WT/VT
26	D25 20WT/VT
27	D25 20WT/VT
28	D25 20WT/VT
29	F20 20PK/WT
30	F100 18PK/VT
31	F201 18PK/OR
32	F850 20LB/PK (3 ZONE HVAC)
32	F504 20GY/PK (AUTOMATIC TEMPERATURE CONTROL)
33	P7 20LG/DG
34	P8 20LG/WT
35	P64 20TN (MEMORY)
36	P65 20TN/VT (MEMORY)
37	P66 20TN/LG (MEMORY)
38	P67 20TN/OR (MEMORY)
39	P68 20TN/YL (MEMORY)
40	P69 20TN/WT (EXCEPT BUILT-UP-EXPORT) (MEMORY)
40	P69 20TN/DB (BUILT-UP-EXPORT) (MEMORY)

C200 - GRAY (BODY SIDE) — Continued

CAV	CIRCUIT
41	P70 18TN/LB (MEMORY)
42	P71 18TN/GY (BUILT-UP-EXPORT) (MEMORY)
42	P71 18TN/DG (EXCEPT BUILT-UP-EXPORT) (MEMORY)
43	P72 18TN/GY (MEMORY)
44	P73 18TN/VT (EXCEPT BUILT-UP-EXPORT) (MEMORY)
44	P73 18TN/YL (BUILT UP-EXPORT) (MEMORY)
45	P74 18TN/YL (MEMORY)
46	P75 18TN/DB (BUILT-UP-EXPORT) (MEMORY)
46	P75 18TN/LG (EXCEPT BUILT-UP-EXPORT) (MEMORY)
47	P112 20TN/OR (EXCEPT BUILT-UP-EXPORT/POWER MIRRORS/EXCEPT TOWN & COUNTRY)
47	P112 20BK/OR (EXCEPT BUILT-UP-EXPORT/POWER MIRRORS/TOWN & COUNTRY)
47	D23 20WT/BR (RHD)
48	P114 20TN/WT (EXCEPT BUILT-UP-EXPORT) (POWER MIRRORS)
48	B25 20DG/WT (BUILT-UP-EXPORT)
49	C154 20LB/OR (AUTOMATIC TEMPERATURE CONTROL) (3 ZONE HVAC)
50	Z104 18BK/LG
51	X156 20GY/LB (PREMIUM 8 SPEAKER)
52	X154 20GY/YL (PREMIUM 8 SPEAKER)
53	R57 18LG/GY
54	R58 18LB/GY
55	R59 18LG/TN
56	R60 18LB/TN
57	T55 20YL/VT (AUTOSTICK)
57	P162 18LG/DG (BUILT-UP-EXPORT)
58	T751 20YL
59	X15 16GY/DG (PREMIUM 8 SPEAKER)
60	V37 20VT
61	X3 20DG/VT
62	C54 20LB/YL (AUTOMATIC TEMPERATURE CONTROL) (3 ZONE HVAC)
63	A701 16BR/RD
64	X51 20DG/DB
65	X52 20GY/DB
66	X53 20DG
67	X54 20GY
68	X55 20DG/BR
69	X56 20GY/BR
70	X57 20DG/OR
71	X58 20GY/OR
72	X153 20DG/YL (PREMIUM 8 SPEAKER)
73	K900 20DB/DG
74	X155 20DG/LB (PREMIUM 8 SPEAKER)

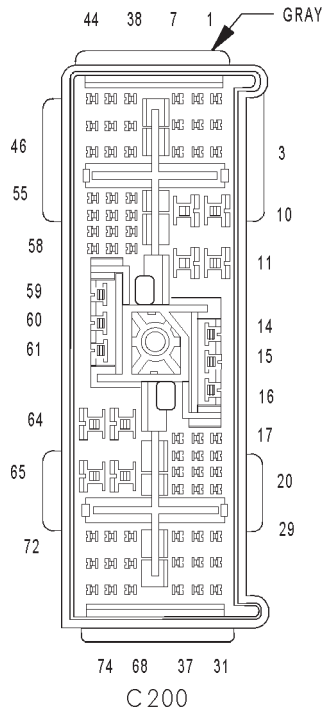

C200

C200 - GRAY (INSTRUMENT PANEL SIDE)

CAV	CIRCUIT
1	C200 20LB/DG (BUILT-UP-EXPORT) (AUTOMATIC TEMPERATURE CONTROL)
1	C151 18LB/DG (3 ZONE HVAC)
2	A106 20LB/RD
3	A108 18LG/RD
4	C59 20DB/LB (AUTOMATIC TEMPERATURE CONTROL)
4	C152 16LB/LG (3 ZONE HVAC)
5	P159 20TN/DG (BUILT-UP-EXPORT)
5	C200 20LB/DG (EXCEPT BUILT-UP-EXPORT) (AUTOMATIC TEMPERATURE CONTROL)
6	K32 18DB/YL
7	C53 20LB (AUTOMATIC TEMPERATURE CONTROL) (3 ZONE HVAC)
8	C16 20DB/GY (POWER MIRRORS)
9	C22 20LB/WT (3 ZONE HVAC)
9	D17 20WT/DG (AUTOMATIC TEMPERATURE CONTROL)
10	L13 20WT/YL (BUILT-UP-EXPORT)
10	C50 12DB/OR (3 ZONE HVAC)
11	C7 12DB
12	C153 12DB/BR (3 ZONE HVAC)
12	D22 20WT/TN (BUILT-UP-EXPORT) (AUTOMATIC TEMPERATURE CONTROL)
12	Z135 12BK/LB (EXCEPT BUILT-UP-EXPORT) (AUTOMATIC TEMPERATURE CONTROL)
13	Z849 12BK/OR
14	A105 16DB/RD
15	A114 16GY/RD
16	F306 16DB/PK
17	C169 20DB/OR (AUTOMATIC TEMPERATURE CONTROL)
17	C154 20LB/OR (3 ZONE HVAC)
18	C121 20DB/DG (3 ZONE HVAC)
18	D22 20WT/TN (EXCEPT BUILT-UP-EXPORT) (AUTOMATIC TEMPERATURE CONTROL)
18	P171 20TN/YL (BUILT-UP-EXPORT)
19	P160 18TN/LG (BUILT-UP-EXPORT)
20	F302 18GY/PK
21	F2 18PK/YL
22	Q900 20OR/BK (EXCEPT BUILT-UP-EXPORT)
22	L78 20WT/OR (BUILT-UP-EXPORT)
23	Q100 20OR/WT (EXCEPT BUILT-UP-EXPORT)
23	P174 20TN/LB (BUILT-UP-EXPORT)
24	D25 18WT/VT
25	D25 18WT/VT (EXCEPT BUILT-UP-EXPORT)
25	D25 20WT/VT (BUILT-UP-EXPORT)
26	D25 20WT/VT
27	D25 20WT/VT
28	D25 20WT/VT
29	F20 20PK/WT
30	F100 18PK/VT
31	F201 18PK/OR
32	F504 20GY/PK (AUTOMATIC TEMPERATURE CONTROL)
32	F850 20LB/PK (3 ZONE HVAC)
33	P7 20LG/DG
34	P8 20LG/WT
35	P64 20TN (MEMORY)
36	P65 20TN/VT (MEMORY)
37	P66 20TN/LG (MEMORY)
38	P67 20TN/OR (MEMORY)
39	P68 20TN/YL (MEMORY)
40	P69 20TN/WT (MEMORY)

C200 - GRAY (INSTRUMENT PANEL SIDE) — Continued

CAV	CIRCUIT
41	P70 18TN/LB (MEMORY)
42	P71 18TN/DG (MEMORY)
43	P72 18TN/GY (MEMORY)
44	P73 18TN/VT (MEMORY)
45	P74 18TN/DB (MEMORY)
46	P75 18TN/LG (MEMORY)
47	D23 20WT/BR (RHD)
47	P112 20TN/OR (EXCEPT BUILT-UP-EXPORT) (MEMORY POWER MIRRORS)
48	B25 20DG/WT (BUILT-UP-EXPORT)
48	P114 20TN/WT (EXCEPT BUILT-UP-EXPORT) (MEMORY POWER MIRRORS)
49	C154 20LB/OR (AUTOMATIC TEMPERATURE CONTROL) (3 ZONE HVAC)
50	Z104 18BK/LG
51	X156 20GY/LB (PREMIUM 8 SPEAKER)
52	X154 20GY/YL (PREMIUM 8 SPEAKER)
53	R57 18LG/GY
54	R58 18LB/GY
55	R59 18LG/TN
56	R60 18DB/LB
57	T55 20YL/VT (AUTOSTICK)
57	P162 20LG/DG (BUILT-UP-EXPORT)
58	T751 20YL
59	X15 16GY/DG (PREMIUM 8 SPEAKER)
60	V37 20VT
61	X3 20DG/VT
62	C54 20LB/YL (AUTOMATIC TEMPERATURE CONTROL) (3 ZONE HVAC)
63	A701 16BR/RD
64	X51 20DG/DB
65	X52 20GY/DB
66	X53 20DG
67	X54 20GY
68	X55 20DG/BR
69	X56 20GY/BR
70	X57 20DG/OR
71	X58 20GY/OR
72	X153 20DG/YL (PREMIUM 8 SPEAKER)
73	K900 20DB/DG
74	X155 20DG/LB (PREMIUM 8 SPEAKER)

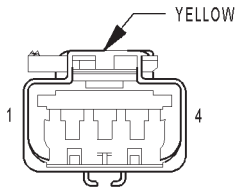

C201

C201 - YELLOW (BODY SIDE)

CAV	CIRCUIT
1	R53 18LG/YL
2	R55 18LG/DG
3	R54 18LB/YL
4	R56 18LB/DG

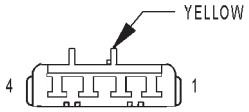

C201

C201 - YELLOW (INSTRUMENT PANEL SIDE)

CAV	CIRCUIT
1	R53 18LG/YL
2	R55 18LG/DG
3	R54 18LB/YL
4	R56 18LB/DG

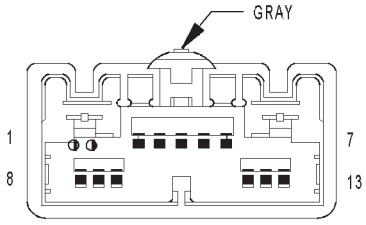

C202

C202 - GRAY (COMPONENT SIDE)

CAV	CIRCUIT
1	Z134 12BK/OR (AUTOMATIC TEMPERATURE CONTROL)
2	C34 20DB/LB (MANUAL TEMPERATURE CONTROL)
2	C56 20DB/LB (AUTOMATIC TEMPERATURE CONTROL)
3	C32 20DB/TN
4	C33 20LB/BR
5	C61 20LB/WT (MANUAL TEMPERATURE CONTROL)
5	C61 20DB/LG (AUTOMATIC TEMPERATURE CONTROL)
6	C35 20LB/OR
7	C7 12DB (AUTOMATIC TEMPERATURE CONTROL)
8	C132 20DB/YL (AUTOMATIC TEMPERATURE CONTROL)
9	C133 20DB/WT (AUTOMATIC TEMPERATURE CONTROL)
10	C161 20LB/WT (AUTOMATIC TEMPERATURE CONTROL)
11	C135 20DB/GY (AUTOMATIC TEMPERATURE CONTROL)
12	C21 20DB/LG
13	C121 20DB/DG

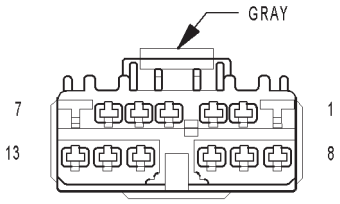

C202

C202 - GRAY (INSTRUMENT PANEL SIDE)

CAV	CIRCUIT
1	Z134 12BK/OR (AUTOMATIC TEMPERATURE CONTROL)
2	C34 20DB/LB (MANUAL TEMPERATURE CONTROL)
2	C56 20DB/LB (AUTOMATIC TEMPERATURE CONTROL)
3	C32 20DB/TN
4	C33 20LB/BR
5	C61 20DB/LG
6	C35 20LB/OR
7	C7 12DB (AUTOMATIC TEMPERATURE CONTROL)
8	C132 20DB/YL (AUTOMATIC TEMPERATURE CONTROL)
9	C133 20DB/WT (AUTOMATIC TEMPERATURE CONTROL)
10	C161 20LB/WT (AUTOMATIC TEMPERATURE CONTROL)
11	C135 20DB/GY (AUTOMATIC TEMPERATURE CONTROL)
12	C21 20DB/LG
13	C121 20DB/DG

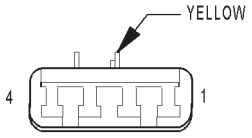

C304

C304 - YELLOW (BODY SIDE)

CAV	CIRCUIT
1	R54 18LB/YL (RHD)
1	R53 18LG/YL (LHD)
2	R56 18LB/DG (RHD)
2	R55 18LG/DG (LHD)
3	R31 18LG/OR
4	R33 18LG/WT

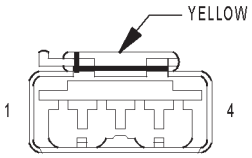

C304

C304 - YELLOW (SEAT SIDE)

CAV	CIRCUIT
1	R54 18LB/YL (RHD)
1	R53 18LG/YL (LHD)
2	R56 18LB/DG (RHD)
2	R55 18LG/DG (LHD)
3	R31 18LG/OR
4	R33 18LG/WT

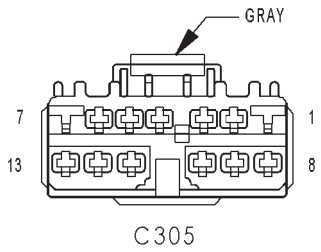

C305

C305 - GRAY (BODY SIDE)

CAV	CIRCUIT
1	Z849 12BK/OR
2	R57 18LG/GY
3	R59 18LG/TN
4	P7 20LG/DG
5	A210 14OR/RD
6	F503 20WT/PK
7	A110 12OR/RD
8	-
9	-
10	-
11	-
12	-
13	-

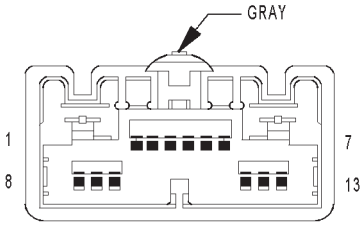

C305

C305 - GRAY (SEAT SIDE)

CAV	CIRCUIT
1	Z849 12BK/OR (HEATED SEAT)
1	Z849 14BK/OR (EXCEPT HEATED SEAT)
2	R57 18LG/GY
3	R59 18LG/TN
4	P7 20LG/DG (HEATED SEAT)
5	A210 14OR/RD (POWER/ HEATED SEAT)
6	F503 20WT/PK (HEATED SEAT)
7	A110 12OR/RD (POWER/ HEATED SEAT)
8	-
9	-
10	-
11	-
12	-
13	-

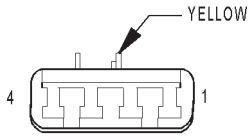

C306

C306 - YELLOW (BODY SIDE)

CAV	CIRCUIT
1	R53 18LG/YL (RHD)
1	R54 18LB/YL (LHD)
2	R55 18LG/DG (RHD)
2	R56 18LB/DG (LHD)
3	R32 18LB/OR
4	R34 18LB/WT

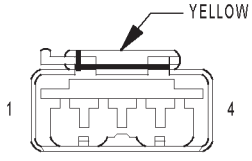

C306

C306 - YELLOW (SEAT SIDE)

CAV	CIRCUIT
1	R53 18LG/YL (RHD)
1	R54 18LB/YL (LHD)
2	R55 18LG/DG (RHD)
2	R56 18LB/DG (LHD)
3	R32 18LB/OR
4	R34 18LB/WT

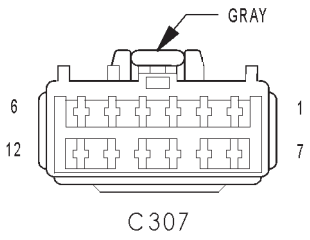

C307

C307 - GRAY (BODY SIDE)

CAV	CIRCUIT
1	Z848 12BK/OR
2	R58 18LB/GY
3	R60 18LB/TN
4	P8 20LG/WT
5	A210 14OR/RD
6	F503 20WT/PK
7	-
8	-
9	-
10	-
11	-
12	-

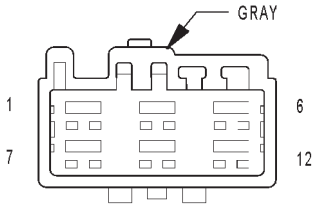

C307

C307 - GRAY (SEAT SIDE)

CAV	CIRCUIT
1	Z848 18BK/OR (POWER/ HEATED SEAT)
2	R58 18LB/GY
3	R60 18LB/TN
4	P8 20LG/WT (HEATED SEAT)
5	A210 14OR/RD (POWER/ HEATED SEAT)
6	F503 20WT/PK (HEATED SEAT)
7	-
8	-
9	-
10	-
11	-
12	-

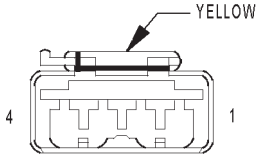

C326

C326 - YELLOW (SAFETY SEAT SIDE)

CAV	CIRCUIT
1	-
2	-
3	R33 18WT/BK (BUILT-UP-EXPORT)
3	R33 18LG/WT (EXCEPT BUILT-UP-EXPORT)
4	R31 18DG/WT (BUILT-UP-EXPORT)
4	R31 18LG/OR (EXCEPT BUILT-UP-EXPORT)

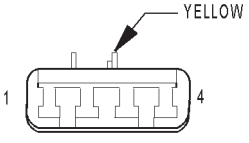

C326

C326 - YELLOW (SEAT SIDE)

CAV	CIRCUIT
1	-
2	-
3	R33 18LG/WT
4	R31 18LG/OR

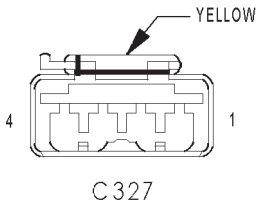

C327

C327 - YELLOW (SAFETY SEAT SIDE)

CAV	CIRCUIT
1	-
2	-
3	R34 18LB/WT (EXCEPT BUILT-UP-EXPORT)
3	R34 18WT/BK (BUILT-UP-EXPORT)
4	R32 18LB/OR (EXCEPT BUILT-UP-EXPORT)
4	R32 18DG/WT (BUILT-UP-EXPORT)

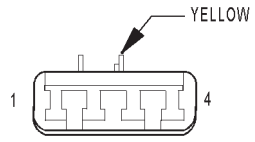

C327

C327 - YELLOW (SEAT SIDE)

CAV	CIRCUIT
1	-
2	-
3	R34 18LB/WT
4	R32 18LB/OR

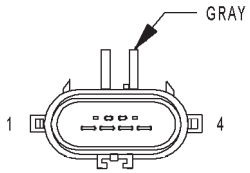

C330
(DIESEL)

C330 (DIESEL) - GRAY (CABIN HEATER JUMPER SIDE)

CAV	CIRCUIT
1	A119 16RD/OR
2	C41 20LB/DG
3	D21 20WT/BR
4	Z149 16BK/DB

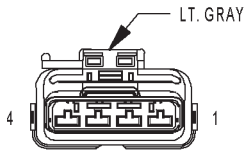

C330
(DIESEL)

C330 (DIESEL) - LT. GRAY (BODY SIDE)

CAV	CIRCUIT
1	A119 16RD/OR
2	C41 20LB/DG
3	D21 20WT/BR
4	Z149 16BK/DB

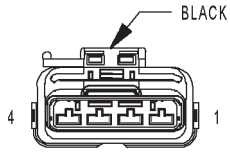

C331
(DIESEL)

C331 (DIESEL) - BLACK (CABIN HEATER JUMPER SIDE)

CAV	CIRCUIT
1	A119 16RD/OR
2	C41 20LB/DG
3	D21 20WT/BR
4	Z149 16BK/DB

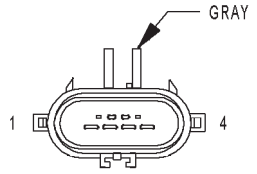

C331
(DIESEL)

C331 (DIESEL) - GRAY (CABIN HEATER COMPONENT SIDE)

CAV	CIRCUIT
1	A119 14RD/OR
2	C41 20DB/OR
3	D21 20WT/DB
4	Z149 14BK/DB

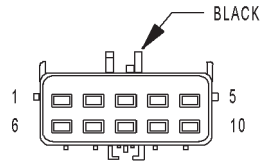

C332
(ATC)

C332 (ATC) - BLACK (COMPONENT SIDE)

CAV	CIRCUIT
1	C53 18LB
2	C169 18LB/TN
3	C51 12DB/BR
4	C59 18DB/LB
5	-
6	Z135 12BK/LB
7	C54 18LB/YL
8	C154 18LB/GY
9	-
10	C200 18LB/DG

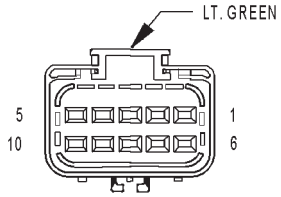

C332
(ATC)

C332 (ATC) - LT. GREEN (BODY SIDE)

CAV	CIRCUIT
1	C53 20LB
2	C169 20DB/OR
3	C51 12LB/BR
4	C59 20DB/LB
5	-
6	Z135 12BK/LB
7	C54 20LB/YL
8	C154 20LB/OR
9	-
10	C200 20LB/DG

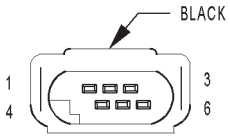

CABIN HEATER
ASSIST C1
(DIESEL)

CABIN HEATER ASSIST C1 (DIESEL) - BLACK 6 WAY

CAV	CIRCUIT	FUNCTION
1	-	-
2	D21 20WT/DB	SCI TRANSMIT
3	-	-
4	-	-
5	C41 20DB/OR	CABIN HEATER ASSIST CONTROL
6	18RD	DOSING PUMP CONTROL

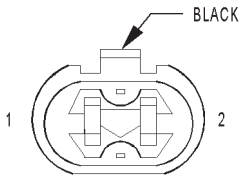

CABIN HEATER ASSIST C2 (DIESEL)

CABIN HEATER ASSIST C2 (DIESEL) - BLACK 2 WAY

CAV	CIRCUIT	FUNCTION
1	A119 14RD/OR	FUSED B(+)
2	Z149 14BK/DB	GROUND

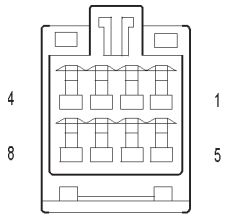

CD CHANGER

CD CHANGER - 8 WAY

CAV	CIRCUIT	FUNCTION
1	X40 24GY/WT	AUDIO OUT RIGHT
2	E14 18OR/TN	PANEL LAMPS DRIVER
3	D25 20WT/VT (EXCEPT BUILT-UP-EXPORT)	PCI BUS
3	D25 20VT/YL (BUILT-UP-EXPORT)	PCI BUS
4	X112 20RD	IGNITION SWITCH OUTPUT
5	X41 20DG/WT	AUDIO OUT LEFT
6	Z140 18BK/OR	GROUND
7	Z141 18BK/TN	GROUND
8	X160 20GY/YL	B(+)

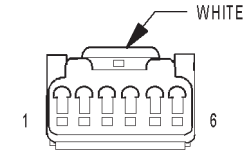

CLOCKSPRING C1

CLOCKSPRING C1 - WHITE 6 WAY

CAV	CIRCUIT	FUNCTION
1	X920 20GY/OR	RADIO CONTROL MUX RETURN
2	X20 20GY/WT	RADIO CONTROL MUX
3	X3 20DG/VT	HORN SWITCH SENSE
4	V37 20VT	SPEED CONTROL SWITCH SIGNAL
5	K900 20DB/DG	SPEED CONTROL SWITCH GROUND
6	-	-

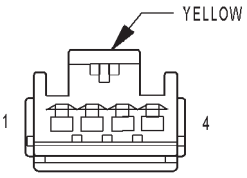

CLOCKSPRING C2

CLOCKSPRING C2 - YELLOW 4 WAY

CAV	CIRCUIT	FUNCTION
1	R61 18LG/PK	DRIVER SQUIB 2 LINE 1
2	R63 18LG/WT	DRIVER SQUIB 2 LINE 2
3	R43 18LG/BR	DRIVER SQUIB 1 LINE 1
4	R45 18LG/OR	DRIVER SQUIB 1 LINE 2

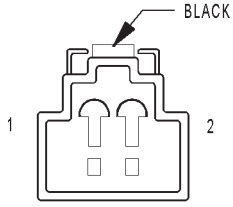

CLOCKSPRING C4

CLOCKSPRING C4 - BLACK 2 WAY

CAV	CIRCUIT	FUNCTION
1	X20 20RD/BK	RADIO CONTROL MUX
2	X920 20RD/DB	RADIO CONTROL MUX RETURN

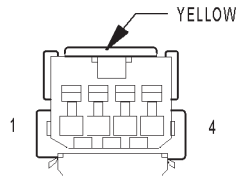

CLOCKSPRING C5

CLOCKSPRING C5 - YELLOW 4 WAY

CAV	CIRCUIT	FUNCTION
1	R45 18OR/LB	DRIVER SQUIB 1 LINE 2
2	R43 18BK/LB	DRIVER SQUIB 1 LINE 1
3	R63 18TN/LB	DRIVER SQUIB 2 LINE 2
4	R61 18OR/LB	DRIVER SQUIB 2 LINE 1

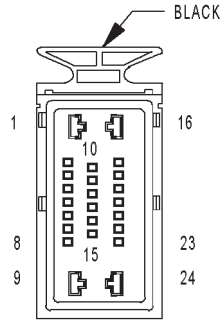

CONTROLLER ANTILOCK BRAKE

CONTROLLER ANTILOCK BRAKE - BLACK 24 WAY

CAV	CIRCUIT	FUNCTION
1	Z107 12BK/DG	GROUND
2	B1 18DG/OR	RIGHT REAR WHEEL SPEED SENSOR SIGNAL
3	B2 18DG/LB	RIGHT REAR WHEEL SPEED SENSOR 12 VOLT SUPPLY
4	-	-
5	D25 18WT/VT	PCI BUS
6	B6 18DG/WT	RIGHT FRONT WHEEL SPEED SENSOR SIGNAL
7	B7 18DG/VT	RIGHT FRONT WHEEL SPEED SENSOR 12 VOLT SUPPLY
8	-	-
9	A111 12DG/RD	FUSED B(+)
10	F500 18DG/PK	FUSED IGNITION SWITCH OUTPUT (RUN)
11	-	-
12	-	-
13	-	-
14	-	-
15	-	-
16	Z127 12BK/DG	GROUND
17	-	-
18	L50 18WT/TN	BRAKE LAMP SWITCH OUTPUT
19	B3 18DG/YL	LEFT REAR WHEEL SPEED SENSOR SIGNAL
20	B4 18DG/GY	LEFT REAR WHEEL SPEED SENSOR 12 VOLT SUPPLY
21	-	-
22	B8 18DG/TN	LEFT FRONT WHEEL SPEED SENSOR SIGNAL
23	B9 18DG/WT (3.3L/3.8L)	LEFT FRONT WHEEL SPEED SENSOR 12 VOLT SUPPLY
23	B9 18DG/LG (EXCEPT 3.3L/3.8L)	LEFT FRONT WHEEL SPEED SENSOR 12 VOLT SUPPLY
24	A107 12TN/RD	FUSED B(+)

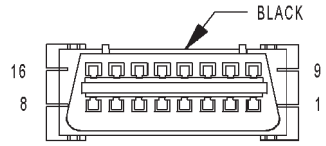

DATA LINK CONNECTOR

DATA LINK CONNECTOR - BLACK 16 WAY

CAV	CIRCUIT	FUNCTION
1	-	-
2	D25 20WT/VT	PCI BUS
3	-	-
4	Z11 18BK/LG	GROUND
5	Z111 18BK/WT (EXCEPT BUILT-UP-EXPORT)	GROUND
5	Z111 20BK/WT (BUILT-UP-EXPORT)	GROUND
6	D20 20WT/LG (GAS)	SCI RECEIVE
7	D21 20WT/BR (EXCEPT BUILT-UP-EXPORT)	SCI TRANSMIT
7	D21 20WT/DG (BUILT- UP-EXPORT)	SCI TRANSMIT
8	-	-
9	D23 20WT/BR	FLASH PROGRAM ENABLE
10	-	-
11	-	-
12	-	-
13	-	-
14	D16 20WT/OR (GAS)	SCI RECEIVE
15	-	-
16	A105 20DB/RD	FUSED B(+)

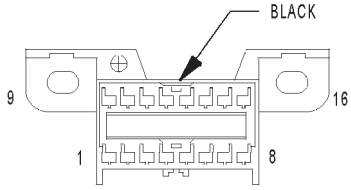

DIAGNOSTIC JUNCTION PORT

DIAGNOSTIC JUNCTION PORT - BLACK 16 WAY

CAV	CIRCUIT	FUNCTION
1	D25 20WT/VT	PCI BUS (PCM/SKIM/ECM/THATCHAM)
2	D25 20WT/VT	PCI BUS (HVAC)
3	D25 20WT/VT	PCI BUS (RADIO)
4	D25 20WT/VT	PCI BUS (ORC)
5	D25 20WT/VT	PCI BUS (CLUSTER)
6	D25 20WT/VT	PCI BUS (BCM)
7	D25 20WT/VT	PCI BUS (DLC)
8	D25 20WT/VT	PCI BUS (OVERHEAD CONSOLE)
9	D25 20WT/VT	PCI BUS (FCM/TCM/CAB)
10	D25 20WT/VT	PCI BUS (LSIACM)
11	D25 20WT/VT (MEMORY)	PCI BUS (MEMORY)
12	D25 20WT/VT	PCI BUS (PWR DOOR LT/RT/LIFTGATE)
13	D25 20WT/VT	PCI BUS (RSIACM)
14	-	-
15	-	-
16	-	-

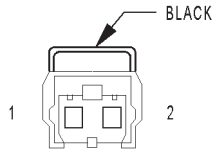

DOSING PUMP (DIESEL)

DOSING PUMP (DIESEL) - BLACK 2 WAY

CAV	CIRCUIT	FUNCTION
1	18RD	DOSING PUMP CONTROL
2	Z149 18BK/DB	GROUND

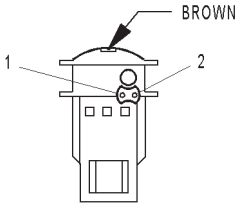

DRIVER
AIRBAG C1

DRIVER AIRBAG C1 - BROWN 2 WAY

CAV	CIRCUIT	FUNCTION
1	R43 18BK/LB	DRIVER SQUIB 1 LINE 1
2	R45 18OR/LB	DRIVER SQUIB 1 LINE 2

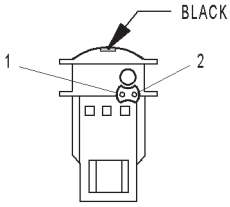

DRIVER
AIRBAG C2

DRIVER AIRBAG C2 - BLACK 2 WAY

CAV	CIRCUIT	FUNCTION
1	R61 18OR/LB	DRIVER SQUIB 2 LINE 1
2	R63 18TN/LB	DRIVER SQUIB 2 LINE 2

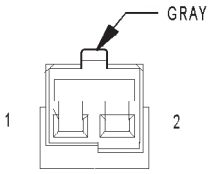

DRIVER
BLEND DOOR
ACTUATOR
(ATC)

DRIVER BLEND DOOR ACTUATOR (ATC) - GRAY 2 WAY

CAV	CIRCUIT	FUNCTION
1	C61 20DB/LG	DRIVER BLEND DOOR DRIVER (A)
2	C161 20LB/WT	DRIVER BLEND DOOR DRIVER (B)

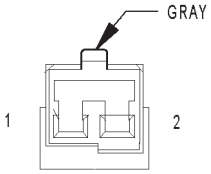

DRIVER
BLEND DOOR
ACTUATOR
(MTC)

DRIVER BLEND DOOR ACTUATOR (MTC) - GRAY 2 WAY

CAV	CIRCUIT	FUNCTION
1	C61 20LB/WT (LHD)	DRIVER BLEND DOOR DRIVER (A)
1	C34 20DB/LB (RHD)	COMMON DOOR DRIVER (B)
2	C61 20LB/WT(RHD)	DRIVER BLEND DOOR DRIVER (A)
2	C34 20DB/LB (LHD)	COMMON DOOR DRIVER (B)

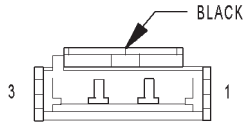

DRIVER DOOR LOCK SWITCH

DRIVER DOOR LOCK SWITCH - BLACK 3 WAY

CAV	CIRCUIT	FUNCTION
1	F304 16WT/PK (EXCEPT POWER WINDOWS)	FUSED ACCESSORY RELAY OUTPUT
1	F304 16WT/PK (POWER WINDOWS)	FUSED WINDOW CIRCUIT BREAKER OUTPUT
2	G160 20VT/LG (RHD)	RIGHT DOOR LOCK SWITCH MUX
2	G161 20VT/DG (LHD)	LEFT DOOR LOCK SWITCH MUX
3	Z460 20BK/LG (RHD)	GROUND
3	Z461 20BK/DG (LHD)	GROUND

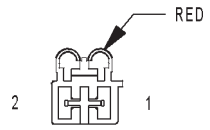

DRIVER POWER SEAT FRONT RISER MOTOR

DRIVER POWER SEAT FRONT RISER MOTOR - RED 2 WAY

CAV	CIRCUIT	FUNCTION
1	P119 14LG/DG (MEMORY)	SEAT FRONT UP DRIVER
1	P19 14LG/LB	DRIVER FRONT UP SWITCH SENSE
2	P121 14LG/DB (MEMORY)	SEAT FRONT DOWN DRIVER
2	P21 14LG/TN	DRIVER FRONT DOWN SWITCH SENSE

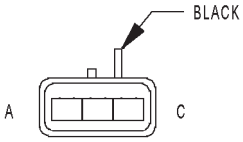

DRIVER POWER SEAT FRONT RISER POSITION SENSOR

DRIVER POWER SEAT FRONT RISER POSITION SENSOR - BLACK 3 WAY

CAV	CIRCUIT	FUNCTION
A	P28 20LG/BR	SEAT POSITION SENSOR GROUND
B	P26 20LG	FRONT RISER POSITION SIGNAL
C	P29 20LG/WT	SEAT SENSOR 5 VOLT SUPPLY

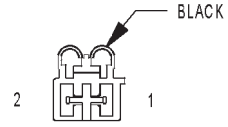

DRIVER POWER SEAT HORIZONTAL MOTOR

DRIVER POWER SEAT HORIZONTAL MOTOR - BLACK 2 WAY

CAV	CIRCUIT	FUNCTION
1	P17 14LG/DG	DRIVER SEAT HORIZONTAL REARWARD SWITCH SENSE
1	P117 14LG/LB (LHD) (MEMORY)	SEAT HORIZONTAL REARWARD DRIVER
1	P115 14LG (RHD) (MEMORY)	SEAT HORIZONTAL FORWARD DRIVER
2	P15 14LG/WT	DRIVER SEAT HORIZONTAL FORWARD SWITCH SENSE
2	P115 14LG (LHD) (MEMORY)	SEAT HORIZONTAL FORWARD DRIVER
2	P117 14LG/LB (RHD) (MEMORY)	SEAT HORIZONTAL REARWARD DRIVER

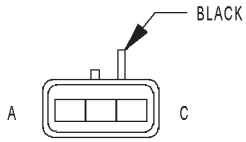

DRIVER POWER SEAT HORIZONTAL POSITION SENSOR

DRIVER POWER SEAT HORIZONTAL POSITION SENSOR - BLACK 3 WAY

CAV	CIRCUIT	FUNCTION
A	P29 20LG/WT	SEAT SENSOR 5 VOLT SUPPLY
B	P25 20LG/VT	SEAT HORIZONTAL POSITION SIGNAL
C	P28 20LG/BR	SEAT POSITION SENSOR GROUND

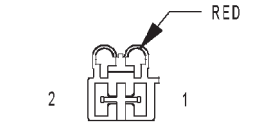

DRIVER POWER SEAT REAR RISER MOTOR

DRIVER POWER SEAT REAR RISER MOTOR - RED 2 WAY

CAV	CIRCUIT	FUNCTION
1	P11 14LG/YL	DRIVER SEAT REAR UP SWITCH SENSE
1	P111 14LG/YL (MEMORY)	SEAT REAR UP DRIVER
2	P13 14LG/OR	DRIVER SEAT REAR DOWN SWITCH SENSE
2	P113 14LG/WT (MEMORY)	SEAT REAR DOWN DRIVER

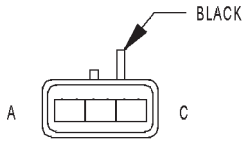

DRIVER POWER SEAT REAR RISER POSITION SENSOR

DRIVER POWER SEAT REAR RISER POSITION SENSOR - BLACK 3 WAY

CAV	CIRCUIT	FUNCTION
A	P28 20LG/BR	SEAT POSITION SENSOR GROUND
B	P27 20LG/LB	REAR RISER POSITION SIGNAL
C	P29 20LG/WT	SEAT SENSOR 5 VOLT SUPPLY

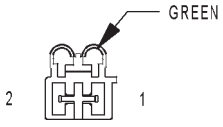

DRIVER POWER SEAT RECLINER MOTOR

DRIVER POWER SEAT RECLINER MOTOR - GREEN 2 WAY

CAV	CIRCUIT	FUNCTION
1	P41 14LG/GY	DRIVER SEAT RECLINER DOWN SWITCH SENSE
1	P141 14LG/BR (MEMORY)	SEAT RECLINER DOWN DRIVER
2	P43 14LG/VT	DRIVER SEAT RECLINER UP SWITCH SENSE
2	P143 14LG/GY (MEMORY)	SEAT RECLINER UP DRIVER

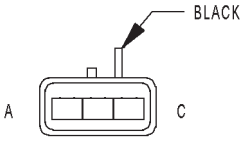

DRIVER POWER SEAT RECLINER POSITION SENSOR

DRIVER POWER SEAT RECLINER POSITION SENSOR - BLACK 3 WAY

CAV	CIRCUIT	FUNCTION
A	P29 20LG/WT	SEAT SENSOR 5 VOLT SUPPLY
B	P47 20LG/LB	RECLINER POSITION SIGNAL
C	P28 20LG/BR	SEAT POSITION SENSOR GROUND

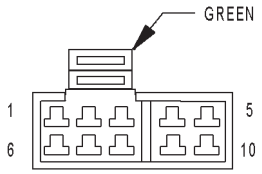

DRIVER POWER SEAT SWITCH

DRIVER POWER SEAT SWITCH - GREEN 10 WAY

CAV	CIRCUIT	FUNCTION
1	Z849 20BK/OR (MEMORY)	GROUND
1	Z849 14BK/OR	GROUND
2	P43 14LG/VT	DRIVER SEAT RECLINER UP SWITCH SENSE
2	P43 14LG/VT (MEMORY)	RECLINER UP SWITCH SENSE
3	P17 14LG/DG	DRIVER SEAT HORIZONTAL REARWARD SWITCH SENSE
3	P17 20LG/DG (MEMORY)	SEAT HORIZONTAL REARWARD SWITCH SENSE
4	P41 14LG/GY	DRIVER SEAT RECLINER DOWN SWITCH SENSE
4	P41 14LG/GY (MEMORY)	RECLINER DOWN SWITCH SENSE
5	A210 14OR/RD	FUSED SEAT SWITCH DRIVER
5	P9 20LG/OR (MEMORY)	SEAT SWITCH B(+) SUPPLY
6	P15 14LG/WT	DRIVER SEAT HORIZONTAL FORWARD SWITCH SENSE
6	P15 20LG/WT (MEMORY)	SEAT HORIZONTAL FORWARD SWITCH SENSE
7	P19 14LG/LB	DRIVER FRONT UP SWITCH SENSE
7	P19 20LG/LB (MEMORY)	SEAT FRONT UP SWITCH SENSE
8	P11 14LG/YL	DRIVER SEAT REAR UP SWITCH SENSE
8	P11 20LG/YL (MEMORY)	SEAT REAR UP SWITCH SENSE
9	P13 20LG/OR (MEMORY)	SEAT REAR DOWN SWITCH SENSE
9	P13 14LG/OR	DRIVER SEAT REAR DOWN SWITCH SENSE
10	P21 14LG/TN	DRIVER FRONT DOWN SWITCH SENSE
10	P21 20LG/TN (MEMORY)	SEAT FRONT DOWN SWITCH SENSE

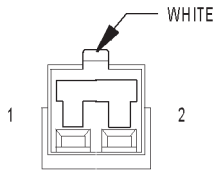

DRIVER SEAT BELT SWITCH

DRIVER SEAT BELT SWITCH - WHITE 2 WAY

CAV	CIRCUIT	FUNCTION
1	R59 18LG/TN	DRIVER SEAT BELT SWITCH LINE 1
2	R57 18LG/GY	DRIVER SEAT BELT SWITCH LINE 2

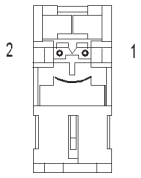

DRIVER SEAT BELT TENISIONER

DRIVER SEAT BELT TENSIONER - 2 WAY

CAV	CIRCUIT	FUNCTION
1	R53 18LG/YL	DRIVER SEAT BELT TENSIONER LINE 2
2	R55 18LG/DG	DRIVER SEAT BELT TENSIONER LINE 1

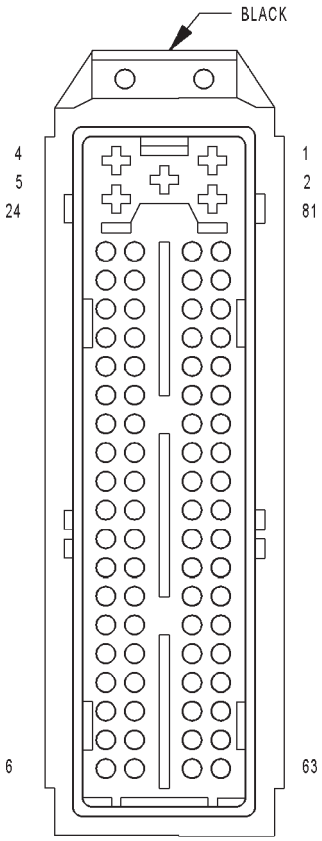

ENGINE CONTROL MODULE C1 (DIESEL)

ENGINE CONTROL MODULE C1 (DIESEL) - BLACK 81 WAY

CAV	CIRCUIT	FUNCTION
1	Z130 14BK/BR	GROUND
2	Z131 14BK/DG	GROUND
3	K20 14BR/GY	GENERATOR FIELD CONTROL
4	K342 14BR/WT	ECM/PCM RELAY OUTPUT
5	K342 14BR/WT	ECM/PCM RELAY OUTPUT
6	-	-
7	D25 20WT/VT	PCI BUS
8	K944 20BK/GY	CAMSHAFT POSITION SENSOR SHIELD GROUND
9	K44 20DB/GY	CAMSHAFT POSITION SENSOR SIGNAL
10	-	-
11	K37 20DB/YL	BOOST PRESSURE SENSOR SIGNAL
12	K55 20DB/OR	MASS AIR FLOW SENSOR SIGNAL
13	K78 20GY	FUEL PRESSURE SENSOR SIGNAL
14	-	-
15	K22 20OR/DB	ACCELERATOR PEDAL POSITION SENSOR SIGNAL
16	K80 20DB/TN	FUEL PRESSURE SENSOR GROUND
17	-	-
18	-	-
19	N1 20DB/OR	FUEL HEATER RELAY OUTPUT
20	Z138 20BK/OR	GROUND
21	K900 20DB/DG	SENSOR GROUND
22	F202 20PK/GY	FUSED IGNITION SWITCH OUTPUT (RUN-START)
23	F851 20LB/PK	SENSOR REFERENCE VOLTAGE B
24	K3 20BR/OR	CRANKSHAFT POSITION SENSOR SIGNAL NO. 1
25	-	-
26	-	-
27	-	-
28	-	-
29	-	-
30	G6 20VT/GY	ENGINE OIL PRESSURE SENSOR SIGNAL
31	F853 20LG/PK	WATER IN FUEL SENSOR SIGNAL
32	K25 20BR/TN	BATTERY TEMPERATURE SENSOR SIGNAL
33	-	-
34	K167 20BR/YL	ACCELERATOR PEDAL POSITION SENSOR GROUND
35	K853 20DB/BR	ACCELERATOR PEDAL POSITION SENSOR 5 VOLT SUPPLY
36	C18 20LB/BR	A/C PRESSURE SENSOR SIGNAL
37	K89 20DB/WT	ENGINE OIL TEMPERATURE SENSOR SIGNAL
38	V37 20VT/TN	SPEED CONTROL SWITCH SIGNAL
39	-	-
40	K2 20TN/BK	ENGINE COOLANT TEMPERATURE SENSOR SIGNAL
41	K21 20DB/LG	INTAKE AIR TEMPERATURE SENSOR SIGNAL
42	Z122 18WT	GROUND (DRAIN)
43	K24 20BR/LB	CRANKSHAFT POSITION SENSOR SIGNAL NO. 2
44	-	-
45	-	-
46	-	-
47	L50 20WT/TN	BRAKE LAMP SWITCH OUTPUT
48	B29 20DG/WT	SECONDARY BRAKE SWITCH SIGNAL
49	T751 20YL	FUSED IGNITION SWITCH OUTPUT (START)
50	F855 20PK/YL	SENSOR REFERENCE VOLTAGE A
51	-	-
52	K121 20DB	BOOST PRESSURE SENSOR GROUND
53	-	-
54	K957 20BK/OR	MASS AIR FLOW SENSOR GROUND
55	N7 20DB/OR	VEHICLE SPEED SENSOR SIGNAL
56	C918 20BK/LB	A/C PRESSURE SENSOR GROUND

ENGINE CONTROL MODULE C1 (DIESEL) - BLACK 81 WAY — Continued

CAV	CIRCUIT	FUNCTION
57	-	-
58	K4 20BK/LB	LOW IDLE POSITION SWITCH GROUND
59	-	-
60	K9 20LB	FUEL PRESSURE SENSOR 5 VOLT SUPPLY
61	K51 20BR/WT	ECM/PCM RELAY CONTROL
62	-	-
63	D21 20WT/BR	SCI TRANSMIT
64	K151 20WT	LOW IDLE POSITION SWITCH SENSE
65	-	-
66	K936 20BR/YL	ENGINE OIL PRESSURE SENSOR GROUND
67	-	-
68	-	-
69	C13 20LB/OR	A/C COMPRESSOR CLUTCH RELAY CONTROL
70	N210 20DB/DG	LOW SPEED RADIATOR FAN RELAY CONTROL
71	-	-
72	N21 20DB/TN	LIFT PUMP RELAY CONTROL
73	-	-
74	T752 20DG/OR	ENGINE STARTER MOTOR RELAY CONTROL
75	-	-
76	-	-
77	K152 20DB/WT	GLOW PLUG RELAY CONTROL
78	N122 20DB/YL	HIGH SPEED RADIATOR FAN DUAL RELAY CONTROL
79	-	-
80	K87 20BR	FUEL PRESSURE SOLENOID CONTROL
81	K87 20BR	FUEL PRESSURE SOLENOID CONTROL

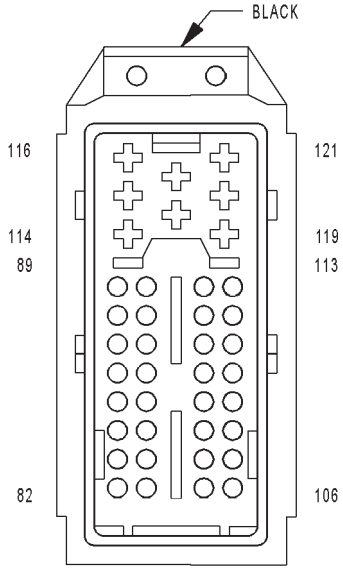

ENGINE CONTROL MODULE C2 (DIESEL)

ENGINE CONTROL MODULE C2 (DIESEL) - BLACK 40 WAY

CAV	CIRCUIT	FUNCTION
82	-	-
83	-	-
84	-	-
85	-	-
86	T753 20DG/YL	FUSED IGNITION SWITCH OUTPUT (START)
87	-	-
88	K35 20GY/YL	EGR SOLENOID CONTROL
89	K35 20GY/YL	EGR SOLENOID CONTROL
90	-	-
91	-	-
92	-	-
93	-	-
94	-	-
95	-	-
96	-	-
97	-	-
98	-	-
99	-	-
100	-	-
101	-	-
102	-	-
103	-	-
104	-	-
105	-	-
106	-	-
107	-	-
108	-	-
109	-	-
110	-	-
111	-	-
112	K119 20DB/LG	CLUTCH PEDAL UPSTOP SWITCH SENSE
113	-	-
114	-	-
115	K14 14LB/BR	FUEL INJECTOR NO. 4 CONTROL
116	K111 14DB/LB	COMMON INJECTOR DRIVER
117	-	-
118	K11 14WT/DB	FUEL INJECTOR NO. 1 CONTROL
119	K12 14TN	FUEL INJECTOR NO. 2 CONTROL
120	K13 14BR/LB	FUEL INJECTOR NO. 3 CONTROL
121	-	-

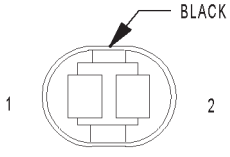

EVAPORATOR TEMPERATURE SENSOR

EVAPORATOR TEMPERATURE SENSOR - BLACK 2 WAY

CAV	CIRCUIT	FUNCTION
1	C21 20DB/LG	EVAPORATOR TEMPERATURE SENSOR SIGNAL
2	C121 20DB/DG	SENSOR GROUND

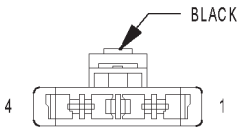

FRONT BLOWER MODULE C1 (ATC)

FRONT BLOWER MODULE C1 (ATC) - BLACK 4 WAY

CAV	CIRCUIT	FUNCTION
1	-	-
2	Z134 12BK/OR	GROUND
3	C56 20DB/LB	BLOWER MOTOR CONTROL
4	C7 12DB	FUSED FRONT BLOWER MOTOR RELAY OUTPUT

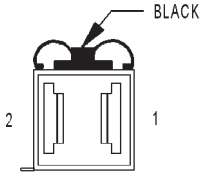

FRONT BLOWER MODULE C2 (ATC)

FRONT BLOWER MODULE C2 (ATC) - BLACK 2 WAY

CAV	CIRCUIT	FUNCTION
1	C7 12DB (EXCEPT BUILT-UP-EXPORT)	HIGH SPEED BLOWER MOTOR
1	C7 12DG (BUILT-UP-EXPORT)	HIGH SPEED BLOWER MOTOR
2	C70 12DB/YL (EXCEPT BUILT-UP-EXPORT)	REAR BLOWER HIGH SPEED
2	C70 12BK (BUILT-UP-EXPORT)	REAR BLOWER HIGH SPEED

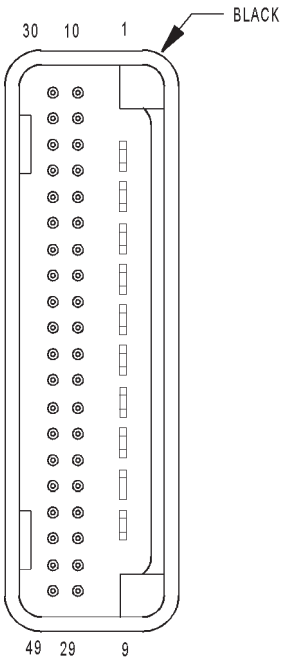

FRONT CONTROL MODULE

FRONT CONTROL MODULE - BLACK 49 WAY

CAV	CIRCUIT	FUNCTION
1	A1	B(+)
2	A1	B(+)
3	L43	LEFT LOW BEAM DRIVER
4	L34	RIGHT HIGH BEAM DRIVER
5	L33	LEFT HIGH BEAM DRIVER
6	L44	RIGHT LOW BEAM DRIVER
7	-	NOT USED
8	Z117, Z118, Z343, Z344	GROUND
9	A1	B(+)
10	FCM 10	HORN RELAY CONTROL
11	FCM 11	NAME BRAND SPEAKER RELAY CONTROL
12	-	SPARE
13	FCM 13	PARK LAMP RELAY CONTROL
14	FCM 14	FRONT WIPER ON/OFF RELAY CONTROL
15	C41 (DIESEL)	CABIN HEATER ASSIST CONTROL
16	W7	FRONT WIPER PARK SWITCH SENSE
17	X3	HORN SWITCH SENSE
18	W1	WASHER FLUID LEVEL SWITCH SENSE
19	FCM 19 (GAS)	FUSED IGNITION SWITCH OUTPUT (START)
20	A114	FUSED B(+) (I.O.D.)
21	L78	FUSED PARK LAMP RELAY OUTPUT (RIGHT)
22	D25	PCI BUS
23	G931	AMBIENT TEMPERATURE SENSOR RETURN
24	-	SPARE
25	G31	AMBIENT TEMPERATURE SENSOR SIGNAL
26	L13 (BUILT-UP-EXPORT)	HEADLAMP ADJUST SIGNAL
27	F1, F2	FCM OUTPUT (UNLOCK-RUN-START)
28	F214	SIACM RUN-START DRIVER
29	F100	ORC RUN ONLY DRIVER
30	FCM 30	FRONT/REAR BLOWER MOTOR RELAY CONTROL
31	FCM 31	REAR WINDOW DEFOGGER RELAY CONTROL
32	FCM 32 (BUILT-UP-EXPORT))	HEADLAMP WASHER RELAY CONTROL
33	FCM 33	FRONT FOG LAMP RELAY CONTROL
34	FCM 34	FRONT WIPER HIGH/LOW RELAY CONTROL
35	FCM 35	ACCESSORY RELAY CONTROL (RUN-ACC)
36	B20	BRAKE FLUID LEVEL SWITCH SENSE
37	F20	FUSED IGNITION SWITCH OUTPUT (RUN-START)
38	A1	B(+) (WHEN IPM C-5 CPA IS NOT ENGAGED)
39	T2	TRS REVERSE SENSE
40	T753 (DIESEL)	FUSED IGNITION SWITCH OUTPUT (START)
41	L77	FUSED PARK LAMP RELAY OUTPUT (LEFT)
42	D23	FLASH PROGRAM ENABLE
43	Z116	GROUND
44	L50	PRIMARY BRAKE SWITCH SIGNAL
45	W10	FRONT WASHER PUMP MOTOR CONTROL
46	W20	REAR WASHER PUMP MOTOR CONTROL
47	K32	BRAKE TRANSMISSION SHIFT INTERLOCK SOLENOID CONTROL
48	F201	ORC RUN-START DRIVER
49	-	NOT USED

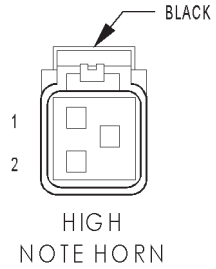

HIGH
NOTE HORN

HIGH NOTE HORN - BLACK 2 WAY

CAV	CIRCUIT	FUNCTION
1	Z299 18BK/OR	GROUND
2	X2 18DG/OR	HORN RELAY OUTPUT

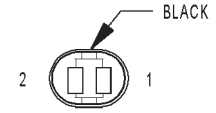

HOOD AJAR
SWITCH

HOOD AJAR SWITCH - BLACK 2 WAY

CAV	CIRCUIT	FUNCTION
1	G70 20VT/LB	HOOD AJAR SWITCH SENSE
2	Z470 20BK/LB	GROUND

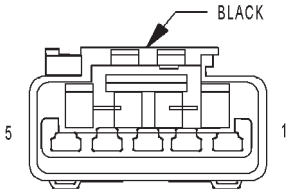

IGNITION
SWITCH

IGNITION SWITCH - BLACK 5 WAY

CAV	CIRCUIT	FUNCTION
1	G900 20VT/OR	IGNITION SWITCH SENSE RETURN
2	G20 20VT/BR	IGNITION SWITCH SENSE
3	F20 20PK/WT (LHD)	FUSED IGNITION SWITCH OUTPUT (RUN-START)
3	F20 20PK/WT	FUSED IGNITION SWITCH OUTPUT (RUN-START)
4	T751 20YL	FUSED IGNITION SWITCH OUTPUT (START)
5	A106 20LB/RD	FUSED B(+)

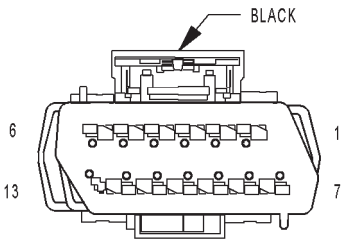

INSTRUMENT
CLUSTER

INSTRUMENT CLUSTER - BLACK 13 WAY

CAV	CIRCUIT	FUNCTION
1	E13 20OR/YL	PANEL LAMPS DRIVER
2	L160 20WT/TN (LOW LINE)	RIGHT TURN INDICATOR DRIVER
3	G7 20VT/GY (HIGH LINE)	LOW OIL PRESSURE INDICATOR DRIVER
4	G3 20VT/LB (HIGH LINE)	MALFUNCTION INDICATOR LAMP DRIVER
5	L134 20WT/GY (HIGH LINE)	HIGH BEAM INDICATOR DRIVER
6	A701 16BR/RD	FUSED B(+) (HAZARD)
7	Z108 18BK/LG	GROUND
8	L161 20WT/LG (LOW LINE)	LEFT TURN INDICATOR DRIVER
9	D25 20WT/VT	PCI BUS
10	B25 18DG/WT (LHD BUILT-UP-EXPORT)	PARK BRAKE SWITCH SENSE
10	B25 20DG/WT (RHD)	PARK BRAKE SWITCH SENSE
10	B25 16DG/WT (LHD EX-CEPT BUILT-UP-EXPORT)	PARK BRAKE SWITCH SENSE
11	G26 20VT/OR	CHIME DRIVER
12	G150 20VT/BR	INSTRUMENT CLUSTER WAKE UP SENSE
13	Z18 18BK/LB	GROUND

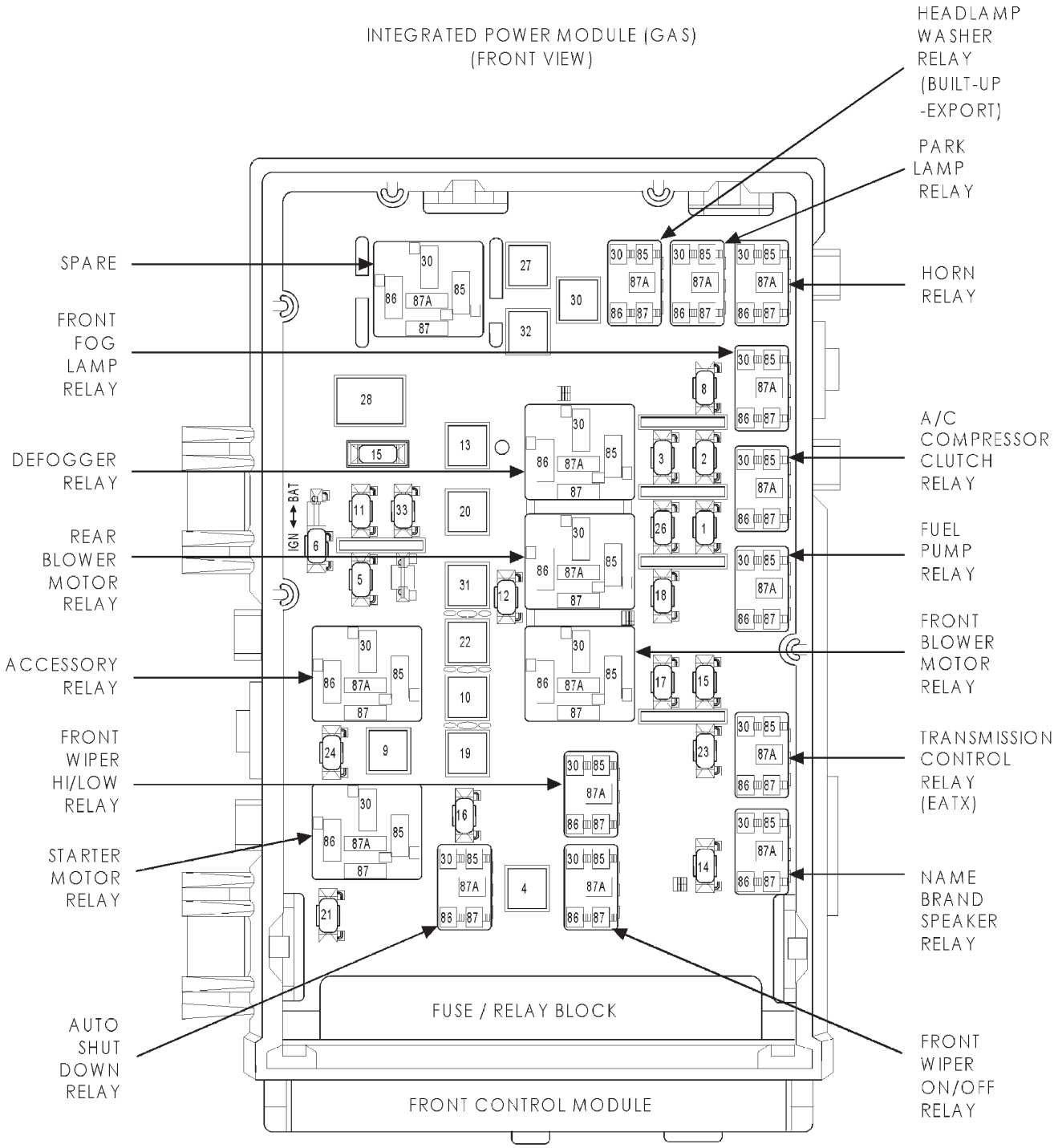
INTEGRATED POWER MODULE (GAS)
(FRONT VIEW)
HEADLAMP WASHER RELAY (BUILT-UP -EXPORT)
PARK LAMP RELAY
SPARE
HORN RELAY
FRONT FOG LAMP RELAY
A/C COMPRESSOR CLUTCH RELAY
DEFOGGER RELAY
FUEL PUMP RELAY
REAR BLOWER MOTOR RELAY
FRONT BLOWER MOTOR RELAY
ACCESSORY RELAY
TRANSMISSION CONTROL RELAY (EATX)
FRONT WIPER HI/LOW RELAY
NAME BRAND SPEAKER RELAY
STARTER MOTOR RELAY
FUSE / RELAY BLOCK
AUTO SHUT DOWN RELAY
FRONT WIPER ON/OFF RELAY
FRONT CONTROL MODULE
IGN
BAT

FUSES (IPM)

FUSE NO.	AMPS	FUSED CIRCUIT	FUNCTION
1	20A	INTERNAL	FUSED B(+)
2	15A	INTERNAL	FUSED PARK LAMP RELAY OUTPUT
3	15A	INTERNAL	FUSED PARK LAMP RELAY OUTPUT
4	30A	INTERNAL	FUSED B(+)
5	20A	F306 16DB/PK	FUSED ACCESSORY RELAY OUTPUT
6	20A	F307 16LB/PK (BATTERY POSITION)	FUSED B(+)
6	20A	F307 16LB/PK (ACCESSORY RELAY POSITION)	FUSED ACCESSORY RELAY OUTPUT
8	20A	INTERNAL	FUSED B(+)
9	40A	INTERNAL	FUSED B(+)
10	40A	C7 12DB	FUSED FRONT BLOWER MOTOR RELAY OUTPUT
11	20A	F302 18GY/PK	FUSED ACCESSORY RELAY OUTPUT
12	25A	C51 12LB/BR	FUSED REAR BLOWER MOTOR RELAY OUTPUT
13	40A	C15 12DB/WT	FUSED REAR WINDOW DEFOGGER RELAY OUTPUT
14	15A	INTERNAL	FUSED B(+) (I.O.D.)
15	20A	INTERNAL (DIESEL)	FUSED B(+)
15	20A	INTERNAL (EATX)	FUSED B(+)
16	25A	INTERNAL	FUSED B(+)
17	20A	INTERNAL	FUSED B(+)
18	15A	INTERNAL	FUSED B(+)
19	40A	A101 12VT/RD	FUSED B(+)
20	40A	A102 12WT/RD	FUSED B(+)
21	25A	A111 12DG/RD	FUSED B(+)
22	40A	A110 12OR/RD	FUSED B(+)
23	10A	A106 20LB/RD	FUSED B(+)
24	20A	A701 16BR/RD	FUSED B(+) (HAZARD)
26	20A	A103 18GY/RD	FUSED B(+)
27	40A	A112 12OR/RD	FUSED B(+)
28	40A	F30 12PK/YL	FUSED ACCESSORY RELAY OUTPUT
30	40A	INTERNAL (BUILT-UP-EXPORT)	FUSED B(+)
31	40A	A113 12WT/RD	FUSED B(+)
32	40A	A115 12YL/RD	FUSED B(+)
33	15A	INTERNAL	FUSED ACCESSORY RELAY OUTPUT

DEFOGGER RELAY

CAV	CIRCUIT	FUNCTION
30	INTERNAL	B(+)
85	FCM 31	REAR WINDOW DEFOGGER RELAY CONTROL
86	INTERNAL	B(+)
87A	-	-
87	INTERNAL	FUSED REAR WINDOW DEFOGGER RELAY OUTPUT

FRONT BLOWER MOTOR RELAY

CAV	CIRCUIT	FUNCTION
30	INTERNAL	B(+)
85	FCM 30	FRONT BLOWER MOTOR RELAY CONTROL
86	INTERNAL	B(+)
87A	-	-
87	C7 12DB	FUSED FRONT BLOWER MOTOR RELAY OUTPUT

HORN RELAY

CAV	CIRCUIT	FUNCTION
30	INTERNAL	FUSED B(+)
85	FCM 10	HORN RELAY CONTROL
86	INTERNAL	FUSED B(+)
87A	-	-
87	X2 18DG/OR	HORN RELAY OUTPUT

NAME BRAND SPEAKER RELAY

CAV	CIRCUIT	FUNCTION
30	INTERNAL	FUSED B(+) (I.O.D.)
85	FCM 11	NAME BRAND SPEAKER (NBS) RELAY CONTROL
86	INTERNAL	FUSED B(+) (I.O.D.)
87A	-	-
87	X1 16DG/BR	NAME BRAND SPEAKER (NBS) RELAY OUTPUT

POSITIVE TEMPERATURE COEFFICIENTS

FUSE NO.	AMPS	FUSED CIRCUIT	FUNCTION
4	8A	C16 18DB/GY	FUSED REAR WINDOW DEFOGGER RELAY OUTPUT
7	13A	A105 18DB/RD	FUSED B(+)

REAR BLOWER MOTOR RELAY

CAV	CIRCUIT	FUNCTION
30	INTERNAL	B(+)
85	FCM 30	REAR BLOWER MOTOR RELAY CONTROL
86	INTERNAL	B(+)
87A	-	-
87	C51 12LB/BR	FUSED REAR BLOWER MOTOR RELAY OUTPUT

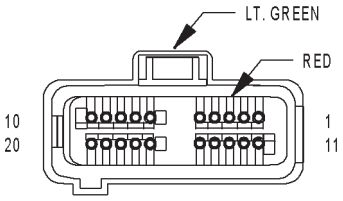

INTEGRATED POWER MODULE C1

INTEGRATED POWER MODULE C1 - LT. GREEN/RED 20 WAY

CAV	CIRCUIT	FUNCTION
1	F301 18VT/PK	FUSED ACCESSORY RELAY OUTPUT
2	-	-
3	-	-
4	L43 18WT/DB	LEFT LOW BEAM DRIVER
5	Z344 16BK/TN	GROUND
6	L34 16WT/GY	RIGHT HIGH BEAM DRIVER
7	W1 18BR/TN	WASHER FLUID LEVEL SWITCH SENSE
8	L33 18WT/LG	LEFT HIGH BEAM DRIVER
9	G31 18VT/LG (EXCEPT BASE)	AMBIENT TEMPERATURE SENSOR SIGNAL
10	L44 16WT/TN	RIGHT LOW BEAM DRIVER
11	F300 18OR/PK	FUSED ACCESSORY RELAY OUTPUT
12	-	-
13	Z343 18BK/LG	GROUND
14	-	-
15	L78 18WT/OR	FUSED PARK LAMP RELAY OUTPUT (RIGHT)
16	L77 18WT/BR	FUSED PARK LAMP RELAY OUTPUT (LEFT)
17	-	-
18	G931 18VT/BR (EXCEPT BASE)	AMBIENT TEMPERATURE SENSOR RETURN
19	W20 18BR/YL	REAR WASHER PUMP MOTOR CONTROL
20	W10 18BR	FRONT WASHER PUMP MOTOR CONTROL

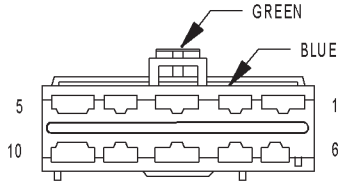

INTEGRATED POWER MODULE C2

INTEGRATED POWER MODULE C2 - GREEN/BLUE 10 WAY

CAV	CIRCUIT	FUNCTION
1	N173 16DB/VT (GAS)	RADIATOR FAN RELAY CONTROL
2	V53 12BR/OR (BUILT-UP-EXPORT)	HEADLAMP WASHER RELAY OUTPUT
3	L60 18WT/TN (EXCEPT BUILT-UP-EXPORT)	RIGHT FRONT TURN SIGNAL DRIVER
3	L60 16WT/TN (BUILT-UP-EXPORT)	RIGHT FRONT TURN SIGNAL DRIVER
4	L13 18WT/YL (BUILT-UP-EXPORT)	HEADLAMP ADJUST SIGNAL
5	X2 18DG/OR	HORN RELAY OUTPUT
6	L90 18WT/OR (FOG LAMPS)	FRONT FOG LAMP RELAY OUTPUT
7	L61 16WT/LG	LEFT FRONT TURN SIGNAL DRIVER
8	-	-
9	A112 12OR/RD	FUSED B(+)
10	L89 18WT/YL (FOG LAMPS)	FRONT FOG LAMP RELAY OUTPUT

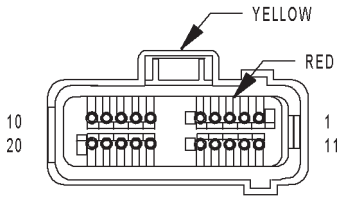

INTEGRATED POWER MODULE C3 (DIESEL)

INTEGRATED POWER MODULE C3 (DIESEL) - YELLOW/RED 20 WAY

CAV	CIRCUIT	FUNCTION
1	N21 20DB/TN	LIFT PUMP RELAY CONTROL
2	-	-
3	T751 20YL	FUSED IGNITION SWITCH OUTPUT (START)
4	T2 18DG/WT	TRS REVERSE SENSE
5	N2 18DB/YL	LIFT PUMP RELAY OUTPUT
6	F202 18PK/GY	FUSED IGNITION SWITCH OUTPUT (RUN-START)
7	C3 18DB/YL	A/C COMPRESSOR CLUTCH RELAY OUTPUT
8	Z114 18BK/LG	GROUND
9	C13 20LB/OR	A/C COMPRESSOR CLUTCH RELAY CONTROL
10	A119 16RD/OR	FUSED B(+)
11	C41 20LB/DG	CABIN HEATER ASSIST CONTROL
12	T753 20DG/YL	FUSED IGNITION SWITCH OUTPUT (START)
13	-	-
14	T752 20DG/OR	ENGINE STARTER MOTOR RELAY CONTROL
15	Z116 18BK/VT	GROUND
16	K51 20BR/WT	ECM/PCM RELAY CONTROL
17	F202 18PK/GY	FUSED IGNITION SWITCH OUTPUT (RUN-START)
18	-	-
19	K342 16BR/WT	ECM/PCM RELAY OUTPUT
20	-	-

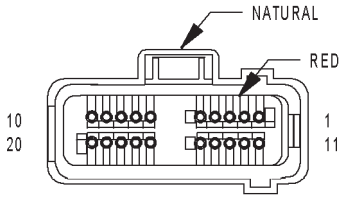

INTEGRATED POWER MODULE C3 (GAS)

INTEGRATED POWER MODULE C3 (GAS) - NATURAL/RED 20 WAY

CAV	CIRCUIT	FUNCTION
1	Z115 20BK/OR (EATX) (3.3L/3.8L)	GROUND
1	Z115 18BK/OR (EATX) (2.4L)	GROUND
2	F1 18PK/WT (EATX)	FCM OUTPUT (UNLOCK-RUN-START)
3	T751 18YL (EATX)	FUSED IGNITION SWITCH OUTPUT (START)
4	T2 18DG/WT	TRS REVERSE SENSE
5	T16 18YL/OR (EATX)	TRANSMISSION CONTROL RELAY OUTPUT
6	T15 18YL/BR (EATX)	TRANSMISSION CONTROL RELAY CONTROL
7	C3 18DB/YL	A/C COMPRESSOR CLUTCH RELAY OUTPUT
8	K31 18BR	FUEL PUMP RELAY CONTROL
9	C13 18LB/OR	A/C COMPRESSOR CLUTCH RELAY CONTROL
10	A104 18YL/RD (EATX)	FUSED B(+)
11	-	-
12	-	-
13	D25 18WT/VT (EATX)	PCI BUS (EATX)
14	T752 18DG/OR	ENGINE STARTER MOTOR RELAY CONTROL
15	Z116 18BK/VT	GROUND
16	K51 18BR/WT	AUTOMATIC SHUT DOWN RELAY CONTROL
17	F202 18PK/GY	FUSED IGNITION SWITCH OUTPUT (RUN-START)
18	K173 18BR/VT	RADIATOR FAN RELAY CONTROL
19	F202 18PK/GY	FUSED IGNITION SWITCH OUTPUT (RUN-START)
20	A109 18OR/RD	FUSED B(+)

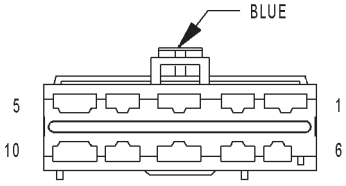

INTEGRATED
POWER
MODULE C4

INTEGRATED POWER MODULE C4 - BLUE 10 WAY

CAV	CIRCUIT	FUNCTION
1	Z127 12BK/DG (GAS)	GROUND
2	T750 12YL/GY	ENGINE STARTER MOTOR RELAY OUTPUT
3	K342 16BR/WT (DIESEL)	ECM/PCM RELAY OUTPUT
3	K342 16BR/WT (GAS)	AUTOMATIC SHUT DOWN RELAY OUTPUT
4	F500 16DG/PK (EXCEPT MTX)	FUSED IGNITION SWITCH OUTPUT (RUN)
5	-	-
6	D25 16WT/VT (ANTILOCK BRAKES)	PCI BUS
7	A107 12TN/RD (ANTILOCK BRAKES)	FUSED B(+)
8	A111 12DG/RD (ANTILOCK BRAKES)	FUSED B(+)
9	A710 14RD/BR (DIESEL)	B(+) (HAZARD FEED)
9	A701 14BR/RD (GAS)	B(+) (HAZARD FEED)
10	-	-

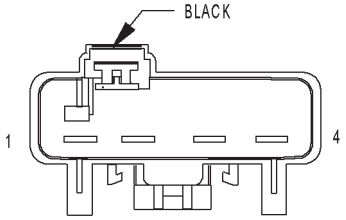

INTEGRATED
POWER
MODULE C5

INTEGRATED POWER MODULE C5 - BLACK 4 WAY

CAV	CIRCUIT	FUNCTION
1	A1 4RD	B(+)
2	-	-
3	-	-
4	-	-

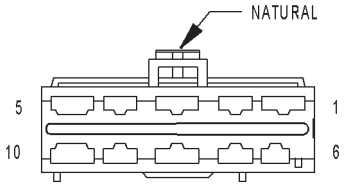

INTEGRATED
POWER
MODULE C6

INTEGRATED POWER MODULE C6 - NATURAL 10 WAY

CAV	CIRCUIT	FUNCTION
1	A101 12VT/RD	FUSED B(+)
2	Z117 16BK/WT	GROUND
3	Z118 16BK/YL	GROUND
4	A110 12OR/RD (POWER SEAT)	FUSED B(+)
5	-	-
6	-	-
7	C7 12DB	FUSED FRONT BLOWER MOTOR RELAY OUTPUT
8	F307 16LB/PK (ACCESSORY RELAY POSITION)	FUSED ACCESSORY RELAY OUTPUT
8	F307 16LB/PK (BATTERY POSITION)	FUSED B(+)
9	A113 12WT/RD (POWER SLIDING DOOR)	FUSED B(+)
10	-	-

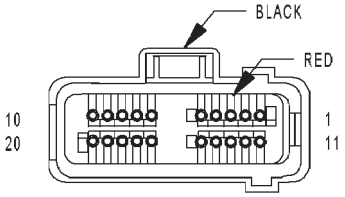

INTEGRATED POWER MODULE C7

INTEGRATED POWER MODULE C7 - BLACK/RED 20 WAY

CAV	CIRCUIT	FUNCTION
1	C16 20DB/GY (EXCEPT BUILT-UP-EXPORT)	FUSED REAR WINDOW DEFOGGER RELAY OUTPUT
1	C16 18DB/GY (BUILT-UP-EXPORT)	FUSED REAR WINDOW DEFOGGER RELAY OUTPUT
2	T141 20YL/OR (BUILT-UP-EXPORT)	FUSED IGNITION SWITCH OUTPUT (START)
2	T751 20YL (EXCEPT BUILT-UP-EXPORT)	FUSED IGNITION SWITCH OUTPUT (START)
3	D25 20WT/VT	PCI BUS
4	L13 20WT/YL (BUILT-UP-EXPORT)	HEADLAMP ADJUST SIGNAL
5	K32 18DB/YL (GAS)	BRAKE TRANSMISSION SHIFT INTERLOCK SOLENOID CONTROL
6	-	-
7	W7 20BR/GY	FRONT WIPER PARK SWITCH SENSE
8	B20 20DG/OR	BRAKE FLUID LEVEL SWITCH SENSE
9	F201 18PK/OR	FCM OUTPUT (ORC RUN-START DRIVER)
10	F214 18PK/LG	FCM OUTPUT (SIACM RUN-START DRIVER)
11	A106 20LB/RD	FUSED B(+)
12	-	-
13	F2 18PK/WT (GAS)	FCM OUTPUT (UNLOCK-RUN-START)
14	-	-
15	A114 16GY/RD	FUSED B(+) (I.O.D.)
16	D23 20WT/BR	FLASH PROGRAM ENABLE
17	L50 18WT/TN	BRAKE LAMP SWITCH OUTPUT
18	X1 16DG/BR (PREMIUM 8 SPEAKER)	NAME BRAND SPEAKER RELAY OUTPUT
19	X3 20DG/VT	HORN SWITCH SENSE
20	F100 18PK/VT	FCM OUTPUT (ORC RUN ONLY DRIVER)

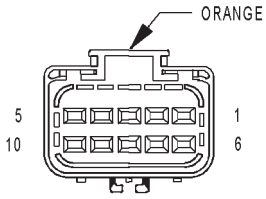

INTEGRATED POWER MODULE C8

INTEGRATED POWER MODULE C8 - ORANGE 10 WAY

CAV	CIRCUIT	FUNCTION
1	W3 12BR/WT	FRONT WIPER HIGH/LOW RELAY LOW SPEED OUTPUT
2	N1 16DB/OR (DIESEL)	FUEL HEATER RELAY OUTPUT
2	N1 16DB/OR (GAS)	FUEL PUMP RELAY OUTPUT
3	A108 18LG/RD (BUILT-UP-EXPORT)	FUSED B(+)
3	A108 18LG/RD	FUSED B(+)
4	A103 18GY/RD	FUSED B(+)
5	L77 18WT/BR	FUSED PARK LAMP RELAY OUTPUT (LEFT)
6	W4 12BR/OR	FRONT WIPER HIGH/LOW RELAY HIGH SPEED OUTPUT
7	C51 12LB/BR (AUTOMATIC TEMPERATURE CONTROL) (3 ZONE HVAC)	FUSED REAR BLOWER MOTOR RELAY OUTPUT
8	-	-
9	L78 18WT/OR	FUSED PARK LAMP RELAY OUTPUT (RIGHT)
10	L60 18WT/TN	RIGHT FRONT TURN SIGNAL DRIVER

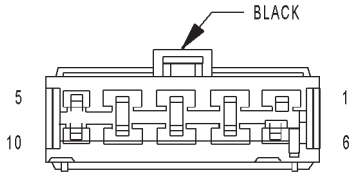

INTEGRATED POWER MODULE C9

INTEGRATED POWER MODULE C9 - BLACK 10 WAY

CAV	CIRCUIT	FUNCTION
1	A102 12WT/RD	FUSED B(+)
2	F20 18PK/WT	FUSED IGNITION SWITCH OUTPUT (RUN-START)
3	C15 12DB/WT	FUSED REAR WINDOW DEFOGGER RELAY OUTPUT
4	A105 18DB/RD	FUSED B(+)
5	L61 18WT/LB (BUILT-UP-EXPORT)	LEFT FRONT TURN SIGNAL DIVER
5	L61 18WT/LG (EXCEPT BUILT-UP-EXPORT)	LEFT FRONT TURN SIGNAL DIVER
6	A701 16BR/RD	FUSED B(+) (HAZARD)
6	A701 16BR/RD	FUSED B(+) (HAZARD)
7	F306 16DB/PK	FUSED ACCESSORY RELAY OUTPUT
8	F30 12PK/YL (POWER WINDOWS)	FUSED ACCESSORY RELAY OUTPUT
9	A115 12YL/RD (POWER LIFTGATE)	FUSED B(+)
10	F302 18GY/PK	FUSED ACCESSORY RELAY OUTPUT

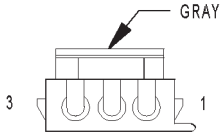

LEFT B-PILLAR SWITCH (POWER SLIDING DOOR)

LEFT B-PILLAR SWITCH (POWER SLIDING DOOR) - GRAY 3 WAY

CAV	CIRCUIT	FUNCTION
1	Z61 20BK/DG	GROUND
2	F302 18GY/PK	FUSED ACCESSORY RELAY OUTPUT
3	G41 20VT/DG	LEFT SLIDING DOOR PILLAR SWITCH MUX

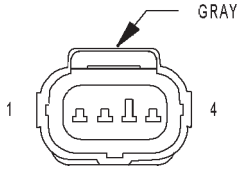

LEFT CINCH/ RELEASE MOTOR (POWER SLIDING DOOR)

LEFT CINCH/RELEASE MOTOR (POWER SLIDING DOOR) - GRAY 4 WAY

CAV	CIRCUIT	FUNCTION
1	Q49 18TN/WT	LEFT CINCH/RELEASE MOTOR UNLATCH DRIVER
2	Z249 18BK/WT	GROUND
3	Q45 18OR/GY	LEFT CINCH/RELEASE MOTOR CLUTCH DRIVER
4	Q47 18TN/GY	LEFT CINCH/RELEASE MOTOR LATCH DRIVER

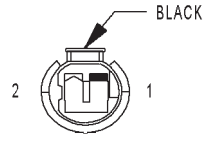

LEFT CYLINDER LOCK SWITCH

LEFT CYLINDER LOCK SWITCH - BLACK 2 WAY

CAV	CIRCUIT	FUNCTION
1	Z463 20BK/LB	GROUND
2	G163 20VT/LB	LEFT CYLINDER LOCK SWITCH MUX

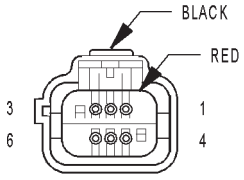

LEFT
DOOR
SPEAKER

LEFT DOOR SPEAKER - BLACK/RED 6 WAY

CAV	CIRCUIT	FUNCTION
1	X153 20DG/YL (HIGH LINE)	LEFT FRONT INSTRUMENT PANEL SPEAKER (+)
2	X15 16GY/DG (HIGH LINE)	AMPLIFIED SPEAKER GROUND
3	X155 20DG/LB (HIGH LINE)	LEFT FRONT INSTRUMENT PANEL SPEAKER (-)
4	X53 20DG	LEFT FRONT SPEAKER (+)
5	X13 16DG/GY (HIGH LINE)	RADIO CHOKE OUTPUT
6	X55 20DG/BR	LEFT FRONT SPEAKER (-)

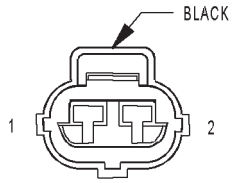

LEFT FRONT DOOR
AJAR SWITCH
(BASE)

LEFT FRONT DOOR AJAR SWITCH (BASE) - BLACK 2 WAY

CAV	CIRCUIT	FUNCTION
1	G75 20VT	LEFT FRONT DOOR AJAR SWITCH SENSE
2	Z75 20BK/VT	GROUND

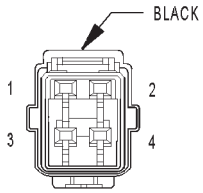

LEFT FRONT DOOR
LOCK MOTOR/
AJAR SWITCH
(EXCEPT BASE)

LEFT FRONT DOOR LOCK MOTOR/AJAR SWITCH (EXCEPT BASE) - BLACK 4 WAY

CAV	CIRCUIT	FUNCTION
1	G75 20VT	LEFT FRONT DOOR AJAR SWITCH SENSE
2	Z75 20BK/VT	GROUND
3	P1 20TN/LG	LEFT FRONT DOOR UNLOCK DRIVER
4	P3 20TN/WT	LEFT FRONT DOOR LOCK DRIVER

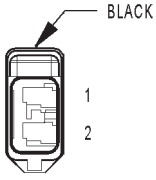

LEFT FULL
OPEN SWITCH
(POWER SLIDING DOOR)

LEFT FULL OPEN SWITCH (POWER SLIDING DOOR) - BLACK 2 WAY

CAV	CIRCUIT	FUNCTION
1	Q53 20OR	LEFT FULL OPEN SWITCH SENSE
2	Z77 20BK/GY	GROUND

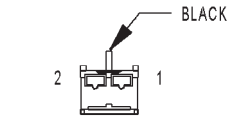

LEFT INSTRUMENT PANEL SPEAKER

LEFT INSTRUMENT PANEL SPEAKER - BLACK 2 WAY

CAV	CIRCUIT	FUNCTION
1	X153 20DG/YL	LEFT FRONT I/P SPEAKER (+)
2	X155 20DG/LB	LEFT FRONT I/P SPEAKER (-)

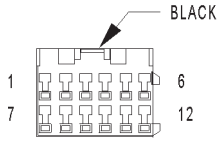

LEFT POWER MIRROR

LEFT POWER MIRROR - BLACK 12 WAY

CAV	CIRCUIT	FUNCTION
1	P171 20TN/YL (BUILT-UP-EXPORT)	LEFT FOLDING MIRROR UNFOLD DRIVER
2	P112 20TN/OR (EXCEPT BUILT-UP-EXPORT/ MEMORY)	MIRROR B(+)
3	P114 20TN/WT (EXCEPT BUILT-UP-EXPORT/ MEMORY)	MIRROR B(-)
4	P65 20TN/VT (MEMORY)	LEFT MIRROR HORIZONTAL POSITION SIGNAL
5	P69 20TN/WT (MEMORY)	LEFT MIRROR SENSOR GROUND
6	P64 20TN (MEMORY)	LEFT MIRROR VERTICAL POSITION SIGNAL
7	P159 20TN/DG (BUILT-UP-EXPORT/LHD)	DRIVER FOLDING MIRROR FOLD DRIVER
7	P160 20TN/LG (BUILT-UP-EXPORT/RHD)	PASSENGER FOLDING MIRROR RELAY OUTPUT
8	Z215 20BK/LG	GROUND
9	C16 20DB/GY	FUSED REAR WINDOW DEFOGGER RELAY OUTPUT
10	P73 20TN/VT	LEFT MIRROR COMMON DRIVER (RIGHT/DOWN)
11	P71 20TN/DG	LEFT MIRROR UP DRIVER
12	P75 20TN/LG	LEFT MIRROR LEFT DRIVER

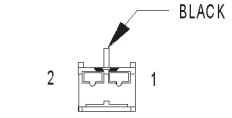

LEFT REAR PILLAR SPEAKER

LEFT REAR PILLAR SPEAKER - BLACK 2 WAY

CAV	CIRCUIT	FUNCTION
1	X157 20DG	LEFT REAR PILLAR SPEAKER (+)
2	X151 20DG/WT	LEFT REAR PILLAR SPEAKER (-)

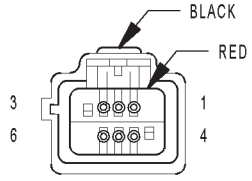

LEFT REAR SPEAKER

LEFT REAR SPEAKER - BLACK/RED 6 WAY

CAV	CIRCUIT	FUNCTION
1	X151 20DG/WT (HIGH LINE)	LEFT REAR PILLAR SPEAKER (-)
2	X15 16GY/DG (HIGH LINE)	AMPLIFIED SPEAKER GROUND
3	X157 20DG (HIGH LINE)	LEFT REAR PILLAR SPEAKER (+)
4	X51 20DG/DB	LEFT REAR SPEAKER (+)
5	X13 16DG/GY (HIGH LINE)	RADIO CHOKE OUTPUT
6	X57 20DG/OR	LEFT REAR SPEAKER (-)

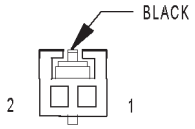

LEFT REMOTE
RADIO SWITCH

LEFT REMOTE RADIO SWITCH - BLACK 2 WAY

CAV	CIRCUIT	FUNCTION
1	X20 20RD/BK	RADIO CONTROL MUX
2	X920 20RD/DB	RADIO CONTROL MUX RETURN

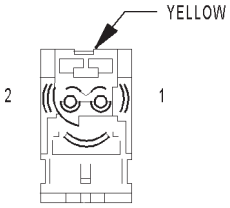

LEFT
SEAT AIRBAG

LEFT SEAT AIRBAG - YELLOW 2 WAY

CAV	CIRCUIT	FUNCTION
1	R31 18LG/OR (EXCEPT BUILT-UP-EXPORT)	LEFT SEAT SQUIB LINE 1
1	R33 18WT/BK (BUILT-UP-EXPORT)	LEFT SEAT SQUIB LINE 2
2	R33 18LG/WT (EXCEPT BUILT-UP-EXPORT)	LEFT SEAT SQUIB LINE 2
2	R31 18DG/WT (BUILT-UP-EXPORT)	LEFT SEAT SQUIB LINE 1

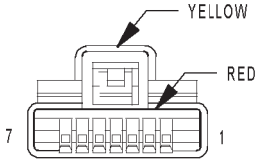

LEFT SIDE
IMPACT AIRBAG
CONTROL MODULE

LEFT SIDE IMPACT AIRBAG CONTROL MODULE - YELLOW/RED 7 WAY

CAV	CIRCUIT	FUNCTION
1	R31 18LG/OR	LEFT SEAT SQUIB LINE 1
2	R33 18LG/WT	LEFT SEAT SQUIB LINE 2
3	-	-
4	D25 20WT/VT	PCI BUS
5	F214 18PK/LG	FCM OUTPUT (SIACM RUN-START DRIVER)
6	Z104 18BK/LG	GROUND
7	Z104 18BK/LG	GROUND

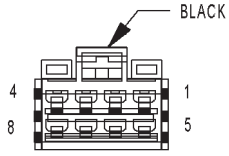

LEFT SLIDING
DOOR CONTROL
MODULE C1
(POWER SLIDING DOOR)

LEFT SLIDING DOOR CONTROL MODULE C1 (POWER SLIDING DOOR) - BLACK 8 WAY

CAV	CIRCUIT	FUNCTION
1	Q45 18OR/GY	LEFT CINCH/RELEASE MOTOR CLUTCH DRIVER
2	Q67 16TN/BR	LEFT SLIDING DOOR OPEN DRIVER
3	Q69 16TN/OR	LEFT SLIDING DOOR CLOSE DRIVER
4	-	-
5	A113 14WT/RD	FUSED B(+)
6	-	-
7	-	-
8	Z123 14BK/WT	GROUND

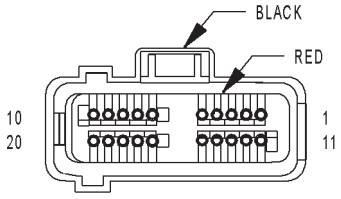

LEFT SLIDING DOOR CONTROL MODULE C2 (POWER SLIDING DOOR)

LEFT SLIDING DOOR CONTROL MODULE C2 (POWER SLIDING DOOR) - BLACK/RED 20 WAY

CAV	CIRCUIT	FUNCTION
1	Q71 20TN/VT	LEFT DOOR MOTOR HALL EFFECT SUPPLY
2	-	-
3	Q35 20OR/GY	LEFT DOOR LOCK SENSE
4	Q55 20OR/BR	LEFT DOOR IN/OUT HANDLE SWITCH SENSE
5	-	-
6	-	-
7	Q63 18OR/TN	LEFT DOOR MOTOR CLUTCH DRIVER
8	Q47 18TN/GY	LEFT CINCH/RELEASE MOTOR LATCH DRIVER
9	Q49 18TN/WT	LEFT CINCH/RELEASE MOTOR UNLATCH DRIVER
10	-	-
11	D25 20WT/VT	PCI BUS
12	G77 20TN/OR	LEFT SLIDING DOOR AJAR SWITCH SENSE
13	Q59 20OR/YL	LEFT PAWL SWITCH SENSE
14	Q53 20OR	LEFT FULL OPEN SWITCH SENSE
15	Z25 20BK/TN	GROUND-DRIVER SIDE IDENTIFIER (LHD/RHD)
16	Q57 20OR/VT	LEFT DOOR CHILD LOCKOUT SWITCH SENSE
17	Q73 20TN/YL	LEFT DOOR MOTOR HALL EFFECT SIGNAL
18	-	-
19	G151 20VT/BR	LEFT SLIDING DOOR WAKE UP SIGNAL
20	Z25 20BK/TN	GROUND

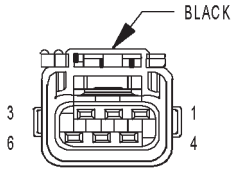

LEFT SLIDING DOOR LATCH SENSING SWITCH (POWER SLIDING DOOR)

LEFT SLIDING DOOR LATCH SENSING SWITCH (POWER SLIDING DOOR) - BLACK 6 WAY

CAV	CIRCUIT	FUNCTION
1	Z77 20BK/GY	GROUND
2	Q59 20OR/YL	LEFT PAWL SWITCH SENSE
3	G77 20TN/OR	LEFT SLIDING DOOR AJAR SWITCH SENSE
4	Z77 20BK/GY	GROUND
5	Q55 20OR/BR	LEFT DOOR IN/OUT HANDLE SWITCH SENSE
6	Q57 20OR/VT	LEFT DOOR CHILD LOCKOUT SWITCH SENSE

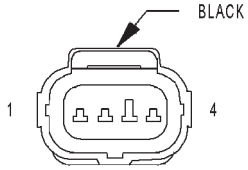

LEFT SLIDING DOOR LOCK MOTOR (POWER SLIDING DOOR)

LEFT SLIDING DOOR LOCK MOTOR (POWER SLIDING DOOR) - BLACK 4 WAY

CAV	CIRCUIT	FUNCTION
1	P5 20TN/OR	LEFT SLIDING DOOR LOCK UNLOCK DRIVER
2	P32 20TN/VT	LEFT SLIDING DOOR LOCK DRIVER
3	Q35 20OR/GY	LEFT DOOR LOCK SENSE
4	Z77 20BK/GY	GROUND

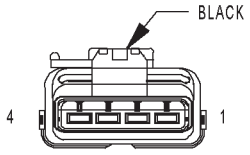

LEFT SLIDING DOOR LOCK MOTOR/ AJAR SWITCH (MANUAL SLIDING DOOR)

LEFT SLIDING DOOR LOCK MOTOR/AJAR SWITCH (MANUAL SLIDING DOOR) - BLACK 4 WAY

CAV	CIRCUIT	FUNCTION
1	P5 20BK/DB	LEFT SLIDING DOOR UNLOCK DRIVER
2	P32 20BK/TN	LEFT SLIDING DOOR LOCK DRIVER
3	G77 20BK/DG	LEFT SLIDING DOOR AJAR SWITCH SENSE
4	Z77 20BK	GROUND

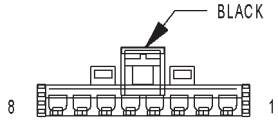

LEFT SLIDING DOOR MOTOR (POWER SLIDING DOOR)

LEFT SLIDING DOOR MOTOR (POWER SLIDING DOOR) - BLACK 8 WAY

CAV	CIRCUIT	FUNCTION
1	-	-
2	Q71 20TN/VT	LEFT DOOR MOTOR HALL EFFECT SUPPLY
3	Q69 16TN/OR	LEFT SLIDING DOOR CLOSE DRIVER
4	Z163 18BK/TN	GROUND
5	Q63 18OR/TN	LEFT DOOR MOTOR CLUTCH DRIVER
6	Q67 16TN/BR	LEFT SLIDING DOOR OPEN DRIVER
7	Z33 20BK/TN	GROUND
8	Q73 20TN/YL	LEFT DOOR MOTOR HALL EFFECT SIGNAL

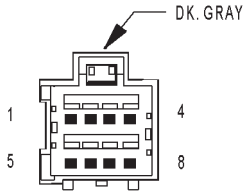

LICENSE LAMP (POWER LIFTGATE)

LICENSE LAMP (POWER LIFTGATE) - DK. GRAY 8 WAY

CAV	CIRCUIT	FUNCTION
1	L77 18WT/BR	FUSED PARK LAMP RELAY OUTPUT (LEFT)
2	Z367 20BK/BR	GROUND
3	P30 20TN/DG	LIFTGATE HANDLE SWITCH SENSE
4	Z430 20BK/LG	GROUND
5	Q94 20TN/LG	LIFTGATE CHIME DRIVER
6	Z294 20BK/LG	GROUND
7	G32 20VT/LB	LIFTGATE TEMPERATURE SENSOR SIGNAL
8	Z78 20BK/OR	GROUND

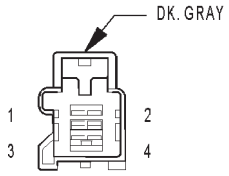

LICENSE LAMP (POWER RELEASE)

LICENSE LAMP (POWER RELEASE) - DK. GRAY 4 WAY

CAV	CIRCUIT	FUNCTION
1	L77 18WT/BR	FUSED PARK LAMP RELAY OUTPUT (LEFT)
2	Z367 20BK/BR	GROUND
3	P30 20TN/DG	LIFTGATE HANDLE SWITCH SENSE
4	Z430 20BK/LG	GROUND

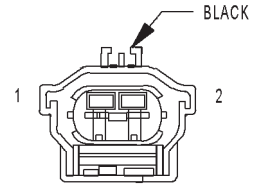

LIFTGATE
AJAR SWITCH
(MANUAL RELEASE)

LIFTGATE AJAR SWITCH (MANUAL RELEASE) - BLACK 2 WAY

CAV	CIRCUIT	FUNCTION
1	Z78 20BK/OR	GROUND
2	G78 20VT/OR	LIFTGATE AJAR SWITCH SENSE

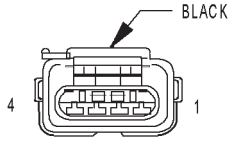

LIFTGATE
AJAR SWITCH
(POWER RELEASE)

LIFTGATE AJAR SWITCH (POWER RELEASE) - BLACK 4 WAY

CAV	CIRCUIT	FUNCTION
1	Z78 20BK/OR	GROUND
2	G78 20VT/OR	LIFTGATE AJAR SWITCH SENSE
3	P31 20TN/YL	LIFTGATE RELEASE DRIVER
4	Z231 20BK/YL	GROUND

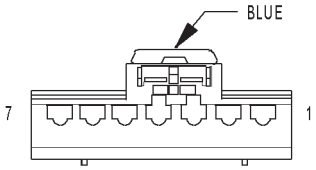

LIFTGATE
CINCH/
RELEASE
MOTOR
(POWER LIFTGATE)

LIFTGATE CINCH/RELEASE MOTOR (POWER LIFTGATE) - BLUE 7 WAY

CAV	CIRCUIT	FUNCTION
1	Z78 20BK/OR	GROUND
2	G78 20VT/OR	LIFTGATE AJAR SWITCH SENSE
3	Q60 20OR/YL	LIFTGATE PAWL SWITCH SENSE
4	Z245 18BK/GY	GROUND
5	Q85 18TN/WT	LIFTGATE LATCH RELEASE DRIVER
6	Q84 18TN/GY	LIFTGATE LATCH CINCH DRIVER
7	Q83 18OR/GY	LIFTGATE LATCH CLUTCH DRIVER

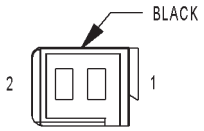

LIFTGATE
CYLINDER LOCK
SWITCH

LIFTGATE CYLINDER LOCK SWITCH - BLACK 2 WAY

CAV	CIRCUIT	FUNCTION
1	Z465 20BK/GY	GROUND
2	G165 20VT/GY	LIFTGATE CYLINDER LOCK SWITCH MUX

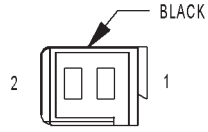

LIFTGATE LEFT
PINCH SENSOR
(POWER LIFTGATE)

LIFTGATE LEFT PINCH SENSOR (POWER LIFTGATE) - BLACK 2 WAY

CAV	CIRCUIT	FUNCTION
1	Q77 20OR/DB	RIGHT PINCH SENSOR SIGNAL
2	Q76 20OR/LB	PINCH SENSOR SIGNAL

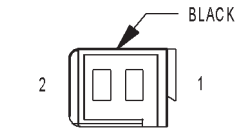

LIFTGATE
RIGHT PINCH
SENSOR
(POWER LIFTGATE)

LIFTGATE RIGHT PINCH SENSOR (POWER LIFTGATE) - BLACK 2 WAY

CAV	CIRCUIT	FUNCTION
1	Q77 20OR/DB	RIGHT PINCH SENSOR SIGNAL
2	Z78 20BK/OR	GROUND

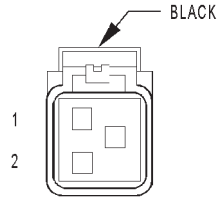

LOW
NOTE
HORN

LOW NOTE HORN - BLACK 2 WAY

CAV	CIRCUIT	FUNCTION
1	Z298 18BK/DB	GROUND
2	X2 18DG/OR	HORN RELAY OUTPUT

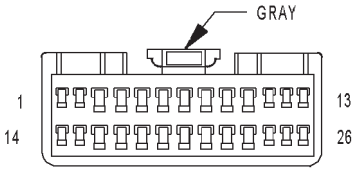

MEMORY
SEAT/MIRROR
MODULE C1

MEMORY SEAT/MIRROR MODULE C1 - GRAY 26 WAY

CAV	CIRCUIT	FUNCTION
1	P69 20TN/WT	LEFT MIRROR SENSOR GROUND
2	P25 20LG/VT	SEAT HORIZONTAL POSITION SIGNAL
3	P27 20LG/LB	REAR RISER POSITION SIGNAL
4	-	-
5	-	-
6	P67 20OR	RIGHT MIRROR VERTICAL POSITION SIGNAL
7	P64 20TN/OR	LEFT MIRROR VERTICAL POSITION SIGNAL
8	P21 20LG/TN	SEAT FRONT DOWN SWITCH SENSE
9	P13 20LG/OR	SEAT REAR DOWN SWITCH SENSE
10	P15 20LG/WT	SEAT HORIZONTAL FORWARD SWITCH SENSE
11	P43 14LG/VT	RECLINER UP SWITCH SENSE
12	-	-
13	-	-
14	P66 20WT	RIGHT MIRROR SENSOR GROUND
15	P26 20LG	FRONT RISER POSITION SIGNAL
16	P47 20LG/LB	RECLINER POSITION SIGNAL
17	-	-
18	-	-
19	P68 20YL	RIGHT MIRROR HORIZONTAL POSITION SIGNAL
20	P65 20TN/YL	LEFT MIRROR HORIZONTAL POSITION SIGNAL
21	P19 20LG/LB	SEAT FRONT UP SWITCH SENSE
22	P11 20LG/YL	SEAT REAR UP SWITCH SENSE
23	P17 20LG/DG	SEAT HORIZONTAL REARWARD SWITCH SENSE
24	P41 14LG/GY	RECLINER DOWN SWITCH SENSE
25	-	-
26	D25 20WT/VT	PCI BUS

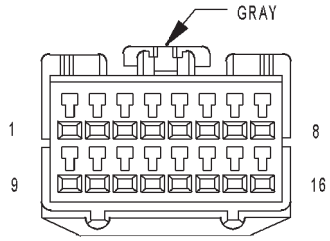

MEMORY SEAT/MIRROR MODULE C2

MEMORY SEAT/MIRROR MODULE C2 - GRAY 16 WAY

CAV	CIRCUIT	FUNCTION
1	-	-
2	-	-
3	P73 18TN/LB	LEFT MIRROR COMMON DRIVER (RIGHT/DOWN)
4	P75 18DB	LEFT MIRROR LEFT DRIVER
5	P71 18TN/GY	LEFT MIRROR UP DRIVER
6	P29 20LG/WT	SEAT SENSOR 5 VOLT SUPPLY
7	-	-
8	-	-
9	-	-
10	-	-
11	P70 18LB	RIGHT MIRROR COMMON DRIVER (RIGHT/DOWN)
12	P74 18TN/DB	RIGHT MIRROR LEFT DRIVER
13	P72 18GY	RIGHT MIRROR UP DRIVER
14	-	-
15	-	-
16	P28 20LG/BR	SEAT POSITION SENSOR GROUND

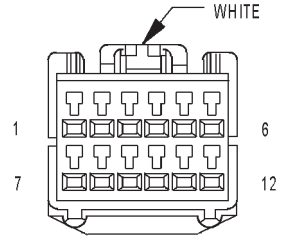

MEMORY SEAT/MIRROR MODULE C3

MEMORY SEAT/MIRROR MODULE C3 - WHITE 12 WAY

CAV	CIRCUIT	FUNCTION
1	P111 14LG/YL	SEAT REAR UP DRIVER
2	P115 14LG	SEAT HORIZONTAL FORWARD DRIVER
3	P119 14LG/DG	SEAT FRONT UP DRIVER
4	P113 14LG/WT	SEAT REAR DOWN DRIVER
5	P121 14LG/DB	SEAT FRONT DOWN DRIVER
6	-	-
7	P143 14LG/GY	SEAT RECLINER UP DRIVER
8	P9 20LG/OR	SEAT SWITCH B(+) SUPPLY
9	-	-
10	P141 14LG/BR	SEAT RECLINER DOWN DRIVER
11	P117 14LG/LB	SEAT HORIZONTAL REARWARD DRIVER
12	-	-

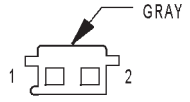

MEMORY SEAT/MIRROR MODULE C4

MEMORY SEAT/MIRROR MODULE C4 - GRAY 2 WAY

CAV	CIRCUIT	FUNCTION
1	Z849 14BK/OR	GROUND
2	A210 14OR/RD	FUSED B(+)

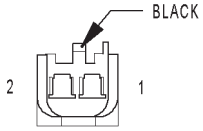

MEMORY SET SWITCH

MEMORY SET SWITCH - BLACK 2 WAY

CAV	CIRCUIT	FUNCTION
1	G200 20VT/BR	MEMORY SELECT SWITCH MUX
2	G920 20VT/YL	MEMORY SELECT SWITCH RETURN

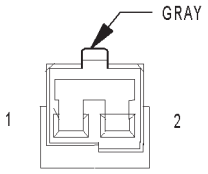

MODE DOOR ACTUATOR (ATC)

MODE DOOR ACTUATOR (ATC) - GRAY 2 WAY

CAV	CIRCUIT	FUNCTION
1	C135 20DB/GY	MODE DOOR DRIVER (B)
2	C35 20LB/OR	MODE DOOR DRIVER (A)

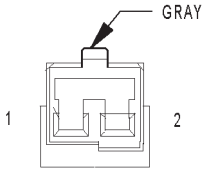

MODE DOOR ACTUATOR (MTC)

MODE DOOR ACTUATOR (MTC) - GRAY 2 WAY

CAV	CIRCUIT	FUNCTION
1	C34 20DB/LB	COMMON DOOR DRIVER (B)
2	C35 20LB/OR	MODE DOOR DRIVER (A)

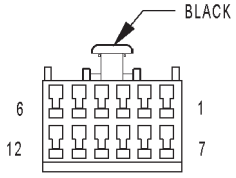

OVERHEAD CONSOLE (EXCEPT BASE)

OVERHEAD CONSOLE (EXCEPT BASE) - BLACK 12 WAY

CAV	CIRCUIT	FUNCTION
1	G23 20VT/DB	SLIDING DOORS OVERHEAD SWITCH MUX
2	G25 20VT/TN	LIFTGATE SWITCH MUX
3	D25 20WT/VT	PCI BUS
4	Z113 20BK/DB	GROUND
5	A114 20GY/RD	FUSED B(+) (I.O.D.)
6	F503 20WT/PK	FUSED IGNITION SWITCH OUTPUT (RUN)
7	Z13 20BK/WT	GROUND
8	E15 20OR/DB	ASH/RECEIVER LAMP FEED
9	-	-
10	-	-
11	L24 20BK/GY (EXCEPT BUILT-UP-EXPORT) (PREMIUM/LUXURY)	AUTOMATIC HEADLAMP SWITCH SENSOR
12	L1 20BK/WT (PREMIUM/ LUXURY)	BACK-UP LAMP FEED

RADIATOR FAN RELAY NO. 1 (DIESEL) - BLUE 9 WAY

CAV	CIRCUIT	FUNCTION
1	-	-
2	N201 12DB/LG	RADIATOR FAN RELAY NO. 1 OUTPUT
3	-	-
4	K342 16BR/WT	ECM/PCM RELAY OUTPUT
5	-	-
6	N210 18DB/DG	LOW SPEED RADIATOR FAN RELAY CONTROL
7	-	-
8	A201 12RD/LG	FUSED B(+)
9	-	-

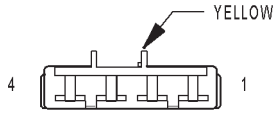

PASSENGER AIRBAG

PASSENGER AIRBAG - YELLOW 4 WAY

CAV	CIRCUIT	FUNCTION
1	R42 18LB/BR	PASSENGER SQUIB 1 LINE 2
2	R44 18LB/OR	PASSENGER SQUIB 1 LINE 1
3	R62 18LB/PK	PASSENGER SQUIB 2 LINE 2
4	R64 18LB/WT	PASSENGER SQUIB 2 LINE 1

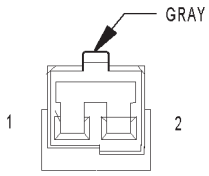

PASSENGER BLEND DOOR ACTUATOR (ATC)

PASSENGER BLEND DOOR ACTUATOR (ATC) - GRAY 2 WAY

CAV	CIRCUIT	FUNCTION
1	C133 20DB/WT	PASSENGER BLEND DOOR DRIVER (B)
2	C33 20LB/BR	PASSENGER BLEND DOOR DRIVER (A)

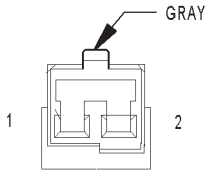

PASSENGER BLEND DOOR ACTUATOR (MTC)

PASSENGER BLEND DOOR ACTUATOR (MTC) - GRAY 2 WAY

CAV	CIRCUIT	FUNCTION
1	C33 20LB/BR (RHD)	PASSENGER BLEND DOOR DRIVER (A)
1	C34 20DB/LB (LHD)	COMMON DOOR DRIVER (B)
2	C34 20DB/LB (RHD)	COMMON DOOR DRIVER (B)
2	C33 20LB/BR (LHD)	PASSENGER BLEND DOOR DRIVER (A)

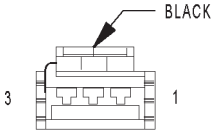

PASSENGER DOOR LOCK SWITCH

PASSENGER DOOR LOCK SWITCH - BLACK 3 WAY

CAV	CIRCUIT	FUNCTION
1	F304 16WT/PK (EXCEPT POWER WINDOWS)	FUSED ACCESSORY RELAY OUTPUT
1	F304 16WT/PK (POWER WINDOWS)	FUSED WINDOW CIRCUIT BREAKER OUTPUT
2	G161 20VT/DG (RHD)	LEFT DOOR LOCK SWITCH MUX
2	G160 20VT/LG (LHD)	RIGHT DOOR LOCK SWITCH MUX
3	Z461 20BK/DG (RHD)	GROUND
3	Z460 20BK/LG (LHD)	GROUND

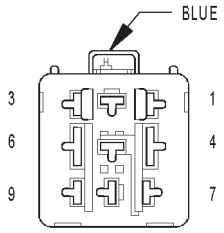

PASSENGER FOLDING MIRROR RELAY (BUILT-UP-EXPORT)

PASSENGER FOLDING MIRROR RELAY (BUILT-UP-EXPORT) - BLUE 9 WAY

CAV	CIRCUIT	FUNCTION
1	-	-
2	-	-
3	-	-
4	A108 18LG/RD	FUSED B(+)
5	P164 18LG/DB	PASSENGER FOLDING MIRROR RELAY INPUT
6	P162 18LG/DG	PASSENGER FOLDING MIRROR RELAY CONTROL
7	-	-
8	P160 18TN/LG	PASSENGER FOLDING MIRROR RELAY OUTPUT
9	-	-

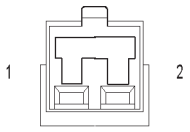

PASSENGER SEAT BELT SWITCH

PASSENGER SEAT BELT SWITCH - 2 WAY

CAV	CIRCUIT	FUNCTION
1	R60 18LB/TN	PASSENGER SEAT BELT SWITCH LINE 1
2	R58 18LB/GY	PASSENGER SEAT BELT SWITCH LINE 2

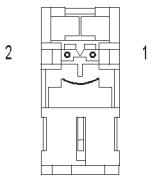

PASSENGER SEAT BELT TENSIONER

PASSENGER SEAT BELT TENSIONER - 2 WAY

CAV	CIRCUIT	FUNCTION
1	R54 18LB/YL	PASSENGER SEAT BELT TENSIONER LINE 2
2	R56 18LB/DG	PASSENGER SEAT BELT TENSIONER LINE 1

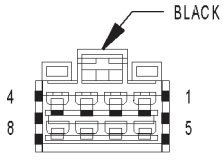

POWER LIFTGATE MODULE C1

POWER LIFTGATE MODULE C1 - BLACK 8 WAY

CAV	CIRCUIT	FUNCTION
1	Q83 18OR/GY	LIFTGATE LATCH CLUTCH DRIVER
2	Q88 16TN/BR (EXCEPT BUILT-UP-EXPORT)	LIFTGATE OPEN DRIVER
2	Q88 14TN/BR (BUILT-UP-EXPORT)	LIFTGATE OPEN DRIVER
3	Q89 16TN/OR (EXCEPT BUILT-UP-EXPORT)	LIFTGATE CLOSE DRIVER
3	Q89 14TN/OR (BUILT-UP-EXPORT)	LIFTGATE CLOSE DRIVER
4	-	-
5	A115 12YL/RD	FUSED B(+)
6	-	-
7	-	-
8	Z125 14BK/WT	GROUND

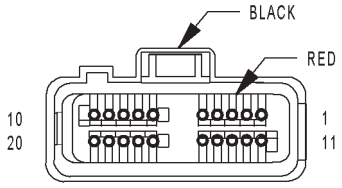

POWER
LIFTGATE
MODULE C2

POWER LIFTGATE MODULE C2 - BLACK/RED 20 WAY

CAV	CIRCUIT	FUNCTION
1	Q90 20TN/VT	LIFTGATE HALL EFFECT SIGNAL
2	-	-
3	Q151 20TN/DB	LIFTGATE ENGAGE/DISENGAGE SWITCH SENSE
4	-	-
5	Q76 20OR/LB	PINCH SENSOR SIGNAL
6	-	-
7	Q86 18OR/DB	LIFTGATE GEAR ENGAGE DRIVER
8	Q84 18TN/GY	LIFTGATE LATCH CINCH DRIVER
9	Q85 18TN/WT	LIFTGATE LATCH RELEASE DRIVER
10	Q87 18OR/LG	LIFTGATE GEAR DISENGAGE DRIVER
11	D25 20WT/VT	PCI BUS
12	G78 20VT/OR	LIFTGATE AJAR SWITCH SENSE
13	Q60 20OR/YL	LIFTGATE PAWL SWITCH SENSE
14	Q51 20OR	LIFTGATE FULL OPEN SWITCH SENSE
15	-	-
16	G32 20VT/LB	LIFTGATE TEMPERATURE SENSOR SIGNAL
17	Q91 20TN/LG	LIFTGATE HALL EFFECT SIGNAL
18	Q94 20TN/LG	LIFTGATE CHIME DRIVER
19	G153 20VT/YL	LIFTGATE MODULE WAKE UP SIGNAL
20	Z87 20BK/LG	GROUND

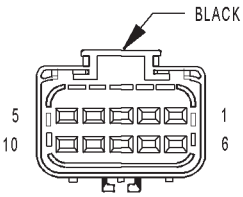

POWER
LIFTGATE
MOTOR

POWER LIFTGATE MOTOR - BLACK 10 WAY

CAV	CIRCUIT	FUNCTION
1	Z78 20BK/OR (EXCEPT BUILT-UP-EXPORT)	GROUND
1	Z87 20BK/LG (BUILT-UP-EXPORT)	GROUND
2	Q51 20OR	LIFTGATE FULL OPEN SWITCH SENSE
3	Q151 20TN/DB	LIFTGATE ENGAGE/DISENGAGE SWITCH SENSE
4	Q87 18OR/LG	LIFTGATE GEAR DISENGAGE DRIVER
5	Q86 18OR/DB	LIFTGATE GEAR ENGAGE DRIVER
6	Q88 16TN/BR (EXCEPT BUILT-UP-EXPORT)	LIFTGATE OPEN DRIVER
6	Q88 14TN/BR (BUILT-UP-EXPORT)	LIFTGATE OPEN DRIVER
7	Q90 20TN/VT	LIFTGATE HALL EFFECT SUPPLY
8	Q91 20TN/LG	LIFTGATE HALL EFFECT SIGNAL
9	Z87 20BK/LG	GROUND
10	Q89 16TN/OR (EXCEPT BUILT-UP-EXPORT)	LIFTGATE CLOSE DRIVER
10	Q89 14TN/OR (BUILT-UP-EXPORT)	LIFTGATE CLOSE DRIVER

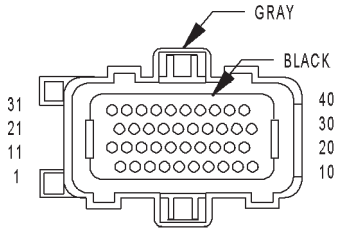

POWERTRAIN CONTROL MODULE C1 (GAS)

POWERTRAIN CONTROL MODULE C1 (GAS) - GRAY/BLACK 40-WAY

CAV	CIRCUIT	FUNCTION
1	-	-
2	K18 16DB/OR (3.3L/3.8L)	IGNITION COIL NO. 3 DRIVER
3	K17 16DB/TN	IGNITION COIL NO. 2 DRIVER
4	-	-
5	V32 18VT/YL	SPEED CONTROL ON/OFF SWITCH SENSE
6	K342 16BR/WT	AUTOMATIC SHUT DOWN RELAY OUTPUT
7	K13 16BR/LB	FUEL INJECTOR NO. 3 DRIVER
8	K20 18BR/GY	GENERATOR FIELD CONTROL
9	-	-
10	Z130 18BK/BR	GROUND
11	K19 16DB/DG	IGNITION COIL NO. 1 DRIVER
12	G6 16VT/GY	ENGINE OIL PRESSURE SWITCH SENSE
13	K11 16BR/YL	FUEL INJECTOR NO. 1 DRIVER
14	K58 16BR/VT (3.3L/3.8L)	FUEL INJECTOR NO. 6 DRIVER
15	K38 16BR/OR (3.3L/3.8L)	FUEL INJECTOR NO. 5 DRIVER
16	K14 16BR/TN	FUEL INJECTOR NO. 4 DRIVER
17	K12 16BR/DB	FUEL INJECTOR NO. 2 DRIVER
18	K99 18BR/LG	OXYGEN SENSOR 1/1 HEATER CONTROL
19	-	-
20	F202 18PK/GY	FUSED IGNITION SWITCH OUTPUT (RUN-START)
21	-	-
22	-	-
23	-	-
24	-	-
25	K42 18DB/YL (EXCEPT 3.3L/3.8L BUILT-UP-EXPORT)	KNOCK SENSOR SIGNAL
26	K2 18VT/OR	ENGINE COOLANT TEMPERATURE SENSOR SIGNAL
27	K902 18BR/DG	OXYGEN SENSOR GROUND
28	-	-
29	-	-
30	K41 18DB/LB	OXYGEN SENSOR 1/1 SIGNAL
31	T752 18DG/OR	ENGINE STARTER MOTOR RELAY CONTROL
32	K24 18BR/LB	CRANKSHAFT POSITION SENSOR SIGNAL
33	K44 18DB/GY	CAMSHAFT POSITION SENSOR SIGNAL
34	-	-
35	K22 18BR/OR	THROTTLE POSITION SENSOR SIGNAL
36	K1 18VT/BR	MANIFOLD ABSOLUTE PRESSURE SENSOR SIGNAL
37	K21 18DB/LG	INTAKE AIR TEMPERATURE SENSOR SIGNAL
38	-	-
39	-	-
40	K35 18DB/VT	EGR SOLENOID CONTROL

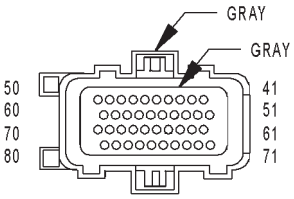

POWERTRAIN CONTROL MODULE C2 (GAS)

POWERTRAIN CONTROL MODULE C2 (GAS) - GRAY/GRAY 40 WAY

CAV	CIRCUIT	FUNCTION
41	V37 18VT	SPEED CONTROL SWITCH SIGNAL
42	C18 18LB/BR	A/C PRESSURE SENSOR SIGNAL
43	K900 18DB/DG	SENSOR GROUND
44	F888 18BR/PK	8 VOLT SUPPLY
45	-	-
46	A109 18OR/RD	FUSED B(+)
47	-	-
48	K40 18BR/LG (2.4L)	IDLE AIR CONTROL NO. 3 DRIVER
49	K60 18VT/LG (2.4L)	IDLE AIR CONTROL NO. 2 DRIVER
49	K39 18VT/DG (3.3L/3.8L)	IDLE AIR CONTROL NO. 1 DRIVER
50	Z131 18BK/DG	GROUND
51	K141 18DB/YL	OXYGEN SENSOR 1/2 SIGNAL
52	-	-
53	-	-
54	-	-
55	-	-
56	V36 18VT/YL	SPEED CONTROL VACUUM SOLENOID CONTROL
57	K39 18VT/DG (2.4L)	IDLE AIR CONTROL NO. 1 DRIVER
57	K60 18VT/LG (3.3L/3.8L)	IDLE AIR CONTROL NO. 2 DRIVER
58	K59 18BR/DG (2.4L)	IDLE AIR CONTROL NO. 4 DRIVER
59	D25 18WT/VT	PCI BUS
60	-	-
61	F855 18PK/YL	5 VOLT SUPPLY
62	B29 18DG/WT	SECONDARY BRAKE SWITCH SIGNAL
63	T10 18DG/LG (EATX)	TORQUE MANAGEMENT REQUEST SENSE
64	C13 18LB/OR	A/C COMPRESSOR CLUTCH RELAY CONTROL
65	D21 18WT/BR	SCI TRANSMIT
66	N7 18DB/OR	VEHICLE SPEED SENSOR SIGNAL
67	K51 18BR/WT	AUTOMATIC SHUT DOWN RELAY CONTROL
68	K52 18DB/WT	EVAPORATIVE EMISSION SOLENOID CONTROL
69	-	-
70	K70 18DB/BR	EVAPORATIVE EMISSION SOLENOID SENSE
71	-	-
72	K107 18VT/WT (EXCEPT BUILT-UP-EXPORT)	LEAK DETECTION PUMP SWITCH SENSE
73	K173 18BR/VT	RADIATOR FAN RELAY CONTROL
74	K31 18BR	FUEL PUMP RELAY CONTROL
75	D20 18WT/LG	SCI RECEIVE
76	T41 18YL/DB	PARK/NEUTRAL POSITION SWITCH SENSE (TRS T41)
77	K106 18VT/WT (EXCEPT BUILT-UP-EXPORT) (2.4L EATX W/ABS)	LEAK DETECTION PUMP SOLENOID CONTROL
77	K106 18VT/LB (EXCEPT BUILT-UP-EXPORT) (EXCEPT 2.4L EATX W/ABS)	LEAK DETECTION PUMP SOLENOID CONTROL
78	K54 18DB/WT (ATX)	TORQUE CONVERTER CLUTCH SOLENOID CONTROL
79	-	-
80	V35 18VT/OR	SPEED CONTROL VENT SOLENOID CONTROL

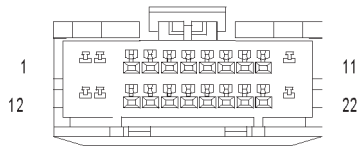

RADIO C1

RADIO C1 - 22 WAY

CAV	CIRCUIT	FUNCTION
1	A114 16GY/RD	FUSED B(+) (I.O.D.)
2	F306 16DB/PK	FUSED ACCESSORY RELAY OUTPUT
3	E14 20OR/TN	PANEL LAMPS DRIVER
4	-	-
5	-	-
6	-	-
7	X56 20GY/BR (EXCEPT BUILT-UP-EXPORT)	RIGHT FRONT SPEAKER (-)
7	X54 20GY (BUILT-UP-EXPORT)	RIGHT FRONT SPEAKER (-)
7	X156 20GY/LB (LOW LINE)	RIGHT FRONT I/P SPEAKER (-)
8	X154 20GY/YL (LOW LINE)	RIGHT FRONT I/P SPEAKER (+)
8	X56 20GY/BR (BUILT-UP-EXPORT)	RIGHT FRONT SPEAKER (+)
8	X54 20GY (EXCEPT BUILT-UP-EXPORT)	RIGHT FRONT SPEAKER (+)
9	X55 20DG/BR	LEFT FRONT SPEAKER (-)
9	X155 20DG/LB (LOW LINE)	LEFT FRONT I/P SPEAKER (-)
10	X53 20DG	LEFT FRONT SPEAKER (+)
10	X153 20DG/YL (LOW LINE)	LEFT FRONT I/P SPEAKER (+)
11	Z514 16BK/LG (BUILT-UP-EXPORT)	GROUND
11	Z333 16BK/PK (EXCEPT BUILT-UP-EXPORT)	GROUND
12	A114 16GY/RD (EXCEPT BUILT-UP-EXPORT)	FUSED B(+) (I.O.D.)
13	X60 20GY/YL (BUILT-UP-EXPORT)	RADIO 12 VOLT OUTPUT
14	D25 18WT/VT (EXCEPT BUILT-UP-EXPORT)	PCI BUS
14	D25 20WT/VT (BUILT-UP-EXPORT)	PCI BUS
15	-	-
16	-	-
17	-	-
18	X51 20DG/DB	LEFT REAR SPEAKER (+)
19	X57 20DG/OR	LEFT REAR SPEAKER (-)
20	X58 20GY/OR	RIGHT REAR SPEAKER (-)
21	X52 20GY/DB	RIGHT REAR SPEAKER (+)
22	Z515 16BK (BUILT-UP-EXPORT)	GROUND
22	Z222 16BK/LG (EXCEPT BUILT-UP-EXPORT)	GROUND

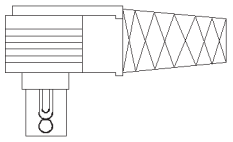

RADIO C2

RADIO C2 - 8 WAY

CAV	CIRCUIT	FUNCTION
1	X40 20GY/WT	AUDIO OUT RIGHT
2	E14 18OR/TN	PANEL LAMPS DRIVER
3	D25 20WT/VT (EXCEPT BUILT-UP-EXPORT)	PCI BUS
3	D25 20VT/YL (BUILT-UP-EXPORT)	PCI BUS
4	X112 20RD	IGNITION SWITCH OUTPUT
5	X41 20DG/WT	AUDIO OUT LEFT
6	Z140 18BK/OR	GROUND
7	Z141 18BK/TN	GROUND
8	X160 20GY/YL	B(+)

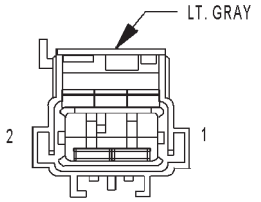

RADIO
CHOKE

RADIO CHOKE - LT. GRAY 2 WAY

CAV	CIRCUIT	FUNCTION
1	X1 16DG/BR	NAME BRAND SPEAKER RELAY OUTPUT
2	X13 16DG/GY	RADIO CHOKE OUTPUT

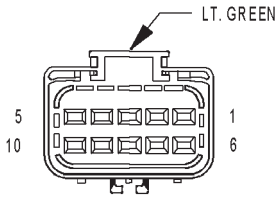

REAR
A/C-HEATER
UNIT
(3 ZONE HVAC)

REAR A/C-HEATER UNIT (3 ZONE HVAC) - LT. GREEN 10 WAY

CAV	CIRCUIT	FUNCTION
1	C53 20LB	REAR MODE DOOR DRIVER
2	C154 20LB/OR	REAR COMMON DOOR DRIVER
3	C51 12LB/BR	FUSED REAR BLOWER MOTOR RELAY OUTPUT
4	C152 16LB/LG	REAR BLOWER MOTOR MED
5	C151 18LB/DG	REAR BLOWER MOTOR LOW
6	C153 12DB/BR	REAR BLOWER MOTOR HIGH
7	C54 20LB/YL	REAR BLEND DOOR DRIVER
8	C154 20LB/OR	REAR COMMON DOOR DRIVER
9	-	-
10	C200 20LB/DG	TXV SOLENOID FEED

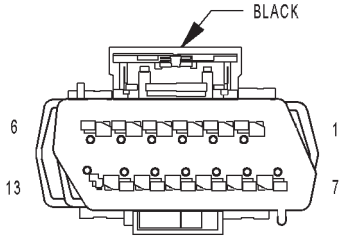

REAR
AUTO TEMP
CONTROL
SWITCH
(ATC)

REAR AUTO TEMP CONTROL SWITCH (ATC) - BLACK 13 WAY

CAV	CIRCUIT	FUNCTION
1	F504 20GY/PK	FUSED IGNITION SWITCH OUTPUT (RUN)
2	Z27 18BK/DG	GROUND
3	D22 20WT/TN	KDB CLOCK
4	D17 20WT/DG	KDB DATA
5	E10 20OR/DG	PANEL LAMPS DRIVER
6	-	-
7	-	-
8	-	-
9	-	-
10	-	-
11	-	-
12	-	-
13	-	-

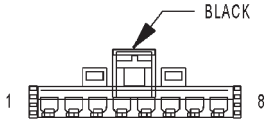

REAR
BLOWER FRONT
CONTROL SWITCH
(3 ZONE HVAC)

REAR BLOWER FRONT CONTROL SWITCH (3 ZONE HVAC) - BLACK 8 WAY

CAV	CIRCUIT	FUNCTION
1	-	-
2	Z440 12BK/DG	GROUND
3	-	-
4	C153 12DB/BR	REAR BLOWER MOTOR HIGH
5	-	-
6	C152 16LB/LG	REAR BLOWER MOTOR MED
7	C151 18LB/DG	REAR BLOWER MOTOR LOW
8	C50 12DB/OR	REAR BLOWER FRONT CONTROL FEED

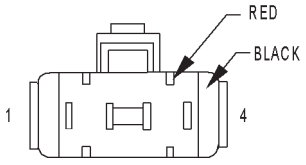

REAR BLOWER MOTOR POWER MODULE C1 (ATC)

REAR BLOWER MOTOR POWER MODULE C1 (ATC) - RED/BLACK 4 WAY

CAV	CIRCUIT	FUNCTION
1	C51 18DB/BR	FUSED REAR BLOWER MOTOR RELAY OUTPUT
1	C51 12DB/BR	FUSED REAR BLOWER MOTOR RELAY OUTPUT
2	C59 18DB/LB	BLOWER MOTOR CONTROL
3	Z135 12BK/LB	GROUND
4	-	-

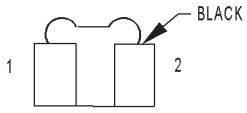

REAR BLOWER MOTOR POWER MODULE C2 (ATC)

REAR BLOWER MOTOR POWER MODULE C2 (ATC) - BLACK 2 WAY

CAV	CIRCUIT	FUNCTION
1	12BK	GROUND
2	12DG	POWER FEED

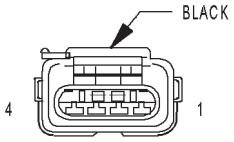

REAR BLOWER REAR CONTROL SWITCH C1 (3 ZONE HVAC)

REAR BLOWER REAR CONTROL SWITCH C1 (3 ZONE HVAC) - BLACK 4 WAY

CAV	CIRCUIT	FUNCTION
1	C153 12DB/BR	REAR BLOWER MOTOR HIGH
2	C152 16LB/LG	REAR BLOWER MOTOR MED
3	C151 18LB/DG	REAR BLOWER MOTOR LOW
4	C50 12DB/OR	REAR BLOWER FRONT CONTROL FEED

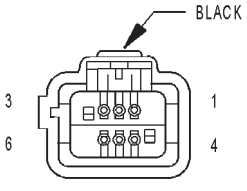

REAR BLOWER REAR CONTROL SWITCH C2 (3 ZONE HVAC)

REAR BLOWER REAR CONTROL SWITCH C2 (3 ZONE HVAC) - BLACK 6 WAY

CAV	CIRCUIT	FUNCTION
1	-	-
2	C22 20LB/DB	REAR TEMPERATURE FEEDBACK SIGNAL
3	E10 20OR/DG	PANEL LAMPS DRIVER
4	F850 20LB/PK	5 VOLT SUPPLY
5	C121 20DB/DG	REAR TEMPERATURE RETURN
6	Z409 20BK/OR	GROUND

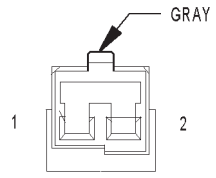

REAR
MODE
MOTOR
(ATC)

REAR MODE MOTOR (ATC) - GRAY 2 WAY

CAV	CIRCUIT	FUNCTION
1	C154 18LB/GY	REAR MODE DOOR DRIVER (B)
2	C53 18LB	REAR MODE DOOR DRIVER (A)

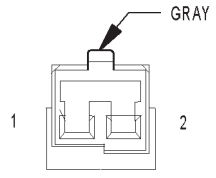

REAR
TEMPERATURE
MOTOR
(ATC)

REAR TEMPERATURE MOTOR (ATC) - GRAY 2 WAY

CAV	CIRCUIT	FUNCTION
1	C54 18LB/YL	REAR BLEND DOOR DRIVER (A)
2	C169 18LB/TN	REAR BLEND DOOR DRIVER (B)

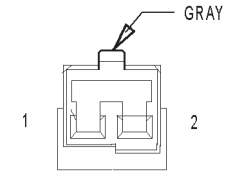

RECIRCULATION
DOOR ACTUATOR
(ATC)

RECIRCULATION DOOR ACTUATOR (ATC) - GRAY 2 WAY

CAV	CIRCUIT	FUNCTION
1	C132 20DB/YL	RECIRCULATION DOOR DRIVER (B)
2	C32 20DB/TN	RECIRCULATION DOOR DRIVER (A)

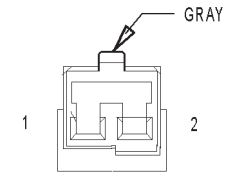

RECIRCULATION
DOOR ACTUATOR
(MTC)

RECIRCULATION DOOR ACTUATOR (MTC) - GRAY 2 WAY

CAV	CIRCUIT	FUNCTION
1	C32 20DB/TN (RHD)	RECIRCULATION DOOR DRIVER (A)
1	C34 20DB/LB (LHD)	COMMON DOOR DRIVER (B)
2	C34 20DB/LB (RHD)	COMMON DOOR DRIVER (B)
2	C32 20DB/TN (LHD)	RECIRCULATION DOOR DRIVER (A)

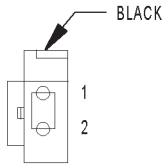

REMOTE KEYLESS ENTRY ANTENNA (JAPAN)

REMOTE KEYLESS ENTRY ANTENNA (JAPAN) - BLACK 2 WAY

CAV	CIRCUIT	FUNCTION
1	D10 18WT	REMOTE KEYLESS ENTRY ANTENNA (+)
2	D10 18WT/LB	REMOTE KEYLESS ENTRY ANTENNA (-)

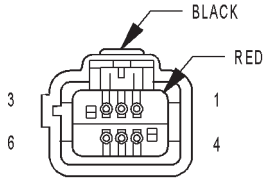

REMOTE KEYLESS ENTRY MODULE

REMOTE KEYLESS ENTRY MODULE - BLACK/RED 6 WAY

CAV	CIRCUIT	FUNCTION
1	G96 20VT/DG	REMOTE KEYLESS ENTRY INTERFACE
2	D9 20WT/GY	RKE MODULE PROGRAM ENABLE
3	Z109 20BK/GY	GROUND
4	D10 18WT (RHD) (JAPAN ONLY)	REMOTE KEYLESS ENTRY ANTENNA (+)
5	D10 18WT/LB (RHD) (JAPAN ONLY)	REMOTE KEYLESS ENTRY ANTENNA (-)
6	A114 20GY/RD	FUSED B(+) (I.O.D.)

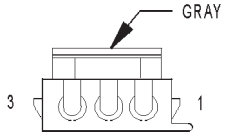

RIGHT B-PILLAR SWITCH (POWER SLIDING DOOR)

RIGHT B-PILLAR SWITCH (POWER SLIDING DOOR) - GRAY 3 WAY

CAV	CIRCUIT	FUNCTION
1	Z62 20BK/YL	GROUND
2	F302 18GY/PK	FUSED ACCESSORY RELAY OUTPUT
3	G42 20VT/YL (EXCEPT TOWN&COUNTRY)	RIGHT SLIDING DOOR PILLAR SWITCH MUX
3	G42 20VT/WT (TOWN&COUNTRY)	RIGHT SLIDING DOOR PILLAR SWITCH MUX

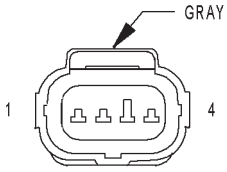

RIGHT CINCH/RELEASE MOTOR (POWER SLIDING DOOR)

RIGHT CINCH/RELEASE MOTOR (POWER SLIDING DOOR) - GRAY 4 WAY

CAV	CIRCUIT	FUNCTION
1	Q46 18TN/GY	RIGHT CINCH/RELEASE MOTOR LATCH DRIVER
2	Z248 18BK/WT	GROUND
3	Q44 18OR/GY	RIGHT CINCH/RELEASE MOTOR CLUTCH DRIVER
4	Q48 18TN/WT	RIGHT CINCH/RELEASE MOTOR UNLATCH DRIVER

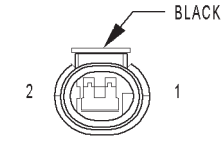

RIGHT CYLINDER LOCK SWITCH

RIGHT CYLINDER LOCK SWITCH - BLACK 2 WAY

CAV	CIRCUIT	FUNCTION
1	Z462 20BK/WT	GROUND
2	G162 20VT/WT	RIGHT CYLINDER LOCK SWITCH MUX

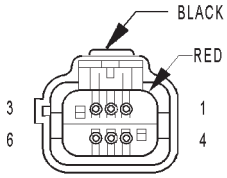

RIGHT DOOR SPEAKER

RIGHT DOOR SPEAKER - BLACK/RED 6 WAY

CAV	CIRCUIT	FUNCTION
1	X154 20GY/YL (HIGH LINE)	RIGHT FRONT INSTRUMENT PANEL SPEAKER (+)
2	X15 16GY/DG (HIGH LINE)	AMPLIFIED SPEAKER GROUND
3	X156 20GY/LB (HIGH LINE)	RIGHT FRONT INSTRUMENT PANEL SPEAKER (-)
4	X54 20GY	RIGHT FRONT SPEAKER (+)
5	X13 16DG/GY (HIGH LINE)	RADIO CHOKE OUTPUT
6	X56 20GY/BR	RIGHT FRONT SPEAKER (-)

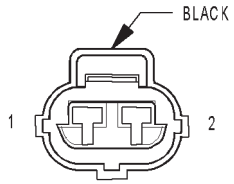

RIGHT FRONT DOOR AJAR SWITCH (BASE)

RIGHT FRONT DOOR AJAR SWITCH (BASE) - BLACK 2 WAY

CAV	CIRCUIT	FUNCTION
1	G74 20VT/WT	RIGHT FRONT DOOR AJAR SWITCH SENSE
2	Z74 20BK/WT	GROUND

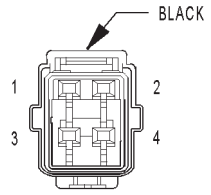

RIGHT FRONT DOOR LOCK MOTOR/AJAR SWITCH (EXCEPT BASE)

RIGHT FRONT DOOR LOCK MOTOR/AJAR SWITCH (EXCEPT BASE) - BLACK 4 WAY

CAV	CIRCUIT	FUNCTION
1	G74 20VT/WT	RIGHT FRONT DOOR AJAR SWITCH SENSE
2	Z74 20BK/WT	GROUND
3	P4 20TN/BR	RIGHT FRONT DOOR UNLOCK DRIVER
4	P2 20TN/GY	RIGHT FRONT DOOR LOCK DRIVER

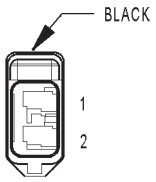

RIGHT FULL
OPEN SWITCH
(POWER SLIDING DOOR)

RIGHT FULL OPEN SWITCH (POWER SLIDING DOOR) - BLACK 2 WAY

CAV	CIRCUIT	FUNCTION
1	Q52 20OR	RIGHT FULL OPEN SWITCH SENSE
2	Z76 20BK/YL	GROUND

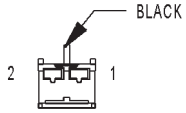

RIGHT
INSTRUMENT
PANEL
SPEAKER

RIGHT INSTRUMENT PANEL SPEAKER - BLACK 2 WAY

CAV	CIRCUIT	FUNCTION
1	X154 20GY/YL	RIGHT FRONT I/P SPEAKER (+)
2	X156 20GY/LB	RIGHT FRONT I/P SPEAKER (-)

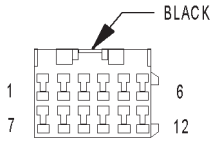

RIGHT
POWER
MIRROR

RIGHT POWER MIRROR - BLACK 12 WAY

CAV	CIRCUIT	FUNCTION
1	P174 20TN/LB (BUILT-UP-EXPORT)	RIGHT FOLDING MIRROR UNFOLD DRIVER
2	-	-
3	-	-
4	P68 20TN/YL (MEMORY)	RIGHT MIRROR HORIZONTAL POSITION SIGNAL
5	P66 20TN/LG (MEMORY)	RIGHT MIRROR SENSOR GROUND
6	P67 20TN/OR (MEMORY)	RIGHT MIRROR VERTICAL POSITION SIGNAL
7	P159 20TN/DG (BUILT-UP-EXPORT/RHD)	DRIVER FOLDING MIRROR FOLD DRIVER
7	P160 20TN/LG (BUILT-UP-EXPORT/LHD)	PASSENGER FOLDING MIRROR RELAY OUTPUT
8	Z216 20BK/DB	GROUND
9	C16 20DB/GY	FUSED REAR WINDOW DEFOGGER RELAY OUTPUT
10	P70 20TN/LB	RIGHT MIRROR COMMON DRIVER (RIGHT/DOWN)
11	P72 20TN/GY	RIGHT MIRROR UP DRIVER
12	P74 20TN/DB	RIGHT MIRROR LEFT DRIVER

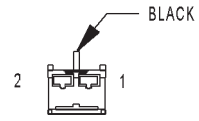

RIGHT REAR
PILLAR SPEAKER

RIGHT REAR PILLAR SPEAKER - BLACK 2 WAY

CAV	CIRCUIT	FUNCTION
1	X158 20GY/YL	RIGHT REAR PILLAR SPEAKER (+)
2	X152 20GY/WT	RIGHT REAR PILLAR SPEAKER (-)

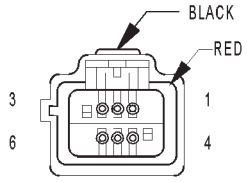

RIGHT
REAR
SPEAKER

RIGHT REAR SPEAKER - BLACK/RED 6 WAY

CAV	CIRCUIT	FUNCTION
1	X152 20GY/WT (HIGH LINE)	RIGHT REAR PILLAR SPEAKER (-)
2	X15 16GY/DG (HIGH LINE)	AMPLIFIED SPEAKER GROUND
3	X158 20GY/YL (HIGH LINE)	RIGHT REAR PILLAR SPEAKER (+)
4	X52 20GY/DB	RIGHT REAR SPEAKER (+)
5	X13 16DG/GY (HIGH LINE)	RADIO CHOKE OUTPUT
6	X58 20GY/OR	RIGHT REAR SPEAKER (-)

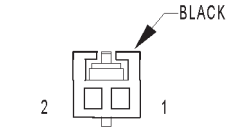

RIGHT REMOTE
RADIO SWITCH

RIGHT REMOTE RADIO SWITCH - BLACK 2 WAY

CAV	CIRCUIT	FUNCTION
1	X20 20RD/BK	RADIO CONTROL MUX
2	X920 20RD/DB	RADIO CONTROL MUX RETURN

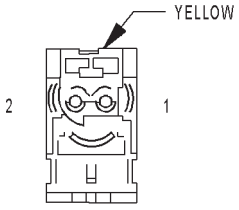

RIGHT
SEAT AIRBAG

RIGHT SEAT AIRBAG - YELLOW 2 WAY

CAV	CIRCUIT	FUNCTION
1	R32 18LB/OR (EXCEPT BUILT-UP-EXPORT)	RIGHT SEAT SQUIB LINE 1
1	R34 18WT/BK (BUILT UP EXPORT)	RIGHT SEAT SQUIB LINE 2
2	R34 18LB/WT (EXCEPT BUILT-UP-EXPORT)	RIGHT SEAT SQUIB LINE 2
2	R32 18DG/WT (BUILT UP EXPORT)	RIGHT SEAT SQUIB LINE 1

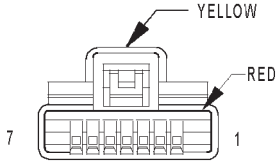

RIGHT SIDE
IMPACT AIRBAG
CONTROL MODULE

RIGHT SIDE IMPACT AIRBAG CONTROL MODULE - YELLOW/RED 7 WAY

CAV	CIRCUIT	FUNCTION
1	R32 18LB/OR	RIGHT SEAT SQUIB LINE 1
2	R34 18LB/WT	RIGHT SEAT SQUIB LINE 2
3	-	-
4	D25 20WT/VT	PCI BUS
5	F214 18PK/LG	FCM OUTPUT (SIACM RUN-START DRIVER)
6	-	-
7	Z104 18BK/LG	GROUND

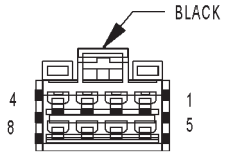

RIGHT SLIDING DOOR CONTROL MODULE C1 (POWER SLIDING DOOR)

RIGHT SLIDING DOOR CONTROL MODULE C1 (POWER SLIDING DOOR) - BLACK 8 WAY

CAV	CIRCUIT	FUNCTION
1	Q44 18OR/GY	RIGHT CINCH/RELEASE MOTOR CLUTCH DRIVER
2	Q68 16TN/BR	RIGHT SLIDING DOOR OPEN DRIVER
3	Q70 16TN/OR	RIGHT SLIDING DOOR CLOSE DRIVER
4	-	-
5	A113 14WT/RD	FUSED B(+)
6	-	-
7	-	-
8	Z124 14BK	GROUND

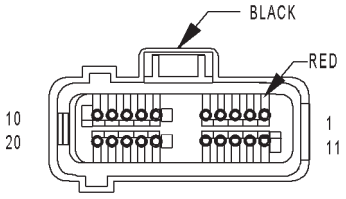

RIGHT SLIDING DOOR CONTROL MODULE C2 (POWER SLIDING DOOR)

RIGHT SLIDING DOOR CONTROL MODULE C2 (POWER SLIDING DOOR) - BLACK/RED 20 WAY

CAV	CIRCUIT	FUNCTION
1	Q72 20TN/VT	RIGHT DOOR MOTOR HALL EFFECT SUPPLY
2	-	-
3	Q34 20OR/GY	RIGHT DOOR LOCK SENSE
4	Q54 20OR/BR	RIGHT DOOR IN/OUT HANDLE SWITCH SENSE
5	-	-
6	-	-
7	Q64 18OR/TN	RIGHT DOOR MOTOR CLUTCH DRIVER
8	Q46 18TN/GY	RIGHT CINCH/RELEASE MOTOR LATCH DRIVER
9	Q48 18TN/WT	RIGHT CINCH/RELEASE MOTOR UNLATCH DRIVER
10	-	-
11	D25 20WT/VT	PCI BUS
12	G76 20TN/OR	RIGHT SLIDING DOOR AJAR SWITCH SENSE
13	Q58 20OR/YL	RIGHT PAWL SWITCH SENSE
14	Q52 20OR	RIGHT FULL OPEN SWITCH SENSE
15	-	GROUND-DRIVER SIDE IDENTIFIER (LHD/RHD)
16	Q56 20OR/VT	RIGHT DOOR CHILD LOCKOUT SWITCH SENSE
17	Q74 20TN/YL	RIGHT DOOR MOTOR HALL EFFECT SIGNAL
18	-	-
19	G152 20VT/GY	RIGHT SLIDING DOOR WAKE UP SIGNAL
20	Z26 20BK/TN	GROUND

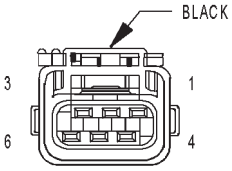

RIGHT SLIDING DOOR LATCH SENSING SWITCH (POWER SLIDING DOOR)

RIGHT SLIDING DOOR LATCH SENSING SWITCH (POWER SLIDING DOOR) - BLACK 6 WAY

CAV	CIRCUIT	FUNCTION
1	Z76 20BK/YL	GROUND
2	Q58 20OR/YL	RIGHT PAWL SWITCH SENSE
3	G76 20TN/OR	RIGHT SLIDING DOOR AJAR SWITCH SENSE
4	Z76 20BK/YL	GROUND
5	Q54 20OR/BR	RIGHT DOOR IN/OUT HANDLE SWITCH SENSE
6	Q56 20OR/VT	RIGHT DOOR CHILD LOCKOUT SWITCH SENSE

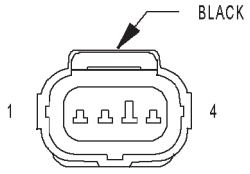

RIGHT SLIDING DOOR LOCK MOTOR (POWER SLIDING DOOR)

RIGHT SLIDING DOOR LOCK MOTOR (POWER SLIDING DOOR) - BLACK 4 WAY

CAV	CIRCUIT	FUNCTION
1	P38 20TN/DB	RIGHT SLIDING DOOR LOCK DRIVER
2	P34 20TN/LB	RIGHT SLIDING DOOR UNLOCK DRIVER
3	Q34 20OR/GY	RIGHT DOOR LOCK SENSE
4	Z76 20BK/YL	GROUND

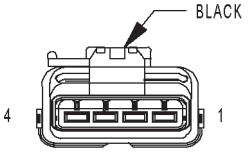

RIGHT SLIDING DOOR LOCK MOTOR/ AJAR SWITCH (MANUAL SLIDING DOOR)

RIGHT SLIDING DOOR LOCK MOTOR/AJAR SWITCH (MANUAL SLIDING DOOR) - BLACK 4 WAY

CAV	CIRCUIT	FUNCTION
1	P38 20BK/DB	RIGHT SLIDING DOOR LOCK DRIVER
2	P34 20BK/TN	RIGHT SLIDING DOOR UNLOCK DRIVER
3	G76 20BK/DG	RIGHT SLIDING DOOR AJAR SWITCH SENSE
4	Z76 20BK	GROUND

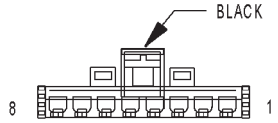

RIGHT SLIDING DOOR MOTOR (POWER SLIDING DOOR)

RIGHT SLIDING DOOR MOTOR (POWER SLIDING DOOR) - BLACK 8 WAY

CAV	CIRCUIT	FUNCTION
1	-	-
2	Q72 20TN/VT	RIGHT DOOR MOTOR HALL EFFECT SUPPLY
3	Q68 16TN/BR	RIGHT SLIDING DOOR OPEN DRIVER
4	Z164 18BK/TN	GROUND
5	Q64 18OR/TN	RIGHT DOOR MOTOR CLUTCH DRIVER
6	Q70 16TN/OR	RIGHT SLIDING DOOR CLOSE DRIVER
7	Z34 20BK/TN	GROUND
8	Q74 20TN/YL	RIGHT DOOR MOTOR HALL EFFECT SIGNAL

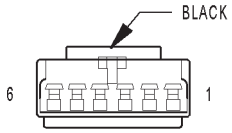

SENTRY KEY IMMOBILIZER MODULE

SENTRY KEY IMMOBILIZER MODULE - BLACK 6 WAY

CAV	CIRCUIT	FUNCTION
1	-	-
2	D25 20WT/VT	PCI BUS
3	-	-
4	F20 20PK/WT	FUSED IGNITION SWITCH OUTPUT (RUN-START)
5	Z120 20BK/WT	GROUND
6	A114 20GY/RD	FUSED B(+) (I.O.D.)

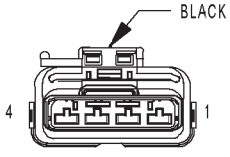

SIREN (UNITED KINGDOM)

SIREN (UNITED KINGDOM) - BLACK 4 WAY

CAV	CIRCUIT	FUNCTION
1	D97 18WT/OR	SIREN SIGNAL OUTPUT
2	D96 18WT/LB	SIREN SIGNAL CONTROL
3	A600 18RD/LB	SIREN SUPPLY
4	G944 18LB/BR	SIREN SIGNAL RETURN

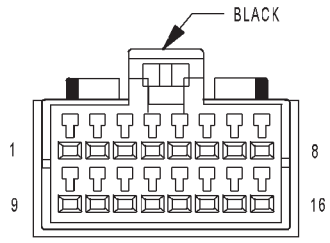

THATCHAM ALARM
MODULE C1
(UNITED KINGDOM)

THATCHAM ALARM MODULE C1 (UNITED KINGDOM) - BLACK 16 WAY

CAV	CIRCUIT	FUNCTION
1	-	-
2	-	-
3	G22 20YL	VTSS INDICATOR SUPPLY
4	D23 20WT/BR	FLASH PROGRAM ENABLE
5	D97 20WT/OR	SIREN SIGNAL OUTPUT
6	D96 20WT/LB	SIREN SIGNAL CONTROL
7	F20 20PK/WT	FUSED IGNITION SWITCH OUTPUT (RUN-START)
8	G944 20LB/BR	SIREN SIGNAL RETURN
9	-	-
10	-	-
11	G922 20GY	VTSS INDICATOR DRIVER
12	-	-
13	D25 20WT/VT	PCI BUS
14	-	-
15	L91 20WT/DB	HAZARD SWITCH SENSE
16	A600 20RD/LB	SIREN SUPPLY

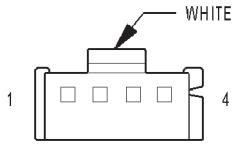

THATCHAM ALARM
MODULE C2
(UNITED KINGDOM)

THATCHAM ALARM MODULE C2 (UNITED KINGDOM) - WHITE 4 WAY

CAV	CIRCUIT	FUNCTION
1	18BK/LB	REAR INTRUSION SENSOR SIGNAL
2	18BK/LB	FRONT INTRUSION SENSOR SIGNAL
3	18BK/WT	SENSOR GROUND
4	18BK/WT	SENSOR GROUND

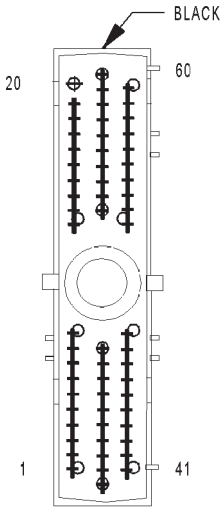

TRANSMISSION CONTROL MODULE (EATX)

TRANSMISSION CONTROL MODULE (EATX) - BLACK 60 WAY

CAV	CIRCUIT	FUNCTION
1	T1 18DG/LB	TRS T1 SENSE
2	-	-
3	T3 18DG/DB	TRS T3 SENSE
4	-	-
5	-	-
6	K24 18BR/LB	CRANKSHAFT POSITION SENSOR SIGNAL
7	D21 18WT/BR	SCI TRANSMIT
8	T751 18YL	FUSED IGNITION SWITCH OUTPUT (START)
9	T9 18DG/TN	OVERDRIVE PRESSURE SWITCH SENSE
10	T10 18DG/LG	TORQUE MANAGEMENT REQUEST SENSE
11	F1 18PK/WT	FCM OUTPUT (UNLOCK-RUN-START)
12	K22 18BR/OR	THROTTLE POSITION SENSOR SIGNAL
13	T13 18DG/VT	SPEED SENSOR GROUND
14	T14 18DG/BR	OUTPUT SPEED SENSOR SIGNAL
15	T15 18YL/BR	TRANSMISSION CONTROL RELAY CONTROL
16	T16 18YL/OR	TRANSMISSION CONTROL RELAY OUTPUT
17	T16 18YL/OR	TRANSMISSION CONTROL RELAY OUTPUT
18	-	-
19	T19 18YL/DB	2-4 SOLENOID CONTROL
20	T20 18DG/WT	LOW/REVERSE SOLENOID CONTROL
21	-	-
22	-	-
23	-	-
24	-	-
25	-	-
26	-	-
27	-	-
28	-	-
29	-	-
30	-	-
31	-	-
32	-	-
33	-	-
34	-	-
35	-	-
36	-	-
37	-	-
38	-	-
39	-	-
40	-	-
41	T41 18DG/GY (3.3L/3.8L)	TRS T41 SENSE
41	T41 18YL/DB (2.4L)	TRS T41 SENSE
42	T42 18DG/YL	TRS T42 SENSE
43	D25 18WT/VT	PCI BUS
44	-	-
45	-	-
46	D16 18WT/OR	SCI RECEIVE
47	T47 18YL/DG	2-4 PRESSURE SWITCH SENSE
48	-	-
49	-	-
50	T50 18YL/TN	LOW/REVERSE PRESSURE SWITCH SENSE
51	K900 18DB/DG	SENSOR GROUND
52	T52 18DG/WT	INPUT SPEED SENSOR SIGNAL
53	Z132 16BK/YL	GROUND
54	T54 18DG/OR	TRANSMISSION TEMPERATURE SENSOR SIGNAL
55	T55 18YL/VT (AUTOSTICK)	AUTOSTICK/OVERDRIVE OFF MUX INPUT
56	A104 18YL/RD	FUSED B(+)
57	Z133 16BK/LG	GROUND
58	N7 18DB/OR	VEHICLE SPEED SENSOR SIGNAL
59	T59 18YL/LB	UNDERDRIVE SOLENOID CONTROL
60	T60 18YL/GY	OVERDRIVE SOLENOID CONTROL

NOTES

10.0 SCHEMATIC DIAGRAMS

10.1 AIRBAG SYSTEM

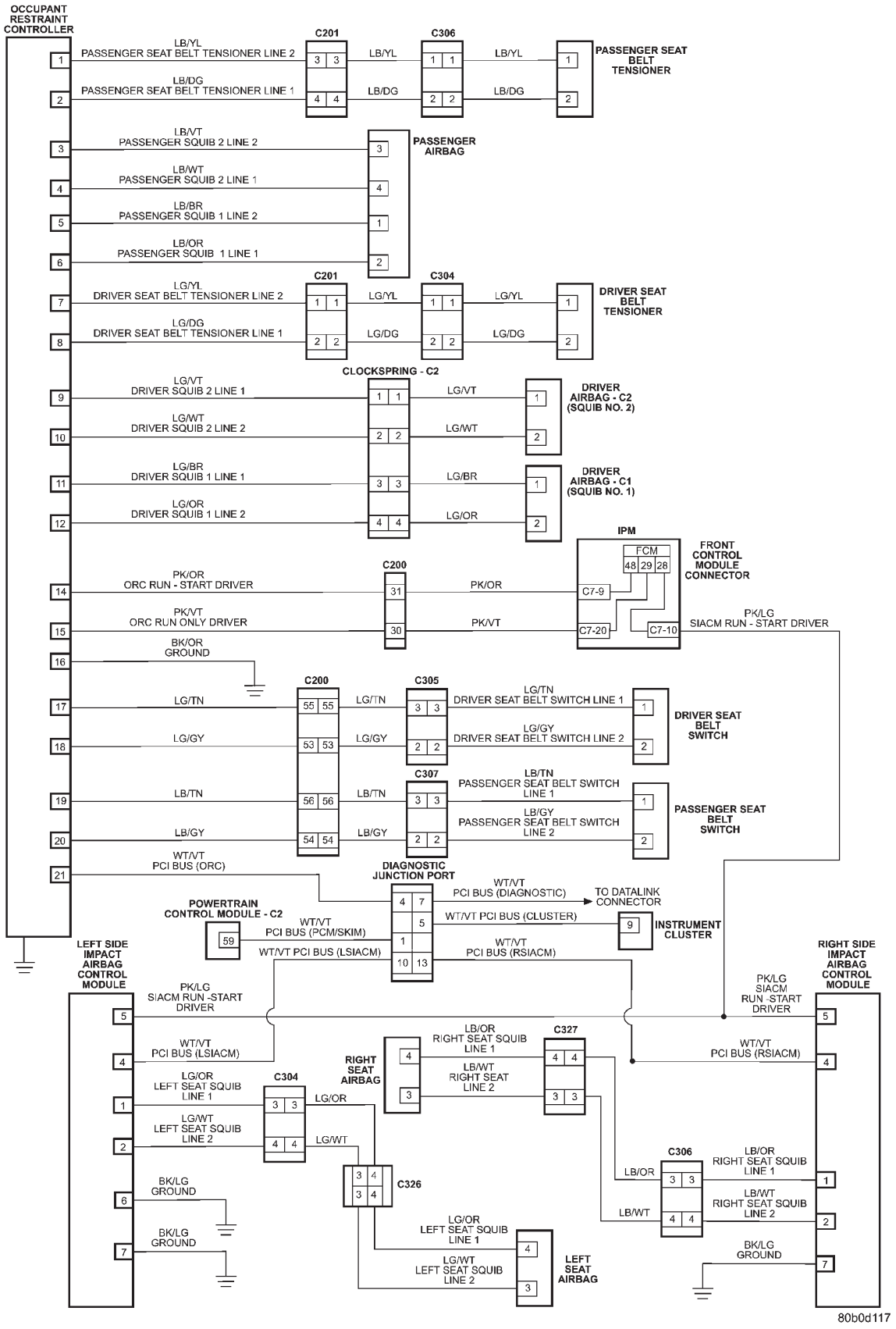

10.2 AUDIO SYSTEM

10.2.1 PREMIUM AUDIO SYSTEM

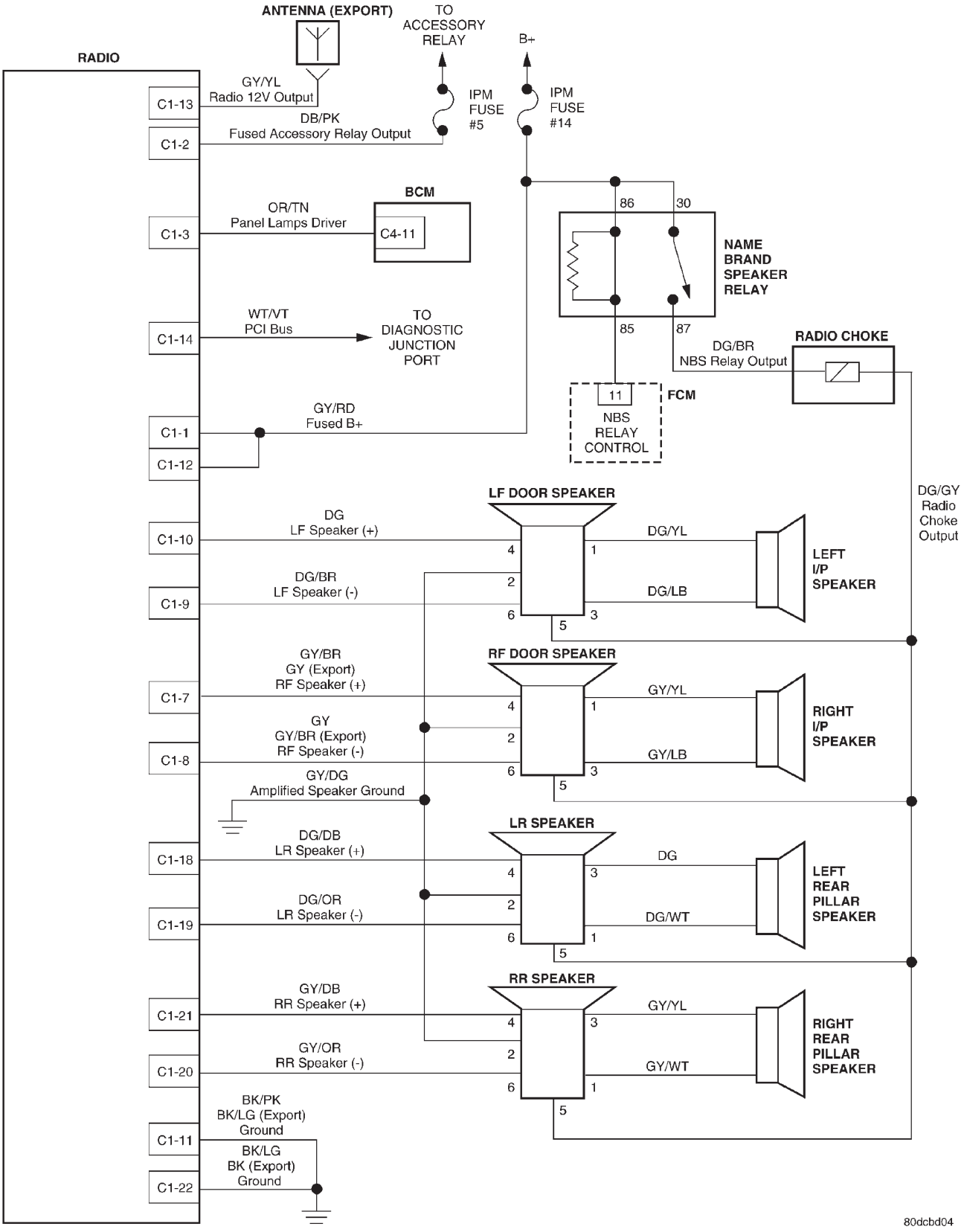

10.2.2 BASE AUDIO SYSTEM

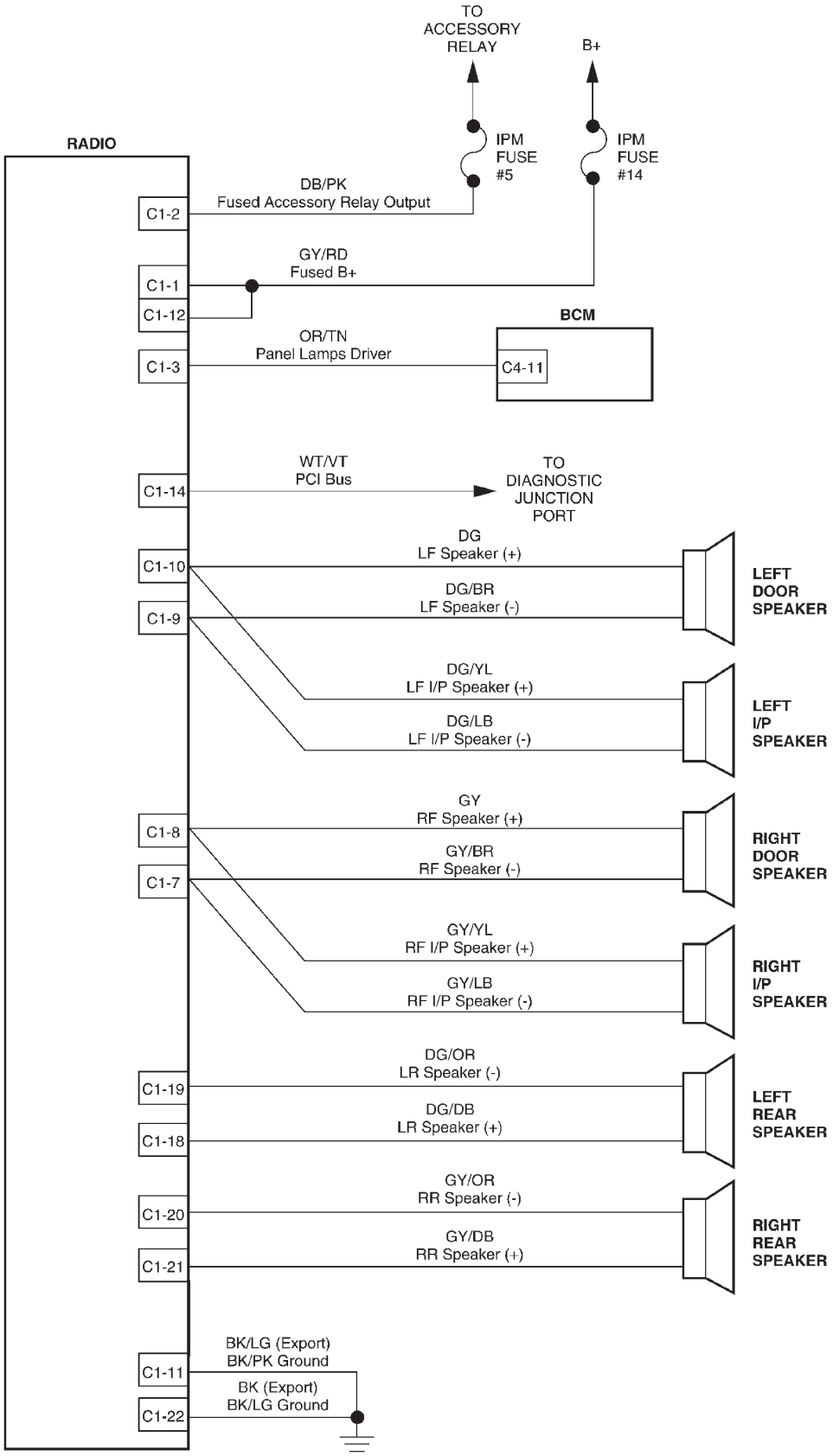

10.2 AUDIO SYSTEM (Continued)
10.2.3 CD CHANGER

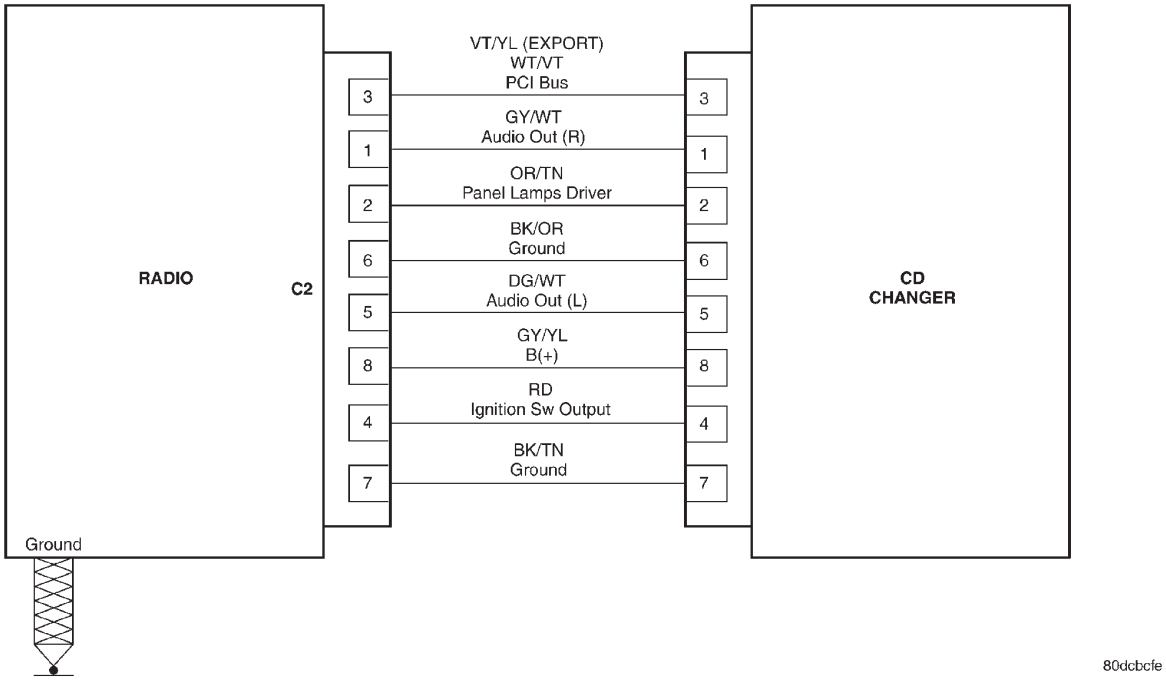

10.2.4 REMOTE RADIO CONTROLS

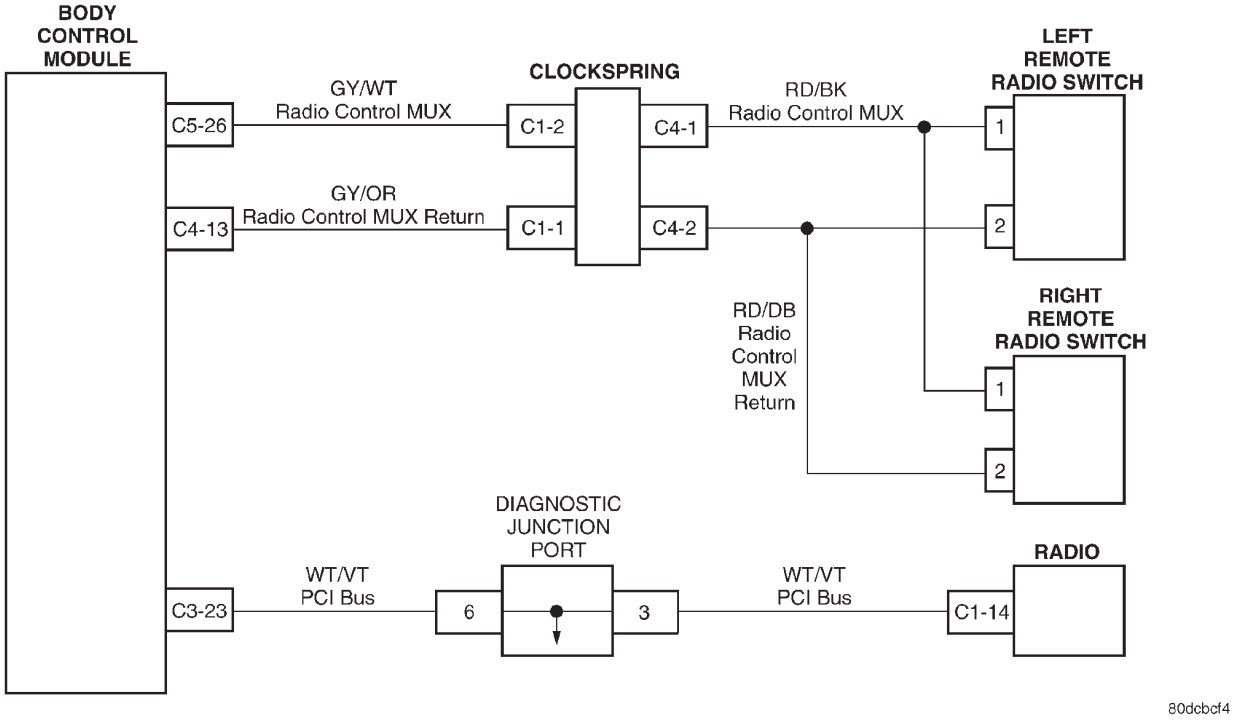

10.3 AUTOMATIC TEMPERATURE CONTROL SYSTEM

10.3.1 FRONT ATC

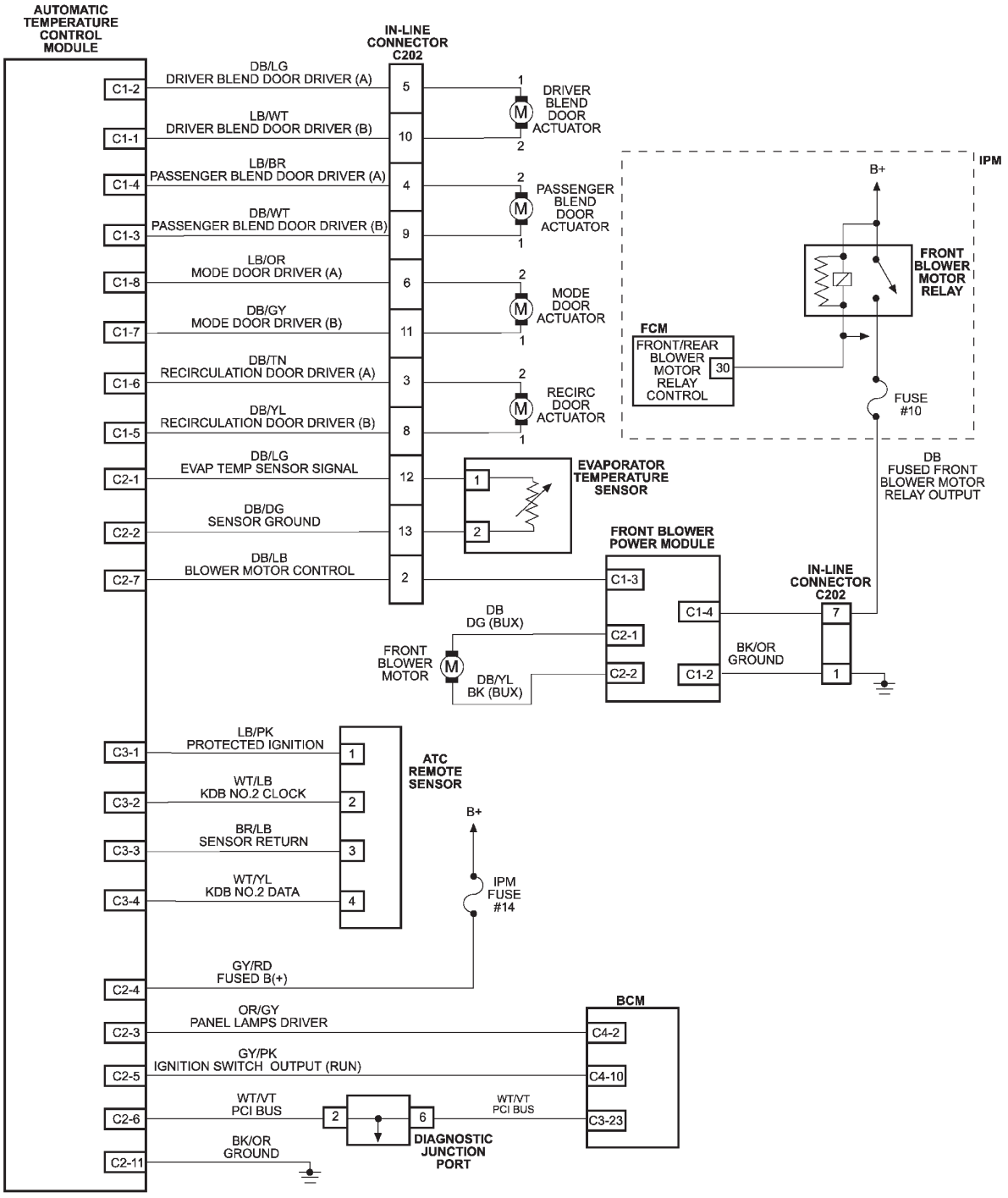

80d4e665

10.3.2 REAR ATC

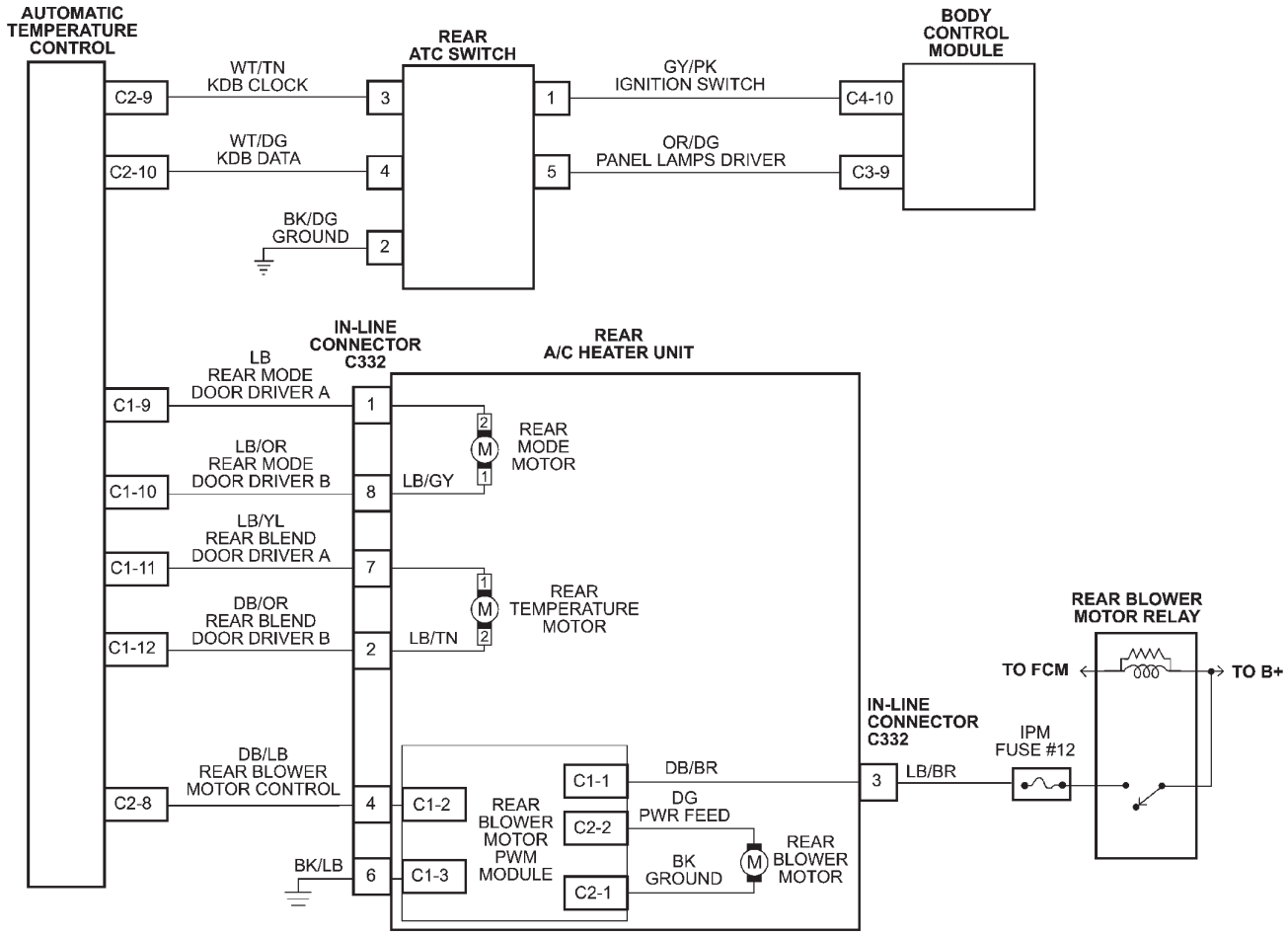

80d4e5cf

10.4 COMMUNICATION

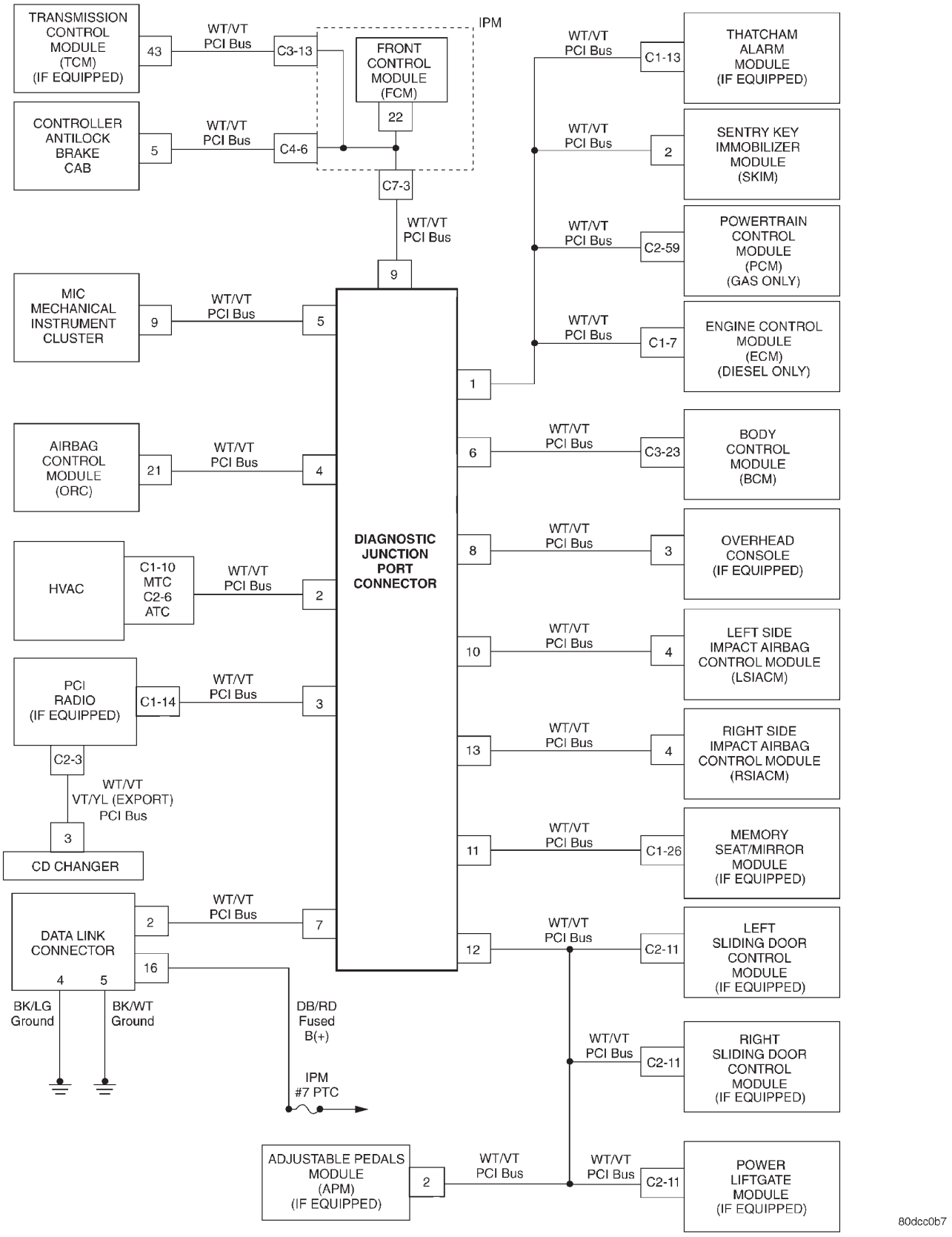

10.4.1 PCM COMMUNICATION

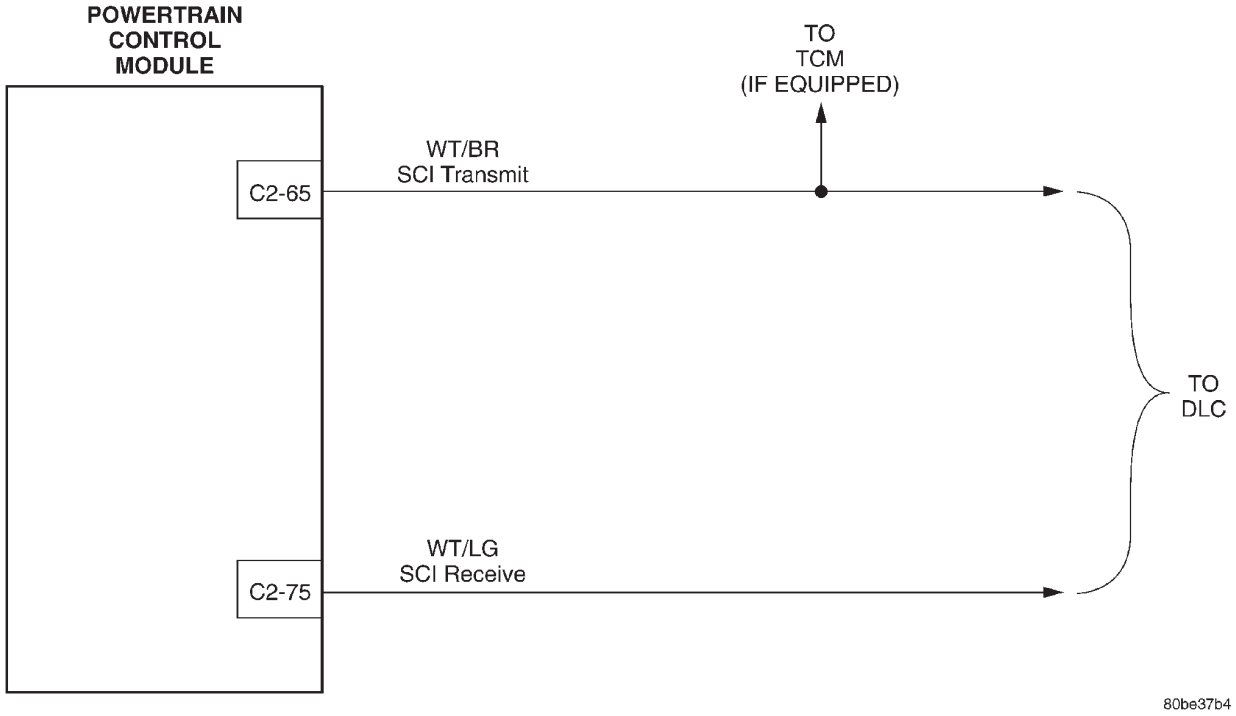

10.4.2 ECM & CABIN HEATER ASSIST COMMUNICATION - DIESEL ONLY

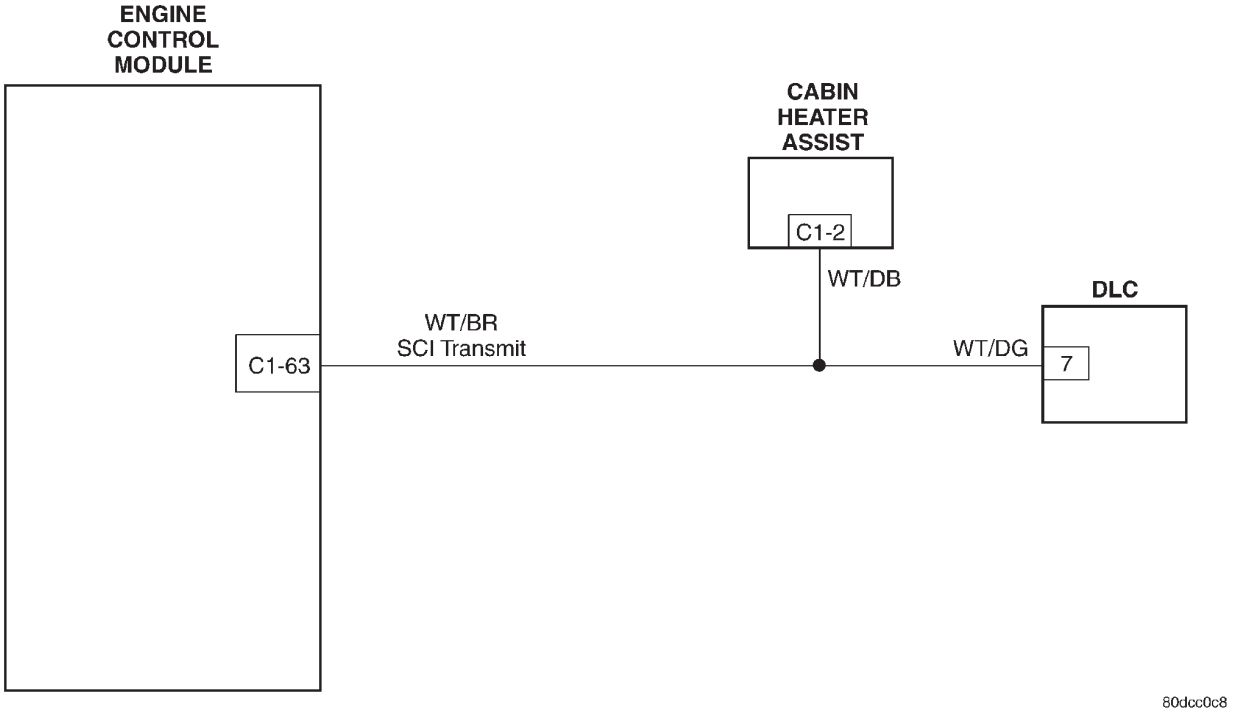

10.5 DOOR AJAR SYSTEM

10.5.1 DOOR AJAR SYSTEM WITH POWER SLIDING DOORS

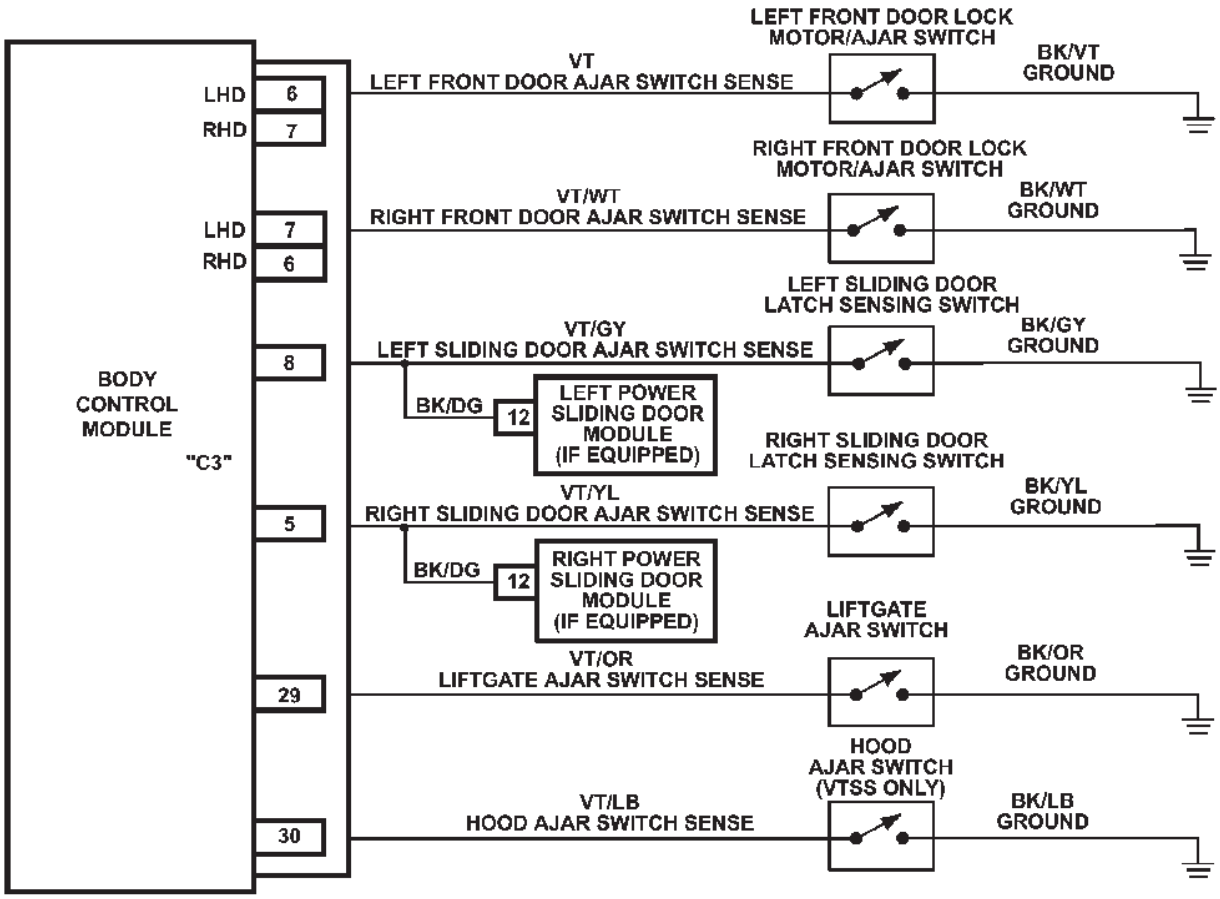

80d85f29

10.5.2 DOOR AJAR WITHOUT POWER SLIDING DOORS

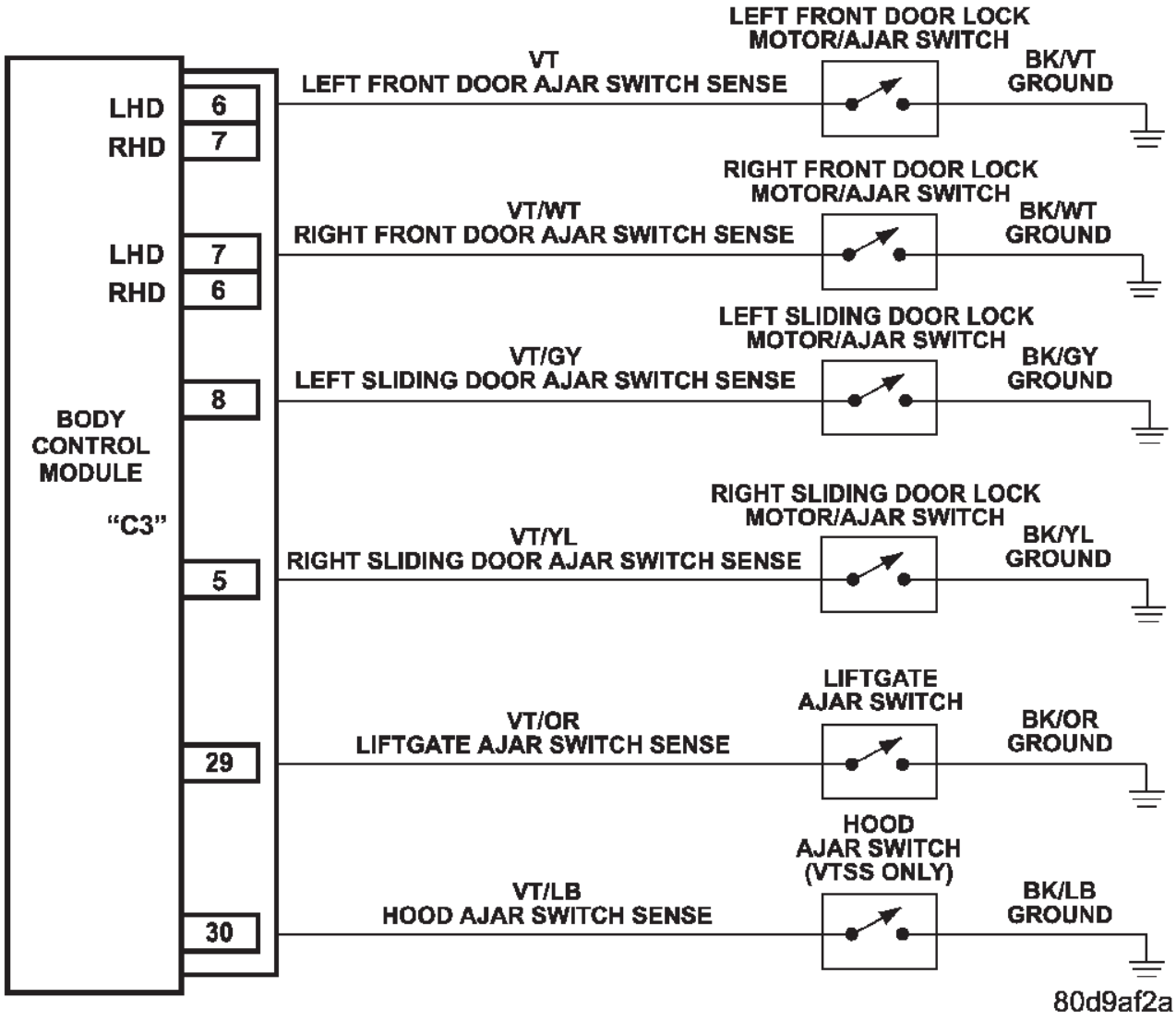

10.6 EXTERIOR LIGHTING

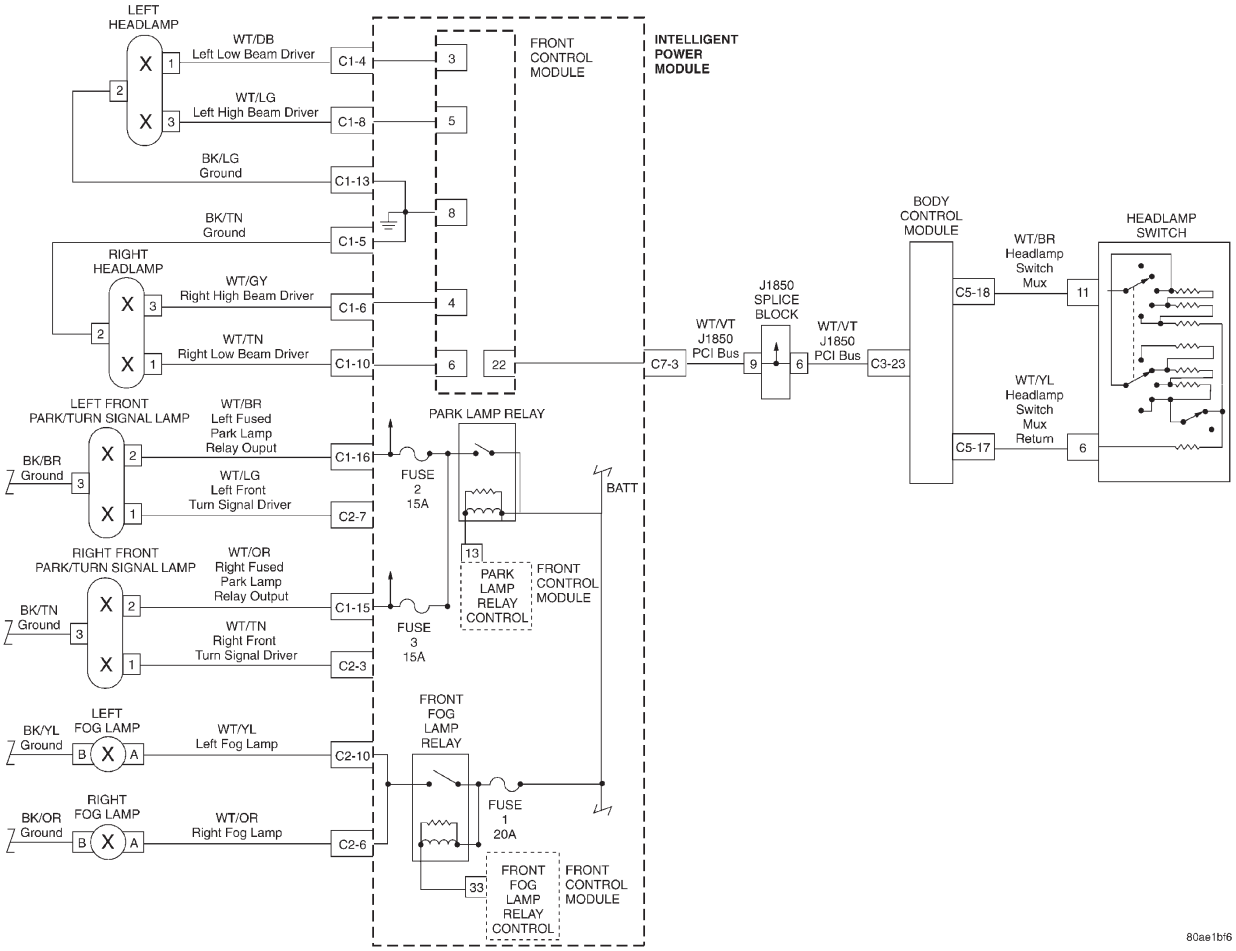

10.7 IGNITION SWITCH

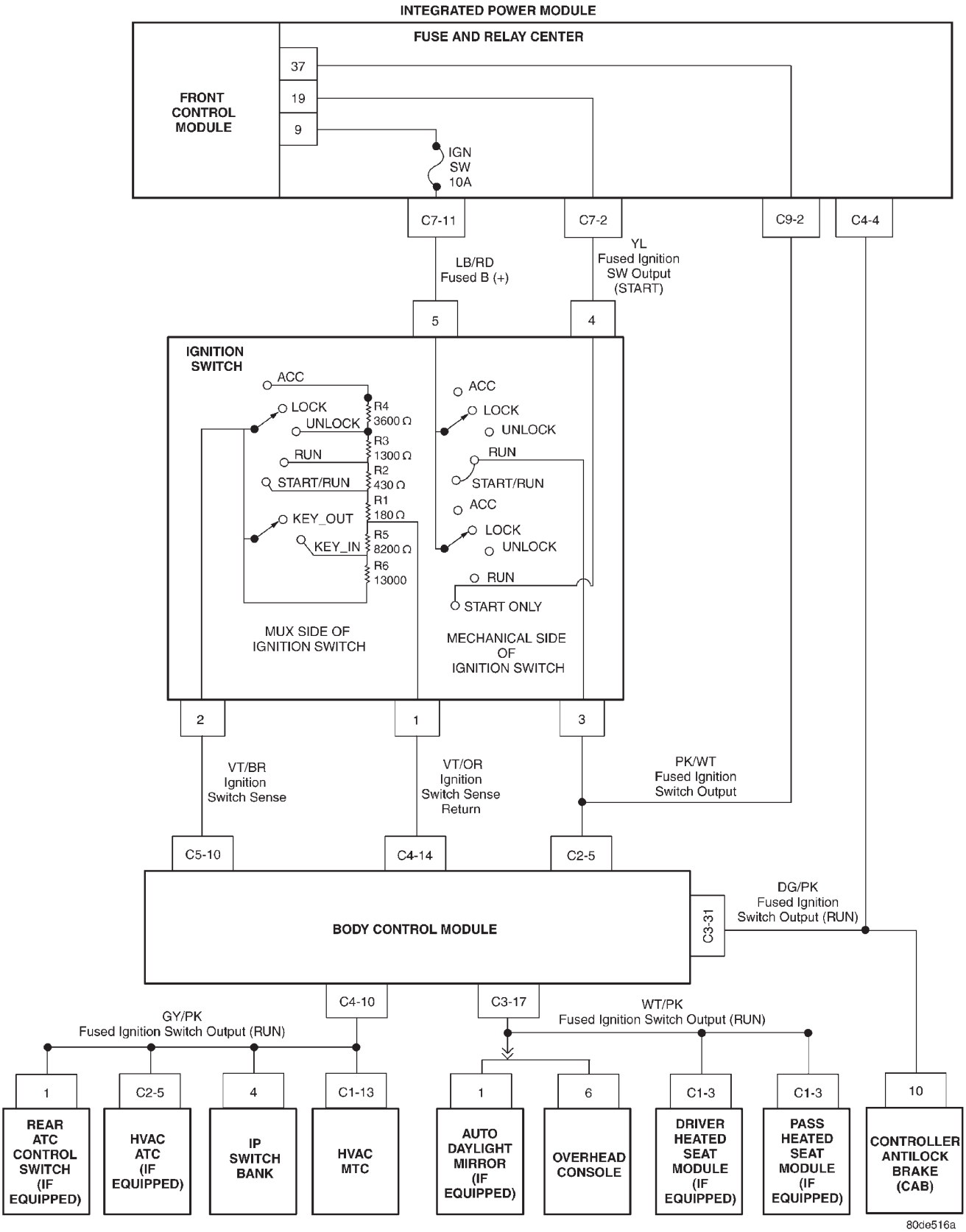

10.8 INSTRUMENT CLUSTER

10.8.1 INSTRUMENT CLUSTER — BASE

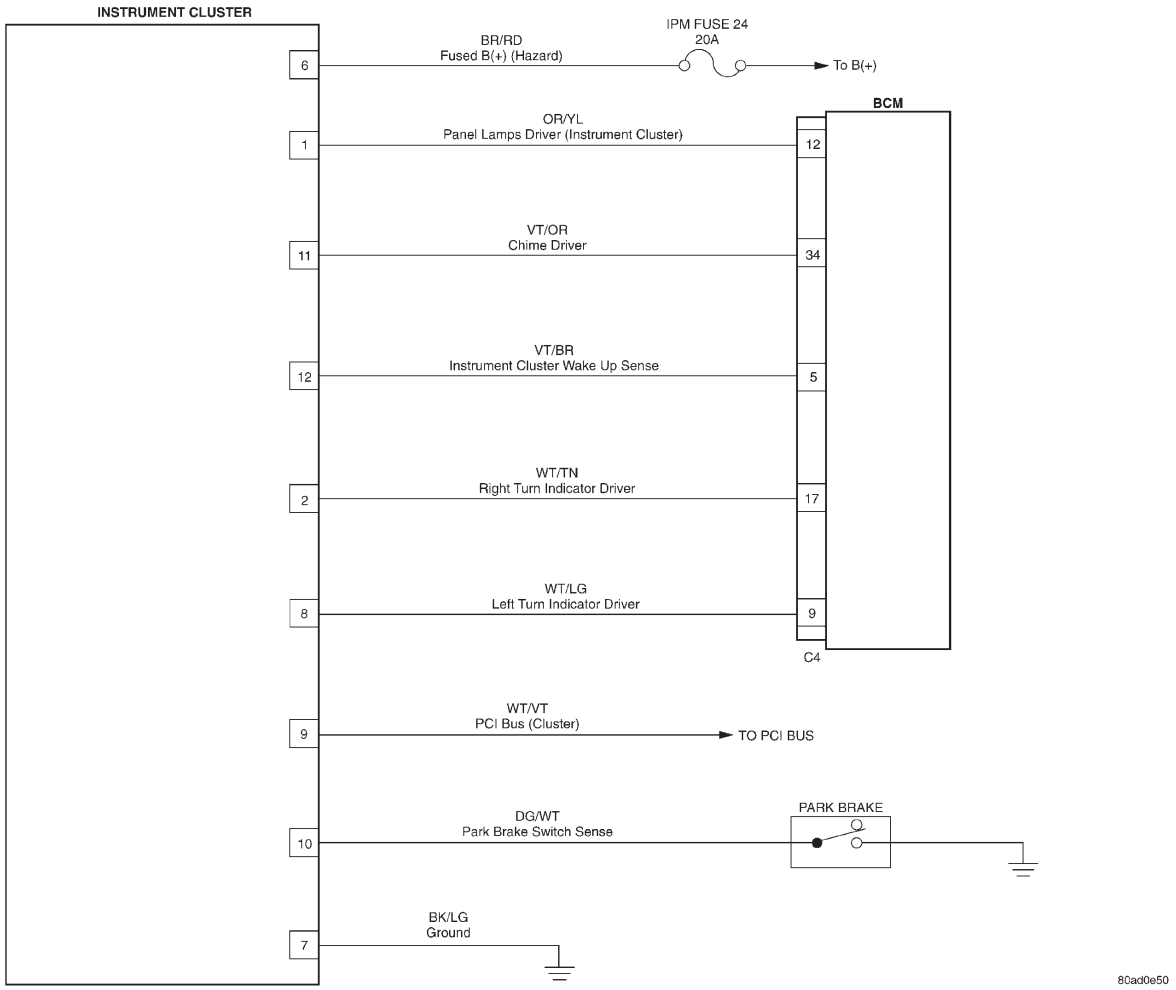

10.8.2 INSTRUMENT CLUSTER & MESSAGE CENTER

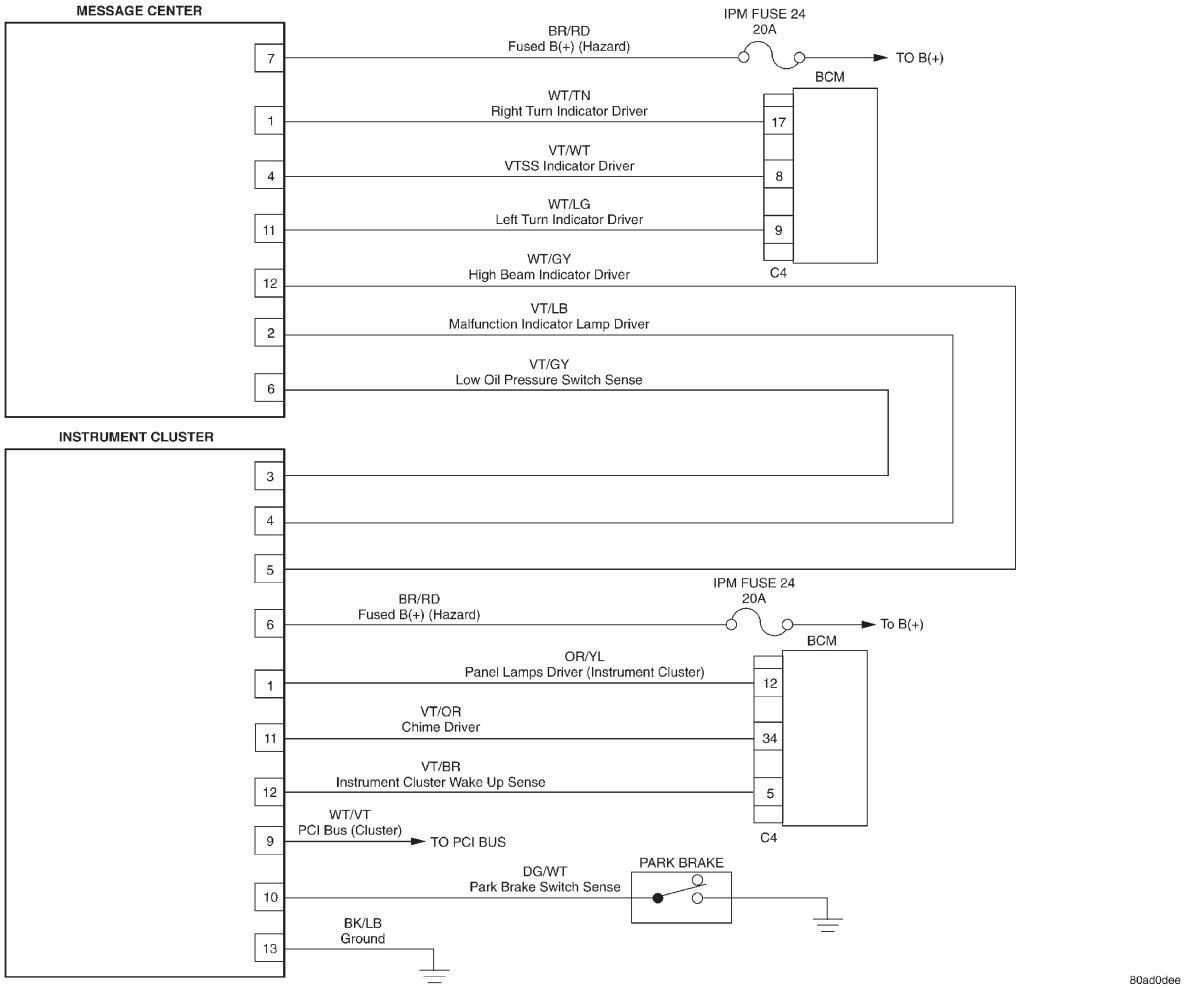

10.9 INTEGRATED POWER MODULE/BODY CONTROL MODULE POWER AND GROUNDS

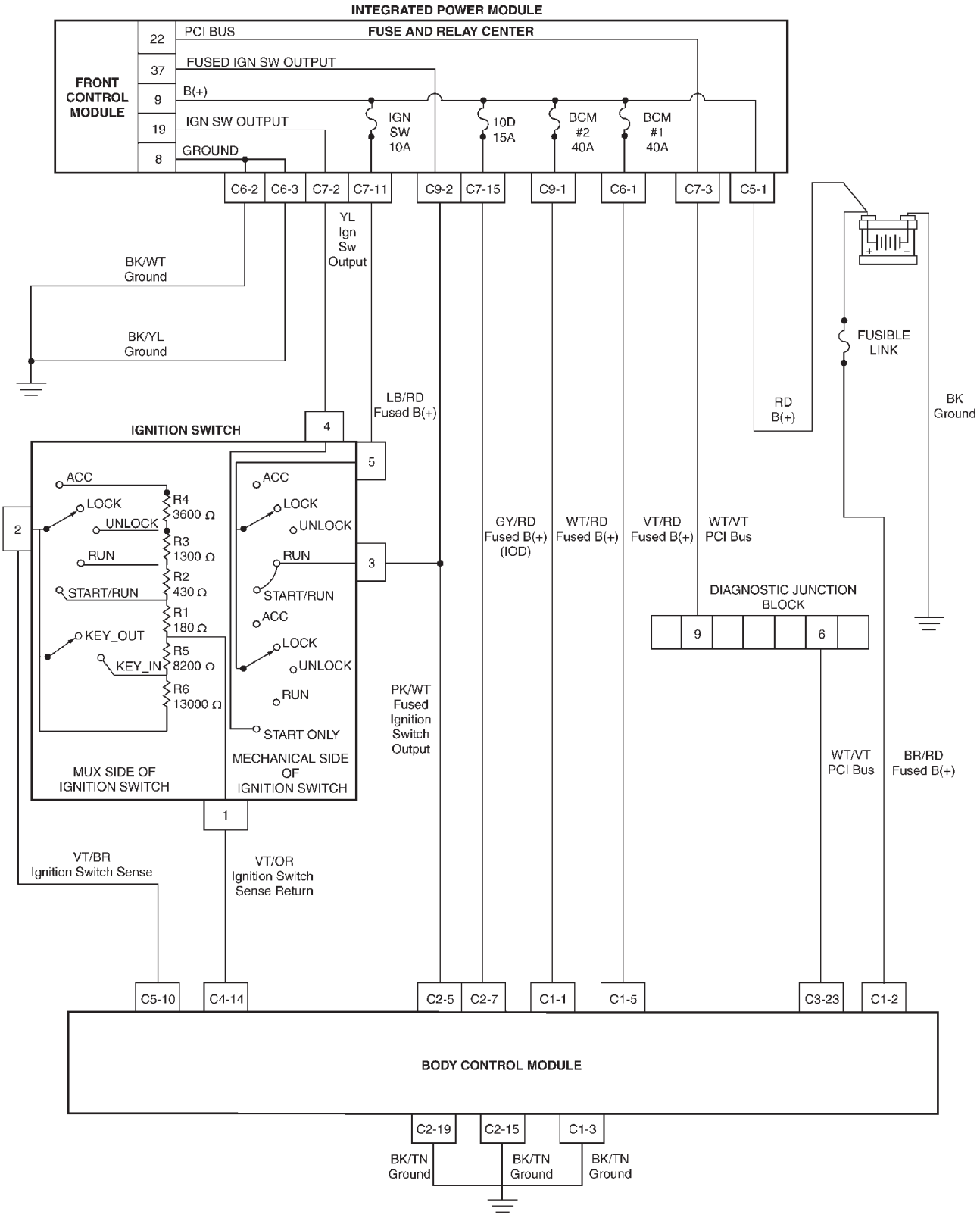

80a69a03

10.10 INTERIOR LIGHTING

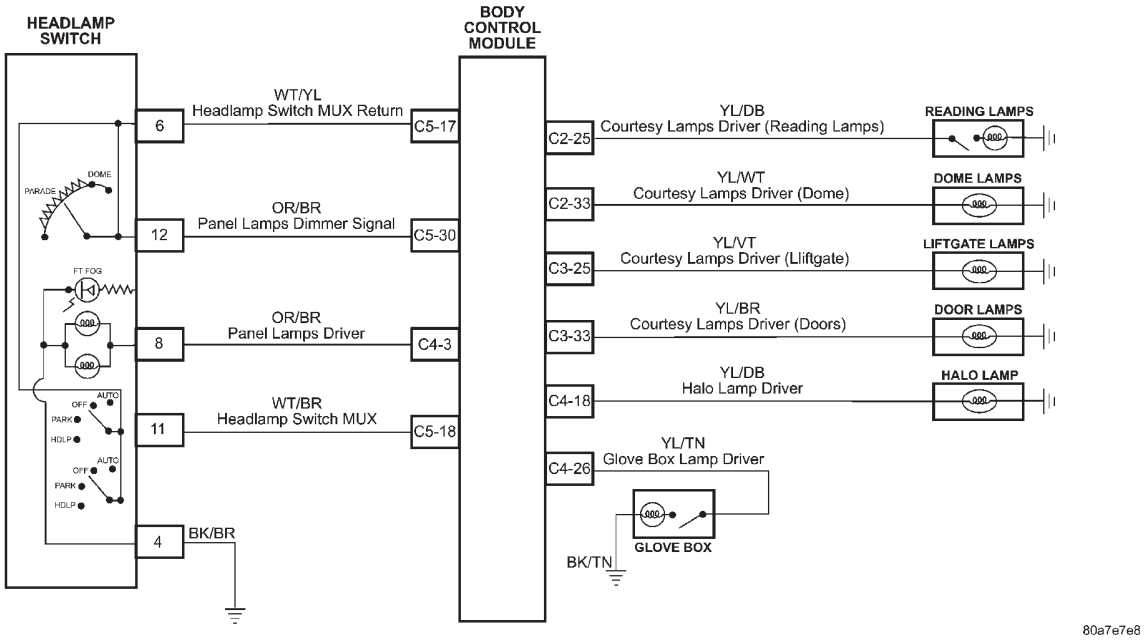

10.11 MANUAL TEMPERATURE CONTROLS

10.11.1 BASE MANUAL TEMPERATURE CONTROL SYSTEM, LHD

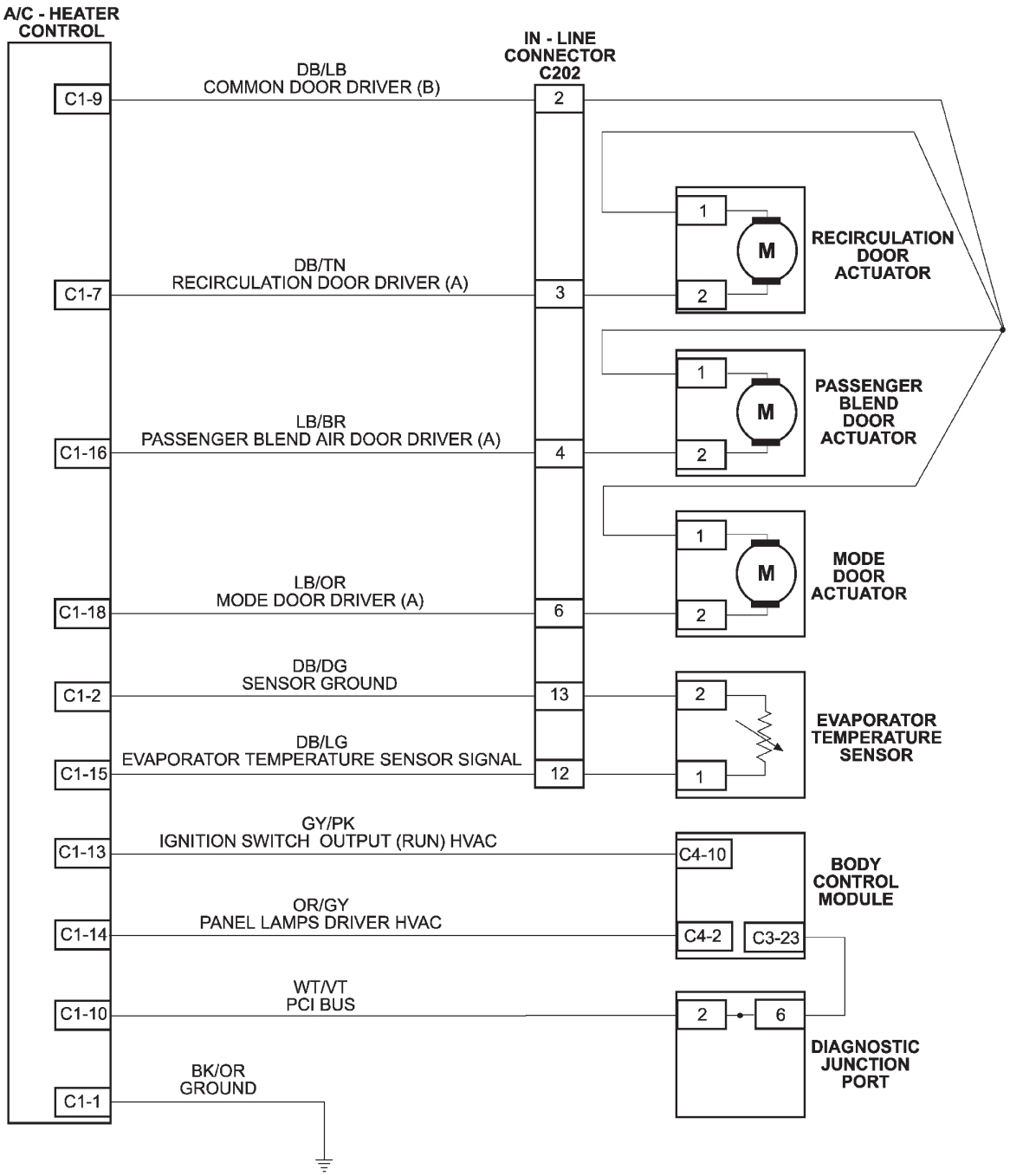

80d4e6e5

10.11.2 BASE MANUAL TEMPERATURE CONTROL SYSTEM, RHD

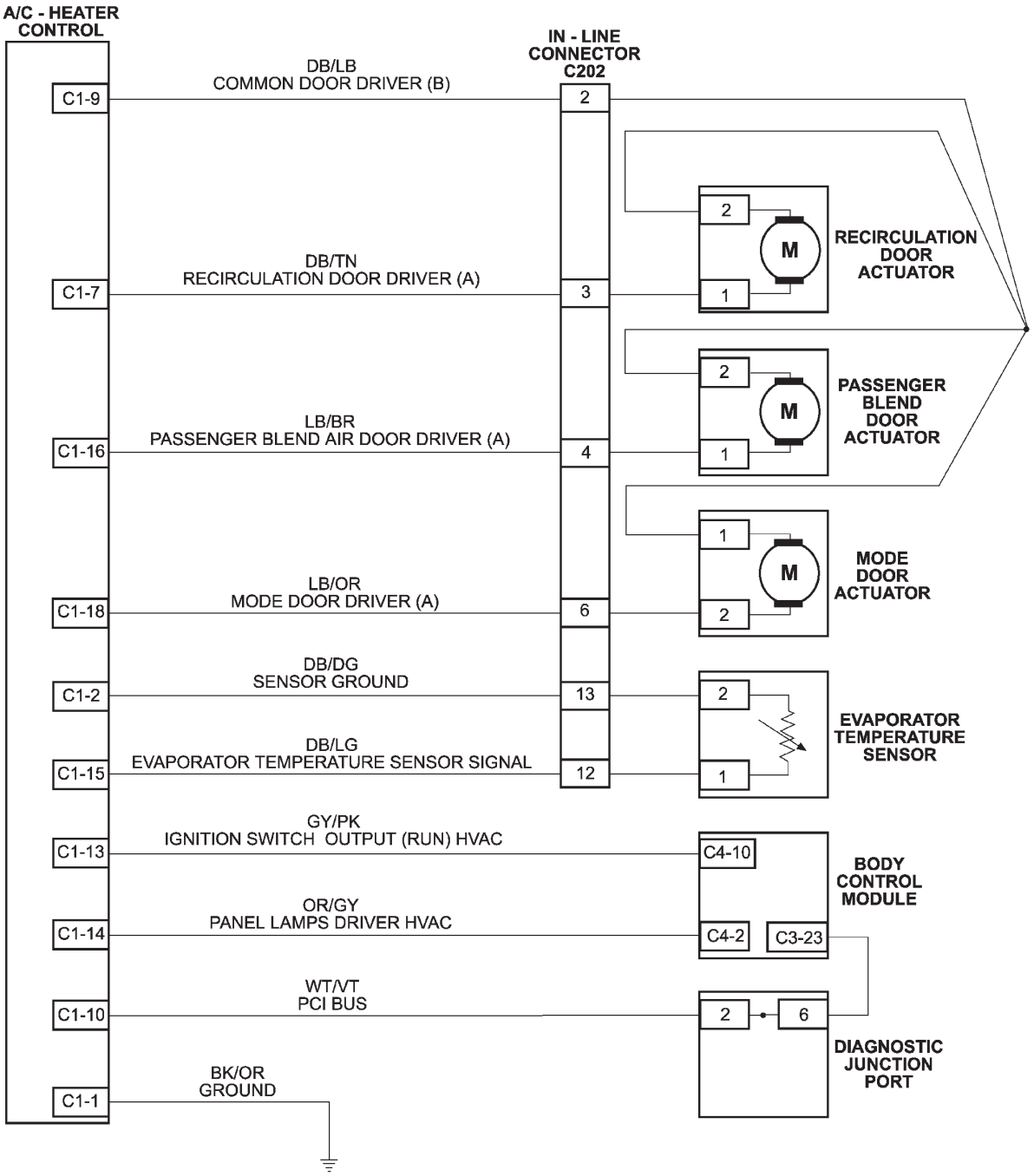

80d4e863

10.11 MANUAL TEMPERATURE CONTROLS (Continued)

10.11.3 DUAL-ZONE & THREE-ZONE (FRONT) MANUAL TEMPERATURE CONTROL SYSTEM, LHD

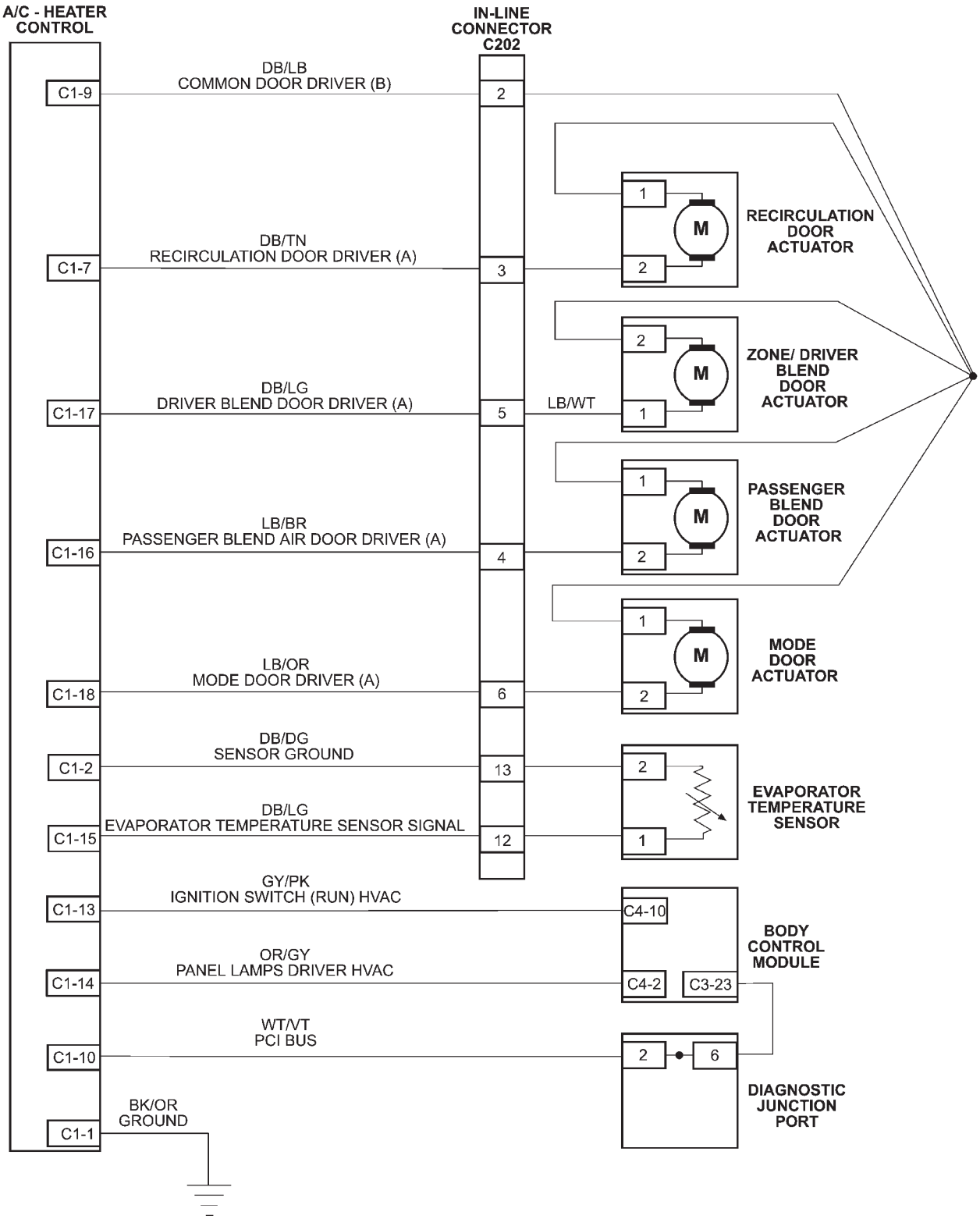

80d4e808

10.11.4 DUAL-ZONE (FRONT) MANUAL TEMPERATURE CONTROL SYSTEM, RHD

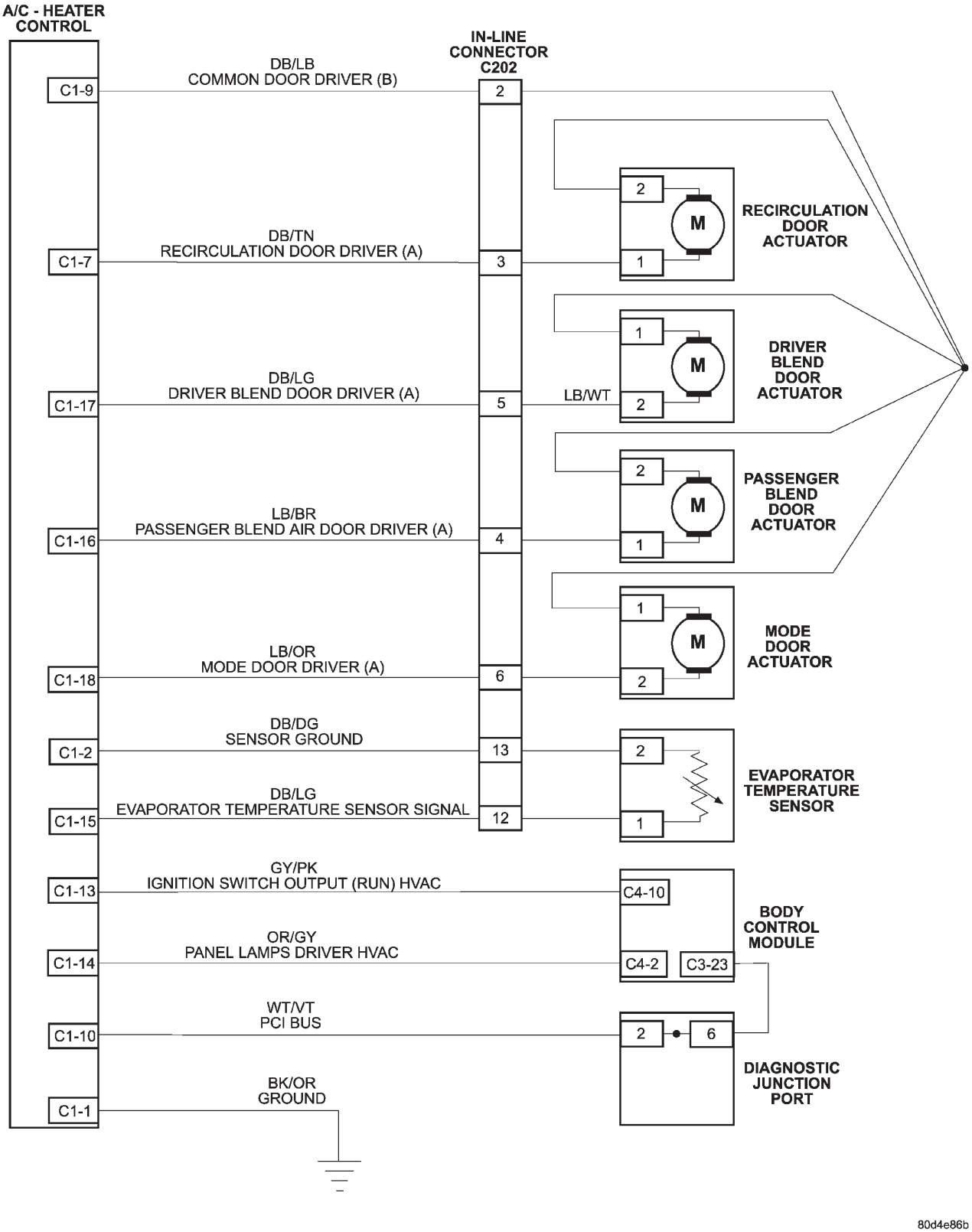

10.11 MANUAL TEMPERATURE CONTROLS (Continued)
10.11.5 THREE ZONE REAR MANUAL TEMPERATURE CONTROL SYSTEM

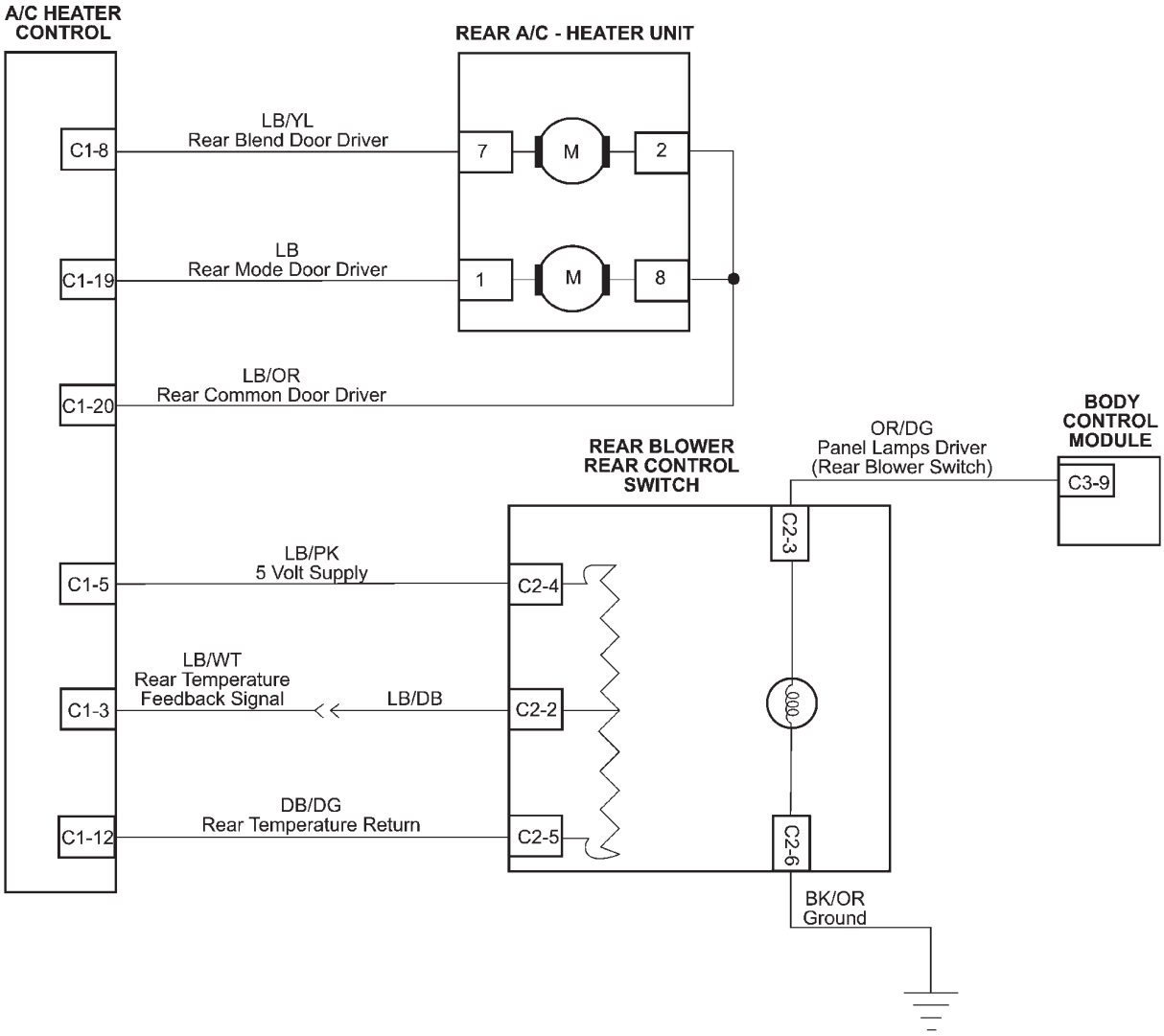

80d4e48b

10.11.6 FRONT BLOWER MOTOR

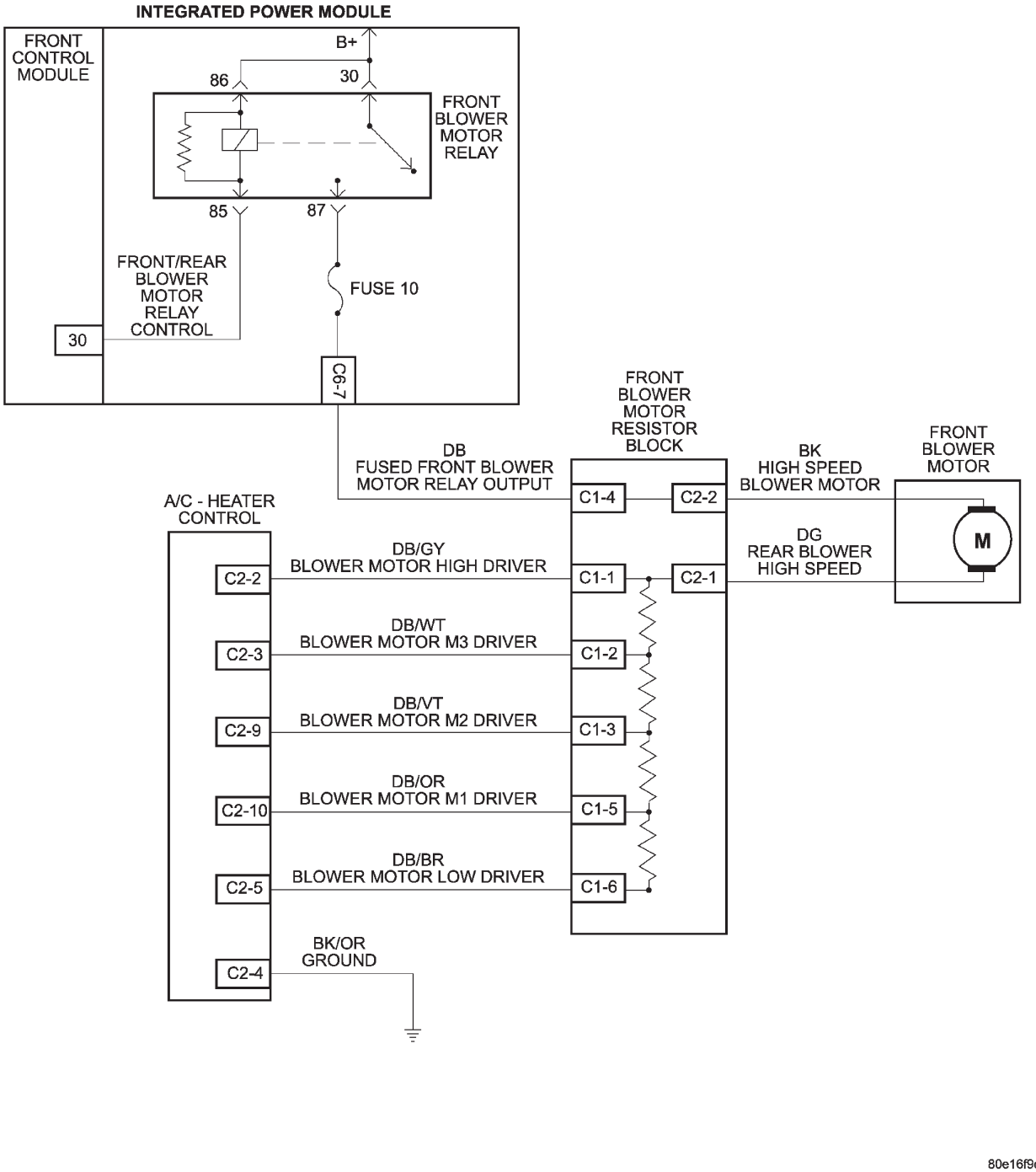

10.11 MANUAL TEMPERATURE CONTROLS (Continued)
10.11.7 REAR BLOWER MOTOR

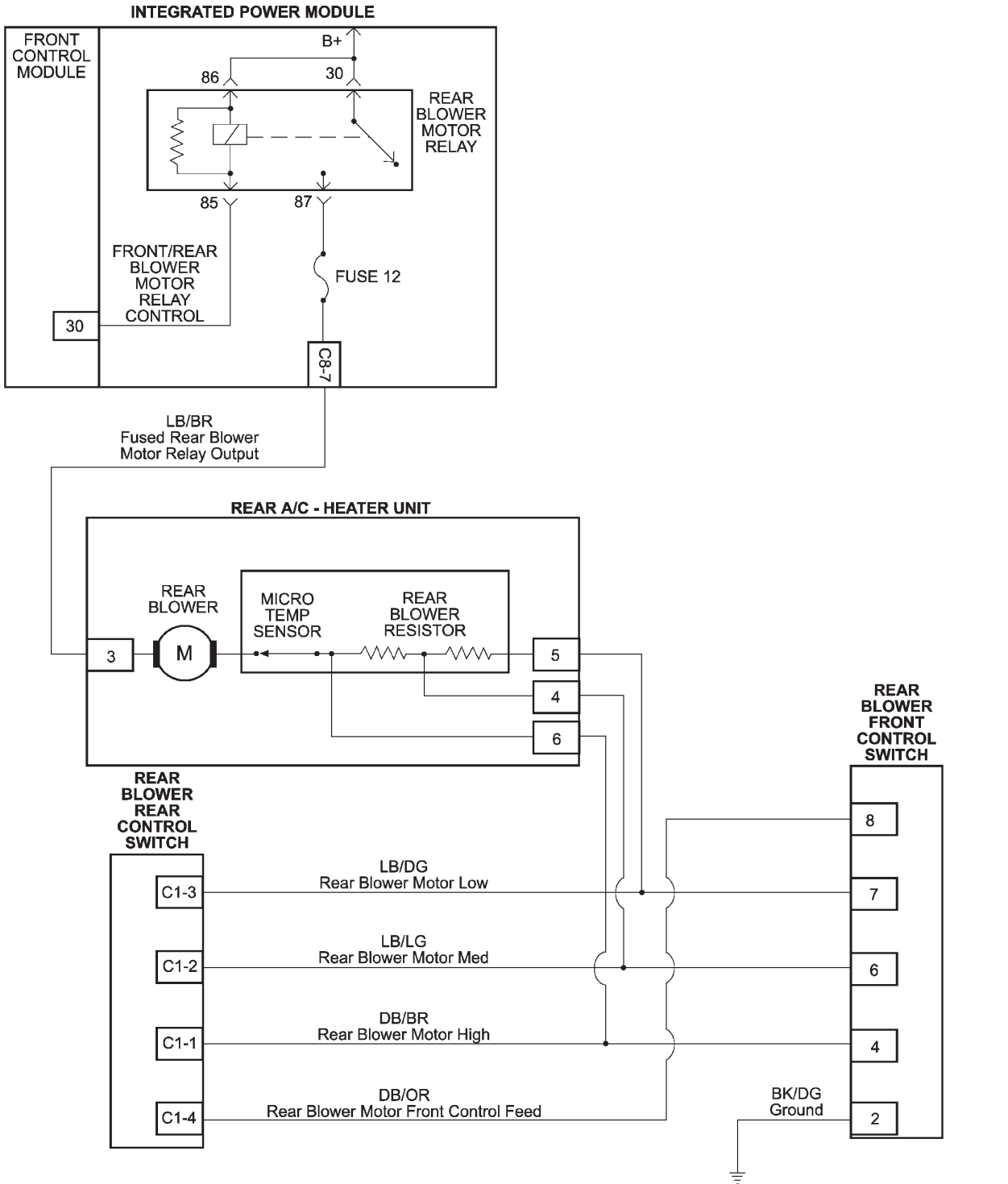

10.11.8 DIESEL CABIN HEATER ASSIT (DCHA)

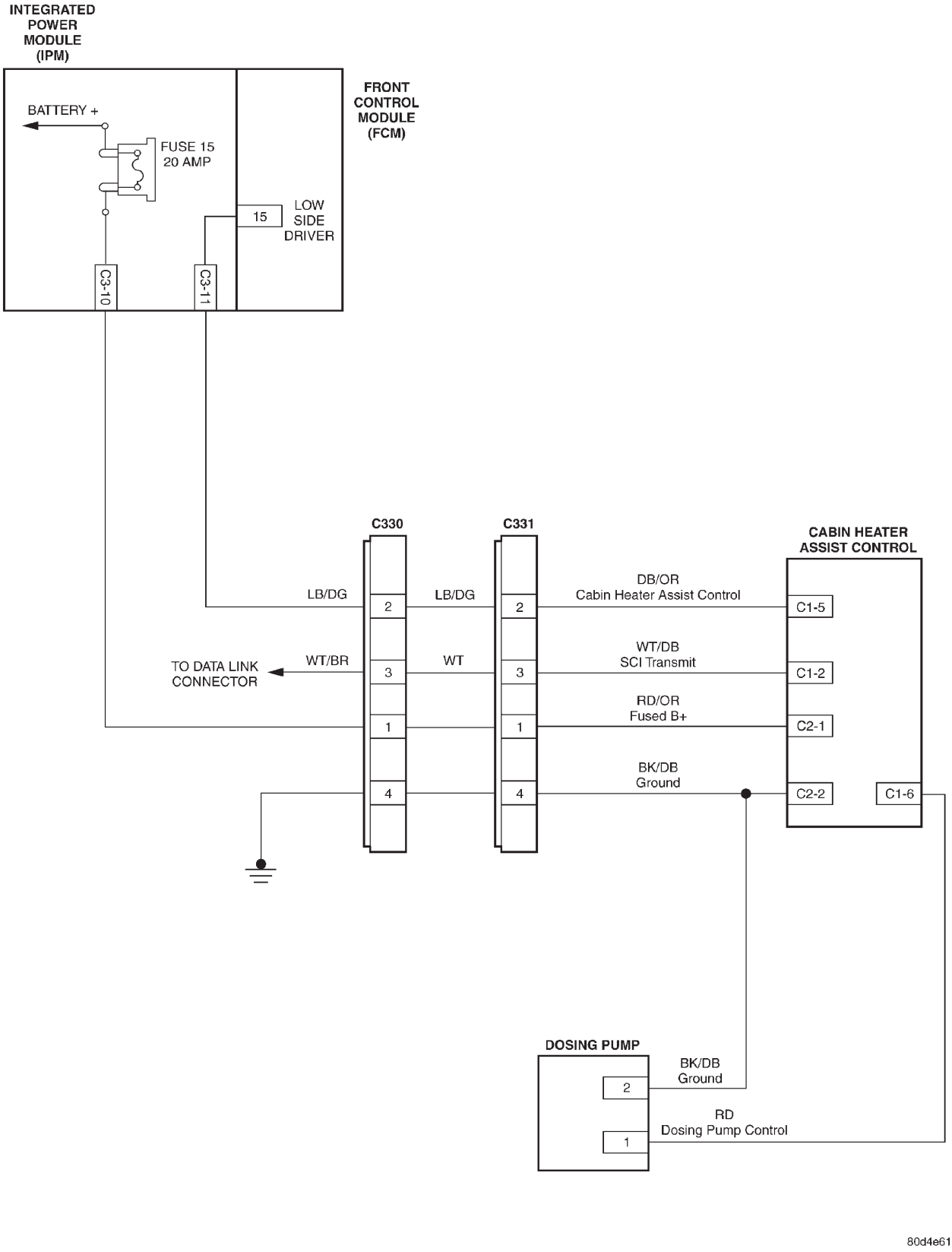

10.12 MEMORY SYSTEM

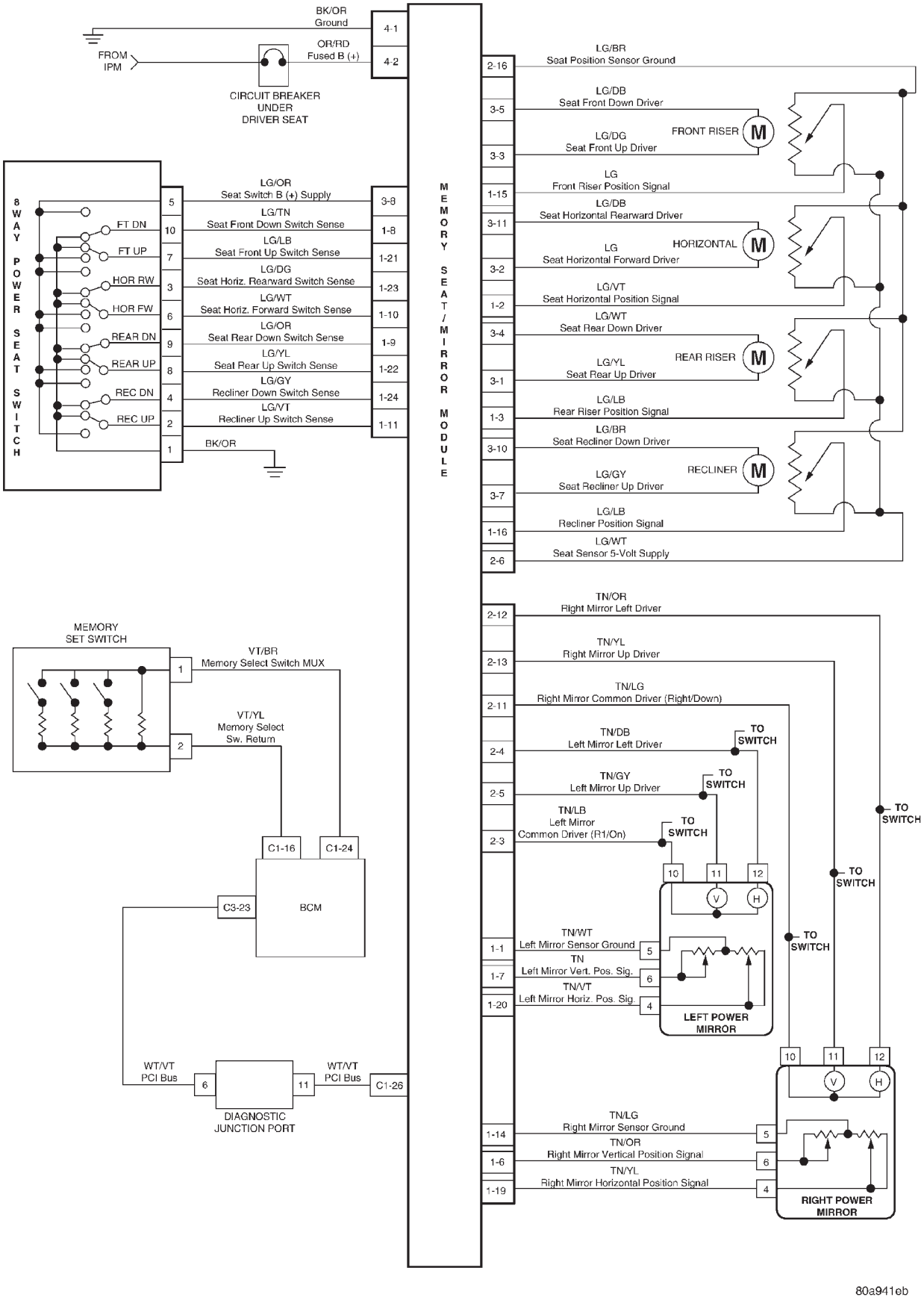

10.13 OVERHEAD CONSOLE

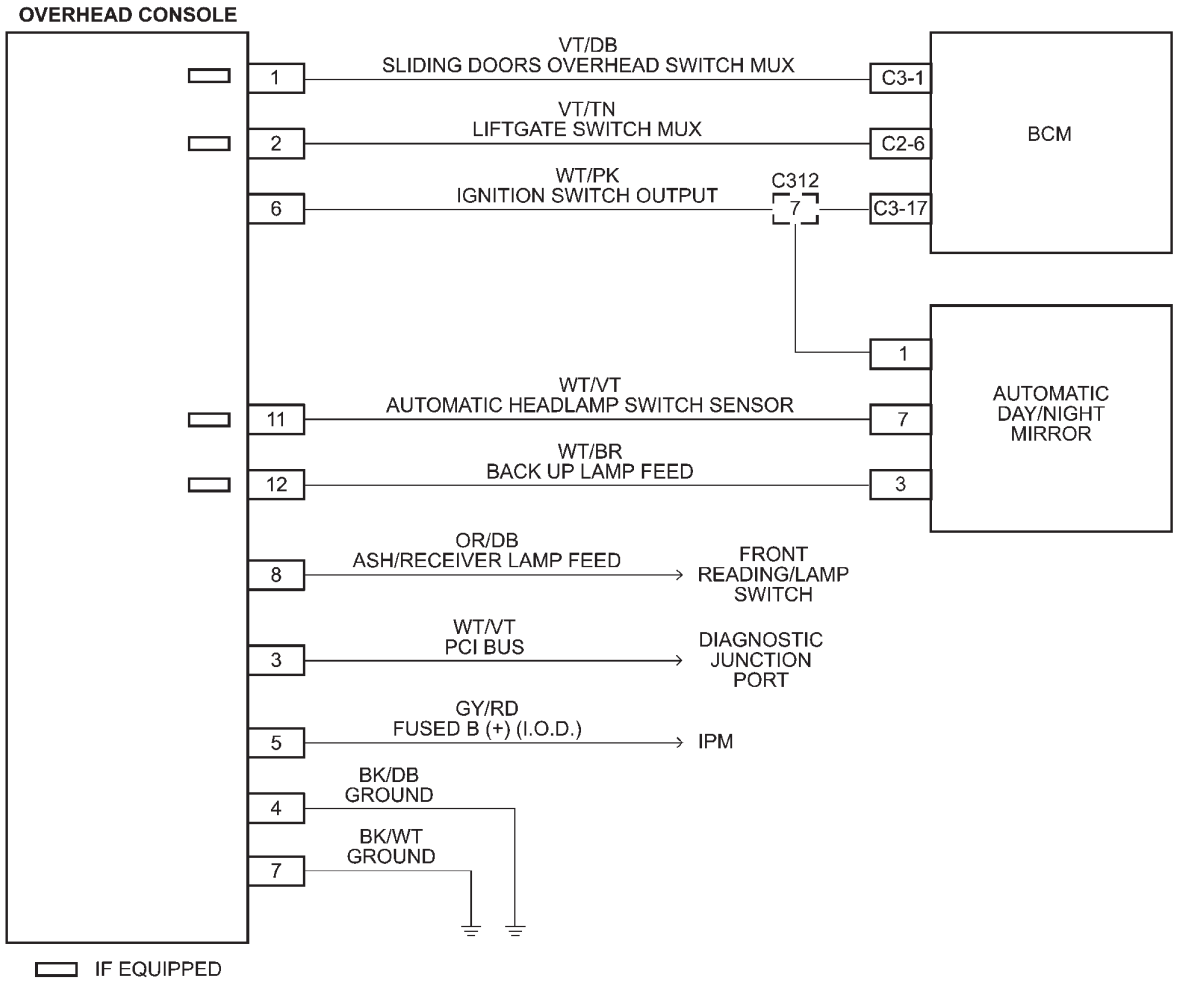

80af5332

10.14 POWER DOOR LOCKS/RKE

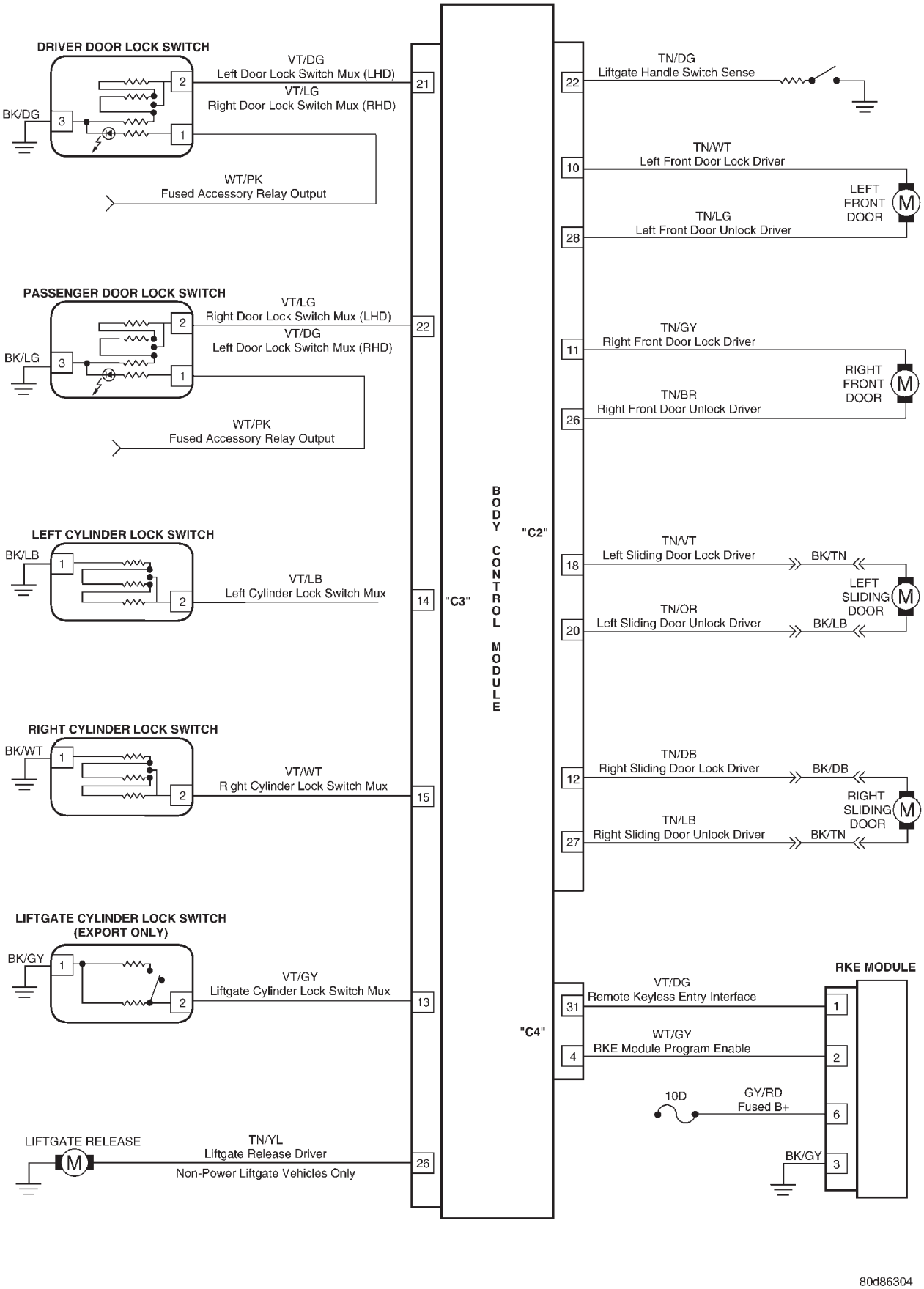

80d86304

10.15 POWER FOLDING MIRROR LHD (EXPORT ONLY)

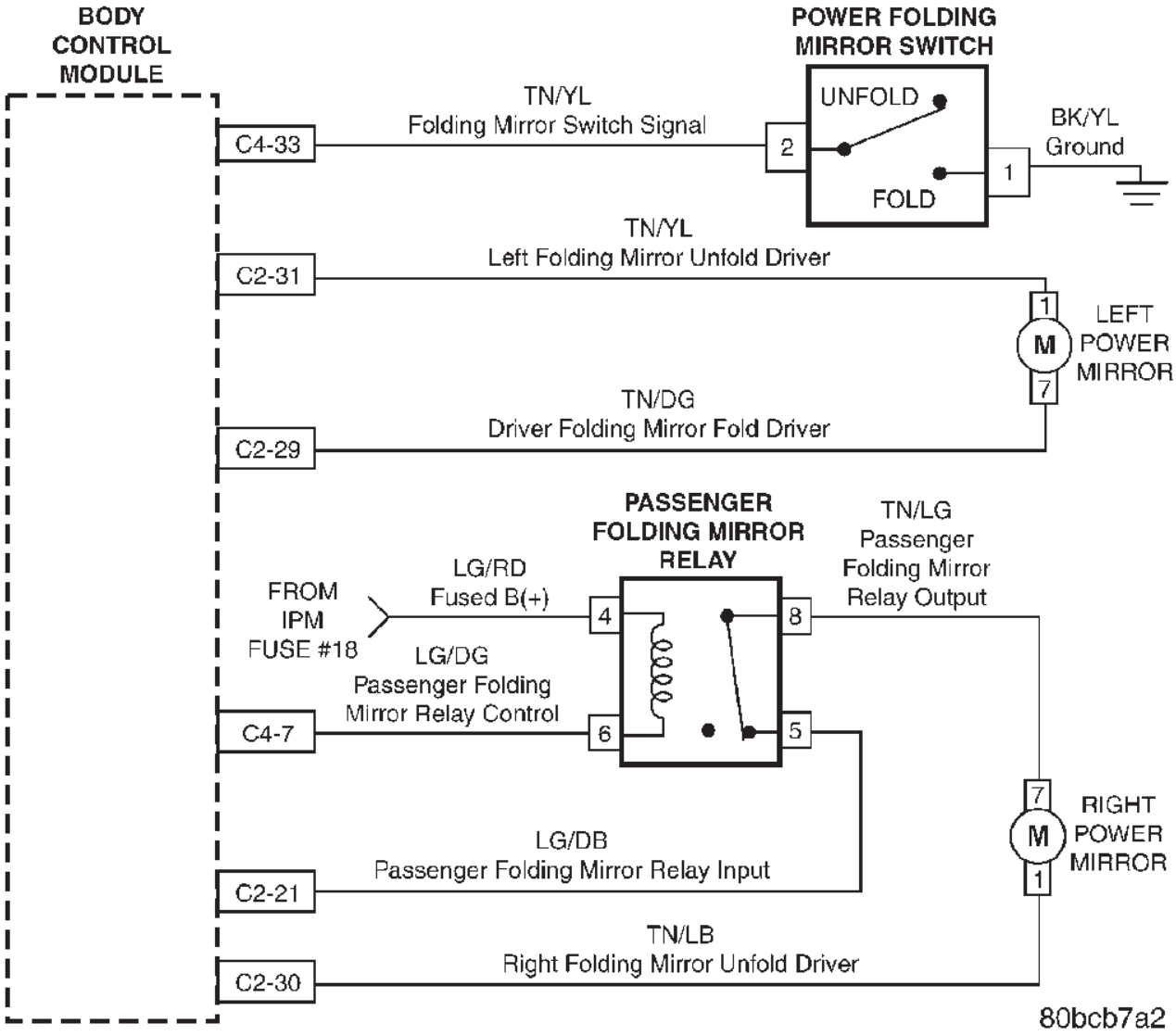

10.16 POWER FOLDING MIRROR RHD

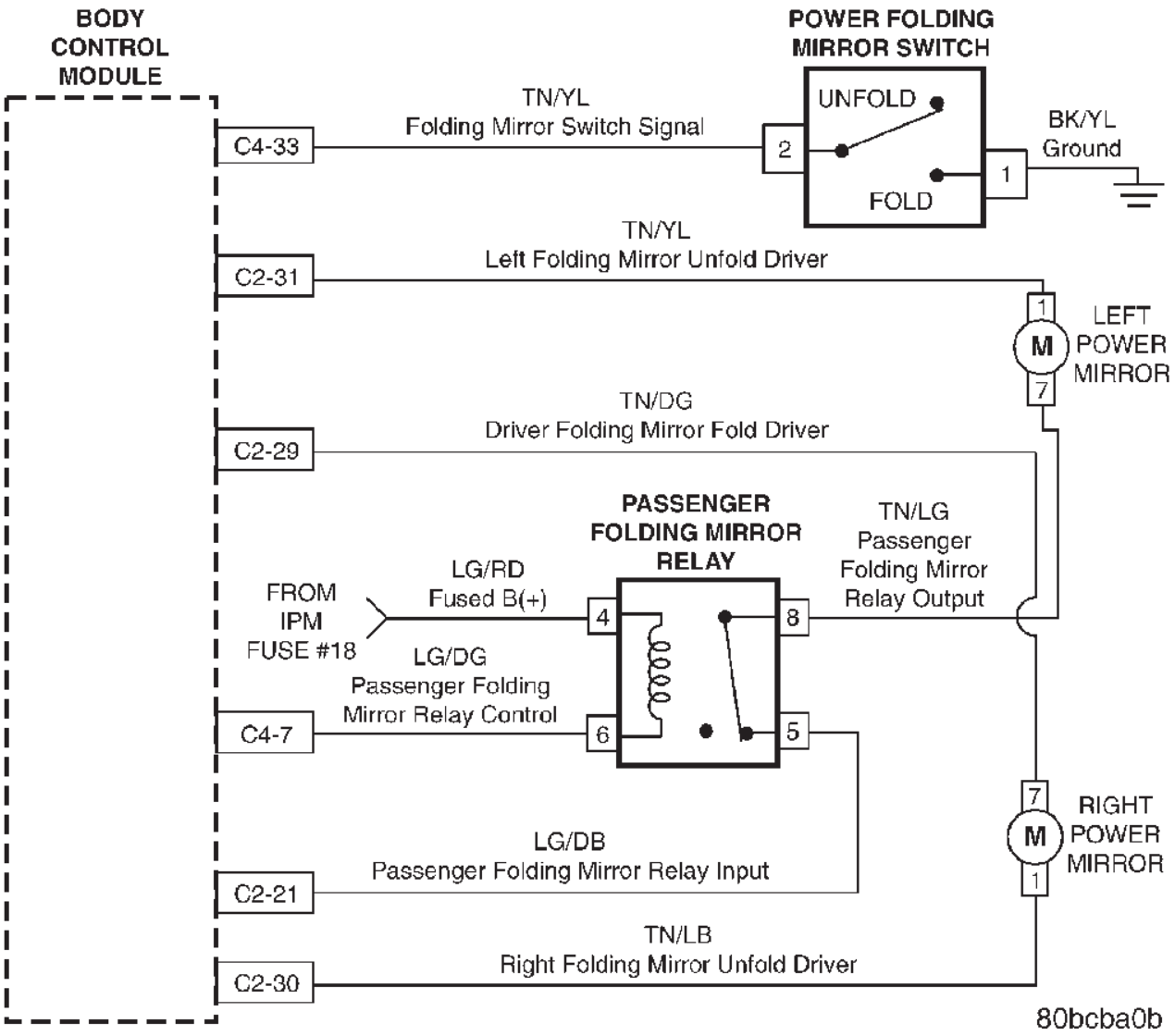

10.17 POWER LIFTGATE SYSTEM

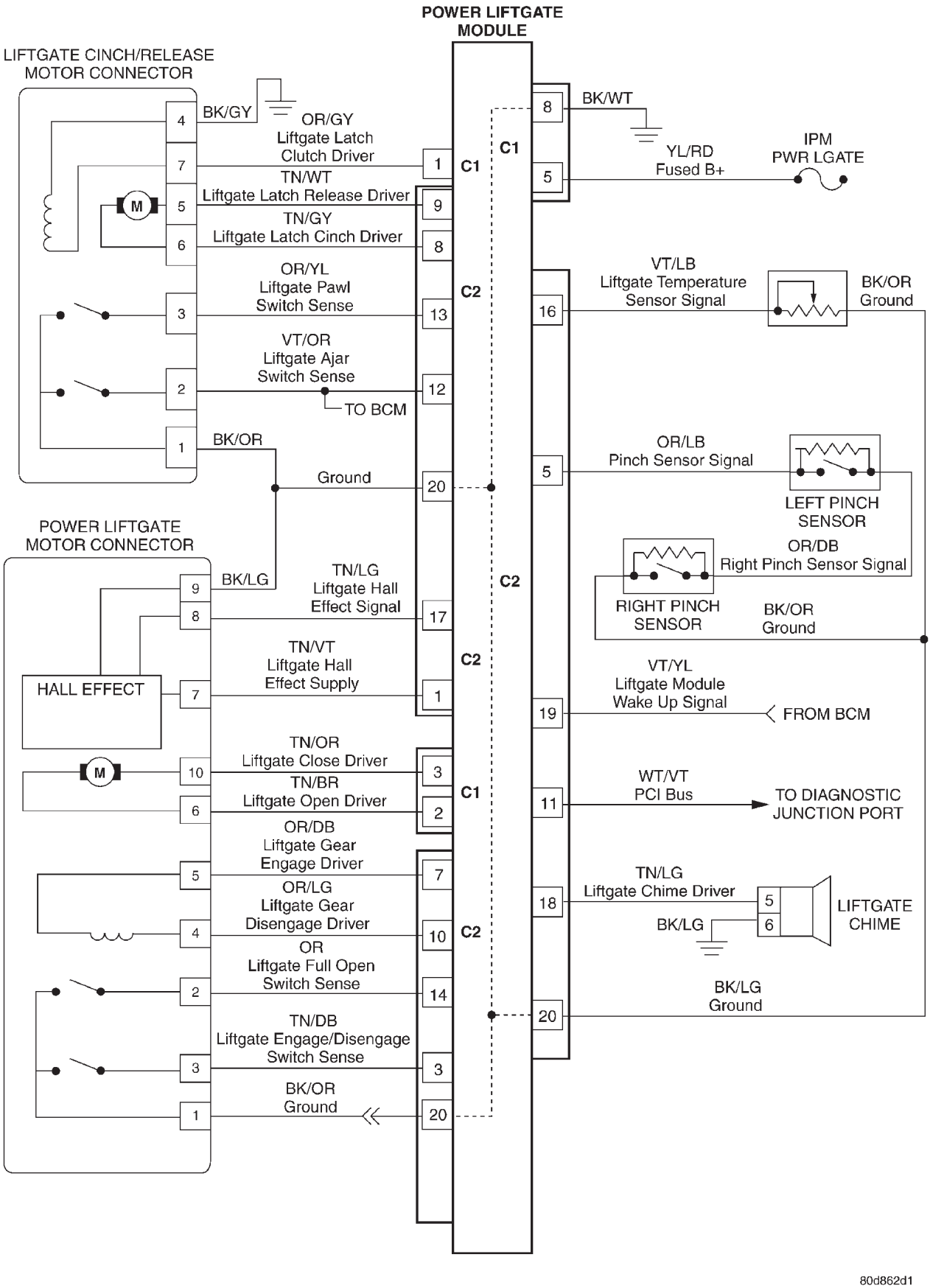

10.18 POWER SLIDING DOOR SYSTEM

10.18.1 LEFT POWER SLIDING DOOR

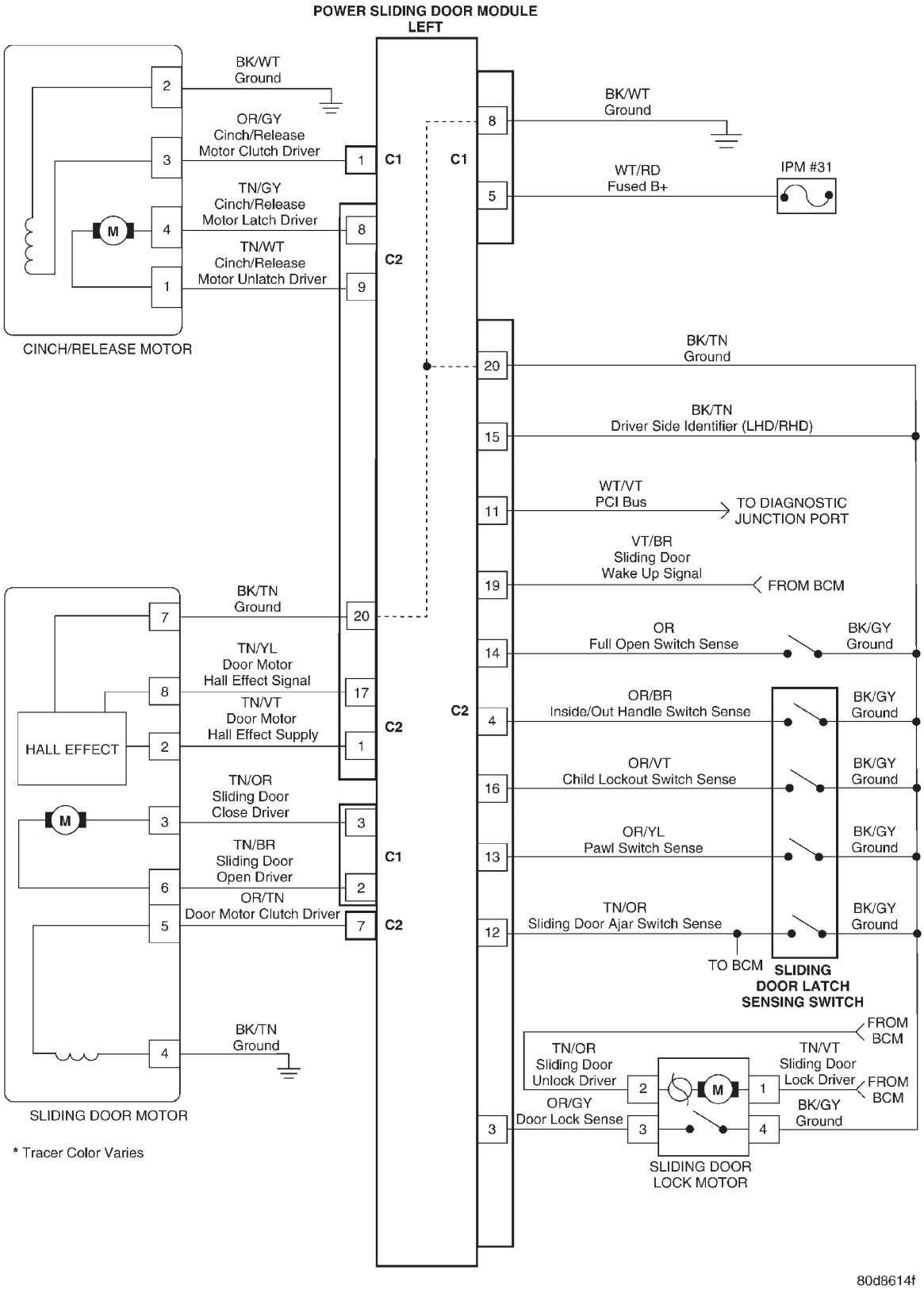

10.18.2 RIGHT POWER SLIDING DOOR

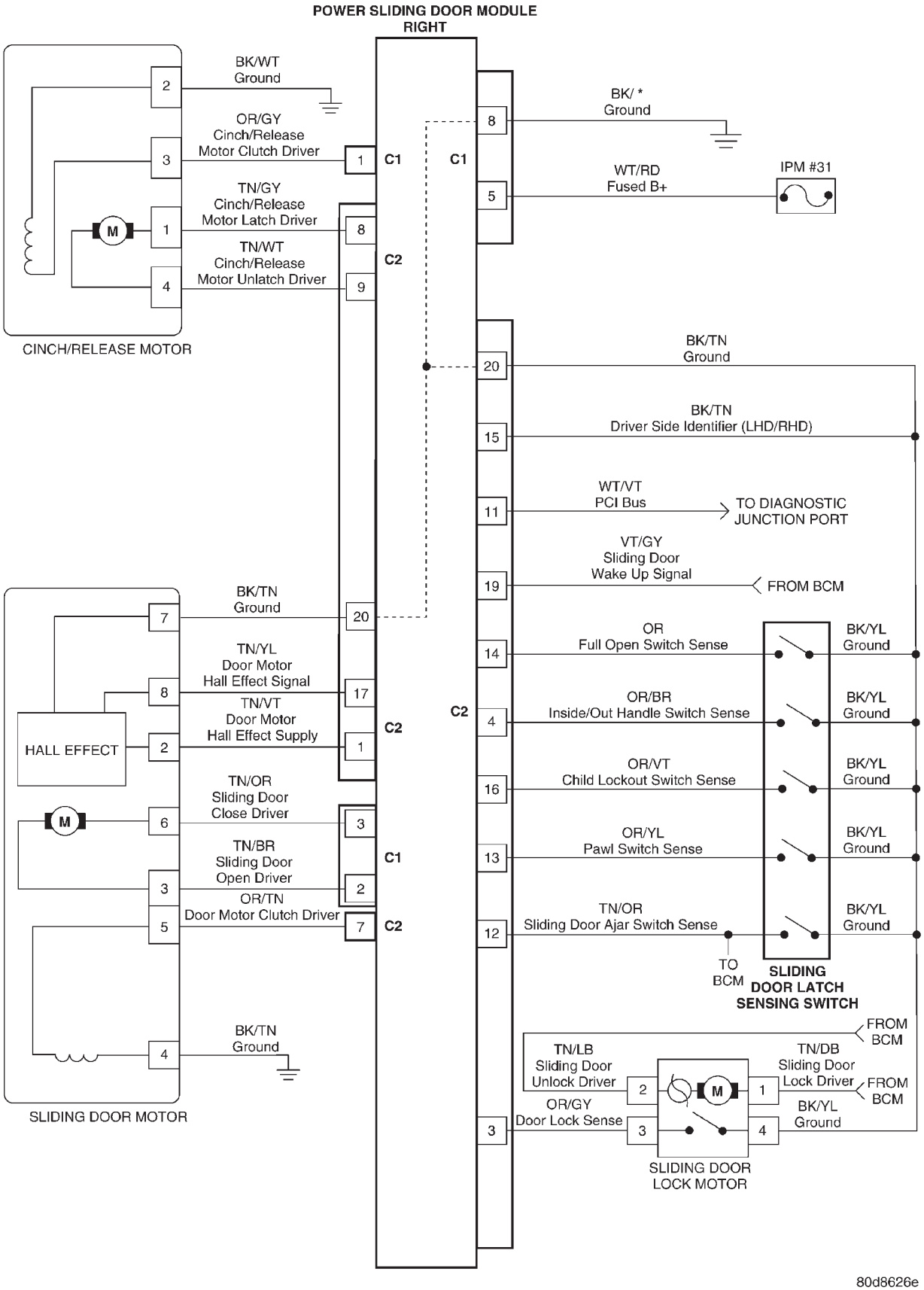

10.19 POWER SLIDING DOOR AND LIFTGATE SWITCHES

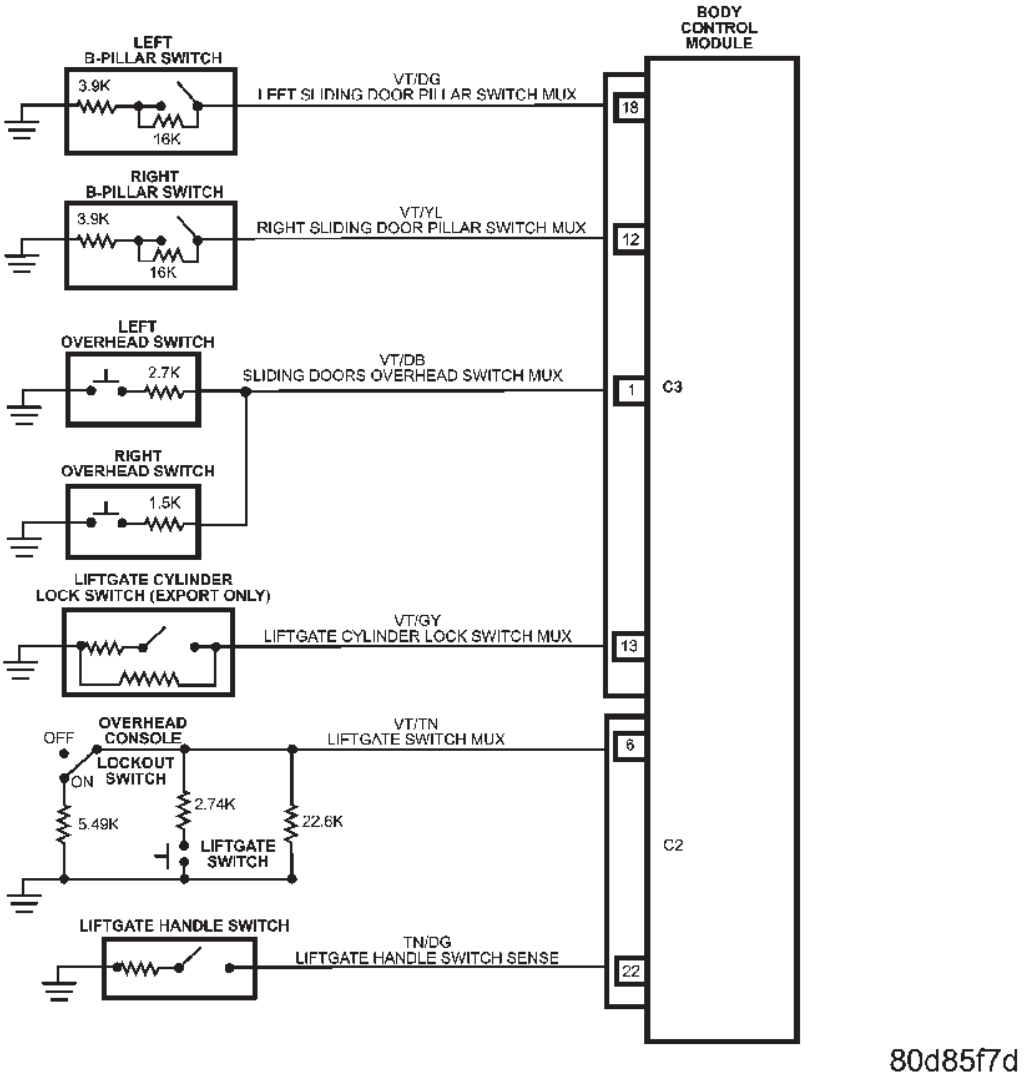

80d85f7d

10.20 REAR DEFOG/HEATED MIRROR/FRONT WIPER DE-ICE

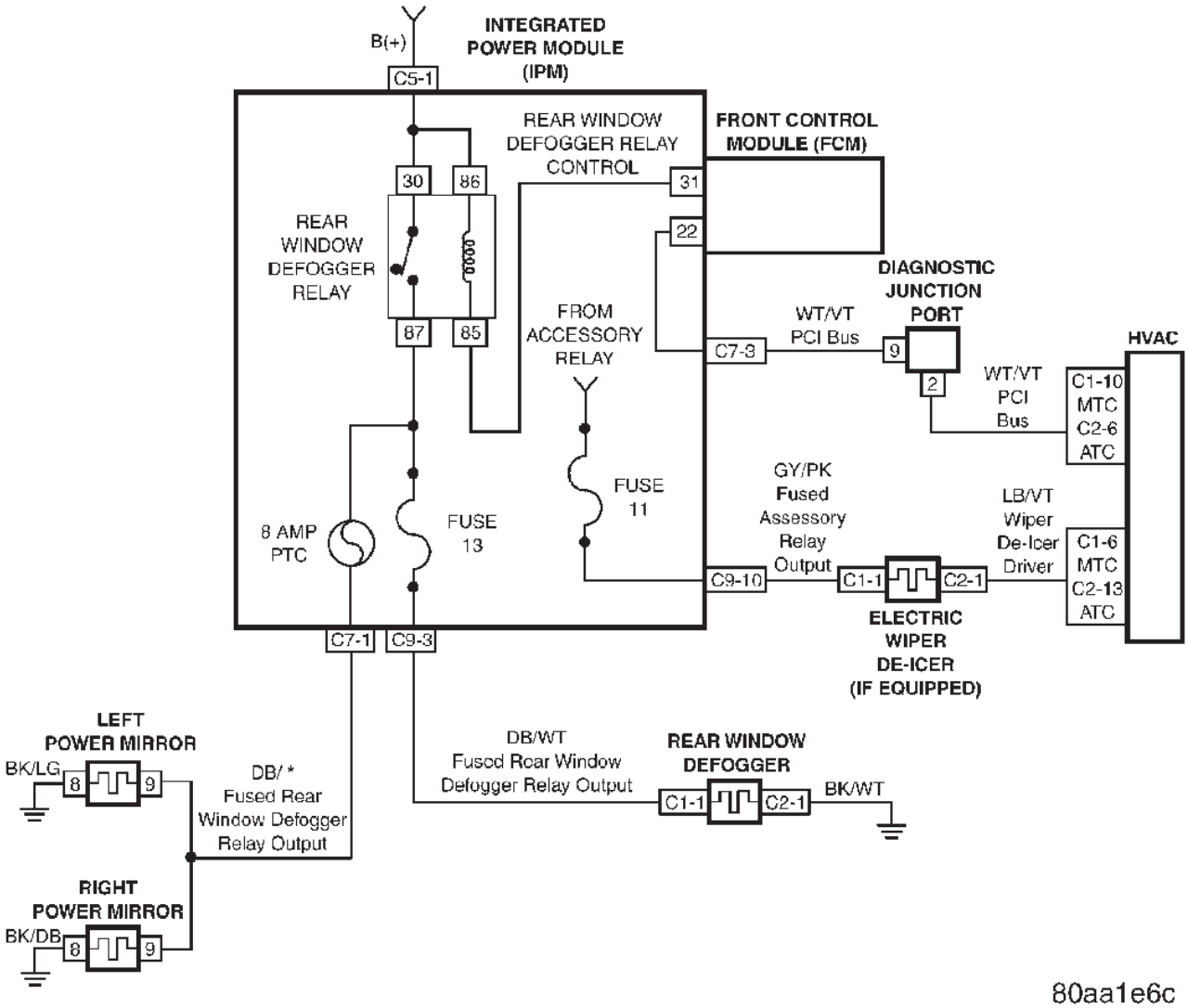

80aa1e6c

10.21 VEHICLE THEFT SECURITY SYSTEM

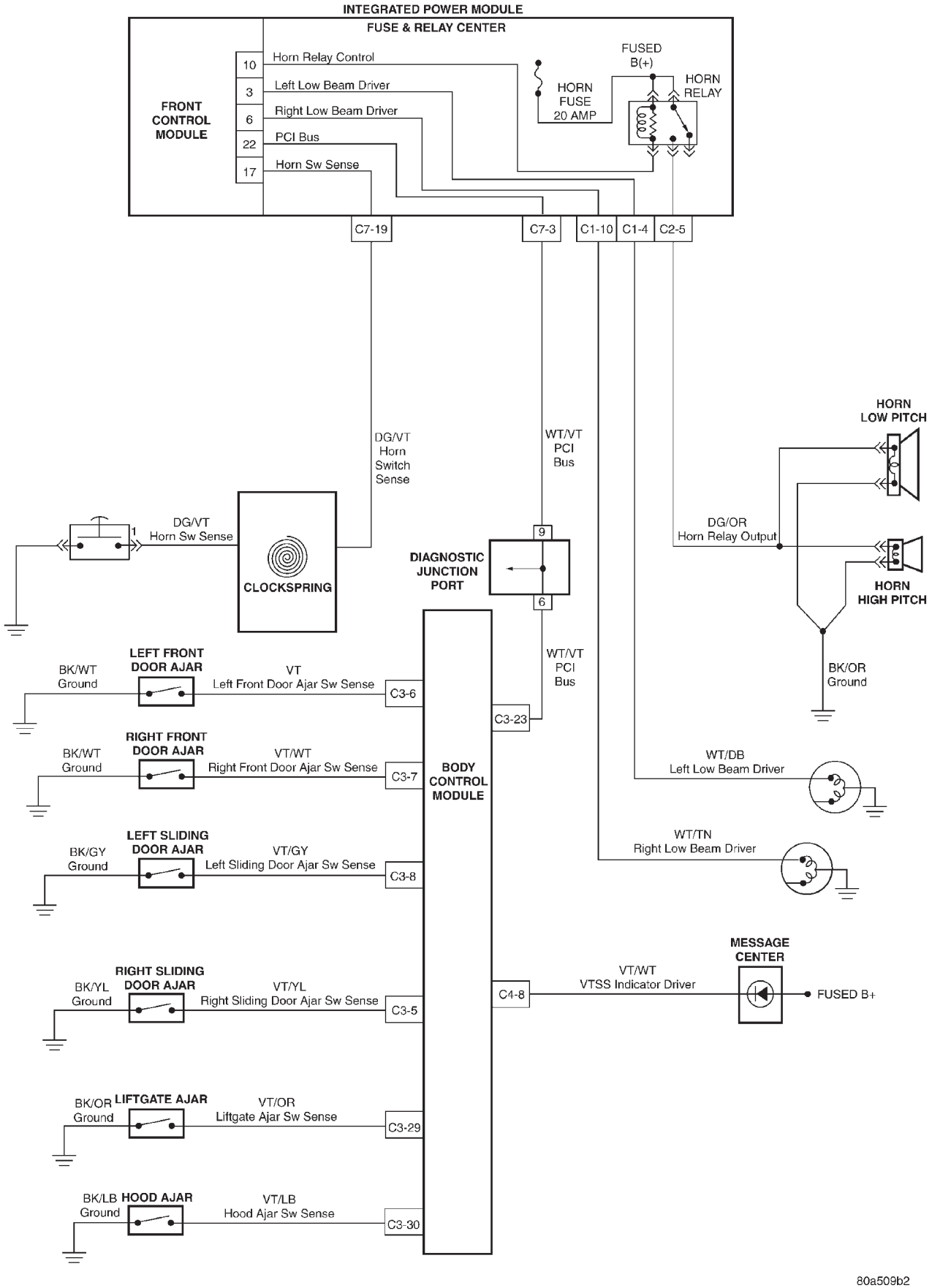

10.21.1 THATCHAM ALARM SYSTEM (EXPORT ONLY)

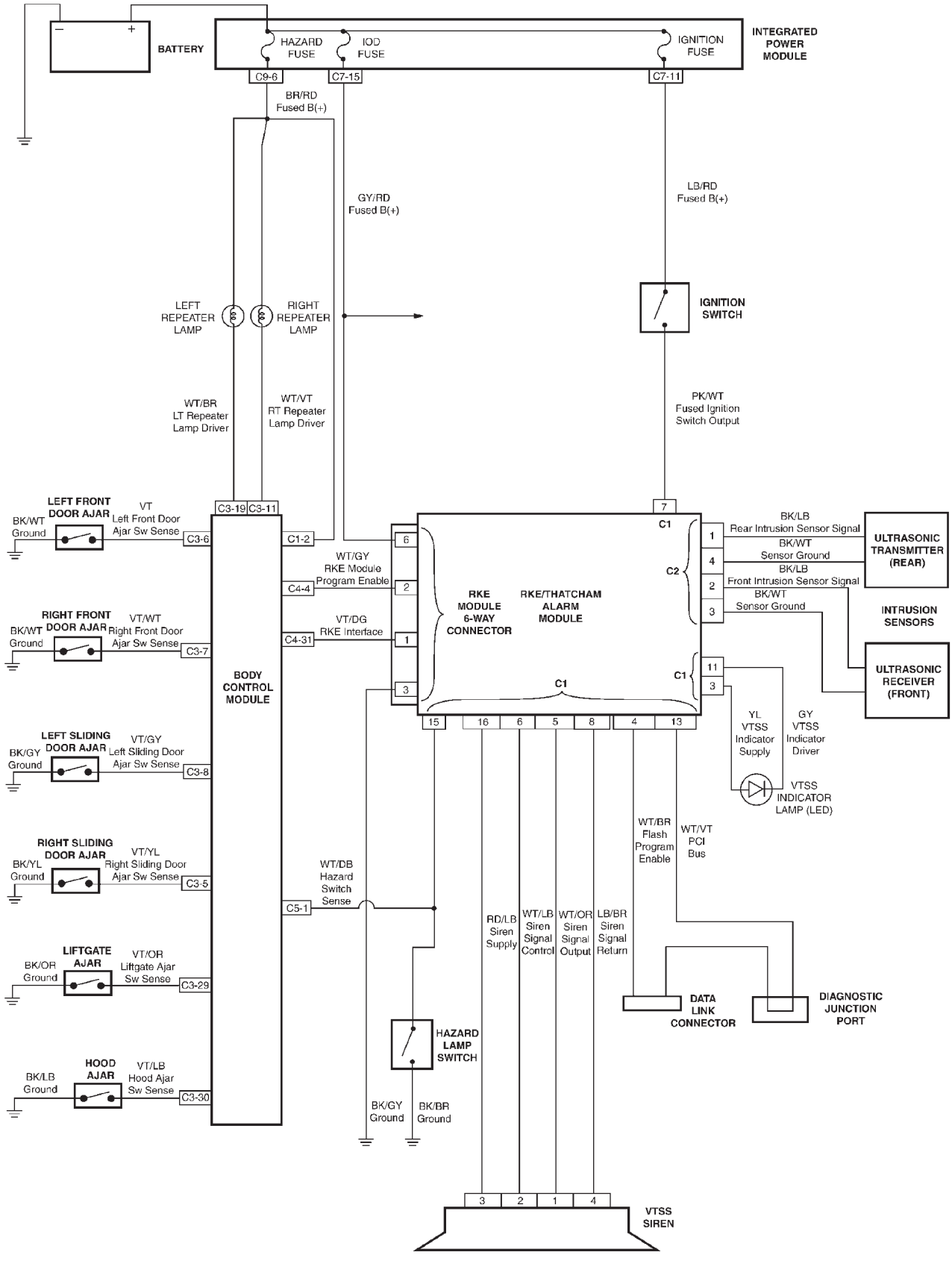

80bd7b17

10.22 WIPERS - FRONT AND REAR

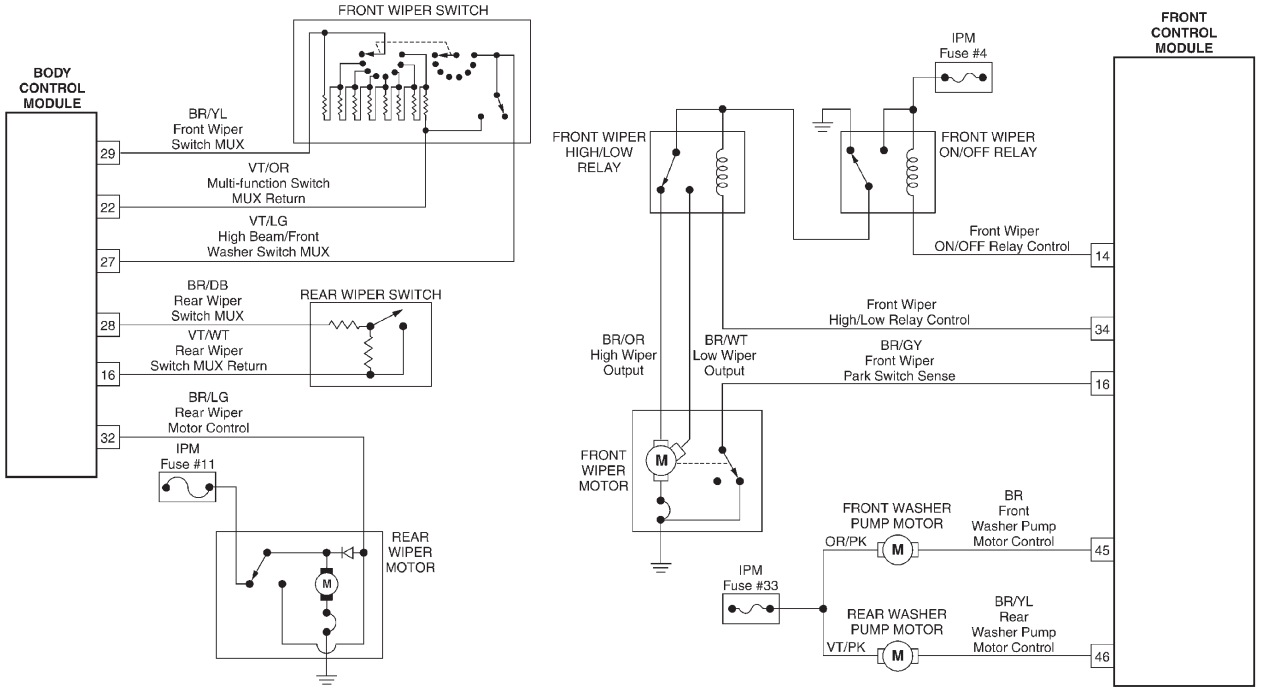

80a8a9ad

11.0 CHARTS AND GRAPHS

11.1 KDB LAB SCOPE PATTERN

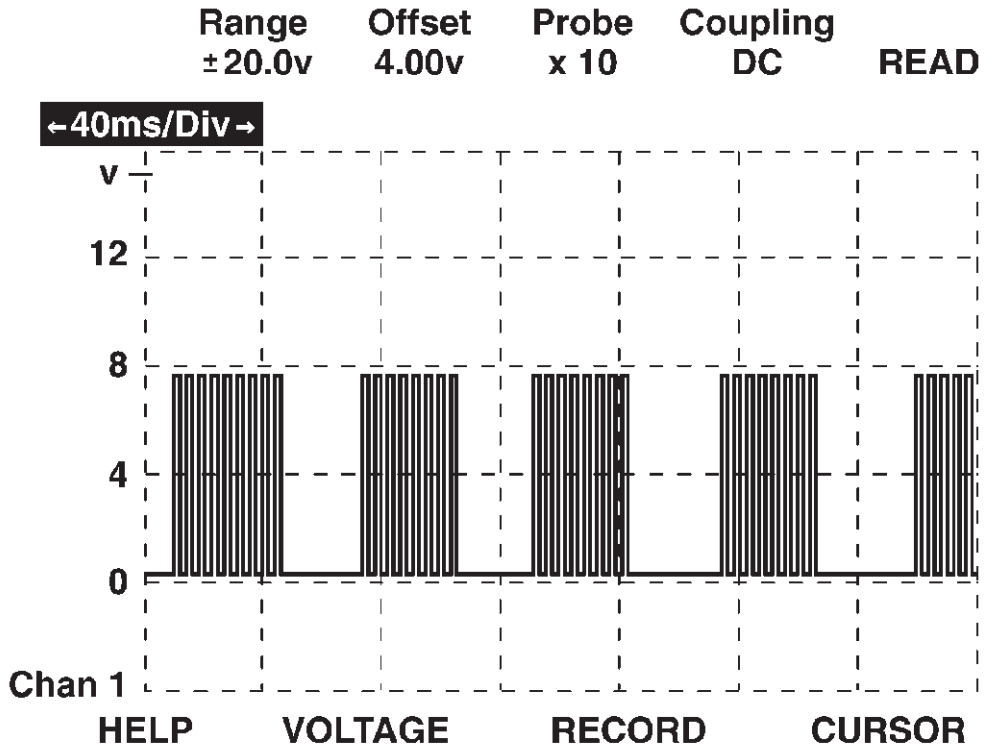

80afa153

11.2 PCI BUS LAB SCOPE PATTERN

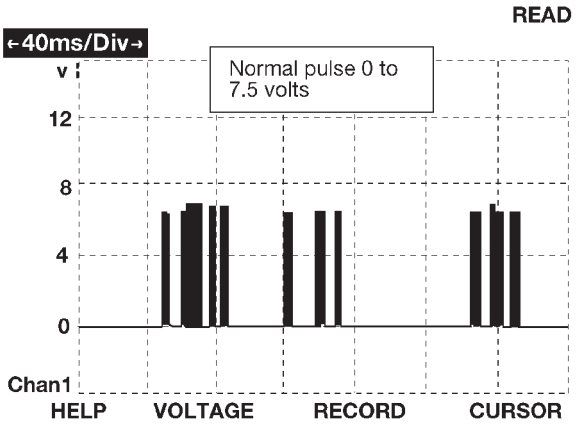

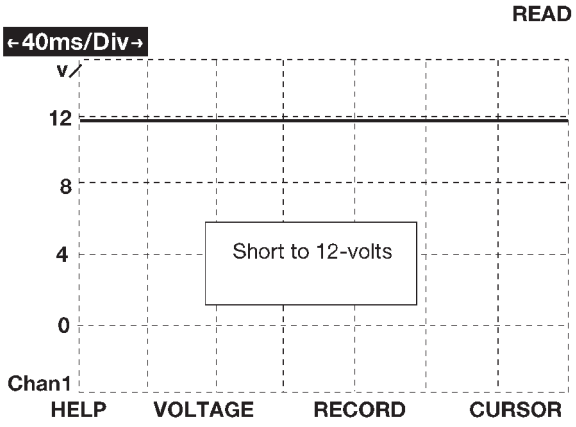

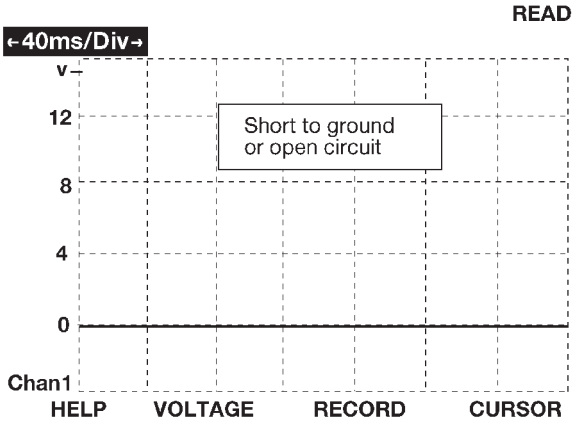

80bdbcf6

NOTES

NOTES