TABLE OF CONTENTS

1.0 INTRODUCTION 1

1.1 SYSTEM COVERAGE 1
1.2 SIX-STEP TROUBLESHOOTING PROCEDURE 1

2.0 IDENTIFICATION OF SYSTEM 1

3.0 SYSTEM DESCRIPTION AND FUNCTIONAL OPERATION 1

3.1 GENERAL DESCRIPTION 1
3.2 FUNCTIONAL OPERATION 1
3.2.1 FUEL CONTROL 1
3.2.2 ON-BOARD DIAGNOSTICS 2
3.2.3 OTHER CONTROLS 4
3.2.4 PCM OPERATING MODES 4
3.2.5 NON-MONITORED CIRCUITS 5
3.2.6 SKIS OVERVIEW 5
3.2.7 SKIM ON-BOARD DIAGNOSTICS 6
3.2.8 SKIS OPERATION 6
3.2.9 PROGRAMMING THE POWERTRAIN CONTROL MODULE 6
3.2.10 PROGRAMMING THE SENTRY KEY IMMOBILIZER MODULE 7
3.2.11 PROGRAMMING THE IGNITION KEYS TO THE SENTRY KEY IMMOBILIZER MODULE 7
3.3 DIAGNOSTIC TROUBLE CODES 7
3.3.1 HARD CODE 8
3.3.2 INTERMITTENT CODE 8
3.3.3 STARTS SINCE SET COUNTER 8
3.3.4 HANDLING NO DTC PROBLEMS 8
3.4 USING THE DRBIII® 10
3.5 DRBIII® ERROR MESSAGES AND BLANK SCREEN 10
3.5.1 DRBIII® DOES NOT POWER UP 10
3.5.2 DISPLAY IS NOT VISIBLE 10

4.0 DISCLAIMERS, SAFETY, WARNINGS 10

4.1 DISCLAIMERS 10
4.2 SAFETY 10
4.2.1 TECHNICIAN SAFETY INFORMATION 10
4.2.2 VEHICLE PREPARATION FOR TESTING 10
4.2.3 SERVICING SUB ASSEMBLIES 11
4.2.4 DRBIII® SAFETY INFORMATION 11
4.3 WARNINGS AND CAUTIONS 11
4.3.1 ROAD TEST WARNINGS 11
4.3.2 VEHICLE DAMAGE CAUTIONS 11

5.0 REQUIRED TOOLS AND EQUIPMENT 11

6.0 GLOSSARY OF TERMS 12

7.0 DIAGNOSTIC INFORMATION AND PROCEDURES 13

TABLE OF CONTENTS - Continued

CHARGING

P0622-GENERATOR FIELD NOT SWITCHING PROPERLY 14
P1478-BATTERY TEMP SENSOR VOLTS OUT OF LIMIT 16
P1492-AMBIENT/BATT TEMP SEN VOLTS TOO HIGH 17
P1493-AMBIENT/BATT TEMP SEN VOLTS TOO LOW 20
P1594-CHARGING SYSTEM VOLTAGE TOO HIGH 22
P1682-CHARGING SYSTEM VOLTAGE TOO LOW 24

COMMUNICATION

P0600-PCM FAILURE SPI COMMUNICATIONS 27
P0601-PCM INTERNAL CONTROLLER FAILURE 27
P1685-WRONG OR INVALID KEY MSG RECEIVED FROM SKIM 28
P1686-NO SKIM BUS MESSAGE RECEIVED 30
P1695-NO CCD/J1850 MESSAGE FROM BODY CONTROL MODULE 32
P1696-PCM FAILURE EEPROM WRITE DENIED 34
P1697-PCM FAILURE SRI MILE NOT STORED 34
P1698-NO BUS MESSAGE FROM TRANS CONTROL MODULE 36
*NO RESPONSE FROM PCM (PCI BUS) 38
*NO RESPONSE FROM PCM (SCI ONLY) 39
*PCI BUS COMMUNICATION FAILURE 42

DRIVEABILITY - GAS

P0106-BAROMETRIC PRESSURE OUT OF RANGE 45
P0107-MAP SENSOR VOLTAGE TOO LOW 48
P0108-MAP SENSOR VOLTAGE TOO HIGH 51
P0111-INTAKE AIR TEMP SENSOR PERFORMANCE 54
P0112-INTAKE AIR TEMP SENSOR VOLTAGE LOW 56
P0113-INTAKE AIR TEMP SENSOR VOLTAGE HIGH 58
P0117-ECT SENSOR VOLTAGE TOO LOW 60
P0118-ECT SENSOR VOLTAGE TOO HIGH 62
P0121-TPS VOLTAGE DOES NOT AGREE WITH MAP 65
P0122-THROTTLE POSITION SENSOR VOLTAGE LOW 70
P0123-THROTTLE POSITION SENSOR VOLTAGE HIGH 74
P0125-CLOSED LOOP TEMP NOT REACHED 77
P0131-1/1 O2 SENSOR SHORTED TO GROUND 79
P0137-1/2 O2 SENSOR SHORTED TO GROUND 79
P0132-1/1 O2 SENSOR SHORTED TO VOLTAGE 82
P0138-1/2 O2 SENSOR SHORTED TO VOLTAGE 82
P0133-1/1 O2 SENSOR SLOW RESPONSE 85
P0139-1/2 O2 SENSOR SLOW RESPONSE 85
P0134-1/1 O2 SENSOR STAYS AT CENTER 88
P0140-1/2 O2 SENSOR STAYS AT CENTER 88
P0135-1/1 O2 SENSOR HEATER FAILURE 91
P0141-1/2 O2 SENSOR HEATER FAILURE 94
P0171-1/1 FUEL SYSTEM LEAN 96
P0172-1/1 FUEL SYSTEM RICH 101
P0201-INJECTOR #1 CONTROL CIRCUIT 106
P0202-INJECTOR #2 CONTROL CIRCUIT 106
P0203-INJECTOR #3 CONTROL CIRCUIT 106
P0204-INJECTOR #4 CONTROL CIRCUIT 106
P0205-INJECTOR #5 CONTROL CIRCUIT 106
P0206-INJECTOR #6 CONTROL CIRCUIT 106
P0300-MULTIPLE CYLINDER MIS-FIRE 109

TABLE OF CONTENTS - Continued

P0301-CYLINDER #1 MISFIRE 109
P0302-CYLINDER #2 MISFIRE 109
P0303-CYLINDER #3 MISFIRE 109
P0304-CYLINDER #4 MISFIRE 109
P0305-CYLINDER #5 MISFIRE 109
P0306-CYLINDER #6 MISFIRE 109
P0320-NO CRANK REFERENCE SIGNAL AT PCM 114
P0325-KNOCK SENSOR #1 CIRCUIT. 119
P0340-NO CAM SIGNAL AT PCM 122
P0351-IGNITION COIL #1 PRIMARY CIRCUIT 127
P0352-IGNITION COIL #2 PRIMARY CIRCUIT 127
P0353-IGNITION COIL #3 PRIMARY CIRCUIT 127
P0401 - EGR SYSTEM FAILURE 130
P0403 - EGR SOLENOID CIRCUIT. 134
P0420-1/1 CATALYTIC CONVERTER EFFICIENCY. 137
P0441-EVAP PURGE FLOW MONITOR 139
P0442-EVAP LEAK MONITOR .040 LEAK DETECTED 142
P0455-EVAP LEAK MONITOR LARGE LEAK DETECTED 142
P0456 - EVAP LEAK MONITOR .020 LEAK DETECTED. 142
P0443-EVAP PURGE SOLENOID CIRCUIT 146
P0460-FUEL LEVEL UNIT NO CHANGE OVER MILES. 149
P0462-FUEL LEVEL SENDING UNIT VOLTS TOO LOW. 152
P0463-FUEL LEVEL SENDING UNIT VOLTS TOO HIGH 152
P0500-NO VEHICLE SPEED SIGNAL (3SP AUTO AND MANUAL TRANSMISSIONS) 154
P0500-NO VEHICLE SPEED SIGNAL (4SP AUTO TRANS) 157
P0505-IDLE AIR CONTROL MOTOR CIRCUITS 160
P0508 - IAC MOTOR SENSE CIRCUIT LOW. 163
P0509 - IAC MOTOR SENSE CIRCUIT HIGH 166
P0700-EATX CONTROLLER DTC PRESENT. 168
P0703-BRAKE SWITCH SENSE CIRCUIT 169
P0740-TORQ CONV CLU, NO RPM DROP AT LOCKUP (3SP AUTO TRANS). 172
P0743-TORQUE CONVERTER CLUTCH SOLENOID/TRANS RELAY CIRCUITS (3SP AUTO TRANS) 175
P0833-CLUTCH RELEASED SWITCH CIRCUIT 178
P1192-INLET AIR TEMP SENSOR VOLTAGE LOW. 181
P1193-INLET AIR TEMP SENSOR VOLTAGE HIGH 183
P1195-1/1 O2 SENSOR SLOW DURING CATALYST MONITOR 185
P1281-ENGINE IS COLD TOO LONG. 187
P1282-FUEL PUMP RELAY CONTROL CIRCUIT. 188
P1294-TARGET IDLE NOT REACHED 191
P1294-TARGET IDLE NOT REACHED 193
P1297-NO CHANGE IN MAP FROM START TO RUN. 196
P1299-VACUUM LEAK FOUND (IAC FULLY SEATED) 200
P1388-AUTO SHUTDOWN RELAY CONTROL CIRCUIT. 202
P1389-NO ASD RELAY OUTPUT VOLTAGE AT PCM 205
P1391-INTERMITTENT LOSS OF CMP OR CKP. 208
P1398-MIS-FIRE ADAPTIVE NUMERATOR AT LIMIT 212
P1486-EVAP LEAK MONITOR PINCHED HOSE FOUND 214
P1491-RAD FAN CONTROL RELAY CIRCUIT 217
P1494-LEAK DETECT PUMP SW OR MECHANICAL FAULT 221
P1495-LEAK DETECTION PUMP SOLENOID CIRCUIT 223
P1496-5 VOLT SUPPLY, OUTPUT TOO LOW 225

TABLE OF CONTENTS - Continued

P1602-PCM NOT PROGRAMMED 228
P1899-P/N SWITCH STUCK IN PARK OR IN GEAR (3SP AUTO TRANS) 229
P1899-P/N SWITCH STUCK IN PARK OR IN GEAR (4SP AUTO TRNAS) 231
*CHECKING ECT SENSOR 233
*CHECKING FUEL DELIVERY 234
*CHECKING IAC MOTOR 2.4L 238
*CHECKING IAT SENSOR 239
*CHECKING MAP SENSOR 240
*CHECKING MINIMUM AIR FLOW 241
*CHECKING PCM POWER AND GROUND CIRCUITS 242
*CHECKING RADIATOR FAN RELAY OUTPUT 243
*CHECKING THE A/C RELAY OUTPUT 244
*CHECKING THE EVAP SYSTEM 246
*CHECKING TP SENSOR 248

HEATING & A/C
P0645-A/C CLUTCH RELAY CKT 249
P1598-A/C PRESSURE SENSOR VOLTS TOO HIGH 252
P1599-A/C PRESSURE SENSOR VOLTS TOO LOW 255

SPEED CONTROL
P1595-SPEED CONTROL SOLENOID CIRCUITS 258
P1683-SPD CTRL PWR RELAY; OR S/C 12V DRIVER CKT 258

STARTING
*ENGINE CRANKS DOES NOT START 263
*NO CRANK CONDITION 268
*NO RESPONSE FROM PCM WITH A NO START CONDITION 271
*START AND STALL CONDITION 272

VEHICLE THEFT/SECURITY
ANTENNA FAILURE 276
COP FAILURE 276
EEPROM FAILURE 276
INTERNAL FAULT 276
RAM FAILURE 276
SERIAL LINK INTERNAL FAULT 276
STACK OVERFLOW FAILURE 276
PCM STATUS FAILURE 278
SERIAL LINK EXTERNAL FAULT 278
ROLLING CODE FAILURE 280
VIN MISMATCH 280
TRANSPONDER COMMUNICATION FAILURE 282
TRANSPONDER CYCLIC REDUNDANCY CHECK (CRC) FAILURE 282
TRANSPONDER ID MISMATCH 282
TRANSPONDER RESPONSE MISMATCH 282

VERIFICATION TESTS
VERIFICATION TESTS 285

TABLE OF CONTENTS - Continued

8.0 COMPONENT LOCATIONS 293

8.1 CONTROL MODULES AND FUSE & RELAY CENTER 293
8.2 CONTROLS AND SOLENOID 293
8.3 DATA LINK CONNECTOR 295
8.4 SENSORS 296
8.5 FUEL SYSTEM 298
8.6 SWITCHES 299

9.0 CONNECTOR PINOUTS 301

A/C COMPRESSOR CLUTCH - LT. GRAY 2 WAY 301
A/C PRESSURE SENSOR - GRAY 4 WAY 301
AMBIENT TEMP SENSOR (EXCEPT BASE) - BLACK 2 WAY 301
BRAKE LAMP SWITCH - BLACK 6 WAY 301
CAMSHAFT POSITION SENSOR (GAS) - BLACK 3 WAY 302
CLUTCH PEDAL INTERLOCK SWITCH (MTX) - BLACK 2 WAY 302
CRANKSHAFT POSITION SENSOR (GAS) - BLACK 3 WAY 302
DATA LINK CONNECTOR - BLACK 16 WAY 303
ENGINE COOLANT TEMP SENSOR (GAS) - BLACK 2 WAY 303
EVAP/PURGE SOLENOID (GAS) - BLACK 2 WAY 303
FUEL INJECTOR NO. 1 (2.4L/3.3L/3.8L) - BLACK 2 WAY 304
FUEL INJECTOR NO. 2 (2.4L/3.3L/3.8L) - BLACK 2 WAY 304
FUEL INJECTOR NO. 3 (2.4L/3.3L/3.8L) - BLACK 2 WAY 304
FUEL INJECTOR NO. 4 (2.4L/3.3L/3.8L) - BLACK 2 WAY 304
FUEL INJECTOR NO. 5 (3.3L/3.8L) - BLACK 2 WAY 305
FUEL INJECTOR NO. 6 (3.3L/3.8L) - BLACK 2 WAY 305
FUEL PUMP MODULE - LT. GRAY 4 WAY 305
GENERATOR - BLACK 2 WAY 305
IDLE AIR CONTROL MOTOR (2.4L) - BLACK 4 WAY 306
IDLE AIR CONTROL MOTOR (3.3L/3.8L) - BLACK 2 WAY 306
IGNITION COIL (2.4L) - BLACK 3 WAY 306
IGNITION COIL (3.3L/3.8L) - DK. GRAY 4 WAY 306
INLET AIR TEMPERATURE SENSOR - BLACK 2 WAY 307
INTEGRATED POWER MODULE C2 - GREEN/BLUE 10 WAY 307
INTEGRATED POWER MODULE C3 (GAS) - NATURAL/RED 20 WAY 307
INTEGRATED POWER MODULE C4 - BLUE 10 WAY 308
INTEGRATED POWER MODULE C5 - BLACK 4 WAY 308
INTEGRATED POWER MODULE C6 - NATURAL 10 WAY 308
INTEGRATED POWER MODULE C7 - BLACK/RED 20 WAY 309
INTEGRATED POWER MODULE C8 - ORANGE 10 WAY 309
INTEGRATED POWER MODULE C9 - BLACK 10 WAY 310
FUSES (IPM) 312
A/C COMPRESSOR CLUTCH RELAY 312
AUTO SHUT DOWN RELAY 312
FUEL PUMP RELAY (GAS) 313
STARTER MOTOR RELAY 313
KNOCK SENSOR (2.4L) - GRAY 2 WAY 314
KNOCK SENSOR (3.3L/3.8L) (EXCEPT BUILT-UP-EXPORT) - GRAY 2 WAY 314
LEAK DETECTION PUMP (EXCEPT BUILT-UP-EXPORT) - LT. GRAY 4 WAY 314
MANIFOLD ABSOLUTE PRESSURE SENSOR (GAS) - BLACK 3 WAY 314
OXYGEN SENSOR 1/1 UPSTREAM (GAS) - BLACK 4 WAY 315
OXYGEN SENSOR 1/2 DOWNSTREAM (GAS) - BLACK 4 WAY 315

POWERTRAIN CONTROL MODULE C1 (GAS) - GRAY/BLACK 40-WAY 316
POWERTRAIN CONTROL MODULE C2 (GAS) - GRAY/GRAY 40 WAY 317
RADIATOR FAN NO. 1 (GAS) - BLACK 2 WAY 318
RADIATOR FAN NO. 2 (GAS) - BLACK 2 WAY 318
RADIATOR FAN RELAY (GAS) - BLACK 4 WAY 318
RIGHT SPEED CONTROL SWITCH - WHITE 2 WAY 318
SENTRY KEY IMMOBILIZER MODULE - BLACK 6 WAY 319

10.0 SCHEMATIC DIAGRAMS. 321

10.1 2002 RGS 2.4L 321
10.2 2002 RGS 3.3L/3.8L 322

11.0 CHARTS AND GRAPHS 323

1.0 INTRODUCTION

The procedures contained in this manual include specifications, instructions, and graphics needed to diagnose the PCM System. The diagnostics in this manual are based on the failure condition or symptom being present at time of diagnosis.

Please follow the recommendations below when choosing your diagnostic path.

1. First make sure the DRBIII® is communicating with the appropriate modules; ie., if the DRBIII® displays a No Response condition, you must diagnose this first before proceeding.
2. Read DTC's (diagnostic trouble codes) with the DRBIII®.
3. If no DTC's are present, identify the customer complaint.
4. Once the DTC or customer complaint is identified, locate the matching test in the Table of Contents and begin to diagnose the symptom.

All component location views are in Section 8.0. All connector pinouts are in Section 9.0. All system schematics are in Section 10.0.

An * placed before the symptom description indicates a customer complaint.

When repairs are required, refer to the appropriate service information for the proper removal and repair procedure.

Diagnostic procedures change every year. New diagnostic systems may be added; carryover systems may be enhanced. READ THIS DIAGNOSTIC INFORMATION BEFORE TRYING TO DIAGNOSE A VEHICLE CODE. It is recommended that you review the entire diagnostic information to become familiar with all new and changed diagnostic procedures.

If you have any comments or recommendations after reviewing the diagnostic information, please fill out the form at the back of the book and mail it back to us.

1.1 SYSTEM COVERAGE

This diagnostic procedures manual covers 2001 and 2002 Town and Country, Caravan/Grand Caravan and Voyager/Grand Voyager vehicles equipped with the 2.4L and 3.3L/3.8L engines.

1.2 SIX-STEP TROUBLESHOOTING PROCEDURE

Diagnosis of the powertrain control module (PCM) is done in six basic steps:

- verification of complaint
- verification of any related symptoms
- symptom analysis
- problem isolation
- repair of isolated problem
- verification of proper operation

2.0 IDENTIFICATION OF SYSTEM

The Powertrain Control Module (PCM) monitors and controls:

- Fuel System
- Idle Air Control System
- Ignition System
- Charging System
- Speed Control System
- Cooling system

3.0 SYSTEM DESCRIPTION AND FUNCTIONAL OPERATION

3.1 GENERAL DESCRIPTION

These Sequential Fuel Injection (SFI) engine systems have the latest in technical advances. The on-board Euro Stage III On-Board Diagnostics incorporated with the Powertrain Control Module (PCM) are intended to assist the field technician in repairing vehicle problems by the quickest means.

3.2 FUNCTIONAL OPERATION

3.2.1 FUEL CONTROL

The PCM controls the air/fuel ratio of the engine by varying fuel injector on time. Mass air flow is calculated using the speed density method using enigne speed, manifold absolute pressure, and air temperature change.

Different fuel calculation strategies are used depending on the operational state of the engine. During cold start crank mode, a longer pulse width fuel pulse is delivered followed by fuel pulses determined by a crank time strategy. Cold engine operation is determined via an open loop strategy until the O2 sensors have reached operating temperature. At this point, the strategy enters a closed loop mode where fuel requirements are based upon the state of the O2 sensors, engine speed, manifold absolute pressure (MAP), throttle position (TP), air temperature, battery voltage, and coolant temperature.

3.2.2 ON-BOARD DIAGNOSTICS

The PCM has been programmed to monitor many different circuits of the fuel injection system. This monitoring is called on-board diagnosis.

Certain criteria, or arming conditions, must be met for a trouble code to be entered into the PCM memory. The criteria may be a range of: engine rpm, engine temperature, and/or input voltage to the PCM. If a problem is sensed with a monitored circuit, and all of the criteria or arming conditions are met, then a trouble code will be stored in the PCM.

It is possible that a trouble code for a monitored circuit may not be entered into the PCM memory even though a malfunction has occurred. This may happen because one of the trouble code criteria have not been met.

The PCM compares input signal voltages from each input device with specifications (the established high and low limits of the range) that are programmed into it for that device. If the input voltage is not within specifications and other trouble code criteria are met, a trouble code will be stored in the PCM memory.

The On Board Diagnostics have evolved to the second Generation of Diagnostics referred to as Euro Stage III OBD.

The following table summarizes the various Euro Stage III OBD monitors operation.

EURO STAGE III OBD MONITOR INFORMATION

Comprehensive Components Monitor	Major Monitors Non Fuel Control & Non Misfire	Major Monitors Fuel Control & Misfire
Run constantly	Run Once Per Trip	Run Constantly
Includes All Engine Hardware - Sensors, Switches, Solenoids, etc.	Monitors Entire Emission System	Monitors Entire System
One Trip Faults - Turns On The MIL and Sets DTC After One Failure	Two Trip Faults - Turns On The MIL and Sets DTC After Two Consecutive Failures	Two Trip Faults - Turns On The MIL and Sets DTC After Two Consecutive Failures
Priority 3	**Priority 1 or 3**	**Priority 2 or 4**
All Checked For Continuity Open Short To Ground Short To Voltage	Done Stop Testing = Yes Oxygen Sensor Heater Oxygen Sensor Response	**Fuel Control Monitor** Monitors Fuel Control System For: Fuel System Lean Fuel System Rich Requires 3 Consecutive *Fuel System Good Trips* To Extinguish The MIL
Inputs Checked For Rationality	Catalytic Converter Efficiency Except EWMA - up to 6 tests per trip and a one trip fault	
Outputs Checked For Functionality	EGR System Evaporative Emission System (Purge and Leak) Non-LDP or LDP	**Misfire Monitor** Monitors For Engine Misfire at: 1000 RPM Counter (Type B) **200 RPM Counter (Type A) Requires 3 Consecutive *Misfire Good Trips* To Extinguish the MIL **Type A misfire is a two trip failure. The MIL will illuminate and blink at the first failure.
Requires 3 Consecutive *Global/Alternate Good Trips* to Extinguish the MIL*	Requires 3 Consecutive *Global Good Trips* to Extinguish the MIL*	

***40 Warm Up Cycles** are required to erase DTC's *after* the MIL has been extinguished.

3.2.3 OTHER CONTROLS

CHARGING SYSTEM

The charging system is turned on when the engine is started and the Automatic Shut Down (ASD) relay energized. When the ASD relay is on, ASD output voltage is supplied to the ASD sense circuit at the PCM. This voltage is connected in some cases, through the PCM and supplied to one of the generator field terminals (Gen Source +). All others, the Gen field is connected directly to the ASD output voltage. The amount of current produced by the generator is controlled by the Electronic Voltage Regulator (EVR) circuitry, in the PCM. Battery temperature is determined from IAT. This temperature along with sensed line voltage, is used by the PCM to vary the battery charging rate. This is done by cycling the ground path to the other generator field terminal (Gen field driver).

SPEED CONTROL SYSTEM

The PCM controls vehicle speed by operation of the speed control servo vacuum and vent solenoids. Energizing the vacuum solenoid applies vacuum to the servo to increase throttle position. Operation of the vent solenoid slowly releases the vacuum allowing throttle position to decrease. A special dump solenoid allows immediate release of throttle position caused by braking, cruise control switch turned off, shifting into neutral, excessive RPM (tires spinning) or ignition off.

LEAK DETECTION PUMP SYSTEM

The leak detection pump is a device that pressurizes the evaporative system to determine if there are any leaks. When certain conditions are met, the PCM will activate the pump and start counting pump strokes. If the pump stops within a calibrated number of strokes, the system is determined to be normal. If the pump does not stop or stops too soon, a DTC will be set.

3.2.4 PCM OPERATING MODES

As input signals to the PCM change, the PCM adjusts its response to output devices. For example, the PCM must calculate a different injector pulse width and ignition timing for idle than it does for wide open throttle. There are several different modes of operation that determine how the PCM responds to the various input signals.

There are two types of engine control operation: **open loop** and **closed loop.**

In **open loop** operation, the PCM receives input signals and responds according to preset programming. Inputs from the heated oxygen sensors are not monitored.

In **closed loop** operation, the PCM monitors the inputs from the heated oxygen sensors. This input indicates to the PCM whether or not the calculated injector pulse width results in the ideal air-fuel ratio of 14.7 parts air to 1 part fuel. By monitoring the exhaust oxygen content through the oxygen sensor, the PCM can fine tune injector pulse width. Fine tuning injector pulse width allows the PCM to achieve the lowest emission levels while maintaining optimum fuel economy.

The engine start-up (crank), engine warm-up, and wide open throttle modes are open loop modes. Under most operating conditions, closed loop modes occur with the engine at operating temperature.

IGNITION SWITCH ON (ENGINE OFF) MODE

When the ignition switch activates the fuel injection system, the following actions occur:

1. The PCM determines atmospheric air pressure from the MAP sensor input to determine basic fuel strategy.
2. The PCM monitors the engine coolant temperature sensor and throttle position sensor input. The PCM modifies fuel strategy based on this input.

When the key is in the on position and the engine is not running (zero rpm), the auto shutdown relay and fuel pump relay are not energized. Therefore, voltage is not supplied to the fuel pump, ignition coil, and fuel injectors.

Engine Start-up Mode — This is an open loop mode. The following actions occur when the starter motor is engaged:

1. The auto shutdown and fuel pump relays are energized. If the PCM does not receive the camshaft and crankshaft signal within approximately one second, these relays are de-energized.
2. The PCM energizes all fuel injectors until it determines crankshaft position from the camshaft and crankshaft signals. The PCM determines crankshaft position within one engine revolution. After the camshaft position has been determined, the PCM energizes the fuel injectors in sequence. The PCM adjusts the injector pulse width and synchronizes the fuel injectors by controlling the fuel injectors' ground paths.
3. Once the engine idles within 64 rpm of its target engine speed, the PCM compares the current MAP sensor value with the value received during the ignition switch on (zero rpm) mode. A diagnostic trouble code is written to PCM memory if a minimum difference between the two values is not found.

Once the auto shutdown and fuel pump relays have been energized, the PCM determines the fuel injector pulse width based on the following:

- engine coolant temperature
- manifold absolute pressure
- intake air temperature
- engine revolutions
- throttle position

The PCM determines the spark advance based on the following:

- engine coolant temperature
- crankshaft position
- intake air temperature
- manifold absolute pressure
- throttle position

Engine Warm-Up Mode − This is an open loop mode. The PCM adjusts injector pulse width and controls injector synchronization by controlling the fuel injectors' ground paths. The PCM adjusts ignition timing and engine idle speed. The PCM adjusts the idle speed by controlling the idle air control motor.

Cruise or Idle Mode − When the engine is at normal operating temperature, this is a closed loop mode.

Acceleration Mode − This is a closed loop mode. The PCM recognizes an increase in throttle position and a decrease in Manifold Vacuum as engine load increases. In response, the PCM increases the injector pulse width to meet the increased load. The A/C compressor may be de-energized for a short period of time.

Deceleration − This is a closed loop mode. The PCM recognizes a decrease in throttle position and an increase in Manifold Vacuum as engine load decreases. In response, the PCM decreases the injector pulse width to meet the decreased load. Full injector shut off may be obtained during high speed deceleration.

Wide Open Throttle Mode − This is an open loop mode. The throttle position sensor notifies the PCM of a wide open throttle condition. Once a wide open throttle is sensed, the PCM de-energizes the A/C compressor clutch relay for 20 seconds.

3.2.5 NON-MONITORED CIRCUITS

The PCM does not monitor the following circuits, systems, and conditions even though they could have malfunctions that result in driveability problems. A diagnostic code may not be displayed for the following conditions. However, problems with these systems may cause a diagnostic code to be displayed for other systems. For example, a fuel pressure problem will not register a diagnostic code directly, but could cause a rich or lean condition. This could cause an oxygen sensor, fuel system, or misfire monitor trouble code to be stored in the PCM.

Engine Timing − The PCM cannot detect an incorrectly indexed timing chain, camshaft sprocket, or crankshaft sprocket. The PCM also cannot detect an incorrectly indexed distributor.(*)

Fuel Pressure − Fuel pressure is controlled by the fuel pressure regulator. The PCM cannot detect a clogged fuel pump inlet filter, clogged in-line filter, or a pinched fuel supply.(*)

Fuel Injectors − The PCM cannot detect if a fuel injector is clogged, the pintle is sticking, or the wrong injectors are installed.(*)

Fuel Requirements − Poor quality gasoline can cause problems such as hard starting, stalling, and stumble. Use of methanol-gasoline blends may result in starting and driveability problems. See individual symptoms and their definitions in Section 6.0 (Glossary of Terms).

PCM Grounds − The PCM cannot detect a poor system ground. However, a diagnostic trouble code may be stored in the PCM as a result of this condition.

Throttle Body Air Flow − The PCM cannot detect a clogged or restricted air cleaner inlet or filter element.(*)

Exhaust System − The PCM cannot detect a plugged, restricted, or leaking exhaust system.(*)

Cylinder Compression − The PCM cannot detect uneven, low, or high engine cylinder compression.(*)

Excessive Oil Consumption − Although the PCM monitors the exhaust stream oxygen content through the oxygen sensor when the system is in a closed loop, it cannot determine excessive oil consumption.

NOTE: Any of these conditions could result in a rich or lean condition causing an oxygen sensor TROUBLE CODE to be stored in the PCM, or the vehicle may exhibit one or more of the driveability symptoms listed in the Table of Contents.

3.2.6 SKIS OVERVIEW

The Sentry Key Immobilizer System (SKIS) is designed to prevent unauthorized vehicle operation. The system consists of a Sentry Key Immobilizer Module (SKIM), ignition key(s) equipped with a transponder chip and PCM. When the ignition switch is turned on, the SKIM interrogates the ignition key. If the ignition key is Valid or Invalid, the SKIM sends a PCI Bus message to the PCM indicating ignition key status. Upon receiving this

message the PCM will terminate engine operation, or allow the engine to continue to operate.

3.2.7 SKIM ON-BOARD DIAGNOSTICS

The SKIM has been programmed to transmit and monitor many different coded messages as well as PCI Bus messages. This monitoring is called On Board Diagnosis.

Certain criteria must be met for a diagnostic trouble code to be entered into the SKIM memory. The criteria may be a range of; Input voltage, PCI Bus message, or coded messages to the SKIM. If all of the criteria for monitoring a circuit or function are met and a fault is sensed, a diagnostic trouble code will be stored in the SKIM memory.

3.2.8 SKIS OPERATION

When ignition power is supplied to the SKIM, the SKIM performs an internal self-test. After the self-test is completed, the SKIM energizes the antenna (this activates the transponder chip) and sends a challenge to the transponder chip. The transponder chip responds to the challenge by generating an encrypted response message using the following:

Secret Key - This is an electronically stored value (identification number) that is unique to each SKIS. The secret key is stored in the SKIM, PCM and all ignition key transponders.

Challenge - This is a random number that is generated by the SKIM at each ignition key cycle.

The secret key and challenge are the two variables used in the algorithm that produces the encrypted response message. The transponder uses the crypto algorithm to receive, decode and respond to the message sent by the SKIM. After responding to the coded message, the transponder sends a transponder I.D. message to the SKIM. The SKIM compares the transponder I.D. to the available valid key codes in the SKIM memory (8 key maximum at any one time). After validating the key ignition the SKIM sends a PCI Bus message called a Seed Request to the engine controller then waits for a PCM response. If the PCM does not respond, the SKIM will send the seed request again. After three failed attempts the SKIM will stop sending the seed request and store a trouble code. If the PCM sends a seed response, the SKIM sends a valid/invalid key message to the PCM. This is an encrypted message that is generated using the following:

VIN - Vehicle Identification Number

Seed - This is a random number that is generated by the PCM at each ignition key cycle.

The VIN and seed are the two variables used in the rolling code algorithm that encrypts the valid/invalid key message. The PCM uses the rolling code algorithm to receive, decode and respond to the valid/invalid key message sent by the SKIM. After sending the valid/invalid key message the SKIM waits 3.5 seconds for a PCM status message from the PCM. If the PCM does not respond with a valid key message to the SKIM, a fault is detected and a trouble code is stored.

The SKIS incorporates a VTSS LED located on the instrument panel upper cover. The LED receives a hard wired, switched ignition voltage from the Body Control Module. The LED is actuated when the SKIM sends a PCI Bus message to the body controller requesting the LED on. The body controller then provides the ground for the LED. The SKIM will request VTSS LED operation for the following:

- bulb checks at ignition on
- to alert the vehicle operator to a SKIS malfunction
- customer key programming mode

For all faults except transponder faults and VTSS LED remains on steady. In the event of a transponder fault the LED flashes at a rate of 1 Hz (once per second). If a fault is present the LED will remain on or flashing for the complete ignition cycle. If a fault is stored in SKIM memory which prevents the system from operating properly, the PCM will allow the engine to start and run (for 2 seconds) up to six times. After the sixth attempt, the PCM disables the starter relay until the fault is corrected.

3.2.9 PROGRAMMING THE POWERTRAIN CONTROL MODULE

Important Note: Before replacing the PCM for a failed driver, control circuit or ground circuit, be sure to check the related component/circuit integrity for failures not detected due to a double fault in the circuit. Most PCM driver/control circuit failures are caused by internal failure to components (i.e. 12-volt pull-ups, drivers and ground sensors). These failures are difficult to detect when a double fault has occurred and only one DTC has set.

NOTE: If the PCM and the SKIM are replaced at the same time, program the VIN into the PCM first. All vehicle keys will then need to be replaced and programmed to the new SKIM.

The SKIS Secret Key is an I.D. code that is unique to each SKIS. This code is programmed and stored in the SKIM, engine controller and transponder chip (ignition key). When replacing the PCM it is necessary to program the secret key into the PCM.

1. Turn the ignition on (transmission in park/neutral).
2. Use the DRBIII® and select THEFT ALARM, SKIM then MISCELLANEOUS.

3. Select PCM REPLACED.
4. Enter secured access mode by entering the vehicle four-digit PIN.

NOTE: If three attempts are made to enter the secure access mode using an incorrect PIN, secured access mode will be locked out for one hour. To exit this lockout mode, turn the ignition to the run position for one hour then enter the correct PIN. (Ensure all accessories are turned off. Also monitor the battery state and connect a battery charger if necessary).

5. Press ENTER to transfer the secret key (the SKIM will send the secret key to the PCM).

3.2.10 PROGRAMMING THE SENTRY KEY IMMOBILIZER MODULE

NOTE: If the PCM and the SKIM are replaced at the same time, program the VIN into the PCM first. All vehicle keys will then need to be replaced and programmed to the new SKIM.

1. Turn the ignition on (transmission in park/ neutral).
2. Use the DRBIII® and select THEFT ALARM, SKIM then MISCELLANEOUS.
3. Select SKIM MODULE REPLACEMENT (GASOLINE).
4. Program the vehicle four-digit PIN into the SKIM.
5. Select COUNTRY CODE and enter the correct country.

NOTE: Be sure to enter the correct country code. If the incorrect country code is programmed into SKIM, the SKIM must be replaced.

6. Select UPDATE VIN (the SKIM will learn the VIN from the PCM).
7. Press ENTER to transfer the VIN (the PCM will send the VIN to the SKIM).
8. The DRBIII® will ask if you want to transfer the secret key. Select ENTER to transfer secret key from the PCM. This will ensure the current vehicle ignition keys will still operate the SKIS system.

3.2.11 PROGRAMMING THE IGNITION KEYS TO THE SENTRY KEY IMMOBILIZER MODULE

1. Turn the ignition on (transmission in park/ neutral).
2. Use the DRBIII® and select THEFT ALARM, SKIM, then MISCELLANEOUS.
3. Select PROGRAM IGNITION KEYS.
4. Enter secured access mode by entering the vehicle four-digit PIN.

NOTE: A maximum of eight keys can be learned to each SKIM at one time. Once a key is learned to a SKIM it (the key) cannot be transferred to another vehicle.

If ignition key programming is unsuccessful, the DRBIII® will display one of the following messages:

Programming Not Attempted - The DRBIII® attempts to read the programmed key status and there are no keys programmed in the SKIM memory.

Programming Key Failed - (Possible Used Key From Wrong Vehicle) - SKIM is unable to program key due to one of the following:

- faulty ignition key transponder
- ignition key is programmed to another vehicle.

8 Keys Already Learned, Programming Not Done - SKIM transponder ID memory is full.

1. Obtain ignition keys to be programmed from customer (8 keys maximum)
2. Using the DRBIII®, erase all ignition keys by selecting MISCELLANEOUS and ERASE ALL CURRENT IGN. KEYS
3. Program all ignition keys.

Learned Key In Ignition - Ignition key transponder ID is currently programmed in SKIM memory.

3.3 DIAGNOSTIC TROUBLE CODES

NOTE: If the DRBIII® displays faults for multiple components (i.e. ECT, IAT, MAP, ETC DTC'S) identify and check the shared circuits for possible problems before continuing (i.e. sensor ground or 5 volt supply). Refer to the schematics found in Section 10.0 in this manual to identify the shared circuits.

Each diagnostic trouble code is diagnosed by following a specific testing procedure. The diagnostic test procedures contain step-by-step instructions for determining the cause of trouble codes as well as

no trouble code problems. It is not necessary to perform all of the tests in this book to diagnose an individual code.

Always begin by reading the diagnostic trouble codes using the DRBIII®.

3.3.1 HARD CODE

A diagnostic trouble code that comes back within one cycle of the ignition key is a hard code. This means that the defect is there every time the powertrain control module checks that circuit or function. Procedures in this manual verify if the DTC is a hard code at the beginning of each test. When it is not a hard code, an intermittent test must be performed.

DTC's that are for OBDII monitors will not set with just the ignition key on. Comparing these to non-emission DTC's, they will seem like an intermittent. These DTC's require a set of parameters to be performed (The DRBIII® pre-test screens will help with this for MONITOR DTC's), this is called a TRIP. All OBDII DTCs will be set after one or in some cases two trip failures, and the MIL will be turned on. These DTC's require three successful, no failures, TRIPS to extinguish the MIL, followed by 40 warm-up cycles to erase the DTC. For further explanation of TRIPS, Pre-test screens, Warm-up cycles, and the use of the DRBIII®, refer to the On Board Diagnostic training booklet #81-699-97094.

3.3.2 INTERMITTENT CODE

A diagnostic trouble code that is not there every time the PCM checks the circuit is an intermittent DTC. Most intermittent DTC's are caused by wiring or connector problems. Defects that come and go like this are the most difficult to diagnose; they must be looked for under specific conditions that cause them. The following checks may assist you in identifying a possible intermittent problem:

- Visually inspect related wire harness connectors. Look for broken, bent, pushed out, or corroded terminals.
- Visually inspect the related harnesses. Look for chafed, pierced, or partially broken wire.
- Refer to any technical service bulletins that may apply.
- Use the DRBIII® data recorder or co-pilot.

3.3.3 STARTS SINCE SET COUNTER

The start since set counter counts the number of times the vehicle has been started since codes were last set, erased, or the battery was disconnected. The reset counter will count up to 255 start counts.

The number of starts helps determine when the trouble code actually happened. This is recorded by the PCM and can be viewed on the DRBIII® as STARTS since set.

When there are no trouble codes stored in memory, the DRBIII® will display NO DTC's Detected and the reset counter will show STARTS since clear = XXX.

3.3.4 HANDLING NO DTC PROBLEMS

Symptom checks cannot be used properly unless the driveability problem characteristic actually happens while the vehicle is being tested.

Select the symptom that most accurately describes the vehicle's driveability problem and then perform the test routine that pertains to this symptom. Perform each routine test in sequence until the problem is found. For definitions, see Section 6.0 Glossary Of Terms.

SYMPTOM	DIAGNOSTIC TEST
HARD START	CHECKING THE FUEL PRESSURE CHECKING THE ECT SENSOR CHECKING THROTTLE POSITION SENSOR CHECKING MAP SENSOR CHECKING IDLE AIR CONTROL MOTOR OPERATION CHECKING EGR SYSTEM CHECKING IAT SENSOR
START AND STALL	CHECKING PCM POWER AND GND CKT CHECKING THE FUEL PRESSURE CHECKING ECT SENSOR CHECKING THROTTLE POSITION SENSOR CHECKING MAP SENSOR CHECKING IDLE AIR CONTROL MOTOR OPERATION

SYMPTOM	DIAGNOSTIC TEST
HESITATION/SAG/STUMBLE	CHECKING PCM POWER AND GND CKT CHECKING THE FUEL PRESSURE CHECKING ECT SENSOR CHECKING THROTTLE POSITION SENSOR CHECKING MAP SENSOR
SURGE	CHECKING IDLE AIR CONTROL MOTOR OPERATION CHECKING IAT SENSOR CHECKING PCM POWER AND GND CKT CHECKING THE FUEL PRESSURE CHECKING ECT SENSOR CHECKING THROTTLE POSITION SENSOR CHECKING MAP SENSOR CHECKING IDLE AIR CONTROL MOTOR OPERATION
LACK OF POWER/SLUGGISH	CHECKING PCM POWER AND GND CKT CHECKING THE FUEL PRESSURE CHECKING ECT SENSOR CHECKING THROTTLE POSTION SENSOR CHECKING MAP SENSOR CHECKING IDLE AIR CONTROL MOTOR OPERATION
SPARK KNOCK DETONATION	CHECKING PCM POWER AND GND CKT CHECKING THE FUEL PRESSURE CHECKING ECT SENSOR CHECKING THROTTLE POSITION SENSOR CHECKING MAP SENSOR CHECKING IDLE AIR CONTROL MOTOR OPERATION
CUTS OUT/MISSES	CHECKING PCM POWER AND GND CKT CHECKING THE FUEL PRESSURE CHECKING IDLE AIR CONTROL MOTOR OPERATION
BACKFIRE/POPBACK	CHECKING PCM POWER AND GND CKT CHECKING THE FUEL PRESSURE CHECKING MAP SENSOR
RUNS ROUGH/UNSTABLE/ ERRATIC IDLE	CHECKING PCM POWER AND GND CKT CHECKING THE FUEL PRESSURE CHECKING ECT SENSOR CHECKING THROTTLE POSITION SENSOR CHECKING MAP SENSOR CHECKING IDLE AIR CONTROL MOTOR OPERATION CHECKING IAT SENSOR
POOR FUEL ECONOMY	CHECKING PCM POWER AND GND CKT CHECKING THE FUEL PRESSURE CHECKING ECT SENSOR CHECKING THROTTLE POSITION SENSOR CHECKING MAP SENSOR CHECKING IDLE AIR CONTROL MOTOR OPERATION CHECKING IAT SENSOR

3.4 USING THE DRBIII®

Refer to the DRBIII® user's guide for instructions and assistance with reading DTC's, erasing DTC's, and other DRBIII® functions.

3.5 DRBIII® ERROR MESSAGES AND BLANK SCREEN

Under normal operation, the DRBIII® will display one of only two error messages:

– User-Requested WARM Boot or User-Requested COLD Boot

If the DRBIII® should display any other error message, record the entire display and call the Star Center for information and assistance. This is a sample of such an error message display:

```
ver: 2.14
date: 26 Jul93
file: key_itf.cc
date: Jul 26 1993
line: 548
err: 0x1
User-Requested COLD Boot

Press MORE to switch between this display
  and the application screen.
Press F4 when done noting information.
```

3.5.1 DRBIII® DOES NOT POWER UP

If the LED's do not light or no sound is emitted at start up, check for loose cable connections or a bad cable. Check the vehicle battery voltage (data link connector cavity 16). A minimum of 11 volts is required to adequately power the DRBIII®.

If all connections are proper between the DRBIII® and the vehicle or other devices, and the vehicle battery is fully charged, and inoperative DRBIII® may be the result of faulty cable or vehicle wiring.

3.5.2 DISPLAY IS NOT VISIBLE

Low temperatures will affect the visibility of the display. Adjust the contrast to compensate for this condition

4.0 DISCLAIMERS, SAFETY, WARNINGS

4.1 DISCLAIMERS

All information, illustrations, and specifications contained in this manual are based on the latest

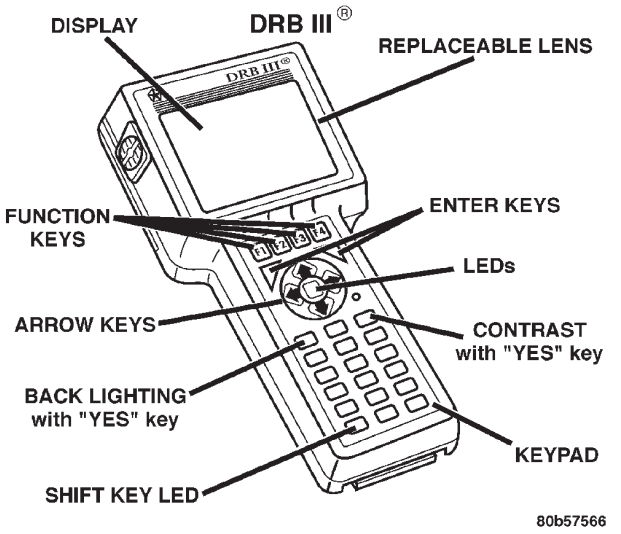

information available at the time of publication. The right is reserved to make changes at any time without notice.

4.2 SAFETY

4.2.1 TECHNICIAN SAFETY INFORMATION

WARNING: ENGINES PRODUCE CARBON MONOXIDE THAT IS ODORLESS, CAUSES SLOWER REACTION TIME, AND CAN LEAD TO SERIOUS INJURY. WHEN THE ENGINE IS OPERATING, KEEP SERVICE AREAS WELL VENTILATED OR ATTACH THE VEHICLE EXHAUST SYSTEM TO THE SHOP EXHAUST REMOVAL SYSTEM.

Set the parking brake and block the wheels before testing or repairing the vehicle. It is especially important to block the wheels on front-wheel drive vehicles; the parking brake does not hold the drive wheels.

When servicing a vehicle, always wear eye protection, and remove any metal jewelry such as watchbands or bracelets that might make an inadvertent electrical contact.

When diagnosing a powertrain system problem, it is important to follow approved procedures where applicable. These procedures can be found in service manual procedures. Following these procedures is very important to the safety of individuals performing diagnostic tests.

4.2.2 VEHICLE PREPARATION FOR TESTING

Make sure the vehicle being tested has a fully charged battery. If it does not, false diagnostic codes or error messages may occur.

4.2.3 SERVICING SUB ASSEMBLIES

Some components of the powertrain system are intended to be serviced in assembly only. Attempting to remove or repair certain system subcomponents may result in personal injury and/or improper system operation. Only those components with approved repair and installation procedures in the service manual should be serviced.

4.2.4 DRBIII® SAFETY INFORMATION

WARNING: EXCEEDING THE LIMITS OF THE DRBIII® MULTIMETER IS DANGEROUS. IT CAN EXPOSE YOU TO SERIOUS INJURY. CAREFULLY READ AND UNDERSTAND THE CAUTIONS AND THE SPECIFICATION LIMITS.

Follow the vehicle manufacturer's service specifications at all times.

- Do not use the DRBIII® if it has been damaged.
- Do not use the test leads if the insulation is damaged or if metal is exposed.
- To avoid electrical shock, do not touch the test leads, tips, or the circuit being tested.
- Choose the proper range and function for the measurement. Do not try voltage or current measurements that may exceed the rated capacity.
- Do not exceed the limits shown in the table below:

FUNCTION	INPUT LIMIT
Volts	0 - 500 peak volts AC 0 - 500 volts DC
Ohms (resistance)*	0 - 1.12 megohms
Frequency Measured Frequency Generated	0 - 10 kHz
Temperature	-58 - 1100°F -50 - 600°C

* Ohms cannot be measured if voltage is present. Ohms can be measured only in a non-powered circuit.

- Voltage between any terminal and ground must not exceed 500v DC or 500v peak AC.
- Use caution when measuring voltage above 25v DC or 25v AC.
- The circuit being tested must be protected by a 10A fuse or circuit breaker.
- Use the low current shunt to measure circuits up to 10A. Use the high current clamp to measure circuits exceeding 10A.
- When testing for the presence of voltage or current, make sure the meter is functioning correctly. Take a reading of a known voltage or current before accepting a zero reading.
- When measuring current, connect the meter in series with the load.
- Disconnect the live test lead before disconnecting the common test lead.
- When using the meter function, keep the DRBIII® away from spark plug or coil wires to avoid measuring error from outside interference.

4.3 WARNINGS AND CAUTIONS

4.3.1 ROAD TEST WARNINGS

Some complaints will require a test drive as part of the repair verification procedure. The purpose of the test drive is to try to duplicate the diagnostic code or symptom condition.

CAUTION: Before road testing a vehicle, be sure that all components are reassembled. During the test drive, do not try to read the DRBIII® screen while in motion. Do not hang the DRBIII® from the rear view mirror or operate it yourself. Have an assistant available to operate the DRBIII®.

4.3.2 VEHICLE DAMAGE CAUTIONS

Before connecting or disconnecting any control module, make sure the ignition is off. Failure to do so could damage the module.

When testing voltage or continuity at any control module, use the terminal side (not the wire end) of the connector. Do not probe a wire through the insulation; this will damage it and eventually cause it to fail because of corrosion.

Be careful when performing electrical tests so as to prevent accidental shorting of terminals. Such mistakes can damage fuses or components. Also, a second DTC could be set, making diagnosis of the original problem more difficult.

5.0 REQUIRED TOOLS AND EQUIPMENT

DRBIII® (diagnostic read-out box) scan tool
Evaporative System Diagnostic Kit #6917
fuel filler adapter #8382
fuel pressure adapter (C-6631) or #6539
fuel pressure kit (C-4799-B) or #5069
fuel release hose (C-4799-1)
Min Air flow fitting #6714
jumper wires
ohmmeter
oscilloscope
vacuum gauge
voltmeter

12 volt test light minimum 25 ohms resistance with probe #6801

CAUTION: A 12 volt test light should not be used for the following circuits, damage to the powertrain controller will occur.

- 5 Volt Supply
- 8 Volt Supply
- J1850 PCI Bus
- CCD Bus
- CKP Sensor Signal
- CMP Sensor Signal
- Vehicle Speed Sensor Signal
- O2 Sensor Signal

6.0 GLOSSARY OF TERMS

ABS	Anti-lock brake system
ASD	Automatic shut down
backfire, popback	Fuel ignites in either the intake or the exhaust system
CKP	Crank position sensor
CMP	Camshaft position sensor
cuts out, misses	A steady pulsation or the inability of the engine to maintain a consistent rpm
detonation, spark knock	A mild to severe ping, especially under loaded engine conditions
DLC	Data link connector (previously called engine diagnostic connector)
ECT	Engine coolant temperature sensor
EGR	Exhaust gas recirculation valve and system
generator	Previously called alternator
hard start	The engine takes longer than usual to start, even though it is able to crank normally.
hesitation, sag, stumble	There is a momentary lack of response when the throttle is opened. This can occur at all vehicle speeds. If it is severe enough, the engine may stall.
IAC	Idle air control motor
IAT	Intake air temperature sensor
JTEC	Combined engine and transmission control module
lack of power, sluggish	The engine has less than expected power, with little or no increase in vehicle speed when the throttle is opened.
LDP	Leak detection pump
MAP	Manifold absolute pressure sensor
MIL	Malfunction indicator lamp
MTV	Manifold tuning valve
O2S	Oxygen sensor
PCI	Programmable communication interface
PCM	Powertrain control module
PCV	Positive crankcase ventilation
PEP	Peripheral expansion port
poor fuel economy	There is significantly less fuel mileage than other vehicles of the same design ad configuration
rough, unstable, or erratic idle stalling	The engine runs unevenly at idle and causes the engine to shake if it is severe enough. The engine idle rpm may vary (called hunting). This condition may cause stalling if it is severe enough.
SBEC	Single board engine controller
SKIM	Sentry key immobilizer module
SKIS	Sentry key immobilizer system
start & stall	The engine starts but immediately dies.
surge	Engine rpm fluctuation without corresponding change in throttle position sensor
TPS	Throttle position sensor
TRS	Transmission range sensor
VSS	Vehicle speed sensor/signal

7.0

DIAGNOSTIC INFORMATION AND PROCEDURES

Symptom:

P0622-GENERATOR FIELD NOT SWITCHING PROPERLY

When Monitored and Set Condition:

P0622-GENERATOR FIELD NOT SWITCHING PROPERLY

When Monitored: With the ignition on. Engine running.

Set Condition: When the PCM tries to regulate the generator field with no result during monitoring.

POSSIBLE CAUSES
WIRING HARNESS INTERMITTENT
INSPECT WIRING HARNESS
ASD RELAY OUTPUT CIRCUIT OPEN
GENERATOR FIELD DRIVER CIRCUIT SHORTED TO GROUND
GENERATOR FIELD DRIVER CIRCUIT OPEN
GENERATOR FIELD COIL OPEN
GENERATOR FIELD COIL SHORTED
POWERTRAIN CONTROL MODULE

TEST	ACTION	APPLICABILITY
1	Turn the ignition on. With the DRBIII®, actuate the Generator Field Driver circuit. Using a 12-volt test light connected to ground, backprobe the Generator Field Driver circuit in the back of the Generator. Does the test light illuminate brightly and flash? Yes → Go To 2 No → Go To 4	All
2	With the DRBIII®, erase DTCs. Start the engine and allow it to idle. Wiggle the wiring harness from the Generator to PCM. With the DRBIII®, read DTC's. Did the DTC reset? Yes → Repair as necessary . Perform POWERTRAIN VERIFICATION TEST VER - 3. No → Go To 3	All
3	Turn the ignition off. Using the schematic as a guide, inspect the Wiring and Connectors. Were any problems found? Yes → Repair as necessary. Perform POWERTRAIN VERIFICATION TEST VER - 3. No → Test Complete.	All

P0622-GENERATOR FIELD NOT SWITCHING PROPERLY — Continued

TEST	ACTION	APPLICABILITY
4	**NOTE: Carefully inspect all Connectors for corrosion or spread Terminals before continuing.** Disconnect the Generator Field harness connector. Turn the ignition on. With the DRBIII® actuate the Generator Field Driver circuit. Using a 12-volt test light connected to ground, probe the ASD Relay Output circuit. Does the test light illuminate brightly? Yes → Go To 5 No → Repair the ASD Relay Output circuit. Perform POWERTRAIN VERIFICATION TEST VER - 3.	All
5	Turn the ignition off. Disconnect the PCM harness connector. Disconnect the Generator Field harness connector. Measure the resistance of the Generator Field Driver circuit from PCM harness connector to ground. Is the resistance below 100 ohms? Yes → Repair the Generator Field Driver circuit for a short to ground. Perform POWERTRAIN VERIFICATION TEST VER - 3. No → Go To 6	All
6	Turn the ignition off. Disconnect the PCM harness connector. Disconnect the Generator Field harness connector. Measure the resistance of the Generator Field Driver circuit from the PCM harness connector to the Generator Field harness connector. Is the resistance below 5.0 ohms? Yes → Go To 7 No → Repair the Generator Field Driver circuit for an open. Perform POWERTRAIN VERIFICATION TEST VER - 3.	All
7	Turn the ignition off. Disconnect the Generator Field harness connector. Measure the resistance across the Generator Field Terminals at the Generator. Is the resistance above 15.0 ohms? Yes → Replace the Generator. Perform POWERTRAIN VERIFICATION TEST VER - 3. No → Go To 8	All
8	Turn the ignition off. Disconnect the Generator Field harness connector. Measure the resistance across the Generator Field Terminals at the Generator. Is the resistance below 0.5 ohms? Yes → Replace the Generator. Perform POWERTRAIN VERIFICATION TEST VER - 3. No → Go To 9	All
9	If there is no more possible causes remaining, view repair. Repair Replace and program the Powertrain Control Module in accordance with the Service Information. Perform POWERTRAIN VERIFICATION TEST VER - 3.	All

Symptom:

P1478-BATTERY TEMP SENSOR VOLTS OUT OF LIMIT

When Monitored and Set Condition:

P1478-BATTERY TEMP SENSOR VOLTS OUT OF LIMIT

When Monitored: Ignition on.

Set Condition: The Battery Temperature Sensor, internal to the PCM, goes above 4.9 volts or below 0.1 volt for more than 3.2 seconds.

POSSIBLE CAUSES
PCM

TEST	ACTION	APPLICABILITY
1	The PCM has detected a fault with the Battery Temperature Sensor which is internal to the Powertrain Control Module. If there are no possible causes remaining, view repair. Review Replace and program the Powertrain Control Module in accordance with the Service Information. Perform POWERTRAIN VERIFICATION TEST VER - 5.	All

Symptom:

P1492-AMBIENT/BATT TEMP SEN VOLTS TOO HIGH

When Monitored and Set Condition:

P1492-AMBIENT/BATT TEMP SEN VOLTS TOO HIGH

When Monitored: The ignition key on.

Set Condition: The Ambient Temperature Sensor voltage is greater than 4.9 volts at the PCM for 5 seconds.

POSSIBLE CAUSES
INTERMITTENT CONDITION
AMBIENT TEMPERATURE SENSOR SIGNAL CIRCUIT SHORTED TO BATTERY VOLTAGE
AMBIENT TEMPERATURE SENSOR INTERNAL FAILURE
AMBIENT TEMPERATURE SENSOR SIGNAL CIRCUIT OPEN
SENSOR GROUND CIRCUIT OPEN
FCM

TEST	ACTION	APPLICABILITY
1	Turn the ignition on. With the DRBIII®, read the Ambient Temperature Sensor voltage. Is the voltage above 4.8 volts? Yes → Go To 2 No → Go To 7	All
2	Turn the ignition off. Disconnect the Ambient Temperature Sensor harness connector. Turn the ignition on. Measure the voltage of the Ambient Temperature Sensor Signal circuit in the Ambient Temperature Sensor harness connector. Is the voltage above 5.2 volts? Yes → Repair the Ambient Temperature Sensor Signal circuit for a short to battery voltage. Perform POWERTRAIN VERIFICATION TEST VER - 5. No → Go To 3	All

P1492-AMBIENT/BATT TEMP SEN VOLTS TOO HIGH — Continued

TEST	ACTION	APPLICABILITY
3	Turn the ignition off. Disconnect the Ambient Temperature Sensor harness connector. Connect a jumper wire between the Ambient Temperature Sensor Signal circuit and the Sensor ground circuit in the Ambient Temperature Sensor harness connector. Turn the ignition on. With the DRBIII®, read Ambient Temperature Sensor voltage. Is the voltage below 1.0 volt? Yes → Replace the Ambient Temperature Sensor. Perform POWERTRAIN VERIFICATION TEST VER - 5. No → Go To 4	All
4	Turn the ignition off. Disconnect the Ambient Temperature Sensor harness connector. Disconnect the FCM harness connector. Measure the resistance of the Ambient Temperature Sensor Signal circuit between the Ambient Temperature Sensor harness connector and the FCM harness connector. Is the resistance below 5.0 ohms? Yes → Go To 5 No → Repair the Ambient Temperature Sensor Signal circuit for an open. Perform POWERTRAIN VERIFICATION TEST VER - 5.	All
5	Turn the ignition off. Disconnect the Ambient Temperature Sensor harness connector. Disconnect the FCM harness connector. Measure the resistance of the Sensor ground circuit between the Ambient Temperature Sensor harness connector and the FCM harness connector. Is the resistance below 5.0 ohms? Yes → Go To 6 No → Repair the Sensor ground circuit for an open. Perform POWERTRAIN VERIFICATION TEST VER - 5.	All
6	If there are no possible causes remaining, view repair. Repair Replace the Front Control Module in accordance with the Service Information. Perform POWERTRAIN VERIFICATION TEST VER - 5.	All

P1492-AMBIENT/BATT TEMP SEN VOLTS TOO HIGH — Continued

TEST	ACTION	APPLICABILITY
7	**WARNING: WHEN THE ENGINE IS OPERATING, DO NOT STAND IN A DIRECT LINE WITH THE FAN. DO NOT PUT YOUR HANDS NEAR THE PULLEYS, BELTS OR FAN. DO NOT WEAR LOOSE CLOTHING.** **NOTE: The conditions that set the DTC are not present at this time. The following list may help in identifying the intermittent condition.** With the engine running at normal operating temperature, monitor the DRBIII® parameters related to the DTC while wiggling the wiring harness. Look for parameter values to change and/or a DTC to set. Review the DRBIII® Freeze Frame information. If possible, try to duplicate the conditions under which the DTC was set. Refer to any Technical Service Bulletins (TSB) that may apply. Visually inspect the related wiring harness. Look for any chafed, pierced, pinched, or partially broken wires. Visually inspect the related wiring harness connectors. Look for broken, bent, pushed out, or corroded terminals. Were any of the above conditions present? Yes → Repair as necessary Perform POWERTRAIN VERIFICATION TEST VER - 5. No → Test Complete.	All

Symptom:

P1493-AMBIENT/BATT TEMP SEN VOLTS TOO LOW

When Monitored and Set Condition:

P1493-AMBIENT/BATT TEMP SEN VOLTS TOO LOW

When Monitored: The ignition key on.

Set Condition: Ambient Temperture Sensor is less than .098 volt at the PCM for 5 seconds.

POSSIBLE CAUSES
INTERMITTENT CONDITION
AMBIENT TEMPERATURE SENSOR INTERNAL FAILURE
AMBIENT TEMPERATURE SENSOR SIGNAL SHORTED TO GROUND
AMBIENT TEMPERATURE SENSOR SIGNAL SHORTED TO SENSOR GROUND CIRCUIT
FCM

TEST	ACTION	APPLICABILITY
1	Turn the ignition on. With the DRBIII®, read the Ambient Temperature Sensor voltage. Is the voltage below 0.3 volt? Yes → Go To 2 No → Go To 6	All
2	Turn the ignition off. Disconnect the Ambient Temperature Sensor harness connector. Turn the ignition on. With the DRBIII®, read Ambient Temperature Sensor voltage. Is the voltage above 1.0 volt? Yes → Replace the Ambient Temperature Sensor. Perform POWERTRAIN VERIFICATION TEST VER - 5. No → Go To 3	All
3	Turn the ignition off. Disconnect the Ambient Temperature Sensor harness connector. Disconnect the FCM harness connector. Measure the resistance of the Ambient Temperature Sensor Signal circuit in the Ambient Temperature Sensor harness connector to chassis ground. Is the resistance below 100 ohms? Yes → Repair the Ambient Temperature Sensor Signal circuit for a short to ground. Perform POWERTRAIN VERIFICATION TEST VER - 5. No → Go To 4	All

P1493-AMBIENT/BATT TEMP SEN VOLTS TOO LOW — Continued

TEST	ACTION	APPLICABILITY
4	Turn the ignition off. Disconnect the Ambient Temperature Sensor harness connector. Disconnect the FCM harness connector. Measure the resistance between the Ambient Temperature Sensor Signal circuit and the Sensor ground circuit in the Ambient Temperature Sensor harness connector. Is the resistance below 100 ohms? Yes → Repair the Ambient Temperature Sensor Signal circuit for a short to the Sensor ground circuit. Perform POWERTRAIN VERIFICATION TEST VER - 5. No → Go To 5	All
5	If there are no possible causes remaining, view repair. Repair Replace and program the Front Control Module in accordance with the Service Information. Perform POWERTRAIN VERIFICATION TEST VER - 5.	All
6	**WARNING: WHEN THE ENGINE IS OPERATING, DO NOT STAND IN A DIRECT LINE WITH THE FAN. DO NOT PUT YOUR HANDS NEAR THE PULLEYS, BELTS OR FAN. DO NOT WEAR LOOSE CLOTHING.** **NOTE: The conditions that set the DTC are not present at this time. The following list may help in identifying the intermittent condition.** With the engine running at normal operating temperature, monitor the DRBIII® parameters related to the DTC while wiggling the wiring harness. Look for parameter values to change and/or a DTC to set. Review the DRBIII® Freeze Frame information. If possible, try to duplicate the conditions under which the DTC was set. Refer to any Technical Service Bulletins (TSB) that may apply. Visually inspect the related wiring harness. Look for any chafed, pierced, pinched, or partially broken wires. Visually inspect the related wiring harness connectors. Look for broken, bent, pushed out, or corroded terminals. Were any of the above conditions present? Yes → Repair as necessary Perform POWERTRAIN VERIFICATION TEST VER - 5. No → Test Complete.	All

Symptom:
P1594-CHARGING SYSTEM VOLTAGE TOO HIGH

When Monitored and Set Condition:

P1594-CHARGING SYSTEM VOLTAGE TOO HIGH

When Monitored: The engine running. The engine speed greater than 380 RPM.

Set Condition: Battery voltage is 1 volt greater than desired system voltage.

POSSIBLE CAUSES
TARGET VOLTAGE DIFFERS FROM BATTERY VOLTAGE
INTERMITTENT CONDITION
GENERATOR FIELD DRIVER CIRCUIT SHORTED TO GROUND
GENERATOR FIELD
POWERTRAIN CONTROL MODULE

TEST	ACTION	APPLICABILITY
1	**Note: Battery must be fully charged.** **Note: Generator Belt tension and condition must be checked before continuing.** Turn the ignition on. With DRBIII®, actuate the Generator Field Driver. With a 12-volt test light connected to ground, backprobe the Generator Field Driver circuit in the back of Generator harness connector. Does the test light illuminate brightly and flash? Yes → Go To 2 No → Go To 5	All
2	With DRBIII®, stop all actuation. Turn the ignition on. With DRBIII®, read the Target Charging voltage. Is the Target Charging voltage above 13 volts? Yes → Go To 3 No → Go To 4	All
3	Start the engine. With the DRBIII®, manually set the engine speed to 1600 RPM. With DRBIII®, read both the Battery voltage and the Target Charging voltage. Compare the Target Charging Voltage to the Battery Voltage reading. Monitor voltage for 5 minutes, if necessary. Look for a 1.0 volt difference or more. Was there more than a 1.0 volt difference? Yes → Replace the Powertrain Control Module in accordance with the Service Information. Perform POWERTRAIN VERIFICATION TEST VER - 3. No → Go To 4	All

P1594-CHARGING SYSTEM VOLTAGE TOO HIGH — Continued

TEST	ACTION	APPLICABILITY
4	**WARNING: WHEN THE ENGINE IS OPERATING, DO NOT STAND IN A DIRECT LINE WITH THE FAN. DO NOT PUT YOUR HANDS NEAR THE PULLEYS, BELTS OR FAN. DO NOT WEAR LOOSE CLOTHING.** **NOTE: The conditions that set the DTC are not present at this time. The following list may help in identifying the intermittent condition.** With the engine running at normal operating temperature, monitor the DRBIII® parameters related to the DTC while wiggling the wiring harness. Look for parameter values to change and/or a DTC to set. Review the DRBIII® Freeze Frame information. If possible, try to duplicate the conditions under which the DTC was set. Refer to any Technical Service Bulletins (TSB) that may apply. Visually inspect the related wiring harness. Look for any chafed, pierced, pinched, or partially broken wires. Visually inspect the related wiring harness connectors. Look for broken, bent, pushed out, or corroded terminals. Were any of the above conditions present? Yes → Repair as necessary Perform POWERTRAIN VERIFICATION TEST VER - 3. No → Test Complete.	All
5	Turn the ignition off. Disconnect the PCM harness connector. Disconnect the Generator Field harness connector. Measure the resistance of the Generator Field Driver circuit from the PCM harness connector to ground. Is the resistance below 5.0 ohms? Yes → Repair the Generator Field Driver circuit shorted to ground. Perform POWERTRAIN VERIFICATION TEST VER - 3. No → Go To 6	All
6	Turn the ignition off. Disconnect the Generator Field harness connector. Measure resistance of the Generator Field Driver terminal pin of the Generator to ground. Is the resistance below 5.0 ohms? Yes → Repair or replace the shorted Generator as necessary. Perform POWERTRAIN VERIFICATION TEST VER - 3. No → Go To 7	All
7	If there are no possible causes remaining, view repair. Repair Replace and program the Powertrain Control Module in accordance with the Service Information. Perform POWERTRAIN VERIFICATION TEST VER - 3.	All

Symptom:
P1682-CHARGING SYSTEM VOLTAGE TOO LOW

When Monitored and Set Condition:

P1682-CHARGING SYSTEM VOLTAGE TOO LOW

When Monitored: With the ignition on. Engine RPM greater than 1152 RPM. With no other charging system codes set.

Set Condition: The battery sense voltage is 1 volt below the charging goal for 13.47 seconds. The PCM senses the battery voltage turns off the field driver and senses the battery voltage again. If the voltages are the same, the code is set.

POSSIBLE CAUSES
B+ CIRCUIT HIGH RESISTANCE
GENERATOR GROUND HIGH RESISTANCE
INTERMITTENT CONDITION
GENERATOR FIELD DRIVER CIRCUIT OPEN
ASD RELAY OUTPUT CIRCUIT OPEN
GENERATOR

TEST	ACTION	APPLICABILITY
1	**NOTE: Inspect the vehicle for aftermarket accessories that may exceed the Generator System output.** Turn the ignition off. **NOTE: The battery must be fully charged.** **NOTE: The Generator belt tension and condition must be checked before continuing.** Start the engine. Allow the idle to stabilize. With the DRBIII®, read the Target Charging Voltage. Is the Target Charging Voltage above 15.1 volts? Yes → Go To 8 No → Go To 2	All
2	**WARNING: WHEN THE ENGINE IS OPERATING, DO NOT STAND IN A DIRECT LINE WITH THE FAN. DO NOT PUT YOUR HANDS NEAR THE PULLEYS, BELTS OR FAN. DO NOT WEAR LOOSE CLOTHING.** Turn the ignition on. **NOTE: Ensure all wires are clear of the engine's moving parts.** Measure the voltage between the Generator B+ Terminal and the Battery+ Post. Start the engine. Is the voltage above 0.4 volt? Yes → Repair the B+ circuit for high resistance between the Generator and Battery. Perform POWERTRAIN VERIFICATION TEST VER - 3. No → Go To 3	All

P1682-CHARGING SYSTEM VOLTAGE TOO LOW — Continued

TEST	ACTION	APPLICABILITY
3	**WARNING: WHEN THE ENGINE IS OPERATING, DO NOT STAND IN A DIRECT LINE WITH THE FAN. DO NOT PUT YOUR HANDS NEAR THE PULLEYS, BELTS OR FAN. DO NOT WEAR LOOSE CLOTHING.** Start the engine. Warm the engine to operating temperature. **NOTE: Ensure all wires are clear of the engine's moving parts.** Measure the voltage between the Generator case and Battery ground post. Is the voltage above 0.1 volt? Yes → Repair Generator Case Ground for high resistance between the Generator Case and Battery ground terminal. Perform POWERTRAIN VERIFICATION TEST VER - 3. No → Go To 4	All
4	Start the engine. **WARNING: WHEN THE ENGINE IS OPERATING, DO NOT STAND IN A DIRECT LINE WITH THE FAN. DO NOT PUT YOUR HANDS NEAR THE PULLEYS, BELTS OR FAN. DO NOT WEAR LOOSE CLOTHING.** Turn on all accessories, manually set engine speed to 1600 RPM. With DRBIII®, read Target Charging and Charging voltage. Compare the two readings. Is there more than a 1.0 volt difference? Yes → Go To 5 No → Go To 8	All
5	Turn the ignition off. Disconnect the PCM harness connector. Disconnect the Generator Field harness connector. Measure the resistance of the Generator Field Driver circuit from the PCM harness connector to Generator harness connector. Is the resistance below 5.0 ohms? Yes → Go To 6 No → Repair the Generator Field Driver circuit for an open. Perform POWERTRAIN VERIFICATION TEST VER - 3.	All
6	Disconnect the Generator Field harness connector. Turn the ignition on. With the DRBIII® actuate the Generator Field Driver. Using a 12-volt test light connected to ground, probe the ASD Relay Output circuit in the Generator harness connector. Does the test light illuminate brightly? Yes → Go To 7 No → Repair the ASD Relay Output circuit. Perform POWERTRAIN VERIFICATION TEST VER - 3.	All
7	If there is no possible causes remaining, view repair. Yes → Repair or replace the Generator as necessary.. Perform POWERTRAIN VERIFICATION TEST VER - 3.	All

P1682-CHARGING SYSTEM VOLTAGE TOO LOW — Continued

TEST	ACTION	APPLICABILITY
8	**WARNING: WHEN THE ENGINE IS OPERATING, DO NOT STAND IN A DIRECT LINE WITH THE FAN. DO NOT PUT YOUR HANDS NEAR THE PULLEYS, BELTS OR FAN. DO NOT WEAR LOOSE CLOTHING.** **NOTE: The conditions that set the DTC are not present at this time. The following list may help in identifying the intermittent condition.** With the engine running at normal operating temperature, monitor the DRBIII® parameters related to the DTC while wiggling the wiring harness. Look for parameter values to change and/or a DTC to set. Review the DRBIII® Freeze Frame information. If possible, try to duplicate the conditions under which the DTC was set. Refer to any Technical Service Bulletins (TSB) that may apply. Visually inspect the related wiring harness. Look for any chafed, pierced, pinched, or partially broken wires. Visually inspect the related wiring harness connectors. Look for broken, bent, pushed out, or corroded terminals. Were any of the above conditions present? Yes → Repair as necessary Perform POWERTRAIN VERIFICATION TEST VER - 3. No → Test Complete.	All

Symptom List:

P0600-PCM FAILURE SPI COMMUNICATIONS
P0601-PCM INTERNAL CONTROLLER FAILURE

Test Note: All symptoms listed above are diagnosed using the same tests. The title for the tests will be P0600-PCM FAILURE SPI COMMUNICATIONS.

When Monitored and Set Condition:

P0600-PCM FAILURE SPI COMMUNICATIONS

When Monitored: Ignition key on.

Set Condition: Internal Bus communication failure between processors.

P0601-PCM INTERNAL CONTROLLER FAILURE

When Monitored: Ignition key on.

Set Condition: Internal checksum for software failed, does not match calculated value.

POSSIBLE CAUSES
PCM INTERNAL OR SPI

TEST	ACTION	APPLICABILITY
1	The Powertrain Control Module is reporting internal errors, view repair to continue. Repair Replace and program the Powertrain Control Module in accordance with the Service Information. Perform POWERTRAIN VERIFICATION TEST VER - 5.	All

Symptom:

P1685-WRONG OR INVALID KEY MSG RECEIVED FROM SKIM

When Monitored and Set Condition:

P1685-WRONG OR INVALID KEY MSG RECEIVED FROM SKIM

When Monitored: With the ignition on.

Set Condition: The PCM does not receive a Valid Key message from the SKIM.

POSSIBLE CAUSES
INCORRECT VIN IN PCM
INVALID SKIM KEY PRESENT
NO COMMUNICATION WITH SKIM
NO VIN PROGRAMMED IN THE PCM
PCM
SKIM TROUBLE CODES SET

TEST	ACTION	APPLICABILITY
1	Turn the ignition on. With the DRBIII®, read the PCM DTCs. Look for P1685. Is the Starts Since Set counter for DTC P1685 displayed and equal to 0? Yes → Go To 2 No → Go To 7	All
2	With the DRBIII®, attempt to communicate with the SKIM. Turn the ignition on. Can the DRBIII® communicate with the SKIM? Yes → Go To 3 No → Refer to symptom BUS +/- SIGNAL OPEN FROM SKIM in the COMMUNICATION category. Perform SKIS VERIFICATION.	All
3	Turn the ignition on. With the DRBIII®, check for SKIM DTCs. Are any DTCs present in the SKIM? Yes → Repair all SKIM DTCs. Perform SKIS VERIFICATION. No → Go To 4	All
4	Turn the ignition on. With the DRBIII®, display the VIN that is programmed in the PCM. Has a VIN been programmed into the PCM? Yes → Go To 5 No → Program the correct VIN into the PCM and retest. Perform SKIS VERIFICATION.	All

P1685-WRONG OR INVALID KEY MSG RECEIVED FROM SKIM — Continued

TEST	ACTION	APPLICABILITY
5	Turn the ignition on. With the DRBIII®, display the VIN that is programmed in the PCM. Was the correct VIN programmed into the PCM? Yes → Go To 6 No → Replace and program the Powertrain Control Module in accordance with the Service Information. Perform SKIS VERIFICATION.	All
6	Turn the ignition off. Replace and program the Sentry Key Immobilizer Module in accordance with the Service Information. Turn the ignition on. With the DRBIII®, erase all SKIM and PCM DTCs. Attempt to start and idle the engine. With the DRB III, read the PCM DTCs. Does the DRB III display this code? Yes → Replace and program the Powertrain Control Module in accordance with the Service Information. Perform SKIS VERIFICATION. No → Test Complete.	All
7	**NOTE: This DTC could have been set if the SKIM harness connector was disconnected, or if the SKIM was replaced recently.** **NOTE: All keys that the customer uses for this vehicle must be tested to verify they are operating properly.** **NOTE: Ensure the customer is not attempting to use a non-SKIM duplicate key.** Turn the ignition on. Verify the correct VIN is programmed into the PCM and SKIM. Turn the ignition off. With the next customer key turn the ignition key on and crank the engine to start. With the DRBIII®, read the PCM DTCs. Look for P1685 Is the Starts Since Set counter for DTC P1685 displayed and equal to 0? Yes → Replace the Ignition Key. Perform SKIS VERIFICATION. No → Test Complete. **NOTE: If this DTC cannot be reset, it could have been an actual theft attempt.**	All

Symptom:
P1686-NO SKIM BUS MESSAGE RECEIVED

When Monitored and Set Condition:

P1686-NO SKIM BUS MESSAGE RECEIVED

When Monitored: With the ignition on.

Set Condition: The PCM does not receive a Bus message from the SKIM when expected.

POSSIBLE CAUSES
SKIM/PCM
INTERMITTENT CONDITION
LOSS OF SKIM COMMUNICATION
PCI BUS CIRCUIT OPEN FROM PCM TO SKIM

TEST	ACTION	APPLICABILITY
1	Turn the ignition on. With the DRBIII®, read the PCM DTCs. Look for P1686. Is the Starts Since Set counter on the DTC screen for P1686 equal to Zero? Yes → Go To 2 No → Go To 5	All
2	Turn the ignition on. With the DRBIII®, attempt to communicate with the SKIM. **NOTE: This test will indicate if the Bus is operational from the DLC to the SKIM.** Was the DRBIII® able to communicate with the SKIM? Yes → Go To 3 No → Refer to symptom BUS +/- SIGNAL OPEN FROM SKIM in the COMMUNICATION category. Perform SKIS VERIFICATION.	All
3	Turn the ignition off. Disconnect the PCM harness connectors. Disconnect the SKIM harness connector. Measure the resistance of the PCI Bus circuit between the PCM harness connector and the SKIM harness connector. Is the resistance below 5.0 ohms? Yes → Go To 4 No → Repair the PCI Bus circuit between the PCM and the SKIM for an open. Perform SKIS VERIFICATION.	All

P1686-NO SKIM BUS MESSAGE RECEIVED — Continued

TEST	ACTION	APPLICABILITY
4	Turn the ignition off. Replace the Sentry Key Immobilizer Module in accordance with the Service Information. Turn the ignition on. Display and erase all PCM and SKIM DTCs. Perform 5 ignition key cycles leaving the ignition key on for 90 seconds per cycle. With the DRBIII®, display PCM DTCs. Does the DRBIII® display the same DTC? Yes → Replace and program the PCM in accordance with the Service Information. Perform SKIS VERIFICATION. No → Test Complete.	All
5	**WARNING: KEEP CLEAR OF THE ENGINE'S MOVING PARTS.** **NOTE: The conditions that set the DTC are not present at this time. The following list may help in identifying the intermittent condition.** With the engine running and at normal operating temperature, monitor the DRBIII® parameters related to the DTC while wiggling the wiring harness. Look for parameter values to change and/or a DTC to set. Review the DTC When Monitored and Set Conditions. If possible, try to duplicate the conditions under which the DTC was set. Refer to any Technical Service Bulletins (TSB) that may apply. Visually inspect the related wiring harness. Look for any chafed, pierced, pinched, or partially broken wires. Visually inspect the related wiring harness connectors. Look for broken, bent, pushed out, or corroded terminals. Were any of the above conditions present? Yes → Repair as necessary Perform SKIS VERIFICATION. No → Test Complete.	All

Symptom:

P1695-NO CCD/J1850 MESSAGE FROM BODY CONTROL MODULE

When Monitored and Set Condition:

P1695-NO CCD/J1850 MESSAGE FROM BODY CONTROL MODULE

When Monitored: With the ignition on. Battery voltage greater than 10.0 volts.

Set Condition: No BUS messages recieved from the BCM for 20 seconds.

POSSIBLE CAUSES
INTERMITTENT CONDITION
COMMUNICATE WITH BCM
PCI BUS CIRCUIT OPEN
PCM

TEST	ACTION	APPLICABILITY
1	Turn the ignition on. With the DRBIII®, erase DTCs. Cycle the ignition key on and off several times. Leaving the ignition on for at least 20 seconds. With the DRBIII®, read DTC's. Does the DTC reset? Yes → Go To 2 No → Go To 4	All
2	Turn the ignition on. With the DRBIII®, attempt to communicate with the BCM. Can communication be established with the BCM? Yes → Go To 3 No → Refer to the Communication Category and perform the appropriate symptom related to no communication with BCM. Perform POWERTRAIN VERIFICATION TEST VER - 1.	All
3	Turn the ignition off. Disconnect the PCM harness connector Disconnect the BCM harness connector. **NOTE: Inspect the PCI Bus terminal at both the PCM connectors and the BCM connectors. Check for corrosion, damage or terminal push out.** Measure the resistance of the PCI BUS circuit between the PCM harness connector and the BCM harness connector. Is the resistance below 5.0 ohms? Yes → Replace and program the Powertrain Control Module in accordance with the Service Information. Perform POWERTRAIN VERIFICATION TEST VER - 1. No → Repair the PCI BUS circuit for an open. Perform POWERTRAIN VERIFICATION TEST VER - 1.	All

P1695-NO CCD/J1850 MESSAGE FROM BODY CONTROL MODULE — Continued

TEST	ACTION	APPLICABILITY
4	**WARNING: WHEN THE ENGINE IS OPERATING, DO NOT STAND IN A DIRECT LINE WITH THE FAN. DO NOT PUT YOUR HANDS NEAR THE PULLEYS, BELTS OR FAN. DO NOT WEAR LOOSE CLOTHING.** **NOTE: The conditions that set the DTC are not present at this time. The following list may help in identifying the intermittent condition.** With the engine running at normal operating temperature, monitor the DRBIII® parameters related to the DTC while wiggling the wiring harness. Look for parameter values to change and/or a DTC to set. Review the DRBIII® Freeze Frame information. If possible, try to duplicate the conditions under which the DTC was set. Refer to any Technical Service Bulletins (TSB) that may apply. Visually inspect the related wiring harness. Look for any chafed, pierced, pinched, or partially broken wires. Visually inspect the related wiring harness connectors. Look for broken, bent, pushed out, or corroded terminals. Were any of the above conditions present? Yes → Repair as necessary Perform POWERTRAIN VERIFICATION TEST VER - 1. No → Test Complete.	All

Symptom List:

P1696-PCM FAILURE EEPROM WRITE DENIED
P1697-PCM FAILURE SRI MILE NOT STORED

Test Note: All symptoms listed above are diagnosed using the same tests. The title for the tests will be P1696-PCM FAILURE EEPROM WRITE DENIED.

When Monitored and Set Condition:

P1696-PCM FAILURE EEPROM WRITE DENIED

When Monitored: Ignition key on, Continuous.

Set Condition: An attempt to program/write to the internal EEPROM failed, Also checks at powerdown.

P1697-PCM FAILURE SRI MILE NOT STORED

When Monitored: Ignition key on, Continuous.

Set Condition: An attempt to program/write to the internal EEPROM failed, Also checks at powerdown.

POSSIBLE CAUSES
DRB DISPLAYS WRITE FAILURE
DRB DISPLAYS WRITE REFUSED 2ND TIME
DRB DISPLAYS SRI MILEAGE INVALID
COMPARE SRI MILEAGE WITH ODOMETER

TEST	ACTION	APPLICABILITY
1	With the DRBIII®, perform the SRI Memory Test. Does the DRBIII® display Write Failure? Yes → Replace and program the Powertrain Control Module in accordance with the Service Information. Perform POWERTRAIN VERIFICATION TEST VER - 1. No → Go To 2	All
2	With the DRBIII®, perform the SRI Memory Test. Does the DRBIII® display Write Refused? Yes → Go To 3 No → Go To 4	All

P1696-PCM FAILURE EEPROM WRITE DENIED — Continued

TEST	ACTION	APPLICABILITY
3	With the DRBIII®, perform the SRI Memory Test a second time. **NOTE: Retest the SRI Memory two more times.** Does the DRBIII® display Write Refused again? Yes → Replace and program the Powertrain Control Module in accordance with the Service Information. Perform POWERTRAIN VERIFICATION TEST VER - 1. No → Test Complete.	All
4	With the DRBIII®, perform the SRI Memory Test. Does the DRBIII® display SRI Mileage Invalid? Yes → Update the mileage and retest the SRI Memory. Perform POWERTRAIN VERIFICATION TEST VER - 1. No → Go To 5	All
5	Compare the SRI Mileage stored with the Instrument Panel Odometer. Is the mileage within the specified range displayed on the DRBIII®? Yes → Test Complete. No → Update the mileage and retest the SRI Memory. Perform POWERTRAIN VERIFICATION TEST VER - 1.	All

Symptom:

P1698-NO BUS MESSAGE FROM TRANS CONTROL MODULE

When Monitored and Set Condition:

P1698-NO BUS MESSAGE FROM TRANS CONTROL MODULE

When Monitored: Equipped with a 4 speed automatic transmission. The ignition on. Battery voltage greater than 10 volts.

Set Condition: No bus messages from the TCM for 20 seconds, two trips required.

POSSIBLE CAUSES
INTERMITTENT CONDITION
COMMUNICATE WITH TCM
PCM

TEST	ACTION	APPLICABILITY
1	Turn the ignition on. With the DRBIII®, erase DTCs. Cycle the ignition key on and off several times. Leaving the ignition on for at least 20 seconds. With the DRBIII®, read DTC's. Does the DTC reset? Yes → Go To 2 No → Go To 3	All
2	Turn the ignition on. With the DRBIII®, attempt to communicate with the TCM. Can communication be established with the TCM? Yes → Replace and program the Powertrain Control Module in accordance with the Service Information. Perform POWERTRAIN VERIFICATION TEST VER - 1. No → Refer to the Communication Category and perform the appropriate symptom related to no communication with TCM. Perform POWERTRAIN VERIFICATION TEST VER - 1.	All

P1698-NO BUS MESSAGE FROM TRANS CONTROL MODULE — Continued

TEST	ACTION	APPLICABILITY
3	**WARNING: WHEN THE ENGINE IS OPERATING, DO NOT STAND IN A DIRECT LINE WITH THE FAN. DO NOT PUT YOUR HANDS NEAR THE PULLEYS, BELTS OR FAN. DO NOT WEAR LOOSE CLOTHING.** **NOTE: The conditions that set the DTC are not present at this time. The following list may help in identifying the intermittent condition.** With the engine running at normal operating temperature, monitor the DRBIII® parameters related to the DTC while wiggling the wiring harness. Look for parameter values to change and/or a DTC to set. Review the DRBIII® Freeze Frame information. If possible, try to duplicate the conditions under which the DTC was set. Refer to any Technical Service Bulletins (TSB) that may apply. Visually inspect the related wiring harness. Look for any chafed, pierced, pinched, or partially broken wires. Visually inspect the related wiring harness connectors. Look for broken, bent, pushed out, or corroded terminals. Were any of the above conditions present? Yes → Repair as necessary Perform POWERTRAIN VERIFICATION TEST VER - 1. No → Test Complete.	All

Symptom:
*NO RESPONSE FROM PCM (PCI BUS)

POSSIBLE CAUSES
PCM PCI NO RESPONSE
PCI BUS CIRCUIT OPEN
POWERTRAIN CONTROL MODULE

TEST	ACTION	APPLICABILITY
1	Turn the ignition on. **NOTE: As soon as one or more module communicates with the DRB, answer the question.** With the DRB, enter Body then Body Computer. With the DRB, enter Anti-Lock Brakes. With the DRB, enter Body then Electro/Mechanical Cluster (MIC). With the DRB, enter Passive Restraints then Airbag. Were you able to establish communications with any of the modules? Yes → Go To 2 No → Refer to symptom PCI Bus Communication Failure in the Communications category. Perform POWERTRAIN VERIFICATION TEST VER - 1.	All
2	With the DRB read PCM Diagnostic Trouble Codes. This is to ensure power and grounds to the PCM are operational. **NOTE: If the DRB will not read PCM DTC's, follow the NO RESPONSE TO PCM (SCI only) symptom path.** **NOTE: If the vehicle will not start and the DRBIII® displays a no response message, refer to the appropriate symptom in the powertrain diagnostic procedures.** Turn the ignition off. Disconnect the PCM C2 harness connector. Use Scope input cable CH7058, Cable to Probe adapter CH7062, and the red and black test probes. Connect the scope input cable to the channel one connector on the DRB. Attach the red and black leads and the cable to probe adapter to the scope input cable. With the DRBIII® select Pep Module Tools. Select lab scope. Select Live Data. Select 12 volt square wave. Press F2 for Scope. Press F2 and use the down arrow to set voltage range to 20 volts. Set Probe to x10. Press F2 again when complete. Connect the Black lead to the PCM ground. Connect the Red lead to the PCI Bus circuit in the PCM connector. Turn the ignition on. Observe the voltage display on the DRB Lab Scope. Does the voltage pulse from 0 to approximately 7.5 volts? Yes → Replace the Powertrain Control Module in accordance with the Service Information. Perform POWERTRAIN VERIFICATION TEST VER - 1. No → Repair the PCI Bus circuit for an open. Perform POWERTRAIN VERIFICATION TEST VER - 1.	All

Symptom:

*NO RESPONSE FROM PCM (SCI ONLY)

POSSIBLE CAUSES
CHECK PCM POWERS AND GROUNDS
SCI TRANSMIT CIRCUIT SHORTED TO VOLTAGE
TRANSMISSION CONTROL MODULE
SCI RECEIVE CIRCUIT SHORTED TO VOLTAGE
SCI CIRCUITS SHORTED TOGETHER
SCI TRANSMIT CIRCUIT SHORTED TO GROUND
SCI RECEIVE CIRCUIT SHORTED TO GROUND
SCI RECEIVE CIRCUIT OPEN
SCI TRANSMIT CIRCUIT OPEN
GROUND CIRCUITS AT DLC OPEN
POWERTRAIN CONTROL MODULE

TEST	ACTION	APPLICABILITY
1	Perform the symptom Checking PCM Power and Ground Circuits in the Driveability category. **NOTE: With the DRBIII® in the generic scan tool mode, attempt to communicate with the PCM.** **NOTE: If the DRBIII® can communicate with the PCM in the generic scan tool mode, it may not be necessary to perform this step.** Did the vehicle pass this test? Yes → Go To 2 No → Repair as necessary. Perform POWERTRAIN VERIFICATION TEST VER - 1.	All
2	Turn the ignition off. Disconnect the PCM C2 harness connector. Disconnect the DRB from the DLC. Measure the resistance between ground and the SCI Transmit circuit. Is the resistance below 5.0 ohms? Yes → Go To 3 No → Go To 4	All
3	Turn the ignition off. Disconnect the TCM harness connector (if equipped). **NOTE: If vehicle is not equipped with a TCM, answer yes to the question.** Measure the resistance between ground and the SCI Transmit circuit. Is the resistance below 5.0 ohms? Yes → Repair the SCI Transmit circuit for a short to ground. Perform POWERTRAIN VERIFICATION TEST VER - 1. No → Replace the Transmission Control Module in accordance with the service information. Perform POWERTRAIN VERIFICATION TEST VER - 1.	All

*NO RESPONSE FROM PCM (SCI ONLY) — Continued

TEST	ACTION	APPLICABILITY
4	Turn the ignition off. Disconnect the DRB from the DLC. Disconnect the PCM harness connectors. Disconnect the TCM harness connector (if equipped). Turn the ignition on. Measure the voltage of the SCI Transmit circuit at the DLC connector (cav 7). Is the voltage above 1.0 volt? Yes → Repair the SCI Transmit circuit for a short to voltage. Perform POWERTRAIN VERIFICATION TEST VER - 1. No → Go To 5	All
5	Turn the ignition off. Disconnect the DRB from the DLC. Disconnect the PCM harness connectors. Turn the ignition on. Measure the voltage of the SCI Receive circuit at the DLC connector (cav 6). Is the voltage above 1.0 volt? Yes → Repair the SCI Receive circuit for a short to voltage. Perform POWERTRAIN VERIFICATION TEST VER - 1. No → Go To 6	All
6	Turn the ignition off. Disconnect the DRB from the DLC. Disconnect the PCM harness connectors. Measure the resistance between the SCI Transmit circuit and the SCI Receive circuit at the PCM connector. Is the resistance below 5.0 ohms? Yes → Repair the short between the SCI Transmit and the SCI Receive circuits. Perform POWERTRAIN VERIFICATION TEST VER - 1. No → Go To 7	All
7	Turn the ignition off. Disconnect the PCM C2 harness connector. Disconnect the DRB from the DLC. Measure the resistance between ground and the SCI Receive circuit. Is the resistance below 5.0 ohms? Yes → Repair the SCI Receive circuit for a short to ground. Perform POWERTRAIN VERIFICATION TEST VER - 1. No → Go To 8	All
8	Turn the ignition off. Disconnect the PCM C2 harness connector. Disconnect the DRB from the DLC. Measure the resistance of the SCI Receive circuit between the PCM C2 connector and the DLC. Is the resistance below 5.0 ohms? Yes → Go To 9 No → Repair the SCI Receive circuit for an open. Perform POWERTRAIN VERIFICATION TEST VER - 1.	All

*NO RESPONSE FROM PCM (SCI ONLY) — Continued

TEST	ACTION	APPLICABILITY
9	Turn the ignition off. Disconnect the PCM C2 harness connector. Disconnect the DRB from the DLC. Measure the resistance of the SCI Transmit circuit between the PCM C2 connector and the DLC. Is the resistance below 5.0 ohms? Yes → Go To 10 No → Repair the SCI Transmit circuit for an open. Perform POWERTRAIN VERIFICATION TEST VER - 1.	All
10	Turn the ignition off. Disconnect the DRB from the DLC. Disconnect the negative battery cable. Measure the resistance between ground and both ground circuits at the DLC. Is the resistance below 5.0 ohms for each measurement? Yes → Go To 11 No → Repair the ground circuit that measured above 5.0 ohms for an open. Perform POWERTRAIN VERIFICATION TEST VER - 1.	All
11	If there are no possible causes remaining, view repair. Repair Replace and program the Powertrain Control Module in accordance with the Service Information. Perform POWERTRAIN VERIFICATION TEST VER - 1.	All

Symptom:
*PCI BUS COMMUNICATION FAILURE

POSSIBLE CAUSES
WITH THE DRB PERFORM A MODULE SCAN
OPEN PCI BUS CIRCUIT AT THE DATA LINK CONNECTOR
USING THE DRB, PERFORM THE PCI BUS CONTROL MODE
DISCONNECT THE MODULE(S) HARNESS CONNECTOR
PCI BUS CIRCUIT SHORTED TO VOLTAGE
DISCONNECT THE MODULE(S) HARNESS CONNECTOR
PCI BUS CIRCUIT SHORTED TO GROUND
WIRING HARNESS INTERMITTENT FAILURE

TEST	ACTION	APPLICABILITY
1	**Note: Determine which modules this vehicle is equipped with before beginning.** Connect the Diagnostic Junction Port Tester #8339 to the DRBIII® and to the Diagnostic Junction Port. Using the DRBIII®, along with the Diagnostic Junction Port Tester #8339, select Junction Port Tool then PCI Bus Module Scan and follow the instructions on the DRBIII®. Was the DRBIII® able to scan (I/D or communicate) with any modules? Yes → Refer to the Communication category for the related symptom(s). (Individual module no responses). Perform BODY VERIFICATION TEST - VER 1. No → Go To 2	All
2	Turn the ignition off. Measure the resistance of the PCI Bus circuit between the Data Link Connector and the Diagnostic Junction Port connector. Is the resistance below 5.0 ohms? Yes → Go To 3 No → Repair the PCI Bus circuit for an open between the DLC and the Diagnostic Junction Port. Perform BODY VERIFICATION TEST - VER 1.	All

*PCI BUS COMMUNICATION FAILURE — Continued

TEST	ACTION	APPLICABILITY
3	**Note: Determine which modules this vehicle is equipped with before beginning.** Connect the Diagnostic Junction Port Tester #8339 to the DRB and to the Diagnostic Junction Port. Using the DRB, along with the Diagnostic Junction Port Tester #8339, select Junction Port Tool then PCI Bus Control Mode and follow the instructions on the DRB. **Note: Perform this function on each pin that is equipped with a PCI Bus circuit.** Did the DRB display No Modules Responding from any of the pins that were scanned? Yes → Go To 4 No → Check the PCI Bus circuit between the DLC and the Diagnostic Junction Port connector for a short to voltage or to ground, repair as necessary. Perform BODY VERIFICATION TEST - VER 1.	All
4	Disconnect the Diagnostic Junction Port Tester cable from the DRB. Keep the tester connected to the Diagnostic Junction Port. Turn the ignition on. Measure the voltage of the PCI Bus circuit on the Diagnostic Junction Port Tester that the DRB displayed No Modules Responding. Is the voltage steadily above 7.0 volts? Yes → Go To 5 No → Go To 6	All
5	Measure the voltage of the PCI Bus circuit on the Diagnostic Junction Port tester that previously measured above 7.0 volts. **Note: Turn the ignition off before disconnecting any module harness connector then turn the ignition on.** Disconnect the module harness connector(s). Note: If the problem occurred on pins 1, 3, 9 or 12 of the Diagnostic Junction Port tester, observe the voltmeter while disconnecting each module connector one at a time. Is the voltage steadily above 7.0 volts with the module(s) disconnected? Yes → Repair the PCI Bus circuit that measured over 7.0 volts for a short to voltage. Perform BODY VERIFICATION TEST - VER 1. No → Replace the module that when disconnected the short to voltage was eliminated. Perform BODY VERIFICATION TEST - VER 1.	All
6	Disconnect the Diagnostic Junction Port Tester cable from the DRB. Keep the tester connected to the Diagnostic Junction Port. Turn the ignition off. Disconnect the negative battery cable. Measure the resistance between ground and the PCI Bus circuit on the Diagnostic Junction Port Tester that the DRB displayed No Modules Responding. Is the resistance below 100.0 ohms? Yes → Go To 7 No → Go To 8	All

*PCI BUS COMMUNICATION FAILURE — Continued

TEST	ACTION	APPLICABILITY
7	Disconnect the negative battery cable. Measure the resistance between ground and the PCI Bus circuit at the Diagnostic Junction Port tester that previously measured below 100.0 ohms. Disconnect the module harness connector(s). Note: If the problem occurred on pins 1, 3, 9 or 12 of the Diagnostic Junction Port tester, observe the ohmmeter while disconnecting each module connector one at a time. Is the resistance below 100.0 ohms with the module(s) disconnected? Yes → Repair the PCI Bus circuit that measured below 100.0 ohms for a short to ground. Perform BODY VERIFICATION TEST - VER 1. No → Replace the module that when disconnected the short to ground was eliminated. Perform BODY VERIFICATION TEST - VER 1.	All
8	Turn the ignition off. **Note: Visually inspect the related wiring harness. Look for any chafed, pierced, pinched, or partially broken wires.** **Note: Visually inspect the related wire harness connectors. Look for broken, bent, pushed out, or corroded terminals.** Were any problems found? Yes → Repair wiring harness/connectors as necessary. Perform BODY VERIFICATION TEST - VER 1. No → Test Complete.	All

Symptom:

P0106-BAROMETRIC PRESSURE OUT OF RANGE

When Monitored and Set Condition:

P0106-BAROMETRIC PRESSURE OUT OF RANGE

When Monitored: With the ignition key on. No Cam or Crank signal within 75 ms. Engine speed at less than 250 RPM.

Set Condition: The PCM senses the voltage from the MAP sensor to be less than 2.196 volts but above 0.0392 volts for 300 milliseconds.

POSSIBLE CAUSES
INTERMITTENT CONDITION
5 VOLT SUPPLY CIRCUIT SHORTED TO VOLTAGE
5 VOLT SUPPLY CIRCUIT SHORTED TO GROUND
5 VOLT SUPPLY CIRCUIT OPEN
MAP SENSOR INTERNAL FAILURE
MAP SENSOR SIGNAL CIRCUIT OPEN
MAP SENSOR SIGNAL CIRCUIT SHORTED TO GROUND
PCM 5 VOLT SUPPLY CIRCUIT
PCM MAP SENSOR SIGNAL

TEST	ACTION	APPLICABILITY
1	Turn the ignition on. (Do not start engine) With the DRBIII®, read the MAP Sensor voltage. Is the voltage below 2.2 volts? Yes → Go To 2 No → Go To 11	All
2	Turn the ignition off. Disconnect the MAP Sensor harness connector. Turn the ignition on. Measure the voltage of the 5 Volt Supply circuit in the MAP Sensor harness connector. Is the voltage between 4.5 to 5.2 volts? Yes → Go To 3 No → Go To 7	All

P0106-BAROMETRIC PRESSURE OUT OF RANGE — Continued

TEST	ACTION	APPLICABILITY
3	Turn the ignition off. Disconnect the MAP Sensor harness connector. Turn the ignition on. With the DRBIII®, monitor the MAP Sensor voltage. Is the voltage above 2.2 volts? Yes → Replace the MAP Sensor. Perform POWERTRAIN VERIFICATION TEST VER - 5. No → Go To 4	All
4	Turn the ignition off. Disconnect the MAP Sensor harness connector. Disconnect the PCM harness connector. Measure the resistance of the MAP Sensor Signal circuit between the MAP Sensor harness connector and the PCM harness connector. Is the resistance below 5.0 ohms? Yes → Go To 5 No → Repair the MAP Sensor Signal circuit for an open. Perform POWERTRAIN VERIFICATION TEST VER - 5.	All
5	Turn the ignition off. Disconnect the MAP Sensor harness connector. Disconnect the PCM harness connector. Measure the resistance of the MAP Sensor Signal circuit in the MAP Sensor harness connector to ground. Is the resistance below 100 ohms? Yes → Repair the MAP Sensor Signal circuit for a short to ground. Perform POWERTRAIN VERIFICATION TEST VER - 5. No → Go To 6	All
6	**NOTE: Before Continuing: Disconnect the PCM harness connector and check the related wiring terminals for corrosion, damage or terminal push out. Repair as necessary.** If there are no possible causes remaining, view repair. Repair Replace and program the Powertrain Control Module in accordance with the Service Information. Perform POWERTRAIN VERIFICATION TEST VER - 5.	All
7	Turn the ignition off. Disconnect the MAP Sensor harness connector. Turn the ignition on. Measure the voltage of the 5 Volt Supply circuit in the MAP Sensor harness connector. Is the voltage above 5.2 volts? Yes → Repair the 5 Volt Supply circuit for a short to battery voltage. Perform POWERTRAIN VERIFICATION TEST VER - 5. No → Go To 8	All

P0106-BAROMETRIC PRESSURE OUT OF RANGE — Continued

TEST	ACTION	APPLICABILITY
8	Turn the ignition off. Disconnect the MAP Sensor harness connector. Disconnect the PCM harness connector. Measure the resistance of the 5 Volt Supply circuit in the MAP Sensor harness connector to ground. Is the resistance below 100 ohms? Yes → Repair the 5 Volt Supply circuit for a short to ground. Perform POWERTRAIN VERIFICATION TEST VER - 5. No → Go To 9	All
9	Turn the ignition off. Disconnect the MAP Sensor harness connector. Disconnect the PCM harness connector. Measure the resistance of the 5 Volt Supply circuit between the MAP Sensor harness connector and the PCM harness connector. Is the resistance below 5.0 ohms? Yes → Go To 10 No → Repair the 5 Volt Supply circuit for an open. Perform POWERTRAIN VERIFICATION TEST VER - 5.	All
10	**NOTE: Before Continuing: Disconnect the PCM harness connector and check the related wiring terminals for corrosion, damage or terminal push out. Repair as necessary.** If there are no possible causes remaining, view repair. Repair Replace and program the Powertrain Control Module in accordance with the Service Information. Perform POWERTRAIN VERIFICATION TEST VER - 5.	All
11	**WARNING: WHEN THE ENGINE IS OPERATING, DO NOT STAND IN A DIRECT LINE WITH THE FAN. DO NOT PUT YOUR HANDS NEAR THE PULLEYS, BELTS OR FAN. DO NOT WEAR LOOSE CLOTHING.** **NOTE: The conditions that set the DTC are not present at this time. The following list may help in identifying the intermittent condition.** With the engine running at normal operating temperature, monitor the DRBIII® parameters related to the DTC while wiggling the wiring harness. Look for parameter values to change and/or a DTC to set. Review the DRBIII® Freeze Frame information. If possible, try to duplicate the conditions under which the DTC was set. Refer to any Technical Service Bulletins (TSB) that may apply. Visually inspect the related wiring harness. Look for any chafed, pierced, pinched, or partially broken wires. Visually inspect the related wiring harness connectors. Look for broken, bent, pushed out, or corroded terminals. Were any of the above conditions present? Yes → Repair as necessary Perform POWERTRAIN VERIFICATION TEST VER - 5. No → Test Complete.	All

Symptom:

P0107-MAP SENSOR VOLTAGE TOO LOW

When Monitored and Set Condition:

P0107-MAP SENSOR VOLTAGE TOO LOW

When Monitored: Engine speed between 600 to 3500 RPM. TPS voltage less than 1.2 volts. Battery voltage greater than 10 volts.

Set Condition: The MAP sensor signal voltage is below 0.0392 volt for 1.7 seconds.

POSSIBLE CAUSES
INTERMITTENT CONDITION
5 VOLT SUPPLY CIRCUIT SHORTED TO GROUND
5 VOLT SUPPLY CIRCUIT OPEN
MAP SENSOR INTERNAL FAILURE
MAP SENSOR SIGNAL CIRCUIT SHORTED TO GROUND
MAP SENSOR SIGNAL CIRCUIT SHORTED TO SENSOR GROUND CIRCUIT
PCM 5 VOLT SUPPLY CIRCUIT
PCM MAP SENSOR SIGNAL

TEST	ACTION	APPLICABILITY
1	Turn the ignition on. With the DRBIII®, read the MAP Sensor voltage. Is the voltage below 1.2 volts? Yes → Go To 3 No → Go To 2	All
2	Start the engine. With the DRBIII®, read the MAP Sensor voltage. Is the voltage below .04 volts? Yes → Go To 3 No → Go To 11	All
3	Turn the ignition off. Disconnect the MAP Sensor harness connector. Turn the ignition on. Measure the voltage of the 5 Volt Supply circuit in the MAP Sensor harness connector. Is the voltage between 4.5 to 5.2 volts? Yes → Go To 4 No → Go To 8	All

P0107-MAP SENSOR VOLTAGE TOO LOW — Continued

TEST	ACTION	APPLICABILITY
4	Turn the ignition off. Disconnect the MAP Sensor harness connector. Turn the ignition on. With the DRBIII®, monitor the MAP Sensor voltage. Is the voltage above 1.2 volts? Yes → Replace the MAP Sensor. Perform POWERTRAIN VERIFICATION TEST VER - 5. No → Go To 5	All
5	Turn the ignition off. Disconnect the MAP Sensor harness connector. Disconnect the PCM harness connector. Measure the resistance of the MAP Sensor Signal circuit between the MAP Sensor harness connector and ground. Is the resistance below 100 ohms? Yes → Repair the MAP Sensor Signal circuit for a short to ground. Perform POWERTRAIN VERIFICATION TEST VER - 5. No → Go To 6	All
6	Turn the ignition off. Disconnect the MAP Sensor harness connector. Disconnect the PCM harness connector. Measure the resistance between the MAP Sensor Signal circuit and the Sensor ground circuit in the MAP Sensor harness connector. Is the resistance below 100 ohms? Yes → Repair the MAP Sensor Signal circuit for a short to the Sensor ground circuit. Perform POWERTRAIN VERIFICATION TEST VER - 5. No → Go To 7	All
7	If there are no possible causes remaining, view repair. Repair Replace and program the Powertrain Control Module in accordance with the Service Information. Perform POWERTRAIN VERIFICATION TEST VER - 5.	All
8	Turn the ignition off. Disconnect the MAP Sensor harness connector. Disconnect the PCM harness connector. Measure the resistance of the 5 Volt Supply circuit in the MAP Sensor harness connector to ground. Is the resistance below 100 ohms? Yes → Repair the 5 Volt Supply circuit for a short to ground. Perform POWERTRAIN VERIFICATION TEST VER - 5. No → Go To 9	All

P0107-MAP SENSOR VOLTAGE TOO LOW — Continued

TEST	ACTION	APPLICABILITY
9	Turn the ignition off. Disconnect the MAP Sensor harness connector. Disconnect the PCM harness connector. Measure the resistance of the 5 Volt Supply circuit between the MAP Sensor harness connector and the PCM harness connector. Is the resistance below 5.0 ohms? Yes → Go To 10 No → Repair the 5 Volt Supply circuit for an open. Perform POWERTRAIN VERIFICATION TEST VER - 5.	All
10	If there are no possible causes remaining, view repair. Repair Replace and program the Powertrain Control Module in accordance with the Service Information. Perform POWERTRAIN VERIFICATION TEST VER - 5.	All
11	**WARNING: WHEN THE ENGINE IS OPERATING, DO NOT STAND IN A DIRECT LINE WITH THE FAN. DO NOT PUT YOUR HANDS NEAR THE PULLEYS, BELTS OR FAN. DO NOT WEAR LOOSE CLOTHING.** **NOTE: The conditions that set the DTC are not present at this time. The following list may help in identifying the intermittent condition.** With the engine running at normal operating temperature, monitor the DRBIII® parameters related to the DTC while wiggling the wiring harness. Look for parameter values to change and/or a DTC to set. Review the DRBIII® Freeze Frame information. If possible, try to duplicate the conditions under which the DTC was set. Refer to any Technical Service Bulletins (TSB) that may apply. Visually inspect the related wiring harness. Look for any chafed, pierced, pinched, or partially broken wires. Visually inspect the related wiring harness connectors. Look for broken, bent, pushed out, or corroded terminals. Were any of the above conditions present? Yes → Repair as necessary Perform POWERTRAIN VERIFICATION TEST VER - 5. No → Test Complete.	All

Symptom:

P0108-MAP SENSOR VOLTAGE TOO HIGH

When Monitored and Set Condition:

P0108-MAP SENSOR VOLTAGE TOO HIGH

When Monitored: Engine speed between 600 to 3500 RPM. TP sensor voltage less than 1.2 volts for greater than 1.7 seconds. Battery voltage greater than 10 volts

Set Condition: The MAP sensor signal voltage is greater than 4.96 volts.

POSSIBLE CAUSES
INTERMITTENT CONDITION
MAP SENSOR SIGNAL CIRCUIT SHORTED TO 5 VOLT SUPPLY CIRCUIT
MAP SENSOR SIGNAL CIRCUIT SHORTED TO BATTERY VOLTAGE
MAP SENSOR INTERNAL FAILURE
MAP SENSOR SIGNAL CIRCUIT OPEN
SENSOR GROUND CIRCUIT OPEN
PCM

TEST	ACTION	APPLICABILITY
1	Start the engine. With the DRBIII®, read the MAP Sensor voltage. Is the voltage above 4.6 volts? Yes → Go To 2 No → Go To 8	All
2	Turn the ignition off. Disconnect the MAP Sensor harness connector. Disconnect the PCM harness connector. Measure the resistance between the MAP Sensor Signal circuit and the 5 Volt Supply circuit in the MAP Sensor harness connector. Is the resistance below 100 ohms? Yes → Repair the MAP Sensor Signal circuit for a short to the 5 Volt Supply circuit. Perform POWERTRAIN VERIFICATION TEST VER - 5. No → Go To 3	All

P0108-MAP SENSOR VOLTAGE TOO HIGH — Continued

TEST	ACTION	APPLICABILITY
3	Turn the ignition off. Disconnect the MAP Sensor harness connector. Turn the ignition on. Measure the voltage of the MAP Sensor Signal circuit in the MAP Sensor harness connector. Is the voltage above 5.2 volts? Yes → Repair the MAP Sensor Signal circuit for a short to battery voltage. Perform POWERTRAIN VERIFICATION TEST VER - 5. No → Go To 4	All
4	Turn the ignition off. Disconnect the MAP Sensor harness connector. Connect a jumper wire between the MAP Sensor Signal circuit and the Sensor ground circuit. With the DRBIII®, monitor the MAP Sensor voltage. Turn the ignition on. Is the voltage below 1.0 volts? Yes → Replace the MAP Sensor. Perform POWERTRAIN VERIFICATION TEST VER - 5. No → Go To 5	All
5	Turn the ignition off. Disconnect the MAP Sensor harness connector. Disconnect the PCM harness connector. Measure the resistance of the MAP Sensor Signal circuit between the MAP Sensor harness connector and the PCM harness connector. Is the resistance below 5.0 ohms? Yes → Go To 6 No → Repair the MAP Sensor Signal circuit for an open. Perform POWERTRAIN VERIFICATION TEST VER - 5.	All
6	Turn the ignition off. Disconnect the MAP Sensor harness connector. Disconnect the PCM harness connector. Measure the resistance of the Sensor ground circuit between the MAP Sensor harness connector and the PCM harness connector. Is the resistance below 5.0 ohms? Yes → Go To 7 No → Repair the Sensor ground circuit for an open. Perform POWERTRAIN VERIFICATION TEST VER - 5.	All
7	If there are no possible causes remaining, view repair. Repair Replace and program the Powertrain Control Module in accordance with the Service Information. Perform POWERTRAIN VERIFICATION TEST VER - 5.	All

P0108-MAP SENSOR VOLTAGE TOO HIGH — Continued

TEST	ACTION	APPLICABILITY
8	**WARNING: WHEN THE ENGINE IS OPERATING, DO NOT STAND IN A DIRECT LINE WITH THE FAN. DO NOT PUT YOUR HANDS NEAR THE PULLEYS, BELTS OR FAN. DO NOT WEAR LOOSE CLOTHING.** **NOTE: The conditions that set the DTC are not present at this time. The following list may help in identifying the intermittent condition.** With the engine running at normal operating temperature, monitor the DRBIII® parameters related to the DTC while wiggling the wiring harness. Look for parameter values to change and/or a DTC to set. Review the DRBIII® Freeze Frame information. If possible, try to duplicate the conditions under which the DTC was set. Refer to any Technical Service Bulletins (TSB) that may apply. Visually inspect the related wiring harness. Look for any chafed, pierced, pinched, or partially broken wires. Visually inspect the related wiring harness connectors. Look for broken, bent, pushed out, or corroded terminals. Were any of the above conditions present? Yes → Repair as necessary Perform POWERTRAIN VERIFICATION TEST VER - 5. No → Test Complete.	All

Symptom:

P0111-INTAKE AIR TEMP SENSOR PERFORMANCE

When Monitored and Set Condition:

P0111-INTAKE AIR TEMP SENSOR PERFORMANCE

When Monitored: With the ignition on. Coolant Temperature greater than 71°C (160°F) No Inlet Air Temperature Sensor Faults present

Set Condition: After 5 warm cycles have occurred (coolant increases from great than 4.4°C (40°F) to a minimum of 71°C (160°F) and the odometer mileage has increased 196.6 miles and the Inlet Air Temperature has increased less than 3°C (5.4°F) change in temperature. Two trip fault.

POSSIBLE CAUSES
INTERMITTENT CONDITION
IAT SENSOR VOLTAGE BELOW 1.0 VOLTS
SENSOR GROUND CIRCUIT VOLTAGE DROP
IAT SENSOR SIGNAL CIRCUIT VOLTAGE DROP
PCM

TEST	ACTION	APPLICABILITY
1	**NOTE: If DTC P1192 or P1193 have set along with P0111, diagnose P1192 or P1193 first before continuing.** Turn the ignition on. With the DRBIII®, read DTC's. Is the Good Trip displayed and equal to zero? Yes → Go To 2 No → Go To 7	All
2	Turn the ignition off. Disconnect the Inlet Air Temperature Sensor harness connector. Turn the ignition on. With the DRBIII®, read the IAT voltage. Is the voltage above 4.6 volts? Yes → Go To 3 No → Go To 4	All
3	Turn the ignition off. Disconnect the Inlet Air Temperature Sensor harness connector. Using a jumper wire, jumper across the IAT Sensor harness connector. Turn the ignition on. With the DRBIII®, read the IAT voltage. Is the voltage below 1.0 volt? Yes → Replace the Inlet Air Temperature Sensor. Perform POWERTRAIN VERIFICATION TEST VER - 5. No → Go To 4	All

P0111-INTAKE AIR TEMP SENSOR PERFORMANCE — Continued

TEST	ACTION	APPLICABILITY
4	**NOTE: Ensure the voltmeter leads meet the terminals in the connector and that there is good terminal to wire connection.** **NOTE: Ensure the voltmeter leads are connected for positive polarity** Backprobe between the Sensor ground circuit at the IAT Sensor harness connector and PCM harness connector. Start the engine. Allow the engine to idle. Is the voltage below 0.10 volt? Yes → Go To 5 No → Repair the high resistance in the Sensor ground circuit. Perform POWERTRAIN VERIFICATION TEST VER - 5.	All
5	**NOTE: Ensure the voltmeter leads meet the terminals in the connector and that there is good terminal to wire connection.** **NOTE: Ensure the voltmeter leads are connected for positive polarity** Backprobe between the IAT Sensor Signal circuit at the IAT Sensor harness connector and PCM harness connector. Start the engine. Allow the engine to idle. Is the voltage below 0.10 volt? Yes → Go To 6 No → Repair the high resistance in the IAT Sensor Signal circuit. Perform POWERTRAIN VERIFICATION TEST VER - 5.	All
6	If there are no possible causes remaining, view repair. Repair Replace and program the Powertrain Control Module in accordance with the Service Information. Perform POWERTRAIN VERIFICATION TEST VER - 5.	All
7	**WARNING: WHEN THE ENGINE IS OPERATING, DO NOT STAND IN A DIRECT LINE WITH THE FAN. DO NOT PUT YOUR HANDS NEAR THE PULLEYS, BELTS OR FAN. DO NOT WEAR LOOSE CLOTHING.** **NOTE: The conditions that set the DTC are not present at this time. The following list may help in identifying the intermittent condition.** With the engine running at normal operating temperature, monitor the DRBIII® parameters related to the DTC while wiggling the wiring harness. Look for parameter values to change and/or a DTC to set. Review the DRBIII® Freeze Frame information to identify under what conditions the DTC set. Refer to any Technical Service Bulletins (TSB) that may apply. Visually inspect the related wiring harness. Look for any chafed, pierced, pinched, or partially broken wires. Visually inspect the related wiring harness connectors. Look for broken, bent, pushed out, or corroded terminals. Were any of the above conditions present? Yes → Repair as necessary Perform POWERTRAIN VERIFICATION TEST VER - 5. No → Test Complete.	All

Symptom:

P0112-INTAKE AIR TEMP SENSOR VOLTAGE LOW

When Monitored and Set Condition:

P0112-INTAKE AIR TEMP SENSOR VOLTAGE LOW

When Monitored: With the ignition on. Battery voltage greater than 10 volts.

Set Condition: The Intake Air Temperature (IAT) sensor circuit voltage at the PCM goes below 0.5 volt.

POSSIBLE CAUSES
INTERMITTENT CONDITION
IAT SENSOR INTERNAL FAILURE
IAT SENSOR SIGNAL SHORTED TO GROUND
IAT SENSOR SIGNAL SHORTED TO SENSOR GROUND CIRCUIT
PCM

TEST	ACTION	APPLICABILITY
1	Turn the ignition on. With the DRBIII®, read the IAT voltage. Is the voltage below 1.0 volt? Yes → Go To 2 No → Go To 6	All
2	Turn the ignition off. Disconnect the IAT harness connector. Turn the ignition on. With the DRBIII®, read IAT voltage. Is the voltage above 1.0 volt? Yes → Replace the IAT Sensor. Perform POWERTRAIN VERIFICATION TEST VER - 5. No → Go To 3	All
3	Turn the ignition off. Disconnect the MAP/IAT Sensor harness connector. Disconnect the PCM harness connector. Measure the resistance of the IAT Sensor Signal circuit between the MAP/IAT Sensor harness connector and ground. Is the resistance below 100 ohms? Yes → Repair the IAT Sensor Signal circuit for a short to ground. Perform POWERTRAIN VERIFICATION TEST VER - 5. No → Go To 4	All

P0112-INTAKE AIR TEMP SENSOR VOLTAGE LOW — Continued

TEST	ACTION	APPLICABILITY
4	Turn the ignition off. Disconnect the MAP/IAT Sensor harness connector. Disconnect the PCM harness connector. Measure the resistance between the IAT Sensor Signal circuit and the Sensor ground circuit in the MAP/IAT Sensor harness connector. Is the resistance below 100 ohms? Yes → Repair the IAT Sensor Signal circuit for a short to the Sensor ground circuit. Perform POWERTRAIN VERIFICATION TEST VER - 5. No → Go To 5	All
5	If there are no possible causes remaining, view repair. Repair Replace and program the Powertrain Control Module in accordance with the Service Information. Perform POWERTRAIN VERIFICATION TEST VER - 5.	All
6	**WARNING: WHEN THE ENGINE IS OPERATING, DO NOT STAND IN A DIRECT LINE WITH THE FAN. DO NOT PUT YOUR HANDS NEAR THE PULLEYS, BELTS OR FAN. DO NOT WEAR LOOSE CLOTHING.** **NOTE: The conditions that set the DTC are not present at this time. The following list may help in identifying the intermittent condition.** With the engine running at normal operating temperature, monitor the DRBIII® parameters related to the DTC while wiggling the wiring harness. Look for parameter values to change and/or a DTC to set. Review the DRBIII® Freeze Frame information. If possible, try to duplicate the conditions under which the DTC was set. Refer to any Technical Service Bulletins (TSB) that may apply. Visually inspect the related wiring harness. Look for any chafed, pierced, pinched, or partially broken wires. Visually inspect the related wiring harness connectors. Look for broken, bent, pushed out, or corroded terminals. Were any of the above conditions present? Yes → Repair as necessary Perform POWERTRAIN VERIFICATION TEST VER - 5. No → Test Complete.	All

Symptom:

P0113-INTAKE AIR TEMP SENSOR VOLTAGE HIGH

When Monitored and Set Condition:

P0113-INTAKE AIR TEMP SENSOR VOLTAGE HIGH

When Monitored: With the ignition on. Battery voltage greater than 10 volts.

Set Condition: The Intake Air Temperature (IAT) sensor circuit voltage at the PCM goes above 4.9 volts.

POSSIBLE CAUSES
INTERMITTENT CONDITION
IAT SENSOR SIGNAL CIRCUIT SHORTED TO BATTERY VOLTAGE
IAT SENSOR INTERNAL FAILURE
IAT SENSOR SIGNAL CIRCUIT OPEN
SENSOR GROUND CIRCUIT OPEN
PCM

TEST	ACTION	APPLICABILITY
1	Turn the ignition on. With the DRBIII®, read the IAT voltage. Is the voltage above 4.6 volts? Yes → Go To 2 No → Go To 7	All
2	Turn the ignition off. Disconnect the MAP/IAT Sensor harness connector. Turn the ignition on. Measure the voltage of the IAT Sensor Signal circuit in the MAP/IAT Sensor harness connector. Is the voltage above 5.2 volts? Yes → Repair the IAT Sensor Signal circuit for a short to battery voltage. Perform POWERTRAIN VERIFICATION TEST VER - 5. No → Go To 3	All
3	Turn the ignition off. Disconnect the IAT harness connector. Connect a jumper wire between the IAT Sensor Signal circuit and the Sensor ground circuit in the IAT harness connector. Turn the ignition on. With the DRBIII®, read IAT voltage. Is the voltage below 1.0 volt? Yes → Replace the IAT Sensor. Perform POWERTRAIN VERIFICATION TEST VER - 5. No → Go To 4	All

P0113-INTAKE AIR TEMP SENSOR VOLTAGE HIGH — Continued

TEST	ACTION	APPLICABILITY
4	Turn the ignition off. Disconnect the IAT Sensor harness connector. Disconnect the PCM harness connector. Measure the resistance of the IAT Sensor Signal circuit between the IAT Sensor harness connector and the PCM harness connector. Is the resistance below 5.0 ohms? Yes → Go To 5 No → Repair the IAT Sensor Signal circuit for an open. Perform POWERTRAIN VERIFICATION TEST VER - 5.	All
5	Turn the ignition off. Disconnect the IAT Sensor harness connector. Disconnect the PCM harness connector. Measure the resistance of the Sensor ground circuit between the IAT Sensor harness connector and the PCM harness connector. Is the resistance below 5.0 ohms? Yes → Go To 6 No → Repair the Sensor ground circuit for an open. Perform POWERTRAIN VERIFICATION TEST VER - 5.	All
6	If there are no possible causes remaining, view repair. Repair Replace and program the Powertrain Control Module in accordance with the Service Information. Perform POWERTRAIN VERIFICATION TEST VER - 5.	All
7	**WARNING: WHEN THE ENGINE IS OPERATING, DO NOT STAND IN A DIRECT LINE WITH THE FAN. DO NOT PUT YOUR HANDS NEAR THE PULLEYS, BELTS OR FAN. DO NOT WEAR LOOSE CLOTHING.** **NOTE: The conditions that set the DTC are not present at this time. The following list may help in identifying the intermittent condition.** With the engine running at normal operating temperature, monitor the DRBIII® parameters related to the DTC while wiggling the wiring harness. Look for parameter values to change and/or a DTC to set. Review the DRBIII® Freeze Frame information. If possible, try to duplicate the conditions under which the DTC was set. Refer to any Technical Service Bulletins (TSB) that may apply. Visually inspect the related wiring harness. Look for any chafed, pierced, pinched, or partially broken wires. Visually inspect the related wiring harness connectors. Look for broken, bent, pushed out, or corroded terminals. Were any of the above conditions present? Yes → Repair as necessary Perform POWERTRAIN VERIFICATION TEST VER - 5. No → Test Complete.	All

Symptom:

P0117-ECT SENSOR VOLTAGE TOO LOW

When Monitored and Set Condition:

P0117-ECT SENSOR VOLTAGE TOO LOW

When Monitored: With the ignition on. Battery voltage greater than 10 volts.

Set Condition: The Engine Coolant Temperature (ECT) sensor circuit voltage at the PCM is less than 0.5 volt for more than 2.6 seconds.

POSSIBLE CAUSES
INTERMITTENT CONDITION
ECT SENSOR INTERNAL FAILURE
ECT SENSOR SIGNAL SHORTED TO GROUND
ECT SENSOR SIGNAL SHORTED TO SENSOR GROUND CIRCUIT
PCM

TEST	ACTION	APPLICABILITY
1	Turn the ignition on. With the DRBIII®, read the ECT voltage. Is the voltage below 1.0 volt? Yes → Go To 2 No → Go To 6	All
2	Turn the ignition off. Disconnect the ECT harness connector. Turn the ignition on. With the DRBIII®, read ECT voltage. Is the voltage above 1.0 volt? Yes → Replace the ECT Sensor. Perform POWERTRAIN VERIFICATION TEST VER - 5. No → Go To 3	All
3	Turn the ignition off. Disconnect the ECT Sensor harness connector. Disconnect the PCM harness connector. Measure the resistance of the ECT Sensor Signal circuit in the ECT Sensor harness connector to ground. Is the resistance below 100 ohms? Yes → Repair the ECT Sensor Signal circuit for a short to ground. Perform POWERTRAIN VERIFICATION TEST VER - 5. No → Go To 4	All

P0117-ECT SENSOR VOLTAGE TOO LOW — Continued

TEST	ACTION	APPLICABILITY
4	Turn the ignition off. Disconnect the ECT Sensor harness connector. Disconnect the PCM harness connector. Measure the resistance between the ECT Sensor Signal circuit and the Sensor ground circuit in the ECT Sensor harness connector. Is the resistance below 100 ohms? Yes → Repair the ECT Sensor Signal circuit for a short to the Sensor ground circuit. Perform POWERTRAIN VERIFICATION TEST VER - 5. No → Go To 5	All
5	If there are no possible causes remaining, view repair. Repair Replace and program the Powertrain Control Module in accordance with the Service Information. Perform POWERTRAIN VERIFICATION TEST VER - 5.	All
6	**WARNING: WHEN THE ENGINE IS OPERATING, DO NOT STAND IN A DIRECT LINE WITH THE FAN. DO NOT PUT YOUR HANDS NEAR THE PULLEYS, BELTS OR FAN. DO NOT WEAR LOOSE CLOTHING.** **NOTE: The conditions that set the DTC are not present at this time. The following list may help in identifying the intermittent condition.** With the engine running at normal operating temperature, monitor the DRBIII® parameters related to the DTC while wiggling the wiring harness. Look for parameter values to change and/or a DTC to set. Review the DRBIII® Freeze Frame information. If possible, try to duplicate the conditions under which the DTC was set. Refer to any Technical Service Bulletins (TSB) that may apply. Visually inspect the related wiring harness. Look for any chafed, pierced, pinched, or partially broken wires. Visually inspect the related wiring harness connectors. Look for broken, bent, pushed out, or corroded terminals. Were any of the above conditions present? Yes → Repair as necessary Perform POWERTRAIN VERIFICATION TEST VER - 5. No → Test Complete.	All

Symptom:

P0118-ECT SENSOR VOLTAGE TOO HIGH

When Monitored and Set Condition:

P0118-ECT SENSOR VOLTAGE TOO HIGH

When Monitored: With the ignition on. Battery voltage greater than 10 volts.

Set Condition: The Engine Coolant Temperature (ECT) sensor circuit voltage at the PCM is greater than 4.96 volts for more than 2.6 seconds.

POSSIBLE CAUSES
INTERMITTENT CONDITION
ECT SENSOR SIGNAL CIRCUIT SHORTED TO BATTERY VOLTAGE
ECT SENSOR INTERNAL FAILURE
ECT SENSOR SIGNAL CIRCUIT OPEN
SENSOR GROUND CIRCUIT OPEN
PCM

TEST	ACTION	APPLICABILITY
1	Turn the ignition on. With the DRBIII®, read the ECT voltage. Is the voltage above 4.6 volts? Yes → Go To 2 No → Go To 7	All
2	Turn the ignition off. Disconnect the ECT Sensor harness connector. Turn the ignition on. Measure the voltage of the ECT Sensor Signal circuit in the ECT Sensor harness connector. Is the voltage above 5.2 volts? Yes → Repair the ECT Sensor Signal circuit for a short to battery voltage. Perform POWERTRAIN VERIFICATION TEST VER - 5. No → Go To 3	All

P0118-ECT SENSOR VOLTAGE TOO HIGH — Continued

TEST	ACTION	APPLICABILITY
3	Turn the ignition off. Disconnect the ECT harness connector. Connect a jumper wire between the ECT Sensor Signal circuit and the Sensor ground circuit in the ECT harness connector. Turn the ignition on. With the DRBIII®, read ECT voltage. Is the voltage below 1.0 volt? Yes → Replace the ECT Sensor. Perform POWERTRAIN VERIFICATION TEST VER - 5. No → Go To 4	All
4	Turn the ignition off. Disconnect the ECT Sensor harness connector. Disconnect the PCM harness connector. Measure the resistance of the ECT Sensor Signal circuit between the ECT Sensor harness connector and the PCM harness connector. Is the resistance below 5.0 ohms? Yes → Go To 5 No → Repair the ECT Sensor Signal circuit for an open. Perform POWERTRAIN VERIFICATION TEST VER - 5.	All
5	Turn the ignition off. Disconnect the ECT Sensor harness connector. Disconnect the PCM harness connector. Measure the resistance of the Sensor ground circuit between the ECT Sensor harness connector and the PCM harness connector. Is the resistance below 5.0 ohms? Yes → Go To 6 No → Repair the Sensor ground circuit for an open. Perform POWERTRAIN VERIFICATION TEST VER - 5.	All
6	If there are no possible causes remaining, view repair. Repair Replace and program the Powertrain Control Module in accordance with the Service Information. Perform POWERTRAIN VERIFICATION TEST VER - 5.	All

P0118-ECT SENSOR VOLTAGE TOO HIGH — Continued

TEST	ACTION	APPLICABILITY
7	**WARNING: WHEN THE ENGINE IS OPERATING, DO NOT STAND IN A DIRECT LINE WITH THE FAN. DO NOT PUT YOUR HANDS NEAR THE PULLEYS, BELTS OR FAN. DO NOT WEAR LOOSE CLOTHING.** **NOTE: The conditions that set the DTC are not present at this time. The following list may help in identifying the intermittent condition.** With the engine running at normal operating temperature, monitor the DRBIII® parameters related to the DTC while wiggling the wiring harness. Look for parameter values to change and/or a DTC to set. Review the DRBIII® Freeze Frame information. If possible, try to duplicate the conditions under which the DTC was set. Refer to any Technical Service Bulletins (TSB) that may apply. Visually inspect the related wiring harness. Look for any chafed, pierced, pinched, or partially broken wires. Visually inspect the related wiring harness connectors. Look for broken, bent, pushed out, or corroded terminals. Were any of the above conditions present? Yes → Repair as necessary Perform POWERTRAIN VERIFICATION TEST VER - 5. No → Test Complete.	All

Symptom:

P0121-TPS VOLTAGE DOES NOT AGREE WITH MAP

When Monitored and Set Condition:

P0121-TPS VOLTAGE DOES NOT AGREE WITH MAP

When Monitored: With the engine running and no MAP Sensor or TP Sensor DTC's set.

Set Condition: When the manifold vacuum is low, the TP sensor signal should be high. Conversely, when manifold vacuum is high, the TP sensor signal should be low. If the MAP Sensor and TP Sensor do not respond within 4 seconds as stated above, a DTC will be set.

POSSIBLE CAUSES
INTERMITTENT CONDITION
HIGH RESISTANCE IN 5 VOLT SUPPLY CIRCUIT
RESISTANCE TO GROUND IN 5 VOLT SUPPLY CIRCUIT
MAP SENSOR
HIGH RESISTANCE IN MAP SENSOR SIGNAL CIRCUIT
RESISTANCE TO GROUND IN MAP SENSOR SIGNAL CIRCUIT
HIGH RESISTANCE IN SENSOR GROUND CIRCUIT
PCM
HIGH RESISTANCE IN 5 VOLT SUPPLY CIRCUIT
RESISTANCE TO GROUND IN 5 VOLT SUPPLY CIRCUIT
TP SENSOR
HIGH RESISTANCE IN TP SENSOR SIGNAL CIRCUIT
RESISTANCE TO GROUND IN THROTTLE POSITION SENSOR SIGNAL CIRCUIT
HIGH RESISTANCE IN SENSOR GROUND CIRCUIT
PCM

TEST	ACTION	APPLICABILITY
1	**NOTE: Diagnose any TP Sensor or MAP Sensor component DTC first before continuing.** **NOTE: If the P0500 - No Vehicle Speed Signal is set long with this DTC, refer to the P0500 diagnostics before continuing.** **NOTE: The throttle plate and linkage should be free from binding and carbon build up.** **NOTE: Ensure the throttle plate is at the idle position.** Turn the ignition on. With the DRBIII®, read DTC's. Is the Good Trip displayed and equal to zero? Yes → Go To 2 No → Go To 18	All

P0121-TPS VOLTAGE DOES NOT AGREE WITH MAP — Continued

TEST	ACTION	APPLICABILITY
2	Start the engine. With the DRBIII®, monitor the MAP Sensor voltage. Snap the throttle. Does the MAP Sensor voltage vary from below 2.0 volts at idle to above 3.5 volts wide open throttle? Yes → Go To 3 No → Go To 11	All
3	Turn the ignition on. With the DRBIII®, monitor the TP Sensor voltage while slowly depressing the throttle pedal from the idle position to the wide open throttle position. Does voltage start approximately at 0.8 volts and go above 3.5 volts with a smooth voltage change? Yes → Go To 18 No → Go To 4	All
4	Turn the ignition off. Disconnect the TP Sensor harness connector. Disconnect the PCM harness connector. Measure the resistance of the 5 Volt Supply circuit from the TP Sensor harness connector to the PCM harness connector. Is the resistance below 5.0 ohms? Yes → Go To 5 No → Repair the 5 Volt Supply circuit for high resistance. Perform POWERTRAIN VERIFICATION TEST VER - 5.	All
5	Turn the ignition off. Disconnect the TP Sensor harness connector. Disconnect the PCM harness connector. Measure the resistance of the 5 Volt Supply circuit from the TP Sensor harness connector to ground. Is the resistance above 100k ohms? Yes → Go To 6 No → Repair the 5 Volt Supply circuit for a short to ground. Perform POWERTRAIN VERIFICATION TEST VER - 5.	All
6	Turn the ignition off. Disconnect the TP Sensor harness connector. With the DRBIII®, monitor the TP Sensor voltage. Turn the ignition on. Connect a jumper wire between the TP Sensor Signal circuit and the Sensor ground circuit . Does the DRBIII® display TP voltage from approximately 4.9 volts to below 0.5 volt? Yes → Replace the Throttle Position Sensor. Perform POWERTRAIN VERIFICATION TEST VER - 5. No → Go To 7	All

P0121-TPS VOLTAGE DOES NOT AGREE WITH MAP — Continued

TEST	ACTION	APPLICABILITY
7	Turn the ignition off. Disconnect the TP Sensor harness connector. Disconnect the PCM harness connector. Measure the resistance of the TP Sensor Signal circuit from the TP Sensor harness connector to the PCM harness connector. Is the resistance below 5.0 ohms? Yes → Go To 8 No → Repair the Throttle Position Sensor Signal circuit for a short to ground. Perform POWERTRAIN VERIFICATION TEST VER - 5.	All
8	Turn the ignition off. Disconnect the TP Sensor harness connector. Disconnect the PCM harness connector. Measure the resistance of the TP Sensor Signal circuit from the TP Sensor harness connector to ground. Is the resistance above 100k ohms? Yes → Go To 9 No → Repair the TP Sensor Signal circuit for low resistance to ground. Perform POWERTRAIN VERIFICATION TEST VER - 5.	All
9	Turn the ignition off. Disconnect the TP Sensor harness connector. Disconnect the PCM harness connector. Measure the resistance of the Sensor ground circuit from the TP Sensor harness connector to the PCM harness connector. Is the resistance below 5.0 ohms? Yes → Go To 10 No → Repair the Sensor Ground circuit for high resistance. Perform POWERTRAIN VERIFICATION TEST VER - 5.	All
10	If there are no possible causes remaining, view repair. Repair Replace and program the Powertrain Control Module in accordance with the Service Information. Perform POWERTRAIN VERIFICATION TEST VER - 5.	All
11	Turn the ignition off. Disconnect the MAP Sensor harness connector. Disconnect the PCM harness connector. Measure the resistance of the 5 Volt Supply circuit from the MAP Sensor harness connector to the PCM harness connector. Is the resistance below 5.0 ohms? Yes → Go To 12 No → Repair the 5 Volt Supply circuit for high resistance. Perform POWERTRAIN VERIFICATION TEST VER - 5.	All

P0121-TPS VOLTAGE DOES NOT AGREE WITH MAP — Continued

TEST	ACTION	APPLICABILITY
12	Turn the ignition off. Disconnect the MAP Sensor harness connector. Disconnect the PCM harness connector. Measure the resistance of the 5 Volt Supply circuit from the MAP Sensor harness connector to ground. Is the resistance above 100k ohms? Yes → Go To 13 No → Repair the 5 Volt Supply circuit for low resistance to ground. Perform POWERTRAIN VERIFICATION TEST VER - 5.	All
13	Turn the ignition off. Disconnect the MAP Sensor harness connector. With the DRBIII®, monitor the MAP Sensor voltage. Turn the ignition on. Connect a jumper wire between the MAP Sensor Signal circuit and the Sensor ground circuit . Cycle the ignition switch from off to on. With the DRBIII®, monitor the MAP Sensor voltage. Does the DRBIII® display MAP voltage from approximately 4.9 volts to below 0.5 volt? Yes → Replace the MAP Sensor. Perform POWERTRAIN VERIFICATION TEST VER - 5. No → Go To 14	All
14	Turn the ignition off. Disconnect the MAP Sensor harness connector. Disconnect the PCM harness connector. Measure the resistance of the MAP Sensor Signal circuit from the MAP Sensor harness connector to the PCM harness connector. Is the resistance below 5.0 ohms? Yes → Go To 15 No → Repair the MAP Sensor Signal circuit for high resistance. Perform POWERTRAIN VERIFICATION TEST VER - 5.	All
15	Turn the ignition off. Disconnect the MAP Sensor harness connector. Disconnect the PCM harness connector. Measure the resistance of the MAP Sensor Signal circuit from the MAP Sensor harness connector to ground. Is the resistance above 100k ohms? Yes → Go To 16 No → Repair the MAP Sensor Signal circuit for low resistance to ground. Perform POWERTRAIN VERIFICATION TEST VER - 5.	All

P0121-TPS VOLTAGE DOES NOT AGREE WITH MAP — Continued

TEST	ACTION	APPLICABILITY
16	Turn the ignition off. Disconnect the MAP Sensor harness connector. Disconnect the PCM harness connector. Measure the resistance of the Sensor ground circuit from the MAP Sensor harness connector to the PCM harness connector. Is the resistance below 5.0 ohms? Yes → Go To 17 No → Repair the Sensor Ground circuit for high resistance. Perform POWERTRAIN VERIFICATION TEST VER - 5.	All
17	If there are no possible causes remaining, view repair. Repair Replace and program the Powertrain Control Module in accordance with the Service Information. Perform POWERTRAIN VERIFICATION TEST VER - 5.	All
18	**WARNING: WHEN THE ENGINE IS OPERATING, DO NOT STAND IN A DIRECT LINE WITH THE FAN. DO NOT PUT YOUR HANDS NEAR THE PULLEYS, BELTS OR FAN. DO NOT WEAR LOOSE CLOTHING.** **NOTE: The conditions that set the DTC are not present at this time. The following list may help in identifying the intermittent condition.** With the engine running at normal operating temperature, monitor the DRBIII® parameters related to the DTC while wiggling the wiring harness. Look for parameter values to change and/or a DTC to set. Review the DRBIII® Freeze Frame information. If possible, try to duplicate the conditions under which the DTC was set. Refer to any Technical Service Bulletins (TSB) that may apply. Visually inspect the related wiring harness. Look for any chafed, pierced, pinched, or partially broken wires. Visually inspect the related wiring harness connectors. Look for broken, bent, pushed out, or corroded terminals. Were any of the above conditions present? Yes → Repair as necessary Perform POWERTRAIN VERIFICATION TEST VER - 5. No → Test Complete.	All

Symptom:

P0122-THROTTLE POSITION SENSOR VOLTAGE LOW

When Monitored and Set Condition:

P0122-THROTTLE POSITION SENSOR VOLTAGE LOW

When Monitored: With the ignition on. Battery voltage greater than 10 volts.

Set Condition: Throttle Position Sensor voltage at the PCM is less than 0.16 volt for 0.7 seconds.

POSSIBLE CAUSES
THROTTLE POSITION SENSOR SWEEP
INTERMITTENT CONDITION
5 VOLT SUPPLY CIRCUIT SHORTED TO GROUND
5 VOLT SUPPLY CIRCUIT OPEN
TP SENSOR INTERNAL FAILURE
THROTTLE POSITION SENSOR SIGNAL CIRCUIT SHORTED TO GROUND
THROTTLE POSITION SENSOR SIGNAL CIRCUIT SHORTED TO SENSOR GROUND CIRCUIT
TCM INTERNALLY SHORTED TP SIGNAL CIRCUIT
PCM 5 VOLT SUPPLY CIRCUIT
PCM TP SENSOR SIGNAL

TEST	ACTION	APPLICABILITY
1	Turn the ignition on. With the DRBIII®, read the Throttle Position Sensor voltage. Is the voltage below 0.2 volts? Yes → Go To 2 No → Go To 11	All
2	Turn the ignition off. Disconnect the TP Sensor harness connector. Turn the ignition on. Measure the voltage of the 5 Volt Supply circuit in the TP Sensor harness connector. Is the voltage between 4.5 to 5.2 volts? Yes → Go To 3 No → Go To 8	All

P0122-THROTTLE POSITION SENSOR VOLTAGE LOW — Continued

TEST	ACTION	APPLICABILITY
3	Turn the ignition off. Disconnect the TP Sensor harness connector. With the DRBIII®, monitor the TP Sensor voltage. Turn the ignition on. Is the voltage above 4.5 volts? Yes → Replace the Throttle Position Sensor. Perform POWERTRAIN VERIFICATION TEST VER - 5. No → Go To 4	All
4	Turn the ignition off. Disconnect the TP Sensor harness connector. Disconnect the PCM harness connector. Measure the resistance of the TP Sensor Signal circuit in the TP Sensor harness connector to ground. Is the resistance below 100 ohms? Yes → Repair the Throttle Position Sensor Signal circuit for a short to ground. Perform POWERTRAIN VERIFICATION TEST VER - 5. No → Go To 5	All
5	Turn the ignition off. Disconnect the TP Sensor harness connector. Disconnect the PCM harness connector. Measure the resistance between the TP Sensor Signal circuit and the Sensor ground circuit in the TP Sensor harness connector. Is the resistance below 100 ohms? Yes → Repair the Throttle Position Sensor Signal circuit for a short to the Sensor ground circuit. Perform POWERTRAIN VERIFICATION TEST VER - 5. No → Go To 6	All
6	Turn the ignition off. Disconnect the TP Sensor harness connector. Disconnect the TCM harness connector. With the DRBIII®, monitor the TP Sensor voltage. Turn the ignition on. Is the voltage above 4.5 volts? Yes → Replace the Transmission Control Module. Perform POWERTRAIN VERIFICATION TEST VER - 5. No → Go To 7	All
7	If there are no possible causes remaining, view repair. Repair Replace and program the Powertrain Control Module in accordance with the Service Information. Perform POWERTRAIN VERIFICATION TEST VER - 5.	All

P0122-THROTTLE POSITION SENSOR VOLTAGE LOW — Continued

TEST	ACTION	APPLICABILITY
8	Turn the ignition off. Disconnect the TP Sensor harness connector. Disconnect the PCM harness connector. Measure the resistance of the 5 Volt Supply circuit in the TP Sensor harness connector to ground. Is the resistance below 100 ohms? Yes → Repair the 5 Volt Supply circuit for a short to ground. Perform POWERTRAIN VERIFICATION TEST VER - 5. No → Go To 9	All
9	Turn the ignition off. Disconnect the TP Sensor harness connector. Disconnect the PCM harness connector. Measure the resistance of the 5 Volt Supply circuit between the TP Sensor harness connector and the PCM harness connector. Is the resistance below 5.0 ohms? Yes → Go To 10 No → Repair the 5 Volt Supply circuit for an open. Perform POWERTRAIN VERIFICATION TEST VER - 5.	All
10	If there are no possible causes remaining, view repair. Repair Replace and program the Powertrain Control Module in accordance with the Service Information. Perform POWERTRAIN VERIFICATION TEST VER - 5.	All
11	Turn the ignition on. With the DRBIII®, monitor the Throttle Position Sensor voltage. Slowly open the throttle from the idle position to the wide open throttle position. Does voltage start at approximately 0.8 volts and go above 3.5 volts with a smooth voltage change? Yes → Go To 12 No → Replace the Throttle Position Sensor. Perform POWERTRAIN VERIFICATION TEST VER - 5.	All

P0122-THROTTLE POSITION SENSOR VOLTAGE LOW — Continued

TEST	ACTION	APPLICABILITY
12	**WARNING: WHEN THE ENGINE IS OPERATING, DO NOT STAND IN A DIRECT LINE WITH THE FAN. DO NOT PUT YOUR HANDS NEAR THE PULLEYS, BELTS OR FAN. DO NOT WEAR LOOSE CLOTHING.** **NOTE: The conditions that set the DTC are not present at this time. The following list may help in identifying the intermittent condition.** With the engine running at normal operating temperature, monitor the DRBIII® parameters related to the DTC while wiggling the wiring harness. Look for parameter values to change and/or a DTC to set. Review the DRBIII® Freeze Frame information. If possible, try to duplicate the conditions under which the DTC was set. Refer to any Technical Service Bulletins (TSB) that may apply. Visually inspect the related wiring harness. Look for any chafed, pierced, pinched, or partially broken wires. Visually inspect the related wiring harness connectors. Look for broken, bent, pushed out, or corroded terminals. Were any of the above conditions present? Yes → Repair as necessary Perform POWERTRAIN VERIFICATION TEST VER - 5. No → Test Complete.	All

Symptom:

P0123-THROTTLE POSITION SENSOR VOLTAGE HIGH

When Monitored and Set Condition:

P0123-THROTTLE POSITION SENSOR VOLTAGE HIGH

When Monitored: With the ignition on. Battery voltage greater than 10 volts.

Set Condition: Throttle Position Sensor voltage at the PCM is greater than 4.5 volts for 0.7 seconds.

POSSIBLE CAUSES
THROTTLE POSITION SENSOR SWEEP
INTERMITTENT CONDITION
TP SENSOR SIGNAL CIRCUIT SHORTED TO 5 VOLT SUPPLY CIRCUIT
TP SENSOR SIGNAL CIRCUIT SHORTED TO BATTERY VOLTAGE
TP SENSOR INTERNAL FAILURE
SENSOR GROUND CIRCUIT OPEN
TP SENSOR SIGNAL CIRCUIT OPEN
PCM

TEST	ACTION	APPLICABILITY
1	**NOTE: Ensure the throttle is fully closed and free from binding or carbon build up.** Start the engine. With the DRBIII®, read the TP Sensor voltage. Is the voltage above 4.5 volts? Yes → Go To 2 No → Go To 8	All
2	Turn the ignition off. Disconnect the TP Sensor harness connector. Disconnect the PCM harness connector. Measure the resistance between the TP Sensor Signal circuit and the 5 Volt Supply circuit in the TP Sensor harness connector. Is the resistance below 100 ohms? Yes → Repair the Throttle Position Sensor Signal circuit for a short to the 5 Volt Supply circuit. Perform POWERTRAIN VERIFICATION TEST VER - 5. No → Go To 3	All

P0123-THROTTLE POSITION SENSOR VOLTAGE HIGH — Continued

TEST	ACTION	APPLICABILITY
3	Turn the ignition off. Disconnect the TP Sensor harness connector. Turn the ignition on. Measure the voltage of the TP Sensor Signal circuit in the TP Sensor harness connector. Is the voltage above 5.2 volts? Yes → Repair the Throttle Position Sensor Signal circuit for a short to battery voltage. Perform POWERTRAIN VERIFICATION TEST VER - 5. No → Go To 4	All
4	Turn the ignition off. Disconnect the TP Sensor harness connector. Connect a jumper wire between the TP Sensor Signal circuit and the Sensor ground circuit. With the DRBIII®, monitor the TP Sensor voltage. Turn the ignition on. Is the voltage below 0.5 volts? Yes → Replace the Throttle Position Sensor. Perform POWERTRAIN VERIFICATION TEST VER - 5. No → Go To 5	All
5	Turn the ignition off. Disconnect the TP Sensor harness connector. Disconnect the PCM harness connector. Measure the resistance of the Sensor ground circuit between the TP Sensor harness connector and the PCM harness connector. Is the resistance below 5.0 ohms? Yes → Go To 6 No → Repair the Sensor ground circuit for an open. Perform POWERTRAIN VERIFICATION TEST VER - 5.	All
6	Turn the ignition off. Disconnect the TP Sensor harness connector. Disconnect the PCM harness connector. Measure the resistance of the TP Sensor Signal circuit between the TP Sensor harness connector and the PCM harness connector. Is the resistance below 5.0 ohms? Yes → Go To 7 No → Repair the Throttle Position Sensor Signal circuit for an open. Perform POWERTRAIN VERIFICATION TEST VER - 5.	All
7	If there are no possible causes remaining, view repair. Repair Replace and program the Powertrain Control Module in accordance with the Service Information. Perform POWERTRAIN VERIFICATION TEST VER - 5.	All

P0123-THROTTLE POSITION SENSOR VOLTAGE HIGH — Continued

TEST	ACTION	APPLICABILITY
8	Turn the ignition on. With the DRBIII®, monitor the Throttle Position Sensor voltage. Slowly open the throttle from the idle position to the wide open throttle position. Does voltage start at approximately 0.8 volts and go above 3.5 volts with a smooth voltage change? Yes → Go To 9 No → Replace the Throttle Position Sensor. Perform POWERTRAIN VERIFICATION TEST VER - 5.	All
9	**WARNING: WHEN THE ENGINE IS OPERATING, DO NOT STAND IN A DIRECT LINE WITH THE FAN. DO NOT PUT YOUR HANDS NEAR THE PULLEYS, BELTS OR FAN. DO NOT WEAR LOOSE CLOTHING.** **NOTE: The conditions that set the DTC are not present at this time. The following list may help in identifying the intermittent condition.** With the engine running at normal operating temperature, monitor the DRBIII® parameters related to the DTC while wiggling the wiring harness. Look for parameter values to change and/or a DTC to set. Review the DRBIII® Freeze Frame information. If possible, try to duplicate the conditions under which the DTC was set. Refer to any Technical Service Bulletins (TSB) that may apply. Visually inspect the related wiring harness. Look for any chafed, pierced, pinched, or partially broken wires. Visually inspect the related wiring harness connectors. Look for broken, bent, pushed out, or corroded terminals. Were any of the above conditions present? Yes → Repair as necessary Perform POWERTRAIN VERIFICATION TEST VER - 5. No → Test Complete.	All

Symptom:

P0125-CLOSED LOOP TEMP NOT REACHED

When Monitored and Set Condition:

P0125-CLOSED LOOP TEMP NOT REACHED

When Monitored: With battery voltage greater than 10.4 volts, after engine is started.

Set Condition: The engine temperature does not go above 15°C (60°F). Failure time depends on start-up coolant temperature and ambient temperature. (i.e. 2 minutes for a start temp of 10°C (50°F) or up to 10 mintues for a vehicle with a start-up temp of -28°C (20°F). Two trips are required to set this DTC.

POSSIBLE CAUSES
LOW COOLANT LEVEL
THERMOSTAT OPERATION
ENGINE COOLANT TEMPERATURE SENSOR

TEST	ACTION	APPLICABILITY
1	**NOTE: If a Engine Coolant Temperature (ECT) DTC is set along with this code, diagnose the ECT DTC first.** **NOTE: Inspect the ECT terminals and related PCM terminals. Ensure the terminals are free from corrosion and damage.** **NOTE: The best way to diagnose this DTC is to allow the vehicle to sit overnight outside in order to have a totally cold soaked engine.** **Note: Extremely cold outside ambient temperatures may have caused this DTC to set.** **WARNING: Never open the cooling system when the engine is hot. The system is under pressure. Extreme burns or scalding may result. Allow the engine to cool before opening the cooling system.** Check the coolant system to make sure that the coolant is in good condition and at the proper level. Is the coolant level and condition OK? Yes → Go To 2 No → Inspect the vehicle for a coolant leak and add the necessary amount of coolant. Perform POWERTRAIN VERIFICATION TEST VER - 5.	All

P0125-CLOSED LOOP TEMP NOT REACHED — Continued

TEST	ACTION	APPLICABILITY
2	**Note: This test works best if performed on a cold engine (cold soak)** Turn the ignition on. With the DRBIII®, read the Eng Coolant Tmp Deg value. If the engine was allowed to sit overnight (cold soak), the temperature value should be a sensible value that is somewhere close to the ambient temperature. **Note: If engine coolant temperature is above 82°C (180°F), allow the engine to cool until 65°C (150°F) is reached.** Start the Engine. Using the appropriate service information, determine the proper opening temperature of the thermostat. Did the thermostat open at the proper temperature? Yes → Go To 3 No → Replace the thermostat. Perform POWERTRAIN VERIFICATION TEST VER - 5.	All
3	Turn the ignition on. With the DRBIII®, read the Eng Coolant Tmp Deg value. If the engine was allowed to sit overnight (cold soak), the temperature value should be a sensible value that is somewhere close to the ambient temperature. **Note: If engine coolant temperature is above 82°C (180°F), allow the engine to cool until 65°C (150°F) is reached.** Start the Engine. During engine warm-up monitor the Eng Coolant Tmp Deg value. The temp deg value change should be a smooth transition from start up to normal operating temp 82°C (180°F) . Also monitor the actual coolant temperature with a thermometer. **NOTE: As the engine warms up to operating temperature, the actual coolant temperature (thermometer reading) and the Eng Coolant Tmp Deg in the DRB values should stay relatively close to each other.** Does the actual coolant temperature and the reading on the DRBIII® remain relatively the same with a Yes → Test Complete. No → Replace the Engine Coolant Temperature Sensor. Perform POWERTRAIN VERIFICATION TEST VER - 5.	All

Symptom List:

P0131-1/1 O2 SENSOR SHORTED TO GROUND
P0137-1/2 O2 SENSOR SHORTED TO GROUND

Test Note: All symptoms listed above are diagnosed using the same tests. The title for the tests will be P0131-1/1 O2 SENSOR SHORTED TO GROUND.

When Monitored and Set Condition:

P0131-1/1 O2 SENSOR SHORTED TO GROUND

When Monitored: At engine shutdown O2 Heater Diagnostics test. Then at subsequent cold start. Cold start is defined as engine coolant below 37°C (100°F), ambient/battery sensor reading within 6.6°C (44°F), and engine coolant temperature above 63°C (146°F) on the previous key off.

Set Condition: The oxygen sensor signal voltage is below 0.078 volts for 5 seconds after starting engine.

P0137-1/2 O2 SENSOR SHORTED TO GROUND

When Monitored: Engine running for 119 seconds. Coolant temperature above 80°C (176°F). Vehicle speed greater than 40 mph. Two trip fault.

Set Condition: The oxygen sensor signal voltage is below 0.078 volts for 61 seconds after starting engine.

POSSIBLE CAUSES
INTERMITTENT CONDITION
O2 SENSOR OPERATION
O2 SENSOR SIGNAL CIRCUIT SHORTED TO GROUND
O2 SENSOR SIGNAL CIRCUIT SHORTED TO SENSOR GROUND CIRCUIT
O2 SENSOR SIGNAL SHORTED TO HEATER CONTROL/GROUND CIRCUIT
PCM

TEST	ACTION	APPLICABILITY
1	Start the engine. Allow the engine to idle. With the DRBIII®, read the O2 Sensor voltage. Is the voltage below 0.08? Yes → Go To 2 No → Go To 7	All

P0131-1/1 O2 SENSOR SHORTED TO GROUND — Continued

TEST	ACTION	APPLICABILITY
2	**WARNING: WHEN THE ENGINE IS OPERATING, DO NOT STAND IN A DIRECT LINE WITH THE FAN. DO NOT PUT YOUR HANDS NEAR THE PULLEYS, BELTS OR FAN. DO NOT WEAR LOOSE CLOTHING.** Start the engine. Disconnect the O2 Sensor harness connector. With the DRBIII®, monitor the O2 Sensor voltage. Is the O2 Sensor voltage above 0.08? Yes → Replace the O2 Sensor Perform POWERTRAIN VERIFICATION TEST VER - 5. No → Go To 3	All
3	Turn the ignition off. Disconnect the O2 Sensor harness connector. Disconnect the PCM harness connector. Measure the resistance of the O2 Sensor Signal circuit in the O2 Sensor harness connector to ground. Is the resistance below 100 ohms? Yes → Repair the O2 Sensor Signal circuit for a short to ground. Perform POWERTRAIN VERIFICATION TEST VER - 5. No → Go To 4	All
4	Turn the ignition off. Disconnect the O2 Sensor harness connector. Disconnect the PCM harness connector. Measure the resistance between the O2 Sensor Signal circuit and the Sensor ground circuit in the O2 Sensor harness connector. Is the resistance below 100 ohms? Yes → Repair the O2 Sensor Signal circuit for a short to the Sensor ground circuit. Perform POWERTRAIN VERIFICATION TEST VER - 5. No → Go To 5	All
5	Turn the ignition off. Disconnect the O2 Sensor harness connector. Disconnect the PCM harness connector. Measure the resistance between the O2 Sensor Signal circuit and the Heater control/ground circuit in the O2 Sensor harness connector. Is the resistance below 100 ohms? Yes → Repair the O2 Sensor Signal circuit for a short to the Heater control/ground circuit. Perform POWERTRAIN VERIFICATION TEST VER - 5. No → Go To 6	All
6	If there are no possible causes remaining, view repair. Repair Replace and program the Powertrain Control Module in accordance with the Service Information. Perform POWERTRAIN VERIFICATION TEST VER - 5.	All

P0131-1/1 O2 SENSOR SHORTED TO GROUND — Continued

TEST	ACTION	APPLICABILITY
7	**WARNING: WHEN THE ENGINE IS OPERATING, DO NOT STAND IN A DIRECT LINE WITH THE FAN. DO NOT PUT YOUR HANDS NEAR THE PULLEYS, BELTS OR FAN. DO NOT WEAR LOOSE CLOTHING.** **NOTE: The conditions that set the DTC are not present at this time. The following list may help in identifying the intermittent condition.** With the engine running at normal operating temperature, monitor the DRBIII® parameters related to the DTC while wiggling the wiring harness. Look for parameter values to change and/or a DTC to set. Review the DRBIII® Freeze Frame information. If possible, try to duplicate the conditions under which the DTC was set. Refer to any Technical Service Bulletins (TSB) that may apply. Visually inspect the related wiring harness. Look for any chafed, pierced, pinched, or partially broken wires. Visually inspect the related wiring harness connectors. Look for broken, bent, pushed out, or corroded terminals. Were any of the above conditions present? Yes → Repair as necessary Perform POWERTRAIN VERIFICATION TEST VER - 5. No → Test Complete.	All

Symptom List:

P0132-1/1 O2 SENSOR SHORTED TO VOLTAGE
P0138-1/2 O2 SENSOR SHORTED TO VOLTAGE

Test Note: All symptoms listed above are diagnosed using the same tests. The title for the tests will be P0132-1/1 O2 SENSOR SHORTED TO VOLTAGE.

When Monitored and Set Condition:

P0132-1/1 O2 SENSOR SHORTED TO VOLTAGE

When Monitored: Engine running for 119 seconds. Battery voltage greater than 10 volts. Coolant temperature above 80°C (176°F).

Set Condition: The Oxygen Sensor voltage is above 1.29 volts for 30 seconds. One trip fault.

P0138-1/2 O2 SENSOR SHORTED TO VOLTAGE

When Monitored: The engine running for 119 seconds. Battery voltage greater than 10 volts. Coolant temperature above 80°C (176°F).

Set Condition: The Oxygen Sensor voltage is above 1.29 volts for 30 seconds. Two trip fault.

POSSIBLE CAUSES
INTERMITTENT CONDITION
O2 SENSOR OPERATION
O2 SENSOR SIGNAL SHORTED TO VOLTAGE
O2 SENSOR SIGNAL OPEN
O2 SENSOR GROUND CIRCUIT OPEN
PCM

TEST	ACTION	APPLICABILITY
1	Start the engine. Allow the engine to idle. With the DRBIII®, read the O2 Sensor voltage. Is the voltage above 1.2 volts? Yes → Go To 2 No → Go To 7	All

P0132-1/1 O2 SENSOR SHORTED TO VOLTAGE — Continued

TEST	ACTION	APPLICABILITY
2	**WARNING: WHEN THE ENGINE IS OPERATING, DO NOT STAND IN A DIRECT LINE WITH THE FAN. DO NOT PUT YOUR HANDS NEAR THE PULLEYS, BELTS OR FAN. DO NOT WEAR LOOSE CLOTHING.** Start the engine. Disconnect the O2 Sensor harness connector. With the DRBIII®, monitor the O2 Sensor voltage. Is the O2 Sensor voltage below 1.2 volts? Yes → Replace the O2 Sensor. Perform POWERTRAIN VERIFICATION TEST VER - 5. No → Go To 3	All
3	Turn the ignition off. Disconnect the O2 Sensor harness connector **WARNING: WHEN THE ENGINE IS OPERATING, DO NOT STAND IN A DIRECT LINE WITH THE FAN. DO NOT PUT YOUR HANDS NEAR THE PULLEYS, BELTS OR FAN. DO NOT WEAR LOOSE CLOTHING.** Start the engine and allow the engine to idle. Measure the voltage of the O2 Sensor Signal circuit in the O2 Sensor harness connector. Is the voltage above 1.2 volts? Yes → Repair the O2 Sensor Signal circuit for a shorted to voltage. Perform POWERTRAIN VERIFICATION TEST VER - 5. No → Go To 4	All
4	Turn the ignition off. Disconnect the O2 Sensor harness connector Disconnect the PCM harness connector. Measure the resistance of the O2 Sensor Signal circuit between the O2 Sensor harness connector and the PCM harness connector. Is the resistance below 5.0 ohms? Yes → Go To 5 No → Repair the O2 Sensor Signal for an open. Perform POWERTRAIN VERIFICATION TEST VER - 5.	All
5	Turn the ignition off. Disconnect the O2 Sensor harness connector Disconnect the PCM harness connector. Measure the resistance of the O2 Sensor ground circuit from the O2 Sensor harness connector and the PCM harness connector. Is the resistance below 5.0 ohms? Yes → Go To 6 No → Repair the O2 Sensor ground cirucit for an open. Perform POWERTRAIN VERIFICATION TEST VER - 5.	All
6	If there are no possible causes remaining, view repair. Repair Replace and program the Powertrain Control Module in accordance with the Service Information. Perform POWERTRAIN VERIFICATION TEST VER - 5.	All

P0132-1/1 O2 SENSOR SHORTED TO VOLTAGE — Continued

TEST	ACTION	APPLICABILITY
7	**WARNING: WHEN THE ENGINE IS OPERATING, DO NOT STAND IN A DIRECT LINE WITH THE FAN. DO NOT PUT YOUR HANDS NEAR THE PULLEYS, BELTS OR FAN. DO NOT WEAR LOOSE CLOTHING.** **NOTE: The conditions that set the DTC are not present at this time. The following list may help in identifying the intermittent condition.** With the engine running at normal operating temperature, monitor the DRBIII® parameters related to the DTC while wiggling the wiring harness. Look for parameter values to change and/or a DTC to set. Review the DRBIII® Freeze Frame information. If possible, try to duplicate the conditions under which the DTC was set. Refer to any Technical Service Bulletins (TSB) that may apply. Visually inspect the related wiring harness. Look for any chafed, pierced, pinched, or partially broken wires. Visually inspect the related wiring harness connectors. Look for broken, bent, pushed out, or corroded terminals. Were any of the above conditions present? Yes → Repair as necessary Perform POWERTRAIN VERIFICATION TEST VER - 5. No → Test Complete.	All

Symptom List:

P0133-1/1 O2 SENSOR SLOW RESPONSE
P0139-1/2 O2 SENSOR SLOW RESPONSE

Test Note: All symptoms listed above are diagnosed using the same tests. The title for the tests will be P0133-1/1 O2 SENSOR SLOW RESPONSE.

When Monitored and Set Condition:

P0133-1/1 O2 SENSOR SLOW RESPONSE

When Monitored: Start and drive vehicle greater than 10 MPH with throttle open for a minimum 200 seconds. Coolant greater than 70°C (158°F). EVAP Purge is active. Test performs in idle drive.

Set Condition: The oxygen sensor signal voltage is switching from below 0.33 volts to above 0.61 volts and back fewer times than required in 60 seconds. Two trip fault..

P0139-1/2 O2 SENSOR SLOW RESPONSE

When Monitored: Start engine. Allow engine to idle. For 1st part of test, if limits are exceeded, test passes. If not, 2nd part of test runs. Engine running for grater than 295 seconds. amb/batt temp >44°F, Baro >22.13″ HG, MAP >13.8 & <21.6″ HG, RPM >1400 & <2500 (4cylinder) RPM > 1120 & <1950(6 cylinder) and vss >22 and < 60 MPH.

Set Condition: The oxygen sensor signal voltage is has not switched below 0.35 volts to above 0.53 volts in 411 seconds of engine run. Two trip fault.

POSSIBLE CAUSES
INTERMITTENT CONDITION
EXHAUST LEAK
O2 SENSOR SIGNAL CIRCUIT VOLTAGE DROP
O2 SENSOR GROUND CIRCUIT VOLTAGE DROP
O2 SENSOR

TEST	ACTION	APPLICABILITY
1	**NOTE: Check for contaminates that may have damaged the O2 Sensor: contaminated fuel, unapproved silicone, oil and coolant.** Turn the ignition on. With the DRBIII®, read DTC's. Is the Good Trip displayed and equal to zero? Yes → Go To 2 No → Go To 6	All

P0133-1/1 O2 SENSOR SLOW RESPONSE — Continued

TEST	ACTION	APPLICABILITY
2	Start the engine. Inspect the exhaust system for leak between the engine and the O2 sensors. Are there any exhaust leaks? Yes → Repair or replace the leaking exhaust parts as necessary. Perform POWERTRAIN VERIFICATION TEST VER - 5. No → Go To 3	All
3	**NOTE: Ensure the voltmeter leads meet the terminals in the connector and that there is good terminal to wire connection.** **NOTE: Ensure the voltmeter leads are connected for positive polarity** Perform a voltage drop test by backprobing the O2 Sensor Signal circuit at the O2 Sensor harness connector and at the PCM harness connector. Start the engine. Allow the engine to idle. Is the voltage below 0.10 volt? Yes → Go To 4 No → Repair the high resistance on the O2 Sensor Signal circuit. Perform POWERTRAIN VERIFICATION TEST VER - 5.	All
4	**NOTE: Ensure the voltmeter leads meet the terminals in the connector and that there is good terminal to wire connection.** **NOTE: Ensure the voltmeter leads are connected for positive polarity** Backprobe between the O2 Sensor ground circuit at the O2 Sensor harness connector and PCM harness connector. Start the engine. Allow the engine to idle. Is the voltage below 0.10 volt? Yes → Go To 5 No → Repair the high resistance on the O2 Sensor ground circuit. Perform POWERTRAIN VERIFICATION TEST VER - 5.	All
5	If there are no possible causes remaining, view repair. Repair Replace the O2 Sensor Perform POWERTRAIN VERIFICATION TEST VER - 5.	All

P0133-1/1 O2 SENSOR SLOW RESPONSE — Continued

TEST	ACTION	APPLICABILITY
6	**NOTE: Check for contaminates that may have damaged the O2 Sensor: contaminated fuel, unapproved silicone, oil and coolant.** **WARNING: WHEN THE ENGINE IS OPERATING, DO NOT STAND IN A DIRECT LINE WITH THE FAN. DO NOT PUT YOUR HANDS NEAR THE PULLEYS, BELTS OR FAN. DO NOT WEAR LOOSE CLOTHING.** **NOTE: The conditions that set the DTC are not present at this time. The following list may help in identifying the intermittent condition.** With the engine running at normal operating temperature, monitor the DRBIII® parameters related to the DTC while wiggling the wiring harness. Look for parameter values to change and/or a DTC to set. Review the DRBIII® Freeze Frame information. If possible, try to duplicate the conditions under which the DTC was set. Refer to any Technical Service Bulletins (TSB) that may apply. Visually inspect the related wiring harness. Look for any chafed, pierced, pinched, or partially broken wires. Visually inspect the related wiring harness connectors. Look for broken, bent, pushed out, or corroded terminals. Were any of the above conditions present? Yes → Repair as necessary Perform POWERTRAIN VERIFICATION TEST VER - 5. No → Test Complete.	All

Symptom List:

P0134-1/1 O2 SENSOR STAYS AT CENTER
P0140-1/2 O2 SENSOR STAYS AT CENTER

Test Note: All symptoms listed above are diagnosed using the same tests. The title for the tests will be P0134-1/1 O2 SENSOR STAYS AT CENTER.

When Monitored and Set Condition:

P0134-1/1 O2 SENSOR STAYS AT CENTER

When Monitored: Engine running for greater than 121 second. Coolant Temperature greater than 66°C (150.8°F). Engine in closed loop fuel control mode.

Set Condition: O2 signal voltage is between .35 volt and .58 volt for a total of 30 seconds and then O2 signal volt is 1.5 volts for 60 seconds. One trip fault.

P0140-1/2 O2 SENSOR STAYS AT CENTER

When Monitored: Engine running for greater than 121 second. Coolant Temperature greater than 66°C (150.8°F). Engine in closed loop fuel control mode. Vehicle Speed greater than 40 MPH.

Set Condition: O2 signal voltage is between .35 volt and .58 volt for a total of 30 seconds and then O2 signal volt is 1.5 volts for 60 seconds. Two trip fault.

POSSIBLE CAUSES
INTERMITTENT CONDITION
O2 SENSOR OPERATION
O2 SENSOR GROUND CIRCUIT OPEN
O2 SENSOR SIGNAL OPEN
O2 SENSOR GROUND CIRCUIT VOLTAGE DROP
O2 SENSOR SIGNAL CIRCUIT VOLTAGE DROP
PCM

TEST	ACTION	APPLICABILITY
1	**NOTE: Check for contaminates that may have damaged the O2 Sensor: contaminated fuel, unapproved silicone, oil and coolant.** Turn the ignition on. With the DRBIII®, read DTC's. Is the Good Trip displayed and equal to zero? Yes → Go To 2 No → Go To 8	All

P0134-1/1 O2 SENSOR STAYS AT CENTER — Continued

TEST	ACTION	APPLICABILITY
2	Turn the ignition off. Disconnect the O2 Sensor harness connector. Turn the ignition on. Connect a test light to battery voltage, probe the O2 Sensor Signal circuit in the O2 Sensor harness connector. With the DRBIII®, read the O2 Sensor voltage. Is the voltage above 1.0 volts? Yes → Replace the O2 Sensor. Perform POWERTRAIN VERIFICATION TEST VER - 5. No → Go To 3	All
3	Turn the ignition off. Disconnect the O2 Sensor harness connector Disconnect the PCM harness connector. Measure the resistance of the O2 Sensor ground circuit between the O2 Sensor harness connector and the PCM harness connector. Is the resistance below 5.0 ohms? Yes → Go To 4 No → Repair the O2 Sensor ground circuit for an open. Perform POWERTRAIN VERIFICATION TEST VER - 5.	All
4	Turn the ignition off. Disconnect the O2 Sensor harness connector Disconnect the PCM harness connector. Measure the resistance of the O2 Sensor Signal circuit between the O2 Sensor harness connector and the PCM harness connector. Is the resistance below 5.0 ohms? Yes → Go To 5 No → Repair the O2 Sensor Signal for an open. Perform POWERTRAIN VERIFICATION TEST VER - 5.	All
5	**NOTE: Ensure the voltmeter leads meet the terminals in the connector and that there is good terminal to wire connection.** **NOTE: Ensure the voltmeter leads are connected for positive polarity** Perform a voltage drop test by back probing between the O2 Sensor ground circuit at the O2 Sensor harness connector and PCM harness connector. Start the engine. Allow the engine to idle. Is the voltage below 0.10 volt? Yes → Go To 6 No → Repair the high resistance on the O2 Sensor ground circuit. Perform POWERTRAIN VERIFICATION TEST VER - 5.	All

P0134-1/1 O2 SENSOR STAYS AT CENTER — Continued

TEST	ACTION	APPLICABILITY
6	**NOTE: Ensure the voltmeter leads meet the terminals in the connector and that there is good terminal to wire connection.** **NOTE: Ensure the voltmeter leads are connected for positive polarity** Perform a voltage drop test by back probing between the O2 Sensor Signal circuit at the O2 Sensor harness connector and PCM harness connector. Start the engine. Allow the engine to idle. Is the voltage below 0.10 volt? Yes → Go To 7 No → Repair the high resistance on the O2 Sensor Signal circuit. Perform POWERTRAIN VERIFICATION TEST VER - 5.	All
7	If there are no possible causes remaining, view repair. Repair Replace and program the Powertrain Control Module in accordance with the Service Information. Perform POWERTRAIN VERIFICATION TEST VER - 5.	All
8	**NOTE: Check for contaminates that may have damaged the O2 Sensor: contaminated fuel, unapproved silicone, oil and coolant.** **WARNING: WHEN THE ENGINE IS OPERATING, DO NOT STAND IN A DIRECT LINE WITH THE FAN. DO NOT PUT YOUR HANDS NEAR THE PULLEYS, BELTS OR FAN. DO NOT WEAR LOOSE CLOTHING.** **NOTE: The conditions that set the DTC are not present at this time. The following list may help in identifying the intermittent condition.** With the engine running at normal operating temperature, monitor the DRBIII® parameters related to the DTC while wiggling the wiring harness. Look for parameter values to change and/or a DTC to set. Review the DRBIII® Freeze Frame information. If possible, try to duplicate the conditions under which the DTC was set. Refer to any Technical Service Bulletins (TSB) that may apply. Visually inspect the related wiring harness. Look for any chafed, pierced, pinched, or partially broken wires. Visually inspect the related wiring harness connectors. Look for broken, bent, pushed out, or corroded terminals. Were any of the above conditions present? Yes → Repair as necessary. Perform POWERTRAIN VERIFICATION TEST VER - 5. No → Test Complete.	All

Symptom:

P0135-1/1 O2 SENSOR HEATER FAILURE

When Monitored and Set Condition:

P0135-1/1 O2 SENSOR HEATER FAILURE

When Monitored: During vehicle shutdown after vehicle had been driven greater than 10 MPH with throttle open for a minimum of 3 minutes. Battery voltage greater than 11.0 volts.

Set Condition: O2 sensor voltage continues to rise (instead of fall) after the diagnostics has turned the ASD relay back on. Two trip fault.

POSSIBLE CAUSES
O2 HEATER ELEMENT
O2 SENSOR HEATER CONTROL CIRCUIT OPEN
O2 SENSOR HEATER CONTROL CIRCUIT SHORTED TO GROUND
ASD RELAY OUTPUT CIRCUIT OPEN
INTERMITTENT CONDITION
PCM

TEST	ACTION	APPLICABILITY
1	Turn the ignition on. With the DRBIII®, read DTC's. Is the Good Trip display and equal to zero? Yes → Go To 3 No → Go To 2	All
2	Turn the ignition off. **NOTE: Wait a minimum of 8 minutes to allow the O2 Sensor to cool down before continuing the test. Allow the O2 Sensor voltage to stabilize between 0.4 to 0.6 volts.** Turn the ignition on. With the DRBIII®, actuate the O2 Heater Test. With the DRBIII®, monitor O2 Sensor voltage for at least 2 minutes. Does the voltage stay between 0.4 and 0.6 Yes → Go To 3 No → Go To 8	All

P0135-1/1 O2 SENSOR HEATER FAILURE — Continued

TEST	ACTION	APPLICABILITY
3	**NOTE: Allow the O2 sensor to cool down to room temperature.** Turn the ignition off. Disconnect the O2 Sensor harness connector. Measure the resistance across the O2 Sensor Heater element component side. Is the resistance between 2.0 and 7.0 ohms? Yes → Go To 4 No → Replace the O2 Sensor. Perform POWERTRAIN VERIFICATION TEST VER - 5.	All
4	Turn the ignition off. Disconnect the O2 Sensor harness connector. Disconnect the PCM harness connector. Measure the resistance of the O2 Sensor Heater Control circuit between the O2 Sensor harness connector and the PCM harness connector. Is the resistance below 5.0 ohms? Yes → Go To 5 No → Repair the O2 Sensor Heater Control circuit for an open. Perform POWERTRAIN VERIFICATION TEST VER - 5.	All
5	Turn the ignition off. Disconnect the O2 Sensor harness connector. Disconnect the PCM harness connector. Measure the resistance of the O2 Sensor Heater Control circuit in the O2 Sensor harness connector to ground. Is the resistance below 5.0 ohms? Yes → Repair the O2 Sensor Heater Control circuit for a short to ground. Perform POWERTRAIN VERIFICATION TEST VER - 5. No → Go To 6	All
6	Turn the ignition off. Disconnect the O2 Sensor harness connector. With the DRBIII®, actuate the O2 Heater Test. Measure the voltage of the ASD Relay Output circuit in the O2 Sensor harness connector. Is the voltage above 11.0 volts? Yes → Go To 7 No → Repair the ASD Relay Output circuit for an open. Perform POWERTRAIN VERIFICATION TEST VER - 5.	All
7	If there are no possible causes remaining, view repair. Repair Replace and program the Powertrain Control Module in accordance with the Service Information. Perform POWERTRAIN VERIFICATION TEST VER - 5.	All

P0135-1/1 O2 SENSOR HEATER FAILURE — Continued

TEST	ACTION	APPLICABILITY
8	**WARNING: WHEN THE ENGINE IS OPERATING, DO NOT STAND IN A DIRECT LINE WITH THE FAN. DO NOT PUT YOUR HANDS NEAR THE PULLEYS, BELTS OR FAN. DO NOT WEAR LOOSE CLOTHING.** **NOTE: The conditions that set the DTC are not present at this time. The following list may help in identifying the intermittent condition.** With the engine running at normal operating temperature, monitor the DRBIII® parameters related to the DTC while wiggling the wiring harness. Look for parameter values to change and/or a DTC to set. Review the DRBIII® Freeze Frame information. If possible, try to duplicate the conditions under which the DTC was set. Refer to any Technical Service Bulletins (TSB) that may apply. Visually inspect the related wiring harness. Look for any chafed, pierced, pinched, or partially broken wires. Visually inspect the related wiring harness connectors. Look for broken, bent, pushed out, or corroded terminals. Were any of the above conditions present? Yes → Repair as necessary Perform POWERTRAIN VERIFICATION TEST VER - 5. No → Test Complete.	All

Symptom:

P0141-1/2 O2 SENSOR HEATER FAILURE

When Monitored and Set Condition:

P0141-1/2 O2 SENSOR HEATER FAILURE

When Monitored: During vehicle shutdown after the vehicle has been driven for greater than 10 miles with the throttle open for a minimum of 3 minutes. Battery voltage greater than 11.0 volts.

Set Condition: O2 sensor continues to rise, (instead of fall) after the diagnostics has turned the ASD relay back on. Two trip fault.

POSSIBLE CAUSES
O2 HEATER ELEMENT
O2 SENSOR HEATER GROUND CIRCUIT OPEN
ASD RELAY OUTPUT CIRCUIT OPEN
INTERMITTENT CONDITION
PCM

TEST	ACTION	APPLICABILITY
1	Turn the ignition on. With the DRBIII®, read DTC's. Is the Good Trip display and equal to zero? Yes → Go To 3 No → Go To 2	All
2	Turn the ignition off. **NOTE: Wait a minimum of 8 minutes to allow the O2 Sensor to cool down before continuing the test. Allow the O2 Sensor voltage to stabilize between 0.4 to 0.6 volts.** Turn the ignition on. With the DRBIII®, actuate the O2 Heater Test. With the DRBIII®, monitor O2 Sensor voltage for at least 2 minutes. Does the voltage stay between 0.4 and 0.6 volts? Yes → Go To 3 No → Go To 7	All
3	**NOTE: Allow the O2 sensor to cool down to room temperature.** Turn the ignition off. Disconnect the O2 Sensor harness connector. Measure the resistance across the O2 Sensor Heater element component side. Is the resistance between 4.0 and 7.0 ohms? Yes → Go To 4 No → Replace the O2 Sensor. Perform POWERTRAIN VERIFICATION TEST VER - 5.	All

P0141-1/2 O2 SENSOR HEATER FAILURE — Continued

TEST	ACTION	APPLICABILITY
4	Turn the ignition off. Disconnect the O2 Sensor harness connector. Measure the resistance of the O2 Sensor Heater ground circuit in the O2 Sensor harness connector. Is the resistance below 5.0 ohms? Yes → Go To 5 No → Repair the O2 Sensor Heater ground circuit for an open. Perform POWERTRAIN VERIFICATION TEST VER - 5.	All
5	Turn the ignition off. Disconnect the O2 Sensor harness connector. With the DRBIII®, actuate the O2 Heater Test. Measure the voltage of the ASD Relay Output circuit in the O2 Sensor harness connector. Is the voltage above 11.0 volts? Yes → Go To 6 No → Repair the ASD Relay Output circuit for an open. Perform POWERTRAIN VERIFICATION TEST VER - 5.	All
6	If there are no possible causes remaining, view repair. Repair Replace and program the Powertrain Control Module in accordance with the Service Information. Perform POWERTRAIN VERIFICATION TEST VER - 5.	All
7	**WARNING: WHEN THE ENGINE IS OPERATING, DO NOT STAND IN A DIRECT LINE WITH THE FAN. DO NOT PUT YOUR HANDS NEAR THE PULLEYS, BELTS OR FAN. DO NOT WEAR LOOSE CLOTHING.** **NOTE: The conditions that set the DTC are not present at this time. The following list may help in identifying the intermittent condition.** With the engine running at normal operating temperature, monitor the DRBIII® parameters related to the DTC while wiggling the wiring harness. Look for parameter values to change and/or a DTC to set. Review the DRBIII® Freeze Frame information. If possible, try to duplicate the conditions under which the DTC was set. Refer to any Technical Service Bulletins (TSB) that may apply. Visually inspect the related wiring harness. Look for any chafed, pierced, pinched, or partially broken wires. Visually inspect the related wiring harness connectors. Look for broken, bent, pushed out, or corroded terminals. Were any of the above conditions present? Yes → Repair as necessary Perform POWERTRAIN VERIFICATION TEST VER - 5. No → Test Complete.	All

Symptom:

P0171-1/1 FUEL SYSTEM LEAN

When Monitored and Set Condition:

P0171-1/1 FUEL SYSTEM LEAN

When Monitored: With the engine running in closed loop mode, the ambient/battery temperature above 20 deg. F and altitude below 8000 ft.

Set Condition: If the PCM multiplies short term compensation by long term adaptive and a certain percentage is exceeded for two trips, a freeze frame is stored, the MIL illuminates and a trouble code is stored.

POSSIBLE CAUSES
INTERMITTENT CONDITION
RESTRICTED FUEL SUPPLY LINE
FUEL PUMP INLET STRAINER PLUGGED
FUEL PUMP MODULE
O2 SENSOR
O2 SENSOR SIGNAL CIRCUIT SHORTED TO GROUND
O2 SENSOR HEATER OPERATION
THROTTLE POSITION SENSOR VOLTAGE GREATER THAN 0.92 VOLTS WITH THROTTLE CLOSED
THROTTLE POSITION SENSOR SWEEP
MAP SENSOR OPERATION
ECT SENSOR OPERATION
ENGINE MECHANICAL PROBLEM
FUEL FILTER/PRESSURE REGULATOR (HIGH)
PCM

TEST	ACTION	APPLICABILITY
1	**NOTE: Check for contaminates that may have damaged the O2 Sensor: contaminated fuel, unapproved silicone, oil and coolant.** Turn the ignition on. With the DRBIII®, read DTC's. Is the Good Trip displayed and equal to zero? Yes → Go To 2 No → Go To 16	All

P0171-1/1 FUEL SYSTEM LEAN — Continued

TEST	ACTION	APPLICABILITY
2	**Warning: The fuel system is under a constant pressure (even with the engine off). Before testing or servicing any fuel system hose, fitting or line, the fuel system pressure must be released.** Install a fuel pressure gauge to the fuel rail. Turn the ignition on. With the DRBIII®, actuate the ASD Fuel System test and observe the fuel pressure gauge. **NOTE: Fuel pressure specification is 400 KPa +/- 34 KPa (58 psi +/- 5 psi).** Turn the ignition off. Choose a conclusion that best matches your fuel pressure reading. Within Specification Go To 3 Above Specification Replace the fuel filter/pressure regulator. Perform POWERTRAIN VERIFICATION TEST VER - 5. Below Specification Go To 13 **Caution: Stop All Actuations.**	All
3	Turn the ignition on With the DRBIII®, read the O2 Sensor voltage. Is the voltage between 0.4 to 0.6 volts? Yes → Go To 4 No → Go To 10	All
4	Turn the ignition off. **NOTE: Wait a minimum of 10 minutes to allow the O2 Sensor to cool down before continuing the test. Allow the O2 Sensor voltage to stabilize between 0.4 to 0.6 volts.** Turn the ignition on. With the DRBIII®, actuate the O2 Heater Test. With the DRBIII®, monitor O2 Sensor voltage for at least 2 minutes. Does the voltage stay between 0.4 and 0.6 volts. Yes → Replace the O2 Sensor. Perform POWERTRAIN VERIFICATION TEST VER - 5. No → Go To 5	All
5	Turn the ignition on. With the DRBIII®, read TP Sensor voltage. **NOTE: The throttle must be against the stop.** Is the voltage 0.92 or less with the Throttle closed? Yes → Go To 6 No → Check for a binding throttle condition. If OK, replace the Throttle Position Sensor. Perform POWERTRAIN VERIFICATION TEST VER - 5.	All

P0171-1/1 FUEL SYSTEM LEAN — Continued

TEST	ACTION	APPLICABILITY
6	Turn the ignition on. With the DRBIII®, read the TP Sensor voltage. While monitoring the DRBIII®, slowly open and close the throttle. Does the voltage increase and decease smoothly? Yes → Go To 7 No → Replace the Throttle Position Sensor. Perform POWERTRAIN VERIFICATION TEST VER - 5.	All
7	Turn the ignition off. Connect a Vacuum Gauge to a Manifold Vacuum source. Start the engine. Allow the engine to idle. **Note: If engine will not idle, maintain a constant RPM above idle.** With the DRBIII® in Sensors, read the MAP Sensor vacuum value. Is the DRBIII® reading within 1″ of the Vacuum Gauge reading? Yes → Go To 8 No → Replace the MAP Sensor. Perform POWERTRAIN VERIFICATION TEST VER - 5.	All
8	**Note: For this test to be valid, the thermostat must be operating correctly.** **Note: This test works best if performed on a cold engine (cold soak)** Turn the ignition on. With the DRBIII®, read the Engine Coolant Temperature (ECT) Sensor value. If the engine was allowed to sit overnight (cold soak), the temperature value should be a sensible value that is somewhere close to the ambient temperature. **Note: If engine coolant temperature is above 82°C (180°F), allow the engine to cool until 65°C (150°F) is reached.** Start the Engine. During engine warm-up, monitor the Engine Coolant Temperature value. The temperature value change should be a smooth transition from start up to normal operating temperature 82°C (180°F). The value should reach at least 82°C (180°F). Did the Engine Coolant Temperature value increase a smooth transition and did it reach at least 82°C Yes → Go To 9 No → Replace the Engine Coolant Temperature Sensor. Perform POWERTRAIN VERIFICATION TEST VER - 5.	All
9	Check for any of the following conditions/mechanical problems. AIR INDUCTION SYSTEM - must be free from leaks. ENGINE VACUUM - must be at least 13 inches in neutral ENGINE VALVE TIMING - must be within specifications ENGINE COMPRESSION - must be within specifications ENGINE EXHAUST SYSTEM - must be free of any restrictions or leaks. ENGINE PCV SYSTEM - must flow freely TORQUE CONVERTER STALL SPEED - must be within specifications POWER BRAKE BOOSTER - no internal vacuum leaks FUEL - must be free of contamination FUEL INJECTOR - plugged or restricted injector; control wire not connected to correct injector Are there any engine mechanical problems? Yes → Repair as necessary. Perform POWERTRAIN VERIFICATION TEST VER - 5. No → Test Complete.	All

P0171-1/1 FUEL SYSTEM LEAN — Continued

TEST	ACTION	APPLICABILITY
10	Turn the ignition on. Disconnect the O2 Sensor harness connector. With the DRBIII®, monitor the O2 Sensor voltage. Is the O2 Sensor voltage between 0.40 to 0.60 volts? Yes → Replace the O2 Sensor Perform POWERTRAIN VERIFICATION TEST VER - 5. No → Go To 11	All
11	Turn the ignition off. Disconnect the O2 Sensor harness connector. Disconnect the PCM harness connector. Measure the resistance of the O2 Sensor Signal circuit in the PCM harness connector to ground. Is the resistance below 5.0 ohms? Yes → Repair the O2 Sensor Signal for a short to ground. Perform POWERTRAIN VERIFICATION TEST VER - 5. No → Go To 12	All
12	If there are no possible causes remaining, view repair. Repair Replace and program the Powertrain Control Module in accordance with the Service Information. Perform POWERTRAIN VERIFICATION TEST VER - 5.	All
13	Turn the ignition off. **Warning: The fuel system is under a constant pressure (even with the engine off). Before testing or servicing any fuel system hose, fitting or line, the fuel system pressure must be released.** Raise vehicle on hoist, and disconnect the fuel pressure line at the fuel pump module. Install special 5/16 fuel line adapter tool #6539 between disconnected fuel line and the fuel pump module. Attach a fuel pressure test gauge to the T fitting on tool #6539. Turn the ignition on. With the DRBIII®, actuate the ASD Fuel System test and observe the fuel pressure gauge. **NOTE: Fuel pressure specification is 400 KPa +/- 34 KPa (58 psi +/- 5 psi).** Is the fuel pressure within specification? Yes → Repair or replace fuel supply line as necessary. Perform POWERTRAIN VERIFICATION TEST VER - 5. No → Go To 14 **Caution: Stop All Actuations.**	All
14	Turn the ignition off. **Warning: The fuel system is under a constant pressure (even with the engine off). Before testing or servicing any fuel system hose,fitting or line, the fuel system pressure must be released.** Remove the Fuel Pump Module and inspect the Fuel Inlet Strainer. Is the Fuel Inlet Strainer plugged? Yes → Replace the Fuel Pump Inlet Strainer. Perform POWERTRAIN VERIFICATION TEST VER - 5. No → Go To 15	All

P0171-1/1 FUEL SYSTEM LEAN — Continued

TEST	ACTION	APPLICABILITY
15	If there are no possible causes remaining, view repair. Repair Replace the Fuel Pump Module. Perform POWERTRAIN VERIFICATION TEST VER - 5.	All
16	**NOTE: Check for contaminates that may have damaged the O2 Sensor: contaminated fuel, unapproved silicone, oil and coolant.** **WARNING: WHEN THE ENGINE IS OPERATING, DO NOT STAND IN A DIRECT LINE WITH THE FAN. DO NOT PUT YOUR HANDS NEAR THE PULLEYS, BELTS OR FAN. DO NOT WEAR LOOSE CLOTHING.** **NOTE: The conditions that set the DTC are not present at this time. The following list may help in identifying the intermittent condition.** With the engine running at normal operating temperature, monitor the DRBIII® parameters related to the DTC while wiggling the wiring harness. Look for parameter values to change and/or a DTC to set. Review the DRBIII® Freeze Frame information. If possible, try to duplicate the conditions under which the DTC was set. Refer to any Technical Service Bulletins (TSB) that may apply. Visually inspect the related wiring harness. Look for any chafed, pierced, pinched, or partially broken wires. Visually inspect the related wiring harness connectors. Look for broken, bent, pushed out, or corroded terminals. Were any of the above conditions present? Yes → Repair as necessary Perform POWERTRAIN VERIFICATION TEST VER - 5. No → Test Complete.	All

Symptom:

P0172-1/1 FUEL SYSTEM RICH

When Monitored and Set Condition:

P0172-1/1 FUEL SYSTEM RICH

When Monitored: With the engine running in closed loop mode, the ambient/battery temperature above 20 deg. F and altitude below 8000 ft.

Set Condition: If the PCM multiplies short term compensation by long term adaptive and the result is below a certain value for two trips, a freeze frame is stored, the MIL illuminates and a trouble code is stored.

POSSIBLE CAUSES
INTERMITTENT CONDITION
O2 SENSOR HEATER OPERATION
O2 SENSOR
EVAP PURGE SOLENOID OPERATION
O2 SENSOR SIGNAL CIRCUIT SHORTED TO VOLTAGE
O2 SENSOR SIGNAL CIRCUIT OPEN
THROTTLE POSITION SENSOR VOLTAGE GREATER THAN 0.92 VOLTS WITH THROTTLE CLOSED
TP SENSOR SWEEP
MAP SENSOR OPERATION
ECT SENSOR OPERATION
ENGINE MECHANICAL PROBLEM
FUEL FILTER/PRESSURE REGULATOR (HIGH)
PCM

TEST	ACTION	APPLICABILITY
1	**NOTE: Check for contaminates that may have damaged the O2 Sensor: contaminated fuel, unapproved silicone, oil and coolant.** Turn the ignition on. With the DRBIII®, read DTC's. Is the Good Trip displayed and equal to zero? Yes → Go To 2 No → Go To 15	All

P0172-1/1 FUEL SYSTEM RICH — Continued

TEST	ACTION	APPLICABILITY
2	**Warning: The fuel system is under a constant pressure (even with the engine off). Before testing or servicing any fuel system hose, fitting or line, the fuel system pressure must be released.** Install a fuel pressure gauge to the fuel rail. Turn the ignition on. With the DRBIII®, actuate the ASD Fuel System test and observe the fuel pressure gauge. **NOTE: Fuel pressure specification is 400 KPa +/- 34 KPa (58 psi +/- 5 psi).** Turn the ignition off. Choose a conclusion that best matches your fuel pressure reading. Within Specification Go To 3 Above Specification Replace the fuel filter/pressure regulator. Perform POWERTRAIN VERIFICATION TEST VER - 5. **Caution: Stop All Actuations.**	All
3	Turn the ignition on With the DRBIII®, read the O2 Sensor voltage. Is the voltage between 0.4 to 0.6 volts? Yes → Go To 4 No → Go To 11	All
4	Turn the ignition off. **NOTE: Wait a minimum of 10 minutes to allow the O2 Sensor to cool down before continuing the test. Allow the O2 Sensor voltage to stabilize between 0.4 to 0.6 volts.** Turn the ignition on. With the DRBIII®, actuate the O2 Heater Test. With the DRBIII®, monitor O2 Sensor voltage for at least 2 minutes. Does the voltage stay between 0.4 and 0.6 Yes → Replace the O2 Sensor. Perform POWERTRAIN VERIFICATION TEST VER - 5. No → Go To 5	All
5	Turn the ignition off. Disconnect the hoses at the Evap Purge Solenoid. Using a hand vacuum pump, apply 10 inches of vacuum to the Evap Purge Solenoid vacuum source port on the component side. Did the Evap Purge Solenoid hold vacuum? Yes → Go To 6 No → Replace the EVAP Purge Solenoid. Perform POWERTRAIN VERIFICATION TEST VER - 5.	All

P0172-1/1 FUEL SYSTEM RICH — Continued

TEST	ACTION	APPLICABILITY
6	Turn the ignition on. With the DRBIII®, read TPS voltage. **NOTE: The throttle must be against the stop.** Is the TPS voltage 0.92V or less with the Throttle closed? Yes → Go To 7 No → Check for a binding throttle condition. If OK, replace the Throttle Position Sensor. Perform POWERTRAIN VERIFICATION TEST VER - 5.	All
7	Turn the ignition on. With the DRBIII®, read the TP Sensor voltage. While monitoring the DRBIII®, slowly open and close the throttle. Does the voltage increase and decease smoothly? Yes → Go To 8 No → Replace the Throttle Position Sensor. Perform POWERTRAIN VERIFICATION TEST VER - 5.	All
8	Turn the ignition off. Connect a Vacuum Gauge to a Manifold Vacuum source. Start the engine. Allow the engine to idle. **Note: If engine will not idle, maintain a constant RPM above idle.** With the DRBIII® in Sensors, read the MAP Sensor vacuum value. Is the DRB reading within 1″ of the Vacuum Gauge reading? Yes → Go To 9 No → Replace the MAP Sensor. Perform POWERTRAIN VERIFICATION TEST VER - 5.	All
9	**Note: For this test to be valid, the thermostat must be operating correctly.** **Note: This test works best if performed on a cold engine (cold soak)** Turn the ignition on. With the DRBIII®, read the Engine Coolant Temperature Sensor value. If the engine was allowed to sit overnight (cold soak), the temperature value should be a sensible value that is somewhere close to the ambient temperature. **Note: If engine coolant temperature is above 82°C (180°F), allow the engine to cool until 65°C (150°F) is reached.** Start the Engine. During engine warm-up, monitor the Engine Coolant Temperature value. The temp value change should be a smooth transition from start up to normal operating temp 82°C (180°F). The value should reach at least 82°C (180°F). Did the Engine Coolant Temperature value increase a smooth transition and did it reach at least 82°C Yes → Go To 10 No → Replace the Engine Coolant Temperature Sensor. Perform POWERTRAIN VERIFICATION TEST VER - 5.	All

P0172-1/1 FUEL SYSTEM RICH — Continued

TEST	ACTION	APPLICABILITY
10	Check for any of the following conditions/mechanical problems. AIR INDUCTION SYSTEM - must be free from restrictions. ENGINE VACUUM - must be at least 13 inches in neutral ENGINE VALVE TIMING - must be within specifications ENGINE COMPRESSION - must be within specifications ENGINE EXHAUST SYSTEM - must be free of any restrictions or leaks. ENGINE PCV SYSTEM - must flow freely TORQUE CONVERTER STALL SPEED - must be within specifications POWER BRAKE BOOSTER - no internal vacuum leaks FUEL - must be free of contamination FUEL INJECTOR - plugged or restricted injector; control wire not connected to correct injector Are there any engine mechanical problems? Yes → Repair as necessary. Perform POWERTRAIN VERIFICATION TEST VER - 5. No → Test Complete.	All
11	Turn the ignition on. Disconnect the O2 Sensor harness connector. With the DRBIII®, monitor the O2 Sensor voltage. Is the O2 Sensor voltage between 0.4 to 0.6 volts? Yes → Replace the O2 Sensor Perform POWERTRAIN VERIFICATION TEST VER - 5. No → Go To 12	All
12	Turn the ignition off. Disconnect the PCM harness connector. Disconnect the O2 Sensor harness connector. Measure the resistance of the O2 Sensor Signal circuit between the PCM harness connector and the O2 Sensor harness connector. Is the resistance below 5.0 ohms? Yes → Go To 13 No → Check for O2 Sensor Signal circuit for an open. Perform POWERTRAIN VERIFICATION TEST VER - 5.	All
13	**WARNING: WHEN THE ENGINE IS OPERATING, DO NOT STAND IN A DIRECT LINE WITH THE FAN. DO NOT PUT YOUR HANDS NEAR THE PULLEYS, BELTS OR FAN. DO NOT WEAR LOOSE CLOTHING.** Turn the ignition off. Disconnect the O2 Sensor harness connector. Start the engine. Measure the voltage of the O2 Sensor Signal circuit in the O2 Sensor harness connector. Is the voltage above 0.60 volt? Yes → Repair the O2 Sensor Signal for a short to voltage. Perform POWERTRAIN VERIFICATION TEST VER - 5. No → Go To 14	All
14	If there are no possible causes remaining, view repair. Repair Replace and program the Powertrain Control Module in accordance with the Service Information. Perform POWERTRAIN VERIFICATION TEST VER - 5.	All

P0172-1/1 FUEL SYSTEM RICH — Continued

TEST	ACTION	APPLICABILITY
15	**NOTE: Check for contaminates that may have damaged the O2 Sensor: contaminated fuel, unapproved silicone, oil and coolant.** **WARNING: WHEN THE ENGINE IS OPERATING, DO NOT STAND IN A DIRECT LINE WITH THE FAN. DO NOT PUT YOUR HANDS NEAR THE PULLEYS, BELTS OR FAN. DO NOT WEAR LOOSE CLOTHING.** **NOTE: The conditions that set the DTC are not present at this time. The following list may help in identifying the intermittent condition.** With the engine running at normal operating temperature, monitor the DRBIII® parameters related to the DTC while wiggling the wiring harness. Look for parameter values to change and/or a DTC to set. Review the DRBIII® Freeze Frame information. If possible, try to duplicate the conditions under which the DTC was set. Refer to any Technical Service Bulletins (TSB) that may apply. Visually inspect the related wiring harness. Look for any chafed, pierced, pinched, or partially broken wires. Visually inspect the related wiring harness connectors. Look for broken, bent, pushed out, or corroded terminals. Were any of the above conditions present? Yes → Repair as necessary Perform POWERTRAIN VERIFICATION TEST VER - 5. No → Test Complete.	All

Symptom List:

P0201-INJECTOR #1 CONTROL CIRCUIT
P0202-INJECTOR #2 CONTROL CIRCUIT
P0203-INJECTOR #3 CONTROL CIRCUIT
P0204-INJECTOR #4 CONTROL CIRCUIT
P0205-INJECTOR #5 CONTROL CIRCUIT
P0206-INJECTOR #6 CONTROL CIRCUIT

Test Note: All symptoms listed above are diagnosed using the same tests. The title for the tests will be P0201-INJECTOR #1 CONTROL CIRCUIT.

When Monitored and Set Condition:

P0201-INJECTOR #1 CONTROL CIRCUIT

When Monitored: With battery voltage greater than 10 volts. Auto Shutdown Relay energized. Engine speed less than 3000 rpm.

Set Condition: No inductive spike is detected after injector turn off.

P0202-INJECTOR #2 CONTROL CIRCUIT

When Monitored: With battery voltage greater than 10 volts. Auto Shutdown Relay energized. Engine speed less than 3000 rpm.

Set Condition: No inductive spike is detected after injector turn off.

P0203-INJECTOR #3 CONTROL CIRCUIT

When Monitored: With battery voltage greater than 10 volts. Auto Shutdown Relay energized. Engine speed less than 3000 rpm.

Set Condition: No inductive is detected after injector turn off.

P0204-INJECTOR #4 CONTROL CIRCUIT

When Monitored: With battery voltage greater than 10 volts. Auto Shutdown Relay energized. Engine speed less than 3000 rpm.

Set Condition: No inductive spike is detected after injector turn off, and with no other injectors on.

P0205-INJECTOR #5 CONTROL CIRCUIT

When Monitored: With battery voltage greater than 10 volts. Auto Shutdown Relay energized. Engine speed less than 3000 rpm.

Set Condition: No inductive spike is detected after injector turn off.

P0201-INJECTOR #1 CONTROL CIRCUIT — Continued

P0206-INJECTOR #6 CONTROL CIRCUIT

When Monitored: With battery voltage greater than 10 volts. Auto Shutdown Relay energized. Engine speed less than 3000 rpm.

Set Condition: No inductive spike is detected after injector turn off.

POSSIBLE CAUSES
ASD RELAY OUTPUT CIRCUIT OPEN
INTERMITTENT CONDITION
FUEL INJECTOR
FUEL INJECTOR DRIVER CIRCUIT OPEN
FUEL INJECTOR DRIVER CIRCUIT SHORTED TO GROUND
PCM

TEST	ACTION	APPLICABILITY
1	**NOTE: Record the Freeze Frame Information that set along with the DTC.** Turn the ignition on. With the DRBIII®, read DTC's. Is the Good Trip displayed and equal to zero? Yes → Go To 2 No → Go To 7	All
2	Turn the ignition off. Disconnect the Fuel Injector harness connector. Measure the resistance of the Fuel Injector, component side. Is the resistance between 10 and 16 ohms? Yes → Go To 3 No → Replace the Fuel Injector. Perform POWERTRAIN VERIFICATION TEST VER - 5.	All
3	Turn the ignition off. Disconnect the Fuel Injector harness connector. Remove the ASD Relay from the PDC. Turn the ignition on. Jumper the Fused B+ circuit and the ASD Relay Output circuit in the PDC. Using a 12-volt test light connected to 12-volts, probe the ASD Relay Output circuit. Does the test light illuminate brightly? Yes → Go To 4 No → Repair the ASD Relay Output circuit for an open. Perform POWERTRAIN VERIFICATION TEST VER - 5.	All

P0201-INJECTOR #1 CONTROL CIRCUIT — Continued

TEST	ACTION	APPLICABILITY
4	Turn the ignition off. Disconnect the Fuel Injector harness connector. Disconnect the PCM harness connector. Measure the resistance of the Fuel Injector driver circuit between the Fuel Injector harness connector and the PCM harness connector. Is the resistance below 5.0 ohms? Yes → Go To 5 No → Repair the Fuel Injector driver circuit for an open. Perform POWERTRAIN VERIFICATION TEST VER - 5.	All
5	Turn the ignition off. Disconnect the Fuel Injector harness connector. Disconnect the PCM harness connector. Measure the resistance between ground and the Fuel Injector driver circuit in the Fuel Injector harness connector. Is the resistance below 100k ohms? Yes → Repair the Fuel Injector driver circuit for a short to ground. Perform POWERTRAIN VERIFICATION TEST VER - 5. No → Go To 6	All
6	If there are no possible causes remaining, view repair. Repair Replace and program the Powertrain Control Module in accordance with the Service Information. Perform POWERTRAIN VERIFICATION TEST VER - 5.	All
7	**WARNING: WHEN THE ENGINE IS OPERATING, DO NOT STAND IN A DIRECT LINE WITH THE FAN. DO NOT PUT YOUR HANDS NEAR THE PULLEYS, BELTS OR FAN. DO NOT WEAR LOOSE CLOTHING.** **NOTE: The conditions that set the DTC are not present at this time. The following list may help in identifying the intermittent condition.** With the engine running at normal operating temperature, monitor the DRBIII® parameters related to the DTC while wiggling the wiring harness. Look for parameter values to change and/or a DTC to set. Review the DRBIII® Freeze Frame information. If possible, try to duplicate the conditions under which the DTC was set. Refer to any Technical Service Bulletins (TSB) that may apply. Visually inspect the related wiring harness. Look for any chafed, pierced, pinched, or partially broken wires. Visually inspect the related wiring harness connectors. Look for broken, bent, pushed out, or corroded terminals. Were any of the above conditions present? Yes → Repair as necessary Perform POWERTRAIN VERIFICATION TEST VER - 5. No → Test Complete.	All

Symptom List:

P0300-MULTIPLE CYLINDER MIS-FIRE
P0301-CYLINDER #1 MISFIRE
P0302-CYLINDER #2 MISFIRE
P0303-CYLINDER #3 MISFIRE
P0304-CYLINDER #4 MISFIRE
P0305-CYLINDER #5 MISFIRE
P0306-CYLINDER #6 MISFIRE

Test Note: All symptoms listed above are diagnosed using the same tests. The title for the tests will be P0300-MULTIPLE CYLINDER MIS-FIRE.

When Monitored and Set Condition:

P0300-MULTIPLE CYLINDER MIS-FIRE

When Monitored: Any time the engine is running, and the adaptive numerator has been successfully updated.

Set Condition: When more than a 2% (2.5% LEV) misfire rate is measured during two trips. Above 3000 RPM 1 trip less than 3000 RPM 2 trip.

P0301-CYLINDER #1 MISFIRE

When Monitored: Any time the engine is running, and the adaptive numerator has been successfully updated.

Set Condition: When more than a 2% (2.5% LEV) misfire rate is measured during two trips, or with a 10% to 30% misfire rate during one trip.

P0302-CYLINDER #2 MISFIRE

When Monitored: Any time the engine is running, and the adaptive numerator has been successfully updated.

Set Condition: When more than a 2% (2.5% LEV) misfire rate is measured during two trips, or with a 10% to 30% misfire rate during one trip.

P0303-CYLINDER #3 MISFIRE

When Monitored: Any time the engine is running, and the adaptive numerator has been successfully updated.

Set Condition: When more than a 2% (2.5% LEV) misfire rate is measured during two trips, or with a 10% to 30% misfire rate during one trip.

P0304-CYLINDER #4 MISFIRE

When Monitored: Any time the engine is running, and the adaptive numerator has been successfully updated.

Set Condition: When more than a 2% (2.5% LEV) misfire rate is measured during two trips, or with a 10% to 30% misfire rate during one trip.

P0300-MULTIPLE CYLINDER MIS-FIRE — Continued

P0305-CYLINDER #5 MISFIRE

When Monitored: Any time the engine is running, and the adaptive numerator has been successfully updated.

Set Condition: When more than a 2% (2.5% LEV) misfire rate is measured during two trips, or with a 10% to 30% misfire rate during one trip.

P0306-CYLINDER #6 MISFIRE

When Monitored: Any time the engine is running, and the adaptive numerator has been successfully updated.

Set Condition: When more than a 2% (2.5 LEV) misfire rate is measured during two trips, or with a 10% to 30% misfire rate during one trip.

POSSIBLE CAUSES
MIS-FIRE CONDITIONS NO LONGER EXIST
FUEL SYSTEM PROBLEM
SECONDARY IGNITION OR MECHANICAL PROBLEM
ERRATIC CAM/CRANK SENSOR SIGNALS
ENGINE MECHANICAL PROBLEM
OTHER POSSIBLE CAUSES FOR MIS-FIRE

TEST	ACTION	APPLICABILITY
1	**Note: Repair all other PCM DTC's before continuing with this test.** With the DRBIII®, read DTC's. Is the MIS-FIRE GOOD TRIP counter displayed and equal to zero? Yes → Go To 2 No → Go To 8	All
2	At this time the conditions that set the Misfire DTC are present. With the DRBIII®, select DTC's and RELATED FUNCTIONS. Read and record the FREEZE FRAME DATA. Select OBD II MONITORS. Read and record the MIS-FIRE SIMILAR CONDITIONS WINDOW DATA. With these screens, attempt to duplicate the condition(s) that has set this DTC. When the vehicle is operating in the SIMILAR CONDITIONS WINDOW, refer to the WHICH CYLINDER IS MISFIRING screen. Observe the WHICH CYLINDER IS MISFIRING screen for at least one minute. Is the DRBIII® counting mis-fires at this time? Yes → Go To 3 No → Go To 8	All

P0300-MULTIPLE CYLINDER MIS-FIRE — Continued

TEST	ACTION	APPLICABILITY
3	Start the engine and allow the engine to idle. With the DRBIII®, read the FREEZE FRAME DATA. Use the FREEZE FRAME DATA and attempt to determine the cause of the Misfire DTC. In the FREEZE FRAME, are the adaptive fuel percentages greater than +/- 15%? Yes → Refer to the Driveablitiy Category and perform the Checking Fuel Delivery symptom. Perform POWERTRAIN VERIFICATION TEST VER - 5. No → Go To 4	All
4	With the DRBIII®, read the FREEZE FRAME DATA. Use the FREEZE FRAME DATA and attempt to determine the cause of the Misfire DTC. In the FREEZE FRAME DATA, is the LOAD VALUE over 50% and the operating temp normal? Yes → Check secondary ignition, compression, and cylinder leakage. Perform POWERTRAIN VERIFICATION TEST VER - 5. No → Go To 5	All
5	With the DRBIII®, read the FREEZE FRAME DATA. Use the FREEZE FRAME DATA and attempt to determine the cause of the Misfire DTC. In the FREEZE FRAME DATA, is the engine RPM over 3000 and the operating temp normal? Yes → Test CMP and CKP signals with Lab Scope, check valve timing, and perform running vacuum test. Perform POWERTRAIN VERIFICATION TEST VER - 5. No → Go To 6	All
6	Check for any of the following conditions/mechanical problems. ENGINE VACUUM - must be at least 13 inches in neutral ENGINE VALVE TIMING - must be within specifications ENGINE COMPRESSION - must be within specifications ENGINE EXHAUST SYSTEM - must be free of any restrictions or leaks. ENGINE PCV SYSTEM - must flow freely TORQUE CONVERTER STALL SPEED - must be within specifications POWER BRAKE BOOSTER - no internal vacuum leaks FUEL - must be free of contamination FUEL INJECTOR - plugged or restricted injector; control wire not connected to correct injector Are there any engine mechanical problems? Yes → Repair as necessary. Perform POWERTRAIN VERIFICATION TEST VER - 5. No → Go To 7	All

P0300-MULTIPLE CYLINDER MIS-FIRE — Continued

TEST	ACTION	APPLICABILITY
7	**Note: Anything that affects the speed of the crankshaft can cause a misfire DTC.** The following are other possible causes for mis-fire: Injector harness connectors, secondary ignition problem, mechanical engine problem, PCM power grounds, irregular cam and crank signal, plugged injectors, restricted exhaust, intake restriction, damaged trigger wheel, contaminated fuel, or vacuum leak. Weak valve springs, carbon deposits on valves, or accessory drive belt (serpentine belt). Check for any TSB's that may relate to a Misfire DTC. Do any of the above causes exist? Yes → Repair as necessary. Perform POWERTRAIN VERIFICATION TEST VER - 5. No → Test Complete.	All
8	At this time the mis-fire does not exist or is an intermittent problem. **Note: An intermittent problem may have been caused by moisture in the secondary ignition.** With the DRBIII®, select DTC's AND RELATED FUNCTIONS. Read and record the FREEZE FRAME DATA. Select OBD II MONITORS. Read and record MIS-FIRE SIMILAR CONDITIONS WINDOW DATA. With these screens, attempt to duplicate the condition that has set the Misfire DTC. While using FREEZE FRAME DATA, pay particular attention to the DTC setting conditions, such as speed, temp, load, and map vacuum. Does the mis-fire reoccur? Yes → Go To 9 No → Mis-fire DTC conditions no longer exist. Refer to any TSB's that may relate to the symptom. Operate the vehicle for 2 misfire good trip and erase DTC's. Perform POWERTRAIN VERIFICATION TEST VER - 5.	All
9	Start the engine and allow the engine to idle. With the DRBIII®, read the FREEZE FRAME DATA. Use the FREEZE FRAME DATA and attempt to determine the cause of the Misfire DTC. In the FREEZE FRAME, are the adaptive fuel percentages greater than +/- 15%? Yes → Refer to the Driveablitiy Category and perform the Checking Fuel Delivery symptom. Perform POWERTRAIN VERIFICATION TEST VER - 5. No → Go To 10	All
10	With the DRBIII®, read the FREEZE FRAME DATA. Use the FREEZE FRAME DATA and attempt to determine the cause of the Misfire DTC. In the FREEZE FRAME DATA, is the LOAD VALUE over 50% and the operating temp normal? Yes → Check secondary ignition, compression, and cylinder leakage. Perform POWERTRAIN VERIFICATION TEST VER - 5. No → Go To 11	All

P0300-MULTIPLE CYLINDER MIS-FIRE — Continued

TEST	ACTION	APPLICABILITY
11	With the DRBIII®, read the FREEZE FRAME DATA. Use the FREEZE FRAME DATA and attempt to determine the cause of the Misfire DTC. In the FREEZE FRAME DATA, is the engine RPM over 3000 and the operating temp normal? Yes → Test CMP and CKP signals with Lab Scope, check valve timing, and perform running vacuum test. Perform POWERTRAIN VERIFICATION TEST VER - 5. No → Go To 12	All
12	Check for any of the following conditions/mechanical problems. ENGINE VACUUM - must be at least 13 inches in neutral ENGINE VALVE TIMING - must be within specifications ENGINE COMPRESSION - must be within specifications ENGINE EXHAUST SYSTEM - must be free of any restrictions or leaks. ENGINE PCV SYSTEM - must flow freely TORQUE CONVERTER STALL SPEED - must be within specifications POWER BRAKE BOOSTER - no internal vacuum leaks FUEL - must be free of contamination FUEL INJECTOR - plugged or restricted injector; control wire not connected to correct injector Are there any engine mechanical problems? Yes → Repair as necessary. Perform POWERTRAIN VERIFICATION TEST VER - 5. No → Test Complete.	All

Symptom:

P0320-NO CRANK REFERENCE SIGNAL AT PCM

When Monitored and Set Condition:

P0320-NO CRANK REFERENCE SIGNAL AT PCM

When Monitored: Engine cranking.

Set Condition: No CKP signal is present during engine cranking, and at least 8 camshaft position sensor signals have occurred.

POSSIBLE CAUSES
INTERMITTENT CKP SIGNAL
INTERMITTENT CMP SIGNAL
INTERMITTENT WIRING
INTERMITTENT CONDITION
8 VOLT SUPPLY CIRCUIT SHORTED TO GROUND
8 VOLT SUPPLY CIRCUIT OPEN
8 VOLT SUPPLY CIRCUIT SHORTED TO VOLTAGE
CRANKSHAFT POSITION SENSOR SIGNAL CIRCUIT SHORTED GROUND
CRANKSHAFT POSITION SENSOR SIGNAL CIRCUIT OPEN
CRANKSHAFT POSITION SENSOR SIGNAL CIRCUIT SHORTED TO VOLTAGE
CRANKSHAFT POSITION SENSOR SIGNAL SHORTED TO 8 VOLT SUPPLY CIRCUIT
SENSOR GROUND CIRCUIT OPEN
PCM - 8 VOLT SUPPLY
PCM - CRANKSHAFT POSITION SENSOR SIGNAL
CRANKSHAFT POSITION SENSOR

TEST	ACTION	APPLICABILITY
1	With the DRBIII®, read the Current Crankshaft Position (CKP) Sensor State while cranking the engine. Does the DRBIII® display Current CKP State Present while cranking the engine? Yes → Go To 2 No → Go To 6	All

P0320-NO CRANK REFERENCE SIGNAL AT PCM — Continued

TEST	ACTION	APPLICABILITY
2	Turn the ignition off. With the DRBIII® lab scope probe and the Miller special tool #6801, backprobe the CKP Signal circuit in the PCM harness connector. **WARNING: WHEN THE ENGINE IS OPERATING, DO NOT STAND IN A DIRECT LINE WITH THE FAN. DO NOT PUT YOUR HANDS NEAR THE PULLEYS, BELTS OR FAN. DO NOT WEAR LOOSE CLOTHING.** Turn the ignition on. (do not start or crank the engine) Observe the lab scope screen. Look for any pulses generated by the CKP Sensor. Did the CKP Sensor generate any pulses? Yes → Replace the Crankshaft Position Sensor. Perform POWERTRAIN VERIFICATION TEST VER - 5. No → Go To 3	All
3	Turn the ignition off. With the DRBIII® lab scope probe and the Miller special tool #6801, back probe the Camshaft Position (CMP) Sensor Signal circuit in the PCM harness connector. **WARNING: WHEN THE ENGINE IS OPERATING, DO NOT STAND IN A DIRECT LINE WITH THE FAN. DO NOT PUT YOUR HANDS NEAR THE PULLEYS, BELTS OR FAN. DO NOT WEAR LOOSE CLOTHING.** Turn the ignition on. (do not start or crank the engine) Observe the lab scope screen. Look for any pulses generated by the CMP Sensor. Did the CMP Sensor generate any pulses? Yes → Replace the Camshaft Position Sensor. Perform POWERTRAIN VERIFICATION TEST VER - 5. No → Go To 4	All
4	Turn the ignition off. With the DRBIII® lab scope probe and the Miller special tool #6801, backprobe the CKP Signal circuit in the PCM harness connector. **WARNING: WHEN THE ENGINE IS OPERATING, DO NOT STAND IN A DIRECT LINE WITH THE FAN. DO NOT PUT YOUR HANDS NEAR THE PULLEYS, BELTS OR FAN. DO NOT WEAR LOOSE CLOTHING.** Start the engine. Observe the lab scope screen while wiggling the wiring harness and connectors. Were there any irregularities in the lab scope pattern? Yes → Check the harness connectors carefully. If OK, replace the Crankshaft Position Sensor. Perform POWERTRAIN VERIFICATION TEST VER - 5. No → Go To 5	All

P0320-NO CRANK REFERENCE SIGNAL AT PCM — Continued

TEST	ACTION	APPLICABILITY
5	**WARNING: WHEN THE ENGINE IS OPERATING, DO NOT STAND IN A DIRECT LINE WITH THE FAN. DO NOT PUT YOUR HANDS NEAR THE PULLEYS, BELTS OR FAN. DO NOT WEAR LOOSE CLOTHING.** **NOTE: The conditions that set the DTC are not present at this time. The following list may help in identifying the intermittent condition.** With the engine running at normal operating temperature, monitor the DRBIII® parameters related to the DTC while wiggling the wiring harness. Look for parameter values to change and/or a DTC to set. Review the DRBIII® Freeze Frame information. If possible, try to duplicate the conditions under which the DTC was set. Refer to any Technical Service Bulletins (TSB) that may apply. Visually inspect the related wiring harness. Look for any chafed, pierced, pinched, or partially broken wires. Visually inspect the related wiring harness connectors. Look for broken, bent, pushed out, or corroded terminals. Were any of the above conditions present? Yes → Repair as necessary Perform POWERTRAIN VERIFICATION TEST VER - 5. No → Test Complete.	All
6	Turn the ignition off. Disconnect the CKP Sensor harness connector. Turn the ignition on. Measure the voltage of the 8 Volt Supply circuit in the CKP Sensor harness connector. Is the voltage between 7.5 and 9.1 volts? Yes → Go To 7 No → Go To 15	All
7	Turn the ignition off. Disconnect the CKP Sensor harness connector. Turn the ignition on. Measure the voltage of the CKP Sensor Signal circuit in the CKP Sensor harness connector. Is the voltage between 4.5 and 5.0 volts? Yes → Go To 8 No → Go To 10	All
8	Turn the ignition off. Disconnect the CKP Sensor harness connector. Disconnect the PCM harness connector. Measure the resistance of the Sensor Ground circuit between the CKP Sensor harness connector and the PCM harness connector. Is the resistance below 5.0 ohms? Yes → Go To 9 No → Repair the Sensor Ground circuit for an open. Perform POWERTRAIN VERIFICATION TEST VER - 5.	All
9	**NOTE: Inspect the slots on the flywheel for damage. If a problem is found repair as necessary.** If there are no possible causes remaining, view repair. Repair Replace the Crankshaft Position Sensor. Perform POWERTRAIN VERIFICATION TEST VER - 5.	All

P0320-NO CRANK REFERENCE SIGNAL AT PCM — Continued

TEST	ACTION	APPLICABILITY
10	Turn the ignition off. Disconnect the CKP Sensor harness connector. Disconnect the PCM harness connector. Measure the resistance of the CKP Sensor Signal circuit in the CKP Sensor harness connector to ground. Is the resistance below 5.0 ohms? Yes → Repair the CKP Sensor Signal circuit for a short to ground. Perform POWERTRAIN VERIFICATION TEST VER - 5. No → Go To 11	All
11	Turn the ignition off. Disconnect the CKP Sensor harness connector. Disconnect the PCM harness connector. Measure the resistance of the CKP Sensor Signal circuit between the CKP Sensor harness connector and the PCM harness connector. Is the resistance below 5.0 ohms? Yes → Go To 12 No → Repair the CKP Sensor Signal circuit for an open. Perform POWERTRAIN VERIFICATION TEST VER - 5.	All
12	Turn the ignition off. Disconnect the CKP Sensor harness connector. Turn the ignition on. Measure the voltage of the CKP Sensor Signal circuit in the CKP Sensor harness connector. Is the voltage above 5.0 volts? Yes → Repair the CKP Sensor Signal circuit for a short to battery voltage. Perform POWERTRAIN VERIFICATION TEST VER - 5. No → Go To 13	All
13	Turn the ignition off. Disconnect the CKP Sensor harness connector. Disconnect the PCM harness connector. Measure the resistance between the CKP Sensor Signal circuit and the 8 Volt Supply circuit in the CKP Sensor harness connector. Is the resistance below 5.0 ohms? Yes → Repair the CKP Sensor Signal circuit shorted to the 8 Volt Supply circuit. Perform POWERTRAIN VERIFICATION TEST VER - 5. No → Go To 14	All
14	If there are no possible causes remaining, view repair. Repair Replace and program the Powertrain Control Module in accordance with the Service Information. Perform POWERTRAIN VERIFICATION TEST VER - 5.	All

P0320-NO CRANK REFERENCE SIGNAL AT PCM — Continued

TEST	ACTION	APPLICABILITY
15	Turn the ignition off. Disconnect the CKP Sensor harness connector. Disconnect the PCM harness connector. Measure the resistance of the 8 Volt Supply circuit in the CKP Sensor harness connector to ground. Is the resistance below 100 ohms? Yes → Repair the 8 Volt Supply circuit for a short to ground. Perform POWERTRAIN VERIFICATION TEST VER - 5. No → Go To 16	All
16	Turn the ignition off. Disconnect the CKP Sensor harness connector. Disconnect the PCM harness connector. Measure the resistance of the 8 Volt Supply circuit between the CKP Sensor harness connector and the PCM harness connector. Is the resistance below 5.0 ohms? Yes → Go To 17 No → Repair the 8 Volt Supply circuit for an open. Perform POWERTRAIN VERIFICATION TEST VER - 5.	All
17	Turn the ignition off. Disconnect the CKP Sensor harness connector. Turn the ignition on. Measure the voltage of the 8 Volt Supply circuit in the CKP Sensor harness connector. Is the voltage above 9.1 volts? Yes → Repair the 8 Volt Supply circuit for a short to battery voltage. Perform POWERTRAIN VERIFICATION TEST VER - 5. No → Go To 18	All
18	If there are no possible causes remaining, view repair. Repair Replace and program the Powertrain Control Module in accordance with the Service Information. Perform POWERTRAIN VERIFICATION TEST VER - 5.	All

Symptom:

P0325-KNOCK SENSOR #1 CIRCUIT

When Monitored and Set Condition:

P0325-KNOCK SENSOR #1 CIRCUIT

When Monitored: With the ignition on and the engine running.

Set Condition: The Knock Sensor circuit voltage falls below a minimum value at idle or deceleration. The minimum value is from a look-up table internal to the PCM and is based on engine rpm. DTC also sets if sensor output goes above 5.0 volts.

POSSIBLE CAUSES
INTERMITTENT CONDITION
KNOCK SENSOR SIGNAL CIRCUIT SHORTED TO VOLTAGE
KNOCK SENSOR SIGNAL CIRCUIT SHORTED TO GROUND
KNOCK SENSOR SIGNAL CIRCUIT OPEN
KNOCK SENSOR SIGNAL CIRCUIT SHORTED TO KNOCK SENSOR RETURN CIRCUIT
KNOCK SENSOR RETURN CIRCUIT OPEN
KNOCK SENSOR

TEST	ACTION	APPLICABILITY
1	**NOTE: Record the Freeze Frame Information that set along with the DTC.** Turn the ignition on. With the DRBIII®, read DTC's. Is the Good Trip displayed and equal to zero? Yes → Go To 2 No → Go To 8	All
2	Turn the ignition off. Disconnect the Knock Sensor harness connector. Measure the voltage of the Knock Sensor Signal circuit in the Knock Sensor harness connector. Is the voltage above 2.0 volts? Yes → Repair the Knock Sensor Signal circuit for a short to voltage. Perform POWERTRAIN VERIFICATION TEST VER - 5. No → Go To 3	All

P0325-KNOCK SENSOR #1 CIRCUIT — Continued

TEST	ACTION	APPLICABILITY
3	Turn the ignition off. Disconnect the Knock Sensor harness connector. Disconnect the PCM harness connector. Measure the Knock Sensor Signal circuit in the Knock Sensor harness connector to ground. Is the resistance below 100 ohms? Yes → Repair the Knock Sensor Signal circuit for a short to ground. Perform POWERTRAIN VERIFICATION TEST VER - 5. No → Go To 4	All
4	Turn the ignition off. Disconnect the Knock Sensor harness connector. Disconnect the PCM harness connector. Measure the resistance of the Knock Sensor Signal circuit between the Knock Sensor harness connector and the PCM harness connector. Is the resistance below 5.0 ohms? Yes → Go To 5 No → Repair the Knock Sensor Signal circuit for an open. Perform POWERTRAIN VERIFICATION TEST VER - 5.	All
5	Turn the ignition off. Disconnect the Knock Sensor harness connector. Measure the resistance between the Knock Sensor Signal circuit and the Knock Sensor Return circuit in the Knock Sensor harness connector. Is the resistance below 100 ohms? Yes → Repair the Knock Sensor Signal circuit for a short to Knock Sensor Return circuit. Perform POWERTRAIN VERIFICATION TEST VER - 5. No → Go To 6	All
6	Turn the ignition off. Disconnect the Knock Sensor harness connector. Disconnect the PCM harness connector. Measure the resistance of the Knock Sensor Return circuit between the Knock Sensor harness connector and the PCM harness connector. Is the resistance below 5.0 ohms? Yes → Go To 7 No → Repair the Knock Sensor Signal circuit for an open. Perform POWERTRAIN VERIFICATION TEST VER - 5.	All
7	Turn the ignition off. Replace the Knock Sensor. Turn the ignition on. With the DRBIII®, erase DTC. Attempt to operate the vehicle using the information noted in the Freeze Frame. With the DRBIII®, read DTC's. Does the DRBIII® display the DTC that was previously erased? Yes → Replace and program the Powertrain Control Module in accordance with the Service Information. Perform POWERTRAIN VERIFICATION TEST VER - 5. No → Test Complete.	All

P0325-KNOCK SENSOR #1 CIRCUIT — Continued

TEST	ACTION	APPLICABILITY
8	**WARNING: WHEN THE ENGINE IS OPERATING, DO NOT STAND IN A DIRECT LINE WITH THE FAN. DO NOT PUT YOUR HANDS NEAR THE PULLEYS, BELTS OR FAN. DO NOT WEAR LOOSE CLOTHING.** **NOTE: The conditions that set the DTC are not present at this time. The following list may help in identifying the intermittent condition.** With the engine running at normal operating temperature, monitor the DRBIII® parameters related to the DTC while wiggling the wiring harness. Look for parameter values to change and/or a DTC to set. Review the DRBIII® Freeze Frame information. If possible, try to duplicate the conditions under which the DTC was set. Refer to any Technical Service Bulletins (TSB) that may apply. Visually inspect the related wiring harness. Look for any chafed, pierced, pinched, or partially broken wires. Visually inspect the related wiring harness connectors. Look for broken, bent, pushed out, or corroded terminals. Were any of the above conditions present? Yes → Repair as necessary Perform POWERTRAIN VERIFICATION TEST VER - 5. No → Test Complete.	All

Symptom:

P0340-NO CAM SIGNAL AT PCM

When Monitored and Set Condition:

P0340-NO CAM SIGNAL AT PCM

When Monitored: Engine cranking/running. Battery voltage greater than 10 volts.

Set Condition: At least 5 seconds or 2.5 engine revolutions have elapsed with crankshaft position sensor signals present but no camshaft position sensor signal.

POSSIBLE CAUSES
INTERMITTENT CRANKSHAFT POSITION SENSOR SIGNAL
INTERMITTENT CAMSHAFT POSITION SENSOR SIGNAL
INTERMITTENT WIRING
INTERMITTENT CONDITION
8 VOLT SUPPLY CIRCUIT SHORTED TO GROUND
8 VOLT SUPPLY CIRCUIT OPEN
8 VOLT SUPPLY CIRCUIT SHORTED TO VOLTAGE
CAMSHAFT POSITION SENSOR SIGNAL CIRCUIT SHORTED GROUND
CAMSHAFT POSITION SENSOR SIGNAL CIRCUIT OPEN
CAMSHAFT POSITION SENSOR SIGNAL CIRCUIT SHORTED TO VOLTAGE
CAMSHAFT POSITION SENSOR SIGNAL SHORTED TO 8 VOLT SUPPLY CIRCUIT
SENSOR GROUND CIRCUIT OPEN
PCM - 8 VOLT SUPPLY
PCM - CAMSHAFT POSITION SENSOR SIGNAL
CAMSHAFT POSITION SENSOR

TEST	ACTION	APPLICABILITY
1	With the DRBIII®, read the Current Camshaft Position (CMP) Sensor State while cranking the engine. Does the DRBIII® display Current CMP State Present while cranking the engine. Yes → Go To 2 No → Go To 6	All

P0340-NO CAM SIGNAL AT PCM — Continued

TEST	ACTION	APPLICABILITY
2	Turn the ignition off. With the DRBIII® lab scope probe and the Miller special tool #6801, back probe the Crankshaft Position (CKP) Sensor signal circuit in the PCM harness connector. **WARNING: WHEN THE ENGINE IS OPERATING, DO NOT STAND IN A DIRECT LINE WITH THE FAN. DO NOT PUT YOUR HANDS NEAR THE PULLEYS, BELTS OR FAN. DO NOT WEAR LOOSE CLOTHING.** Turn the ignition on. (do not start or crank the engine) Observe the lab scope screen. Look for any pulses generated by the Crankshaft Position (CKP) Sensor. Did the CKP Sensor generate any pulses? Yes → Replace the Crankshaft Position Sensor. Perform POWERTRAIN VERIFICATION TEST VER - 5. No → Go To 3	All
3	Turn the ignition off. With the DRBIII® lab scope probe and the Miller special tool #6801, backprobe the CMP Signal circuit in the PCM harness connector. **WARNING: WHEN THE ENGINE IS OPERATING, DO NOT STAND IN A DIRECT LINE WITH THE FAN. DO NOT PUT YOUR HANDS NEAR THE PULLEYS, BELTS OR FAN. DO NOT WEAR LOOSE CLOTHING.** Turn the ignition on. (do not start or crank the engine) Observe the lab scope screen. Look for any pulses generated by the CMP Sensor. Did the CMP Sensor generate any pulses? Yes → Replace the Camshaft Position Sensor. Perform POWERTRAIN VERIFICATION TEST VER - 5. No → Go To 4	All
4	Turn the ignition off. With the DRBIII® lab scope probe and the Miller special tool #6801, backprobe the CMP Signal circuit in the PCM harness connector. **WARNING: WHEN THE ENGINE IS OPERATING, DO NOT STAND IN A DIRECT LINE WITH THE FAN. DO NOT PUT YOUR HANDS NEAR THE PULLEYS, BELTS OR FAN. DO NOT WEAR LOOSE CLOTHING.** Start the engine. Observe the lab scope screen while wiggling the wiring harness and connectors. Were there any irregularities in the lab scope pattern? Yes → Check the harness connectors carefully. If OK, replace the Camshaft Position Sensor. Perform POWERTRAIN VERIFICATION TEST VER - 5. No → Go To 5	All

P0340-NO CAM SIGNAL AT PCM — Continued

TEST	ACTION	APPLICABILITY
5	**WARNING: WHEN THE ENGINE IS OPERATING, DO NOT STAND IN A DIRECT LINE WITH THE FAN. DO NOT PUT YOUR HANDS NEAR THE PULLEYS, BELTS OR FAN. DO NOT WEAR LOOSE CLOTHING.** **NOTE: The conditions that set the DTC are not present at this time. The following list may help in identifying the intermittent condition.** With the engine running at normal operating temperature, monitor the DRBIII® parameters related to the DTC while wiggling the wiring harness. Look for parameter values to change and/or a DTC to set. Review the DRBIII® Freeze Frame information. If possible, try to duplicate the conditions under which the DTC was set. Refer to any Technical Service Bulletins (TSB) that may apply. Visually inspect the related wiring harness. Look for any chafed, pierced, pinched, or partially broken wires. Visually inspect the related wiring harness connectors. Look for broken, bent, pushed out, or corroded terminals. Were any of the above conditions present? Yes → Repair as necessary Perform POWERTRAIN VERIFICATION TEST VER - 5. No → Test Complete.	All
6	Turn the ignition off. Disconnect the CMP Sensor harness connector. Turn the ignition on. Measure the voltage of the 8 Volt Supply circuit in the CMP Sensor harness connector. Is the voltage between 7.5 and 9.1 volts? Yes → Go To 7 No → Go To 15	All
7	Turn the ignition off. Disconnect the CMP Sensor harness connector. Turn the ignition on. Measure the voltage of the CMP Sensor Signal circuit in the CMP Sensor harness connector. Is the voltage between 4.5 and 5.0 volts? Yes → Go To 8 No → Go To 10	All
8	Turn the ignition off. Disconnect the CMP Sensor harness connector. Disconnect the PCM harness connector. Measure the resistance of the Sensor Ground circuit between the CMP Sensor harness connector and the PCM harness connector. Is the resistance below 5.0 ohms? Yes → Go To 9 No → Repair the Sensor Ground circuit for an open. Perform POWERTRAIN VERIFICATION TEST VER - 5.	All

P0340-NO CAM SIGNAL AT PCM — Continued

TEST	ACTION	APPLICABILITY
9	**NOTE: Inspect the Camshaft sprocket or Magnet Target for damage per the Service Information. If a problem is found repair as necessary.** If there are no possible causes remaining, view repair. Repair Replace the Camshaft Position Sensor. Perform POWERTRAIN VERIFICATION TEST VER - 5.	All
10	Turn the ignition off. Disconnect the CMP Sensor harness connector. Disconnect the PCM harness connector. Measure the resistance of the CMP Sensor Signal circuit in the CMP Sensor harness connector to ground. Is the resistance below 100 ohms? Yes → Repair the CMP Sensor Signal circuit for a short to ground. Perform POWERTRAIN VERIFICATION TEST VER - 5. No → Go To 11	All
11	Turn the ignition off. Disconnect the CMP Sensor harness connector. Disconnect the PCM harness connector. Measure the resistance of the CMP Sensor Signal circuit between the CMP Sensor harness connector and the PCM harness connector. Is the resistance below 5.0 ohms? Yes → Go To 12 No → Repair the CMP Sensor Signal circuit for an open. Perform POWERTRAIN VERIFICATION TEST VER - 5.	All
12	Turn the ignition off. Disconnect the CMP Sensor harness connector. Turn the ignition on. Measure the voltage of the CMP Sensor Signal circuit in the CMP Sensor harness connector. Is the voltage above 5.0 volts? Yes → Repair the CMP Sensor Signal circuit for a short to battery voltage. Perform POWERTRAIN VERIFICATION TEST VER - 5. No → Go To 13	All
13	Turn the ignition off. Disconnect the CMP Sensor harness connector. Measure the resistance between the CMP Sensor Signal circuit and the 8 Volt Supply circuit in the CMP Sensor harness connector. Is the resistance below 5.0 ohms? Yes → Repair the CMP Sensor Signal circuit shorted to the 8 Volt Supply circuit. Perform POWERTRAIN VERIFICATION TEST VER - 5. No → Go To 14	All

P0340-NO CAM SIGNAL AT PCM — Continued

TEST	ACTION	APPLICABILITY
14	If there are no possible causes remaining, view repair. Repair Replace and program the Powertrain Control Module in accordance with the Service Information. Perform POWERTRAIN VERIFICATION TEST VER - 5.	All
15	Turn the ignition off. Disconnect the CMP Sensor harness connector. Disconnect the PCM harness connector. Measure the resistance of the 8 Volt Supply circuit in the CMP Sensor harness connector to ground. Is the resistance below 100 ohms? Yes → Repair the 8 Volt Supply circuit for a short to ground. Perform POWERTRAIN VERIFICATION TEST VER - 5. No → Go To 16	All
16	Turn the ignition off. Disconnect the CMP Sensor harness connector. Disconnect the PCM harness connector. Measure the resistance of the 8 Volt Supply circuit between the CMP Sensor harness connector and the PCM harness connector. Is the resistance below 5.0 ohms? Yes → Go To 17 No → Repair the 8 Volt Supply circuit for an open. Perform POWERTRAIN VERIFICATION TEST VER - 5.	All
17	Turn the ignition off. Disconnect the CMP Sensor harness connector. Turn the ignition on. Measure the voltage of the 8 Volt Supply circuit in the CMP Sensor harness connector. Is the voltage above 9.1 volts Yes → Repair the 8 Volt Supply circuit for a short to battery voltage. Perform POWERTRAIN VERIFICATION TEST VER - 5. No → Go To 18	All
18	If there are no possible causes remaining, view repair. Repair Replace and program the Powertrain Control Module in accordance with the Service Information. Perform POWERTRAIN VERIFICATION TEST VER - 5.	All

Symptom List:

P0351-IGNITION COIL #1 PRIMARY CIRCUIT
P0352-IGNITION COIL #2 PRIMARY CIRCUIT
P0353-IGNITION COIL #3 PRIMARY CIRCUIT

Test Note: All symptoms listed above are diagnosed using the same tests. The title for the tests will be P0351-IGNITION COIL #1 PRIMARY CIRCUIT.

When Monitored and Set Condition:

P0351-IGNITION COIL #1 PRIMARY CIRCUIT

When Monitored: With battery voltage greater than 8 volts during engine cranking or greater than 13 volts with engine running. Engine RPM less than 3000. No coil in dwell during test.

Set Condition: Peak current is not achieved with battery based dwell plus 1.5 msec of diagnostic offset. It takes less than 3 seconds during cranking or up to 6 seconds while running to set.

P0352-IGNITION COIL #2 PRIMARY CIRCUIT

When Monitored: With battery voltage greater than 8 volts during engine cranking or greater than 13 volts with engine running. Engine RPM less than 3000. No coil in dwell during test.

Set Condition: Peak current is not achieved with battery based dwell plus 1.5 msec of diagnostic offset. It takes less than 3 seconds during cranking or up to 6 seconds while running to set.

P0353-IGNITION COIL #3 PRIMARY CIRCUIT

When Monitored: With battery voltage greater than 8 volts during engine cranking or greater than 13 volts with engine running. Engine RPM less than 3000. No coil in dwell during test.

Set Condition: Peak current is not achieved with battery based dwell plus 1.5 msec of diagnostic offset. It takes less than 3 seconds during cranking or up to 6 seconds while running to set.

POSSIBLE CAUSES
IGNITION COIL
INTERMITTENT CONDITION
ASD RELAY OUTPUT CIRCUIT
IGNITION COIL DRIVER CIRCUIT OPEN
IGNITION COIL DRIVER CIRCUIT SHORTED TO GROUND
PCM

P0351-IGNITION COIL #1 PRIMARY CIRCUIT — Continued

TEST	ACTION	APPLICABILITY
1	**NOTE: Record the Freeze Frame Information that set along with the DTC.** Turn the ignition on. With the DRBIII®, read DTC's. Is the Good Trip displayed and equal to zero? Yes → Go To 2 No → Go To 7	All
2	Turn the ignition off. Disconnect the Ignition Coil harness connector. Turn the ignition on. With the DRBIII®, actuate the ASD Relay. Using a 12 volt test light connected to ground, probe the ASD Relay Output circuit in the Ignition Coil harness connector. Does the test light illuminate brightly? Yes → Go To 3 No → Repair the ASD Relay Output circuit. Perform POWERTRAIN VERIFICATION TEST VER - 5.	All
3	Turn the ignition off. Disconnect the Ignition Coil harness connector. Using a 12-volt test light connected to 12-volts, probe the Ignition Coil Driver circuit. Crank the engine for 5 second while observing the test light. Does the test light blink/flicker? Yes → Replace the Ignition Coil. Perform POWERTRAIN VERIFICATION TEST VER - 5. No → Go To 4	All
4	Turn the ignition off. Disconnect the Ignition Coil harness connector. Disconnect the PCM harness connector. Measure the resistance of the Ignition Coil driver circuit between the Ignition Coil harness connector and the PCM harness connector. Is the resistance below 5.0 ohms? Yes → Go To 5 No → Repair the Ignition Coil driver circuit for an open. Perform POWERTRAIN VERIFICATION TEST VER - 5.	All
5	Turn the ignition off. Disconnect the Ignition Coil harness connector. Disconnect the PCM harness connector. Measure the resistance between ground and the Ignition Coil driver circuit in the Ignition Coil harness connector. Is the resistance below 100k ohms? Yes → Repair the Ignition Coil driver circuit for a short to ground. Perform POWERTRAIN VERIFICATION TEST VER - 5. No → Go To 6	All

P0351-IGNITION COIL #1 PRIMARY CIRCUIT — Continued

TEST	ACTION	APPLICABILITY
6	If there are no possible causes remaining, view repair. Repair Replace and program the Powertrain Control Module in accordance with the Service Information. Perform POWERTRAIN VERIFICATION TEST VER - 5.	All
7	**WARNING: WHEN THE ENGINE IS OPERATING, DO NOT STAND IN A DIRECT LINE WITH THE FAN. DO NOT PUT YOUR HANDS NEAR THE PULLEYS, BELTS OR FAN. DO NOT WEAR LOOSE CLOTHING.** **NOTE: The conditions that set the DTC are not present at this time. The following list may help in identifying the intermittent condition.** With the engine running at normal operating temperature, monitor the DRBIII® parameters related to the DTC while wiggling the wiring harness. Look for parameter values to change and/or a DTC to set. Review the DRBIII® Freeze Frame information. If possible, try to duplicate the conditions under which the DTC was set. Refer to any Technical Service Bulletins (TSB) that may apply. Visually inspect the related wiring harness. Look for any chafed, pierced, pinched, or partially broken wires. Visually inspect the related wiring harness connectors. Look for broken, bent, pushed out, or corroded terminals. Were any of the above conditions present? Yes → Repair as necessary Perform POWERTRAIN VERIFICATION TEST VER - 5. No → Test Complete.	All

Symptom:

P0401 - EGR SYSTEM FAILURE

When Monitored and Set Condition:

P0401 - EGR SYSTEM FAILURE

When Monitored: With the ignition on and the battery voltage greater than 10.4 volts.

Set Condition: Conditions are met, the EGR is turned off and on momentarily. The oxygen sensor signal is monitor for changes in its output signal during this test. If no significant change or too much change is seen, a flag is set.

POSSIBLE CAUSES
INTERMITTENT CONDITION
EGR SOLENOID VACUUM SUPPLY
EGR VALVE OPERATION (CLOSED)
EGR VALVE OPERATION (OPEN)
FUSED IGNITION SWITCH OUTPUT CIRCUIT OPEN
EGR SOLENOID CONTROL CIRCUIT SHORTED TO VOLTAGE
EGR SOLENOID CONTROL CIRCUIT OPEN
EGR SOLENOID (CLOSED)
EGR SOLENOID CONTROL CIRCUIT SHORT TO GND
EGR SOLENOID (OPEN)
PCM
PCM (CLOSED)

TEST	ACTION	APPLICABILITY
1	Turn the ignition on. With the DRBIII®, read DTC's. Is the Good Trip displayed and equal to zero? Yes → Go To 2 No → Go To 12	All
2	Start the engine. Allow the engine to reach operating temperature. Does the engine run rough or stall at idle? Yes → Go To 3 No → Go To 6	All

P0401 - EGR SYSTEM FAILURE — Continued

TEST	ACTION	APPLICABILITY
3	Disconnect the vacuum hose from the EGR Valve. Start the engine and allow it to idle. Does the engine run rough or stall at idle? Yes → Remove the EGR Valve and inspect the valve for an obstruction that would keep the valve open. If OK, replace the EGR Valve. Perform POWERTRAIN VERIFICATION TEST VER - 5. No → Go To 4	All
4	Turn the ignition off. Disconnect the PCM harness connector. Disconnect the EGR Solenoid harness connector. Measure the resistance of the EGR Solenoid Control circuit in the EGR Solenoid harness connector to ground. Is the resistance below 5.0 ohms? Yes → Repair the EGR Solenoid Control circuirt for a short to ground. Perform POWERTRAIN VERIFICATION TEST VER - 5. No → Go To 5	All
5	Turn the ignition off. Disconnect the EGR Solenoid harness connector. Using a 12-volt test light connected to 12-volts, probe the EGR Solenoid Control circuit. Turn the ignition on. With the DRBIII®, actuate the EGR Solenoid. Observe the test light. Does the test light flash on and off? Yes → Replace the EGR Solenoid. Perform POWERTRAIN VERIFICATION TEST VER - 5. No → Replace and program the Powertrain Control Module in accordance with the Service Information. Perform POWERTRAIN VERIFICATION TEST VER - 5.	All
6	Turn the ignition off. Disconnect the EGR Solenoid vacuum supply at the EGR Solenoid. Connect a vacuum gauge to the EGR Solenoid vacuum supply. Start the engine. Observe the vacuum gauge. Does the vacuum gauge read above 10″? Yes → Go To 7 No → Repair the EGR Solenoid vacuum supply. Perform POWERTRAIN VERIFICATION TEST VER - 5.	All
7	Disconnect the vacuum hose from the EGR Valve. Inspect the vacuum hose for any obstructions. Connect a Vacuum Pump to the EGR Valve. Using the Vacuum Pump, apply vacuum to the EGR Valve. Does the engine run rough or stall at idle? Yes → Go To 8 No → Remove the EGR Valve and inspect the valve for an obstruction that would keep the valve form opening. If OK, replace the EGR Valve. Perform POWERTRAIN VERIFICATION TEST VER - 5.	All

P0401 - EGR SYSTEM FAILURE — Continued

TEST	ACTION	APPLICABILITY
8	Turn the igntion off. Disconnect the EGR Solenoid harness connector. Turn the ignition on. Using a 12 volt Test Light connected to ground, probe the Fused Ignition Switch Output circuit in the EGR Solenoid harness connector. Does the 12 volt test light illuminate? Yes → Go To 9 No → Repair the Fused Ignition Switch Output circuit for an open. Perform POWERTRAIN VERIFICATION TEST VER - 5.	All
9	Turn the ignition off. Disconnect the EGR Solenoid harness connector. Turn the ignition on. Measure the voltage of the EGR Solenoid Control circuit in the EGR Solenoid connector. Is the voltage above 1.0 volts? Yes → Repair the EGR Solenoid Control circuit for a short to voltage. Perform POWERTRAIN VERIFICATION TEST VER - 5. No → Go To 10	All
10	Turn the ignition off. Disconnect the PCM harness connector. Disconnect the EGR Solenoid harness connector. Measure the resistance of the EGR Solenoid Control circuit between the PCM harness connector and the EGR Solenoid harness connector. Is the resistance below 5.0 ohms? Yes → Go To 11 No → Repair the EGR solenoid control circuit for an open. Perform POWERTRAIN VERIFICATION TEST VER - 5.	All
11	Turn the ignition off. Disconnect the EGR Solenoid harness connector. Using a 12-volt test light connected to 12-volts, probe the EGR Solenoid Control circuit in the EGR Solenoid harness connector. Turn the ignition on. With the DRBIII®, actuate the EGR Solenoid. Observe the test light. Does the test light flash on and off. Yes → Inspect the EGR Solenoid Back Pressure hose and tube for obstructions or damage. If OK, replace the EGR Solenoid. Perform POWERTRAIN VERIFICATION TEST VER - 5. No → Replace and program the Powertrain Control Module in accordance with the Service Information. Perform POWERTRAIN VERIFICATION TEST VER - 5.	All

P0401 - EGR SYSTEM FAILURE — Continued

TEST	ACTION	APPLICABILITY
12	**NOTE: Inspect the exhaust system for leaks.** **WARNING: KEEP CLEAR OF THE ENGINE'S MOVING PARTS.** **NOTE: The conditions that set the DTC are not present at this time. The following list may help in identifying the intermittent condition.** With the engine running at normal operating temperature, monitor the DRBIII® parameters related to the DTC while wiggling the wiring harness. Look for parameter values to change and/or a DTC to set. Review the DRBIII® Freeze Frame information. If possible, try to duplicate the conditions under which the DTC was set. Refer to any Technical Service Bulletins (TSB) that may apply. Visually inspect the related wiring harness. Look for any chafed, pierced, pinched, or partially broken wires. Visually inspect the related wiring harness connectors. Look for broken, bent, pushed out, or corroded terminals. Were any of the above conditions present? Yes → Repair as necessary Perform POWERTRAIN VERIFICATION TEST VER - 5. No → Test Complete.	All

Symptom:

P0403 - EGR SOLENOID CIRCUIT

When Monitored and Set Condition:

P0403 - EGR SOLENOID CIRCUIT

When Monitored: Engine running. Battery voltage greater than 10 volts.

Set Condition: The EGR solenoid control circuit is not in the expected state when requested to operate by the PCM.

POSSIBLE CAUSES
INTERMITTENT CONDITION
EGR SOLENOID
FUSED IGNITION SWITCH OUTPUT CIRCUIT OPEN
EGR SOLENOID CONTROL CIRCUIT SHORTED TO VOLTAGE
EGR SOLENOID CONTROL CIRCUIT SHORT TO GND
EGR SOLENOID CONTROL CIRCUIT OPEN
PCM

TEST	ACTION	APPLICABILITY
1	Turn the ignition on. With the DRBIII®, read DTC's. Is the Good Trip displayed and equal to zero? Yes → Go To 2 No → Go To 8	All
2	Turn the ignition off. Disconnect the EGR Solenoid harness connector. Turn the ignition on. Turn all accessories off. Using a 12 volt Test Light connected to the Fused Ignition Switch Output circuit, probe the EGR Solenoid Control circuit. With the DRBIII®, actuate the EGR solenoid. Does the 12 volt test light flash on and off? Yes → Inspect the EGR Valve Back Pressure hose and tube for obstructions or damage. If OK, replace the EGR Solenoid. Perform POWERTRAIN VERIFICATION TEST VER - 5. No → Go To 3	All

P0403 - EGR SOLENOID CIRCUIT — Continued

TEST	ACTION	APPLICABILITY
3	Turn the igntion off. Disconnect the EGR Solenoid harness connector. Turn the ignition on. Using a 12 volt Test Light connected to ground, probe the Fused Ignition Switch Output circuit in the EGR Solenoid harness connector. Does the 12 volt test light illuminate? Yes → Go To 4 No → Repair the Fused Ignition Switch Output circuit for an open. Perform POWERTRAIN VERIFICATION TEST VER - 5.	All
4	Turn the ignition off. Disconnect the EGR Solenoid harness connector. Turn the ignition on. Measure the voltage on the EGR Solenoid Control circuit in the EGR Solenoid connector. Is the voltage above 1.0 volt? Yes → Repair the EGR Solenoid Control circuit for a short to voltage. Perform POWERTRAIN VERIFICATION TEST VER - 5. No → Go To 5	All
5	Turn the ignition off. Disconnect the PCM harness connector. Disconnect the EGR Solenoid harness connector. Measure the resistance of the EGR Solenoid Control circuit in the EGR Solenoid harness connector to ground. Is the resistance below 5.0 ohms? Yes → Repair the EGR Solenoid Control circuirt for a short to ground. Perform POWERTRAIN VERIFICATION TEST VER - 5. No → Go To 6	All
6	Turn the ignition off. Disconnect the PCM harness connector. Disconnect the EGR Solenoid harness connector. Measure the resistance of the EGR Solenoid Control circuit between the PCM harness connector and the EGR Solenoid harness connector. Is the resistance below 5.0 ohms? Yes → Go To 7 No → Repair the EGR Solenoid Control circuit for an open. Perform POWERTRAIN VERIFICATION TEST VER - 5.	All
7	If there are no possible causes remaining, view repair. Repair Replace and program the Powertrain Control Module in accordance with the Service Information. Perform POWERTRAIN VERIFICATION TEST VER - 5.	All

P0403 - EGR SOLENOID CIRCUIT — Continued

TEST	ACTION	APPLICABILITY
8	**NOTE: Inspect the exhaust system for leaks.** **WARNING: WHEN THE ENGINE IS OPERATING, DO NOT STAND IN A DIRECT LINE WITH THE FAN. DO NOT PUT YOUR HANDS NEAR THE PULLEYS, BELTS OR FAN. DO NOT WEAR LOOSE CLOTHING.** **NOTE: The conditions that set the DTC are not present at this time. The following list may help in identifying the intermittent condition.** With the engine running at normal operating temperature, monitor the DRBIII® parameters related to the DTC while wiggling the wiring harness. Look for parameter values to change and/or a DTC to set. Review the DRBIII® Freeze Frame information. If possible, try to duplicate the conditions under which the DTC was set. Refer to any Technical Service Bulletins (TSB) that may apply. Visually inspect the related wiring harness. Look for any chafed, pierced, pinched, or partially broken wires. Visually inspect the related wiring harness connectors. Look for broken, bent, pushed out, or corroded terminals. Were any of the above conditions present? Yes → Repair as necessary Perform POWERTRAIN VERIFICATION TEST VER - 5. No → Test Complete.	All

Symptom:
P0420-1/1 CATALYTIC CONVERTER EFFICIENCY

When Monitored and Set Condition:

P0420-1/1 CATALYTIC CONVERTER EFFICIENCY

When Monitored: After engine warm up to 70°C (158°F), 180 seconds of open throttle operation, at a speed greater than 18 mph and less than 55 mph, with the engine at 1200-1700 rpm and MAP vacuum between 15.0 and 21.0 inches of mercury (Hg).

Set Condition: As catalyst efficiency deteriorates, the switch rate of the downstream O2 sensor approaches that of the upstream O2 sensor. If at any point during the test the switch ratio reaches a predetermined value a counter is incremented by one.

POSSIBLE CAUSES
INTERMITTENT CONDITION
VISUALLY INSPECT CATALYTIC CONVERTER
EXHAUST LEAK
ENGINE MECHANICAL CONDITION
AGING O2 SENSOR
CATALYTIC CONVERTER

TEST	ACTION	APPLICABILITY
1	**NOTE: If a O2 Sensor DTC(s) set along with the Catalytic Converter Efficiency DTC diagnose the O2 Sensor DTC(s) before continuing.** **NOTE: Check for contaminates that may have damaged the O2 Sensor and Catalytic Converter: contaminated fuel, unapproved silicone, oil and coolant, repair necessary.** Turn the ignition on. With the DRBIII®, read DTC's. Is the Good Trip displayed and equal to zero? Yes → Go To 2 No → Go To 7	All
2	Inspect the Catalytic Converter for the following damage. Damage Catalytic Converter, dent and holes. Severe discoloration caused by overheating the Catalytic Converter. Catalytic Converter broke internally. Leaking Catalytic Converter. Were any problems found? Yes → Replace the Catalytic Converter. Repair the condition that may have caused the failure. Perform POWERTRAIN VERIFICATION TEST VER - 5. No → Go To 3	All

P0420-1/1 CATALYTIC CONVERTER EFFICIENCY — Continued

TEST	ACTION	APPLICABILITY
3	Start the engine. Inspect the exhaust for leak between the engine and the O2 sensor. Inspect the exhaust for leaks between the engine and the appropriate rear O2 Sensor. Are there any exhaust leaks? Yes → Repair or replace the leaking exhaust parts as necessary. Perform POWERTRAIN VERIFICATION TEST VER - 5. No → Go To 4	All
4	Check the exhaust for excessive smoke caused by an internal problem in the engine. Is a engine mechanical condition present? Yes → Repair the engine mechanical condition as necessary. Perform POWERTRAIN VERIFICATION TEST VER - 5. No → Go To 5	All
5	A new rear O2 Sensor along with an aging front O2 Sensor may cause the DTC to set. Review the vehicles repair history. Has the rear O2 Sensor been replace without replacing the front O2 Sensor? Yes → Replace the Front O2 Sensor as necessary. Perform POWERTRAIN VERIFICATION TEST VER - 5. No → Go To 6	All
6	If there are no possible cause remaining, view repair. Repair Replace the Catalytic Converter. Perform POWERTRAIN VERIFICATION TEST VER - 5.	All
7	**WARNING: WHEN THE ENGINE IS OPERATING, DO NOT STAND IN A DIRECT LINE WITH THE FAN. DO NOT PUT YOUR HANDS NEAR THE PULLEYS, BELTS OR FAN. DO NOT WEAR LOOSE CLOTHING.** **NOTE: Check for contaminates that may have damaged the O2 Sensor and Catalytic Converter: contaminated fuel, unapproved silicone, oil and coolant, repair necessary.** **NOTE: The conditions that set the DTC are not present at this time. The following list may help in identifying the intermittent condition.** A new rear O2 Sensor along with a aging front O2 Sensor may cause the DTC to set. Review repair history of the vehicle and repair as necessary. With the engine running at normal operating temperature, monitor the DRBIII® parameters related to the DTC while wiggling the wiring harness. Look for parameter values to change and/or a DTC to set. Review the DRBIII® Freeze Frame information. If possible, try to duplicate the conditions under which the DTC was set. Refer to any Technical Service Bulletins (TSB) that may apply. Visually inspect the related wiring harness connectors. Look for broken, bent, pushed out, or corroded terminals. Were any of the above conditions present? Yes → Repair as necessary Perform POWERTRAIN VERIFICATION TEST VER - 5. No → Test Complete.	All

Symptom:

P0441-EVAP PURGE FLOW MONITOR

When Monitored and Set Condition:

P0441-EVAP PURGE FLOW MONITOR

When Monitored: With engine temperature greater than 71°C (160°F), fuel control in closed loop, engine idling for 200 seconds, no low fuel, MAP less than 23.6 inches mercury and barometric altitude less than 8,000 feet.

Set Condition: After having passed the Leak Detection Pump (LDP) test, no air flow through the evaporative system is detected by the evap monitor.

POSSIBLE CAUSES
INTERMITTENT CONDITION
EVAP PURGE SOLENOID LEAKS/STUCK OPEN
EVAP PURGE SOLENOID STUCK CLOSED
EVAP PURGE SOLENOID VACUUM SUPPLY
EVAP PURGE HOSE SOLENOID TO CANISTER
EVAP PURGE HOSE CANISTER TO FUEL TANK
EVAP CANISTER

TEST	ACTION	APPLICABILITY
1	Turn the ignition on. With the DRBIII®, read DTC's. Is the Good Trip Counter displayed and equal to zero? Yes → Go To 2 No → Go To 8	All
2	**NOTE: After disconnecting the Evap Purge Solenoid vacuum connections, inspect the lines and solenoid for any signs of contamination from the EVAP Canister. This may indicate a faulty rollover valve. Replace/repair as necessary.** Turn the ignition off. Disconnect the vacuum hoses at the Evap Purge Solenoid. Using a hand vacuum pump, apply 10 inches of vacuum to the Evap Purge Solenoid vacuum source port on the component side. Does the Evap Purge Solenoid hold vacuum? Yes → Go To 3 No → Replace the Evap Purge Solenoid. Perform POWERTRAIN VERIFICATION TEST VER - 5.	All

P0441-EVAP PURGE FLOW MONITOR — Continued

TEST	ACTION	APPLICABILITY
3	Using a hand vacuum pump, apply 10 inches of vacuum to the Evap Purge Solenoid vacuum source port on the component side. Turn the ignition on. Observe the vacuum gauge. With the DRBIII®, actuate the EVAP Purge Solenoid . Does the vacuum drop when the solenoid is actuated? Yes → Go To 4 No → Replace the Evap Purge Solenoid. Perform POWERTRAIN VERIFICATION TEST VER - 5.	All
4	Turn the ignition off. Carefully inspect the Evap Purge Solenoid vacuum supply hose for proper routing. Check for a pinched or plugged hose from the throttle body to the Purge Solenoid. Inspect the vacuum port at the throttle body for any damage or plugging. Were any problems found? Yes → Repair the vacuum supply hose/tube as necessary. Perform POWERTRAIN VERIFICATION TEST VER - 5. No → Go To 5	All
5	Visually inspect the Evap Purge hose from the Evap Purge Solenoid to the Evap Canister. Look for any physical damage such as a pinched, plugged, ripped or dry rotted hose. Were any problems found? Yes → Repair or replace hose as necessary. Perform POWERTRAIN VERIFICATION TEST VER - 5. No → Go To 6	All
6	Visually inspect the Evap Purge hose from between the Evap Canister and the Fuel Tank. Check for any physical damage such as a pinched, plugged, ripped or dry rotted hose. Were any problems found? Yes → Repair or replace hose as necessary. Perform POWERTRAIN VERIFICATION TEST VER - 5. No → Go To 7	All
7	Visually inspect the Evap Canister for the following. Check for physical damage or signs of fuel that has entered the canister. Check for signs of fuel, this may indicate a bad rollover valve. Were any problems found? Yes → Repair or Replace as necessary. Perform POWERTRAIN VERIFICATION TEST VER - 5. No → Test Complete.	All

P0441-EVAP PURGE FLOW MONITOR — Continued

TEST	ACTION	APPLICABILITY
8	**WARNING: WHEN THE ENGINE IS OPERATING, DO NOT STAND IN A DIRECT LINE WITH THE FAN. DO NOT PUT YOUR HANDS NEAR THE PULLEYS, BELTS OR FAN. DO NOT WEAR LOOSE CLOTHING.** **NOTE: The conditions that set the DTC are not present at this time. The following list may help in identifying the intermittent condition.** Perform a wiggle test of the Evap Purge Solenoid wiring while the circuit is actuated with the DRBIII®. Listen for the solenoid to quit actuating. Also watch for the Good Trip Counter to change to 0. Review the DRBIII® Freeze Frame information. If possible, try to duplicate the conditions under which the DTC was set. Refer to any Technical Service Bulletins (TSB) that may apply. Visually inspect the related wiring harness. Look for any chafed, pierced, pinched, or partially broken wires. Visually inspect the related wiring harness connectors. Look for broken, bent, pushed out, or corroded terminals. Were any of the above conditions present? Yes → Repair as necessary Perform POWERTRAIN VERIFICATION TEST VER - 5. No → Test Complete.	All

Symptom List:

P0442-EVAP LEAK MONITOR .040 LEAK DETECTED
P0455-EVAP LEAK MONITOR LARGE LEAK DETECTED
P0456 - EVAP LEAK MONITOR .020 LEAK DETECTED

Test Note: All symptoms listed above are diagnosed using the same tests. The title for the tests will be P0442-EVAP LEAK MONITOR .040 LEAK DETECTED.

When Monitored and Set Condition:

P0442-EVAP LEAK MONITOR .040 LEAK DETECTED

When Monitored: Immediately after a cold start, with battery/ambient temperature between 4°C (40°F) and 32°C (90°F) and coolant temperature within -12°C (20°F) of battery/ambient.

Set Condition: If there is a leak larger than 0.040″ and smaller than 0.080″ in the evaporative system.

P0455-EVAP LEAK MONITOR LARGE LEAK DETECTED

When Monitored: Immediately after a cold start, with battery/ambient temperature between 4°C (40°F) and 32°C (90°F) and coolant temperature within -12°C (10°F) of battery/ambient.

Set Condition: There is a leak larger than 0.080″ in the evaporative system.

P0456 - EVAP LEAK MONITOR .020 LEAK DETECTED

When Monitored: Immediately after a cold start, with battery/ambient temperature between 4°C (40°F) and 30°C (86°F) and coolant temperature within -12°C (10°F) of battery/ambient.

Set Condition: If there is a leak larger than 0.020″ and smaller than 0.040″ in the evaporative system.

POSSIBLE CAUSES
EVAPORATIVE EMISSION LEAK DETECTION
EVAP PURGE SOLENOID LEAKS/STUCK OPEN
INTERMITTENT LDP MONITOR FAILURE

P0442-EVAP LEAK MONITOR .040 LEAK DETECTED — Continued

TEST	ACTION	APPLICABILITY
1	**NOTE: Since a hot vehicle can conceal a leak, it is best to perform this test at room temperature.** **NOTE: A loose gas cap could have caused this DTC to set. Make sure gas cap is tight and in good condition. Ensure the gas cap meets OEM specifications.** Turn the ignition on. With the DRBIII®, read DTC's. Is the Good Trip Counter displayed and equal to zero? Yes → Go To 2 No → Go To 5	All
2	To continue testing you will need Miller Tool #8404 Evaporative Emission Leak Detector (EELD). **WARNING: Keep lighted cigarettes, sparks, flames, and other ignition sources away from the test area to prevent the ignition of explosive gases. Keep the test area well ventilated.** **NOTE: The fuel tank should have between 20% and 80% of fuel tank capacity to properly test the Evap system.** Disconnect the vacuum supply hose at the Leak Detection Pump. Connect and apply a continuous vacuum supply (i.e. 20″Hg) to the Leak Detection Pump. A vacuum pump such as an A/C recovery unit works well. Using the DRBIII®, select Engine/System Tests and actuate the Leak Detect Pump Test (Option 3/Hold PSI). **NOTE: The above energizes the LDP solenoid and allows the constant vacuum source to apply vacuum to the LDP pump diaphragm. This lifts the diaphragm up and seals the atmospheric canister vent valve at the bottom of the Leak Detection Pump.** Connect the red power lead of Miller Tool #8404 to the battery positive terminal and the black ground lead to battery negative terminal. **NOTE: See Charts and Graph support material EELD Calibration Setup for an example.** Connect shop air to the #8404 EELD. Set the smoke/air control switch to AIR. Insert the tester's AIR supply tip (clear hose) into the appropriate calibration orifice on the tester's control panel (based on DTC leak size). Press the remote smoke/air start button. Position the red flag on the air flow meter so it is aligned with the indicator ball. When the calibration is complete, release the remote button. The EELD is now calibrated the flow meter in liters per minute to the size leak indicated by the DTC set in the PCM. Install the service port adapter #8404-14 on the vehicle's service port. Connect the Air supply hose from the EELD to the service port. Press the remote button to activate AIR flow. **NOTE: Larger volume fuel tanks, and/or those with less fuel, may require 4 to 5 minutes to fill.** Compare the flow meter indicator ball reading to the red flag. ABOVE the red flag indicates a leak present. BELOW the red flag indicates a sealed system. Is the indicator ball above the red flag? Yes → Go To 3 No → Go To 5	All

P0442-EVAP LEAK MONITOR .040 LEAK DETECTED — Continued

TEST	ACTION	APPLICABILITY
3	**NOTE: A thorough visual inspection of the Evap system hoses, tubes, and connections may save time in your diagnosis. Look for any physical damage or signs of wetness at connections. The strong smell of fuel vapors may aid diagnosis also.** To continue testing, you will need Miller Tool #8404 Evaporative Emissions Leak Detector (EELD). Remove the Air supply hose from the service port. Connect the SMOKE supply tip (black hose) to the service port. Set the smoke/air control switch to SMOKE. **NOTE: The flow meter indicator ball will not move at this point.** Press the remote smoke/air start button. **NOTE: Ensure that smoke has filled the EVAP system by continuing to press the remote smoke/air start button, remove the vehicle fuel cap, and wait for the smoke to exit. Once smoke is indicated reinstall the fuel cap.** **NOTE: For optimal performance, introduce smoke into the system for an additional 60 seconds; continue introducing smoke at 15 second intervals, as necessary.** While still holding the remote smoke/air start button, use the white light (#8404-CLL) to follow the EVAP system path, and look for the source of the leak indicated by exiting smoke. If a leak is concealed from view (i.e., top of fuel tank), release the remote smoke/air start button, and use the ultraviolet (UV) black light #8404-UVL and the yellow goggles 8404-20 to look for residual traces of dye that is left behind by the smoke. The exiting smoke deposits a residual fluid that is either bright green or bright yellow in color when viewed with a UV light. **NOTE: Hoses** Was a leak found? Yes → Repair or replace the leaking component as necessary. Perform POWERTRAIN VERIFICATION TEST VER - 6. No → Go To 4	All
4	**NOTE: After disconnecting the Evap Purge Solenoid vacuum connections, inspect the lines and solenoid for any signs of contamination from the EVAP Canister. This may indicate a faulty rollover valve. Replace/repair as necessary.** Turn the ignition off. Disconnect the vacuum hoses at the Evap Purge Solenoid. Using a hand vacuum pump, apply 10 inches of vacuum to the Evap Purge Solenoid vacuum source port on the component side. **NOTE: Monitor the vacuum gauge for at least 15 seconds.** Does the Evap Purge Solenoid hold vacuum? Yes → Go To 5 No → Replace the Evap Purge Solenoid. Perform POWERTRAIN VERIFICATION TEST VER - 6.	All

P0442-EVAP LEAK MONITOR .040 LEAK DETECTED — Continued

TEST	ACTION	APPLICABILITY
5	At this time, the conditions required to set the DTC are not present. **NOTE: Use the Freeze Frame Data to help you duplicate the conditions that set the DTC. Pay particular attention to the DTC set conditions, such as, VSS, MAP, ECT, and Load.** **NOTE: A thorough visual inspection of the Evap system hoses, tubes, and connections may save time in your diagnosis. Look for any physical damage or signs of wetness at connections. The strong smell of fuel vapors may aid diagnosis also.** **NOTE: Refer to any Technical Service Bulletins (TSB's) that may apply.** With the DRBIII® in System Tests, perform the LDP Monitor Test. This will force the PCM to run the LDP Monitor. If the monitor fails, further diagnosis is required to find faulty component. If the monitor passes, the condition is not present at this time. Were any problems found? Yes → Repair as necessary. Perform POWERTRAIN VERIFICATION TEST VER - 6. No → Test Complete.	All

Symptom:

P0443-EVAP PURGE SOLENOID CIRCUIT

When Monitored and Set Condition:

P0443-EVAP PURGE SOLENOID CIRCUIT

When Monitored: The ignition on or engine running. Battery voltage greater than 10 volts.

Set Condition: The PCM will set a trouble code if the actual state of the solenoid does not match the intended state.

POSSIBLE CAUSES
INTERMITTENT CONDITION
EVAP PURGE SOLENOID CONTROL CIRCUIT OPEN
EVAP PURGE SOLENOID CONTROL CIRCUIT SHORTED TO GROUND
EVAP PURGE SOLENOID SENSE CIRCUIT OPEN
EVAP PURGE SOLENOID SENSE CIRCUIT SHORTED TO GROUND
EVAP PURGE SOLENOID
EVAP PURGE SOLENOID LEAKS/STUCK OPEN
EVAP PURGE SOLENOID STUCK CLOSED
POWERTRAIN CONTROL MODULE

TEST	ACTION	APPLICABILITY
1	Turn the ignition on. With the DRBIII®, read DTC's. Is the Good Trip Counter displayed and equal to zero? Yes → Go To 2 No → Go To 10	All
2	Turn the ignition off. Disconnect the Evap Purge Solenoid harness connector. Disconnect the Powertrain Control Module harness connectors. Measure the resistance of the Evap Purge Solenoid Control circuit from the PCM harness connector to the Evap Purge Solenoid harness connector. Is the resistance below 5.0 ohms? Yes → Go To 3 No → Repair the Evap Purge Solenoid Control circuit for an open. Perform POWERTRAIN VERIFICATION TEST VER - 5.	All

P0443-EVAP PURGE SOLENOID CIRCUIT — Continued

TEST	ACTION	APPLICABILITY
3	Turn the ignition off. Disconnect the Evap Purge Solenoid harness connector. Disconnect the Powertrain Control Module harness connectors. Measure the resistance of the Evap Purge Solenoid Control circuit in the Evap Purge Solenoid harness connector to ground. Is the resistance below 5.0 ohms? Yes → Repair the Evap Purge Solenoid Control circuit for a short to ground. Perform POWERTRAIN VERIFICATION TEST VER - 5. No → Go To 4	All
4	Turn the ignition off. Disconnect the Evap Purge Solenoid harness connector. Disconnect the Powertrain Control Module harness connectors. Measure the resistance of the Evap Purge Solenoid Sense circuit from the PCM harness connector to the Evap Purge Solenoid harness connector. Is the resistance below 5.0 ohms? Yes → Go To 5 No → Repair the Evap Purge Solenoid Sense circuit for an open. Perform POWERTRAIN VERIFICATION TEST VER - 5.	All
5	Turn the ignition off. Disconnect the Evap Purge Solenoid harness connector. Disconnect the Powertrain Control Module harness connectors. Measure the resistance between ground and the Evap Purge Solenoid Sense circuit at the Evap Purge Solenoid harness connector. Is the resistance below 5.0 ohms? Yes → Repair the Evap Purge Solenoid Sense circuit for a short to ground. Perform POWERTRAIN VERIFICATION TEST VER - 5. No → Go To 6	All
6	Turn the ignition off. Disconnect the vacuum hoses at the Evap Purge Solenoid. Using a hand vacuum pump, apply 10 inches of vacuum to the Evap Purge Solenoid vacuum source port on the component side. Does the Evap Purge Solenoid hold vacuum? Yes → Go To 7 No → Replace the Evap Purge Solenoid. Perform POWERTRAIN VERIFICATION TEST VER - 5.	All
7	Turn the ignition off. Disconnect the Evap Purge Solenoid harness connector. Measure the resistance between the terminals of the Evap Purge Solenoid. Is the resistance between 10.0 and 15.0 ohms? No → Replace the Evap Purge Solenoid. Perform POWERTRAIN VERIFICATION TEST VER - 5. Yes → Go To 8	All

P0443-EVAP PURGE SOLENOID CIRCUIT — Continued

TEST	ACTION	APPLICABILITY
8	Using a hand vacuum pump, apply 10 inches of vacuum to the Evap Purge Solenoid vacuum source port on the component side. Turn the ignition on. Observe the vacuum gauge. With the DRBIII®, actuate the EVAP Purge Solenoid . Does the vacuum drop when the solenoid is actuated? Yes → Go To 9 No → Replace the Evap Purge Solenoid. Perform POWERTRAIN VERIFICATION TEST VER - 5.	All
9	If there are no possible causes remaining, view repair. Repair Repair Replace and program the Powertrain Control Module in accordance with the Service Information. Perform POWERTRAIN VERIFICATION TEST VER - 5.	All
10	**WARNING: WHEN THE ENGINE IS OPERATING, DO NOT STAND IN A DIRECT LINE WITH THE FAN. DO NOT PUT YOUR HANDS NEAR THE PULLEYS, BELTS OR FAN. DO NOT WEAR LOOSE CLOTHING.** **NOTE: The conditions that set the DTC are not present at this time. The following list may help in identifying the intermittent condition.** Perform a wiggle test of the Evap Purge Solenoid wiring while the circuit is actuated with the DRBIII®. Listen for the solenoid to quit actuating. Also watch for the Good Trip Counter to change to 0. Review the DRBIII® Freeze Frame information. If possible, try to duplicate the conditions under which the DTC was set. Refer to any Technical Service Bulletins (TSB) that may apply. Visually inspect the related wiring harness. Look for any chafed, pierced, pinched, or partially broken wires. Visually inspect the related wiring harness connectors. Look for broken, bent, pushed out, or corroded terminals. Were any of the above conditions present? Yes → Repair as necessary Perform POWERTRAIN VERIFICATION TEST VER - 5. No → Test Complete.	All

Symptom:

P0460-FUEL LEVEL UNIT NO CHANGE OVER MILES

When Monitored and Set Condition:

P0460-FUEL LEVEL UNIT NO CHANGE OVER MILES

When Monitored: TEST #1: With the ignition on, the fuel level is compared to the previuos key down after a 20 second delay. TEST #2: The PCM monitor the fuel level at ignition on.

Set Condition: TEST #1: If the PCM does not see a difference in fuel level of greater than 0.1 volt the test will fail. TEST #2: If the PCM does not see a change in the fuel level of .1765 over a set amount of miles the test will fail. See Charts and Graphs (Fuel Level Voltage Change Over Miles Chart) for an example.

POSSIBLE CAUSES
INTERMITTENT CONDITION
VISUALLY INSPECT FUEL TANK
FUEL LEVEL SENSOR SIGNAL CIRCUIT SHORTED TO GROUND
FUEL LEVEL SENSOR SIGNAL CIRCUIT OPEN
GROUND CIRCUIT OPEN
INTERNAL INSPECTION OF THE FUEL TANK
FUEL LEVEL SENSOR

TEST	ACTION	APPLICABILITY
1	**NOTE: Diagnose P0462 or P0463 first, if set along with P0460.** **NOTE: Inspect the Fuel Pump Module harness connector for any corrosion or damage.** Turn the ignition on. With the DRBIII®, read DTC's. Is the Good Trip displayed and equal to zero? Yes → Go To 2 No → Go To 8	All
2	Visually inspect the Fuel Tank for damage that may restrict the Fuel Sending Unit float from moving. Is the Fuel Tank OK? Yes → Go To 3 No → Replace the Fuel Tank as necessary. Perform POWERTRAIN VERIFICATION TEST VER - 5.	All

P0460-FUEL LEVEL UNIT NO CHANGE OVER MILES — Continued

TEST	ACTION	APPLICABILITY
3	Turn the ignition off. Disconnect the Fuel Pump Module harness connector. Measure the resistance of the Fuel Level Sensor Signal circuit in the Fuel Pump Module harness connector to ground. Is the resistance below 100 ohms? Yes → Repair the Fuel Level Sensor Signal circuit for a short to ground Perform POWERTRAIN VERIFICATION TEST VER - 5. No → Go To 4	All
4	Turn the ignition off. Disconnect the Fuel Pump Module harness connector. Disconnect the BCM harness connector. Measure the resistance of the Fuel Level Sensor Signal circuit between the Fuel Pump Module harness connector and the BCM harness connector. Is the resistance below 5.0 ohms? Yes → Go To 5 No → Repair the Fuel Level Sensor Signal circuit for an open. Perform POWERTRAIN VERIFICATION TEST VER - 5.	All
5	Turn the ignition off. Disconnect the Fuel Pump Module harness connector. Measure the resistance of the Ground circuit in the Fuel Pump Module harness connector to ground. Is the resistance below 5.0 ohms? Yes → Go To 6 No → Repair the Ground circuit for an open. Perform POWERTRAIN VERIFICATION TEST VER - 5.	All
6	**WARNING: The fuel system is under a constant pressure even with the engine off. Before opening the fuel system the fuel pressure must be release. Relieve the fuel pressure in accordance with the service information.** Remove the Fuel Tank in accordance with the Service Information. Remove the Fuel Pump Module. Visually inspect the inside of the Fuel Tank for any obstructions or deformities. Inspect the Fuel Pump Module Float arm for damage. Were any problem found? Yes → Repair or replace as necessary. Perform POWERTRAIN VERIFICATION TEST VER - 5. No → Go To 7	All
7	If there are no possible causes remaining, view repair. Repair Replace the Fuel Level Sensor. Perform POWERTRAIN VERIFICATION TEST VER - 5.	All

P0460-FUEL LEVEL UNIT NO CHANGE OVER MILES — Continued

TEST	ACTION	APPLICABILITY
8	**WARNING: WHEN THE ENGINE IS OPERATING, DO NOT STAND IN A DIRECT LINE WITH THE FAN. DO NOT PUT YOUR HANDS NEAR THE PULLEYS, BELTS OR FAN. DO NOT WEAR LOOSE CLOTHING.** **NOTE: The conditions that set the DTC are not present at this time. The following list may help in identifying the intermittent condition.** **NOTE: Physically and Visually inspect the fuel tank for damage, if a problem is found repair or replace as necessary.** With the engine running at normal operating temperature, monitor the DRBIII® parameters related to the DTC while wiggling the wiring harness. Look for parameter values to change and/or a DTC to set. Review the DRBIII® Freeze Frame information. If possible, try to duplicate the conditions under which the DTC was set. Refer to any Technical Service Bulletins (TSB) that may apply. Visually inspect the related wiring harness. Look for any chafed, pierced, pinched, or partially broken wires. Visually inspect the related wiring harness connectors. Look for broken, bent, pushed out, or corroded terminals. Were any of the above conditions present? Yes → Repair as necessary Perform POWERTRAIN VERIFICATION TEST VER - 5. No → Test Complete.	All

Symptom List:

P0462-FUEL LEVEL SENDING UNIT VOLTS TOO LOW
P0463-FUEL LEVEL SENDING UNIT VOLTS TOO HIGH

Test Note: All symptoms listed above are diagnosed using the same tests. The title for the tests will be P0462-FUEL LEVEL SENDING UNIT VOLTS TOO LOW.

When Monitored and Set Condition:

P0462-FUEL LEVEL SENDING UNIT VOLTS TOO LOW

When Monitored: Ignition on and battery voltage above 10.4 volts.

Set Condition: The fuel level sensor signal voltage goes below 0.4 volts for more than 90 seconds.

P0463-FUEL LEVEL SENDING UNIT VOLTS TOO HIGH

When Monitored: Ignition on and battery voltage above 10.4 volts.

Set Condition: The fuel level sensor signal voltage at the PCM goes above 9.9 volts for more than 90 seconds.

POSSIBLE CAUSES
GOOD TRIP EQUAL TO ZERO
INTERMITTENT CONDITION

TEST	ACTION	APPLICABILITY
1	Turn the ignition on. With the DRBIII®, read DTC's. Is the Good Trip displayed and equal to zero? Yes → Refer to the Instrument Category and perform the appropriate symptoms. Perform POWERTRAIN VERIFICATION TEST VER - 5. No → Go To 2	All

P0462-FUEL LEVEL SENDING UNIT VOLTS TOO LOW — Continued

TEST	ACTION	APPLICABILITY
2	**WARNING: WHEN THE ENGINE IS OPERATING, DO NOT STAND IN A DIRECT LINE WITH THE FAN. DO NOT PUT YOUR HANDS NEAR THE PULLEYS, BELTS OR FAN. DO NOT WEAR LOOSE CLOTHING.** **NOTE: The conditions that set the DTC are not present at this time. The following list may help in identifying the intermittent condition.** **NOTE: Physically and Visually inspect the fuel tank for damage. if a problem is found repair or replace as necessary.** With the engine running at normal operating temperature, monitor the DRBIII® parameters related to the DTC while wiggling the wiring harness. Look for parameter values to change and/or a DTC to set. Review the DRBIII® Freeze Frame information. If possible, try to duplicate the conditions under which the DTC was set. Refer to any Technical Service Bulletins (TSB) that may apply. Visually inspect the related wiring harness. Look for any chafed, pierced, pinched, or partially broken wires. Visually inspect the related wiring harness connectors. Look for broken, bent, pushed out, or corroded terminals. Were any of the above conditions present? Yes → Repair as necessary Perform POWERTRAIN VERIFICATION TEST VER - 5. No → Test Complete.	All

Symptom:

P0500-NO VEHICLE SPEED SIGNAL (3SP AUTO AND MANUAL TRANSMISSIONS)

When Monitored and Set Condition:

P0500-NO VEHICLE SPEED SIGNAL (3SP AUTO AND MANUAL TRANSMISSIONS)

When Monitored: With the engine running, transmission not in park or neutral, brakes not applied, and engine rpm greater than 1800.

Set Condition: This code will set if no vehicle speed signal is received from the Vehicle Speed Sensor for more than 7.2 seconds for 2 consecutive trips.

POSSIBLE CAUSES
INTERMITTENT CONDITION
8 VOLT SUPPLY CIRCUIT OPEN
VEHICLE SPEED SENSOR SIGNAL CIRCUIT SHORTED TO GROUND
VEHICLE SPEED SENSOR SIGNAL CIRCUIT OPEN
PCM VSS SIGNAL
SENSOR GROUND CIRCUIT OPEN
VEHICLE SPEED SENSOR

TEST	ACTION	APPLICABILITY
1	Raise the drive wheels off the ground. **WARNING: BE SURE TO KEEP HANDS AND FEET CLEAR OF ROTATING WHEELS.** Start the engine. With the DRBIII®, monitor the Vehicle Speed Sensor Place the transmission in any forward gear. Allow the wheels to rotate. Does the DRBIII® display vehicle speed above 0 MPH/Kph? Yes → Go To 2 No → Go To 3	All

P0500-NO VEHICLE SPEED SIGNAL (3SP AUTO AND MANUAL TRANSMISSIONS) — Continued

TEST	ACTION	APPLICABILITY
2	**WARNING: WHEN THE ENGINE IS OPERATING, DO NOT STAND IN A DIRECT LINE WITH THE FAN. DO NOT PUT YOUR HANDS NEAR THE PULLEYS, BELTS OR FAN. DO NOT WEAR LOOSE CLOTHING.** **NOTE: The conditions that set the DTC are not present at this time. The following list may help in identifying the intermittent condition.** Remove and inspect the pinion gear, ensure the gear is free from damage. With the engine running at normal operating temperature, monitor the DRBIII® parameters related to the DTC while wiggling the wiring harness. Look for parameter values to change and/or a DTC to set. Review the DRBIII® Freeze Frame information. If possible, try to duplicate the conditions under which the DTC was set. Refer to any Technical Service Bulletins (TSB) that may apply. Visually inspect the related wiring harness. Look for any chafed, pierced, pinched, or partially broken wires. Visually inspect the related wiring harness connectors. Look for broken, bent, pushed out, or corroded terminals. Were any of the above conditions present? Yes → Repair as necessary Perform POWERTRAIN VERIFICATION TEST VER - 5. No → Test Complete.	All
3	Turn the ignition off. Disconnect the Vehicle Speed Sensor harness connector. Turn the ignition on. Measure the voltage of the 8 Volt Supply circuit in the VSS harness connector. Is the voltage above 7.0 volts? Yes → Go To 4 No → Repair the 8 Volt Supply circuit for an open. Perform POWERTRAIN VERIFICATION TEST VER - 5.	All
4	Turn the ignition off. Disconnect the Vehicle Speed Sensor harness connector. Turn the ignition on. Measure the voltage of the Vehicle Speed Sensor Signal circuit in the VSS harness connector. Is the voltage between 4.5 to 5.0 volts? Yes → Go To 5 No → Go To 6	All
5	Turn the ignition off. Disconnect the Vehicle Speed Sensor harness connector. Measure the resistance of the Sensor ground circuit between the VSS harness connector and ground. Is the resistance below 5.0 ohms? Yes → Remove and inspect the Pinion Gear. If OK, replace the Vehicle Speed Sensor. Perform POWERTRAIN VERIFICATION TEST VER - 5. No → Repair the Sensor ground circuit for an open. Perform POWERTRAIN VERIFICATION TEST VER - 5.	All

P0500-NO VEHICLE SPEED SIGNAL (3SP AUTO AND MANUAL TRANSMISSIONS) — Continued

TEST	ACTION	APPLICABILITY
6	Turn the ignition off. Disconnect the Vehicle Speed Sensor harness connector. Disconnect the PCM harness connector. Measure the resistance of the Vehicle Speed Sensor Signal circuit in the VSS harness connector to ground. Is the resistance below 100 ohms? Yes → Repair the Vehicle Speed Sensor Signal circuit for a short to ground. Perform POWERTRAIN VERIFICATION TEST VER - 5. No → Go To 7	All
7	Turn the ignition off. Disconnect the Vehicle Speed Sensor harness connector. Disconnect the PCM harness connector. Measure the resistance of the Vehicle Speed Sensor Signal circuit between the VSS harness connector and the PCM harness connector. Is the resistance below 5 ohms? Yes → Go To 8 No → Repair the Vehicle Speed Sensor Signal circuit for an open. Perform POWERTRAIN VERIFICATION TEST VER - 5.	All
8	If there are no possible causes remaining, view repair, Repair Replace and program the Powertrain Control Module in accordance with the Service Information. Perform POWERTRAIN VERIFICATION TEST VER - 5.	All

Symptom:

P0500-NO VEHICLE SPEED SIGNAL (4SP AUTO TRANS)

When Monitored and Set Condition:

P0500-NO VEHICLE SPEED SIGNAL (4SP AUTO TRANS)

When Monitored: With the engine running, transmission not in park or neutral, brakes not applied, and engine rpm greater than 1800.

Set Condition: This code will set if no vehicle speed signal is received from the TCM (transmission control module) for more than 7.2 seconds for 2 consecutive trips.

POSSIBLE CAUSES
INTERMITTENT CONDITION
VEHICLE SPEED SENSOR SIGNAL SHORTED VOLTAGE
VSS SIGNAL FROM TCM
VEHICLE SPEED SENSOR SIGNAL SHORTED TO GROUND
VEHICLE SPEED SENSOR SIGNAL OPEN
PCM VSS SIGNAL

TEST	ACTION	APPLICABILITY
1	**NOTE: Before continuing this test use the DRB and check Pinion Factor. If not correct, reset and retest vehicle.** Turn the ignition on. With the DRBIII®, read DTC's. Is the Good Trip displayed and equal to zero? Yes → Go To 2 No → Go To 7	All
2	Turn the ignition off. Disconnect the TCM harness connector. Turn the ignition on. Measure the voltage of the VSS Signal circuit in the TCM harness connector. Is the voltage above 6.0 volts? Yes → Repair the Vehicle Speed Sensor Signal circuit for a short to voltage. Perform POWERTRAIN VERIFICATION TEST VER - 5. No → Go To 3	All

P0500-NO VEHICLE SPEED SIGNAL (4SP AUTO TRANS) — Continued

TEST	ACTION	APPLICABILITY
3	Turn the ignition off. Disconnect the TCM harness connector. Turn the ignition on. Connect a jumper wire to the VSS Signal circuit in the TCM harness connector. With the DRBIII®, monitor the Vehicle Speed Signal display. Tap the other end of the jumper wire rapidly to ground. Does the Vehicle Speed Signal display the MPH/kmh above 0? Yes → Go To 4 No → Replace the Transmission Comtrol Module in accordance with the Service Information. Perform POWERTRAIN VERIFICATION TEST VER - 5.	All
4	Turn the ignition off. Disconnect the PCM harness connector. Disconnect the TCM harness connector. Measure the resistance of the Vehicle Speed Sensor Signal circuit in the PCM harness connector to ground. Is the resistance below 100 ohms? Yes → Repair the Vehicle Speed Sensor Signal circuit for a short to ground. Perform POWERTRAIN VERIFICATION TEST VER - 5. No → Go To 5	All
5	Turn the ignition off. Disconnect the PCM harness connector. Disconnect the TCM harness connector Measure the resistance of the Vehicle Speed Sensor Signal circuit between the PCM harness connector and the TCM harness connector. Is the resistance below 5.0 ohms? Yes → Go To 6 No → Repair the Vehicle Speed Sensor Signal circuit for an open. Perform POWERTRAIN VERIFICATION TEST VER - 5.	All
6	If there is no possible causes remaining, view repair. Repair Replace and program the Powertrain Control Module in accordance with the Service Information. Perform POWERTRAIN VERIFICATION TEST VER - 5.	All

P0500-NO VEHICLE SPEED SIGNAL (4SP AUTO TRANS) — Continued

TEST	ACTION	APPLICABILITY
7	**WARNING: WHEN THE ENGINE IS OPERATING, DO NOT STAND IN A DIRECT LINE WITH THE FAN. DO NOT PUT YOUR HANDS NEAR THE PULLEYS, BELTS OR FAN. DO NOT WEAR LOOSE CLOTHING.** **NOTE: The conditions that set the DTC are not present at this time. The following list may help in identifying the intermittent condition.** With the engine running at normal operating temperature, monitor the DRBIII® parameters related to the DTC while wiggling the wiring harness. Look for parameter values to change and/or a DTC to set. Review the DRBIII® Freeze Frame information. If possible, try to duplicate the conditions under which the DTC was set. Refer to any Technical Service Bulletins (TSB) that may apply. Visually inspect the related wiring harness. Look for any chafed, pierced, pinched, or partially broken wires. Visually inspect the related wiring harness connectors. Look for broken, bent, pushed out, or corroded terminals. Were any of the above conditions present? Yes → Repair as necessary Perform POWERTRAIN VERIFICATION TEST VER - 5. No → Test Complete.	All

Symptom:

P0505-IDLE AIR CONTROL MOTOR CIRCUITS

When Monitored and Set Condition:

P0505-IDLE AIR CONTROL MOTOR CIRCUITS

When Monitored: Engine running. Battery voltage greater than 10 volts. IAC motor operating.

Set Condition: The PCM senses a short to ground or battery voltage on any of the four Idle Air Control (IAC) driver circuits for 2.75 seconds while the IAC motor is active.

POSSIBLE CAUSES
INTERMITTENT CONDITION
IAC #1 DRIVER CIRCUIT SHORTED TO #2, #3, OR #4
IAC #2 DRIVER CIRCUIT SHORTED TO #3 OR #4
IAC #3 DRIVER CIRCUIT SHORTED TO #4
IAC DRIVER CIRCUIT SHORTED TO VOLTAGE
IAC DRIVER CIRCUIT SHORTED TO GROUND
IAC MOTOR OPERATION
IAC MOTOR

TEST	ACTION	APPLICABILITY
1	Turn the ignition on. With the DRBIII®, read DTC's. Is the Good Trip displayed and equal to zero? Yes → Go To 2 No → Go To 8	All
2	Turn the ignition off. Disconnect the IAC Motor harness connector. Disconnect the Powertrain Control Module harness connectors. **Note: The following steps are checking for a short between the IAC Driver Circuits.** Measure the resistance between the IAC #1 Driver circuit and #2, #3, #4 Driver circuits. Is the resistance below 5.0 ohms between any of the Drivers? Yes → Repair the IAC Driver Circuits shorted together. Perform POWERTRAIN VERIFICATION TEST VER - 5. No → Go To 3	All

P0505-IDLE AIR CONTROL MOTOR CIRCUITS — Continued

TEST	ACTION	APPLICABILITY
3	Turn the ignition off. Disconnect the IAC Motor harness connector. Disconnect the Powertrain Control Module harness connectors. **Note: The following steps are checking for a short between the IAC Driver Circuits.** Measure the resistance between the IAC #2 Driver circuit and #3, #4 Driver circuits. Is the resistance below 5.0 ohms between any of the Drivers? Yes → Repair the IAC Driver Circuits shorted together. Perform POWERTRAIN VERIFICATION TEST VER - 5. No → Go To 4	All
4	Turn the ignition off. Disconnect the IAC Motor harness connector. Disconnect the Powertrain Control Module harness connectors. **Note: The following steps are checking for a short between the Driver Circuits.** Measure the resistance between the IAC #3 Driver circuit and the #4 Driver circuit. Is the resistance below 5.0 ohms? Yes → Repair the IAC Driver Circuits shorted together. Perform POWERTRAIN VERIFICATION TEST VER - 5. No → Go To 5	All
5	Turn the ignition off. Disconnect the IAC Motor harness connector. Disconnect the Powertrain Control Module harness connector. Remove the ASD Relay. Using a jumper wire, jumper between the Fused B+ circuit and ASD Relay Output circuit in the PDC. Turn the ignition on. Measure the voltage of each of the IAC Driver circuit. Is the voltage above 1.0 volt at any IAC Driver circuit? Yes → Repair the IAC Driver circuit(s) for a short to voltage. Perform POWERTRAIN VERIFICATION TEST VER - 5. No → Go To 6	All
6	Turn the ignition off. Disconnect IAC Motor harness connector. Disconnect the PCM harness connector. Repeat each measurement for each IAC Driver circuit. Measure the resistance of each IAC Driver circuit to ground. Is the resistance below 5.0 ohms at any IAC Driver circuit? Yes → Repair the IAC Driver circuit(s) for a short to ground. Perform POWERTRAIN VERIFICATION TEST VER - 5. No → Go To 7	All

P0505-IDLE AIR CONTROL MOTOR CIRCUITS — Continued

TEST	ACTION	APPLICABILITY
7	Turn the ignition off. Disconnect the IAC Motor harness connector. Start and idle the engine. Using a test light connected to ground, probe the IAC Driver #1 circuit for 10 seconds. Repeat the above test for the remaining IAC Motor Driver circuits. Does the test light turn on and off while probing each IAC Motor Driver circuit? Yes → Replace the Idle Air Control Motor. Perform POWERTRAIN VERIFICATION TEST VER - 5. No → Replace and program the Powertrain Control Module in accordance with the Service Information. Perform POWERTRAIN VERIFICATION TEST VER - 5.	All
8	**WARNING: WHEN THE ENGINE IS OPERATING, DO NOT STAND IN A DIRECT LINE WITH THE FAN. DO NOT PUT YOUR HANDS NEAR THE PULLEYS, BELTS OR FAN. DO NOT WEAR LOOSE CLOTHING.** **NOTE: The conditions that set the DTC are not present at this time. The following list may help in identifying the intermittent condition.** With the engine running at normal operating temperature, monitor the DRBIII® parameters related to the DTC while wiggling the wiring harness. Look for parameter values to change and/or a DTC to set. Review the DRBIII® Freeze Frame information. If possible, try to duplicate the conditions under which the DTC was set. Refer to any Technical Service Bulletins (TSB) that may apply. Visually inspect the related wiring harness. Look for any chafed, pierced, pinched, or partially broken wires. Visually inspect the related wiring harness connectors. Look for broken, bent, pushed out, or corroded terminals. Were any of the above conditions present? Yes → Repair as necessary Perform POWERTRAIN VERIFICATION TEST VER - 5. No → Test Complete.	All

Symptom:

P0508 - IAC MOTOR SENSE CIRCUIT LOW

When Monitored and Set Condition:

P0508 - IAC MOTOR SENSE CIRCUIT LOW

When Monitored: Engine running. The batterty voltage greater than 10 volts.

Set Condition: IAC Valve Sense current is less than 146.33 mA.

POSSIBLE CAUSES
INTERMITTENT CONDITION
IAC MOTOR
IAC MOTOR DRIVER CIRCUIT SHORTED TO GROUND
IAC MOTOR SENSE CIRCUIT OPEN
IAC MOTOR SENSE CIRCUIT SHORTED TO GROUND
IAC MOTOR DRIVER CIRCUIT OPEN
POWERTRAIN CONTROL MODULE

TEST	ACTION	APPLICABILITY
1	**NOTE: If the engine will not idle, maintain an engine speed between 800 and 1500 RPM.** Start the engine. Allow the engine to idle. With the DRBIII®, read the IAC Current. Is the IAC Current below 146 mA? Yes → Go To 2 No → Go To 8	All
2	Turn the ignition off. Disconnect the IAC Motor harness connector. Remove the IAC Motor. **NOTE: Inspect the IAC air passages for restriction and damage to the IAC valve.** Measure the resistance across the IAC Motor pin terminals (component). Is the resistance 9.7 +/- 1.0 ohms? Yes → Go To 3 No → Replace the IAC Motor. Perform POWERTRAIN VERIFICATION TEST VER - 5.	All

P0508 - IAC MOTOR SENSE CIRCUIT LOW — Continued

TEST	ACTION	APPLICABILITY
3	Turn the ignition off. Disconnect the IAC Motor harness connector. Disconnect the Powertrain Control Module harness connectors. Measure the resistance of the IAC Motor Sense circuit from the PCM harness connector to the IAC Motor harness connector. Is the resistance below 5.0 ohms? Yes → Go To 4 No → Repair the IAC Sense circuit for an open. Perform POWERTRAIN VERIFICATION TEST VER - 5.	All
4	Turn the ignition off. Disconnect the IAC Motor harness connector. Disconnect the Powertrain Control Module harness connectors. Measure the resistance of the IAC Motor Sense in the IAC Motor harness connector to ground. Is the resistance below 5.0 ohms? Yes → Repair the IAC Motor Sense circuit for a short to ground. Perform POWERTRAIN VERIFICATION TEST VER - 5. No → Go To 5	All
5	Turn the ignition off. Disconnect the IAC Motor harness connector. Disconnect the Powertrain Control Module harness connectors. Measure the resistance of the IAC Motor Driver circuit in the IAC Motor harness connector to ground. Is the resistance below 5.0 ohms? Yes → Repair the IAC Motor Driver circuit for a short to ground. Perform POWERTRAIN VERIFICATION TEST VER - 5. No → Go To 6	All
6	Turn the ignition off. Disconnect the IAC Motor harness connector. Disconnect the Powertrain Control Module harness connectors. Measure the resistance of the IAC Motor Driver circuit from the PCM harness connector to the IAC Motor harness connector. Is the resistance below 5.0 ohms? Yes → Go To 7 No → Repair the IAC Motor Driver circuit for an open. Perform POWERTRAIN VERIFICATION TEST VER - 5.	All
7	If there are no possible causes remaining, view repair. Repair Replace and program the Powertrain Control Module in accordance with the Service Information. Perform POWERTRAIN VERIFICATION TEST VER - 5.	All

P0508 - IAC MOTOR SENSE CIRCUIT LOW — Continued

TEST	ACTION	APPLICABILITY
8	**WARNING: KEEP CLEAR OF THE ENGINE'S MOVING PARTS.** **NOTE: The conditions that set the DTC are not present at this time. The following list may help in identifying the intermittent condition.** With the engine running at normal operating temperature, monitor the DRBIII® parameters related to the DTC while wiggling the wiring harness. Look for parameter values to change and/or a DTC to set. Review the DRBIII® Freeze Frame information. If possible, try to duplicate the conditions under which the DTC was set. Refer to any Technical Service Bulletins (TSB) that may apply. Visually inspect the related wiring harness. Look for any chafed, pierced, pinched, or partially broken wires. Visually inspect the related wiring harness connectors. Look for broken, bent, pushed out, or corroded terminals. Were any of the above conditions present? Yes → Repair as necessary Perform POWERTRAIN VERIFICATION TEST VER - 5. No → Test Complete.	All

Symptom:

P0509 - IAC MOTOR SENSE CIRCUIT HIGH

When Monitored and Set Condition:

P0509 - IAC MOTOR SENSE CIRCUIT HIGH

When Monitored: Engine running. The batterty voltage greater than 10 volts.

Set Condition: IAC Valve Sense current is greater than 999.9 mA.

POSSIBLE CAUSES
INTERMITTENT CONDITION
IAC MOTOR
IAC MOTOR SENSE CIRCUIT SHORTED TO VOLTAGE
IAC MOTOR DRIVER CIRCUIT SHORTED TO VOLTAGE
IAC MOTOR SENSE CIRCUIT SHORTED TO IAC MOTOR DRIVER CIRCUIT
POWERTRAIN CONTROL MODULE

TEST	ACTION	APPLICABILITY
1	**NOTE: If the engine will not idle, maintain an engine speed between 800 and 1500 RPM.** Start the engine. Allow the engine to idle. With the DRBIII®, read the IAC Current. Is the IAC Current above 999 mA? Yes → Go To 2 No → Go To 7	All
2	Turn the ignition off. Disconnect the IAC Motor harness connector. With the DRBIII®, monitor the IAC Current. Turn the ignition on. Does the DRBIII® display IAC Current at 0mA? Yes → Replace the IAC Motor. Perform POWERTRAIN VERIFICATION TEST VER - 5. No → Go To 3	All
3	Turn the ignition off. Disconnect the IAC Motor harness connector. Turn the ignition on. With the DRBIII®, actuate the ASD Relay. Measure the voltage of the IAC Motor Sense circuit in the IAC Motor harness connector. Is the voltage above 0.5 volt? Yes → Repair the IAC Motor Sense circuit for a short to voltage. Perform POWERTRAIN VERIFICATION TEST VER - 5. No → Go To 4	All

P0509 - IAC MOTOR SENSE CIRCUIT HIGH — Continued

TEST	ACTION	APPLICABILITY
4	Turn the ignition off. Disconnect the IAC Motor harness connector. Turn the ignition on. With the DRBIII®, actuate the ASD Relay. Measure the voltage of the IAC Motor Driver circuit in the IAC Motor harness connector. Is the voltage above 0.5 volt? Yes → Repair the IAC Motor Driver circuit for a short to voltage. Perform POWERTRAIN VERIFICATION TEST VER - 5. No → Go To 5	All
5	Turn the ignition off. Disconnect the IAC Motor harness connector. Measure the resistance across the IAC Motor harness connector. Is the resistance below 5.0 ohms? Yes → Repair the IAC Motor Sense circuit shorted to the IAC Motor Driver circuit. Perform POWERTRAIN VERIFICATION TEST VER - 5. No → Go To 6	All
6	If there are no possible causes remaining, view repair. Repair Replace and program the Powertrain Control Module in accordance with the Service Information. Perform POWERTRAIN VERIFICATION TEST VER - 5.	All
7	**WARNING: WHEN THE ENGINE IS OPERATING, DO NOT STAND IN A DIRECT LINE WITH THE FAN. DO NOT PUT YOUR HANDS NEAR THE PULLEYS, BELTS OR FAN. DO NOT WEAR LOOSE CLOTHING.** **NOTE: The conditions that set the DTC are not present at this time. The following list may help in identifying the intermittent condition.** With the engine running at normal operating temperature, monitor the DRBIII® parameters related to the DTC while wiggling the wiring harness. Look for parameter values to change and/or a DTC to set. Review the DRBIII® Freeze Frame information. If possible, try to duplicate the conditions under which the DTC was set. Refer to any Technical Service Bulletins (TSB) that may apply. Visually inspect the related wiring harness. Look for any chafed, pierced, pinched, or partially broken wires. Visually inspect the related wiring harness connectors. Look for broken, bent, pushed out, or corroded terminals. Were any of the above conditions present? Yes → Repair as necessary Perform POWERTRAIN VERIFICATION TEST VER - 5. No → Test Complete.	All

Symptom:

P0700-EATX CONTROLLER DTC PRESENT

TEST	ACTION	APPLICABILITY
1	This is an informational DTC letting you know that a DTC(s) is stored in the Transmission Control Module. Erase this DTC from the PCM after all Transmission DTC(s) have been repaired. Using the DRBIII®, read the Transmission Controller DTC and refer to the Transmission Category and perform the appropriate symptom. PCM Diagnostic Information complete. Continue Test Complete.	All

Symptom:

P0703-BRAKE SWITCH SENSE CIRCUIT

When Monitored and Set Condition:

P0703-BRAKE SWITCH SENSE CIRCUIT

When Monitored: TEST #1: Vehicle speed greater than 17 MPH to enable. TEST #2: Speed must be 0 and brake switch indicates on.

Set Condition: TEST #1: If vehicle speed goes to 0 MPH without brake input. Condition must be repeated 9 times to set fault. Two trip fault. TEST #2: If vehicle speed go above 17 MPH for more than 6.4 seconds without a change with the brake depressed. Condition must be repeat 9 times to set fault.

POSSIBLE CAUSES
INTERMITTENT CONDITION
FUSED B+ CIRCUIT
BRAKE SWITCH SENSE CIRCUIT SHORTED TO VOLTAGE
BRAKE SWITCH SENSE SHORTED TO GROUND
BRAKE SWITCH SENSE CIRCUIT OPEN
GROUND CIRCUIT OPEN
BRAKE LAMP SWITCH OPERATION
PCM

TEST	ACTION	APPLICABILITY
1	**NOTE: Ensure the Brake Switch is adjusted properly before continuing.** Turn the ignition on. With the DRBIII®, read DTC's. Is the Good Trip displayed and equal to zero? Yes → Go To 2 No → Go To 9	All
2	Turn the ignition off. Disconnect the Brake Lamp Switch harness connector. Using a 12-volt test light connected to ground, check the Fused B+ circuit in the Brake Lamp Switch harness connector. Does the test light illuminate brightly? Yes → Go To 3 No → Repair the Fuse B+ circuit. Perform POWERTRAIN VERIFICATION TEST VER - 4.	All

P0703-BRAKE SWITCH SENSE CIRCUIT — Continued

TEST	ACTION	APPLICABILITY
3	Turn the ignition off. Disconnect the Brake Lamp Switch harness connector. Disconnect the PCM harness connector. Remove the ASD Relay from the PDC. Using a jumper wire, jumper between the Fused B+ circuit and ASD Relay Output circuit in the PDC. Turn the ignition on. Measure the voltage of the Brake Switch Sense circuit in the Brake Lamp Switch harness connector. Is the voltage above 1.0 volts? Yes → Repair the Brake Switch Sense circuit shorted to voltage. Perform POWERTRAIN VERIFICATION TEST VER - 4. No → Go To 4	All
4	Turn the ignition off. Disconnect the Brake Lamp Switch harness connector. Disconnect the PCM harness connector. Measure the resistance of the Brake Switch Sense circuit in the Brake Lamp Switch harness connector to ground. Is the resistance below 5.0 ohms? Yes → Repair the Brake Switch Sense circuit shorted to ground. Perform POWERTRAIN VERIFICATION TEST VER - 4. No → Go To 5	All
5	Turn the ignition off. Disconnect the Brake Lamp Switch harness connector. Disconnect the PCM harness connector. Measure the resistance of the Brake Switch Sense circuit between the Brake Lamp Switch harness connector and the PCM harness connector. Is the resistance below 5.0 ohms? Yes → Go To 6 No → Repair the Brake Switch Sense circuit for an open. Perform POWERTRAIN VERIFICATION TEST VER - 4.	All
6	Turn the ignition off. Disconnect the Brake Lamp Switch harness connector. Measure the resistance of the Ground circuit in the Brake Lamp Switch harness connector to ground. Is the resistance below 5.0 ohms? Yes → Go To 7 No → Repair the Ground circuit for an open. Perform POWERTRAIN VERIFICATION TEST VER - 4.	All
7	Turn the ignition off. Disconnect the Brake Lamp Switch harness connector. Measure the resistance between the Ground circuit terminal and the Brake Switch Sense terminal in the Brake Lamp Switch. Apply and release the brake pedal while monitoring the ohmmeter. Does the resistance change from below 5.0 ohms to open circuit? Yes → Go To 8 No → Replace the Brake Lamp Switch. Perform POWERTRAIN VERIFICATION TEST VER - 4.	All

P0703-BRAKE SWITCH SENSE CIRCUIT — Continued

TEST	ACTION	APPLICABILITY
8	If there are no possible causes remaining, view repair. Repair Replace and program the Powertrain Control Module in accordance with the Service Information. Perform POWERTRAIN VERIFICATION TEST VER - 4.	All
9	**WARNING: WHEN THE ENGINE IS OPERATING, DO NOT STAND IN A DIRECT LINE WITH THE FAN. DO NOT PUT YOUR HANDS NEAR THE PULLEYS, BELTS OR FAN. DO NOT WEAR LOOSE CLOTHING.** **NOTE: The conditions that set the DTC are not present at this time. The following list may help in identifying the intermittent condition.** With the engine running at normal operating temperature, monitor the DRBIII® parameters related to the DTC while wiggling the wiring harness. Look for parameter values to change and/or a DTC to set. Review the DRBIII® Freeze Frame information. If possible, try to duplicate the conditions under which the DTC was set. Refer to any Technical Service Bulletins (TSB) that may apply. Visually inspect the related wiring harness. Look for any chafed, pierced, pinched, or partially broken wires. Visually inspect the related wiring harness connectors. Look for broken, bent, pushed out, or corroded terminals. Were any of the above conditions present? Yes → Repair as necessary Perform POWERTRAIN VERIFICATION TEST VER - 4. No → Test Complete.	All

Symptom:

P0740-TORQ CONV CLU, NO RPM DROP AT LOCKUP (3SP AUTO TRANS)

When Monitored and Set Condition:

P0740-TORQ CONV CLU, NO RPM DROP AT LOCKUP (3SP AUTO TRANS)

When Monitored: Run in third with converter unlocked for 10 seconds, apply throttle until it locks then run for 5 seconds, vehicle speed less than 60 MPH. No DTCs set for: TCC solenoids, any cam/crank conditions, VSS, TPS signal, TPS voltage too high or too low.

Set Condition: Torque converter malfunctions are detected when it does not lock or unlock properly. Two consecutive trips that fail will store the code. Mountainous terrain may cause this trouble code.

POSSIBLE CAUSES
INTERMITTENT CONDITION
DTCS PRESENT
TRANSMISSION FLUID
TIRE AND WHEEL SIZE
FUSED IGNITION OUTPUT CIRCUIT
TCC SOLENOID
TCC ASSEMBLY OR TCC SOLENOID STUCK
TCC SOLENOID OPERATION

TEST	ACTION	APPLICABILITY
1	Turn the ignition on. With the DRBIII®, read DTC's. Is the Good Trip Counter displayed and equal to zero? Yes → Go To 2 No → Go To 9	All

P0740-TORQ CONV CLU, NO RPM DROP AT LOCKUP (3SP AUTO TRANS)

— Continued

TEST	ACTION	APPLICABILITY
2	Turn the ignition on. With the DRBIII®, read DTCs. Are any of the following DTCs set in the PCM memory? P0122 - Throttle Position Sensor Voltage Low P0123 - Throttle Position Sensor High P0320 - No Crank Reference Signal At PCM P0743 - Torque Converter Clutch Solenoid/Trans Relay Circuits P0300, P0301, P0302, P0303 or P0304 Misfire DTC(s) Did any of the above DTCs set along with P0740 Yes → Refer to the Driveability Category and perform the appropriate symptom before proceeding. Perform 31TH TRANSMISSION VERIFICATION TEST - VER 1.. No → Go To 3	All
3	Check the transmission fluid level and condition. Is the fluid level OK and free of contamination? Yes → Go To 4 No → Repair the fliuld level and/or condition as necessary. Perform 31TH TRANSMISSION VERIFICATION TEST - VER 1..	All
4	Inspect the front wheels and tires. Ensure the wheels and tires are the manufactures recommended size. Ensure both left and right wheels and tires are the same size. Were any problems found? Yes → Repair or replace as necessary. Perform 31TH TRANSMISSION VERIFICATION TEST - VER 1.. No → Go To 5	All
5	Turn the ignition off. Disconnect the TCC Solenoid harness connector. Turn the ignition on. Measure the voltage of the Fused Ignition Switch Output circuit in the TCC Solenoid harness connector. Is the voltage above 10.0 volts? Yes → Go To 6 No → Repair the Fused Ignition Switch Output circuit for an open. Perform 31TH TRANSMISSION VERIFICATION TEST - VER 1..	All
6	Turn the ignition off. Disconnect the TCC Solenoid harness connector. Measure the resistance across the TCC Solenoid. Is the resistance between 30.0 and 50.0 ohms? Yes → Go To 7 No → Replace the TCC Solenoid. Perform 31TH TRANSMISSION VERIFICATION TEST - VER 1..	All

P0740-TORQ CONV CLU, NO RPM DROP AT LOCKUP (3SP AUTO TRANS)

— Continued

TEST	ACTION	APPLICABILITY
7	Turn the ignition off. At the Cooler In port, install a 0 to 2070 KPa (300 PSI) gauge using a T. Ensure the gauge hose is long enough to reach in the driver's side of the vehicle so the gauge can be monitor while driving. Road test the vehicle. Transmission in the Driver gear. Monitoring the DRB, achieve 80 km/h (50 mph). **NOTE: The gauge will read around 103 KPa (15 PSI) until lockup is achieved in 3rd gear. If the TCC Solenoid operation is correct, the gauge pressure will jump when the lockup is achieved.** Did the gauge pressure jump? Yes → Go To 8 No → Refer to Service Manual for proper service procedure on Torque Converter Assembly or Stuck TCC Solenoid and repair as necessary. Perform 31TH TRANSMISSION VERIFICATION TEST - VER 1..	All
8	Turn the ignition off. At the Cooler In port, install a 0 to 2070 KPa (300 PSI) gauge using a T. Ensure the gauge hose is long enough to reach in the driver's side of the vehicle so the gauge can be monitor while driving. Road test the vehicle. Transmission in the Driver gear. Monitoring the DRB, achieve 80 km/h (50 mph). **NOTE: The gauge will read around 103 KPa (15 PSI) until lockup is achieved in 3rd gear. If the TCC Solenoid operation is properly, the gauge pressure will jump when the lockup is achieved.** Maintain 80 km/h (50 MPH) per DRB. Wait 10 seconds in lockup. Record engine RPM. Was engine RPM 2200 RPM +/- 50 RPM? Yes → Test Complete. No → The problem appears to be in the Differential, Output Shaft or Gear Box. Refer to Service Manual for proper service. Perform 31TH TRANSMISSION VERIFICATION TEST - VER 1..	All
9	**WARNING: WHEN THE ENGINE IS OPERATING, DO NOT STAND IN A DIRECT LINE WITH THE FAN. DO NOT PUT YOUR HANDS NEAR THE PULLEYS, BELTS OR FAN. DO NOT WEAR LOOSE CLOTHING.** **NOTE: The conditions that set the DTC are not present at this time. The following list may help in identifying the intermittent condition.** Review the DRBIII® Freeze Frame information. If possible, try to duplicate the conditions under which the DTC was set. Refer to any Technical Service Bulletins (TSB) that may apply. Visually inspect the related wiring harness. Look for any chafed, pierced, pinched, or partially broken wires. Visually inspect the related wiring harness connectors. Look for broken, bent, pushed out, or corroded terminals. Were any of the above conditions present? Yes → Repair as necessary Perform 31TH TRANSMISSION VERIFICATION TEST - VER 1.. No → Test Complete.	All

Symptom:

P0743-TORQUE CONVERTER CLUTCH SOLENOID/TRANS RELAY CIRCUITS (3SP AUTO TRANS)

When Monitored and Set Condition:

P0743-TORQUE CONVERTER CLUTCH SOLENOID/TRANS RELAY CIRCUITS (3SP AUTO TRANS)

When Monitored: With the ignition on. Battery voltage greater than 10 volts

Set Condition: An open or shorted condition is detected in the torque converter clutch solenoid control circuit.

POSSIBLE CAUSES
INTERMITTENT CONDITION
TCC SOLENOID
FUSED IGNITION SWITCH OUTPUT CIRCUIT OPEN
TCC SOLENOID CONTROL CKT SHORTED TO VOLTAGE
TCC SOLENOID CONTROL CKT SHORT TO GND
TCC SOLENOID CONTROL CKT OPEN
PCM

TEST	ACTION	APPLICABILITY
1	Turn the ignition on. With the DRBIII®, read DTC's. Is the Good Trip displayed and equal to zero? Yes → Go To 2 No → Go To 8	All
2	Turn the ignition on. Turn all accessories off. Disconnect the TCC Solenoid harness connector. Using a 12 volt Test Light connected to the Fused Ignition Switch Output circuit, probe the TCC Solenoid Control circuit. With the DRBIII®, actuate the TCC solenoid. Does the 12 volt test light flash on and off? Yes → Replace the TCC Solenoid. Perform 31TH TRANSMISSION VERIFICATION TEST - VER 1.. No → Go To 3	All

P0743-TORQUE CONVERTER CLUTCH SOLENOID/TRANS RELAY CIRCUITS (3SP AUTO TRANS) — Continued

TEST	ACTION	APPLICABILITY
3	Turn the igntion off. Disconnect the TCC Solenoid harness connector. Turn the ignition on. Using a 12 volt Test Light connected to ground, probe the Fused Ignition Switch Output circuit in the TCC Solenoid harness connector. Does the 12 volt test light illuminate? Yes → Go To 4 No → Repair the Fused Ignition Switch Output circuit for an open. Perform 31TH TRANSMISSION VERIFICATION TEST - VER 1..	All
4	Turn the ignition off. Disconnect the TCC Solenoid harness connector. Turn the ignition on. Measure the voltage of the TCC Solenoid Control circuit in the TCC Solenoid connector. Is the voltage above 0.5 volts. Yes → Repair the TCC Solenoid Control circuit for a short to voltage. Perform 31TH TRANSMISSION VERIFICATION TEST - VER 1.. No → Go To 5	All
5	Turn the ignition off. Disconnect the PCM harness connector. Disconnect the TCC Solenoid harness connector. Measure the resistance of the TCC Solenoid Control circuit in the TCC Solenoid harness connector to ground. Is the resistance below 5.0 ohms? Yes → Repair the TCC Solenoid Control circuirt for a short to ground. Perform 31TH TRANSMISSION VERIFICATION TEST - VER 1.. No → Go To 6	All
6	Turn the ignition off. Disconnect the PCM harness connector. Disconnect the TCC Solenoid harness connector. Measure the resistance of the TCC Solenoid Control circuit between the PCM harness connector and the TCC Solenoid harness connector. Is the resistance below 5.0 ohms? Yes → Go To 7 No → Repair the TCC Solenoid Control circuit for an open. Perform 31TH TRANSMISSION VERIFICATION TEST - VER 1..	All
7	If there are no possible causes remaining, view repair. Repair Replace and program the Powertrain Control Module in accordance with the Service Information. Perform 31TH TRANSMISSION VERIFICATION TEST - VER 1..	All

P0743-TORQUE CONVERTER CLUTCH SOLENOID/TRANS RELAY CIRCUITS (3SP AUTO TRANS) — Continued

TEST	ACTION	APPLICABILITY
8	**WARNING: WHEN THE ENGINE IS OPERATING, DO NOT STAND IN A DIRECT LINE WITH THE FAN. DO NOT PUT YOUR HANDS NEAR THE PULLEYS, BELTS OR FAN. DO NOT WEAR LOOSE CLOTHING.** **NOTE: The conditions that set the DTC are not present at this time. The following list may help in identifying the intermittent condition.** With the engine running at normal operating temperature, monitor the DRBIII® parameters related to the DTC while wiggling the wiring harness. Look for parameter values to change and/or a DTC to set. Review the DRBIII® Freeze Frame information. If possible, try to duplicate the conditions under which the DTC was set. Refer to any Technical Service Bulletins (TSB) that may apply. Visually inspect the related wiring harness. Look for any chafed, pierced, pinched, or partially broken wires. Visually inspect the related wiring harness connectors. Look for broken, bent, pushed out, or corroded terminals. Were any of the above conditions present? Yes → Repair as necessary Perform 31TH TRANSMISSION VERIFICATION TEST - VER 1.. No → Test Complete.	All

Symptom:

P0833-CLUTCH RELEASED SWITCH CIRCUIT

When Monitored and Set Condition:

P0833-CLUTCH RELEASED SWITCH CIRCUIT

When Monitored: During crank or when engine speed is between 1500-2880 RPM and vehicle speed is greater than 25 MPH.

Set Condition: A short to ground is detected during startup. An open circuit is detected when engine Speed is between 1500-2880 RPM, vehicle speed is >25 MPH, and delta throttle is >1.1 volts for 4 seconds. This cycle must repeat 5 times per trip for 2 trips.

POSSIBLE CAUSES
INTERMITTENT CONDITION
CLUTCH PEDAL POSITION SWITCH
CLUTCH UPSTOP SIGNAL CIRCUIT OPEN
CLUTCH UPSTOP SIGNAL CIRCUIT SHORTED TO GROUND
GROUND CIRCUIT
PCM

TEST	ACTION	APPLICABILITY
1	With the DRBIII®, monitor the Clutch Upstop Switch. Depress the Clutch Pedal completely to the floor and release all the way up several times. Did the Clutch Upstop Switch state change open to closed? Yes → Go To 2 No → Go To 3	All

P0833-CLUTCH RELEASED SWITCH CIRCUIT — Continued

TEST	ACTION	APPLICABILITY
2	**WARNING: WHEN THE ENGINE IS OPERATING, DO NOT STAND IN A DIRECT LINE WITH THE FAN. DO NOT PUT YOUR HANDS NEAR THE PULLEYS, BELTS OR FAN. DO NOT WEAR LOOSE CLOTHING.** **NOTE: The conditions that set the DTC are not present at this time. The following list may help in identifying the intermittent condition.** With the engine running at normal operating temperature, monitor the DRBIII® parameters related to the DTC while wiggling the wiring harness. Look for parameter values to change and/or a DTC to set. Review the DRBIII® Freeze Frame information. If possible, try to duplicate the conditions under which the DTC was set. Refer to any Technical Service Bulletins (TSB) that may apply. Visually inspect the related wiring harness. Look for any chafed, pierced, pinched, or partially broken wires. Visually inspect the related wiring harness connectors. Look for broken, bent, pushed out, or corroded terminals. Were any of the above conditions present? Yes → Repair as necessary Perform POWERTRAIN VERIFICATION TEST VER - 5. No → Test Complete.	All
3	Disconnect the Clutch Pedal Position Switch harness connector. Connect a jumper wire between the Ground circuit and the Clutch Upstop Switch Signal circuit in the Clutch Pedal Position Switch harness connector. With the DRBIII®, monitor the Clutch Upstop Switch status. Did the Clutch Upstop Switch status change from Open to Closed? Yes → Replace the Clutch Pedal Position Switch. Perform POWERTRAIN VERIFICATION TEST VER - 5. No → Go To 4	All
4	Turn the ignition off. Disconnect the Clutch Pedal Position Switch harness connector. Disconnect the PCM harness connector. Measure the resistance of the Clutch Upstop Signal circuit in the Clutch Pedal Position Switch harness connector to ground. Is the resistance below 100 ohms? Yes → Repair the Clutch Upstop circuit for a short to ground. Perform POWERTRAIN VERIFICATION TEST VER - 5. No → Go To 5	All
5	Turn the ignition off. Disconnect the Clutch Pedal Position Switch harness connector. Disconnect the PCM harness connector. Measure the resistance of the Clutch Upstop Signal circuit between the Clutch Pedal Position Switch harness connector and the PCM harness connector. Is the resistance below 5.0 ohms? Yes → Go To 6 No → Repair the Clutch Upstop Signal circuit for an open. Perform POWERTRAIN VERIFICATION TEST VER - 5.	All

P0833-CLUTCH RELEASED SWITCH CIRCUIT — Continued

TEST	ACTION	APPLICABILITY
6	Turn the ignition off. Disconnect Clutch Pedal Position Switch harness connector. Using a 12-volt test light connected to 12-volts, probe the ground circuit in the Clutch Pedal Position Switch harness connector. Does the test light illuminate brightly? Yes → Go To 7 No → Repair the ground circuit for an open. Perform POWERTRAIN VERIFICATION TEST VER - 5.	All
7	If there are no possible causes remaining, view repair. Repair Replace and program the Powertrain Control Module in accordance with the Service Information. Perform POWERTRAIN VERIFICATION TEST VER - 5.	All

Symptom:

P1192-INLET AIR TEMP SENSOR VOLTAGE LOW

When Monitored and Set Condition:

P1192-INLET AIR TEMP SENSOR VOLTAGE LOW

When Monitored: With the ignition on and battery voltage greater than 10.4 volts.

Set Condition: The Inlet Air Temperature (IAT) sensor circuit voltage at the PCM goes below 0.8 volt.

POSSIBLE CAUSES
INTERMITTENT CONDITION
IAT SENSOR INTERNAL FAILURE
IAT SENSOR SIGNAL SHORTED TO GROUND
IAT SENSOR SIGNAL SHORTED TO SENSOR GROUND CIRCUIT
PCM

TEST	ACTION	APPLICABILITY
1	Turn the ignition on. With the DRBIII®, read the IAT voltage. Is the voltage below 1.0 volt? Yes → Go To 2 No → Go To 6	All
2	Turn the ignition off. Disconnect the IAT harness connector. Turn the ignition on. With the DRBIII®, read IAT voltage. Is the voltage above 1.0 volt? Yes → Replace the IAT Sensor. Perform POWERTRAIN VERIFICATION TEST VER - 5. No → Go To 3	All
3	Turn the ignition off. Disconnect the IAT Sensor harness connector. Disconnect the PCM harness connector. Measure the resistance of the IAT Sensor Signal circuit between the IAT Sensor harness connector and ground. Is the resistance below 100 ohms? Yes → Repair the IAT Sensor Signal circuit for a short to ground. Perform POWERTRAIN VERIFICATION TEST VER - 5. No → Go To 4	All

P1192-INLET AIR TEMP SENSOR VOLTAGE LOW — Continued

TEST	ACTION	APPLICABILITY
4	Turn the ignition off. Disconnect the IAT Sensor harness connector. Disconnect the PCM harness connector. Measure the resistance between the IAT Sensor Signal circuit and the Sensor ground circuit in the IAT Sensor harness connector. Is the resistance below 100 ohms? Yes → Repair the IAT Sensor Signal circuit for a short to the Sensor ground circuit. Perform POWERTRAIN VERIFICATION TEST VER - 5. No → Go To 5	All
5	If there are no possible causes remaining, view repair. Repair Replace and program the Powertrain Control Module in accordance with the Service Information. Perform POWERTRAIN VERIFICATION TEST VER - 5.	All
6	**WARNING: WHEN THE ENGINE IS OPERATING, DO NOT STAND IN A DIRECT LINE WITH THE FAN. DO NOT PUT YOUR HANDS NEAR THE PULLEYS, BELTS OR FAN. DO NOT WEAR LOOSE CLOTHING.** **NOTE: The conditions that set the DTC are not present at this time. The following list may help in identifying the intermittent condition.** With the engine running at normal operating temperature, monitor the DRBIII® parameters related to the DTC while wiggling the wiring harness. Look for parameter values to change and/or a DTC to set. Review the DRBIII® Freeze Frame information. If possible, try to duplicate the conditions under which the DTC was set. Refer to any Technical Service Bulletins (TSB) that may apply. Visually inspect the related wiring harness. Look for any chafed, pierced, pinched, or partially broken wires. Visually inspect the related wiring harness connectors. Look for broken, bent, pushed out, or corroded terminals. Were any of the above conditions present? Yes → Repair as necessary Perform POWERTRAIN VERIFICATION TEST VER - 5. No → Test Complete.	All

Symptom:

P1193-INLET AIR TEMP SENSOR VOLTAGE HIGH

When Monitored and Set Condition:

P1193-INLET AIR TEMP SENSOR VOLTAGE HIGH

When Monitored: With the ignition on and battery voltage greater than 10.4 volts.

Set Condition: The inlet air temperature (IAT) sensor circuit voltage at the PCM goes above 4.9 volts.

POSSIBLE CAUSES
INTERMITTENT CONDITION
IAT SENSOR SIGNAL CIRCUIT SHORTED TO BATTERY VOLTAGE
IAT SENSOR INTERNAL FAILURE
IAT SENSOR SIGNAL CIRCUIT OPEN
SENSOR GROUND CIRCUIT OPEN
PCM

TEST	ACTION	APPLICABILITY
1	Turn the ignition on. With the DRBIII®, read the IAT voltage. Is the voltage above 4.6 volts? Yes → Go To 2 No → Go To 7	All
2	Turn the ignition off. Disconnect the IAT Sensor harness connector. Turn the ignition on. Measure the voltage of the IAT Sensor Signal circuit in the IAT Sensor harness connector. Is the voltage above 5.2 volts? Yes → Repair the IAT Sensor Signal circuit for a short to battery voltage. Perform POWERTRAIN VERIFICATION TEST VER - 5. No → Go To 3	All
3	Turn the ignition off. Disconnect the IAT harness connector. Connect a jumper wire between the IAT Sensor Signal circuit and the Sensor ground circuit in the IAT harness connector. Turn the ignition on. With the DRBIII®, read IAT voltage. Is the voltage below 1.0 volt? Yes → Replace the IAT Sensor. Perform POWERTRAIN VERIFICATION TEST VER - 5. No → Go To 4	All

P1193-INLET AIR TEMP SENSOR VOLTAGE HIGH — Continued

TEST	ACTION	APPLICABILITY
4	Turn the ignition off. Disconnect the IAT Sensor harness connector. Disconnect the PCM harness connector. Measure the resistance of the IAT Sensor Signal circuit between the IAT Sensor harness connector and the PCM harness connector. Is the resistance below 5.0 ohms? Yes → Go To 5 No → Repair the IAT Sensor Signal circuit for an open. Perform POWERTRAIN VERIFICATION TEST VER - 5.	All
5	Turn the ignition off. Disconnect the IAT Sensor harness connector. Disconnect the PCM harness connector. Measure the resistance of the Sensor ground circuit between the IAT Sensor harness connector and the PCM harness connector. Is the resistance below 5.0 ohms? Yes → Go To 6 No → Repair the Sensor ground circuit for an open. Perform POWERTRAIN VERIFICATION TEST VER - 5.	All
6	If there are no possible causes remaining, view repair. Repair Replace and program the Powertrain Control Module in accordance with the Service Information. Perform POWERTRAIN VERIFICATION TEST VER - 5.	All
7	**WARNING: WHEN THE ENGINE IS OPERATING, DO NOT STAND IN A DIRECT LINE WITH THE FAN. DO NOT PUT YOUR HANDS NEAR THE PULLEYS, BELTS OR FAN. DO NOT WEAR LOOSE CLOTHING.** **NOTE: The conditions that set the DTC are not present at this time. The following list may help in identifying the intermittent condition.** With the engine running at normal operating temperature, monitor the DRBIII® parameters related to the DTC while wiggling the wiring harness. Look for parameter values to change and/or a DTC to set. Review the DRBIII® Freeze Frame information. If possible, try to duplicate the conditions under which the DTC was set. Refer to any Technical Service Bulletins (TSB) that may apply. Visually inspect the related wiring harness. Look for any chafed, pierced, pinched, or partially broken wires. Visually inspect the related wiring harness connectors. Look for broken, bent, pushed out, or corroded terminals. Were any of the above conditions present? Yes → Repair as necessary Perform POWERTRAIN VERIFICATION TEST VER - 5. No → Test Complete.	All

Symptom:
P1195-1/1 O2 SENSOR SLOW DURING CATALYST MONITOR

When Monitored and Set Condition:

P1195-1/1 O2 SENSOR SLOW DURING CATALYST MONITOR

When Monitored: With the engine running, coolant greater than 70°C (158°F), open throttle, steady to slightly increasing vehicle speed greater than 18 mph but less than 55 mph, with a light load on the engine, for a period no less than 5 minutes.

Set Condition: The oxygen sensor signal voltage is switching from below 0.39 volt to above 0.6 volts and back fewer times than required.

POSSIBLE CAUSES
INTERMITTENT CONDITION
EXHAUST LEAK
O2 SENSOR SIGNAL CIRCUIT VOLTAGE DROP
O2 SENSOR GROUND CIRCUIT VOLTAGE DROP
O2 SENSOR

TEST	ACTION	APPLICABILITY
1	**NOTE: Check for contaminants that may have damaged the O2 Sensor: contaminated fuel, unapproved silicone, oil and coolant.** Turn the ignition on. With the DRBIII®, read DTC's. Is the Good Trip displayed and equal to zero? Yes → Go To 2 No → Go To 6	All
2	Start the engine. Inspect the exhaust for leak between the engine and the O2 sensor. Inspect the exhaust for leaks between the engine and the appropriate rear O2 Sensor. Are there any exhaust leaks? Yes → Repair or replace the leaking exhaust parts as necessary. Perform POWERTRAIN VERIFICATION TEST VER - 5. No → Go To 3	All

P1195-1/1 O2 SENSOR SLOW DURING CATALYST MONITOR — Continued

TEST	ACTION	APPLICABILITY
3	**NOTE: Ensure the voltmeter leads meet the terminals in the connector and that there is good terminal to wire connection.** **NOTE: Ensure the voltmeter leads are connected for positive polarity** Back probe the O2 Sensor Signal circuit at the O2 Sensor harness connector and PCM harness connector. Start the engine. Allow the engine to idle. Is the voltage below 0.10 volt? Yes → Go To 4 No → Repair the high resistance on the O2 Sensor Signal circuit. Perform POWERTRAIN VERIFICATION TEST VER - 5.	All
4	**NOTE: Ensure the voltmeter leads meet the terminals in the connector and that there is good terminal to wire connection.** **NOTE: Ensure the voltmeter leads are connected for positive polarity** Back probe the O2 Sensor ground circuit at the O2 Sensor harness connector and PCM harness connector. Start the engine. Allow the engine to idle. Is the voltage below 0.10 volt? Yes → Go To 5 No → Repair the high resistance on the O2 Sensor ground circuit. Perform POWERTRAIN VERIFICATION TEST VER - 5.	All
5	If there are no possible causes remaining, view repair. Repair Replace the O2 Sensor Perform POWERTRAIN VERIFICATION TEST VER - 5.	All
6	**NOTE: Check for contaminates that may have damaged the O2 Sensor: contaminated fuel, unapproved silicone, oil and coolant.** **WARNING: WHEN THE ENGINE IS OPERATING, DO NOT STAND IN A DIRECT LINE WITH THE FAN. DO NOT PUT YOUR HANDS NEAR THE PULLEYS, BELTS OR FAN. DO NOT WEAR LOOSE CLOTHING.** **NOTE: The conditions that set the DTC are not present at this time. The following list may help in identifying the intermittent condition.** With the engine running at normal operating temperature, monitor the DRBIII® parameters related to the DTC while wiggling the wiring harness. Look for parameter values to change and/or a DTC to set. Review the DRBIII® Freeze Frame information. If possible, try to duplicate the conditions under which the DTC was set. Refer to any Technical Service Bulletins (TSB) that may apply. Visually inspect the related wiring harness. Look for any chafed, pierced, pinched, or partially broken wires. Visually inspect the related wiring harness connectors. Look for broken, bent, pushed out, or corroded terminals. Were any of the above conditions present? Yes → Repair as necessary Perform POWERTRAIN VERIFICATION TEST VER - 5. No → Test Complete.	All

Symptom:

P1281-ENGINE IS COLD TOO LONG

When Monitored and Set Condition:

P1281-ENGINE IS COLD TOO LONG

When Monitored: The ignition key on, engine running.

Set Condition: The engine does not warm to 71°C (160°F) while driving (throttle off idle) greater than 20 MPH for 27 minutes after start.

POSSIBLE CAUSES
COOLING SYSTEM PROBLEM

TEST	ACTION	APPLICABILITY
1	**NOTE: The best way to diagnose this DTC is to allow the vehicle to remain outside overnight in order to have a completely cold soaked engine.** **NOTE: Extremely cold outside ambient temperatures may cause this DTC to set.** Verify that the coolant level is correct. If not, repair as necessary **NOTE: Ensure the ECT Sensor is operating correctly.** With the DRBIII®, monitor the Engine Coolant Temperature value during the warm up cycle. Make sure the transition of the temperature change is smooth. Did the engine temperature reach a minimum of 71°C (160°F)? Yes → Test Complete. No → Refer to the Service Information for cooling system performance diagnosis. The most probable cause is a Thermostat problem. Also, refer to any related TSBs. Perform POWERTRAIN VERIFICATION TEST VER - 5.	All

Symptom:

P1282-FUEL PUMP RELAY CONTROL CIRCUIT

When Monitored and Set Condition:

P1282-FUEL PUMP RELAY CONTROL CIRCUIT

When Monitored: With the ignition on. Battery voltage greater than 10.4 volts.

Set Condition: An open or shorted condition is detected in the fuel pump relay control circuit.

POSSIBLE CAUSES
FUEL PUMP RELAY INTERMITTENT OPERATION
INTERMITTENT CONDITION
FUSED IGNITION SWITCH OUTPUT CIRCUIT OPEN
INTELLIGENT POWER MODULE
FUEL PUMP RELAY
IPM FUSE & RELAY CENTER
FUEL PUMP RELAY CONTROL CIRCUIT OPEN
FUEL PUMP RELAY CONTROL CIRCUIT SHORT TO GROUND
PCM

TEST	ACTION	APPLICABILITY
1	Turn the ignition on. With the DRBIII®, actuate the Fuel Pump Relay. Is the Fuel Pump Relay operating? Yes → Go To 2 No → Go To 4	All
2	Turn the ignition on. With the DRBIII®, actuate the Fuel Pump Relay. Wiggle the wiring harness from the Fuel Pump Relay to the PCM while the relay is actuating. Did the Fuel Pump Relay stop when wiggling the wiring harness? Yes → Repair as necessary. Perform POWERTRAIN VERIFICATION TEST VER - 5. No → Go To 3	All

P1282-FUEL PUMP RELAY CONTROL CIRCUIT — Continued

TEST	ACTION	APPLICABILITY
3	**WARNING: WHEN THE ENGINE IS OPERATING, DO NOT STAND IN A DIRECT LINE WITH THE FAN. DO NOT PUT YOUR HANDS NEAR THE PULLEYS, BELTS OR FAN. DO NOT WEAR LOOSE CLOTHING.** **NOTE: The conditions that set the DTC are not present at this time. The following list may help in identifying the intermittent condition.** With the engine running at normal operating temperature, monitor the DRBIII® parameters related to the DTC while wiggling the wiring harness. Look for parameter values to change and/or a DTC to set. Review the DRBIII® Freeze Frame information. If possible, try to duplicate the conditions under which the DTC was set. Refer to any Technical Service Bulletins (TSB) that may apply. Visually inspect the related wiring harness. Look for any chafed, pierced, pinched, or partially broken wires. Visually inspect the related wiring harness connectors. Look for broken, bent, pushed out, or corroded terminals. Were any of the above conditions present? Yes → Repair as necessary Perform POWERTRAIN VERIFICATION TEST VER - 5. No → Test Complete.	All
4	Turn the ignition off. Remove the Fuel Pump Relay from the IPM. Turn the ignition on. Using a 12-volt test light connected to ground, probe the Fused Ignition Switch circuit in the IPM. Does the test light illuminate? Yes → Go To 5 No → Go To 10	All
5	Turn the ignition off. Remove the Fuel Pump Relay from the IPM. Turn the ignition on. Using a 12-volt test light connected to 12-volts, probe the Fuel Pump Relay Control circuit in the IPM. With the DRBIII®, actuate the Fuel Pump Relay. Does the test light flash on and off? Yes → Replace the Fuel Pump Relay. Perform POWERTRAIN VERIFICATION TEST VER - 5. No → Go To 6	All
6	Turn the ignition off. Disconnect the Intelligent Power Module C3 harness connector. Turn the ignition on. Using a 12-volt test light connected to 12-volts, probe the Fuel Pump Relay Control circuit in the IPM harness connector.. With the DRBIII®, actuate the Fuel Pump Relay. Does the test light flash on and off? Yes → Replace the IPM Fused & Relay Center. Perform POWERTRAIN VERIFICATION TEST VER - 5. No → Go To 7	All

P1282-FUEL PUMP RELAY CONTROL CIRCUIT — Continued

TEST	ACTION	APPLICABILITY
7	Turn the ignition off. Disconnect the Intelligent Power Module C3 harness connector. Disconnect the PCM harness connector. Measure the resistance of the Fuel Pump Relay Control circuit between the Intelligent Power Module C3 harness connector and the PCM harness connector. Is the resistance below 5.0 ohms? Yes → Go To 8 No → Repair the Fuel Pump Relay Control circuit for an open. Perform POWERTRAIN VERIFICATION TEST VER - 5.	All
8	Turn the ignition off. Disconnect the Intelligent Power Module C3 harness connector. Disconnect the PCM harness connector. Measure the resistance of the Fuel Pump Relay Control circuit in the Intelligent Power Module C3 harness connector to ground. Is the resistance below 5.0 ohms? Yes → Repair the Fuel Pump Relay Control circuit for a short to ground. Perform POWERTRAIN VERIFICATION TEST VER - 5. No → Go To 9	All
9	If there are no possible causes remaining, view repair. Repair Replace and program the Powertrain Control Module in accordance with the Service Information. Perform POWERTRAIN VERIFICATION TEST VER - 5.	All
10	Turn the ignition off. Disconnect the Intelligent Power Module C9 harness connector. Turn the ignition on. Using a 12-volt test light connected to ground, probe the Fused Ignition Switch circuit in the IPM harness connector. Does the test light illuminate? Yes → Replace the IPM Fuse & Relay Center. Perform POWERTRAIN VERIFICATION TEST VER - 5. No → Repair the Fused Ignition Switch Output circuit for an open. Perform POWERTRAIN VERIFICATION TEST VER - 5.	All

Symptom:
P1294-TARGET IDLE NOT REACHED

When Monitored and Set Condition:

P1294-TARGET IDLE NOT REACHED

When Monitored: With the engine idling and the transmission in drive, if automatic. There must not be a MAP sensor trouble code or a Throttle Position Sensor trouble code.

Set Condition: The engine idle is not within 200 rpm above or 100 rpm below the target idle for 40 seconds. One trip fault.

POSSIBLE CAUSES
INTERMITTENT CONDITION
IAC MOTOR PASSAGES
VACUUM LEAKS
AIR INDUCTION SYSTEM
THROTTLE BODY AND THROTTLE LINKAGE

TEST	ACTION	APPLICABILITY
1	Turn the ignition on. With the DRBIII®, read DTC's. Is the Good Trip displayed and equal to zero? Yes → Go To 2 No → Go To 6	3.3L V6 SMPI or 3.8L V6 SMPI
2	Turn the ignition off. Remove the IAC Motor. Inspect the IAC Motor and passages way for any obstructions or damage to motor. Were any problems found? Yes → Repair as necessary. Perform POWERTRAIN VERIFICATION TEST VER - 5. No → Go To 3	3.3L V6 SMPI or 3.8L V6 SMPI
3	Start the engine. Inspect the vehicle for external vacuum leaks. Inspect the engine for internal vacuum leaks. Were any vacuum leaks found? Yes → Repair the vacuum leak as necessary. Perform POWERTRAIN VERIFICATION TEST VER - 5. No → Go To 4	3.3L V6 SMPI or 3.8L V6 SMPI

P1294-TARGET IDLE NOT REACHED — Continued

TEST	ACTION	APPLICABILITY
4	Inspect the Air Induction System for the following problems. Restrictions: Dirty Air Cleaner, Foreign material trapped in the air intake tube, etc. Leaks: Air Intake tube connection, Air Cleaner housing, etc. Were any problems found? Yes → Repair or replace as necessary. Perform POWERTRAIN VERIFICATION TEST VER - 5. No → Go To 5	3.3L V6 SMPI or 3.8L V6 SMPI
5	Inspect the throttle body plate carbon build up or other restrictions. Inspect the throttle linkage for binding and smooth operation. Ensure the throttle plate is resting on the stop at idle. Were any problems found? Yes → Repair or replace as necessary. Perform POWERTRAIN VERIFICATION TEST VER - 5. No → Test Complete.	3.3L V6 SMPI or 3.8L V6 SMPI
6	**WARNING: WHEN THE ENGINE IS OPERATING, DO NOT STAND IN A DIRECT LINE WITH THE FAN. DO NOT PUT YOUR HANDS NEAR THE PULLEYS, BELTS OR FAN. DO NOT WEAR LOOSE CLOTHING.** **NOTE: The conditions that set the DTC are not present at this time. The following list may help in identifying the intermittent condition.** With the engine running at normal operating temperature, monitor the DRBIII® parameters related to the DTC while wiggling the wiring harness. Look for parameter values to change and/or a DTC to set. Review the DRBIII® Freeze Frame information. If possible, try to duplicate the conditions under which the DTC was set. Refer to any Technical Service Bulletins (TSB) that may apply. Visually inspect the related wiring harness. Look for any chafed, pierced, pinched, or partially broken wires. Visually inspect the related wiring harness connectors. Look for broken, bent, pushed out, or corroded terminals. Were any of the above conditions present? Yes → Repair as necessary Perform POWERTRAIN VERIFICATION TEST VER - 5. No → Test Complete.	3.3L V6 SMPI or 3.8L V6 SMPI

Symptom:

P1294-TARGET IDLE NOT REACHED

When Monitored and Set Condition:

P1294-TARGET IDLE NOT REACHED

When Monitored: With the engine idling and the transmission in drive, if automatic. There must not be a MAP sensor trouble code or a Throttle Position Sensor trouble code.

Set Condition: The engine idle is not within 200 rpm above or 100 rpm below the target idle for 40 seconds. One trip fault.

POSSIBLE CAUSES
IAC MOTOR OPERATION INTERMITTENT
INTERMITTENT CONDITION
IAC MOTOR OPERATION INTERMITTENT
IAC MOTOR
IAC DRIVER CIRCUIT OPEN
VACUUM LEAKS
AIR INDUCTION SYSTEM
THROTTLE BODY AND THROTTLE LINKAGE
PCM IAC MOTOR
PCM

TEST	ACTION	APPLICABILITY
1	Turn the ignition on. With the DRBIII®, read DTC's. Is the Good Trip displayed and equal to zero? Yes → Go To 2 No → Go To 10	2.4L 4 CYL DOHC 16V SMPI
2	Start the engine. Allow the engine idle to stabilize for 60 seconds. Using the DRBIII®, perform the IAC wiggle test. **NOTE: The engine idle should raise and lower with the display.** Does the RPM raise and lower correctly? Yes → Go To 3 No → Go To 6	2.4L 4 CYL DOHC 16V SMPI

P1294-TARGET IDLE NOT REACHED — Continued

TEST	ACTION	APPLICABILITY
3	Reinstall the IAC Motor. Start the engine. Inspect the vehicle for external vacuum leaks. Inspect the engine for internal vacuum leaks. Were any vacuum leaks found? Yes → Repair the vacuum leak as necessary. Perform POWERTRAIN VERIFICATION TEST VER - 5. No → Go To 4	2.4L 4 CYL DOHC 16V SMPI
4	Inspect the Air Induction System for the following problems. Restrictions: Dirty Air Cleaner, Foreign material trapped in the air intake tube, etc. Leaks: Air Intake tube connection, Air Cleaner housing, etc. Were any problems found? Yes → Repair or replace as necessary. Perform POWERTRAIN VERIFICATION TEST VER - 5. No → Go To 5	2.4L 4 CYL DOHC 16V SMPI
5	Inspect the throttle body plate carbon build up or other restrictions. Inspect the throttle linkage for binding and smooth operation. Ensure the throttle plate is resting on the stop at idle. Were any problems found? Yes → Repair or replace as necessary. Perform POWERTRAIN VERIFICATION TEST VER - 5. No → Test Complete.	2.4L 4 CYL DOHC 16V SMPI
6	Turn the ignition off. Disconnect the IAC Motor harness connector. Start and idle the engine. Using a test light connected to ground, probe the IAC Driver #1 circuit for 10 seconds. Repeat the above test for the remaining IAC Motor Driver circuits. Does the test light turn on and off while probing each IAC Motor Driver circuit? Yes → Go To 7 No → Go To 8	2.4L 4 CYL DOHC 16V SMPI
7	Turn the ignition off. Disconnect the IAC Motor harness connector. Start and idle the engine. Using a test light connected to battery positive, probe the IAC Driver #1 circuit for 10 seconds. Repeat the above test for the remaining IAC Motor Driver circuits. Does the test light turn on and off while probing each IAC Motor Driver circuit? Yes → Replace the IAC Motor. Perform POWERTRAIN VERIFICATION TEST VER - 5. No → Replace and program the Powertrain Control Module in accordance with the Service Information. Perform POWERTRAIN VERIFICATION TEST VER - 5.	2.4L 4 CYL DOHC 16V SMPI

P1294-TARGET IDLE NOT REACHED — Continued

TEST	ACTION	APPLICABILITY
8	Turn the ignition off. Disconnect IAC Motor harness connector. Disconnect the PCM harness connector. Measure the resistance of the IAC Driver circuit between the IAC Motor harness connector and the PCM harness connector that indicated no test light illumination. Is the resistance below 5.0 ohms? Yes → Go To 9 No → Repair the IAC Driver circuit(s) for an open. Perform POWERTRAIN VERIFICATION TEST VER - 5.	2.4L 4 CYL DOHC 16V SMPI
9	If there are no possible causes remaining, view repair. Repair Replace and program the Powertrain Control Module in accordance with the Service Information. Perform POWERTRAIN VERIFICATION TEST VER - 5.	2.4L 4 CYL DOHC 16V SMPI
10	Start the engine. Allow the engine idle to stabilize for 60 seconds. Using the DRBIII®, perform the IAC wiggle test. **NOTE: The engine idle should raise and lower with the display.** Does the RPM raise and lower correctly? Yes → Go To 11 No → Refer to symptom Checking the IAC Motor in the Driveability category. Perform POWERTRAIN VERIFICATION TEST VER - 5.	2.4L 4 CYL DOHC 16V SMPI
11	**WARNING: WHEN THE ENGINE IS OPERATING, DO NOT STAND IN A DIRECT LINE WITH THE FAN. DO NOT PUT YOUR HANDS NEAR THE PULLEYS, BELTS OR FAN. DO NOT WEAR LOOSE CLOTHING.** **NOTE: The conditions that set the DTC are not present at this time. The following list may help in identifying the intermittent condition.** Inspect the throttle linkage, ensure smooth operation. Ensure the throttle linkage allows the throttle plate to close fully and rests on the stop. With the engine running at normal operating temperature, monitor the DRBIII® parameters related to the DTC while wiggling the wiring harness. Look for parameter values to change and/or a DTC to set. Review the DRBIII® Freeze Frame information. If possible, try to duplicate the conditions under which the DTC was set. Refer to any Technical Service Bulletins (TSB) that may apply. Visually inspect the related wiring harness. Look for any chafed, pierced, pinched, or partially broken wires. Visually inspect the related wiring harness connectors. Look for broken, bent, pushed out, or corroded terminals. Were any of the above conditions present? Yes → Repair as necessary Perform POWERTRAIN VERIFICATION TEST VER - 5. No → Test Complete.	2.4L 4 CYL DOHC 16V SMPI

Symptom:

P1297-NO CHANGE IN MAP FROM START TO RUN

When Monitored and Set Condition:

P1297-NO CHANGE IN MAP FROM START TO RUN

When Monitored: With engine RPM +/- 64 of target idle and the throttle blade at closed throttle.

Set Condition: Too small of a difference is seen between barometric pressure with ignition on (engine not running) and manifold vacuum for 8.80 seconds (engine running).

POSSIBLE CAUSES
INTERMITTENT CONDITION
5 VOLT SUPPLY CIRCUIT SHORTED TO GROUND
5 VOLT SUPPLY CIRCUIT OPEN
MAP SENSOR INTERNAL FAILURE
MAP SENSOR SIGNAL CIRCUIT SHORTED TO GROUND
MAP SENSOR SIGNAL CIRCUIT SHORTED TO SENSOR GROUND CIRCUIT
MAP 5 VOLT SUPPLY CIRCUIT OPEN
MAP SENSOR VACUUM PORT
MAP SENSOR
PCM 5 VOLT SUPPLY CIRCUIT
PCM MAP SENSOR SIGNAL

TEST	ACTION	APPLICABILITY
1	**NOTE: If a MAP high or Low DTC set along with P1297, diagnose the High or Low DTC first before continuing.** Turn the ignition on. With the DRBIII®, read DTC's. Is the Good Trip displayed and equal to zero? Yes → Go To 2 No → Go To 14	All
2	Turn the ignition on. With the DRBIII®, read the MAP Sensor voltage. Is the voltage below 3.19 volts. Yes → Go To 3 No → Go To 11	All

P1297-NO CHANGE IN MAP FROM START TO RUN — Continued

TEST	ACTION	APPLICABILITY
3	Turn the ignition off. Disconnect the MAP Sensor harness connector. Turn the ignition on. Measure the voltage of the 5 Volt Supply circuit in the MAP Sensor harness connector. Is the voltage between 4.5 to 5.2 volts? Yes → Go To 4 No → Go To 8	All
4	Turn the ignition off. Disconnect the MAP Sensor harness connector. With the DRBIII®, monitor the MAP Sensor voltage. Turn the ignition on. Is the voltage above 1.2 volts? Yes → Replace the MAP Sensor. Perform POWERTRAIN VERIFICATION TEST VER - 5. No → Go To 5	All
5	Turn the ignition off. Disconnect the MAP Sensor harness connector. Disconnect the PCM harness connector. Measure the resistance of the MAP Sensor Signal circuit in the MAP Sensor harness connector to ground. Is the resistance below 100 ohms? Yes → Repair the MAP Sensor Signal circuit for a short to ground. Perform POWERTRAIN VERIFICATION TEST VER - 5. No → Go To 6	All
6	Turn the ignition off. Disconnect the MAP Sensor harness connector. Disconnect the PCM harness connector. Measure the resistance between the MAP Sensor Signal circuit and the Sensor ground circuit in the MAP Sensor harness connector. Is the resistance below 100 ohms? Yes → Repair the MAP Sensor Signal circuit for a short to the Sensor ground circuit. Perform POWERTRAIN VERIFICATION TEST VER - 5. No → Go To 7	All
7	If there are no possible causes remaining, view repair. Repair Replace and program the Powertrain Control Module in accordance with the Service Information. Perform POWERTRAIN VERIFICATION TEST VER - 5.	All

P1297-NO CHANGE IN MAP FROM START TO RUN — Continued

TEST	ACTION	APPLICABILITY
8	Turn the ignition off. Disconnect the MAP Sensor harness connector. Disconnect the PCM harness connector. Measure the resistance of the 5 Volt Supply circuit in the MAP Sensor harness connector to ground. Is the resistance below 100 ohms? Yes → Repair the 5 Volt Supply circuit for a short to ground. Perform POWERTRAIN VERIFICATION TEST VER - 5. No → Go To 9	All
9	Turn the ignition off. Disconnect the MAP Sensor harness connector. Disconnect the PCM harness connector. Measure the resistance of the 5 Volt Supply circuit between the MAP Sensor harness connector and the PCM harness connector. Is the resistance below 5.0 ohms? Yes → Go To 10 No → Repair the 5 Volt Supply circuit for an open. Perform POWERTRAIN VERIFICATION TEST VER - 5.	All
10	If there are no possible causes remaining, view repair. Repair Replace and program the Powertrain Control Module in accordance with the Service Information. Perform POWERTRAIN VERIFICATION TEST VER - 5.	All
11	Turn the ignition off. Disconnect the MAP Sensor harness connector. Disconnect the PCM harness connector. Measure the resistance of the 5 Volt Supply circuit between the MAP Sensor harness connector and the PCM harness connector. Is the resistance below 5.0 ohms? Yes → Go To 12 No → Repair the 5 Volt Supply circuit for an open. Perform POWERTRAIN VERIFICATION TEST VER - 5.	All
12	Turn the ignition off. Remove the MAP Sensor. Inspect the vacuum port, check for restrictions or any foreign materials. Were any restriction found? Yes → Repair as necessary. Perform POWERTRAIN VERIFICATION TEST VER - 5. No → Go To 13	All
13	If there are no possible causes remaining, view repair. Repair Replace the MAP Sensor. Perform POWERTRAIN VERIFICATION TEST VER - 5.	All

P1297-NO CHANGE IN MAP FROM START TO RUN — Continued

TEST	ACTION	APPLICABILITY
14	**WARNING: WHEN THE ENGINE IS OPERATING, DO NOT STAND IN A DIRECT LINE WITH THE FAN. DO NOT PUT YOUR HANDS NEAR THE PULLEYS, BELTS OR FAN. DO NOT WEAR LOOSE CLOTHING.** **NOTE: The conditions that set the DTC are not present at this time. The following list may help in identifying the intermittent condition.** **NOTE: Remove the MAP Sensor and inspect the MAP and vacuum passage for restrictions and foriegn material** With the engine running at normal operating temperature, monitor the DRBIII® parameters related to the DTC while wiggling the wiring harness. Look for parameter values to change and/or a DTC to set. Review the DRBIII® Freeze Frame information. If possible, try to duplicate the conditions under which the DTC was set. Refer to any Technical Service Bulletins (TSB) that may apply. Visually inspect the related wiring harness. Look for any chafed, pierced, pinched, or partially broken wires. Visually inspect the related wiring harness connectors. Look for broken, bent, pushed out, or corroded terminals. Were any of the above conditions present? Yes → Repair as necessary Perform POWERTRAIN VERIFICATION TEST VER - 5. No → Test Complete.	All

Symptom:
P1299-VACUUM LEAK FOUND (IAC FULLY SEATED)

When Monitored and Set Condition:

P1299-VACUUM LEAK FOUND (IAC FULLY SEATED)

When Monitored: With the engine running.

Set Condition: The MAP sensor signal does not correlate to the TPS signal.

POSSIBLE CAUSES
VACUUM LEAK
THROTTLE POSITION SENSOR SWEEP
MAP SENSOR OPERATION
TP SENSOR FULLY SEATED
INTERMITTENT CONDITION

TEST	ACTION	APPLICABILITY
1	**NOTE: A large vacuum leak is likely the cause of this DTC.** Inspect the Intake manifold for vacuum leaks. Inspect the Power Brake Booster for any vacuum leaks. Inspect the PCV system for proper operation or any vacuum leaks. Were any vacuum leaks found? Yes → Repair vacuum leak as necessary. Perform POWERTRAIN VERIFICATION TEST VER - 5. No → Go To 2	All
2	Turn the ignition on. With the DRBIII®, monitor the Throttle Position Sensor voltage. Slowly open the throttle from the idle position to the wide open throttle position. Does voltage start at approximately 0.8 volts and go above 3.5 volts with a smooth voltage change? Yes → Go To 3 No → Replace the Throttle Position Sensor. Perform POWERTRAIN VERIFICATION TEST VER - 5.	All
3	**NOTE: The throttle must be fully seated and rest on the throttle stop.** Turn the ignition on. With the DRBIII®, read the Throttle Position Sensor voltage. Is the voltage below 1.5 volts? Yes → Go To 4 No → Replace the Throttle Position Sensor. Perform POWERTRAIN VERIFICATION TEST VER - 5.	All

P1299-VACUUM LEAK FOUND (IAC FULLY SEATED) — Continued

TEST	ACTION	APPLICABILITY
4	Turn the ignition off. Connect a vacuum gauge to manifold vacuum. Start the engine and allow it to reach operating temperature. **NOTE: If the engine will not idle, maintain a constant RPM above idle.** With the DRBIII®, read the MAP Sensor vacuum value. Is the DRB reading within 1″ of the vacuum gauge? Yes → Go To 5 No → Replace the MAP Sensor Perform POWERTRAIN VERIFICATION TEST VER - 5.	All
5	**WARNING: WHEN THE ENGINE IS OPERATING, DO NOT STAND IN A DIRECT LINE WITH THE FAN. DO NOT PUT YOUR HANDS NEAR THE PULLEYS, BELTS OR FAN. DO NOT WEAR LOOSE CLOTHING.** **NOTE: The conditions that set the DTC are not present at this time. The following list may help in identifying the intermittent condition.** With the engine running at normal operating temperature, monitor the DRBIII® parameters related to the DTC while wiggling the wiring harness. Look for parameter values to change and/or a DTC to set. Review the DRBIII® Freeze Frame information. If possible, try to duplicate the conditions under which the DTC was set. Refer to any Technical Service Bulletins (TSB) that may apply. Visually inspect the related wiring harness. Look for any chafed, pierced, pinched, or partially broken wires. Visually inspect the related wiring harness connectors. Look for broken, bent, pushed out, or corroded terminals. Were any of the above conditions present? Yes → Repair as necessary Perform POWERTRAIN VERIFICATION TEST VER - 5. No → Test Complete.	All

Symptom:

P1388-AUTO SHUTDOWN RELAY CONTROL CIRCUIT

When Monitored and Set Condition:

P1388-AUTO SHUTDOWN RELAY CONTROL CIRCUIT

When Monitored: With ignition on. Battery voltage above 10 volts.

Set Condition: An open or shorted condition is detected in the ASD relay control circuit.

POSSIBLE CAUSES
ASD RELAY INTERMITTENT OPERATION
INTERMITTENT CONDITION
FUSED B+ OUTPUT CIRCUIT
ASD RELAY
IPM FUSE & RELAY CENTER
ASD RELAY CONTROL CIRCUIT OPEN
ASD RELAY CONTROL CIRCUIT SHORT TO GROUND
PCM

TEST	ACTION	APPLICABILITY
1	Turn the ignition on. With the DRBIII®, actuate the ASD Relay. Is the ASD Relay operating? Yes → Go To 2 No → Go To 4	All
2	Turn the ignition on. With the DRBIII®, actuate the ASD Relay. Wiggle the wiring harness from the ASD Relay to the PCM while the relay is actuating. Did the ASD Relay stop when wiggling the wiring harness? Yes → Repair as necessary. Perform POWERTRAIN VERIFICATION TEST VER - 5. No → Go To 3	All

P1388-AUTO SHUTDOWN RELAY CONTROL CIRCUIT — Continued

TEST	ACTION	APPLICABILITY
3	**WARNING: WHEN THE ENGINE IS OPERATING, DO NOT STAND IN A DIRECT LINE WITH THE FAN. DO NOT PUT YOUR HANDS NEAR THE PULLEYS, BELTS OR FAN. DO NOT WEAR LOOSE CLOTHING.** **NOTE: The conditions that set the DTC are not present at this time. The following list may help in identifying the intermittent condition.** With the engine running at normal operating temperature, monitor the DRBIII® parameters related to the DTC while wiggling the wiring harness. Look for parameter values to change and/or a DTC to set. Review the DRBIII® Freeze Frame information. If possible, try to duplicate the conditions under which the DTC was set. Refer to any Technical Service Bulletins (TSB) that may apply. Visually inspect the related wiring harness. Look for any chafed, pierced, pinched, or partially broken wires. Visually inspect the related wiring harness connectors. Look for broken, bent, pushed out, or corroded terminals. Were any of the above conditions present? Yes → Repair as necessary Perform POWERTRAIN VERIFICATION TEST VER - 5. No → Test Complete.	All
4	**NOTE: Inspect the ASD Relay fuse located in the IPM. If the ASD Relay fuse is open, repair the cause of the open first before continuing. Inspect the ASD Relay Output circuit for a short to ground for the cause of the open fuse.** Turn the ignition off. Remove the ASD Relay from the IPM. Turn the ignition on. Using a 12-volt test light connected to ground, probe the Fused B+ circuit in the IPM. Does the test light illuminate? Yes → Go To 5 No → Replace the IPM Fuse & Relay Center. Perform POWERTRAIN VERIFICATION TEST VER - 5.	All
5	Turn the ignition off. Remove the ASD Relay from the IPM. Turn the ignition on. Using a 12-volt test light connected to 12-volts, probe the ASD Relay Control circuit in the IPM. With the DRBIII®, actuate the ASD Relay. Does the test light flash on and off? Yes → Replace the ASD Relay. Perform POWERTRAIN VERIFICATION TEST VER - 5. No → Go To 6	All
6	Turn the ignition off. Disconnect the Intelligent Power Module C3 harness connector. Turn the ignition on. Using a 12-volt test light connected to 12-volts, probe the ASD Relay Control circuit in the IPM harness connector. With the DRBIII®, actuate the ASD Relay. Does the test light flash on and off? Yes → Replace the IPM Fused & Relay Center. Perform POWERTRAIN VERIFICATION TEST VER - 5. No → Go To 7	All

P1388-AUTO SHUTDOWN RELAY CONTROL CIRCUIT — Continued

TEST	ACTION	APPLICABILITY
7	Turn the ignition off. Disconnect the Intelligent Power Module C3 harness connector. Disconnect the PCM harness connector. Measure the resistance of the ASD Relay Control circuit between the Intelligent Power Module C3 harness connector and the PCM harness connector. Is the resistance below 5.0 ohms. Yes → Go To 8 No → Repair the ASD Relay Control circuit for an open. Perform POWERTRAIN VERIFICATION TEST VER - 5.	All
8	Turn the ignition off. Disconnect the Intelligent Power Module C3 harness connector. Disconnect the PCM harness connector. Measure the resistance of the ASD Relay Control circuit in the Intelligent Power Module C3 harness connector to ground. Is the resistance below 5.0 ohms. Yes → Repair the ASD Relay Control circuit for a short to ground. Perform POWERTRAIN VERIFICATION TEST VER - 5. No → Go To 9	All
9	If there are no possible causes remaining, view repair. Repair Replace and program the Powertrain Control Module Module in accordance with the Service Information. Perform POWERTRAIN VERIFICATION TEST VER - 5.	All

Symptom:

P1389-NO ASD RELAY OUTPUT VOLTAGE AT PCM

When Monitored and Set Condition:

P1389-NO ASD RELAY OUTPUT VOLTAGE AT PCM

When Monitored: With ignition key on. Battery voltage greater than 10 volts.

Set Condition: No voltage sensed at the PCM when the ASD relay is energized.

POSSIBLE CAUSES
INTERMITTENT CONDITION
ASD RELAY
FUSED B+ CIRCUIT
ASD RELAY OUTPUT CIRCUIT OPEN (NO START)
IPM FUSE & RELAY CENTER
ASD RELAY OUTPUT CIRCUIT OPEN
PCM START
PCM

TEST	ACTION	APPLICABILITY
1	**NOTE: Inspect the ASD Relay fuse located in the IPM. If the ASD Relay fuse is open, repair the cause of the open first before continuing. Inspect the ASD Relay Output circuit for a short to ground for the cause of the open fuse.** **NOTE: Diagnose P1388 - Auto Shutdown Relay Control Circuit first if set along with this DTC.** With the DRBIII®, erase the DTC. Attempt to start the engine. If the engine will not start, crank the engine for at least 15 seconds. It may be necessary to repeat several times. Does the DTC reset. Yes → Go To 2 No → Go To 9	All
2	Attempt to start the engine. Does the engine start. Yes → Go To 3 No → Go To 5	All

P1389-NO ASD RELAY OUTPUT VOLTAGE AT PCM — Continued

TEST	ACTION	APPLICABILITY
3	Turn the ignition off. Disconnect the PCM harness connector. Disconnect the IPM C4 harness connector Measure the resistance of the ASD Output circuit between the IPM harness connector and the PCM harness connector. Is the resistance below 5.0 ohms. Yes → Go To 4 No → Repair the ASD Relay Output circuit for an open. Perform POWERTRAIN VERIFICATION TEST VER - 5.	All
4	If there are no possible causes remaining, view repair. Repair Replace and program the Powertrain Control Module in accordance with the Service Information. Perform POWERTRAIN VERIFICATION TEST VER - 5.	All
5	Turn the ignition off. Install a substitute relay in place of the ASD Relay. With the DRBIII®, erase DTCs. Attempt to start the engine. With the DRBIII®, read DTCs. Does the DTC reset? Yes → Go To 6 No → Replace the ASD Relay. Perform POWERTRAIN VERIFICATION TEST VER - 5.	All
6	Turn the ignition off. Remove the ASD Relay from the IPM. Using a 12-volt test light connected to ground, probe the Fused B+ circuit in the IPM. Does the test light illuminate? Yes → Go To 7 No → Replace the IPM Fuse & Relay Center. Perform POWERTRAIN VERIFICATION TEST VER - 5.	All
7	Turn the ignition off. Remove the ASD Relay from the IPM. Disconnect the PCM harness connector. Disconnect the IPM C4 harness connector. Measure the resistance of the ASD Relay Output circuit between the IPM harness connector and the PCM harness connector. Is the resistance below 5.0 ohms. Yes → Go To 8 No → Repair the ASD Relay Output circuit for an open. Perform POWERTRAIN VERIFICATION TEST VER - 5.	All

P1389-NO ASD RELAY OUTPUT VOLTAGE AT PCM — Continued

TEST	ACTION	APPLICABILITY
8	**NOTE: Ensure the IPM C4 harness connector is connected to the IPM.** Turn the ignition off. Disconnect the PCM harness connector. Measure the resistance of the ASD Relay Output circuit between the IPM and the PCM harness connector. Is the resistance below 5.0 ohms? Yes → Replace and program the Powertrain Control Module in accordance with the Service Information. Perform POWERTRAIN VERIFICATION TEST VER - 5. No → Replace the IPM Fuse & Relay Center. Perform POWERTRAIN VERIFICATION TEST VER - 5.	All
9	**WARNING: WHEN THE ENGINE IS OPERATING, DO NOT STAND IN A DIRECT LINE WITH THE FAN. DO NOT PUT YOUR HANDS NEAR THE PULLEYS, BELTS OR FAN. DO NOT WEAR LOOSE CLOTHING.** **NOTE: The conditions that set the DTC are not present at this time. The following list may help in identifying the intermittent condition.** With the engine running at normal operating temperature, monitor the DRBIII® parameters related to the DTC while wiggling the wiring harness. Check for the engine stumble, stall or quite running. Refer to any Technical Service Bulletins (TSB) that may apply. Visually inspect the related wiring harness. Look for any chafed, pierced, pinched, or partially broken wires. Visually inspect the related wiring harness connectors. Look for broken, bent, pushed out, or corroded terminals. Were any of the above conditions present? Yes → Repair as necessary Perform POWERTRAIN VERIFICATION TEST VER - 5. No → Test Complete.	All

Symptom:

P1391-INTERMITTENT LOSS OF CMP OR CKP

When Monitored and Set Condition:

P1391-INTERMITTENT LOSS OF CMP OR CKP

When Monitored: Engine running or cranking.

Set Condition: When the failure counter reaches 20 for 2 consecutive trips.

POSSIBLE CAUSES
WIRING HARNESS INSPECTION
TONE WHEEL/PULSE RING INSPECTION
WIRING HARNESS INSPECTION
TONE WHEEL/PULSE RING INSPECTION
CHECKING INTERMITTENT CRANKSHAFT POSITION SENSOR SIGNAL WITH LAB
CHECKING INTERMITTENT CAMSHAFT POSITION SENSOR SIGNAL WITH LAB
CHECKING INTERMITTENT CKP WIRING WITH LAB SCOPE
CHECKING INTERMITTENT CMP WIRING WITH LAB SCOPE
INTERMITTENT CONDITION
CAMSHAFT POSITION SENSOR
CRANKSHAFT POSITION SENSOR

TEST	ACTION	APPLICABILITY
1	Turn the ignition on. With the DRBIII®, read DTC's. Is the Good Trip displayed and equal to zero? Yes → Go To 2 No → Go To 10	All
2	Turn the ignition off. With the DRBIII® lab scope probe and the Miller special tool #6801, backprobe the CMP Signal circuit in the CMP harness connector. **WARNING: WHEN THE ENGINE IS OPERATING, DO NOT STAND IN A DIRECT LINE WITH THE FAN. DO NOT PUT YOUR HANDS NEAR THE PULLEYS, BELTS OR FAN. DO NOT WEAR LOOSE CLOTHING.** Start the engine. Observe the lab scope screen. Are there any irregular or missing signals? Yes → Go To 3 No → Go To 6	All

P1391-INTERMITTENT LOSS OF CMP OR CKP — Continued

TEST	ACTION	APPLICABILITY
3	Visually inspect the related wiring harness. Look for any chafed, pierced, pinched, or partially broken wires. Visually inspect the related wiring harness connectors. Look for broken, bent, pushed out, or corroded terminals. Ensure the Crankshaft Position Sensor and the Camshaft Position Sensor are properly installed and the mounting bolt(s) tight. Refer to any TSB that may apply. Were any of the above conditions present? Yes → Repair as necessary Perform POWERTRAIN VERIFICATION TEST VER - 5. No → Go To 4	All
4	Turn the ignition off. Remove the Camshaft Position Sensor. Inspect the Tone Wheel/Pulse Ring or Cam Magnet Target for damage, foreign material, or excessive movement. Were any problems found? Yes → Repair or replace the Tone Wheel/Pulse Ring as necessary. Perform POWERTRAIN VERIFICATION TEST VER - 5. No → Go To 5	All
5	If there are no possible causes remaining, view repair. Repair Replace the Camshaft Position Sensor. Perform POWERTRAIN VERIFICATION TEST VER - 5.	All
6	Turn the ignition off. With the DRBIII® lab scope probe and the Miller special tool #6801, backprobe the CKP Signal circuit in the CKP harness connector. **WARNING: WHEN THE ENGINE IS OPERATING, DO NOT STAND IN A DIRECT LINE WITH THE FAN. DO NOT PUT YOUR HANDS NEAR THE PULLEYS, BELTS OR FAN. DO NOT WEAR LOOSE CLOTHING.** Start the engine. Observe the lab scope screen. Are there any irregular or missing signals? Yes → Go To 7 No → Go To 10	All
7	Visually inspect the related wiring harness. Look for any chafed, pierced, pinched, or partially broken wires. Visually inspect the related wiring harness connectors. Look for broken, bent, pushed out, or corroded terminals. Ensure the Crankshaft Position Sensor and the Camshaft Position Sensor are properly installed and the mounting bolt(s) are tight. Refer to any TSB that may apply. Were any of the above conditions present? Yes → Repair as necessary Perform POWERTRAIN VERIFICATION TEST VER - 5. No → Go To 8	All

P1391-INTERMITTENT LOSS OF CMP OR CKP — Continued

TEST	ACTION	APPLICABILITY
8	Turn the ignition off. Remove the Crankshaft Position Sensor. Inspect the Tone Wheel/Flex Plate slots for damage, foreign material, or excessive movement. Were any problems found? Yes → Repair or replace the Tone Wheel/Flex Plate as necessary. Perform POWERTRAIN VERIFICATION TEST VER - 5. No → Go To 9	All
9	If there are no possible causes remaining, view repair. Repair Replace the Crankshaft Position Sensor. Perform POWERTRAIN VERIFICATION TEST VER - 5.	All
10	Turn the ignition off. With the DRBIII® lab scope probe and the Miller special tool #6801, backprobe the CKP Signal circuit in the PCM harness connector. **WARNING: WHEN THE ENGINE IS OPERATING, DO NOT STAND IN A DIRECT LINE WITH THE FAN. DO NOT PUT YOUR HANDS NEAR THE PULLEYS, BELTS OR FAN. DO NOT WEAR LOOSE CLOTHING.** Turn the ignition on. (do not start the engine) Observe the lab scope screen. Look for any pulses generated by the CKP Sensor. Did the CKP Sensor generate any pulses? Yes → Replace the Crankshaft Position Sensor. Perform POWERTRAIN VERIFICATION TEST VER - 5. No → Go To 11	All
11	Turn the ignition off. With the DRBIII® lab scope probe and the Miller special tool #6801, backprobe the CMP Signal circuit in the PCM harness connector. **WARNING: WHEN THE ENGINE IS OPERATING, DO NOT STAND IN A DIRECT LINE WITH THE FAN. DO NOT PUT YOUR HANDS NEAR THE PULLEYS, BELTS OR FAN. DO NOT WEAR LOOSE CLOTHING.** Turn the ignition on. (do not start the engine) Observe the lab scope screen. Look for any pulses generated by the CMP Sensor. Did the CMP Sensor generate any pulses? Yes → Replace the Camshaft Position Sensor. Perform POWERTRAIN VERIFICATION TEST VER - 5. No → Go To 12	All

P1391-INTERMITTENT LOSS OF CMP OR CKP — Continued

TEST	ACTION	APPLICABILITY
12	Turn the ignition off. With the DRBIII® lab scope probe and the Miller special tool #6801, backprobe the CKP Signal circuit in the PCM harness connector. **WARNING: WHEN THE ENGINE IS OPERATING, DO NOT STAND IN A DIRECT LINE WITH THE FAN. DO NOT PUT YOUR HANDS NEAR THE PULLEYS, BELTS OR FAN. DO NOT WEAR LOOSE CLOTHING.** Start the engine. Observe the lab scope screen while wiggling the wiring harness and connectors. Were there any irregularities in the lab scope pattern? Yes → Check the harness connectors carefully. If OK, replace the Crankshaft Position Sensor. Perform POWERTRAIN VERIFICATION TEST VER - 5. No → Go To 13	All
13	Turn the ignition off. With the DRBIII® lab scope probe and the Miller special tool #6801, backprobe the CMP Signal circuit in the PCM harness connector. **WARNING: WHEN THE ENGINE IS OPERATING, DO NOT STAND IN A DIRECT LINE WITH THE FAN. DO NOT PUT YOUR HANDS NEAR THE PULLEYS, BELTS OR FAN. DO NOT WEAR LOOSE CLOTHING.** Start the engine. Observe the lab scope screen while wiggling the wiring harness and connectors. Were there any irregularities in the lab scope pattern? Yes → Check the harness connectors carefully. If OK, replace the Camshaft Position Sensor. Perform POWERTRAIN VERIFICATION TEST VER - 5. No → Go To 14	All
14	**WARNING: WHEN THE ENGINE IS OPERATING, DO NOT STAND IN A DIRECT LINE WITH THE FAN. DO NOT PUT YOUR HANDS NEAR THE PULLEYS, BELTS OR FAN. DO NOT WEAR LOOSE CLOTHING.** **NOTE: The conditions that set the DTC are not present at this time. The following list may help in identifying the intermittent condition.** With the engine running at normal operating temperature, monitor the DRBIII® parameters related to the DTC while wiggling the wiring harness. Look for parameter values to change and/or a DTC to set. Review the DRBIII® Freeze Frame information. If possible, try to duplicate the conditions under which the DTC was set. Refer to any Technical Service Bulletins (TSB) that may apply. Visually inspect the related wiring harness. Look for any chafed, pierced, pinched, or partially broken wires. Visually inspect the related wiring harness connectors. Look for broken, bent, pushed out, or corroded terminals. Were any of the above conditions present? Yes → Repair as necessary Perform POWERTRAIN VERIFICATION TEST VER - 5. No → Test Complete.	All

Symptom:
P1398-MIS-FIRE ADAPTIVE NUMERATOR AT LIMIT

When Monitored and Set Condition:

P1398-MIS-FIRE ADAPTIVE NUMERATOR AT LIMIT

When Monitored: Under closed throttle decel with A/C off, ECT above 75, and more than 50 seconds after engine start.

Set Condition: One of the CKP sensor target windows has more than 2.86% variance from the reference window.

POSSIBLE CAUSES
INTERMITTENT CONDITION
TONE WHEEL/PULSE RING INSPECTION
WIRING HARNESS INSPECTION
CRANKSHAFT POSITION SENSOR

TEST	ACTION	APPLICABILITY
1	**Note: Check for any TSB's that may apply to this symptom.** Turn the ignition on. With the DRBIII® in the miscellaneous menu, choose Clear PCM battery disconnect to reset the PCM. With the DRBIII®, choose the Misfire Pretest Road test the vehicle and relearn the adaptive numerator. The adaptive numerator is learned when the Adaptive Numerator Done Learning line on the Misfire screen changes to Yes. Did the adaptive numerator relearn? Yes → Go To 2 No → Go To 3	All

P1398-MIS-FIRE ADAPTIVE NUMERATOR AT LIMIT — Continued

TEST	ACTION	APPLICABILITY
2	**WARNING: WHEN THE ENGINE IS OPERATING, DO NOT STAND IN A DIRECT LINE WITH THE FAN. DO NOT PUT YOUR HANDS NEAR THE PULLEYS, BELTS OR FAN. DO NOT WEAR LOOSE CLOTHING.** **NOTE: The conditions that set the DTC are not present at this time. The following list may help in identifying the intermittent condition.** With the engine running at normal operating temperature, monitor the DRBIII® parameters related to the DTC while wiggling the wiring harness. Look for parameter values to change and/or a DTC to set. Review the DRBIII® Freeze Frame information. If possible, try to duplicate the conditions under which the DTC was set. Refer to any Technical Service Bulletins (TSB) that may apply. Visually inspect the related wiring harness. Look for any chafed, pierced, pinched, or partially broken wires. Visually inspect the related wiring harness connectors. Look for broken, bent, pushed out, or corroded terminals. Were any of the above conditions present? Yes → Repair as necessary Perform POWERTRAIN VERIFICATION TEST VER - 5. No → Test Complete.	All
3	Visually inspect the CKP wiring harness. Look for any chafed, pierced, pinched, or partially broken wires. Visually inspect the CKP wiring harness connectors. Look for broken, bent, pushed out, or corroded terminals. Ensure the Crankshaft Position Sensor properly installed and the mounting bolt(s) tight. Refer to any TSB that may apply. Were any of the above conditions present? Yes → Repair as necessary Perform POWERTRAIN VERIFICATION TEST VER - 5. No → Go To 4	All
4	Turn the ignition off. Remove the Crankshaft Position Sensor. Inspect the Tone Wheel/Flex Plate slots for damage, foreign material, or excessive movement. Were any problems found? Yes → Repair or replace the Tone Wheel/Flex Plate as necessary. Perform POWERTRAIN VERIFICATION TEST VER - 5. No → Go To 5	All
5	If there are no possible causes remaining, view repair. Repair Replace the Crankshaft Position Sensor. Perform POWERTRAIN VERIFICATION TEST VER - 5.	All

Symptom:

P1486-EVAP LEAK MONITOR PINCHED HOSE FOUND

When Monitored and Set Condition:

P1486-EVAP LEAK MONITOR PINCHED HOSE FOUND

When Monitored: Immediately after a cold start, with battery/ambient temperature between 4°C (40°F) and 32°C (90°F) and coolant temperature within -12°C (10°F) of battery/ambient.

Set Condition: LDP Switch does not reach at least 3 closures with 10 seconds. LDP must initial in normal conditions to mature failure.

POSSIBLE CAUSES
INTERMITTENT LDP MONITOR FAILURE
EVAP CANISTER OBSTRUCTED
PRESSURIZING EVAP EMISSION SYSTEM
OBSTRUCTION IN HOSE/TUBE BETWEEN EVAP CANISTER AND PURGE SOLENOID
LDP PRESSURE HOSE OBSTRUCTED
LEAK DETECTION PUMP

TEST	ACTION	APPLICABILITY
1	Turn the ignition on. With the DRBIII®, read DTC's. Is the Good Trip displayed and equal to zero? Yes → Go To 2 No → Go To 6	All

P1486-EVAP LEAK MONITOR PINCHED HOSE FOUND — Continued

TEST	ACTION	APPLICABILITY
2	To continue testing you will need Miller Tool #8404 Evaporative Emission Leak Detector (EELD). **WARNING: Keep lighted cigarettes, sparks, flames, and other ignition sources away from the test area to prevent the ignition of explosive gases. Keep the test area well ventilated.** **NOTE: The fuel tank should have between 20% and 80% of fuel tank capacity to properly test the Evap system.** Disconnect the vacuum supply hose at the Leak Detection Pump. Connect and apply a continuous vacuum supply (i.e. 20″Hg) to the Leak Detection Pump. A vacuum pump such as an A/C recovery unit works well. Using the DRBIII®, select Engine/System Tests and actuate the Leak Detect Pump Test (Option 3/Hold PSI). **NOTE: The above energizes the LDP solenoid and allows the constant vacuum source to apply vacuum to the LDP pump diaphragm. This lifts the diaphragm up and seals the atmospheric canister vent valve at the bottom of the Leak Detection Pump.** Connect the red power lead of Miller Tool #8404 to the battery positive terminal and the black ground lead to battery negative terminal. **NOTE: See Charts and Graph support material EELD Calibration Setup for an example.** Connect shop air to the #8404 EELD. Set the smoke/air control switch to AIR. Insert the tester's AIR supply tip (clear hose) into the appropriate calibration orifice on the tester's control panel (based on DTC leak size). Press the remote smoke/air start button. Position the red flag on the flow meter so it is aligned with the indicator ball. When the calibration is complete, release the remote button. The EELD is now calibrated the flow meter in liters per minute to the size leak indicated by the DTC set in the PCM. Install the service port adapter #8404-14 on the vehicle's service port. Connect the Air supply hose from the EELD to the service port. Press the remote button to activate AIR flow. **NOTE: Larger volume fuel tanks, and/or those with less fuel, may require 4 to 5 minutes to fill.** The flow meter gauge on the EELD will read zero LPM when the EVAP system is completely pressurized. Disconnect the hose at the EVAP Canister that goes to the Fuel Tank. Did the pressure drop when the hose was disconnected? Yes → Go To 3 No → Repair the obstruction in the EVAP system between the EVAP Canister and the Fuel Tank. Perform POWERTRAIN VERIFICATION TEST VER - 6.	All
3	**Note: All previously disconnected hose(s) reconnected.** Re-pressurize the EVAP System. Using Miller Tool #8404, hold down the Remote Smoke/Air Start Button and monitor the gauge. The flow meter gauge on the EELD reads 0 LPM the EVAP system completely pressurized. Disconnect the LDP Pressure hose at the EVAP Canister. The LDP Pressure hose is the hose that connects the Evap Canister to the Leak Detection Pump. Did the pressure drop when the hose was disconnected? Yes → Go To 4 No → Replace the EVAP Canister. Perform POWERTRAIN VERIFICATION TEST VER - 6.	All

P1486-EVAP LEAK MONITOR PINCHED HOSE FOUND — Continued

TEST	ACTION	APPLICABILITY
4	**Note: All previously disconnected hose(s) reconnected.** Re-pressurize the EVAP System. On Miller Tool #8404, set the Pressure/Hold switch to Open and set the Vent switch to Closed. Turn the pump timer On and watch the gauge. The flow meter gauge on the EELD reads 0 LPM the EVAP system completely pressurized. Disconnect the EVAP hoses at the Purge Solenoid. Did the pressure drop when the hose was disconnected? Yes → Go To 5 No → Repair or replace hose/tube as necessary. Perform POWERTRAIN VERIFICATION TEST VER - 6.	All
5	Disconnect and remove the LDP pressure hose. The LDP pressure hose is the hose that connects the EVAP Canister to the Leak Detection Pump. Inspect the LDP pressure hose for any obstructions or physical damage. Is the LDP pressure hose free from defects? Yes → Replace the Leak Detection Pump. Perform POWERTRAIN VERIFICATION TEST VER - 6. No → Repair/replace hose as necessary. Perform POWERTRAIN VERIFICATION TEST VER - 6.	All
6	At this time, the conditions required to set the DTC are not present. **Note: Use the Freeze Frame Data to help you duplicate the conditions that set the DTC. Pay particular attention to the DTC set conditions, such as, VSS, MAP, ECT, and Load.** **Note: A thorough visual inspection of the Evap system hoses, tubes, and connections may save time in your diagnosis. Look for any physical damage or signs of wetness at connections. The strong smell of fuel vapors may aid diagnosis also.** **Note: Refer to any Technical Service Bulletins (TSB's) that may apply.** With the DRBIII® in System Tests, perform the LDP Monitor Test. This will force the PCM to run the LDP Monitor. If the monitor fails, further diagnosis is required to find faulty component. If the monitor passes, the condition is not present at this time. Were any problems found? Yes → Repair as necessary. Perform POWERTRAIN VERIFICATION TEST VER - 6. No → Test Complete.	All

Symptom:

P1491-RAD FAN CONTROL RELAY CIRCUIT

When Monitored and Set Condition:

P1491-RAD FAN CONTROL RELAY CIRCUIT

When Monitored: With the ignition on. Battery voltage greater than 10 volts.

Set Condition: An open or shorted circuit is detected in the radiator fan relay control circuit.

POSSIBLE CAUSES
RADIATOR FAN RELAY INTERMITTENT OPERATION
INTERMITTENT CONDITION
GROUND CIRCUIT
FUSED B+ OUTPUT CIRCUIT
POWERTRAIN CONTROL MODULE
RADIATOR FAN RELAY CONTROL CIRCUIT SHORT TO GROUND
RADIATOR FAN RELAY CONTROL CIRCUIT OPEN (IPM)
RADIATOR FAN RELAY CONTROL CIRCUIT OPEN (PCM)
RADIATOR FAN RELAY CONTROL CIRCUIT SHORTED TO GROUND (IPM)
RADIATOR FAN RELAY CONTROL CIRCUIT SHORT TO GROUND (PCM)
INTELLIGENT POWER MODULE (OPEN)
INTELLIGENT POWER MODULE (SHORTED)

TEST	ACTION	APPLICABILITY
1	Turn the ignition on. With the DRBIII®, actuate the Radiator Fan Relay. Are both Radiator Fan operating? Yes → Go To 2 No → Go To 4	All
2	Turn the ignition on. With the DRBIII®, actuate the Radiator Fan Relay. Wiggle the wiring harness from the Radiator Fan Relay to the PCM while the relay is actuating. Did the Radiator Fan Relay stop when wiggling the wiring harness? Yes → Repair as necessary. Perform POWERTRAIN VERIFICATION TEST VER - 5. No → Go To 3	All

P1491-RAD FAN CONTROL RELAY CIRCUIT — Continued

TEST	ACTION	APPLICABILITY
3	**WARNING: WHEN THE ENGINE IS OPERATING, DO NOT STAND IN A DIRECT LINE WITH THE FAN. DO NOT PUT YOUR HANDS NEAR THE PULLEYS, BELTS OR FAN. DO NOT WEAR LOOSE CLOTHING.** **NOTE: The conditions that set the DTC are not present at this time. The following list may help in identifying the intermittent condition.** With the engine running at normal operating temperature, monitor the DRBIII® parameters related to the DTC while wiggling the wiring harness. Look for parameter values to change and/or a DTC to set. Review the DRBIII® Freeze Frame information. If possible, try to duplicate the conditions under which the DTC was set. Refer to any Technical Service Bulletins (TSB) that may apply. Visually inspect the related wiring harness. Look for any chafed, pierced, pinched, or partially broken wires. Visually inspect the related wiring harness connectors. Look for broken, bent, pushed out, or corroded terminals. Were any of the above conditions present? Yes → Repair as necessary Perform POWERTRAIN VERIFICATION TEST VER - 5. No → Test Complete.	All
4	Turn the ignition off. Disconnect the Radiator Fan Relay harness connector. Using a 12-volt test light connected to 12-volts, probe the Ground circuit in the Radiator Fan Relay harness connector. Does the test light illuminate? Yes → Go To 5 No → Repair the Ground circuit for an open. Perform POWERTRAIN VERIFICATION TEST VER - 5.	All
5	**NOTE: Inspect the Radiator Fan fuse located in the IPM.** Turn the ignition off. Disconnect the Radiator Fan Relay harness connector. Measure the voltage of the Fused B+ Output circuit in the Radiator Fan harness connector. Is the voltage above 11.0 volts? Yes → Go To 6 No → Repair the Fused B+ circuit. Check and replace any open fuses. Perform POWERTRAIN VERIFICATION TEST VER - 5.	All
6	**NOTE: Ensure the Radiator Fan Relay harness connector is connected.** Turn the ignition off. Disconnect the PCM harness connector. Turn the ignition on. Using a jumper wire, momentarily jumper the Radiator Fan Relay Control circuit to ground. Did the Radiator Fans operate? Yes → Replace and program the Powertrain Control Module in accordance with the Service Information. Perform POWERTRAIN VERIFICATION TEST VER - 5. No → Go To 7	All

P1491-RAD FAN CONTROL RELAY CIRCUIT — Continued

TEST	ACTION	APPLICABILITY
7	Turn the ignition off. Disconnect the Radiator Fan Relay harness connector. Disconnect the PCM harness connector. Measure the resistance of the Radiator Fan Relay Control circuit between the Radiator Fan Relay harness connector and the PCM harness connector. Is the resistance below 5.0 ohms? Yes → Go To 8 No → Go To 11	All
8	Turn the ignition off. Disconnect the Radiator Fan Relay harness connector. Disconnect the PCM harness connector. Measure the resistance of the Radiator Fan Relay Control circuit in the Radiator Fan Relay harness connector to ground. Is the resistance below 5.0 ohms? Yes → Go To 9 No → Replace Radiator Fan Relay. Perform POWERTRAIN VERIFICATION TEST VER - 5.	All
9	Turn the ignition off. Disconnect the Radiator Fan Relay harness connector. Disconnect the IPM C2 harness connector. Measure the resistance of the Radiator Fan Relay Control circuit in the Radiator Fan Relay harness connector to ground. Is the resistance below 5.0 ohms? Yes → Repair the Radiator Fan Relay Control circuit for a short to ground between the Radiator Fan Relay harness connector and the IPM harness connector. Perform POWERTRAIN VERIFICATION TEST VER - 5. No → Go To 10	All
10	Turn the ignition off. Disconnect the PCM harness connector. Disconnect the IPM C3 harness connector. Measure the resistance of the Radiator Fan Relay Control circuit in the PCM harness connector to ground. Is the resistance below 5.0 ohms? Yes → Repair the Radiator Fan Relay Control circuit for a short to ground between PCM harness connector and the IPM harness connector. Perform POWERTRAIN VERIFICATION TEST VER - 5. No → Replace the IPM Fuse & Relay Center. Perform POWERTRAIN VERIFICATION TEST VER - 5.	All

P1491-RAD FAN CONTROL RELAY CIRCUIT — Continued

TEST	ACTION	APPLICABILITY
11	Turn the ignition off. Disconnect the Radiator Fan Relay harness connector. Disconnect the IPM C2 harness connector. Measure the resistance of the Radiator Fan Relay Control circuit between the IPM harness connector and the Radiator Fan Relay harness connector. Is the resistance below 5.0 ohms. Yes → Go To 12 No → Repair the Radiator Fan Relay Control circuit for an open between the Radiator Fan Relay harness connector and the IPM harness connector. Perform POWERTRAIN VERIFICATION TEST VER - 5.	All
12	Turn the ignition off. Disconnect the PCM harness connector. Disconnect the IPM C3 harness connector. Measure the resistance of the Radiator Fan Relay Control circuit between the IPM harness connector and the PCM harness connector. Is the resistance below 5.0 ohms. Yes → Replace the IPM Fuse & Relay Center. Perform POWERTRAIN VERIFICATION TEST VER - 5. No → Repair the Radiator Fan Relay Control circuit for an open between PCM harness connector and the IPM harness connector. Perform POWERTRAIN VERIFICATION TEST VER - 5.	All

Symptom:

P1494-LEAK DETECT PUMP SW OR MECHANICAL FAULT

When Monitored and Set Condition:

P1494-LEAK DETECT PUMP SW OR MECHANICAL FAULT

When Monitored: Immediately after a cold start, with battery/ambient temperature between 4°C (40°F) and 32°C (90°F) and coolant temperature within -12°C (10°F) of battery/ambient.

Set Condition: The state of the switch does not change when the solenoid is energized.

POSSIBLE CAUSES
LDP VACUUM SUPPLY
WIRING HARNESS INTERMITTENT
LEAK DETECTION PUMP
LDP SWITCH SENSE CIRCUIT SHORTED TO GROUND
LDP SWITCH SENSE CIRCUIT OPEN
POWERTRAIN CONTROL MODULE

TEST	ACTION	APPLICABILITY
1	Turn the ignition on. With the DRBIII®, read DTC's. Is the Good Trip displayed and equal to zero? Yes → Go To 2 No → Go To 7	All
2	Turn the ignition off. Disconnect the vacuum supply hose at the Leak Detection Pump. Connect a vacuum gauge to the disconnected vacuum supply hose at the Leak Detection Pump. Start the engine and read the vacuum gauge. Does the vacuum gauge read at least 13 in/Hg? Yes → Go To 3 No → Repair leak or obstruction in vacuum hose as necessary. Perform POWERTRAIN VERIFICATION TEST VER - 6.	All

P1494-LEAK DETECT PUMP SW OR MECHANICAL FAULT — Continued

TEST	ACTION	APPLICABILITY
3	Turn the ignition off. Disconnect the Leak Detection Pump harness connector. Turn the ignition on. With the DRBIII® in Inputs/Outputs, read the Leak Detect Pump Sw state. While observing the Leak Detect Pump Sw state, connect a jumper wire between a 12 volt source and the LDP Switch Sense circuit. Did the Leak Detect Pump Sw state change when the jumper was connected? Yes → Replace the Leak Detection Pump. Perform POWERTRAIN VERIFICATION TEST VER - 6. No → Go To 4	All
4	Turn the ignition off. Disconnect the Leak Detection Pump harness connector. Disconnect the Powertrain Control Module harness connectors. Measure the resistance of the LDP Switch Sense circuit in the LDP harness connector to ground. Is the resistance below 5.0 Ohms? Yes → Repair the LDP Switch Sense Circuit for a short to ground. Perform POWERTRAIN VERIFICATION TEST VER - 6. No → Go To 5	All
5	Turn the ignition off. Disconnect the Leak Detection Pump harness connector. Disconnect the Powertrain Control Module harness connectors. Measure the resistance of the LDP Switch Sense circuit between the LDP harness connector and the PCM harness connector. Is the resistance below 5.0 Ohms? Yes → Go To 6 No → Repair the LDP Switch Sense Circuit for an open. Perform POWERTRAIN VERIFICATION TEST VER - 6.	All
6	If there are no possible causes remaining, view repair. Repair Replace and program the Powertrain Control Module in accordance with the Service Information. Perform POWERTRAIN VERIFICATION TEST VER - 6.	All
7	At this time, the conditions required to set the DTC are not present. **Note: Use the Freeze Frame Data to help you duplicate the conditions that set the DTC. Pay particular attention to the DTC set conditions, such as, VSS, MAP, ECT, and Load.** **Note: Visually inspect the related wiring harness. Look for any chafed, pierced, pinched, or partially broken wires.** **Note: Visually inspect the related wire harness connectors. Look for broken, bent, pushed out, or corroded terminals.** **Note: Refer to any Technical Service Bulletins (TSB's) that may apply.** Perform a wiggle test of the LDP wiring while the circuit is actuated with the DRBIII®. Listen for the LDP to quit actuating. Also watch for the Good Trip Counter to change to 0. Were any problems found? Yes → Repair wiring harness/connectors as necessary. Perform POWERTRAIN VERIFICATION TEST VER - 6. No → Test Complete.	All

Symptom:

P1495-LEAK DETECTION PUMP SOLENOID CIRCUIT

When Monitored and Set Condition:

P1495-LEAK DETECTION PUMP SOLENOID CIRCUIT

When Monitored: Immediately after a cold start, with battery/ambient temperature between 4.4°C (40°F). F and 32°C (90°F). Coolant temperature within -12°C (10°F) of battery/ambient.

Set Condition: The state of the solenoid circuit does not match the PCM's desired state.

POSSIBLE CAUSES
WIRING HARNESS INTERMITTENT
LEAK DETECTION PUMP
FUSED IGNITION SWITCH OUTPUT
LDP SOLENOID CONTROL CIRCUIT SHORTED TO GROUND
LDP SOLENOID CONTROL CIRCUIT OPEN
PCM

TEST	ACTION	APPLICABILITY
1	Turn the ignition on. With the DRBIII®, read DTC's. Is the Good Trip displayed and equal to zero? Yes → Go To 2 No → Go To 7	All
2	Turn the ignition off. Disconnect the Leak Detection Pump harness connector. Using a 12-volt test light, connect one end to the Fused Ignition Switch Output circuit and the other end to the LDP Solenoid Control circuit. Turn the ignition on. With the DRBIII®, actuate the Leak Detection Pump. Does the test light flash on and off? Yes → Replace the Leak Detection Pump. Perform POWERTRAIN VERIFICATION TEST VER - 6. No → Go To 3	All

P1495-LEAK DETECTION PUMP SOLENOID CIRCUIT — Continued

TEST	ACTION	APPLICABILITY
3	Turn the ignition off. Disconnect the Leak Detection Pump harness connector. Turn the ignition on. Using a 12-volt test light connected to ground, probe the Ignition Switch Output circuit in the LDP harness connector. Does the test light illuminate brightly? Yes → Go To 4 No → Repair the Fused Ignition Switch Output circuit. Perform POWERTRAIN VERIFICATION TEST VER - 6.	All
4	Turn the ignition off. Disconnect the Leak Detection Pump harness connector. Disconnect the Powertrain Control Module harness connector. Measure the resistance of the LDP Solenoid Control circuit in the LDP harness connector to ground. Is the resistance below 5.0 ohms? Yes → Repair the LDP Solenoid Control circuit for a short to ground. Perform POWERTRAIN VERIFICATION TEST VER - 6. No → Go To 5	All
5	Turn the ignition off. Disconnect the Leak Detection Pump harness connector. Disconnect the Powertrain Control Module harness connector. Measure the resistance of the LDP Solenoid Control circuit between the LDP Solenoid harness connector and the PCM harness connector. Is the resistance below 5.0 ohms? Yes → Go To 6 No → Repair the LDP Solenoid Control circuit for an open. Perform POWERTRAIN VERIFICATION TEST VER - 6.	All
6	If there are no possible causes remaining, view repair. Repair Replace and program the Powertrain Control Module in accordance with the Service Information. Perform POWERTRAIN VERIFICATION TEST VER - 6.	All
7	At this time, the conditions required to set the DTC are not present. **Note: Use the Freeze Frame Data to help you duplicate the conditions that set the DTC. Pay particular attention to the DTC set conditions, such as, VSS, MAP, ECT, and Load.** **Note: Visually inspect the related wiring harness. Look for any chafed, pierced, pinched, or partially broken wires.** **Note: Visually inspect the related wire harness connectors. Look for broken, bent, pushed out, or corroded terminals.** **Note: Refer to any Technical Service Bulletins (TSB's) that may apply.** Perform a wiggle test of the LDP wiring while the circuit is actuated with the DRBIII®. Listen for the LDP to quit actuating. Also watch for the Good Trip Counter to change to 0. Were any problems found? Yes → Repair wiring harness/connectors as necessary. Perform POWERTRAIN VERIFICATION TEST VER - 6. No → Test Complete.	All

Symptom:

P1496-5 VOLT SUPPLY, OUTPUT TOO LOW

When Monitored and Set Condition:

P1496-5 VOLT SUPPLY, OUTPUT TOO LOW

When Monitored: With the ignition on.

Set Condition: The 5-volt supply to the sensors is below 3.5 volts for 4 seconds.

POSSIBLE CAUSES
INTERMITTENT CONDITION
THROTTLE POSITION SENSOR
MAP SENSOR
A/C PRESSURE SENSOR
EGR SOLENOID
5 VOLT SUPPLY SHORTED TO GROUND
PCM

TEST	ACTION	APPLICABILITY
1	Turn the ignition on. With the DRBIII®, read the DTC's. Is the Good Trip displayed and equal to zero? Yes → Go To 2 No → Go To 9	All
2	Turn the ignition off. Disconnect the Throttle Position Sensor harness connector. Turn the ignition on. Measure the 5 Volt Supply circuit at the Throttle Position Sensor harness connector. Is the Voltage below 4.5 Volts? Yes → Go To 3 No → Go To 8	All

P1496-5 VOLT SUPPLY, OUTPUT TOO LOW — Continued

TEST	ACTION	APPLICABILITY
3	Turn the ignition off. Disconnect the Throttle Position Sensor harness connector. Turn the ignition on. Connect a voltmeter to the 5 Volt Supply circuit at the Throttle Position Sensor harness connector. Monitor the voltage display. Turn the ignition off. Disconnect the MAP Sensor harness connector. Turn the ignition on. Did the 5 Volt Supply go from below 4.5 volts to above 4.5 volts when MAP Sensor was disconnected? Yes → Replace the MAP Sensor. Perform POWERTRAIN VERIFICATION TEST VER - 5. No → Go To 4	All
4	Turn the ignition off. Disconnect the Throttle Position Sensor harness connector. Turn the ignition on. Connect a voltmeter to the 5 Volt Supply circuit at the Throttle Position Sensor harness connector. Monitor the voltage display. Turn the ignition off. Disconnect the A/C Pressure Sensor harness connector. Turn the ignition on. Did the 5 Volt Supply go from below 4.5 volts to above 4.5 volts when the A/C sensor was disconnecte Yes → Replace the A/C Pressure Sensor. Perform POWERTRAIN VERIFICATION TEST VER - 5. No → Go To 5	All
5	Turn the ignition off. Disconnect the Throttle Position Sensor harness connector. Turn the ignition on. Connect a voltmeter to the 5 Volt Supply circuit at the Throttle Position Sensor harness connector. Monitor the voltage display. Turn the ignition off. Disconnect the EGR Solenoid harness connector. Turn the ignition on. Did the 5 Volt Supply go from below 4.5 volts to above 4.5 volts when the EGR was disconnected? Yes → Replace the EGR Solenoid. Perform POWERTRAIN VERIFICATION TEST VER - 5. No → Go To 6	All

P1496-5 VOLT SUPPLY, OUTPUT TOO LOW — Continued

TEST	ACTION	APPLICABILITY
6	Turn the ignition off. Disconnect the Throttle Position Sensor harness connector. Disconnect the MAP Sensor harness connector. Disconnect the A/C Pressure Sensor harness connector. Disconnect the EGR Solenoid harness connector. Disconnect the PCM harness connectors. Measure the resistance of the 5 Volt Supply circuit in the Throttle Position Sensor harness connector to ground. Is the resistance below 5.0 ohms? Yes → Repair the 5 Volt Supply Circuit for a short to ground. Perform POWERTRAIN VERIFICATION TEST VER - 5. No → Go To 7	All
7	**NOTE: Before Continuing: Disconnect the PCM harness connector and check the related wiring terminals for corrosion, damage or terminal push out. Repair as necessary.** If there are no possible causes remaining, view repair. Repair Replace and program the Powertrain Control Module in accordance with the Service Information. Perform POWERTRAIN VERIFICATION TEST VER - 5.	All
8	**NOTE: The Throttle Position Sensor harness connector must be connected during this test.** Disconnect the MAP Sensor harness connector. Turn the ignition on. Measure the 5 Volt Supply circuit in the MAP Sensor harness connector. Is the Voltage below 4.5 Volts? Yes → Replace the Throttle Position Sensor. Perform POWERTRAIN VERIFICATION TEST VER - 5. No → Go To 9	All
9	**WARNING: WHEN THE ENGINE IS OPERATING, DO NOT STAND IN A DIRECT LINE WITH THE FAN. DO NOT PUT YOUR HANDS NEAR THE PULLEYS, BELTS OR FAN. DO NOT WEAR LOOSE CLOTHING.** **NOTE: The conditions that set the DTC are not present at this time. The following list may help in identifying the intermittent condition.** With the engine running at normal operating temperature, monitor the DRBIII® parameters related to the DTC while wiggling the wiring harness. Look for parameter values to change and/or a DTC to set. Review the DRBIII® Freeze Frame information. If possible, try to duplicate the conditions under which the DTC was set. Refer to any Technical Service Bulletins (TSB) that may apply. Visually inspect the related wiring harness. Look for any chafed, pierced, pinched, or partially broken wires. Visually inspect the related wiring harness connectors. Look for broken, bent, pushed out, or corroded terminals. Were any of the above conditions present? Yes → Repair as necessary Perform POWERTRAIN VERIFICATION TEST VER - 5. No → Test Complete.	All

Symptom:

P1602-PCM NOT PROGRAMMED

When Monitored and Set Condition:

P1602-PCM NOT PROGRAMMED

When Monitored: Ignition key on.

Set Condition: PCM has not been programmed.

POSSIBLE CAUSES
PCM PROGRAMMED

TEST	ACTION	APPLICABILITY
1	Attempt to program PCM in accordance with the Service Information. Turn the ignition on. Start the engine. **NOTE: If the engine will not start, crank the engine over for 15 seconds. Crank at least 2 time with the ignition switch returning to the off position each time.** Allow the engine to reach normal operating temperature. With the DRBIII®, read DTCs. Does the DTC reset? Yes → Replace and program the Powertrain Control Module in accordance with the Service Information. Perform POWERTRAIN VERIFICATION TEST VER - 1. No → Test Complete.	All

Symptom:

P1899-P/N SWITCH STUCK IN PARK OR IN GEAR (3SP AUTO TRANS)

When Monitored and Set Condition:

P1899-P/N SWITCH STUCK IN PARK OR IN GEAR (3SP AUTO TRANS)

When Monitored: Continuously with the transmission in Park, Neutral, or Drive and NOT in Limp-in mode.

Set Condition: This code will set if the PCM detects an incorrect Park/Neutral switch state for a given mode of vehicle operation. Two trip fault.

POSSIBLE CAUSES
INTERMITTENT PARK/NEUTRAL SWITCH
P/N POSITION SWITCH SENSE CIRCUIT SHORTED TO GROUND
P/N POSITION SWITCH SENSE CIRCUIT OPEN
PARK/NEUTRAL POSITION SWITCH
POWERTRAIN CONTROL MODULE

TEST	ACTION	APPLICABILITY
1	Turn the ignition on. With the DRBIII®, read PCM DTCs. Is the Good Trip displayed and equal to zero? Yes → Go To 2 No → Go To 7	All
2	Turn the ignition on. With the DRBIII®, read the Park/Neutral Position Switch input state. While moving the gear selector through all gear positions (Park to 1 and back to Park), monitor the DRB display. Did the DRBIII® display show P/N and D/R in the correct gear positions? Yes → Go To 7 No → Go To 3	All
3	Turn the ignition off. Disconnect the PCM harness connector. Disconnect the Park/Neutral Position Switch harness connector. Measure the resistance between ground and the P/N Position Switch Sense circuit. Is the resistance above 100k ohms? Yes → Go To 4 No → Repair the P/N Position Switch Sense circuit for a short to ground. Perform 31TH TRANSMISSION VERIFICATION TEST - VER 1..	All

P1899-P/N SWITCH STUCK IN PARK OR IN GEAR (3SP AUTO TRANS) — Continued

TEST	ACTION	APPLICABILITY
4	Turn the ignition off. Disconnect the PCM harness connector. Disconnect the Park/Neutral Position Switch harness connector. Measure the resistance of the P/N Position Switch Sense circuit. Is the resistance below 5.0 ohms? Yes → Go To 5 No → Repair the P/N Position Switch Sense circuit for an open. Perform 31TH TRANSMISSION VERIFICATION TEST - VER 1..	All
5	Turn the ignition off. Disconnect the PCM harness connector. Move the Gear selector through all gear positions, from Park to 1st and back. While moving the gear selector through each gear, measure the resistance between ground and the P/N Position Switch Sense circuit. Did the resistance change from above 10.0 ohms to below 10.0 ohms? Yes → Go To 6 No → Replace the Park/Neutral Position Switch. Perform 31TH TRANSMISSION VERIFICATION TEST - VER 1..	All
6	If there are no possible causes remaining, view repair. Repair Replace and program the Powertrain Module in accordance with the Service Information. Perform 31TH TRANSMISSION VERIFICATION TEST - VER 1..	All
7	At this time, the conditions required to set the DTC are not present. **NOTE: Use the Freeze Frame Data to help duplicate the conditions that set the DTC. Pay particular attention to the DTC set conditions, such as, VSS, MAP, ECT, and Load.** **NOTE: Visually inspect the related wiring harness. Look for any chafed, pierced, pinched, or partially broken wires.** **NOTE: Visually inspect the related wiring harness connectors. Look for broken, bent, pushed out, or corroded terminals.** **NOTE: Refer to any technical service bulletins (TSB) that may apply.** Were any problems found? Yes → Repair as necessary. Perform 31TH TRANSMISSION VERIFICATION TEST - VER 1.. No → Test Complete.	All

Symptom:

P1899-P/N SWITCH STUCK IN PARK OR IN GEAR (4SP AUTO TRNAS)

When Monitored and Set Condition:

P1899-P/N SWITCH STUCK IN PARK OR IN GEAR (4SP AUTO TRNAS)

When Monitored: Continuously with the transmission in Park, Neutral, or Drive and NOT in Limp-in mode.

Set Condition: This code will set if the PCM detects an incorrect Park/Neutral switch state for a given mode of vehicle operation. Two trip fault.

POSSIBLE CAUSES
INTERMITTENT PARK/NEUTRAL SWITCH
P/N POSITION SWITCH SENSE CIRCUIT SHORTED TO GROUND
P/N POSITION SWITCH SENSE CIRCUIT OPEN
TRANSMISSION RANGE SENSOR
POWERTRAIN CONTROL MODULE

TEST	ACTION	APPLICABILITY
1	Turn the ignition on. With the DRBIII®, read PCM DTCs. Is the Good Trip displayed and equal to zero? Yes → Go To 2 No → Go To 7	All
2	Turn the ignition on. With the DRBIII®, read the Park/Neutral Position Switch input state. While moving the gear selector through all gear positions (Park to 1 and back to Park), monitor the DRB display. Did the DRBIII® display show P/N and D/R in the correct gear positions? Yes → Go To 7 No → Go To 3	All
3	Turn the ignition off. Disconnect the PCM harness connector. Disconnect the Transmission Range Sensor harness connector. Measure the resistance between ground and the P/N Position Switch Sense circuit. Is the resistance above 100k ohms? Yes → Go To 4 No → Repair the P/N Position Switch Sense circuit for a short to ground. Perform 41TE TRANSMISSION VERIFICATION TEST - VER 1..	All

P1899-P/N SWITCH STUCK IN PARK OR IN GEAR (4SP AUTO TRNAS) — Continued

TEST	ACTION	APPLICABILITY
4	Turn the ignition off. Disconnect the PCM harness connector. Disconnect the Transmission Range Sensor harness connector. Measure the resistance of the P/N Position Switch Sense circuit. Is the resistance below 5.0 ohms? Yes → Go To 5 No → Repair the P/N Position Switch Sense circuit for an open. Perform 41TE TRANSMISSION VERIFICATION TEST - VER 1..	All
5	Turn the ignition off. Disconnect the PCM harness connector. Move the Gear selector through all gear positions, from Park to 1st and back. While moving the gear selector through each gear, measure the resistance between ground and the P/N Position Switch Sense circuit. Did the resistance change from below 10.0 ohms to above 10.0 ohms? Yes → Go To 6 No → Replace the Transmission Range Sensor. Perform 41TE TRANSMISSION VERIFICATION TEST - VER 1..	All
6	**NOTE: Before Continuing: Disconnect the PCM harness connector and check the related wiring terminals for corrosion, damage or terminal push out. Repair as necessary.** If there are no possible causes remaining, view repair. Repair Replace and program the Powertrain Module in accordance with the Service Information. Perform 41TE TRANSMISSION VERIFICATION TEST - VER 1..	All
7	At this time, the conditions required to set the DTC are not present. **NOTE: Use the Freeze Frame Data to help duplicate the conditions that set the DTC. Pay particular attention to the DTC set conditions, such as, VSS, MAP, ECT, and Load.** **NOTE: Visually inspect the related wiring harness. Look for any chafed, pierced, pinched, or partially broken wires.** **NOTE: Visually inspect the related wiring harness connectors. Look for broken, bent, pushed out, or corroded terminals.** **NOTE: Refer to any technical service bulletins (TSB) that may apply.** Were any problems found? Yes → Repair as necessary. Perform 41TE TRANSMISSION VERIFICATION TEST - VER 1.. No → Test Complete.	All

Symptom:

***CHECKING ECT SENSOR**

POSSIBLE CAUSES
ECT SENSOR OPERATION
ECT SENSOR

TEST	ACTION	APPLICABILITY
1	**NOTE: The engine coolant temperature must be below 62°C (150°F).** Turn the ignition on. With the DRBIII®, monitor the ECT value. Start the engine. Does the ECT reach 82°C (180°F) and was it a smooth transition? Yes → Engine Coolant Temperature sensor is operating normally. Perform POWERTRAIN VERIFICATION TEST VER - 2. No → Replace the Engine Coolant Temperature Sensor. Perform POWERTRAIN VERIFICATION TEST VER - 2.	All

Symptom:

***CHECKING FUEL DELIVERY**

POSSIBLE CAUSES
FUEL PUMP RELAY
FUEL PRESSURE OUT OF SPECS
RESTRICTED FUEL SUPPLY LINE
FUEL PUMP INLET STRAINER PLUGGED
FUEL PUMP MODULE
FUEL PUMP CAPACITY (VOLUME) OUT OF SPECS
FUEL PUMP RELAY FUSED B+ CIRCUIT
FUEL PUMP RELAY OUTPUT CIRCUIT OPEN
FUEL PUMP GROUND CIRCUIT OPEN/HIGH RESISTANCE
IPM FUSE & RELAY CENTER
FUEL PUMP MODULE

TEST	ACTION	APPLICABILITY
1	**NOTE: Inspect the Fuel Pump Relay fuse located in the IPM. If the Fuel Pump Relay fuse is open, repair the cause of the open first before continuing. Inspect the Fuel Pump Relay Output circuit for a short to ground for the cause of the open fuse.** Turn the ignition on. With the DRBIII®, actuate the ASD Fuel System test. **Note: It may be necessary to use a mechanics stethoscope in the next step.** Listen for fuel pump operation at the fuel tank. Does the Fuel Pump operate? Yes → Go To 2 No → Go To 6 **Caution: Stop All Actuations.**	All

*CHECKING FUEL DELIVERY — Continued

TEST	ACTION	APPLICABILITY
2	Turn the ignition off. **WARNING: The fuel system is under a constant pressure even with the engine off. Before testing or servicing any fuel system hose, fitting or line, the fuel system pressure must be released.** Install a fuel pressure gauge to the fuel rail test port. Turn the ignition on. With the DRBIII®, actuate the ASD Fuel System test and observe the fuel pressure gauge. **NOTE: Fuel pressure specification is 400 KPa +/- 34 KPa (58 psi +/- 5 psi).** Choose a conclusion that best matches your fuel pressure reading. Below Specification Go To 3 Within Specification Go To 5 Above Specification Replace the fuel filter/fuel pressure regulator. Perform POWERTRAIN VERIFICATION TEST VER - 1. **Caution: Stop All Actuations.**	All
3	Turn the ignition off. **WARNING: The fuel system is under a constant pressure even with the engine off. Before testing or servicing any fuel system hose, fitting or line, the fuel system pressure must be released.** Raise vehicle on hoist, and disconnect the fuel pressure line at the fuel pump module. Install special 5/16″ fuel line adapter tool #6539 between disconnected fuel line and the fuel pump module. Attach a fuel pressure test gauge to the ″T″ fitting on tool #6539. Turn the ignition on. With the DRBIII®, actuate the ASD Fuel System test and observe the fuel pressure gauge. **NOTE: Fuel pressure specification is 400 KPa +/- 34 KPa (58 psi +/- 5 psi).** Is the fuel pressure within specification now? Yes → Repair/replace fuel supply line as necessary. Perform POWERTRAIN VERIFICATION TEST VER - 1. No → Go To 4 **Caution: Stop All Actuations.**	All
4	Turn the ignition off. **WARNING: The fuel system is under a constant pressure even with the engine off. Before testing or servicing any fuel system hose,fitting or line, the fuel system pressure must be released.** Remove the Fuel Pump Module and inspect the Fuel Inlet Strainer. Is the Fuel Inlet Strainer plugged? Yes → Replace the Fuel Pump Inlet Strainer. Perform POWERTRAIN VERIFICATION TEST VER - 1. No → Replace the Fuel Pump Module. Perform POWERTRAIN VERIFICATION TEST VER - 1.	All

*CHECKING FUEL DELIVERY — Continued

TEST	ACTION	APPLICABILITY
5	**Note: The fuel pressure must be within specification before continuing.** Turn the ignition off. **WARNING: The fuel system is under a constant pressure even with the engine off. Before testing or servicing any fuel system hose, fitting or line, the fuel system pressure must be released.** Disconnect the fuel supply line at the fuel rail. Connect fuel line adapter #6539(5/16″) or #6631(3/8″) to the disconnected fuel supply line. Insert the other end of the adapter into a graduated container. **Caution: Do not operate the fuel pump for more than 7 seconds in the next step. Fuel pump module reservoir may run empty and damage to the fuel pump will result.** **Note: Specification: A good fuel pump will deliver at least 1/4 liter (1/2 pint) of fuel in 7 seconds.** Turn the ignition on. With the DRBIII®, actuate the ASD Fuel System test for 7 seconds. Is the fuel pump capacity within specification? Yes → Test Complete. No → Check for a kinked/damaged fuel supply line between the fuel tank and fuel rail. If OK, replace the fuel pump module. Perform POWERTRAIN VERIFICATION TEST VER - 1. **Caution: Stop All Actuations.**	All
6	Turn the ignition off. Disconnect the fuel pump module harness connector. Turn the ignition on. With the DRBIII®, actuate the ASD Fuel System test. Using a 12 volt test light connected to ground, probe the Fuel Pump Relay Output circuit at the Fuel Pump Module harness connector. Does the test light illuminate brightly? Yes → Go To 7 No → Go To 9 **Caution: Stop All Actuations.**	All
7	Turn the ignition off. Disconnect the Fuel Pump Module harness connector. **Note: Check connectors - It is critical that the connector is free from any signs of corrosion or deformities - Clean/repair as necessary.** Using a 12 - volt test light connected to battery voltage, probe the Fuel Pump ground circuit at the Fuel Pump Module harness connector. Does the test light illuminate brightly? Yes → Go To 8 No → Repair the open/high resistance in the fuel pump ground circuit. Perform POWERTRAIN VERIFICATION TEST VER - 1.	All
8	If there are no possible causes remaining, view repair. Repair Replace the Fuel Pump Module. Perform POWERTRAIN VERIFICATION TEST VER - 1.	All

*CHECKING FUEL DELIVERY — Continued

TEST	ACTION	APPLICABILITY
9	Turn the ignition off. Remove the Fuel Pump Relay from the IPM. With a 12 volt test light connected to ground, probe the Fuel Pump Relay Fused B+ circuit at the IPM. Does the test light illuminate? Yes → Go To 10 No → Check for an open Fuel Pump fuse, repair cause of open. If OK, replace the IPM Fuse & Relay Center. Perform POWERTRAIN VERIFICATION TEST VER - 1.	All
10	Turn the ignition off. Disconnect the Fuel Pump Module harness connector. Disconnect the IPM C8 harness connector. Measure the resistance of the Fuel Pump Relay Output circuit from between the IPM harness connector and the Fuel Pump Module harness connector. Is the resistance below 5.0 ohms? Yes → Go To 11 No → Repair the Fuel Pump Relay Output circuit for an open. Perform POWERTRAIN VERIFICATION TEST VER - 1.	All
11	**NOTE: Ensure all IPM harness connectors are connected.** Turn the ignition off. Disconnect the Fuel Pump Module harness connector. Remove the Fuel Pump Relay from the IPM. Measure the resistance of the Fuel Pump Relay Output circuit between the IPM and the Fuel Pump Module harness connector. Is the resistance below 5.0 ohms? Yes → Replace the Fuel Pump Relay. Perform POWERTRAIN VERIFICATION TEST VER - 1. No → Replace the IPM Fused & Relay Center. Perform POWERTRAIN VERIFICATION TEST VER - 1.	All

Symptom:

***CHECKING IAC MOTOR 2.4L**

POSSIBLE CAUSES
IAC MOTOR OPERATION
IAC DRIVER CIRCUITS OPEN
IAC MOTOR

TEST	ACTION	APPLICABILITY
1	Turn the ignition on. With the DRBIII®, monitor engine RPM. With the DRBIII®, set the engine speed to 1400 RPM. Does the engine speed reach 1400 rpm? Yes → The IAC Motor is operation normally Perform POWERTRAIN VERIFICATION TEST VER - 2. No → Go To 2	All
2	Turn the ignition off. Disconnect IAC Motor harness connector. Disconnect the PCM harness connector. Repeat each measurement for each IAC Driver circuit. Measure the resistance of each IAC Driver circuit between the IAC Motor harness connector and the PCM harness connector. Is the resistance below 5.0 ohms at all IAC Driver circuits? Yes → Replace the Idle Air Control Motor. Perform POWERTRAIN VERIFICATION TEST VER - 2. No → Repair the IAC Driver circuit(s) for an open. Perform POWERTRAIN VERIFICATION TEST VER - 2.	All

Symptom:

***CHECKING IAT SENSOR**

POSSIBLE CAUSES
IAT SENSOR OPERATION
IAT SENSOR

TEST	ACTION	APPLICABILITY
1	**NOTE: Do not allow more than 5 minutes delay during the removal of the IAT sensor and measuring the temperature.** Turn the ignition on. With the DRBIII®, read and record the IAT temperature value. Remove the IAT sensor. Using a temperature probe, measure the temperature inside the opening of the IAT sensor. Compare both temperature readings. Are the temperature readings with 12°C (10°F) of one another? Yes → The IAT sensor is operating normally. Perform POWERTRAIN VERIFICATION TEST VER - 2. No → Replace the IAT sensor. Perform POWERTRAIN VERIFICATION TEST VER - 2.	All

Symptom:

***CHECKING MAP SENSOR**

POSSIBLE CAUSES
MAP SENSOR OPERATION
MAP SENSOR

TEST	ACTION	APPLICABILITY
1	Turn the ignition off. Attach a vacuum gauge to a manifold vacuum source. **NOTE: If the engine will not idle, maintain a constant engine speed above idle.** Allow the engine to idle. With the DRBIII®, monitor the MAP sensor vacuum. Compare the MAP vacuum value on the DRBIII® and the vacuum reading on the vacuum gauge. Are the vacuum readings within 1 inch of vacuum of each other? Yes → The MAP sensor is operating normally. Perform POWERTRAIN VERIFICATION TEST VER - 2. No → Replace the MAP sensor. Perform POWERTRAIN VERIFICATION TEST VER - 2.	All

Symptom:

***CHECKING MINIMUM AIR FLOW**

POSSIBLE CAUSES
CHECKING THE MINIMUM AIRFLOW

TEST	ACTION	APPLICABILITY
1	Ensure all accessories are off before performing this test. Start the engine. Allow the engine to reach normal operating temperature. Using the DRBIII®, run the Minimum Air Flow test following the instruction shown on the DRB. The DRBIII® will count down to stabilize the idle rpm and display the minimum air flow idle rpm. Vehicles with mileage below 1000 miles: 600 - 950 RPM. Vehicles with mileage above 1000 miles: 650 - 950 RPM. Is the engine RPM within specification? Yes → Test Complete. No → Replace the Throttle Body. Perform POWERTRAIN VERIFICATION TEST VER - 5.	All

Symptom:

*CHECKING PCM POWER AND GROUND CIRCUITS

POSSIBLE CAUSES
PCM FUSED B+ CIRCUIT
PCM FUSED IGNITION SWITCH OUTPUT CIRCUIT
PCM GROUND CIRCUITS

TEST	ACTION	APPLICABILITY
1	Turn the ignition off. Disconnect the PCM harness connector. Using a 12-volt test light connected to ground, probe the PCM Fused B+ circuit in the PCM harness connector. Does the test light illuminate brightly? Yes → Go To 2 No → Repair the Fused B+ circuit. Perform POWERTRAIN VERIFICATION TEST VER - 1.	All
2	Turn the ignition off. Disconnect the PCM harness connector. Turn the ignition on. Using a 12-volt test light connected to ground, probe the PCM Fused Ignition Switch Output circuit in the PCM harness connector. Does the test light illuminate brightly? Yes → Go To 3 No → Repair the Ignition Switch Output circuit Perform POWERTRAIN VERIFICATION TEST VER - 1.	All
3	Turn the ignition off. Disconnect the PCM harness connector. Using a 12-volt test light connected to battery voltage, probe the PCM ground circuits in the PCM harness connector. Does the test light illuminate brightly? Yes → Test Complete. No → Repair the PCM ground circuits. Perform POWERTRAIN VERIFICATION TEST VER - 1.	All

Symptom:

*CHECKING RADIATOR FAN RELAY OUTPUT

POSSIBLE CAUSES
RADIATOR FAN RELAY OPERATION
GROUND CIRCUIT OPEN
RADIATOR FAN RELAY OUTPUT CIRCUIT
RADIATOR FAN ASSEMBLY

TEST	ACTION	APPLICABILITY
1	Turn the ignition off. Disconnect the Radiator Fan Relay harness connector. Using a jumper wire, momentarily jumper the Fuse B+ circuit and Radiator Fan Relay Output circuit in the Radiator Fan Relay harness connector. Are both Fans operating? Yes → The Radiator Fan System operating properly at this time. Perform POWERTRAIN VERIFICATION TEST VER - 2. No → Go To 2	All
2	Turn the ignition off. Disconnect the Radiator Fan harness connector. Measure both Ground circuit in the Radiator Fan Motor harness connectors to ground. Is the resistance below 5.0 ohms? Yes → Go To 3 No → Repair the Ground circuit(s) for an open. Perform POWERTRAIN VERIFICATION TEST VER - 2.	All
3	Turn the ignition off. Disconnect the Radiator Fan Relay harness connector. Disconnect both Radiator Fan Motor harness connectors. Measure the voltage in both Radiator Fan Motor harness connectors. Is the voltage above 10 volts? Yes → Replace the Radiator Fan Assembly. Perform POWERTRAIN VERIFICATION TEST VER - 2. No → Repair the Radiator Fan Relay Output circuit(s) for an open. Perform POWERTRAIN VERIFICATION TEST VER - 2.	All

Symptom:

*CHECKING THE A/C RELAY OUTPUT

POSSIBLE CAUSES
A/C CLUTCH RELAY OPERATION
GROUND CIRCUIT OPEN
A/C CLUTCH
FUSED B+ CIRCUIT
A/C CLUTCH OUTPUT CIRCUIT
IPM FUSE & RELAY CENTER
A/C CLUTCH RELAY

TEST	ACTION	APPLICABILITY
1	**NOTE: Ensure that the refrigerant system is properly charged. Refer to the appropriate Service Information.** Turn the ignition on. With the DRBIII®, actuate the A/C Clutch Relay. Is the A/C Clutch actuating? Yes → The A/C Clutch System operating properly at this time. Perform POWERTRAIN VERIFICATION TEST VER - 2. No → Go To 2	All
2	Turn the ignition off. Disconnect the A/C Clutch harness connector. Measure the Ground circuit in the A/C Clutch harness connector to ground. Is the resistance below 5.0 ohms? Yes → Go To 3 No → Repair the Ground circuit for an open. Perform POWERTRAIN VERIFICATION TEST VER - 2.	All
3	Disconnect the A/C Clutch harness connector. Turn the ignition on. With the DRBIII®, actuate the A/C Clutch Relay. Measure the voltage of the A/C Clutch Relay Output circuit in the A/C Clutch harness connector. Is the voltage above 11.0 volts? Yes → Replace the A/C Clutch. Perform POWERTRAIN VERIFICATION TEST VER - 2. No → Go To 4	All

*CHECKING THE A/C RELAY OUTPUT — Continued

TEST	ACTION	APPLICABILITY
4	Turn the ignition off. Remove the A/C Clutch Relay from the IPM. Using a 12-volt test light connected to ground, probe the Fused B+ circuit in the IPM. Does the test light illuminate brightly? Yes → Go To 5 No → Check for an open A/C Clutch fuse, repair the cause of the open fuse. If OK, replace the IPM Fuse & Relay Center. Perform POWERTRAIN VERIFICATION TEST VER - 2.	All
5	Turn the ignition off. Disconnect the IPM C3 harness connector. Disconnect the A/C Clutch harness connector. Measure the resistance of the A/C Clutch Relay Output circuit between the IPM harness connector and the A/C Clutch harness connector. Is the resistance below 5.0 ohms? Yes → Go To 6 No → Repair the A/C Clutch Relay Output circuit for an open. Perform POWERTRAIN VERIFICATION TEST VER - 2.	All
6	**NOTE: Ensure all IPM harness connectors are connected.** Turn the ignition off. Disconnect the A/C Clutch harness connector. Remove the A/C Clutch Relay from the IPM. Measure the resistance of the A/C Clutch Relay Output circuit between the IPM and the A/C Clutch harness connector. Is the resistance below 5.0 ohms? Yes → Replace the A/C Clutch Relay. Perform POWERTRAIN VERIFICATION TEST VER - 2. No → Replace the IPM Fused & Relay Center. Perform POWERTRAIN VERIFICATION TEST VER - 2.	All

Symptom:

***CHECKING THE EVAP SYSTEM**

POSSIBLE CAUSES
EVAP PURGE SOLENOID VACUUM HOSE
EVAP PURGE SOLENOID LEAKING
EVAP PURGE SOLENOID RESTICTION
EVAP CANISTER VACUUM FEED HOSE
EVAP CANISTER VENT VALVE HOSE
EVAP CANISTER OUTPUT HOSE BETWEEN THE CANISTER AND THE FUEL TANK

TEST	ACTION	APPLICABILITY
1	Turn the ignition off. Disconnect the EVAP Purge Solenoid hose assembly Connect a vacuum gauge to the vacuum side of the hose assembly. Start the engine and observe the vacuum gauge. Is the vacuum above 13 inches of vacuum? Yes → Go To 2 No → Repair vacuum hose or vacuum source as necessary. Perform POWERTRAIN VERIFICATION TEST VER - 2.	All
2	Turn the ignition off. Disconnect the EVAP Purge Solenoid hose assembly. Connect a vacuum pump to the vacuum port side of the EVAP Purge Solenoid component side. Apply 10 inches of vacuum to the EVAP Purge Solenoid. Does the EVAP purge Solenoid hold vacuum? Yes → Go To 3 No → Replace the EVAP Purge Solenoid. Perform POWERTRAIN VERIFICATION TEST VER - 2.	All
3	Turn the ignition off. Disconnect the EVAP Purge Solenoid hose assembly. Connect a vacuum pump to the vacuum port side of the EVAP Purge Solenoid component side. Apply 10 inches of vacuum to the EVAP Purge Solenoid. With the DRBIII®, actuate the EVAP Purge Solenoid. Does vacuum drop to zero when the EVAP Purge Solenoid is actuated? Yes → Go To 4 No → Replace the EVAP Purge Solenoid. Perform POWERTRAIN VERIFICATION TEST VER - 2.	All

*CHECKING THE EVAP SYSTEM — Continued

TEST	ACTION	APPLICABILITY
4	Turn the ignition off. Disconnect the vacuum hose from the EVAP Canister. Connect a vacuum gauge to the vacuum hose. Disconnect the EVAP Purge Solenoid hose assembly. Using a piece of extra hose, jumper the vacuum port to the EVAP canister vacuum feed port on the hose assembly side. Start the engine and observe the vacuum gauge. Is the vacuum above 13 inches? Yes → Go To 5 No → Repair or replace the vacuum hose between the EVAP Purge Solenoid and EVAP Canister. Perform POWERTRAIN VERIFICATION TEST VER - 2.	All
5	Turn the ignition off. Disconnect the EVAP Canister Outlet hose from the EVAP Canister. Connect a vacuum gauge to the EVAP Canister Outlet port on the EVAP canister. Plug the EVAP Canister vent hose. Disconnect the EVAP Solenoid hose assembly. Using a piece of extra hose, jumper the vacuum port to the EVAP canister vacuum feed port on the hose assembly side. Start the engine and observe the vacuum gauge. Is the vacuum above 13 inches? Yes → Go To 6 No → Check for a restricted or damage canister vent hose, repair/replace as necessary. If ok, replace the EVAP Canister. Perform POWERTRAIN VERIFICATION TEST VER - 2.	All
6	Inspect the EVAP Canister Output hose between the Fuel Tank and the EVAP Canister. Check hose for holes or rubbed through areas. **NOTE: If using shop air to check for restriction do not let the air pressure exceed 5.0 psi.** Check hose for restrictions. Were any problems found? Yes → Repair or replace as necessary. Perform POWERTRAIN VERIFICATION TEST VER - 2. No → Test Complete.	All

Symptom:

*CHECKING TP SENSOR

POSSIBLE CAUSES
THROTTLE POSITION SENSOR VOLTAGE ABOVE 1.5 VOLTS
THROTTLE POSITION SENSOR SWEEP
THROTTLE POSITION SENSOR

TEST	ACTION	APPLICABILITY
1	**NOTE: Ensure that the throttle and linkage is not binding and is operating properly.** Turn the ignition on. With the DRBIII®, read the Throttle Position Sensor voltage. Is the voltage above 1.5 volts? Yes → Replace the Throttle Position Sensor. Perform POWERTRAIN VERIFICATION TEST VER - 2. No → Go To 2	All
2	Turn the ignition on. With the DRBIII®, monitor the Throttle Position Sensor voltage. Slowly open the throttle from the idle position to the wide open throttle position. Does voltage start at approximately 0.8 volts and go above 3.5 volts with a smooth voltage change? Yes → Throttle Position Sensor Operating normally. Perform POWERTRAIN VERIFICATION TEST VER - 2. No → Replace the Throttle Position Sensor. Perform POWERTRAIN VERIFICATION TEST VER - 2.	All

Symptom:

P0645-A/C CLUTCH RELAY CKT

When Monitored and Set Condition:

P0645-A/C CLUTCH RELAY CKT

When Monitored: With the ignition on. Battery voltage greater than 10 volts. A/C Switch on.

Set Condition: An open or shorted condition is detected in the A/C clutch relay control circuit.

POSSIBLE CAUSES
A/C CLUTCH RELAY INTERMITTENT OPERATION
INTERMITTENT CONDITION
FUSED IGNITION SWITCH OUTPUT CIRCUIT OPEN
INTELLIGENT POWER MODULE
A/C CLUTCH RELAY
IPM FUSE & RELAY CENTER
A/C CLUTCH RELAY CONTROL CKT OPEN
A/C CLUTCH RELAY CONTROL CIRCUIT SHORT TO GROUND
PCM

TEST	ACTION	APPLICABILITY
1	Turn the ignition on. With the DRBIII®, actuate the A/C Clutch Relay. Is the A/C Clutch Relay operating? Yes → Go To 2 No → Go To 4	All
2	Turn the ignition on. With the DRBIII®, actuate the A/C Clutch Relay. Wiggle the wiring harness from the A/C Clutch Relay to the PCM while the relay is actuating. Did the A/C Clutch Relay stop when wiggling the wiring harness? Yes → Repair as necessary. Perform POWERTRAIN VERIFICATION TEST VER - 5. No → Go To 3	All

P0645-A/C CLUTCH RELAY CKT — Continued

TEST	ACTION	APPLICABILITY
3	**WARNING: WHEN THE ENGINE IS OPERATING, DO NOT STAND IN A DIRECT LINE WITH THE FAN. DO NOT PUT YOUR HANDS NEAR THE PULLEYS, BELTS OR FAN. DO NOT WEAR LOOSE CLOTHING.** **NOTE: The conditions that set the DTC are not present at this time. The following list may help in identifying the intermittent condition.** With the engine running at normal operating temperature, monitor the DRBIII® parameters related to the DTC while wiggling the wiring harness. Look for parameter values to change and/or a DTC to set. Review the DRBIII® Freeze Frame information. If possible, try to duplicate the conditions under which the DTC was set. Refer to any Technical Service Bulletins (TSB) that may apply. Visually inspect the related wiring harness. Look for any chafed, pierced, pinched, or partially broken wires. Visually inspect the related wiring harness connectors. Look for broken, bent, pushed out, or corroded terminals. Were any of the above conditions present? Yes → Repair as necessary Perform POWERTRAIN VERIFICATION TEST VER - 5. No → Test Complete.	All
4	Turn the ignition off. Remove the A/C Clutch Relay from the IPM. Turn the ignition on. Using a 12-volt test light connected to ground, probe the Fused Ignition Switch circuit in the IPM. Does the test light illuminate? Yes → Go To 5 No → Go To 10	All
5	Turn the ignition off. Remove the A/C Clutch Relay from the IPM. Turn the ignition on. Using a 12-volt test light connected to 12-volts, probe the A/C Clutch Relay circuit in the IPM. With the DRBIII®, actuate the A/C Clutch Relay. Does the test light flash on and off? Yes → Replace the A/C Clutch Relay. Perform POWERTRAIN VERIFICATION TEST VER - 5. No → Go To 6	All
6	Turn the ignition off. Disconnect the Intelligent Power Module C3 harness connector. Turn the ignition on. Using a 12-volt test light connected to 12-volts, probe the A/C Clutch Relay Control circuit in the IPM harness connector. With the DRBIII®, actuate the A/C Clutch Relay. Does the test light flash on and off? Yes → Replace the IPM Fused & Relay Center. Perform POWERTRAIN VERIFICATION TEST VER - 5. No → Go To 7	All

P0645-A/C CLUTCH RELAY CKT — Continued

TEST	ACTION	APPLICABILITY
7	Turn the ignition off. Disconnect the Intelligent Power Module C3 harness connector. Disconnect the PCM harness connector. Measure the resistance of the A/C Clutch Relay Control circuit between the Intelligent Power Module C3 harness connector and the PCM harness connector. Is the resistance below 5.0 ohms? Yes → Go To 8 No → Repair the A/C Clutch Relay Control circuit for an open. Perform POWERTRAIN VERIFICATION TEST VER - 5.	All
8	Turn the ignition off. Disconnect the Intelligent Power Module C3 harness connector. Disconnect the PCM harness connector. Measure the resistance of the A/C Clutch Relay Control circuit in the Intelligent Power Module C3 harness connector to ground. Is the resistance below 5.0 ohms? Yes → Repair the A/C Clutch Relay Control circuit for a short to ground. Perform POWERTRAIN VERIFICATION TEST VER - 5. No → Go To 9	All
9	If there are no possible causes remaining, view repair. Repair Replace and program the Powertrain Control Module Module in accordance with the Service Information. Perform POWERTRAIN VERIFICATION TEST VER - 5.	All
10	Turn the ignition off. Disconnect the Intelligent Power Module C3 harness connector. Turn the ignition on. Using a 12-volt test light connected to ground, probe the Fused Ignition Switch circuit in the IPM harness connector. Does the test light illuminate? Yes → Replace the IPM Fuse & Relay Center. Perform POWERTRAIN VERIFICATION TEST VER - 5. No → Repair the Fused Ignition Switch Output circuit for an open. Perform POWERTRAIN VERIFICATION TEST VER - 5.	All

Symptom:

P1598-A/C PRESSURE SENSOR VOLTS TOO HIGH

When Monitored and Set Condition:

P1598-A/C PRESSURE SENSOR VOLTS TOO HIGH

When Monitored: Engine running. The A/C relay energized.

Set Condition: The A/C pressure sensor signal at the PCM goes above 4.92 volts.

POSSIBLE CAUSES
INTERMITTENT CONDITION
A/C PRESSURE SENSOR SIGNAL CIRCUIT SHORTED TO 5 VOLT SUPPLY CIRCUIT
A/C PRESSURE SENSOR SIGNAL CIRCUIT SHORTED TO BATTERY VOLTAGE
A/C PRESSURE SENSOR INTERNAL FAILURE
A/C PRESSURE SENSOR SIGNAL CIRCUIT OPEN
SENSOR GROUND CIRCUIT OPEN
PCM

TEST	ACTION	APPLICABILITY
1	**NOTE: Ensure the A/C refrigerant System is properly charged per the Service Information.** Start the engine. With the DRBIII®, read the A/C Pressure Sensor voltage. Is the voltage above 4.6 volts? Yes → Go To 2 No → Go To 8	All
2	Turn the ignition off. Disconnect the A/C Pressure Sensor harness connector. Disconnect the PCM harness connector. Measure the resistance between the A/C Pressure Sensor Signal circuit and the 5 Volt Supply circuit in the A/C Pressure Sensor harness connector. Is the resistance below 5.0 ohms? Yes → Repair the A/C Pressure Sensor Signal circuit for a short to the 5 Volt Supply circuit. Perform POWERTRAIN VERIFICATION TEST VER - 2. No → Go To 3	All

P1598-A/C PRESSURE SENSOR VOLTS TOO HIGH — Continued

TEST	ACTION	APPLICABILITY
3	Turn the ignition off. Disconnect the A/C Pressure Sensor harness connector. Turn the ignition on. Measure the voltage on the A/C Pressure Sensor Signal circuit at the A/C Pressure Sensor harness connector. Is the voltage above 5.2 volts? Yes → Repair the A/C Pressure Sensor Signal circuit for a short to battery voltage. Perform POWERTRAIN VERIFICATION TEST VER - 2. No → Go To 4	All
4	Turn the ignition off. Disconnect the A/C Pressure Sensor harness connector. Connect a jumper wire between the A/C Pressure Sensor Signal circuit and the Sensor ground circuit. With the DRBIII®, monitor the A/C Pressure Sensor voltage. Turn the ignition on. Is the voltage below 1.0 volts? Yes → Replace the A/C Pressure Sensor. Perform POWERTRAIN VERIFICATION TEST VER - 2. No → Go To 5	All
5	Turn the ignition off. Disconnect the A/C Pressure Sensor harness connector. Disconnect the PCM harness connector. Measure the resistance of the A/C Pressure Sensor Signal circuit between the PCM harness connector and the A/C Pressure Sensor harness connector. Is the resistance below 5.0 ohms? Yes → Go To 6 No → Repair the A/C Pressure Sensor Signal circuit for an open. Perform POWERTRAIN VERIFICATION TEST VER - 2.	All
6	Turn the ignition off. Disconnect the A/C Pressure Sensor harness connector. Measure the resistance between ground and the Sensor ground circuit at the A/C Pressure Sensor harness connector. Is the resistance below 30 ohms? Yes → Go To 7 No → Repair the Sensor ground circuit for an open. Perform POWERTRAIN VERIFICATION TEST VER - 2.	All
7	If there are no possible causes remaining, view repair. Repair Replace and program the Powertrain Control Module Module in accordance with the Service Information. Perform POWERTRAIN VERIFICATION TEST VER - 2.	All

P1598-A/C PRESSURE SENSOR VOLTS TOO HIGH — Continued

TEST	ACTION	APPLICABILITY
8	**NOTE: Ensure the A/C refrigerant System is properly charged per the Service Information.** **NOTE: The conditions that set the DTC are not present at this time. The following list may help in identifying the intermittent condition.** **WARNING: WHEN THE ENGINE IS OPERATING, DO NOT STAND IN A DIRECT LINE WITH THE FAN. DO NOT PUT YOUR HANDS NEAR THE PULLEYS, BELTS OR FAN. DO NOT WEAR LOOSE CLOTHING.** With the engine running at normal operating temperature, monitor the DRBIII® parameters related to the DTC while wiggling the wiring harness. Look for parameter values to change and/or a DTC to set. Review the DRBIII® Freeze Frame information. If possible, try to duplicate the conditions under which the DTC was set. Refer to any Technical Service Bulletins (TSB) that may apply. Visually inspect the related wiring harness. Look for any chafed, pierced, pinched, or partially broken wires. Visually inspect the related wiring harness connectors. Look for broken, bent, pushed out, or corroded terminals. Were any of the above conditions present? Yes → Repair as necessary Perform POWERTRAIN VERIFICATION TEST VER - 2. No → Test Complete.	All

Symptom:

P1599-A/C PRESSURE SENSOR VOLTS TOO LOW

When Monitored and Set Condition:

P1599-A/C PRESSURE SENSOR VOLTS TOO LOW

When Monitored: Engine running. The A/C relay energized.

Set Condition: The A/C pressure sensor signal voltage at the PCM goes below 0.58 volts for 2.6 seconds.

POSSIBLE CAUSES
INTERMITTENT CONDITION
5 VOLT SUPPLY CIRCUIT SHORTED TO GROUND
5 VOLT SUPPLY CIRCUIT OPEN
A/C PRESSURE SENSOR INTERNAL FAILURE
A/C PRESSURE SENSOR SIGNAL CIRCUIT SHORTED TO GROUND
A/C PRESSURE SENSOR SIGNAL CIRCUIT SHORTED TO SENSOR GROUND CIRCUIT
PCM 5 VOLT SUPPLY CIRCUIT
PCM A/C PRESSURE SENSOR SIGNAL

TEST	ACTION	APPLICABILITY
1	**NOTE: Ensure the A/C refrigerant System is properly charged per the Service Information.** Start the engine. With the DRBIII®, read the A/C Pressure Sensor voltage. Is the voltage below 0.6 volts? Yes → Go To 2 No → Go To 10	All
2	Turn the ignition off. Disconnect the A/C Pressure Sensor harness connector. Turn the ignition on. Measure the voltage of the 5 Volt Supply circuit in the A/C Pressure Sensor harness connector. Is the voltage between 4.5 to 5.2 volts? Yes → Go To 3 No → Go To 7	All

P1599-A/C PRESSURE SENSOR VOLTS TOO LOW — Continued

TEST	ACTION	APPLICABILITY
3	Turn the ignition off. Disconnect the A/C Pressure Sensor harness connector. With the DRBIII®, monitor the A/C Pressure Sensor voltage. Turn the ignition on. Is the voltage above 0.6 volts? Yes → Replace the A/C Pressure Sensor. Perform POWERTRAIN VERIFICATION TEST VER - 2. No → Go To 4	All
4	Turn the ignition off. Disconnect the A/C Pressure Sensor harness connector. Disconnect the PCM harness connector. Measure the resistance between ground and the A/C Pressure Sensor Signal circuit in the A/C Pressure Sensor harness connector. Is the resistance below 100 ohms? Yes → Repair the A/C Pressure Sensor Signal circuit for a short to ground. Perform POWERTRAIN VERIFICATION TEST VER - 2. No → Go To 5	All
5	Turn the ignition off. Disconnect the A/C Pressure Sensor harness connector. Disconnect the PCM harness connector. Measure the resistance between the A/C Pressure Sensor Signal circuit and the Sensor ground circuit in the A/C Pressure Sensor harness connector. Is the resistance below 100 ohms? Yes → Repair the A/C Pressure Sensor Signal circuit for a short to the Sensor ground circuit. Perform POWERTRAIN VERIFICATION TEST VER - 2. No → Go To 6	All
6	If there are no possible causes remaining, view repair. Repair Replace and program the Powertrain Control Module Module in accordance with the Service Information. Perform POWERTRAIN VERIFICATION TEST VER - 2.	All
7	Turn the ignition off. Disconnect the A/C Pressure Sensor harness connector. Disconnect the PCM harness connector. Measure the resistance between ground and the 5 Volt Supply circuit in the A/C Pressure Sensor harness connector. Is the resistance below 100 ohms? Yes → Repair the 5 Volt Supply circuit for a short to ground. Perform POWERTRAIN VERIFICATION TEST VER - 2. No → Go To 8	All

P1599-A/C PRESSURE SENSOR VOLTS TOO LOW — Continued

TEST	ACTION	APPLICABILITY
8	Turn the ignition off. Disconnect the A/C Pressure Sensor harness connector. Disconnect the PCM harness connector. Measure the resistance of the 5 Volt Supply circuit between the A/C Pressure Sensor harness connector and the PCM harness connector. Is the resistance below 5.0 ohms? Yes → Go To 9 No → Repair the 5 Volt Supply circuit for an open. Perform POWERTRAIN VERIFICATION TEST VER - 2.	All
9	If there are no possible causes remaining, view repair. Repair Replace and program the Powertrain Control Module in accordance with the Service Information. Perform POWERTRAIN VERIFICATION TEST VER - 2.	All
10	**NOTE: Ensure the A/C refrigerant System is properly charges per the Service Information.** **WARNING: WHEN THE ENGINE IS OPERATING, DO NOT STAND IN A DIRECT LINE WITH THE FAN. DO NOT PUT YOUR HANDS NEAR THE PULLEYS, BELTS OR FAN. DO NOT WEAR LOOSE CLOTHING.** **NOTE: The conditions that set the DTC are not present at this time. The following list may help in identifying the intermittent condition.** With the engine running at normal operating temperature, monitor the DRBIII® parameters related to the DTC while wiggling the wiring harness. Look for parameter values to change and/or a DTC to set. Review the DRBIII® Freeze Frame information. If possible, try to duplicate the conditions under which the DTC was set. Refer to any Technical Service Bulletins (TSB) that may apply. Visually inspect the related wiring harness. Look for any chafed, pierced, pinched, or partially broken wires. Visually inspect the related wiring harness connectors. Look for broken, bent, pushed out, or corroded terminals. Were any of the above conditions present? Yes → Repair as necessary Perform POWERTRAIN VERIFICATION TEST VER - 2. No → Test Complete.	All

Symptom List:

P1595-SPEED CONTROL SOLENOID CIRCUITS
P1683-SPD CTRL PWR RELAY; OR S/C 12V DRIVER CKT

Test Note: All symptoms listed above are diagnosed using the same tests. The title for the tests will be P1595-SPEED CONTROL SOLENOID CIRCUITS.

When Monitored and Set Condition:

P1595-SPEED CONTROL SOLENOID CIRCUITS

When Monitored: With the ignition on. Battery voltage greater than 10 volts. Speed Control Switched on.

Set Condition: The Powertrain Control Module actuates the vacuum and vent solenoids but they do not respond.

P1683-SPD CTRL PWR RELAY; OR S/C 12V DRIVER CKT

When Monitored: With the ignition key on. The speed control switched on.

Set Condition: The speed control power supply circuit is either open or shorted to ground.

POSSIBLE CAUSES
GROUND CIRCUIT OPEN
INTERMITTENT CONDITION
S/C BRAKE SWITCH OUTPUT CIRCUIT
SPEED CONTROL SWITCH OUTPUT OPEN
BRAKE LAMP SWITCH
SPEED CONTROL POWER SUPPLY CIRCUIT
PCM (S/C POWER SUPPLY)
SPEED CONTROL VACUUM SOLENOID
SPEED CONTROL VACUUM SOLENOID CONTROL CIRCUIT OPEN
PCM (VACUUM SOLENOID)
SPEED CONTROL VACUUM SOLENOID CONTROL CIRCUIT SHORTED TO GROUND
SPEED CONTROL VENT SOLENOID
SPEED CONTROL VENT SOLENOID CONTROL CIRCUIT OPEN
SPEED CONTROL VENT SOLENOID CONTROL CIRCUIT SHORTED TO GROUND
PCM (VENT SOLENOID)

P1595-SPEED CONTROL SOLENOID CIRCUITS — Continued

TEST	ACTION	APPLICABILITY
1	Turn the ignition on. **NOTE: In the below step you will need to actuate both S/C solenoids separately. Note the operation of the each solenoid when actuated.** With the DRBIII®, actuate the Speed Control Vacuum Solenoid and note operation. With the DRBIII®, actuate the Speed Control Vent Solenoid and note operation. Choose the conclusion that best matches the solenoids operation? Vacuum Solenoid not operating Go To 2 Vent Solenoid not operating Go To 6 Both S/C Solenoids not operating Go To 10 Both S/C Solenoids operating Go To 15	All
2	Turn the ignition off. Disconnect the Speed Control Servo harness connector. Turn the ignition on. With the DRBIII®, actuate the Speed Control Vacuum Solenoid. Using a 12-volt test light connected to 12-volts, probe the Speed Control Vacuum Solenoid Control circuit. Does the test light illuminate brightly and flash? Yes → Replace the Speed Control Servo. Perform POWERTRAIN VERIFICATION TEST VER - 4. No → Go To 3	All
3	Turn the ignition off. Disconnect the S/C Servo harness connector. Disconnect the PCM harness connector. Measure the resistance of the Speed Control Vacuum Solenoid Control circuit between the PCM harness connector and Speed Control Servo harness connector. Is the resistance below 5.0 ohms? Yes → Go To 4 No → Repair the Speed Control Vacuum Solenoid Control circuit for an open. Perform POWERTRAIN VERIFICATION TEST VER - 4.	All
4	Turn the ignition off. Disconnect the S/C Servo harness connector. Disconnect the PCM harness connector. Measure the resistance of the Speed Control Vacuum Solenoid Control circuit in the PCM harness connector to ground. Is the resistance below 5.0 ohms? Yes → Repair the Speed Control Vacuum Solenoid Control circuit for a short to ground. Perform POWERTRAIN VERIFICATION TEST VER - 4. No → Go To 5	All

P1595-SPEED CONTROL SOLENOID CIRCUITS — Continued

TEST	ACTION	APPLICABILITY
5	If the there are no possible causes remaining, view repair. Repair Replace and program the Powertrain Control Module in accordance with the Service Information. Perform POWERTRAIN VERIFICATION TEST VER - 4.	All
6	Turn the ignition off. Disconnect the Speed Control Servo harness connector. Turn the ignition on. With the DRBIII®, actuate the Speed Control Vent Solenoid. Using a 12-volt test light connected to 12-volts, probe the Speed Control Vent Solenoid Control circuit in the Speed Control Servo harness connector. Does the test light illuminate brightly and flash? Yes → Replace the Speed Control Servo. Perform POWERTRAIN VERIFICATION TEST VER - 4. No → Go To 7	All
7	Turn the ignition off. Disconnect the S/C Servo harness connector. Disconnect the PCM harness connector. Measure the resistance of the Speed Control Vent Solenoid Control circuit between the PCM harness connector and Speed Control Servo harness connector. Is the resistance below 5.0 ohms? Yes → Go To 8 No → Repair the Speed Control Vacuum Solenoid Control circuit for an open. Perform POWERTRAIN VERIFICATION TEST VER - 4.	All
8	Turn the ignition off. Disconnect the S/C Servo harness connector. Disconnect the PCM harness connector. Measure the resistance of the Speed Control Vent Solenoid Control circuit in the PCM harness connector to ground. Is the resistance below 5.0 ohms? Yes → Repair the Speed Control Vacuum Solenoid Control circuit for a short to ground. Perform POWERTRAIN VERIFICATION TEST VER - 4. No → Go To 9	All
9	If the there are no possible causes remaining, view repair. Repair Replace and program the Powertrain Control Module in accordance with the Service Information. Perform POWERTRAIN VERIFICATION TEST VER - 4.	All

P1595-SPEED CONTROL SOLENOID CIRCUITS — Continued

TEST	ACTION	APPLICABILITY
10	Turn the ignition off. Disconnect the S/C Servo harness connector. Turn the ignition on. Using a 12-volt test light connected to ground, probe the S/C Brake Switch Output circuit in the S/C Servo harness connector. Does the test light illuminate brightly? Yes → Replace the Speed Control Servo. Perform POWERTRAIN VERIFICATION TEST VER - 4. No → Go To 11	All
11	Turn the ignition off. Disconnect the Speed Control Servo harness connector. Disconnect the Brake Lamp Switch harness connector. Measure the resistance of the Speed Control Brake Switch Output circuit between the Speed Control Servo harness connector and Brake Lamp Switch harness connector. Is the resistance below 5.0 ohms? Yes → Go To 12 No → Repair the Speed Control Brake Switch Output circuit for an open. Perform POWERTRAIN VERIFICATION TEST VER - 4.	All
12	Disconnect the Brake Lamp Switch harness connector. Turn the ignition on. Using a 12-volt test light connected to ground, probe the Speed Control Power Supply circuit in the Brake Lamp Switch harness connector. Does the test light illuminate brightly? Yes → Replace the Brake Lamp Switch. Perform POWERTRAIN VERIFICATION TEST VER - 4. No → Go To 13	All
13	Turn the ignition off. Disconnect the PCM harness connector. Disconnect the Brake Lamp Switch harness connector. Measure the resistance of the Speed Control Power Supply circuit between the PCM harness connector and the Brake Lamp Switch harness connector. Is the resistance below 5.0 ohms? Yes → Go To 14 No → Repair the Speed Control Supply circuit for an open. Perform POWERTRAIN VERIFICATION TEST VER - 4.	All
14	If there are no possible causes remaining, view repair. Repair Replace and program the Powertrain Control Module in accordance with the Service Information. Perform POWERTRAIN VERIFICATION TEST VER - 4.	All

P1595-SPEED CONTROL SOLENOID CIRCUITS — Continued

TEST	ACTION	APPLICABILITY
15	Turn the ignition off. Disconnect the S/C Servo harness connector. Using a 12-volt test light connected to 12-volts, probe the ground circuit in the S/C Servo harness connector. Does the test light illuminate brightly? Yes → Go To 16 No → Repair the ground circuit for an open. Perform POWERTRAIN VERIFICATION TEST VER - 4.	All
16	**WARNING: WHEN THE ENGINE IS OPERATING, DO NOT STAND IN A DIRECT LINE WITH THE FAN. DO NOT PUT YOUR HANDS NEAR THE PULLEYS, BELTS OR FAN. DO NOT WEAR LOOSE CLOTHING.** **NOTE: The conditions that set the DTC are not present at this time. The following list may help in identifying the intermittent condition.** With the engine running at normal operating temperature, monitor the DRBIII® parameters related to the DTC while wiggling the wiring harness. Look for parameter values to change and/or a DTC to set. Review the DRBIII® Freeze Frame information. If possible, try to duplicate the conditions under which the DTC was set. Refer to any Technical Service Bulletins (TSB) that may apply. Visually inspect the related wiring harness. Look for any chafed, pierced, pinched, or partially broken wires. Visually inspect the related wiring harness connectors. Look for broken, bent, pushed out, or corroded terminals. Were any of the above conditions present? Yes → Repair as necessary Perform POWERTRAIN VERIFICATION TEST VER - 4. No → Test Complete.	All

Symptom:

***ENGINE CRANKS DOES NOT START**

POSSIBLE CAUSES
FUEL PUMP RELAY
NO START PRE-TEST
POWERTRAIN FUSES OPEN
FUEL PRESSURE OUT OF SPECS
RESTRICTED FUEL SUPPLY LINE
FUEL PUMP INLET STRAINER PLUGGED
FUEL PUMP MODULE
FUEL PUMP CAPACITY (VOLUME) OUT OF SPECS
FUEL PUMP RELAY FUSED B+ CIRCUIT
OTHER POSSIBLE CAUSES FOR NO START
FUEL PUMP RELAY OUTPUT CIRCUIT OPEN
FUEL PUMP GROUND CIRCUIT OPEN/HIGH RESISTANCE
IPM FUSE & RELAY CENTER
FUEL PUMP MODULE

TEST	ACTION	APPLICABILITY
1	**Note: The following list of items must be checked before continuing with any no start tests.** The battery must be fully charged and pass a load test. A low charge battery may produce invalid test results. If the battery is low, charge the battery and then attempt to start the vehicle by cranking the engine for 15 seconds, 3 consecutive times. This will allow any DTC's to set that may have been erased due to a dead battery. Ensure the Battery, Ignition voltage and Ground to the PCM are ok. Make sure the PCM communicates with the DRBIII® and that there are no DTC's stored in the PCM memory. If the PCM reports a No Response condition, refer to the Communication category for the proper tests. Read the PCM DTC's with the DRBIII®. If any DTC's are present, they must be repaired before continuing with any other No Start diagnostic tests. Refer to the Symptom list for the related P-code that is reported by the PCM. Ensure that the PCI bus is functional. Attempt to communicate with the Instrument Cluster and SKIM, If you are unable to establish communicate refer to the Communication category for the proper symptoms. The Sentry Key Immobilizer System must be operating properly. Check for proper communication with the DRBIII® and check for DTC's that may be stored in the Sentry Key Immobilizer Module (SKIM). repair the DTC(s) before continuing. If no DTC's are found, using the DRBIII® select Clear PCM (Batt Disconnect). Crank the engine several times. Using the DRBIII®, read DTC's. If a DTC is present perform the DTC diagnostics before continuing. Were any problems found? Yes → Repair as necessary. Perform POWERTRAIN VERIFICATION TEST VER - 1. No → Go To 2	All

*ENGINE CRANKS DOES NOT START — Continued

TEST	ACTION	APPLICABILITY
2	Check for any open fuses in the IPM that may be related to the No Start condition. Are any of the fuses open? Yes → Using the wiring diagram/schematic as a guide, inspect the wiring and connectors, repair as necessary. Replace the Fuse. Perform POWERTRAIN VERIFICATION TEST VER - 1. No → Go To 3	All
3	Turn the ignition on. With the DRBIII®, actuate the ASD Fuel System test. **Note: It may be necessary to use a mechanics stethoscope in the next step.** Listen for fuel pump operation at the fuel tank. Does the Fuel Pump operate? Yes → Go To 4 No → Go To 9 **Caution: Stop All Actuations.**	All
4	Turn the ignition off. **WARNING: The fuel system is under a constant pressure even with the engine off. Before testing or servicing any fuel system hose, fitting or line, the fuel system pressure must be released.** Install a fuel pressure gauge to the fuel rail test port. Turn the ignition on. With the DRBIII®, actuate the ASD Fuel System test and observe the fuel pressure gauge. **NOTE: Fuel pressure specification is 400 kPa +/- 34 kPa (58 psi +/- 5 psi).** Choose a conclusion that best matches your fuel pressure reading. Below Specification Go To 5 Within Specification Go To 7 Above Specification Replace the fuel filter/fuel pressure regulator. Perform POWERTRAIN VERIFICATION TEST VER - 1. **Caution: Stop All Actuations.**	All

*ENGINE CRANKS DOES NOT START — Continued

TEST	ACTION	APPLICABILITY
5	Turn the ignition off. **WARNING: The fuel system is under a constant pressure even with the engine off. Before testing or servicing any fuel system hose, fitting or line, the fuel system pressure must be released.** Raise vehicle on hoist, and disconnect the fuel pressure line at the fuel pump module. Install special 5/16″ fuel line adapter tool #6539 between disconnected fuel line and the fuel pump module. Attach a fuel pressure test gauge to the ″T″ fitting on tool #6539. Turn the ignition on. With the DRBIII®, actuate the ASD Fuel System test and observe the fuel pressure gauge. **NOTE: Fuel pressure specification is 400 KPa +/- 34 KPa (58 psi +/- 5 psi).** Is the fuel pressure within specification now? Yes → Repair/replace fuel supply line as necessary. Perform POWERTRAIN VERIFICATION TEST VER - 1. No → Go To 6 **Caution: Stop All Actuations.**	All
6	Turn the ignition off. **WARNING: The fuel system is under a constant pressure even with the engine off. Before testing or servicing any fuel system hose,fitting or line, the fuel system pressure must be released.** Remove the Fuel Pump Module and inspect the Fuel Inlet Strainer. Is the Fuel Inlet Strainer plugged? Yes → Replace the Fuel Pump Inlet Strainer. Perform POWERTRAIN VERIFICATION TEST VER - 1. No → Replace the Fuel Pump Module. Perform POWERTRAIN VERIFICATION TEST VER - 1.	All
7	**Note: The fuel pressure must be within specification before continuing.** Turn the ignition off. **WARNING: The fuel system is under a constant pressure even with the engine off. Before testing or servicing any fuel system hose, fitting or line, the fuel system pressure must be released.** Disconnect the fuel supply line at the fuel rail. Connect fuel line adapter #6539(5/16″) or #6631(3/8″) to the disconnected fuel supply line. Insert the other end of the adapter into a graduated container. **Caution: Do not operate the fuel pump for more than 7 seconds in the next step. Fuel pump module reservoir may run empty and damage to the fuel pump will result.** **Note: Specification: A good fuel pump will deliver at least 1/4 liter (1/2 pint) of fuel in 7 seconds.** Turn the ignition on. With the DRBIII®, actuate the ASD Fuel System test for 7 seconds. Is the fuel pump capacity within specification? Yes → Go To 8 No → Check for a kinked/damaged fuel supply line between the fuel tank and fuel rail. If OK, replace the fuel pump module. Perform POWERTRAIN VERIFICATION TEST VER - 1. **Caution: Stop All Actuations.**	All

*ENGINE CRANKS DOES NOT START — Continued

TEST	ACTION	APPLICABILITY
8	The following items need to be checked as a possible cause for a no start condition. Refer to any Technical Service Bulletins that may apply to the symptom. The spark plugs must be free from fuel, oil, coolant and/or any foreign material or deposits. The fuel must be free from contamination. The exhaust may be free from restrictions. The engine compression must be within specifications. The engine valve timing must be within specifications. The engine must be free from vacuum leaks. Were any of the above conditions found? Yes → Repair as necessary. Perform POWERTRAIN VERIFICATION TEST VER - 1. No → Test Complete.	All
9	Turn the ignition off. Disconnect the fuel pump module harness connector. Turn the ignition on. With the DRBIII®, actuate the ASD Fuel System test. Using a 12 volt test light connected to ground, probe the Fuel Pump Relay Output circuit at the Fuel Pump Module harness connector. Does the test light illuminate brightly? Yes → Go To 10 No → Go To 12 **Caution: Stop All Actuations.**	All
10	Turn the ignition off. Disconnect the Fuel Pump Module harness connector. **Note: Check connectors - It is critical that the connector is free from any signs of corrosion or deformities - Clean/repair as necessary.** Using a 12 - volt test light connected to battery voltage, probe the Fuel Pump ground circuit at the Fuel Pump Module harness connector. Does the test light illuminate brightly? Yes → Go To 11 No → Repair the open/high resistance in the fuel pump ground circuit. Perform POWERTRAIN VERIFICATION TEST VER - 1.	All
11	If there are no possible causes remaining, view repair. Repair Replace the Fuel Pump Module. Perform POWERTRAIN VERIFICATION TEST VER - 1.	All
12	Turn the ignition off. Remove the Fuel Pump Relay from the IPM. With a 12 volt test light connected to ground, probe the Fuel Pump Relay Fused B+ circuit in the IPM. Does the test light illuminate? Yes → Go To 13 No → Check for an open Fuel Pump fuse, repair cause of open. If OK, replace the IPM Fuse & Relay Center. Perform POWERTRAIN VERIFICATION TEST VER - 1.	All

*ENGINE CRANKS DOES NOT START — Continued

TEST	ACTION	APPLICABILITY
13	Turn the ignition off. Disconnect the IPM harness connector. Disconnect the Fuel Pump Module harness connector. Measure the resistance of the Fuel Pump Relay Output circuit between the IPM harness connector and the Fuel Pump Module connector. Is the resistance below 5.0 ohms? Yes → Go To 14 No → Repair the open fuel pump relay output circuit. Perform POWERTRAIN VERIFICATION TEST VER - 1.	All
14	**NOTE: Ensure all IPM harness connector are connected.** Turn the ignition off. Disconnect the Fuel Pump Module harness connector. Remove the Fuel Pump Relay from the IPM. Measure the resistance of the Fuel Pump Relay Output circuit between the IPM and the Fuel Pump Module harness connector. Is the resistance below 5.0 ohms? Yes → Replace the Fuel Pump Relay. Perform POWERTRAIN VERIFICATION TEST VER - 1. No → Replace the IPM Fused & Relay Center. Perform POWERTRAIN VERIFICATION TEST VER - 1.	All

Symptom:
*NO CRANK CONDITION

POSSIBLE CAUSES
REPAIR MECHANICAL CONDITION
TRANSMISSION RANGE SENSOR
BATTERY CIRCUIT RESISTANCE TOO HIGH
IGNITION SWITCH OUTPUT CIRCUIT OPEN
STARTER RELAY CONTROL CIRCUIT OPEN
STARTER RELAY OUTPUT CIRCUIT OPEN
FUSED B(+) CIRCUIT OPEN
STARTER
STARTER MOTOR RELAY
STARTER RELAY

TEST	ACTION	APPLICABILITY
1	**NOTE: Ensure that SKIS is operating properly. Check the SKIM for DTC. If a SKIM DTC(s) is present diagnose them first before continuing.** **WARNING: MAKE SURE THE BATTERY IS DISCONNECTED, THEN WAIT TWO MINUTES BEFORE PROCEEDING.** Turn the engine over by hand to ensure the engine is not seized. Is the engine able to turn over? Yes → Go To 2 No → Repair the mechanical condition preventing the starter motor from cranking. Perform POWERTRAIN VERIFICATION TEST VER - 1.	All
2	Turn the ignition off. Disconnect the PCM harness connectors. Move the Gear selector through all gear positions, from Park to 1st and back. While moving the gear selector through each gear, measure the resistance between ground and the P/N Position Switch Sense circuit. Did the resistance change from above 10.0 ohms to below 10.0 ohms? Yes → Go To 3 No → Replace the Transmission Range Sensor. Perform POWERTRAIN VERIFICATION TEST VER - 1.	All
3	Turn the ignition off. Check the Battery Cables for high resistance using the service information procedure. Did either Battery Cable have a voltage drop greater than 0.2 volt? Yes → Repair the Battery circuit for high resistance. Perform POWERTRAIN VERIFICATION TEST VER - 1. No → Go To 4	All

*NO CRANK CONDITION — Continued

TEST	ACTION	APPLICABILITY
4	Turn ignition off. Remove the Starter Relay from PDC. **WARNING: The Parking Brake must be engaged and the transmission must be in Park for a vehicle equipped with an automatic transmission.** **WARNING: The Starter may Engage in the next step. Keep away from moving engine parts.** Briefly connect a jumper wire between Starter Relay B+ circuit and the Starter Relay Output Circuits. Turn the ignition to the crank position. Did the Starter Motor crank the engine? Yes → Go To 5 No → Go To 8	All
5	Turn the ignition off. Remove the Starter Relay from the PDC. Turn the ignition on. Using a 12-volt test light, probe the Ignition Switch Output circuit in the Starter Relay connector. While observing 12-volt test light, hold ignition key in the start position. Does the test light illuminate brightly? Yes → Go To 6 No → Repair the Ignition Switch Output circuit for an open or high resistance. Perform POWERTRAIN VERIFICATION TEST VER - 1.	All
6	Turn the ignition off. Remove the Starter Relay from the PDC. Disconnect the PCM harness connector. Measure the Starter Relay Control circuit between the Relay terminal and the PCM harness connector. Is the resistance below 5.0 ohms? Yes → Go To 7 No → Repair the Starter Relay Control circuit for an open. Perform POWERTRAIN VERIFICATION TEST VER - 1.	All
7	Turn the ignition off. Install a substitute a Relay in the of the Starter Motor Relay. Attempt to start the vehicle. Does the engine crank over? Yes → Replace the Starter Motor Relay. Perform POWERTRAIN VERIFICATION TEST VER - 1. No → Replace and program the Powertrain Control Module in accordance with the Service Information. Perform POWERTRAIN VERIFICATION TEST VER - 1.	All

*NO CRANK CONDITION — Continued

TEST	ACTION	APPLICABILITY
8	Turn ignition off. Remove the Starter Relay from the PDC. Disconnect the Starter Relay Output connector from the Starter Solenoid. Measure the resistance of the Starter Relay Output circuit between the Relay and the Solenoid harness connector. Is the resistance below 5.0 ohms? Yes → Go To 9 No → Repair Starter Relay Output circuit for an open. Perform POWERTRAIN VERIFICATION TEST VER - 1.	All
9	Turn the ignition off. Remove the Starter Relay from the PDC. Using a 12-volt test light connected to ground, probe the Fused B+ circuit at the Starter Relay terminal. Does the test light illuminate brightly? Yes → Go To 10 No → Repair the Fused B(+) Circuit for an open or high resistance. Perform POWERTRAIN VERIFICATION TEST VER - 1.	All
10	If there are no other possible causes remaining, review repair. Repair Replace the Starter. Perform POWERTRAIN VERIFICATION TEST VER - 1.	All

Symptom:

*NO RESPONSE FROM PCM WITH A NO START CONDITION

POSSIBLE CAUSES
PCM FUSED B+ CIRCUIT
PCM FUSED IGNITION SWITCH OUTPUT CIRCUIT
PCM GROUND CIRCUITS
PCM

TEST	ACTION	APPLICABILITY
1	**NOTE: The DRBIII® and cable must be operating properly for the results of this test to be valid.** **NOTE: Ensure the ignition switch was on when trying to communicate with the PCM.** Turn the ignition off. Disconnect the PCM harness connector. Using a 12-volt test light connected to ground, probe the PCM Fused B+ circuit in the PCM harness connector. Does the test light illuminate brightly? Yes → Go To 2 No → Repair the Fused B+ circuit. Perform POWERTRAIN VERIFICATION TEST VER - 1.	All
2	Turn the ignition off. Disconnect the PCM harness connector. Turn the ignition on. Using a 12-volt test light connected to ground, probe the PCM Fused Ignition Switch Output circuit in the PCM harness connector. Does the test light illuminate brightly? Yes → Go To 3 No → Repair the Ignition Switch Output circuit Perform POWERTRAIN VERIFICATION TEST VER - 1.	All
3	Turn the ignition off. Disconnect the PCM harness connector. Using a 12-volt test light connected to battery voltage, probe all the PCM ground circuits in the PCM harness connector. Does the test light illuminate brightly? Yes → Go To 4 No → Repair the PCM ground circuits. Perform POWERTRAIN VERIFICATION TEST VER - 1.	All
4	If there is no possible causes remaining, view repair. Repair Replace and program the Powertrain Control Module in accordance with the Service Information. Perform POWERTRAIN VERIFICATION TEST VER - 1.	All

Symptom:
*START AND STALL CONDITION

POSSIBLE CAUSES
CHECKING DTCS
CHECKING SKIM DTCS
FUEL PRESSURE OUT OF SPECS
FUEL PUMP CAPACITY (VOLUME) OUT OF SPECS
TP SENSOR SWEEP
TP SENSOR VOLTAGE GREATER THAN 0.92 VOLTS WITH THROTTLE CLOSED
ECT SENSOR OPERATION
OTHER POSSIBLE CAUSES FOR START & STALL
RESTRICTED FUEL SUPPLY LINE
FUEL PUMP INLET STRAINER PLUGGED
FUEL PUMP MODULE

TEST	ACTION	APPLICABILITY
1	Turn the ignition on. With the DRBIII®, read DTC's. Are any DTCs present? Yes → Refer to the Driveability Category and perform the appropriate symptom. Perform POWERTRAIN VERIFICATION TEST VER - 1. No → Go To 2	All
2	Turn the ignition on. **NOTE: If you are unable to communicate with the SKIM, refer to the Communication Category and perform the appropriate symptom.** With the DRBIII®, read the SKIM codes. Are there any SKIM DTCs? Yes → Refer to the Vehicle Theft category and perform the appropriate symptom. Perform POWERTRAIN VERIFICATION TEST VER - 1. No → Go To 3	All

*START AND STALL CONDITION — Continued

TEST	ACTION	APPLICABILITY
3	Turn the ignition off. **WARNING: The fuel system is under a constant pressure even with the engine off. Before testing or servicing any fuel system hose, fitting or line, the fuel system pressure must be released.** Install a fuel pressure gauge to the fuel rail test port. Turn the ignition on. With the DRBIII®, actuate the ASD Fuel System test and observe the fuel pressure gauge. **NOTE: Fuel pressure specification is 400 KPa +/- 34 KPa (58 psi +/- 5 psi).** Choose a conclusion that best matches your fuel pressure reading. Below Specification Go To 4 Within Specification Go To 6 Above Specification Replace the fuel filter/fuel pressure regulator. Perform POWERTRAIN VERIFICATION TEST VER - 1. **Caution: Stop All Actuations.**	All
4	Turn the ignition off. **WARNING: The fuel system is under a constant pressure even with the engine off. Before testing or servicing any fuel system hose, fitting or line, the fuel system pressure must be released.** Raise vehicle on hoist, and disconnect the fuel pressure line at the fuel pump module. Install special 5/16″ fuel line adapter tool #6539 between disconnected fuel line and the fuel pump module. Attach a fuel pressure test gauge to the ″T″ fitting on tool #6539. Turn the ignition on. With the DRBIII®, actuate the ASD Fuel System test and observe the fuel pressure gauge. **NOTE: Fuel pressure specification is 400 KPa +/- 34 KPa (58 psi +/- 5 psi).** Is the fuel pressure within specification now? Yes → Repair/replace fuel supply line as necessary. Perform POWERTRAIN VERIFICATION TEST VER - 1. No → Go To 5 **Caution: Stop All Actuations.**	All
5	Turn the ignition off. **WARNING: The fuel system is under a constant pressure even with the engine off. Before testing or servicing any fuel system hose,fitting or line, the fuel system pressure must be released.** Remove the Fuel Pump Module and inspect the Fuel Inlet Strainer. Is the Fuel Inlet Strainer plugged? Yes → Replace the Fuel Pump Inlet Strainer. Perform POWERTRAIN VERIFICATION TEST VER - 1. No → Replace the Fuel Pump Module. Perform POWERTRAIN VERIFICATION TEST VER - 1.	All

*START AND STALL CONDITION — Continued

TEST	ACTION	APPLICABILITY
6	**Note: The fuel pressure must be within specification before continuing.** Turn the ignition off. **WARNING: The fuel system is under a constant pressure even with the engine off. Before testing or servicing any fuel system hose, fitting or line, the fuel system pressure must be released.** Disconnect the fuel supply line at the fuel rail. Connect fuel line adapter #6539(5/16″) or #6631(3/8″) to the disconnected fuel supply line. Insert the other end of the adapter into a graduated container. **Caution: Do not operate the fuel pump for more than 7 seconds in the next step. Fuel pump module reservoir may run empty and damage to the fuel pump will result.** **Note: Specification: A good fuel pump will deliver at least 1/4 liter (1/2 pint) of fuel in 7 seconds.** Turn the ignition on. With the DRBIII®, actuate the ASD Fuel System test for 7 seconds. Is the fuel pump capacity within specification? Yes → Go To 7 No → Check for a kinked/damaged fuel supply line between the fuel tank and fuel rail. If OK, replace the fuel pump module. Perform POWERTRAIN VERIFICATION TEST VER - 1. **Caution: Stop All Actuations.**	All
7	Turn the ignition on. With the DRBIII®, read TPS VOLTS. While monitoring the DRBIII®, slowly open and close the Throttle. Is the voltage change smooth? Yes → Go To 8 No → Replace the Throttle Position Sensor. Perform POWERTRAIN VERIFICATION TEST VER - 1.	All
8	Turn the ignition on. With the DRBIII®, read Throttle Position voltage. Throttle must be against stop. Is the voltage 0.92 or less with the Throttle closed? Yes → Go To 9 No → Check for a binding throttle condition. If OK, replace the Throttle Position Sensor. Perform POWERTRAIN VERIFICATION TEST VER - 1.	All

*START AND STALL CONDITION — Continued

TEST	ACTION	APPLICABILITY
9	**Note: For this test to be valid, the thermostat must be operating correctly.** **Note: This test works best if performed on a cold engine (cold soaked).** **NOTE: If the vehicle was allow to sit over night with no engine start, coolant temperature should be near ambient temperatures.** Turn the ignition on. With the DRBIII®, read the Engine Coolant Temperature value. **Note: If engine coolant temperature is above 82° C (180° F), allow the engine to cool until 65° C (150° F) is reached.** Start the engine. During engine warm-up, monitor the Engine Coolant Temperature value. The temperature value change should be a smooth transition from start up to normal operating temp 82° C (180° F). The value should reach at least 82° C (180° F). Did the Engine Temperature value increase smoothly and did it reach at least 82° C (180° F)? Yes → Go To 10 No → Replace the Engine Coolant Temperature Sensor. Perform POWERTRAIN VERIFICATION TEST VER - 1.	All
10	The following additional items should be checked as a possible cause for a start and stall condition. Refer to any Technical Service Bulletins (TSB's) that may apply to the symptom. Fuel must be free of contamination. The exhaust system must be free of any restrictions. The engine compression must be within specifications. The engine valve timing must be within specifications. The engine must be free from vacuum leaks. The throttle body must be free of carbon buildup and dirt. Do any of the above conditions exist? Yes → Repair as necessary. Perform POWERTRAIN VERIFICATION TEST VER - 1. No → Test Complete.	All

Symptom List:

ANTENNA FAILURE
COP FAILURE
EEPROM FAILURE
INTERNAL FAULT
RAM FAILURE
SERIAL LINK INTERNAL FAULT
STACK OVERFLOW FAILURE

Test Note: All symptoms listed above are diagnosed using the same tests. The title for the tests will be ANTENNA FAILURE.

When Monitored and Set Condition:

ANTENNA FAILURE

When Monitored: Every 250 milliseconds with the ignition on.

Set Condition: The SKIM's microcontroller determines that an antenna circuit fault has occurred for 2.0 consecutive seconds.

COP FAILURE

When Monitored: With the ignition on.

Set Condition: The COP timer is not reset by the microcontroller every 65.5 milliseconds

EEPROM FAILURE

When Monitored: With the ignition on.

Set Condition: When the value written to EEPROM memory does not equal the value read back after the write operation.

INTERNAL FAULT

When Monitored: With the ignition on.

Set Condition: The SKIM has detected a fault during an internal self test.

RAM FAILURE

When Monitored: With the ignition on.

Set Condition: The RAM fails a test that checks the RAM's ability to retain memory.

SERIAL LINK INTERNAL FAULT

When Monitored: With the ignition on.

Set Condition: The SKIM fails an internal J1850 communication self test.

STACK OVERFLOW FAILURE

When Monitored: With the ignition on.

Set Condition: The microcontroller has exceeded its stack space limit.

ANTENNA FAILURE — Continued

POSSIBLE CAUSES
SKIM INTERNAL DTC FAILURE

TEST	ACTION	APPLICABILITY
1	**Note: This trouble code indicates an internal SKIM fault.** With the DRBIII®, read and record the SKIM DTCs and then erase the SKIM DTCs Perform 10 ignition key cycles, leaving the ignition key on for a minimum of 90 seconds per cycle. With the DRBIII® , read the SKIM DTCs. Did the same SKIM DTC return? Yes → Replace and program the Sentry Key Immobilizer Module in accordance with the Service Information. Perform SKIS VERIFICATION. No → Test Complete.	All

Symptom List:

PCM STATUS FAILURE
SERIAL LINK EXTERNAL FAULT

Test Note: All symptoms listed above are diagnosed using the same tests. The title for the tests will be PCM STATUS FAILURE.

When Monitored and Set Condition:

PCM STATUS FAILURE

When Monitored: With the ignition on.

Set Condition: This DTC exists when a PCM STATUS message was not received from the PCM for at least 20.0 consecutive seconds.

SERIAL LINK EXTERNAL FAULT

When Monitored: At ignition on, after ignition on during any rolling code handshake that occurs with the PCM due to a SKIM reset, or during SECRET KEY transfers to the PCM.

Set Condition: When the SKIM does not receive an expected PCI BUS message transmission acknowledgement from the PCM after 3 transmit attempts.

POSSIBLE CAUSES
INTERMITTENT WIRING HARNESS PROBLEM
WIRING HARNESS INSPECTION
SKIM/PCM

TEST	ACTION	APPLICABILITY
1	**NOTE: Ensure the PCM has proper power and ground connections before continuing.** With the DRBIII®, read and record the SKIM DTCs then erase the SKIM DTCs. Turn the ignition off. Wait 2 minutes. Turn the ignition on. With the DRBIII®, read the SKIM DTCs. Does the DRBIII® display the DTC that was previously erased? Yes → Go To 2 No → Go To 4	All

PCM STATUS FAILURE — Continued

TEST	ACTION	APPLICABILITY
2	Turn the ignition off. **NOTE: Visually inspect the related wiring harness and CCD/PCI Bus (whichever applicable) circuits. Look for any chafed, pierced, pinched, or partially broken wires.** **NOTE: Visually inspect the related wiring harness connectors. Look for broken, bent, pushed out, or corroded terminals.** **Note: Refer to any Technical Service Bulletins (TSB) that may apply.** Were any problems found? Yes → Repair as necessary. Perform SKIS VERIFICATION. No → Go To 3	All
3	**NOTE: Before proceeding it will be necessary to obtain the SKIM PIN.** Turn the ignition on. With the DRBIII®, display and erase all PCM and SKIM DTC's. Perform 5 ignition key cycles, leaving the ignition key on for a minimum of 90 seconds per cycle. With the DRBIII®, read the SKIM DTCs. Does the code appear? Yes → Replace and program the Powertrain Control Module in accordance with the Service Information. Perform SKIS VERIFICATION. No → Test Complete.	All
4	Turn the ignition off. **Note: Visually inspect the related wiring harness. Look for any chafed, pierced, pinched, or partially broken wires.** **NOTE: Visually inspect the related wiring harness connectors. Look for broken, bent, pushed out, or corroded terminals.** **Note: Refer to any Technical Service Bulletins (TSB) that may apply.** Were any problems found? Yes → Repair wiring harness/connectors as necessary. Perform SKIS VERIFICATION. No → Test Complete.	All

Symptom List:

ROLLING CODE FAILURE
VIN MISMATCH

Test Note: All symptoms listed above are diagnosed using the same tests. The title for the tests will be ROLLING CODE FAILURE.

When Monitored and Set Condition:

ROLLING CODE FAILURE

When Monitored: At ignition on, after ignition on during any rolling code handshake that occurs with the PCM due to a SKIM or PCM reset.

Set Condition: When a PCM STATUS message with a Valid Key status is not received by the SKIM within 3.5 seconds of transmitting the last Valid Key Code message to the PCM.

VIN MISMATCH

When Monitored: With the ignition on.

Set Condition: When the VIN received from the PCM does not match the VIN stored in the SKIM's EEPROM.

POSSIBLE CAUSES
VERIFYING PCM VIN
REPLACE SKIM AND CHECK DTC'S
INTERMITTENT WIRING HARNESS PROBLEM
PCM

TEST	ACTION	APPLICABILITY
1	With the DRBIII®, erase the SKIM DTCs. Turn the ignition off. Wait 10 seconds. Turn the ignition on and wait 2 minutes. With the DRBIII®, read the SKIM DTCs. Does the DRBIII® display the DTC that was previously erased? Yes → Go To 2 No → Go To 4	All

ROLLING CODE FAILURE — Continued

TEST	ACTION	APPLICABILITY
2	Turn the ignition on. With the DRBIII®, select Engine system from the main menu. Display and record the Vehicle Identification Number. **NOTE: Ensure that a VIN has been programmed into the PCM. If a VIN is not displayed, attempt to program the PCM with the correct vehicle VIN before continuing.** Does the VIN recorded from the PCM match the VIN of the vehicle? Yes → Go To 3 No → Replace and program the Powertrain Control Module in accordance with the Service Information. Perform SKIS VERIFICATION.	All
3	Turn the ignition off. Replace and program the Sentry Key Immobilizer Module in accordance with the Service Information. Turn the ignition on. With the DRBIII®, display and clear all PCM and SKIM DTC's. Perform 5 ignition key cycles leaving the ignition key on for 90 seconds per cycle. With the DRBIII®, check for SKIM DTCs. Does the DRBIII® display the same DTC? Yes → Replace and program the Powertrain Control Module in accordance with the Service Information. Perform SKIS VERIFICATION. No → The repair is complete. Perform SKIS VERIFICATION.	All
4	Turn the ignition off. **Note: Visually inspect the related wiring harness. Look for any chafed, pierced, pinched, or partially broken wires.** **NOTE: Visually inspect the related wiring harness connectors. Look for broken, bent, pushed out, or corroded terminals.** **Note: Refer to any Technical Service Bulletins (TSB) that may apply.** Were any problems found? Yes → Repair wiring harness/connectors as necessary. Perform SKIS VERIFICATION. No → Test Complete.	All

Symptom List:

TRANSPONDER COMMUNICATION FAILURE
TRANSPONDER CYCLIC REDUNDANCY CHECK (CRC) FAILURE
TRANSPONDER ID MISMATCH
TRANSPONDER RESPONSE MISMATCH

Test Note: All symptoms listed above are diagnosed using the same tests. The title for the tests will be TRANSPONDER COMMUNICATION FAILURE.

When Monitored and Set Condition:

TRANSPONDER COMMUNICATION FAILURE

When Monitored: At ignition on and during Key Programming Mode.

Set Condition: When the SKIM does not receive a transponder response after 8 consecutive transponder read attempts within 2.0 seconds.

TRANSPONDER CYCLIC REDUNDANCY CHECK (CRC) FAILURE

When Monitored: At ignition on and during Key Programming Mode.

Set Condition: When 5 consecutive transponder signal transmissions are sent to the SKIM with the correct message format but with invalid data.

TRANSPONDER ID MISMATCH

When Monitored: At ignition on and during Key Programming Mode.

Set Condition: When the transponder ID read by the SKIM does not match any of the transponder IDs stored in the SKIM's memory.

TRANSPONDER RESPONSE MISMATCH

When Monitored: At ignition on and during Key Programming Mode.

Set Condition: When the transponder's crypto algorithm result fails to match the SKIM's result.

POSSIBLE CAUSES
CHECKING MULTIPLE KEY OPERATION
SKIM
INTERMITTENT WIRING HARNESS PROBLEM
REPLACE IGNITION KEY

TRANSPONDER COMMUNICATION FAILURE — Continued

TEST	ACTION	APPLICABILITY
1	With the DRBIII®, read and record the SKIM DTCs. With the DRBIII®, erase the SKIM DTCs. **NOTE: Perform the following test several times to ensure the DTC is current.** Turn the ignition off. Wait 10 seconds. Turn the ignition on. With the DRBIII®, read the SKIM DTCs. Does the DRBIII® display the DTC that was previously erased? Yes → Go To 2 No → Go To 7	All
2	Are there multiple vehicle ignition keys available? Yes → Go To 3 No → Go To 4	All
3	**NOTE: Perform the following steps using one of the vehicle ignition keys. When finished, repeat the procedure using each of the other vehicle keys one at a time.** With the DRBIII®, erase the SKIM DTCs. Turn the ignition off. Wait 10 seconds. Turn the ignition on. With the DRBIII®, read the SKIM DTCs. Is the DTC present for all ignition keys? Yes → Replace and program the Sentry Key Immobilizer Module in accordance with the Service Information. Perform SKIS VERIFICATION. No → Replace the ignition key(s) that cause the SKIM DTC. Perform SKIS VERIFICATION.	All
4	With the DRBIII®, attempt to reprogram the ignition keys to the SKIM. With the DRBIII®, erase the SKIM DTCs. Wait 10 seconds. Turn the ignition on. With the DRBIII®, read the SKIM DTCs. Does the DTC reset? Yes → Go To 5 No → Test Complete.	All
5	Replace the ignition key with a new key. With the DRBIII®, program the new ignition key to the SKIM. With the DRBIII®, erase the SKIM DTCs. Turn the ignition off. Wait 10 seconds. Turn the ignition on. With the DRBIII®, read the SKIM DTCs. Does the DTC reset? Yes → Go To 6 No → Test Complete.	All

TRANSPONDER COMMUNICATION FAILURE — Continued

TEST	ACTION	APPLICABILITY
6	If there are no possible causes remaining, view repair. Repair Replace and program the Sentry Key Immobilizer Module in accordance with the Service Information. Perform SKIS VERIFICATION.	All
7	Turn the ignition off. **Note: Visually inspect the related wiring harness. Look for any chafed, pierced, pinched, or partially broken wires.** **NOTE: Visually inspect the related wiring harness connectors. Look for broken, bent, pushed out, or corroded terminals.** **Note: Refer to any Technical Service Bulletins (TSB) that may apply.** Were any problems found? Yes → Repair wiring harness/connectors as necessary. Perform SKIS VERIFICATION. No → Test Complete.	All

Verification Tests

31TH TRANSMISSION VERIFICATION TEST - VER 1.	APPLICABILITY
1. Connect the DRBIII® to the Data Link Connector (DLC). 2. Reconnect any disconnected components. 3. With the DRBIII®, erase the PCM DTC's. 4. Check the transmission fluid and adjust if necessary. Refer to the Service information for the Fluid Fill procedure. 5. Road test the vehicle. With the DRBIII®, monitor the engine RPM. Make 15 to 20 1-2, 2-3 upshifts. Perform these shifts from a standing start to 45 MPH with a constant throttle opening of 20 to 25 degrees. 6. Below 25 MPH, make 5 to 8 wide open throttle kickdowns to 1st gear. Allow at least 5 seconds each in 2nd and 3rd gear between each kickdown. 7. For a specific DTC, drive the vehicle to the Symptom's When Monitored/When Set conditions to verify the DTC repair. 8. Check for Diagnostic Trouble Codes (DTC's) during the road test. If a DTC sets during the road test , return to the Symptom list and follow the path. Were any Trouble Codes set during the road test? Yes → Refer to the Symptom List for appropriate diagnostic tests. No → Repair is complete.	All

41TE TRANSMISSION VERIFICATION TEST - VER 1.	APPLICABILITY
1. Connect the DRBIII® to the Data Link Connector (DLC). 2. Reconnect any disconnected components. 3. With the DRBIII®, erase all Transmission DTC's, also erase the PCM DTC's. 4. With the DRBIII®, display transmission temperature. Start and run the engine until the transmission temperature is HOT (above 110 deg. F). 5. Check the transmission fluid and adjust if necessary. Refer to the Service information for the Fluid Fill procedure. **6. NOTE: If the Transmission Control Module or torque converter has been replaced or if the transmission has been repaired or replaced it is necessary to perform the DRBIII® Quick Learn Procedure and reset the ″Pinion Factor″** 7. Road test the vehicle. With the DRBIII®, monitor the engine RPM. Make 15 to 20 1-2, 2-3, 3-4 upshifts. Perform these shifts from a standing start to 45 MPH with a constant throttle opening of 20 to 25 degrees. 8. Below 25 MPH, make 5 to 8 wide open throttle kickdowns to 1st gear. Allow at least 5 seconds each in 2nd and 3rd gear between each kickdown. 9. For a specific DTC, drive the vehicle to the Symptom's When Monitored/When Set conditions to verify the DTC repair. 10. Check for Diagnostic Trouble Codes (DTC's) during the road test. If a DTC sets during the road test , return to the Symptom list and follow the path. **11. NOTE: Erase P0700 DTC in the PCM to turn the MIL light off after making transmission repairs. This will turn the MIL off.** Were any Trouble Codes set during the road test? Yes → Refer to the Symptom List for appropriate diagnostic tests. No → Repair is complete.	All

Verification Tests — Continued

BODY VERIFICATION TEST - VER 1	APPLICABILITY
1. Disconnect all jumper wires and reconnect all previously disconnected components and connectors. 2. With the DRBIII®, record and erase all DTCs from ALL modules. Cycle the ignition on then off. 3. If the Sentry Key Immobilizer Module (SKIM), the Powertrain Control Module (PCM), or the Engine Control Module (ECM) was replaced, proceed to number 12. If the SKIM, PCM, or ECM was not replaced, continue to the next number. 4. If the Body Control Module (BCM) was replaced, turn the ignition on for 15 seconds (to allow the new BCM to learn VIN) or engine may not start (if VTSS equipped). If the vehicle is equipped with VTSS, use the DRBIII® and enable VTSS. 5. Program all other options as needed. 6. If any actuators were replaced in the HVAC System, with the DRBIII® in HVAC, select System Tests then select HVAC Door Recalibration (manual temperature system only). 7. If any actuators were replaced in the ATC System, with the DRBIII® in Automatic Temp Control, select Miscellaneous then select Reset ATC Head. 8. For Three-Zone HVAC Systems, if HVAC Control/Rear Blower Rear Control was replaced/ Rear Blend Pot Circuit Open/Short DTC was set/any rear blend pot circuit was repaired, proceed to Number 9 & 10. Otherwise, proceed to Number 11. 9. With DRBIII® in HVAC, select System Tests then select HVAC Door Recalibration. Door Recalibration must pass before proceeding to next step. 10. With DRBIII® in HVAC, select System Tests then select Reset Rear Blend Switch Span. Rotate Rear Blend/Mode control on Rear Blower Rear Control to full cold. Wait five seconds, then rotate control to full hot. 11. If any repairs were made to the power sliding door or power liftgate, use the DRBIII® and perform the open and close system tests. Observe the instructions on the DRBIII® screen. Proceed to number 16. 12. Obtain the vehicle's unique PIN assigned to it's original SKIM from either the vehicle's invoice or from Chrysler's Customer Assistance Center (1-800-992-1997). 13. NOTE: Once Secured Access Mode is active, the SKIM will remain in that mode for 60 seconds. 14. With the DRBIII®, select THEFT ALARM, SKIM, MISCELLANEOUS and select SKIM REPLACED. Enter the 4 digit PIN to put the SKIM in Secured Access Mode. 15. The DRBIII® will prompt for the following steps. (1) Program the country code into the SKIM's memory. (2) Program the vehicle's VIN into the SKIM memory. (3) Transfer the vehicle's Secret Key data from the PCM. 16. Using the DRBIII®, program all customer keys into the SKIM memory. This requires that the SKIM be in Secured Access Mode, using the 4 digit PIN. 17. Note: If the PCM or ECM is replaced, the VIN and the unique Secret Key data must be transferred from the SKIM to the PCM or ECM. This procedure requires the SKIM to be placed in Secured Access Mode using the 4-digit PIN. 18. Note: If 3 attempts are made to enter Secured Access Mode using an incorrect PIN, Secured Access Mode will be locked out for 1 hour which causes the DRBIII® to display ″No Resp from SKIM″. To exit this mode, turn ignition to Run for 1 hour. 19. Ensure that all accessories are turned off and the battery is fully charged. 20. Start and run the engine for 2 minutes. Operate all functions of the system that caused the original concern. 21. Turn the ignition off and wait 5 seconds. Turn the ignition on and using the DRBIII®, read DTCs from ALL modules. Are any DTC's present or is the original condition still present? Yes → Repair is not complete, refer to the appropriate symptom. No → Repair is complete.	All

Verification Tests — Continued

POWERTRAIN VERIFICATION TEST VER - 1	APPLICABILITY
1. NOTE: If the PCM has been replaced and the correct VIN and mileage have not been programmed, a DTC will be set in the ABS Module, Airbag Module and the SKIM. **2. NOTE: If the vehicle is equipped with a Sentry Key Immobilizer System, Secret Key data must be updated. Refer to the Service Information for the PCM, SKIM and the Transponder (ignition key) for programming information.** 3. Inspect the vehicle to ensure that all components related to the repair are connected properly. 4. Inspect the engine oil for fuel contamination. Replace the oil and filter as necessary. 5. Attempt to start the engine. 6. If the No Start condition is still present, refer to the symptom list and perform the diagnostic testing as necessary. refer to and Technical Service Bulletins that may apply. 7. Run the engine for one warm-up cycle to verify operation. 8. With the DRBIII®, confirm that no DTCs or Secondary Indicators are present and that all components are functioning properly. 9. If a DTC is present, refer to the appropriate category and select the corresponding symptom. Are any DTCs present? Yes → Repair is not complete, refer to appropriate symptom. No → Repair is complete.	All

POWERTRAIN VERIFICATION TEST VER - 2	APPLICABILITY
1. NOTE: If the PCM has been replaced and the correct VIN and mileage have not been programmed, a DTC will be set in the ABS Module, Airbag Module and the SKIM. **2. NOTE: If the vehicle is equipped with a Sentry Key Immobilizer System, Secret Key data must be updated. Refer to the Service Information for the PCM, SKIM and the Transponder (ignition key) for programming information.** 3. Inspect the vehicle to ensure that all components related to the repair are connected properly. 4. With the DRBIII®, clear DTCs and Reset Memory all engine values. 5. Run the engine for one warm-up cycle to verify proper operation. 6. Road test the vehicle. Use all accessories that may be related to this repair. 7. With the DRBIII®, confirm that no DTC's or Secondary Indicators are present and that all components are functioning properly. 8. If this test is being performed after a No Trouble Code test, verify the symptom is no longer present. 9. If the symptom is still present, or any other symptom or DTC is present refer to the appropriate category and perform the corresponding symptom. 10. Refer to any Technical Service Bulletins that may apply. 11. If there are no DTCs present and all components are functional properly, the repair is complete. Are any DTCs present? Yes → Repair is not complete, refer to appropriate symptom. No → Repair is complete.	All

Verification Tests — Continued

POWERTRAIN VERIFICATION TEST VER - 3	APPLICABILITY
1. NOTE: If the PCM has been replaced and the correct VIN and mileage have not been programmed, a DTC will be set in the ABS Module, Airbag Module and the SKIM. **2. NOTE: If the vehicle is equipped with a Sentry Key Immobilizer System, Secret Key data must be updated. Refer to the Service Information for the PCM, SKIM and the Transponder (ignition key) for programming information.** 3. Inspect the vehicle to ensure that all components related to the repair are connected properly. 4. With the DRBIII®, clear DTCs. 5. Perform generator output test. Refer to the appropriate service information as necessary. 6. Start the engine and set engine speed to 2000 RPM for at least thirty seconds. 7. Cycle the ignition key off and on. 8. With the DRBIII®, read the DTCs. If the DTC returns, or any other symptom or DTC is present, refer to the appropriate category and perform the corresponding symptom. 9. If there are no DTCs present and all components are functioning properly, the repair is complete. Are any DTCs present? Yes → Repair is not complete, refer to appropriate symptom. No → Repair is complete.	All

Verification Tests — Continued

POWERTRAIN VERIFICATION TEST VER - 4	APPLICABILITY
1. NOTE: If the PCM has been replaced and the correct VIN and mileage have not been programmed, a DTC will be set in the ABS Module, Airbag Module and the SKIM. **2. NOTE: If the vehicle is equipped with a Sentry Key Immobilizer System, Secret Key data must be updated. Refer to the Service Information for the PCM, SKIM and the Transponder (ignition key) for programming information.** 3. Inspect the vehicle to ensure that all engine components are properly installed and connected. 4. Connect the DRBIII® to the data link connector and erase all codes. 5. Turn the speed control ON (if equipped, cruise light will be on). 6. Press and release the SET switch. If the speed control did not engage, the repair is not complete. Check for TSBs that pertain to speed control problems and then, if necessary, return to the Symptom List. 7. Press and hold the RESUME/ACCEL Switch. If the vehicle speed did not increase by at least 2 mph, the repair is not complete. Check for TSBs that pertain to speed control problem and then, if necessary, return to Symptom List. 8. Press and hold the COAST switch. The vehicle speed should decrease. If it did not decrease, the repair is not complete. Check for TSBs that pertain to speed control problem and then, if necessary, return to Symptom List. 9. Using caution, press and release the brake pedal. If the speed control did not disengage, the repair is not complete. Check for TSBs that pertain to speed control problem and then, if necessary, return to Symptom List. 10. Bring the vehicle speed back up to 35 MPH. 11. Press the RESUME/ACCEL switch. If the speed control did not resume the previously set speed, the repair is not complete. Check for TSBs that pertain to speed control problem and then, if necessary, return to Symptom List. 12. Hold down the SET switch. If the vehicle did not decelerate, the repair is not complete. Check for TSBs that pertain to speed control problem and then, if necessary, return to Symptom List. 13. Ensure vehicle speed is greater than 35 mph and release the SET Switch. If vehicle did not adjust and set a new vehicle speed, the repair is not complete. Check for TSBs that pertain to speed control problem and then, if necessary, return to Symptom List. 14. Press and release the CANCEL switch. If the speed control did not disengage, the repair is not complete. Check for TSBs that pertain to speed control problem and then, if necessary, return to Symptom List. 15. Bring the vehicle speed back up above 35 mph and engage speed control. 16. Press the OFF switch to turn OFF, (Cruise light will be off). If the speed control did not disengage, the repair is not complete. Check for TSBs that pertain to speed control problem and then, if necessary, return to Symptom List. 17. If the vehicle successfully passed all of the previous tests, the speed control system is now functioning as designed. The repair is now complete. Did the Speed Control pass the above test? Yes → Repair is complete. No → Repair is not complete, refer to appropriate symptom.	All

Verification Tests — Continued

POWERTRAIN VERIFICATION TEST VER - 5	APPLICABILITY
1. NOTE: If the PCM has been replaced and the correct VIN and mileage have not been programmed, a DTC will be set in the ABS Module, Airbag Module and the SKIM. **2. NOTE: If the vehicle is equipped with a Sentry Key Immobilizer System, Secret Key data must be updated. Refer to the Service Information for the PCM, SKIM and the Transponder (ignition key) for programming information.** 3. Inspect the vehicle to ensure that all engine components are properly installed and connected. Reassemble and reconnect components as necessary. 4. Connect the DRBIII® to the data link connector. 5. Ensure the fuel tank has at least a quarter tank of fuel. Turn off all accessories. 6. If a Comprehensive Component DTC was repaired, perform steps 5 - 8. If a Major OBDII Monitor DTC was repaired skip those steps and continue verification. 7. After the ignition has been off for at least 10 seconds, restart the vehicle and run 2 minutes. 8. If the Good Trip counter changed to one or more and there are no new DTC's, the repair was successful and is now complete. Erase DTC's and disconnect the DRBIII®. 9. If the repaired DTC has reset, the repair is not complete. Check for any related TSB's or flash updates and return to the Symptom list. 10. If another DTC has set, return to the Symptom List and follow the path specified for that DTC. 11. With the DRBIII®, monitor the appropriate pre-test enabling conditions until all conditions have been met. Once the conditions have been met, switch screen to the appropriate OBDII monitor, (Audible beeps when the monitor is running). 12. If the monitor ran, and the Good Trip counter changed to one or more, the repair was successful and is now complete. Erase DTC's and disconnect the DRBIII®. 13. If the repaired OBDII trouble code has reset or was seen in the monitor while on the road test, the repair is not complete. Check for any related technical service bulletins or flash updates and return to Symptom List. 14. If another DTC has set, return to the Symptom List and follow the path specified for that DTC. Are any DTCs present? Yes → Repair is not complete, refer to appropriate symptom. No → Repair is complete.	All

Verification Tests — Continued

POWERTRAIN VERIFICATION TEST VER - 6	APPLICABILITY
1. NOTE: If the PCM has been replaced and the correct VIN and mileage have not been programmed, a DTC will be set in the ABS Module, Airbag Module and the SKIM. **2. NOTE: If the vehicle is equipped with a Sentry Key Immobilizer System, Secret Key data must be updated. Refer to the Service Information for the PCM, SKIM and the Transponder (ignition key) for programming information.** 3. Inspect the vehicle to ensure that all engine components are properly installed and connected. Reassemble and reconnect components as necessary. 4. The LDP Monitor Test Mode has been added to the DRBIII® to verify repairs to the LDP System. A DRBIII® software program was written which causes the PCM to run the LDP Monitor as part of this test. Test failures will be indicated through a stored DTC. 5. LDP Monitor Test Mode is a useful way to run a total system performance test. Use this test to verify any type of LDP system repair. 6. Software program makes temporary changes to operating mode of PCM. For this reason, it is critical that test not be interrupted. PCM's left in this mode as result of interrupted test will illuminate the MIL for 8-10 mi of driving with no DTC's stored. 7. Erasing DTC's will not change this condition. 8. If a vehicle is found to be stuck in the mode described above, the LDP Dealer Test should be re-run in its entirety so that the software program in the DRBIII® can restore the PCM operating mode. 9. Note similarity to LDP Monitor screen found under OBDII Monitors. Failure modes are fewer in this System Test than OBDII LDP Monitor. 10. System Test failure may have been, for example, due to a large leak, but the PCM will set the Small Leak DTC to indicate failures that occurred as part of the system test. 11. Connect the DRBIII® to the data link connector. Engine running, turn off all accessories. 12. Note: While test is being performed, PCM must see RPM, minimum MAP, No Vehicle speed and minimum Throttle Position sensor (At idle, in park.) With DRBIII® in System Tests, perform the LDP Monitor Test and follow the instructions on the screen. 13. If the LDP Monitor Test failed and a .020 Leak DTC has set, the repair is not complete. Check for any related Technical Service Bulletins and return to Symptom List. 14. If any other trouble code has set, return to Symptom List and follow the path specified for that trouble code. If the LDP Monitor Test passed, the repair was successful and testing is now complete. Are any DTCs present? Yes → Repair is not complete, refer to appropriate symptom. No → Repair is complete.	All

Verification Tests — Continued

SKIS VERIFICATION	APPLICABILITY
1. Reconnect all previously disconnected components and connectors. 2. Obtain the vehicle's unique Personal Identification Number (PIN) assigned to it's original SKIM. This number can be obtained from the vehicle's invoice or Chrysler's Customer Center (1-800-992-1997). **3. NOTE: When entering the PIN, care should be taken because the SKIM will only allow 3 consecutive attempts to enter the correct PIN. If 3 consecutive incorrect PINs are entered, the SKIM will Lock Out the DRB III for 1 hour.** 4. To exit Lock Out mode, the ignition key must remain in the Run position continually for 1 hour. Turn off all accessories and connect a battery charger if necessary. 5. With the DRBIII®, select Theft Alarm, SKIM and Miscellaneous. Then, select the desired procedure and follow the steps that will be displayed. 6. If the SKIM has been replaced, ensure all of the vehicle ignition keys are programmed to the new SKIM. **7. NOTE: Prior to returning vehicle to the customer, perform a module scan to be sure that all DTCs are erased. Erase any DTCs that are found.** 8. With the DRBIII®, erase all DTCs. Perform 5 ignition key cycles leaving the key on for at least 90 seconds per cycle. 9. With the DRBIII®, read the SKIM DTCs. Are there any SKIM DTCs? Yes → Repair is not complete, refer to appropriate symptom. No → Repair is complete.	All

SKIS VERIFICATION	APPLICABILITY
1. Reconnect all previously disconnected components and connectors. 2. Obtain the vehicle's unique Personal Identification Number (PIN) assigned to it's original SKIM. This number can be obtained from the vehicle's invoice or Chrysler's Customer Center (1-800-992-1997). **3. NOTE: When entering the PIN, care should be taken because the SKIM will only allow 3 consecutive attempts to enter the correct PIN. If 3 consecutive incorrect PIN's are entered the SKIM will Lock Out the DRB III for 1 hour.** 4. To exit Lock Out mode, the ignition key must remain in the Run position continually for 1 hour. Turn off all accessories and connect a battery charger if necessary. 5. With the DRB III, select Theft Alarm, SKIM and Miscellaneous. Then select desired procedure and follow the steps that will be displayed. 6. If the SKIM has been replaced, ensure all of the vehicle ignition keys are programmed to the new SKIM. **7. NOTE: Prior to returning vehicle to the costumer, perform a module scan to be sure that all DTC's are erased. Erase any DTC's that are found.** 8. With the DRB III erase all DTC's. Perform 5 ignition key cycles leaving the key on for at least 90 seconds per cycle. 9. With the DRB III, read the SKIM DTC's. Are there any SKIM DTC's? Yes → Repair is not complete, refer to appropriate symptom. No → Repair is complete.	All

8.0 COMPONENT LOCATIONS

8.1 CONTROL MODULES AND FUSE & RELAY CENTER

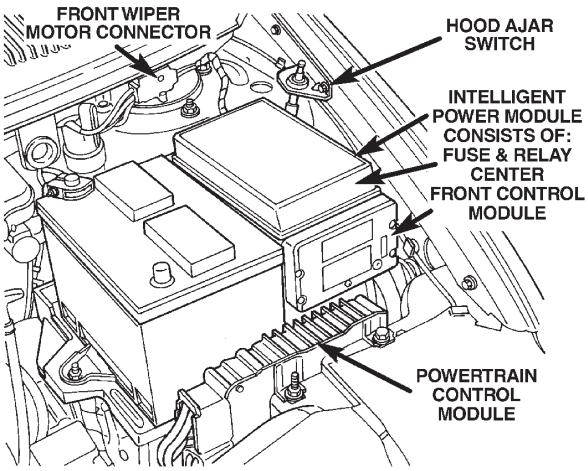

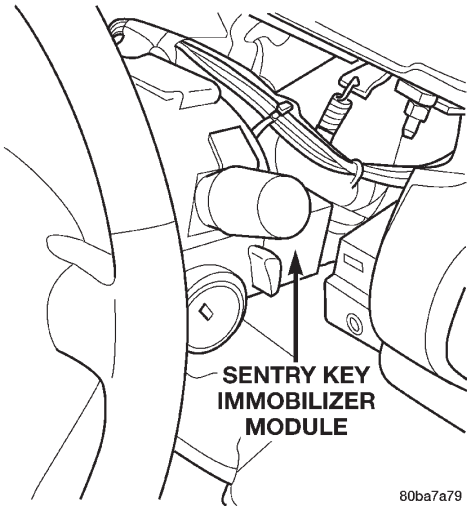

8.2 CONTROLS AND SOLENOID

2.4L

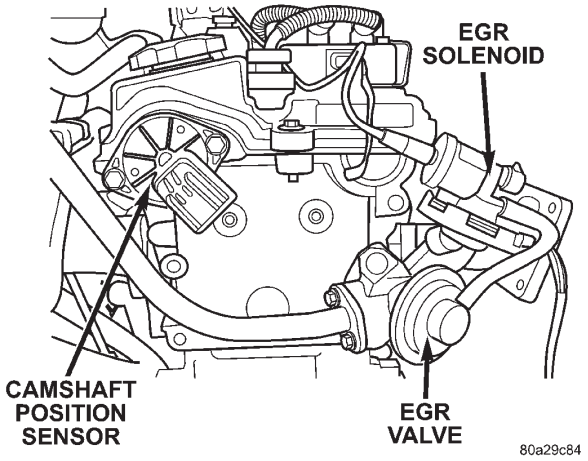

3.3L/3.8L

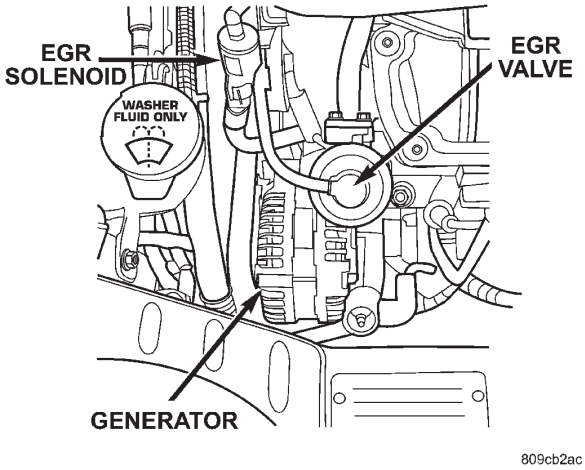

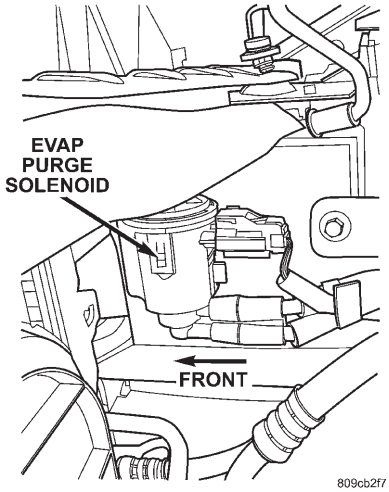

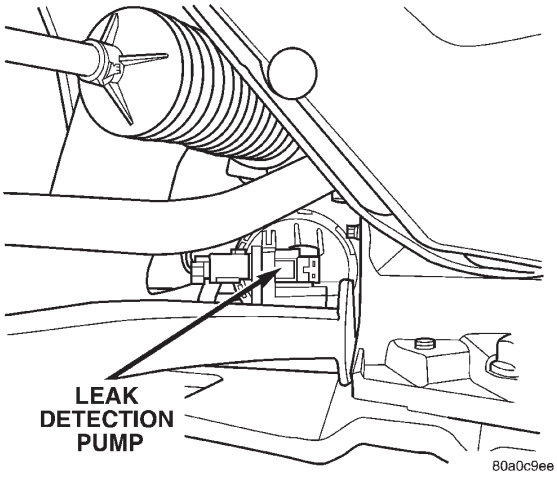

8.2 CONTROLS AND SOLENOID (Continued)

2.4L

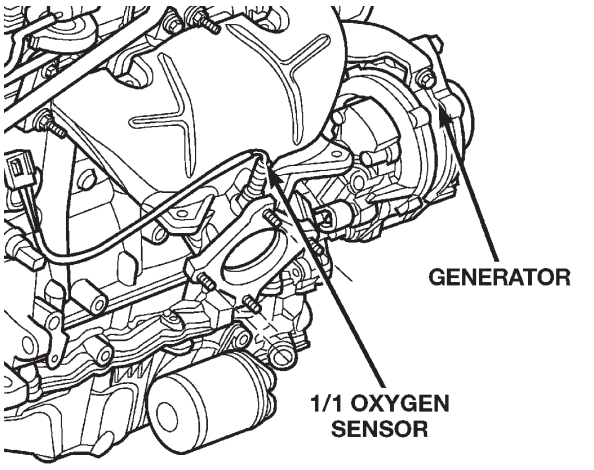

80c4b774

3.3L/3.8L

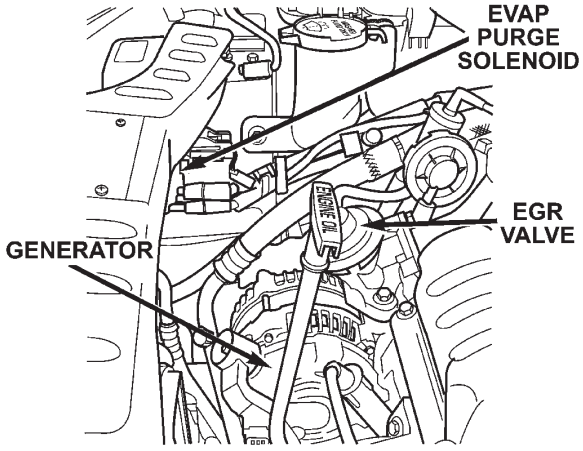

809cb3a4

2.4L

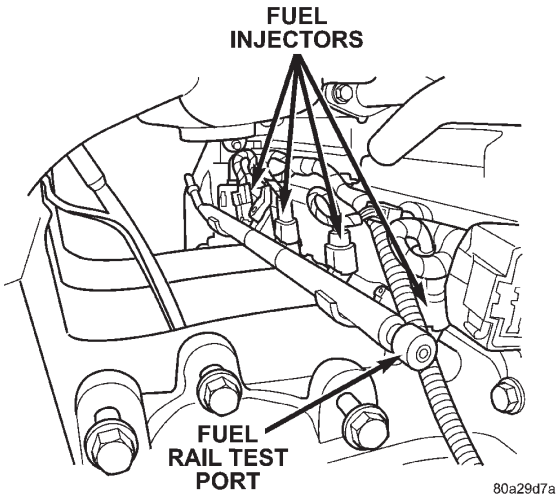

80a29d7a

3.3L/3.8L

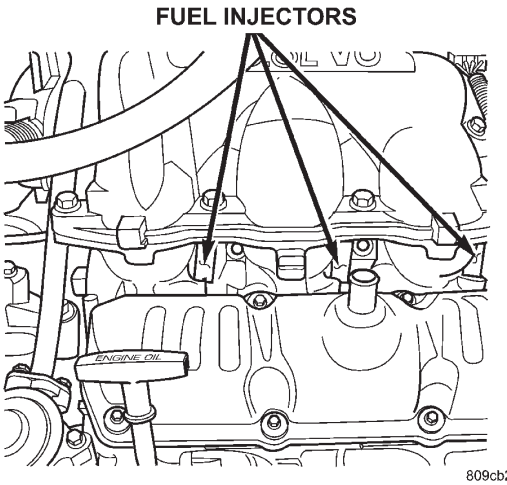

809cb2dd

2.4L

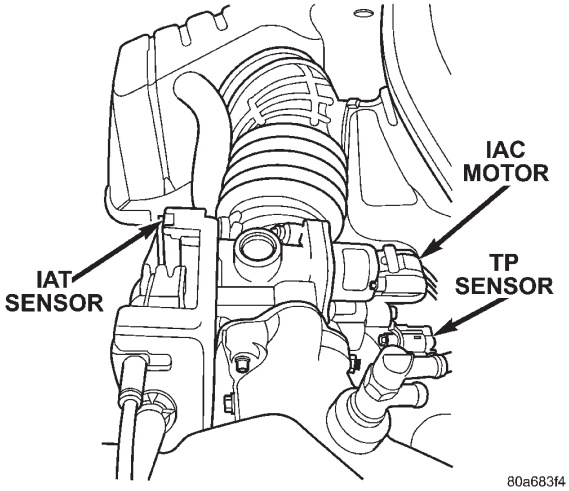

80a683f4

3.3L/3.8L

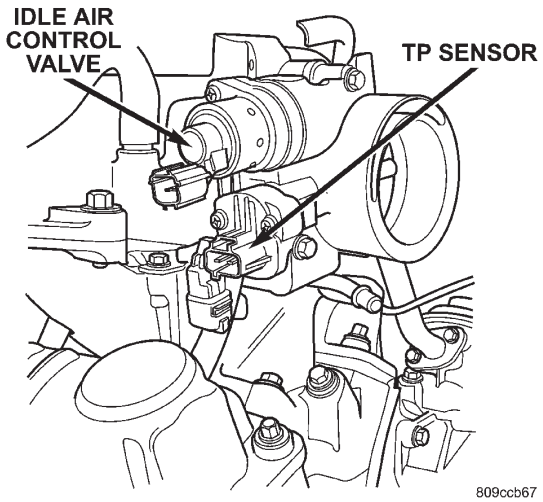

809ccb67

2.4L

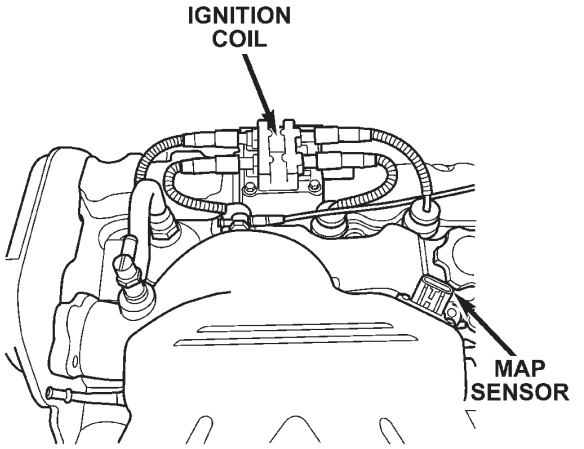

80a2a2be

3.3/3.8L

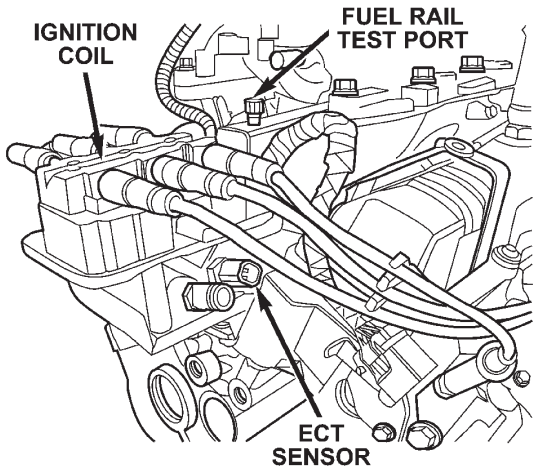

809cb254

3.5L

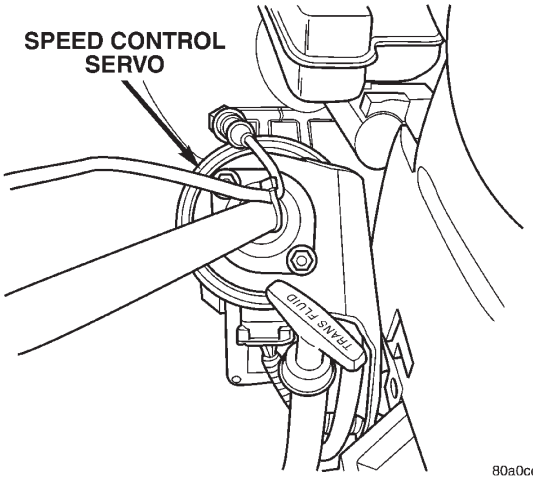

80a0cc16

8.3 DATA LINK CONNECTOR

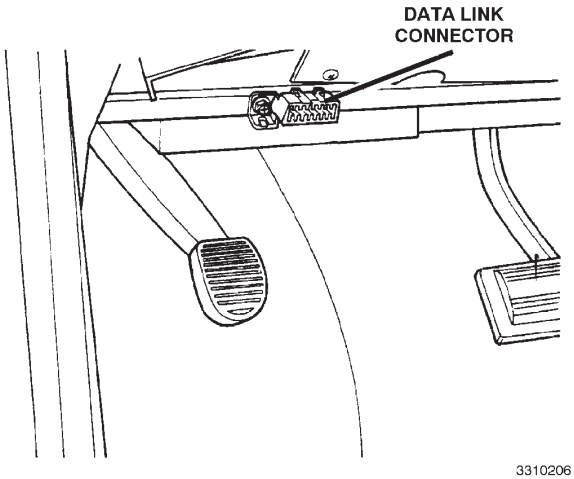

3310206

8.4 SENSORS

2.4L

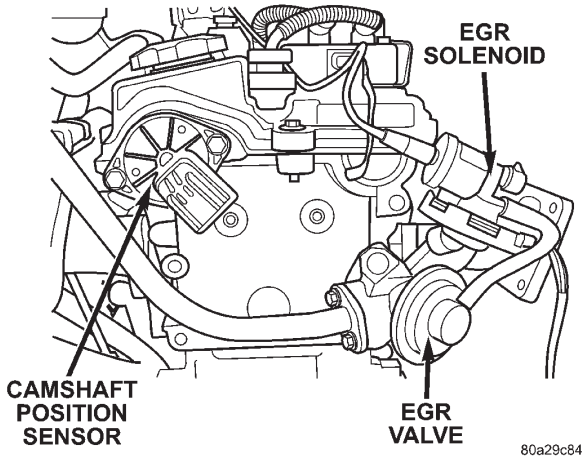

3.3L/3.8L

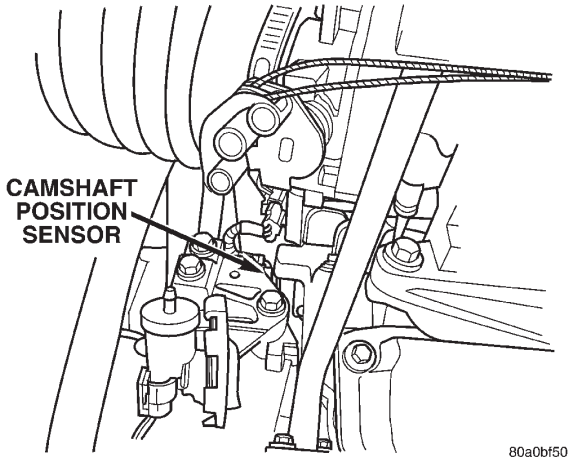

2.4L

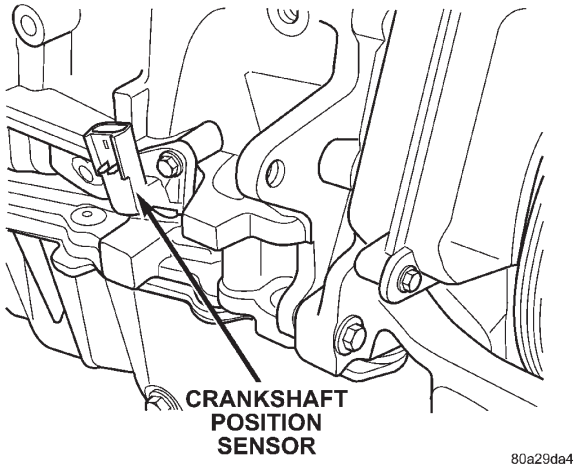

3.3L/3.8L

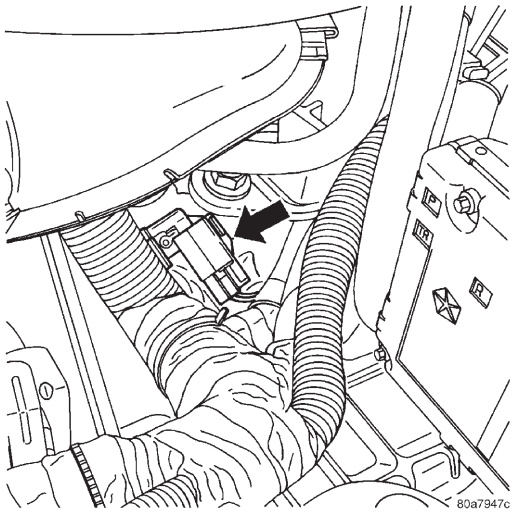

2.4L

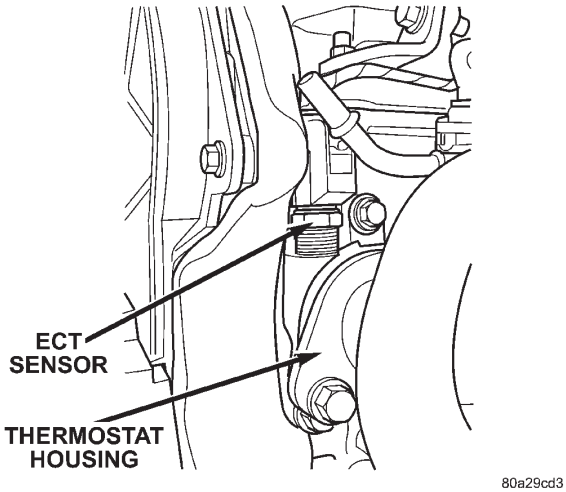

3.3L/3.8L

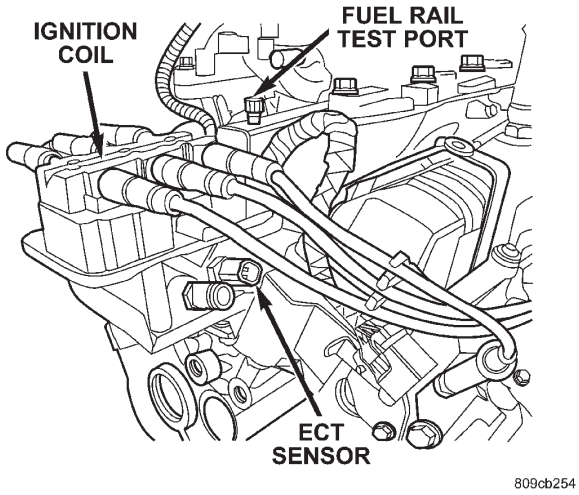

2.4L

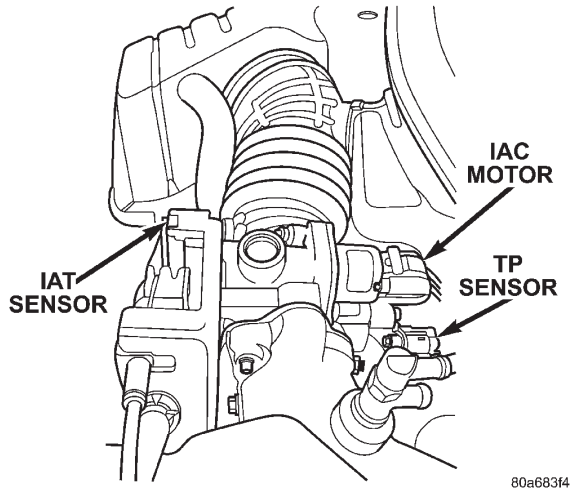

3.3L/3.8L

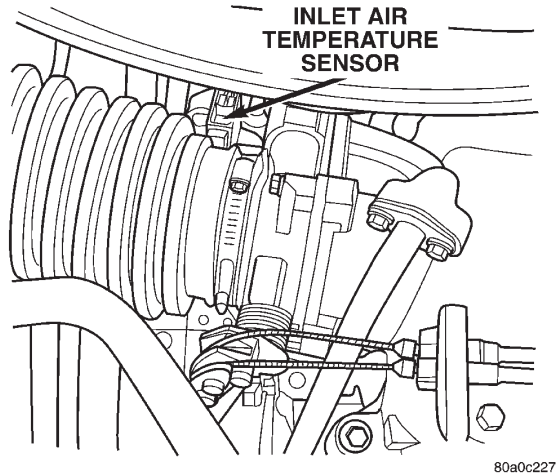

2.4L

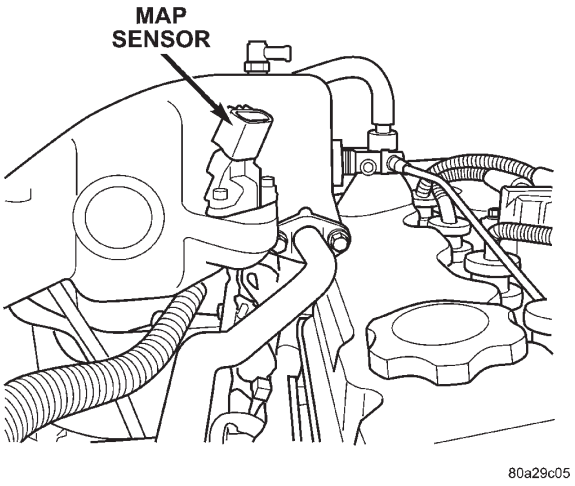

3.3L/3.8L

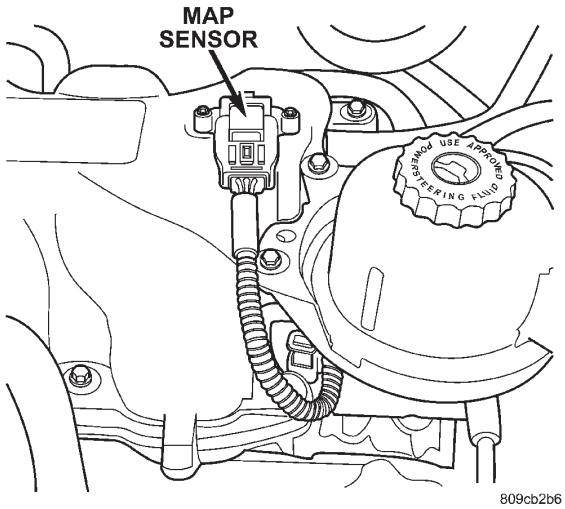

2.4L

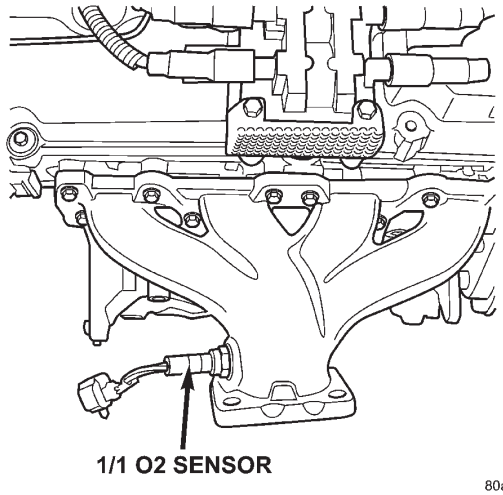

3.3L/3.8L

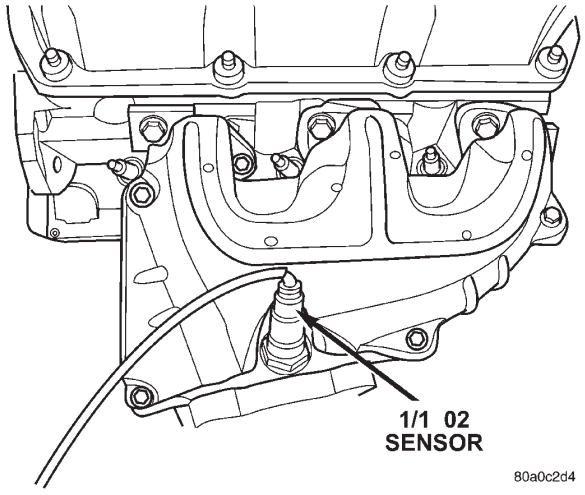

8.4 SENSORS (Continued)

2.4L

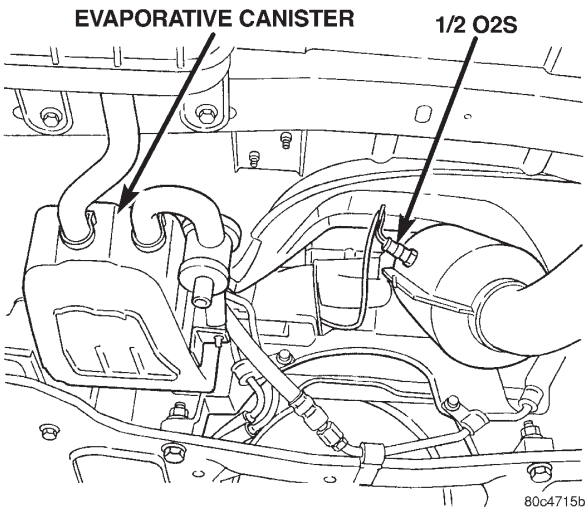

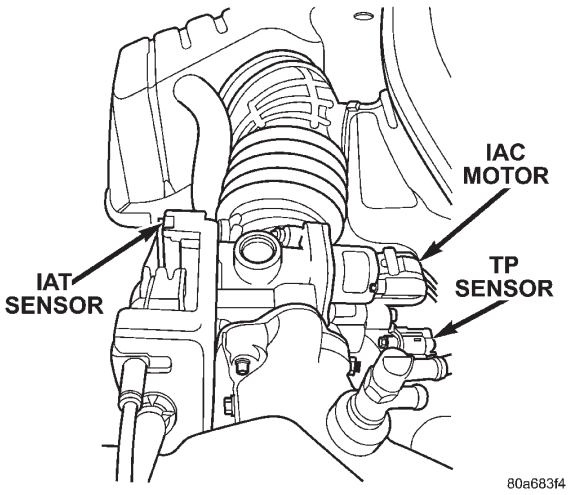

3.3L/3.8L

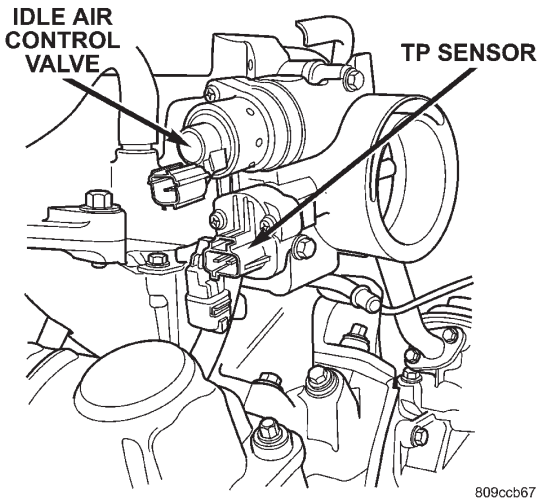

8.5 FUEL SYSTEM

2.4L

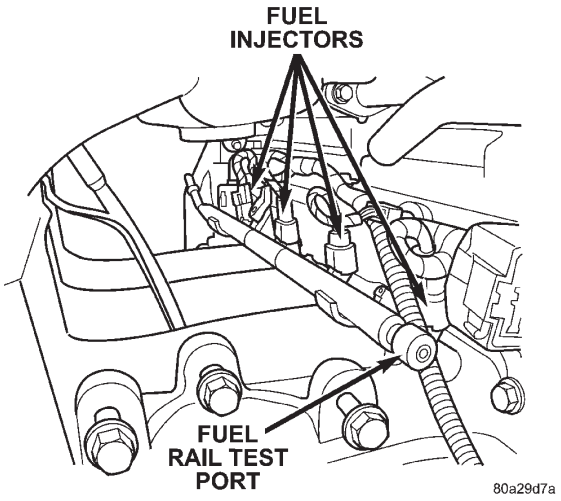

3.3L/3.8L

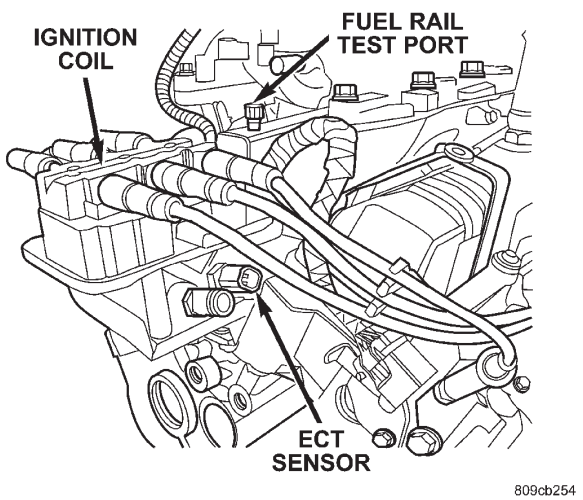

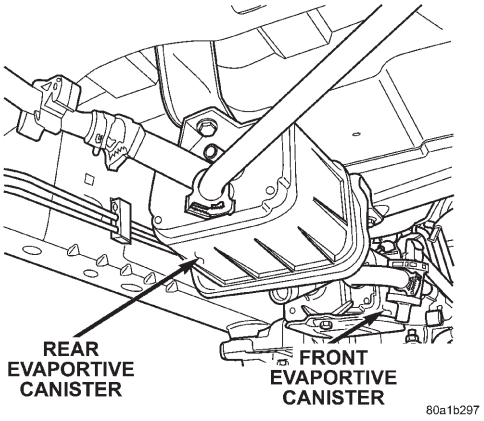
REAR
EVAPORTIVE
CANISTER
FRONT
EVAPORTIVE
CANISTER
80a1b297

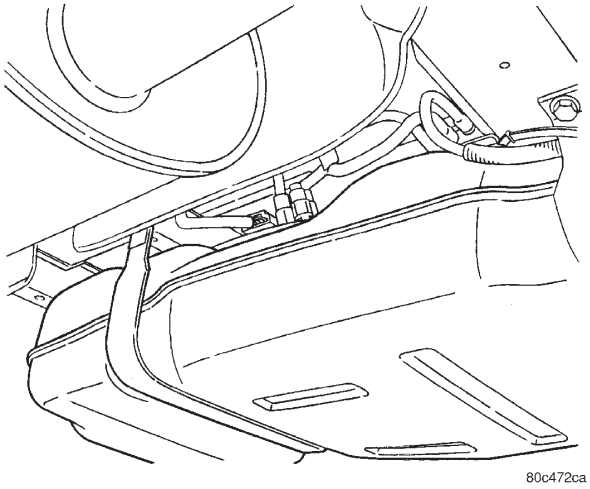
80c472ca

8.6 SWITCHES

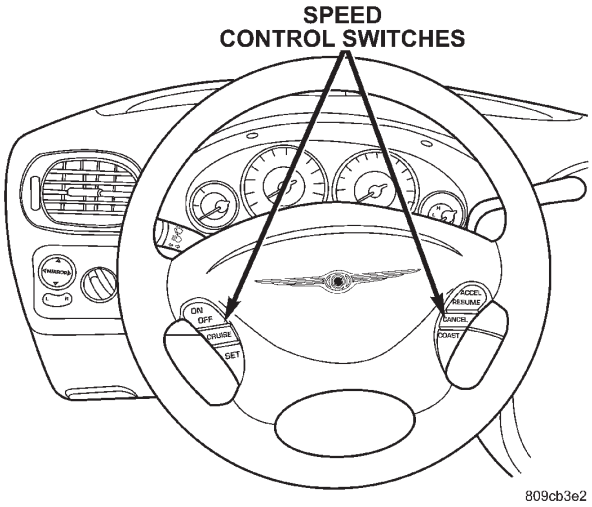
SPEED
CONTROL SWITCHES
ON
OFF
RESUME
SET
ACCEL
CANCEL
COAST
809cb3e2

NOTES

9.0 CONNECTOR PINOUTS

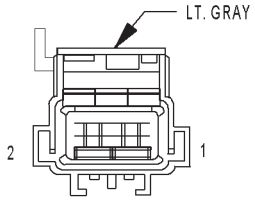

A/C COMPRESSOR CLUTCH

A/C COMPRESSOR CLUTCH - LT. GRAY 2 WAY

CAV	CIRCUIT	FUNCTION
1	C3 18DB/YL	A/C COMPRESSOR CLUTCH RELAY OUTPUT
2	Z153 18BK/GY	GROUND

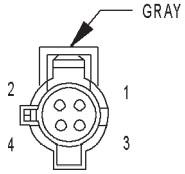

A/C PRESSURE SENSOR

A/C PRESSURE SENSOR - GRAY 4 WAY

CAV	CIRCUIT	FUNCTION
1	C918 20BK/LB (DIESEL)	A/C PRESSURE SENSOR GROUND
1	K900 18DB/DG (GAS)	SENSOR GROUND
2	F851 20LB/PK (DIESEL)	SENSOR REFERENCE VOLTAGE B
2	F855 18PK/YL (GAS)	5 VOLT SUPPLY
3	C18 20LB/BR (DIESEL)	A/C PRESSURE SENSOR SIGNAL
3	C18 18LB/BR (GAS)	A/C PRESSURE SENSOR SIGNAL
4	-	-

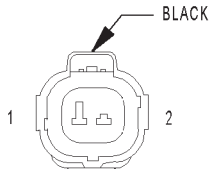

AMBIENT TEMP SENSOR (EXCEPT BASE)

AMBIENT TEMP SENSOR (EXCEPT BASE) - BLACK 2 WAY

CAV	CIRCUIT	FUNCTION
1	G31 18VT/LG	AMBIENT TEMPERATURE SENSOR SIGNAL
2	G931 18VT/BR	AMBIENT TEMPERATURE SENSOR RETURN

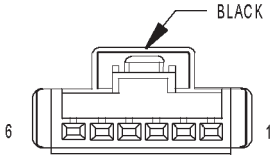

BRAKE LAMP SWITCH

BRAKE LAMP SWITCH - BLACK 6 WAY

CAV	CIRCUIT	FUNCTION
1	A103 18GY/RD	FUSED B(+)
2	L50 18WT/TN	PRIMARY BRAKE SWITCH SIGNAL
3	V30 20VT/WT (GAS)	SPEED CONTROL BRAKE SWITCH OUTPUT
4	V32 20VT/YL (GAS)	SPEED CONTROL ON/OFF SWITCH SENSE
5	Z429 20BK/OR	GROUND
6	B29 20DG/WT	SECONDARY BRAKE SWITCH SIGNAL

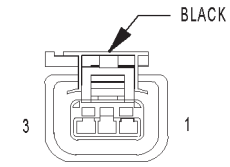

CAMSHAFT POSITION SENSOR (GAS)

CAMSHAFT POSITION SENSOR (GAS) - BLACK 3 WAY

CAV	CIRCUIT	FUNCTION
1	F888 18BR/PK	8 VOLT SUPPLY
2	K900 18DB/DG	SENSOR GROUND
3	K44 18DB/GY	CAMSHAFT POSITION SENSOR SIGNAL

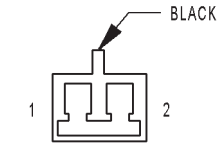

CLUTCH PEDAL INTERLOCK SWITCH (MTX)

CLUTCH PEDAL INTERLOCK SWITCH (MTX) - BLACK 2 WAY

CAV	CIRCUIT	FUNCTION
1	T141 20YL/OR	FUSED IGNITION SWITCH OUTPUT (START)
2	T751 20YL	FUSED IGNITION SWITCH OUTPUT (START)

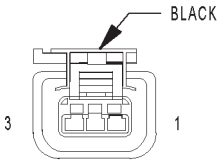

CRANKSHAFT POSITION SENSOR (GAS)

CRANKSHAFT POSITION SENSOR (GAS) - BLACK 3 WAY

CAV	CIRCUIT	FUNCTION
1	F888 18BR/PK	8 VOLT SUPPLY
2	K900 18DB/DG	SENSOR GROUND
3	K24 18BR/LB	CRANKSHAFT POSITION SENSOR SIGNAL

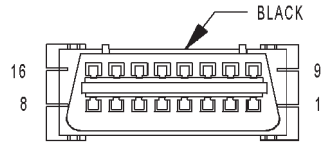

DATA LINK CONNECTOR

DATA LINK CONNECTOR - BLACK 16 WAY

CAV	CIRCUIT	FUNCTION
1	-	-
2	D25 20WT/VT	PCI BUS
3	-	-
4	Z11 18BK/LG	GROUND
5	Z111 18BK/WT (EXCEPT BUILT-UP-EXPORT)	GROUND
5	Z111 20BK/WT (BUILT-UP-EXPORT)	GROUND
6	D20 20WT/LG (GAS)	SCI RECEIVE
7	D21 20WT/BR (EXCEPT BUILT-UP-EXPORT)	SCI TRANSMIT
7	D21 20WT/DG (BUILT- UP-EXPORT)	SCI TRANSMIT
8	-	-
9	D23 20WT/BR	FLASH PROGRAM ENABLE
10	-	-
11	-	-
12	-	-
13	-	-
14	D16 20WT/OR (GAS)	SCI RECEIVE
15	-	-
16	A105 20DB/RD	FUSED B(+)

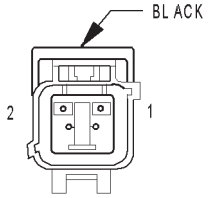

ENGINE COOLANT TEMP SENSOR (GAS)

ENGINE COOLANT TEMP SENSOR (GAS) - BLACK 2 WAY

CAV	CIRCUIT	FUNCTION
1	K900 18DB/DG	SENSOR GROUND
2	K2 18VT/OR	ENGINE COOLANT TEMPERATURE SENSOR SIGNAL

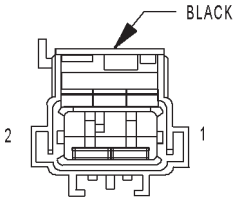

EVAP/ PURGE SOLENOID (GAS)

EVAP/PURGE SOLENOID (GAS) - BLACK 2 WAY

CAV	CIRCUIT	FUNCTION
1	K52 18DB/WT	EVAPORATIVE EMISSION SOLENOID CONTROL
2	K70 18DB/BR	EVAPORATIVE EMISSION SOLENOID SENSE

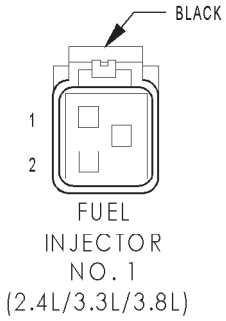

FUEL INJECTOR NO. 1 (2.4L/3.3L/3.8L)

FUEL INJECTOR NO. 1 (2.4L/3.3L/3.8L) - BLACK 2 WAY

CAV	CIRCUIT	FUNCTION
1	K342 16BR/WT	AUTOMATIC SHUT DOWN RELAY OUTPUT
2	K11 16BR/YL	FUEL INJECTOR NO. 1 DRIVER

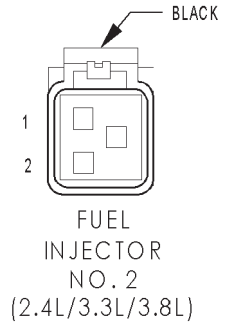

FUEL INJECTOR NO. 2 (2.4L/3.3L/3.8L)

FUEL INJECTOR NO. 2 (2.4L/3.3L/3.8L) - BLACK 2 WAY

CAV	CIRCUIT	FUNCTION
1	K342 16BR/WT	AUTOMATIC SHUT DOWN RELAY OUTPUT
2	K12 16BR/DB	FUEL INJECTOR NO. 2 DRIVER

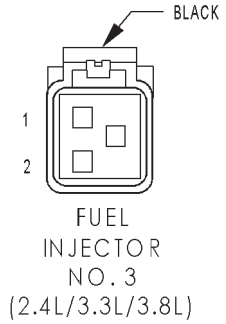

FUEL INJECTOR NO. 3 (2.4L/3.3L/3.8L)

FUEL INJECTOR NO. 3 (2.4L/3.3L/3.8L) - BLACK 2 WAY

CAV	CIRCUIT	FUNCTION
1	K342 16BR/WT	AUTOMATIC SHUT DOWN RELAY OUTPUT
2	K13 16BR/LB	FUEL INJECTOR NO. 3 DRIVER

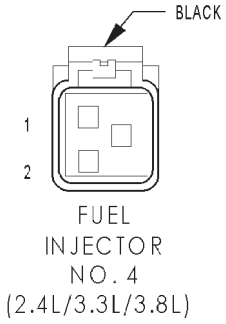

FUEL INJECTOR NO. 4 (2.4L/3.3L/3.8L)

FUEL INJECTOR NO. 4 (2.4L/3.3L/3.8L) - BLACK 2 WAY

CAV	CIRCUIT	FUNCTION
1	K342 16BR/WT	AUTOMATIC SHUT DOWN RELAY OUTPUT
2	K14 16BR/TN	FUEL INJECTOR NO. 4 DRIVER

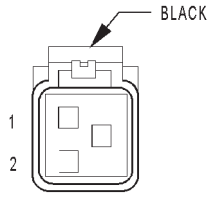

FUEL INJECTOR NO. 5 (3.3L/3.8L)

FUEL INJECTOR NO. 5 (3.3L/3.8L) - BLACK 2 WAY

CAV	CIRCUIT	FUNCTION
1	K342 16BR/WT	AUTOMATIC SHUT DOWN RELAY OUTPUT
2	K38 16BR/OR	FUEL INJECTOR NO. 5 DRIVER

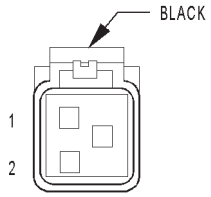

FUEL INJECTOR NO. 6 (3.3L/3.8L)

FUEL INJECTOR NO. 6 (3.3L/3.8L) - BLACK 2 WAY

CAV	CIRCUIT	FUNCTION
1	K342 16BR/WT	AUTOMATIC SHUT DOWN RELAY OUTPUT
2	K58 16BR/VT	FUEL INJECTOR NO. 6 DRIVER

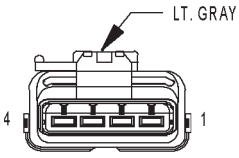

FUEL PUMP MODULE

FUEL PUMP MODULE - LT. GRAY 4 WAY

CAV	CIRCUIT	FUNCTION
1	Z201 16BK/OR (GAS)	GROUND
2	Z201 18BK/OR (RHD/ DIESEL)	GROUND
2	Z201 20BK/DB (LHD/ DIESEL) (GAS)	GROUND
3	N4 18DB/WT	FUEL LEVEL SENSOR SIGNAL
4	N1 16DB/OR (GAS)	FUEL PUMP RELAY OUTPUT

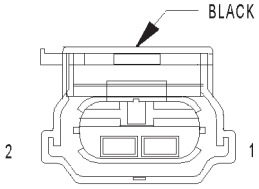

GENERATOR

GENERATOR - BLACK 2 WAY

CAV	CIRCUIT	FUNCTION
1	K342 16BR/WT (DIESEL)	ECM/PCM RELAY OUTPUT
1	K342 16BR/WT (GAS)	AUTOMATIC SHUT DOWN RELAY OUTPUT
2	K20 14BR/GY (DIESEL)	GENERATOR FIELD CONTROL
2	K20 18BR/GY (GAS)	GENERATOR FIELD CONTROL

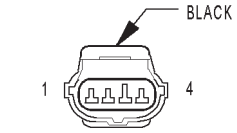

IDLE AIR CONTROL MOTOR (2.4L)

IDLE AIR CONTROL MOTOR (2.4L) - BLACK 4 WAY

CAV	CIRCUIT	FUNCTION
1	K59 18BR/DG	IDLE AIR CONTROL NO. 4 DRIVER
2	K40 18BR/LG	IDLE AIR CONTROL NO. 3 DRIVER
3	K60 18VT/LG	IDLE AIR CONTROL NO. 2 DRIVER
4	K39 18VT/DG	IDLE AIR CONTROL NO. 1 DRIVER

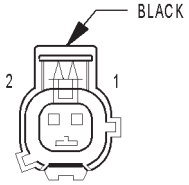

IDLE AIR CONTROL MOTOR (3.3L/3.8L)

IDLE AIR CONTROL MOTOR (3.3L/3.8L) - BLACK 2 WAY

CAV	CIRCUIT	FUNCTION
1	K39 18VT/DG	IDLE AIR CONTROL NO. 1 DRIVER
2	K60 18VT/LG	IDLE AIR CONTROL NO. 2 DRIVER

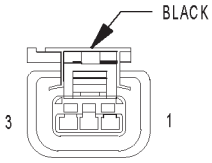

IGNITION COIL (2.4L)

IGNITION COIL (2.4L) - BLACK 3 WAY

CAV	CIRCUIT	FUNCTION
1	K17 16DB/TN	IGNITION COIL NO. 2 DRIVER
2	K342 16BR/WT	AUTOMATIC SHUT DOWN RELAY OUTPUT
3	K19 16DB/DG	IGNITION COIL NO. 1 DRIVER

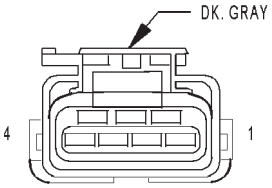

IGNITION COIL (3.3L/3.8L)

IGNITION COIL (3.3L/3.8L) - DK. GRAY 4 WAY

CAV	CIRCUIT	FUNCTION
1	K18 16DB/OR	IGNITION COIL NO. 3 DRIVER
2	K342 16BR/WT	AUTOMATIC SHUT DOWN RELAY OUTPUT
3	K19 16DB/DG	IGNITION COIL NO. 1 DRIVER
4	K17 16DB/TN	IGNITION COIL NO. 2 DRIVER

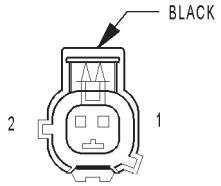

INLET AIR TEMPERATURE SENSOR

INLET AIR TEMPERATURE SENSOR - BLACK 2 WAY

CAV	CIRCUIT	FUNCTION
1	K21 18DB/LG	INTAKE AIR TEMPERATURE SENSOR SIGNAL
2	K900 18DB/DG	SENSOR GROUND

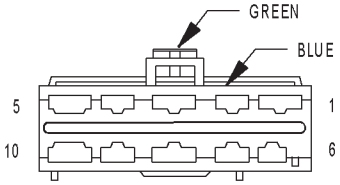

INTEGRATED POWER MODULE C2

INTEGRATED POWER MODULE C2 - GREEN/BLUE 10 WAY

CAV	CIRCUIT	FUNCTION
1	N173 16DB/VT (GAS)	RADIATOR FAN RELAY CONTROL
2	V53 12BR/OR (BUILT-UP-EXPORT)	HEADLAMP WASHER RELAY OUTPUT
3	L60 18WT/TN (EXCEPT BUILT-UP-EXPORT)	RIGHT FRONT TURN SIGNAL DRIVER
3	L60 16WT/TN (BUILT-UP-EXPORT)	RIGHT FRONT TURN SIGNAL DRIVER
4	L13 18WT/YL (BUILT-UP-EXPORT)	HEADLAMP ADJUST SIGNAL
5	X2 18DG/OR	HORN RELAY OUTPUT
6	L90 18WT/OR (FOG LAMPS)	FRONT FOG LAMP RELAY OUTPUT
7	L61 16WT/LG	LEFT FRONT TURN SIGNAL DRIVER
8	-	-
9	A112 12OR/RD	FUSED B(+)
10	L89 18WT/YL (FOG LAMPS)	FRONT FOG LAMP RELAY OUTPUT

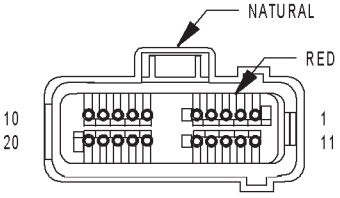

INTEGRATED POWER MODULE C3 (GAS)

INTEGRATED POWER MODULE C3 (GAS) - NATURAL/RED 20 WAY

CAV	CIRCUIT	FUNCTION
1	Z115 20BK/OR (EATX) (3.3L/3.8L)	GROUND
1	Z115 18BK/OR (EATX) (2.4L)	GROUND
2	F1 18PK/WT (EATX)	FCM OUTPUT (UNLOCK-RUN-START)
3	T751 18YL (EATX)	FUSED IGNITION SWITCH OUTPUT (START)
4	T2 18DG/WT	TRS REVERSE SENSE
5	T16 18YL/OR (EATX)	TRANSMISSION CONTROL RELAY OUTPUT
6	T15 18YL/BR (EATX)	TRANSMISSION CONTROL RELAY CONTROL
7	C3 18DB/YL	A/C COMPRESSOR CLUTCH RELAY OUTPUT
8	K31 18BR	FUEL PUMP RELAY CONTROL
9	C13 18LB/OR	A/C COMPRESSOR CLUTCH RELAY CONTROL
10	A104 18YL/RD (EATX)	FUSED B(+)
11	-	-
12	-	-
13	D25 18WT/VT (EATX)	PCI BUS (EATX)
14	T752 18DG/OR	ENGINE STARTER MOTOR RELAY CONTROL
15	Z116 18BK/VT	GROUND
16	K51 18BR/WT	AUTOMATIC SHUT DOWN RELAY CONTROL
17	F202 18PK/GY	FUSED IGNITION SWITCH OUTPUT (RUN-START)
18	K173 18BR/VT	RADIATOR FAN RELAY CONTROL
19	F202 18PK/GY	FUSED IGNITION SWITCH OUTPUT (RUN-START)
20	A109 18OR/RD	FUSED B(+)

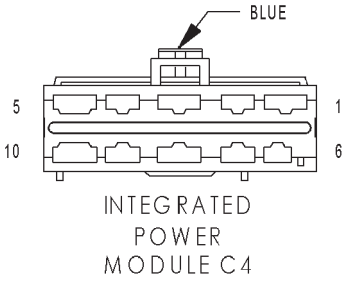

INTEGRATED
POWER
MODULE C4

INTEGRATED POWER MODULE C4 - BLUE 10 WAY

CAV	CIRCUIT	FUNCTION
1	Z127 12BK/DG (GAS)	GROUND
2	T750 12YL/GY	ENGINE STARTER MOTOR RELAY OUTPUT
3	K342 16BR/WT (DIESEL)	ECM/PCM RELAY OUTPUT
3	K342 16BR/WT (GAS)	AUTOMATIC SHUT DOWN RELAY OUTPUT
4	F500 16DG/PK (EXCEPT MTX)	FUSED IGNITION SWITCH OUTPUT (RUN)
5	-	-
6	D25 16WT/VT (ANTILOCK BRAKES)	PCI BUS
7	A107 12TN/RD (ANTILOCK BRAKES)	FUSED B(+)
8	A111 12DG/RD (ANTILOCK BRAKES)	FUSED B(+)
9	A710 14RD/BR (DIESEL)	B(+) (HAZARD FEED)
9	A701 14BR/RD (GAS)	B(+) (HAZARD FEED)
10	-	-

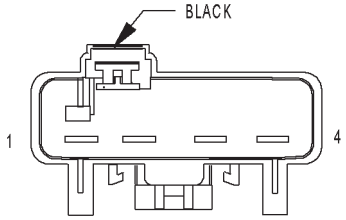

INTEGRATED
POWER
MODULE C5

INTEGRATED POWER MODULE C5 - BLACK 4 WAY

CAV	CIRCUIT	FUNCTION
1	A1 4RD	B(+)
2	-	-
3	-	-
4	-	-

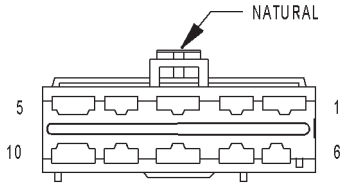

INTEGRATED
POWER
MODULE C6

INTEGRATED POWER MODULE C6 - NATURAL 10 WAY

CAV	CIRCUIT	FUNCTION
1	A101 12VT/RD	FUSED B(+)
2	Z117 16BK/WT	GROUND
3	Z118 16BK/YL	GROUND
4	A110 12OR/RD (POWER SEAT)	FUSED B(+)
5	-	-
6	-	-
7	C7 12DB	FUSED FRONT BLOWER MOTOR RELAY OUTPUT
8	F307 16LB/PK (ACCESSORY RELAY POSITION)	FUSED ACCESSORY RELAY OUTPUT
8	F307 16LB/PK (BATTERY POSITION)	FUSED B(+)
9	A113 12WT/RD (POWER SLIDING DOOR)	FUSED B(+)
10	-	-

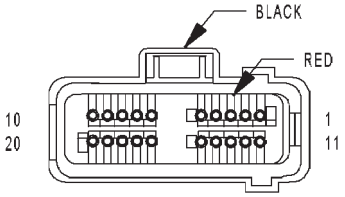

INTEGRATED POWER MODULE C7

INTEGRATED POWER MODULE C7 - BLACK/RED 20 WAY

CAV	CIRCUIT	FUNCTION
1	C16 20DB/GY (EXCEPT BUILT-UP-EXPORT)	FUSED REAR WINDOW DEFOGGER RELAY OUTPUT
1	C16 18DB/GY (BUILT-UP-EXPORT)	FUSED REAR WINDOW DEFOGGER RELAY OUTPUT
2	T141 20YL/OR (BUILT-UP-EXPORT)	FUSED IGNITION SWITCH OUTPUT (START)
2	T751 20YL (EXCEPT BUILT-UP-EXPORT)	FUSED IGNITION SWITCH OUTPUT (START)
3	D25 20WT/VT	PCI BUS
4	L13 20WT/YL (BUILT-UP-EXPORT)	HEADLAMP ADJUST SIGNAL
5	K32 18DB/YL (GAS)	BRAKE TRANSMISSION SHIFT INTERLOCK SOLENOID CONTROL
6	-	-
7	W7 20BR/GY	FRONT WIPER PARK SWITCH SENSE
8	B20 20DG/OR	BRAKE FLUID LEVEL SWITCH SENSE
9	F201 18PK/OR	FCM OUTPUT (RUN-START)
10	F214 18PK/LG	FCM OUTPUT (RUN-START)
11	A106 20LB/RD	FUSED B(+)
12	-	-
13	F2 18PK/WT (GAS)	FCM OUTPUT (UNLOCK-RUN-START)
14	-	-
15	A114 16GY/RD	FUSED B(+) (I.O.D.)
16	D23 20WT/BR	FLASH PROGRAM ENABLE
17	L50 18WT/TN	PRIMARY BRAKE SWITCH SIGNAL
18	X1 16DG/BR (PREMIUM 8 SPEAKER)	NAME BRAND SPEAKER RELAY OUTPUT
19	X3 20DG/VT	HORN SWITCH SENSE
20	F100 18PK/VT	FCM OUTPUT (RUN)

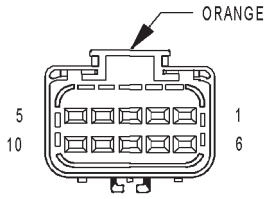

INTEGRATED POWER MODULE C8

INTEGRATED POWER MODULE C8 - ORANGE 10 WAY

CAV	CIRCUIT	FUNCTION
1	W3 12BR/WT	FRONT WIPER HIGH/LOW RELAY LOW SPEED OUTPUT
2	N1 16DB/OR (DIESEL)	FUEL HEATER RELAY OUTPUT
2	N1 16DB/OR (GAS)	FUEL PUMP RELAY OUTPUT
3	A108 18LG/RD (BUILT-UP-EXPORT)	FUSED B(+)
3	A108 18LG/RD	FUSED B(+)
4	A103 18GY/RD	FUSED B(+)
5	L77 18WT/BR	FUSED PARK LAMP RELAY OUTPUT (LEFT)
6	W4 12BR/OR	FRONT WIPER HIGH/LOW RELAY HIGH SPEED OUTPUT
7	C51 12LB/BR (AUTOMATIC TEMPERATURE CONTROL) (3 ZONE HVAC)	FUSED REAR BLOWER MOTOR RELAY OUTPUT
8	-	-
9	L78 18WT/OR	FUSED PARK LAMP RELAY OUTPUT (RIGHT)
10	L60 18WT/TN	RIGHT FRONT TURN SIGNAL DRIVER

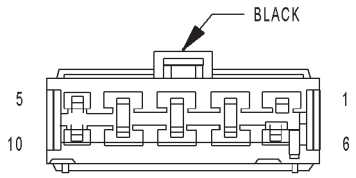

INTEGRATED
POWER
MODULE C9

INTEGRATED POWER MODULE C9 - BLACK 10 WAY

CAV	CIRCUIT	FUNCTION
1	A102 12WT/RD	FUSED B(+)
2	F20 18PK/WT	FUSED IGNITION SWITCH OUTPUT (RUN-START)
3	C15 12DB/WT	FUSED REAR WINDOW DEFOGGER RELAY OUTPUT
4	A105 18DB/RD	FUSED B(+)
5	L61 18WT/LB (BUILT-UP-EXPORT)	LEFT FRONT TURN SIGNAL DIVER
5	L61 18WT/LG (EXCEPT BUILT-UP-EXPORT)	LEFT FRONT TURN SIGNAL DIVER
6	A701 16BR/RD	FUSED B(+) (HAZARD)
6	A701 16BR/RD	FUSED B(+) (HAZARD)
7	F306 16DB/PK	FUSED ACCESSORY RELAY OUTPUT
8	F30 12PK/YL (POWER WINDOWS)	FUSED ACCESSORY RELAY OUTPUT
9	A115 12YL/RD (POWER LIFTGATE)	FUSED B(+)
10	F302 18GY/PK	FUSED ACCESSORY RELAY OUTPUT

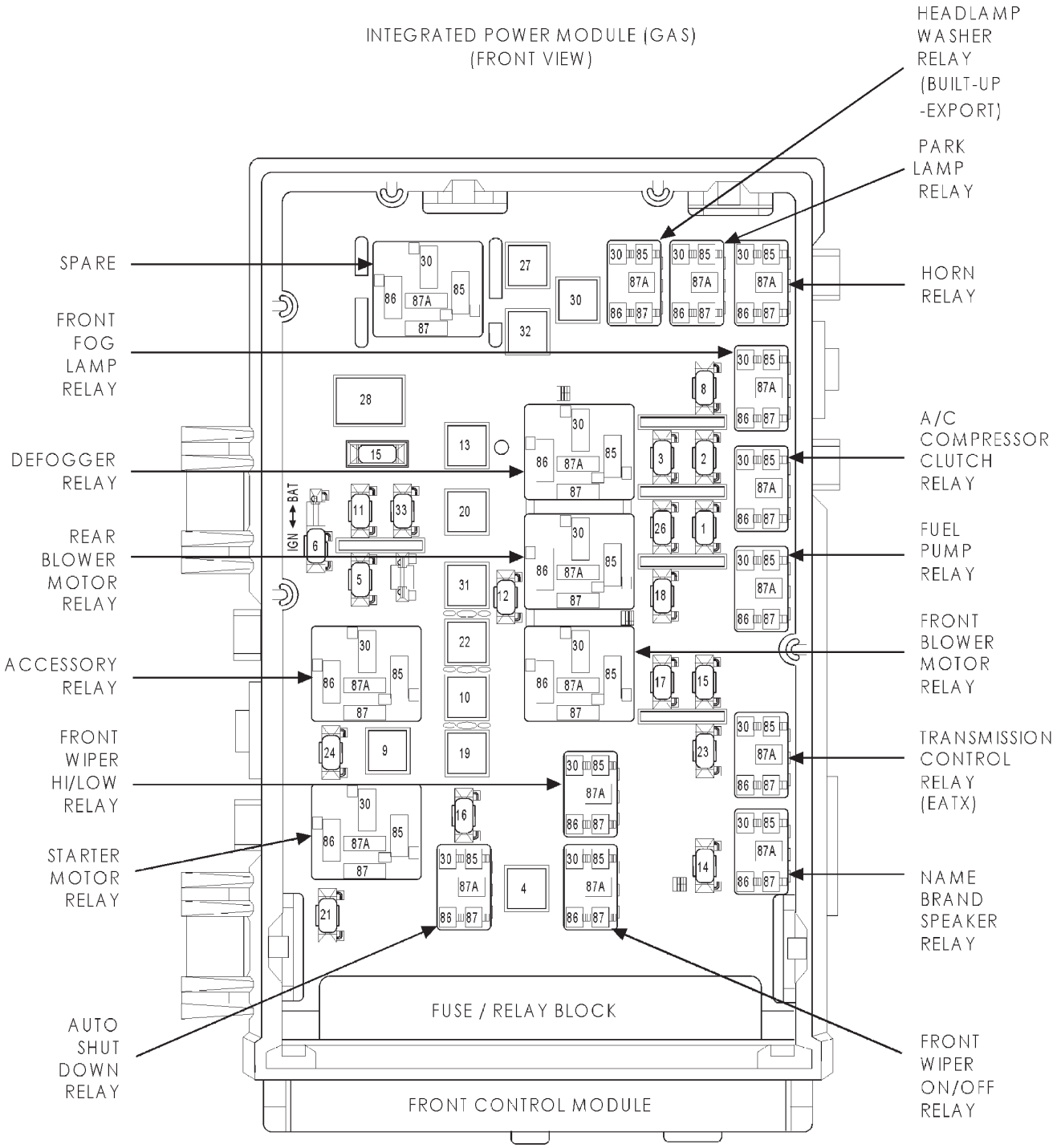
INTEGRATED POWER MODULE (GAS)
(FRONT VIEW)
HEADLAMP WASHER RELAY (BUILT-UP -EXPORT)
PARK LAMP RELAY
SPARE
HORN RELAY
FRONT FOG LAMP RELAY
A/C COMPRESSOR CLUTCH RELAY
DEFOGGER RELAY
FUEL PUMP RELAY
REAR BLOWER MOTOR RELAY
FRONT BLOWER MOTOR RELAY
ACCESSORY RELAY
TRANSMISSION CONTROL RELAY (EATX)
FRONT WIPER HI/LOW RELAY
NAME BRAND SPEAKER RELAY
STARTER MOTOR RELAY
AUTO SHUT DOWN RELAY
FRONT WIPER ON/OFF RELAY
IGN
BAT
FUSE / RELAY BLOCK
FRONT CONTROL MODULE

FUSES (IPM)

FUSE NO.	AMPS	FUSED CIRCUIT	FUNCTION
1	20A	INTERNAL	FUSED B(+)
2	15A	INTERNAL	FUSED PARK LAMP RELAY OUTPUT
3	15A	INTERNAL	FUSED PARK LAMP RELAY OUTPUT
4	30A	INTERNAL	FUSED B(+)
5	20A	F306 16DB/PK	FUSED ACCESSORY RELAY OUTPUT
6	20A	F307 16LB/PK (BATTERY POSITION)	FUSED B(+)
6	20A	F307 16LB/PK (ACCESSORY RELAY POSITION)	FUSED ACCESSORY RELAY OUTPUT
8	20A	INTERNAL	FUSED B(+)
9	40A	INTERNAL	FUSED B(+)
10	40A	C7 12DB	FUSED FRONT BLOWER MOTOR RELAY OUTPUT
11	20A	F302 18GY/PK	FUSED ACCESSORY RELAY OUTPUT
12	25A	C51 12LB/BR	FUSED REAR BLOWER MOTOR RELAY OUTPUT
13	40A	C15 12DB/WT	FUSED REAR WINDOW DEFOGGER RELAY OUTPUT
14	15A	INTERNAL	FUSED B(+) (I.O.D.)
15	20A	INTERNAL (DIESEL)	FUSED B(+)
15	20A	INTERNAL (EATX)	FUSED B(+)
16	25A	INTERNAL	FUSED B(+)
17	20A	INTERNAL	FUSED B(+)
18	15A	INTERNAL	FUSED B(+)
19	40A	A101 12VT/RD	FUSED B(+)
20	40A	A102 12WT/RD	FUSED B(+)
21	25A	A111 12DG/RD	FUSED B(+)
22	40A	A110 12OR/RD	FUSED B(+)
23	10A	A106 20LB/RD	FUSED B(+)
24	20A	A701 16BR/RD	FUSED B(+) (HAZARD)
26	20A	A103 18GY/RD	FUSED B(+)
27	40A	A112 12OR/RD	FUSED B(+)
28	40A	F30 12PK/YL	FUSED ACCESSORY RELAY OUTPUT
30	40A	INTERNAL (BUILT-UP-EXPORT)	FUSED B(+)
31	40A	A113 12WT/RD	FUSED B(+)
32	40A	A115 12YL/RD	FUSED B(+)
33	15A	INTERNAL	FUSED ACCESSORY RELAY OUTPUT

A/C COMPRESSOR CLUTCH RELAY

CAV	CIRCUIT	FUNCTION
30	INTERNAL	FUSED B(+)
85	C13 20LB/OR (DIESEL)	A/C COMPRESSOR CLUTCH RELAY CONTROL
85	C13 18LB/OR (GAS)	A/C COMPRESSOR CLUTCH RELAY CONTROL
86	K342 16BR/WT (DIESEL)	ECM/PCM RELAY OUTPUT
86	F202 18PK/GY (GAS)	FUSED IGNITION SWITCH OUTPUT (RUN-START)
87A	-	-
87	C3 18DB/YL	A/C COMPRESSOR CLUTCH RELAY OUTPUT

AUTO SHUT DOWN RELAY

CAV	CIRCUIT	FUNCTION
30	INTERNAL	FUSED B(+)
85	K51 18BR/WT	AUTOMATIC SHUT DOWN RELAY CONTROL
86	INTERNAL	FUSED B(+)
87A	-	-
87	K342 16BR/WT	AUTOMATIC SHUT DOWN RELAY OUTPUT

FUEL PUMP RELAY (GAS)

CAV	CIRCUIT	FUNCTION
30	INTERNAL	FUSED B(+)
85	K31 18BR	FUEL PUMP RELAY CONTROL
86	INTERNAL	FUSED IGNITION SWITCH OUTPUT (RUN-START)
87A	-	-
87	N1 16DB/OR	FUEL PUMP RELAY OUTPUT

STARTER MOTOR RELAY

CAV	CIRCUIT	FUNCTION
30	INTERNAL	FUSED B(+)
85	T752 20DG/OR (DIESEL)	STARTER MOTOR RELAY CONTROL
85	T752 18DG/OR (GAS)	STARTER MOTOR RELAY CONTROL
86	INTERNAL	FUSED IGNITION SWITCH OUTPUT (START)
87A	-	-
87	T750 12YL/GY	STARTER MOTOR RELAY OUTPUT

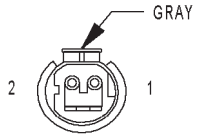

KNOCK SENSOR (2.4L)

KNOCK SENSOR (2.4L) - GRAY 2 WAY

CAV	CIRCUIT	FUNCTION
1	K42 18DB/YL	KNOCK SENSOR SIGNAL
2	K900 18DB/DG	SENSOR GROUND

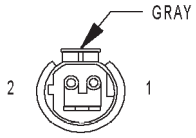

KNOCK SENSOR (3.3L/3.8L) (EXCEPT BUILT-UP-EXPORT)

KNOCK SENSOR (3.3L/3.8L) (EXCEPT BUILT-UP-EXPORT) - GRAY 2 WAY

CAV	CIRCUIT	FUNCTION
1	K42 18DB/YL	KNOCK SENSOR SIGNAL
2	K900 18DB/DG	SENSOR GROUND

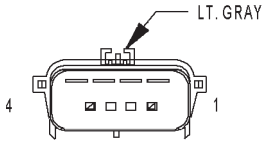

LEAK DETECTION PUMP (EXCEPT BUILT-UP-EXPORT)

LEAK DETECTION PUMP (EXCEPT BUILT-UP-EXPORT) - LT. GRAY 4 WAY

CAV	CIRCUIT	FUNCTION
1	K107 18VT/WT	LEAK DETECTION PUMP SWITCH SENSE
2	K106 18VT/WT (2.4L EATX W/ABS)	LEAK DETECTION PUMP SOLENOID CONTROL
2	K106 18VT/LB (EXCEPT 2.4L EATX W/ABS)	LEAK DETECTION PUMP SOLENOID CONTROL
3	F202 18PK/GY	FUSED IGNITION SWITCH OUTPUT (RUN-START)
4	-	-

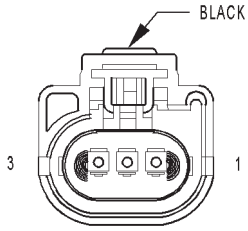

MANIFOLD ABSOLUTE PRESSURE SENSOR (GAS)

MANIFOLD ABSOLUTE PRESSURE SENSOR (GAS) - BLACK 3 WAY

CAV	CIRCUIT	FUNCTION
1	K1 18VT/BR	MANIFOLD ABSOLUTE PRESSURE SENSOR SIGNAL
2	K900 18DB/DG	SENSOR GROUND
3	F855 18PK/YL (BUILT-UP-EXPORT)	5 VOLT SUPPLY
3	F855 18OR/PK (EXCEPT BUILT-UP-EXPORT)	5 VOLT SUPPLY

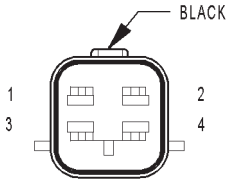

OXYGEN SENSOR 1/1 UPSTREAM (GAS)

OXYGEN SENSOR 1/1 UPSTREAM (GAS) - BLACK 4 WAY

CAV	CIRCUIT	FUNCTION
1	K99 18BR/LG	OXYGEN SENSOR 1/1 HEATER CONTROL
2	K342 16BR/WT	AUTOMATIC SHUT DOWN RELAY OUTPUT
3	K902 18BR/DG	OXYGEN SENSOR 1/1 GROUND
4	K41 18DB/LB	OXYGEN SENSOR 1/1 SIGNAL

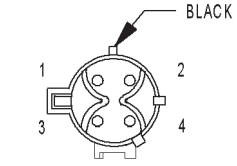

OXYGEN SENSOR 1/2 DOWNSTREAM (GAS)

OXYGEN SENSOR 1/2 DOWNSTREAM (GAS) - BLACK 4 WAY

CAV	CIRCUIT	FUNCTION
1	Z43 18BK/DB	GROUND
2	K342 16BR/WT	AUTOMATIC SHUT DOWN RELAY OUTPUT
3	K902 18BR/DG	OXYGEN SENSOR 1/2 GROUND
4	K141 18DB/YL	OXYGEN SENSOR 1/2 SIGNAL

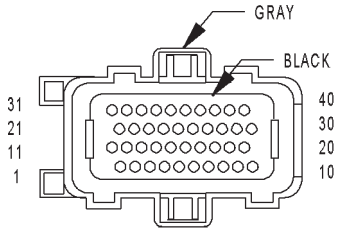

POWERTRAIN CONTROL MODULE C1 (GAS)

POWERTRAIN CONTROL MODULE C1 (GAS) - GRAY/BLACK 40-WAY

CAV	CIRCUIT	FUNCTION
1	-	-
2	K18 16DB/OR (3.3L/3.8L)	IGNITION COIL NO. 3 DRIVER
3	K17 16DB/TN	IGNITION COIL NO. 2 DRIVER
4	-	-
5	V32 18VT/YL	SPEED CONTROL ON/OFF SWITCH SENSE
6	K342 16BR/WT	AUTOMATIC SHUT DOWN RELAY OUTPUT
7	K13 16BR/LB	FUEL INJECTOR NO. 3 DRIVER
8	K20 18BR/GY	GENERATOR FIELD CONTROL
9	-	-
10	Z130 18BK/BR	GROUND
11	K19 16DB/DG	IGNITION COIL NO. 1 DRIVER
12	G6 16VT/GY	ENGINE OIL PRESSURE SWITCH SENSE
13	K11 16BR/YL	FUEL INJECTOR NO. 1 DRIVER
14	K58 16BR/VT (3.3L/3.8L)	FUEL INJECTOR NO. 6 DRIVER
15	K38 16BR/OR (3.3L/3.8L)	FUEL INJECTOR NO. 5 DRIVER
16	K14 16BR/TN	FUEL INJECTOR NO. 4 DRIVER
17	K12 16BR/DB	FUEL INJECTOR NO. 2 DRIVER
18	K99 18BR/LG	OXYGEN SENSOR 1/1 HEATER CONTROL
19	-	-
20	F202 18PK/GY	FUSED IGNITION SWITCH OUTPUT (RUN-START)
21	-	-
22	-	-
23	-	-
24	-	-
25	K42 18DB/YL (EXCEPT 3.3L/3.8L BUILT-UP-EXPORT)	KNOCK SENSOR SIGNAL
26	K2 18VT/OR	ENGINE COOLANT TEMPERATURE SENSOR SIGNAL
27	K902 18BR/DG	OXYGEN SENSOR GROUND
28	-	-
29	-	-
30	K41 18DB/LB	OXYGEN SENSOR 1/1 SIGNAL
31	T752 18DG/OR	ENGINE STARTER MOTOR RELAY CONTROL
32	K24 18BR/LB	CRANKSHAFT POSITION SENSOR SIGNAL
33	K44 18DB/GY	CAMSHAFT POSITION SENSOR SIGNAL
34	-	-
35	K22 18BR/OR	THROTTLE POSITION SENSOR SIGNAL
36	K1 18VT/BR	MANIFOLD ABSOLUTE PRESSURE SENSOR SIGNAL
37	K21 18DB/LG	INTAKE AIR TEMPERATURE SENSOR SIGNAL
38	-	-
39	-	-
40	K35 18DB/VT	EGR SOLENOID CONTROL

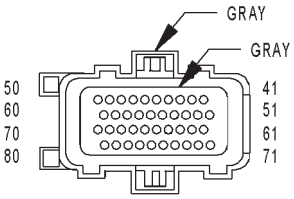

POWERTRAIN CONTROL MODULE C2 (GAS)

POWERTRAIN CONTROL MODULE C2 (GAS) - GRAY/GRAY 40 WAY

CAV	CIRCUIT	FUNCTION
41	V37 18VT	SPEED CONTROL SWITCH SIGNAL
42	C18 18LB/BR	A/C PRESSURE SENSOR SIGNAL
43	K900 18DB/DG	SENSOR GROUND
44	F888 18BR/PK	8 VOLT SUPPLY
45	-	-
46	A109 18OR/RD	FUSED B(+)
47	-	-
48	K40 18BR/LG (2.4L)	IDLE AIR CONTROL NO. 3 DRIVER
49	K60 18VT/LG (2.4L)	IDLE AIR CONTROL NO. 2 DRIVER
49	K39 18VT/DG (3.3L/3.8L)	IDLE AIR CONTROL NO. 1 DRIVER
50	Z131 18BK/DG	GROUND
51	K141 18DB/YL	OXYGEN SENSOR 1/2 SIGNAL
52	-	-
53	-	-
54	-	-
55	-	-
56	V36 18VT/YL	SPEED CONTROL VACUUM SOLENOID CONTROL
57	K39 18VT/DG (2.4L)	IDLE AIR CONTROL NO. 1 DRIVER
57	K60 18VT/LG (3.3L/3.8L)	IDLE AIR CONTROL NO. 2 DRIVER
58	K59 18BR/DG (2.4L)	IDLE AIR CONTROL NO. 4 DRIVER
59	D25 18WT/VT	PCI BUS
60	-	-
61	F855 18PK/YL	5 VOLT SUPPLY
62	B29 18DG/WT	SECONDARY BRAKE SWITCH SIGNAL
63	T10 18DG/LG (EATX)	TORQUE MANAGEMENT REQUEST SENSE
64	C13 18LB/OR	A/C COMPRESSOR CLUTCH RELAY CONTROL
65	D21 18WT/BR	SCI TRANSMIT
66	N7 18DB/OR	VEHICLE SPEED SENSOR SIGNAL
67	K51 18BR/WT	AUTOMATIC SHUT DOWN RELAY CONTROL
68	K52 18DB/WT	EVAPORATIVE EMISSION SOLENOID CONTROL
69	-	-
70	K70 18DB/BR	EVAPORATIVE EMISSION SOLENOID SENSE
71	-	-
72	K107 18VT/WT (EXCEPT BUILT-UP-EXPORT)	LEAK DETECTION PUMP SWITCH SENSE
73	K173 18BR/VT	RADIATOR FAN RELAY CONTROL
74	K31 18BR	FUEL PUMP RELAY CONTROL
75	D20 18WT/LG	SCI RECEIVE
76	T41 18YL/DB	PARK/NEUTRAL POSITION SWITCH SENSE (TRS T41)
77	K106 18VT/WT (EXCEPT BUILT-UP-EXPORT) (2.4L EATX W/ABS)	LEAK DETECTION PUMP SOLENOID CONTROL
77	K106 18VT/LB (EXCEPT BUILT-UP-EXPORT) (EXCEPT 2.4L EATX W/ABS)	LEAK DETECTION PUMP SOLENOID CONTROL
78	K54 18DB/WT (ATX)	TORQUE CONVERTER CLUTCH SOLENOID CONTROL
79	-	-
80	V35 18VT/OR	SPEED CONTROL VENT SOLENOID CONTROL

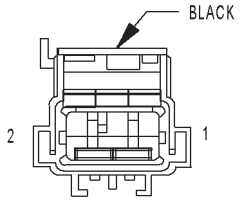

RADIATOR FAN NO. 1 (GAS)

RADIATOR FAN NO. 1 (GAS) - BLACK 2 WAY

CAV	CIRCUIT	FUNCTION
1	N23 12DB/DG	RADIATOR FAN RELAY OUTPUT
2	Z223 12BK/DG	GROUND

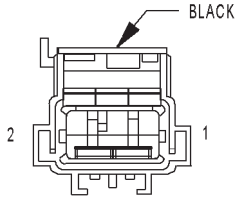

RADIATOR FAN NO. 2 (GAS)

RADIATOR FAN NO. 2 (GAS) - BLACK 2 WAY

CAV	CIRCUIT	FUNCTION
1	N23 12DB/DG	RADIATOR FAN RELAY OUTPUT
2	Z223 12BK/DG	GROUND

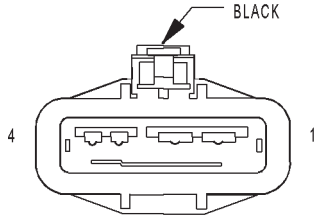

RADIATOR FAN RELAY (GAS)

RADIATOR FAN RELAY (GAS) - BLACK 4 WAY

CAV	CIRCUIT	FUNCTION
1	A112 12OR/RD	FUSED B(+)
2	N23 12DB/DG	RADIATOR FAN RELAY OUTPUT
3	Z723 18BK/DG	GROUND
4	N173 16DB/VT	RADIATOR FAN RELAY CONTROL

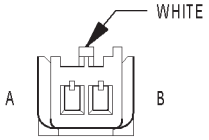

RIGHT SPEED CONTROL SWITCH

RIGHT SPEED CONTROL SWITCH - WHITE 2 WAY

CAV	CIRCUIT	FUNCTION
A	V37 20DG/VT (EXCEPT BUILT-UP-EXPORT)	SPEED CONTROL SWITCH SIGNAL
A	V37 20VT/TN (BUILT UP EXPORT)	SPEED CONTROL SWITCH SIGNAL
B	Z23 20BK/VT	RIGHT SPEED CONTROL SWITCH GROUND

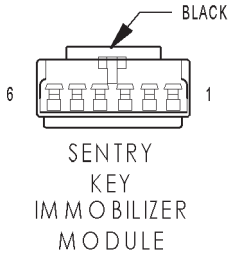

SENTRY KEY IMMOBILIZER MODULE - BLACK 6 WAY

CAV	CIRCUIT	FUNCTION
1	-	-
2	D25 20WT/VT	PCI BUS
3	-	-
4	F20 20PK/WT	FUSED IGNITION SWITCH OUTPUT (RUN-START)
5	Z120 20BK/WT	GROUND
6	A114 20GY/RD	FUSED B(+) (I.O.D.)

NOTES

10.0 SCHEMATIC DIAGRAMS

10.1 2002 RGS 2.4L

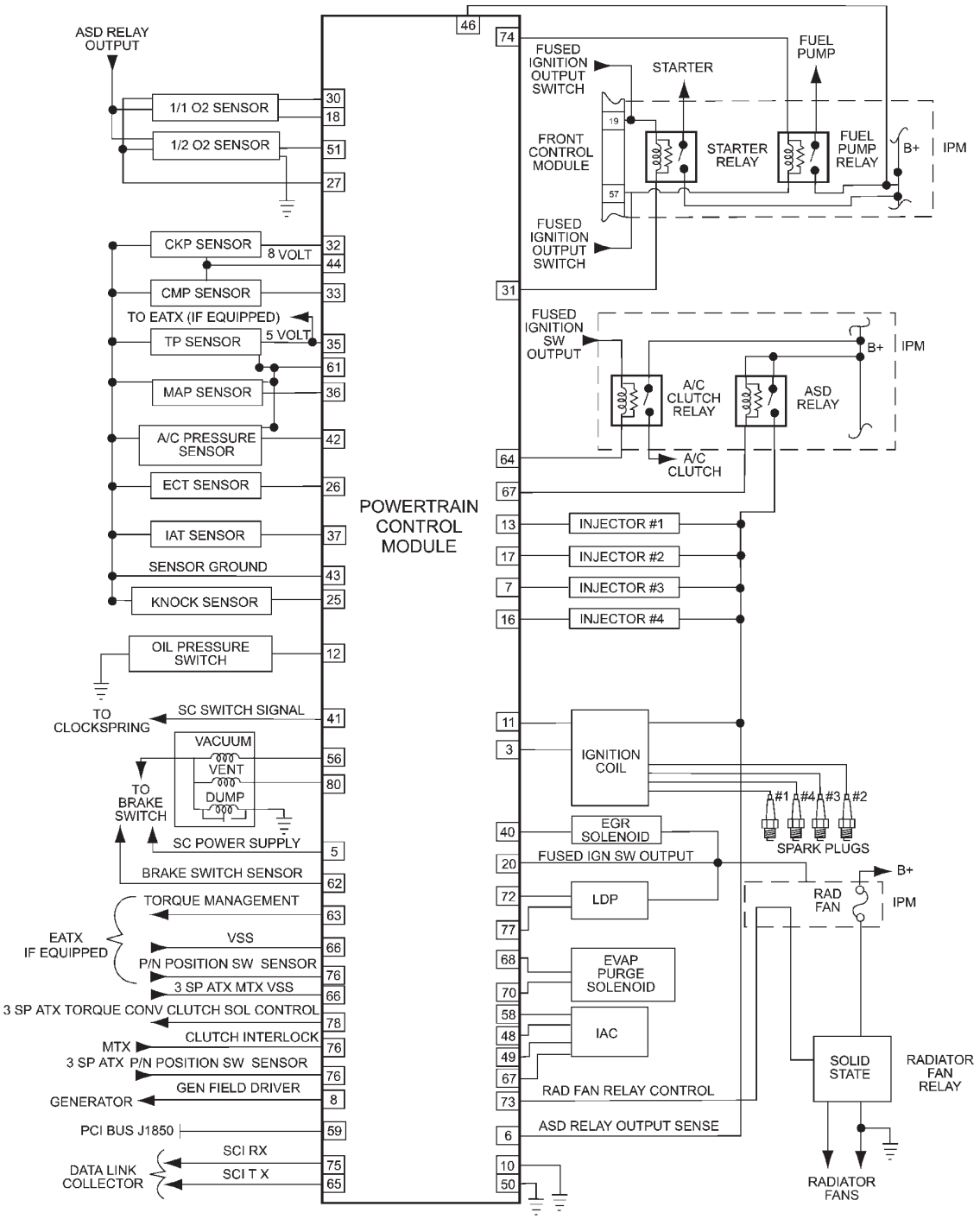

80a11c75

10.2 2002 RGS 3.3L/3.8L

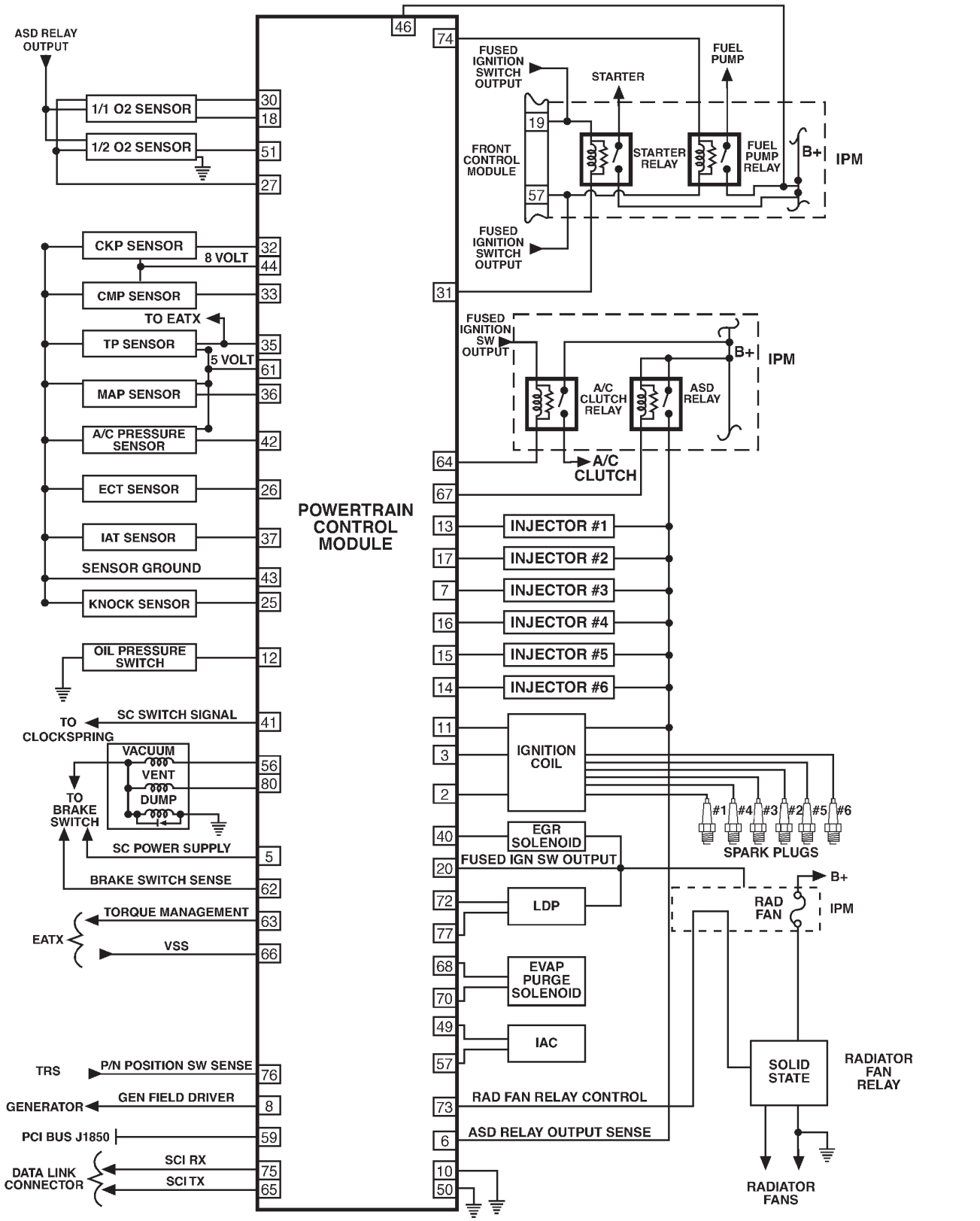

809c281d

11.0 CHARTS AND GRAPHS

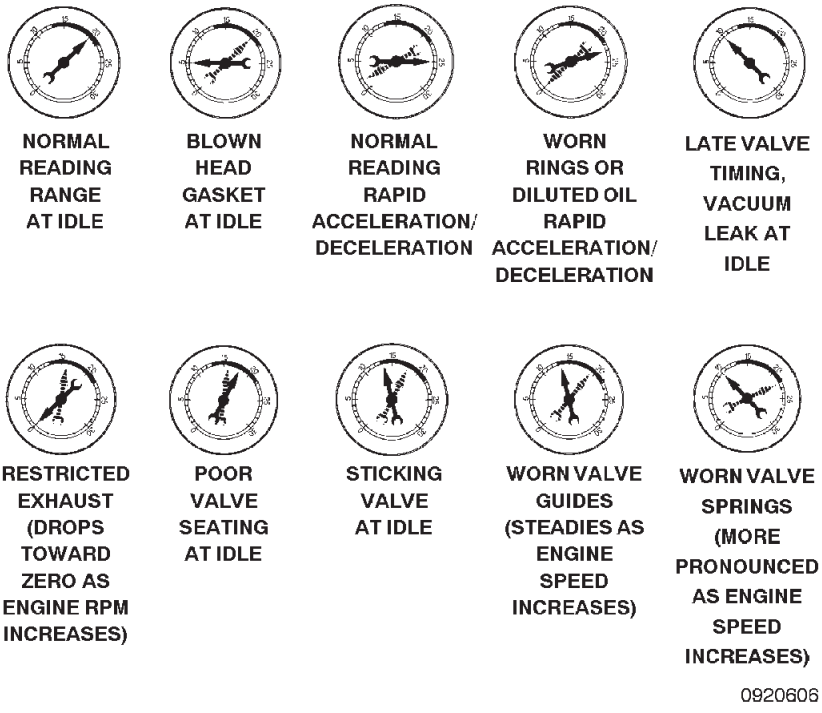

TYPICAL SCOPE PATTERNS
CAMSHAFT AND CRANKSHAFT SENSORS

2.0L/2.4L ENGINES

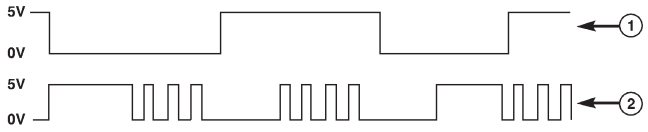

3.3L/3.8L ENGINES

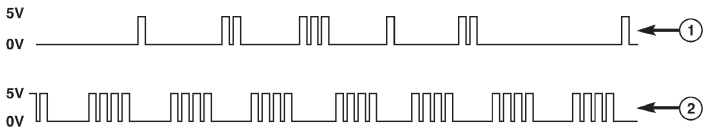

3.5L ENGINE

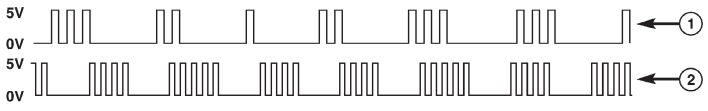

1 CAMSHAFT SIGNAL
2 CRANKSHAFT SIGNAL

80c42a8d

EELD CALIBRATION

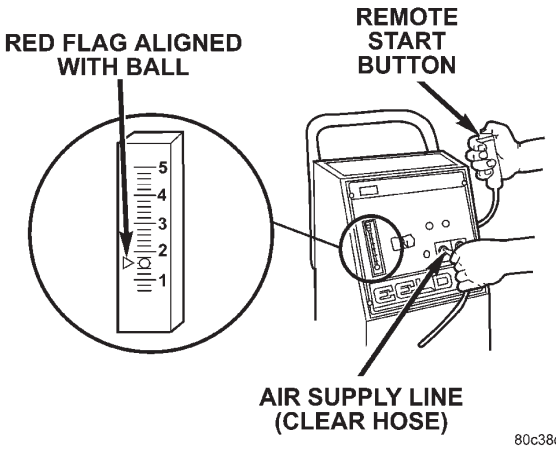

80c38d90

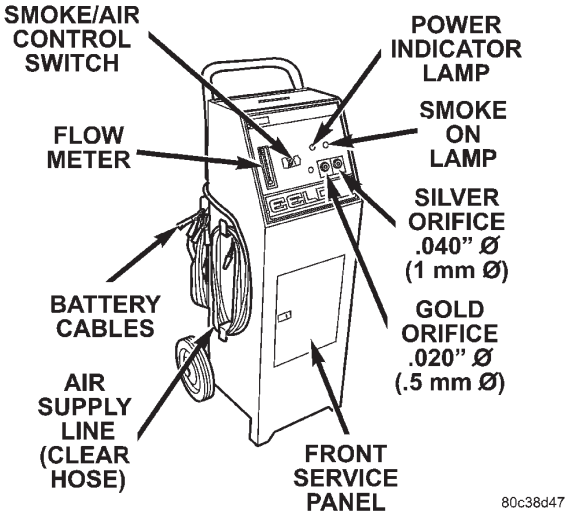

80c38d47

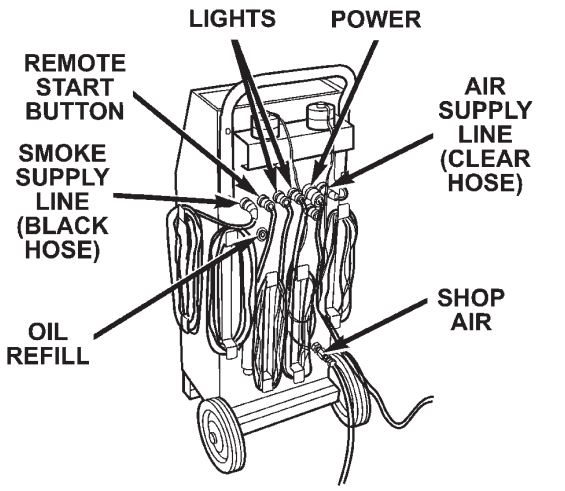

80c38d69

O2 SENSOR CONFIGURATION

JR	4 CYLINDER	1/1	UPSTREAM
JR	4 CYLINDER	1/2	DOWNSTREAM
JR	2.7L V-6	1/1	REAR BANK UP
JR	2.7L V-6	1/2	REAR BANK DOWN
JR	2.7L V-6	2/1	FRONT BANK UP
JR	2.7L V-6	2/2	FRONT BANK DOWN
LH	V-6 ALL	1/1	RIGHT BANK UP
LH	V-6 ALL	1/2	RIGHT BANK DOWN
LH	V-6 ALL	2/1	LEFT BANK UP
LH	V-6 ALL	2/2	LEFT BANK DOWN
RS/RG	ALL	1/1	UPSTREAM
RS/RG	ALL	1/2	DOWNSTREAM
PL	ALL	1/1	UPSTREAM
PL	ALL	1/2	DOWNSTREAM
PR	3.5L	1/1	RIGHT BANK UP
PR	3.5L	1/2	RIGHT BANK DOWN
PR	3.5L	2/1	LEFT BANK UP
PR	3.5L	2/2	LEFT BANK DOWN
PT	ALL	1/1	UPSTREAM
PT	ALL	1/2	DOWNSTREAM

FUEL LEVEL VOLTAGE CHANGE OVER MILES (EXAMPLE) CHART

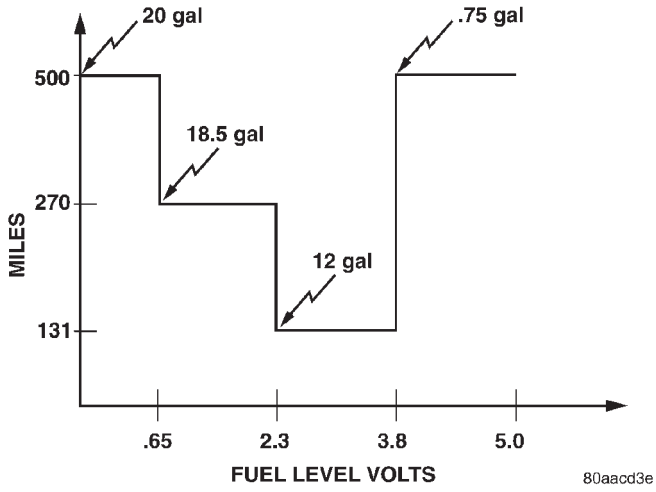

80aacd3e

80aa3148

NOTES