ENGINE

2.0 Liter - Crankshaft, Cylinder Block - Engine Code(s): CAEB (Sedan)

CRANKSHAFT, CYLINDER BLOCK

DESCRIPTION AND OPERATION

GENERAL INFORMATION

RIBBED BELT DRIVE AND AUXILIARY COMPONENT BRACKET OVERVIEW

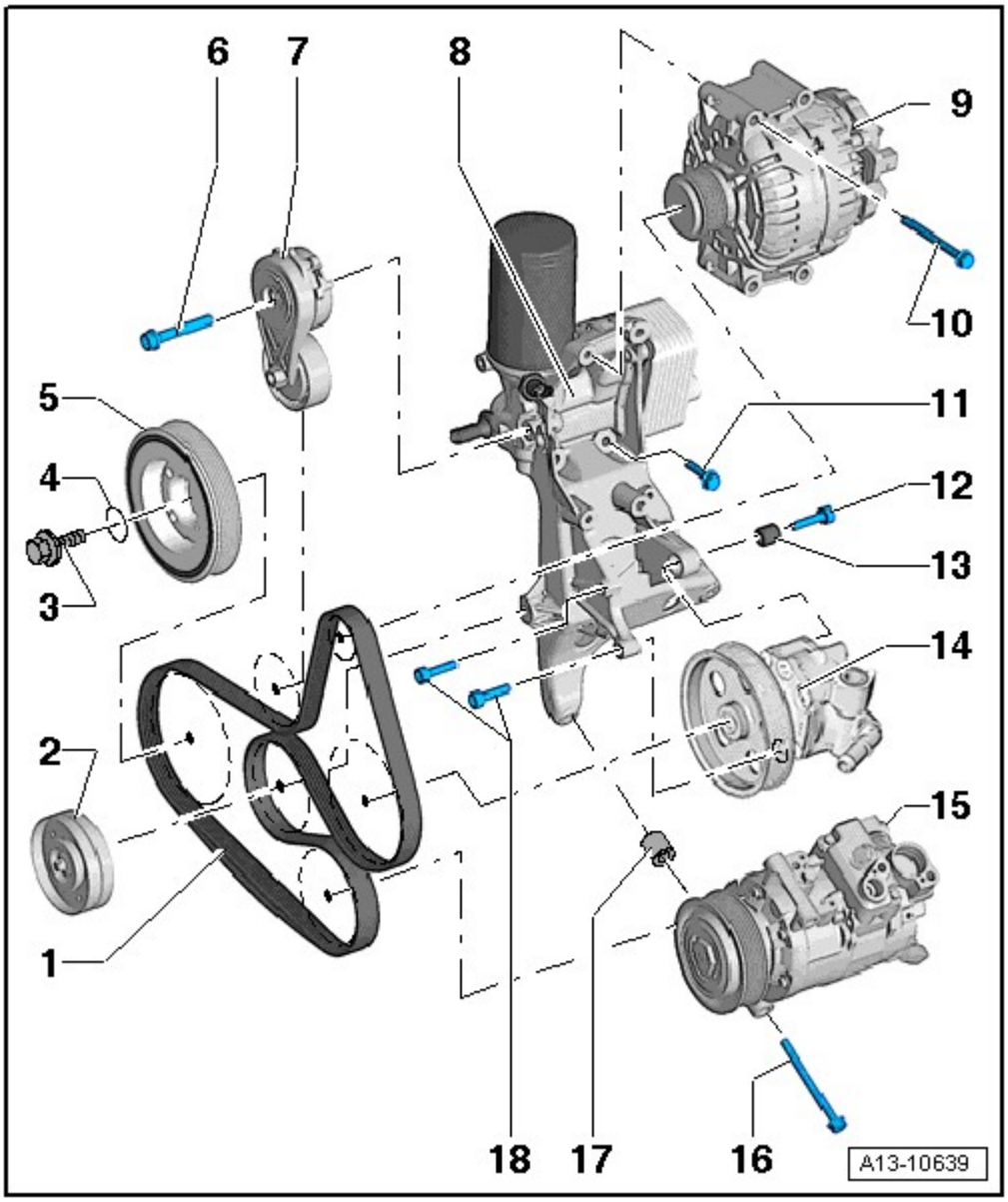

Fig. 1: Identifying Ribbed Belt Drive And Auxiliary Component Bracket Overview
Courtesy of AUDI OF AMERICA, LLC

1. Ribbed Belt
   - Check for wear
   - Do not kink
   - Ribbed belt routing, refer to **Fig. 3**

CAUTION: Risk of destroying due to reversed running direction on a used ribbed belt.

- **Before removing ribbed belt, marking running direction with chalk or felt-tip pen for reinstallation later.**

   - Removing and installing, refer to **RIBBED BELT**
   - When installing, make sure it is seated correctly on the pulleys
2. Idler Roller
   - 20 Nm
3. Bolt
   - 150 Nm + 90° turn
   - Replace
   - Coat the O-ring with oil
   - Use counter hold tool T10355 to loosen and tighten

CAUTION: The engine could be destroyed.

- **Do not turn the crankshaft when a bolt is removed because this will offset the timing.**

4. O-ring
   - No replacement part, part of the bolt delivery package
5. Vibration Damper
   - With ribbed belt pulley
   - Removing and installing, refer to **VIBRATION DAMPER**

CAUTION: The engine could be destroyed.

- **In order not to change the valve timing, the crankshaft must not be moved out of the "TDC" position when the vibration damper is removed.**

6. Bolt
   - 40 Nm
7. Ribbed Belt Tensioning Damper

- To release tension on ribbed belt, pivot using a wrench.
- Secure it with locking toolT40098
- Removing and installing, refer to **RIBBED BELT TENSIONING DAMPER**

8. Bracket for Assemblies
   - With oil filter and engine oil cooler
   - Accessory assembly bracket, removing and installing, refer to **ACCESSORY ASSEMBLY BRACKET**
   - For removing and installing engine oil cooler, refer to **ENGINE OIL COOLER**
9. Generator
   - Removing and installing, refer to **Removal and Installation**
10. Bolt
    - Tightening specifications, refer to **Specifications**
11. Bolt
    - Tightening sequence, refer to **Fig. 2**
12. Bolt
    - Tightening specifications, refer to **Specifications**
13. Sleeve
14. Power Steering Pump
    - Removing and installing, refer to **Removal and Installation**
15. Air Conditioning (A/C) Compressor
    - Do not remove or disconnect refrigerant lines
    - Removing and installing, refer to **Removal and Installation**
16. Bolt
    - Tightening specifications, refer to **Description and Operation**
17. Alignment Bushing
    - For air conditioning compressor
18. Bolt
    - Tightening specifications, refer to **Specifications**

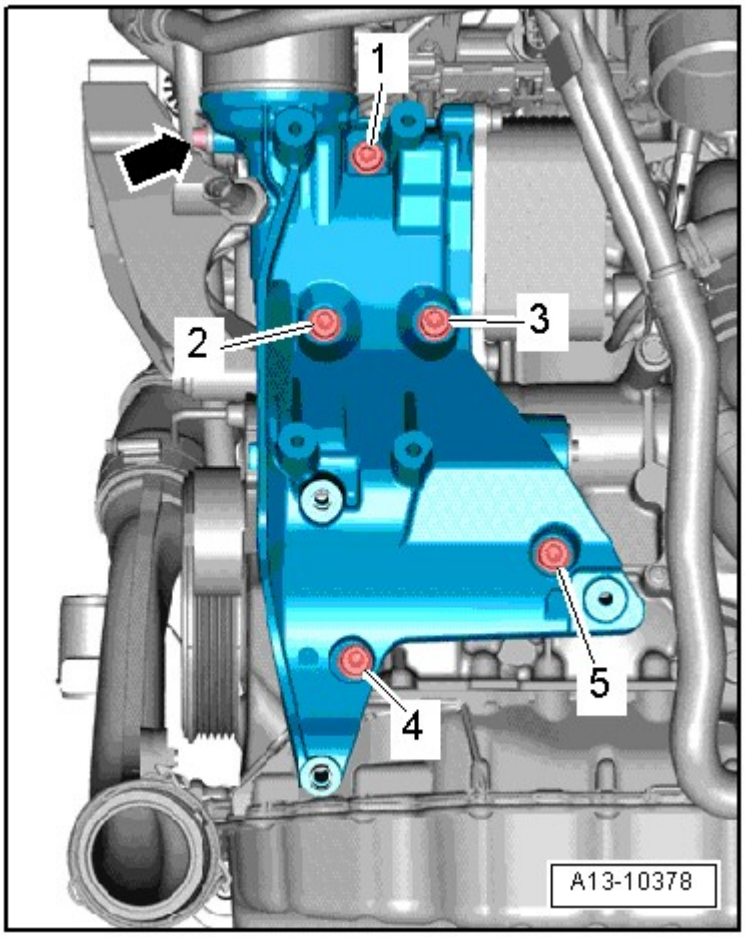

Fig. 2: Identifying Accessory Assembly Bracket Tightening Sequence
Courtesy of AUDI OF AMERICA, LLC

-- Mount the accessory assembly bracket and then mount the bolts -4-.

-- Tighten bolts in 3 stages in -1 to 5- sequence as follows:

-- Tighten bolts by hand.-- Tighten the bolts to 20 Nm.-- Tighten the bolts an additional 90°.

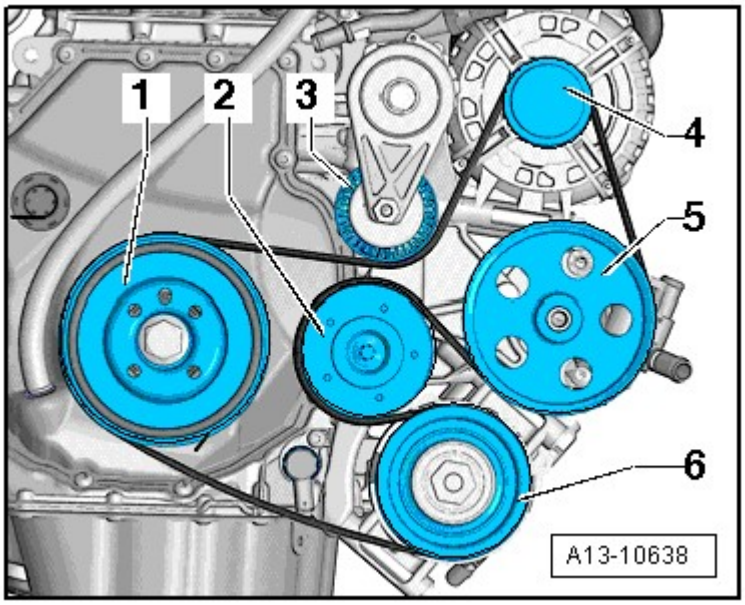

Fig. 3: Identifying Ribbed Belt Routing
Courtesy of AUDI OF AMERICA, LLC

1. Vibration damper
2. Idler roller
3. Ribbed belt tensioning damper
4. Generator
5. Power steering pump
6. A/C compressor

SEALING FLANGE AND DRIVE PLATE OVERVIEW

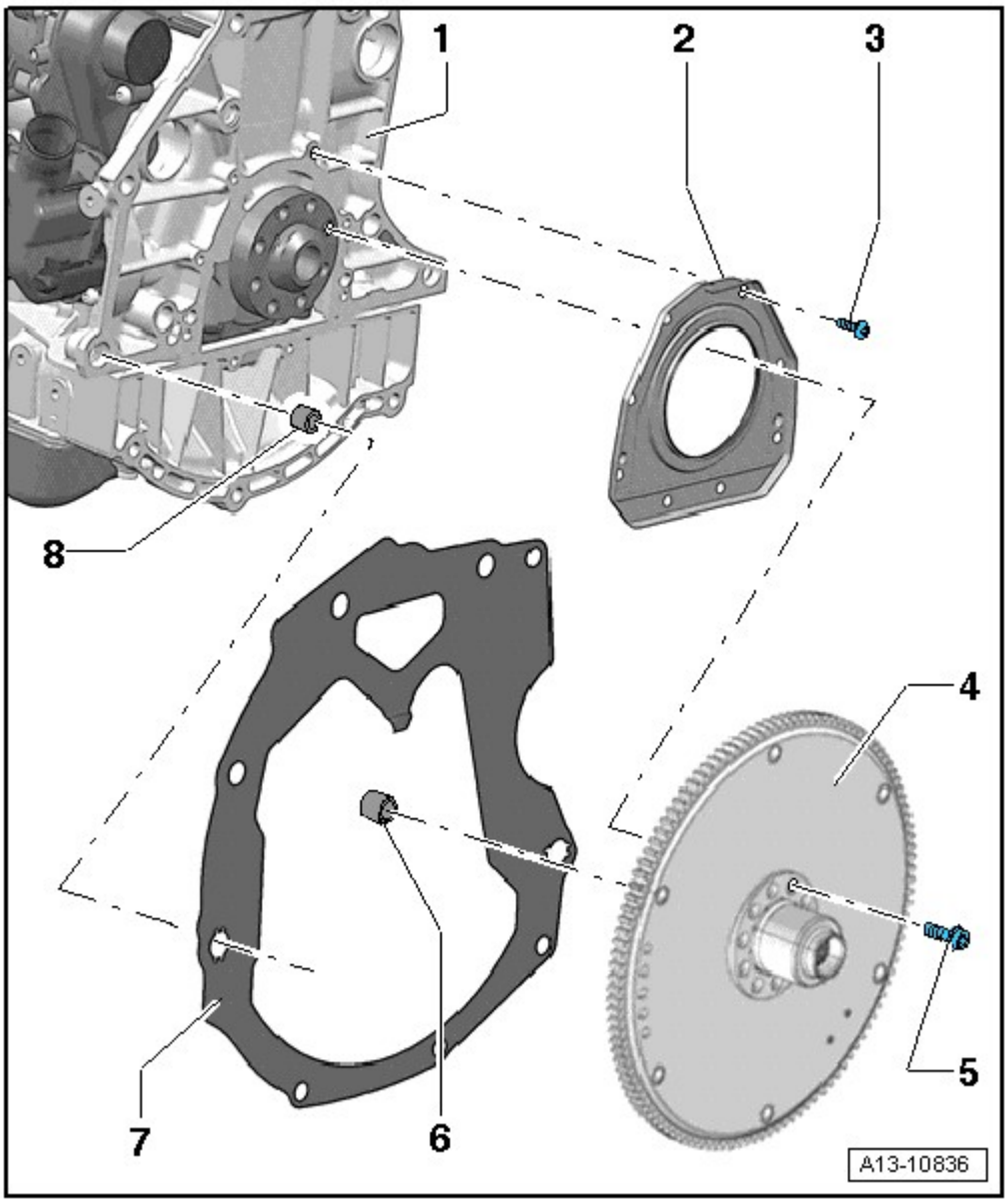

Fig. 4: Identifying Sealing Flange And Drive Plate Overview
Courtesy of AUDI OF AMERICA, LLC

1. Cylinder Block
2. Sealing Flange with Seal
   - Replace, refer to **SEALING FLANGE, TRANSMISSION SIDE**
   - Do not oil or grease the sealing lip of seal
   - Before installing, remove oil remains from crankshaft journal with a clean cloth
3. Bolt
   - Tightening sequence with 8 bolts, refer to **Fig. 5**
   - Tightening sequence with 6 bolts, refer to **Fig. 6**
4. Drive Plate

- To loosen the bolts, secure with 3067

5. Bolt
   - 60 Nm + 90° turn
   - Replace
6. Needle Bearing
   - For removing and installing the needle bearing, refer to **NEEDLE BEARING ON DRIVE PLATE, MANUAL TRANSMISSION**
7. Intermediate Plate
   - Must be located on dowel sleeves
   - Be careful not to damage or bend when installing
   - Is hooked in at sealing flange, refer to **Fig. 7**
8. Alignment Sleeve
   - Quantity: 2

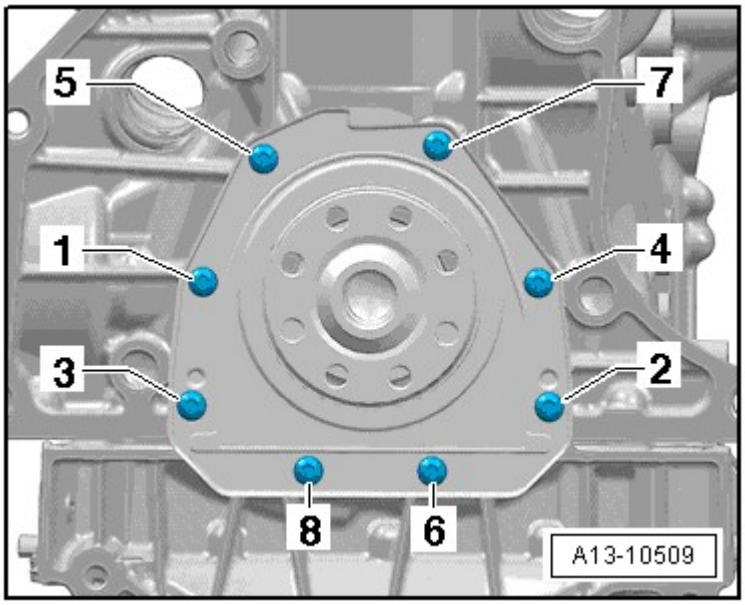

Fig. 5: Identifying Sealing Flange Tightening Sequence
Courtesy of AUDI OF AMERICA, LLC

-- Tighten bolts -1 through 8- in the sequence shown:

-- 1. Tighten the bolts hand-tight.

-- 2. Tighten the bolts to 9 Nm.

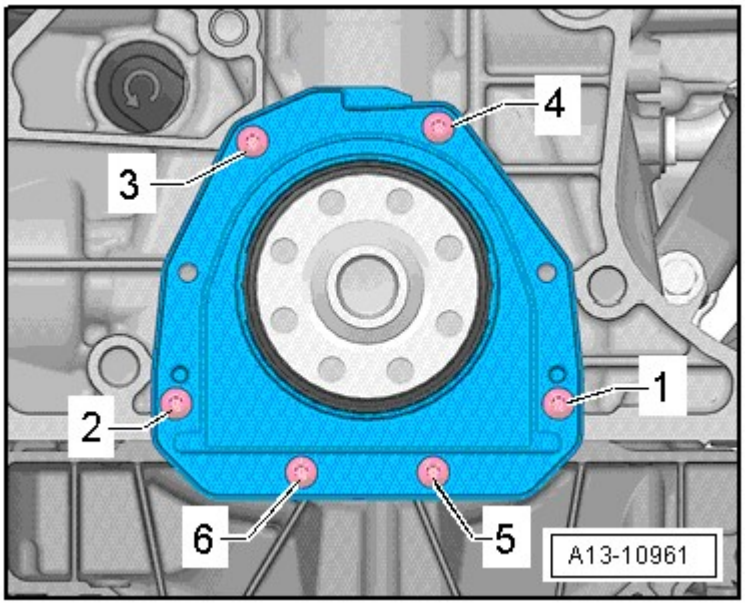

Fig. 6: Identifying Transmission Side Sealing Flange - Tightening Sequence, with 6 Bolts
Courtesy of AUDI OF AMERICA, LLC

-- Tighten new bolts -1 through 6- in the sequence shown:

-- 1. Tighten the bolts hand-tight.

-- 2. Tighten the bolts to 4 Nm + 45°.

NOTE: Only 6 bolts are installed, 2 bolt openings remain open.

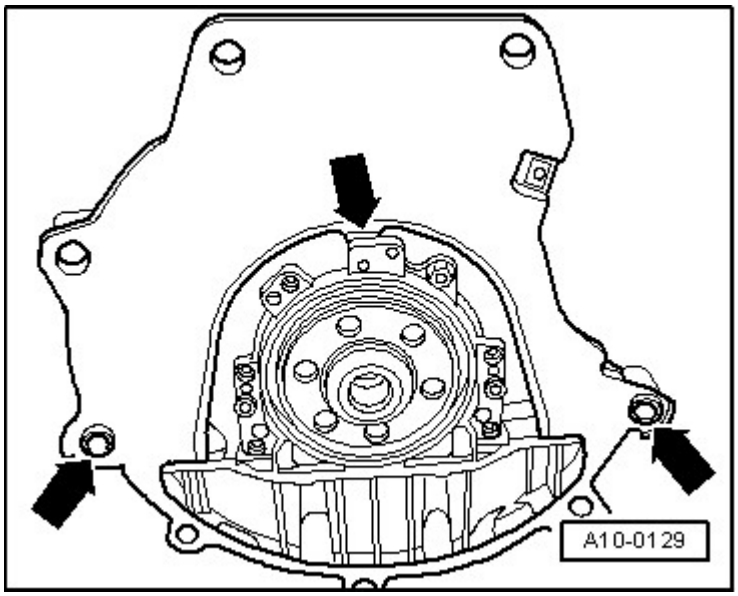

Fig. 7: Identifying Intermediate Plate Alignment Bushings
Courtesy of AUDI OF AMERICA, LLC

-- Hook in intermediate plate at sealing flange and push it onto the alignment sleeves -arrows-.

CRANKSHAFT OVERVIEW

NOTE: **Secure engine to assembly stand using engine and transmission holder VAS 6095 when performing repair work, refer to ENGINE, SECURING TO ENGINE STAND .**

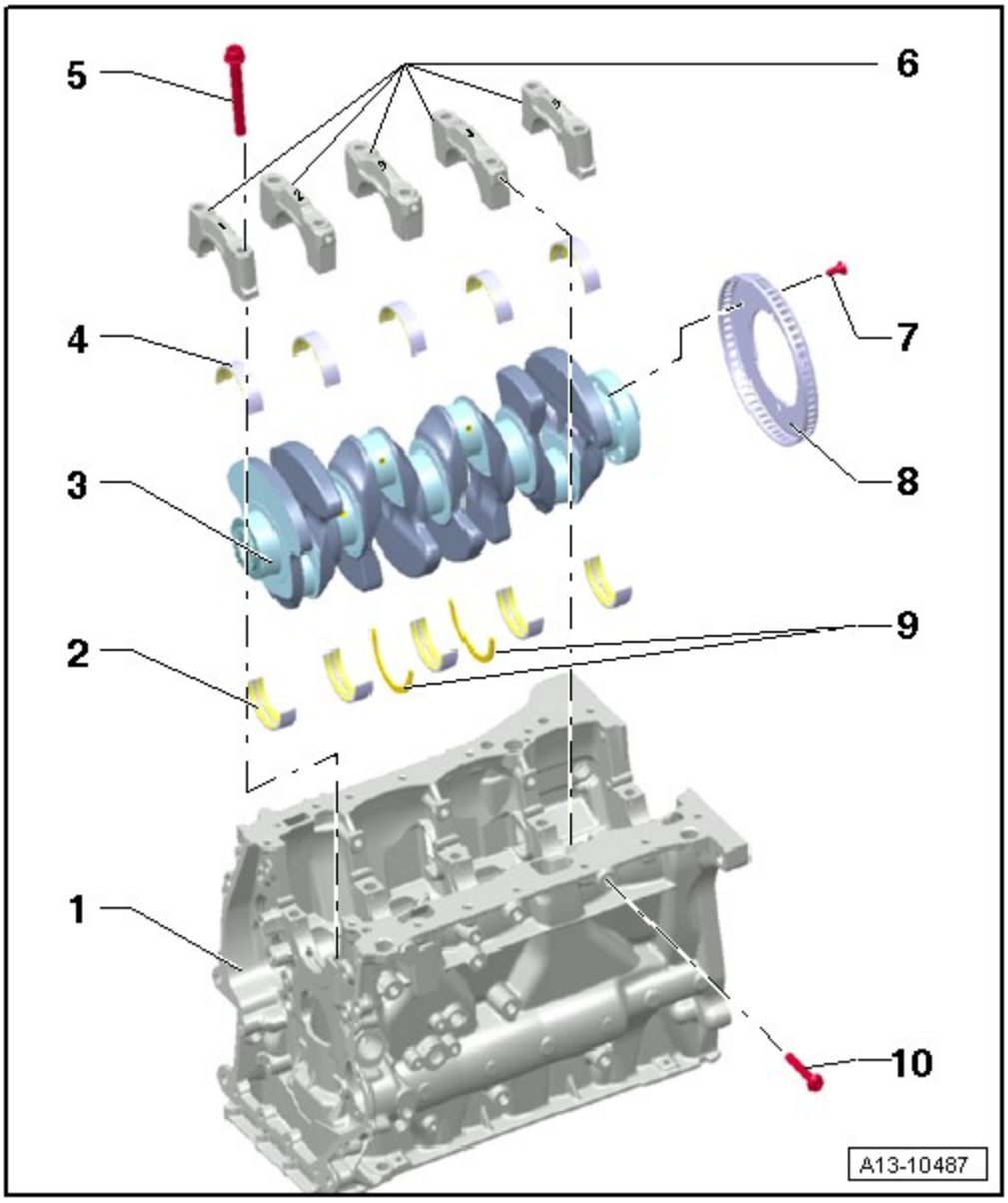

Fig. 8: Identifying Crankshaft Assembly Overview
Courtesy of AUDI OF AMERICA, LLC

1. Cylinder Block
2. Bearing Shell for Cylinder Block

- With lubricating groove
- Lubricate
- Do not interchange used bearing shells (mark)
- Crankshaft bearing shells identification (classification), refer to **ALLOCATION OF THE CRANKSHAFT BEARING SHELLS (CLASSING)**

3. Crankshaft
   - After removal, lay aside so that sensor wheel, refer to item 8 is not rested on and becomes damaged
   - If the crankshaft is being replaced, then the bearing shells must be allocated to the bearing cover, refer to **ALLOCATION OF THE CRANKSHAFT BEARING SHELLS (CLASSING)**
   - Axial clearance, refer to **CRANKSHAFT, MEASURING AXIAL CLEARANCE**
   - Radial clearance, refer to **CRANKSHAFT, MEASURING RADIAL PLAY**
   - Do not turn crankshaft when measuring radial play
   - Crankshaft dimensions, refer to **CRANKSHAFT DIMENSIONS**
4. Bearing Shell for Bearing Cap
   - Without lubricating groove
   - Lubricate
   - Do not interchange used bearing shells (mark)
   - Crankshaft bearing shells identification (classification), refer to **ALLOCATION OF THE CRANKSHAFT BEARING SHELLS (CLASSING)**
5. Bolt
   - Replace
   - Tightening sequence, refer to **Fig. 9**
6. Bearing Cap
   - Bearing cap 1: Belt pulley side
   - Retaining tabs of bearing shells and cylinder block/bearing caps must lie above one another
7. Bolt
   - 10 Nm + 90° turn
   - Replace
   - Replace sensor wheel every time bolts are loosened, refer to **SENSOR WHEEL**
8. Sensor Wheel
   - For Engine Speed (RPM) sensor -G28-
   - Only possible to install in one position - Bores are offset
   - Replace sensor wheel every time bolts are loosened
   - Removing and installing, refer to **SENSOR WHEEL**
9. Thrust Washers
   - Lubricate
   - For bearing 3
10. Bolt

- Replace
- Tightening sequence, refer to **Fig. 9**

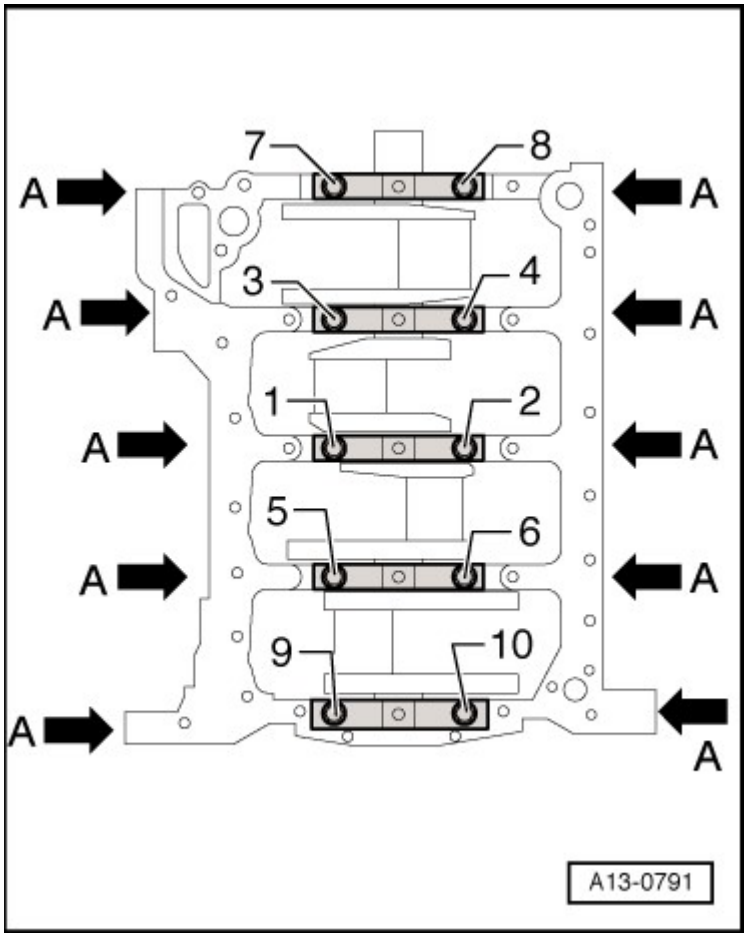

Fig. 9: Identifying Crankshaft Bearing Cap, Installation
Courtesy of AUDI OF AMERICA, LLC

-- Tighten the crankshaft bolts in the sequence -1 to 5-.

-- Tighten the bolts -1 through 10- and -arrows A- hand-tight.

-- Tighten the bolts -1 through 10- to 65 Nm.

-- Tighten the bolts -1 through 10- 90° further using a rigid wrench.

-- Tighten the bolts -arrows A- to 20 Nm.

-- Tighten the bolts -arrows A- 90° further using a rigid wrench.

ALLOCATION OF THE CRANKSHAFT BEARING SHELLS (CLASSING)

The bearing shells are allocated to the cylinder block with the correct thickness at the factory. Colored spots

serve to identify the bearing thicknesses.

The code letters on the lower contact surface or on the top of the cylinder block identify which bearing shell and where it must be mounted on the cylinder block (upper bearing shell).

The code letters on the crankshaft identify which bearing shells and where they must be installed in the bearing cover (lower bearing shell).

The first letter is for bearing cover one, the second for bearing cover two, etc.

Cylinder Block Bearing Shell Identification:

NOTE: The cylinder block identification may be located either on the oil pan sealing surface or on the top (transmission side) of the cylinder block.

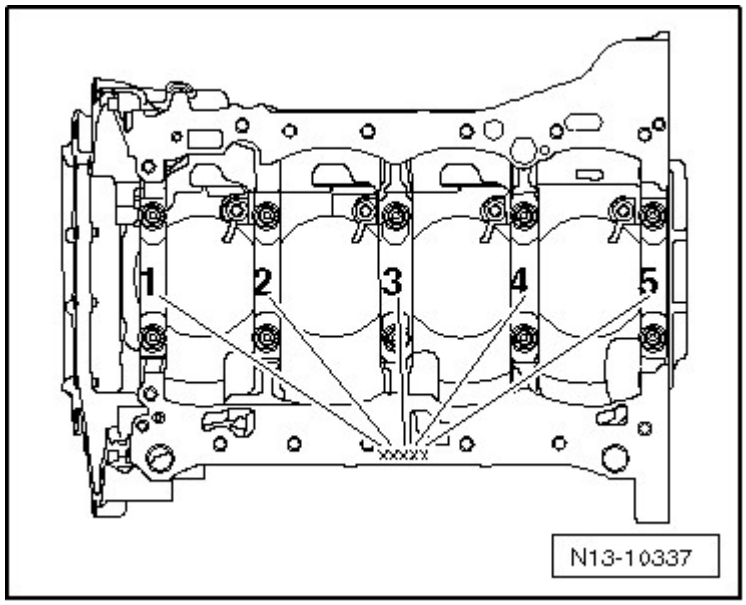

Fig. 10: Locating Cylinder Block Identification On Top (Transmission Side) Of Cylinder Block
Courtesy of AUDI OF AMERICA, LLC

The identification on the cylinder block is for the upper bearing shell.

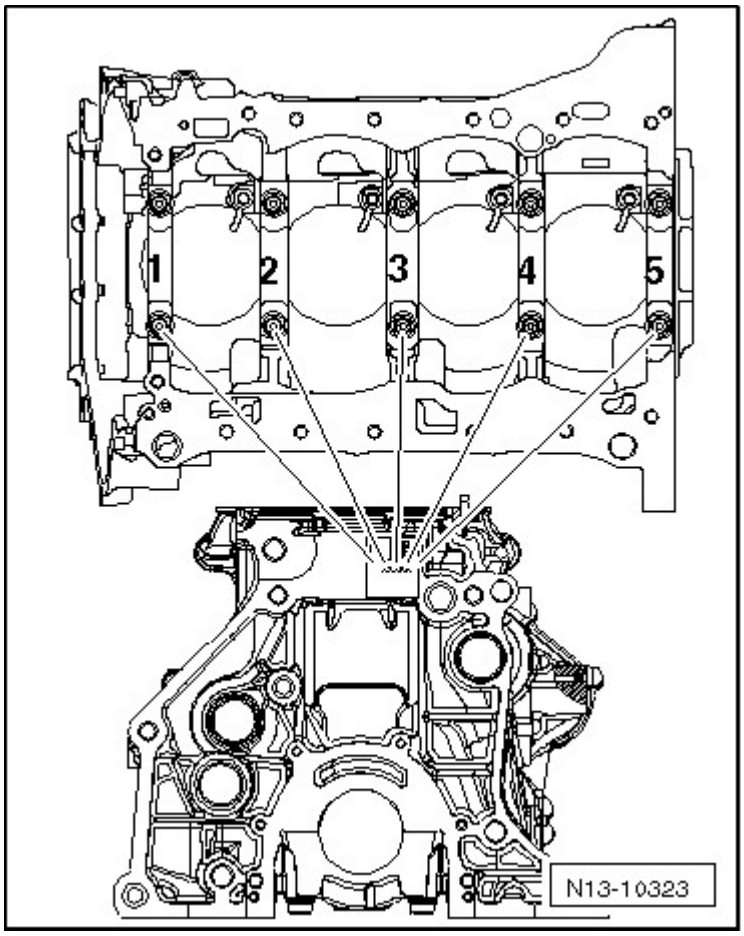

Fig. 11: Locating Identification On Cylinder Block
Courtesy of AUDI OF AMERICA, LLC

-- Note the letters and then match it to the color identification in the table.

Bearing Cap Bearing Shell Identification:

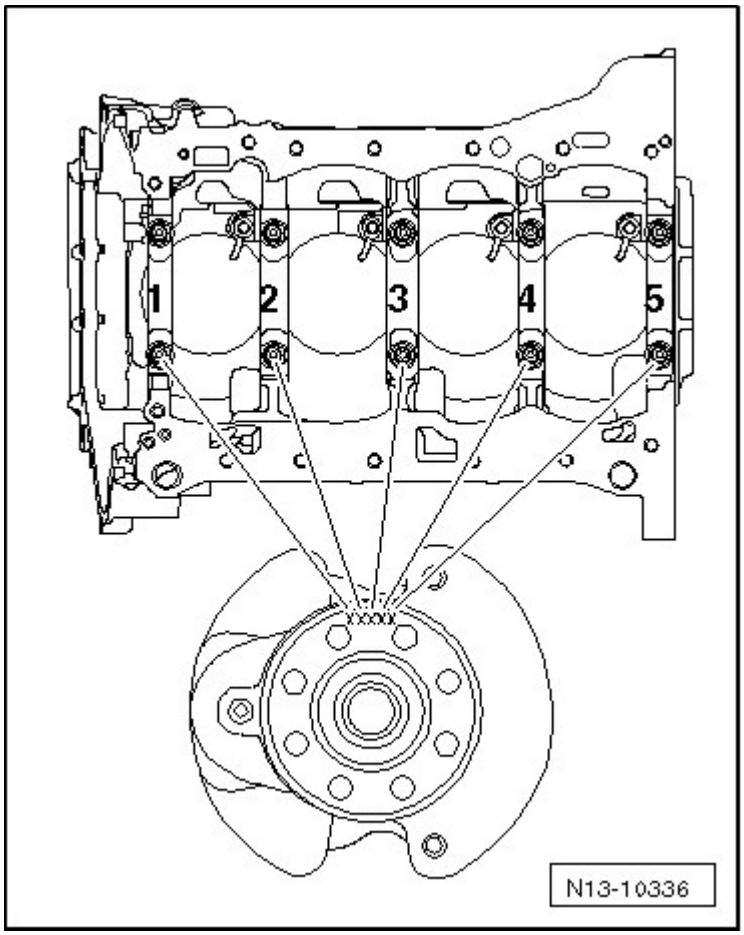

Fig. 12: Locating Identification On Crankshaft
Courtesy of AUDI OF AMERICA, LLC

The identification on the crankshaft is for the lower bearing shell.

-- Note the letters and then match it to the color identification in the table.

S	=	Black
R	=	Red
G	=	Yellow
B	=	Blue
W	=	White

PISTON AND CONNECTING ROD OVERVIEW

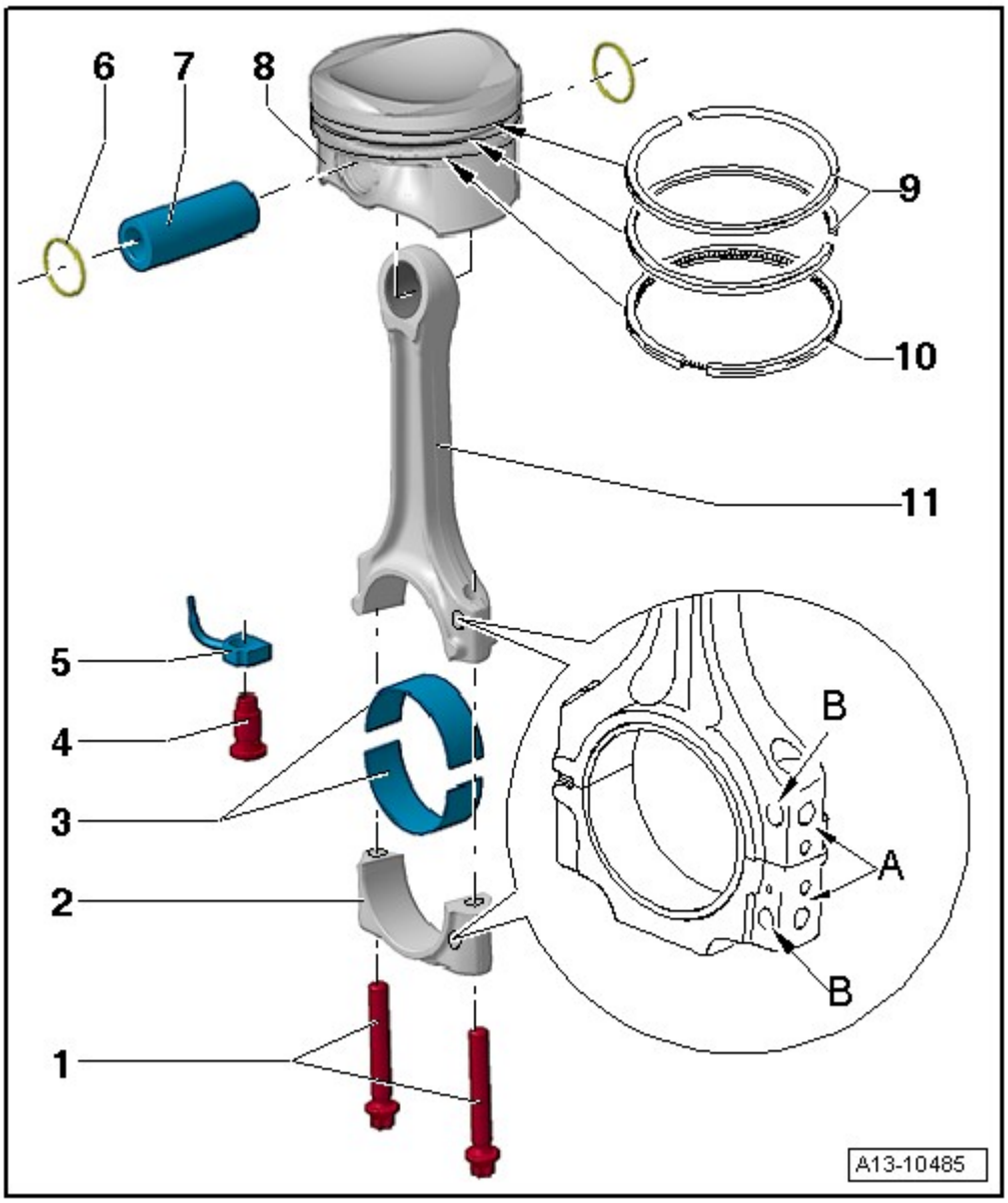

Fig. 13: Identifying Assembly Overview: Pistons And Connecting Rod
Courtesy of AUDI OF AMERICA, LLC

1. Connecting Rod Bolt
    - 45 Nm + 90° turn
    - Replace
    - Lubricate the threads and contact surface
    - Use old bolt to measure radial play
    - Tighten to 30 Nm to measure radial play, do not turn further
2. Connecting Rod Bearing Cap
    - Pay attention to the installed position
    - Due to the separation procedure (cracking) of the connecting rod, the connecting rod bearing cap

only fits in one position and only to the corresponding connecting rod.
- Mark affiliation to cylinder -A-
- Installation position: Markings -B- point to belt pulley side
- Separate new connecting rod, refer to **NEW CONNECTING ROD, SEPARATING**

3. Bearing Shells
   - Installed location, refer to **Fig. 14**
   - Do not interchange used bearing shells (mark)
   - Axial play new: 0.10 to 0.35 mm; Wear limit: 0.40 mm
   - Measure radial clearance with Plastigage: New: 0.02 to 0.06 mm; Wear limit: 0.09 mm. Do not turn crankshaft when checking radial clearance
4. Pressure Relief Valve
   - 27 Nm
5. Oil Spray Jet
   - For piston cooling
   - Do not bend the oil injector jet
   - Replace the oil spry nozzles if they are bent
6. Circlip
   - Replace
7. Piston Pin
8. Piston
   - Removing and installing, refer to **PISTON**
   - Mark installed position and cylinder allocation
   - Arrow on piston face points toward belt pulley side
   - Pistons and cylinder bore, checking, refer to **PISTONS AND CYLINDER BORE, CHECKING**
9. Compression Rings
   - Use commercially available piston ring pliers for removing and installing
   - Offset gaps by 120°
   - Installed position: Identification "TOP" or "R" towards piston crown
   - Checking ring gap, refer to **Fig. 23**
   - Check piston ring groove clearance, refer to **Fig. 24**
10. Oil Scraping Ring
    - 2-part
    - Install offset gaps by 120° to the neighboring compression ring
    - The "TOP" or "R" marking must face toward the piston crown.
    - Checking ring gap, refer to **Fig. 23**
    - Side clearance cannot be measured.
11. Connecting Rod
    - Only replace as set

- Mark affiliation to cylinder -A-
- Installation position: Markings -B- point to belt pulley side
- Separate new connecting rod, refer to **NEW CONNECTING ROD, SEPARATING**
- Radial clearance, measuring, refer to **CONNECTING ROD, MEASURING RADIAL CLEARANCE**

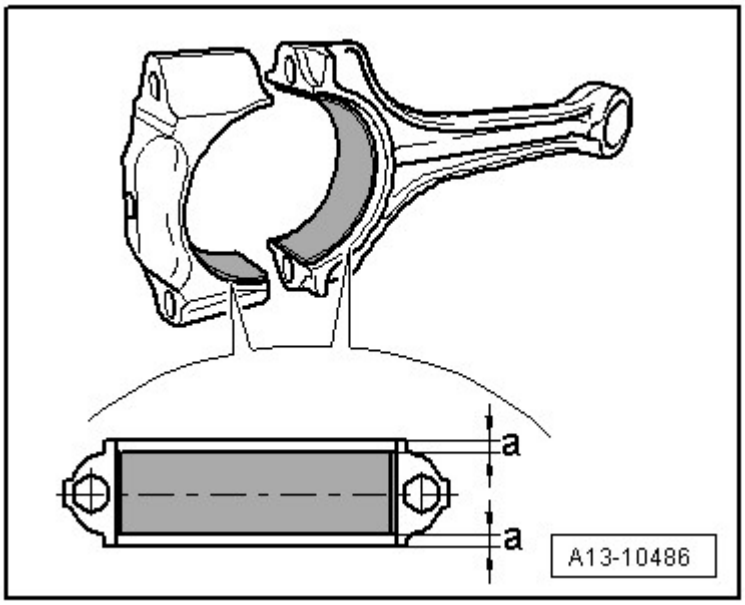

Fig. 14: Identifying Dimension -A- (Must Be Same At Left And Right)
Courtesy of AUDI OF AMERICA, LLC

-- Place bearing shells centrally into connecting rod and connecting rod bearing cap.

Dimension -a- must be the same at left and right.

NEW CONNECTING ROD, SEPARATING

New connecting rods may not be separated at the location where they should be. If the connecting rod bearing cap cannot be removed by hand, proceed as follows:

-- Clamp the connecting rod in a vise, which has protectors over the grips to prevent damage.

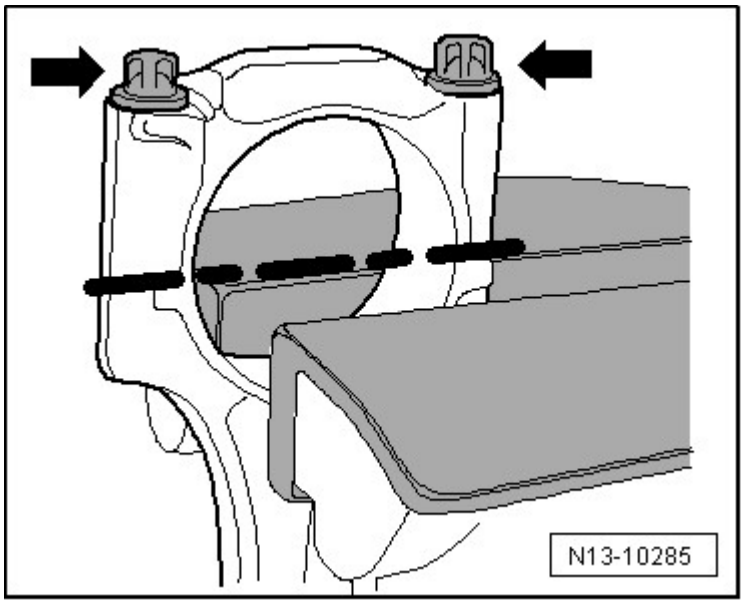

Fig. 15: Clamping Connecting Rod In Vise Equipped With Aluminum Protective Pads
Courtesy of AUDI OF AMERICA, LLC

NOTE:

- **Only clamp the connecting rod lightly to avoid damaging it.**
- **Clamp the connecting rod below the dotted line.**

-- Remove the bolts -arrows- approximately 5 turns.

-- Carefully tap the connecting rod bearing cap with a plastic hammer -arrow- until it comes loose.

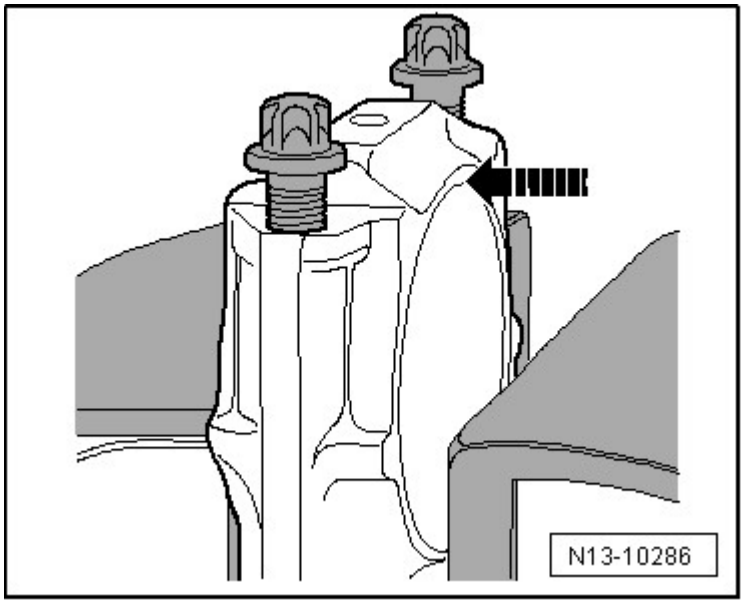

Fig. 16: Identifying Connecting Rod Bearing Cap
Courtesy of AUDI OF AMERICA, LLC

SPECIFICATIONS

CRANKSHAFT DIMENSIONS

(Dimensions in mm)

Reconditioning Dimension (1)	Crankshaft Bearing Pin Diameter	Connecting Rod Bearing Pin Diameter
Basic dimension	58.00	47.80
(1) The preparation of worn crankshafts is not provided.		

FASTENER TIGHTENING SPECIFICATIONS

Component	Bolt Size	Nm
Connecting rod bearing cap [1]	-	45 + 90°
Drive plate [1]	-	60 + 90°
Idler roller	-	20
Pressure relief valve	-	27
Sensor wheel [1]	-	10 + 90°
Ribbed belt tensioning damper	-	40
Vibration damper [1]	-	150 + 90°
• [1] Always replace		

Accessory Assembly Bracket Tightening Sequence

-- Mount the accessory assembly bracket and then mount the bolts -4-.

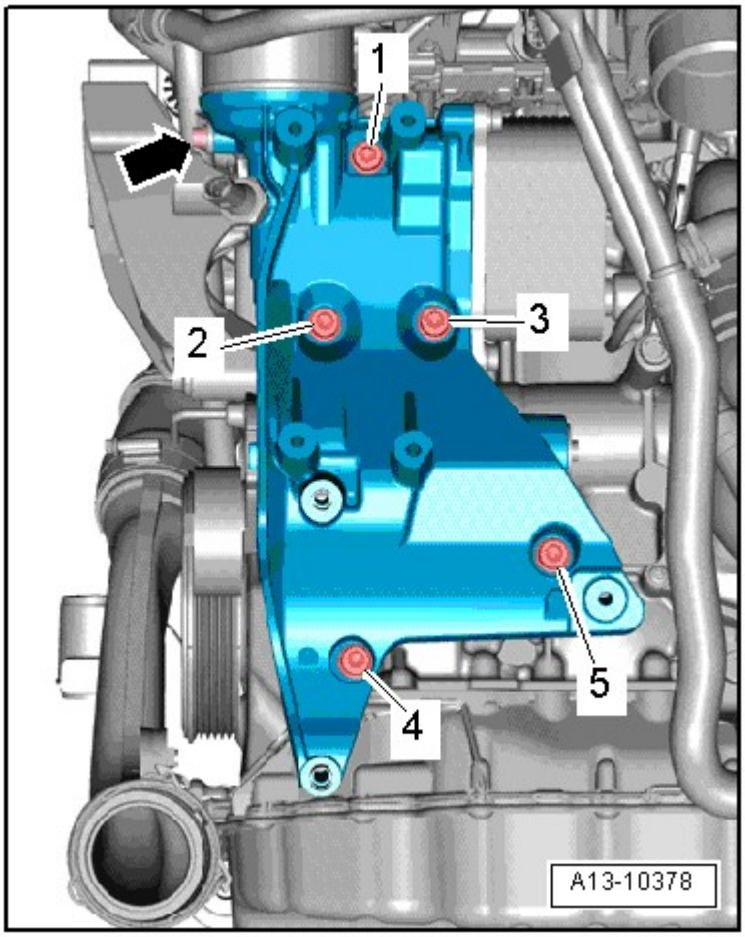

Fig. 17: Identifying Accessory Assembly Bracket Tightening Sequence
Courtesy of AUDI OF AMERICA, LLC

-- Tighten bolts in 3 stages in -1 to 5- sequence as follows:

-- Tighten bolts by hand.-- Tighten the bolts to 20 Nm.-- Tighten the bolts an additional 90°.

Transmission Side Sealing Flange - Tightening Sequence, with 8 Bolts

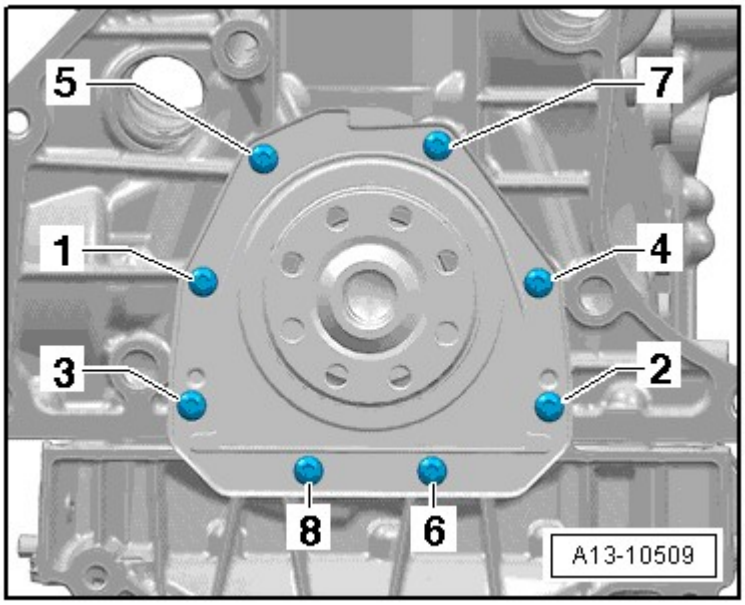

Fig. 18: Identifying Sealing Flange Tightening Sequence
Courtesy of AUDI OF AMERICA, LLC

-- Tighten bolts -1 through 8- in the sequence shown:

-- 1. Tighten the bolts hand-tight.

-- 2. Tighten the bolts to 9 Nm.

Transmission Side Sealing Flange - Tightening Sequence, with 6 Bolts

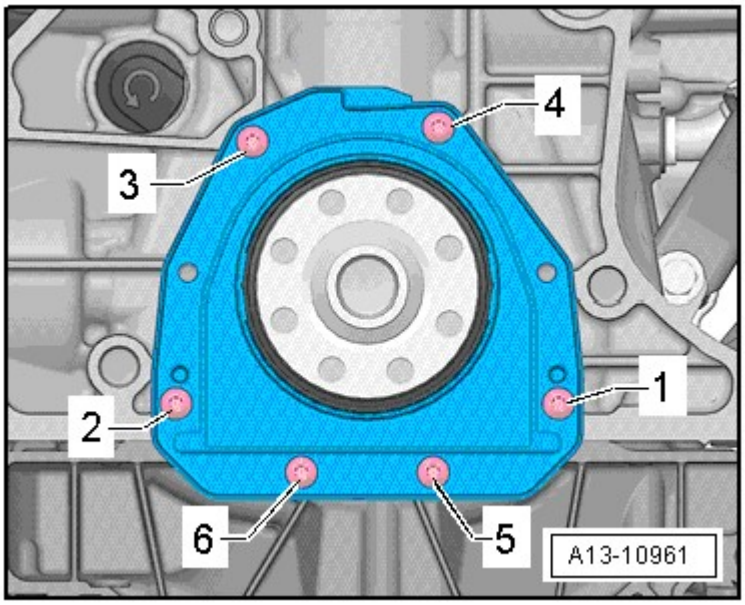

Fig. 19: Identifying Transmission Side Sealing Flange - Tightening Sequence, with 6 Bolts
Courtesy of AUDI OF AMERICA, LLC

-- Tighten new bolts -1 through 6- in the sequence shown:

-- 1. Tighten the bolts hand-tight.

-- 2. Tighten the bolts to 4 Nm + 45°.

Crankshaft, Tightening Sequence

-- Tighten the crankshaft bolts in the sequence -1 to 5-.

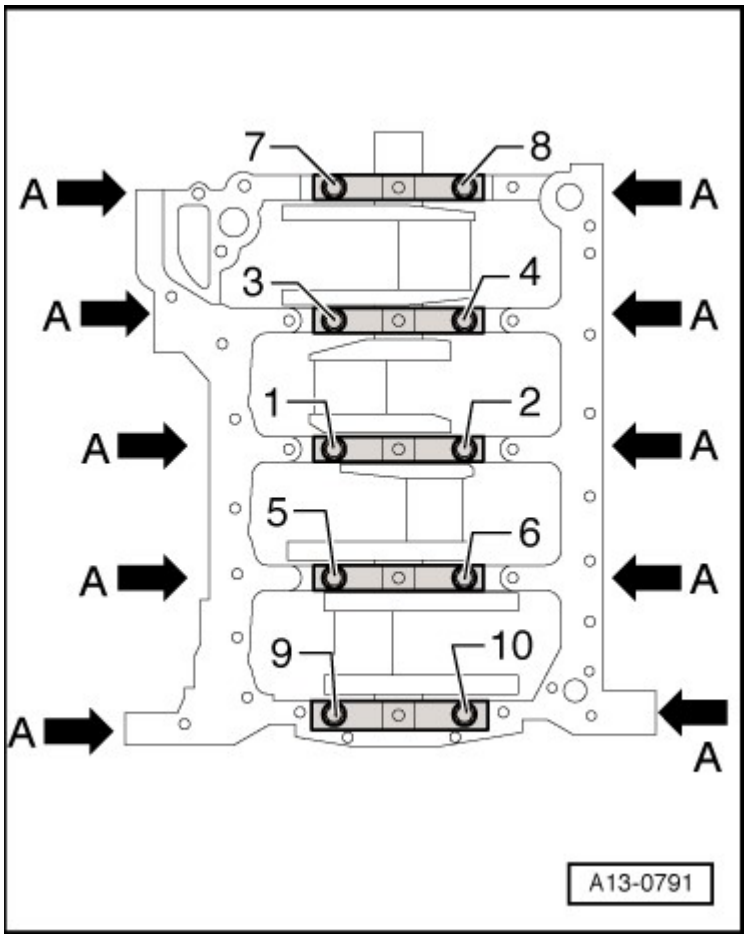

Fig. 20: Identifying Crankshaft Bearing Cap, Installation
Courtesy of AUDI OF AMERICA, LLC

-- Tighten the bolts -1 through 10- and -arrows- hand-tight.

-- Tighten the bolts -1 through 10- to 65 Nm.

-- Tighten the bolts -1 through 10- 90° further using a rigid wrench.

-- Tighten the bolts -arrows- to 20 Nm.

-- Tighten the bolts -arrows- 90° further using a rigid wrench.

DIAGNOSIS AND TESTING

CRANKSHAFT, MEASURING AXIAL CLEARANCE

Special tools and workshop equipment required

- Dial Gauge Holder VW 387
- Dial Gauge 0-10 mm VAS 6079

Procedure

-- Attach the VAS 6079 together with the VW 387 to cylinder block and set indicator against crankshaft counterweight.

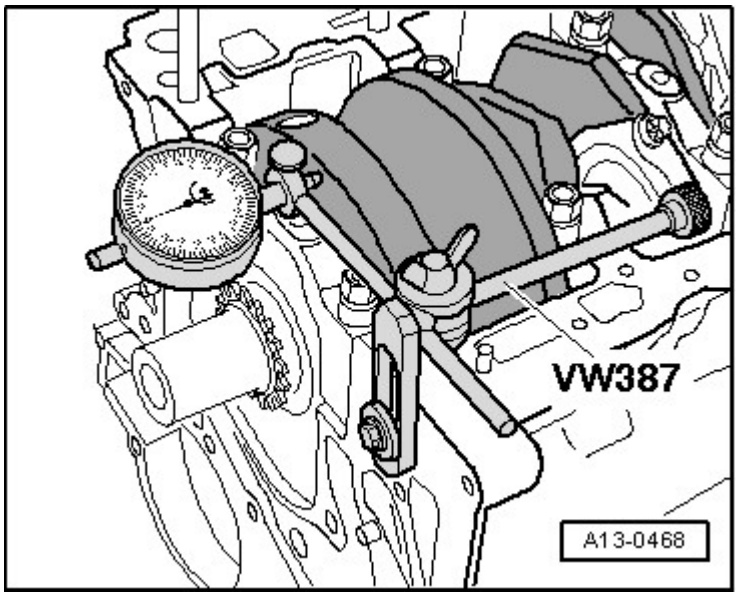

Fig. 21: Identifying Dial Indicator Attached Together With VW387 Dial Gauge Holder To Cylinder Block
Courtesy of AUDI OF AMERICA, LLC

-- Press crankshaft by hand against gauge and set gauge to "0".

-- Press crankshaft off gauge and read value.

Axial clearance:

- New: 0.070 to 0.231 mm
- Wear limit: 0.30 mm

CRANKSHAFT, MEASURING RADIAL PLAY

Special tools and workshop equipment required

- Plastigage

Procedure

NOTE:

- **Do not interchange used bearings**
- **Bearing shells that are worn down to the nickel layer must be replaced.**

-- Remove the crankshaft bearing cap and clean the bearing cap and pins.

-- Place Plastigage over entire width of bearing journal or into bearing shells.

- Plastigage must rest in center of bearing shell.

-- Position the bearing cap and tighten to 60 Nm without rotating the crankshaft.

-- Remove the crankshaft bearing cap again.

-- Compare width of Plastigage with measuring scale.

Radial clearance:

- New: 0.017 to 0.037 mm
- Wear limit: 0.15 mm

PISTONS AND CYLINDER BORE, CHECKING

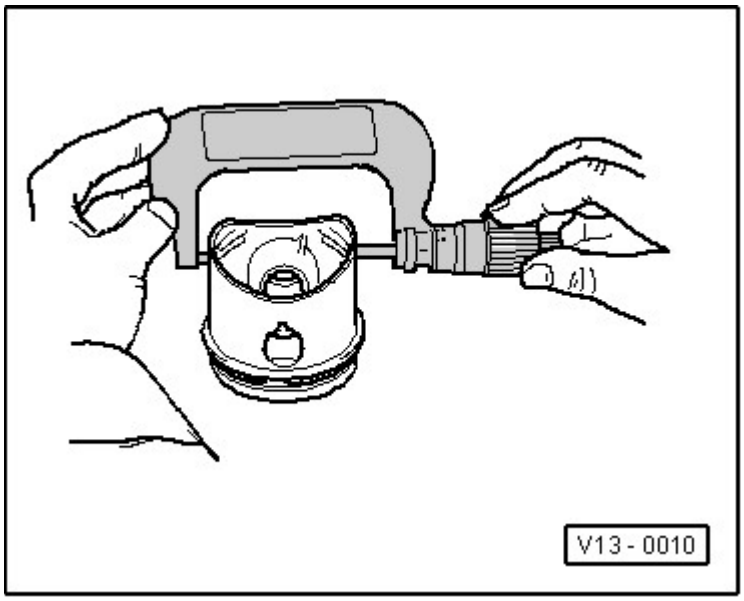

Fig. 22: Checking Piston
Courtesy of AUDI OF AMERICA, LLC

-- Measure approximately 15 mm from the lower edge at a 90° angle to the piston pin axis using a 75 to 100 mm external micrometer.

- Deviation from nominal size: max. 0.04 mm.

	Piston Diameter
Basic dimension mm	82.465 1)
• 1) Measurements without graphite coating (thickness = 0.02 mm). The graphite coating wears off.	

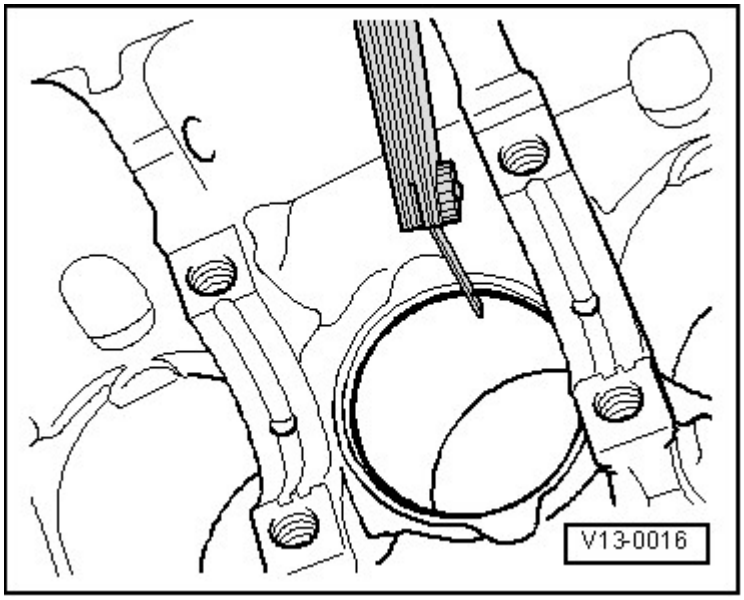

Fig. 23: Checking Piston Ring Gap
Courtesy of AUDI OF AMERICA, LLC

-- Push the piston ring squarely from above down to approximately 15 mm from bottom end of cylinder. To do this use a piston without rings.

-- Measure with feeler gauge.

Piston Ring Dimensions in mm	New	Wear Limit
Compression ring	0.20 to 0.40	0.80
Oil scraping ring	0.25 to 0.50	0.80

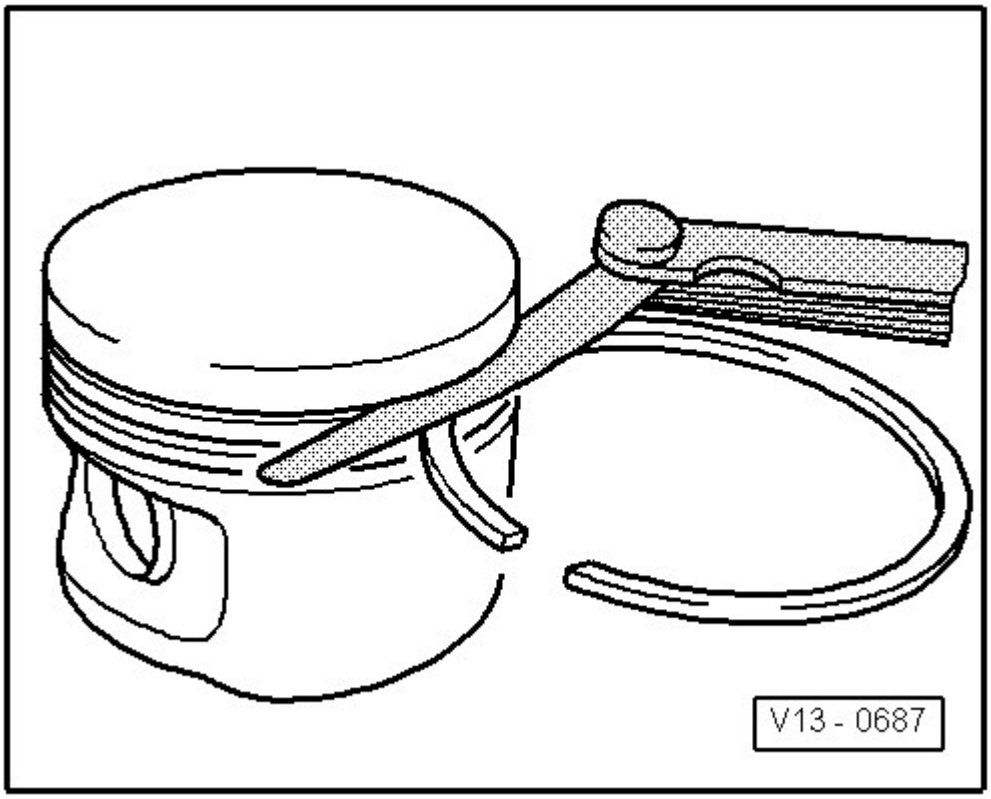

Fig. 24: Checking Piston Ring Gap
Courtesy of AUDI OF AMERICA, LLC

-- Clean piston ring groove.

-- Measure with feeler gauge.

Piston Ring Dimensions in mm	New	Wear Limit
1st Compression ring	0.06 to 0.09	0.20
2nd Compression ring	0.03 to 0.06	0.15
Oil scraping rings	Cannot be measured	

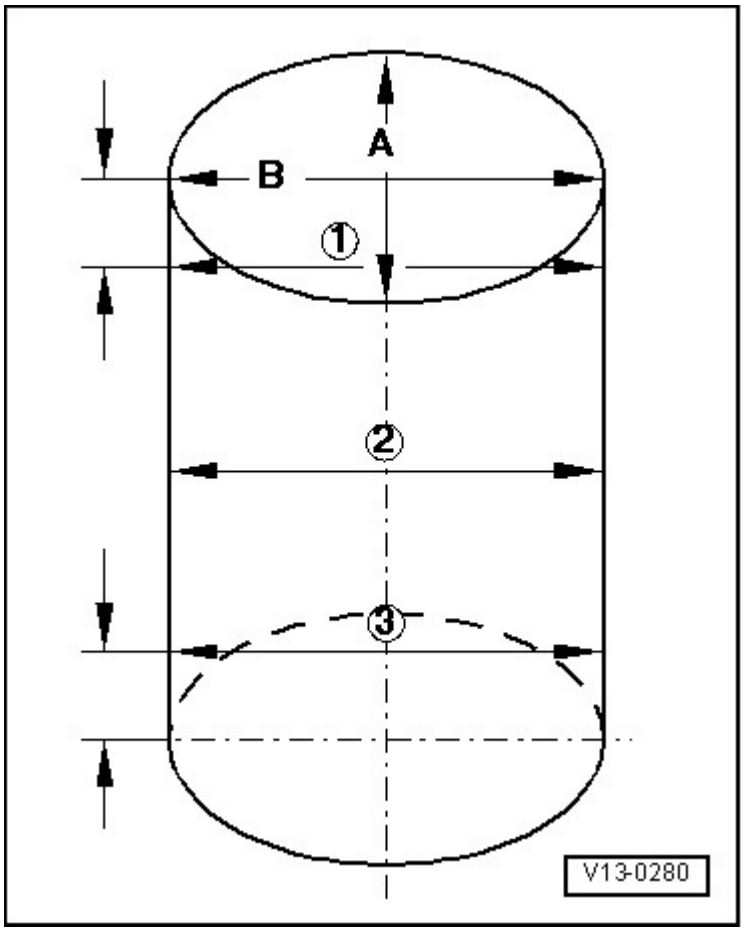

Fig. 25: Checking Cylinder Bores
Courtesy of AUDI OF AMERICA, LLC

Special tools and workshop equipment required

- Internal dial gauge VAS 6078 or
- Inside Micrometer Set 18-100 mm US1033/S
- Engine and Transmission Holder VAS 6095

NOTE:

- **A shadow or a shiny spot on the wall of the cylinder does not mean the cylinder bore is damaged as long as the cross-grinding is still visible.**
- **Always measure the cylinder bore in 3 places laterally and longitudinally using VAS 6078 or US1033/S.**

CAUTION: Do not bore, hone, grind or rework the cylinder bores with shop tools. Reworking damages the surface of the cylinder bore.

-- Using a VAS 6078 or US1033/S measure in a diagonal sequence at 3 positions transversely -A- and longitudinally -B-.

- Deviation from nominal size: max. 0.08 mm.

		Cylinder Bore Diameter
Basic dimension	mm	82.51

NOTE: Measurement of cylinder bore may not be performed when the cylinder block is mounted in engine and transmission holderVAS 6095, false measurements are possible.

CONNECTING ROD, MEASURING RADIAL CLEARANCE

Special tools and workshop equipment required

- Plastigage

Procedure

-- Remove connecting rod bearing cap.

-- Clean the bearing cap and journal.

-- Place the Plastigage over the entire width of the bearing journal or into the bearing shells.

-- Position the connecting rod bearing cap and tighten it to 30 Nm without tightening it further; do not turn the crankshaft.

-- Reinstall connecting rod cover.

-- Compare width of Plastigage with calibrated scale.

Radial clearance:

- New: 0.02 to 0.06 mm.
- Wear limit: 0.09 mm.

-- Replace connecting rod bolts.

REMOVAL AND INSTALLATION

RIBBED BELT

Special tools and workshop equipment required

- Locking Tool T40098

Removing

CAUTION: Risk of destroying due to reversed running direction on a used ribbed belt.

- **Before removing ribbed belt, marking running direction with chalk or felt-tip pen for reinstallation later.**

-- To release ribbed belt tension, rotate tensioner in direction of -arrow-.

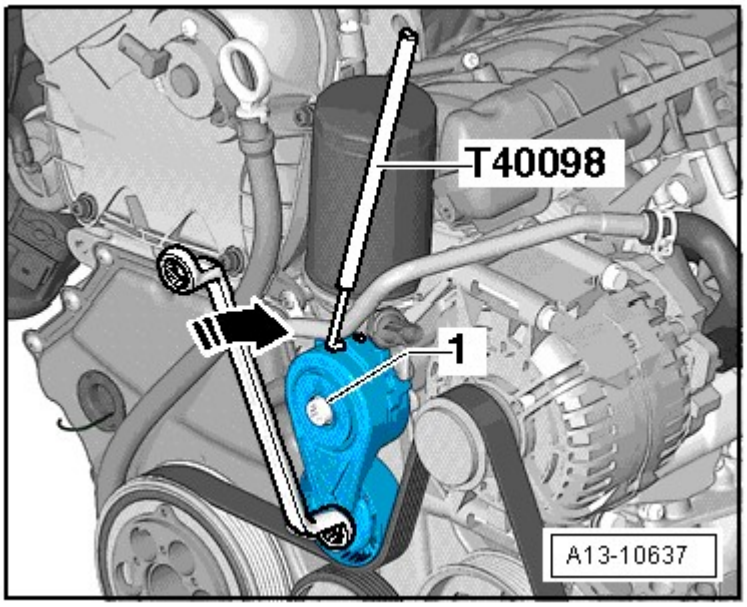

Fig. 26: Releasing Ribbed Belt Tension, Rotate Tensioner In Direction Of Arrow
Courtesy of AUDI OF AMERICA, LLC

-- Secure the tensioner with the T40098.

-- Remove ribbed belt.

Installing

Install in reverse order of removal. Note the following:

NOTE: Secure the generator and A/C compressor before installing the ribbed belt.

-- Install the ribbed belt as illustrated.

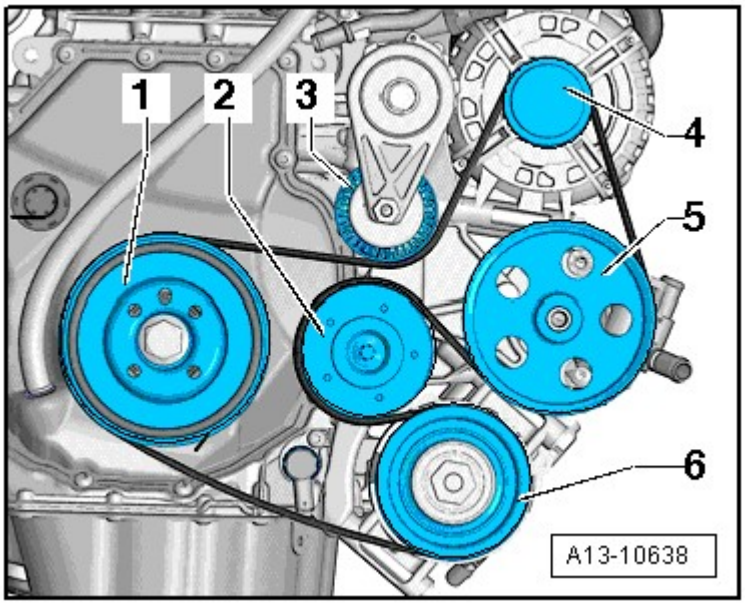

Fig. 27: Identifying Ribbed Belt Routing
Courtesy of AUDI OF AMERICA, LLC

-- Turn the tensioner in direction of -arrow- and remove the T40098.

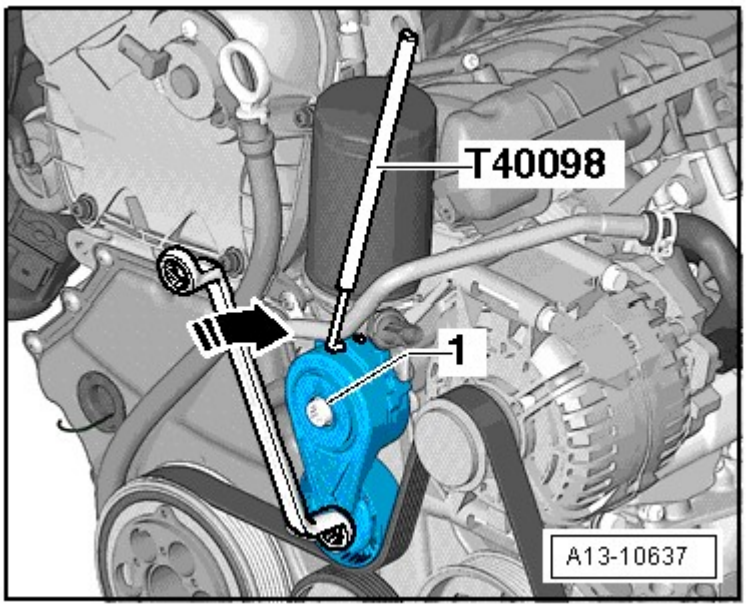

Fig. 28: Releasing Ribbed Belt Tension, Rotate Tensioner In Direction Of Arrow
Courtesy of AUDI OF AMERICA, LLC

-- Release tensioner.

-- Check whether ribbed belt is routed correctly.

-- Start engine and check whether ribbed belt runs correctly.

RIBBED BELT TENSIONING DAMPER

Special tools and workshop equipment required

- Locking Tool T40098

Removing

CAUTION: Risk of destroying due to reversed running direction on a used ribbed belt.

- **Before removing ribbed belt, marking running direction with chalk or felt-tip pen for reinstallation later.**

-- To release ribbed belt tension, rotate tensioner in direction of -arrow-.

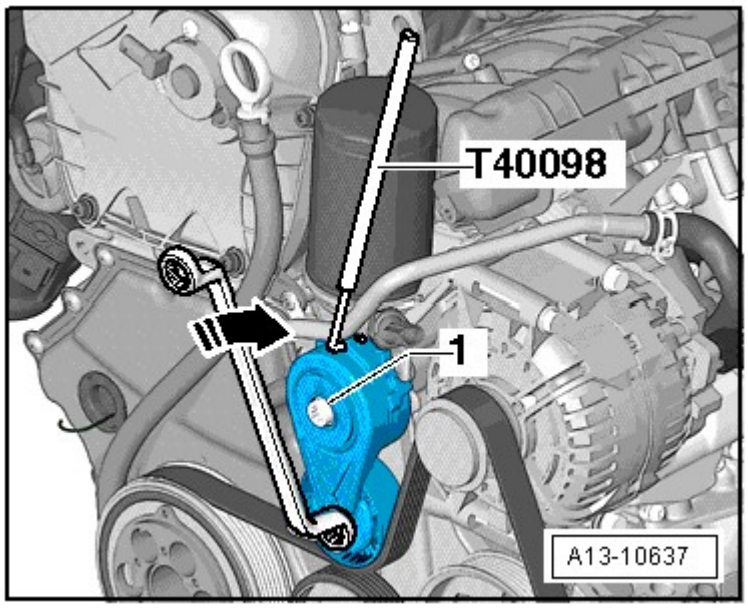

Fig. 29: Releasing Ribbed Belt Tension, Rotate Tensioner In Direction Of Arrow
Courtesy of AUDI OF AMERICA, LLC

-- Secure the tensioner with the T40098.

-- Remove the ribbed belt from the tensioner.

-- Remove the bolt -1- and remove the ribbed belt tensioner from the accessory assembly bracket.

Installing

Install in reverse order of removal. Note the following:

- Tightening specifications, refer to **RIBBED BELT DRIVE AND AUXILIARY COMPONENT BRACKET OVERVIEW**.

-- Install the ribbed belt. Refer to **RIBBED BELT**.

ACCESSORY ASSEMBLY BRACKET

Special tools and workshop equipment required

- Drip Tray for VAS 6100 VAS 6208
- Locking Tool T40098

Removing

-- Drain the coolant. Refer to **COOLANT, DRAINING AND FILLING** .

CAUTION: Risk of destroying due to reversed running direction on a used ribbed belt.

- **Before removing ribbed belt, marking running direction with chalk or felt-tip pen for reinstallation later.**

-- To release ribbed belt tension, rotate tensioner in direction of -arrow-.

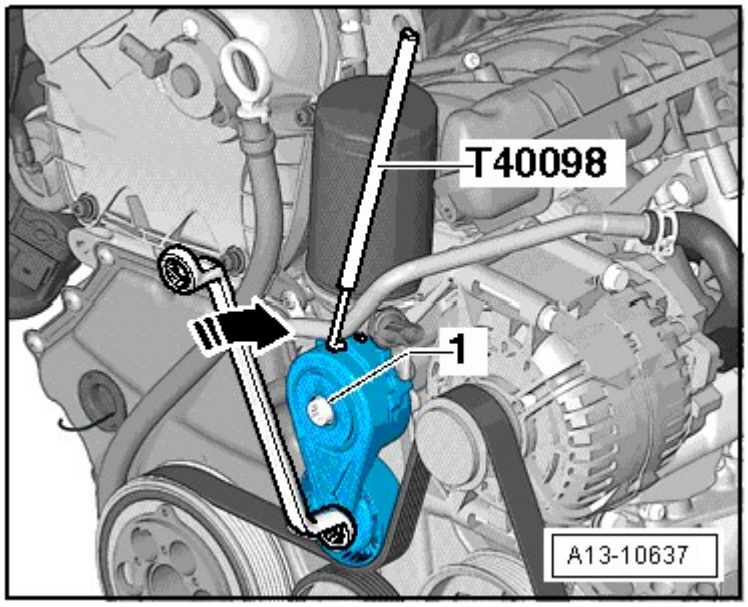

Fig. 30: Releasing Ribbed Belt Tension, Rotate Tensioner In Direction Of Arrow
Courtesy of AUDI OF AMERICA, LLC

-- Secure the tensioner with the T40098.

-- Remove ribbed belt.

-- Remove the bolt -1- and remove the ribbed belt tensioner from the accessory assembly bracket.

NOTE: **Place a cloth under the accessory assembly bracket to collect leaking engine oil.**

-- Disconnect the connectors -1 and 4- from the oil pressure switch -F22- and the reduced oil pressure switch -F378-.

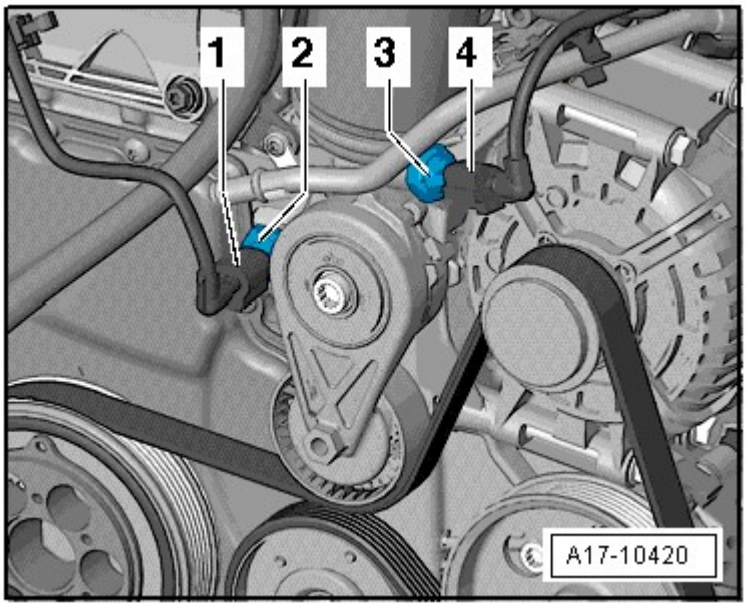

Fig. 31: Identifying Oil Pressure Switch
Courtesy of AUDI OF AMERICA, LLC

-- Loosen the hose clamps -arrows- and remove the air guide hose.

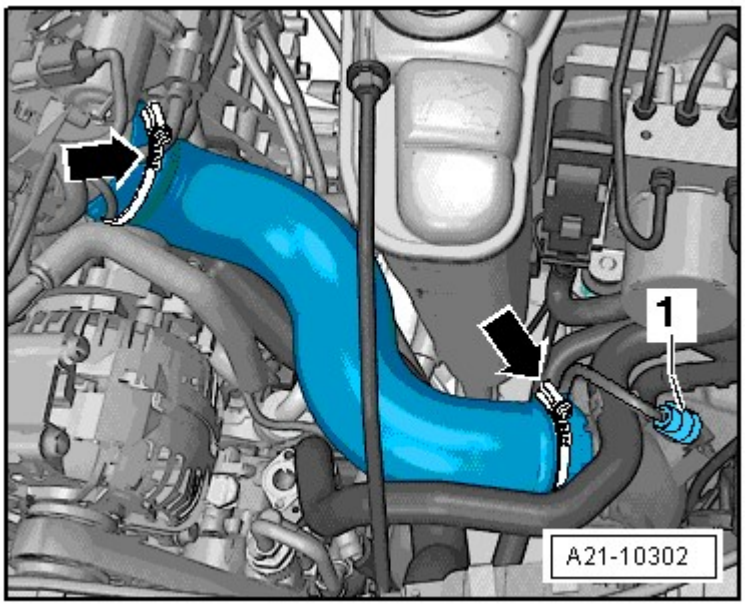

Fig. 32: Loosening Hose Clamps

Courtesy of AUDI OF AMERICA, LLC

-- Remove generator. Refer to **Removal and Installation** .

-- Disconnect solenoid clutch electrical connector -1- on Air Conditioning (A/C) compressor.

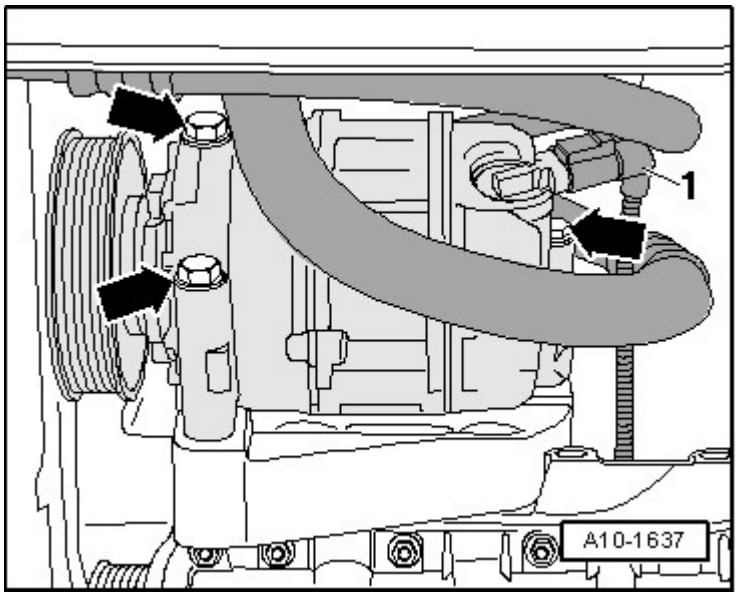

Fig. 33: Identifying A/C Compressor Bolts And Solenoid Clutch Electrical Connector
Courtesy of AUDI OF AMERICA, LLC

WARNING: **Refrigerant can cause serious personal injury.**

- **Do not open the air conditioning refrigerant circuit.**

-- Remove A/C compressor bolts -arrows-.

CAUTION: **Risk of damaging refrigerant lines and hoses.**

- **Do not stretch, kink or bend refrigerant lines and hoses.**

-- Tie up the compressor with the refrigerant lines attached to the longitudinal member.

NOTE: **The power steering pump hydraulic lines remain connected.**

-- Remove the bolts -1- from the front through the belt pulley and then remove the bolt -2- from the back.

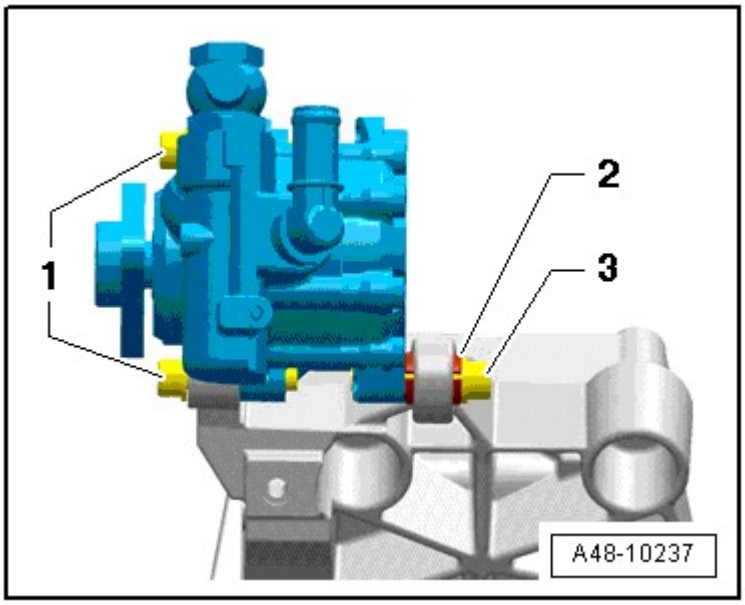

Fig. 34: Identifying Power Steering Pump
Courtesy of AUDI OF AMERICA, LLC

NOTE: The power steering pump is shown in the illustration without the belt pulley and without the hydraulic lines.

-- Remove the power steering pump with the hydraulic lines connected on the longitudinal member.

-- Remove the oil filter -arrow- using the oil filter wrench 3417.

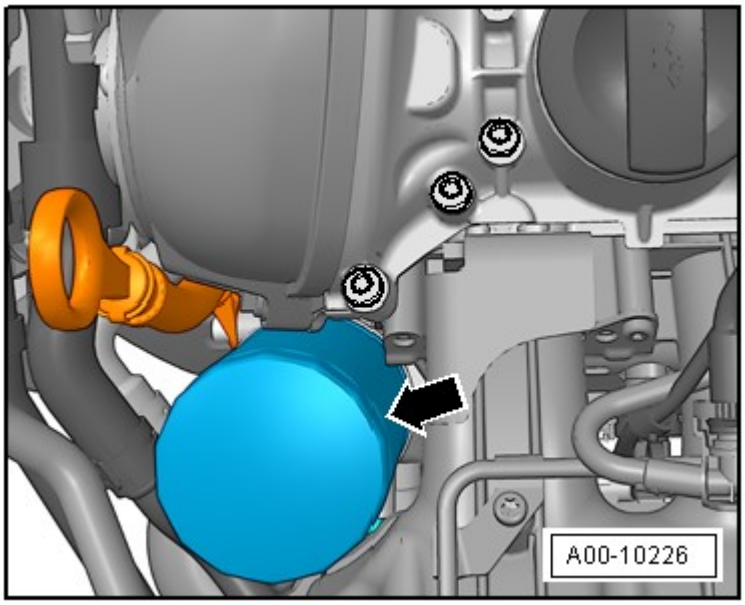

Fig. 35: Identifying Oil Filter
Courtesy of AUDI OF AMERICA, LLC

-- Remove the bolt -arrow- for the oil dipstick guide tube.

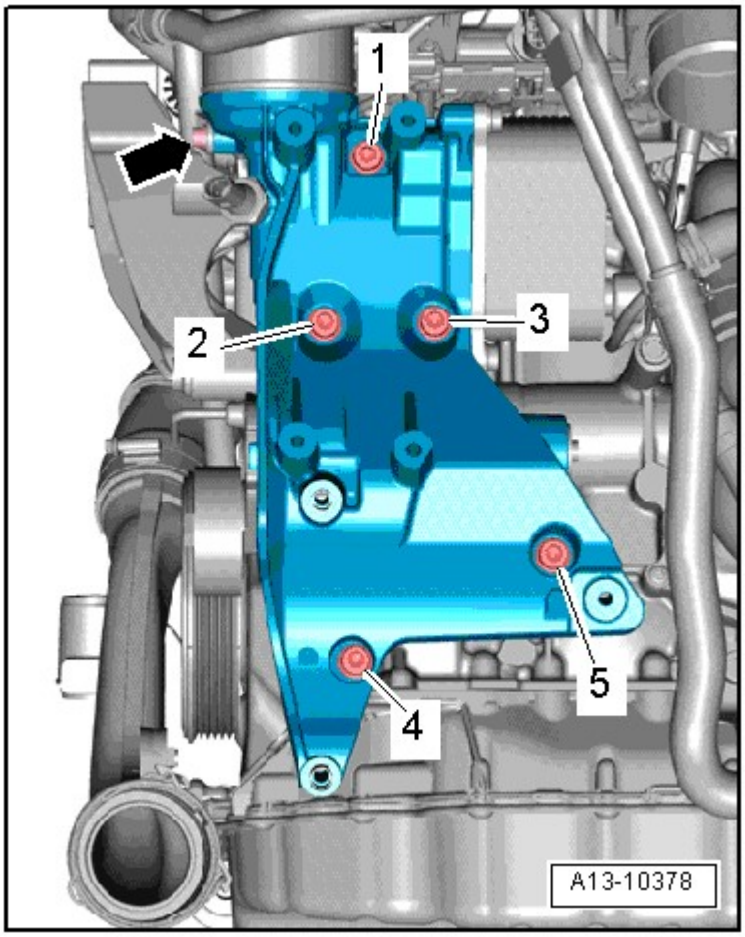

Fig. 36: Identifying Accessory Assembly Bracket Tightening Sequence
Courtesy of AUDI OF AMERICA, LLC

-- Remove the bolts -1 through 5- and pull off the accessory assembly bracket from the coolant pump housing.

Installing

Install in reverse order of removal. Note the following:

- Tightening specifications, refer to **RIBBED BELT DRIVE AND AUXILIARY COMPONENT BRACKET OVERVIEW**.

NOTE:

- **Replace bolts which have been tightened to an additional torque.**
- **Replace the O-rings and seals.**

-- Coat the O-rings -4- with coolant additive.

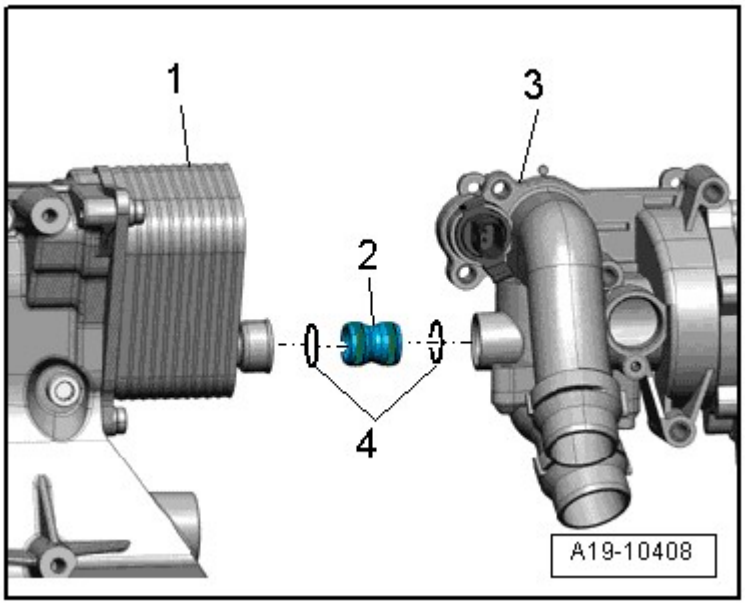

Fig. 37: Identifying Accessory Assembly Bracket, Coolant Pump Housing, Connection And O-Rings
Courtesy of AUDI OF AMERICA, LLC

-- Install the connection -2- into the coolant pump housing -3-.

-- Press the accessory assembly bracket -1- onto the connection, mount the bolts and tighten to tightening specification. Refer to **Fig. 2**.

-- Install the power steering pump. Refer to **Removal and Installation** .

-- Install A/C compressor. Refer to **Removal and Installation** .

-- Install generator. Refer to **Removal and Installation** .

-- Install the ribbed belt. Refer to **RIBBED BELT**.

-- Fill with coolant. Refer to **Filling** .

-- Check the oil level. Refer to **MAINTENANCE PROCEDURES**

VIBRATION DAMPER

Special tools and workshop equipment required

- Locking Tool T40098
- Counter Hold Tool T10355

Removing

-- Remove the front noise insulation. Refer to **Description and Operation** .

-- Remove the coolant fan electrical connector -1- from the bracket and disconnect it by sliding the retainer back -arrow- and pressing the release down.

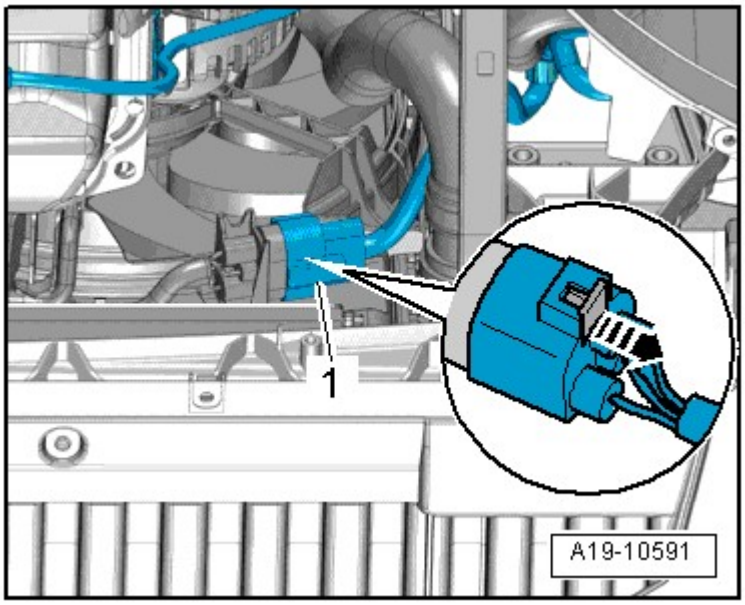

Fig. 38: Identifying Coolant Fan Electrical Connector
Courtesy of AUDI OF AMERICA, LLC

-- Free up the electrical wiring harness to the radiator fan control module.

-- Disconnect electrical connectors -2 and 3- -3-.

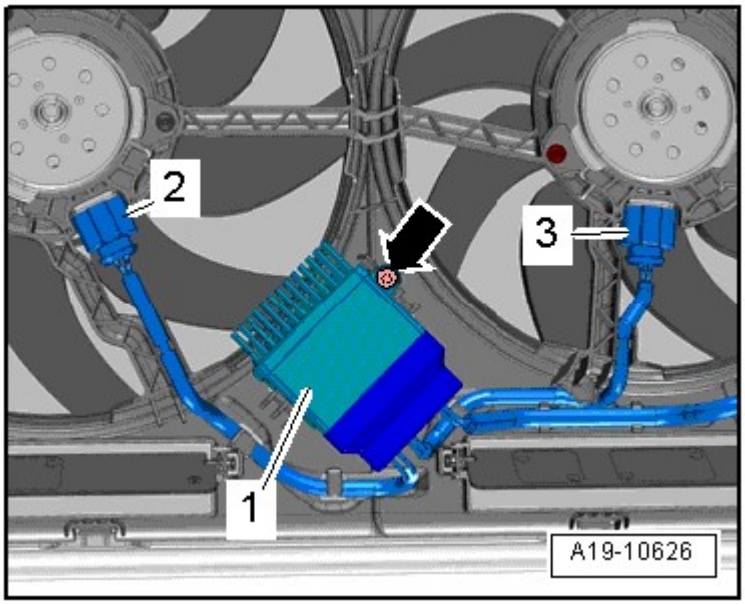

Fig. 39: Disconnecting Electrical Connectors
Courtesy of AUDI OF AMERICA, LLC

-- Remove the bolt -arrow- and the coolant fan control module -1-.

CAUTION: Risk of destroying due to reversed running direction on a used ribbed belt.

- **Before removing ribbed belt, marking running direction with chalk or felt-tip pen for reinstallation later.**

-- To release ribbed belt tension, rotate tensioner in direction of -arrow-.

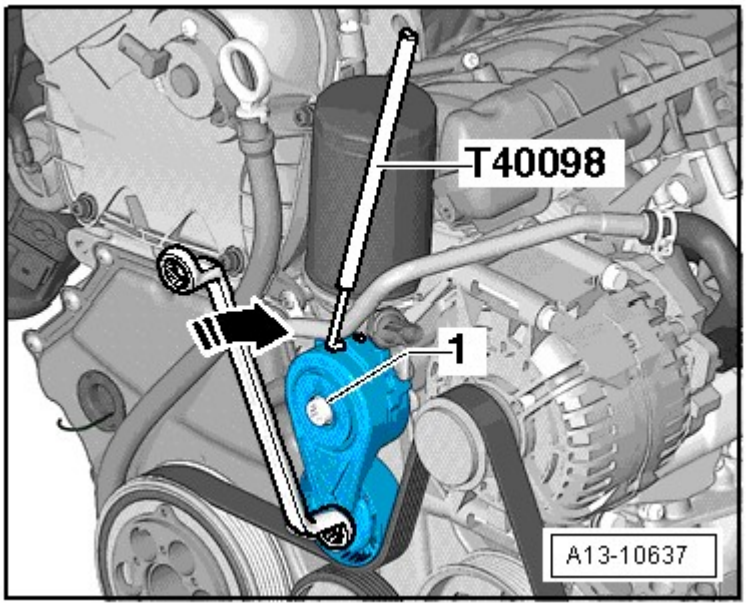

Fig. 40: Releasing Ribbed Belt Tension, Rotate Tensioner In Direction Of Arrow
Courtesy of AUDI OF AMERICA, LLC

-- Secure the tensioner with the T40098.

-- Remove the ribbed belt from the vibration damper ribbed belt pulley.

-- Rotate the vibration damper using the T10355 into the "OT" position -arrow-.

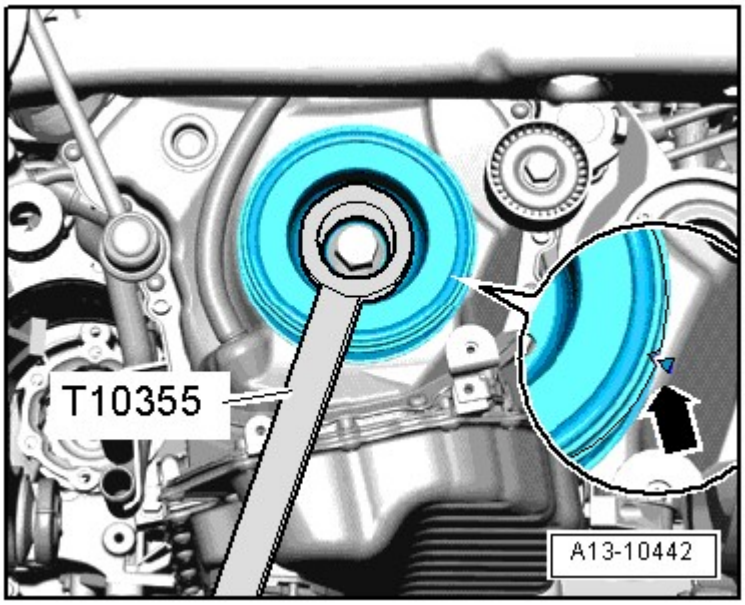

Fig. 41: Identifying Vibration Damper Rotated Into "OT" Position Using Counter Hold Tool T10355
Courtesy of AUDI OF AMERICA, LLC

- The notch on the vibration damper must line up with the arrow marking on the timing chain lower cover.

-- Remove vibration damper bolt using T10355.

CAUTION: The engine could be destroyed.

- **In order not to change the valve timing, the crankshaft must not be moved out of the "TDC" position when the vibration damper is removed.**

Installing

Install in reverse order of removal. Note the following:

- Tightening specifications, refer to **RIBBED BELT DRIVE AND AUXILIARY COMPONENT BRACKET OVERVIEW**.

NOTE:

- **Replace the vibration damper bolt with an O-ring.**
- **The O-ring -1- is supplied with the bolt. Coat it with oil before installing.**

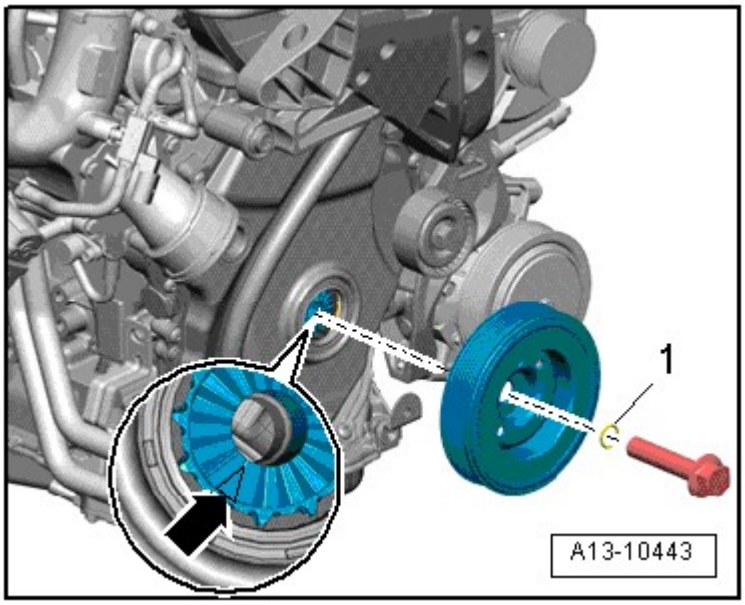

Fig. 42: Identifying O-Ring And Tooth Contour
Courtesy of AUDI OF AMERICA, LLC

-- Coat the sealing lip with engine oil.

-- Mount the vibration damper; when doing this, pay attention to the tooth contour -arrow-.

-- Install the ribbed belt. Refer to **RIBBED BELT**.

-- Install the radiator fan control module -J293-. Refer to **RADIATOR FAN CONTROL MODULE** .

DRIVE PLATE

Special tools and workshop equipment required

- Counter Hold Tool 10 - 201

Removing

- Transmission removed.

-- Insert the 10 - 201 to loosen the bolts.

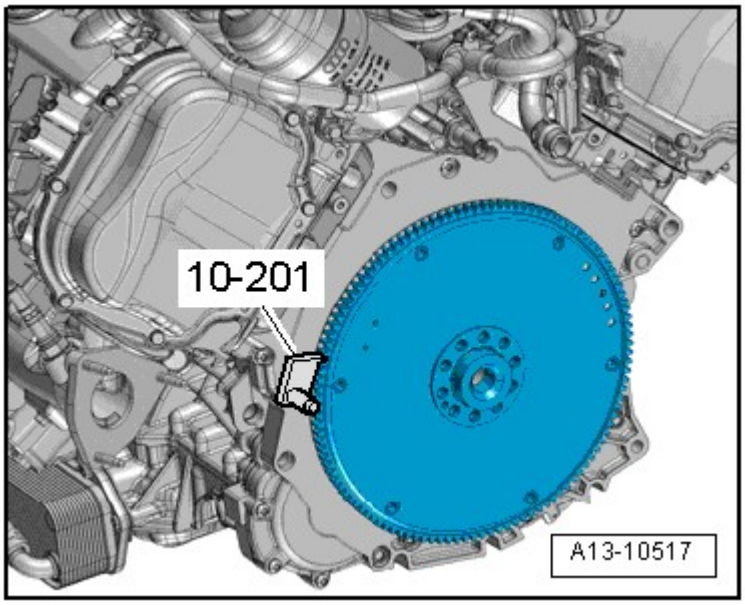

Fig. 43: Identifying Drive Plate Overview
Courtesy of AUDI OF AMERICA, LLC

CAUTION: The outer surface of the bearing flange at the drive plate could be damaged.

- **Use a multipoint socket wrench with a shaft at least 40 mm long to loosen and tighten the drive plate bolts.**

-- Remove the bolts, drive plate and sensor wheel.

Installing

Install in reverse order of removal. Note the following:

- Tightening specifications, refer to **SEALING FLANGE AND DRIVE PLATE OVERVIEW**.

NOTE:

- **Replace the drive plate bolts.**
- **Manual transmission vehicles have a needle bearing inside the drive plate. Check if the needle bearing is inserted before installing. Needle bearing, removing from and installing on drive plate. Refer to NEEDLE BEARING ON DRIVE PLATE, MANUAL TRANSMISSION.**

-- Be careful of the alignment bushings during installation.

-- Reposition the 10 - 201 to tighten the bolts.

NEEDLE BEARING ON DRIVE PLATE, MANUAL TRANSMISSION

Special tools and workshop equipment required

- Tube 31.5 mm Dia.VW 418 A
- Tube 28 mm Dia. 100 mm VW 421
- Sleeve 40 - 103

Procedure

- Transmission removed.

-- Remove the drive plate. Refer to **DRIVE PLATE**.

-- Place the 40 - 103 under the drive plate to remove and install.

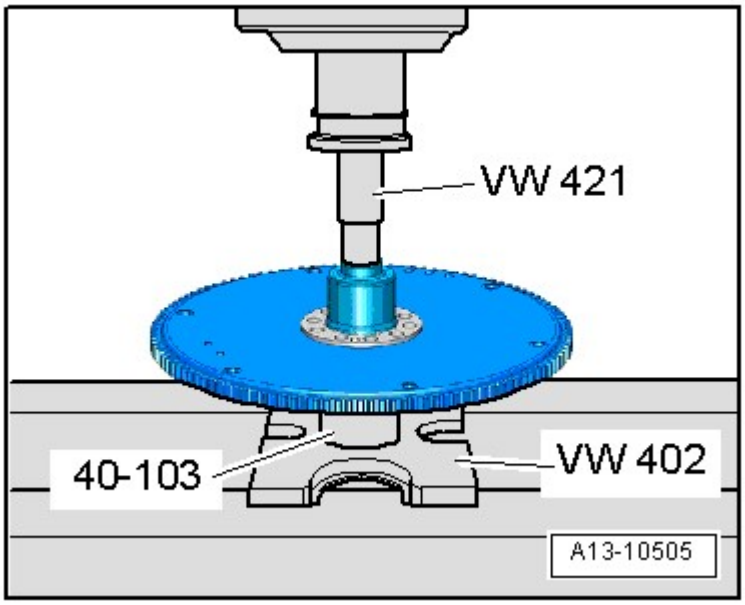

Fig. 44: Identifying Drive Plate, Removal
Courtesy of AUDI OF AMERICA, LLC

-- Press the bearing sleeve out using the VW 421 and shop press.

- The smaller diameter of the VW 421 faces the drive plate.

-- Carefully press the needle bearing in as far as the stop using the VW 418 A and shop press.

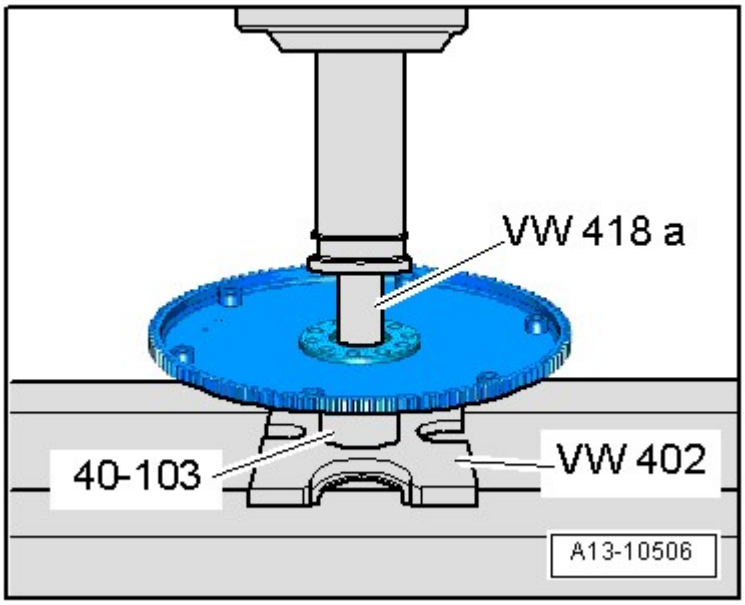

Fig. 45: Identifying Drive Plate, Removal
Courtesy of AUDI OF AMERICA, LLC

- Installation position: the closed side of the needle bearing faces the engine.

-- Installing drive plate. Refer to **DRIVE PLATE**.

SEALING FLANGE, TRANSMISSION SIDE

Special tools and workshop equipment required

- Guide Sleeve T20097
- Hand drill with plastic brush attachment
- Protective goggles
- Sealant

Removing

- Transmission removed.

-- Remove the drive plate. Refer to **DRIVE PLATE**.

-- Unhook the intermediate plate at sealing flange and at the alignment sleeves -arrows-.

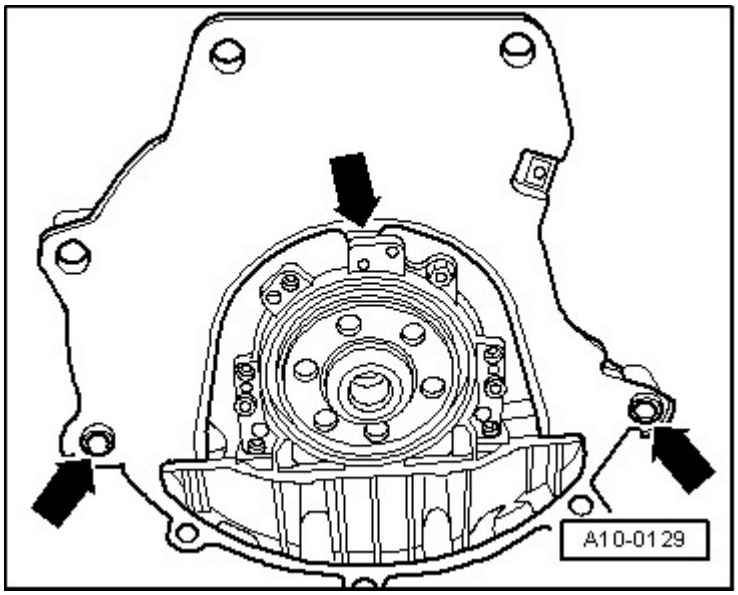

Fig. 46: Identifying Intermediate Plate Alignment Bushings
Courtesy of AUDI OF AMERICA, LLC

-- Remove the bolts -1 through 8-

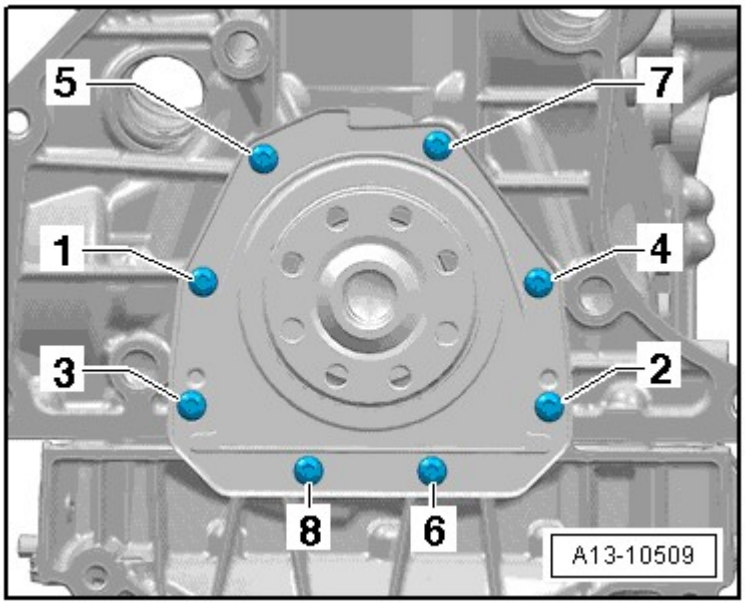

Fig. 47: Identifying Sealing Flange Tightening Sequence
Courtesy of AUDI OF AMERICA, LLC

NOTE: There may be 6 bolts installed, depending on the version.

-- Remove the transmission side sealing flange.

Installing

- For the correct tightening specifications, refer to **SEALING FLANGE AND DRIVE PLATE OVERVIEW**.
- Silicone sealant

NOTE:

- **Note the expiration date of the silicone sealant.**
- **The sealing flange must be installed within 5 minutes after application of silicone sealant.**

-- Remove any sealant residue on the cylinder block using a flat blade scraper.

-- Clean sealing surfaces, must be free of oil and grease.

-- Cut the tube nozzle at the front marking (nozzle diameter: approximately 2 mm).

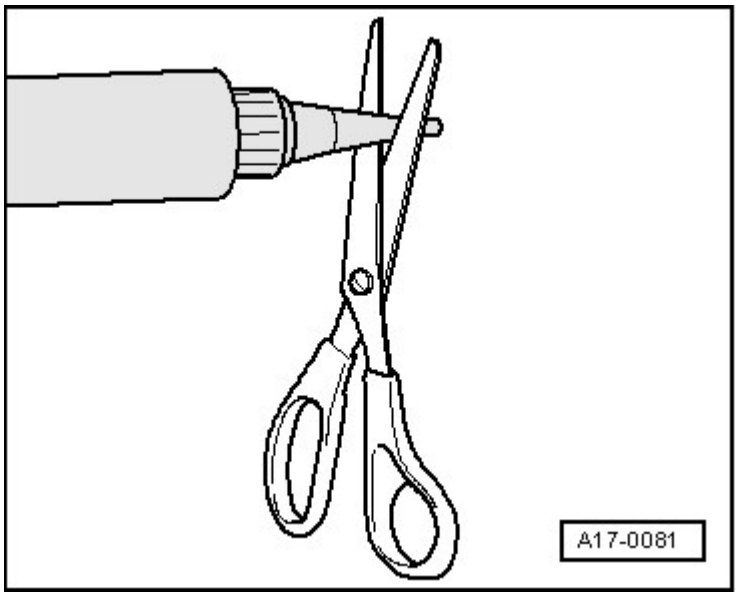

Fig. 48: Cutting Tube Nozzle At Front Marking (Nozzle Diameter Approx. 2 mm)
Courtesy of AUDI OF AMERICA, LLC

-- Apply the silicone sealant on the clean sealing surface of the new cover as shown in the illustration.

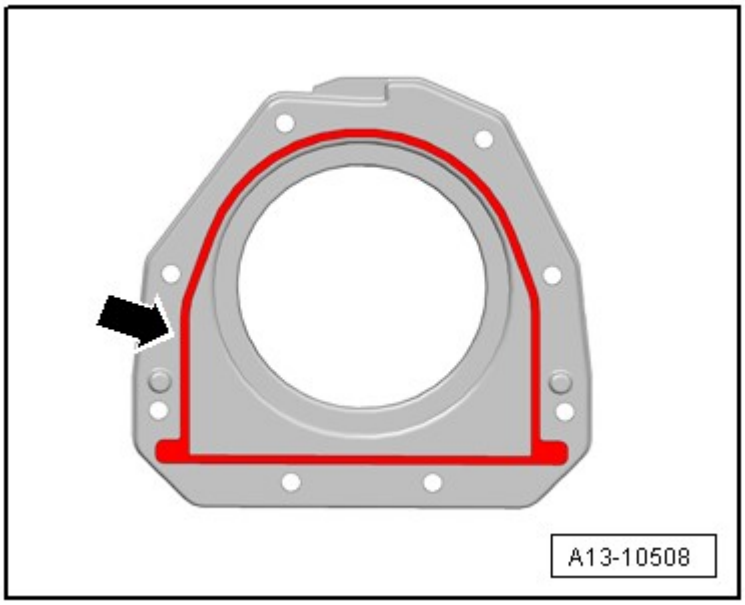

Fig. 49: Identifying Silicone Sealant Applied On Cover Sealing Surface
Courtesy of AUDI OF AMERICA, LLC

- Thickness of sealant bead: 2 to 3 mm.

NOTE:

- **The sealing flange must be installed within 5 minutes after application of silicon sealant.**
- **The sealant bead may not be thicker than specified, otherwise excess sealant could enter the oil pan and clog the oil intake tube.**

-- Position the T20097 on the crankshaft pins.

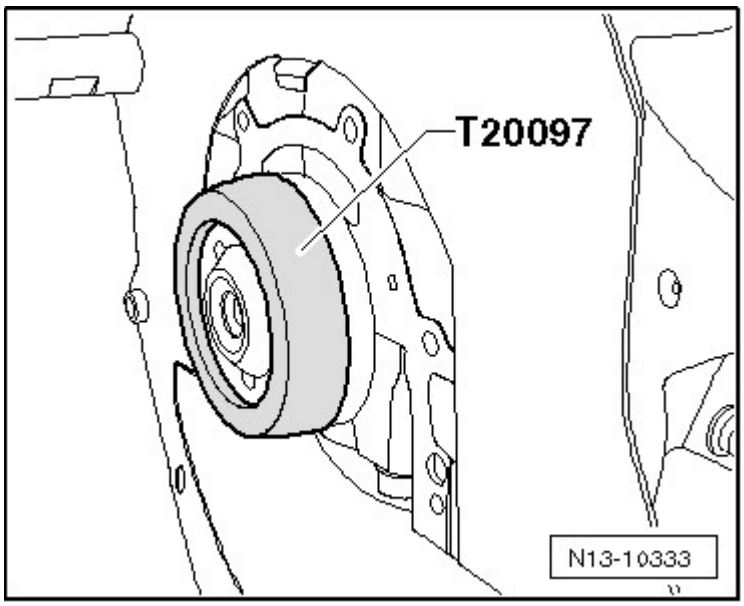

Fig. 50: Identifying Guide Sleeve On Crankshaft
Courtesy of AUDI OF AMERICA, LLC

-- Slide the sealing flange on the crankshaft flange using the T20097 and tighten the bolts right away, tightening sequence:

- Cover with 8 bolts, refer to **Fig. 5**
- Cover with 6 bolts, refer to **Fig. 6**

NOTE: After installing sealing flange, the sealant must dry for approximately 30 minutes. Only after then may the engine oil be replenished.

Further assembly is performed in the reverse order of removal, thereby observing the following:

-- Installing drive plate. Refer to **DRIVE PLATE**.

-- Check the oil level. Refer to **MAINTENANCE PROCEDURES**

SENSOR WHEEL

-- Remove engine.

-- Remove the transmission-side sealing flange. Refer to **SEALING FLANGE, TRANSMISSION SIDE**.

-- Remove the upper section of the oil pan. Refer to **UPPER OIL PAN** .

-- Remove the balance shaft timing chain. Refer to **BALANCE SHAFT TIMING CHAIN** .

-- Remove the connecting rod bearing cover.

-- Remove the crankshaft bearing cover.

-- Remove the crankshaft and the sensor wheel.

-- Always replace sensor wheel -2- whenever bolts are removed -1-.

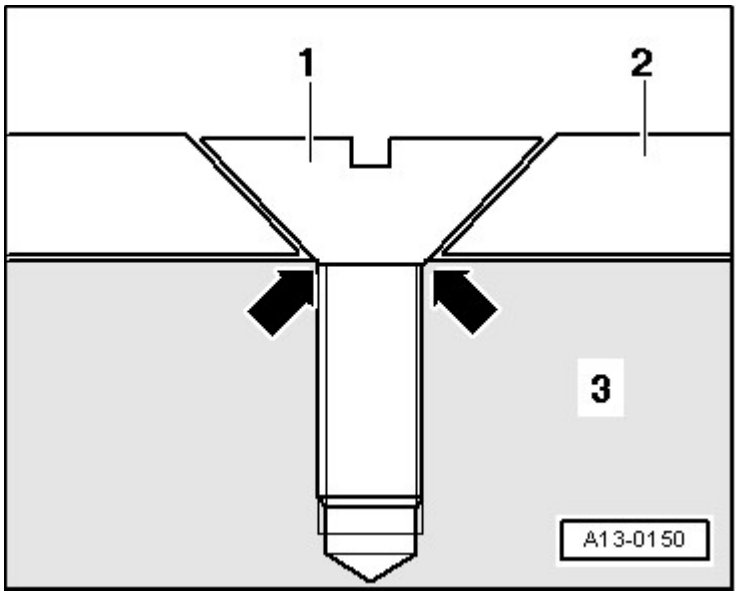

Fig. 51: Identifying Attachment Points, Countersunk Screws, Crankshaft & Sensor Wheel
Courtesy of AUDI OF AMERICA, LLC

NOTE:

- **After tightening a second time, the attachment point of the countersunk bolts of the sensor wheel are so deformed that the bolt heads lie on the crankshaft -3- -arrows- and the sensor wheel is loose underneath the screws.**
- **Installation of sensor wheel is only possible in one position - the bores are offset.**

- Tightening specifications, refer to **CRANKSHAFT OVERVIEW**.

PISTON

Special tools and workshop equipment required

- Pilot Drift VW 222 A
- Piston Installation Tool 82.5 mm Bore SET 850

Removing

-- Removing engine. Refer to **ENGINE, REMOVING** .

-- Secure the engine to engine and transmission holder VAS 6095. Refer to **ENGINE, SECURING TO ENGINE STAND** .

-- Cylinder head, removing:

- Refer to **CYLINDER HEAD WITH WRENCH CLEARANCE**
- Refer to **CYLINDER HEAD WITHOUT WRENCH CLEARANCE**

-- Remove the upper oil pan. Refer to **UPPER OIL PAN** .

-- Mark the installed position of the piston and the cylinder to which it belongs.

-- Mark the installed position of the piston and the connecting rod to which it belongs, refer to item 11.

-- Remove the connecting rod bearing cap and then remove the piston and connecting rod upward.

NOTE: Warm the piston to approximately 60 °C (140 °F) if it is difficult to move.

-- Remove the circlip from the piston pin.

-- Remove the piston pin using a VW 222 A.

Installing

Install in reverse order of removal. Note the following:

- Tightening specifications, refer to **PISTON AND CONNECTING ROD OVERVIEW**.

NOTE:

- **Replace bolts which have been tightened to an additional torque.**
- **Arrow on piston face points toward the belt pulley side.**
- **Offset the end of the piston ring 120°.**

-- Lubricate the running surfaces on the bearing shells.

-- Install the piston with a commercially available piston ring compressor. Pay attention to the installed position, refer to item 8.

-- Install the connecting rod bearing cap. Pay attention to the installed position, refer to item 2.

-- Cylinder Head, Installing:

- Refer to **CYLINDER HEAD WITH WRENCH CLEARANCE**
- Refer to **CYLINDER HEAD WITHOUT WRENCH CLEARANCE**

-- Install the upper oil pan. Refer to **UPPER OIL PAN** .

SPECIAL TOOLS

Special tools and workshop equipment required

- Guide Sleeve T20097

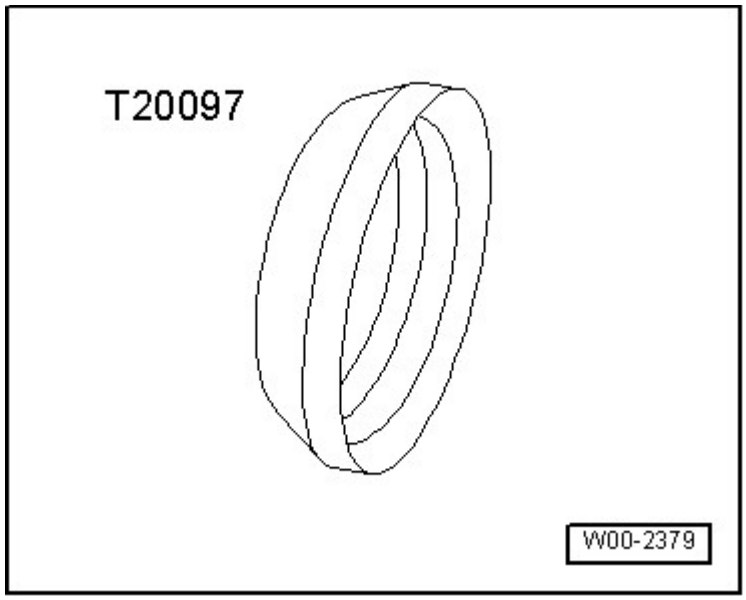

Fig. 52: Identifying Guide Sleeve T20097
Courtesy of AUDI OF AMERICA, LLC

- Dial Gauge Holder VW 387

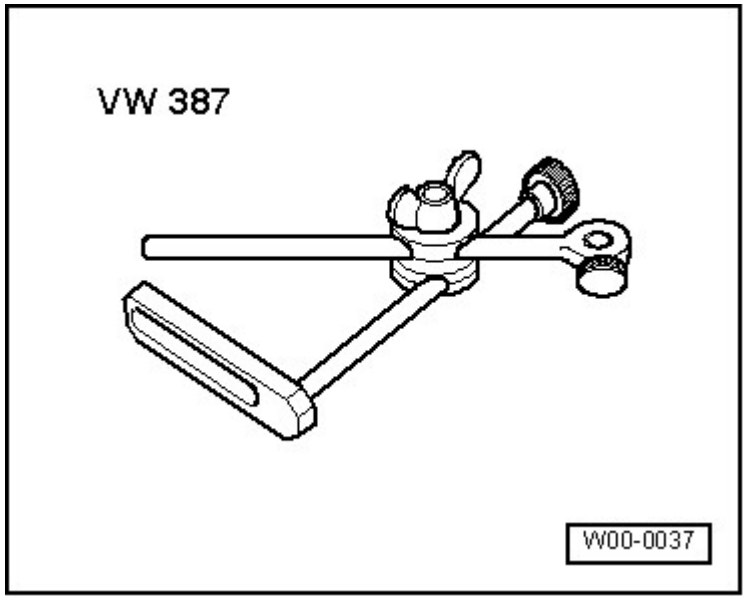

Fig. 53: Identifying Dial Gauge Holder VW 387
Courtesy of AUDI OF AMERICA, LLC

- Dial Gauge 0-10 mm VAS 6079

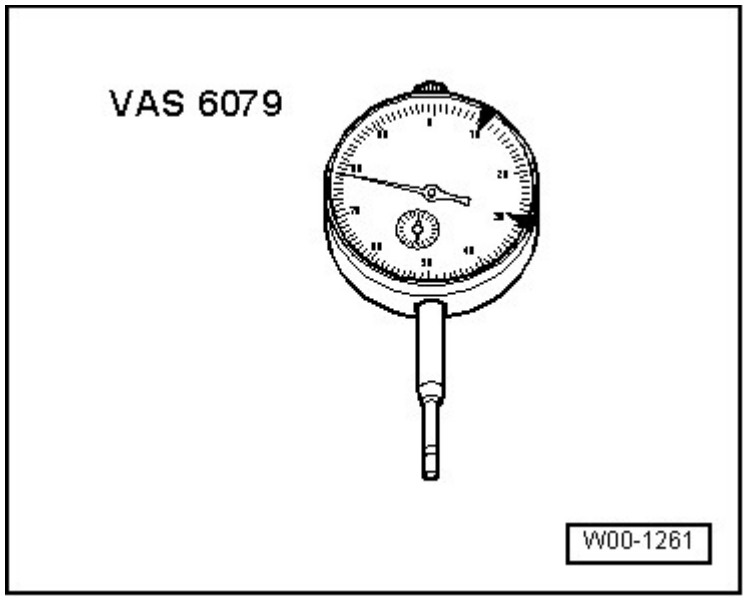

Fig. 54: Identifying Dial Gauge 0-10 mm VAS 6079
Courtesy of AUDI OF AMERICA, LLC

- Locking Tool T40098

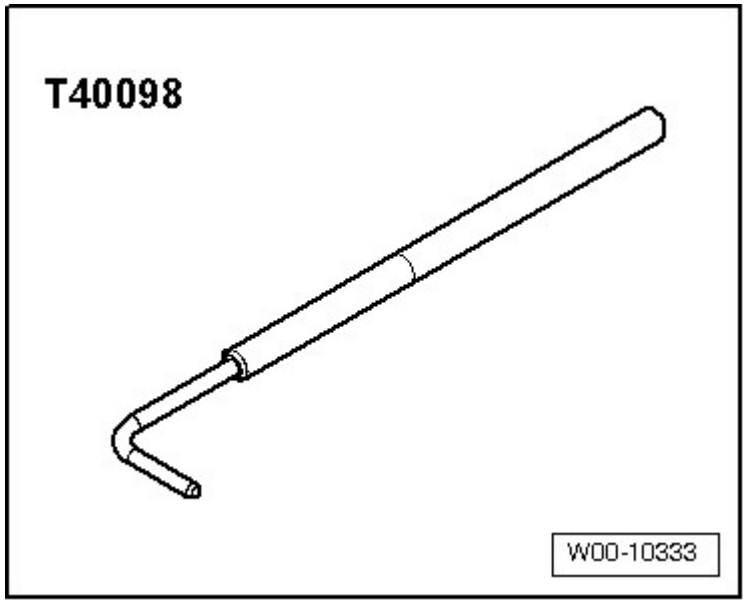

Fig. 55: Identifying Locking Tool T40098
Courtesy of AUDI OF AMERICA, LLC

- Drip Tray for VAS 6100 VAS 6208

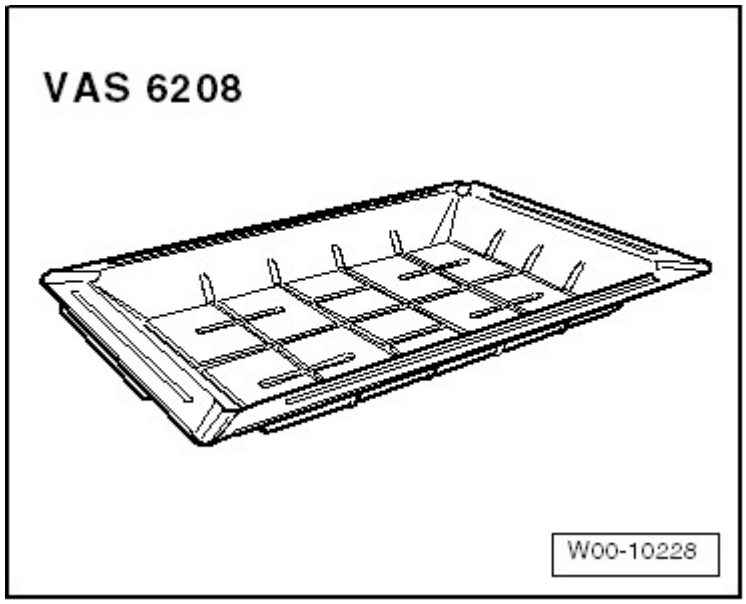

Fig. 56: Identifying Drip Tray for VAS 6100 VAS 6208
Courtesy of AUDI OF AMERICA, LLC

- Counter Hold Tool T10355

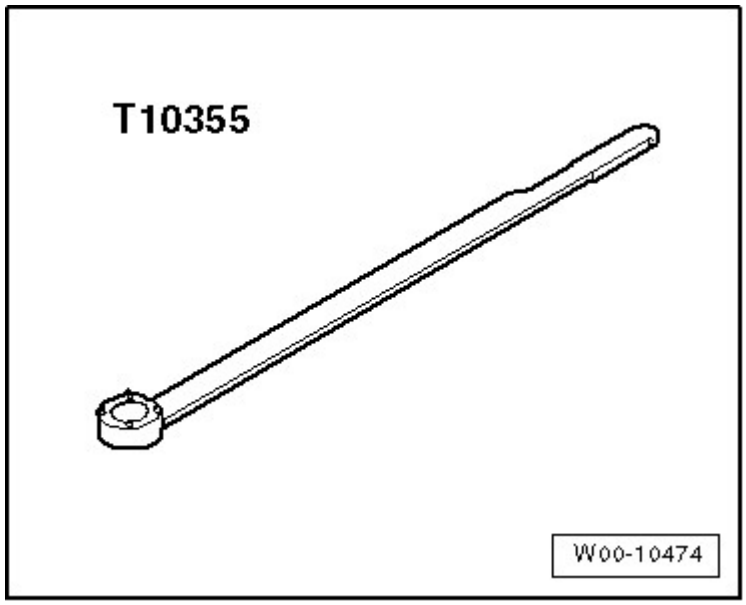

Fig. 57: Identifying Counter Hold Tool T10355
Courtesy of AUDI OF AMERICA, LLC

- Counter Hold Tool 10 - 201

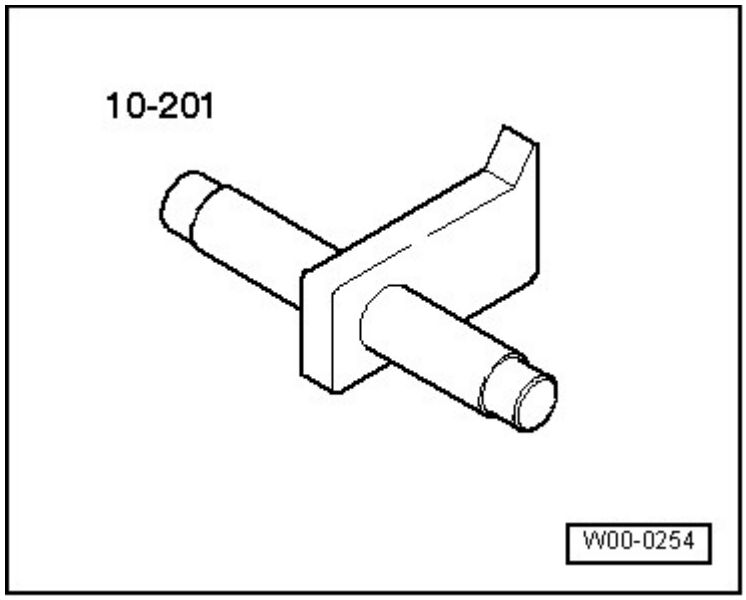

Fig. 58: Identifying Counter Hold Tool 10 - 201
Courtesy of AUDI OF AMERICA, LLC

- Tube 31.5 mm Dia.VW 418 A

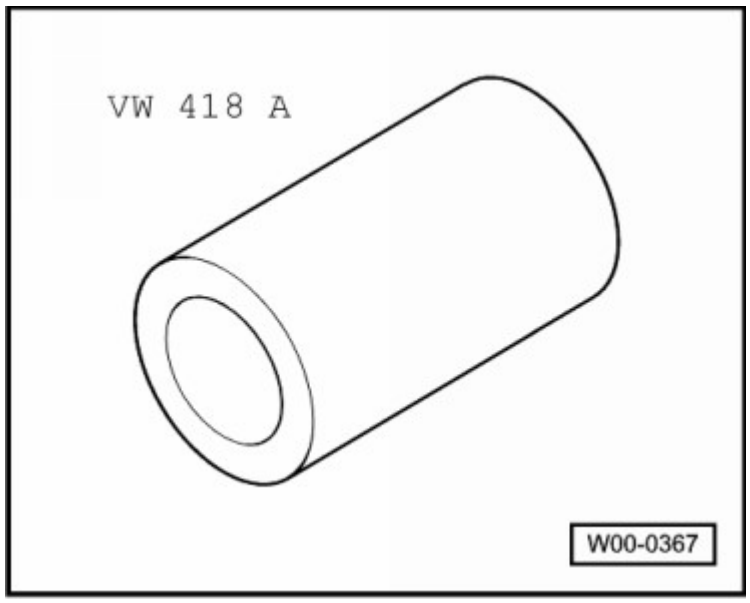

Fig. 59: Identifying Tube 31.5 mm Dia.VW 418 A
Courtesy of AUDI OF AMERICA, LLC

- Tube 28 mm Dia. 100 mm VW 421

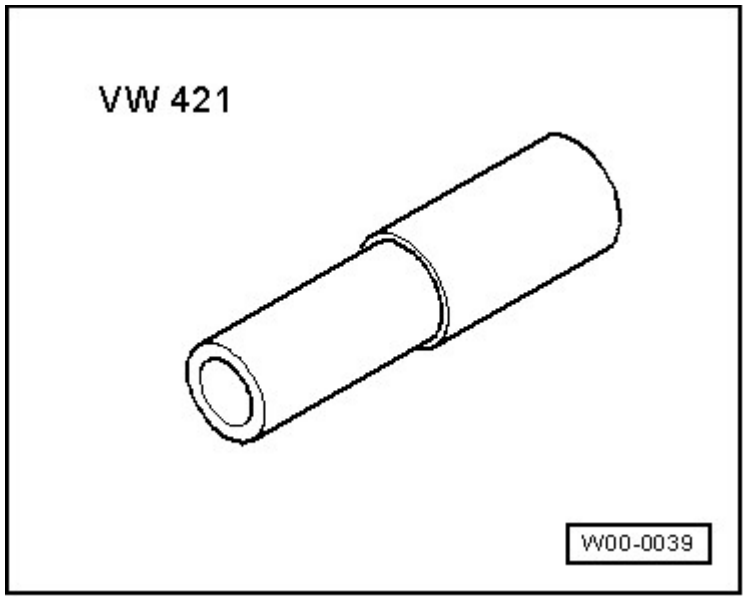

Fig. 60: Identifying Tube 28 mm Dia. 100 mm VW 421
Courtesy of AUDI OF AMERICA, LLC

- Sleeve 40 - 103

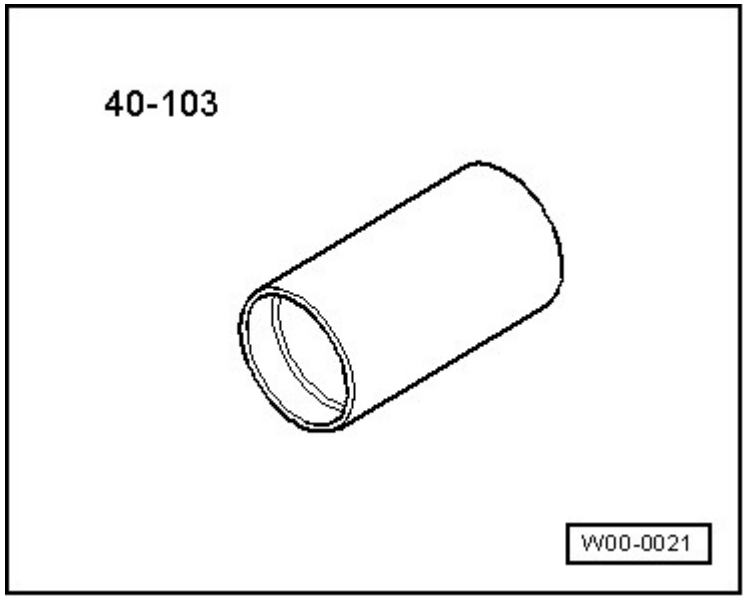

Fig. 61: Identifying Sleeve 40 - 103
Courtesy of AUDI OF AMERICA, LLC

- Pilot Drift VW 222 A

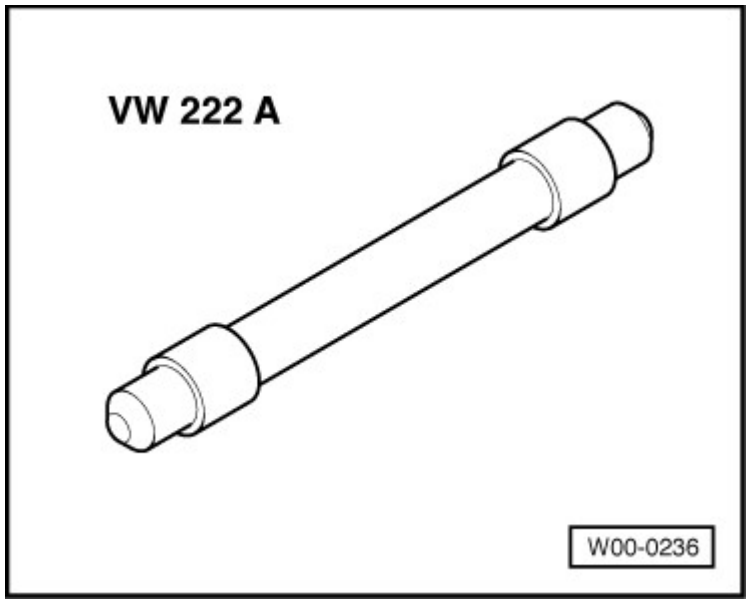

Fig. 62: Identifying Pilot Drift VW 222 A
Courtesy of AUDI OF AMERICA, LLC

- Not illustrated:
- Guide Sleeve T20097
- Piston Installation Tool 82.5 mm Bore SET 850

ENGINE

2.0 Liter - Cylinder Head, Valvetrain - Engine Code(s): CAEB (Sedan)

15 CYLINDER HEAD, VALVETRAIN

GENERAL INFORMATION

CYLINDER HEAD, SCREWDRIVER ACCESS

Screwdriver Access

Camshafts with screwdriver access have notches -arrows- in the camshafts.

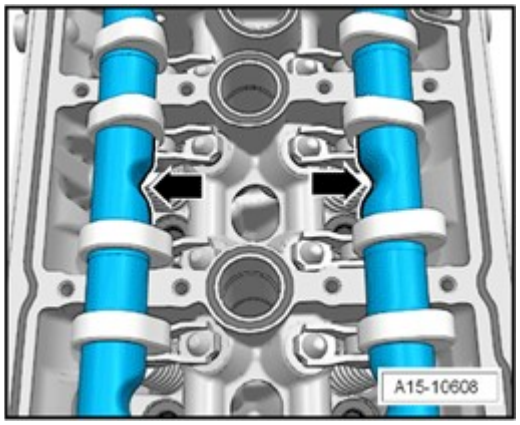

Fig. 1: Identifying Camshaft Recesses
Courtesy of AUDI OF AMERICA, LLC

Camshafts without screwdriver access do not have notches in the camshafts.

To check, turn the plugs -arrows- 90° counter clockwise in the direction of the -arrow- and remove them.

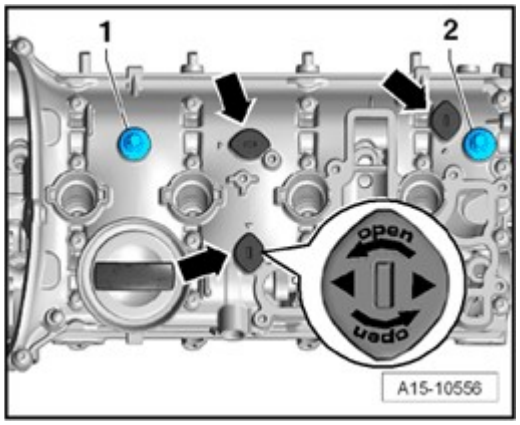

Fig. 2: Turning Plugs 90° Counter Clockwise
Courtesy of AUDI OF AMERICA, LLC

DESCRIPTION AND OPERATION

TIMING CHAIN GUARDS, CAMSHAFT ADJUSTMENT VALVE 1 -N205- OVERVIEW

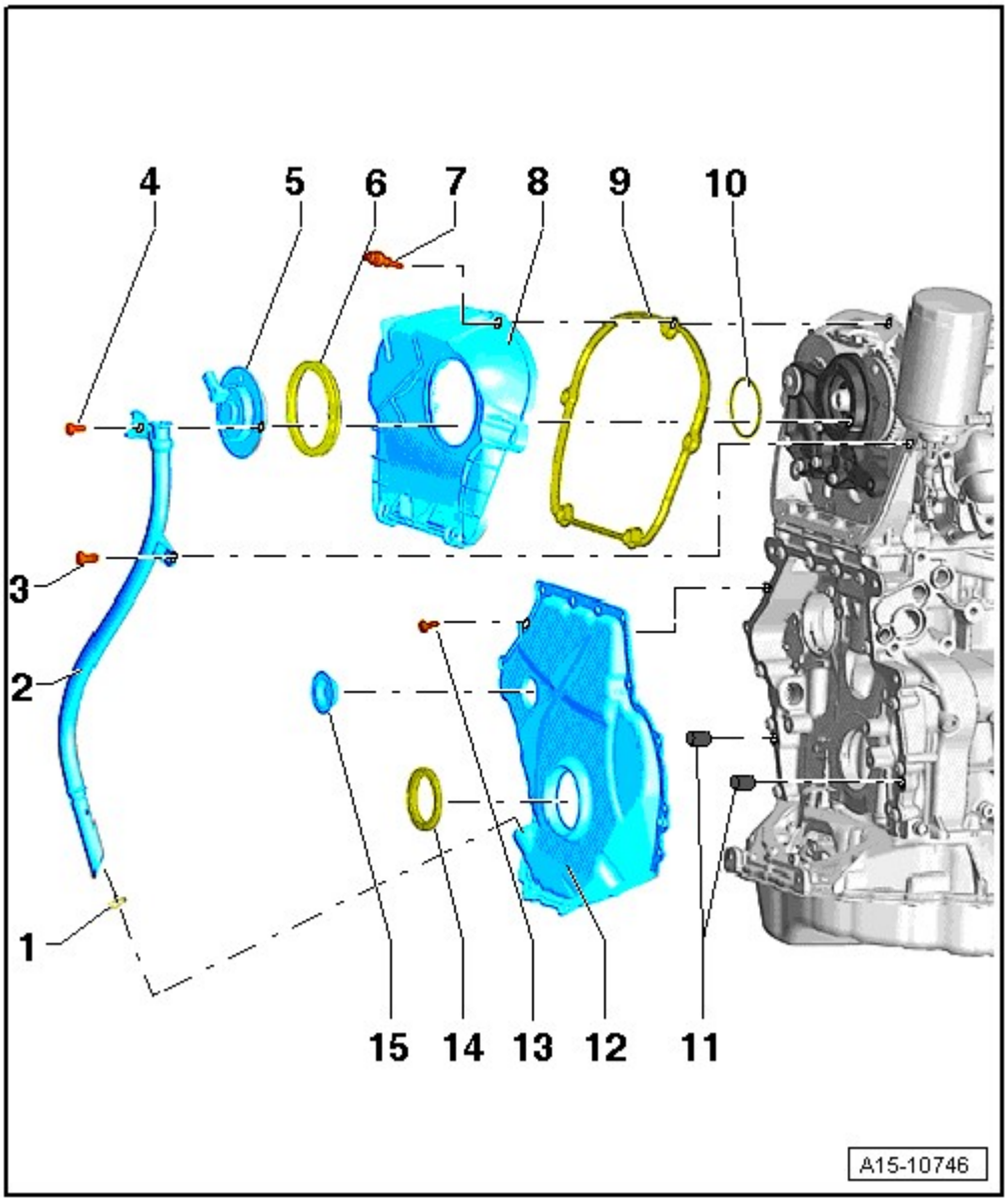

Fig. 3: Identifying Assembly Overview: Timing Chain Covers
Courtesy of AUDI OF AMERICA, LLC

1. O-ring
   - Replace
   - Oil before assembling
2. Guide Tube for Oil Dipstick
3. Bolt
   - 9 Nm

4. Bolt
    - 9 Nm
5. Camshaft Adjustment Valve 1 -N205-
    - Removing and installing, refer to **Camshaft Adjustment Valve 1 -N205-**
6. Seal
    - Oil before assembling
    - Replace if damaged
7. Bolt
    - Tightening sequence, refer to **Fig. 4**
8. Upper Timing Chain Cover
    - Removing and installing, refer to **Fig. 4**
9. Gasket
    - Replace if damaged
10. O-ring
    - Replace
    - Oil before assembling
11. Alignment Pins
    - Centering the cover
12. Lower Timing Chain Cover
    - Replace, refer to **LOWER TIMING CHAIN COVER**
13. Bolt
    - Replace
    - Tightening sequence with 15 bolts, refer to **Fig. 5**
    - Tightening sequence with 8 bolts, refer to **Fig. 6**
14. Shaft Seal
    - For the vibration damper
    - Removing and installing, refer to **VIBRATION DAMPER SHAFT SEAL**
15. Sealing Plugs
    - Replace

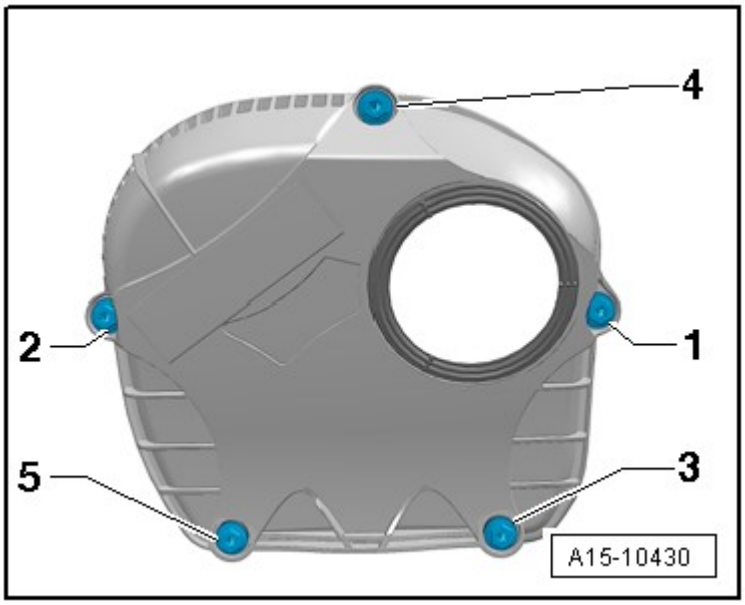

Fig. 4: Identifying Upper Timing Chain Cover - Tightening Sequence
Courtesy of AUDI OF AMERICA, LLC

-- Tighten the bolts -1 through 5- in the sequence shown:

-- Tighten the bolts to 9 Nm.

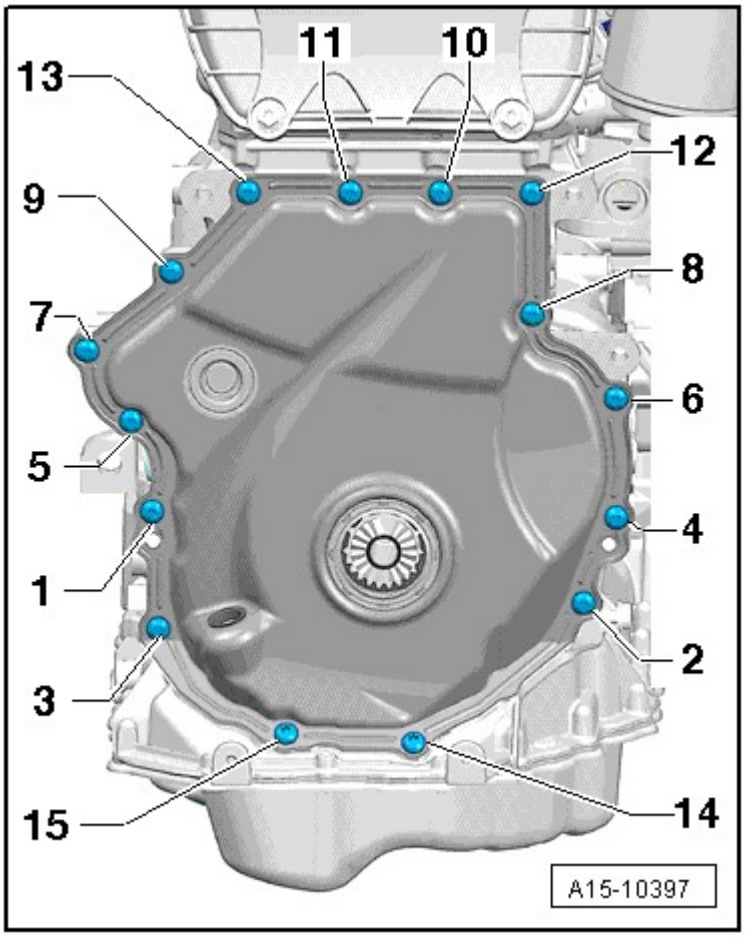

Fig. 5: Identifying Timing Chain Lower Cover Tightening Sequence
Courtesy of AUDI OF AMERICA, LLC

-- Tighten the bolts -1 through 15- in 2 stages in the sequence shown:

-- 1. Tighten the bolts to 8 Nm.

-- 2. Tighten the bolts an additional 45°.

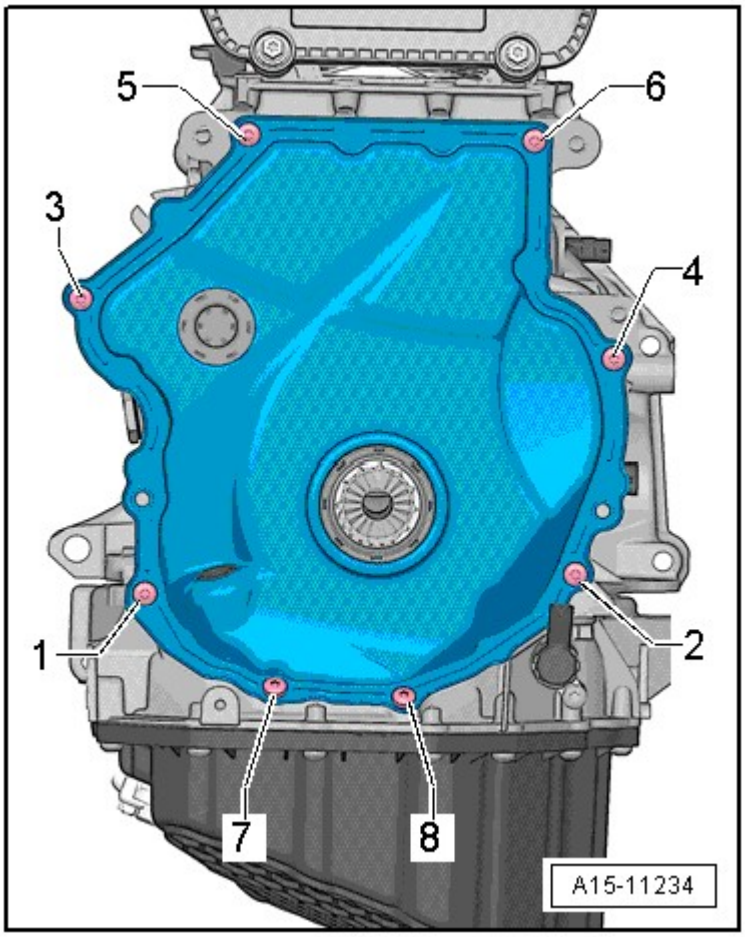

Fig. 6: Identifying Timing Chain Guard Lower Section - Tightening Sequence for 8 Bolts
Courtesy of AUDI OF AMERICA, LLC

-- Tighten the bolts -1 through 8- in 2 stages in the sequence shown:

-- 1. Tighten the bolts to 4 Nm.

-- 2. Tighten the bolts an additional 45°.

CAMSHAFT TIMING CHAIN OVERVIEW

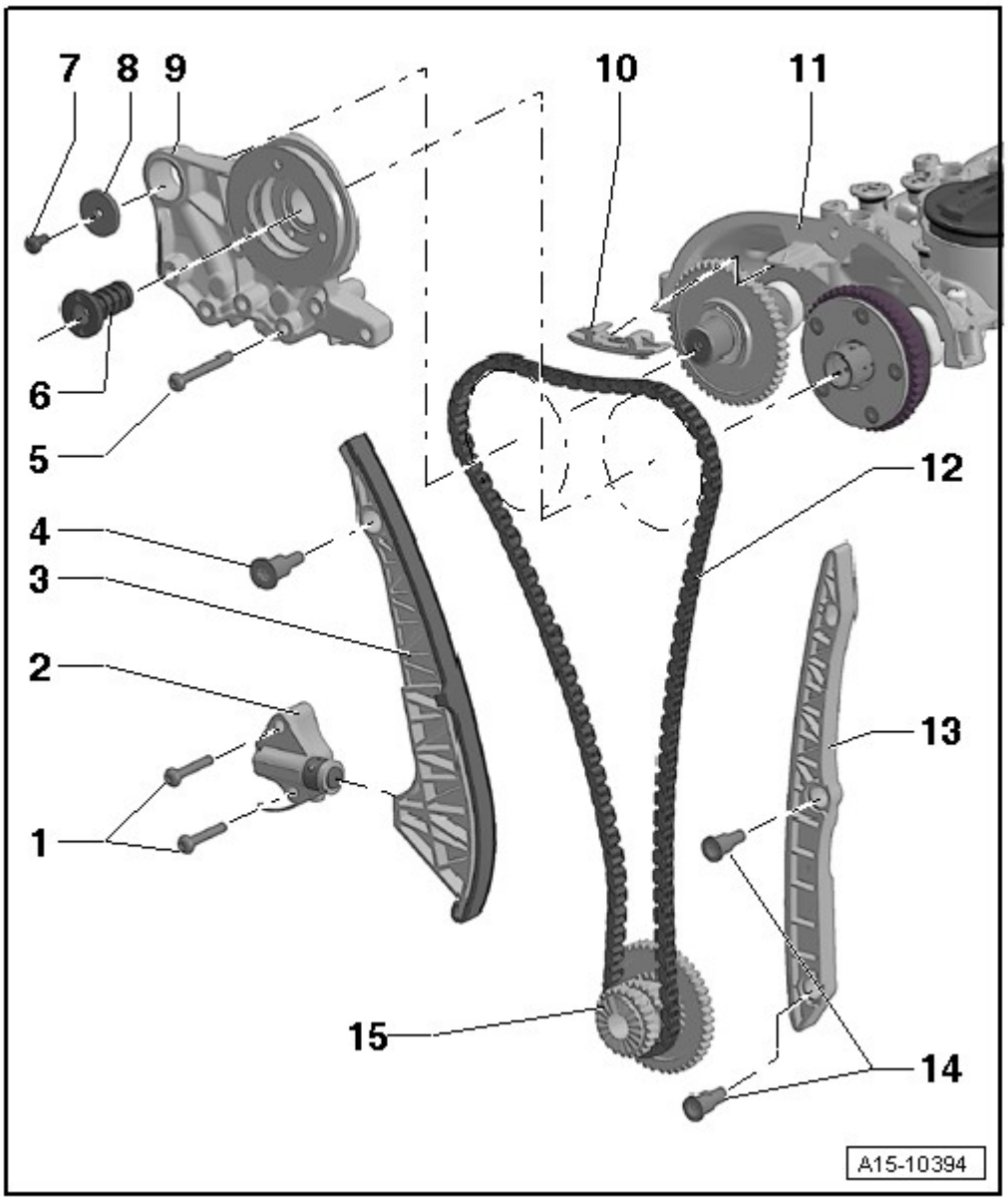

Fig. 7: Identifying Camshaft Timing Chain Assembly Overview
Courtesy of AUDI OF AMERICA, LLC

1. Bolt
   - 9 Nm
2. Chain Tensioner
   - Is under tension
   - Disconnect the locking pinT40011 before removing
3. Timing Chain Tensioning Rail
4. Guide Pins
   - 20 Nm
5. Bolt

- 9 Nm

6. Control Valve
   - 35 Nm
   - Left thread
   - Remove using the assembly tool T10352 or assembly tool T10352/1 depending on the version
7. Bolt
   - 20 Nm + 90° turn
   - Replace
8. Washer
9. Bearing Bracket
10. Camshaft Timing Chain Guide Rail
11. Camshaft Housing
12. Camshaft Timing Chain
    - Before removing, mark the direction of rotation with paint
13. Camshaft Timing Chain Guide Rail
14. Guide Pins
    - 20 Nm
15. Three Stage Chain Sprocket
    - Crankshaft
    - Installed location, refer to **Fig. 8**

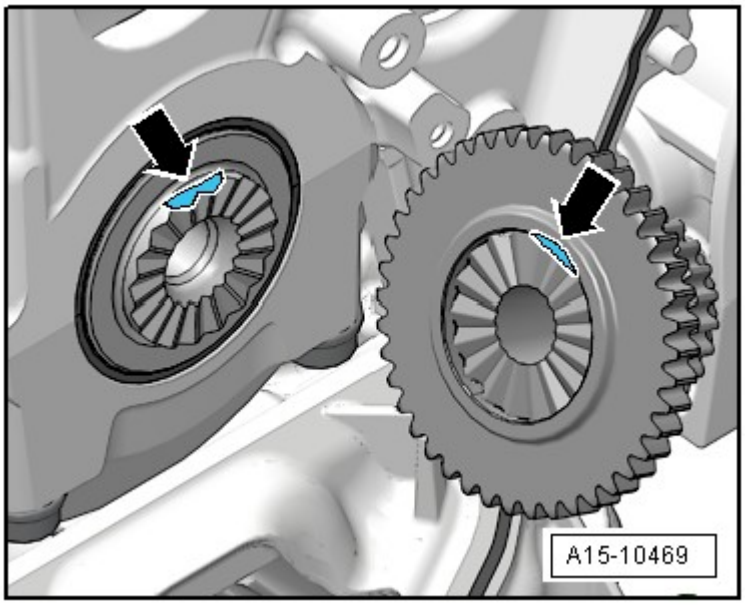

Fig. 8: Identifying Chain Sprocket Crankshaft, Installation Position
Courtesy of AUDI OF AMERICA, LLC

- Both surfaces must line up -arrows- across from each other.

BALANCE SHAFT TIMING CHAIN OVERVIEW

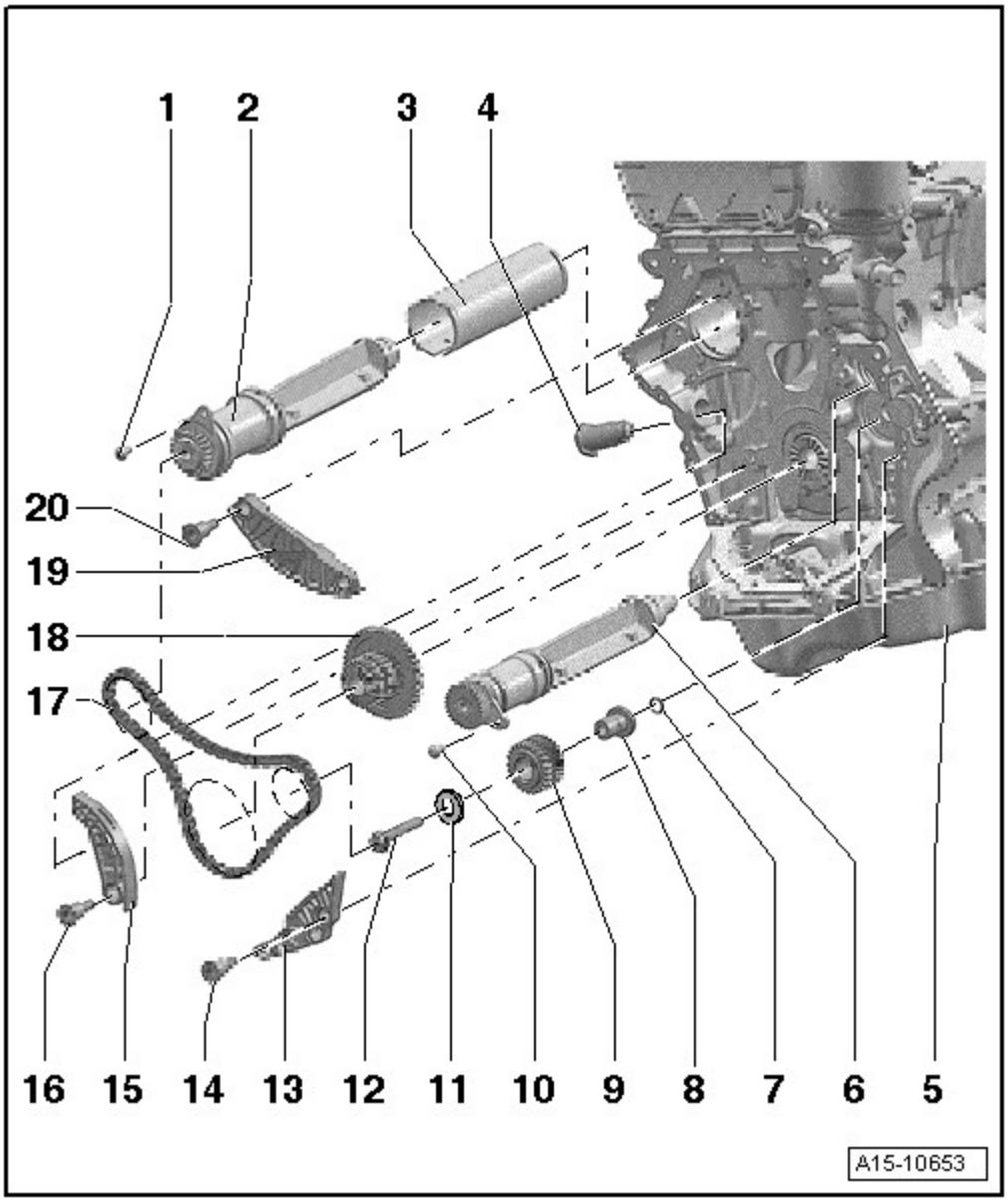

Fig. 9: Identifying Balance Shaft Timing Chain Component Overview
Courtesy of AUDI OF AMERICA, LLC

1. Bolt
   - 9 Nm
   - Replace
2. Balance Shaft
   - Exhaust side
   - Must be replaced after removing
   - Lubricate the bearing with engine oil

- Removing and installing, refer to **EXHAUST CAMSHAFT BALANCE SHAFT**.

3. Pipe for the Balance Shaft
   - Installed location, refer to **Fig. 10**
4. Chain Tensioner
   - 85 Nm
5. Cylinder Block
6. Balance Shaft
   - Intake side
   - Must be replaced after removing
   - Lubricate the bearing with engine oil
   - Removing and installing, refer to **INTAKE CAMSHAFT BALANCE SHAFT**.
7. O-ring
   - Lubricate with engine oil
8. Mounting Pin
   - Lubricate with engine oil
   - Installed location, refer to **Fig. 11**
9. Intermediate Sprocket
   - The intermediate sprocket must be replaced if the bolt is loosened.
10. Bolt
    - Replace
    - 9 Nm
11. Washer
12. Bolt
    - Replace
    - The intermediate sprocket must be replaced if the bolt is loosened.
    - Tightening sequence, refer to **Fig. 12**
13. Guide Rail
    - For timing chain
14. Guide Pins
    - 20 Nm
15. Tensioning Rail
    - For timing chain
16. Guide Pins
    - 20 Nm
17. Timing Chain
    - Removing and installing, refer to **BALANCE SHAFT TIMING CHAIN**
18. Three Stage Chain Sprocket
    - Installed location, refer to **Fig. 8**.

19. Guide Rail
    - For the balance shaft timing chain
20. Guide Pins
    - 20 Nm

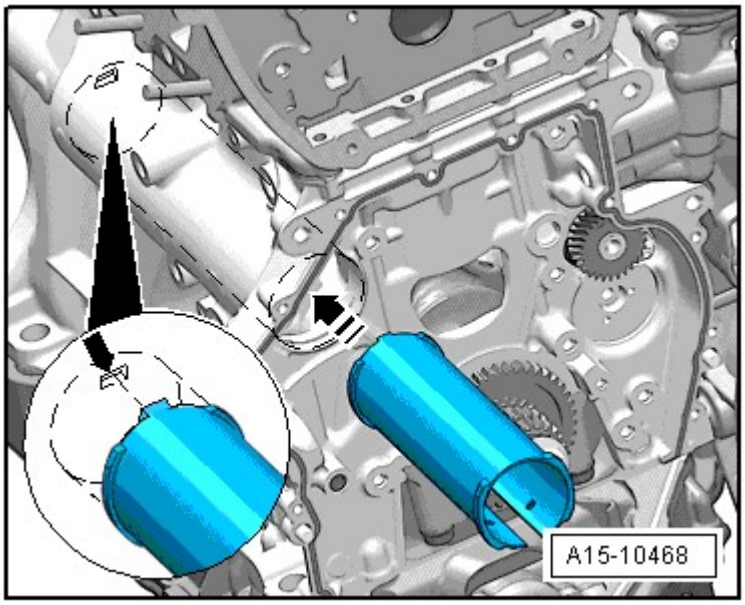

Fig. 10: Identifying Pipe For Balance Shaft - Installation Position
Courtesy of AUDI OF AMERICA, LLC

- The pin from the balance shaft pipe must fit into the groove -arrow-

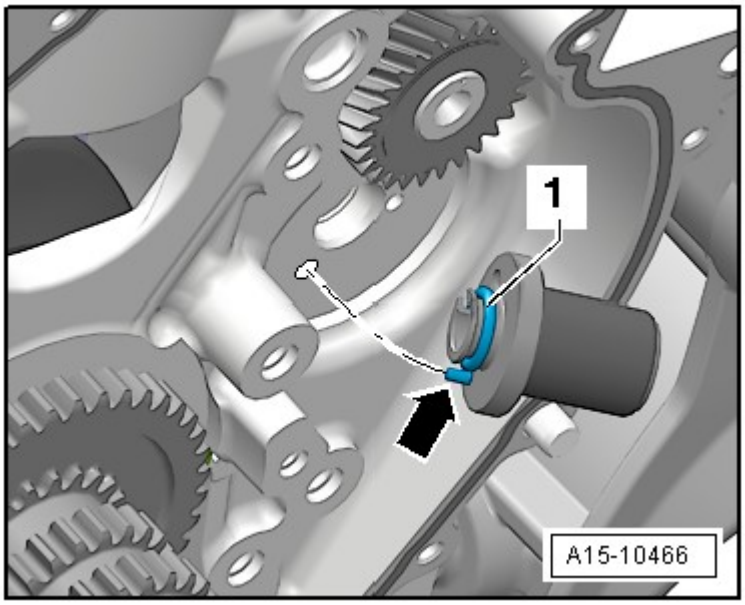

Fig. 11: Identifying Bearing Pins, Installation Position
Courtesy of AUDI OF AMERICA, LLC

- Replace and lubricate the O-ring -1-
- The alignment pin -arrow- for the bearing pins must engage in the hole in the cylinder block.
- Lubricate the bearing pins

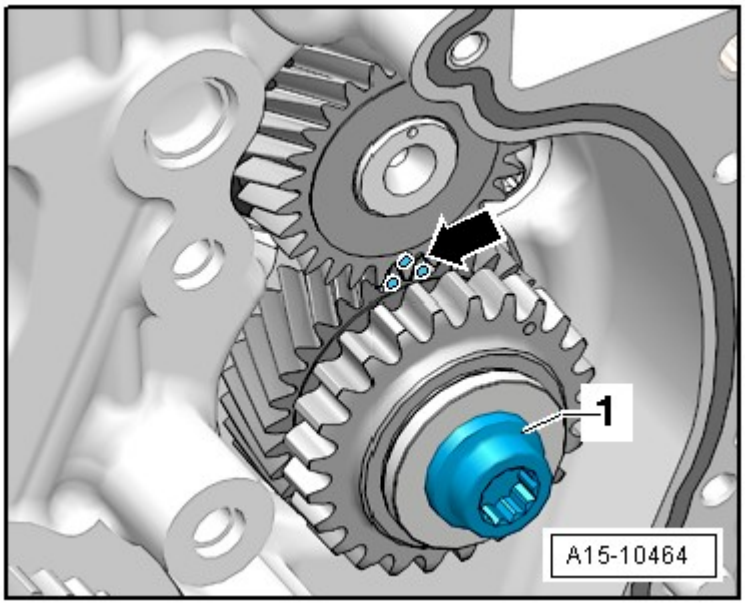

Fig. 12: Identifying Intermediate Shaft Sprocket
Courtesy of AUDI OF AMERICA, LLC

CAUTION: Always replace the intermediate sprocket. Otherwise the backlash will not adjust itself and it could result in engine damage.

The new intermediate sprocket has an anti-friction coating that wears off after a short period of use, which automatically adjusts the backlash.

-- Tighten with a new bolt as follows:

-- Tighten to 10 Nm using a torque wrench.

-- Turn the intermediate sprocket.

The intermediate sprocket must not have any play. Loosen and tighten it again if necessary.

-- Tighten to 25 Nm using a torque wrench.

-- Tighten further 90° using a rigid wrench.

CYLINDER HEAD OVERVIEW, WITH SCREWDRIVER ACCESS

NOTE: Replace the cylinder head bolts.

Always replace self-locking nuts, bolts which have been tightened to tightening specifications as well as gaskets and O-rings.

The plastic protectors installed to protect the open valves must only be removed immediately before installing the cylinder head.

The engine oil and coolant must be changed if the cylinder head or cylinder head seal are replaced.

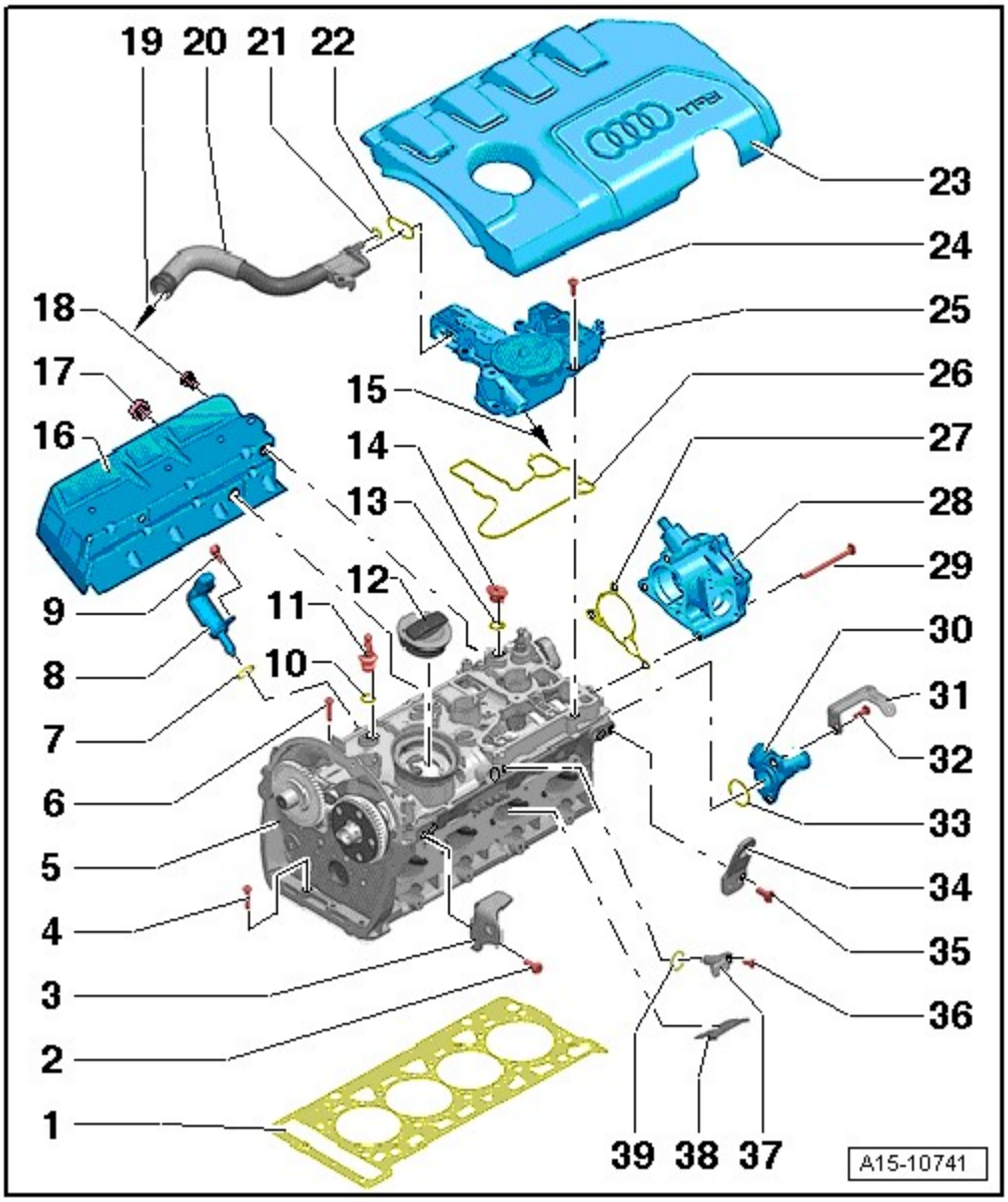

Fig. 13: Identifying Cylinder Head Overview
Courtesy of AUDI OF AMERICA, LLC

1. Cylinder Head Gasket

- Replace
- Note installation position: Parts number to cylinder head

2. Bolt
   - 25 Nm
3. Transport Bracket
4. Bolt
   - Tighten in 2 stages:

     -- Tighten to 8 Nm.

     -- Tighten 90° further using a rigid wrench.
5. Cylinder Head
   - Removing and installing, refer to **CYLINDER HEAD WITH WRENCH CLEARANCE**
   - Check for distortion, refer to **Fig. 15**
6. Cylinder Head Bolt
   - Replace
   - Follow the procedure when loosening.
   - Follow the procedure when tightening. Refer to **Fig. 160**.
   - Tighten in 3 stages:
     1. Tighten to 40 Nm.
     2. Tighten 90° further using a rigid wrench.
     3. Tighten 90° further using a rigid wrench.
7. O-ring
   - Replace
   - Coat with engine oil
8. Camshaft Adjuster Actuator
9. Bolt
   - 5 Nm
10. O-ring
    - Replace
    - Lubricate with engine oil
11. Sealing Plugs
    - 5 Nm
    - With ball head for the engine cover
12. Cap
    - With gasket
13. O-ring
    - Replace

- Lubricate with engine oil

14. Sealing Plugs
15. To the Intake Manifold
16. Heat Shield
17. Screw
    - 20 Nm
18. Bolt
    - 20 Nm
19. To the Intake Manifold/Turbocharger
20. Ventilation Pipe
21. O-ring
    - No replacement part
22. Gasket
    - No replacement part
23. Engine Cover
24. Bolt
    - Tightening sequence, refer to **Fig. 14**
25. Crankcase Ventilation
26. Gasket
    - No replacement part
27. Gasket
    - Replace if damaged
28. Vacuum Pump
    - Removing and installing, refer to **Removal and Installation**
29. Bolt
    - Tightening specifications, refer to **Description and Operation**
30. Connecting Piece
31. Mounting Plate
32. Bolt
    - 9 Nm
33. O-ring
    - Replace
    - Coat with coolant
34. Transport Bracket
35. Bolt
    - 25 Nm
36. Bolt
    - 9 Nm

37. Camshaft Position Sensor -G40-
38. Partition Plate
39. O-ring
    - Replace
    - Lubricate with engine oil

Crankcase Ventilation, Tightening Sequence

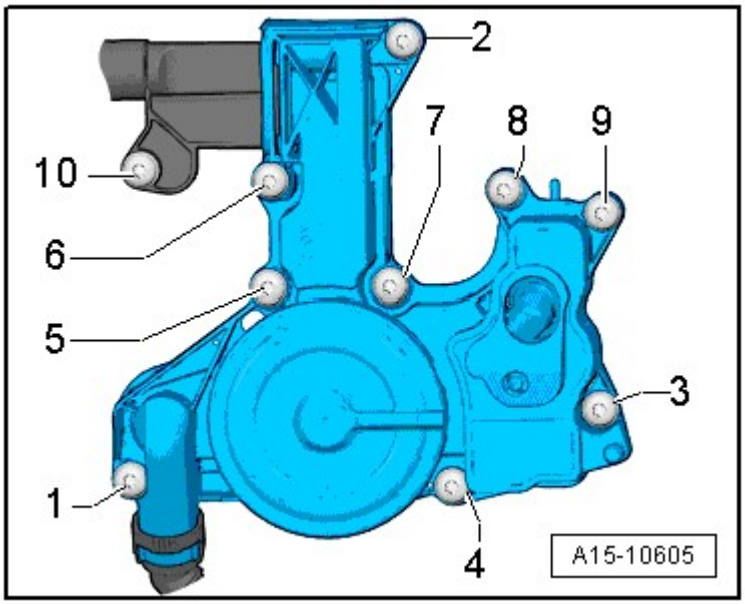

Fig. 14: Identifying Crankcase Ventilation - Tightening Sequence
Courtesy of AUDI OF AMERICA, LLC

NOTE:

- **The bolts are self-tapping. Only use original bolts when replacing the cylinder head, since the cylinder head is delivered without a thread for the installing the crankcase ventilation.**
- **It is not permitted to cut the thread with a thread cutter.**

-- Tighten the crankcase ventilation bolts to 11 Nm in sequence -1 to 10-.

Checking Cylinder Head for Distortion

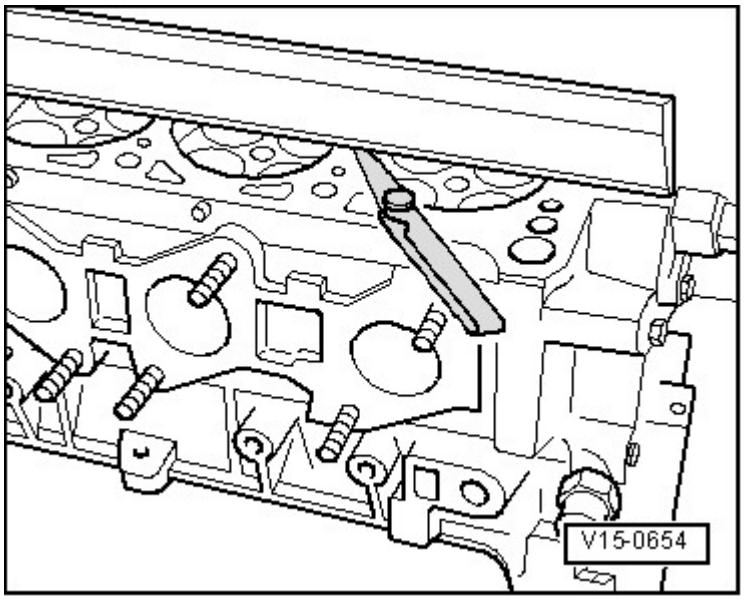

Fig. 15: Checking Cylinder Head For Distortion
Courtesy of AUDI OF AMERICA, LLC

-- Check the cylinder head for distortion with the straight edge and feeler gauge in several places.

- Max. permissible distortion: 0.05 mm

CYLINDER HEAD OVERVIEW, WITHOUT SCREWDRIVER ACCESS

NOTE:

- **Replace the cylinder head bolts.**
- **Always replace self-locking nuts, bolts which have been tightened to tightening specifications as well as gaskets and O-rings.**
- **The plastic protectors installed to protect the open valves must only be removed immediately before installing the cylinder head.**
- **The engine oil and coolant must be changed if the cylinder head or cylinder head seal are replaced.**

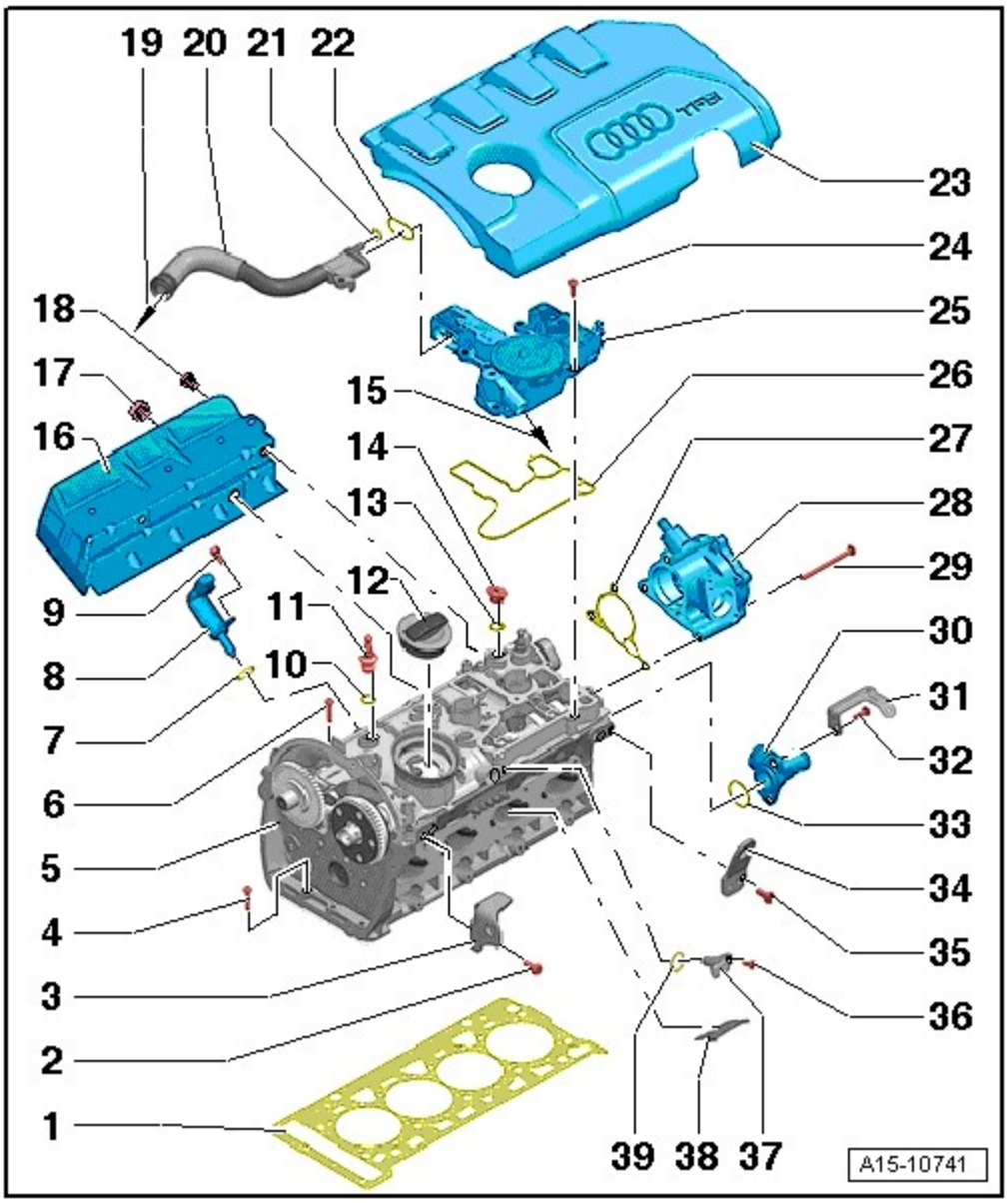

Fig. 16: Identifying Cylinder Head Overview
Courtesy of AUDI OF AMERICA, LLC

1. Cylinder Head Gasket
   - Replace
   - Note installation position: Parts number to cylinder head
2. Bolt
   - 25 Nm
3. Transport strap
4. Bolt
   - Replace
   - Follow the procedure when loosening. Refer to **Fig. 19**.

- Follow the procedure when tightening. Refer to **Fig. 20**.

5. Cylinder Head
   - Removing and installing, refer to **CYLINDER HEAD WITHOUT WRENCH CLEARANCE**
   - Check for distortion, refer to **Fig. 18**
6. Cylinder Head Bolt
   - Replace
   - Follow the procedure when loosening. Refer to **Fig. 19**.
   - Follow the procedure when tightening. Refer to **Fig. 20**.
7. O-ring
   - Replace
   - Coat with engine oil
8. Camshaft Adjuster Actuator
9. Bolt
   - 5 Nm
10. O-ring
    - Replace
    - Lubricate with engine oil
11. Sealing Plugs
    - 5 Nm
    - With ball head for the engine cover
12. Cap
    - With gasket
13. O-ring
    - Replace
    - Lubricate with engine oil
14. Sealing Plugs
15. To the Intake Manifold
16. Heat Shield
17. Bolt
    - 20 Nm
18. Bolt
    - 20 Nm
19. To the Intake Manifold/Turbocharger
20. Ventilation Pipe
21. O-ring
    - No replacement part
22. Gasket
    - No replacement part

23. Engine Cover
24. Bolt
    - Tightening sequence **Fig. 17**
25. Crankcase Ventilation
26. Gasket
    - No replacement part
27. Gasket
    - Replace if damaged
28. Vacuum Pump
    - Removing and installing, refer to **Removal and Installation**
29. Bolt
    - Tightening specifications, refer to **Description and Operation**
30. Connecting Piece
31. Mounting Plate
32. Bolt
    - 9 Nm
33. O-ring
    - Replace
    - Coat with coolant
34. Transport Strap
35. Bolt
    - 25 Nm
36. Bolt
    - 9 Nm
37. Camshaft Position Sensor -G40-
38. Partition Plate
39. O-ring
    - Replace
    - Lubricate with engine oil

Crankcase Ventilation, Tightening Sequence

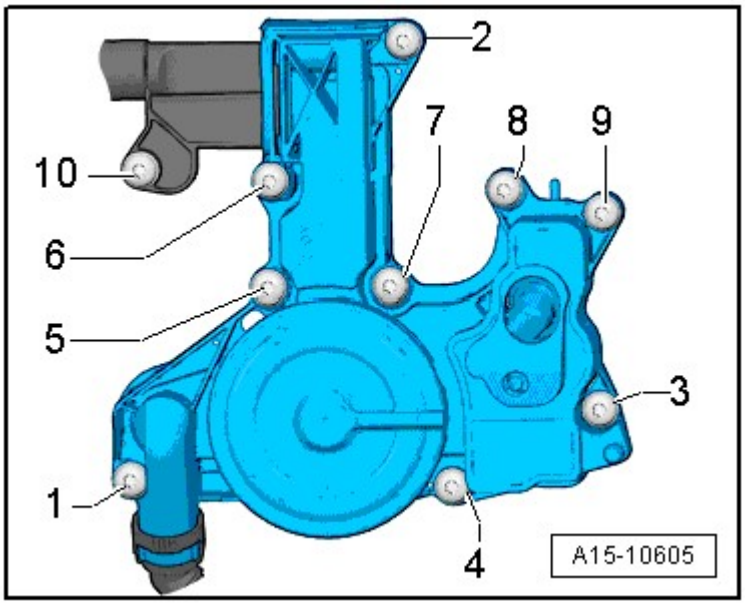

Fig. 17: Identifying Crankcase Ventilation - Tightening Sequence
Courtesy of AUDI OF AMERICA, LLC

NOTE:

- **The bolts are self-tapping. Only use original bolts when replacing the cylinder head, since the cylinder head is delivered without a thread for the installing the crankcase ventilation.**
- **It is not permitted to cut the thread with a thread cutter.**
- **Tighten the crankcase ventilation bolts to 11 Nm in -1 to 10- sequence.**

Checking Cylinder Head for Distortion

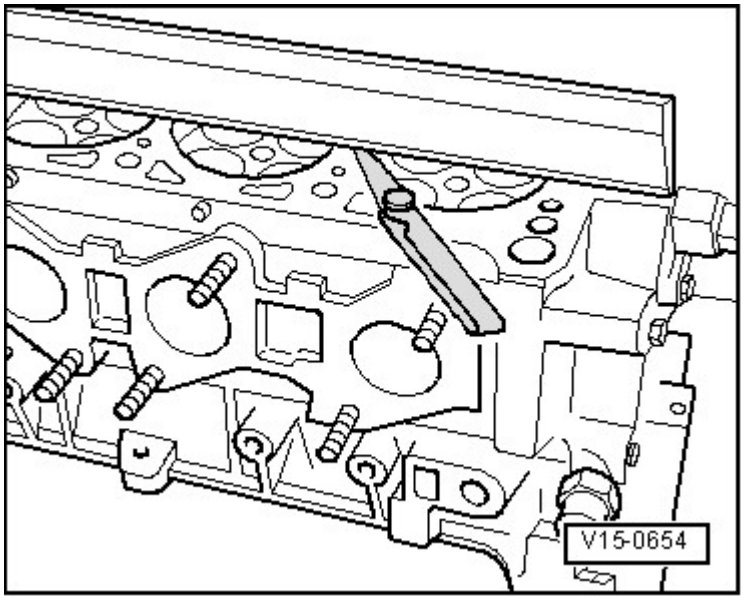

Fig. 18: Checking Cylinder Head For Distortion

Courtesy of AUDI OF AMERICA, LLC

-- Check the cylinder head for distortion with the straight edge and feeler gauge in several places.

- Max. permissible distortion: 0.05 mm

Loosening Cylinder Head

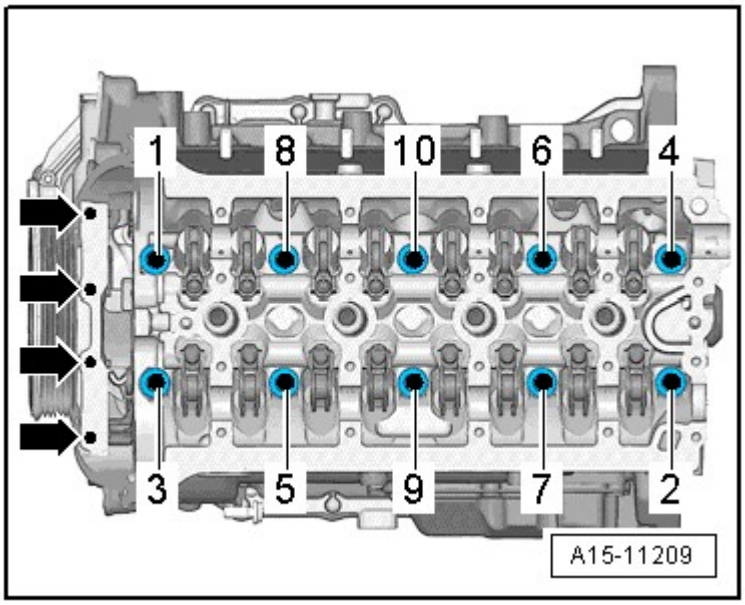

Fig. 19: Loosening Cylinder Head
Courtesy of AUDI OF AMERICA, LLC

-- Remove the bolts -arrows-.

-- Loosen the cylinder head bolts in sequence -1 through 10-

Cylinder Head Tightening Sequence

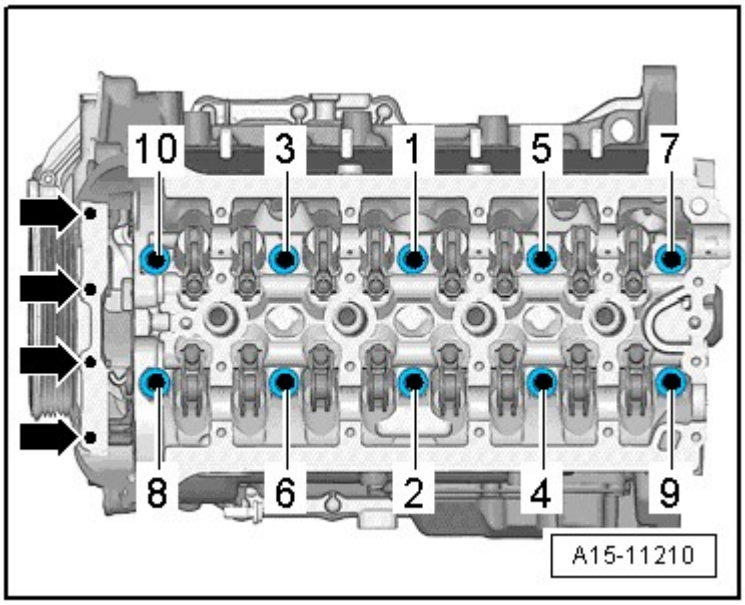

Fig. 20: Identifying Cylinder Head Tightening Sequence
Courtesy of AUDI OF AMERICA, LLC

-- Tighten the cylinder head bolts in -1 through 10- sequence.

1. Tighten to 40 Nm using a torque wrench.
2. Tighten further 90° using a rigid wrench.
3. Tighten further 90° using a rigid wrench.
4. Tighten the bolts -arrows- to 8 Nm.
5. Tighten the bolts -arrows- 90° further using a rigid wrench.

VALVETRAIN OVERVIEW

NOTE:

- **The cylinder head and the cylinder head cover must be replaced together.**
- **Do not start the engine for approximately 30 minutes after installing the camshafts. The hydraulic equalization elements must seat themselves (otherwise the valves will crash into the pistons).**
- **After working on the valvetrain and lifters, carefully rotate the crankshaft by hand at least 2 full revolutions before starting to be sure that valves do not strike the pistons.**
- **Always replace the gaskets and seals.**

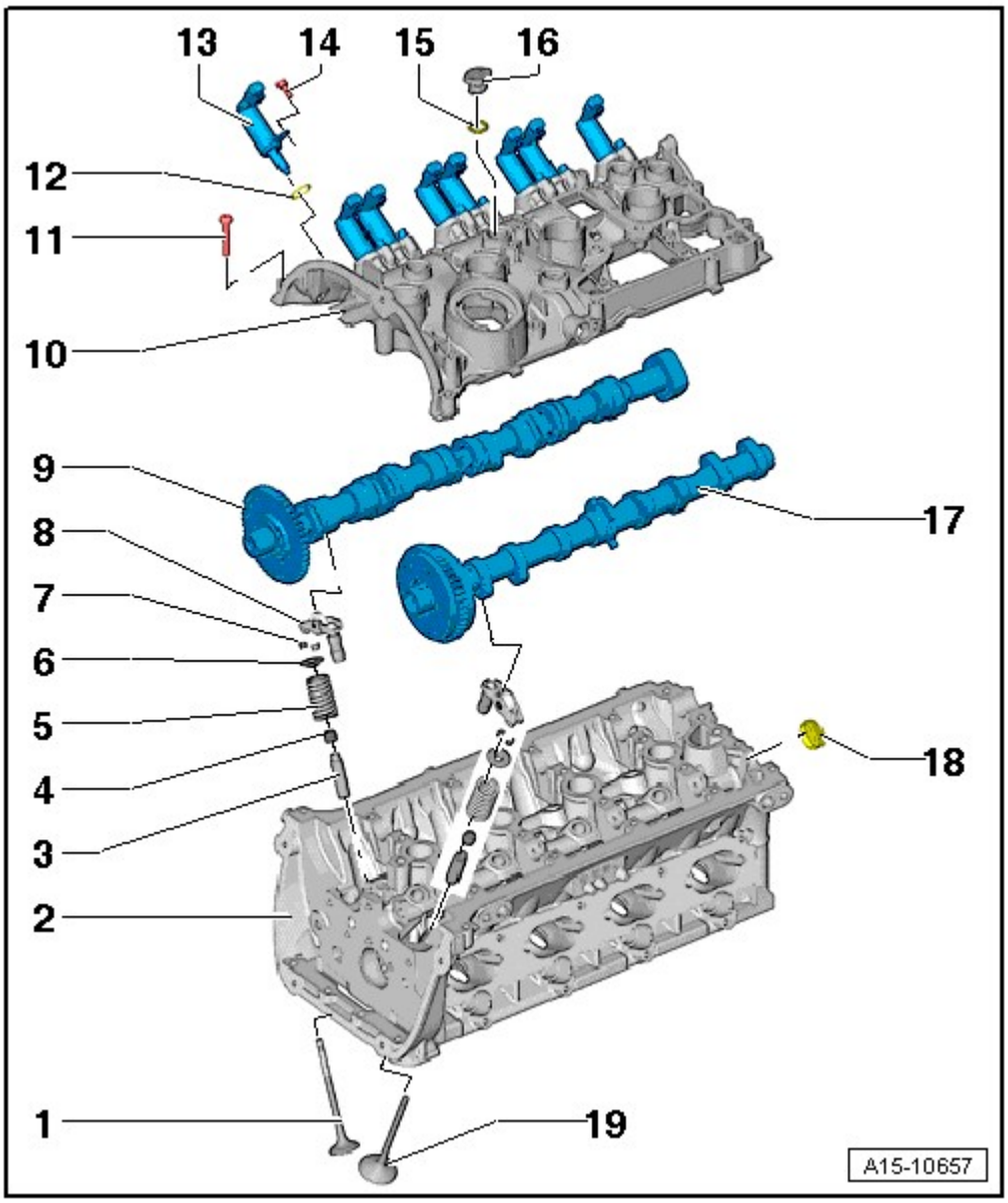

Fig. 21: Identifying Valvetrain Overview
Courtesy of AUDI OF AMERICA, LLC

1. Exhaust Valve
   - Do not rework, only lapping is permitted
   - For the correct valve dimensions, refer to **Fig. 24**
   - Valve guides, checking, refer to **VALVE GUIDES, CHECKING**
2. Cylinder Head
3. Valve Guide
   - Checking, refer to **VALVE GUIDES, CHECKING**
4. Valve Stem Seal
   - Replace, refer to **VALVE STEM SEALS WITH CYLINDER HEAD INSTALLED** or **VALVE**

STEM SEALS WITH CYLINDER HEAD REMOVED

5. Valve Spring
6. Valve Spring Plate
7. Valve Retainers
8. Hydraulic Adjusting Element
    - With roller rocker lever
    - Do not interchange
    - Lubricate contact surface
9. Exhaust Camshaft
    - Removing and installing, refer to **CAMSHAFTS**
    - Check radial clearance using Plastigage (roller rocker lever removed)
    - Radial clearance: 0.024 to 0.066 mm
    - Run-out: max. 0.04 mm
10. Cylinder Head Cover
    - With integrated camshaft bearings
    - Clean sealing surface, reworking is not permitted.
    - Remove old sealant residue.
11. Bolt
    - Replace
    - Loosening, refer to **Fig. 22**
    - Tightening sequence, refer to **Fig. 23**
12. O-ring
    - Replace
    - Coat with engine oil
13. Camshaft Adjuster Actuator
14. Bolt
    - 5 Nm
15. O-ring
    - Replace
    - Coat with engine oil
16. Sealing Plugs
17. Intake Camshaft
    - Removing and installing, refer to **CAMSHAFTS**
    - Check radial clearance using Plastigage (roller rocker lever removed)
    - Radial clearance: 0.024 to 0.066 mm
    - Run-out: max. 0.04 mm
18. Cap
    - Replace

- Removing with the cylinder head cover installed, pierce through one side of the cover with an awl and pry it out
- Installing **Fig. 225**

19. Intake Valve
    - Do not rework, only lapping is permitted
    - For the correct valve dimensions, refer to **Fig. 24**
    - Valve guides, checking, refer to **VALVE GUIDES, CHECKING**

Loosening Cylinder Head Cover

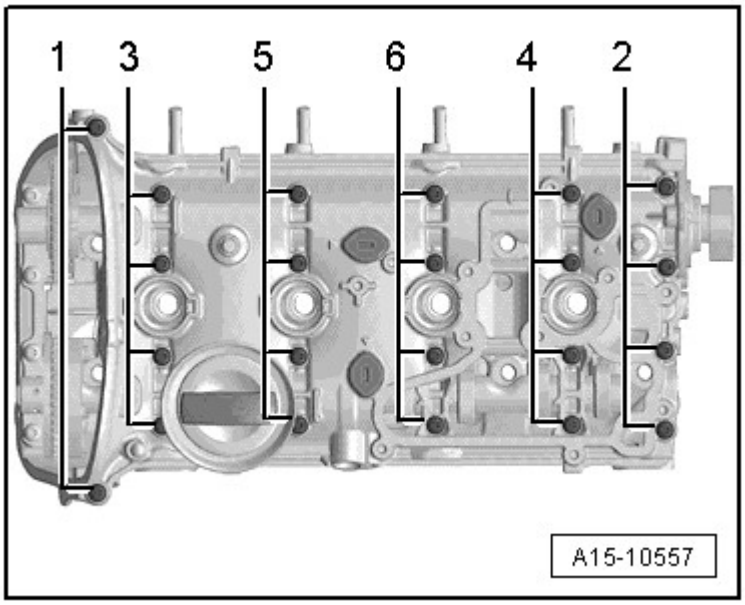

Fig. 22: Identifying Cylinder Head Cover Loosening
Courtesy of AUDI OF AMERICA, LLC

-- Loosen the cylinder head cover in sequence -1 through 6-.

Cylinder Head Cover Tightening Sequence

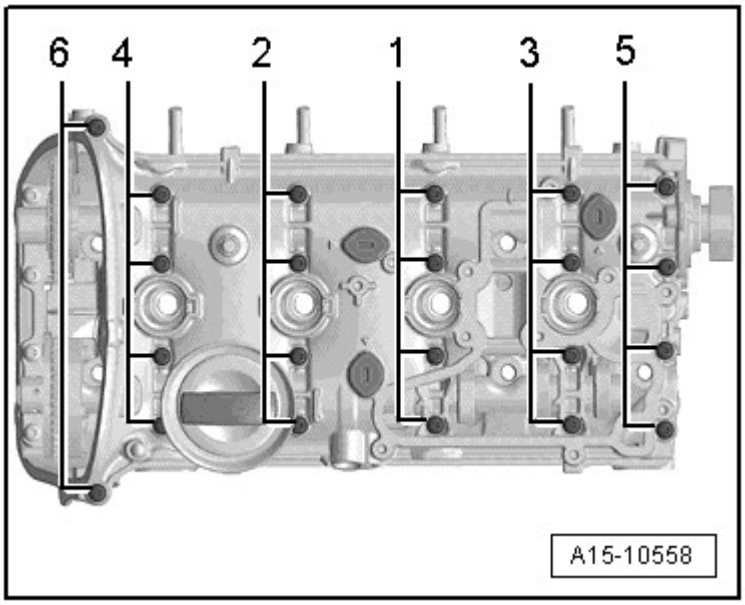

Fig. 23: Identifying Cylinder Head Cover Tightening Sequence
Courtesy of AUDI OF AMERICA, LLC

-- Replace the bolts.

1. Hand-tighten bolts in several steps in -1 to 6- sequence.
2. Tighten the bolts in a -1 to 6- sequence to 8 Nm using a torque wrench.
3. Tighten the bolts an additional 90° using a rigid wrench in the sequence -1 to 6-.

NOTE: Make sure the cylinder head cover is not tilted.

Valve Dimensions

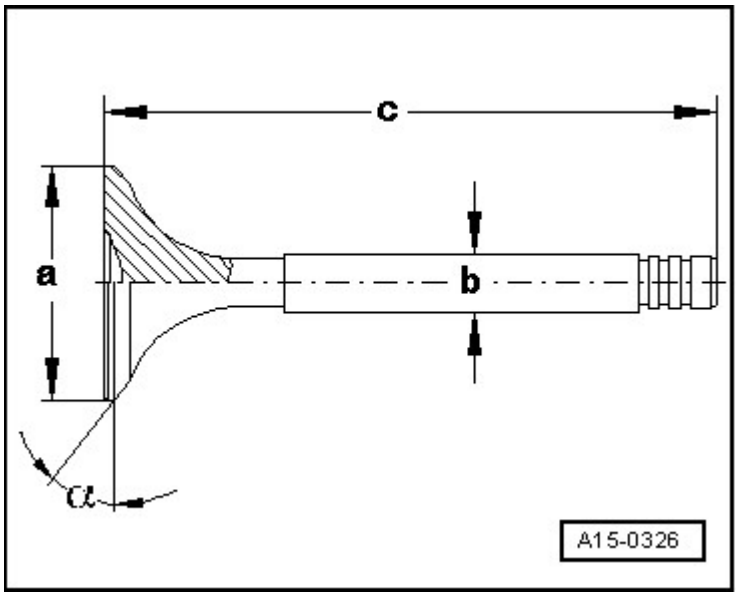

Fig. 24: Identifying Valve Dimensions
Courtesy of AUDI OF AMERICA, LLC

NOTE: **Intake and exhaust valves must not be refaced by grinding. Only lapping is permitted.**

Dimension		Intake Valve	Exhaust Valve
Diameter a	mm	33.85 ± 0.10	28.0 ± 0.1
Diameter b	mm	5.98 ± 0.01	5.96 ± 0.01
c	mm	104.0 ± 0.2	101.9 ± 0.2
a	Angle°	45	45

SPECIFICATIONS

FASTENER TIGHTENING SPECIFICATIONS

Component	Bolt Size	Nm
Balance shaft for exhaust side (2)	-	9
Balance shaft for intake side (2)	-	9
Bearing bracket (1), (2)		
	-	9
	-	20 + 90°
Camshaft adjuster actuator	-	5
Camshaft position sensor	-	9
Camshaft timing chain guide rail, guide pins	-	20
Chain tensioner (4)	-	9
Chain tensioner (3)	-	85
Control valve	-	35
Cylinder head with wrench clearance (2), (5)		
Tighten in 3 stages: • Tighten to 40 Nm. • Tighten 90° further using a rigid wrench. • Tighten 90° further using a rigid wrench.		
Tighten in 2 stages: • Tighten to 8 Nm • Tighten 90° further using a rigid wrench.		
Guide rail for balance shaft timing chain	-	20
Guide rail for timing chain	-	20
Guide tube for oil dipstick	-	9

Heat shield	-	20
Mounting plate	-	9
Sealing plugs with ball head for the engine cover	-	5
Tensioning rail for timing chain	-	20
Timing chain tensioning rail, guide pins	-	20
Transport bracket	-	25

(1) For bolt tightening clarification, refer to **CAMSHAFT TIMING CHAIN OVERVIEW** and see items -5 and 7-

(2) Always replace

(3) For bolt tightening clarification, refer to **BALANCE SHAFT TIMING CHAIN OVERVIEW** and see item -4-

(4) For bolt tightening clarification, refer to **CAMSHAFT TIMING CHAIN OVERVIEW** and see item -2-

(5) For bolt tightening clarification, refer to **CYLINDER HEAD OVERVIEW, WITH WRENCH CLEARANCE** and see items -4 and 6-

Upper Timing Chain Cover - Tightening Sequence

-- Tighten the bolts -1 through 5- in the sequence shown:

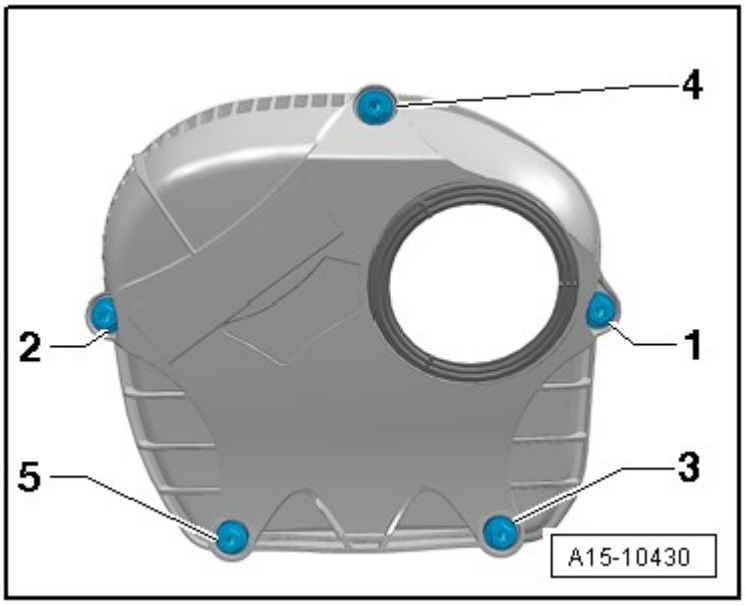

Fig. 25: Identifying Upper Timing Chain Cover - Tightening Sequence
Courtesy of AUDI OF AMERICA, LLC

-- Tighten the bolts to 9 Nm.

Lower Timing Chain Guard - Tightening Sequence for 15 Bolts

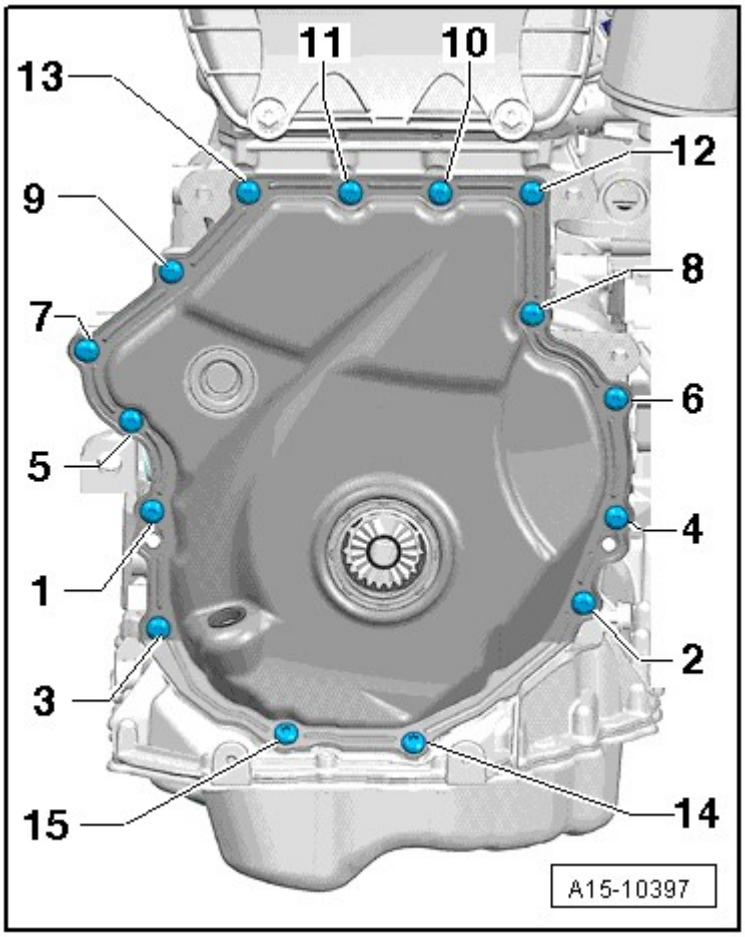

Fig. 26: Identifying Timing Chain Lower Cover Tightening Sequence
Courtesy of AUDI OF AMERICA, LLC

-- Tighten the bolts -1 through 15- in 2 stages in the sequence shown:

-- 1. Tighten the bolts to 8 Nm.

-- 2. Tighten the bolts an additional 45°.

Lower Timing Chain Guard - Tightening Sequence for 8 Bolts

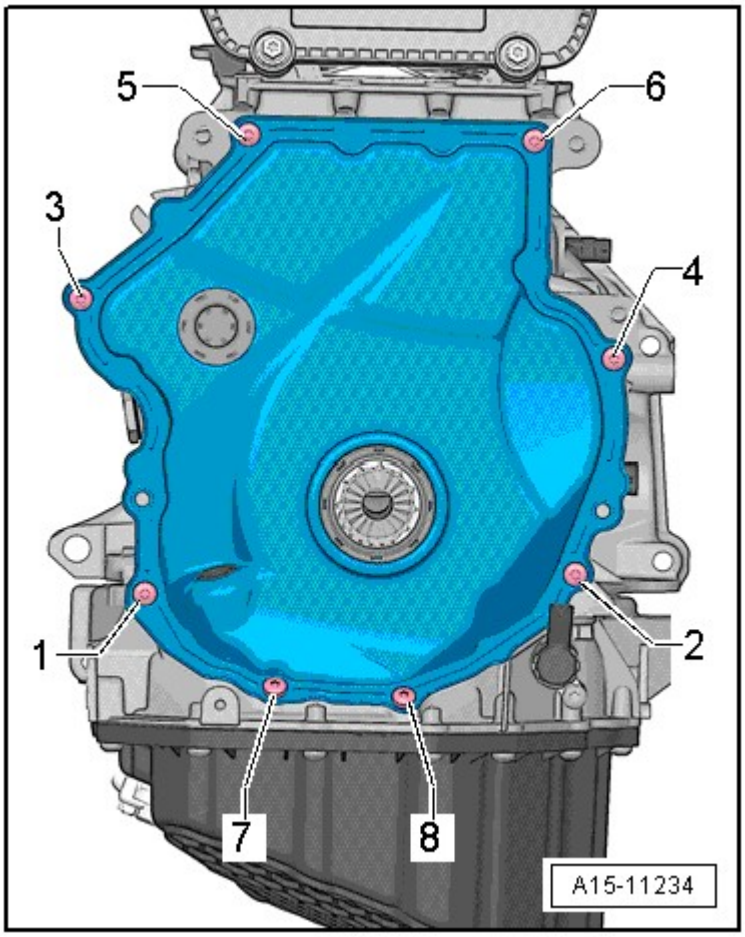

Fig. 27: Identifying Timing Chain Guard Lower Section - Tightening Sequence for 8 Bolts
Courtesy of AUDI OF AMERICA, LLC

-- Tighten the bolts -1 through 8- in 2 stages in the sequence shown:

-- 1. Tighten the bolts to 4 Nm.

-- 2. Tighten the bolts an additional 45°.

Intermediate Shaft Sprocket Tightening Sequence

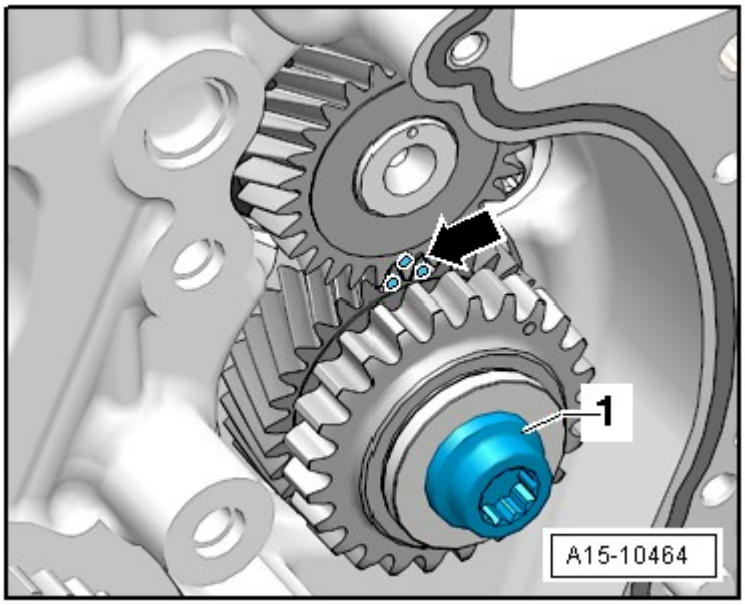

Fig. 28: Identifying Intermediate Shaft Sprocket
Courtesy of AUDI OF AMERICA, LLC

CAUTION: Always replace the intermediate shaft sprocket. Otherwise the backlash will not adjust itself and it could result in engine damage.

The new intermediate shaft sprocket has an anti-friction coating that wears off after a short period of use, which automatically adjusts the backlash.

-- Tighten with a new bolt as follows:

1. Tighten to 10 Nm using a torque wrench.

2. Rotate the intermediate shaft sprocket.

The intermediate shaft sprocket must not have any play. Loosen and tighten it again if necessary.

3. Tighten to 25 Nm using a torque wrench.

4. Tighten further 90° using a rigid wrench.

Crankcase Ventilation, Tightening Sequence

NOTE:

- **The bolts are self-tapping. Only use original bolts when replacing the cylinder head, since the cylinder head is delivered without a thread for the installing the crankcase ventilation.**
- **It is not permitted to cut the thread with a thread cutter.**

-- Tighten the crankcase ventilation bolts to 11 Nm in sequence -1 through 10-.

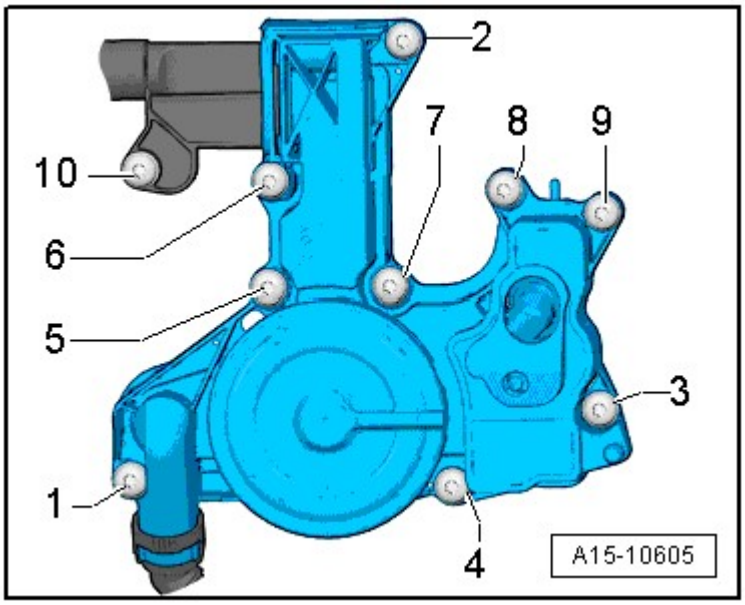

Fig. 29: Identifying Crankcase Ventilation - Tightening Sequence
Courtesy of AUDI OF AMERICA, LLC

Cylinder Head Tightening Sequence

-- Tighten the cylinder head bolts in -1 through 10- sequence.

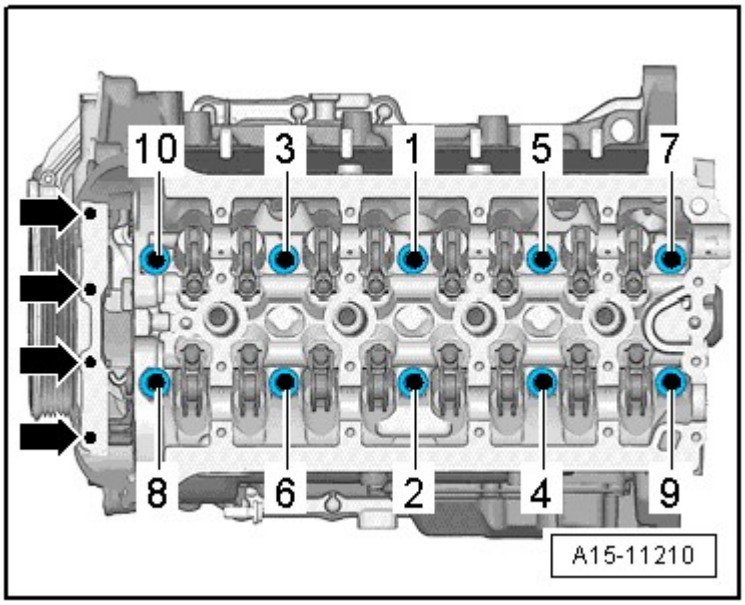

Fig. 30: Identifying Cylinder Head Tightening Sequence
Courtesy of AUDI OF AMERICA, LLC

1. -- Tighten to 40 Nm using a torque wrench.
2. -- Tighten further 90° using a rigid wrench.

3. -- Tighten further 90° using a rigid wrench.
4. -- Tighten the bolts -arrows- to 8 Nm.
5. -- Tighten the bolts -arrows- 90° further using a rigid wrench.

Cylinder Head Cover Tightening Sequence

-- Replace the bolts.

1. Hand-tighten bolts in several stages in sequence -1 through 6-.

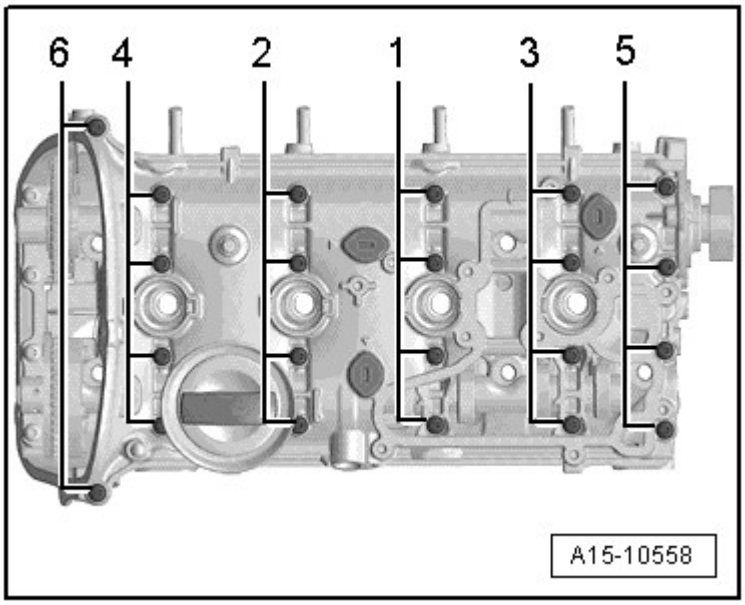

Fig. 31: Identifying Cylinder Head Cover Tightening Sequence
Courtesy of AUDI OF AMERICA, LLC

2. Tighten the bolts in sequence -1 through 6- to 8 Nm using a torque wrench.

3. Tighten the bolts an additional 90° using a rigid wrench in the sequence -1 through 6-.

NOTE: Make sure the cylinder head cover is not tilted.

DIAGNOSIS AND TESTING

VALVE TIMING, CHECKING

Special tools and workshop equipment required

- Dial Gauge 0-10 mm -VAS 6079-

-- Remove timing chain upper cover. Refer to **UPPER TIMING CHAIN GUARD**.

-- Remove the noise insulation. Refer to **Description and Operation** .

Turn the vibration damper, from underneath, in direction of engine rotation to Top Dead Center TDC.

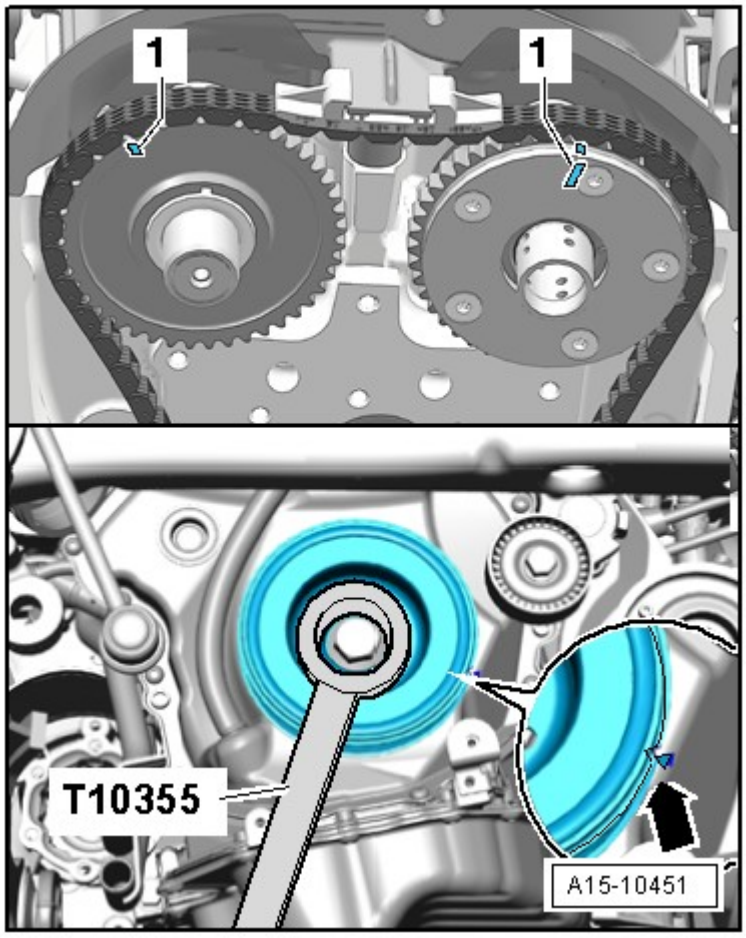

Fig. 32: Identifying Vibration Damper Rotated Into "OT" Position Using Counter Hold Tool T10355
Courtesy of AUDI OF AMERICA, LLC

NOTE: Use a ratchet with a 24 mm socket to turn the vibration damper. Always turn vibration damper in direction of engine rotation to "TDC". Do not turn the vibration damper backward to get to TDC!

- The notch on the vibration damper and the marking on the timing chain guard lower section must be opposite one another -arrow-.
- The markings -1- on the camshafts must point upward.

-- Measure the distance from the outer edge -1- to the marking -2- on the intake camshaft.

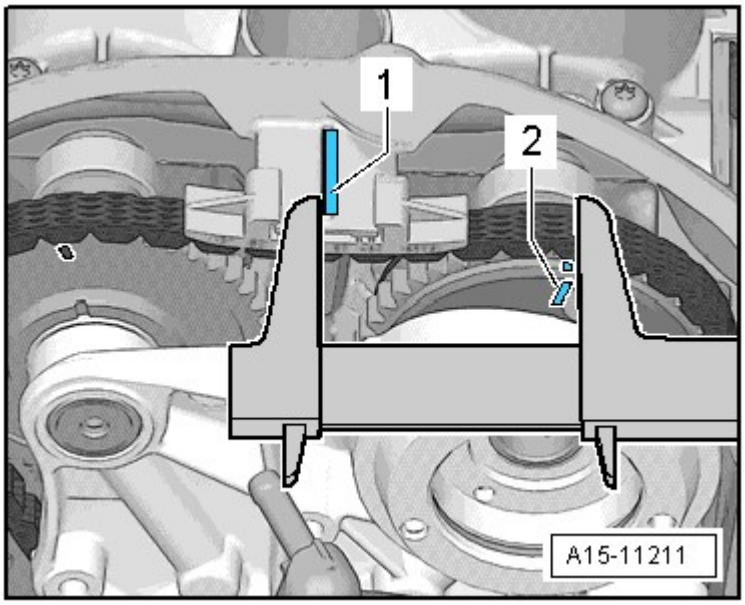

Fig. 33: Measuring Distance From Outer Edge To Marking On Intake Camshaft
Courtesy of AUDI OF AMERICA, LLC

- Specified value: 61 to 64 mm.

-- Once the specified value is reached, measure the distance between the marking on the exhaust camshaft -3- and the marking on the intake camshaft -4-.

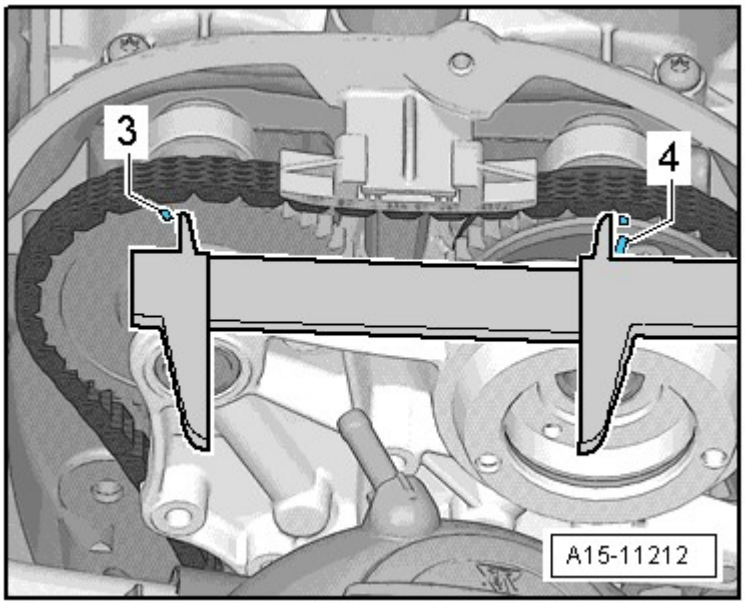

Fig. 34: Measuring Distance Between Marking On Exhaust Camshaft And Marking On Intake Camshaft
Courtesy of AUDI OF AMERICA, LLC

- Specified value: 124 to 126 mm.

NOTE: **If one tooth has an offset, there will be a deviation of approximately 6 mm from the specified value. Install the timing chain once again if there is an offset.**

POSITIONING ENGINE AT TDC WITH DIAL GAUGE 0-10 MM -VAS 6079-

Special tools and workshop equipment required

- Dial Gauge 0-10 mm -VAS 6079-
- Dial Gauge Adapter -T10170- or Dial Gauge Adapter -T10170 A-

- Remove timing chain upper cover
- Turn the crankshaft with the socket SW 24 on the vibration damper in the direction of the engine rotation until the markings -arrows- are on top.

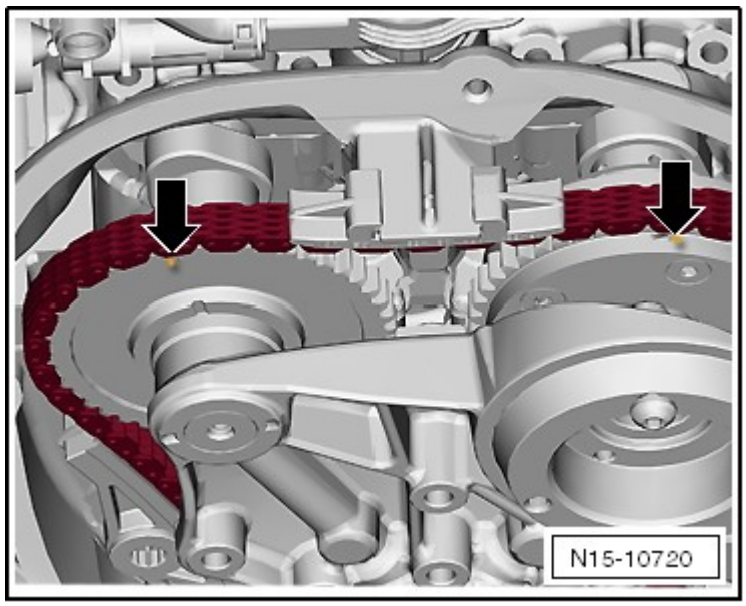

Fig. 35: Turning Crankshaft In Direction Of Engine Rotation Until Markings Are On Top
Courtesy of AUDI OF AMERICA, LLC

- Remove the spark plug from cylinder 1.
- Install the -T10170/A- all the way into the spark plug thread.
- Insert the -VAS 6079- with the -T10170A/1- all the way and secure it with the locking nut -arrow-.

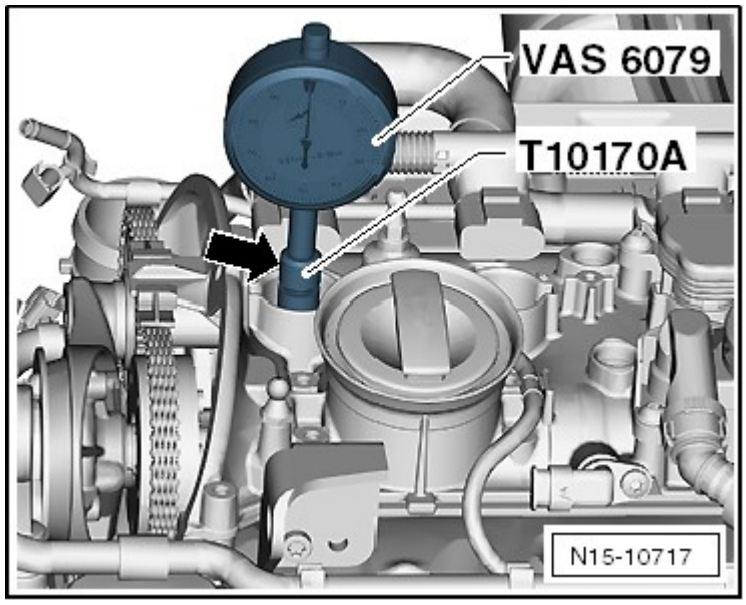

Fig. 36: Identifying Dial Gauge -VAS 6079- With Extending Piece -T10170A/1-
Courtesy of AUDI OF AMERICA, LLC

- Turn the crankshaft slowly to maximum dial reading in the direction of the engine rotation. When the maximum dial reading is reached (Bottom Dead Center (BDC) of the meter) position the piston at Top Dead Center (TDC).

NOTE: Use a ratchet with a 24 mm socket to turn the vibration damper. Always turn vibration damper in direction of engine rotation to TDC. Do not turn the vibration damper backward to get to TDC!

COMPRESSION PRESSURE, CHECKING

Special tools and workshop equipment required

- Spark Plug Removal Tool 3122 B
- Ignition Coil Puller T40039
- Compression Tester V.A.G 1763

Test Sequence

NOTE: Engine oil temperature min. 30°C (86°F)

Battery voltage at least 12.7 V

-- Remove the engine cover -arrows-.

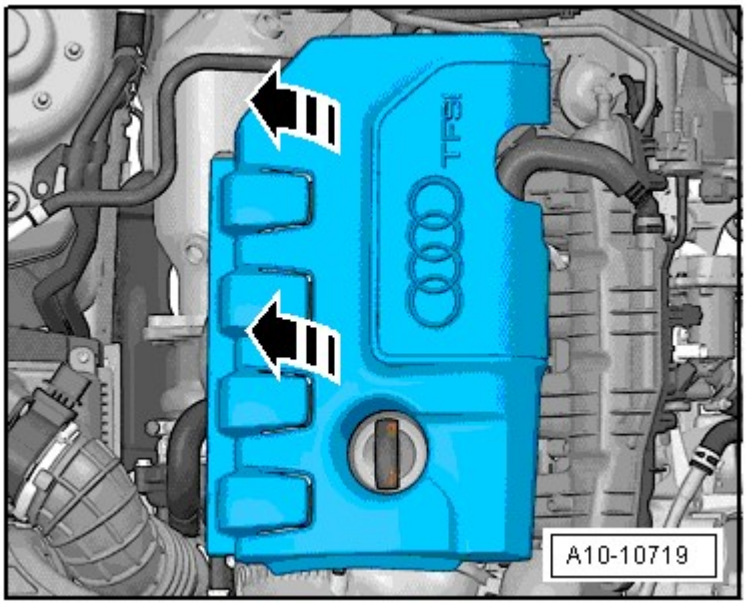

Fig. 37: Identifying Engine Cover
Courtesy of AUDI OF AMERICA, LLC

-- Remove the bolts on the ignition coil connector strip.

-- Release the connector -arrows- and disconnect all the connectors at the same time from the ignition coils.

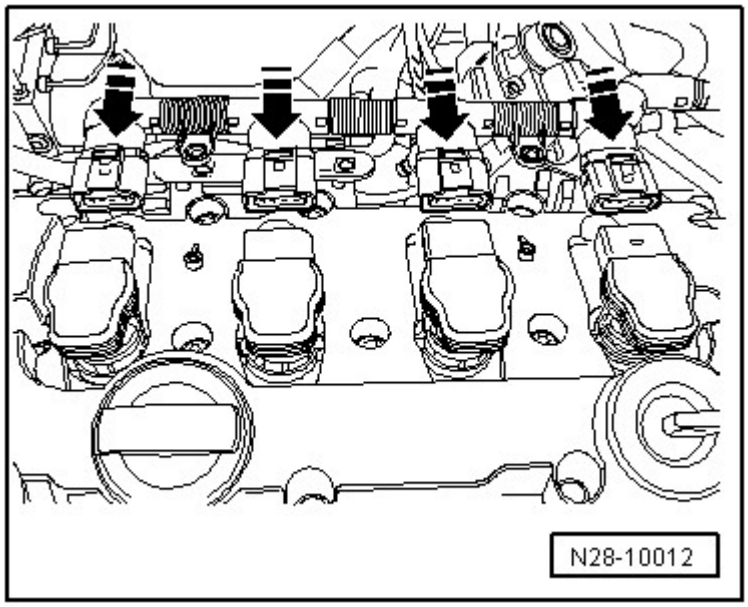

Fig. 38: Connecting Connectors To Ignition Coils
Courtesy of AUDI OF AMERICA, LLC

-- Remove the ignition coils with the T40039.

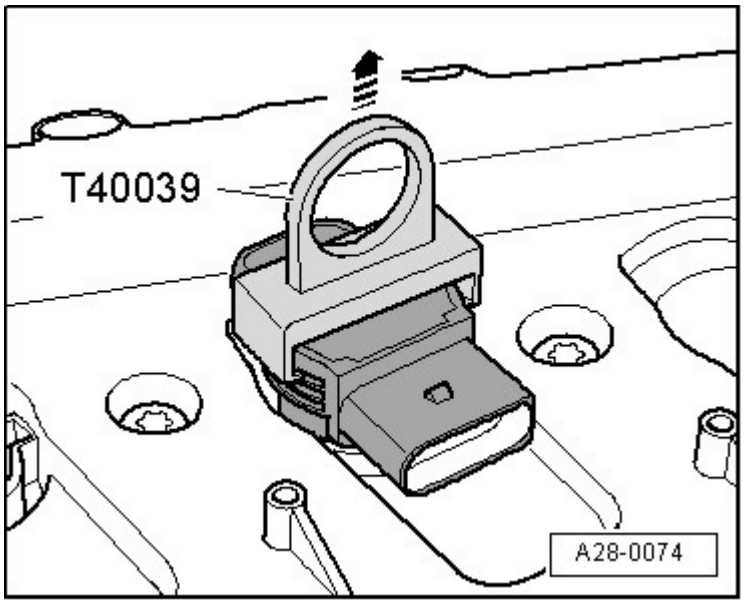

Fig. 39: Identifying Ignition Coil Puller T40039 To Remove Ignition Coils
Courtesy of AUDI OF AMERICA, LLC

-- Remove the spark plugs using a 3122 B.

-- Check compression using V.A.G 1763 and V.A.G 1763/6.

NOTE: Using tester see operating Instructions.

-- Operate starter until tester shows no further pressure increase.

Compression Pressure:

New Bar Positive Pressure	Wear Limit Bar Positive Pressure	Difference Between Cylinders Bar Positive Pressure
11.0 to 14.0	7.0	Max. 3.0

-- Install the spark plugs. Refer to **MAINTENANCE PROCEDURES**

-- Install the ignition coils with output stages. Refer to **Removal and Installation** .

NOTE: By separating the connections, Diagnostic Trouble Codes (DTCs) are stored to memory. After the test, check the DTC memory and erase, if necessary.

-- Check the Engine Control Module (ECM) DTC memory. Refer to vehicle diagnostic, tester under "Guided Fault Finding".

VALVE GUIDES, CHECKING

Special tools and workshop equipment required

- Dial Gauge Holder VW 387
- Dial Gauge 0-10 mm VAS 6079

Test Sequence

-- Insert valve into guide. Valve stem end must be flush with the guide. Due to differences in valve stem diameter, make sure that only intake valves are used to check intake valve guides, and only exhaust valves are used to check exhaust valve guides.

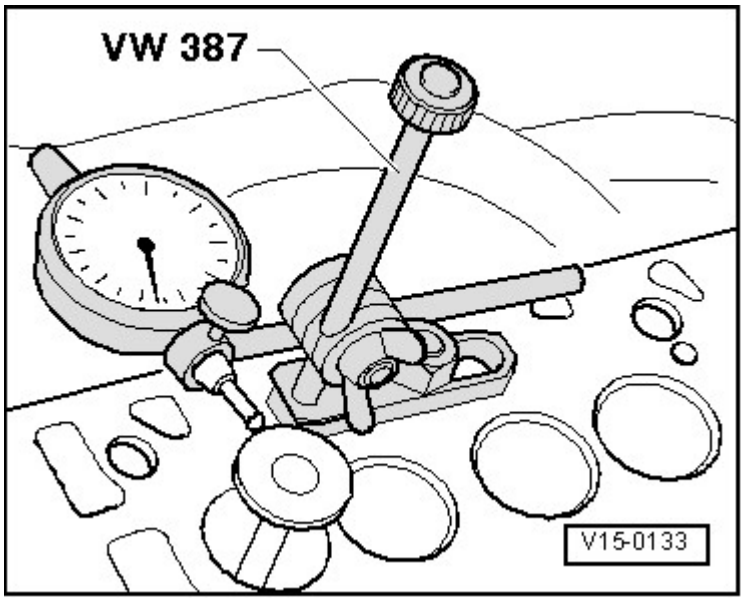

Fig. 40: Determining Valve Rock (Wear limit)
Courtesy of AUDI OF AMERICA, LLC

-- Determine tip clearance.

Wear Limit

Intake Valve Guide	Exhaust Valve Guide
0.80 mm	0.80 mm

NOTE: **If wear limit is exceeded, measure again using new valves. If wear limit is still exceeded, replace cylinder head.**

If the valve is to be replaced as part of a repair, use a new valve for the calculation.

REMOVAL AND INSTALLATION

CAMSHAFT ADJUSTMENT VALVE 1 -N205-

Removing

-- Disconnect the connector from the camshaft adjustment valve 1 -1-.

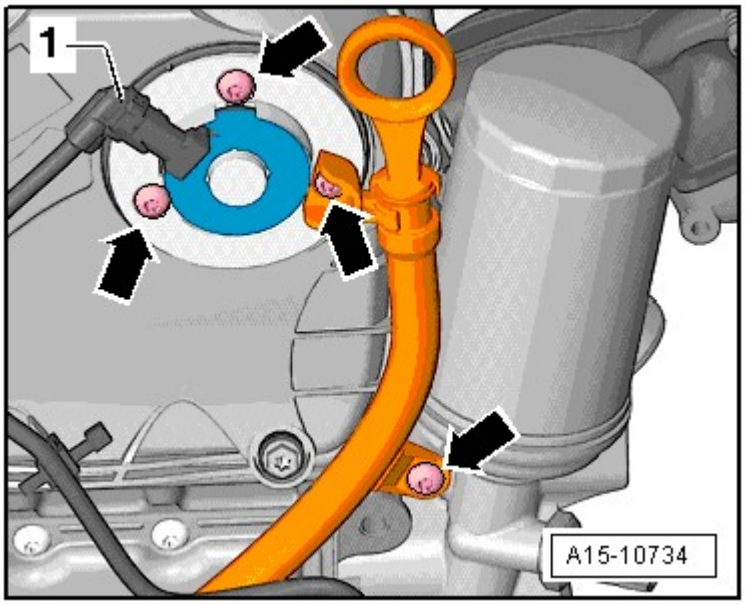

Fig. 41: Disconnecting Connector
Courtesy of AUDI OF AMERICA, LLC

-- Remove the bolts -arrows- and then the camshaft adjustment valve 1.

Installing

Install in reverse order of removal. Note the following:

- Tightening specifications, refer to **TIMING CHAIN GUARDS, Camshaft Adjustment Valve 1 -N205- OVERVIEW**.

NOTE: Replace O-ring.

-- Coat the seal and the O-ring with engine oil.

UPPER TIMING CHAIN GUARD

Removing

-- Disconnect the connector from the camshaft adjustment valve 1 -N205- -1-.

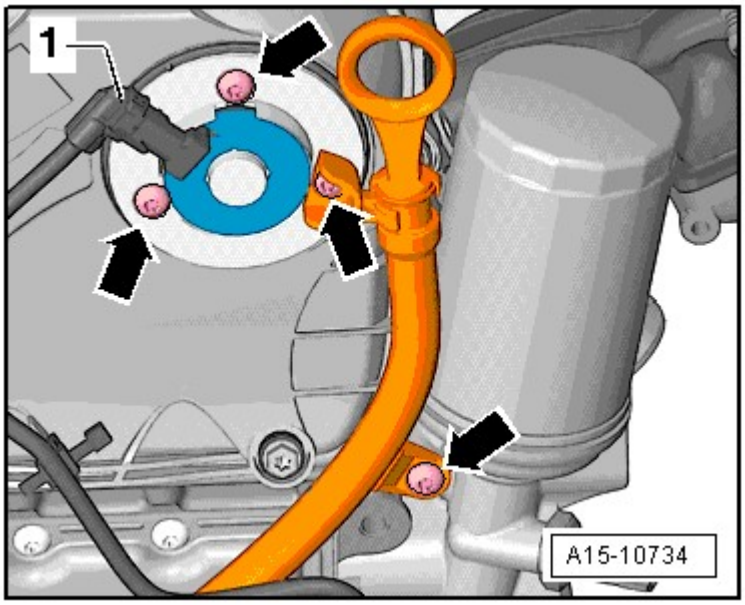

Fig. 42: Disconnecting Connector
Courtesy of AUDI OF AMERICA, LLC

-- Remove the bolts -arrows- and then the camshaft adjustment valve 1.

-- Remove the bolts -1 through 5- and the timing chain guard upper section.

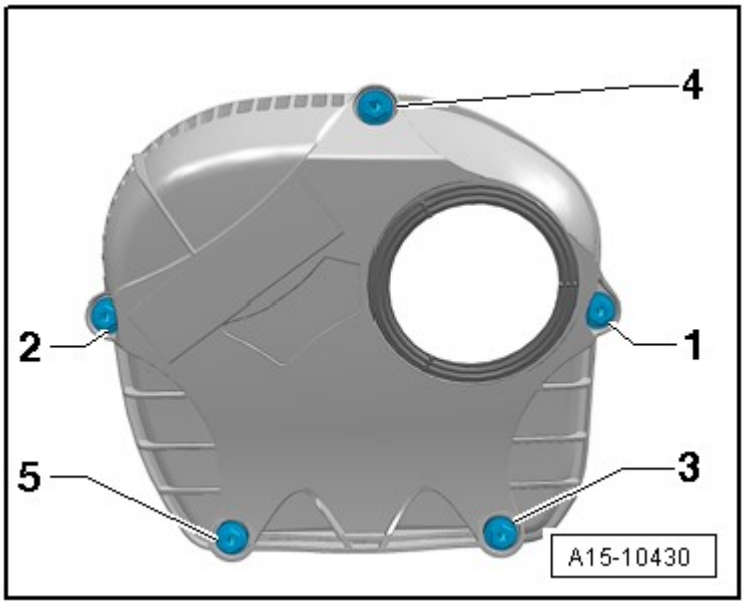

Fig. 43: Identifying Upper Timing Chain Cover - Tightening Sequence
Courtesy of AUDI OF AMERICA, LLC

Installing

Install in reverse order of removal. Note the following:

- Tightening specifications, refer to **TIMING CHAIN GUARDS, Camshaft Adjustment Valve 1 -N205- OVERVIEW**.

NOTE: Replace O-ring.

-- Coat the seal and the O-ring with engine oil.

-- Install the timing chain upper cover, tightening sequence. Refer to **Fig. 4**.

-- Install the camshaft adjustment valve 1. Refer to **Camshaft Adjustment Valve 1 -N205-**.

LOWER TIMING CHAIN COVER

Special tools and workshop equipment required

- Locking Tool T40098
- Counter Hold Tool T10355
- Thrust Piece T10368

Removing

-- Remove the front noise insulation. Refer to **Description and Operation** .

-- Remove the front bumper cover and bumper. Refer to **Removal and Installation** .

-- Install the lock carrier in service position. Refer to **Description and Operation** .

CAUTION: Risk of destroying due to reversed running direction on a used ribbed belt.

- **Before removing ribbed belt, marking running direction with chalk or felt-tip pen for reinstallation later.**

-- To release ribbed belt tension, rotate tensioner in direction of -arrow-.

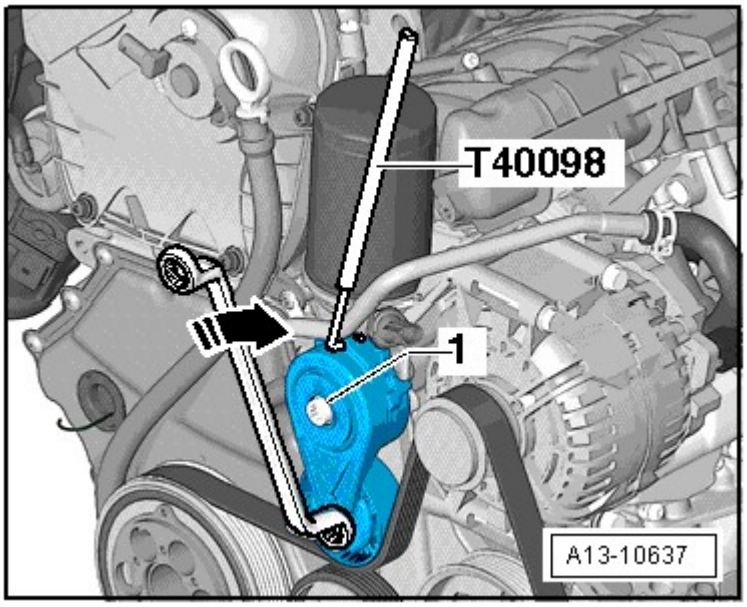

Fig. 44: Releasing Ribbed Belt Tension, Rotate Tensioner In Direction Of Arrow
Courtesy of AUDI OF AMERICA, LLC

-- Secure the tensioner with the T40098.

-- Remove the bolt -1- and remove the ribbed belt tensioner from the accessory assembly bracket.

-- Remove ribbed belt.

-- Rotate the vibration damper using the T10355 into the "TDC" position -arrow-.

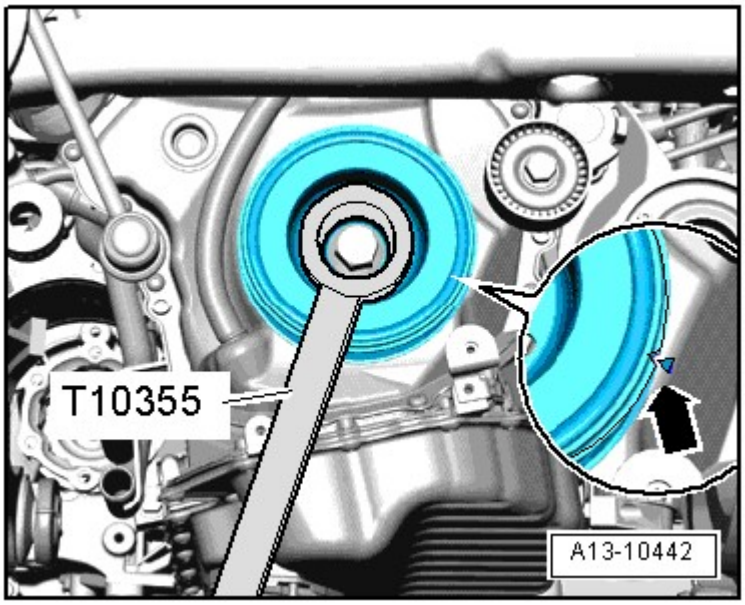

Fig. 45: Identifying Vibration Damper Rotated Into "OT" Position Using Counter Hold Tool T10355
Courtesy of AUDI OF AMERICA, LLC

- The notch on the vibration damper must line up with the arrow marking on the timing chain lower cover.

-- Remove vibration damper bolt using the T10355.

-- Remove the vibration damper.

NOTE: To avoid damaging the splines, only install the vibration damper bolt with the T10368.

-- Install the vibration damper bolt and T10368 again.

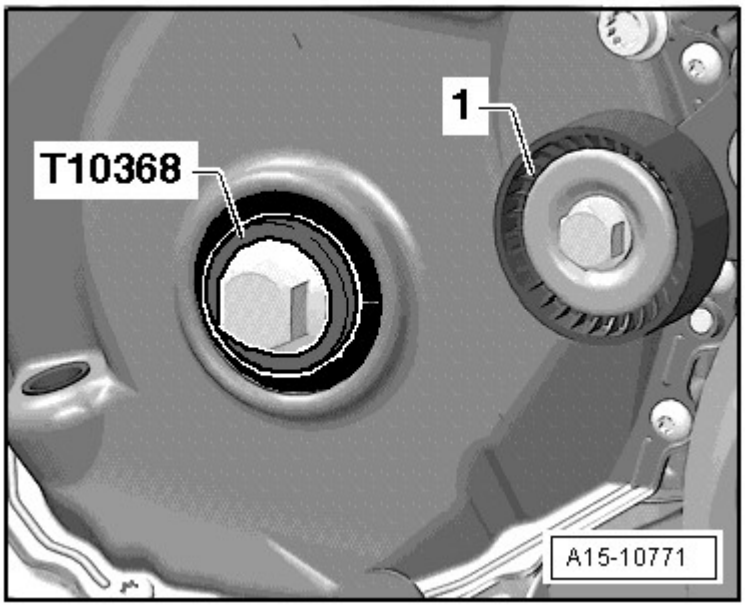

Fig. 46: Identifying Vibration Damper Bolt And T10368
Courtesy of AUDI OF AMERICA, LLC

CAUTION: The engine could be destroyed.

- **In order not to change the valve timing, the crankshaft must not be moved out of the "TDC" position when the vibration damper bolt is removed.**

-- Remove the idler roller -1-.

-- Remove the bolts -arrows- and remove the oil dipstick guide tube from the timing chain cover.

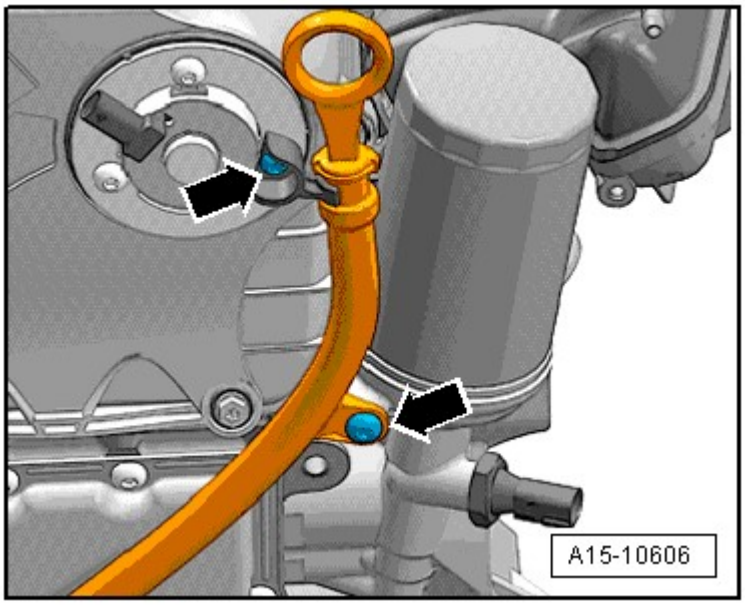

Fig. 47: Identifying Oil Dipstick Guide Tube And Bolts
Courtesy of AUDI OF AMERICA, LLC

-- Remove the bolts -1 through 15-.

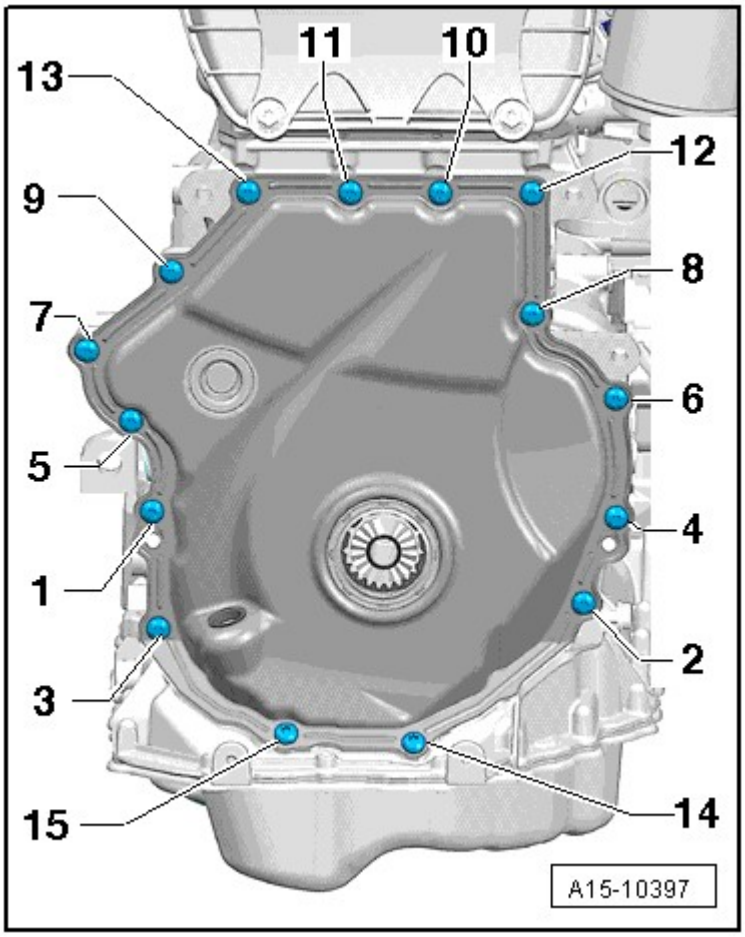

Fig. 48: Identifying Timing Chain Lower Cover Tightening Sequence
Courtesy of AUDI OF AMERICA, LLC

NOTE: There may be 8 bolts installed, depending on the version.

-- Pry off the timing chain guard lower section

Installing

- For the correct tightening specifications, refer to **TIMING CHAIN GUARDS, Camshaft Adjustment Valve 1 -N205- OVERVIEW**
- Silicon sealant

NOTE:

- **Note the expiration date of the silicone sealant.**
- **The cover must be installed within 5 minutes after the silicone sealant has been applied.**
- **Replace the bolts which are being tightened with an additional turn.**
- **Replace sealing rings, seals and self-locking nuts.**

CAUTION: Risk of contaminating lubricating system.

- **Cover open parts of the engine.**

-- Remove any sealant residue on the cylinder block using a flat blade scraper.

-- Clean any oil or grease off the sealing surfaces.

-- Make sure both alignment bushings for centering the cover -arrows- are present.

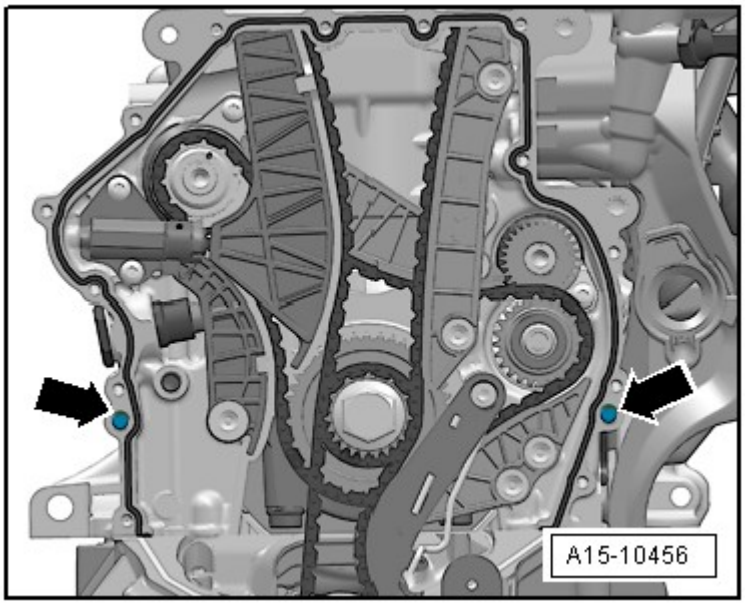

Fig. 49: Identifying Centering Cover Alignment Bushings
Courtesy of AUDI OF AMERICA, LLC

-- Cut the tube nozzle at the front marking (nozzle diameter: approximately 2 mm).

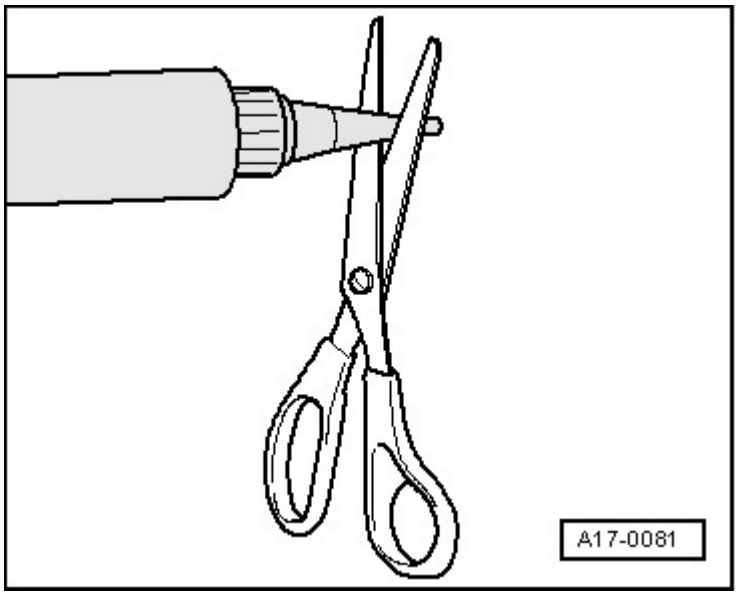

Fig. 50: Cutting Tube Nozzle At Front Marking (Nozzle Diameter Approx. 2 Mm)
Courtesy of AUDI OF AMERICA, LLC

Cover with 15 Bolts

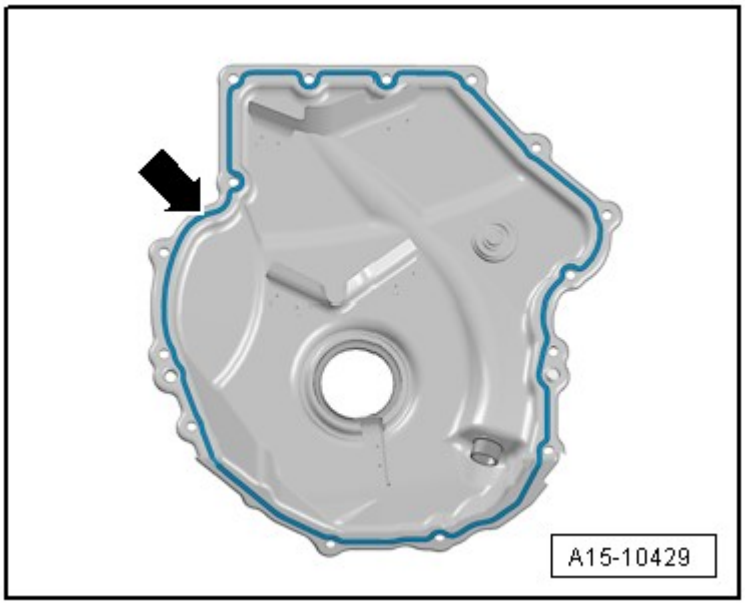

Fig. 51: Identifying Silicone Sealant Application Area For Cover Sealing Surface
Courtesy of AUDI OF AMERICA, LLC

-- Apply the silicone sealant on the clean sealing surface of the new cover as illustrated.

- Thickness of sealant bead: 2 to 3 mm

Cover with 8 Bolts

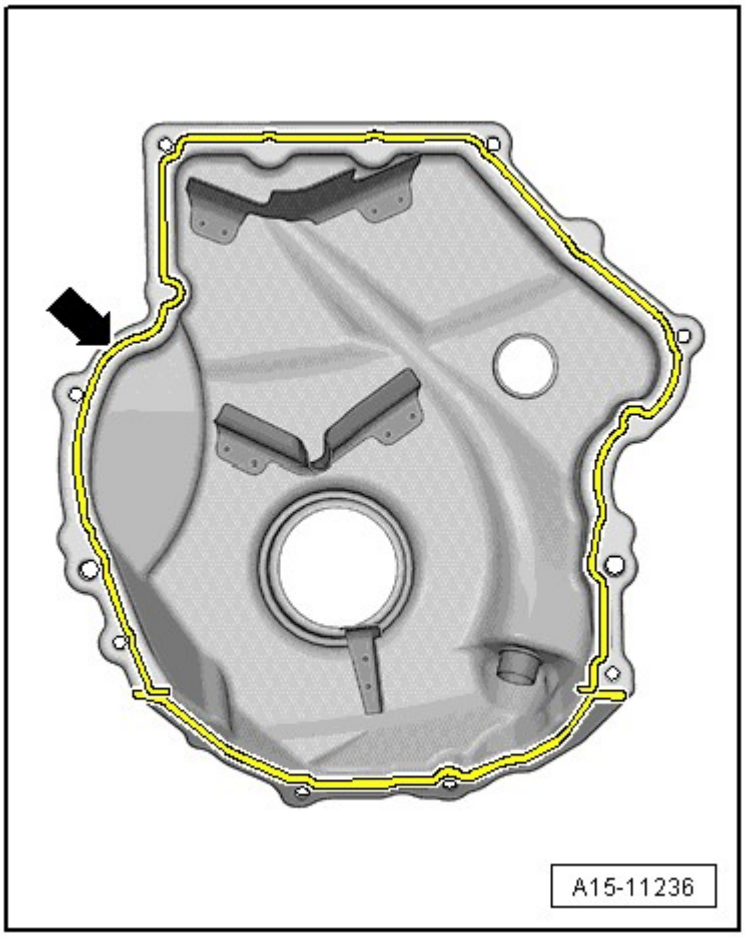

Fig. 52: Applying Silicone Sealant On Clean Sealing Surface Of New Cover
Courtesy of AUDI OF AMERICA, LLC

-- Apply the silicone sealant on the clean sealing surface of the new cover as illustrated.

- Thickness of sealant bead: 2 to 3 mm.

NOTE:

- **The cover must be installed within 5 minutes after the silicone sealant has been applied.**
- **The sealant bead may not be thicker than specified, otherwise excess sealant could enter the oil pan and clog the oil intake tube.**

-- Immediately attach the cover and tighten the bolts:

- Cover with 15 bolts, refer to **Fig. 5**
- Cover with 8 bolts, refer to **Fig. 6**

NOTE: **After installing cover, allow sealant to dry for approximately 30 minutes. Only after then may the engine oil be replenished.**

-- Install vibration damper. Refer to **VIBRATION DAMPER** .

-- Install the ribbed belt tensioning damper. Refer to **RIBBED BELT TENSIONING DAMPER** .

-- Install the ribbed belt. Refer to **RIBBED BELT** .

-- Install the service position. Refer to **Description and Operation** .

-- Install the bumper and front bumper cover. Refer to **Removal and Installation** .

-- Install the front noise insulation. Refer to **Description and Operation** .

-- Check the oil level. Refer to **MAINTENANCE PROCEDURES**

VIBRATION DAMPER SHAFT SEAL

Special tools and workshop equipment required

- Locking Tool T40098
- Counter Hold Tool T10355
- Thrust Piece T10368
- Pulling Hook T40274
- Thrust Piece T10354
- Pulling Hook T20143

Removing

-- Remove the front noise insulation. Refer to **Description and Operation** .

-- Remove the coolant fan electrical connector -1- from the bracket and disconnect it by sliding the retainer back -arrow- and pressing the release down.

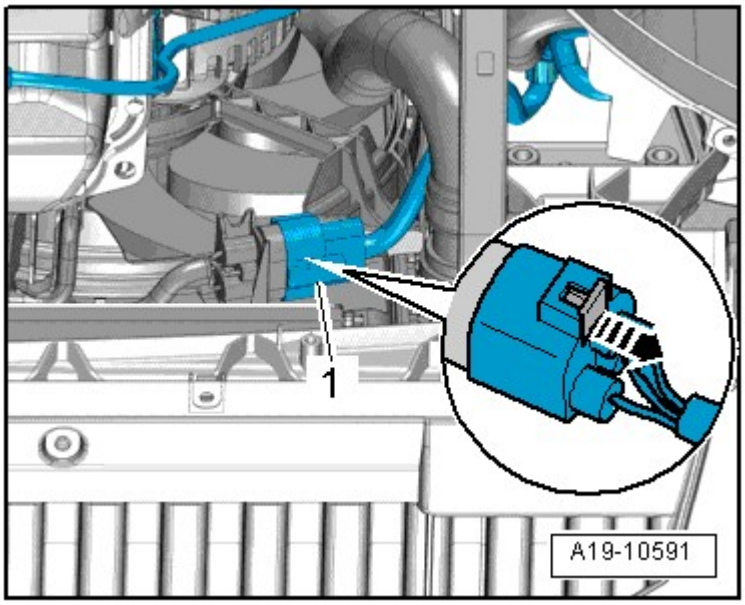

Fig. 53: Identifying Coolant Fan Electrical Connector
Courtesy of AUDI OF AMERICA, LLC

-- Free up the electrical wiring harness to the radiator fan control module.

-- Disconnect electrical connectors -2- and -3-.

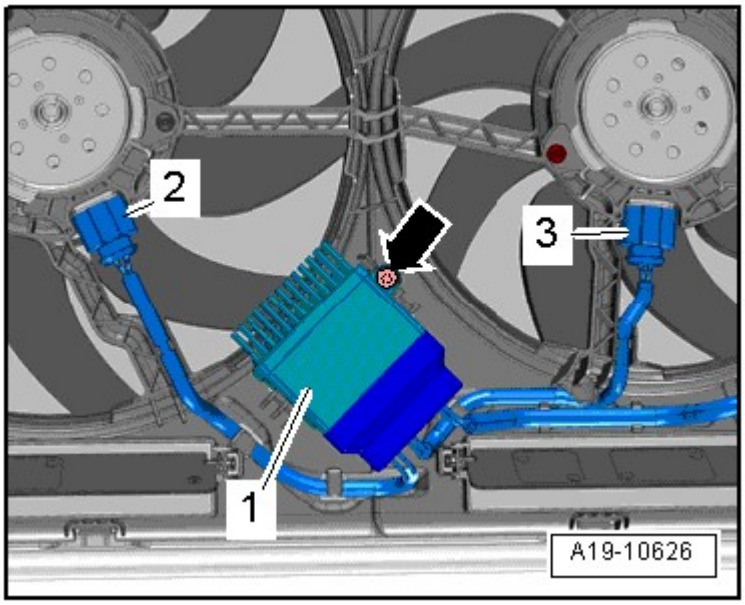

Fig. 54: Disconnecting Electrical Connectors
Courtesy of AUDI OF AMERICA, LLC

-- Remove the bolt -arrow- and the coolant fan control module -1-.

CAUTION: Risk of destroying due to reversed running direction on a used ribbed belt.

- **Before removing ribbed belt, marking running direction with chalk or felt-tip pen for reinstallation later.**

-- To release ribbed belt tension, rotate tensioner in direction of -arrow-.

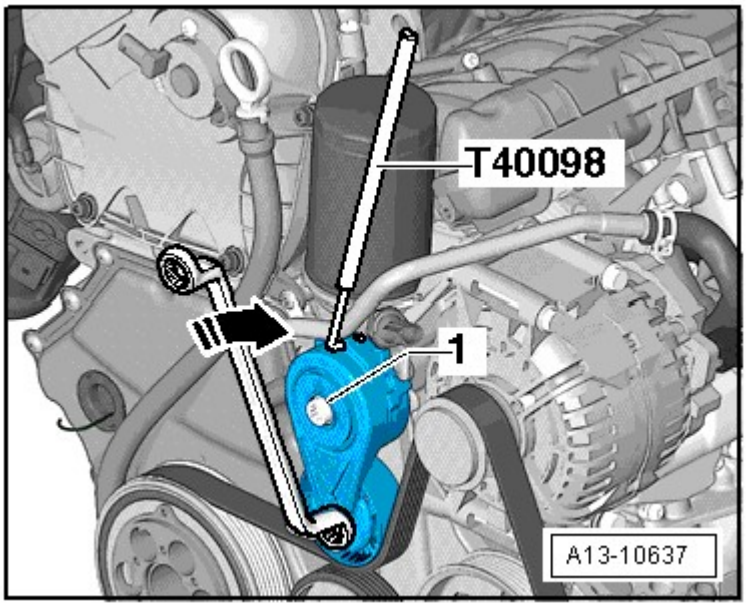

Fig. 55: Releasing Ribbed Belt Tension, Rotate Tensioner In Direction Of Arrow
Courtesy of AUDI OF AMERICA, LLC

-- Secure the tensioner with the T40098.

-- Remove ribbed belt from vibration damper ribbed belt pulley.

CAUTION: The engine could be destroyed.

- **In order not to change the valve timing, the crankshaft must not be moved out of the "TDC" position when the vibration damper is removed.**

-- Rotate the vibration damper using the T10355 into the "TDC" position -arrow-.

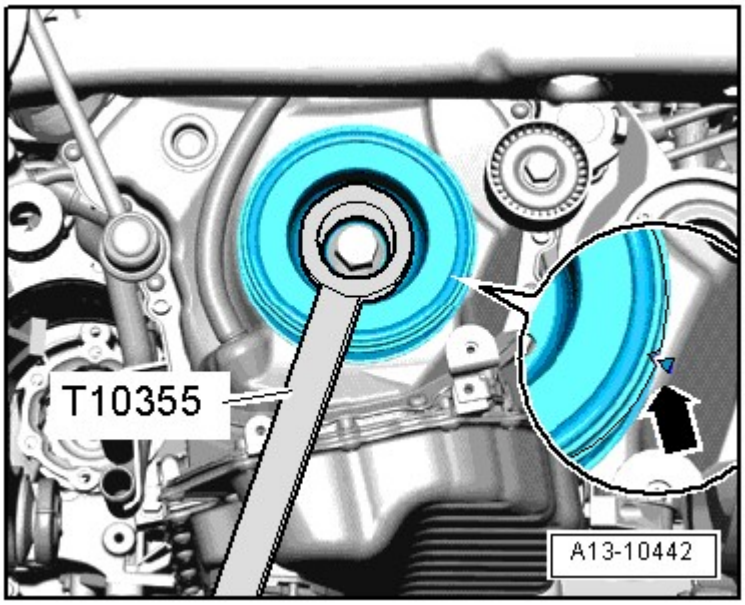

Fig. 56: Identifying Vibration Damper Rotated Into "OT" Position Using Counter Hold Tool T10355
Courtesy of AUDI OF AMERICA, LLC

- The notch on the vibration damper must line up with the arrow marking on the timing chain lower cover.

-- Remove vibration damper bolt using the T10355.

-- Remove the vibration damper and attach the T10368.

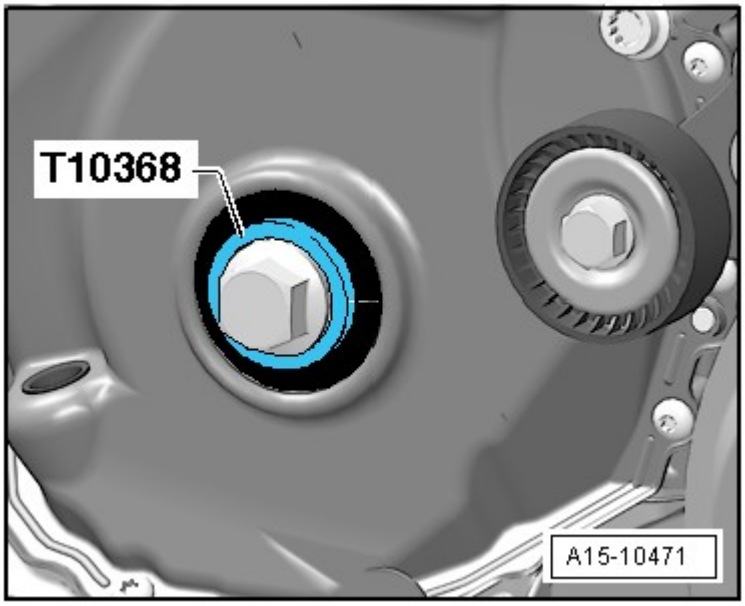

Fig. 57: Identifying Vibration Damper Bolt And Thrust Piece T10368
Courtesy of AUDI OF AMERICA, LLC

-- Remove the shaft seal with the T40274.

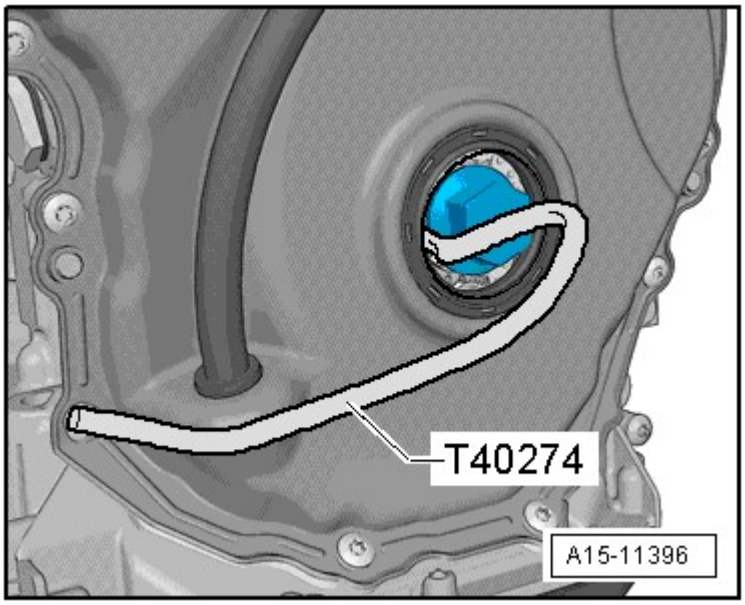

Fig. 58: Identifying Shaft Seal
Courtesy of AUDI OF AMERICA, LLC

Installing

- For the correct tightening specifications, refer to **RIBBED BELT DRIVE AND AUXILIARY COMPONENT BRACKET OVERVIEW** .

-- Clean running and sealing surface.

-- Remove the T10368.

-- Push the sealing ring -arrow- using the T10354 and the vibration damper bolt in all the way.

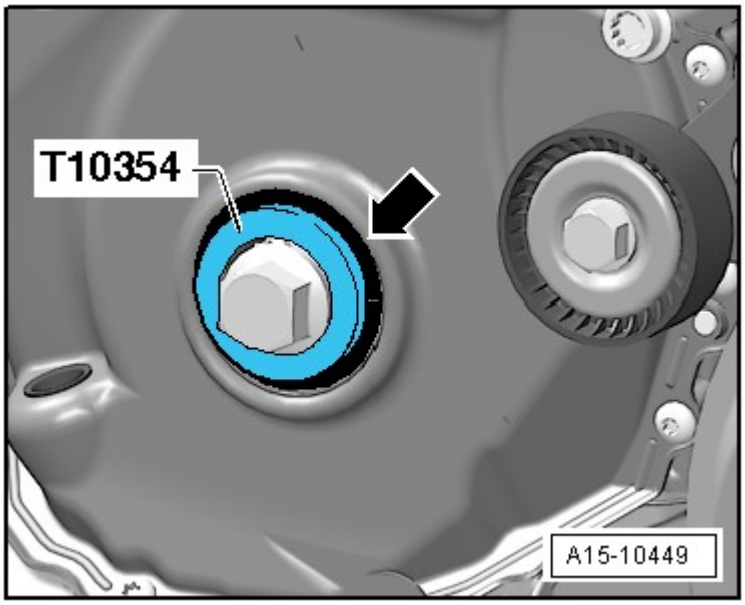

Fig. 59: Identifying Thrust Piece T10354
Courtesy of AUDI OF AMERICA, LLC

NOTE: Replace the vibration damper bolt with an O-ring.

Assemble in reverse order of disassembly. When doing this note the following:

-- Install vibration damper. Refer to **VIBRATION DAMPER** .

-- Install the ribbed belt. Refer to **RIBBED BELT** .

CAMSHAFT TIMING CHAIN (WITHOUT NEW TOOLS)

Special tools and workshop equipment required

- Locking Tool T40098
- Counter Hold Tool T10355
- Assembly Tool T10352 and Assembly Tool T10352/1
- Locking Pin T40011

Removing

-- Remove the front bumper cover and the bumper. Refer to **Removal and Installation** .

-- Install the lock carrier in service position. Refer to **Description and Operation** .

-- Remove timing chain upper cover. Refer to **UPPER TIMING CHAIN GUARD**.

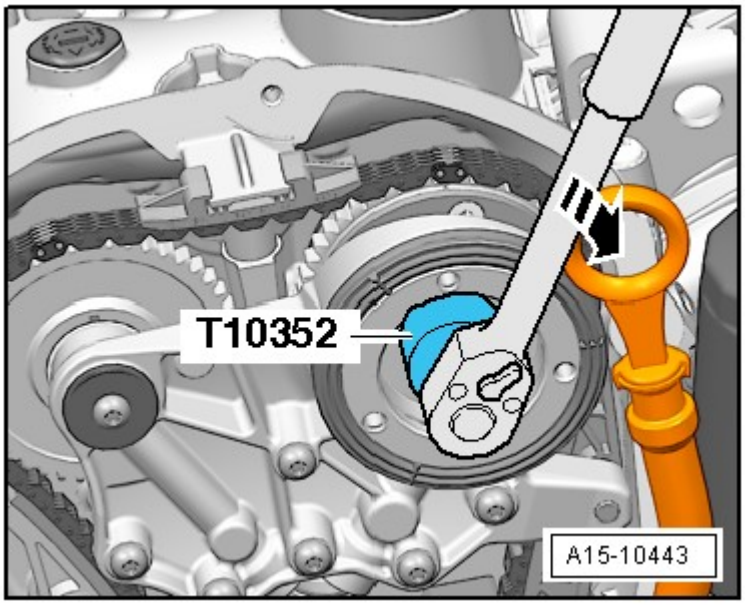

Fig. 60: Identifying Assembly Tool T10352 To Remove Control Valve
Courtesy of AUDI OF AMERICA, LLC

CAUTION: The control valve has a left thread.

-- Remove the control valve using the T10352 or T10352/1 in direction of -arrow- depending on the version.

-- Remove the bolts -arrows- and remove the bearing bracket.

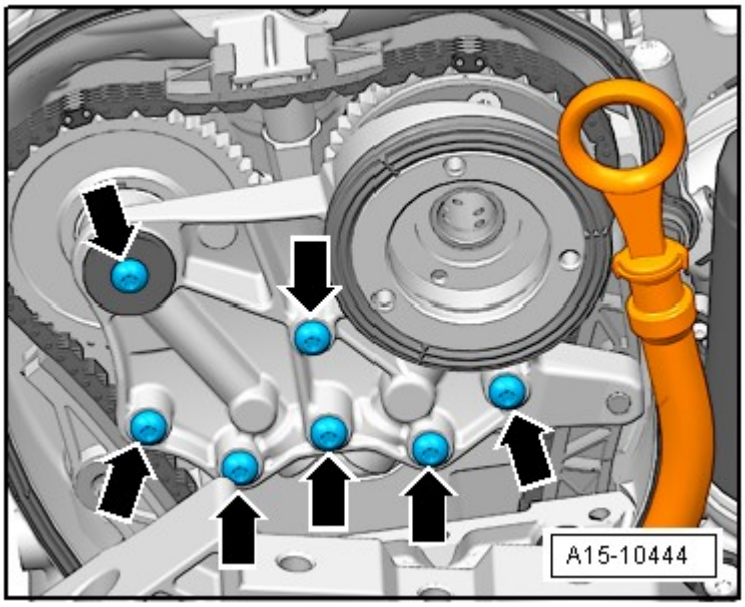

Fig. 61: Identifying Bearing Bracket Bolts
Courtesy of AUDI OF AMERICA, LLC

-- Rotate the vibration damper using the T10355 into the "TDC" position -arrow-.

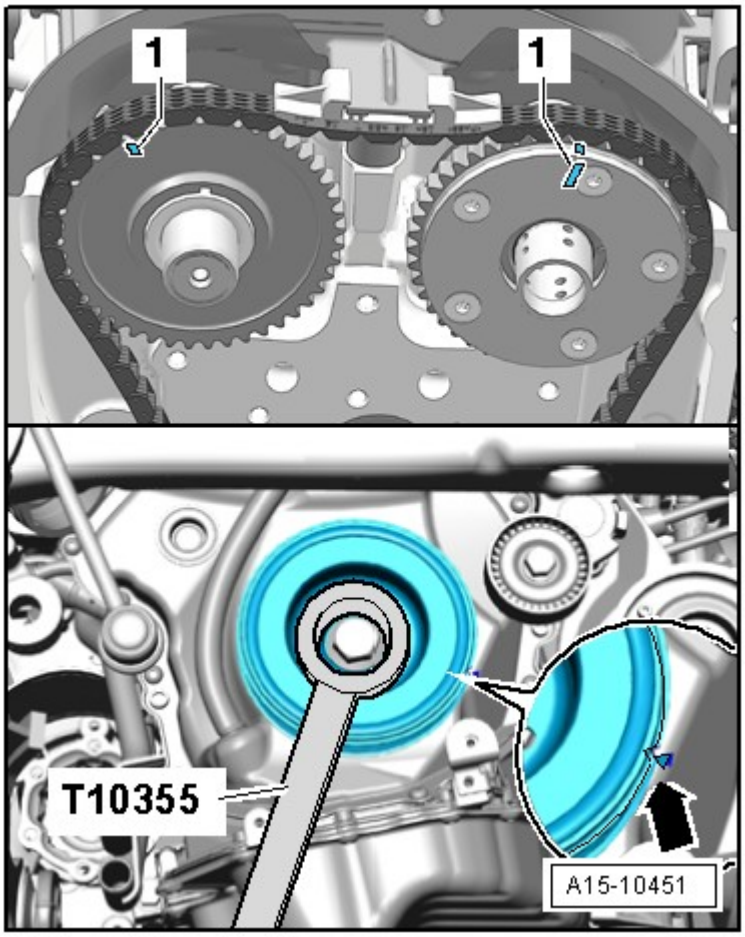

Fig. 62: Identifying Vibration Damper Rotated Into "OT" Position Using Counter Hold Tool T10355
Courtesy of AUDI OF AMERICA, LLC

- The notch on the vibration damper must line up with the arrow marking on the timing chain lower cover.
- The markings -1- on the camshafts must point upward.

-- Remove the lower timing chain cover. Refer to **LOWER TIMING CHAIN COVER**.

-- Press the oil pump chain tensioner in the direction of the -arrow- and secure it with the T40011.

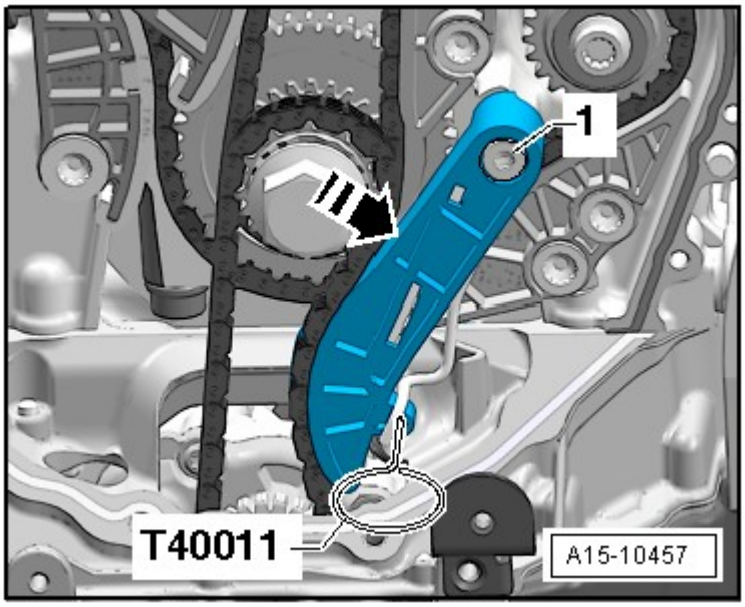

Fig. 63: Identifying Oil Pump Chain Tensioner And Locking Pin T40011
Courtesy of AUDI OF AMERICA, LLC

-- Remove the oil pump chain tensioner -1-.

-- Lift the chain tensioner locking wedge by inserting a scriber or a suitable screwdriver into the hole in the chain tensioner in the direction of -arrow 1-.

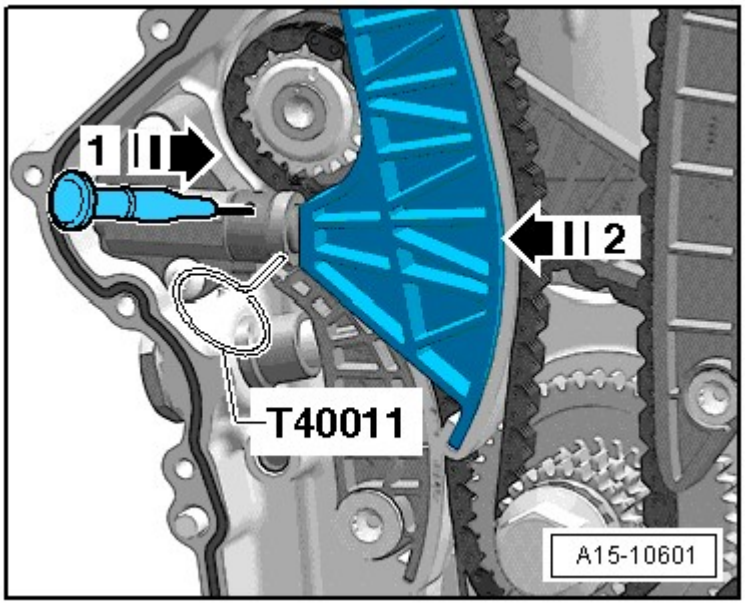

Fig. 64: Inserting Screwdriver Into Chain Tensioner Hole And Pressing Timing Chain Tensioning Rail
Courtesy of AUDI OF AMERICA, LLC

-- Press the timing chain tensioning rail in the direction of -arrow 2- and secure it with the T40011.

-- Remove the camshaft timing chain from the cylinder head.

NOTE: The intake camshaft switches in the engine direction of rotation.

-- Remove the timing chain tensioning rail -2-.

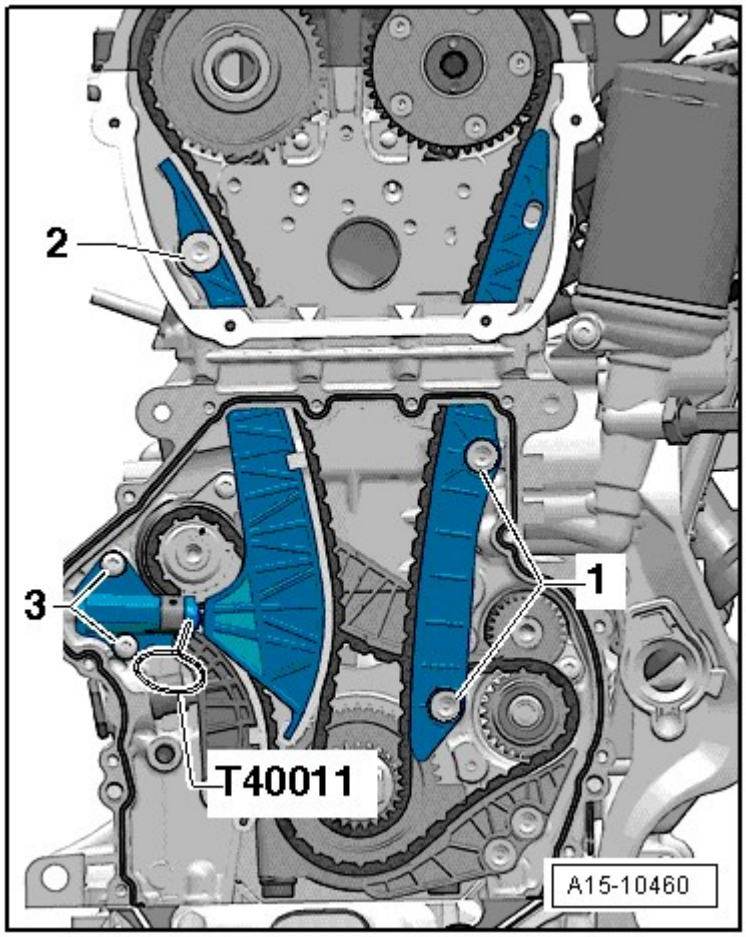

Fig. 65: Identifying Camshaft Timing Chain Tensioner Bolts, Camshaft Timing Chain Guide Rail And Guide Pins
Courtesy of AUDI OF AMERICA, LLC

-- Remove the guide rail for the camshaft timing chain -1-.

-- Remove the timing chain.

Installing

- Tightening specifications, refer to **CAMSHAFT TIMING CHAIN OVERVIEW**.

NOTE: The following must be performed in one sequence. A second technician is required for this.

The painted links of the timing chain must be positioned on the markings on the chain sprockets.

Hold the wrench tight until the tensioning rail is installed.

-- Mount the timing chain on the exhaust camshaft.

-- Mount the timing chain on the crankshaft.

-- Turn the intake camshaft using the wrench in the direction of the -arrow- and mount the timing chain.

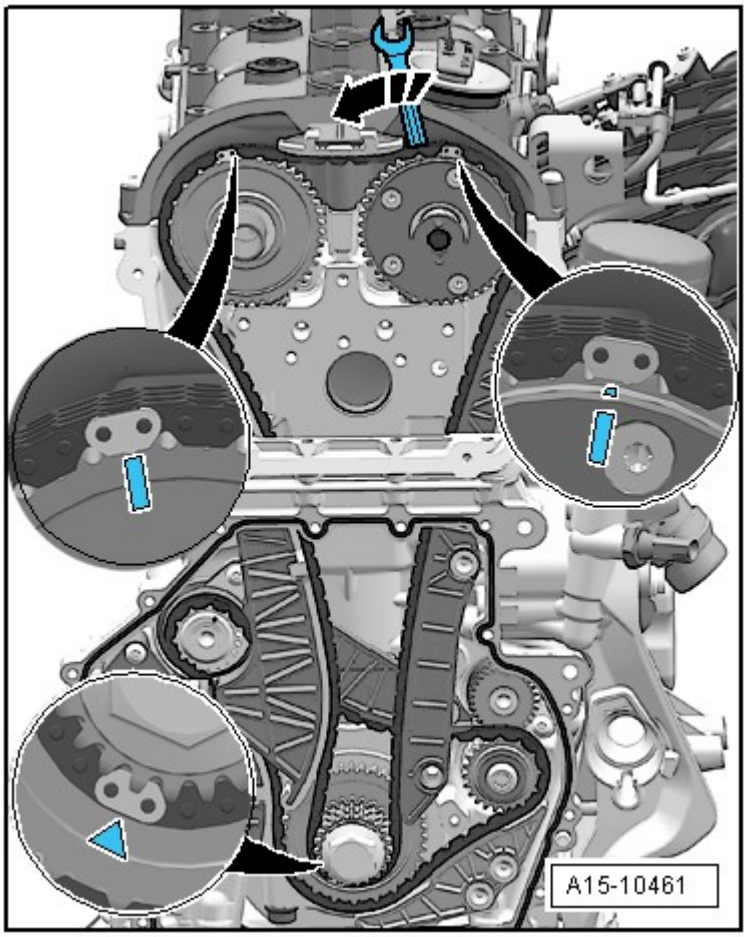

Fig. 66: Identifying Intake Camshaft Turned Using Wrench
Courtesy of AUDI OF AMERICA, LLC

-- Install the timing chain tensioning rail and tighten the bolt -2-.

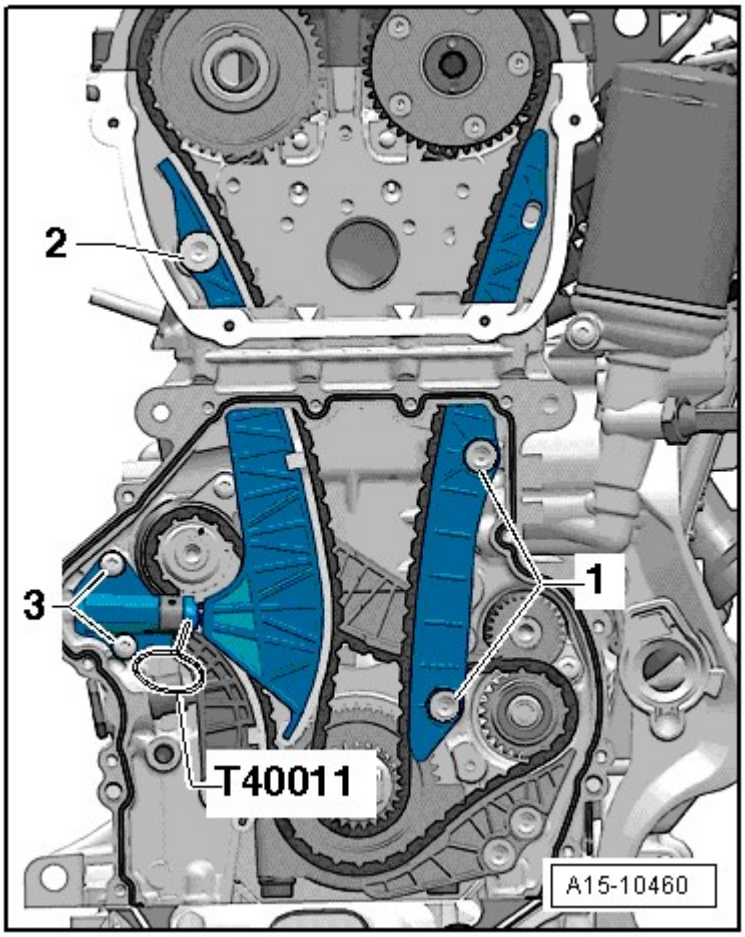

Fig. 67: Identifying Camshaft Timing Chain Tensioner Bolts, Camshaft Timing Chain Guide Rail And Guide Pins
Courtesy of AUDI OF AMERICA, LLC

-- Install the camshaft timing chain guide rail and tighten the bolts -1-.

-- Mount the bearing bracket and the bolts -arrows- hand-tight.

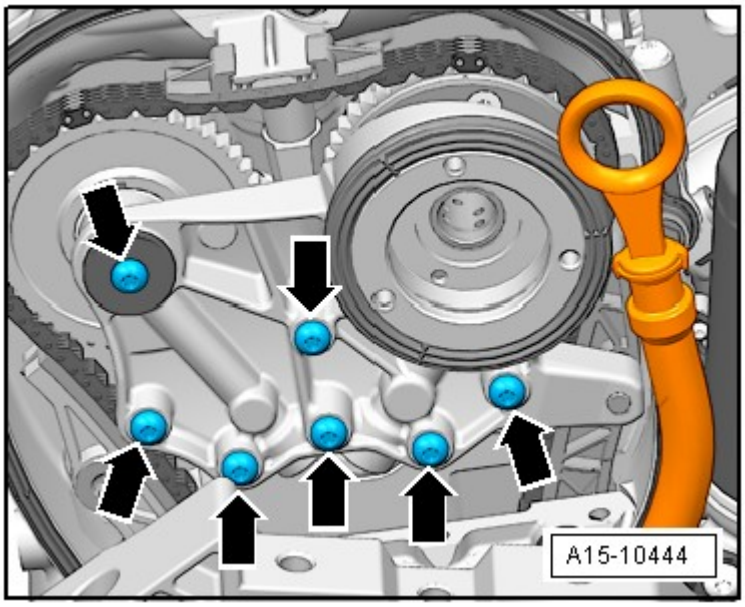

Fig. 68: Identifying Bearing Bracket Bolts
Courtesy of AUDI OF AMERICA, LLC

-- Remove the T40011.

-- Tighten the bolts -arrows-. Refer to **CAMSHAFT TIMING CHAIN OVERVIEW**.

-- Install the control valve. See item 6 in **Fig. 7**.

Assemble in reverse order of disassembly. When doing this note the following:

-- Install the lower timing chain cover. Refer to **LOWER TIMING CHAIN COVER**.

-- Install the timing chain guard upper section. Refer to **UPPER TIMING CHAIN GUARD**.

-- Install the ribbed belt tensioning damper. Refer to **RIBBED BELT TENSIONING DAMPER** .

-- Install the ribbed belt. Refer to **RIBBED BELT** .

-- Install the lock carrier in service position. Refer to **Description and Operation** .

-- Install the bumper and front bumper cover. Refer to **Removal and Installation** .

CAMSHAFT TIMING CHAIN (WITH NEW TOOLS)

Special tools and workshop equipment required

- Locking Tool T40098
- Counter Hold Tool T10355

- Assembly Tool T10352 and Assembly Tool T10352/1
- Locking Pin T40011
- Pry Lever T40243
- Camshaft Locator T40271

Removing

-- Remove the front bumper cover and bumper. Refer to **Removal and Installation** .

-- Install the lock carrier in service position. Refer to **Description and Operation** .

-- Remove timing chain upper cover. Refer to **UPPER TIMING CHAIN GUARD**.

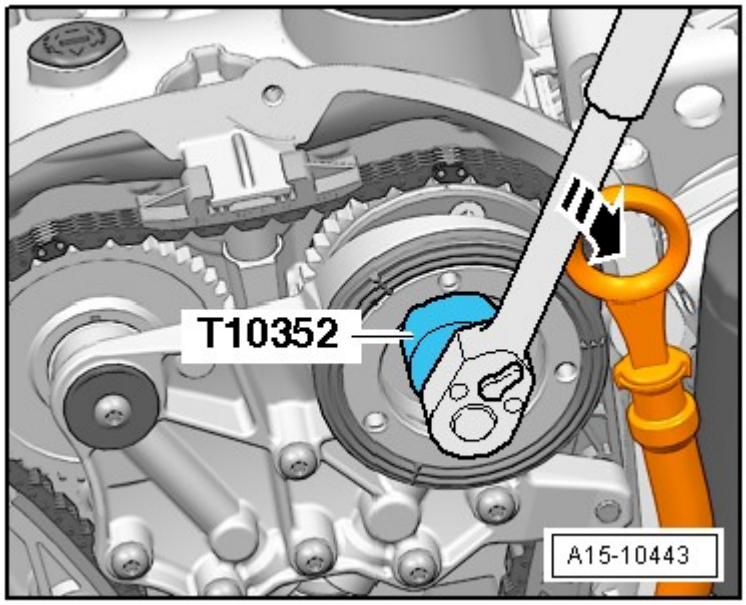

Fig. 69: Identifying Assembly Tool T10352 To Remove Control Valve
Courtesy of AUDI OF AMERICA, LLC

CAUTION: The control valve has a left thread.

-- Remove the control valve using the T10352 or T10352/1 in direction of -arrow- depending on the version.

-- Remove the bolts -arrows- and remove the bearing bracket.

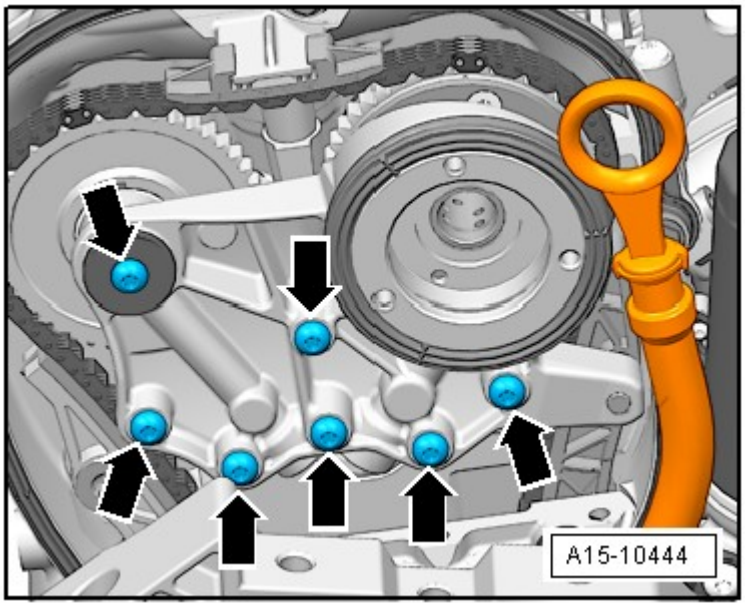

Fig. 70: Identifying Bearing Bracket Bolts
Courtesy of AUDI OF AMERICA, LLC

-- Rotate the vibration damper using the T10355 into the "TDC" position.

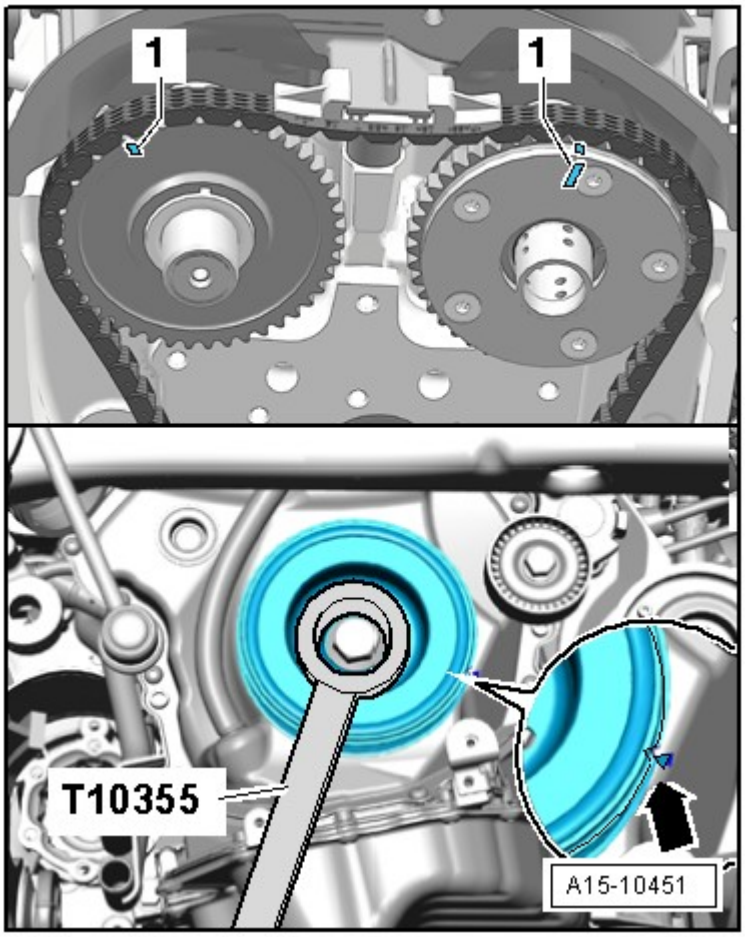

Fig. 71: Identifying Vibration Damper Rotated Into "OT" Position Using Counter Hold Tool T10355
Courtesy of AUDI OF AMERICA, LLC

- The notch on the vibration damper and the marking on the timing chain guard lower section must be opposite one another -arrow-.
- The markings -1- on the camshafts must point upward.

-- Remove the lower timing chain cover. Refer to **LOWER TIMING CHAIN COVER**.

-- Press the oil pump chain tensioner in the direction of the -arrow- and secure it with the T40011.

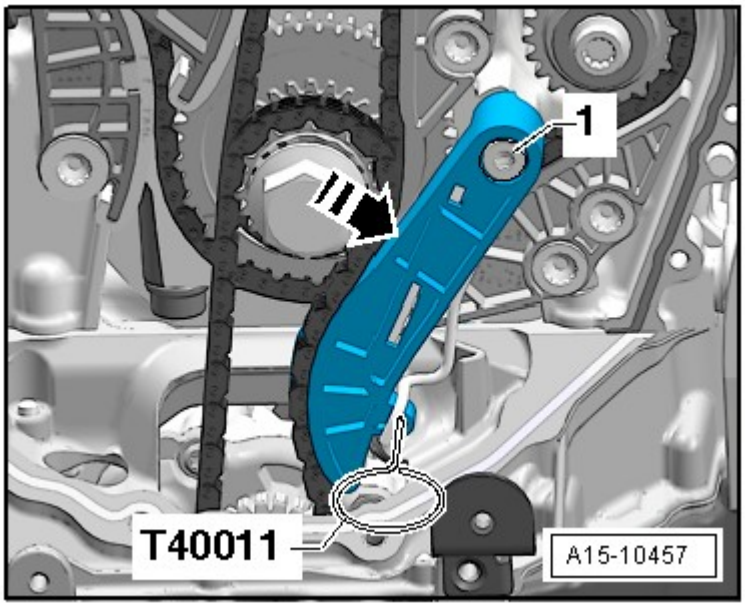

Fig. 72: Identifying Oil Pump Chain Tensioner And Locking Pin T40011
Courtesy of AUDI OF AMERICA, LLC

-- Remove the oil pump chain tensioner -1-.

-- Remove the bolts -arrows-.

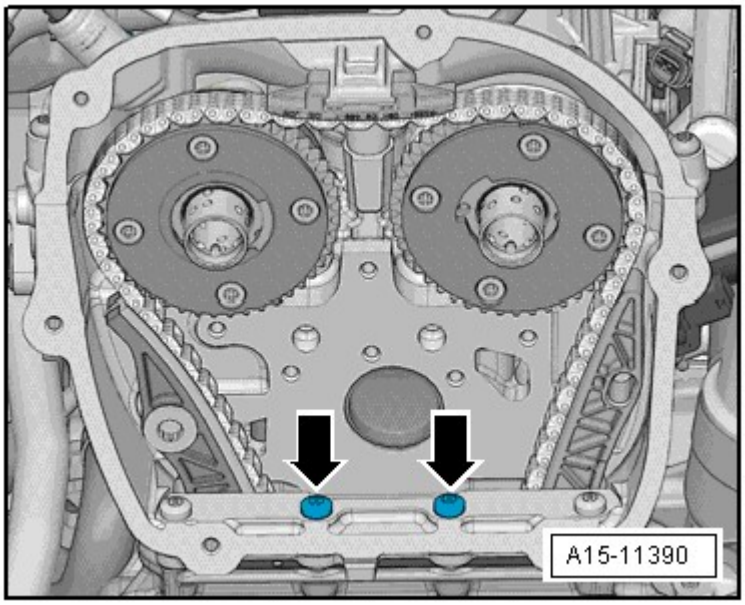

Fig. 73: Identifying Bolts
Courtesy of AUDI OF AMERICA, LLC

Two Different Chain Tensioners may be Installed Depending on the Version

Version 1

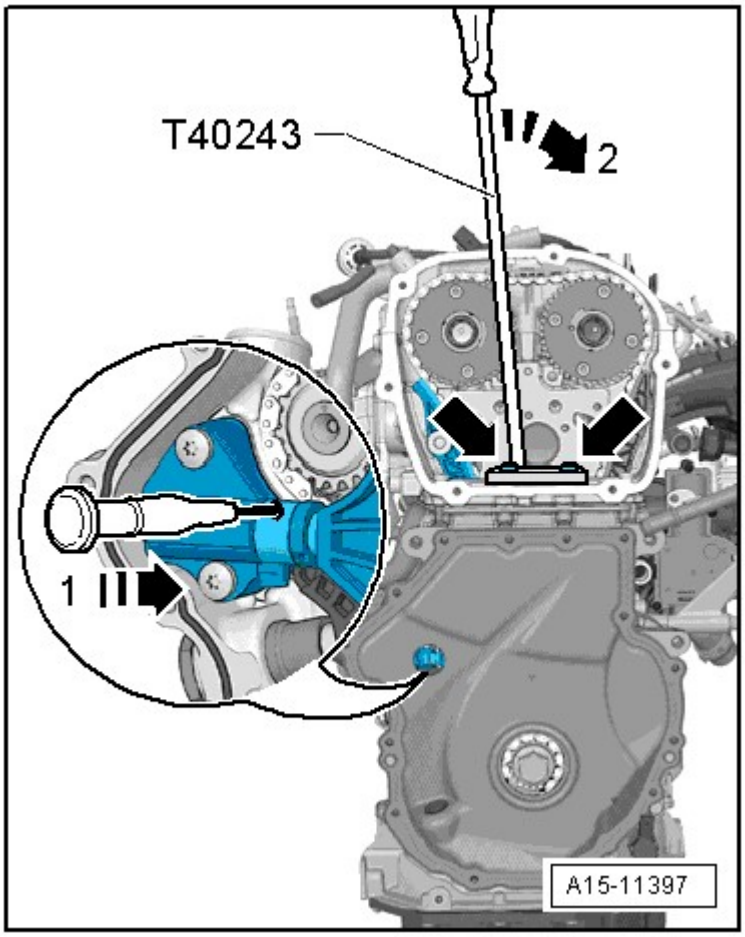

Fig. 74: Identifying Version 1
Courtesy of AUDI OF AMERICA, LLC

-- Install the T40243 -arrows-.

-- Insert a scriber or a suitable screwdriver into the opening for the chain tensioner in the direction of the -arrow 1- to lift up the locking wedge for the chain tensioner, slowly press down the T40243 and hold it in the direction of the -arrow 2-.

-- Secure the chain tensioner using T40011.

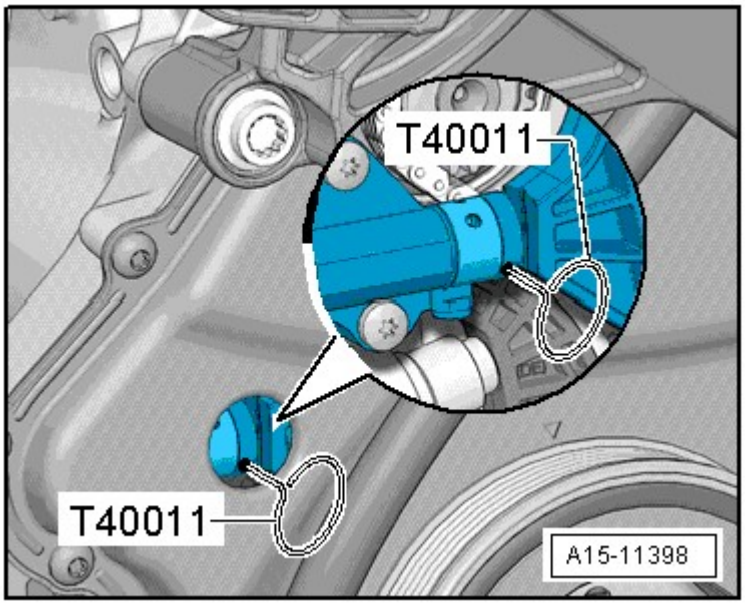

Fig. 75: Securing Chain Tensioner
Courtesy of AUDI OF AMERICA, LLC

Version 2

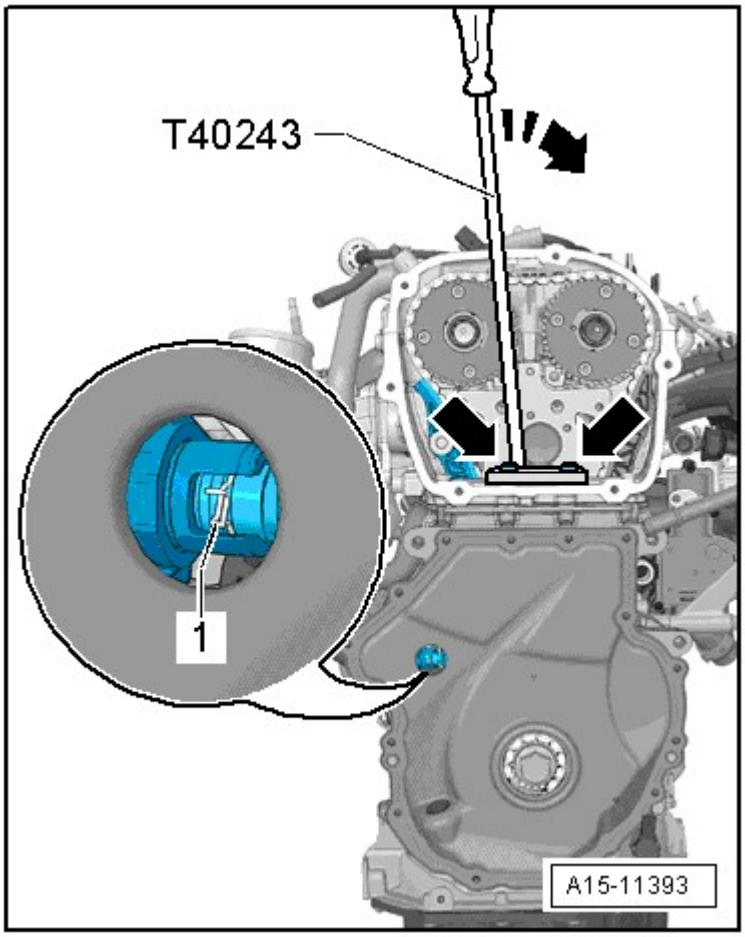

Fig. 76: Identifying Version 2
Courtesy of AUDI OF AMERICA, LLC

-- Install the T40243 -arrows-.

-- Press the chain tensioner locking ring -arrow- together and slowly press and hold the T40243 in the direction of the -arrow-.

-- Secure the chain tensioner with the T40267.

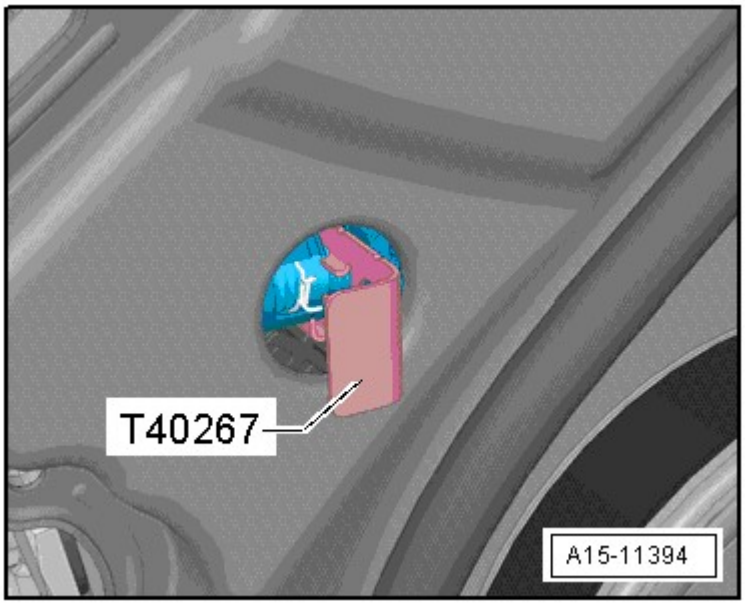

Fig. 77: Securing Chain Tensioner
Courtesy of AUDI OF AMERICA, LLC

All Versions

-- Remove the T40243.

-- Bolt the T40271/2 to the cylinder head and push the chain sprocket splines in the direction of the -arrow 2-. If necessary, turn the intake camshaft with a wrench in the direction of the -arrow 1-.

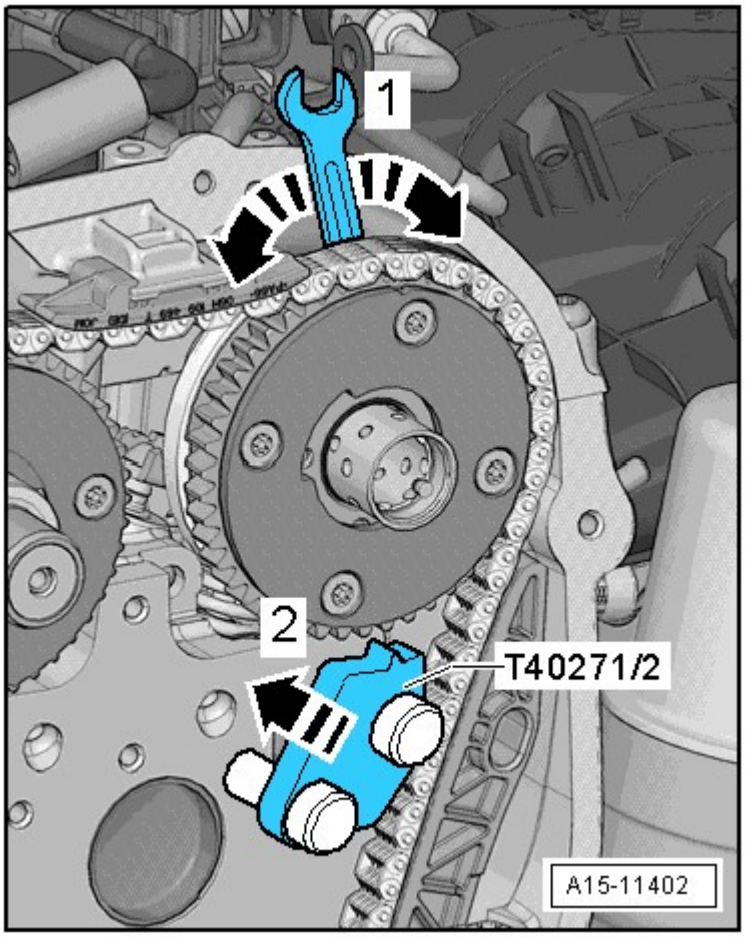

Fig. 78: Identifying Bolt Camshaft Locating Tool T40271/2
Courtesy of AUDI OF AMERICA, LLC

-- Attach the T40271/1 to the cylinder head.

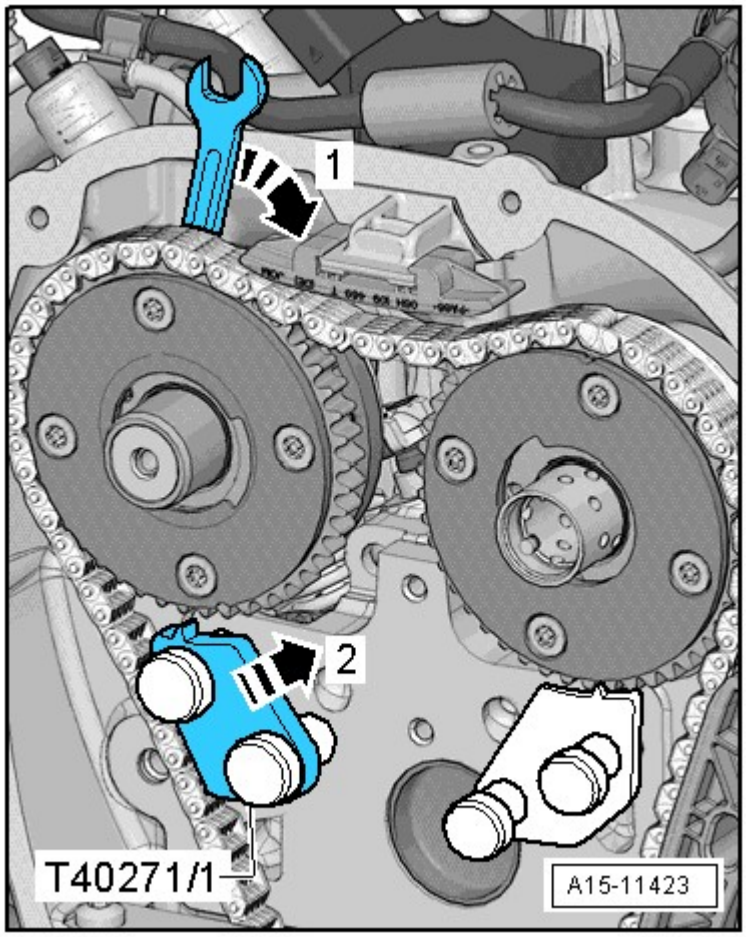

Fig. 79: Identifying Camshaft Locating Tool
Courtesy of AUDI OF AMERICA, LLC

-- Turn the exhaust camshaft with the wrench in the direction of the -arrow 1- and slide the T40271/1 in the chain sprocket splines in the direction of the -arrow 2-.

-- Remove the timing chain tensioning rail -2-.

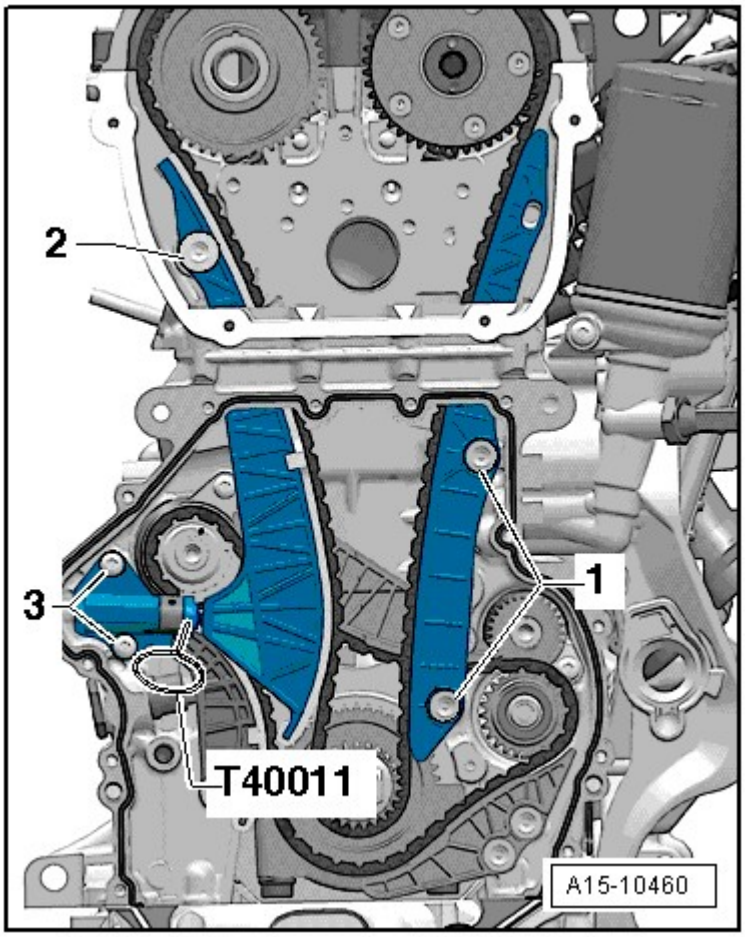

Fig. 80: Identifying Camshaft Timing Chain Tensioner Bolts, Camshaft Timing Chain Guide Rail And Guide Pins
Courtesy of AUDI OF AMERICA, LLC

-- Remove the guide rail for the camshaft timing chain -1-.

-- Remove the timing chain.

Installing

- Tightening specifications, refer to **CAMSHAFT TIMING CHAIN OVERVIEW**.

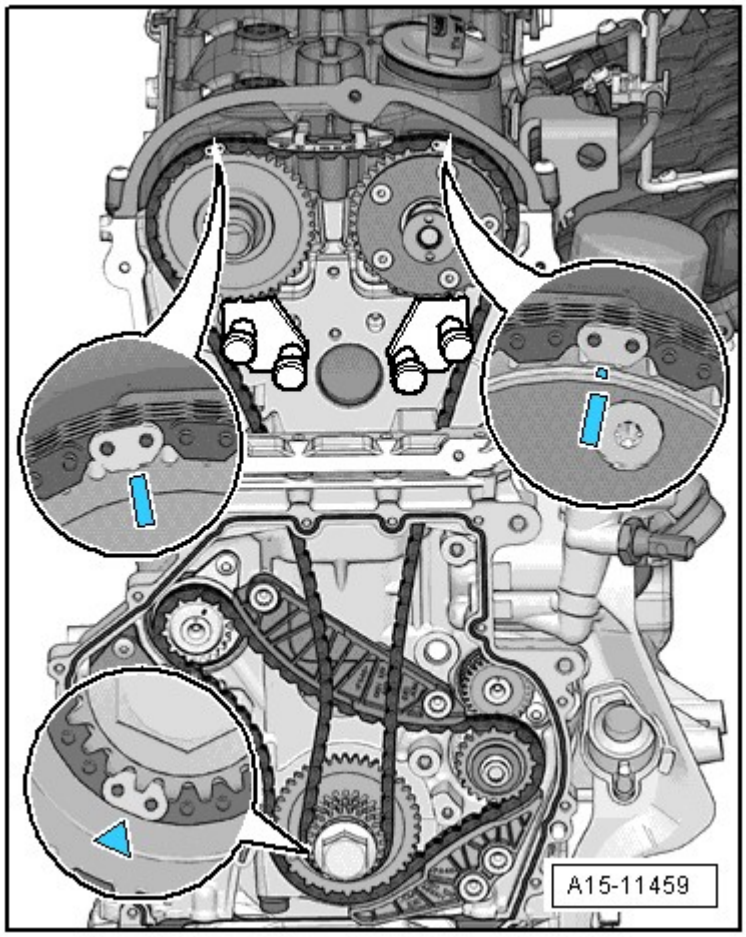

Fig. 81: Identifying Camshaft Timing Chain Overview
Courtesy of AUDI OF AMERICA, LLC

NOTE: The painted links of the timing chain must be positioned on the markings on the chain sprockets.

-- Mount the timing chain on the intake camshaft.

-- Mount the timing chain on the exhaust camshaft.

-- Lay the timing chain on the crankshaft and hold it there.

-- Install the timing chain tensioning rail and tighten the bolt -2-.

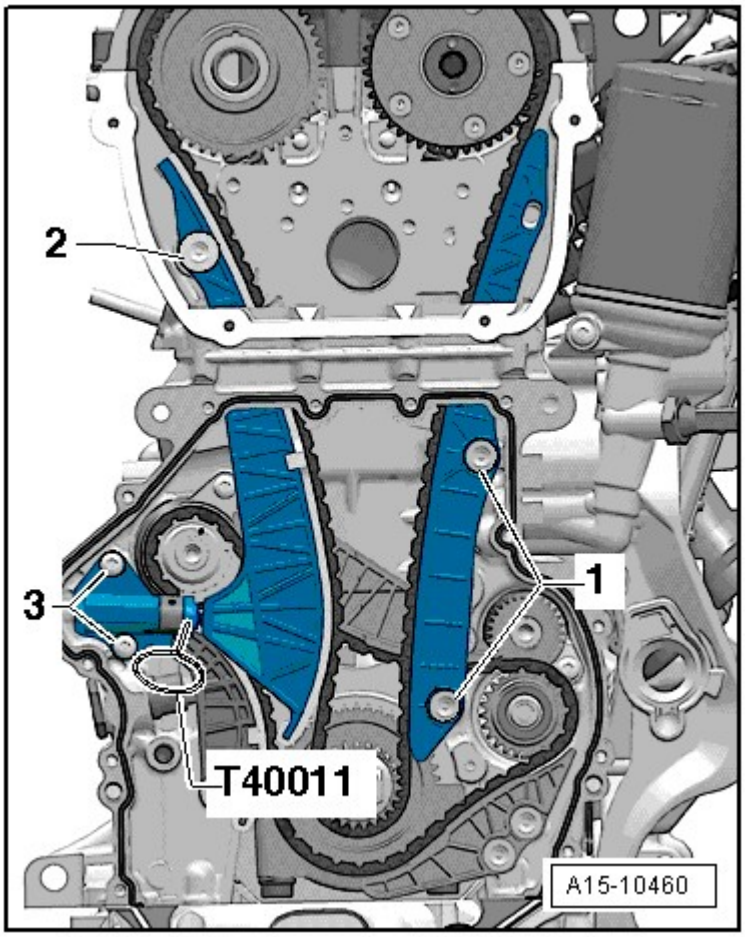

Fig. 82: Identifying Camshaft Timing Chain Tensioner Bolts, Camshaft Timing Chain Guide Rail And Guide Pins
Courtesy of AUDI OF AMERICA, LLC

-- Install the camshaft timing chain guide rail and tighten the bolts -1-.

-- Turn the exhaust camshaft in the direction of the -arrow 1-, slide out the camshaft locating tool T40271/1 from the chain sprocket splines in the direction of the -arrow 2- and release the camshaft.

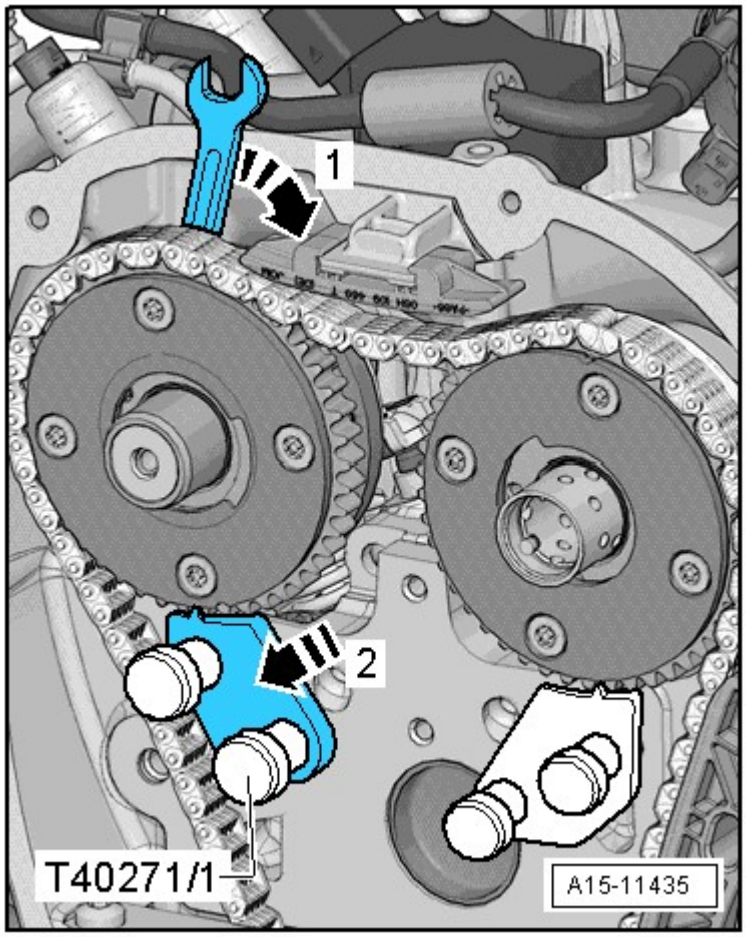

Fig. 83: Turning Exhaust Camshaft In Direction Of Arrow
Courtesy of AUDI OF AMERICA, LLC

-- Remove the camshaft locating tool T40271/1.

-- Turn the intake camshaft in the direction of the -arrow 1-, slide out the camshaft locating tool T40271/2 from the chain sprocket splines in the direction of the -arrow 2- and release the camshaft.

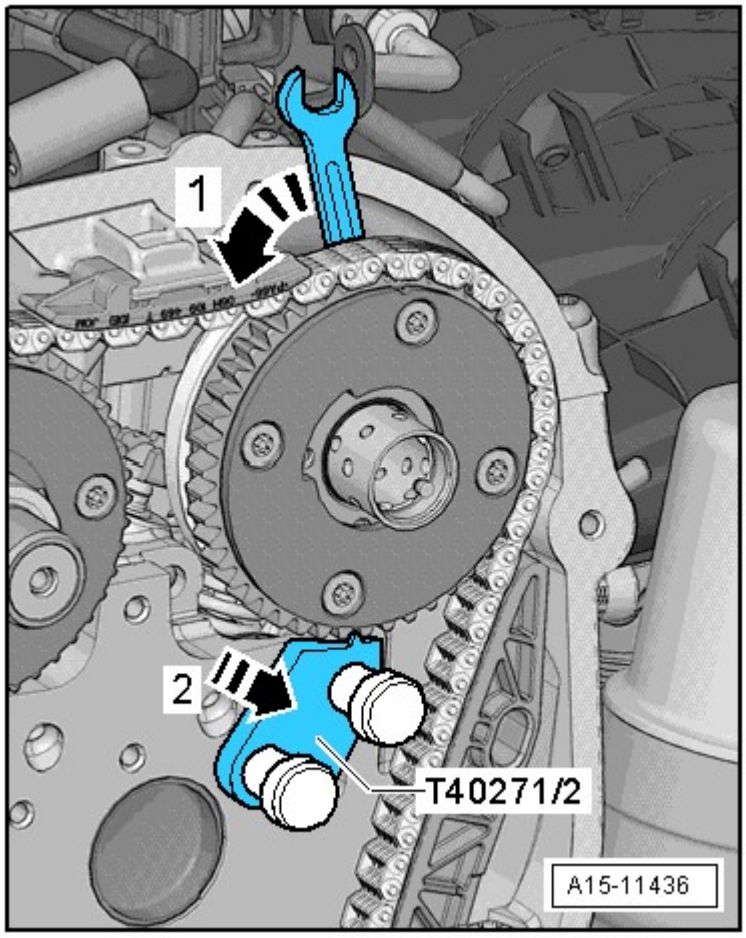

Fig. 84: Turning Intake Camshaft In Direction Of Arrow
Courtesy of AUDI OF AMERICA, LLC

-- Remove the T40271/2.

-- Install the bolts -arrows- and tighten them.

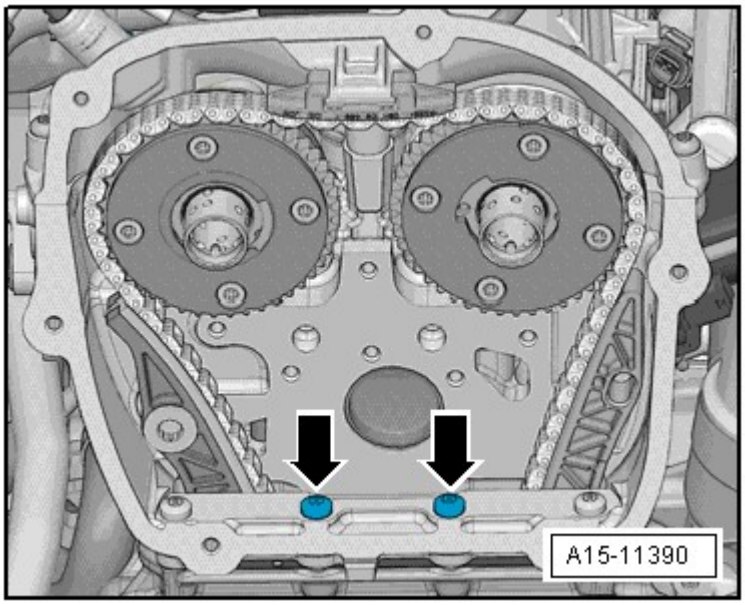

Fig. 85: Identifying Bolts
Courtesy of AUDI OF AMERICA, LLC

-- Mount the bearing bracket and the bolts -arrows- hand-tight.

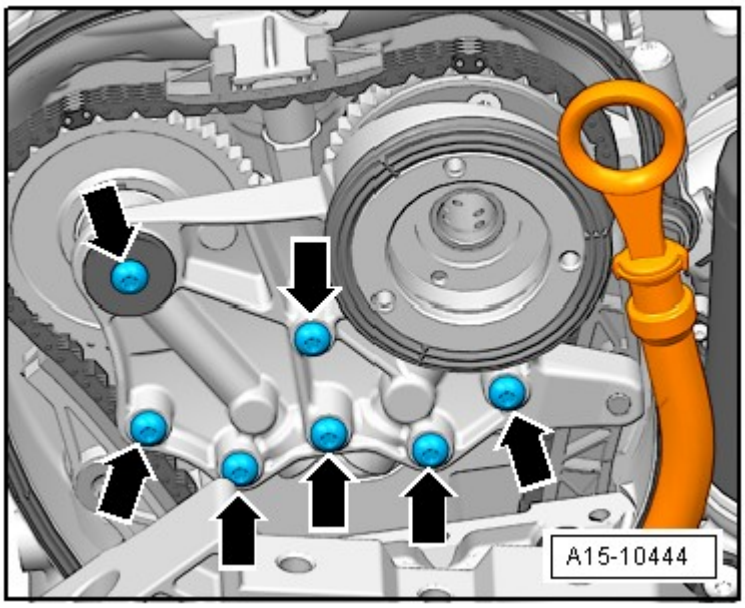

Fig. 86: Identifying Bearing Bracket Bolts
Courtesy of AUDI OF AMERICA, LLC

-- Remove the T40011 or the T40267, depending on the version.

-- Tighten the bolts -arrows-. Refer to **CAMSHAFT TIMING CHAIN OVERVIEW**.

-- Install the control valve -item 6- in **Fig. 7**.

Assemble in reverse order of disassembly. Note the following:

-- Install the lower timing chain cover. Refer to **LOWER TIMING CHAIN COVER**.

-- Install the timing chain guard upper section. Refer to **UPPER TIMING CHAIN GUARD**.

-- Install the ribbed belt tensioning damper. Refer to **RIBBED BELT TENSIONING DAMPER** .

-- Install the ribbed belt. Refer to **RIBBED BELT** .

-- Install the service position. Refer to **Description and Operation** .

-- Install the bumper and front bumper cover. Refer to **Removal and Installation** .

BALANCE SHAFT TIMING CHAIN

Removing

-- Remove timing chain upper cover. Refer to **UPPER TIMING CHAIN GUARD**.

-- Remove the lower timing chain cover. Refer to **LOWER TIMING CHAIN COVER**.

-- Remove the camshaft timing chain. Refer to **CAMSHAFT TIMING CHAIN (WITH NEW TOOLS)**.

-- Remove the camshaft timing chain tensioner -3-.

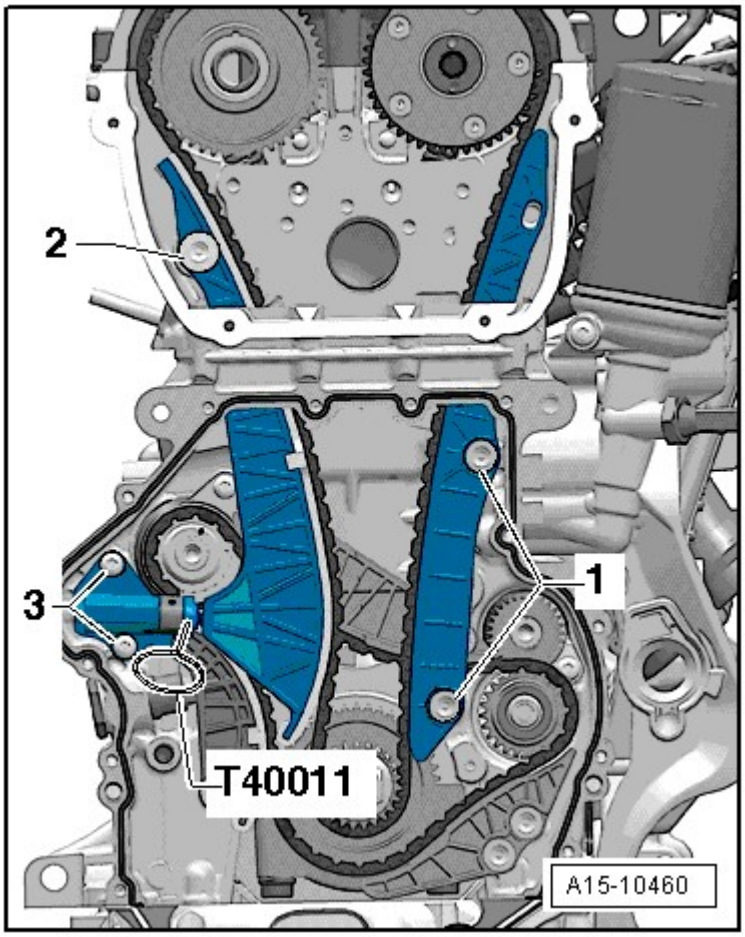

Fig. 87: Identifying Camshaft Timing Chain Tensioner Bolts, Camshaft Timing Chain Guide Rail And Guide Pins
Courtesy of AUDI OF AMERICA, LLC

-- Remove the balance shaft chain tensioner -1-.

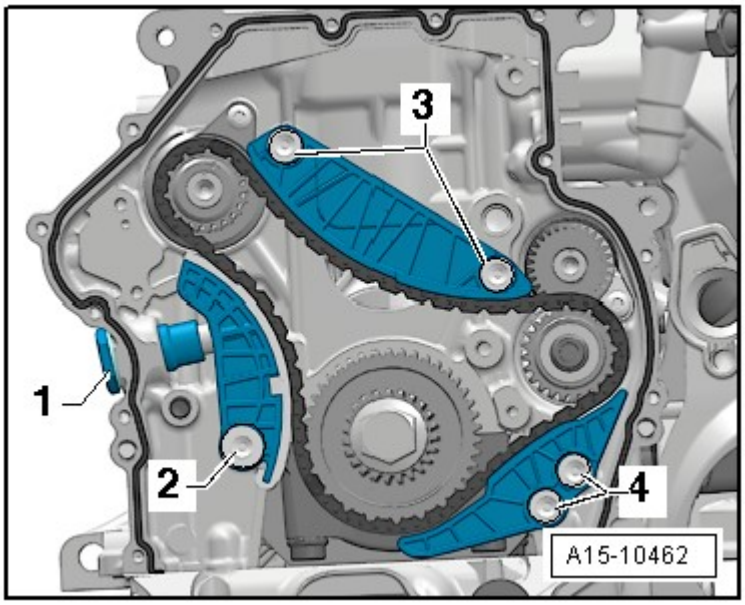

Fig. 88: Identifying Balance Shaft Timing Chain, Tensioning Rail And Guide Rails
Courtesy of AUDI OF AMERICA, LLC

-- Remove the tensioning rail -2-.

-- Remove the guide rail -3-.

-- Remove the guide rail -4-.

-- Remove the timing chain.

Installing

- Tightening specifications, refer to **BALANCE SHAFT TIMING CHAIN OVERVIEW**.

-- Turn the intermediate sprocket/balance shaft to the marking -arrow-.

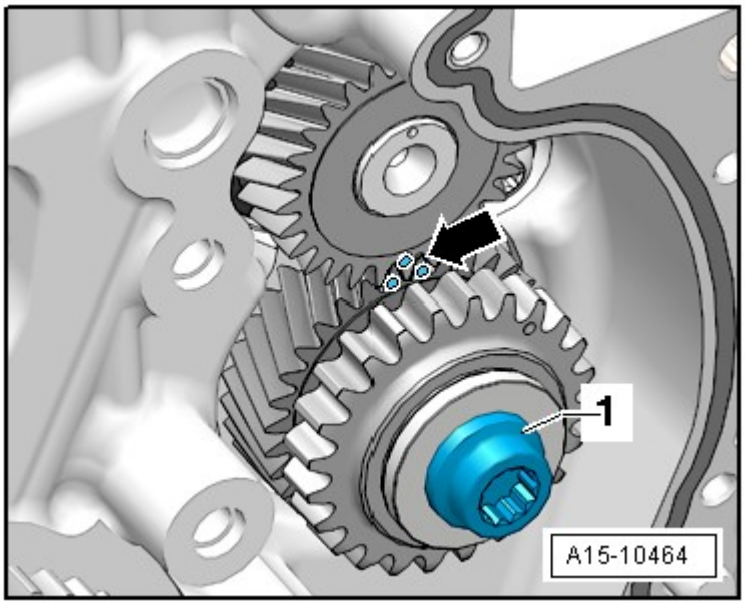

Fig. 89: Identifying Intermediate Shaft Sprocket
Courtesy of AUDI OF AMERICA, LLC

NOTE: The painted links of the timing chain must be positioned on the markings on the chain sprockets.

-- Mount the timing chain; the painted links of the timing chain must be positioned on the markings on the chain sprockets.

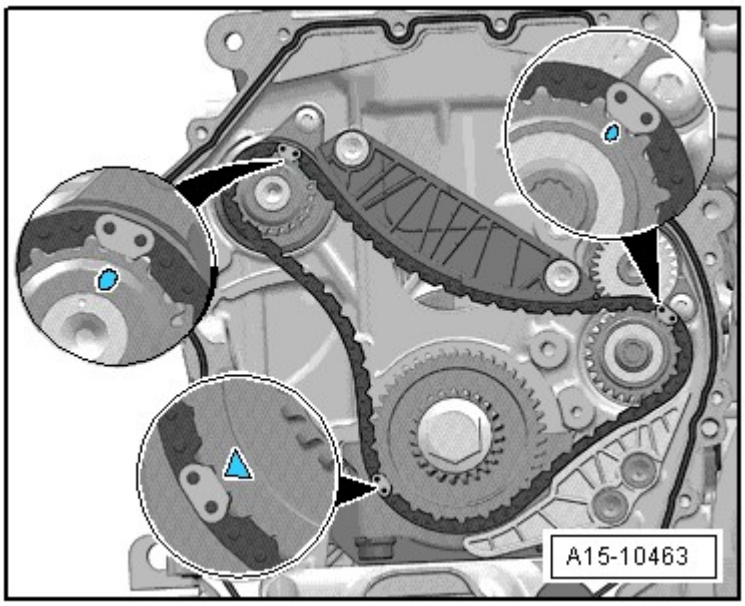

Fig. 90: Identifying Timing Chain Markings
Courtesy of AUDI OF AMERICA, LLC

-- Install the timing chain guide rail and tighten the bolts -4-.

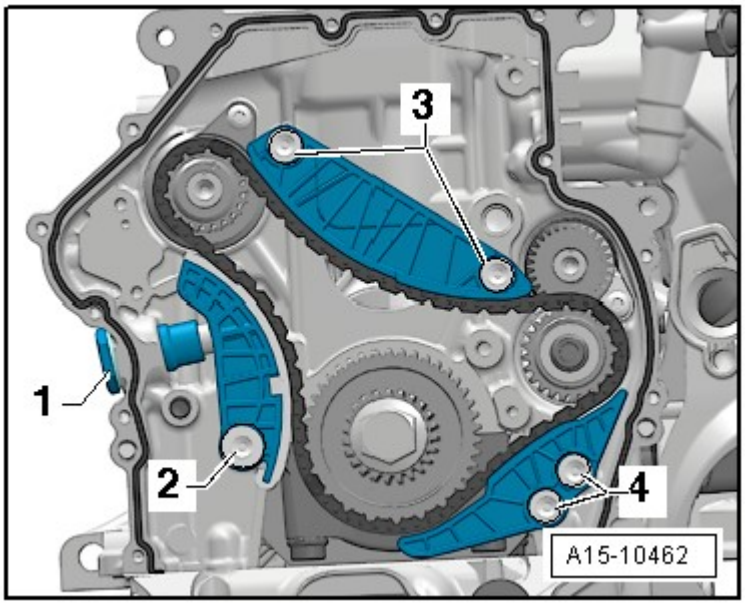

Fig. 91: Identifying Balance Shaft Timing Chain, Tensioning Rail And Guide Rails
Courtesy of AUDI OF AMERICA, LLC

-- Install the timing chain guide rail and tighten the bolts -3-.

-- Install the timing chain tensioning rail and tighten the bolt -2-.

-- Install the timing chain tensioner -1-.

-- Check the setting one more time.

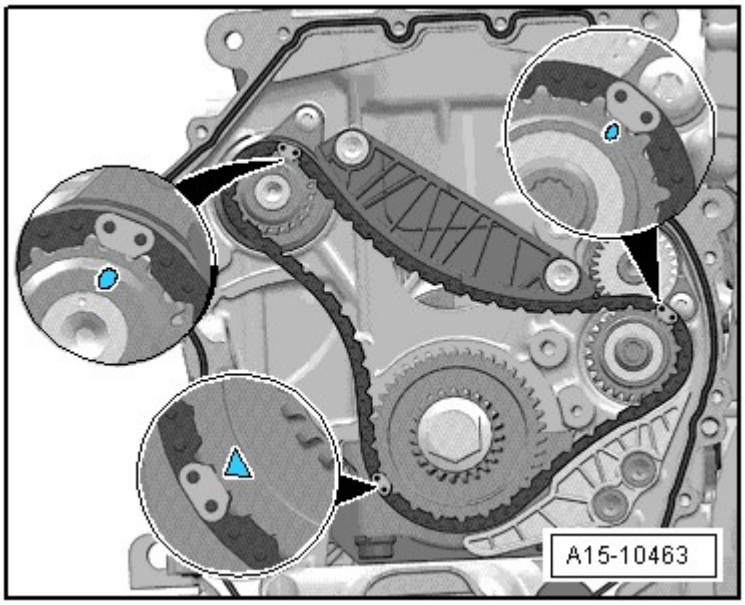

Fig. 92: Identifying Timing Chain Markings
Courtesy of AUDI OF AMERICA, LLC

-- Check the markings on the intermediate sprocket/balance shaft -arrow-.

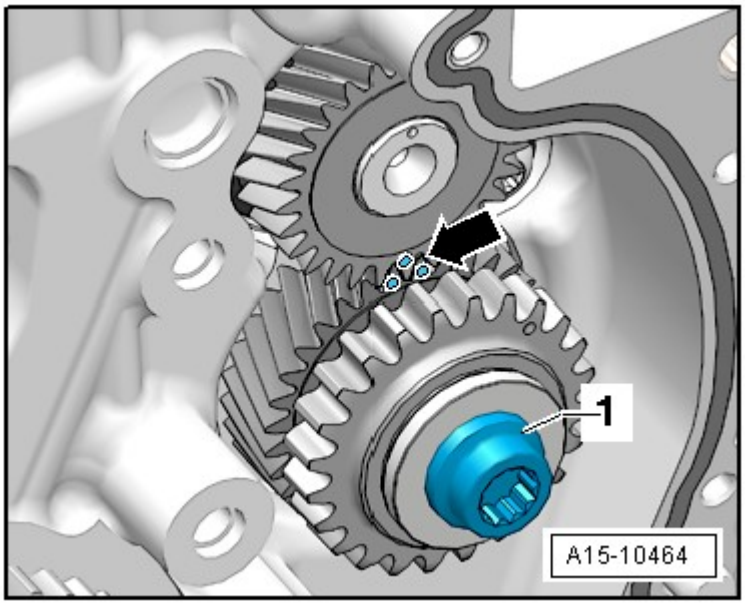

Fig. 93: Identifying Intermediate Shaft Sprocket
Courtesy of AUDI OF AMERICA, LLC

NOTE: The marking on the intermediate sprocket/balance shaft is shown with the chain removed.

Assemble in reverse order of disassembly. When doing this note the following:

-- Install camshaft timing chain. Refer to **CAMSHAFT TIMING CHAIN (WITH NEW TOOLS)**.

-- Install the lower timing chain cover. Refer to **LOWER TIMING CHAIN COVER**.

-- Install the timing chain guard upper section. Refer to **UPPER TIMING CHAIN GUARD**.

-- Install the ribbed belt tensioning damper. Refer to **RIBBED BELT TENSIONING DAMPER** .

-- Install the ribbed belt. Refer to **RIBBED BELT** .

INTAKE CAMSHAFT BALANCE SHAFT

Special tools and workshop equipment required

- Puller T10394
- Puller T10055

Removing

NOTE: The intake camshaft balance shaft must be replaced after removal.

-- Remove the coolant pump toothed belt. Refer to **COOLANT PUMP TOOTHED BELT** .

-- Remove upper timing chain cover. Refer to **UPPER TIMING CHAIN GUARD**.

-- Remove the lower timing chain cover. Refer to **LOWER TIMING CHAIN COVER**.

-- Remove the camshaft timing chain. Refer to **CAMSHAFT TIMING CHAIN (WITH NEW TOOLS)**.

-- Remove the balance shaft timing chain. Refer to **BALANCE SHAFT TIMING CHAIN**.

-- Remove the intermediate sprocket -1-.

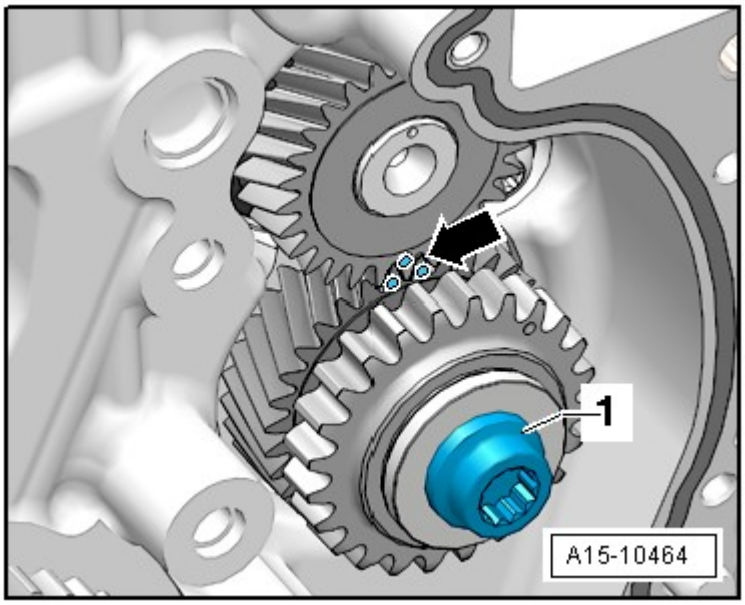

Fig. 94: Identifying Intermediate Shaft Sprocket
Courtesy of AUDI OF AMERICA, LLC

-- Remove the bolt -2- on the intake camshaft balance shaft.

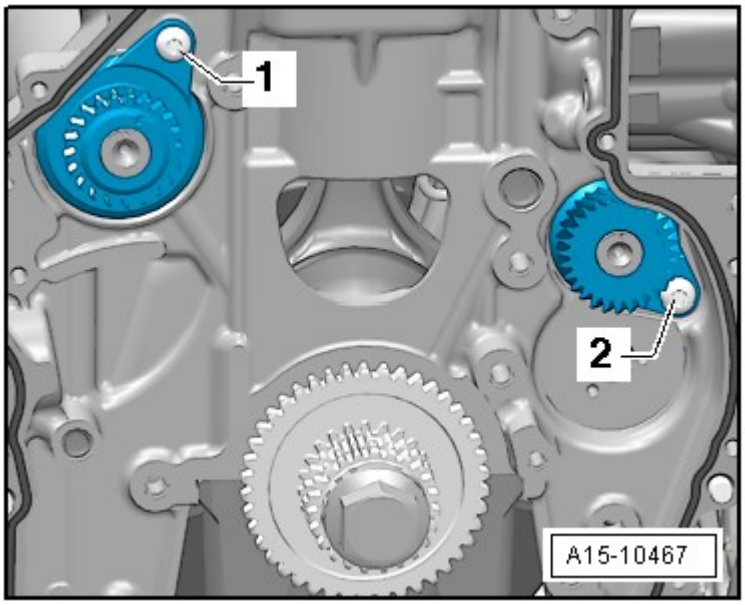

Fig. 95: Identifying Intake Camshaft Balance Shaft
Courtesy of AUDI OF AMERICA, LLC

-- Install the half shell T10394/1 from the T10394 and turn it upward in direction of -arrow-.

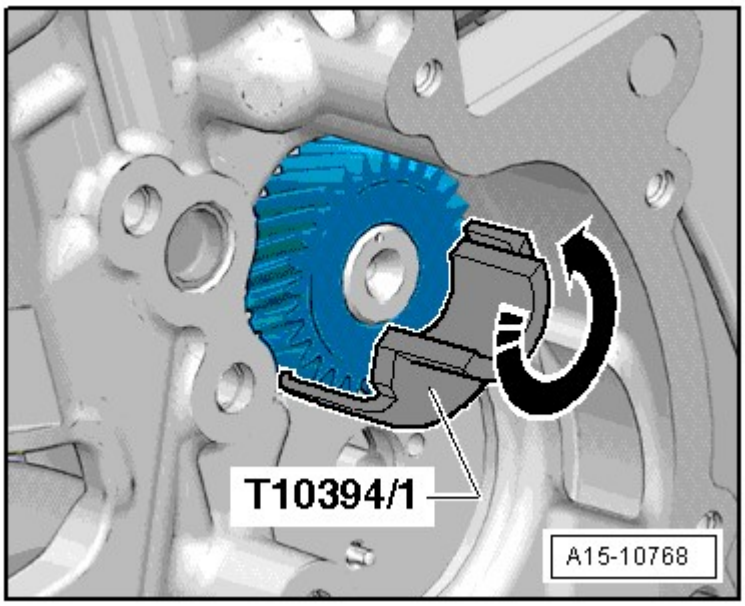

Fig. 96: Identifying Half Shell -T10394/1-
Courtesy of AUDI OF AMERICA, LLC

-- Install the T10394 and push the sliding sleeve in direction of -arrow-.

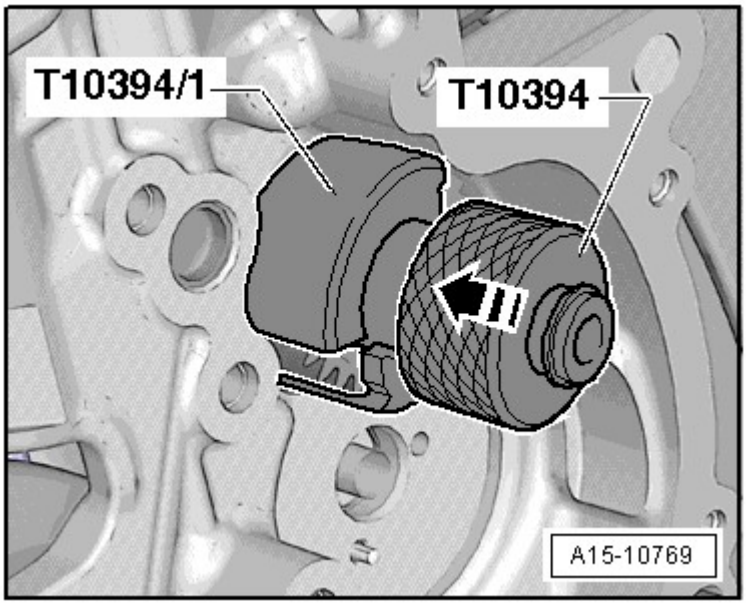

Fig. 97: Identifying Installation Of Puller Pieces -T10394- And -T10394/1-
Courtesy of AUDI OF AMERICA, LLC

-- Install the T10055 into the T10394 and remove the balance shaft in direction of -arrow-.

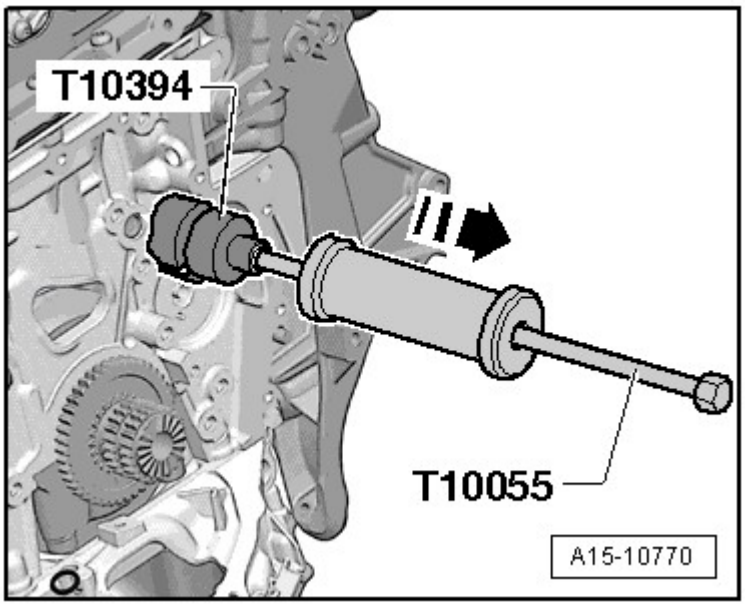

Fig. 98: Identifying Installation And Operation Of Puller -T10055-
Courtesy of AUDI OF AMERICA, LLC

Installing

NOTE: **Because of the small clearance between the balance shaft and cylinder block, the balance shaft may need to be cooled in order to install it. Check if the**

balance shaft can be inserted into the cylinder block without forcing it in. If this is not the case, then the balance shaft must be installed cooled.

- Tightening specifications, refer to **BALANCE SHAFT TIMING CHAIN OVERVIEW**.

-- Place the new balance shaft in a freezer for 30 minutes or spray it with commercially available cooling spray.

-- Lubricate the balance shaft bearing with engine oil.

-- Install the new intake camshaft shim and tighten the bolt -2-.

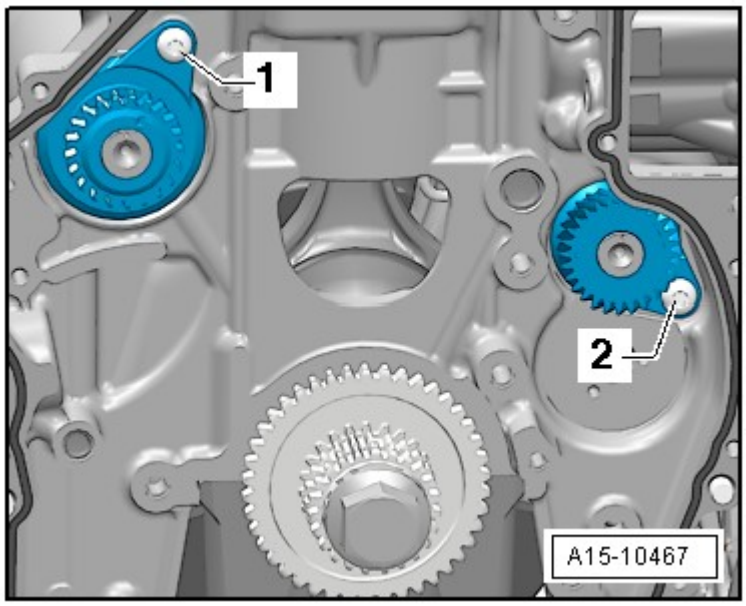

Fig. 99: Identifying Intake Camshaft Balance Shaft
Courtesy of AUDI OF AMERICA, LLC

-- Replace the O-ring -1- and coat with engine oil.

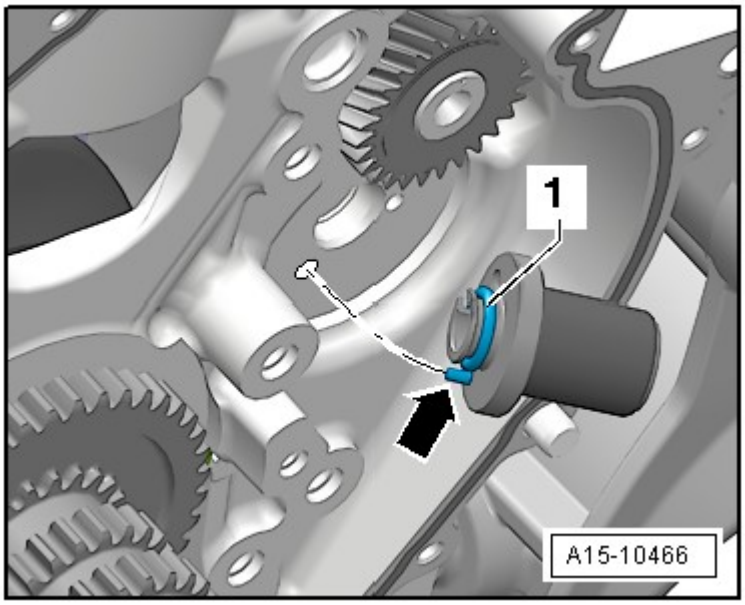

Fig. 100: Identifying Bearing Pins, Installation Position
Courtesy of AUDI OF AMERICA, LLC

-- Coat the mounting pin with engine oil and insert it. The alignment pin -arrow- for the mounting pin must engage in the hole in the cylinder block.

CAUTION: Always replace the intermediate sprocket. Otherwise the backlash will not adjust itself and it could result in engine damage.

The new intermediate sprocket has an anti-friction coating that wears off after a short period of use, which automatically adjusts the backlash.

-- Mark the tooth face on the intermediate sprocket with paint -arrow-.

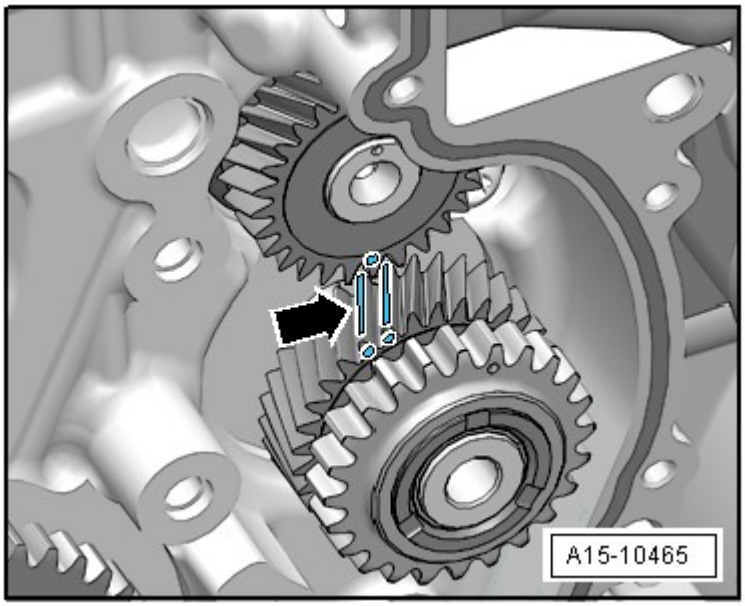

Fig. 101: Identifying Tooth Face On Intermediate Shaft Sprocket Marked With Paint
Courtesy of AUDI OF AMERICA, LLC

-- Install the intermediate sprocket; the marking on the balance shaft must be between the markings on the tooth faces.

-- Tighten the intermediate sprocket bolt -1- : Tightening sequence, refer to **Fig. 12**.

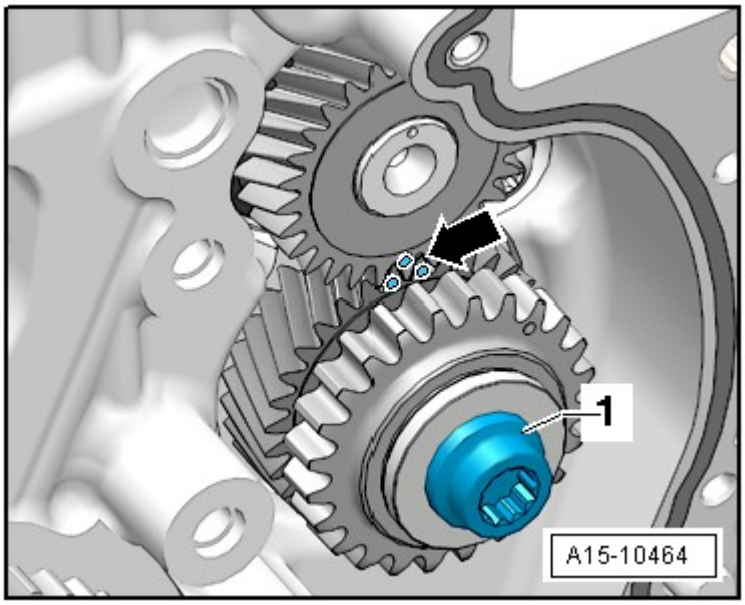

Fig. 102: Identifying Intermediate Shaft Sprocket
Courtesy of AUDI OF AMERICA, LLC

-- Check the markings on the intermediate sprocket/balance shaft -arrow-.

Assemble in reverse order of disassembly. When doing this note the following:

-- Install the balance shaft timing chain. Refer to **BALANCE SHAFT TIMING CHAIN**.

-- Install camshaft timing chain. Refer to **CAMSHAFT TIMING CHAIN (WITH NEW TOOLS)**.

-- Install the lower timing chain cover. Refer to **LOWER TIMING CHAIN COVER**.

-- Install the timing chain guard upper section. Refer to **UPPER TIMING CHAIN GUARD**.

-- Install the ribbed belt tensioning damper. Refer to **RIBBED BELT TENSIONING DAMPER** .

-- Install the ribbed belt. Refer to **RIBBED BELT** .

-- Replace the coolant pump drive seal. Refer to **COOLANT PUMP DRIVE SEAL, REPLACING** .

-- Install the coolant pump toothed belt. Refer to **COOLANT PUMP TOOTHED BELT** .

EXHAUST CAMSHAFT BALANCE SHAFT

Special tools and workshop equipment required

- Puller T10394
- Puller T10055

Removing

NOTE: The exhaust camshaft balance shaft must be replaced after removal.

-- Remove the upper timing chain cover. Refer to **UPPER TIMING CHAIN GUARD**.

-- Remove the lower timing chain cover. Refer to **LOWER TIMING CHAIN COVER**.

-- Remove the camshaft timing chain. Refer to **CAMSHAFT TIMING CHAIN (WITH NEW TOOLS)**.

-- Remove the balance shaft timing chain. Refer to **BALANCE SHAFT TIMING CHAIN**.

-- Remove the bolt -1- on the exhaust camshaft balance shaft.

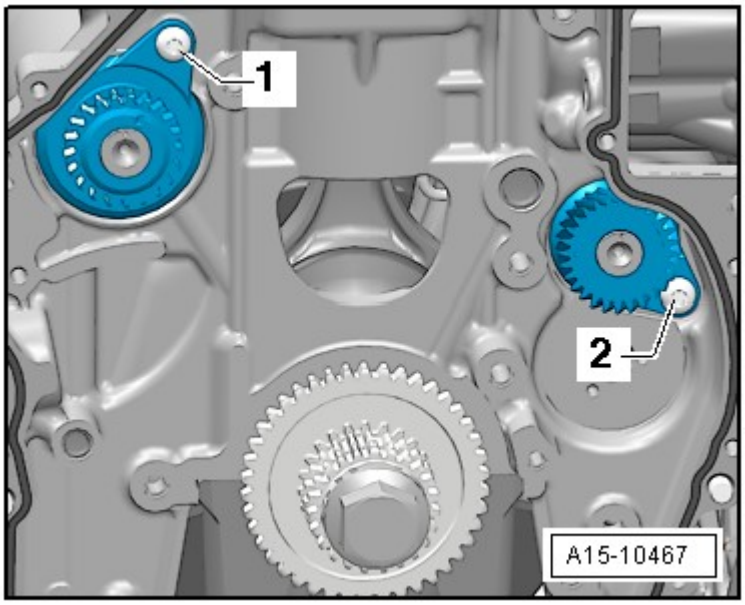

Fig. 103: Identifying Intake Camshaft Balance Shaft
Courtesy of AUDI OF AMERICA, LLC

-- Install the half shell T10394/1 from the T10394.

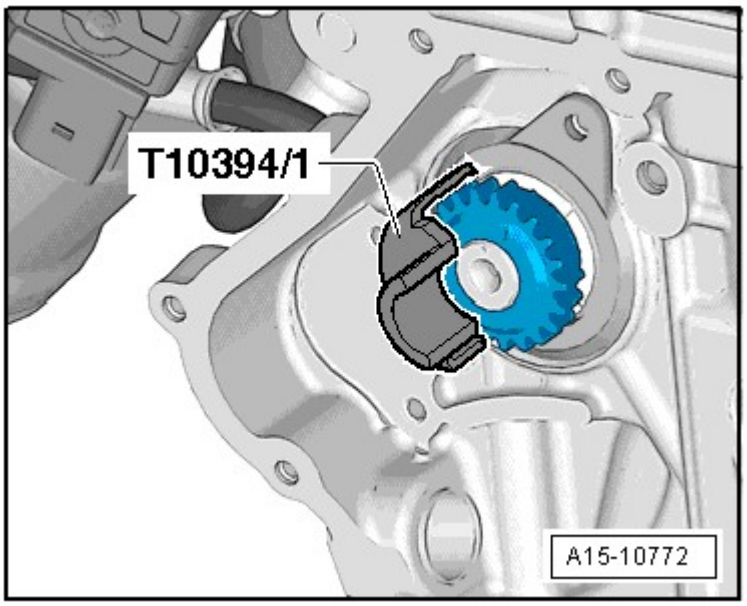

Fig. 104: Identifying Half Shell -T10394/1-
Courtesy of AUDI OF AMERICA, LLC

-- Install the T10394 and push the sliding sleeve in direction of -arrow-.

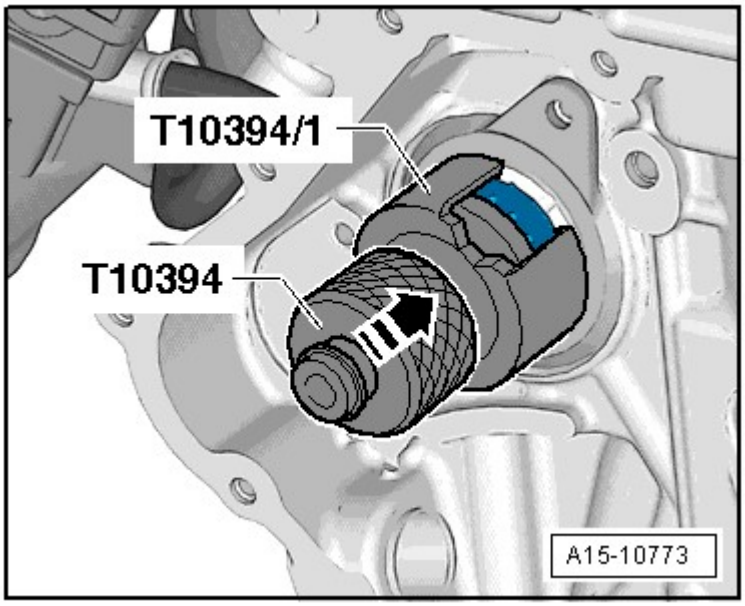

Fig. 105: Identifying Installation Of Puller Pieces -T10394- And -T10394/1-
Courtesy of AUDI OF AMERICA, LLC

-- Install the T10055 into the T10394 and remove the balance shaft.

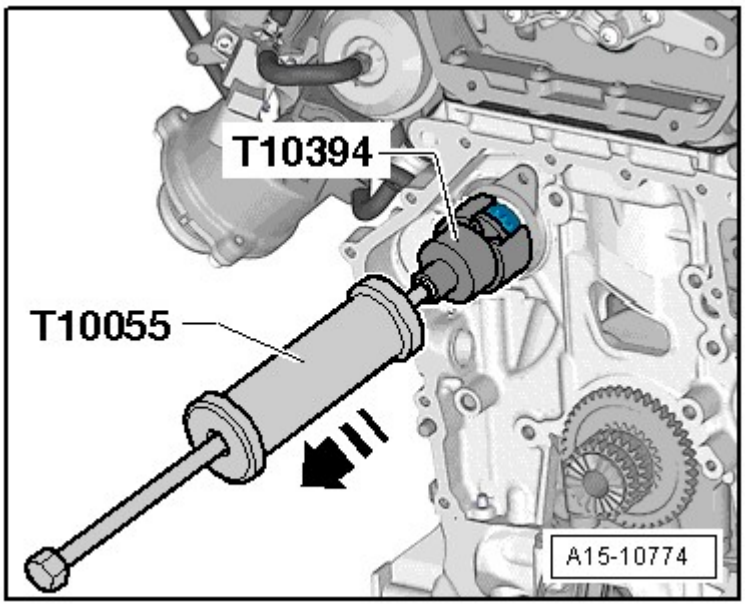

Fig. 106: Identifying Installation And Operation Of Puller -T10055-
Courtesy of AUDI OF AMERICA, LLC

Installing

NOTE: Because of the small clearance between the balance shaft and cylinder block, the balance shaft may need to be cooled in order to install it. Check if the

balance shaft can be inserted into the cylinder block without forcing it in. If this is not the case, then the balance shaft must be installed cooled.

- Tightening specifications, refer to **BALANCE SHAFT TIMING CHAIN OVERVIEW**.

-- Check the installation position of the pipe for the balance shaft -arrow-.

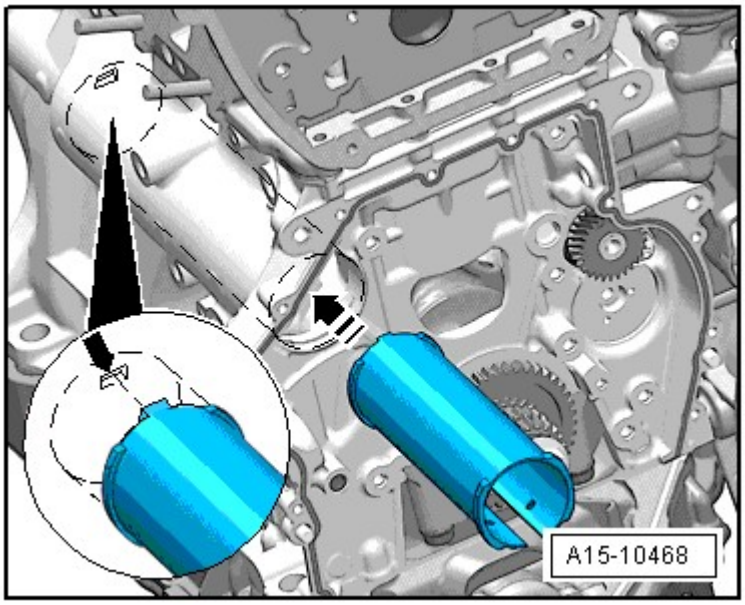

Fig. 107: Identifying Pipe For Balance Shaft - Installation Position
Courtesy of AUDI OF AMERICA, LLC

The pin -arrow- must engage in the groove.

-- Place the new balance shaft in a freezer for 30 minutes or spray it with commercially available cooling spray.

-- Lubricate the balance shaft bearing with engine oil.

-- Install the new exhaust camshaft balance shaft.

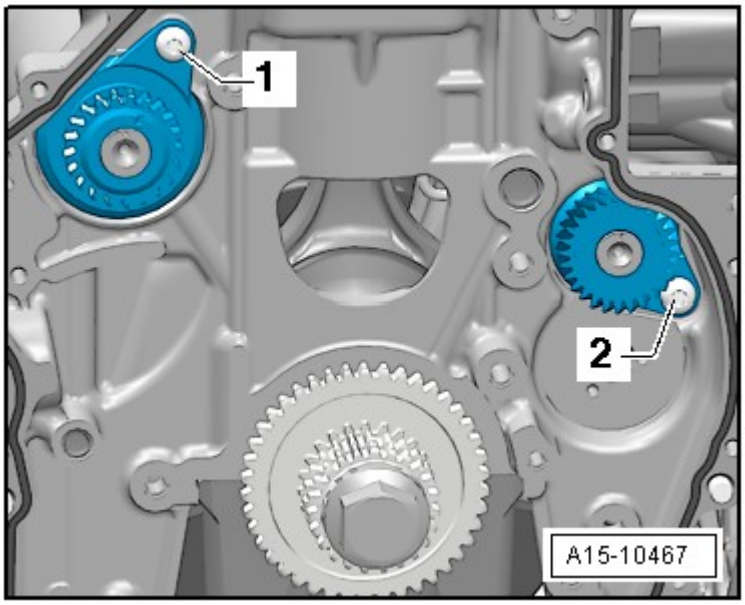

Fig. 108: Identifying Intake Camshaft Balance Shaft
Courtesy of AUDI OF AMERICA, LLC

-- Before tightening the bolt -1- make sure the balance shaft lies level on the crankshaft.

NOTE: If the balance shaft is not level, then the pipe for the balance shaft must be installed again.

Assemble in reverse order of disassembly. When doing this note the following:

-- Install the balance shaft timing chain. Refer to **BALANCE SHAFT TIMING CHAIN**.

-- Install camshaft timing chain. Refer to **CAMSHAFT TIMING CHAIN (WITH NEW TOOLS)**.

-- Install the lower timing chain cover. Refer to **LOWER TIMING CHAIN COVER**.

-- Install the timing chain guard upper section. Refer to **UPPER TIMING CHAIN GUARD**.

-- Install the ribbed belt tensioning damper. Refer to **RIBBED BELT TENSIONING DAMPER** .

-- Install the ribbed belt. Refer to **RIBBED BELT** .

CYLINDER HEAD WITH WRENCH CLEARANCE

NOTE: Camshafts with screwdriver access have notches in the camshafts, refer to Fig. 1.

Special tools and workshop equipment required

- Ignition Coil Puller T40039
- Assembly Tool T10352 and Assembly Tool T10352/1
- Counter Hold Tool T10355
- Locking Pin T40011
- Drift T40196
- Polydrive Bit and Drive Socket T10070
- Engine Bung Set VAS 6122
- Polydrive Bit and Drive Socket T10070
- Pry Lever T40243
- Camshaft Locator T40271
- Spark Plug Removal Tool 3122 B

Removing

--

NOTE: **During installation, cable ties must be installed at the same location.**

Always seal off any open channels in the intake and exhaust tract with plugs. For example, use the plugs from the VAS 6122.

-- Remove the front noise insulation. Refer to **Description and Operation** .

WARNING: **Risk of scalding due to hot steam and hot coolant.**

- **The coolant system is under pressure when the engine is warm.**
- **Reduce pressure by covering coolant reservoir cap with a cloth and carefully open.**

-- Drain the coolant. Refer to **COOLANT, DRAINING AND FILLING** .

-- Remove the front exhaust pipe/front muffler. Refer to **FRONT EXHAUST PIPE AND FRONT MUFFLER** .

-- Remove the engine cover -arrows-.

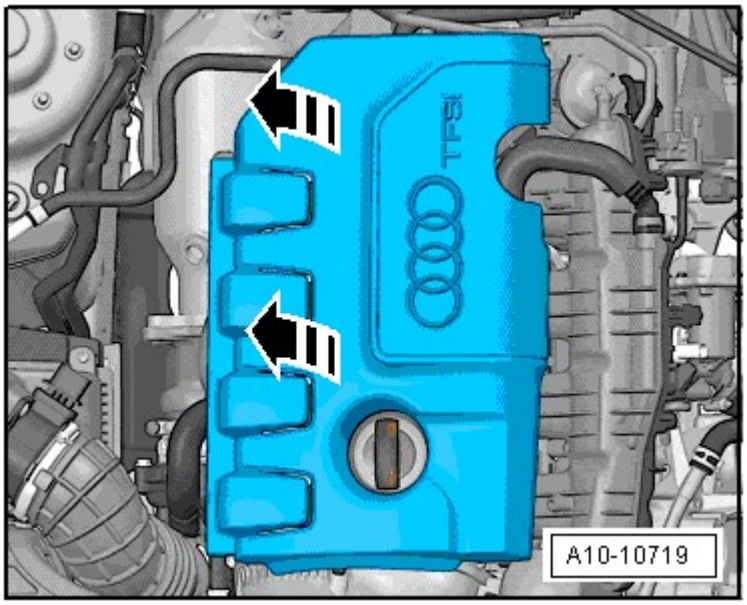

Fig. 109: Identifying Engine Cover
Courtesy of AUDI OF AMERICA, LLC

-- Remove the plenum chamber covers -1, 2 and 3-.

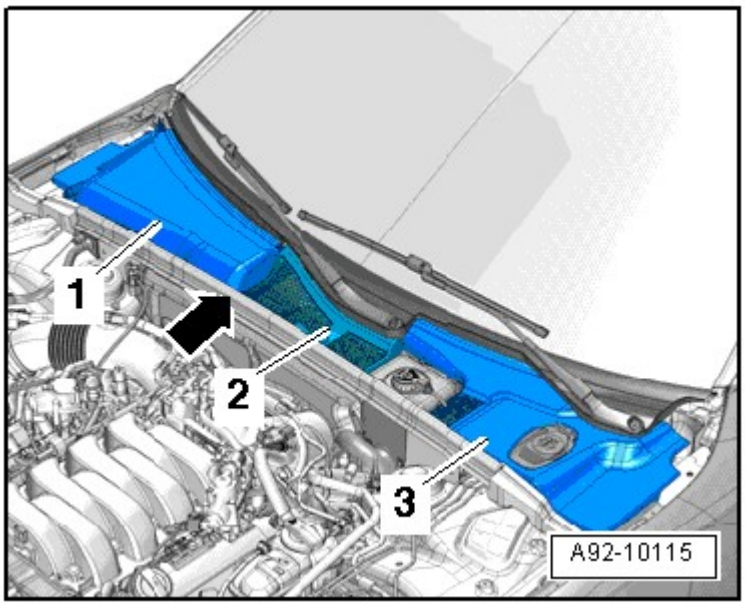

Fig. 110: Identifying Plenum Chamber Covers
Courtesy of AUDI OF AMERICA, LLC

-- Disconnect the vacuum connection -2- from the plenum chamber bulkhead by removing the vacuum hose -3- on the back side -arrow-.

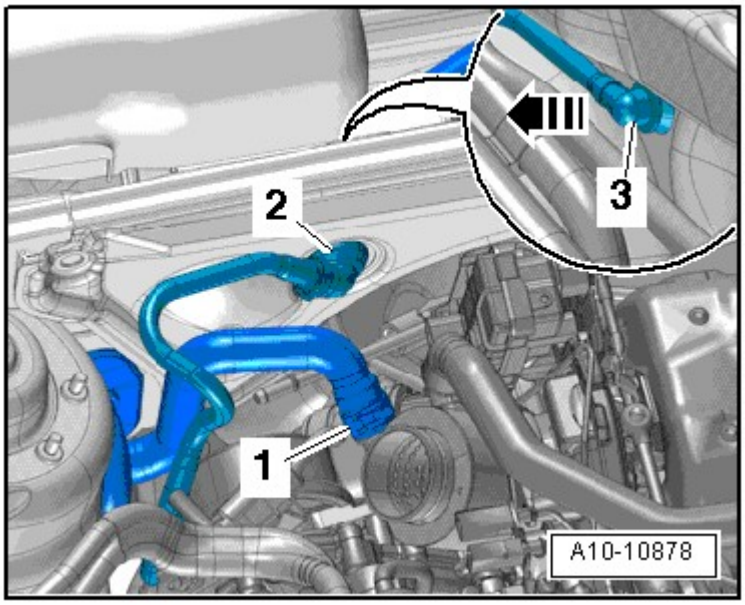

Fig. 111: Disconnecting Vacuum Connection
Courtesy of AUDI OF AMERICA, LLC

-- Remove the coolant hoses on the back of the cylinder head.

CAUTION: Risk of contamination to the fuel system.

- **Note rules of cleanliness for working on the fuel injection system. Refer to CLEAN WORKING CONDITIONS .**

-- Disconnect fuel lines -1 and 2-.

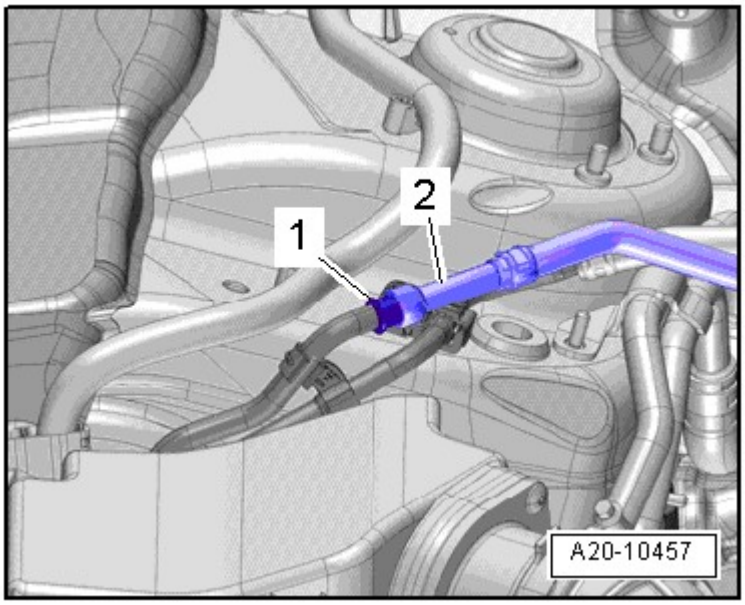

Fig. 112: Identifying Fuel Line
Courtesy of AUDI OF AMERICA, LLC

-- Remove the front bumper cover and the bumper. Refer to **Removal and Installation** .

-- Install the lock carrier in service position. Refer to **Description and Operation** .

-- Disconnect the connector -1- from the Mass Airflow (MAF) Sensor -G70-.

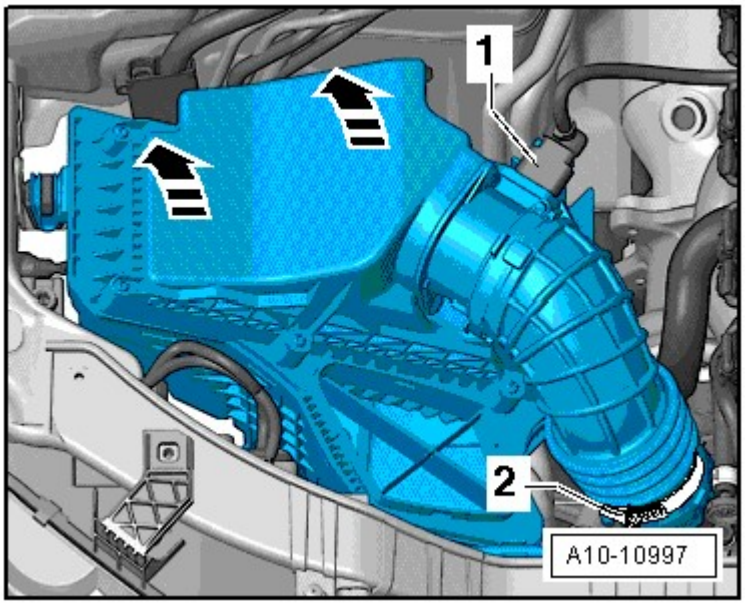

Fig. 113: Disconnecting Connector
Courtesy of AUDI OF AMERICA, LLC

-- Loosen the air intake hose -2-.

-- Remove the air filter housing upward -arrows-.

-- Loosen the hose clamps -arrows- and remove the air guide hose.

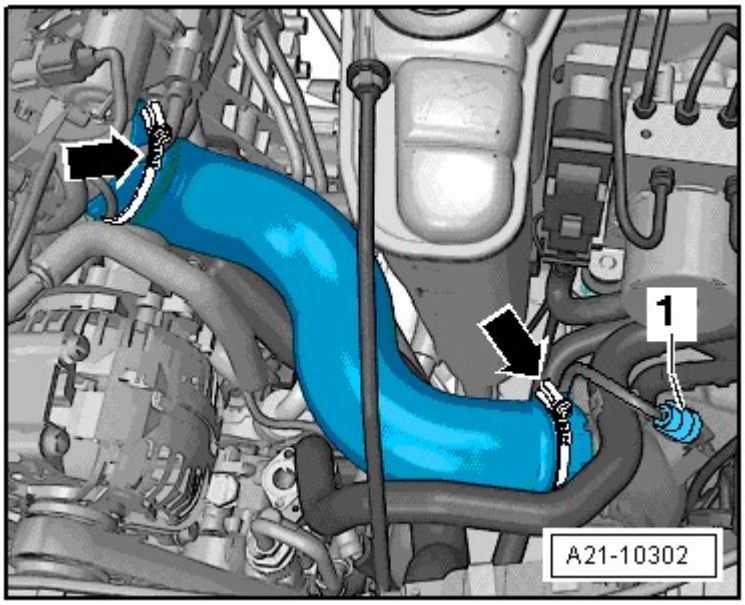

Fig. 114: Loosening Hose Clamps
Courtesy of AUDI OF AMERICA, LLC

-- Disconnect the following connectors.

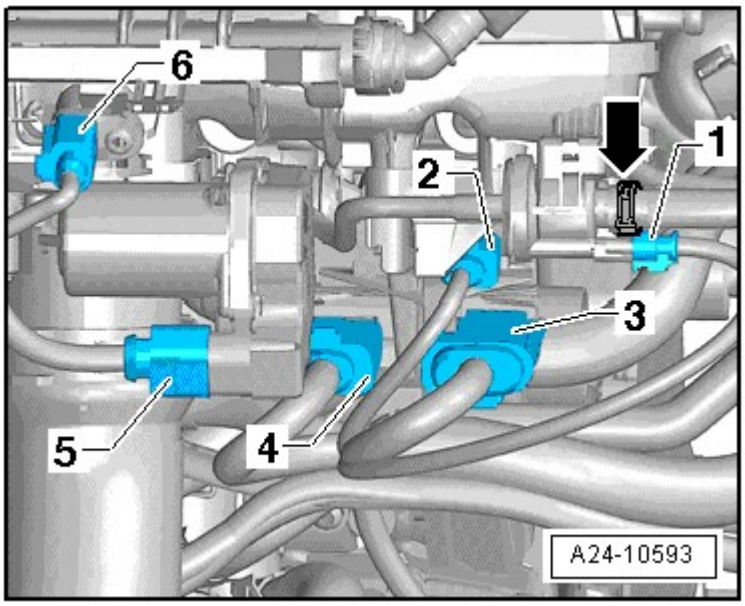

Fig. 115: Identifying Connectors
Courtesy of AUDI OF AMERICA, LLC

2 - Disconnect from Knock Sensor (KS) 1 -G61-

3 - From the Intake Manifold Runner Control (IMRC) Valve -N316-, Fuel Pressure Sensor -G247- and the Camshaft Position (CMP) sensor -G40-.

4 - From the fuel injectors

5 - From the Throttle Valve Control Module -J338-.

6 - From the Intake Air Temperature (IAT) Sensor -G42-.

-- Disconnect the connector -2- and free up the wire.

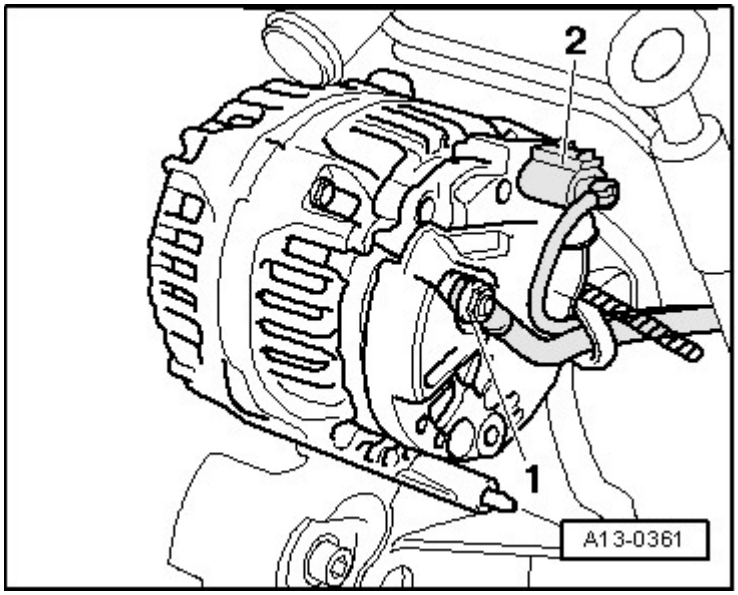

Fig. 116: Identifying Generator Electrical Connector And Terminal B+
Courtesy of AUDI OF AMERICA, LLC

-- Remove the coolant line bracket -arrow-.

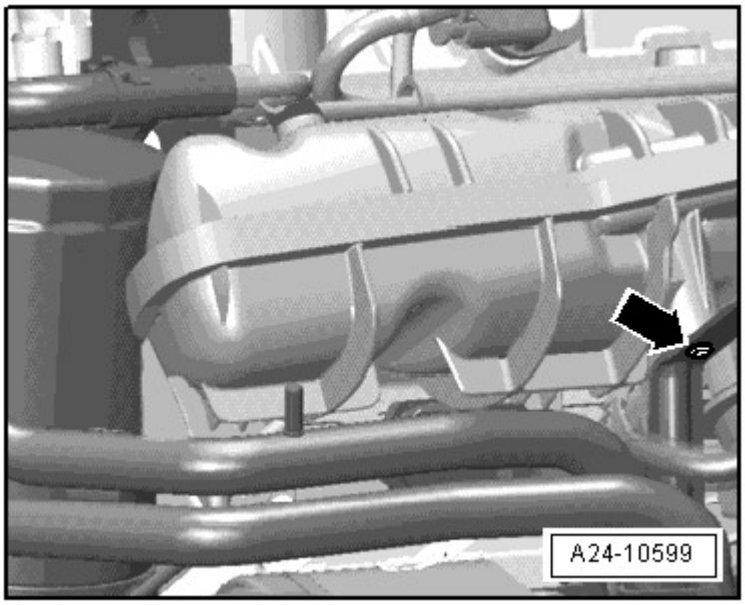

Fig. 117: Locating Coolant Line Bolt
Courtesy of AUDI OF AMERICA, LLC

NOTE: The engine is not shown in the illustrations that follow.

-- Remove the intake manifold bracket by removing the mounting nut -1- and bolt -2-.

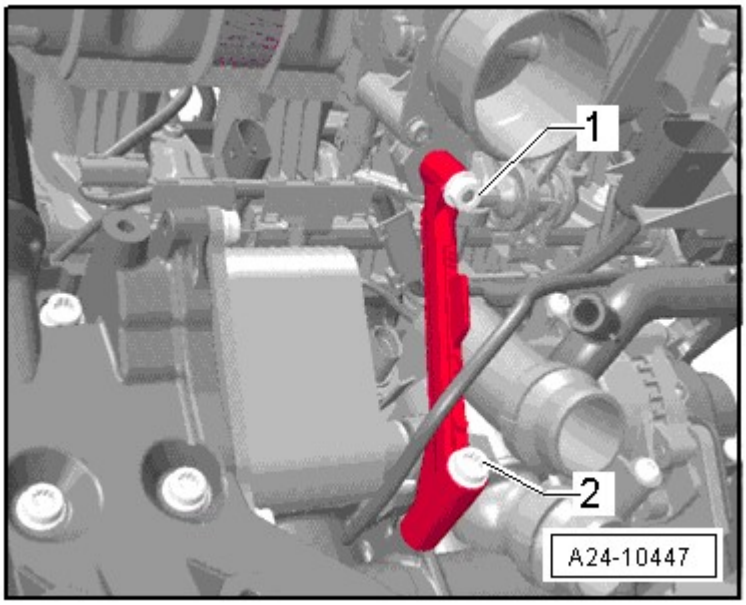

Fig. 118: Identifying Intake Manifold Bracket Mounting Nut And Bolt
Courtesy of AUDI OF AMERICA, LLC

-- Disconnect the coolant hose -arrow-.

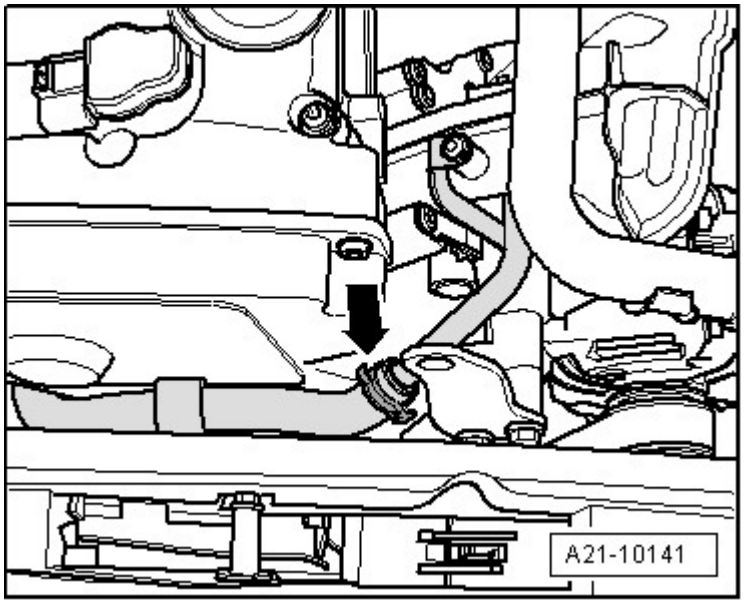

Fig. 119: Disconnecting Coolant Pipe

Courtesy of AUDI OF AMERICA, LLC

-- Remove the bolts -1 and 2- and move the oil supply line to the side.

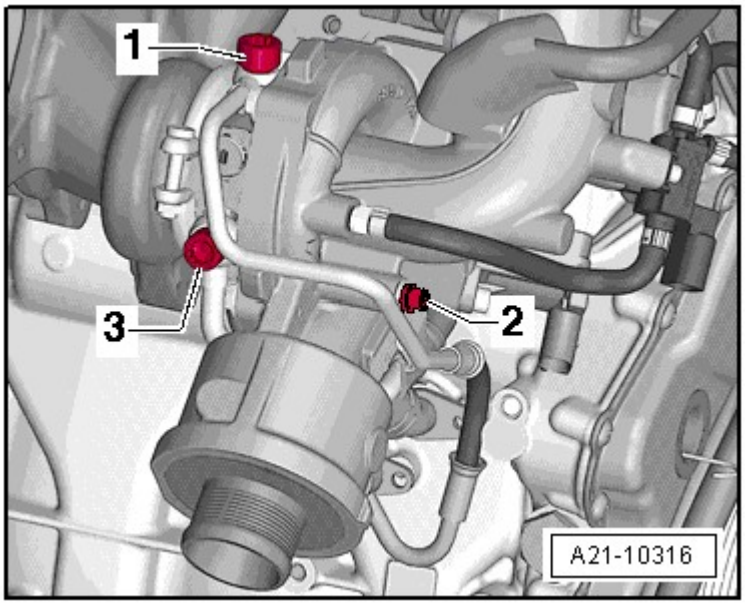

Fig. 120: Identifying Bolts
Courtesy of AUDI OF AMERICA, LLC

-- Remove the bolt -3- and move the coolant line to the side.

-- Loosen the hose clamp -arrow-, pull off the air guide hose and move it to the side.

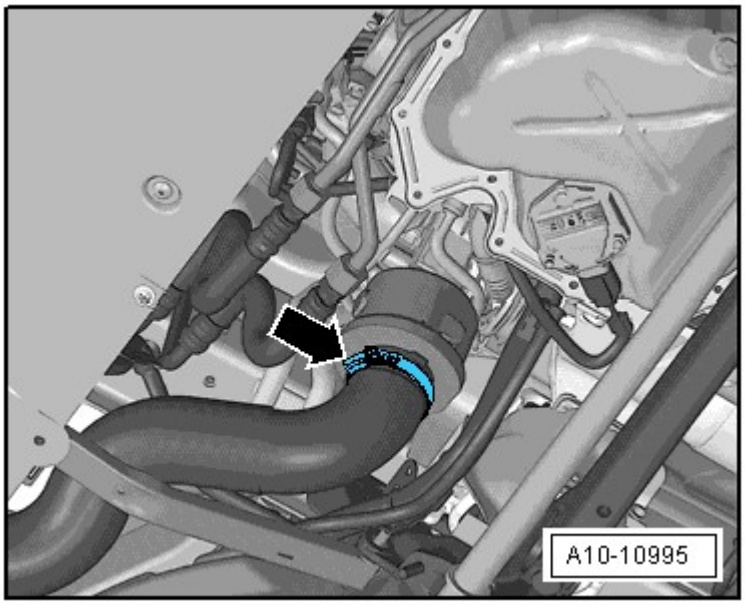

Fig. 121: Loosening Hose Clamp
Courtesy of AUDI OF AMERICA, LLC

-- Disconnect the connectors -1 and 4- from the oil pressure switch -F22- and the reduced oil pressure switch -F378-.

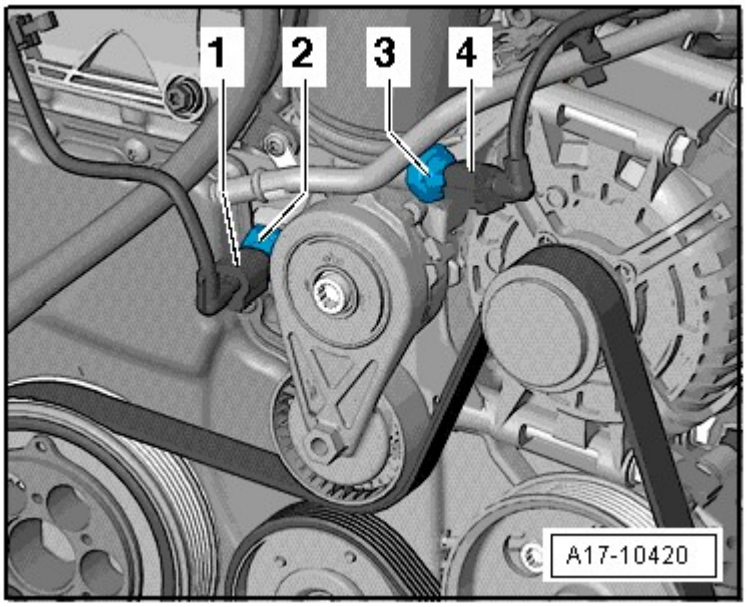

Fig. 122: Identifying Oil Pressure Switch
Courtesy of AUDI OF AMERICA, LLC

-- Disconnect the connectors -1 and 2- and free up the wire.

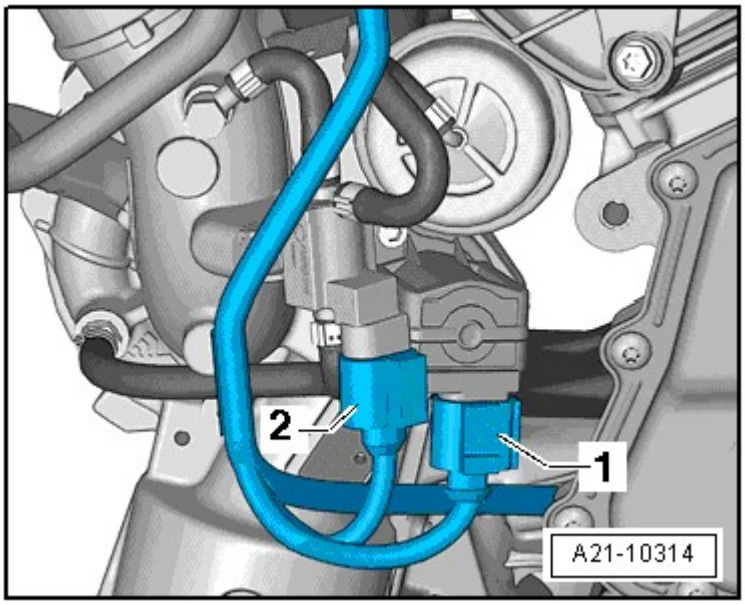

Fig. 123: Disconnecting Connectors
Courtesy of AUDI OF AMERICA, LLC

-- Remove the bolts -arrows- and then remove the turbocharger support.

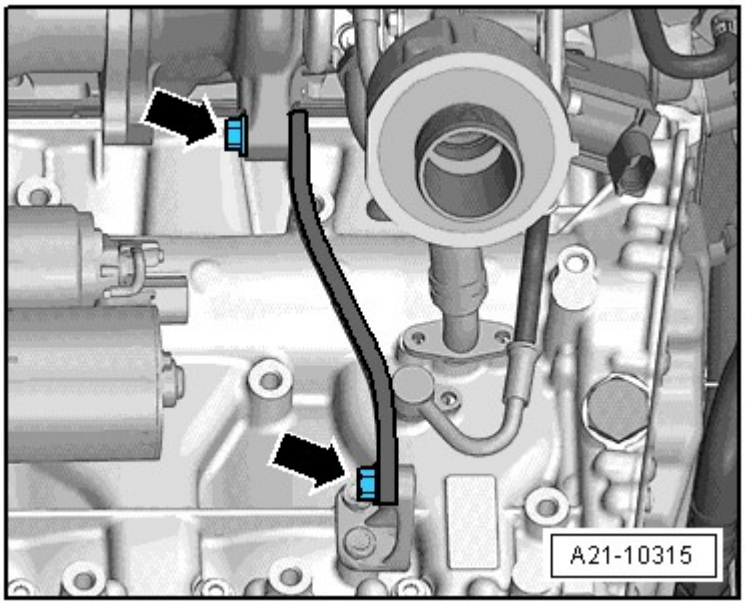

Fig. 124: Identifying Bolts
Courtesy of AUDI OF AMERICA, LLC

-- Remove the bolts -arrows- on the oil return line.

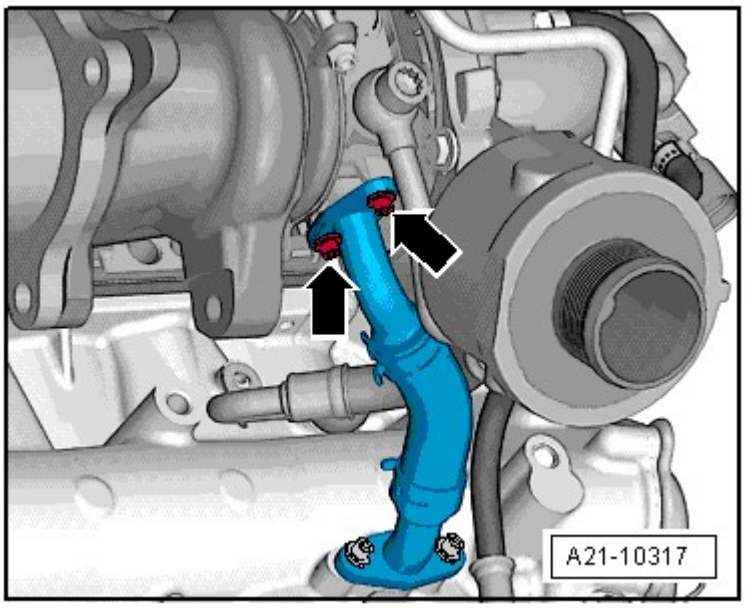

Fig. 125: Identifying Bolts
Courtesy of AUDI OF AMERICA, LLC

-- Remove the nuts -arrows- and push the catalytic converter to the rear.

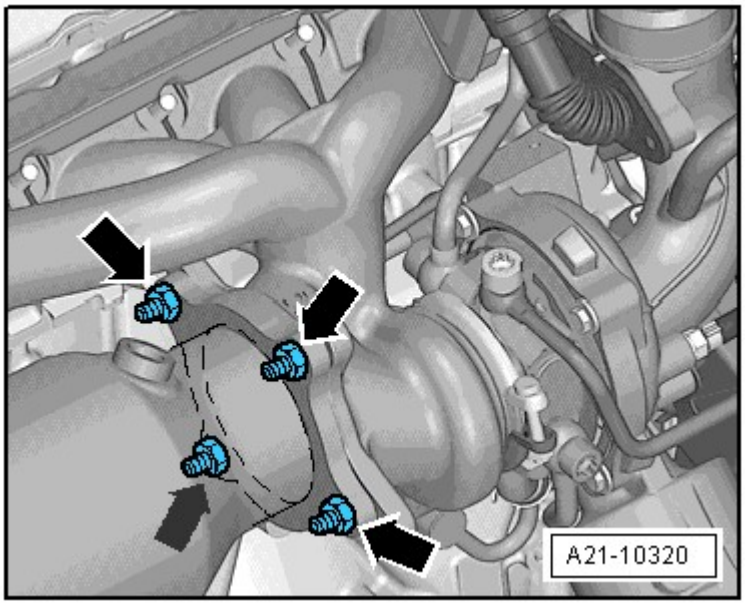

Fig. 126: Identifying Nuts
Courtesy of AUDI OF AMERICA, LLC

-- Disconnect the connector from the camshaft adjustment valve 1 -N205- -1-.

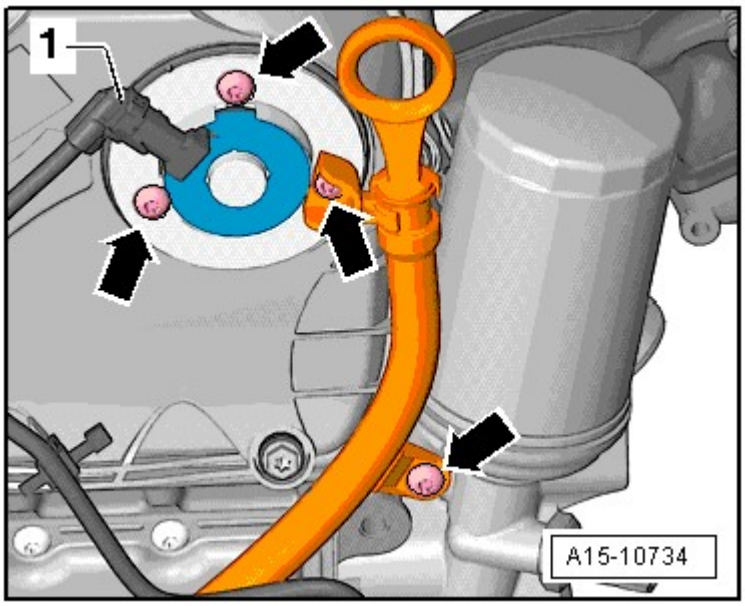

Fig. 127: Disconnecting Connector
Courtesy of AUDI OF AMERICA, LLC

-- Remove the bolts -arrows- and then the camshaft adjustment valve 1 -N205-.

-- Remove the bolts -1 through 5- and the timing chain guard upper section.

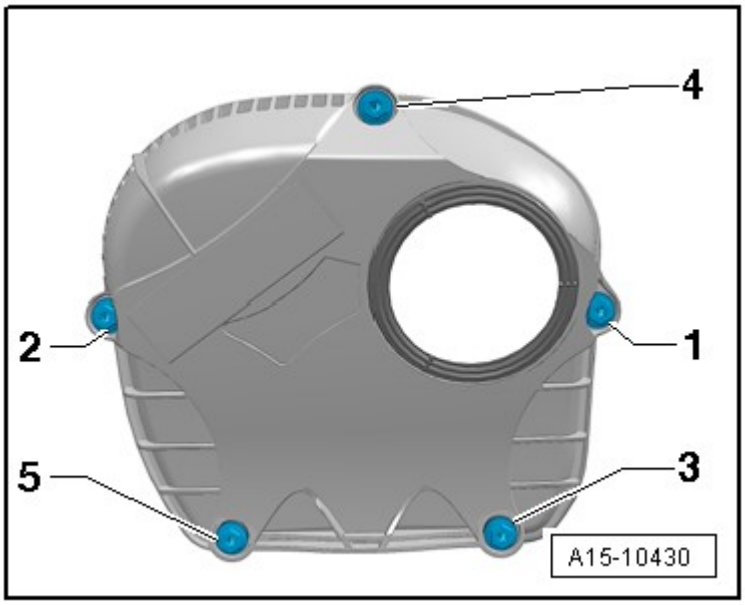

Fig. 128: Identifying Upper Timing Chain Cover - Tightening Sequence
Courtesy of AUDI OF AMERICA, LLC

-- Remove the bolts on the ignition coil connector strip.

-- Release the connector -arrows- and disconnect all the connectors at the same time from the ignition coils.

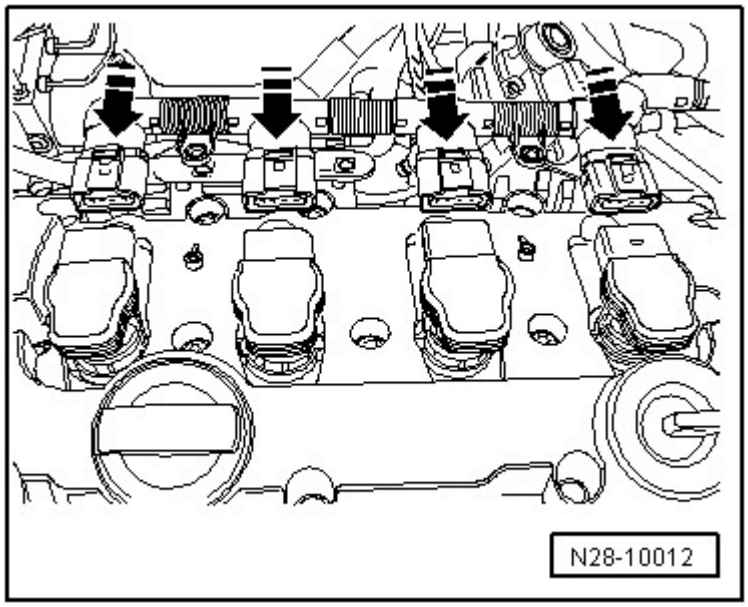

Fig. 129: Connecting Connectors To Ignition Coils
Courtesy of AUDI OF AMERICA, LLC

-- Remove the ignition coils with the T40039.

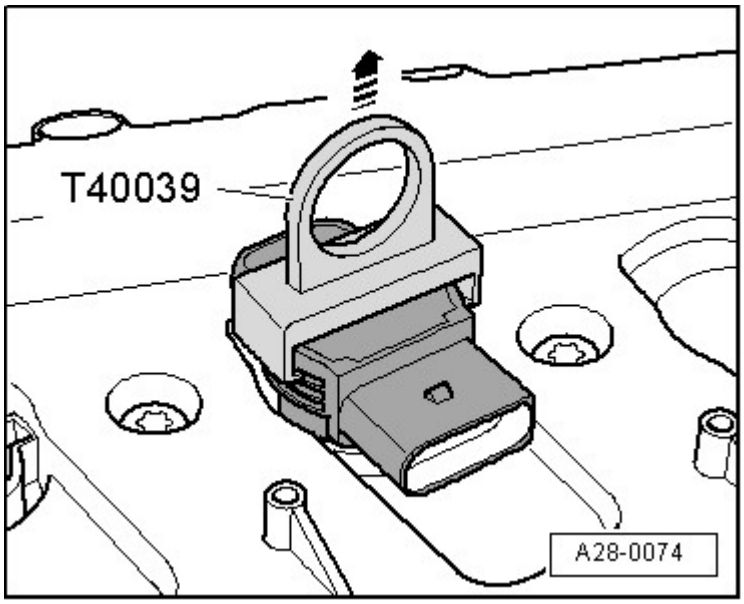

Fig. 130: Identifying Ignition Coil Puller T40039 To Remove Ignition Coils
Courtesy of AUDI OF AMERICA, LLC

-- Remove the spark plugs using a 3122 B.

-- Disconnect the hose for the crankcase ventilation - 1 -.

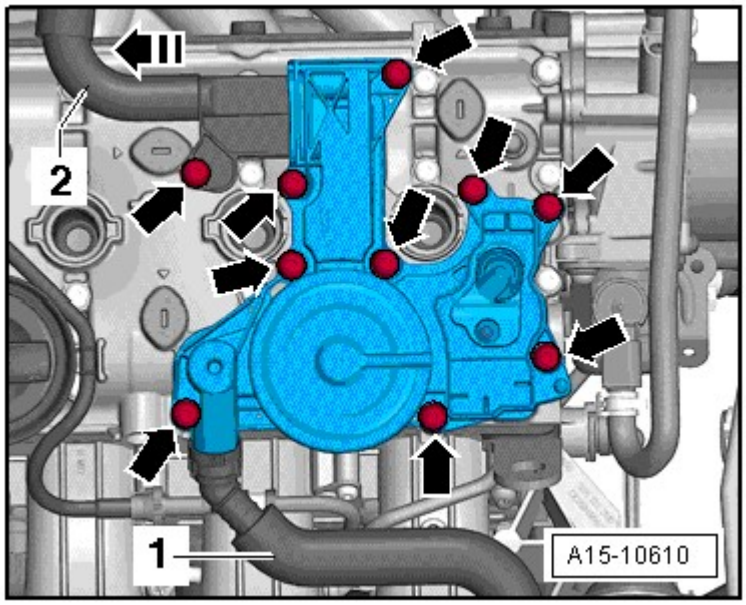

Fig. 131: Locating Crankcase Ventilation Bolts
Courtesy of AUDI OF AMERICA, LLC

-- Remove the bolts -arrows- and then remove the crankcase ventilation from the hose -2- in direction of -arrow-
.

-- Disconnect the connectors -arrows- from the camshaft adjuster actuators --.

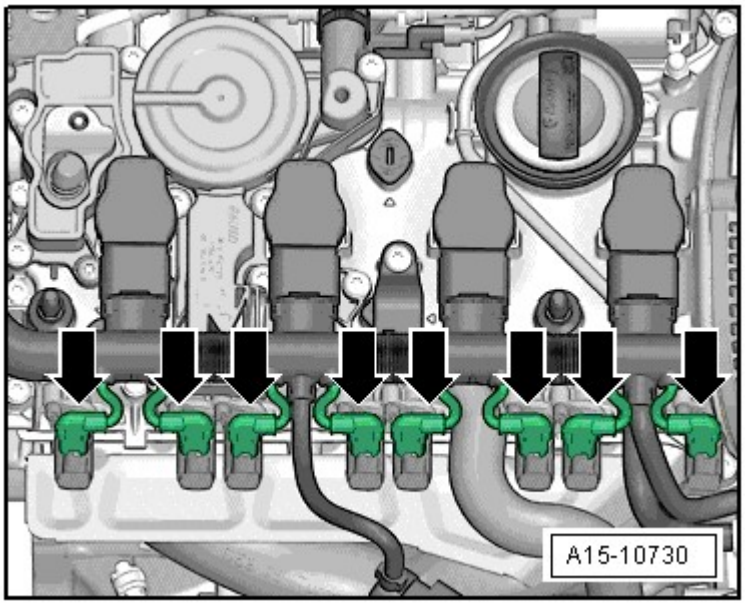

Fig. 132: Identifying Bolts
Courtesy of AUDI OF AMERICA, LLC

-- Remove the camshaft adjuster actuators -- -arrows-.

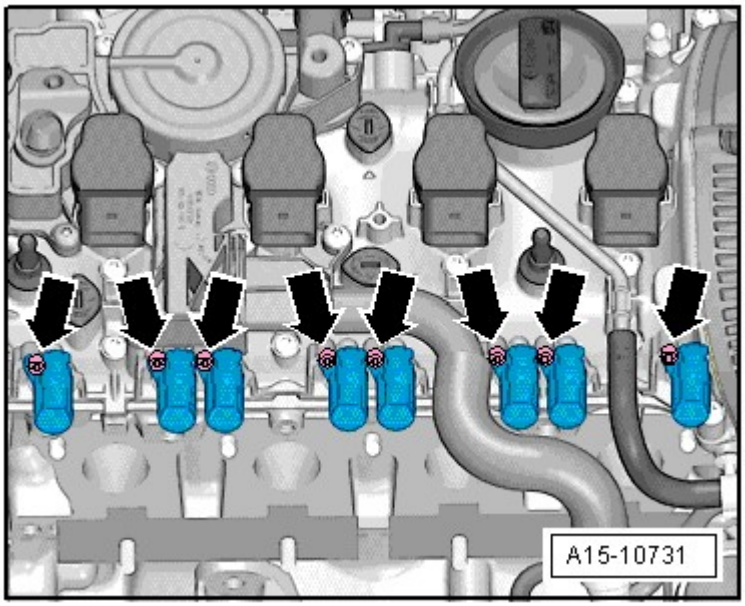

Fig. 133: Identifying Camshaft Adjuster Actuators
Courtesy of AUDI OF AMERICA, LLC

-- Turn the sealing plug -arrows- counterclockwise 90° in the direction of the -arrow- and remove it.

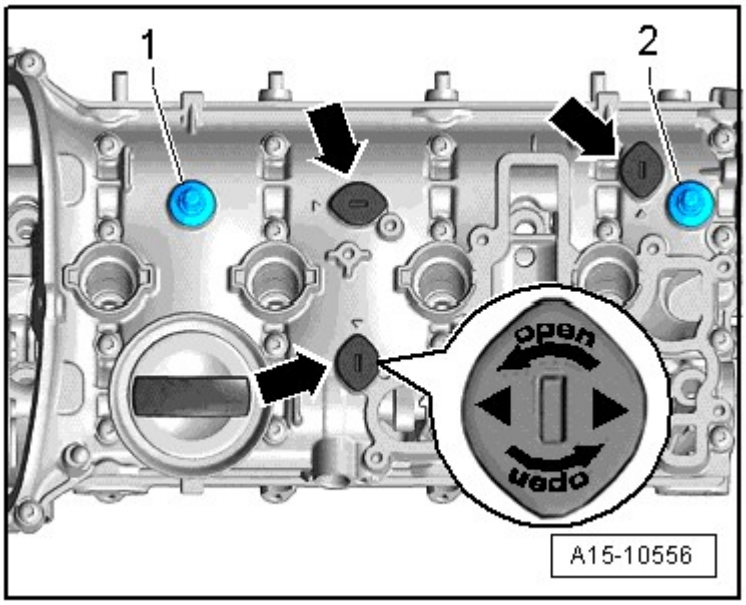

Fig. 134: Identifying Ball Head And Sealing Plug
Courtesy of AUDI OF AMERICA, LLC

-- Remove the ball head -1 and 2-.

-- Remove the cap.

-- Rotate the vibration damper using the T10355 to "TDC" position.

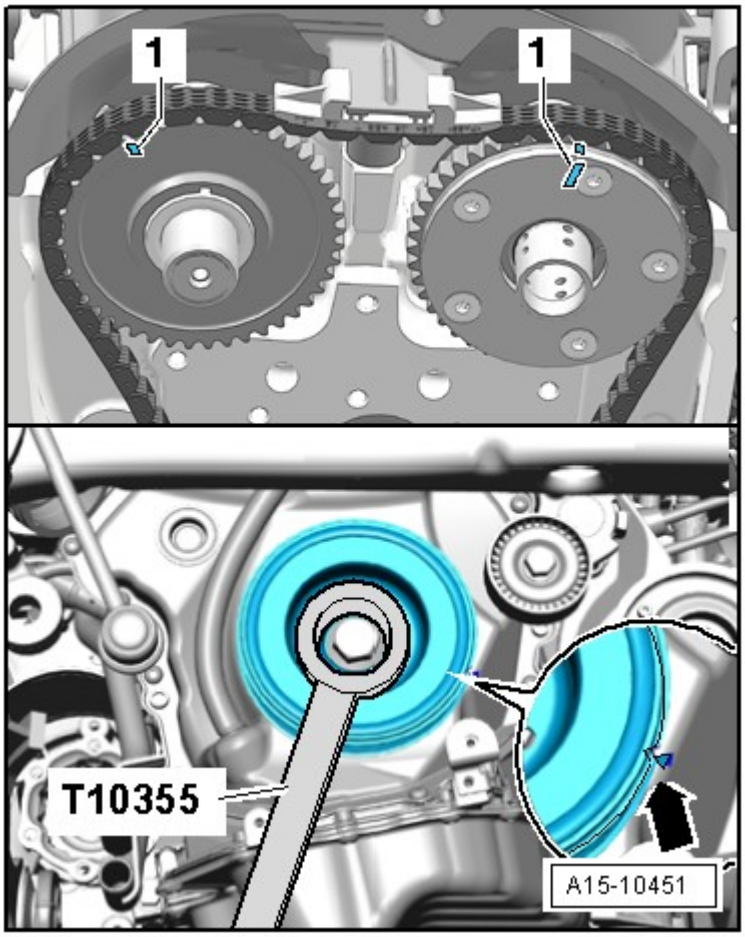

Fig. 135: Identifying Vibration Damper Rotated Into "OT" Position Using Counter Hold Tool T10355
Courtesy of AUDI OF AMERICA, LLC

- The notch on the vibration damper and the marking on the timing chain guard lower section must be opposite of one another -arrow-.
- The markings -1- on the camshafts must point upward.

-- Remove the cylinder head bolts -1 and 2- with the T10070.

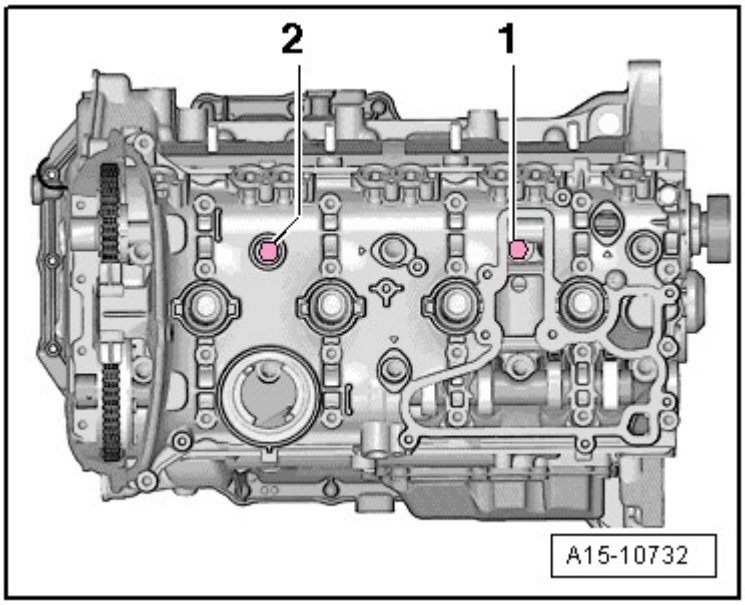

Fig. 136: Identifying Bolts
Courtesy of AUDI OF AMERICA, LLC

CAUTION: Danger of causing damage to the engine.

- **The T40196 may be installed only in the shown positions.**

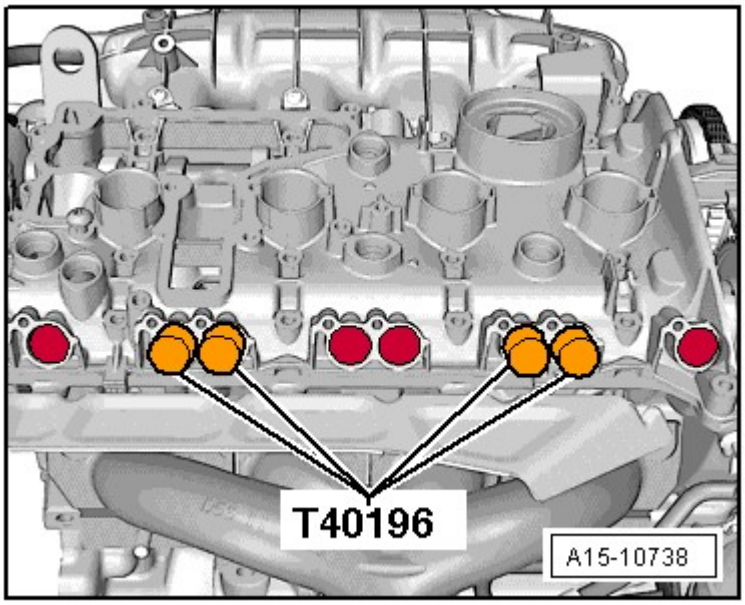

Fig. 137: Identifying T40196 Installation Positions
Courtesy of AUDI OF AMERICA, LLC

-- Install the T40196 as illustrated.

-- Turn the crankshaft 4 complete turns in the direction of engine rotation.

-- Remove the T40196.

CAUTION: The control valve has a left thread.

-- Remove the control valve using the T10352 or T10352/1 in direction of -arrow- depending on the version.

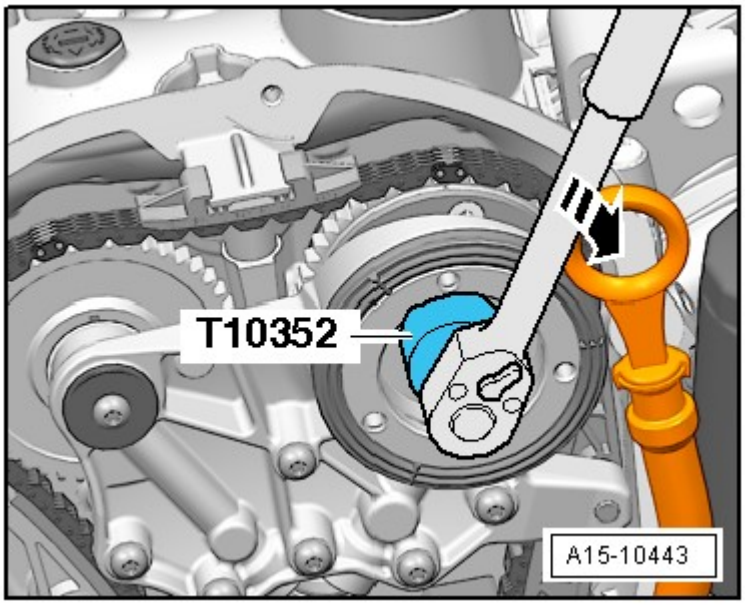

Fig. 138: Identifying Assembly Tool T10352 To Remove Control Valve
Courtesy of AUDI OF AMERICA, LLC

-- Remove the bolts -arrows- and remove the bearing bracket.

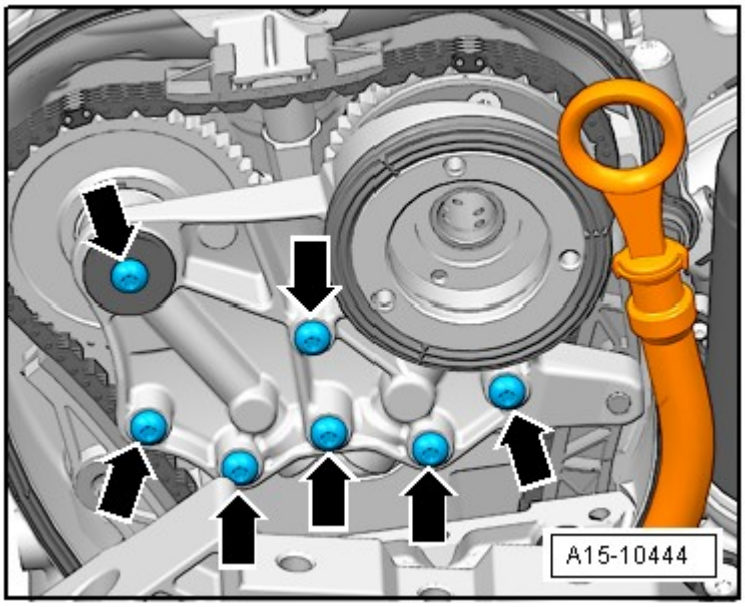

Fig. 139: Identifying Bearing Bracket Bolts
Courtesy of AUDI OF AMERICA, LLC

-- Rotate the vibration damper using the T10355 into the "TDC" position.

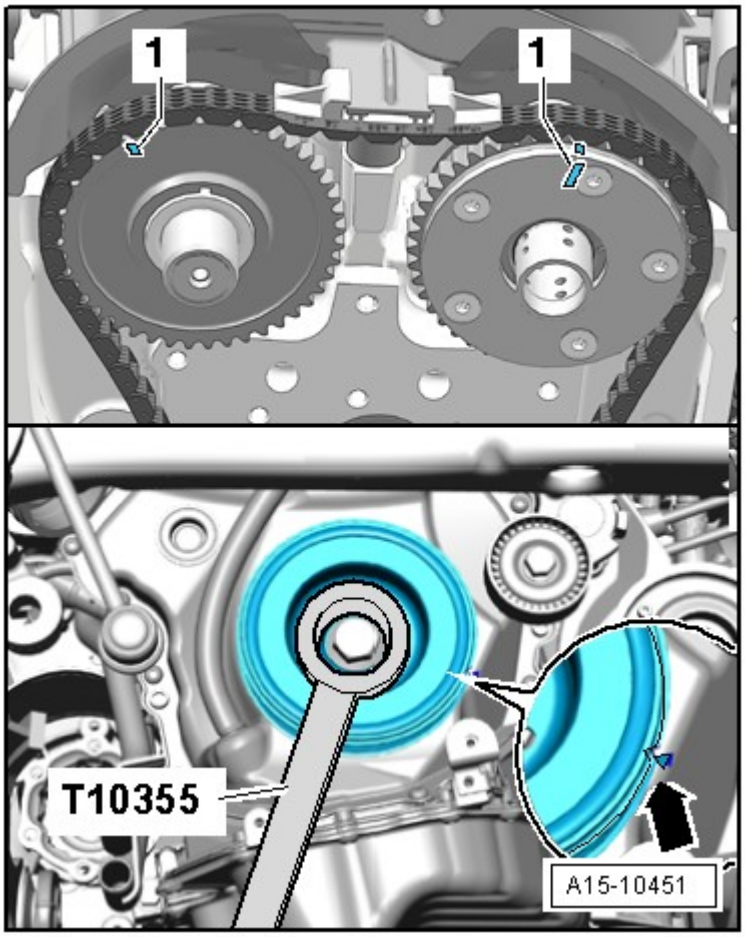

Fig. 140: Identifying Vibration Damper Rotated Into "OT" Position Using Counter Hold Tool T10355
Courtesy of AUDI OF AMERICA, LLC

- The notch on the vibration damper and the marking on the timing chain guard lower section must be opposite one another -arrow-.
- The markings -1- on the camshafts must point upward.

-- Mark the camshaft timing chain and the cylinder head -arrows- to match the marking on the chain sprockets -1- with a waterproof marker.

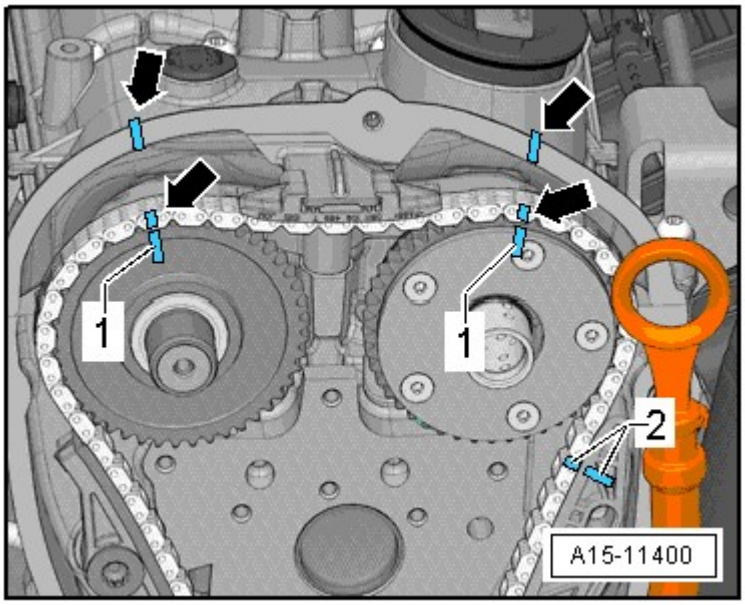

Fig. 141: Marking Camshaft Timing Chain Andcylinder Head
Courtesy of AUDI OF AMERICA, LLC

-- In addition, mark the camshaft timing chain to the camshaft timing chain guide rail -2- with a permanent marker.

-- Remove the plug -arrow-.

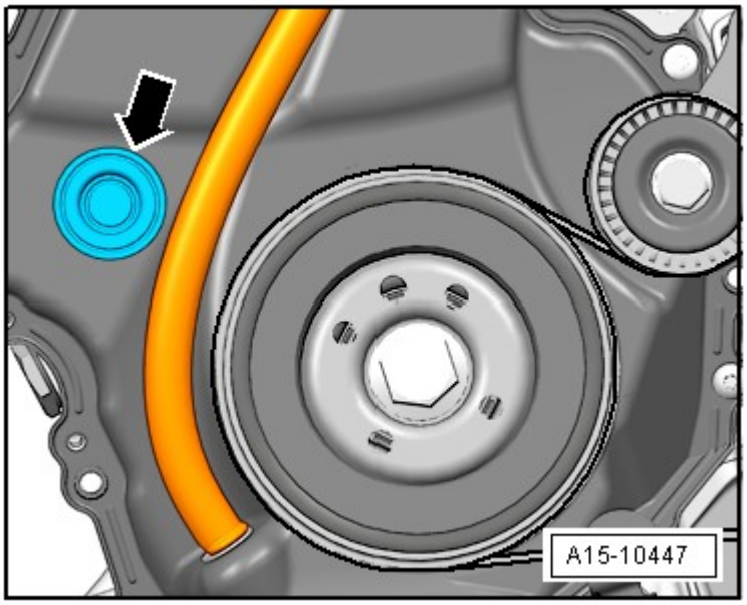

Fig. 142: Locating Plug
Courtesy of AUDI OF AMERICA, LLC

-- Remove the bolts -arrows-.

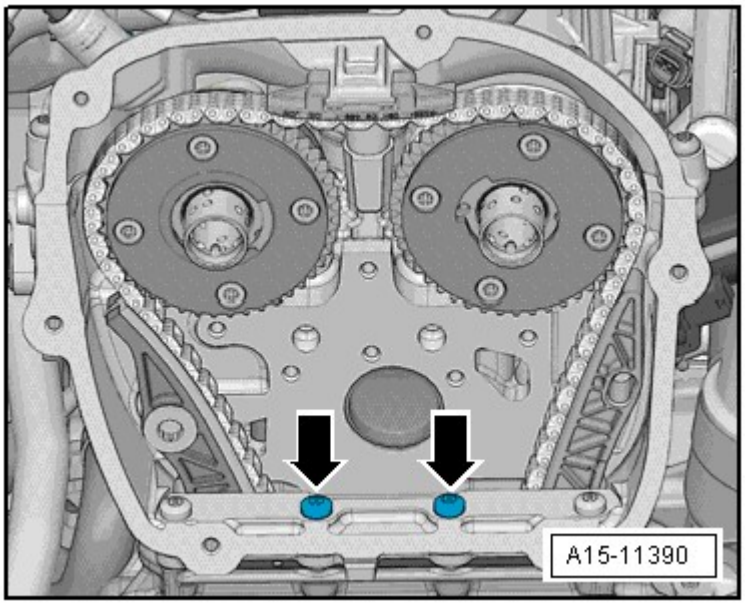

Fig. 143: Identifying Bolts
Courtesy of AUDI OF AMERICA, LLC

-- Remove the bolt -arrow-.

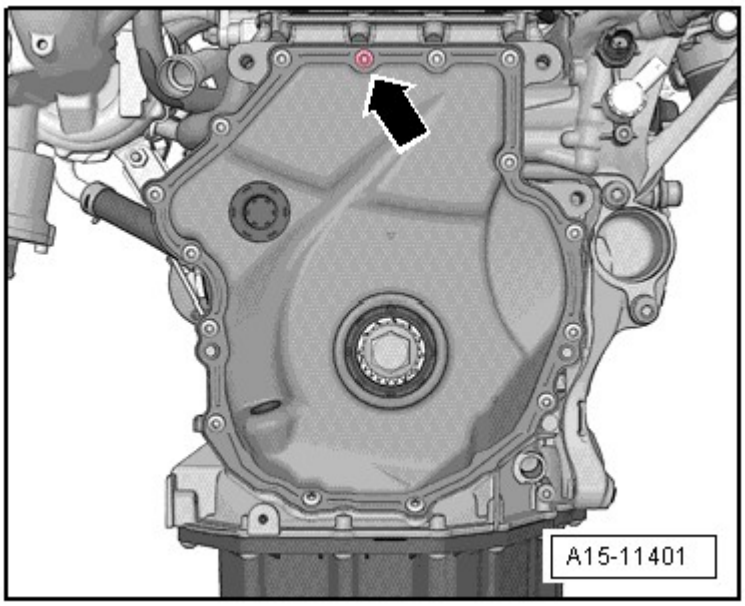

Fig. 144: Identifying Bolt
Courtesy of AUDI OF AMERICA, LLC

Two Different Chain Tensioners may be Installed Depending on the Version:

Version 1

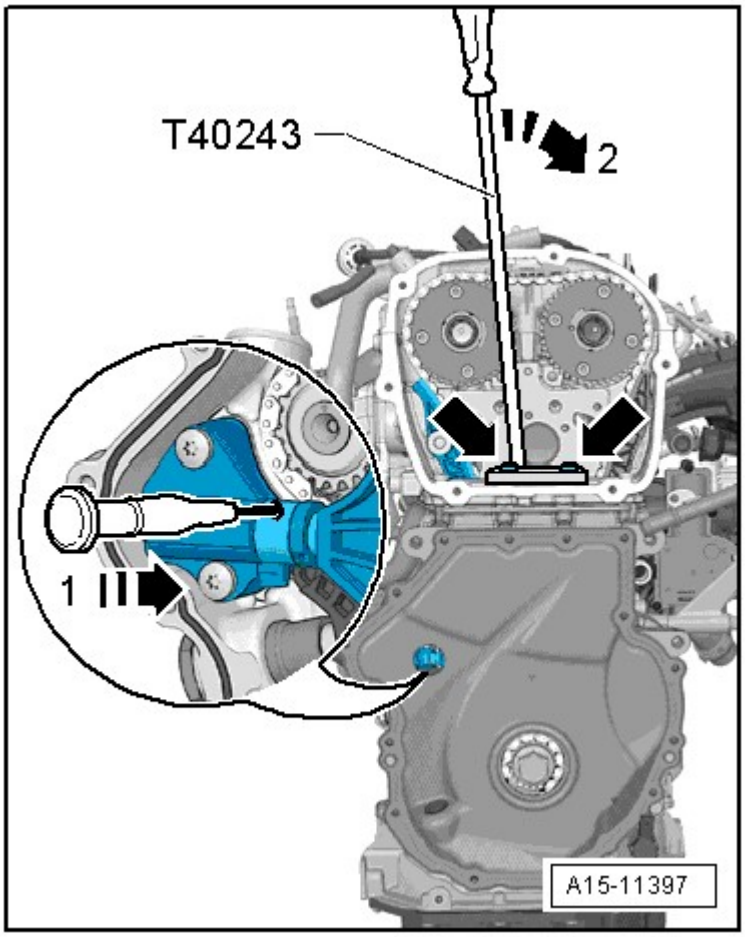

Fig. 145: Identifying Version 1
Courtesy of AUDI OF AMERICA, LLC

-- Install the T40243 -arrows-.

-- Insert a scriber or a suitable screwdriver into the opening for the chain tensioner in the direction of the -arrow 1- to lift up the locking wedge for the chain tensioner, slowly press down the T40243 and hold it in the direction of the -arrow 2-.

-- Secure the chain tensioner using T40011.

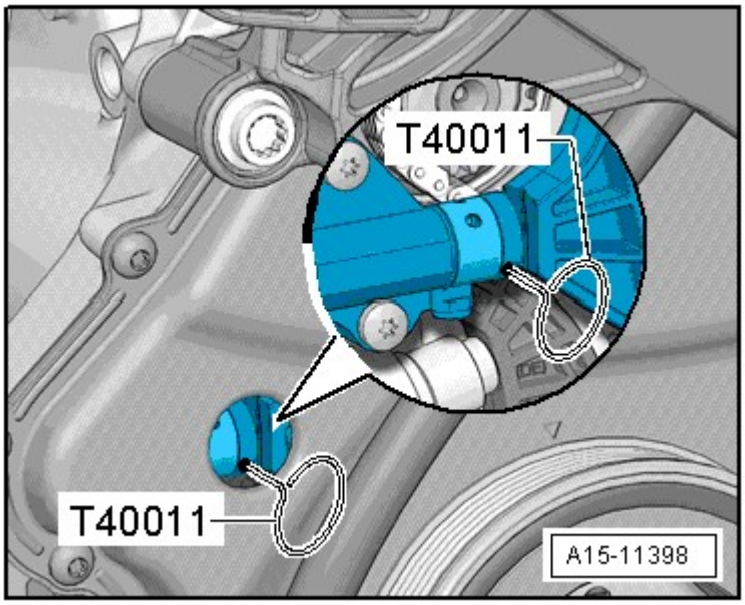

Fig. 146: Securing Chain Tensioner
Courtesy of AUDI OF AMERICA, LLC

Version 2

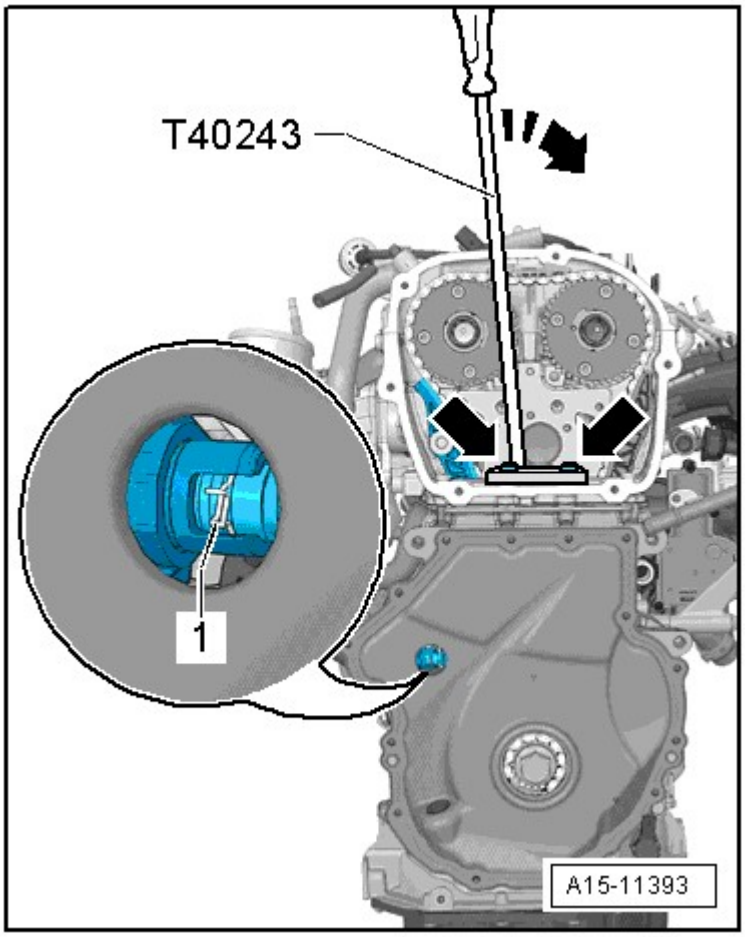

Fig. 147: Identifying Version 2
Courtesy of AUDI OF AMERICA, LLC

-- Install the T40243 -arrows-.

-- Press the chain tensioner locking ring -arrow- together and slowly press and hold the T40243 in the direction of the -arrow-.

-- Secure the chain tensioner with the T40267.

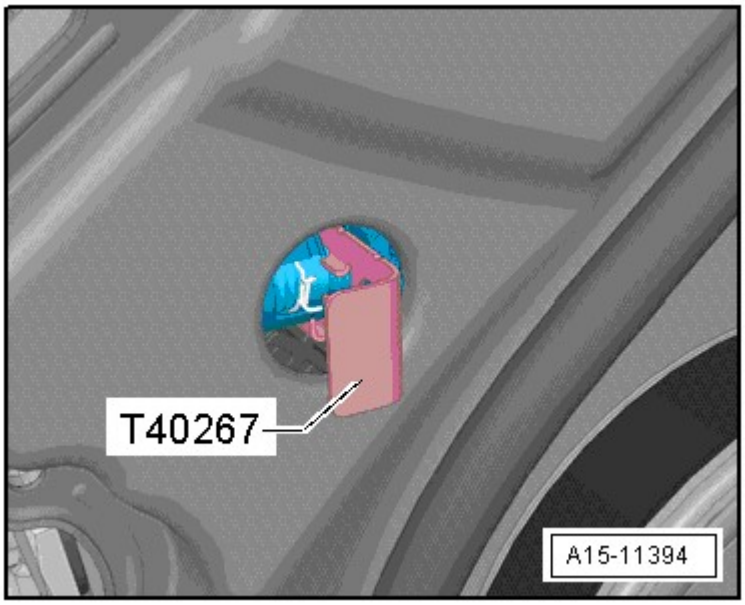

Fig. 148: Securing Chain Tensioner With T40267
Courtesy of AUDI OF AMERICA, LLC

All Versions

-- Remove the T40243.

-- Bolt the T40271/2 to the cylinder head and push the chain sprocket splines in the direction of the -arrow 2-. If necessary, turn the intake camshaft with a wrench in the direction of the -arrow 1-.

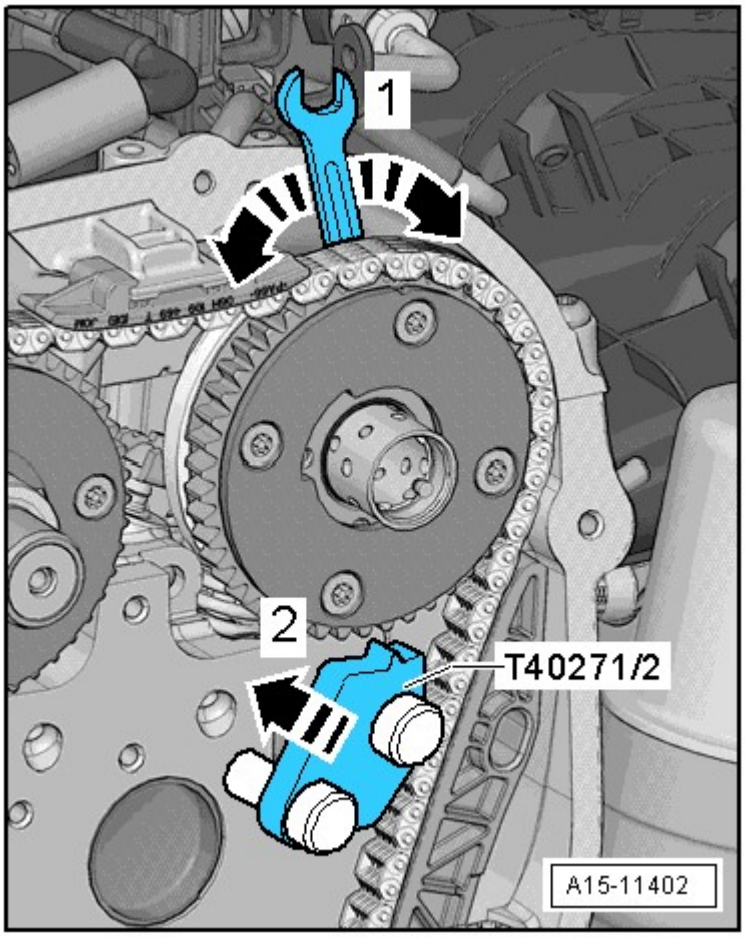

Fig. 149: Identifying Bolt Camshaft Locating Tool T40271/2
Courtesy of AUDI OF AMERICA, LLC

-- Remove the bolt -1- and guide the tensioning rail -2- downward.

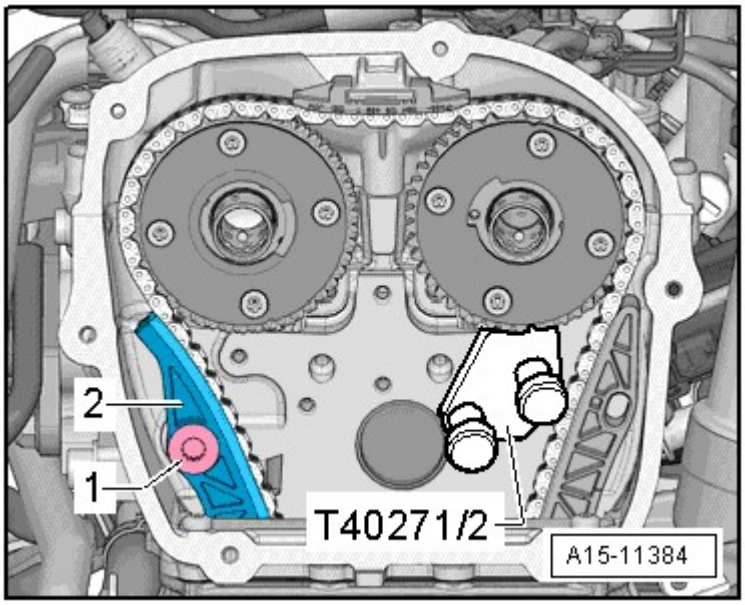

Fig. 150: Moving Tensioning Rail Up To Install Bolt
Courtesy of AUDI OF AMERICA, LLC

-- Attach the camshaft locating tool T40271/1 to the cylinder head.

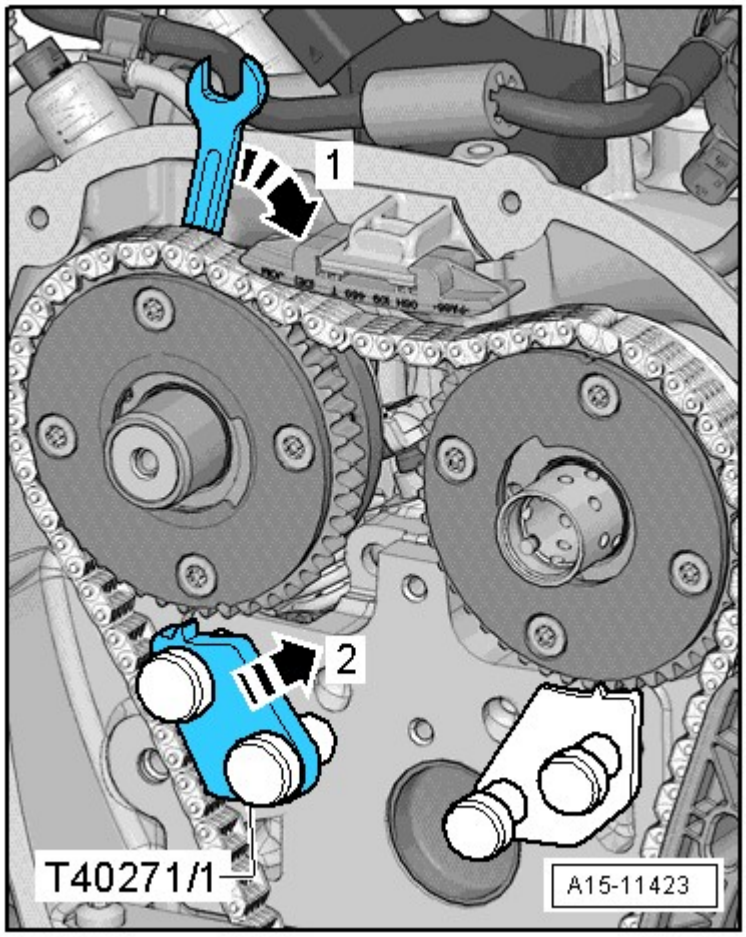

Fig. 151: Identifying Camshaft Locating Tool
Courtesy of AUDI OF AMERICA, LLC

-- Turn the exhaust camshaft with the wrench in the direction of the -arrow 1- and slide the camshaft locating toolT40271/1 in the chain sprocket splines in the direction of the -arrow 2-.

-- Remove the upper guide track -1- by unlocking the latch with a screwdriver and pushing the guide track forward.

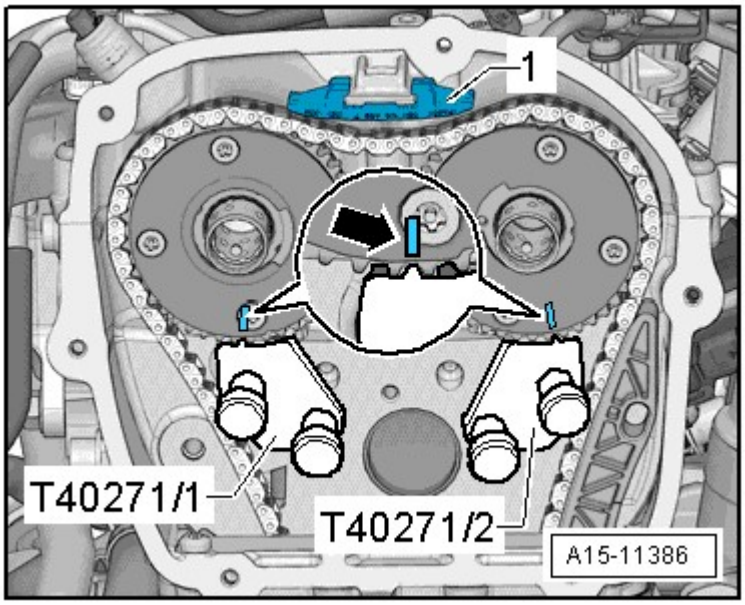

Fig. 152: Marking Camshaft Sprocket
Courtesy of AUDI OF AMERICA, LLC

-- Remove camshaft timing chain from chain sprockets.

CAUTION: Risk of damaging valves and piston crowns.

- **If the camshaft timing chain was removed from the cylinder head, then the crankshaft may not be turn further.**

-- Remove the bolts -arrows-.

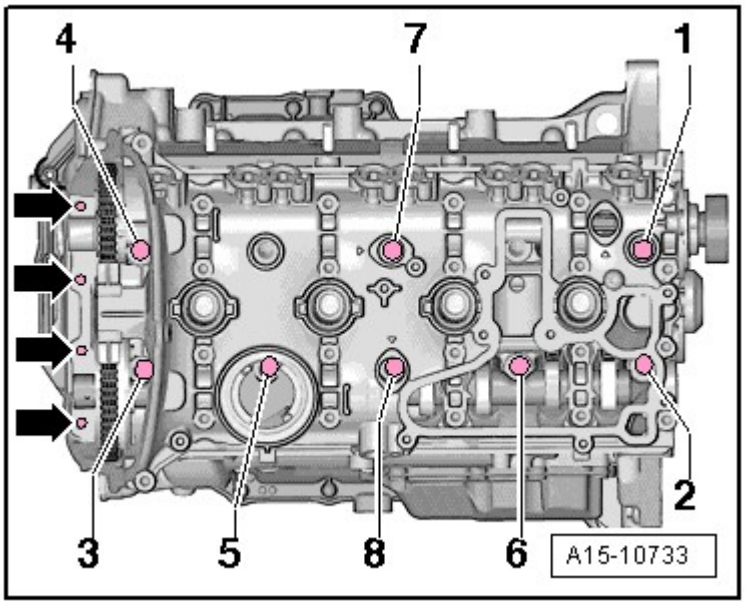

Fig. 153: Identifying Bolts
Courtesy of AUDI OF AMERICA, LLC

-- Remove the cylinder head bolts with the T10070 in the following sequence: -1 through 8-.

NOTE: Make sure all wires and cables are disconnected.

Pay attention to the tension and guide tracks when lifting the cylinder head.

-- Remove the cylinder head.

-- Lay the cylinder head on a soft surface, such as foam.

Installing

- Tightening specifications, refer to **CYLINDER HEAD OVERVIEW, WITH WRENCH CLEARANCE**.

CAUTION: The sealing surfaces could be damaged.

- **Carefully remove sealant residue from cylinder head and cylinder block.**
- **Make sure that no long scrapes or scratches result.**

Risk of damaging cylinder block.

- **There must be no oil or coolant in the blind holes for the cylinder head bolts in the cylinder block.**

Risk of cylinder head seal leaking.

- **Carefully remove all grinding and sanding residue.**
- **Only unpack new cylinder head gasket immediately prior to installation.**
- **To prevent cylinder head seal silicone layer and recessed area from being damaged, always handle seal extremely carefully.**

Risk of damaging open valves.

- **If a replacement cylinder is installed, only remove plastic base right before cylinder head is installed to protect open valves.**

Risk of damaging valves and piston heads after working on valve train.

- **To ensure valves do not strike the pistons when starting, carefully rotate engine at least 2 full revolutions.**

NOTE: **Replace the bolts which are being tightened with an additional turn.**

Replace self-locking nuts, sealing rings, seals and O-rings.

If a replacement cylinder is installed, the contact surfaces between the hydraulic adjusting elements, roller rocker levers and cam running surfaces must be lubricated before installing the camshafts.

The hose supports, air guide pipes and hoses must be free of oil and grease before installing.

Secure all hose connections with hose clamps of the same type as those equipped by the factory.

To mount the charge hoses on their connectors securely, spray the bolts on the used clamps with rust remover before installing.

It is necessary to replace all the coolant and engine oil whenever the cylinder head or the cylinder head gasket are replaced.

When Using a New Cylinder Head

-- Mark the camshaft sprocket to the T40271/1 and the T40271/2 -arrow-.

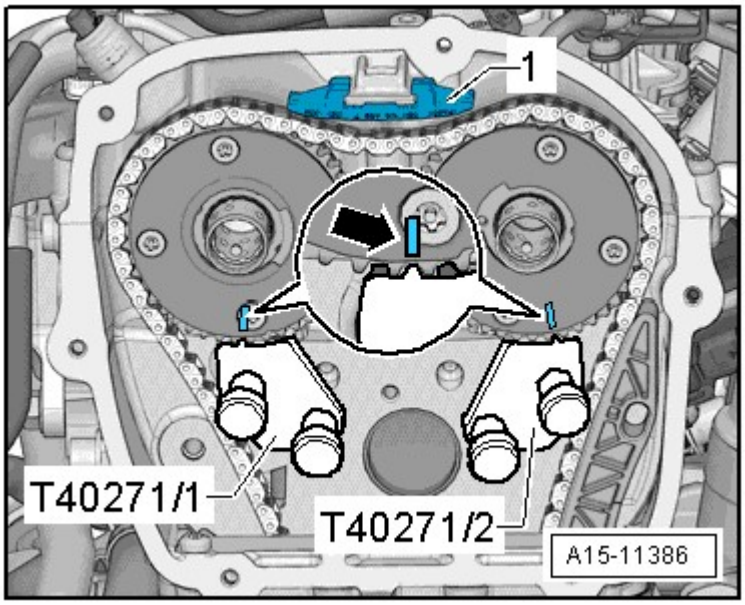

Fig. 154: Marking Camshaft Sprocket
Courtesy of AUDI OF AMERICA, LLC

-- Turn the intake camshaft with a wrench in the direction of the -arrow 1-, slide the T40271/2 out of the chain sprocket splines if the direction of the -arrow 2- and bring the camshaft into the rest position.

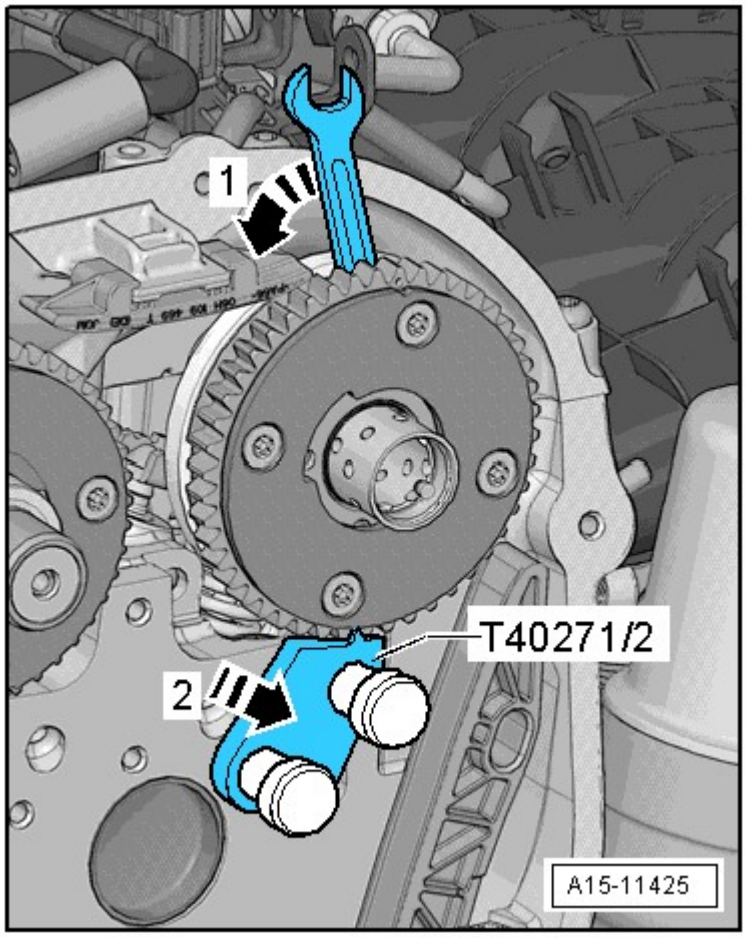

Fig. 155: Turning Intake Camshaft With Wrench In Direction Of Arrow
Courtesy of AUDI OF AMERICA, LLC

-- Remove the T40271/2.

-- Turn the exhaust camshaft with a wrench in the direction of the -arrow 1-, slide the T40271/1 out of the chain sprocket splines if the direction of the -arrow 2- and bring the camshaft into the rest position.

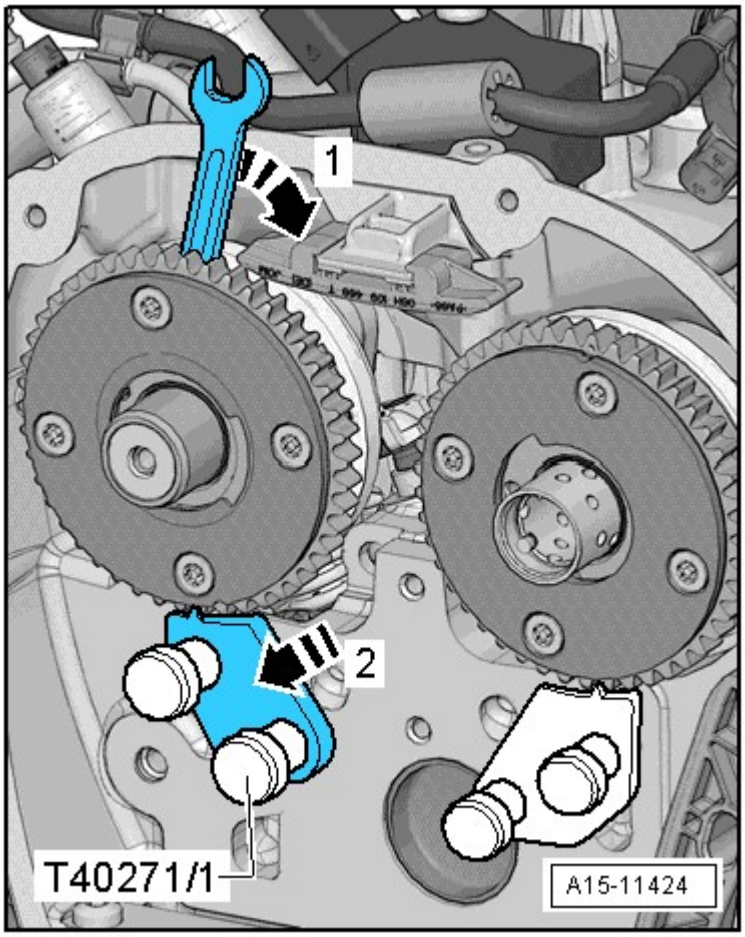

Fig. 156: Turning Exhaust Camshaft With Wrench In Direction Of Arrow
Courtesy of AUDI OF AMERICA, LLC

-- Remove the T40271/1.

-- Transfer the self-made markings from the old camshafts to the new camshafts.

-- Attach the T40271/2 to the cylinder head.

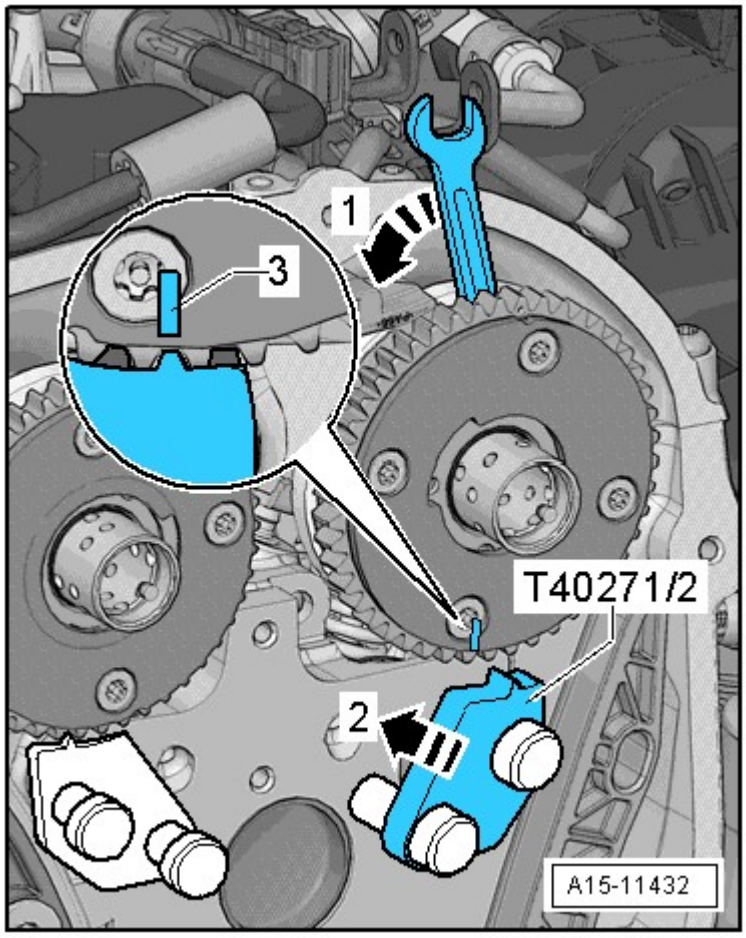

Fig. 157: Turning Intake Camshaft In Direction Of Arrow
Courtesy of AUDI OF AMERICA, LLC

-- Turn the intake camshaft in the direction of the -arrow 1- until the markings -3- align with the T40271/2.

-- Slide the T40271/2 into the chain sprocket splines in the direction of the -arrow 2-.

-- Attach the T40271/1 to the cylinder head.

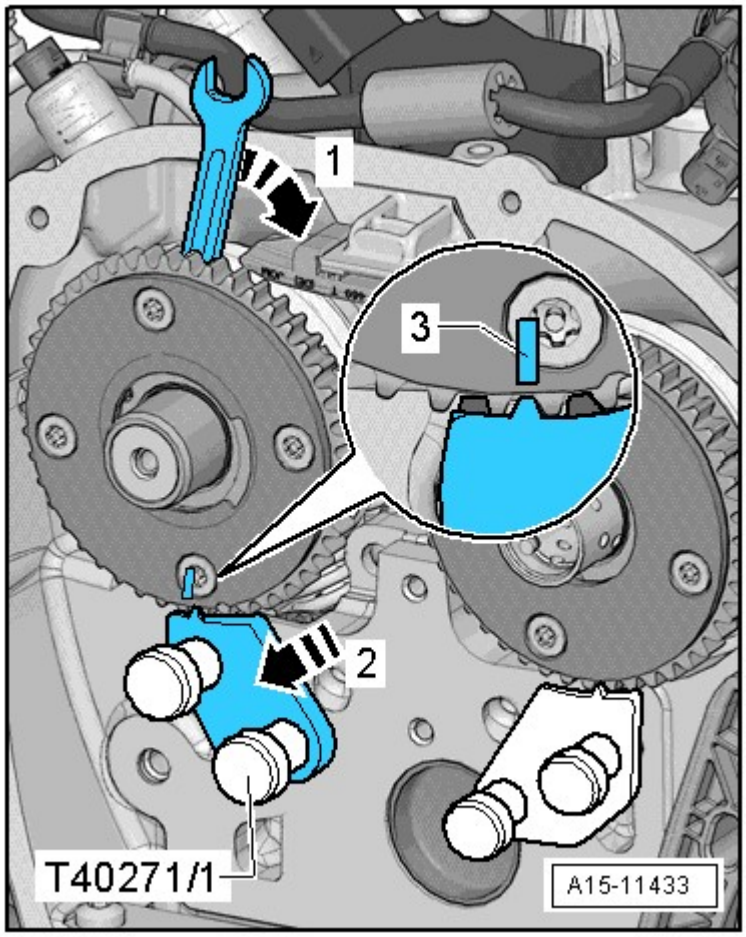

Fig. 158: Turning Exhaust Camshaft In Direction Of Arrow
Courtesy of AUDI OF AMERICA, LLC

-- Turn the exhaust camshaft in the direction of the -arrow 1- until the markings -3- align with the T40271/1.

-- Slide the T40271/1 into the chain sprocket splines in the direction of the -arrow 2-.

All

-- Set cylinder head gasket in place.

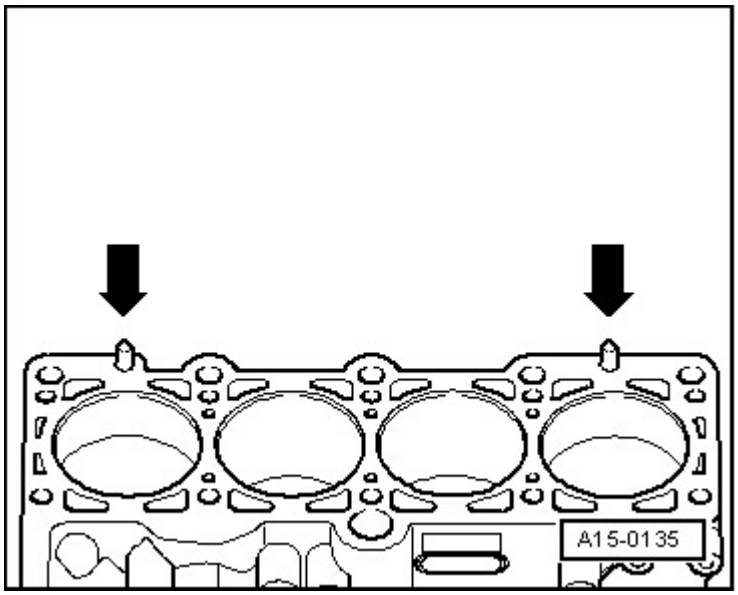

Fig. 159: Identifying Cylinder Block Centering Pins
Courtesy of AUDI OF AMERICA, LLC

- Pay attention to centering pins in cylinder block -arrows-.
- Observe cylinder head seal location, identification: The part number must be visible from the intake side.

WARNING: **When rotating the crankshaft, make sure the timing chain cannot damage any other components.**

-- In the event the crankshaft has been rotated in the meantime: Set piston of cylinder 1 to TDC and turn crankshaft back again slightly.

-- Position the cylinder head.

-- Install the bolts -1 through 8-.

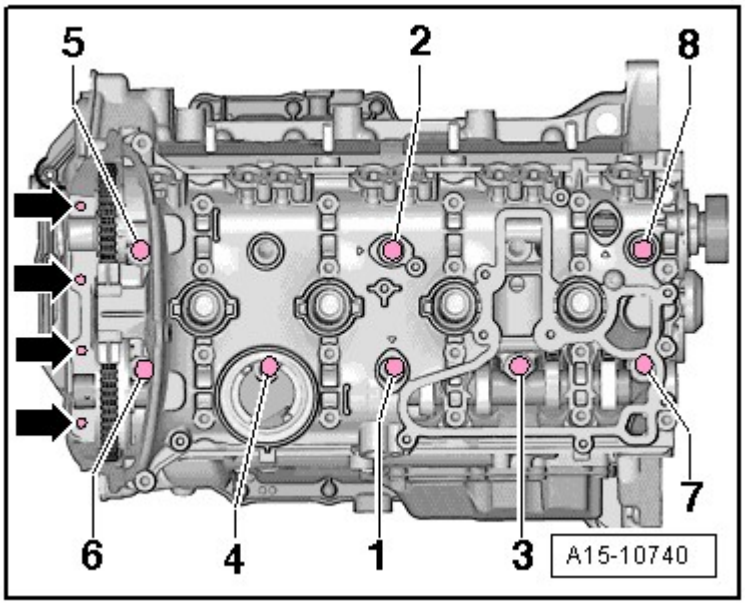

Fig. 160: Identifying Cylinder Head Bolts Tightening Sequence
Courtesy of AUDI OF AMERICA, LLC

-- Install the cylinder head bolts in the following sequence -1 through 8- with the T10070 and tighten them all together in 3 stages -item 6- in **Fig. 13**.

-- Tighten the bolts -arrows- in two steps -item 4- in **Fig. 13**.

NOTE: There is no requirement to tighten the cylinder head bolts after repairs.

-- Rotate the vibration damper using the T10355 into the "TDC" position -arrow-.

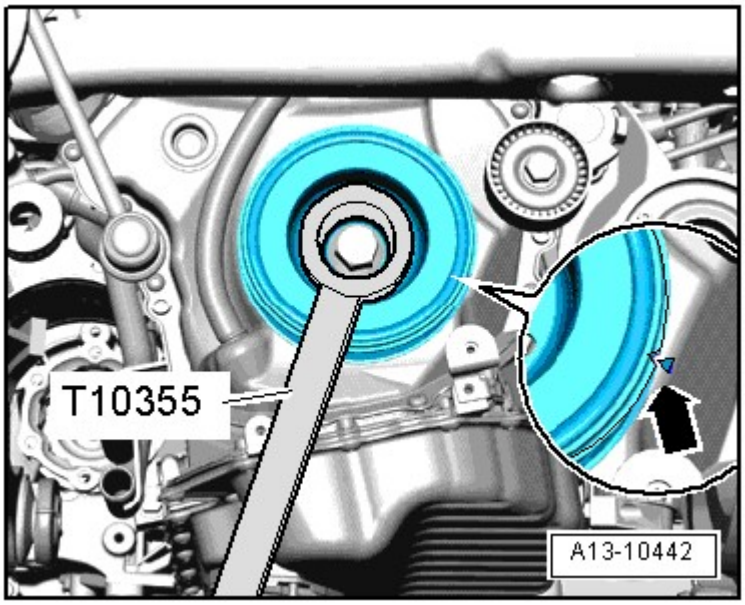

Fig. 161: Identifying Vibration Damper Rotated Into "OT" Position Using Counter Hold Tool T10355
Courtesy of AUDI OF AMERICA, LLC

- The notch on the vibration damper must line up with the -arrow- marking on the timing chain lower cover.

-- Position the markings on the chain links -arrows- at the chain sprockets -1- to install the camshaft timing chain.

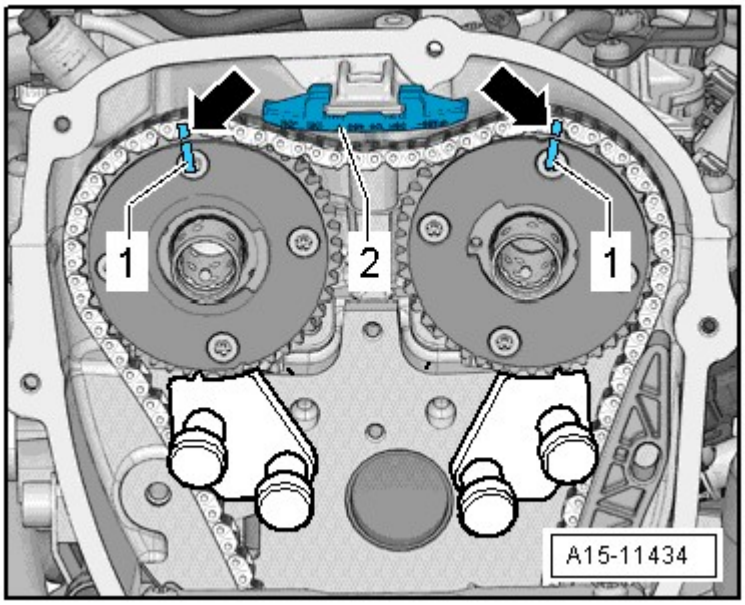

Fig. 162: Positioning Mark On Chain Links At Chain Sprockets
Courtesy of AUDI OF AMERICA, LLC

-- Install the upper glide track -2-.

-- Turn the exhaust camshaft in the direction of the -arrow 1-, slide out the T40271/1 from the chain sprocket splines in the direction of the -arrow 2- and release the camshaft.

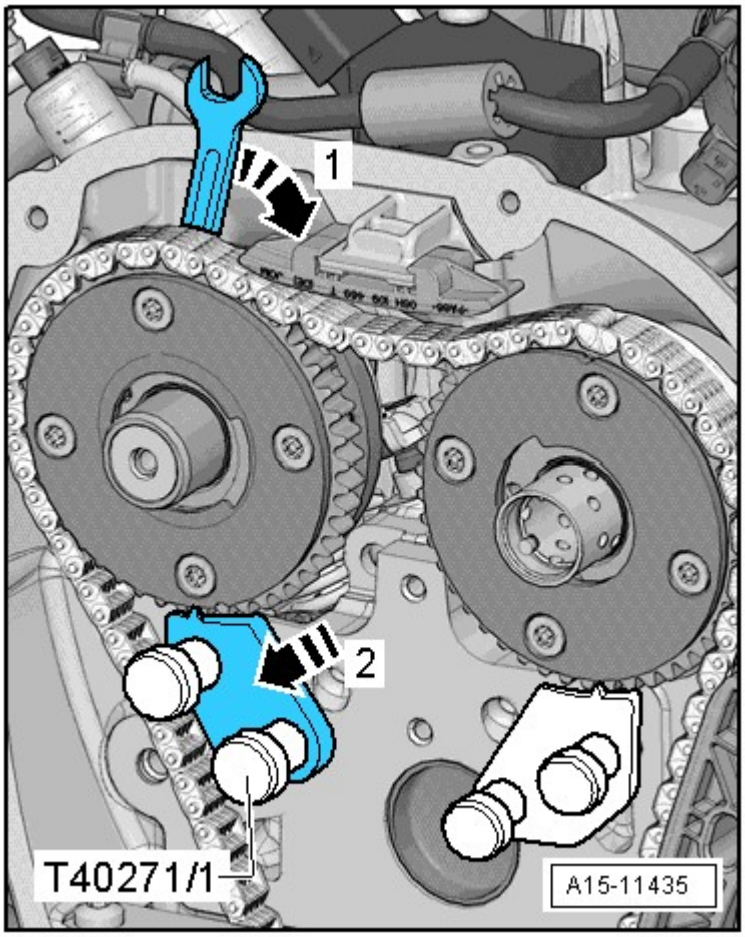

Fig. 163: Turning Exhaust Camshaft In Direction Of Arrow
Courtesy of AUDI OF AMERICA, LLC

-- Remove the T40271/1.

-- Move the tensioning rail -2- up and install the bolt -1-.

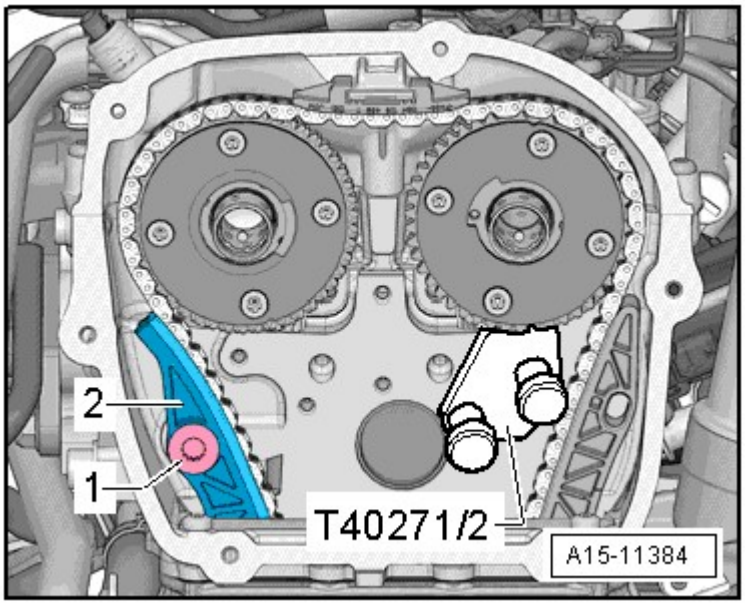

Fig. 164: Moving Tensioning Rail Up To Install Bolt
Courtesy of AUDI OF AMERICA, LLC

-- Turn the intake camshaft in the direction of the -arrow 1-, slide out the T40271/2 from the chain sprocket splines in the direction of the -arrow 2- and release the camshaft.

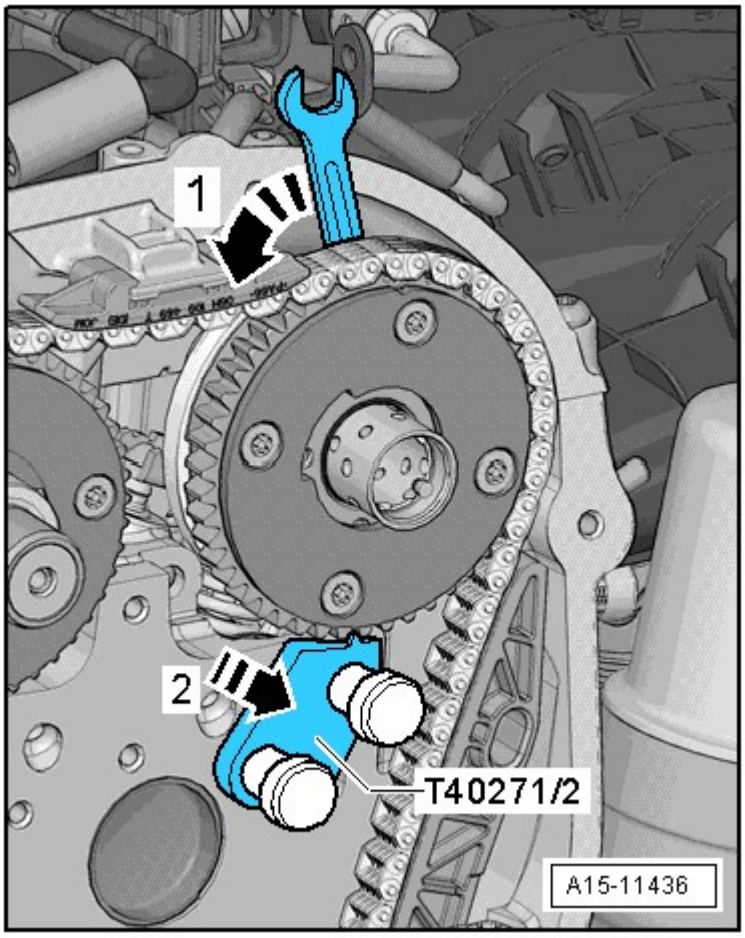

Fig. 165: Turning Intake Camshaft In Direction Of Arrow
Courtesy of AUDI OF AMERICA, LLC

-- Remove the T40271/2.

-- Check the valve timing. The camshaft timing chain and cylinder head -arrows- must align with the markings on the chain sprocket -1-.

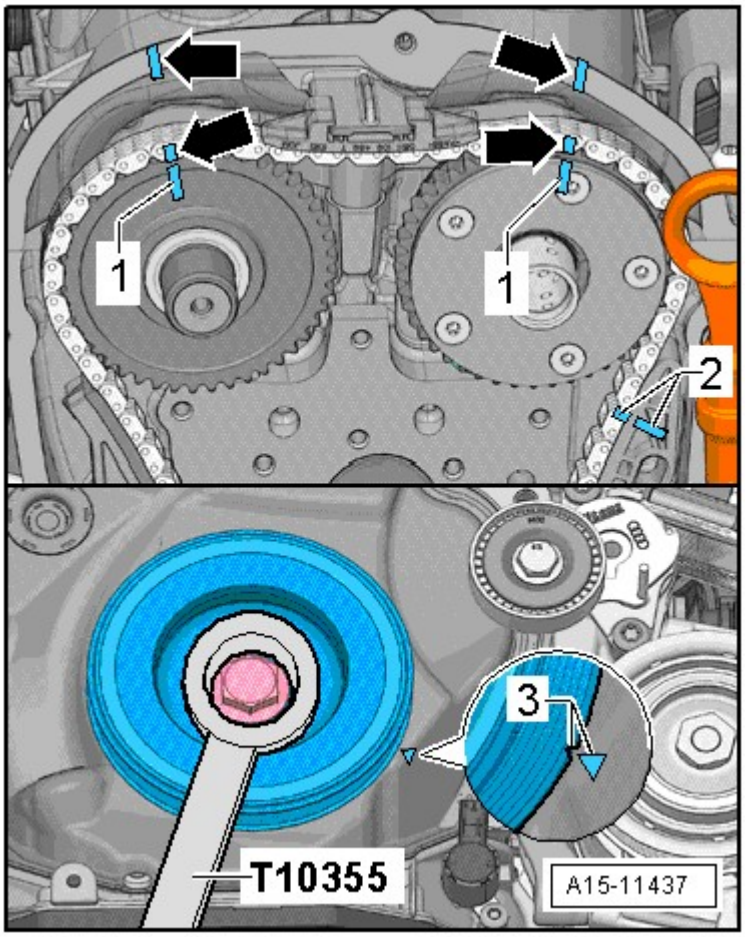

Fig. 166: Checking Valve Timing
Courtesy of AUDI OF AMERICA, LLC

-- The markings for the camshaft timing chain and the camshaft timing chain glide track -2- must be opposite one another.

-- The notch on the vibration damper must be opposite the marking on the lower section of the timing chain guard -3-.

-- Mount the bearing bracket and the bolts -arrows- hand-tight.

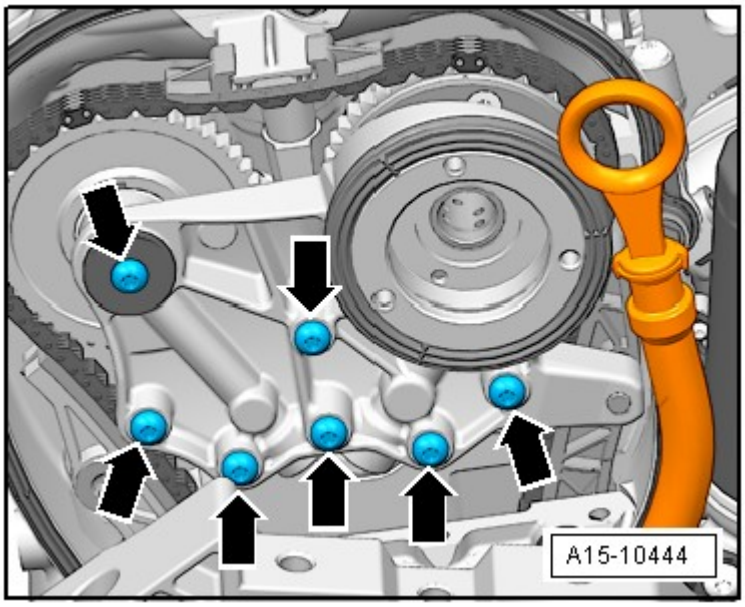

Fig. 167: Identifying Bearing Bracket Bolts
Courtesy of AUDI OF AMERICA, LLC

-- Remove the T40011 or the T40267, depending on the version.

-- Tighten the bolts -arrows-. Refer to **CAMSHAFT TIMING CHAIN OVERVIEW**.

-- Install the bolt -arrow-.

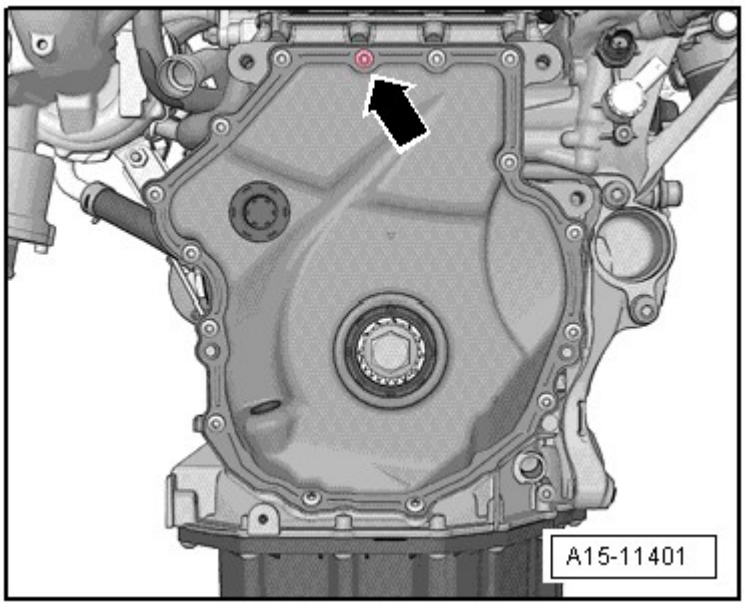

Fig. 168: Identifying Bolt
Courtesy of AUDI OF AMERICA, LLC

-- Install the control valve -item 6- in **Fig. 7**.

-- Install the T40196 as illustrated.

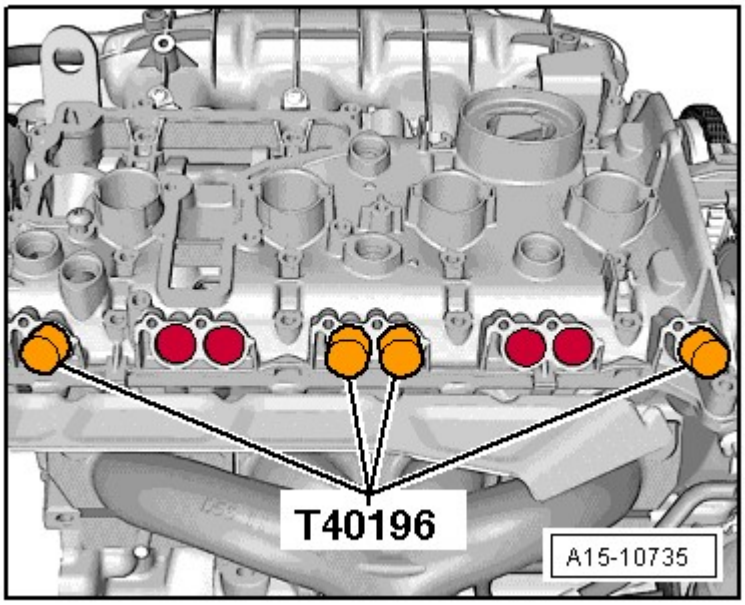

Fig. 169: Identifying T40196, Installation Locations
Courtesy of AUDI OF AMERICA, LLC

-- Turn the crankshaft 4 complete turns in the direction of engine rotation.

-- Remove the T40196.

-- Install the bolts -1 and 2-.

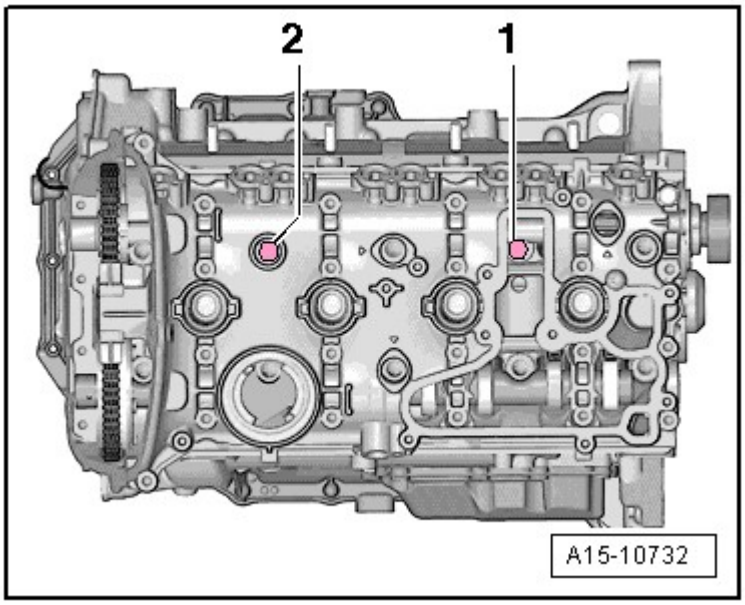

Fig. 170: Identifying Bolts
Courtesy of AUDI OF AMERICA, LLC

-- Install the cylinder head bolts in the following sequence -1 and 2- with the T10070 and tighten them all together in 3 stages -item 6- in **Fig. 13**.

Further assembly is performed in the reverse order of removal, thereby observing the following:

-- Change the engine oil. Refer to **MAINTENANCE PROCEDURES**

-- Install the timing chain guard upper section. Refer to **UPPER TIMING CHAIN GUARD**.

-- Replace coolant. Refer to **COOLANT, DRAINING AND FILLING** .

-- Install the catalytic converter. Refer to **CATALYTIC CONVERTER** .

-- Install the front exhaust pipe/front muffler. Refer to **FRONT EXHAUST PIPE AND FRONT MUFFLER** .

WARNING: Do not use a charger as a starting aid. There is the risk that the vehicle control modules could be damaged.

CYLINDER HEAD WITHOUT WRENCH CLEARANCE

NOTE: Camshafts without screwdriver access do not have notches in the camshafts, refer to Fig. 1.

Special tools and workshop equipment required

- Engine Bung Set VAS 6122
- Polydrive Bit and Drive Socket T10070
- Spark Plug Removal Tool 3122 B

Removing

NOTE: During installation, cable ties must be installed at the same location.

Always seal off any open channels in the intake and exhaust tract with plugs. For example, use the plugs from the VAS 6122.

-- Remove the camshafts. Refer to **CAMSHAFTS**.

CAUTION: Risk of damaging valves and piston crowns.

- **Do not turn the crankshaft if the camshaft has been removed.**

WARNING: Risk of scalding due to hot steam and hot coolant.

- **The coolant system is under pressure when the engine is warm.**

- **Reduce pressure by covering coolant reservoir cap with a cloth and carefully opening.**

-- Drain the coolant. Refer to **COOLANT, DRAINING AND FILLING** .

-- Remove the front exhaust pipe/front muffler. Refer to **FRONT EXHAUST PIPE AND FRONT MUFFLER** .

-- Remove the plenum chamber covers -1, 2 and 3-.

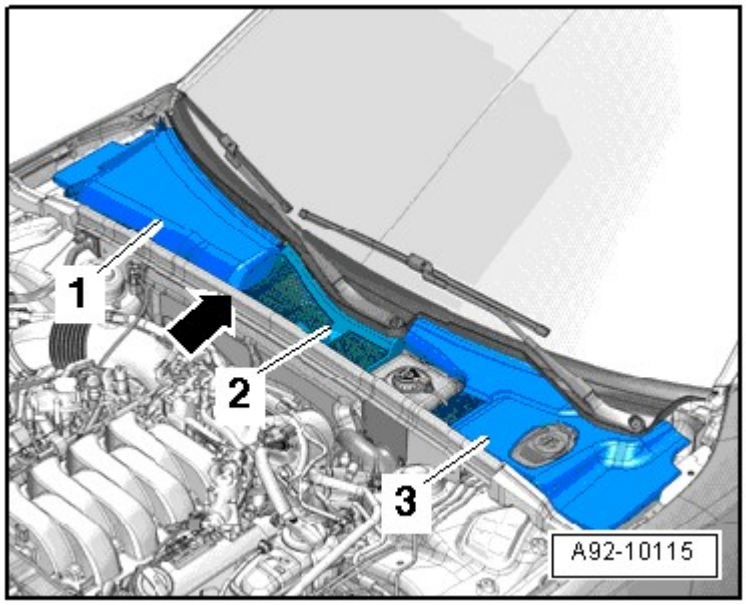

Fig. 171: Identifying Plenum Chamber Covers
Courtesy of AUDI OF AMERICA, LLC

-- Disconnect the vacuum connection -2- from the plenum chamber bulkhead by remove the vacuum hose -3- on the back side -arrow-.

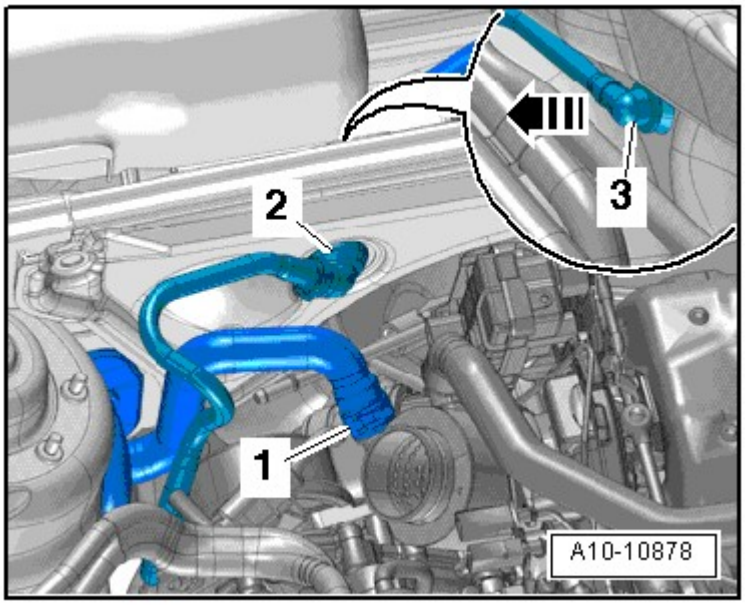

Fig. 172: Disconnecting Vacuum Connection
Courtesy of AUDI OF AMERICA, LLC

-- Remove the coolant hoses on the back of the cylinder head.

CAUTION: Risk of contamination to the fuel system.

- **Note rules of cleanliness for working on the fuel injection system. Refer to CLEAN WORKING CONDITIONS .**

-- Disconnect fuel lines -1 and 2-.

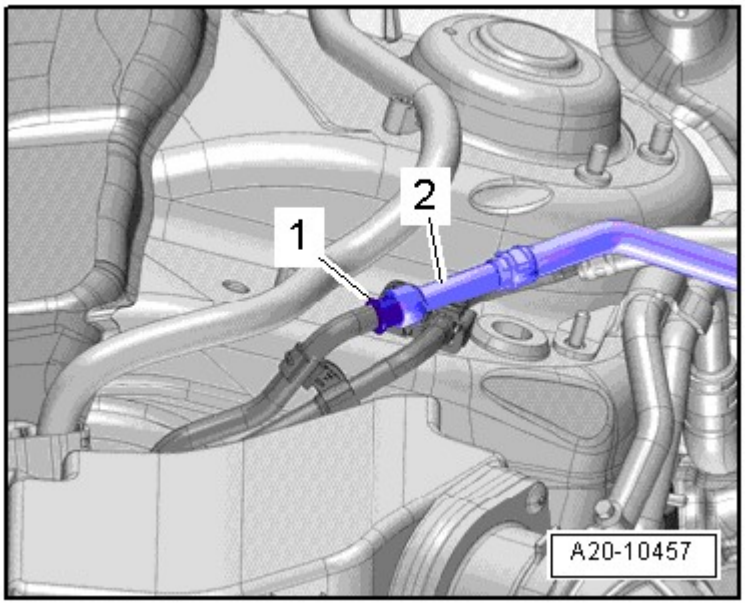

Fig. 173: Identifying Fuel Line
Courtesy of AUDI OF AMERICA, LLC

-- Loosen the hose clamps -arrows- and remove the air guide hose.

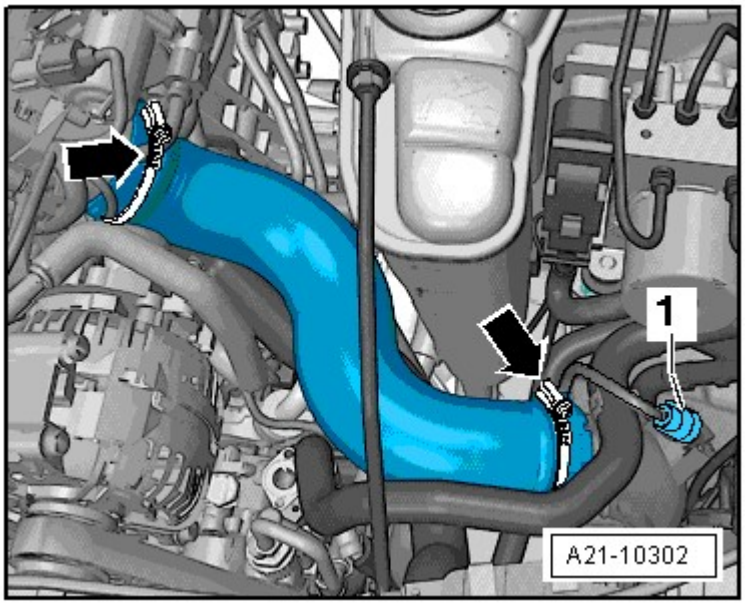

Fig. 174: Loosening Hose Clamps
Courtesy of AUDI OF AMERICA, LLC

-- Disconnect the following connectors.

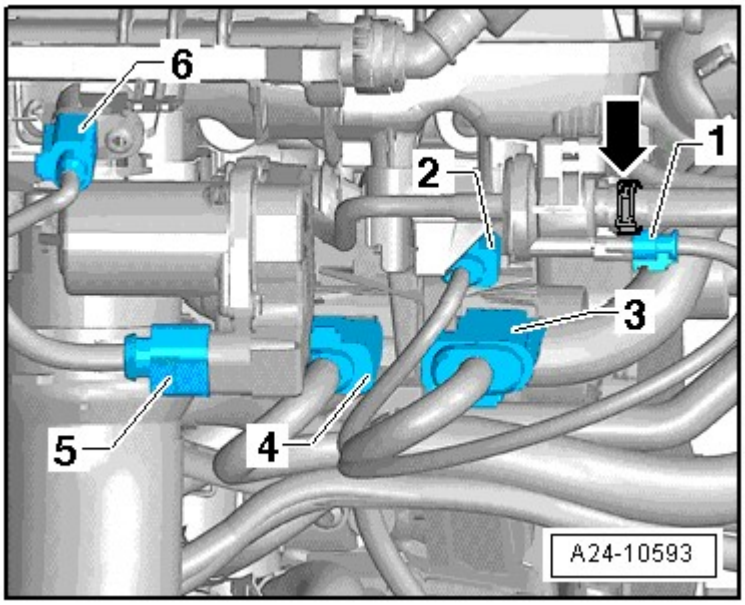

Fig. 175: Identifying Connectors
Courtesy of AUDI OF AMERICA, LLC

2 - Disconnect from Knock Sensor (KS) 1 -G61-

3 - From the Intake Manifold Runner Control (IMRC) Valve -N316-, Fuel Pressure Sensor -G247- and the Camshaft Position (CMP) Sensor -G40-.

4 - From the fuel injectors

5 - From the Throttle Valve Control Module -J338-.

6 - From the Intake Air Temperature (IAT) Sensor -G42-.

-- Disconnect the connector -2- and free up the wire.

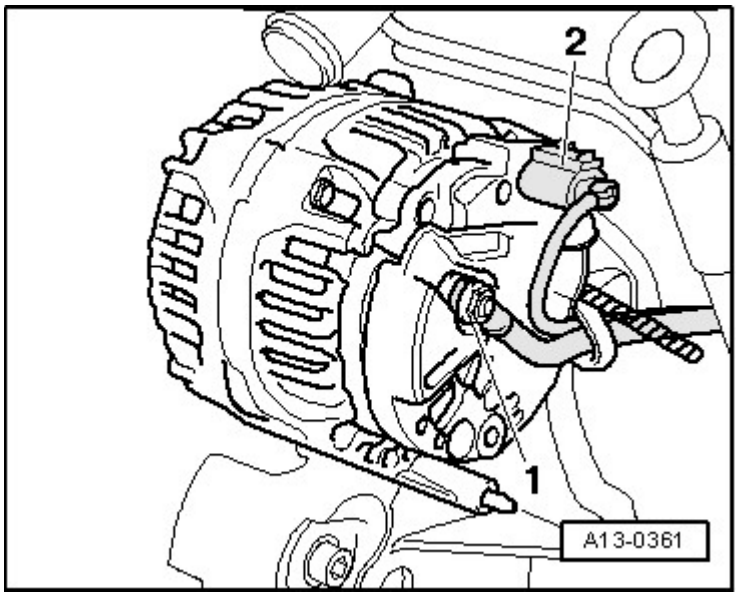

Fig. 176: Identifying Generator Electrical Connector And Terminal B+
Courtesy of AUDI OF AMERICA, LLC

-- Remove the coolant line bracket -arrow-.

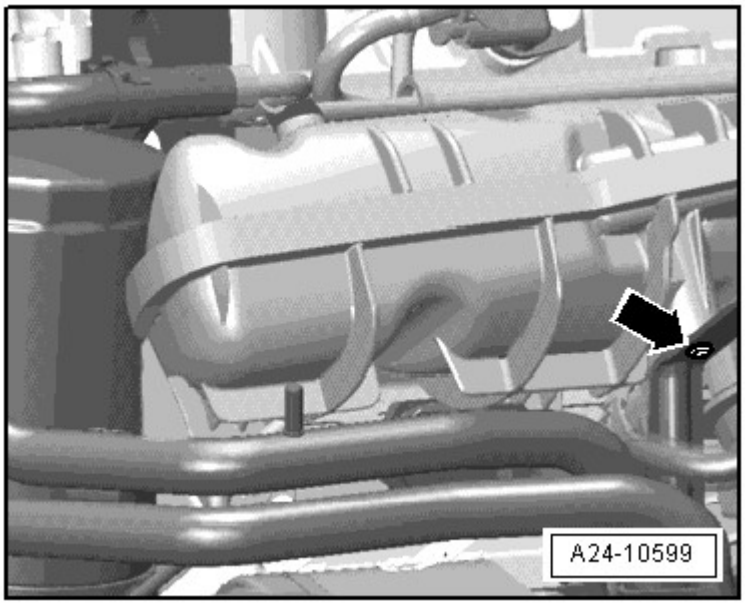

Fig. 177: Locating Coolant Line Bolt
Courtesy of AUDI OF AMERICA, LLC

NOTE: The engine is not shown in the illustrations that follow.

-- Remove the intake manifold bracket by removing the mounting nut -1- and bolt -2-.

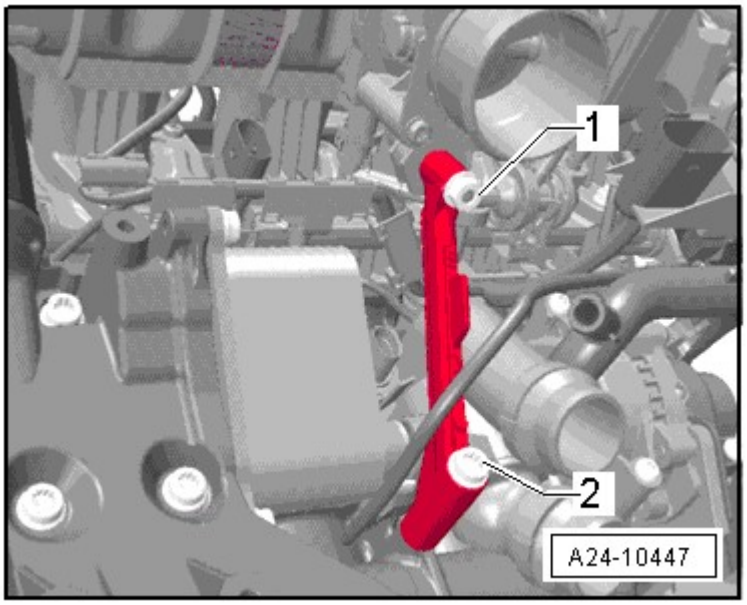

Fig. 178: Identifying Intake Manifold Bracket Mounting Nut And Bolt
Courtesy of AUDI OF AMERICA, LLC

-- Disconnect the coolant hose -arrow-.

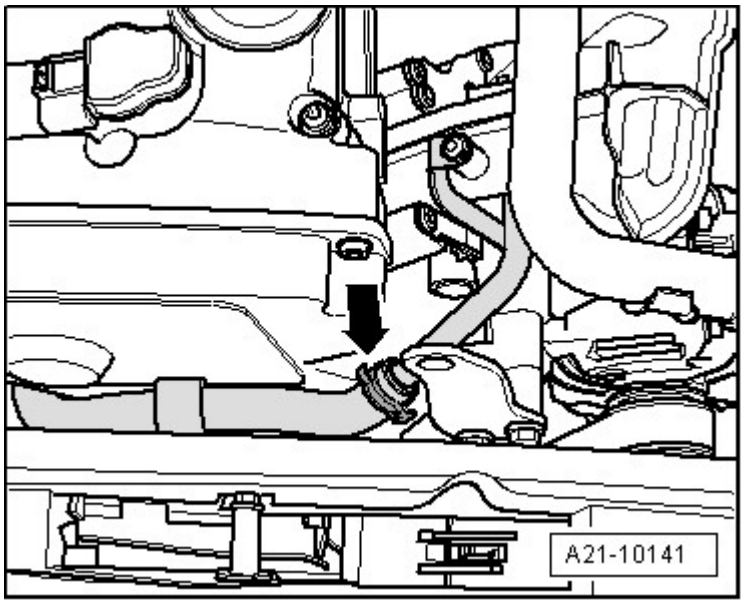

Fig. 179: Disconnecting Coolant Pipe
Courtesy of AUDI OF AMERICA, LLC

-- Remove the bolts -1 and 2- and move the oil supply line to the side.

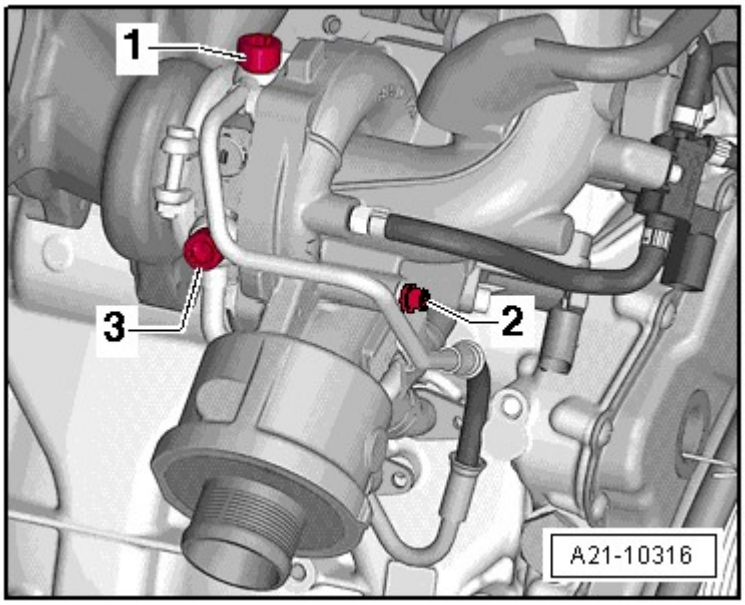

Fig. 180: Identifying Bolts
Courtesy of AUDI OF AMERICA, LLC

-- Remove the bolt -3- and move the coolant pipe to the side.

-- Loosen the hose clamp -arrow-, pull of the air guide hose and move it to the side.

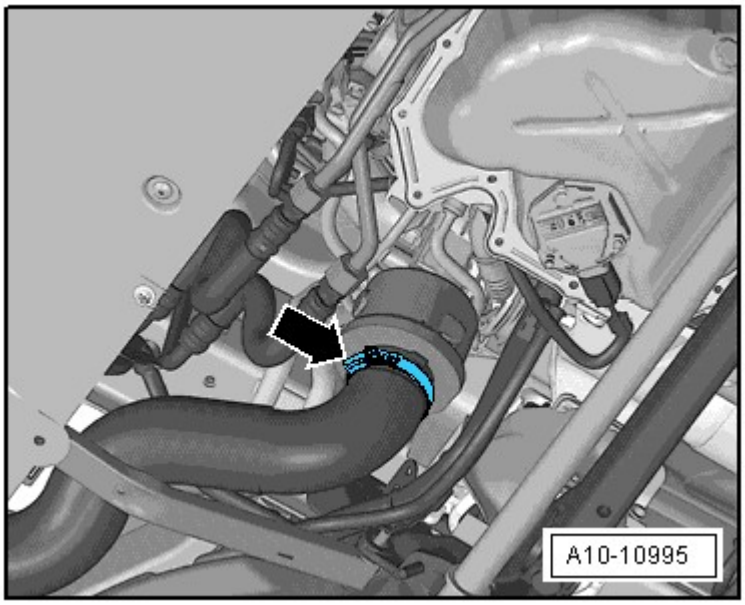

Fig. 181: Loosening Hose Clamp
Courtesy of AUDI OF AMERICA, LLC

-- Disconnect the connectors -1 and 4- from the oil pressure switch -F22- and the reduced oil pressure switch -F378-.

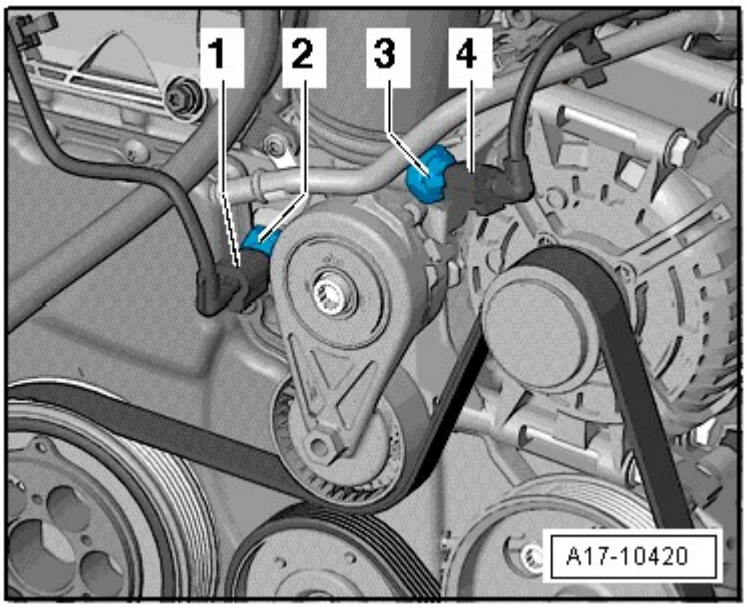

Fig. 182: Identifying Oil Pressure Switch
Courtesy of AUDI OF AMERICA, LLC

-- Disconnect the connectors -1 and 2- and free up the wire.

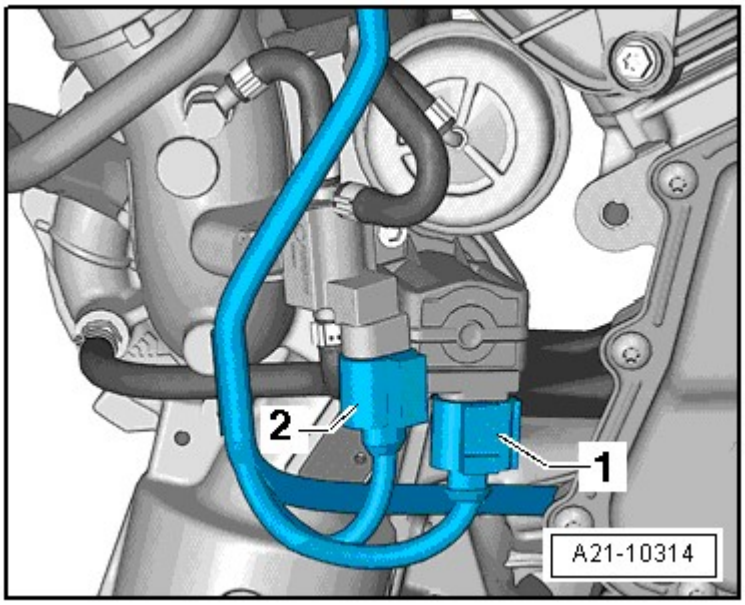

Fig. 183: Disconnecting Connectors
Courtesy of AUDI OF AMERICA, LLC

-- Remove the bolts -arrows- and then remove the turbocharger support.

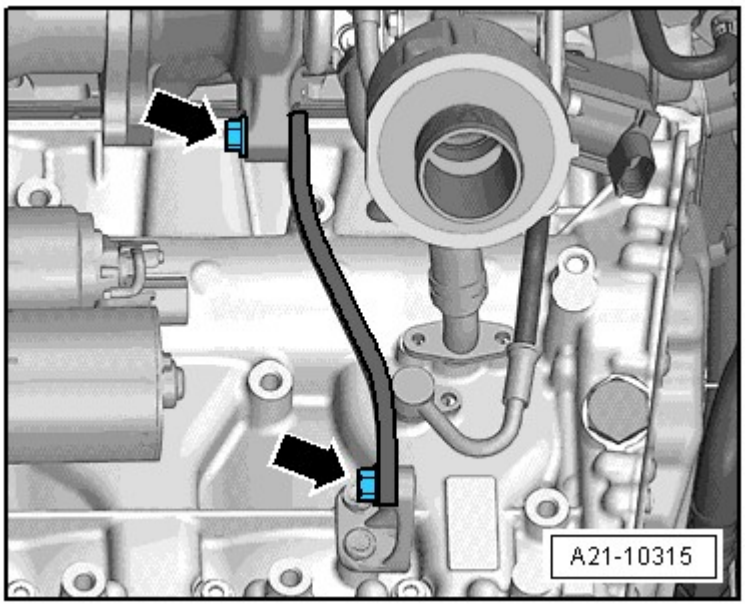

Fig. 184: Identifying Bolts
Courtesy of AUDI OF AMERICA, LLC

-- Remove the bolts -arrows- on the oil return line.

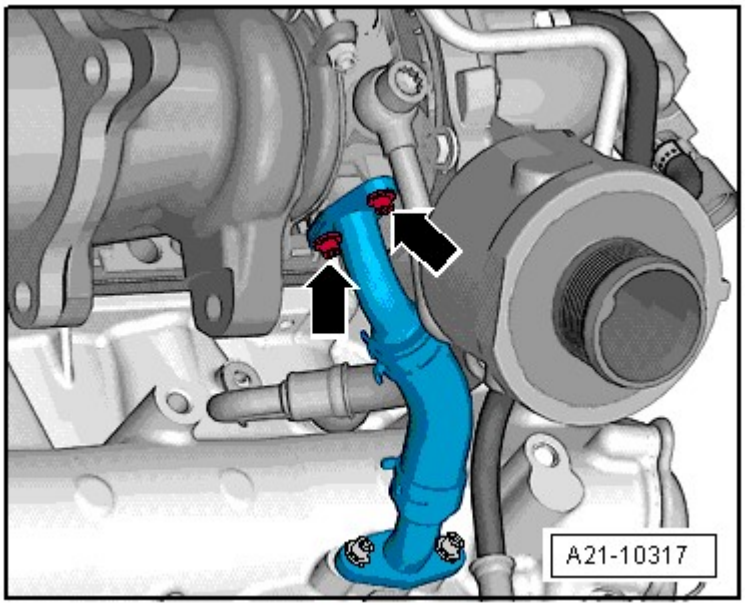

Fig. 185: Identifying Bolts
Courtesy of AUDI OF AMERICA, LLC

-- Remove the nuts -arrows- and push the catalytic converter to the rear.

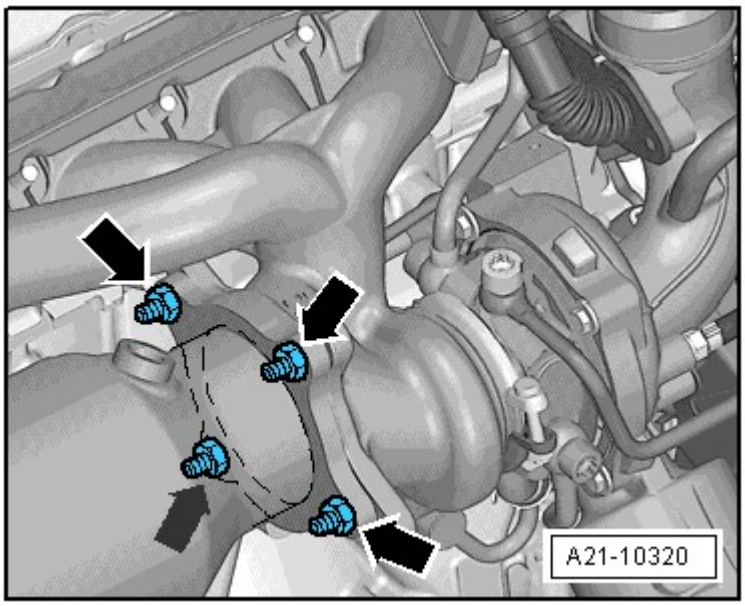

Fig. 186: Identifying Nuts
Courtesy of AUDI OF AMERICA, LLC

-- Remove the spark plugs using a 3122 B.

-- Remove the bolts -arrows-.

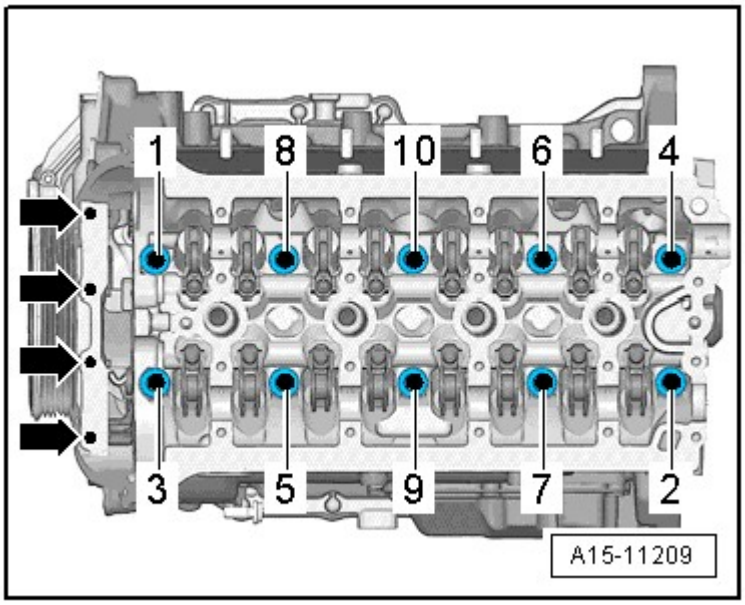

Fig. 187: Loosening Cylinder Head
Courtesy of AUDI OF AMERICA, LLC

-- Remove the cylinder head bolts in sequence -1 through 10- using the T10070.

NOTE: Make sure all wires and cables are disconnected!

Pay attention to the tension and guide tracks when lifting the cylinder head.

-- Remove the cylinder head.

-- Lay the cylinder head on a soft surface, such as foam.

Installing

- For the correct tightening specifications, refer to **CYLINDER HEAD WITHOUT WRENCH CLEARANCE**.

CAUTION: The sealing surfaces could be damaged.

- **Carefully remove sealant residue from cylinder head and cylinder block.**
- **Make sure that no long scrapes or scratches result.**

Risk of damaging cylinder block.

- **There must be no oil or coolant in the blind holes for the cylinder head bolts in the cylinder block.**

Risk of cylinder head seal leaking.

- **Carefully remove all grinding and sanding residue.**
- **Only unpack new cylinder head gasket immediately prior to installation.**
- **To prevent cylinder head seal silicone layer and recessed area from being damaged, always handle seal extremely carefully.**

Risk of damaging open valves.

- **If a replacement cylinder is installed, only remove plastic base right before cylinder head is installed to protect open valves.**

Risk of damaging valves and piston heads after working on valvetrain.

- **To ensure valves do not strike the pistons when starting, carefully rotate engine at least 2 full revolutions.**

NOTE:

- **Replace the bolts which are being tightened with an additional turn.**
- **Replace sealing rings, seals and self-locking nuts.**
- **Note different sealant for cylinder head sealing surfaces and bolts.**
- **If a replacement cylinder is installed, the contact surfaces between the hydraulic adjusting elements, roller rocker levers and cam running surfaces must be lubricated before installing the camshafts.**
- **The hose supports, air guide pipes and hoses must be free of oil and grease before installing.**
- **Secure all hose connections with hose clamps appropriate for the model.**
- **To mount the charge hoses on their connectors securely, spray the bolts on the used clamps with rust remover before installing.**
- **The engine oil and coolant must be changed if the cylinder head or cylinder head seal are replaced.**

-- Set cylinder head gasket in place.

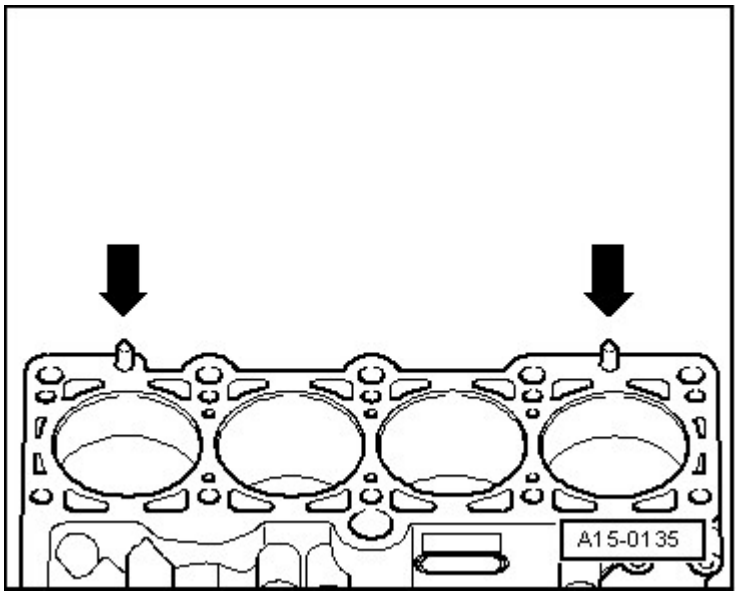

Fig. 188: Identifying Cylinder Block Centering Pins
Courtesy of AUDI OF AMERICA, LLC

- Pay attention to centering pins in cylinder block -arrows-.
- Observe cylinder head seal location, identification: The part number must be visible from the intake side.

WARNING: **When rotating the crankshaft, make sure the timing chain cannot damage any other components.**

-- In the event the crankshaft has been rotated in the meantime: Set piston of cylinder 1 to Top Dead Center (TDC) and turn crankshaft back again slightly.

-- Set cylinder head in place.

-- Insert cylinder head bolts and tighten by hand.

-- Cylinder head tightening sequence. Refer to **Fig. 20**.

NOTE: There is no requirement to tighten the cylinder head bolts after repairs.

-- Rotate the vibration damper using the T10355 into the "TDC" position -arrow-.

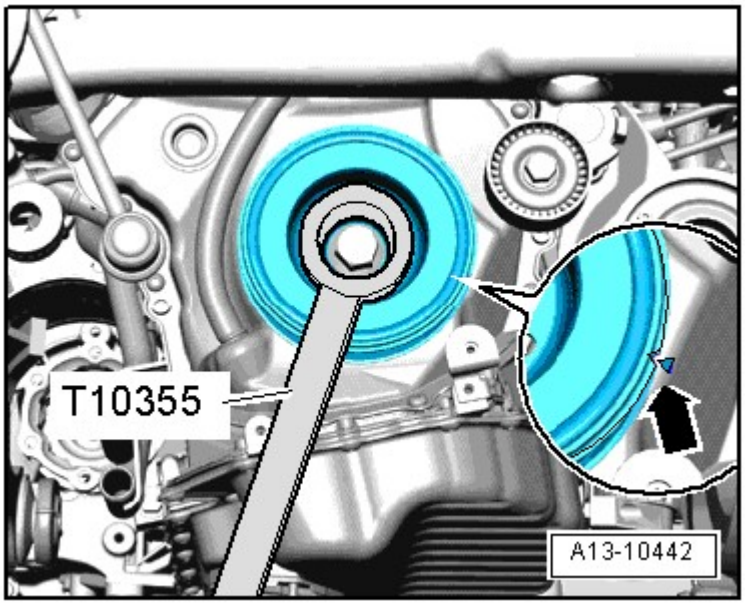

Fig. 189: Identifying Vibration Damper Rotated Into "OT" Position Using Counter Hold Tool T10355
Courtesy of AUDI OF AMERICA, LLC

- The notch on the vibration damper must line up with the arrow marking on the timing chain lower cover.

Further installation is performed in the reverse order of removal, thereby observing the following:

-- Install the camshafts. Refer to **CAMSHAFTS**.

-- Install the timing chain guard upper section. Refer to **UPPER TIMING CHAIN GUARD**.

-- Change the engine oil. Refer to **MAINTENANCE PROCEDURES**

-- Replace coolant. Refer to **COOLANT, DRAINING AND FILLING** .

-- Install the catalytic converter. Refer to **CATALYTIC CONVERTER** .

-- Install the front exhaust pipe/front muffler. Refer to **FRONT EXHAUST PIPE AND FRONT MUFFLER** .

WARNING: Do not use a battery charger for starting assistance! There is the risk that the vehicle control modules could be damaged.

CAMSHAFTS

Special tools and workshop equipment required

- Ignition Coil Puller T40039
- Assembly Tool T10352/1
- Counter hold tool T10355

- Locking Pin T40011
- Thrust Piece T10174
- Drift T40196
- Spacers T40191
- Pry Lever T40243
- Camshaft Locator T40271

Removing

NOTE: **The sealing surfaces of the lower cylinder head cover and on the upper cylinder head must not be reworked.**

The camshaft bearings are integrated in the cylinder head or cylinder head cover. The tension must be released from the camshaft timing chain before removing the cylinder head cover.

If the cylinder head cover was removed, then the cap -item 18 - in VALVETRAIN OVERVIEW must be replaced.

During installation, cable ties must be installed at the same location.

-- Install the lock carrier in service position. Refer to **Description and Operation** .

-- Remove the engine cover -arrows-.

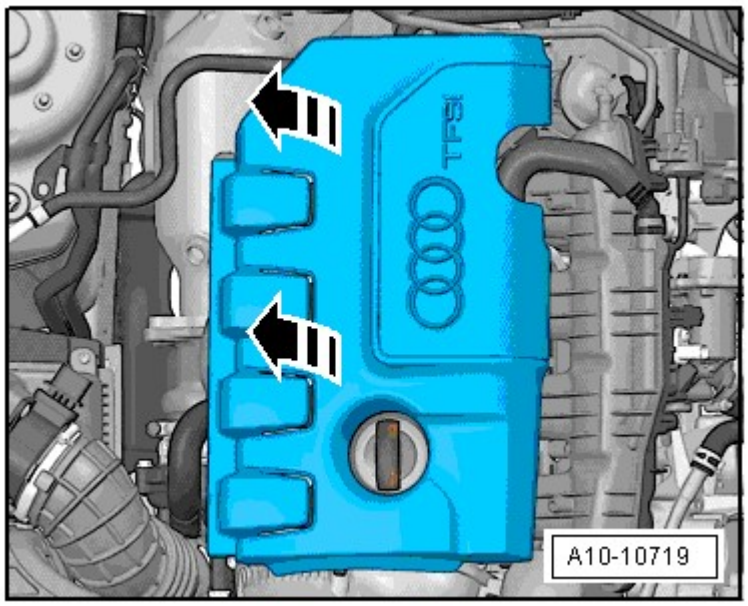

Fig. 190: Identifying Engine Cover
Courtesy of AUDI OF AMERICA, LLC

-- Remove both the lower air guide and the air guide hose.

-- Disconnect the connector -1- from the Mass Airflow (MAF) Sensor -G70-.

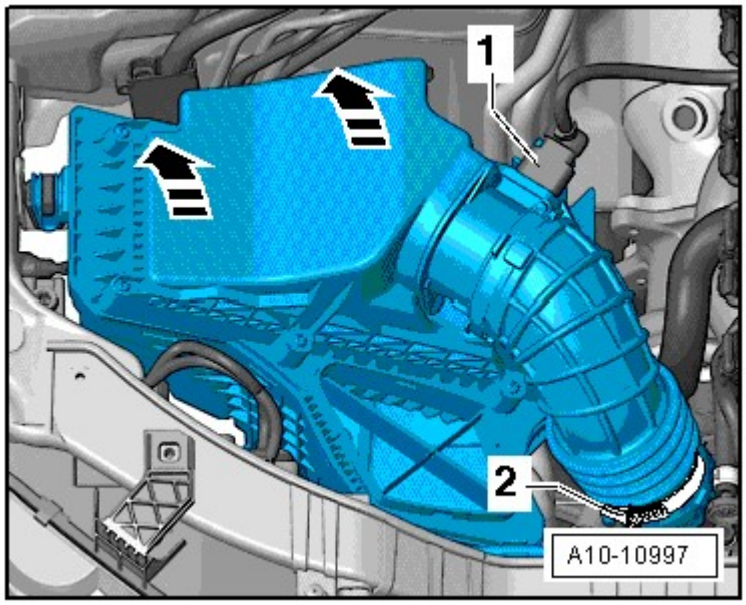

Fig. 191: Disconnecting Connector
Courtesy of AUDI OF AMERICA, LLC

-- Loosen the air intake hose -2-.

-- Remove the air filter housing upward -arrows-.

-- Remove the bolts on the ignition coil connector strip.

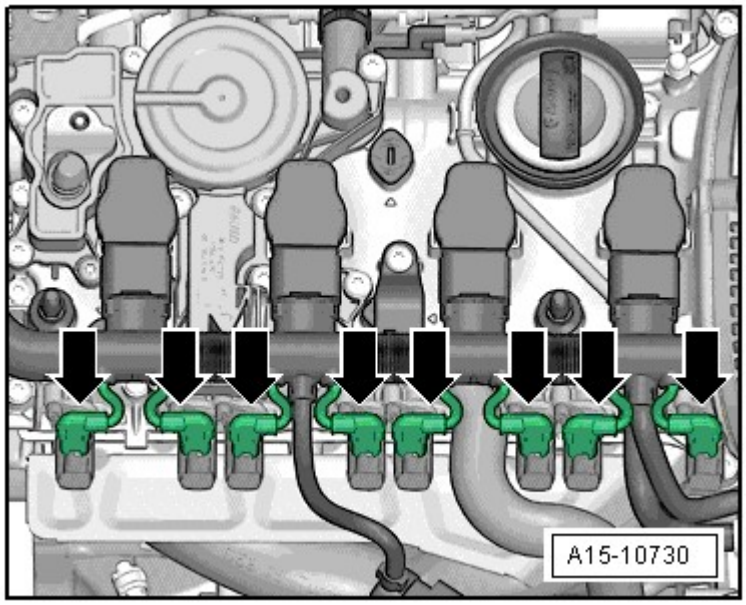

Fig. 192: Identifying Bolts
Courtesy of AUDI OF AMERICA, LLC

-- Disconnect the connectors -arrows- from the camshaft adjuster actuators.

-- Release the connector -arrows- and disconnect all the connectors at the same time from the ignition coils.

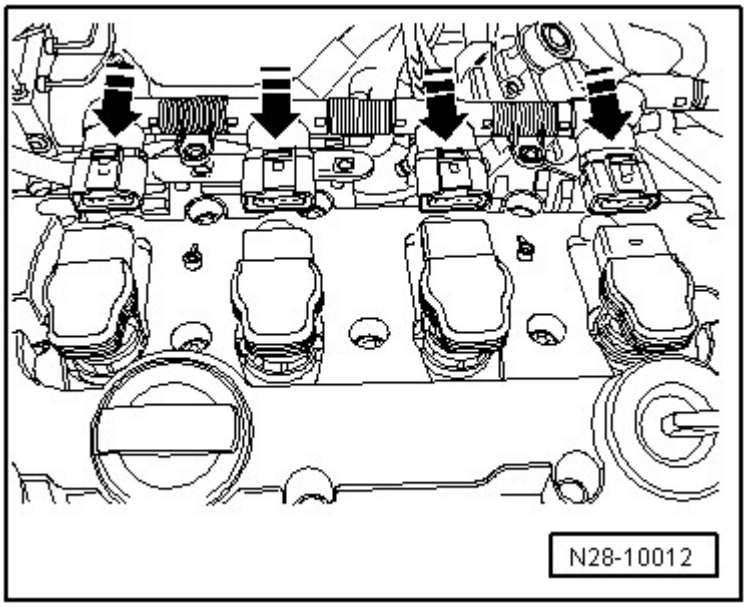

Fig. 193: Connecting Connectors To Ignition Coils
Courtesy of AUDI OF AMERICA, LLC

-- Remove the ignition coils with the T40039.

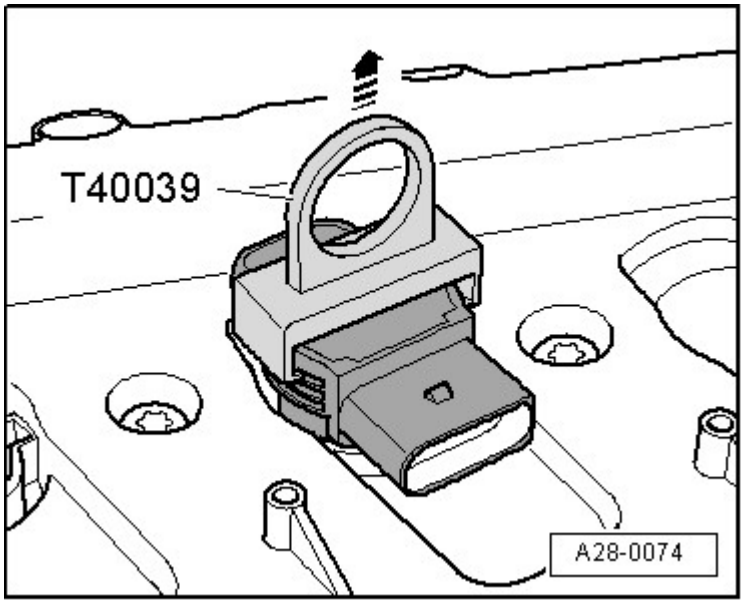

Fig. 194: Identifying Ignition Coil Puller T40039 To Remove Ignition Coils
Courtesy of AUDI OF AMERICA, LLC

-- Remove the camshaft adjuster actuators -arrows-.

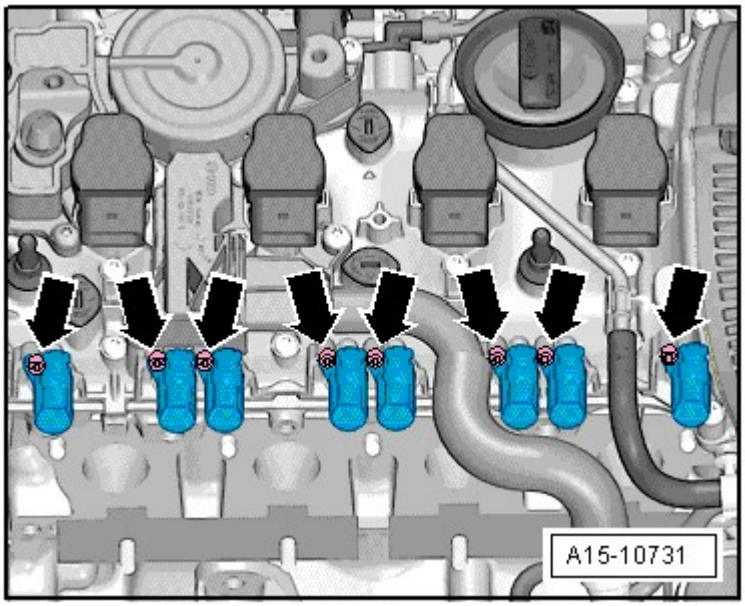

Fig. 195: Identifying Camshaft Adjuster Actuators
Courtesy of AUDI OF AMERICA, LLC

-- Disconnect the hose for the crankcase ventilation -1-.

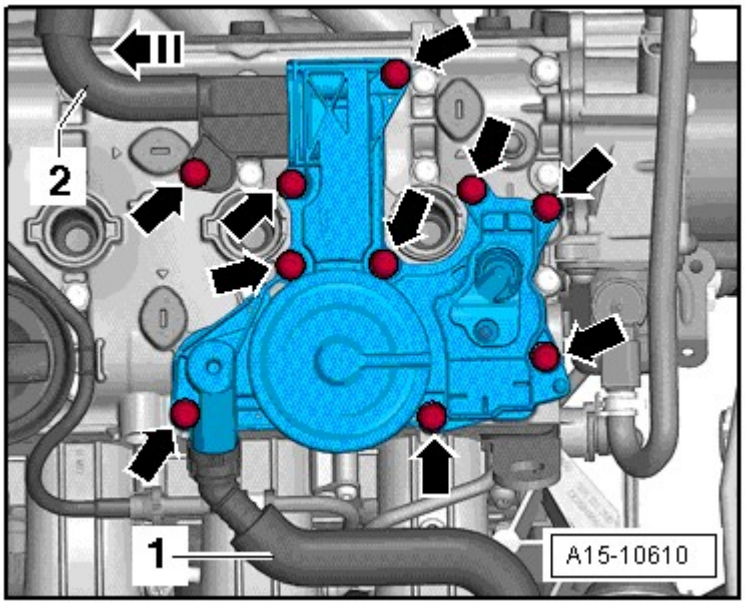

Fig. 196: Locating Crankcase Ventilation Bolts
Courtesy of AUDI OF AMERICA, LLC

-- Remove the bolts -arrows- and then remove the crankcase ventilation from the hose -2- in direction of -arrow-.

-- Disconnect the wire -arrows-.

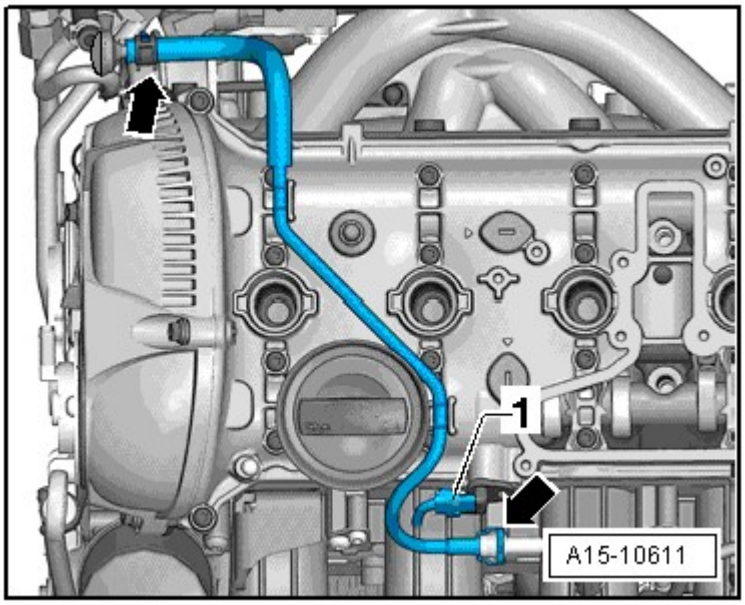

Fig. 197: Disconnecting Wire
Courtesy of AUDI OF AMERICA, LLC

-- Disconnect the connector -1- from the camshaft position sensor -G40-.

-- Disconnect the connector from the camshaft adjustment valve 1 -N205- -1-.

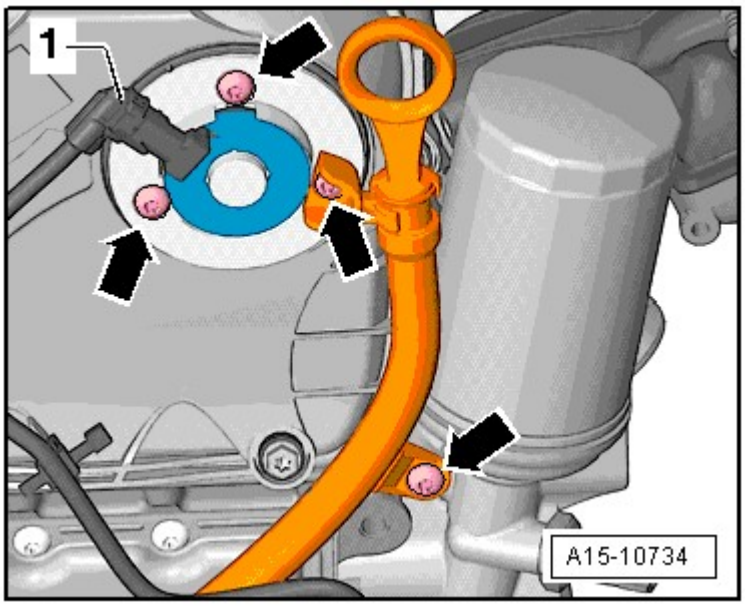

Fig. 198: Disconnecting Connector
Courtesy of AUDI OF AMERICA, LLC

-- Remove the bolts -arrows- and then the camshaft adjustment valve 1 -N205-.

-- Remove the bolts -1 through 5- and the timing chain guard upper section.

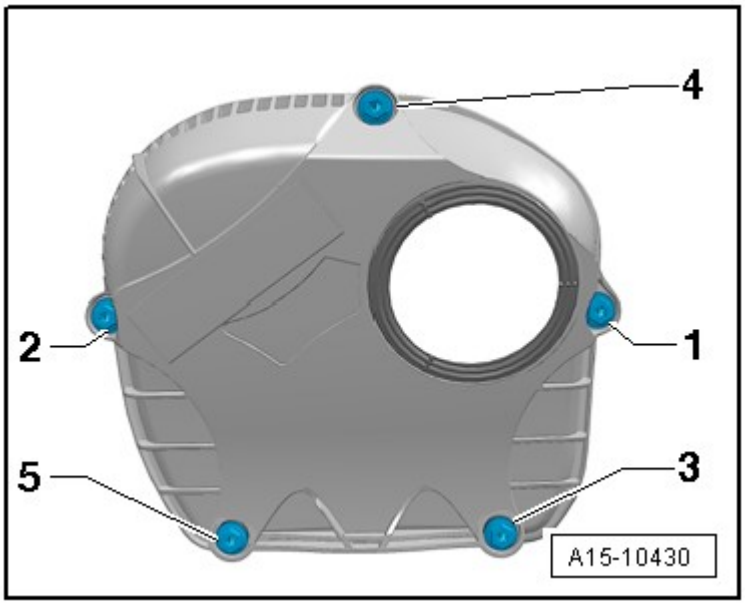

Fig. 199: Identifying Upper Timing Chain Cover - Tightening Sequence
Courtesy of AUDI OF AMERICA, LLC

CAUTION: The control valve has a left thread.

-- Remove the control valve using the T10352/1 in the direction of the -arrow-.

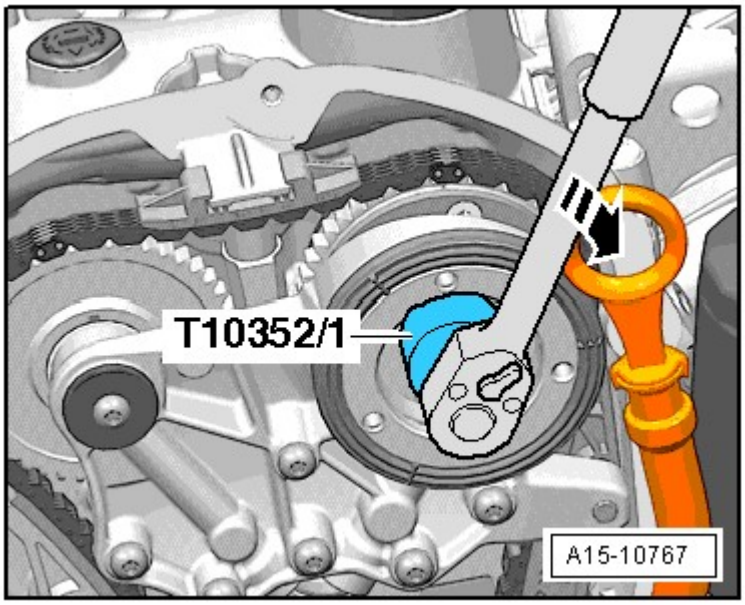

Fig. 200: Identifying Control Valve
Courtesy of AUDI OF AMERICA, LLC

-- Remove the bolts -arrows- and remove the bearing bracket.

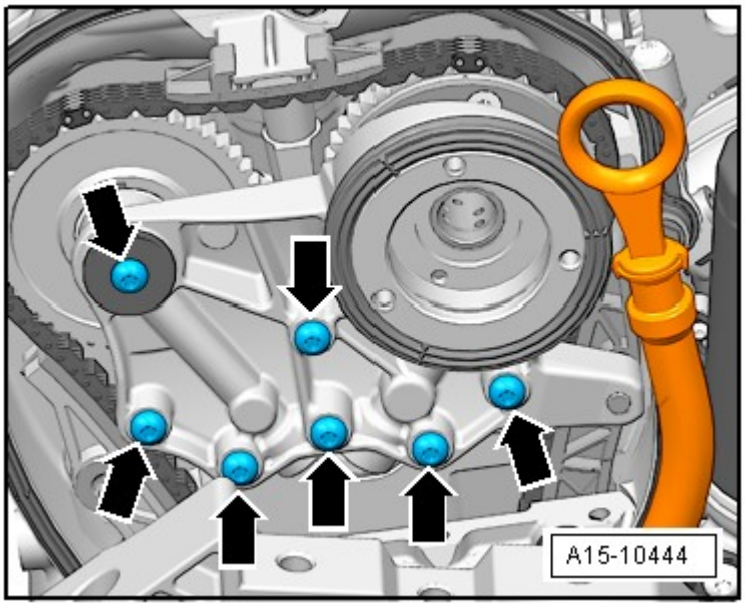

Fig. 201: Identifying Bearing Bracket Bolts
Courtesy of AUDI OF AMERICA, LLC

-- Rotate the vibration damper using the T10355 to "TDC" position.

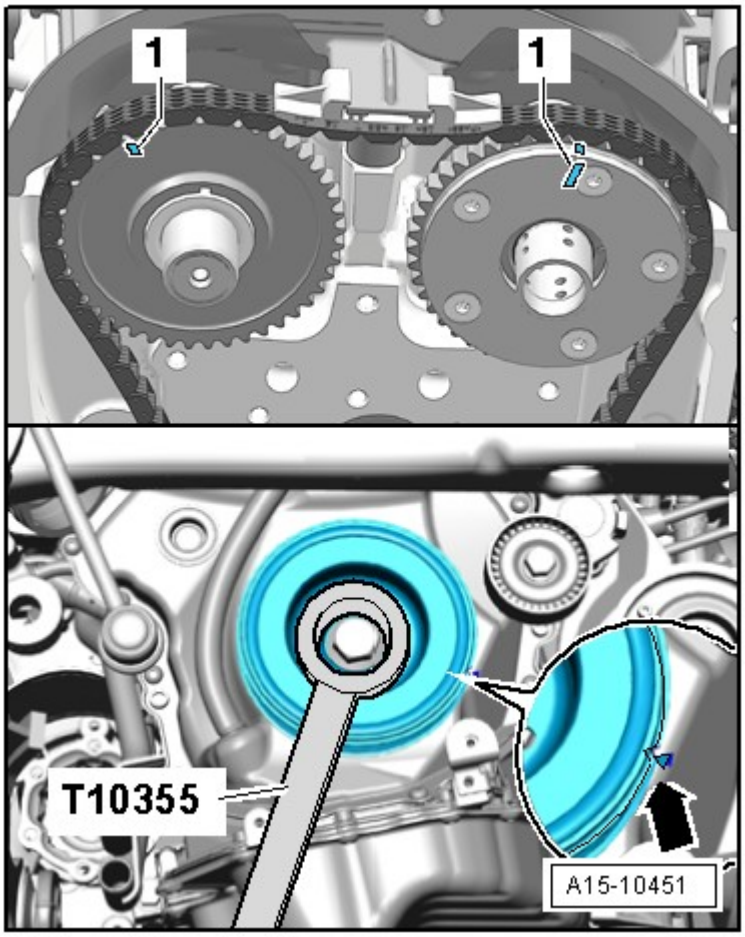

Fig. 202: Identifying Vibration Damper Rotated Into "OT" Position Using Counter Hold Tool T10355
Courtesy of AUDI OF AMERICA, LLC

- The notch on the vibration damper and the marking on the timing chain guard lower section must be opposite one another -arrow-.
- The markings -1- on the camshafts must point upward.

CAUTION: Danger of causing damage to the engine.

- **The T40196 may be installed only in the shown positions.**

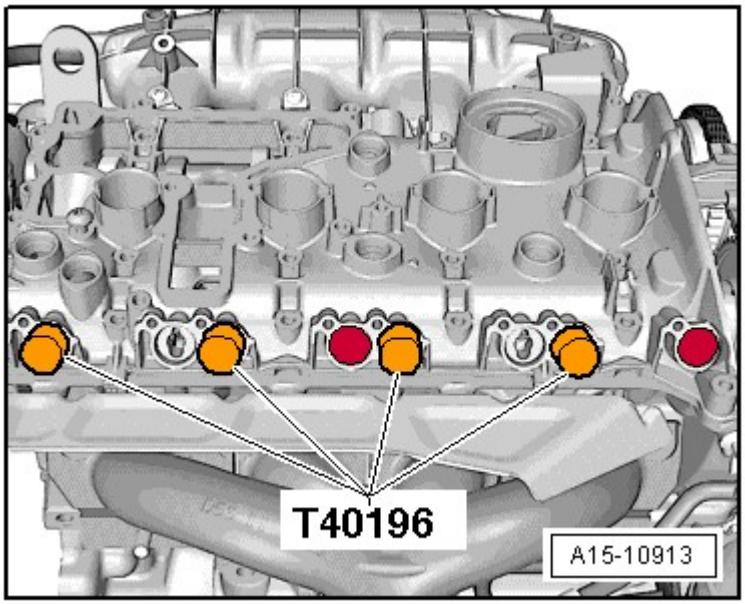

Fig. 203: Identifying T40196 Installed In Exact Position
Courtesy of AUDI OF AMERICA, LLC

-- Install the T40196 as illustrated.

-- Turn the crankshaft 2 complete turns in the direction of engine rotation.

NOTE: The engine back at Top Dead Center (TDC).

-- Remove the T40196.

-- Mark the camshaft timing chain and the cylinder head -arrows- to match the marking on the chain sprockets -1- with a waterproof marker.

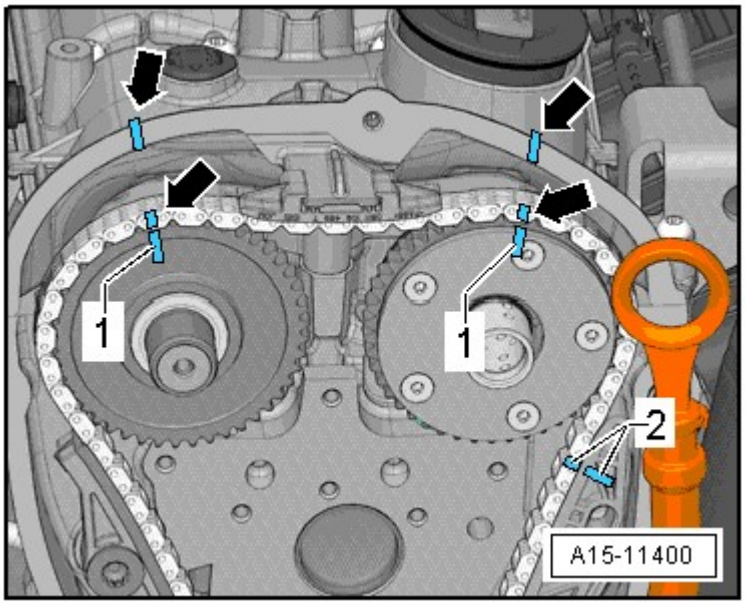

Fig. 204: Marking Camshaft Timing Chain Andcylinder Head
Courtesy of AUDI OF AMERICA, LLC

-- In addition, mark the camshaft timing chain to the camshaft timing chain guide rail -2- with a permanent marker.

-- Remove the plug -arrow-.

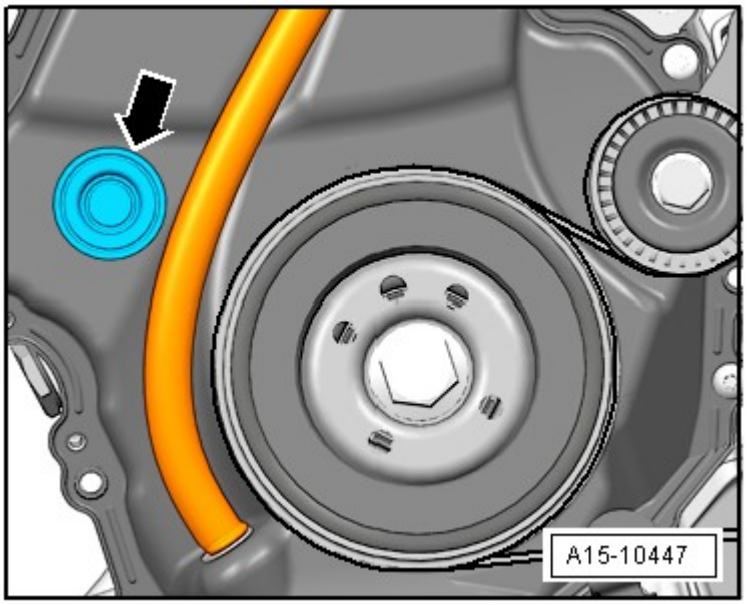

Fig. 205: Locating Plug
Courtesy of AUDI OF AMERICA, LLC

-- Remove the bolts -arrows-.

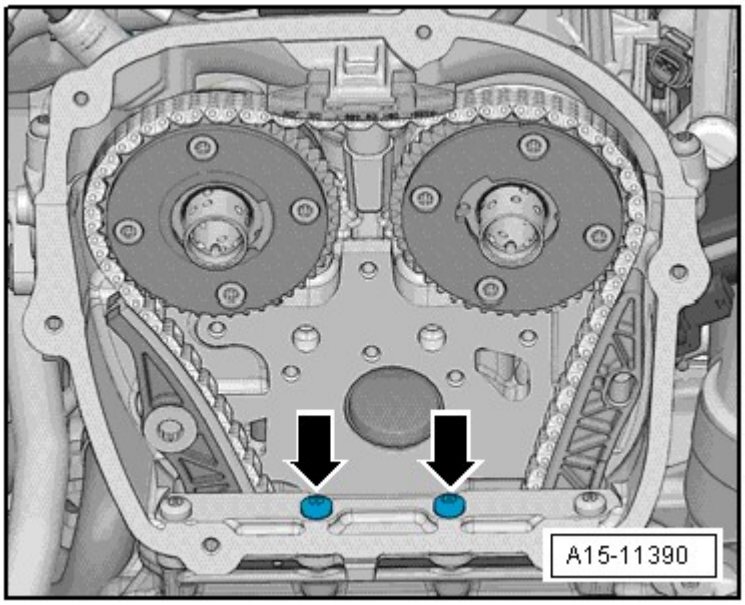

Fig. 206: Identifying Bolts
Courtesy of AUDI OF AMERICA, LLC

-- Remove the bolt -arrow-.

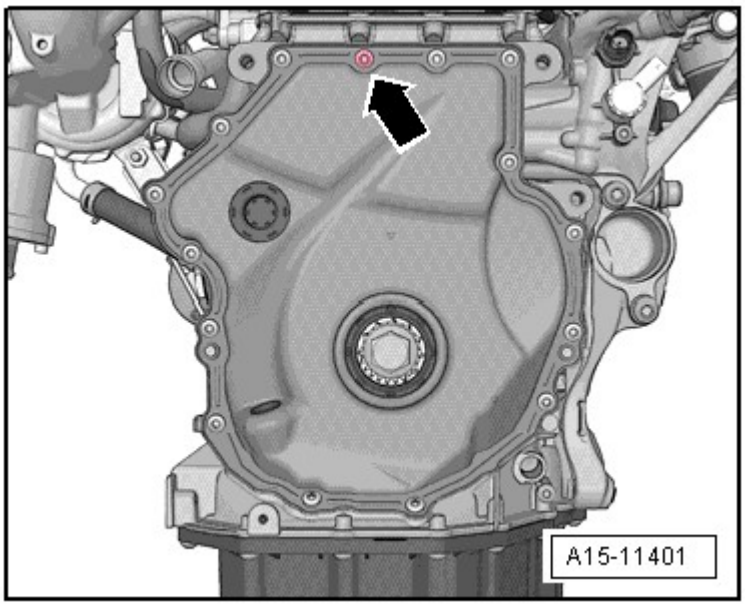

Fig. 207: Identifying Bolt
Courtesy of AUDI OF AMERICA, LLC

Two different chain tensioners may be installed depending on the version:

Version 1

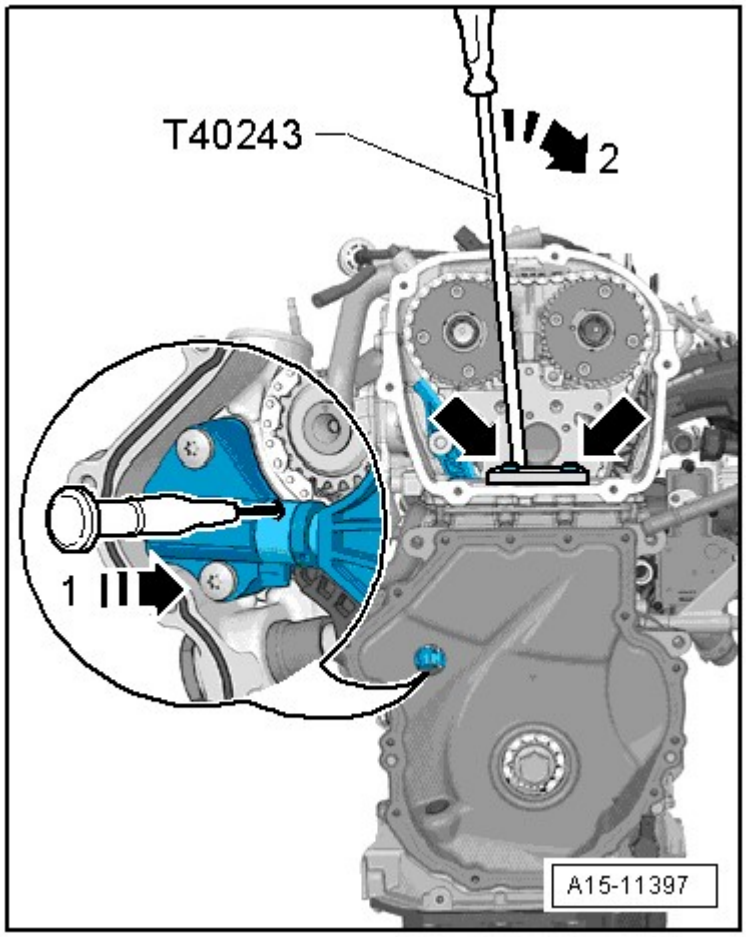

Fig. 208: Identifying Version 1
Courtesy of AUDI OF AMERICA, LLC

-- Install the T40243 -arrows-.

-- Insert a scriber or a suitable screwdriver into the opening for the chain tensioner in the direction of the -arrow 1- to lift up the locking wedge for the chain tensioner, slowly press down the T40243 and hold it in the direction of the -arrow 2-.

-- Secure the chain tensioner using T40011.

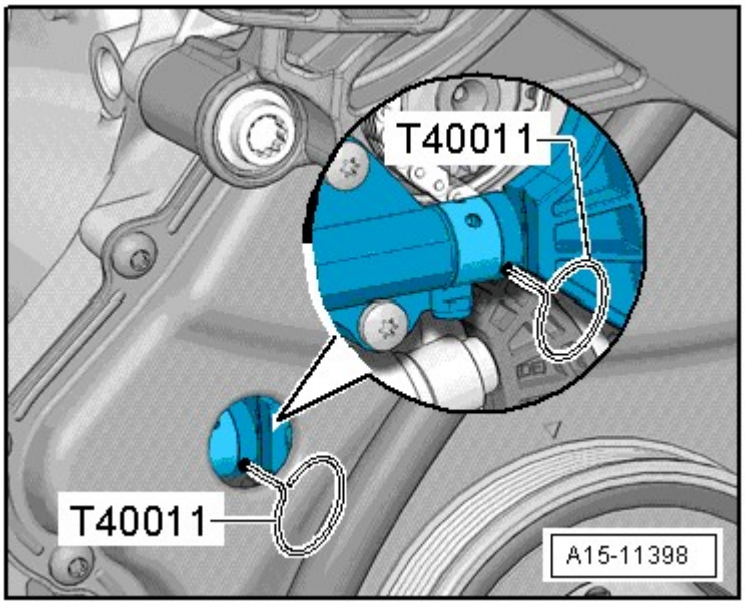

Fig. 209: Securing Chain Tensioner
Courtesy of AUDI OF AMERICA, LLC

Version 2

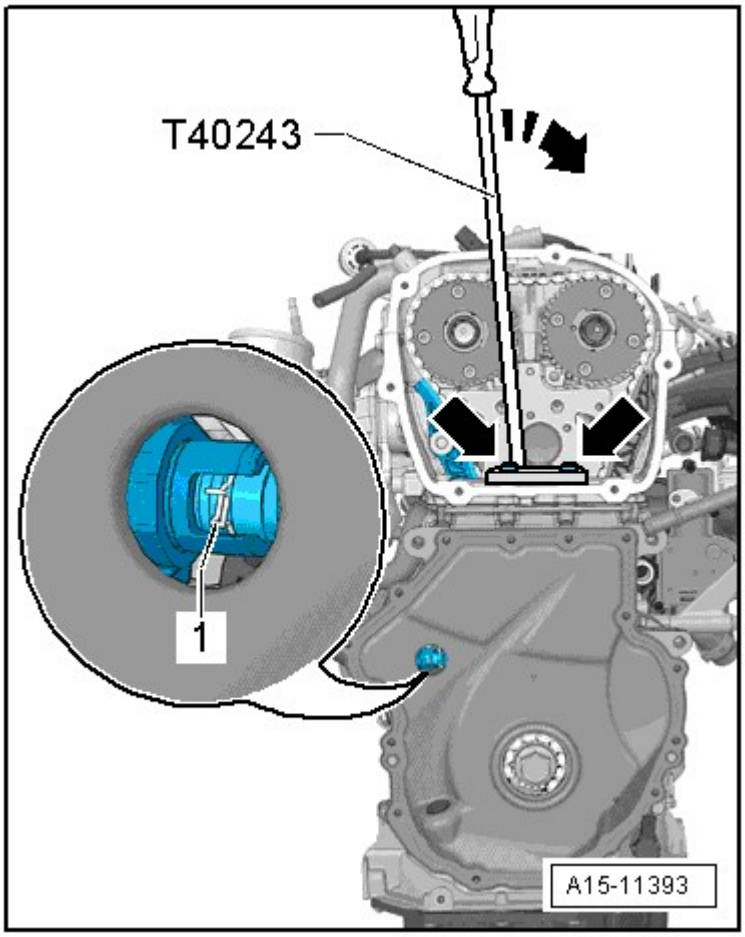

Fig. 210: Identifying Version 2
Courtesy of AUDI OF AMERICA, LLC

-- Install the T40243 -arrows-.

-- Press the chain tensioner locking ring -arrow- together and slowly press and hold the T40243 in the direction of the -arrow-.

-- Secure the chain tensioner with the T40267.

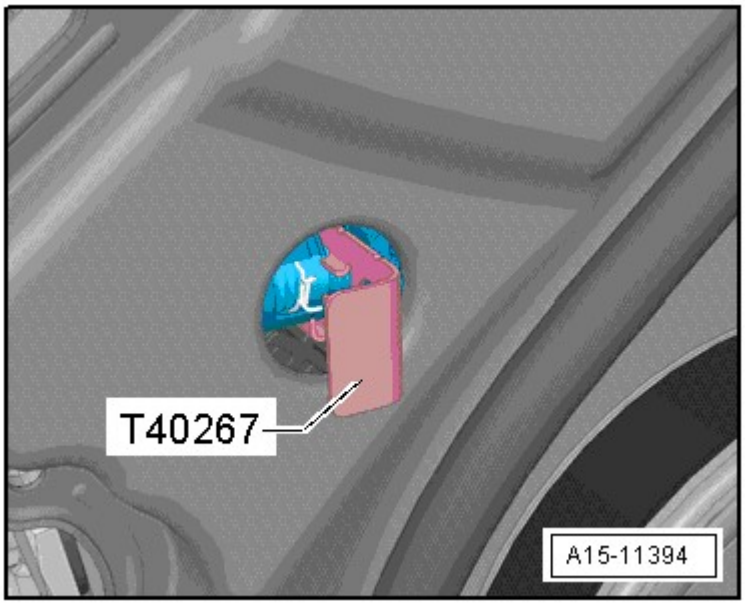

Fig. 211: Securing Chain Tensioner
Courtesy of AUDI OF AMERICA, LLC

-- Remove the T40243.

-- Bolt the camshaft locating tool T40271/2 to the cylinder head and push the chain sprocket splines in the direction of the -arrow 2-. If necessary, turn the intake camshaft with a wrench in the direction of the -arrow 1-.

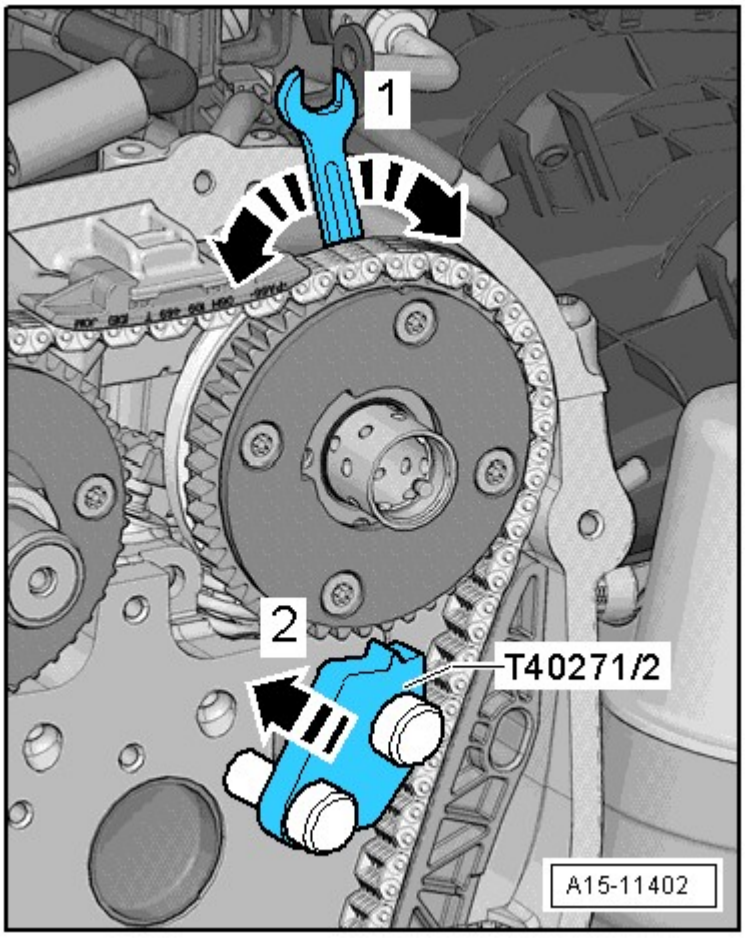

Fig. 212: Identifying Bolt Camshaft Locating Tool T40271/2
Courtesy of AUDI OF AMERICA, LLC

-- Remove the bolt -1- and guide the tensioning rail -2- downward.

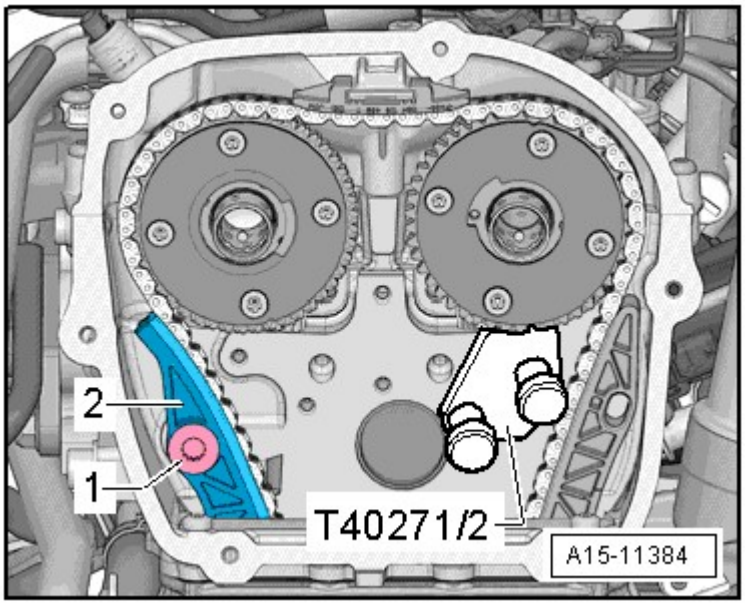

Fig. 213: Moving Tensioning Rail Up To Install Bolt
Courtesy of AUDI OF AMERICA, LLC

-- Attach the camshaft locating tool T40271/1 to the cylinder head.

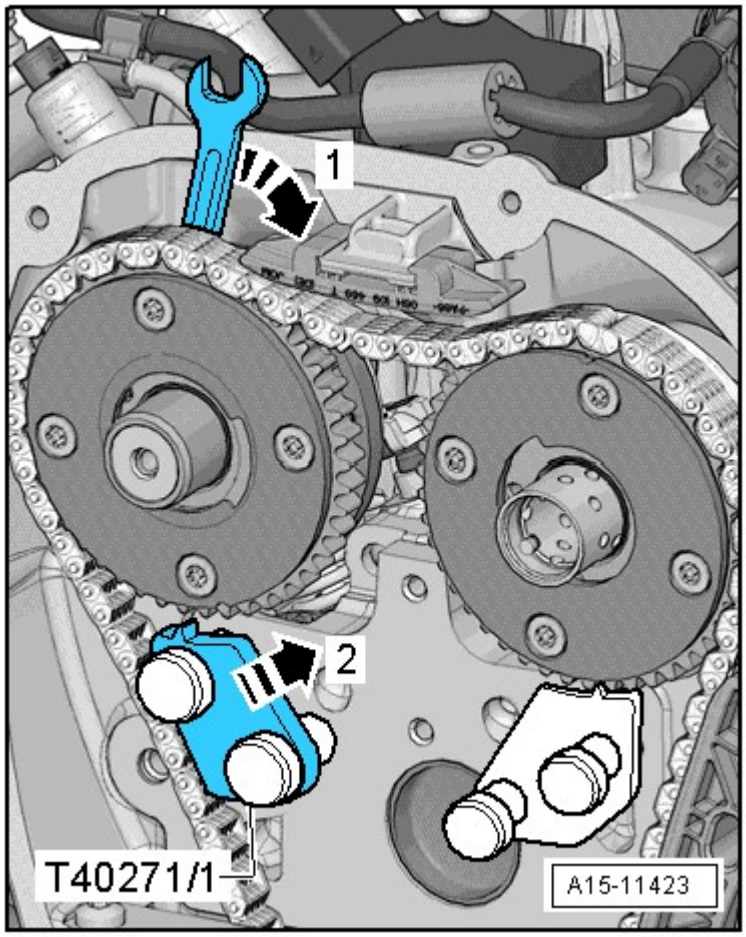

Fig. 214: Identifying Camshaft Locating Tool
Courtesy of AUDI OF AMERICA, LLC

-- Turn the exhaust camshaft with the wrench in the direction of the -arrow 1- and slide the T40271/1 in the chain sprocket splines in the direction of the -arrow 2-.

-- Mark the camshaft sprocket to the T40271/1 and the T40271/2 -arrow-.

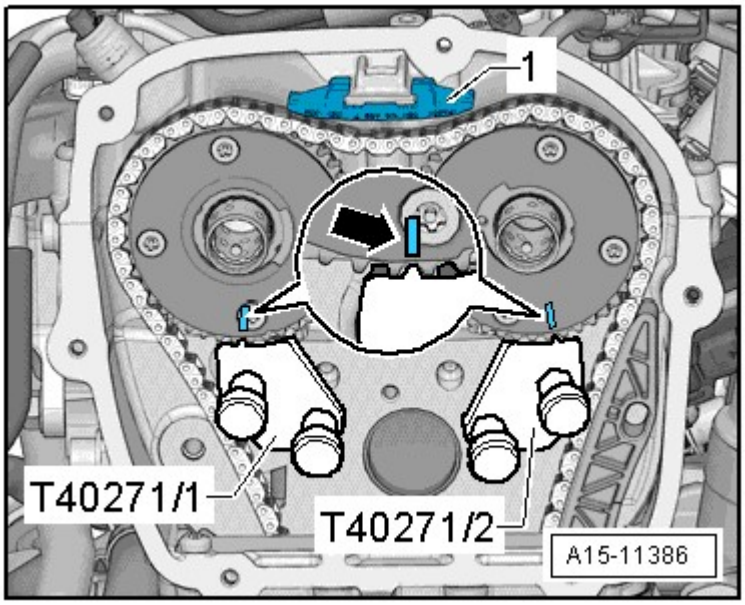

Fig. 215: Marking Camshaft Sprocket
Courtesy of AUDI OF AMERICA, LLC

-- Remove the upper guide track -1- by unlocking the latch with a screwdriver and pushing the guide track forward.

-- Remove camshaft timing chain from chain sprockets.

CAUTION: Risk of damaging valves and piston crowns.

- **If the camshaft timing chain was removed from the cylinder head, then the crankshaft may not be turn further.**

-- Turn the intake camshaft with a wrench in the direction of the -arrow 1-, slide the T40271/2 out of the chain sprocket splines if the direction of the -arrow 2- and bring the camshaft into the rest position.

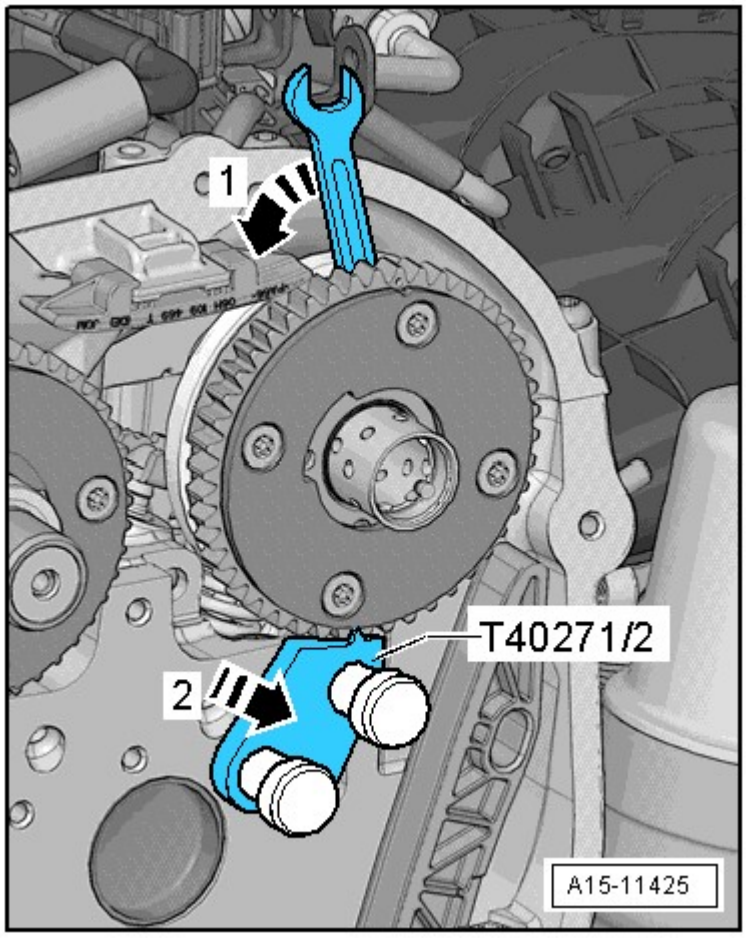

Fig. 216: Turning Intake Camshaft With Wrench In Direction Of Arrow
Courtesy of AUDI OF AMERICA, LLC

-- Turn the exhaust camshaft with a wrench in the direction of the -arrow 1-, slide the T40271/1 out of the chain sprocket splines if the direction of the -arrow 2- and bring the camshaft into the rest position.

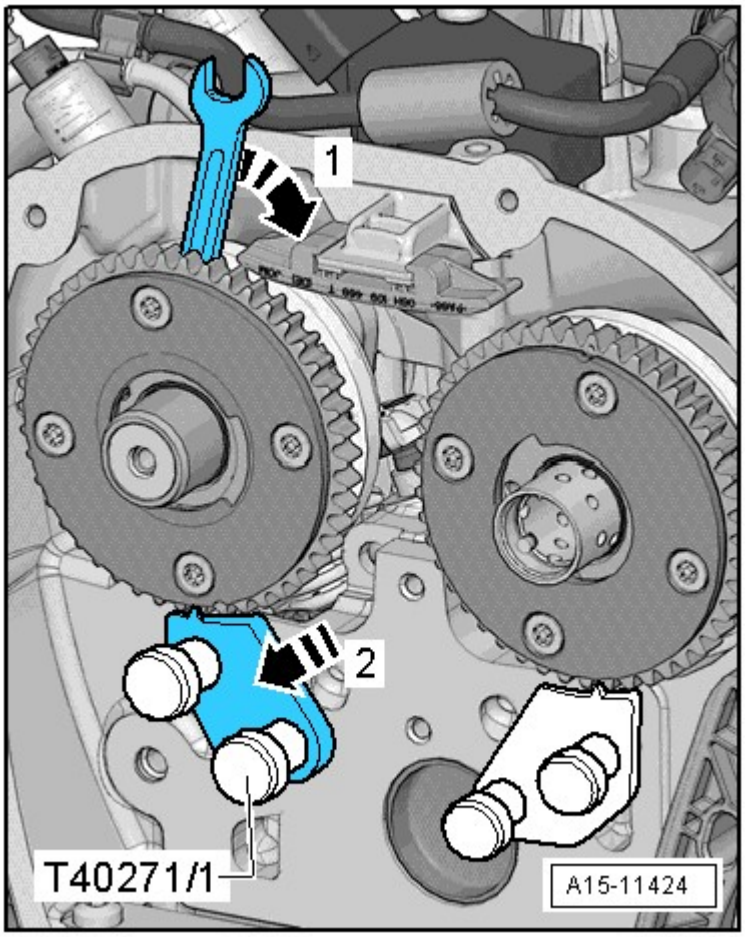

Fig. 217: Turning Exhaust Camshaft With Wrench In Direction Of Arrow
Courtesy of AUDI OF AMERICA, LLC

-- Remove the high pressure pump. Refer to **Removal and Installation** .

-- Remove vacuum pump. Refer to **Removal and Installation** .

-- Remove the cylinder head cover bolts in -1 to 6- sequence.

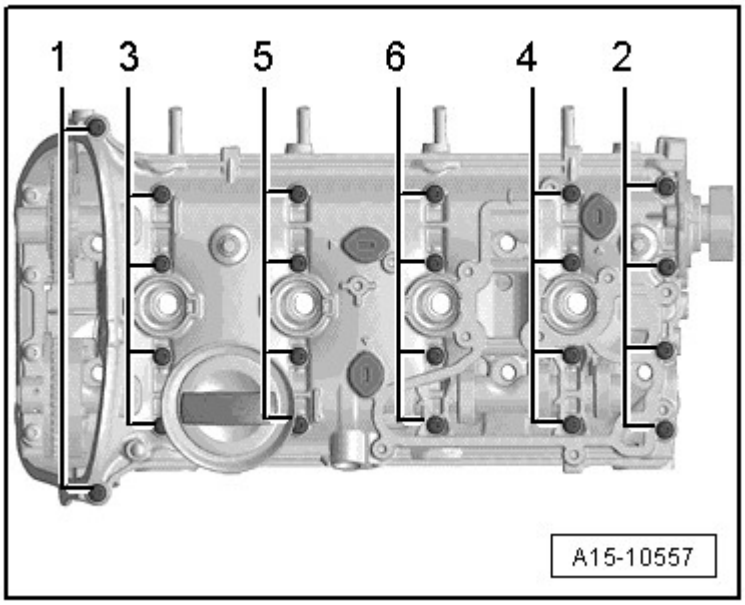

Fig. 218: Identifying Cylinder Head Cover Loosening
Courtesy of AUDI OF AMERICA, LLC

-- Remove the cylinder head cover.

-- Remove the camshafts.

CAUTION: Risk of contaminating lubricating system and bearing.

- **Cover open parts of engine.**

Installing

- Tightening specifications, refer to **VALVETRAIN OVERVIEW**.

NOTE: Sealing surfaces must be completely free of oil and grease.

The pistons must not be positioned at TDC.

Make sure that all roller cam followers make contact correctly on valve stem ends.

-- Remove any sealant residue on the cylinder head using the flat blade scraper.

WARNING: Danger of eye injury.

- **Wear protective goggles**

CAUTION: Risk of contaminating lubricating system and bearing.

- **Cover open parts of engine.**

-- Remove any seal out of the groove in the cylinder head cover as well as from any sealing surface using, for example, a rotating plastic brush.

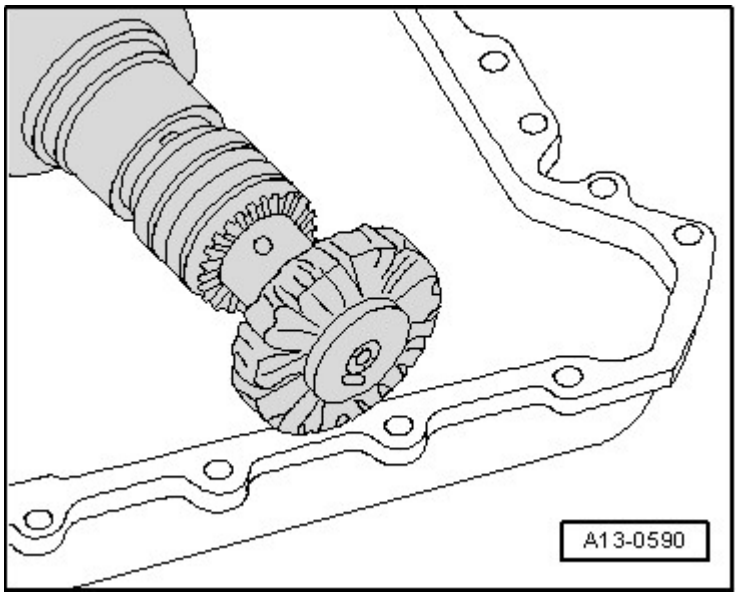

Fig. 219: Identifying Rotating Plastic Brush To Remove Sealant Residue From Sealing Flange, Cylinder Block And Upper Part Of Oil Pan
Courtesy of AUDI OF AMERICA, LLC

-- Clean sealing surfaces, must be free of oil and grease.

-- Lubricate the running surfaces of both camshafts.

For new camshafts

-- Transfer the self-made markings from the old camshafts to the new camshafts.

All

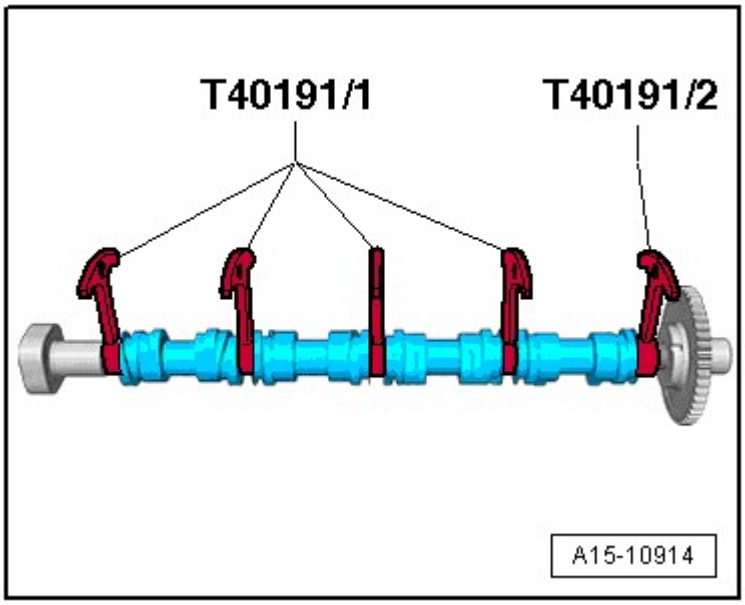

Fig. 220: Transfering Self-Made Markings From Old Camshafts To New Camshafts
Courtesy of AUDI OF AMERICA, LLC

WARNING: Danger of eye injury.

- **Wear protective goggles**

-- Install the camshaft with the T40191 as illustrated, move the spacers into the correct position if necessary.

NOTE: If necessary, use a second set of T40191 or T40191/1.

-- Install the camshafts into the cylinder head; the factory markings -arrows- must be located as shown in the illustration.

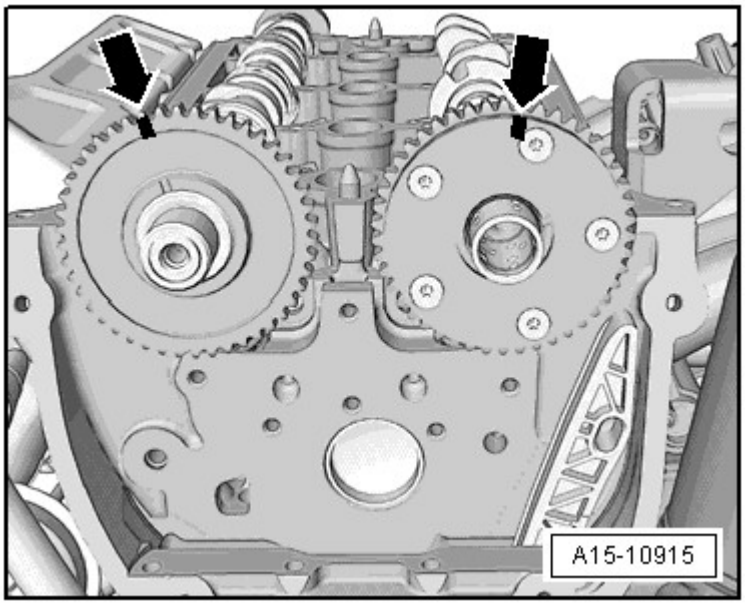

Fig. 221: Identifying Camshafts Installed And Aligned In Cylinder Head
Courtesy of AUDI OF AMERICA, LLC

NOTE: Ignore the self-made markings.

-- Check the alignment -arrows- of the camshafts.

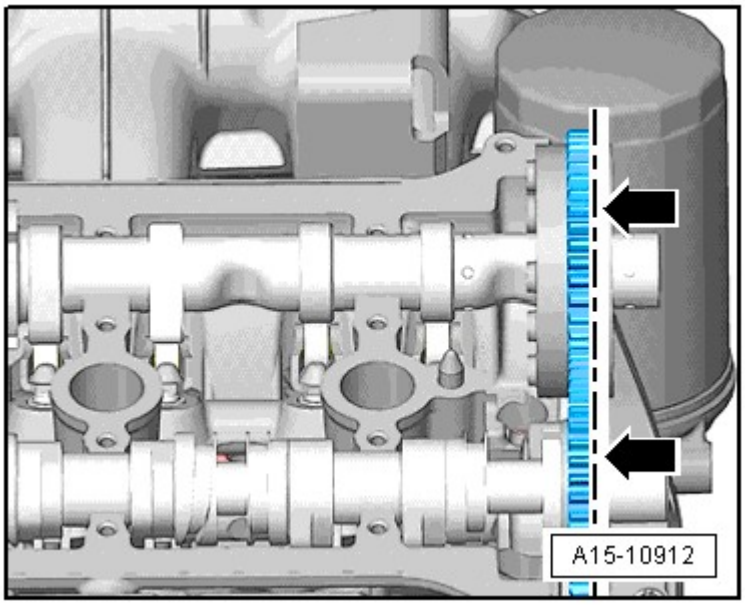

Fig. 222: Checking Alignment
Courtesy of AUDI OF AMERICA, LLC

-- Cut the tube nozzle at the front marking (nozzle diameter: approximately 2 mm).

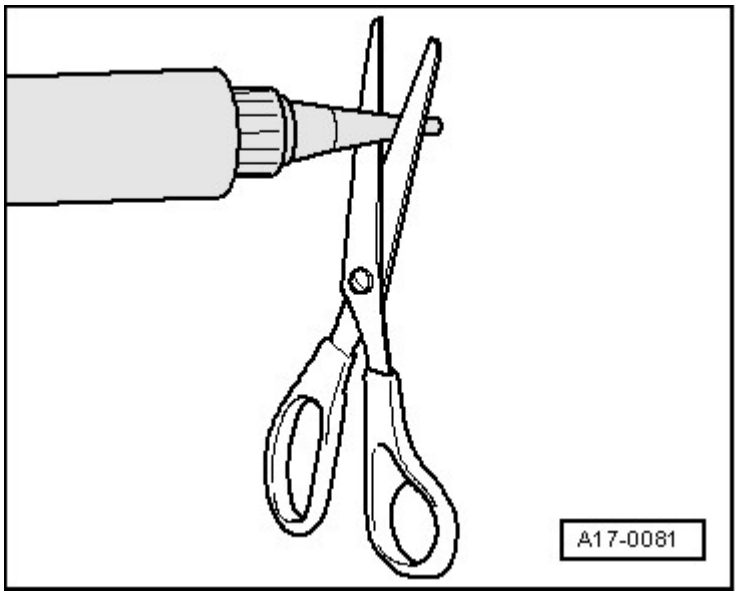

Fig. 223: Cutting Tube Nozzle At Front Marking (Nozzle Diameter Approx. 3 Mm)
Courtesy of AUDI OF AMERICA, LLC

-- Apply the silicone sealant on the clean sealing surface of the cylinder head cover as illustrated -arrows-.

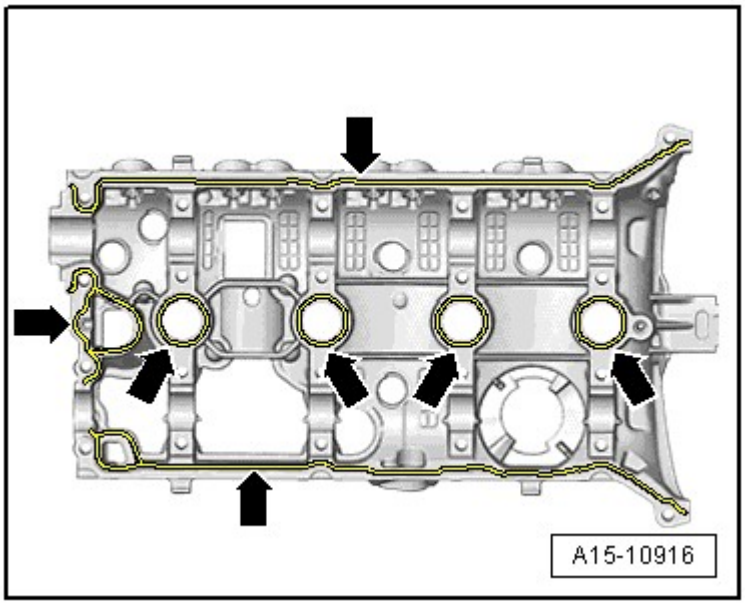

Fig. 224: Applying Silicone Sealant On Clean Sealing Surface
Courtesy of AUDI OF AMERICA, LLC

- Thickness of sealant bead: 2 to mm.

NOTE: **The cylinder head cover must be installed within 5 minutes after application of silicone sealant.**

The sealant bead may not be thicker than specified, otherwise excess sealant could enter the oil pan and clog the oil intake tube.

Note the expiration date of the sealing compound.

Sealant

-- Mount the cylinder head cover on the cylinder head.

-- Replace the cylinder head cover bolts.

-- Tighten the bolts in several steps, tightening sequence. Refer to **Fig. 23**.

NOTE: Make sure the cylinder head cover is not tilted.

-- Drive the cap -1- in without sealing using the T10174.

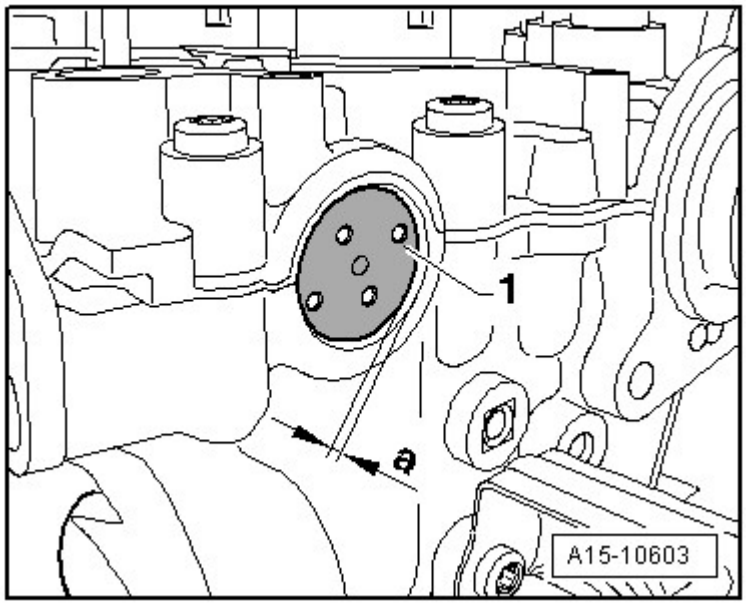

Fig. 225: Driving Cap In Using Thrust Piece T10174
Courtesy of AUDI OF AMERICA, LLC

-a-: 1 to 2 mm

-- Rotate the vibration damper using the T10355 into the "TDC" position -arrow-.

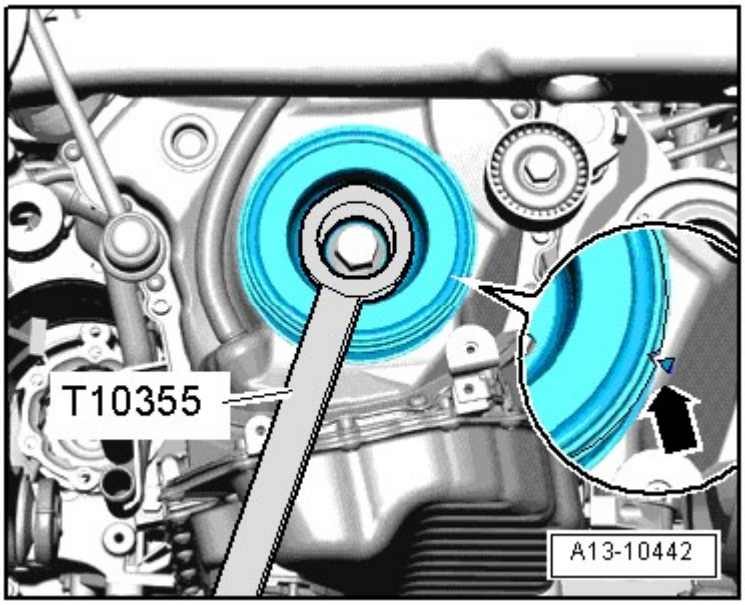

Fig. 226: Identifying Vibration Damper Rotated Into "OT" Position Using Counter Hold Tool T10355
Courtesy of AUDI OF AMERICA, LLC

- The notch on the vibration damper must line up with the arrow marking on the timing chain lower cover.

-- Turn the intake camshaft in the direction of the -arrow 1- until the markings -3- align with the T40271/2.

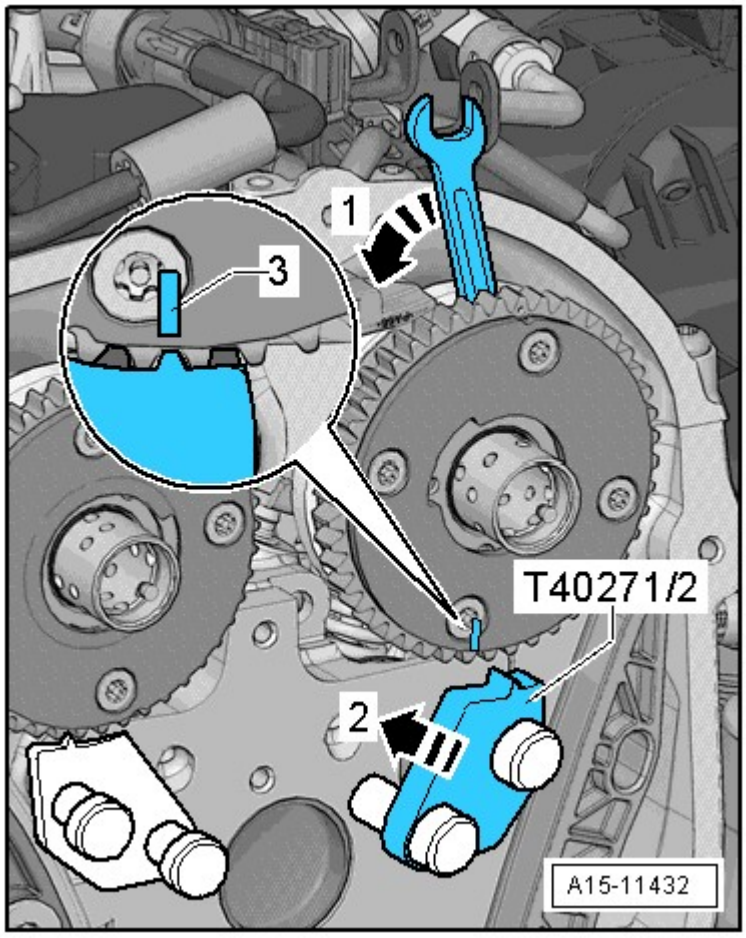

Fig. 227: Turning Intake Camshaft In Direction Of Arrow
Courtesy of AUDI OF AMERICA, LLC

-- Slide the T40271/2 into the chain sprocket splines in the direction of the -arrow 2-.

-- Turn the exhaust camshaft in the direction of the -arrow 1- until the markings -3- align with the T40271/1.

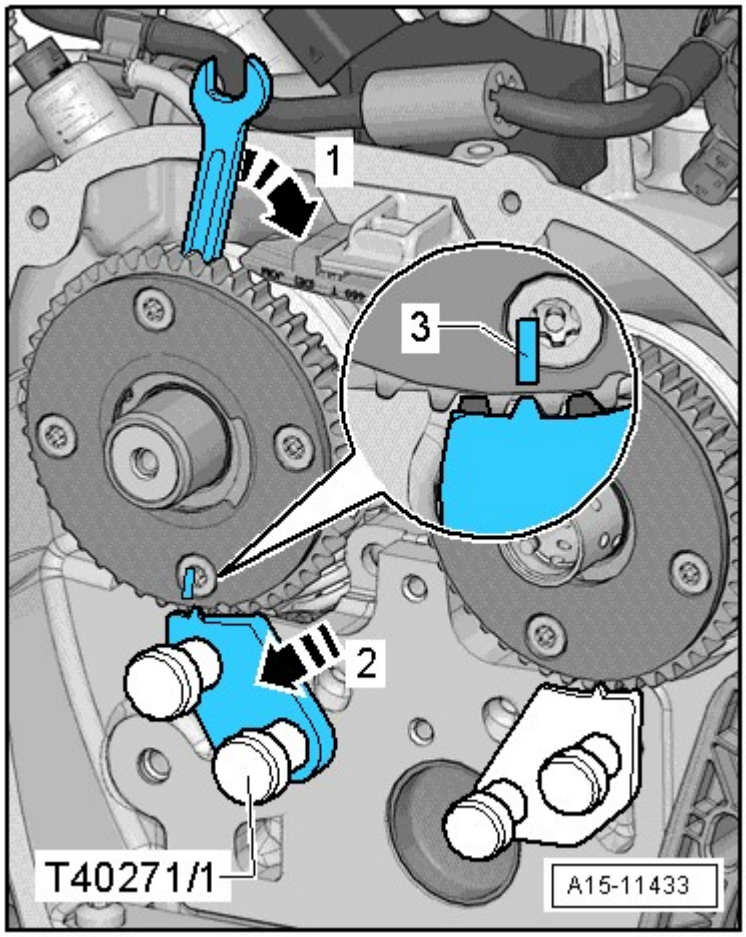

Fig. 228: Turning Exhaust Camshaft In Direction Of Arrow
Courtesy of AUDI OF AMERICA, LLC

-- Slide the T40271/1 into the chain sprocket splines in the direction of the -arrow 2-.

-- Position the markings on the chain links -arrows- at the chain sprockets -1- to install the camshaft timing chain.

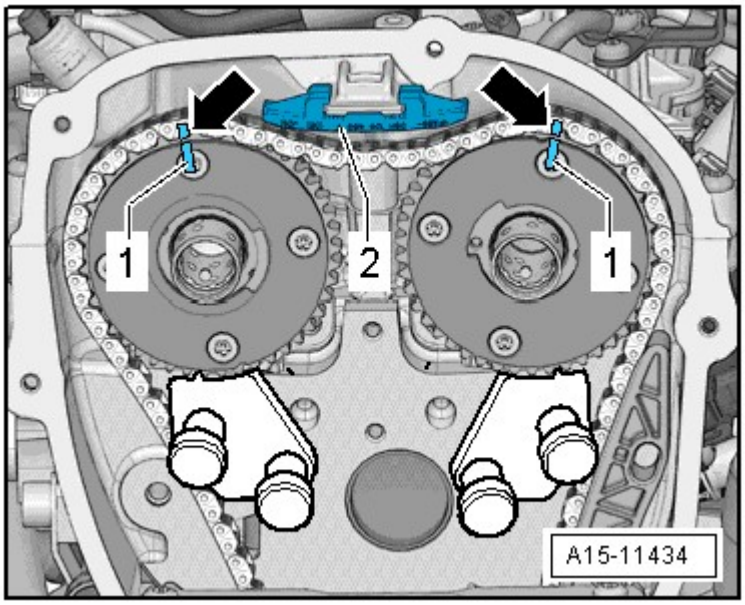

Fig. 229: Positioning Mark On Chain Links At Chain Sprockets
Courtesy of AUDI OF AMERICA, LLC

-- Install the upper glide track -2-.

-- Turn the exhaust camshaft in the direction of the -arrow 1-, slide out the T40271/1 from the chain sprocket splines in the direction of the -arrow 2- and release the camshaft.

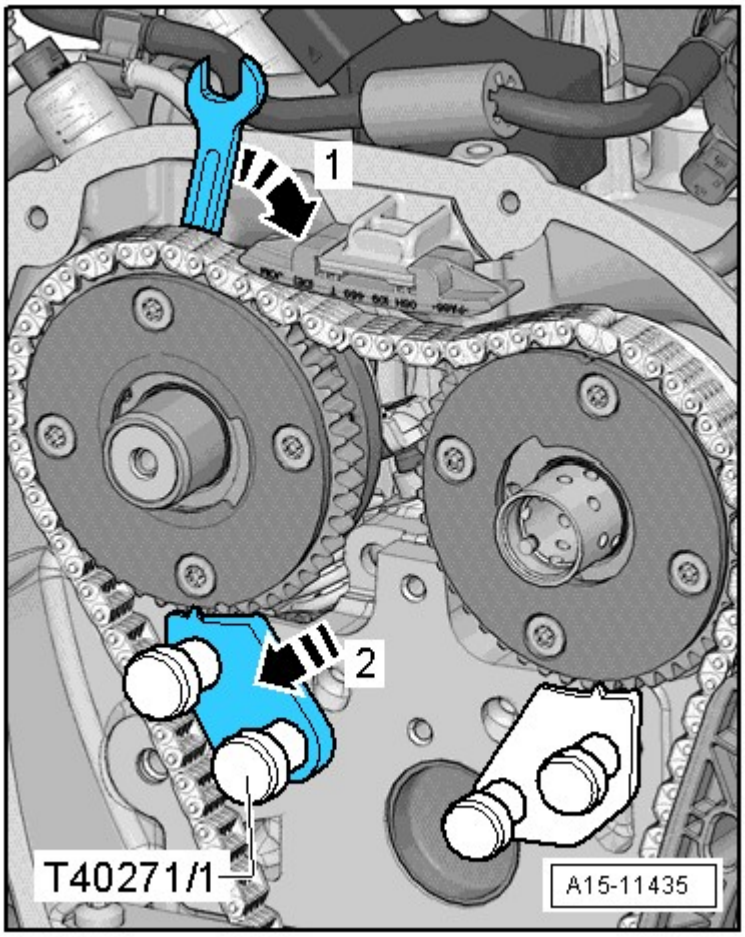

Fig. 230: Turning Exhaust Camshaft In Direction Of Arrow
Courtesy of AUDI OF AMERICA, LLC

-- Remove the T40271/1.

-- Move the tensioning rail -2- up and install the bolt -1-.

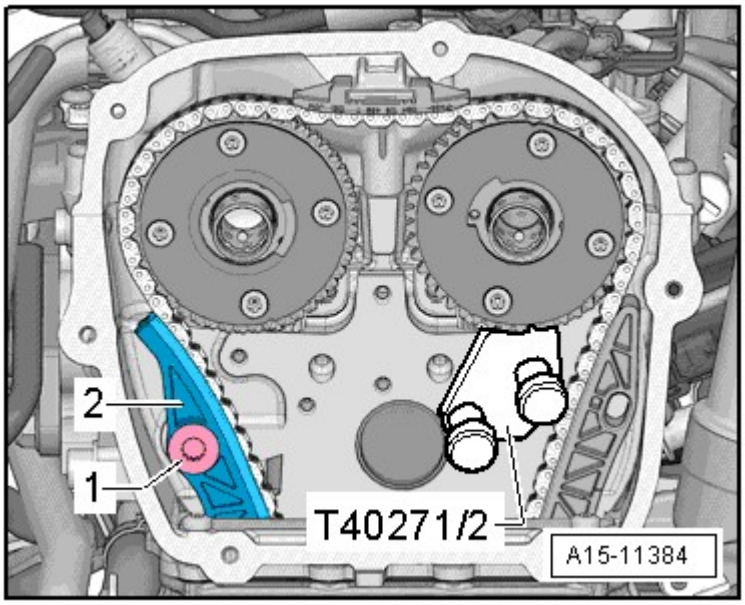

Fig. 231: Moving Tensioning Rail Up To Install Bolt
Courtesy of AUDI OF AMERICA, LLC

-- Turn the intake camshaft in the direction of the -arrow 1-, slide out the T40271/2 from the chain sprocket splines in the direction of the -arrow 2- and release the camshaft.

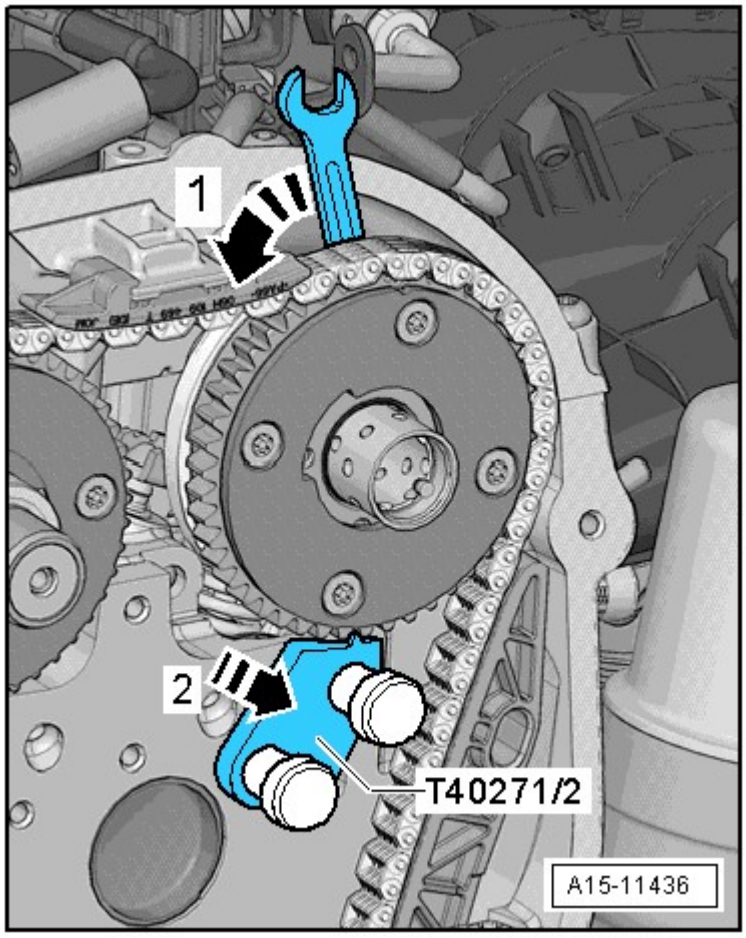

Fig. 232: Turning Intake Camshaft In Direction Of Arrow
Courtesy of AUDI OF AMERICA, LLC

-- Remove the T40271/2.

-- Check the valve timing. The camshaft timing chain and cylinder head -arrows- must align with the markings on the chain sprocket -1-.

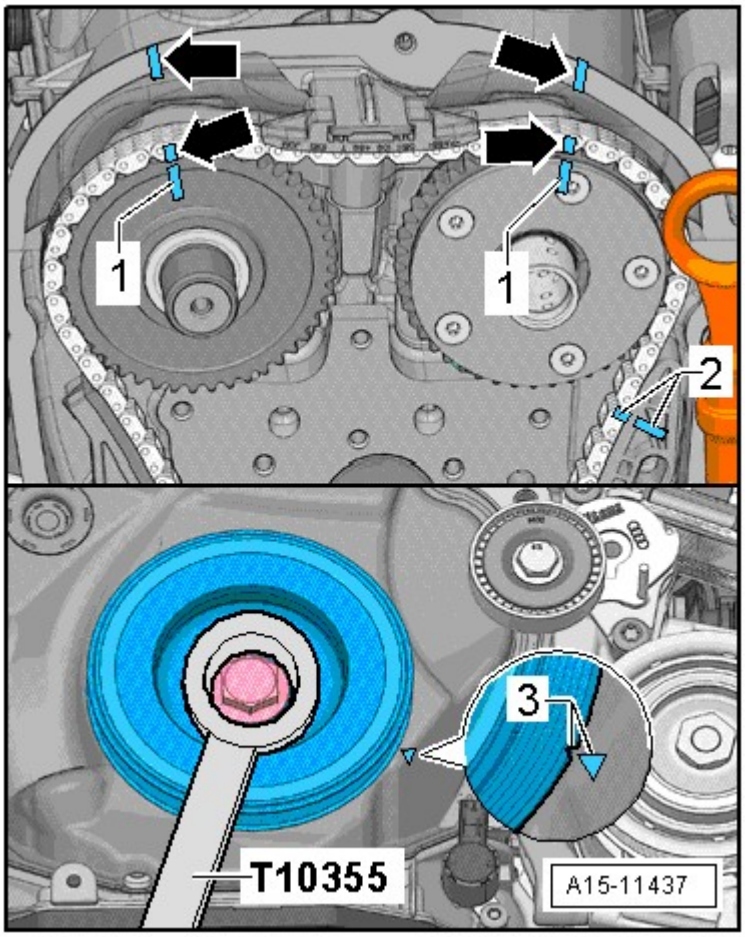

Fig. 233: Checking Valve Timing
Courtesy of AUDI OF AMERICA, LLC

-- The markings for the camshaft timing chain and the camshaft timing chain glide track -2- must be opposite one another.

-- The notch on the vibration damper must be opposite the marking on the lower section of the timing chain guard -3-.

-- Mount the bearing bracket and the bolts -arrows- hand-tight.

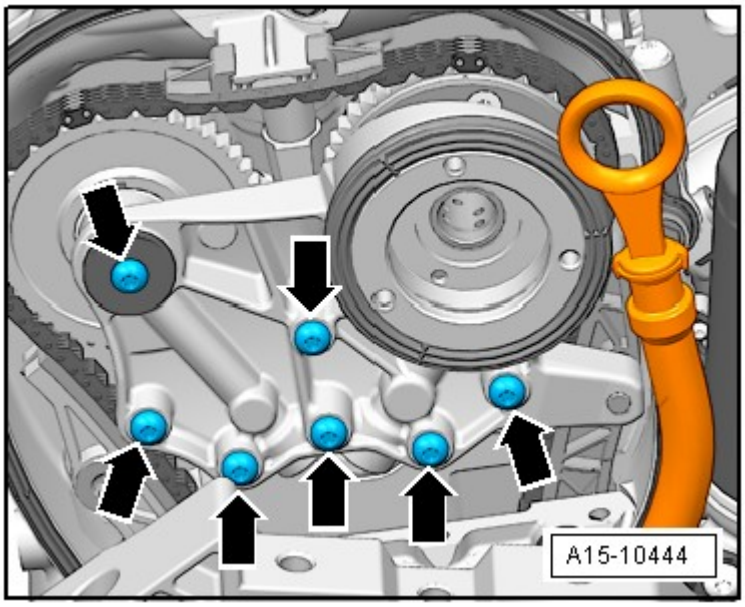

Fig. 234: Identifying Bearing Bracket Bolts
Courtesy of AUDI OF AMERICA, LLC

-- Remove the T40011 or the T40267, depending on the version.

-- Tighten the bolts -arrows-. Refer to **CAMSHAFT TIMING CHAIN OVERVIEW**.

-- Install the bolt -arrow-.

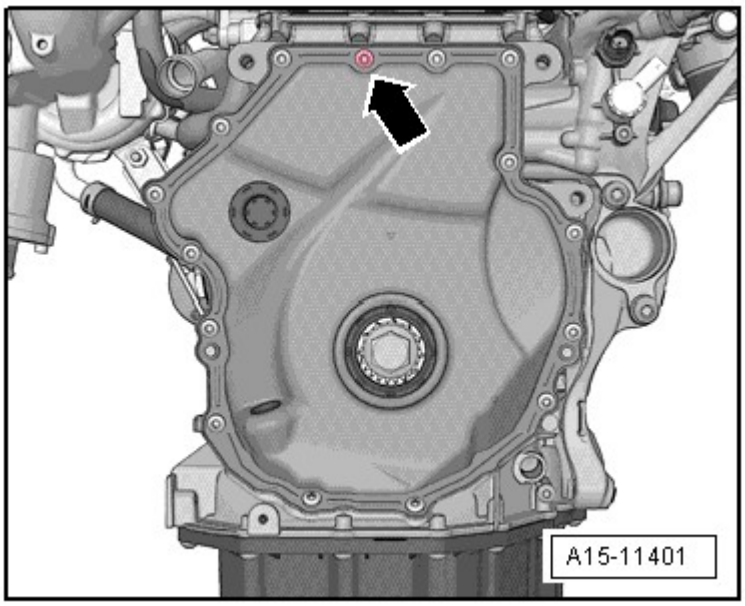

Fig. 235: Identifying Bolt
Courtesy of AUDI OF AMERICA, LLC

-- Install the control valve -item 6- in **Fig. 7**.

-- Install the T40196 as illustrated.

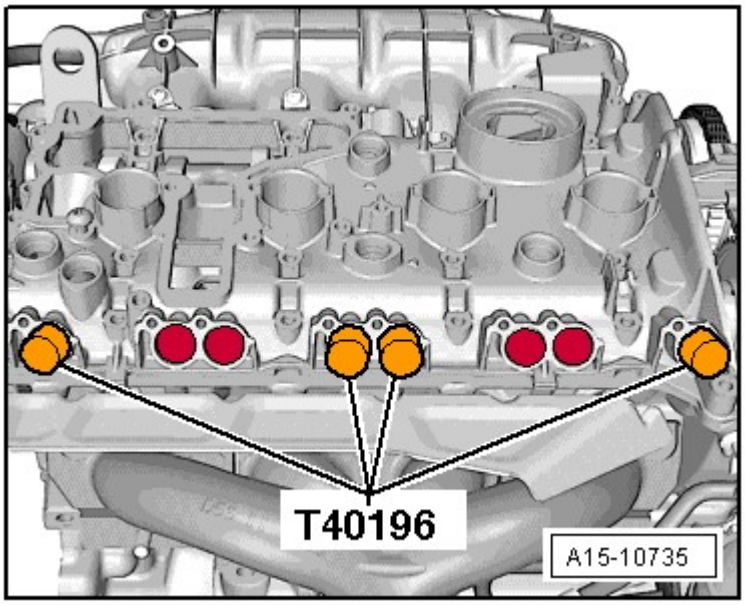

Fig. 236: Identifying T40196, Installation Locations
Courtesy of AUDI OF AMERICA, LLC

-- Turn the crankshaft 4 complete turns in the direction of engine rotation.

-- Remove the T40196.

-- Install the timing chain guard upper section. Refer to **UPPER TIMING CHAIN GUARD**.

-- Install the vacuum pump. Refer to **Removal and Installation** .

-- Install the high pressure pump. Refer to **Removal and Installation** .

-- Install the service position. Refer to **Description and Operation** .

-- Install the air filter housing. Refer to **Removal and Installation** .

Assemble in reverse order of disassembly.

VALVE STEM SEALS WITH CYLINDER HEAD INSTALLED

Special tools and workshop equipment required

- Spark Plug Removal Tool 3122 B
- Valve Seal Removal Tool 3364
- Valve Stem Seal Driver 3365
- Adapter T40012

- Torque Wrench 5-50 Nm V.A.G 1331
- Valve Cotters Asm/Dis-Asm Device VAS 5161
- Guide Plate for FSI Engine VAS 5161/19B

Valve Stem Seals, Removing

-- Remove the camshafts. Refer to **CAMSHAFTS**.

-- Mark the allocation of the roller rocker lever and the hydraulic adjusting elements so they can be installed again.

-- If necessary, remove the roller rocker levers with the hydraulic adjusting elements and place them on a clean surface.

-- Remove the spark plugs using a 3122 B.

-- Tighten the VAS 5161/19B on the cylinder head as shown using the knurled bolts VAS 5161/12.

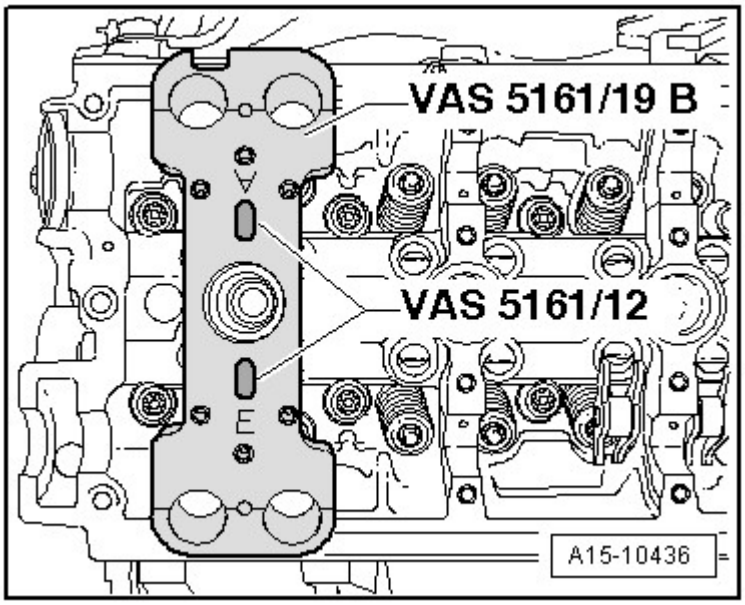

Fig. 237: Identifying FSI Engine VAS 5161/19B Guide Plate Tightened On Cylinder Head Using Knurled Bolts VAS 5161/12
Courtesy of AUDI OF AMERICA, LLC

-- Move piston for respective cylinder to "Bottom Dead Center (BDC) position".

-- Install the T40012 in the spark plug threads.

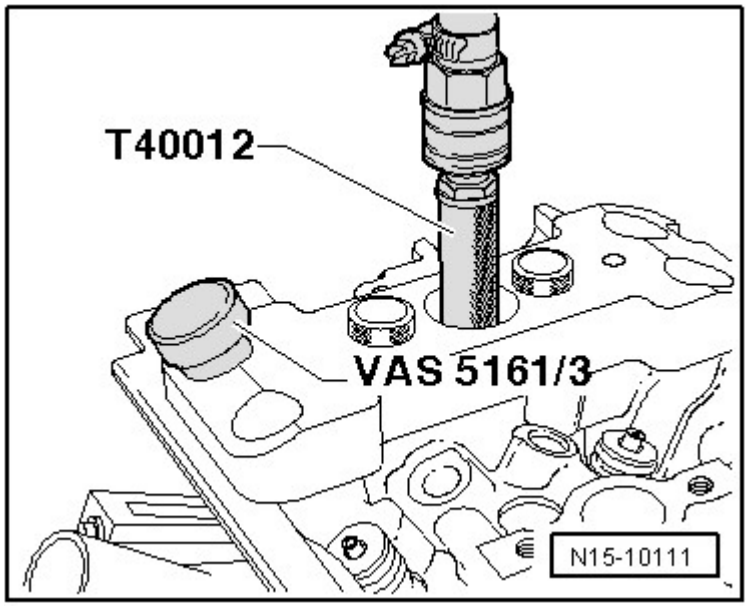

Fig. 238: Identifying Drift VAS 5161/3 And Plastic Mallet To Loosen Stuck Valve Keepers
Courtesy of AUDI OF AMERICA, LLC

-- Connect compressed air with at least 6 bar pressure.

-- Loosen stuck valve retainers using a drift VAS 5161/3 and a plastic hammer.

Intake Side

-- Install the engaging device VAS 5161/6 with the installation fork VAS 5161/5 in the center threads of the VAS 5161/19B.

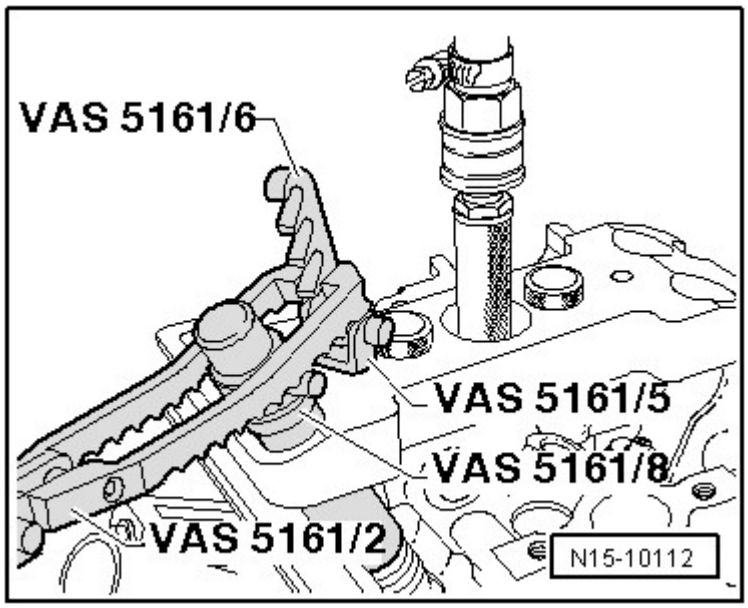

Fig. 239: Identifying Engaging Device VAS 5161/6 With Installation Forks VAS 5161/5 Installed Into Guide Plate VAS 5161/19

Courtesy of AUDI OF AMERICA, LLC

-- Insert the installation cartridge VAS 5161/8 in the VAS 5161/19B.

-- Engage the pressure fork VAS 5161/2 on the engaging device VAS 5161/6.

Exhaust Side

-- Install the engaging device VAS 5161/6 with the installation fork VAS 5161/5 in the outer threads of the VAS 5161/19B.

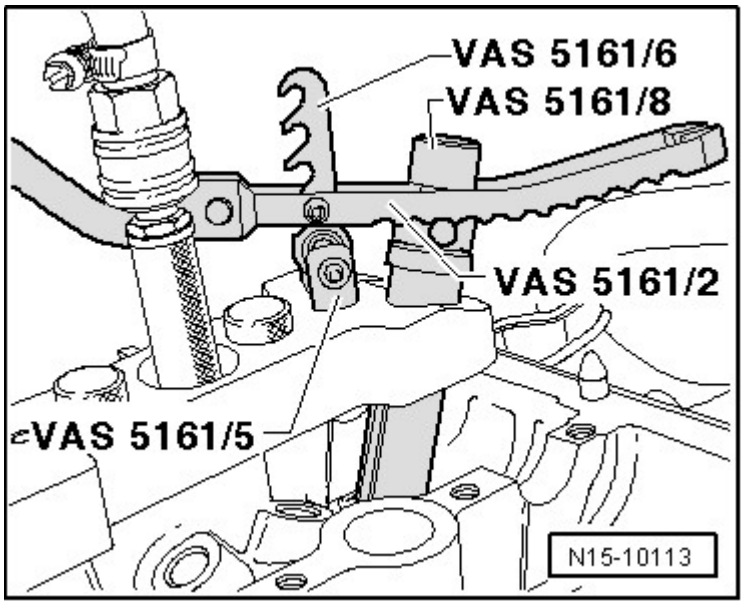

Fig. 240: Identifying Pressure Forks VAS 5161/2 Engaged
Courtesy of AUDI OF AMERICA, LLC

-- Press the installation cartridge VAS 5161/8 down while rotating its knurled bolt to the right until the points engage in the valve retainers.

-- Move the knurled wheel back and forth slightly. This presses the valve retainers apart and captures them in the installation cartridge.

-- Release the pressure fork VAS 5161/2.

-- Remove the installation cartridge VAS 5161/8.

-- Remove the valve stem seals using 3364.

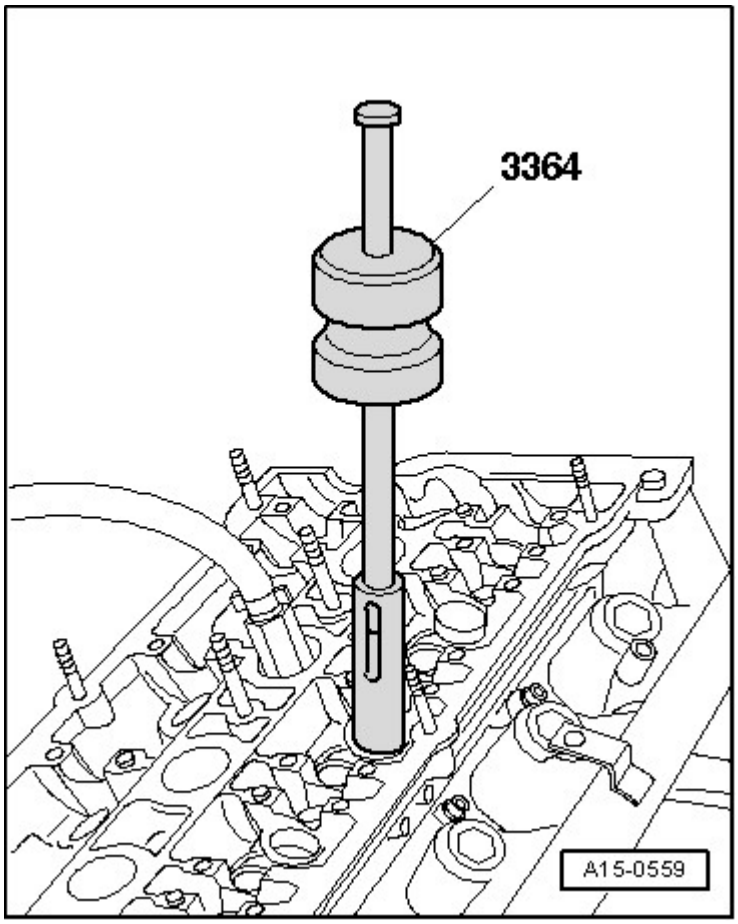

Fig. 241: Identifying Valve Seal Removal Tool 3364
Courtesy of AUDI OF AMERICA, LLC

-- If the 3364 cannot be used because there is not enough space, drive the roll pin -arrow- out using a drift and remove the impact attachment.

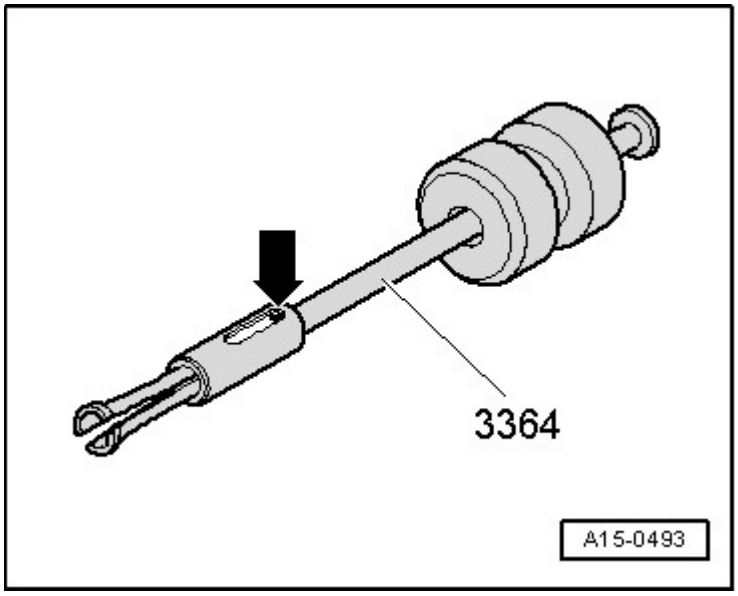

Fig. 242: Driving Out Spring Dowel Sleeve
Courtesy of AUDI OF AMERICA, LLC

-- Position the lower part of the 3364 on the valve stem seal.

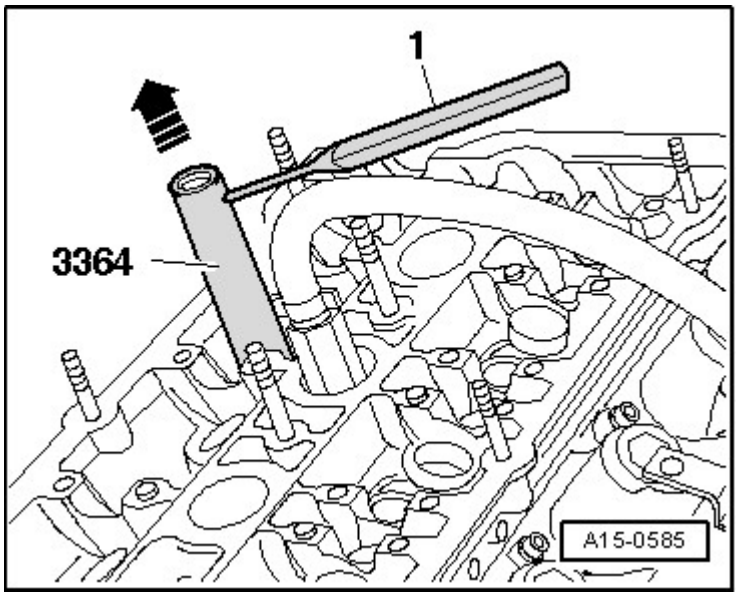

Fig. 243: Identifying Placement Of Lower Part Of Valve Seal Removal Tool 3364 On To Valve Stem Oil Seal
Courtesy of AUDI OF AMERICA, LLC

-- Place the drift -1- in the hole in the lower section of the removal tool.

-- Position the lever on the removal tool and remove the valve stem seal -arrow-.

Valve Stem Seals, Installing

-- Place plastic sleeve -A- on valve stem to prevent damage to new valve stem seals -B-.

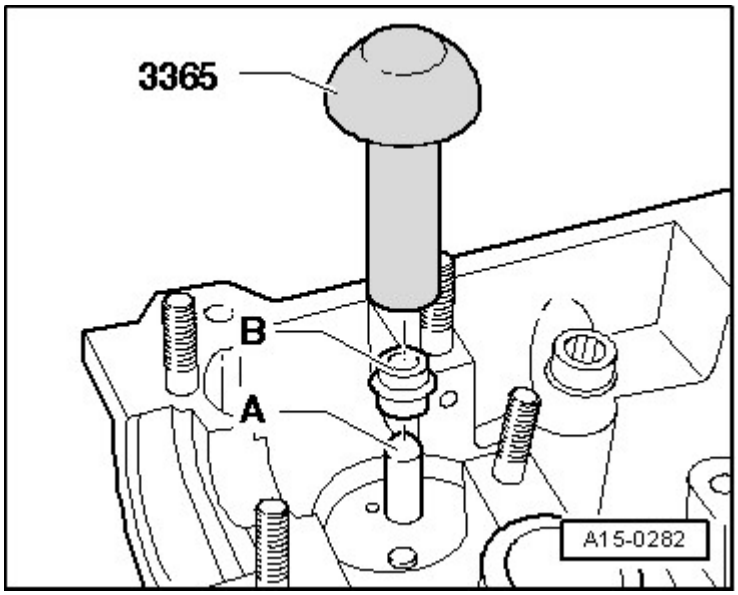

Fig. 244: Identifying Plastic Sleeve, New Valve Stem Oil Seals & Valve Stem Seal Driver 3365
Courtesy of AUDI OF AMERICA, LLC

-- Oil the sealing lip of valve stem seal -B-, insert into 3365 and carefully slide onto valve guide.

-- Remove the plastic sleeve -A-.

-- Insert the valve spring and valve spring plate.

-- Connect the VAS 5161 as illustrated.

Intake Side

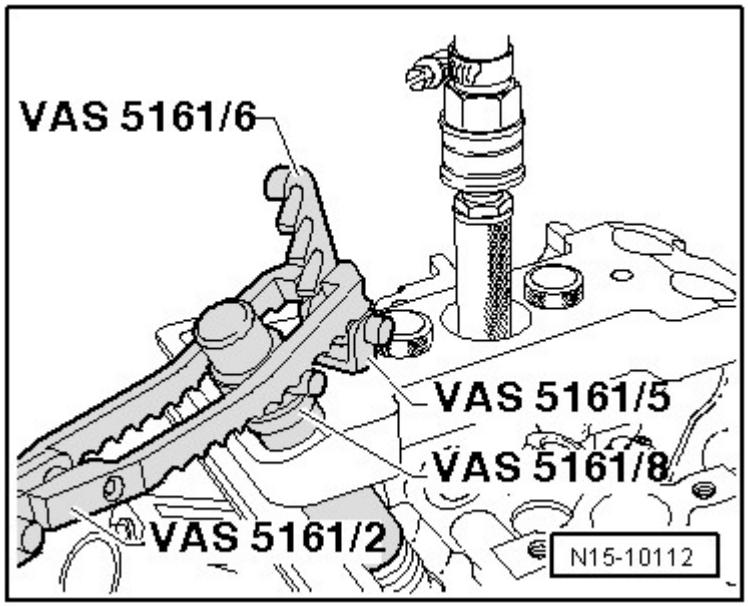

Fig. 245: Identifying Engaging Device VAS 5161/6 With Installation Forks VAS 5161/5 Installed Into

Guide Plate VAS 5161/19
Courtesy of AUDI OF AMERICA, LLC

Exhaust Side

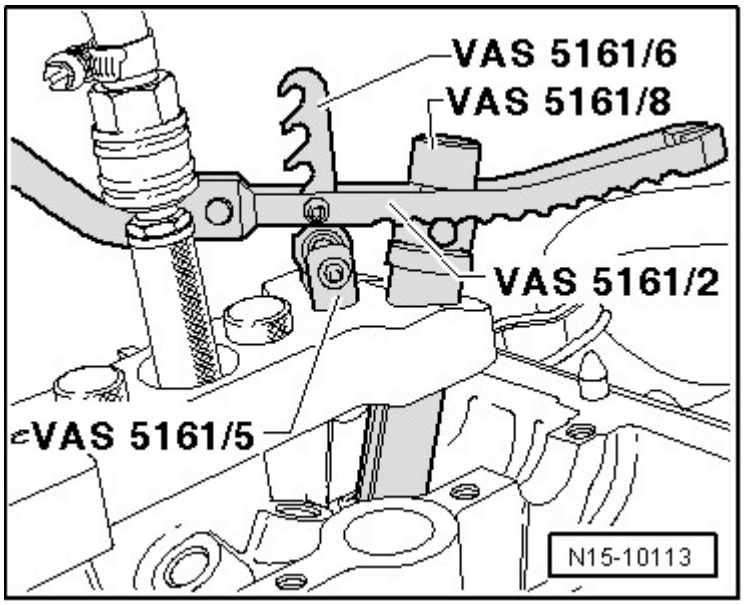

Fig. 246: Identifying Pressure Forks VAS 5161/2 Engaged
Courtesy of AUDI OF AMERICA, LLC

NOTE: **If the valve retainers were removed from the installation cartridge, they must be inserted into valve insertion device VAS 5161/18 next.**

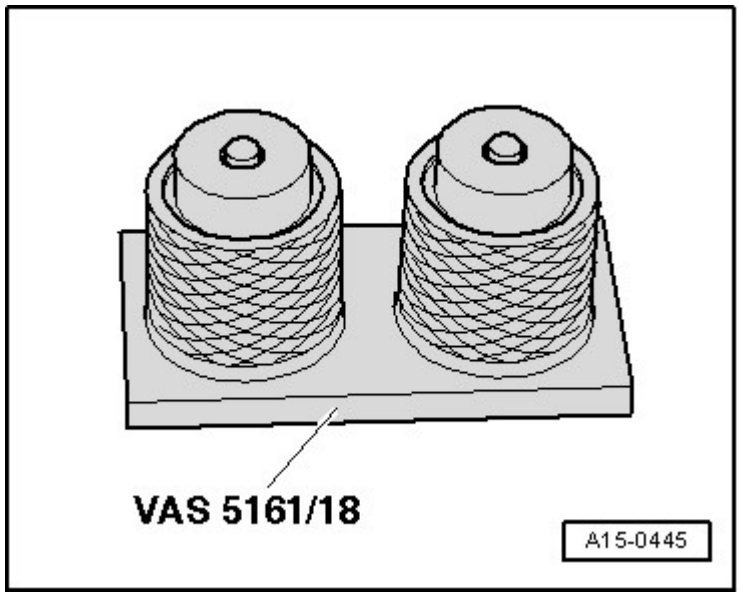

Fig. 247: Identifying Installation Cartridge VAS 5161/8
Courtesy of AUDI OF AMERICA, LLC

Press the installation cartridge VAS 5161/8 onto the insertion device from above and capture the valve retainers.

-- Press the VAS 5161/8 down with the pressure fork VAS 5161/2 and rotate the cartridge knurled bolt back and forth while pulling up.

-- Release the VAS 5161/2 with the knurled bolt pulled.

-- Remove the VAS 5161.

Further assembly is performed in the reverse order of removal, thereby observing the following:

-- Install the camshafts, refer to **CAMSHAFTS**.

VALVE STEM SEALS WITH CYLINDER HEAD REMOVED

Special tools and workshop equipment required

- Valve Seal Removal Tool 3364
- Valve Stem Seal Driver 3365
- Valve Cotters Asm/Dis-Asm Device VAS 5161
- Guide Plate for FSI Engine VAS 5161/19B
- Engine and Transmission Holder VAS 6095
- Cylinder Head Tensioning Device VAS 6419

Procedure

-- Remove the camshafts. Refer to **CAMSHAFTS**.

-- Mark the allocation of the roller rocker lever and the hydraulic adjusting elements so they can be installed again.

-- If necessary, remove the roller rocker levers with the hydraulic adjusting elements and place them on a clean surface.

-- Mount the VAS 6419 into the VAS 6095.

-- Tension the cylinder head on the cylinder head tensioning device, as illustrated.

-- Connect the cylinder head tensioning device to the compressed air.

-- Slide the air cushion with the lever -arrow- under the combustion chamber onto the valve stem seal that will be removed.

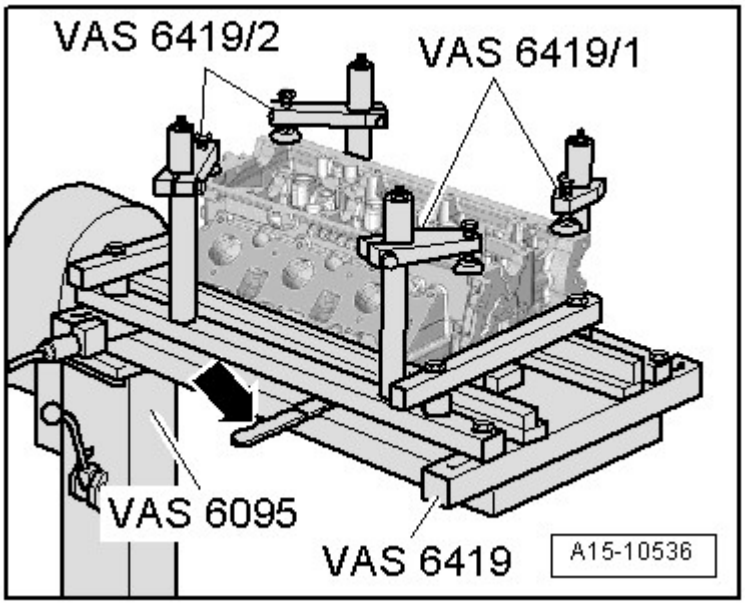

Fig. 248: Sliding Air Cushion With Lever Under Combustion Chamber
Courtesy of AUDI OF AMERICA, LLC

-- Let enough compressed air flow into the air cushion until it contacts the valve plate.

-- Tighten the VAS 5161/19B on the cylinder head as shown using the knurled bolts VAS 5161/12.

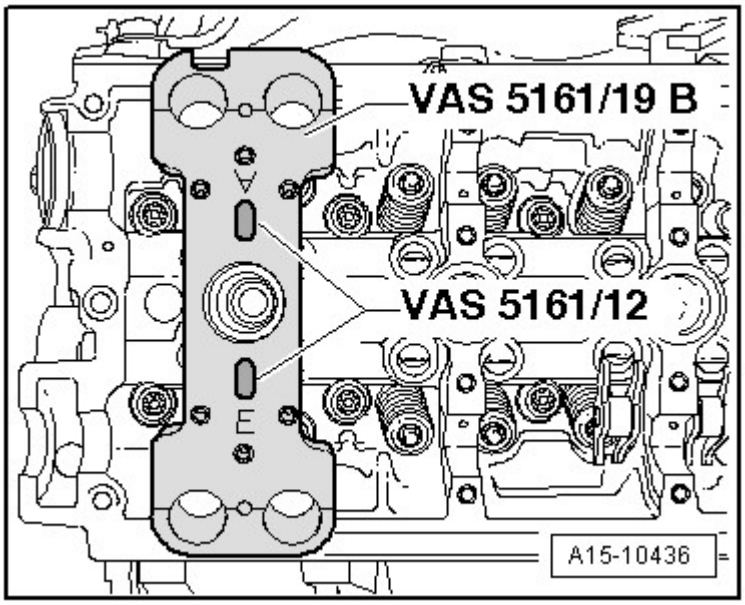

Fig. 249: Identifying FSI Engine VAS 5161/19B Guide Plate Tightened On Cylinder Head Using Knurled Bolts VAS 5161/12
Courtesy of AUDI OF AMERICA, LLC

-- Insert the drift VAS 5161/3 in the guide plate and loosen the stuck valve retainers with a plastic mallet.

Intake Side

-- Install the engaging device VAS 5161/6 with the installation fork VAS 5161/5 in the center threads of the VAS 5161/19B.

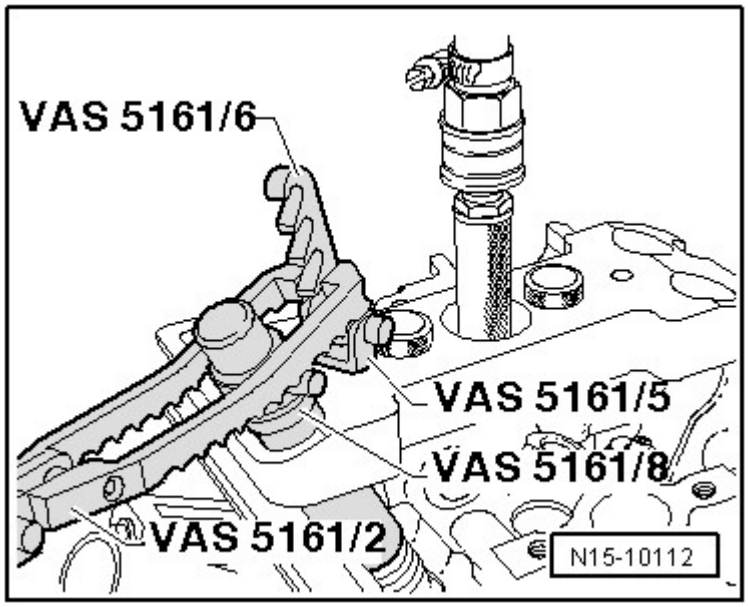

Fig. 250: Identifying Engaging Device VAS 5161/6 With Installation Forks VAS 5161/5 Installed Into Guide Plate VAS 5161/19
Courtesy of AUDI OF AMERICA, LLC

-- Insert the installation cartridge VAS 5161/8 in the guide plate for FSI engine VAS 5161/19B.

-- Engage the pressure fork VAS 5161/2 on the engaging device VAS 5161/6.

Exhaust Side

-- Install the engaging device VAS 5161/6 with the installation fork VAS 5161/5 in the outer threads of the VAS 5161/19B.

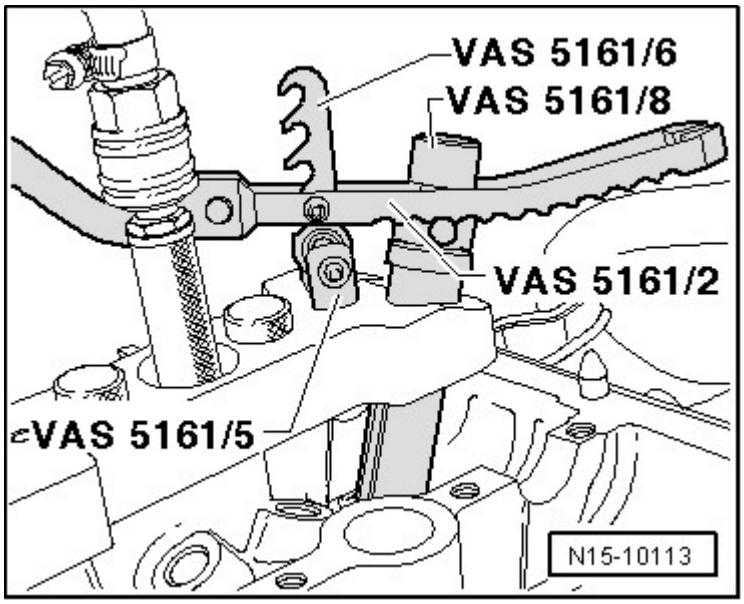

Fig. 251: Identifying Pressure Forks VAS 5161/2 Engaged
Courtesy of AUDI OF AMERICA, LLC

-- Press the installation cartridge VAS 5161/8 down while rotating its knurled bolt to the right until the points engage in the valve retainers.

-- Move the knurled wheel back and forth slightly. This presses the valve retainers apart and captures them in the installation cartridge.

-- Release the pressure fork VAS 5161/2.

-- Remove the installation cartridge VAS 5161/8.

-- Remove valve stem seals using the 3364.

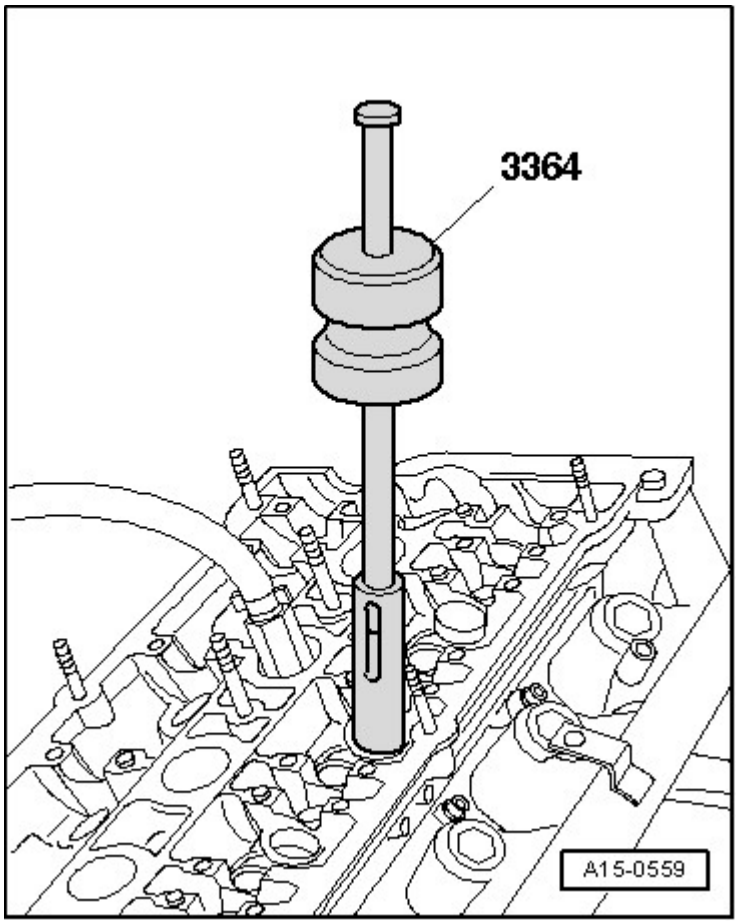

Fig. 252: Identifying Valve Seal Removal Tool 3364
Courtesy of AUDI OF AMERICA, LLC

Valve Stem Seals, Installing

CAUTION: Risk of damage when installing valve stem seals.

- **Place plastic sleeve -A- that is attached to valve stem seals -B- on valve stem.**

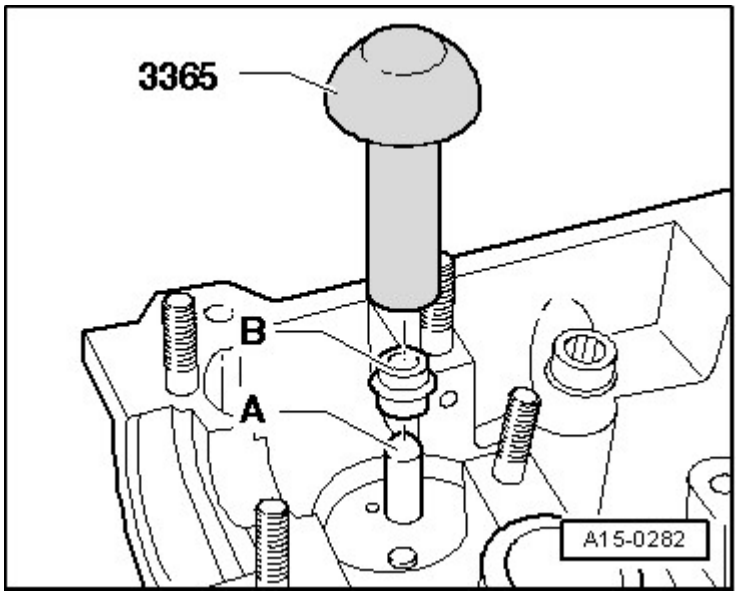

Fig. 253: Identifying Plastic Sleeve, New Valve Stem Oil Seals & Valve Stem Seal Driver 3365
Courtesy of AUDI OF AMERICA, LLC

-- Lightly oil valve stem seal.

-- Slide valve shaft seal onto plastic sleeve.

-- Carefully press valve stem seal onto valve guide with 3365.

-- Remove plastic sleeve.

-- Insert the valve spring and valve spring plate.

-- Install the VAS 5161 as illustrated.

Intake Side

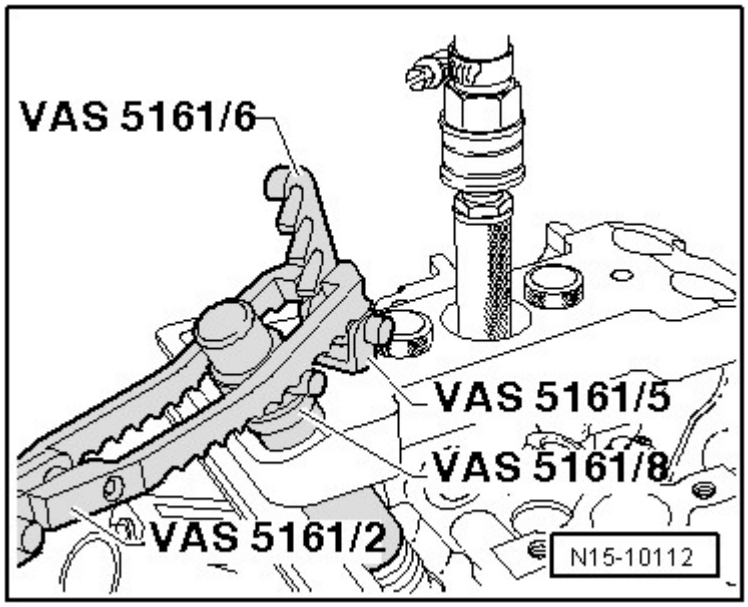

Fig. 254: Identifying Engaging Device VAS 5161/6 With Installation Forks VAS 5161/5 Installed Into Guide Plate VAS 5161/19
Courtesy of AUDI OF AMERICA, LLC

Exhaust Side

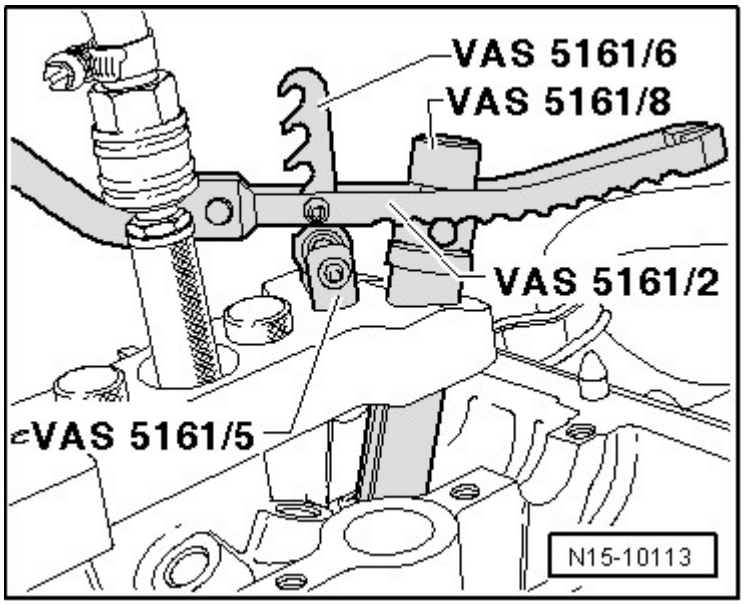

Fig. 255: Identifying Pressure Forks VAS 5161/2 Engaged
Courtesy of AUDI OF AMERICA, LLC

NOTE: **If the valve retainers were removed from the installation cartridge, they must be inserted into valve insertion device VAS 5161/18 next.**

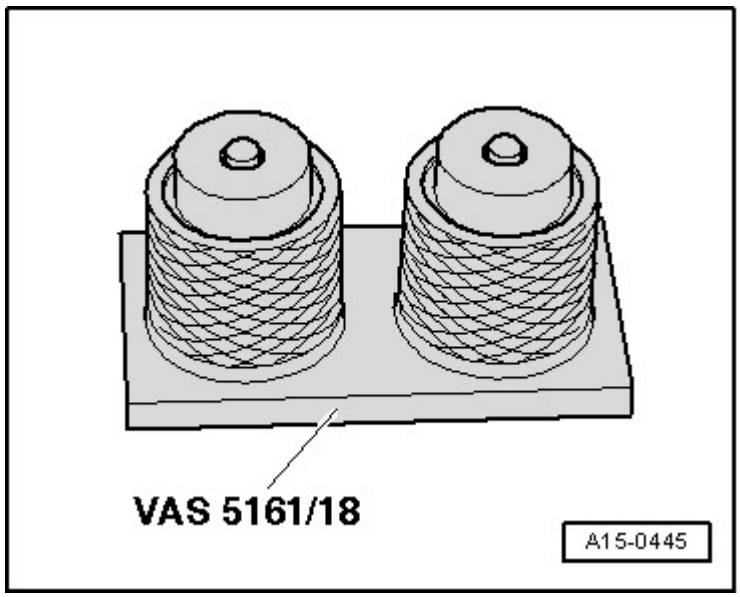

Fig. 256: Identifying Installation Cartridge VAS 5161/8
Courtesy of AUDI OF AMERICA, LLC

Press the installation cartridge VAS 5161/8 onto the insertion device from above and capture the valve retainers.

-- Press the VAS 5161/8 down with the pressure fork VAS 5161/2 and rotate the cartridge knurled bolt back and forth while pulling up.

-- Release the VAS 5161/2 with the knurled bolt pulled.

-- Remove the VAS 5161.

Assemble in reverse order of disassembly. When doing this note the following:

-- Install the camshafts, refer to **CAMSHAFTS**.

SPECIAL TOOLS

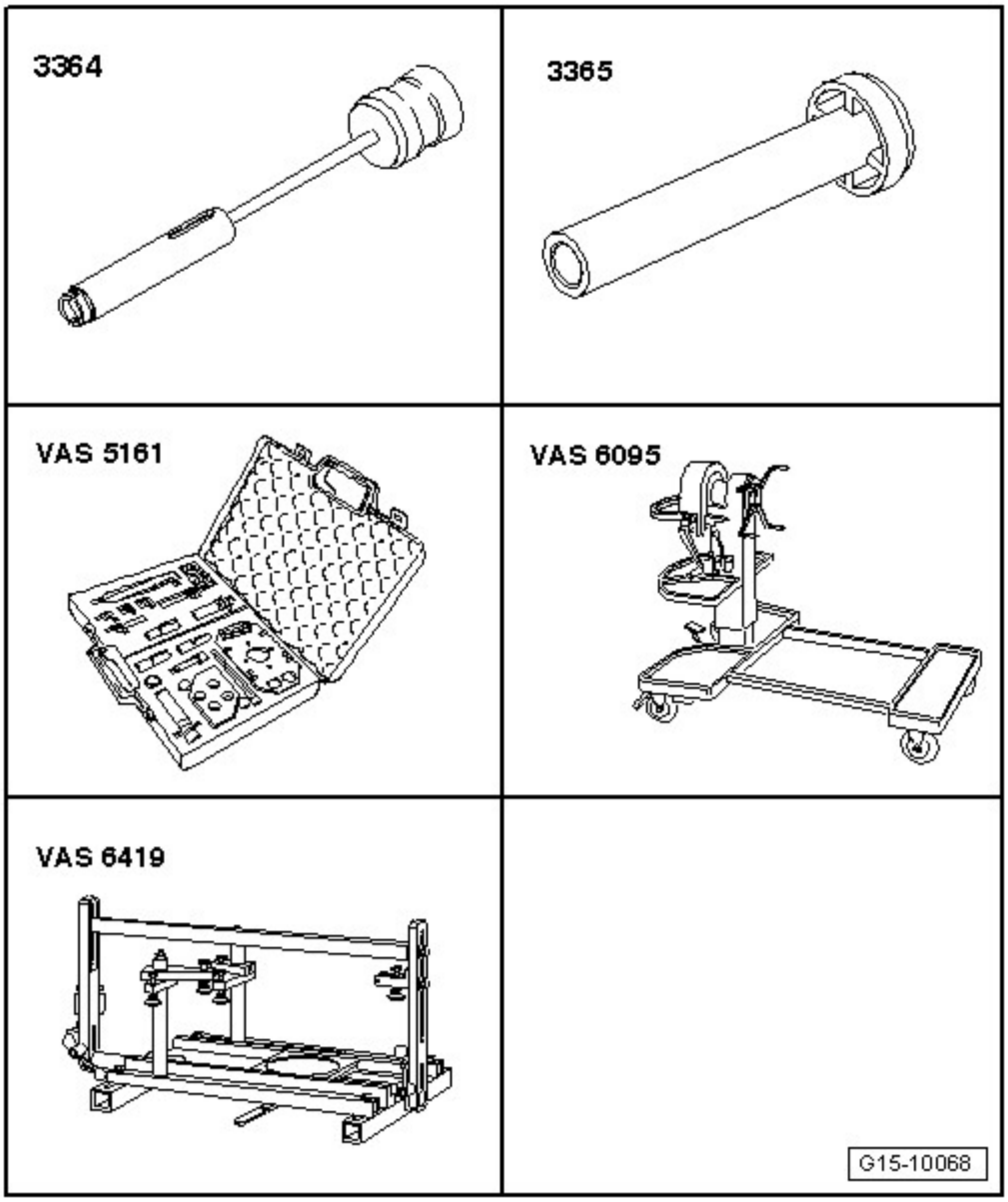

Fig. 257: Identifying Special Tools -- Valve Stem Seals With Cylinder Head Removed
Courtesy of AUDI OF AMERICA, LLC

Special tools and workshop equipment required

- Valve Seal Removal Tool 3364
- Valve Stem Seal Driver 3365
- Valve Cotters Asm/Dis-Asm Device VAS 5161
- Guide Plate for FSI Engine VAS 5161/19B
- Engine and Transmission Holder VAS 6095
- Cylinder Head Tensioning Device VAS 6419

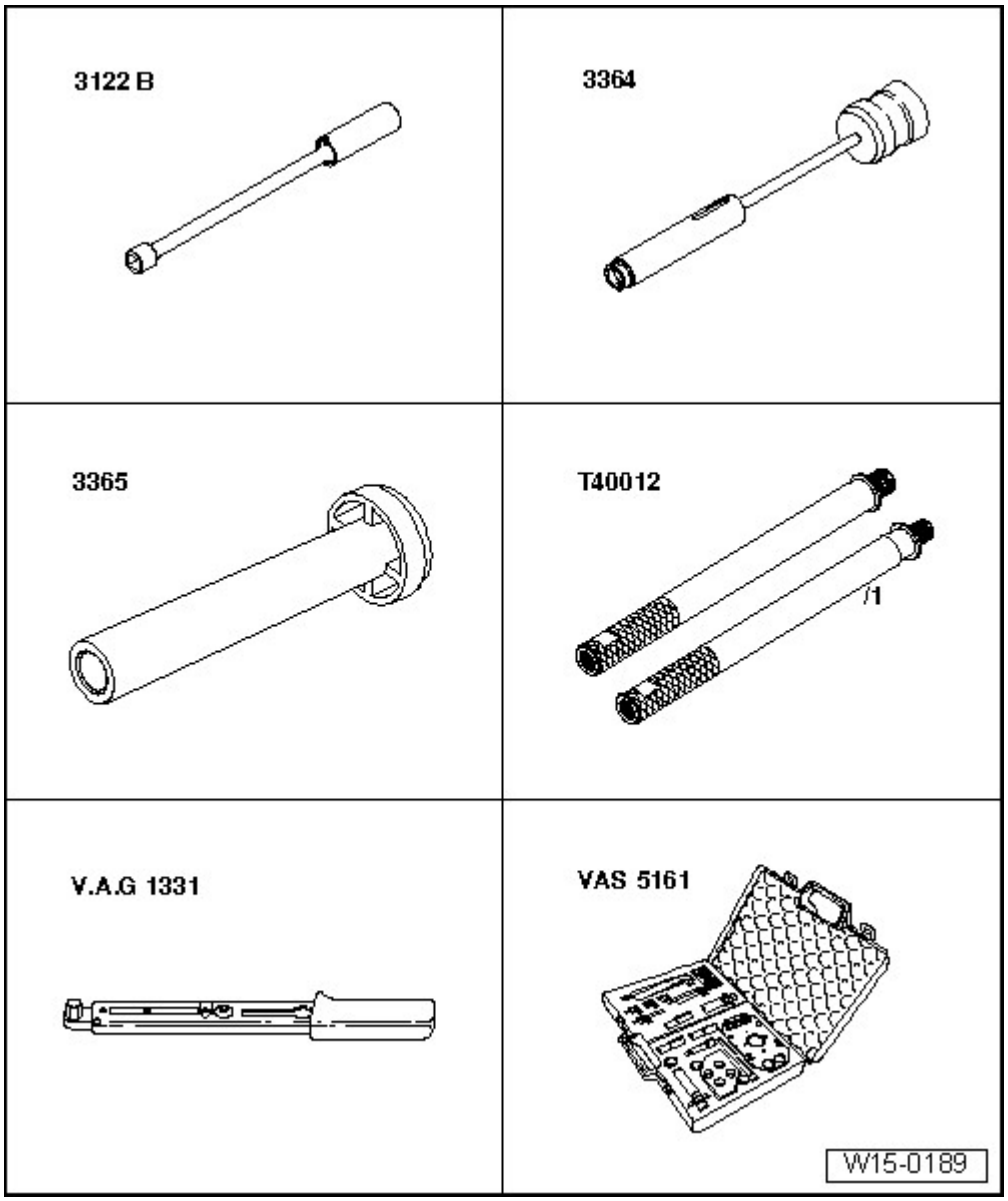

Fig. 258: Identifying Special Tools -- Valve Stem Seals, Replacing
Courtesy of AUDI OF AMERICA, LLC

Special tools and workshop equipment required

- Spark Plug Removal Tool 3122 B
- Valve Seal Removal Tool 3364
- Valve Stem Seal Driver 3365
- Adapter T40012
- Torque Wrench 5-50 Nm V.A.G 1331
- Valve Cotters Asm/Dis-Asm Device VAS 5161
- Guide Plate for FSI Engine VAS 5161/19B

Special tools and workshop equipment required

- Polydrive Bit and Drive Socket T10070

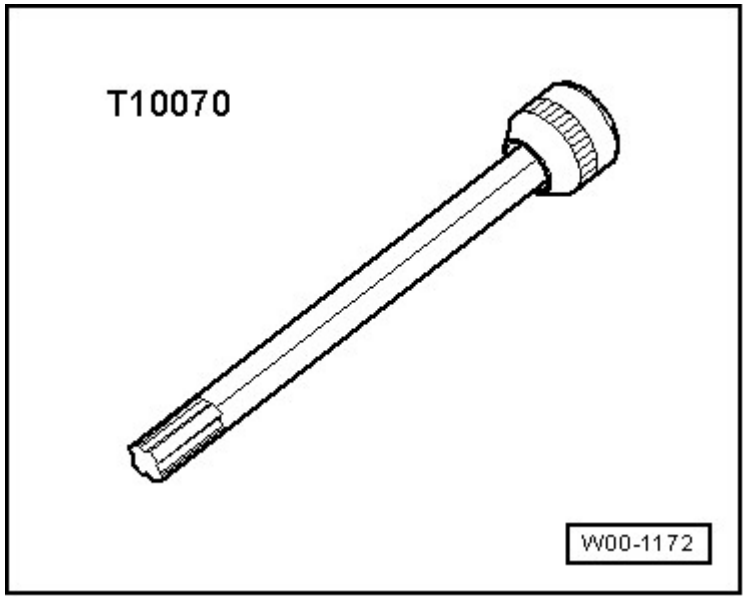

Fig. 259: Identifying Socket T10070
Courtesy of AUDI OF AMERICA, LLC

- Ignition Coil Puller T40039

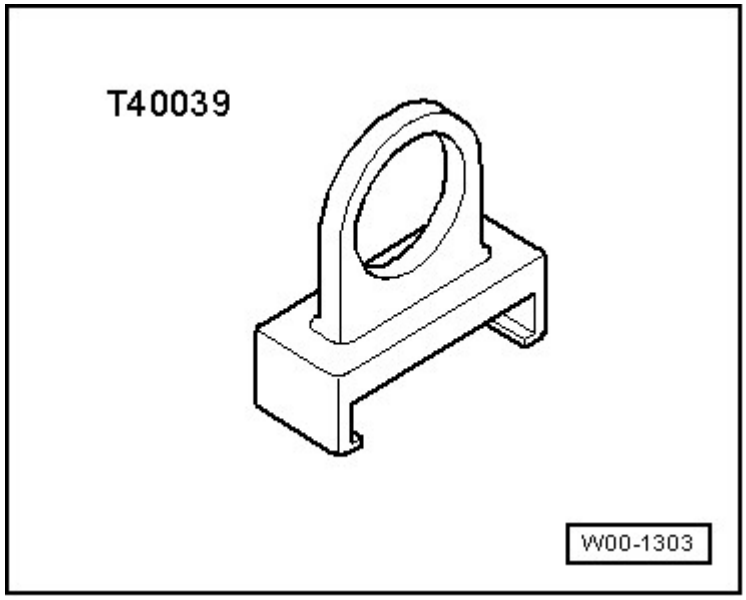

Fig. 260: Identifying Extractor T40039
Courtesy of AUDI OF AMERICA, LLC

- Compression Tester V.A.G 1763

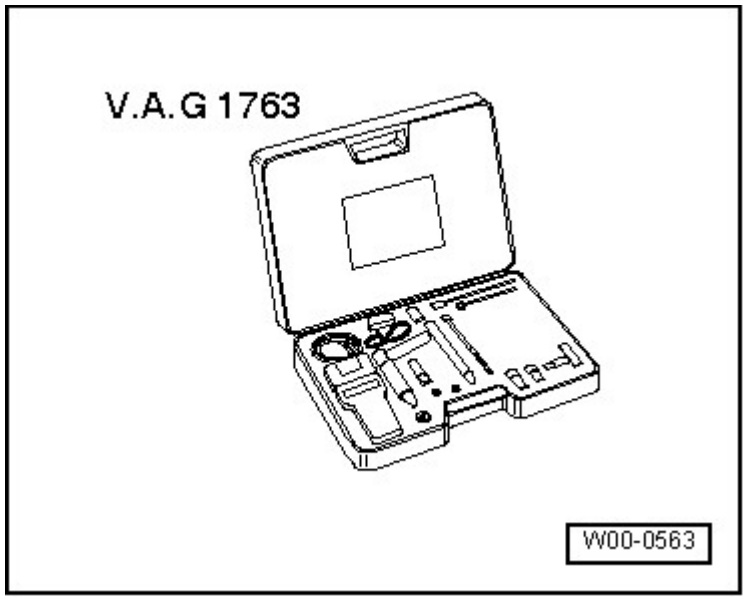

Fig. 261: Identifying Compression Tester V.A.G 1763
Courtesy of AUDI OF AMERICA, LLC

- Dial Gauge Holder VW 387

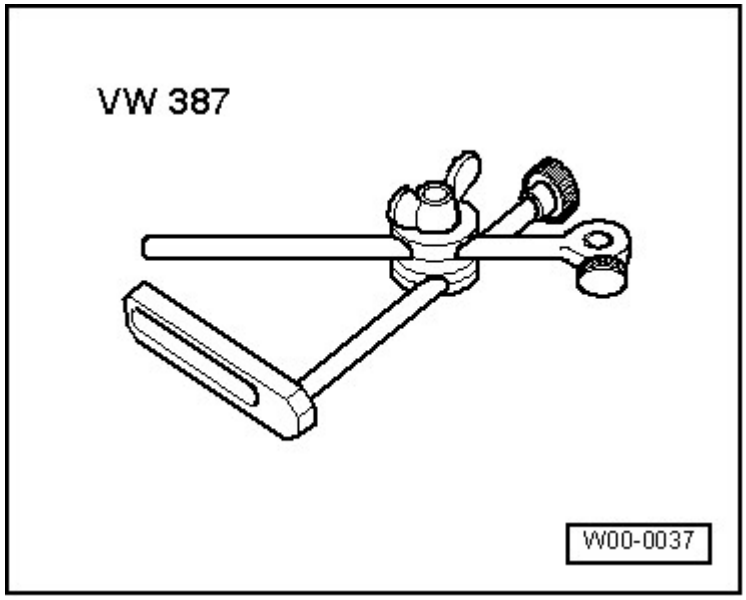

Fig. 262: Identifying Dial Gauge Holder VW 387
Courtesy of AUDI OF AMERICA, LLC

- Dial Gauge 0-10 mm VAS 6079

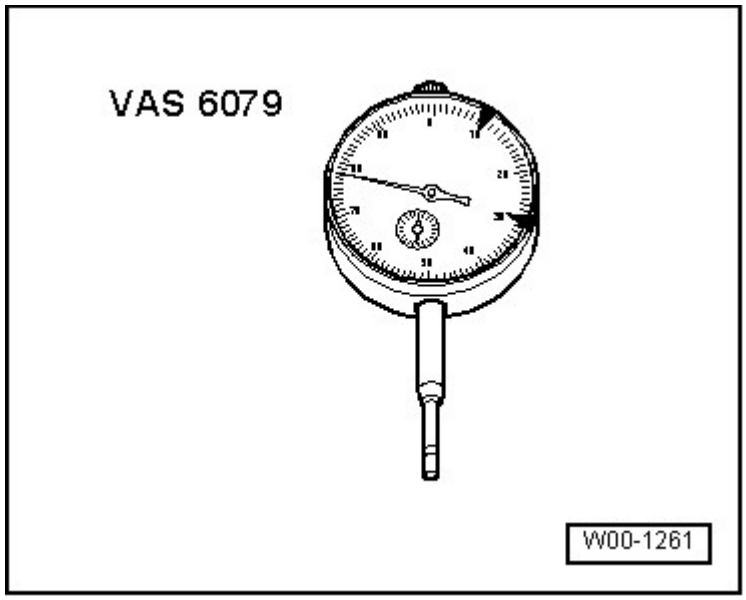

Fig. 263: Identifying Dial Gauge VAS 6079
Courtesy of AUDI OF AMERICA, LLC

- Locking Tool T40098

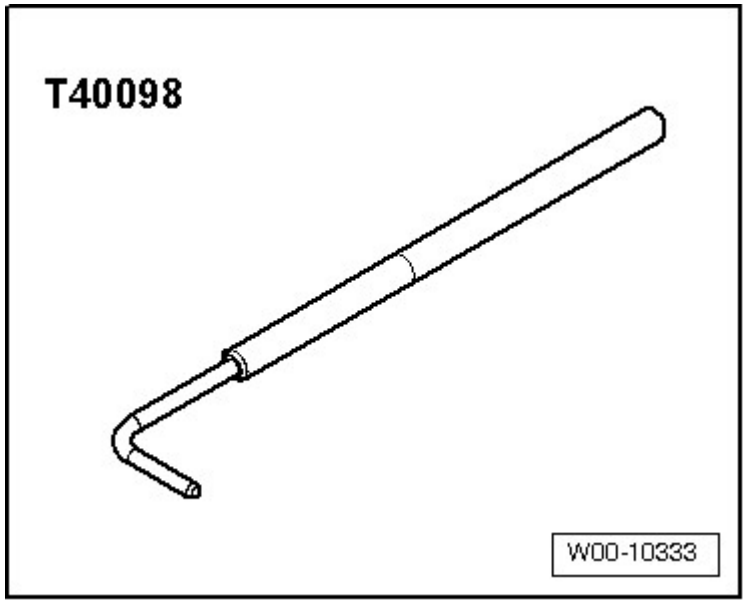

Fig. 264: Identifying Locking Tool T40098
Courtesy of AUDI OF AMERICA, LLC

- Counter Hold Tool T10355

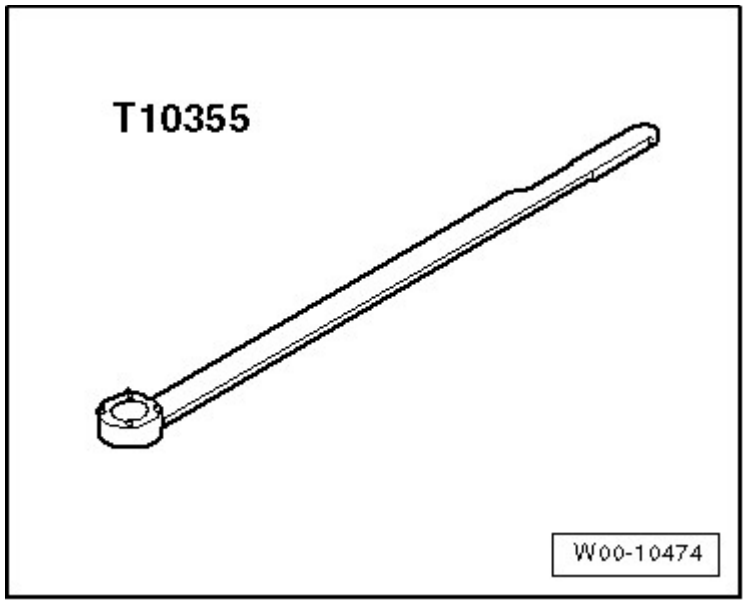

Fig. 265: Identifying Counter-Holder Tool T10355
Courtesy of AUDI OF AMERICA, LLC

- Thrust Piece T10368

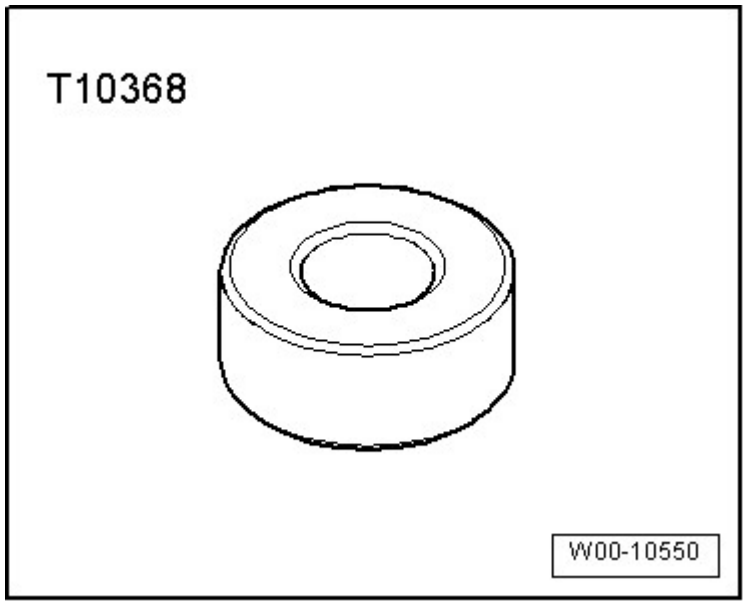

Fig. 266: Identifying Thrust Piece T10368
Courtesy of AUDI OF AMERICA, LLC

- Thrust Piece T10354

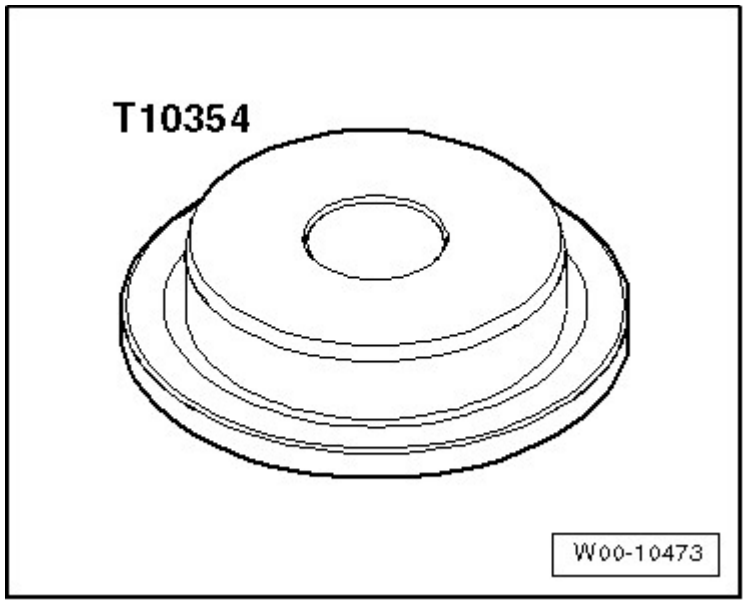

Fig. 267: Identifying Thrust Piece T10354
Courtesy of AUDI OF AMERICA, LLC

- Pulling Hook T20143

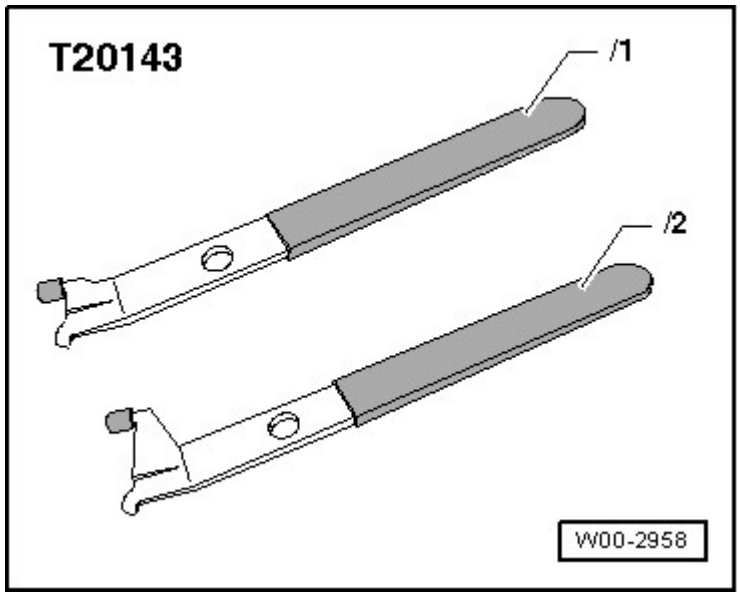

Fig. 268: Identifying Extractor Hook T20143
Courtesy of AUDI OF AMERICA, LLC

- Assembly Tool T10352 and Assembly Tool T10352/1

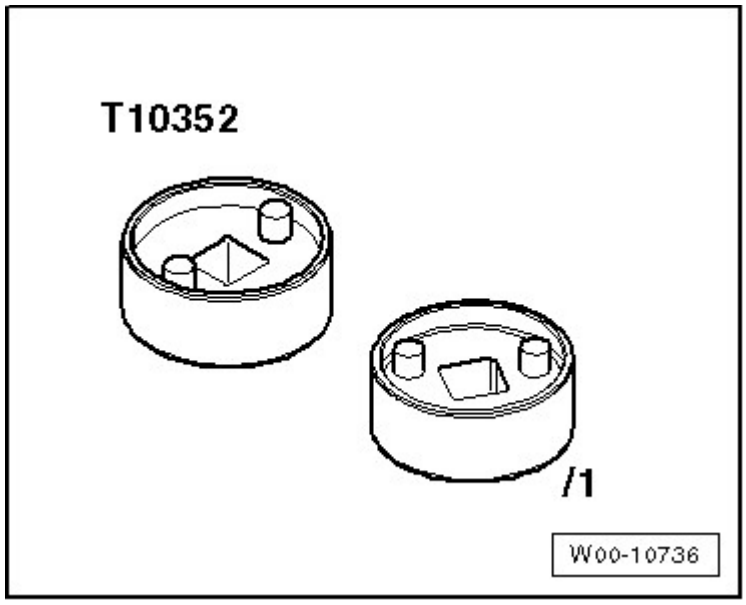

Fig. 269: Identifying Assembly Tool T10352 And Assembly Tool T10352/1
Courtesy of AUDI OF AMERICA, LLC

- Locking Pin T40011

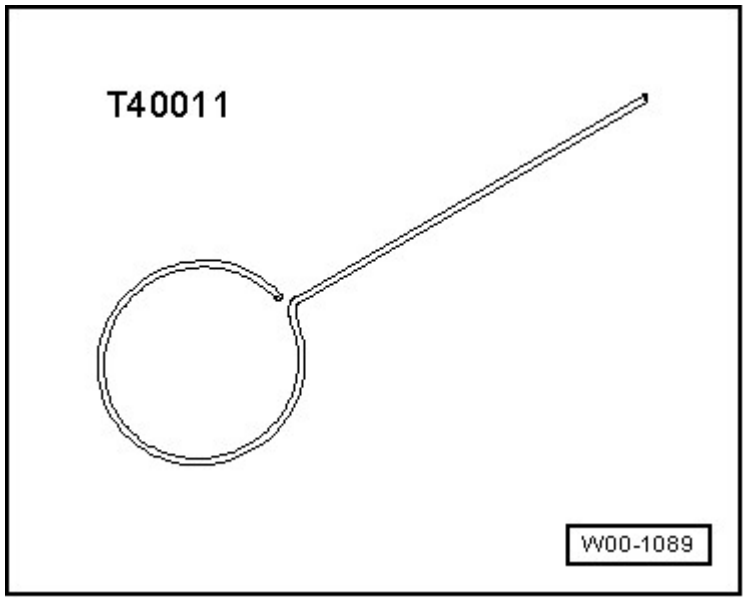

Fig. 270: Identifying Locking Pin T40011
Courtesy of AUDI OF AMERICA, LLC

- Puller T10394

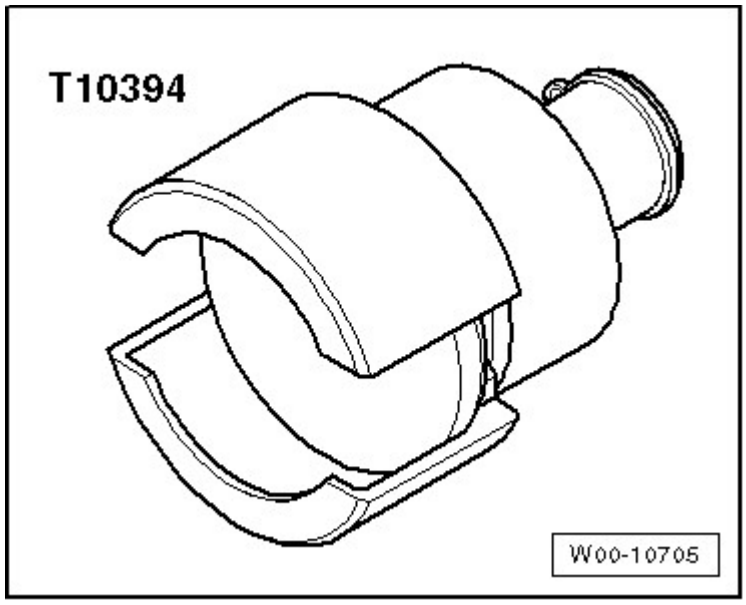

Fig. 271: Identifying Puller T10055
Courtesy of AUDI OF AMERICA, LLC

- Puller T10055

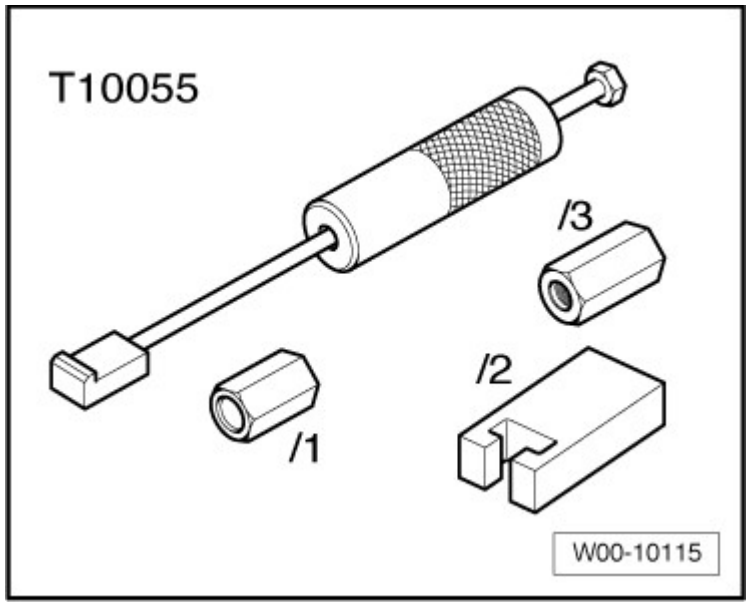

Fig. 272: Identifying Puller T10055 With Adapter T10055/3
Courtesy of AUDI OF AMERICA, LLC

- Drift T40196

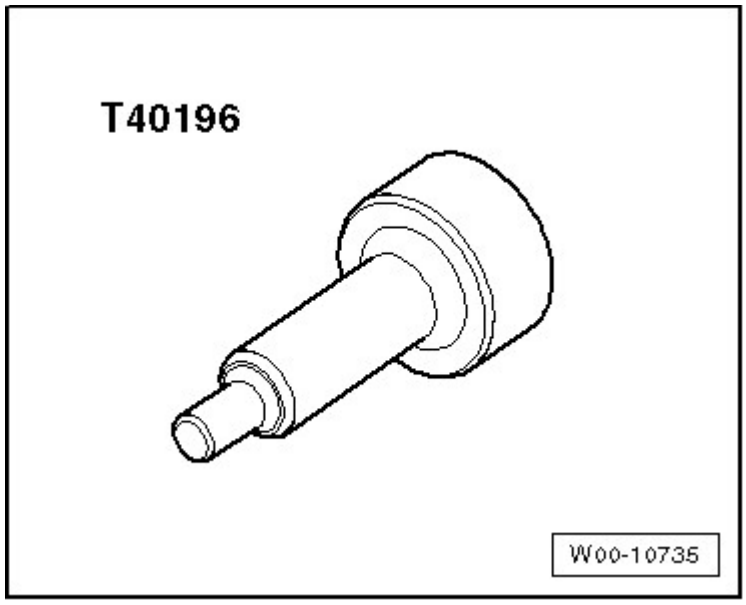

Fig. 273: Identifying Drift T40196
Courtesy of AUDI OF AMERICA, LLC

- Engine Bung Set VAS 6122

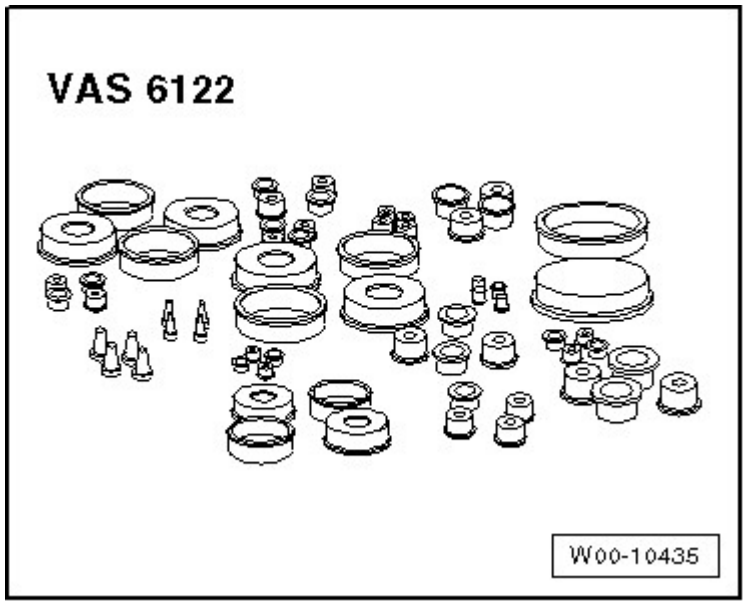

Fig. 274: Identifying Engine Bung Set Plugs VAS 6122
Courtesy of AUDI OF AMERICA, LLC

- Thrust Piece T10174

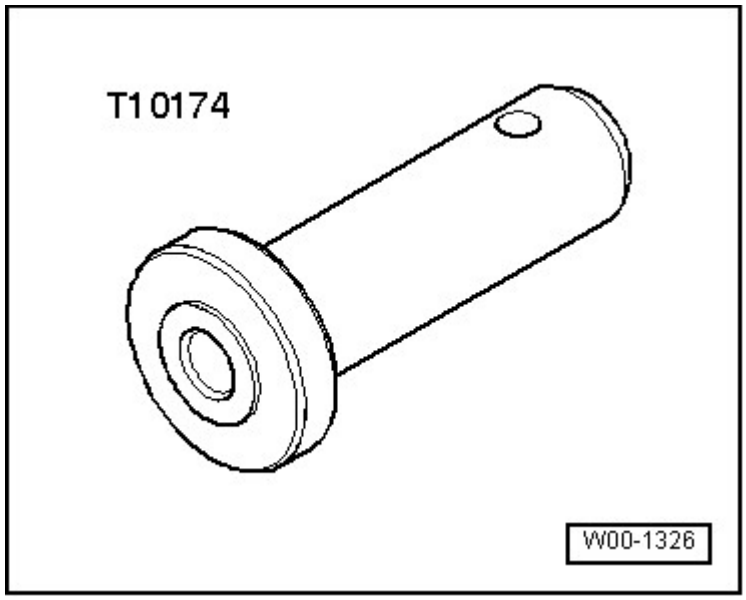

Fig. 275: Identifying Thrust Piece T10174
Courtesy of AUDI OF AMERICA, LLC

- Spacers T40191

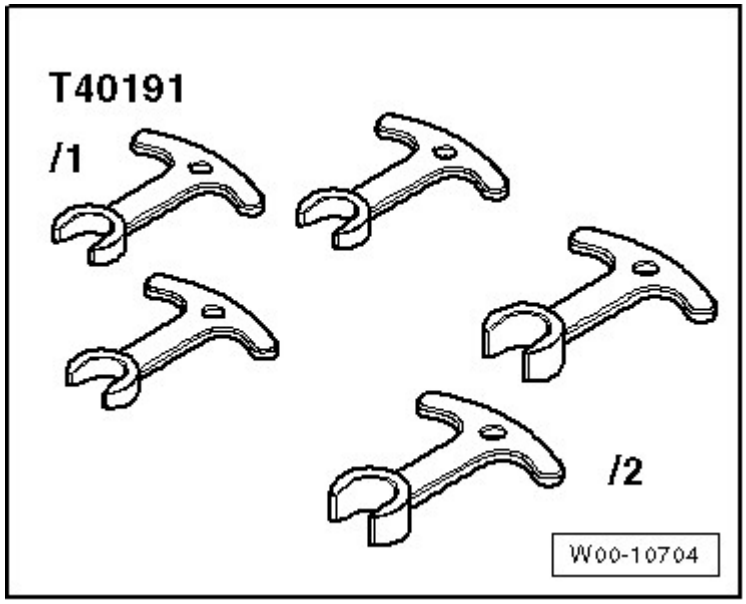

Fig. 276: Identifying Spacers T40191
Courtesy of AUDI OF AMERICA, LLC

- Not illustrated:
- Polydrive Bit and Drive Socket T10070
- Pry Lever T40243
- Camshaft Locator T40271
- Pulling Hook T40274

ENGINE

2.0 Liter - Engine Assembly - Engine Code(s): CAEB (Sedan)

10 ENGINE ASSEMBLY

GENERAL INFORMATION

ENGINE, SECURING TO ENGINE STAND

Special tools and workshop equipment required

- Engine Sling 2024 A
- Shop Crane VAS 6100
- Engine and Transmission Holder VAS 6095
- Counter Hold Tool 10 - 201

Procedure

-- Insert the 10 - 201 to loosen the bolts.

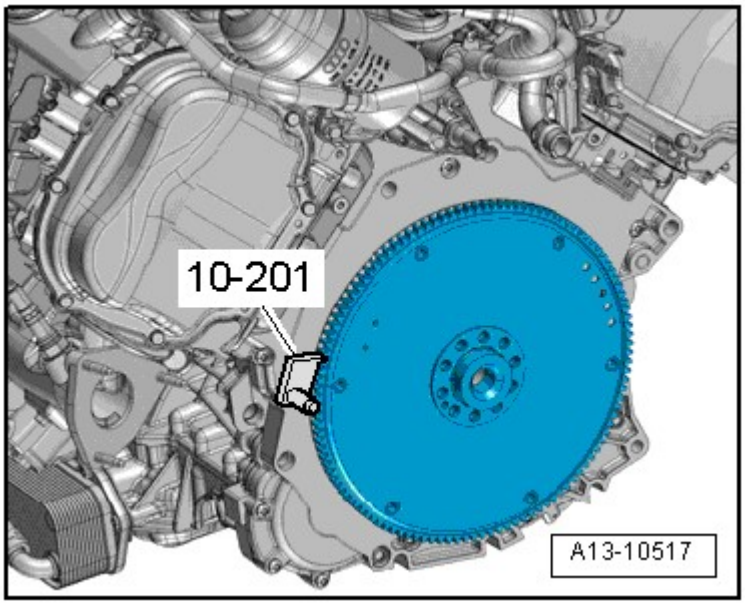

Fig. 1: Identifying Drive Plate Overview
Courtesy of AUDI OF AMERICA, LLC

CAUTION: The outer surface of the bearing flange at the drive plate could be damaged.

- **Use a multipoint socket wrench with a shaft at least 40 mm long to loosen and tighten the drive plate bolts.**

-- Remove the bolts and remove the drive plate.

WARNING: Loose engine support bridge components could cause an accident.

- **Secure the mounting hooks and pins on the engine support bridge using securing pins -arrows-.**

-- Hook the 2024 A to engine and to the VAS 6100.

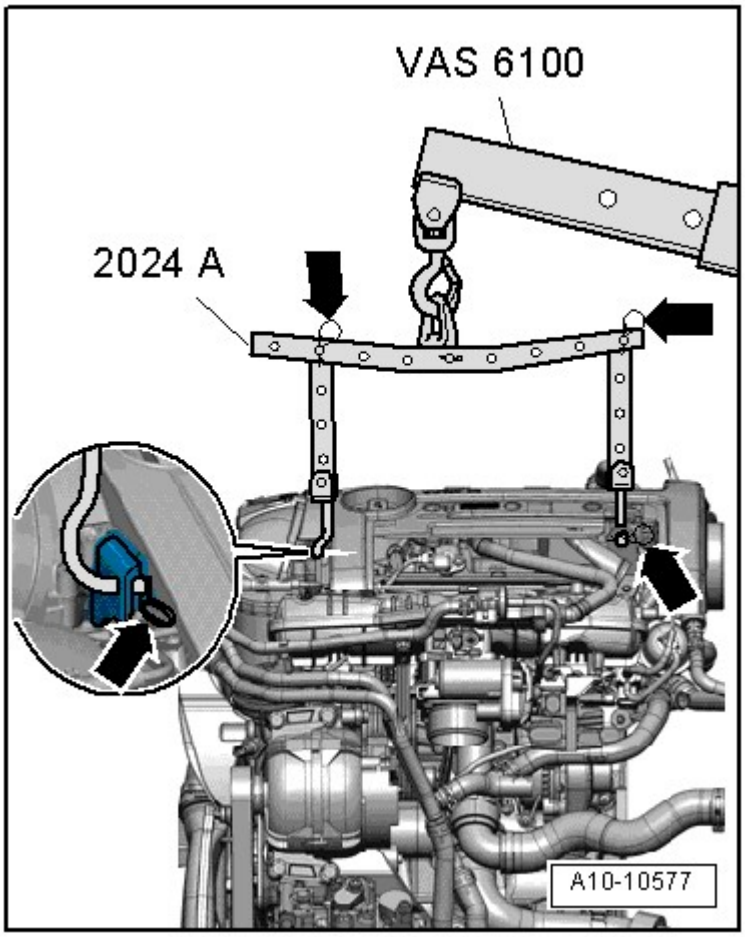

Fig. 2: Identifying Engine Lifted
Courtesy of AUDI OF AMERICA, LLC

NOTE: To be aligned to the center of gravity of the engine assembly, the hole rails of the lifting hook must be inserted as shown in the illustration.

-- Secure the engine on the VAS 6095 during assembly work.

DESCRIPTION AND OPERATION

ENGINE, SUPPORT WITH ENGINE SUPPORT BRIDGE

Special tools and workshop equipment required

- Engine Support Bridge 10 - 222 A

Supporting

-- Remove the engine cover -arrows-.

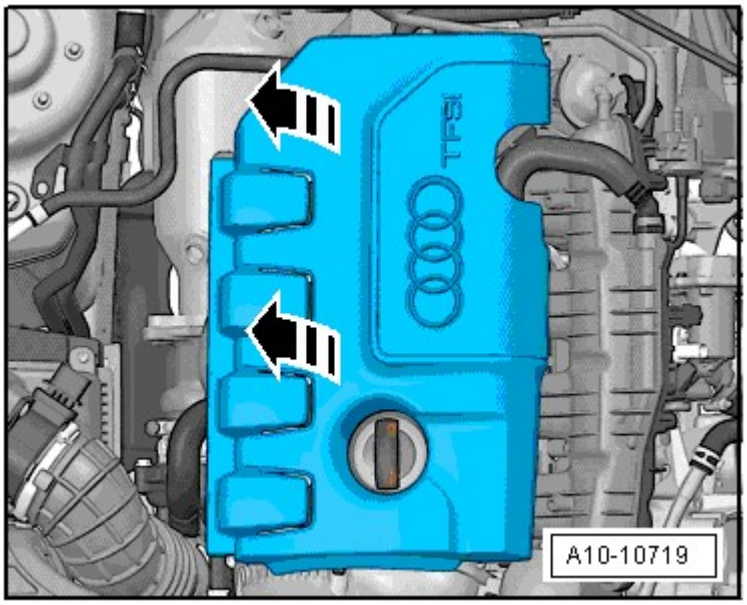

Fig. 3: Identifying Engine Cover
Courtesy of AUDI OF AMERICA, LLC

-- Install the 10 - 222 A with adapters 10 - 222 A /3 on the left and right strut towers, as shown in the illustration.

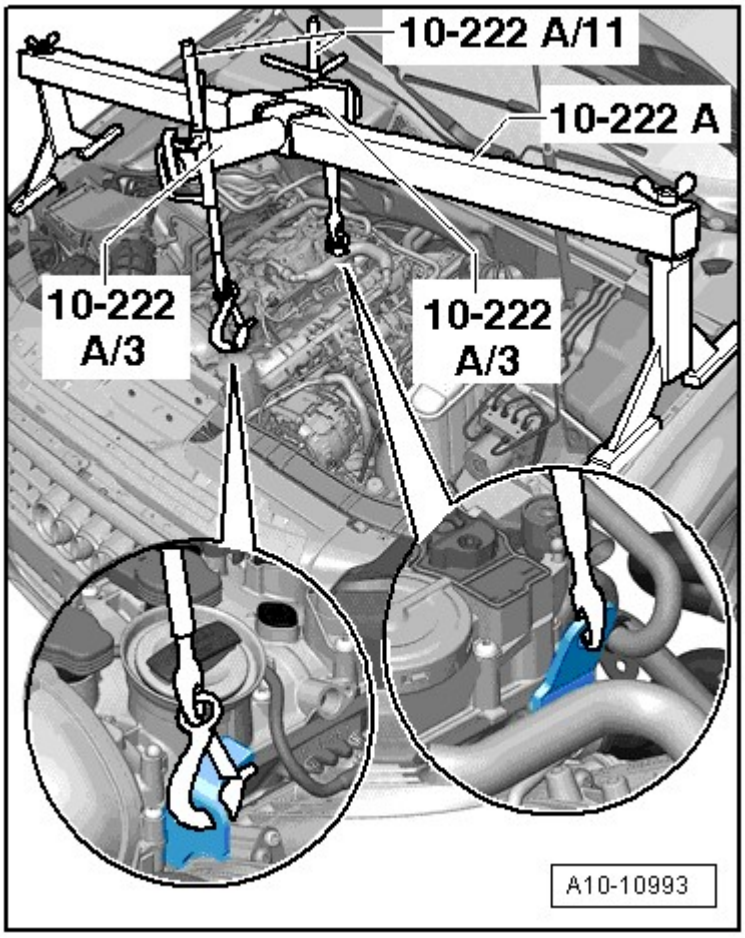

Fig. 4: Mounting Special Tools Onto Engine
Courtesy of AUDI OF AMERICA, LLC

-- Engage the spindles 10 - 222 A /11 to the engine lifting eyes.

-- Lightly pretension engine with spindles.

SUBFRAME MOUNT OVERVIEW

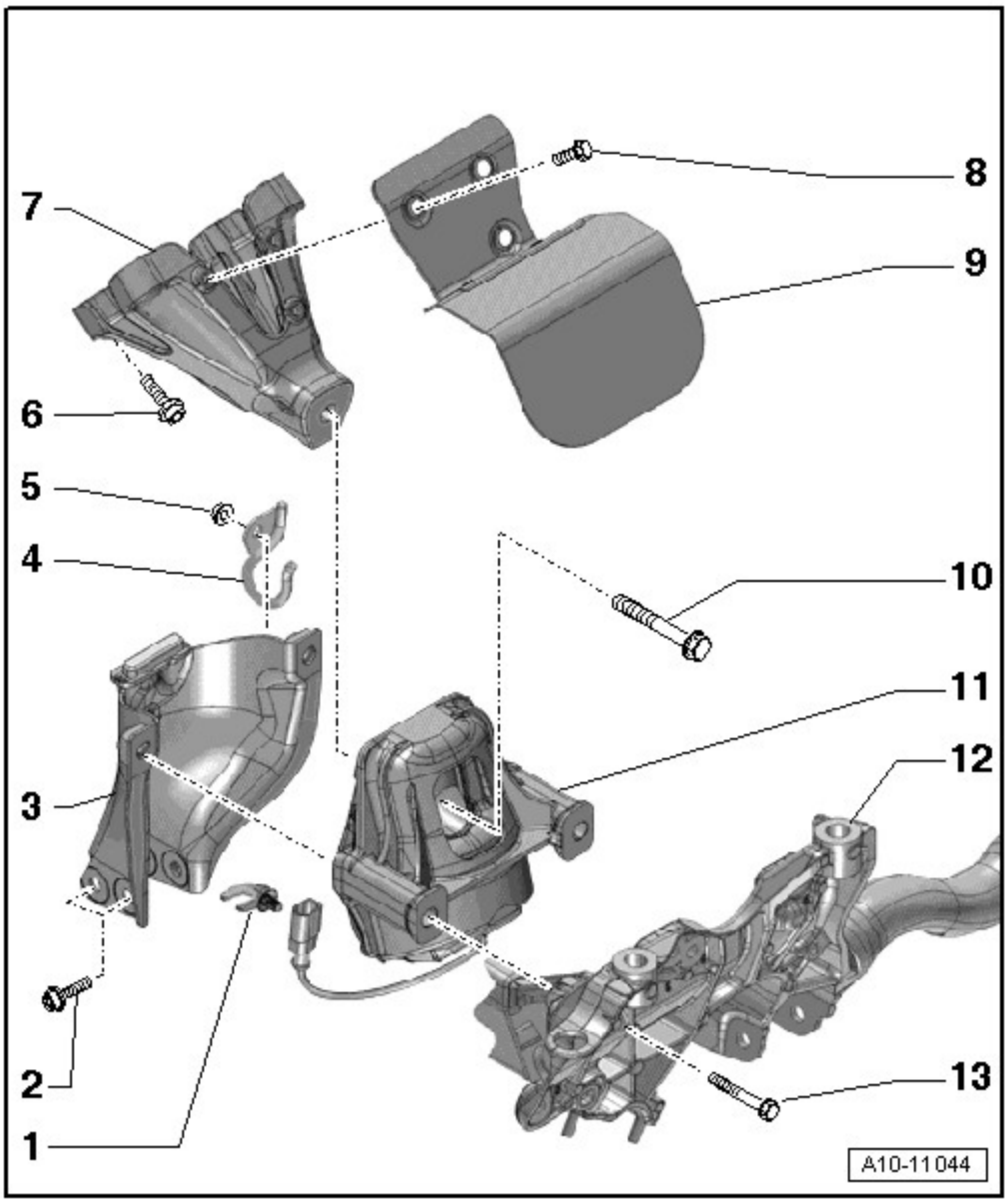

Fig. 5: Identifying Subframe Mount
Courtesy of AUDI OF AMERICA, LLC

1. Not installed
2. Bolt
   - 20 Nm
3. Retaining Plate
   - For the engine mount
   - If the engine mount is faulty, replace the retaining plate
   - Check the retaining plate on the opposite side; replace if necessary
4. Bracket
   - For the hydraulic line

5. Nut
    - 9 Nm
6. Bolt
    - 40 Nm
7. Engine Support
8. Bolt
    - 10 Nm
9. Heat Shield
10. Bolt
    - Replace
    - 90 Nm + 90° turn
11. Engine Mount
    - With the left electrohydraulic engine mount solenoid valve -N144- (left side only)
    - Removing and installing, refer to **ENGINE MOUNT**
    - Replace in pairs only
12. Subframe
13. Bolt
    - 55 Nm

SPECIFICATIONS

FASTENER TIGHTENING SPECIFICATIONS

Component	Bolt Size	Nm
Bolts and nuts		
	M6	9
	M8	20
	M10	40
	M12	60
Bracket for the hydraulic line, nut	-	9
Engine mount [1]	-	90 + 90°
Engine support	-	40
Heat shield	-	10
Retaining plate for the engine mount	-	20
Subframe	-	65
• [1] Always replace		

Manual Transmission to Engine Fasteners

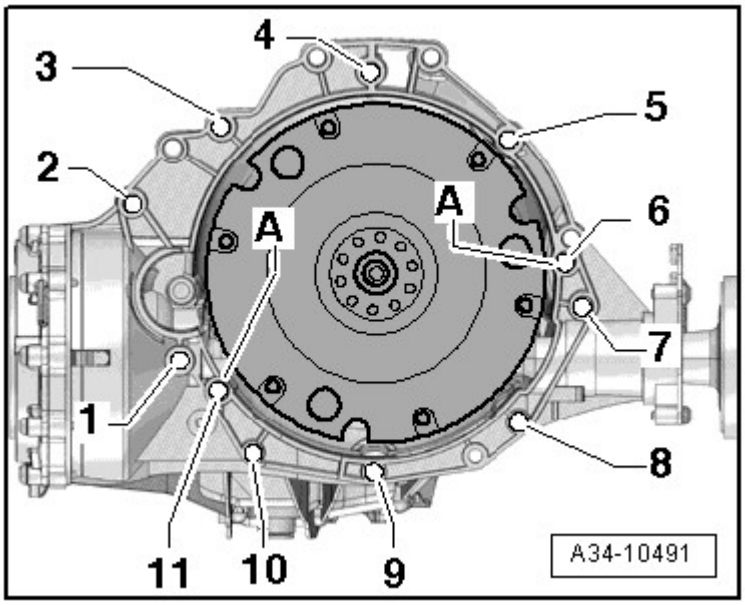

Fig. 6: Mounting Transmission To Engine
Courtesy of AUDI OF AMERICA, LLC

Item	Bolt	Nm
1 3)	M10 x 50 1)	65
2 3) , 7	M12 x 100 2)	30 + 90°
3 4) , 6	M12 x 75 2)	30 + 90°
4 and 5 4)	M12 x 120 2)	30 + 90°
8 to 10	M10 x 75 2)	15 + 90°
11	M12 x 50 2)	30 + 90°
A	Alignment sleeves for centering	

- 1) Steel bolt - not replaced
- 2) Replace bolts
- 3) Also secures the starter.
- 4) Attached the cable bracket as well

REMOVAL AND INSTALLATION

ENGINE, REMOVING

Special tools and workshop equipment required

- Pry Lever - Rmv Outside Mirror 80 - 200
- Hose Clip Pliers V.A.G 1921
- Drip Tray VAS 6208

- Locking Tool T40098
- Engine Support Bridge 10 - 222 A
- Shackle 10-222 A/12
- Shop Crane VAS 6100
- Engine Sling 2024 A
- Engine-/Gearbox Jack V.A.G 1383 A
- Gearbox Support T10337
- Release Tool f/ Rev. Light Switch Conn.T40138

Removing

WARNING: Risk of vehicle tipping over with engine removed.

- **Secure vehicle. Luggage compartment must be empty for this.**

NOTE: Remove the engine without the transmission upward.

Collect escaping coolant in a clean container for disposal or reuse.

During installation, all cable ties must be installed at the same location.

In order to be able to turn the driveshaft on an All Wheel Drive (AWD) vehicle to remove it, release the electro-mechanical parking brake before disconnecting the battery.

CAUTION: Danger of causing damage to electrical components when disconnecting the battery.

- **Follow the instructions when disconnecting the battery. Refer to Removal and Installation .**

-- Disconnect the battery. Refer to **Removal and Installation** .

-- Remove the left and right front wheels.

-- Remove left and right front wheel housing liners. Refer to **Removal and Installation** .

-- Remove the noise insulation. Refer to **Description and Operation** .

-- Install the lock carrier in service position. Refer to **Description and Operation** .

-- Remove the front exhaust pipe/front muffler. Refer to **FRONT EXHAUST PIPE AND FRONT MUFFLER** .

-- Disconnect the connector -1- from the Mass Airflow (MAF) Sensor -G70-.

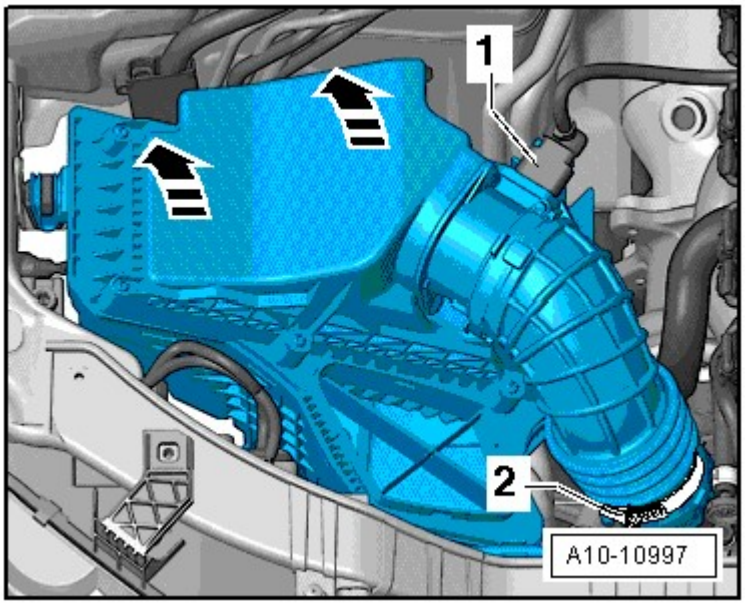

Fig. 7: Disconnecting Connector
Courtesy of AUDI OF AMERICA, LLC

-- Loosen the air intake hose -2-.

-- Remove the air filter housing upward -arrows-.

-- Remove the engine cover -arrows-.

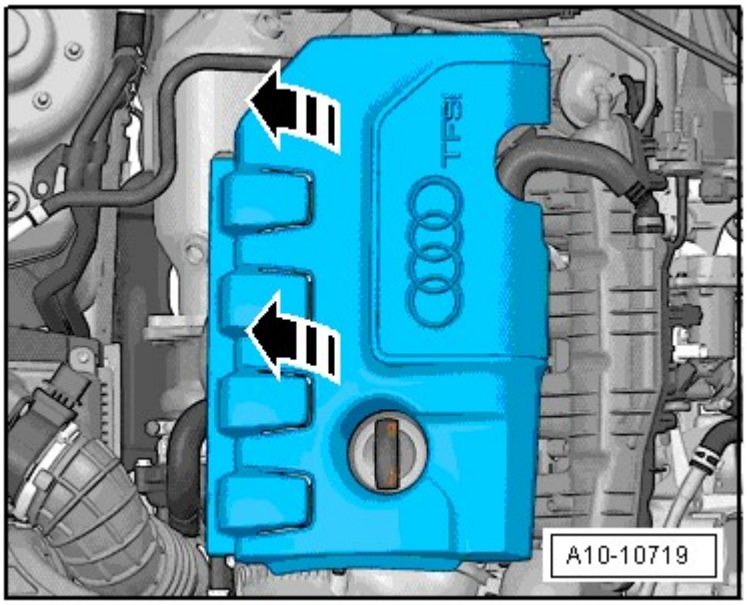

Fig. 8: Identifying Engine Cover
Courtesy of AUDI OF AMERICA, LLC

-- Remove the seal -arrow-.

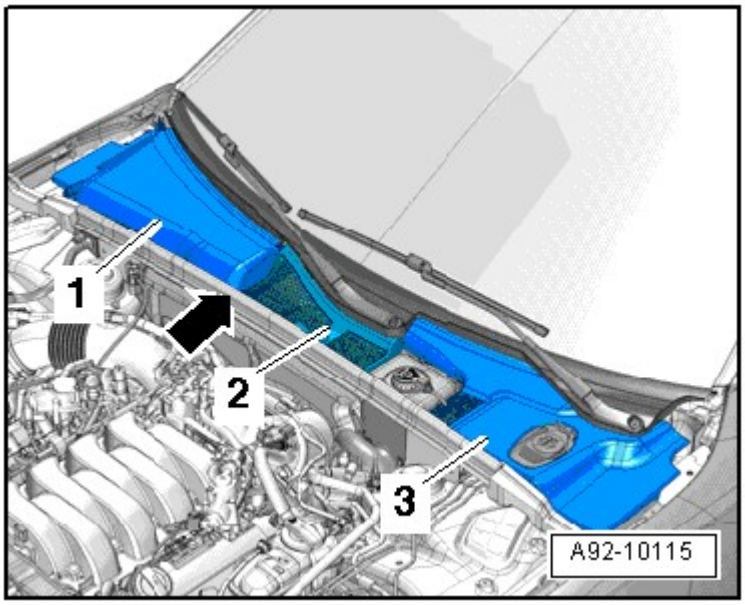

Fig. 9: Identifying Plenum Chamber Covers
Courtesy of AUDI OF AMERICA, LLC

-- Unclip the plenum chamber covers -1, 2 and 3- and remove it.

-- Remove the left and right foam block -1- upward -arrows-.

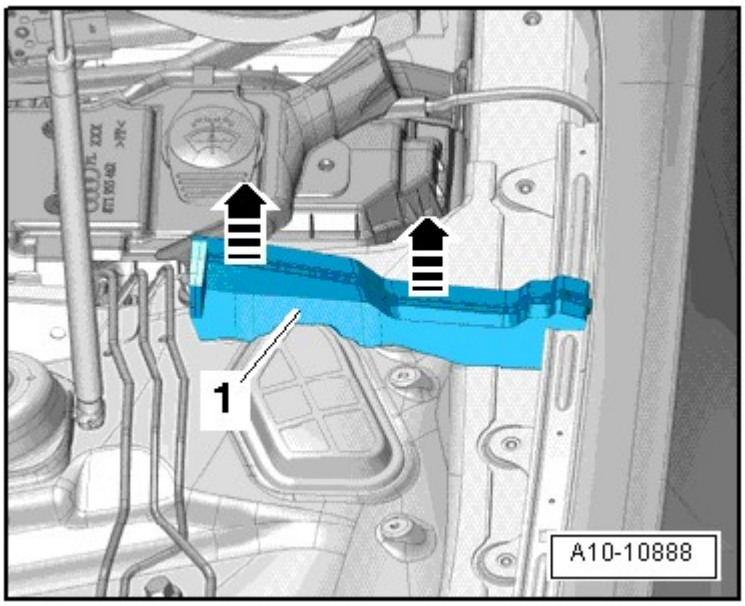

Fig. 10: Identifying Left And Right Foam Block
Courtesy of AUDI OF AMERICA, LLC

-- Release the retainer -arrow A- and open the cover -arrow B-.

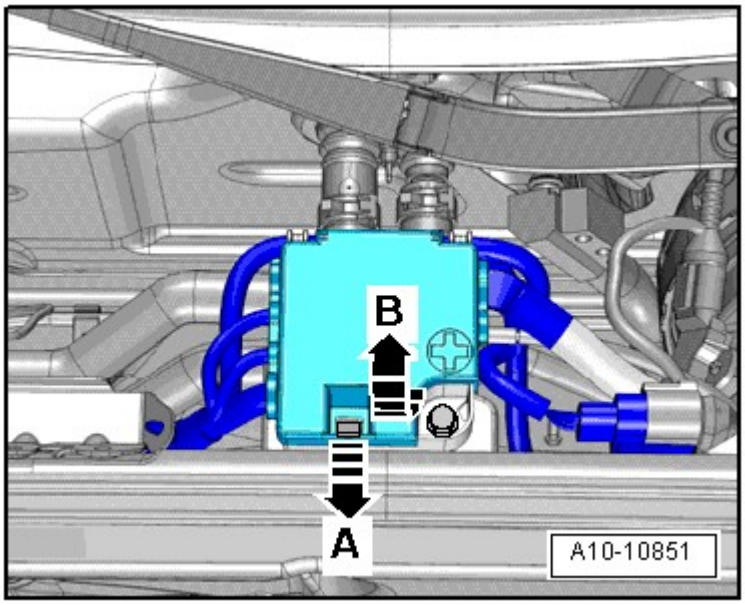

Fig. 11: Opening Terminal Box Cover
Courtesy of AUDI OF AMERICA, LLC

-- Remove the nuts -1 through 3- for the electrical wires.

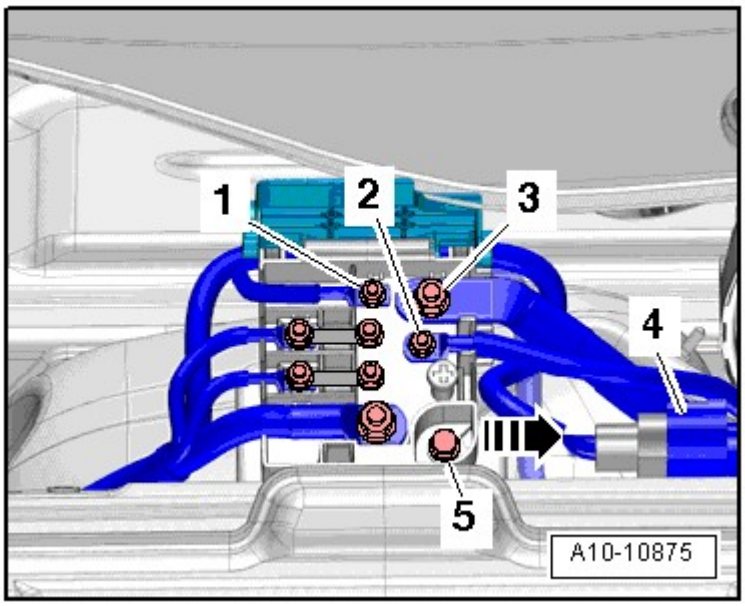

Fig. 12: Identifying Nuts
Courtesy of AUDI OF AMERICA, LLC

-- Remove the electrical connector -4- from the bracket and disconnect it.

-- Remove the bolt -5- and remove the wire junction from the tower brace -arrow-.

-- Release the retainers from the wheel housing side using a 5.5 mm open end wrench -1- and remove the wiring

bushing -2- upward.

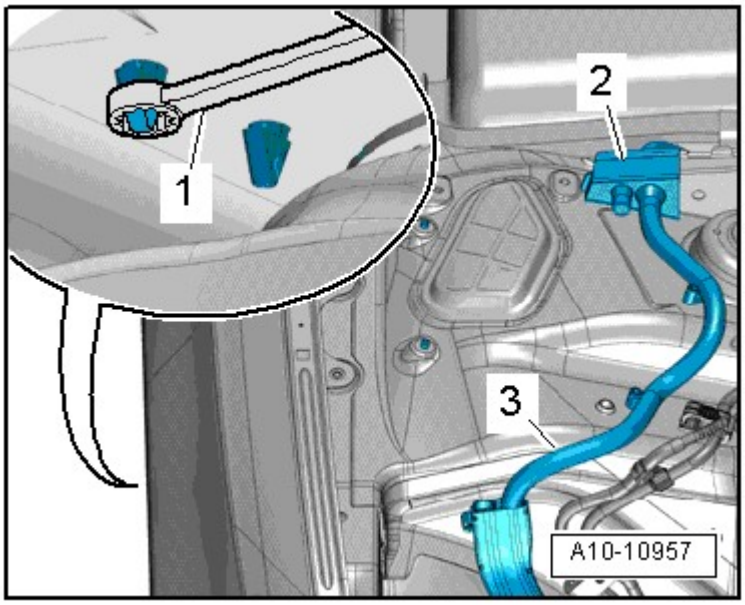

Fig. 13: Releasing Retainers From Wheel Housing Side Using A 5.5 Mm Open End Wrench
Courtesy of AUDI OF AMERICA, LLC

-- Open the wiring duct by opening the release -arrow B-, pull the wiring duct forward -arrow A- and free up the wires.

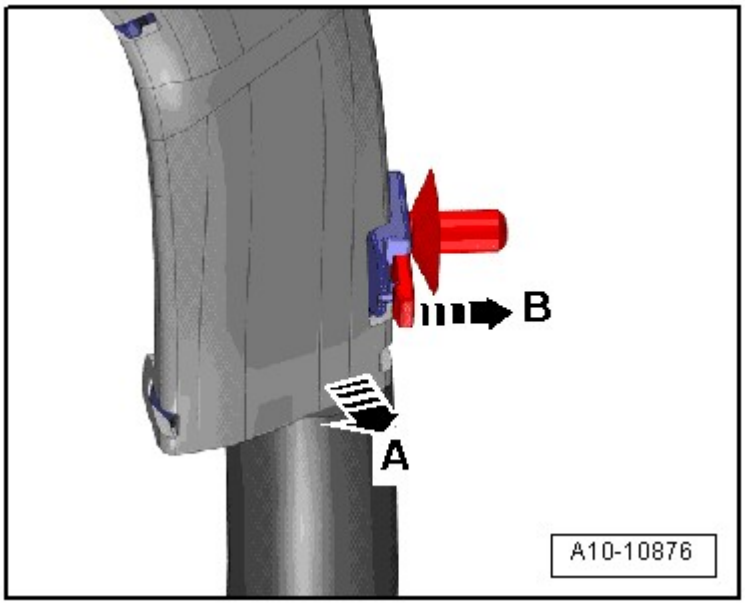

Fig. 14: Freeing Up Wiring Duct By Releasing The Retainer
Courtesy of AUDI OF AMERICA, LLC

-- Remove the nut -1- and tilt the washer fluid filler neck upward -arrow A-.

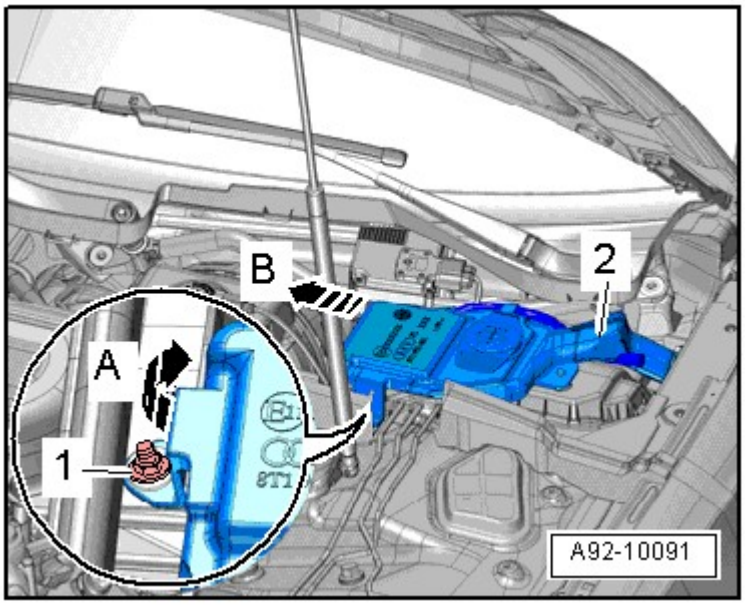

Fig. 15: Identifying Nut And Washer Fluid Reservoir Filler Neck Tilted Upward Slightly
Courtesy of AUDI OF AMERICA, LLC

-- Remove the filler neck -2- with the filler tube from the washer fluid reservoir and the opening in the body - arrow B-.

-- Remove the bolts -1- and nuts -2- and the tower brace -3-.

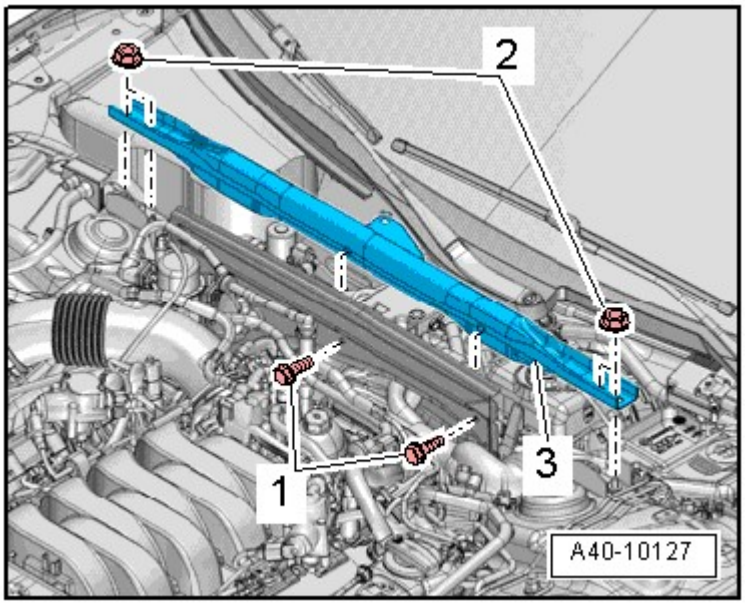

Fig. 16: Identifying Bolts, Nuts And Tower Brace
Courtesy of AUDI OF AMERICA, LLC

-- Remove the bolts -arrows- and the engine compartment E-box cover.

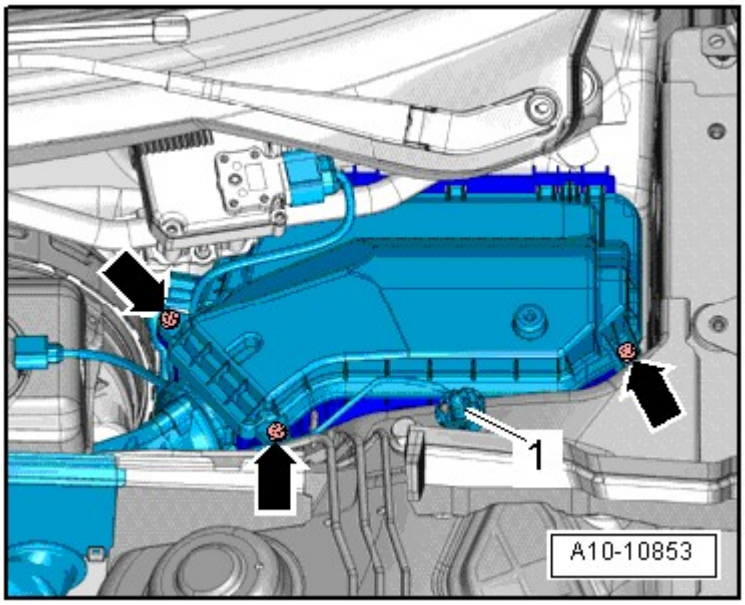

Fig. 17: Identifying E-Box Bolts & Cover
Courtesy of AUDI OF AMERICA, LLC

-- Remove the nut -1- and free up the wire.

-- Release the retainers -A arrows- and remove the engine control module -arrow B-.

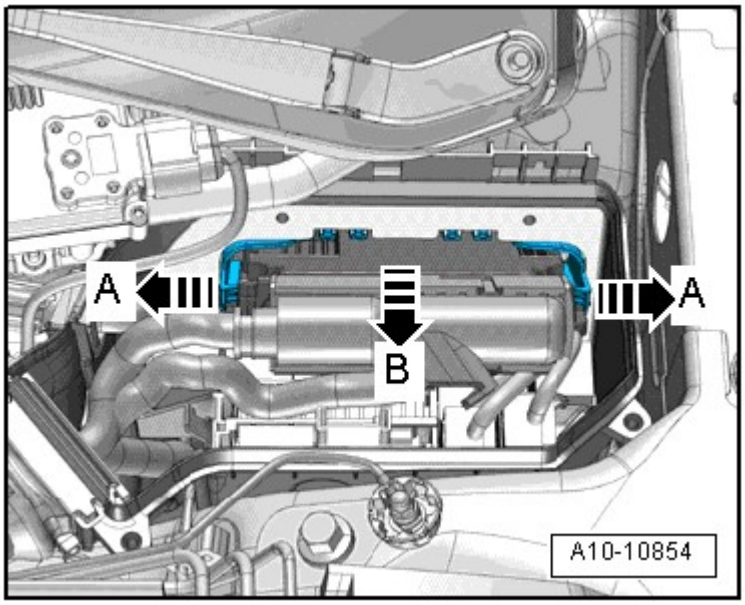

Fig. 18: Identifying Engine Control Module (ECM)
Courtesy of AUDI OF AMERICA, LLC

-- Disconnect the electrical connectors -4- and remove the nut -3- for the electrical wire.

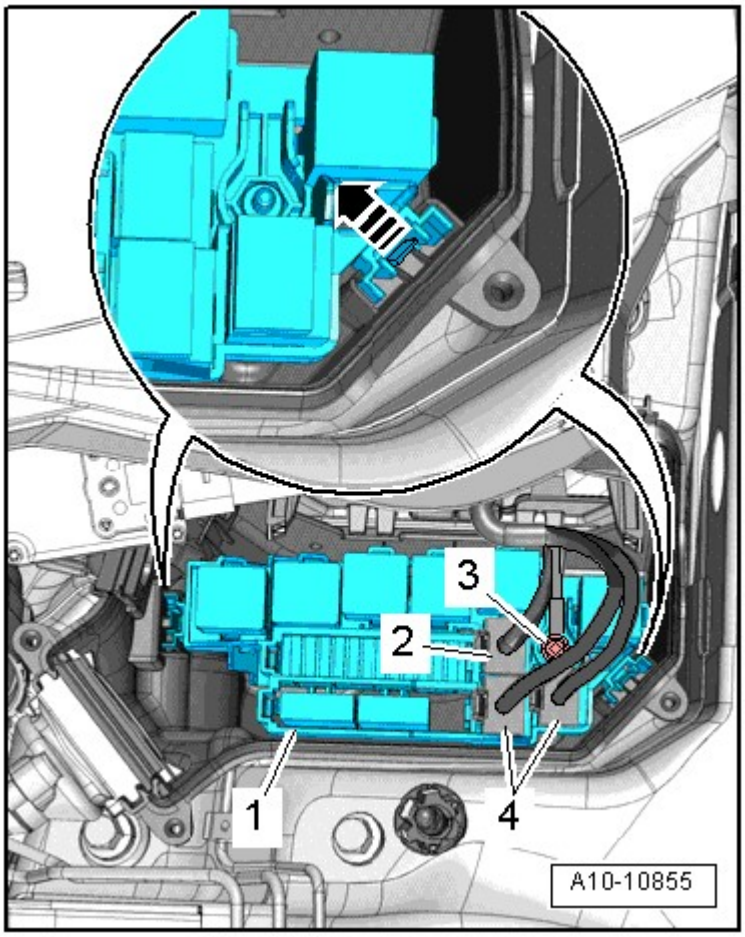

Fig. 19: Disconnecting Electrical Connectors
Courtesy of AUDI OF AMERICA, LLC

-- Disconnect the electrical connector -2- if applicable.

-- Release the retainers -arrow- and remove the relay carrier with the fuse holder -1-.

-- Release the retainers -A arrows- and remove the wiring bushing -1- upward -arrow B-.

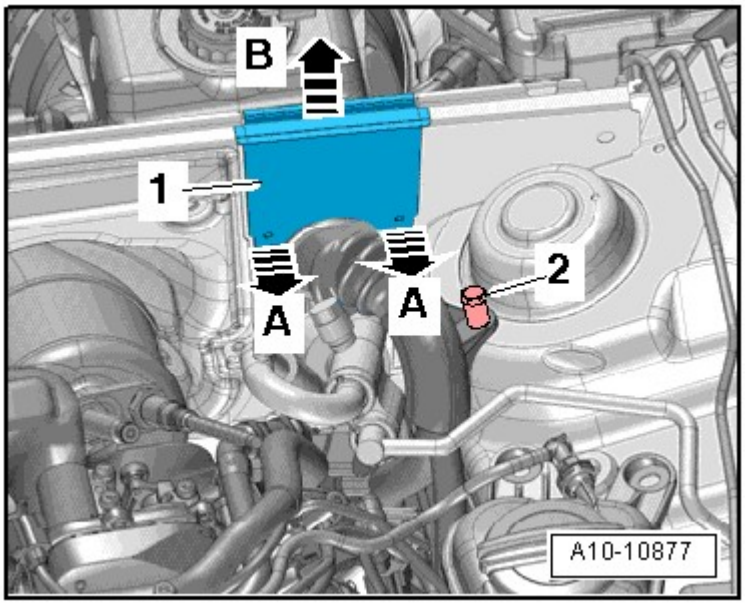

Fig. 20: Releasing Retainers To Remove Wiring Bushing
Courtesy of AUDI OF AMERICA, LLC

-- Disengage the engine wiring harness at the engine compartment E-box and free it up.

-- Lay the wiring harness on the engine and secure the engine control module so that it cannot fall.

WARNING: **Risk of scalding due to hot steam and hot coolant.**

- **The coolant system is under pressure when the engine is warm.**
- **Cover the coolant reservoir cap with a cloth and then open it slowly to release the pressure in the system.**

-- Open the coolant reservoir cap.

-- Place the VAS 6208 under the engine.

-- Open the drain -1- and let the coolant drain out and then remove the connection -2- from the radiator.

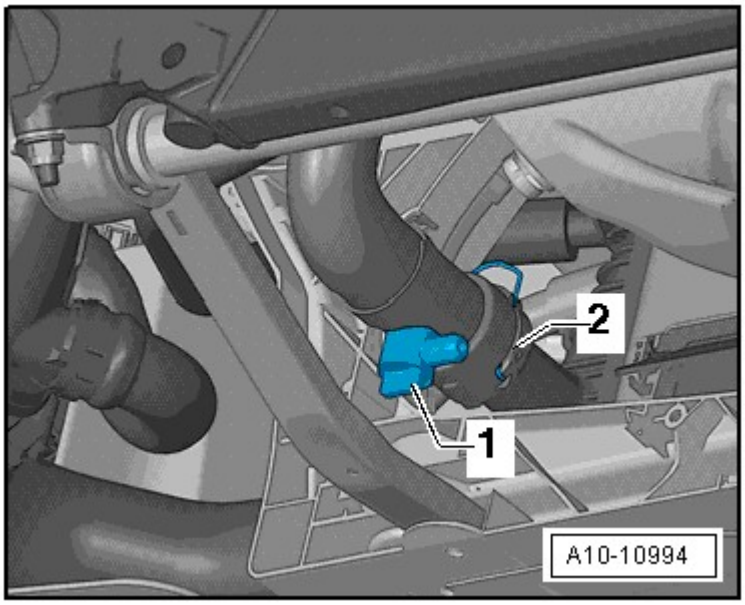

Fig. 21: Identifying Coolant Drain Plug
Courtesy of AUDI OF AMERICA, LLC

-- Remove the left and right nuts -3- and remove the longitudinal braces -2-.

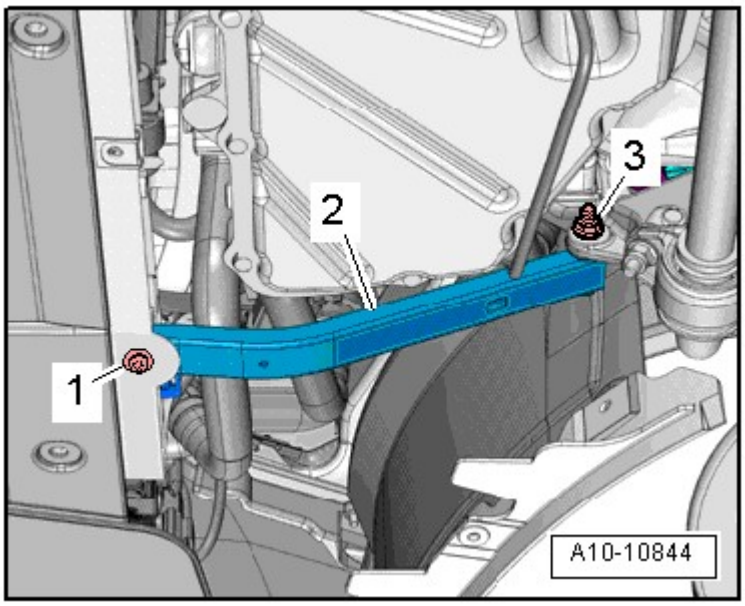

Fig. 22: Identifying Carrier Left Brace Components
Courtesy of AUDI OF AMERICA, LLC

-- Loosen the hose clamp -arrow-, pull off the air guide hose and move it to the side.

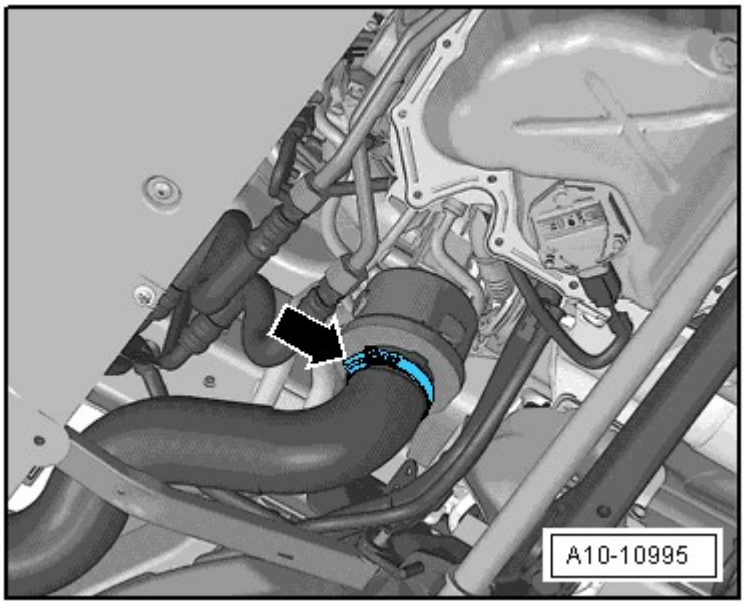

Fig. 23: Loosening Hose Clamp Pull Off Air Guide Hose
Courtesy of AUDI OF AMERICA, LLC

-- Remove the nut -1- on the right longitudinal member and free up the ground (GND) wires.

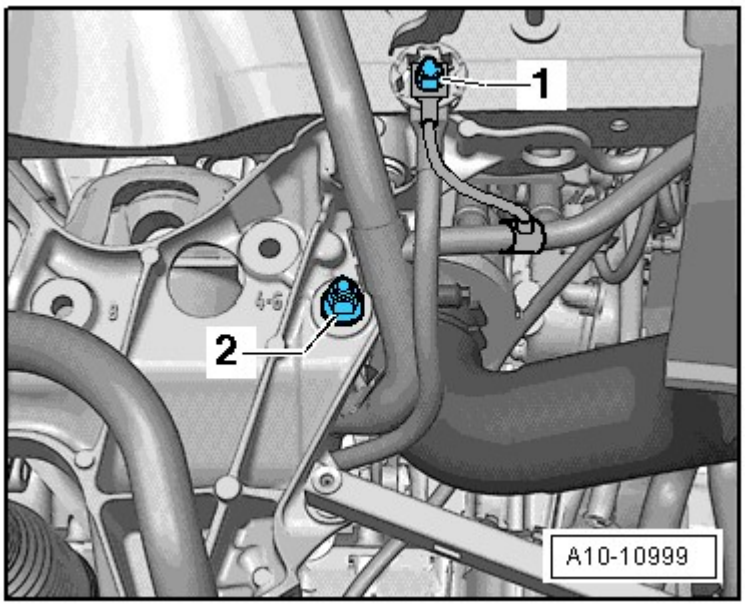

Fig. 24: Identifying Nut
Courtesy of AUDI OF AMERICA, LLC

-- Remove the nut -2- for the bracket with the electrical wires on the right side of the vehicle.

-- Disconnect the coolant fan electrical connector -1- by sliding the retainer back -arrow- and pressing the release down.

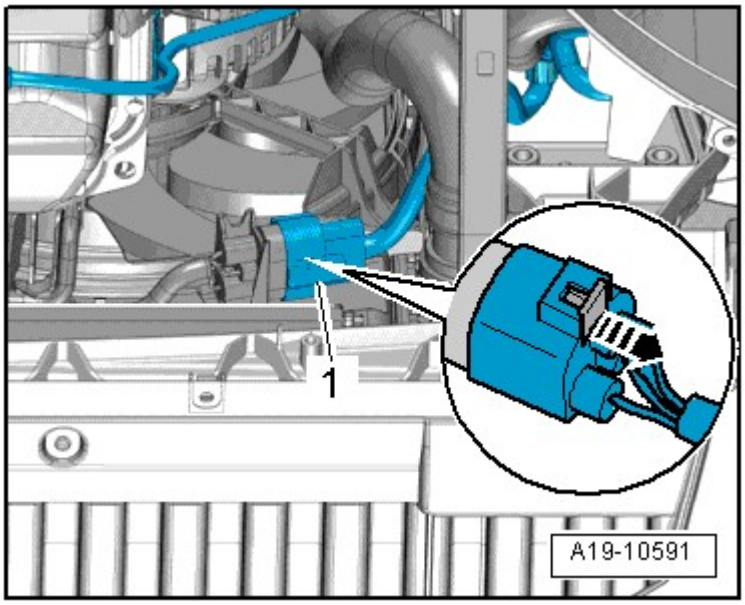

Fig. 25: Identifying Coolant Fan Electrical Connector
Courtesy of AUDI OF AMERICA, LLC

-- Lay the wiring harness on the engine and secure it from falling down.

-- Disconnect the vacuum connection -2- from the plenum chamber bulkhead by removing the vacuum hose -3- on the back side -arrow-.

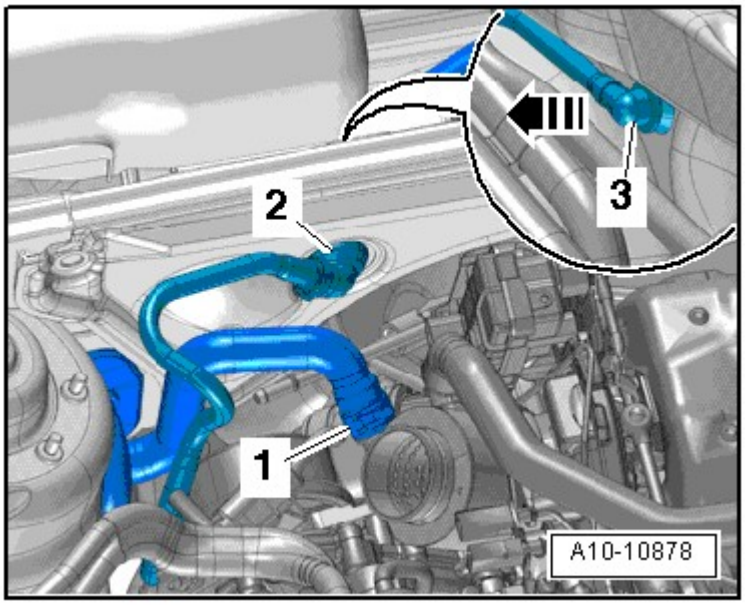

Fig. 26: Disconnecting Vacuum Connection
Courtesy of AUDI OF AMERICA, LLC

-- Remove the nut -5-.

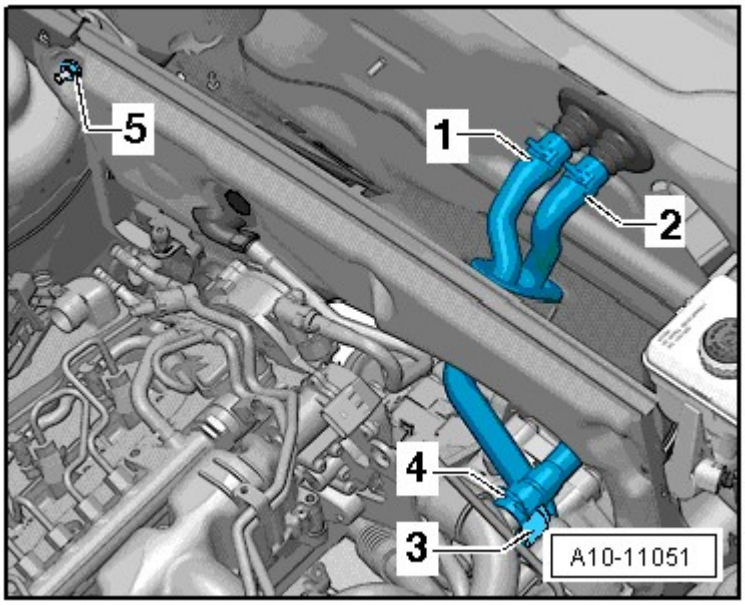

Fig. 27: Identifying Nut
Courtesy of AUDI OF AMERICA, LLC

-- Remove the coolant hoses -1- through -4- and remove the plenum chamber bulkhead.

-- Remove the bolts -2 to 6-.

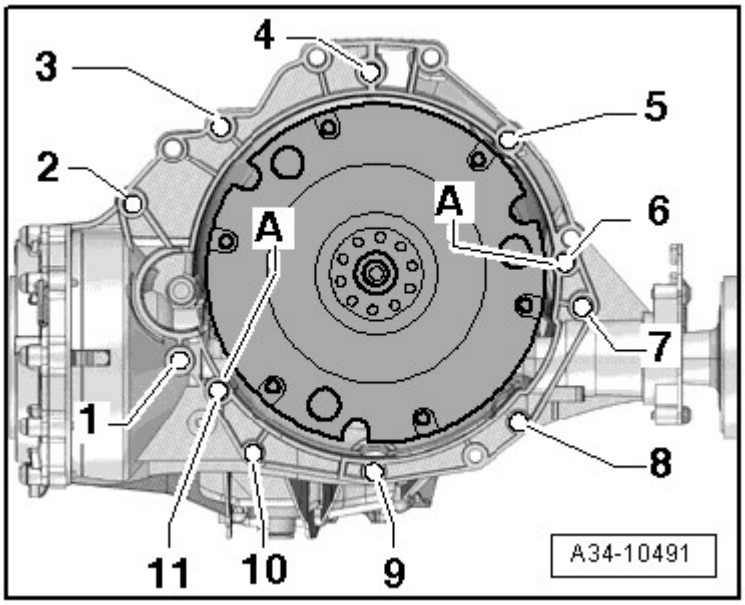

Fig. 28: Mounting Transmission To Engine
Courtesy of AUDI OF AMERICA, LLC

NOTE: The bolt -2- attaches the starter to the transmission and has an additional spacer sleeve -arrow-.

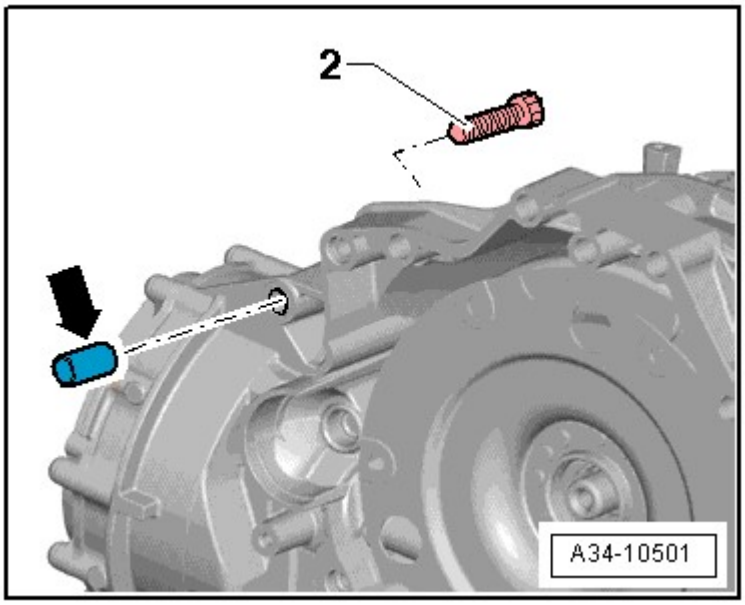

Fig. 29: Identifying Transmission Bolt & Spacer
Courtesy of AUDI OF AMERICA, LLC

Pay attention to the spacer sleeve while removing or installing the engine - arrow-. The spacer sleeve must be inserted between the starter and the transmission.

-- Remove the coolant hose -2- and the permanent ventilation -1-.

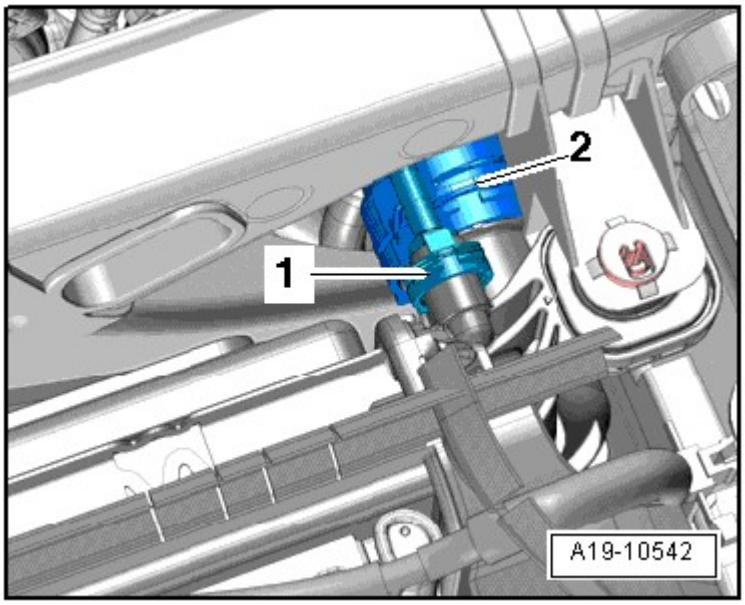

Fig. 30: Identifying Intermediate Flange
Courtesy of AUDI OF AMERICA, LLC

-- Remove the permanent ventilation -1- and coolant hose -2- from the coolant reservoir.

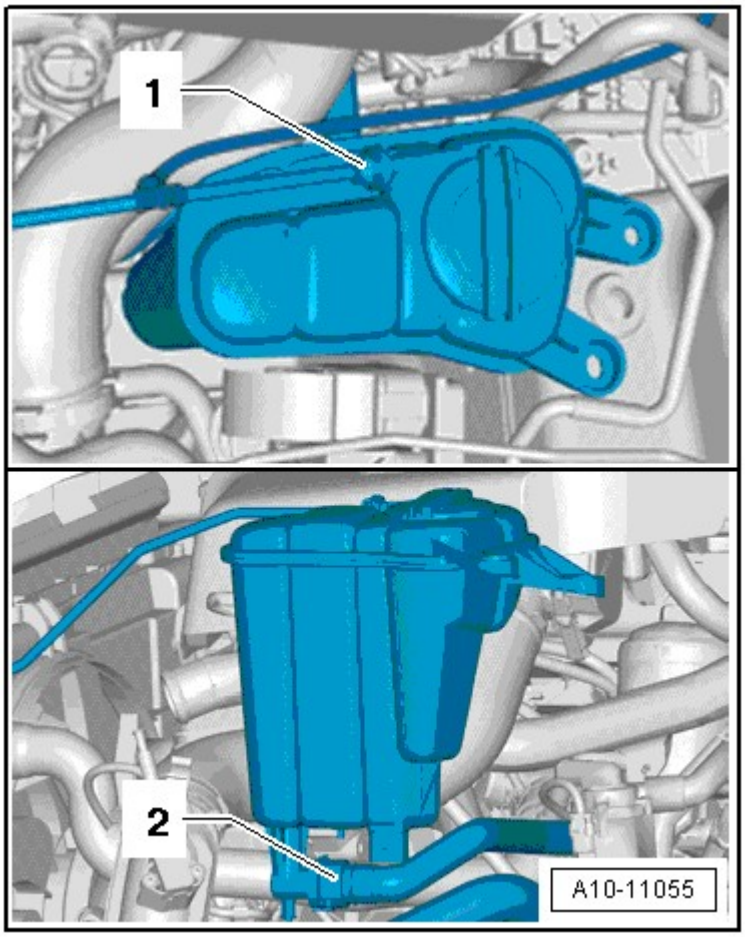

Fig. 31: Identifying Permanent Ventilation -1- And Coolant Hose -2-
Courtesy of AUDI OF AMERICA, LLC

-- Loosen the hose clamps -arrows- and remove the air guide hose.

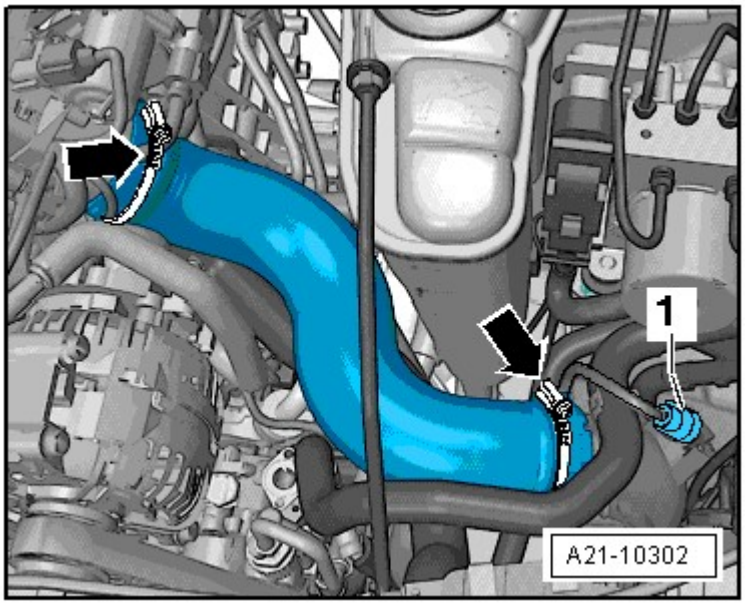

Fig. 32: Loosening Hose Clamps
Courtesy of AUDI OF AMERICA, LLC

-- Disconnect the charge air pressure sensor -G31- -1- connector and free it up.

-- Remove the catalytic converter. Refer to **CATALYTIC CONVERTER** .

CAUTION: Risk of destroying due to reversed running direction on a used ribbed belt.

- **Before removing the ribbed belt, marking running direction with chalk or felt-tip pen for reinstallation later.**

-- To release ribbed belt tension, rotate tensioner in direction of -arrow-.

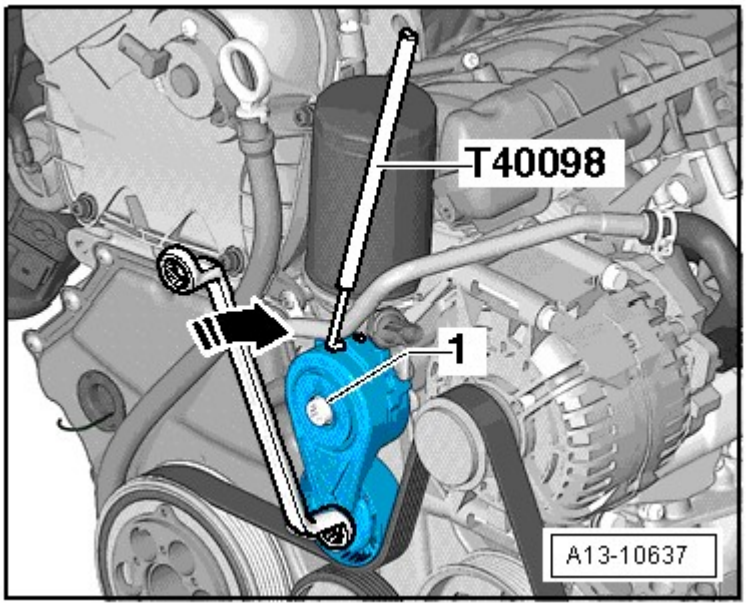

Fig. 33: Releasing Ribbed Belt Tension, Rotate Tensioner In Direction Of Arrow
Courtesy of AUDI OF AMERICA, LLC

-- Secure the tensioner with the T40098.

-- Remove ribbed belt.

-- Disconnect solenoid clutch electrical connector -1- on the Air Conditioning (A/C) compressor.

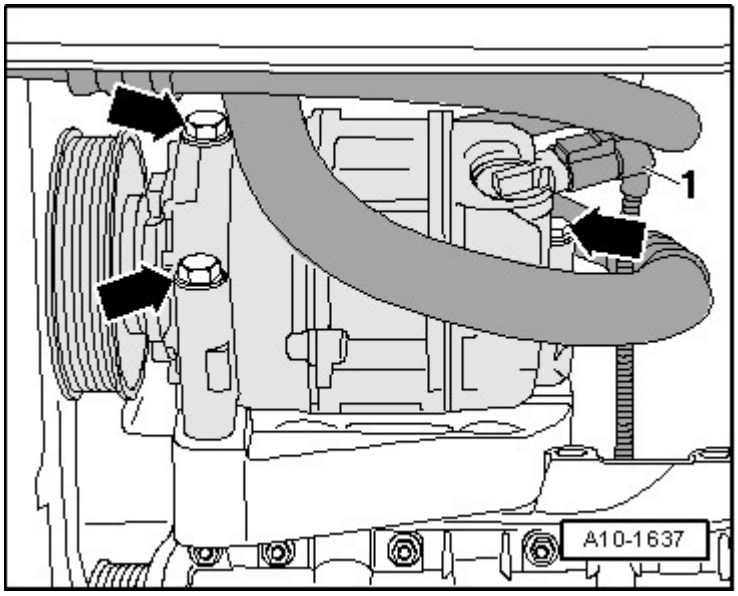

Fig. 34: Identifying A/C Compressor Bolts And Solenoid Clutch Electrical Connector
Courtesy of AUDI OF AMERICA, LLC

WARNING: Refrigerant can cause serious personal injury.

- **Do not open the air conditioning refrigerant circuit.**

-- Remove A/C compressor bolts -arrows-.

CAUTION: Risk of damaging refrigerant lines and hoses.

- **Do not stretch, kink or bend refrigerant lines and hoses.**

-- Tie up the A/C compressor with the refrigerant lines attached to the longitudinal member.

NOTE: The power steering pump hydraulic lines remain connected.

-- Remove the bolts -1- from the front through the belt pulley and then remove the bolt -2- from the back.

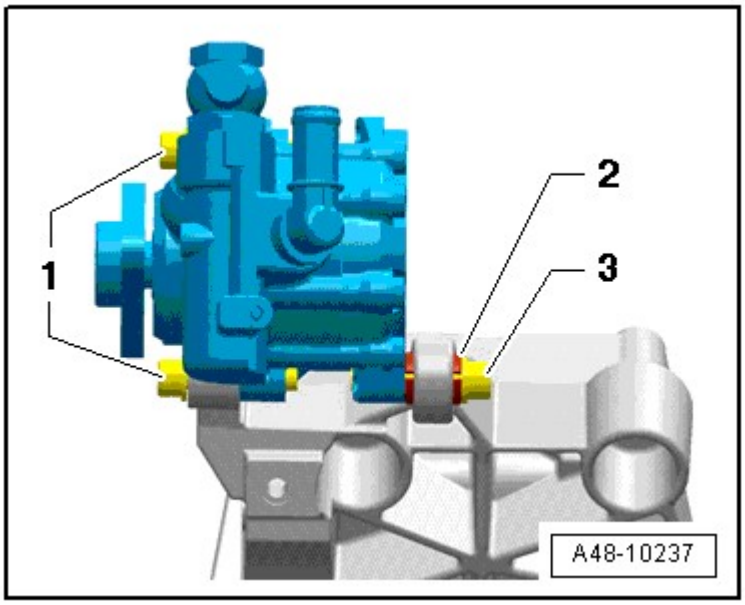

Fig. 35: Identifying Power Steering Pump
Courtesy of AUDI OF AMERICA, LLC

NOTE: The power steering pump is shown in the illustration without the belt pulley and without the hydraulic lines.

-- Remove the power steering pump with the hydraulic lines connected to the longitudinal.

CAUTION: Follow cleanliness precautions when working on the fuel supply system.

-- Disconnect the fuel supply hose -1- and return hose -2-.

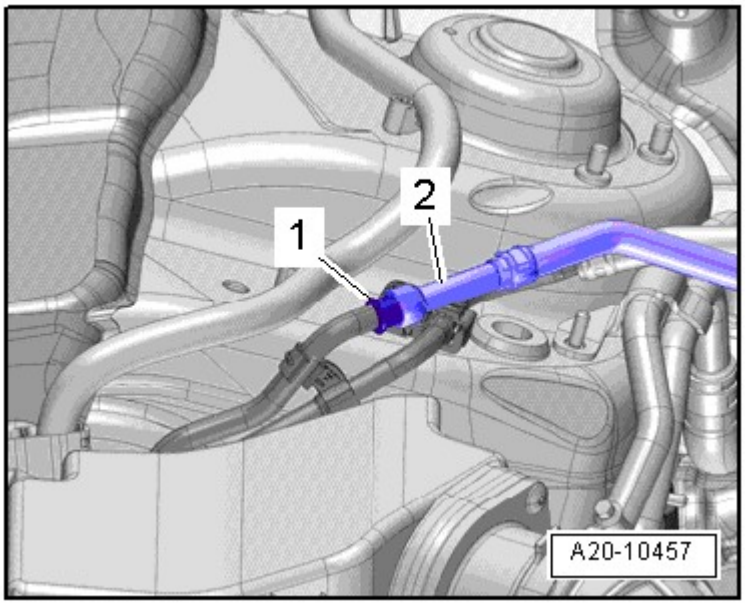

Fig. 36: Identifying Fuel Line
Courtesy of AUDI OF AMERICA, LLC

-- Support the transmission with the V.A.G 1383 A and T10337.

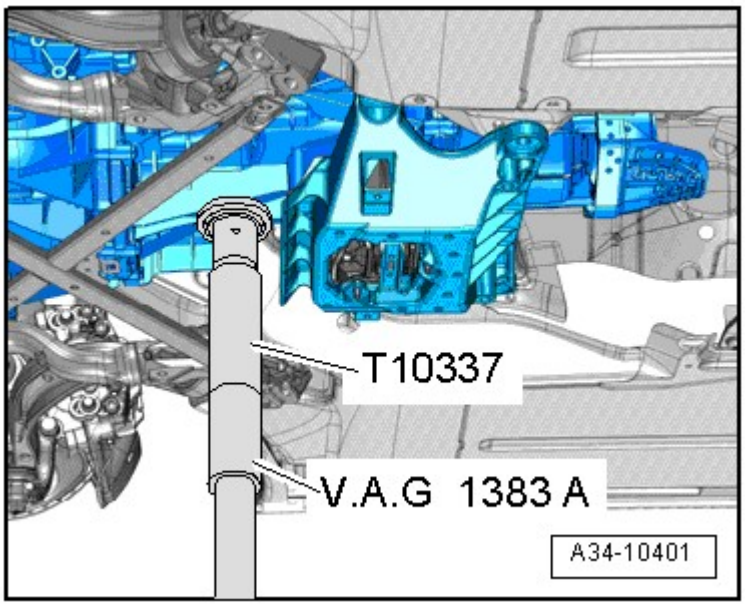

Fig. 37: Supporting Transmission With V.A.G 1383
Courtesy of AUDI OF AMERICA, LLC

-- Remove the bolts -arrows- on the tunnel crossmember.

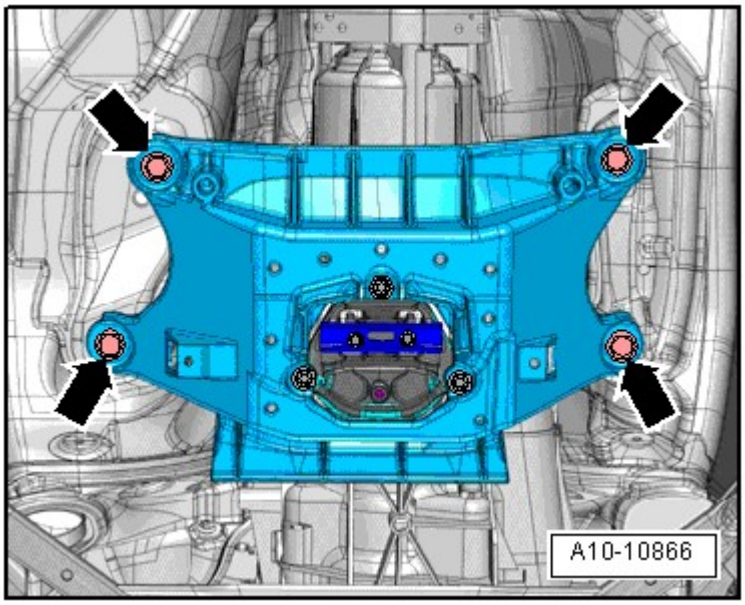

Fig. 38: Identifying Transmission Support Overview
Courtesy of AUDI OF AMERICA, LLC

-- Lower the transmission with the V.A.G 1383 A to dimension -a-.

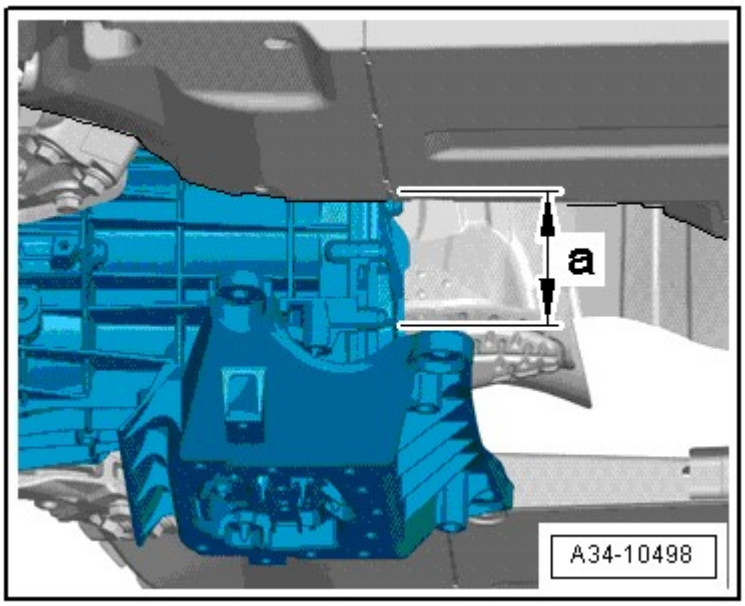

Fig. 39: Lowering Transmission With V.A.G 1383
Courtesy of AUDI OF AMERICA, LLC

- Dimension -a- = 80 mm maximum.

-- Disconnect the connector -1- on the back-up lamp switch -F4- using the release tool f/ rev. light switch conn.T40138 and free it up.

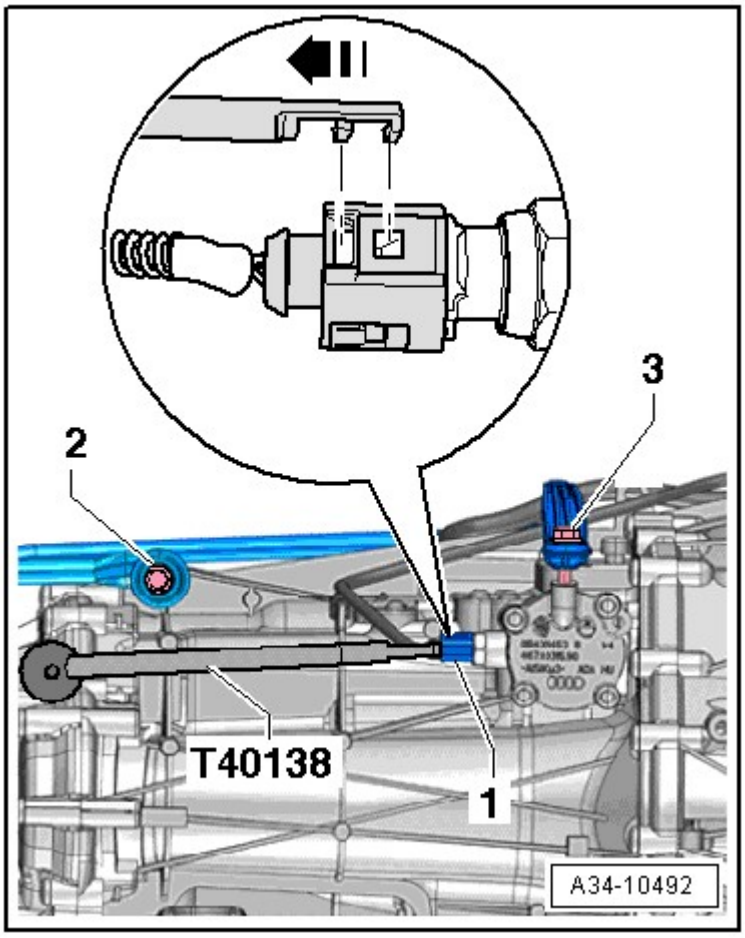

Fig. 40: Disconnecting Connector
Courtesy of AUDI OF AMERICA, LLC

-- Unclip the wire -A- from the transmission and disconnect the connector -C-.

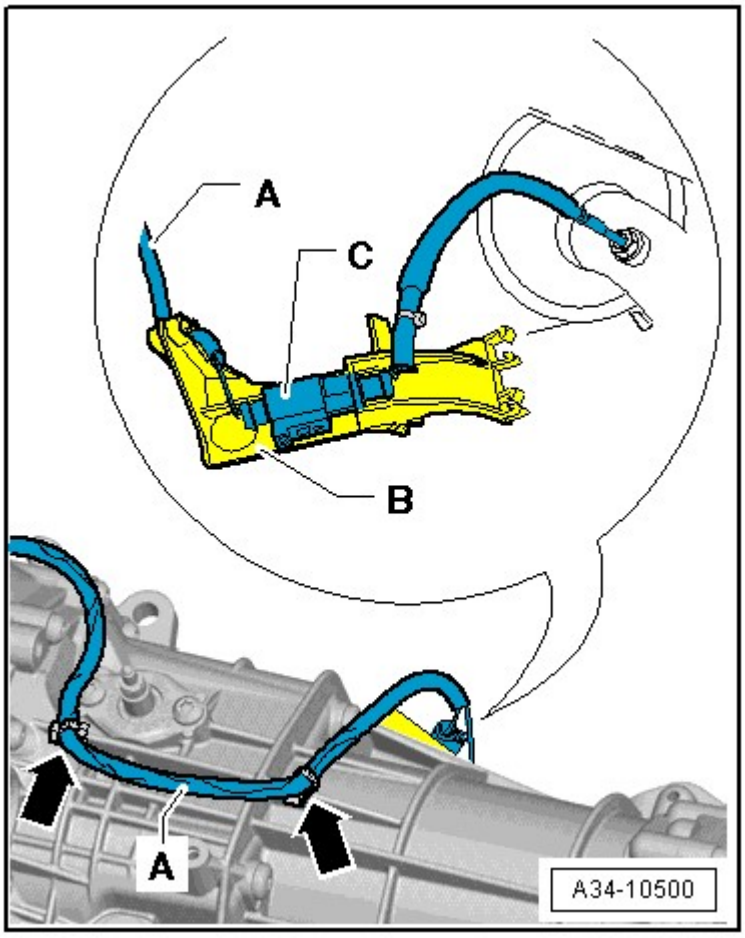

Fig. 41: Unclipping Wiring From Transmission
Courtesy of AUDI OF AMERICA, LLC

-- Lift the transmission with the V.A.G 1383 A and install the bolts -arrows- for the tunnel crossmember.

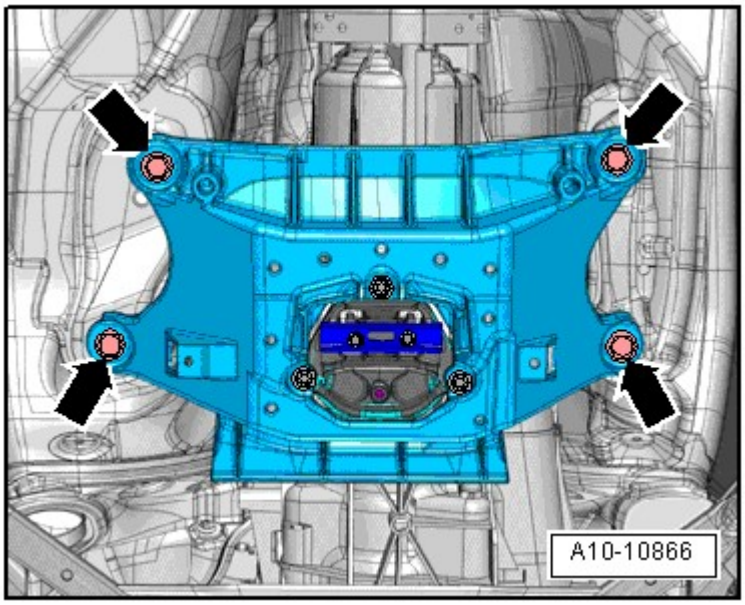

Fig. 42: Identifying Transmission Support Overview
Courtesy of AUDI OF AMERICA, LLC

-- Remove the bottom cover -1- from the transmission -arrow-.

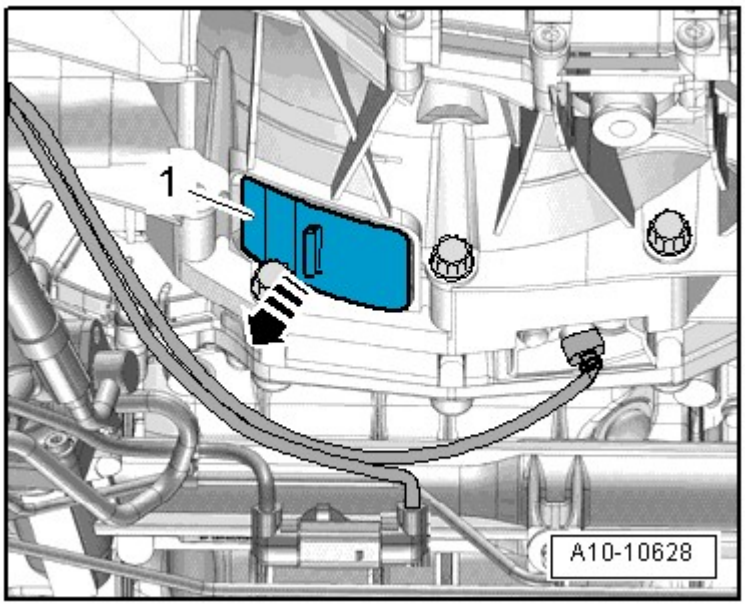

Fig. 43: Identifying Transmission Lower Cover
Courtesy of AUDI OF AMERICA, LLC

-- Remove the 3 drive plate bolts -arrow-. Turn the crankshaft an additional 120° in the direction of engine rotation.

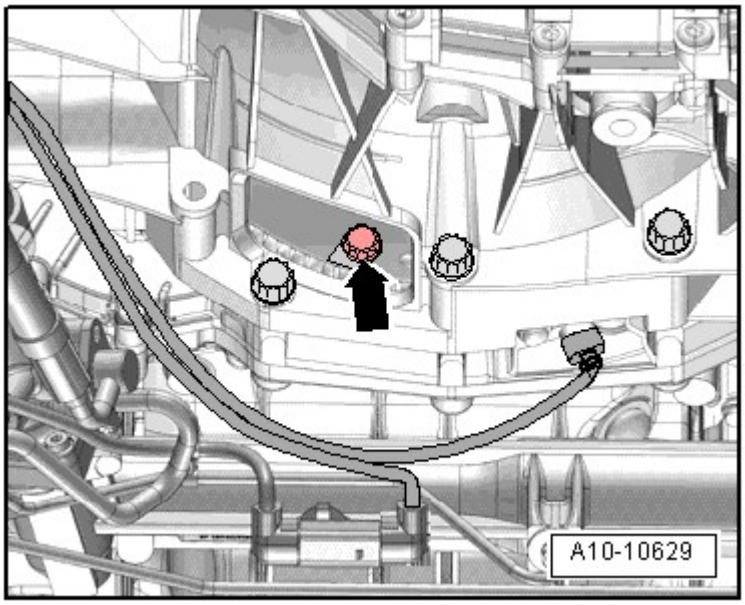

Fig. 44: Identifying Clutch Module First Bolt Installation Location
Courtesy of AUDI OF AMERICA, LLC

-- Remove the bolt on the starter -1- from the engine side.

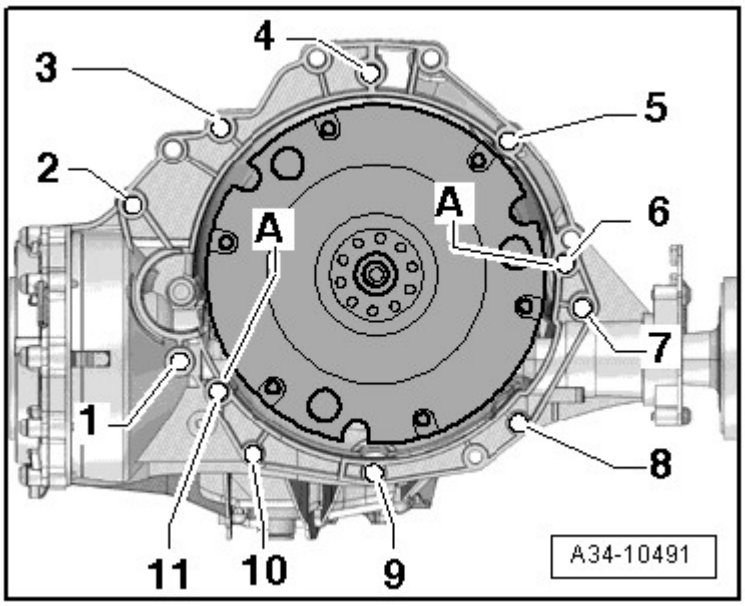

Fig. 45: Mounting Transmission To Engine
Courtesy of AUDI OF AMERICA, LLC

-- Remove the starter from the transmission and leave it in the installation position

-- Remove the remaining bolts -7 through 10- connecting the engine to the transmission.

-- Install the 10 - 222 A with adapter 10 - 222 A /8 on the left and right strut towers, as shown in the illustration.

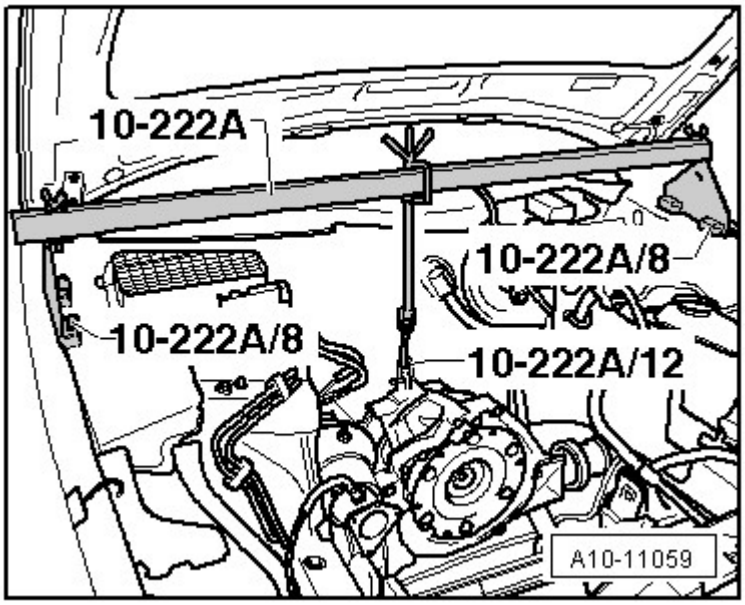

Fig. 46: Identifying Adapter Installed On Left And Right Strut Tower
Courtesy of AUDI OF AMERICA, LLC

-- Attach the transmission and spindle with the shackle 10-222 A/12.

NOTE: To improve clarity, the removed engine is shown.

-- Gently pretension the spindle by the 10-222 A.

-- Engage the 2024 A on the engine and on the VAS 6100 as shown in illustration.

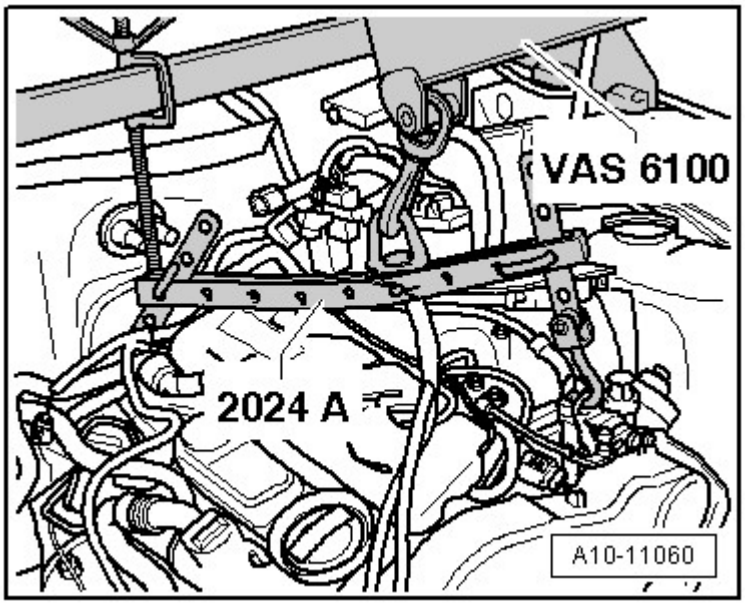

Fig. 47: Engaging 2024A On Engine And On VAS 6100

Courtesy of AUDI OF AMERICA, LLC

WARNING: Lifting hooks and alignment pins on the engine sling must be secured with securing pins.

-- Remove the left and right engine mount bolts -1-.

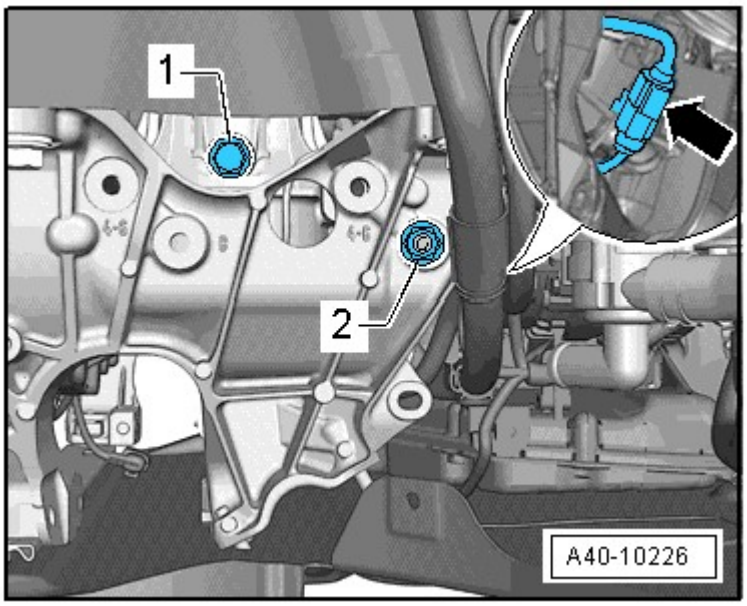

Fig. 48: Disconnecting Left Electrohydraulic Engine Mount Solenoid Valve
Courtesy of AUDI OF AMERICA, LLC

NOTE: Ignore -arrow-.

-- Lift the engine until the engine mount is free.

-- Turn the 10-222 A spindles.

CAUTION: Risk of damaging hose and wiring connections as well as engine compartment.

- **Make sure all the hoses and lines between the engine, transmission, subframe and body have been disconnected.**
- **Carefully lift and guide the engine out of the engine compartment.**

-- Remove the engine from the transmission and lift it out of the engine compartment.

ENGINE, INSTALLING

Special tools and workshop equipment required

- Counter Hold Tool T10355 for vehicles with a DSG transmission
- Assembly Aid T40169
- Transportation Lock T40170
- Engine Support Bridge 10-222 A
- Drip Tray for VAS 6100 VAS 6208

Tightening Specifications

NOTE: **Tightening specifications only apply to lightly greased, oiled, phosphate or blackened nuts and bolts.**

Additional lubricants, such as engine or transmission oil are permissible, although lubricants containing graphite are not.

Do not use any degreased parts.

Tolerance for tightening specifications +/- 15%.

For the correct tightening specifications, refer to **SUBFRAME MOUNT OVERVIEW**.

Additional Tightening Specifications

Component		Nm
Bolts and nuts	M6	9
	M8	20
	M10	40
	M12	65

Manual Transmission To Engine Fastener

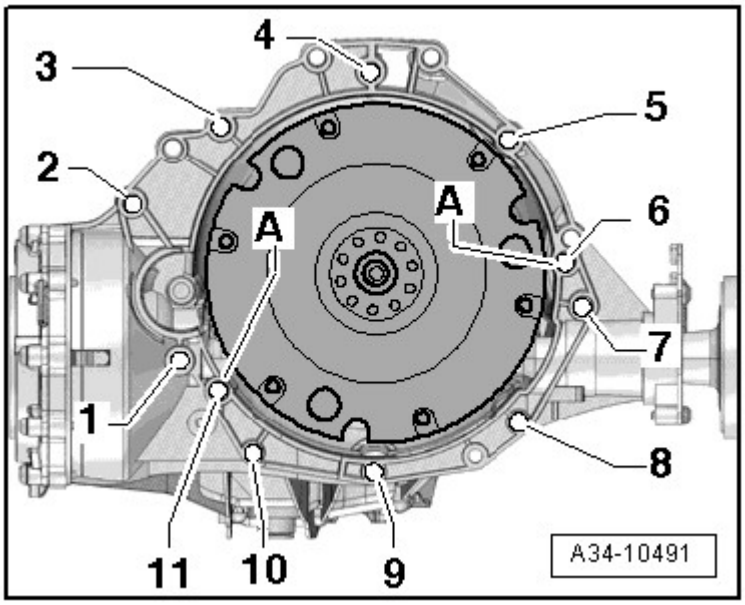

Fig. 49: Mounting Transmission To Engine
Courtesy of AUDI OF AMERICA, LLC

Item	Bolt	Nm
1 3)	M10 x 50 1)	65
2 3) , 7	M12 x 100 2)	30 + 90°
3 4) , 6	M12 x 75 2)	30 + 90°
4 and 5 4)	M12 x 120 2)	30 + 90°
8 to 10	M10 x 75 2)	15 + 90°
11	M12 x 50 2)	30 + 90°
A	Alignment sleeves for centering	

- 1) Steel bolt - not replaced
- 2) Replace bolts
- 3) Also secures the starter.
- 4) Attached the cable bracket as well

Procedure

NOTE: **Replace bolts which have been tightened to an additional torque.**

Replace self-locking nuts and bolts as well as sealing rings, seals and O-rings.

The hose connections and charge air system hoses must be free of oil and grease before installing.

Secure all hose connections with hose clamps appropriate for the model. Refer to the Parts Information.

To mount the charge hoses on their connectors securely, spray the bolts on the used clamps with rust remover before installing.

During installation, all cable ties must be installed at the same location.

-- Check whether alignment sleeves for centering engine and transmission in cylinder block are present, insert missing alignment sleeves.

-- Clean the threaded holes in the cylinder block for connecting the engine and transmission using a thread tap before installing the transmission.

-- Complete the following steps before connecting the engine and transmission:

-- Make sure the intermediate plate is engaged on the sealing flange and slide onto the guide sleeves -arrows-.

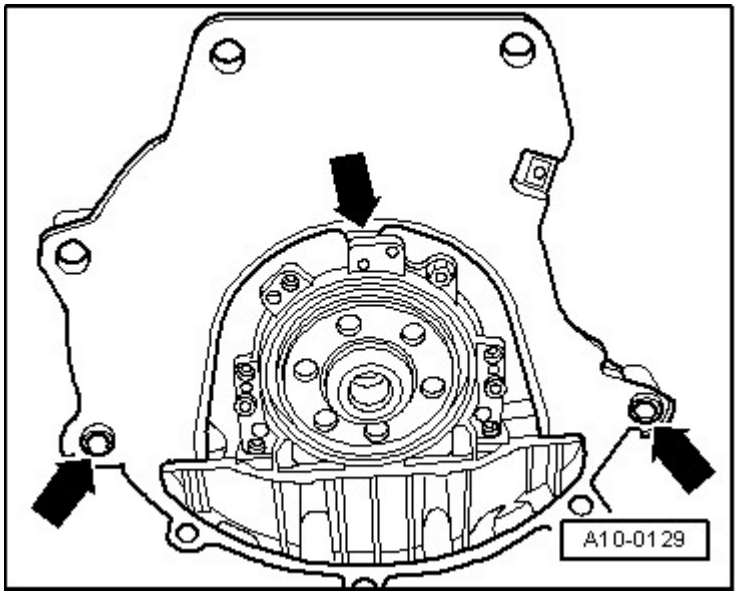

Fig. 50: Identifying Intermediate Plate Alignment Bushings
Courtesy of AUDI OF AMERICA, LLC

-- Insert the T40169 into the transmission housing and clutch module from underneath as illustrated.

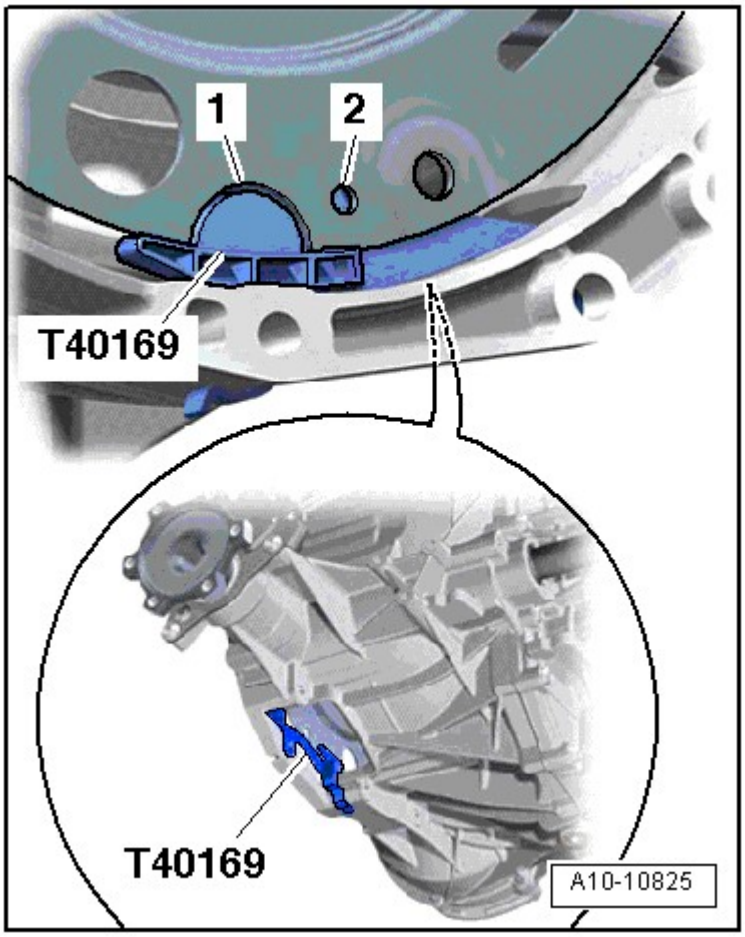

Fig. 51: Inserting Assembly Aid T40169 Into Transmission Housing And Flywheel From Below
Courtesy of AUDI OF AMERICA, LLC

- The T40169 must engage in the semi-circular opening -1- and in the inspection hole -2-.

NOTE: The inspection hole is only in one location on the circumference so rotate the clutch module as needed.

-- Insert the T40170 in the transmission housing from below and clamp it onto the flange shaft -1-.

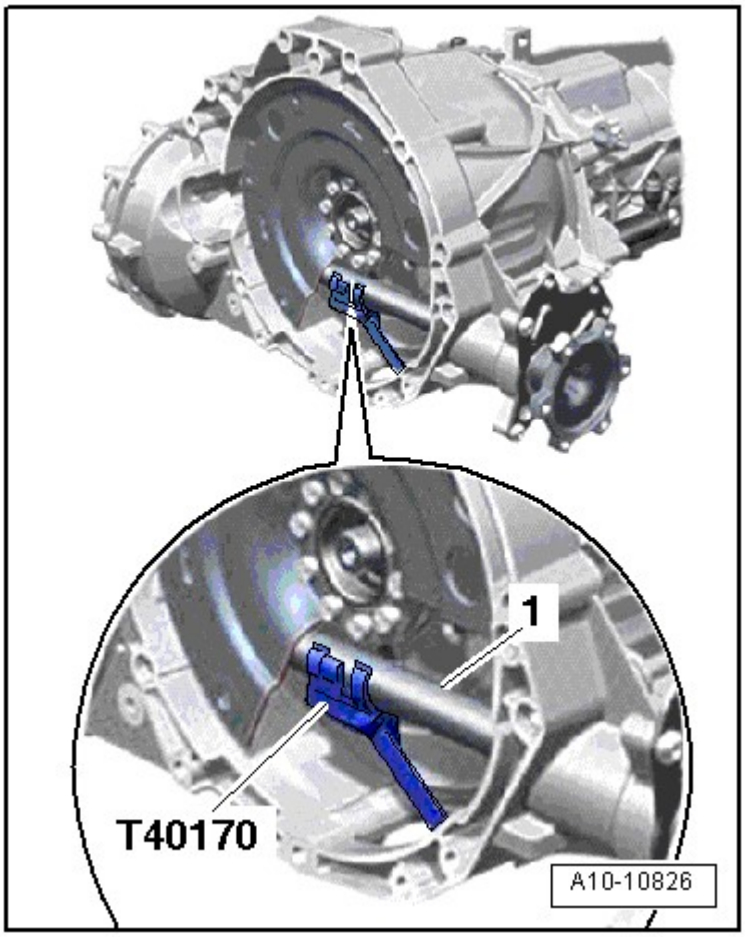

Fig. 52: Identifying Transportation Lock T40170
Courtesy of AUDI OF AMERICA, LLC

NOTE: **The following step is necessary only if there is a drive plate with mounting pins -2- installed.**

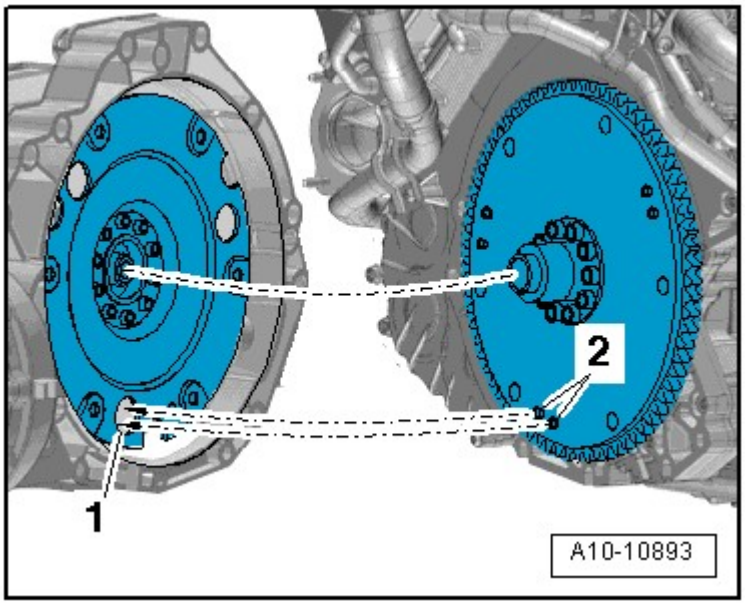

Fig. 53: Aligning Drive Plate To Clutch Module
Courtesy of AUDI OF AMERICA, LLC

-- Align the drive plate to the clutch module so the mounting pins -2- (if equipped) on the drive plate can engage in the large holes -1- on the clutch module.

CAUTION: The clutch will not function properly if it is installed incorrectly.

- **If the drive plate mounting bolts -2- are not in the clutch module hole -1-, the clutch will not function properly.**

NOTE: **The bolt -2- attaches the starter to the transmission and has an additional spacer sleeve -arrow-.**

Pay attention to the spacer sleeve -arrow- with removing or installing the engine. The spacer sleeve must be inserted between the starter and the transmission.

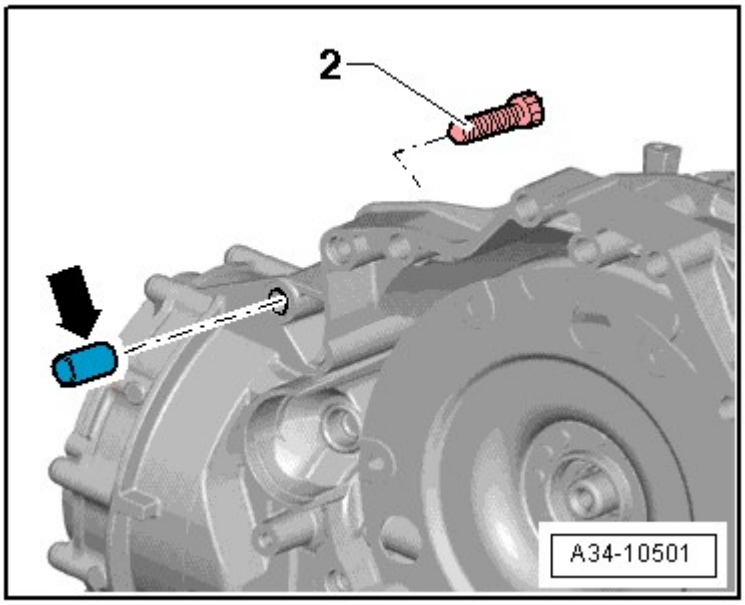

Fig. 54: Identifying Transmission Bolt & Spacer
Courtesy of AUDI OF AMERICA, LLC

-- Attach the transmission to the engine and tighten the bolts -7 through 11-. For the correct tightening specifications, refer to **ENGINE, INSTALLING**.

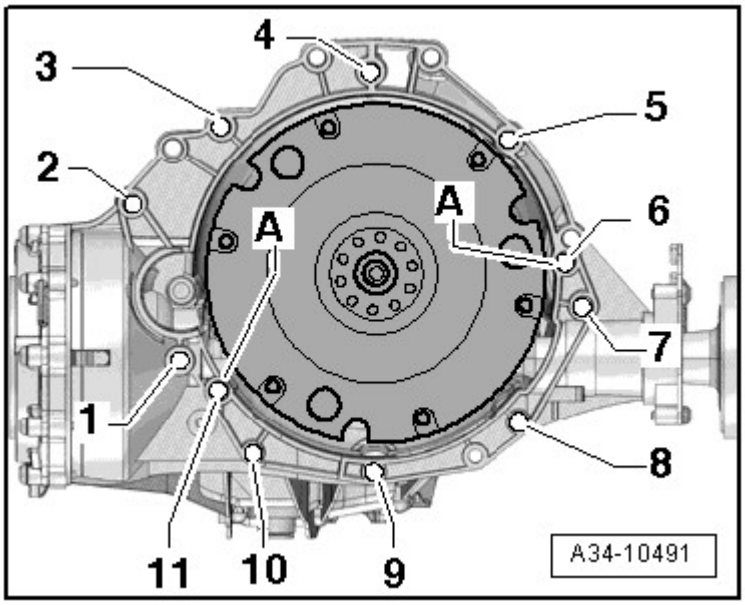

Fig. 55: Mounting Transmission To Engine
Courtesy of AUDI OF AMERICA, LLC

-- Release the tension on the 10-222 A spindles.

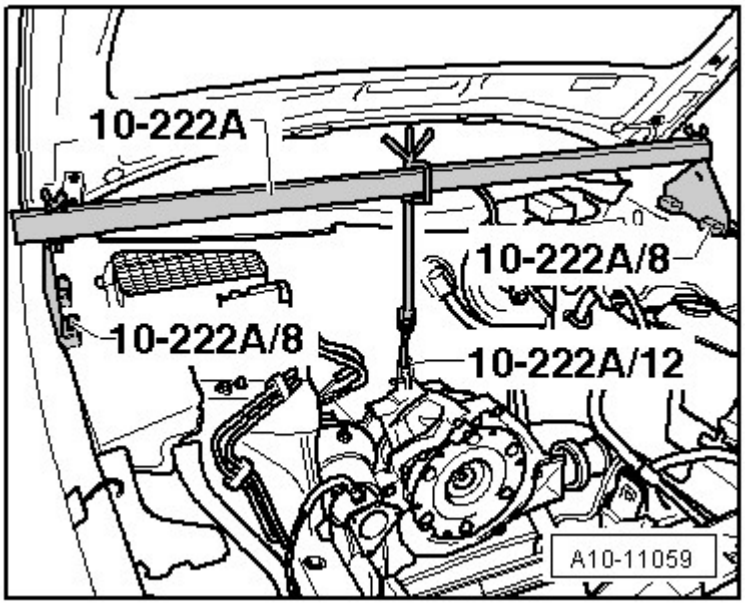

Fig. 56: Identifying Adapter Installed On Left And Right Strut Tower
Courtesy of AUDI OF AMERICA, LLC

-- Lower the VAS 6100 and mount the engine and transmission onto the engine mount.

-- Install the left and right engine mount bolts -1-.

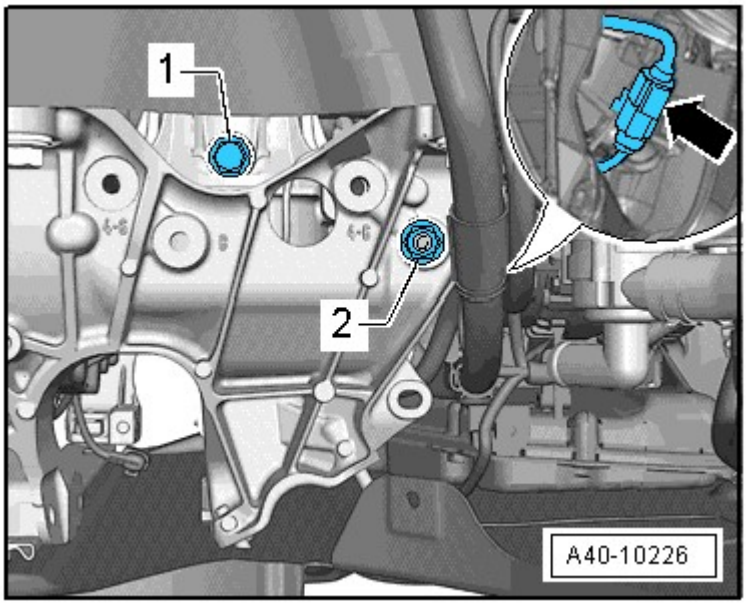

Fig. 57: Disconnecting Left Electrohydraulic Engine Mount Solenoid Valve
Courtesy of AUDI OF AMERICA, LLC

-- Remove the VAS 6100 and 2024 A.

-- Install and tighten the engine/transmission bolts -1 through 6-.

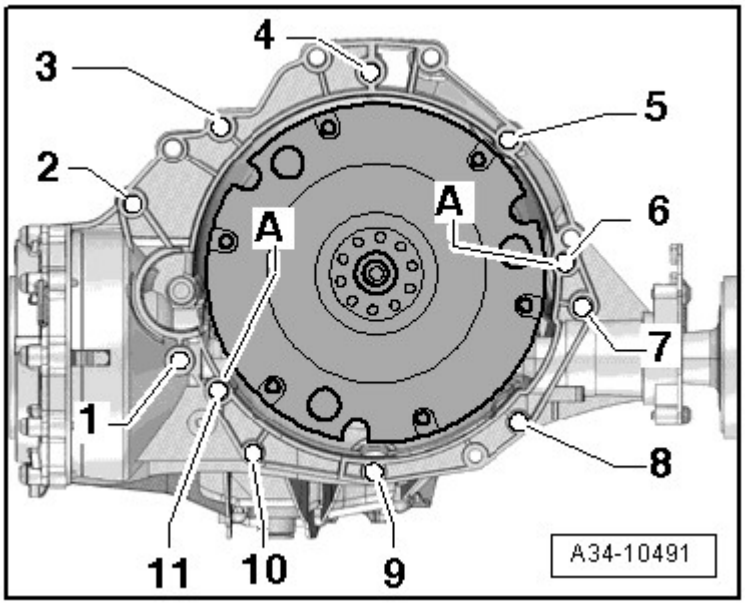

Fig. 58: Mounting Transmission To Engine
Courtesy of AUDI OF AMERICA, LLC

NOTE: Ignore -A-.

-- Remove the T40170 and the T40169.

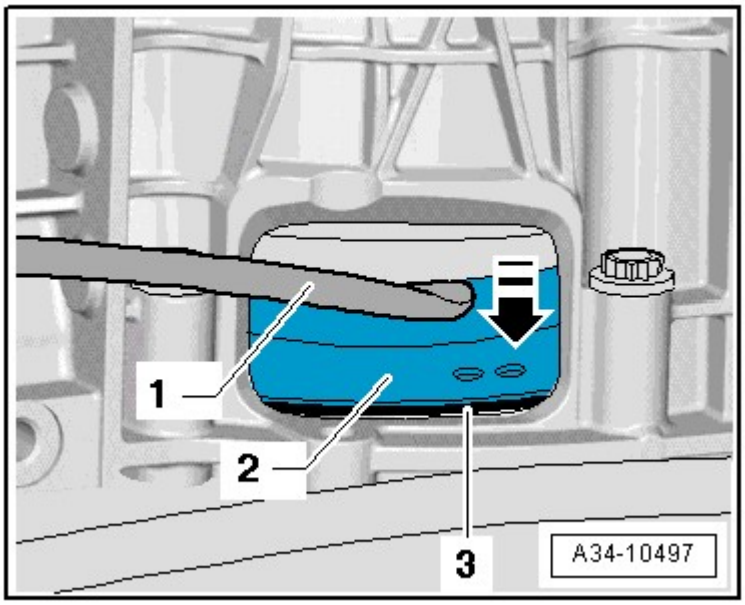

Fig. 59: Pressing Torque Converter
Courtesy of AUDI OF AMERICA, LLC

NOTE: The following procedure is necessary to assure that the clutch module contacts the drive plate evenly and does not get bent.

-- Press the clutch module -2- slightly against the drive plate -3- using a pry bar -1- in direction of -arrow-.

Tightening Sequence - Clutch Module to the Drive Plate

-- Install the first bolt -arrow- hand-tight.

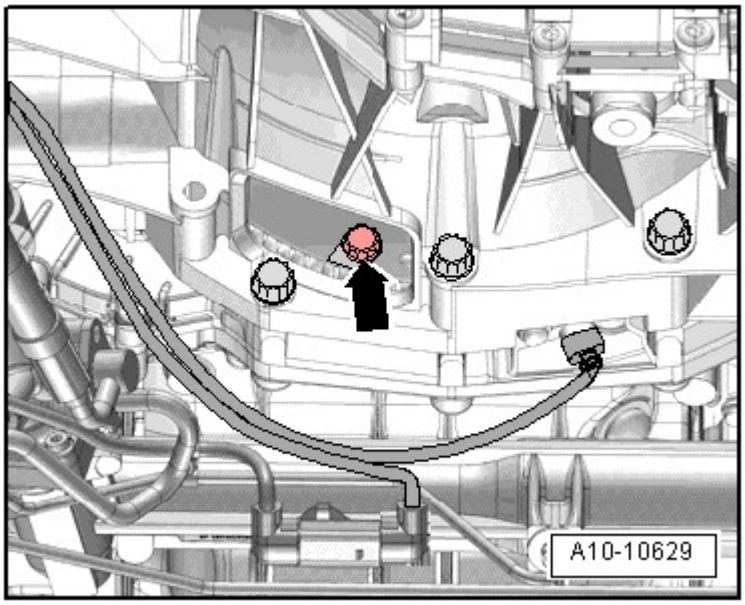

Fig. 60: Identifying Clutch Module First Bolt Installation Location
Courtesy of AUDI OF AMERICA, LLC

-- Turn the crankshaft another 120° in the direction of engine rotation and install the second bolt hand-tight.

-- Turn the crankshaft again 120° in the direction of engine rotation.

-- Tighten the third bolt to the tightening specification. Refer to **Description and Operation** .

-- Tighten the remaining bolts to the tightening specification.

Further installation is performed in reverse order.

-- Install the starter. Refer to **Removal and Installation** .

-- Install the catalytic converter. Refer to **CATALYTIC CONVERTER** .

-- Install the front exhaust pipe/front muffler. Refer to **FRONT EXHAUST PIPE AND FRONT MUFFLER** .

-- Install exhaust system free of stress. Refer to **EXHAUST SYSTEM, ALIGNING** .

-- Install A/C compressor. Refer to **Removal and Installation** .

-- Install the ribbed belt. Refer to **RIBBED BELT** .

-- Electrical connections and routing. Refer to Wiring Diagram.

-- Install Engine Control Module (ECM). Refer to **Removal and Installation** .

-- Install the electrical wires, terminal 30 wire junction 2 -TV22- and the engine compartment E-box cover. Refer to **Removal and Installation** .

-- Install the tower brace. Refer to **Removal and Installation** .

-- Install the washer fluid reservoir filler tube. Refer to **Removal and Installation** .

-- Follow procedures after connecting the battery. Refer to **Removal and Installation** .

CAUTION: Risk of destroying control modules with excess voltage.

- **Do not use a battery charger for starting assistance!**

-- Install the air filter housing. Refer to **Removal and Installation** .

-- Install the lock carrier in service position. Refer to **Description and Operation** .

Check the oil level. Refer to **MAINTENANCE PROCEDURES** .

-- Fill with coolant. Refer to **Filling** .

NOTE: Do not use drained coolant in the following situations:

If the cylinder head or cylinder block was replaced.

If the coolant is contaminated.

-- Install the noise insulation and the wheel housing liners. Refer to **Removal and Installation** .

ENGINE MOUNT

NOTE: The following describes the work procedure on the engine mount.

NOTE: Only replace engine mounts in pairs on the left and right.

The retaining plates for them must also be replaced.

Special tools and workshop equipment required

- Engine Support Bridge 10 - 222 A

Removing

-- Remove the engine cover -arrows-.

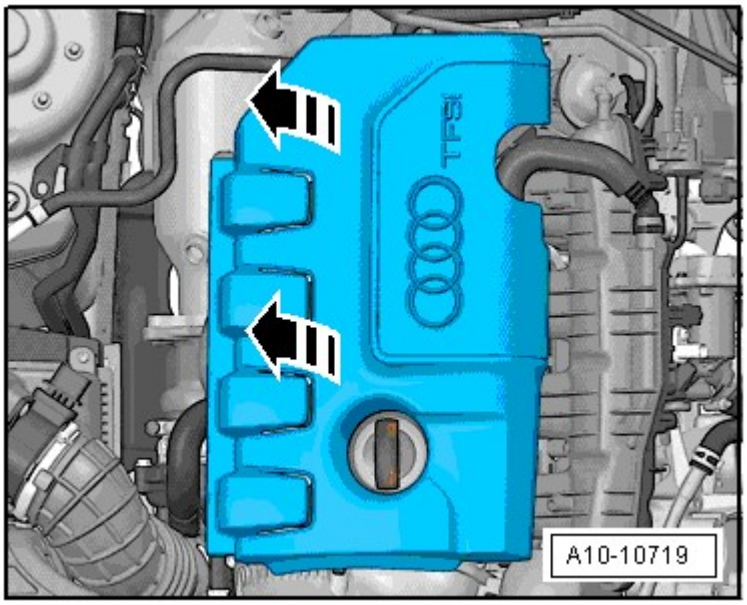

Fig. 61: Identifying Engine Cover
Courtesy of AUDI OF AMERICA, LLC

-- Remove the strut tower brace. Refer to **Removal and Installation** .

-- Position the 10 - 222 A on the left and right suspension strut tower as shown in the illustration.

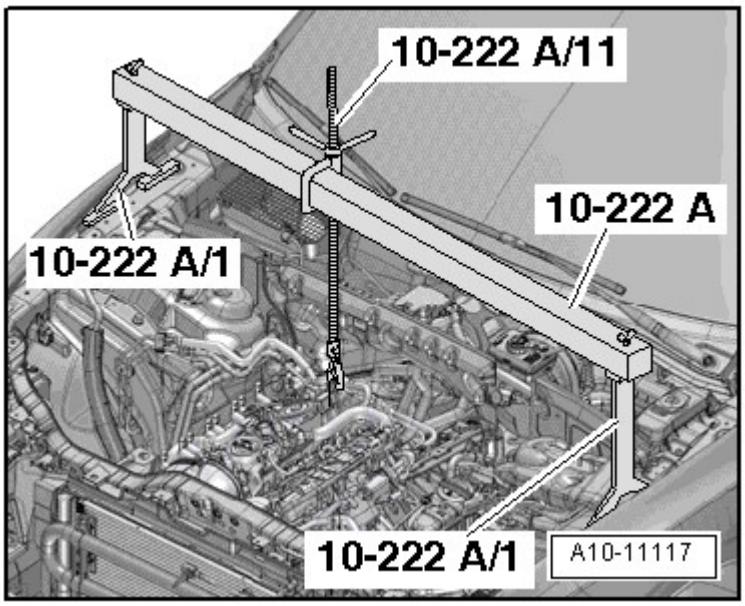

Fig. 62: Positioning 10 - 222 On Left And Right Suspension Strut Tower
Courtesy of AUDI OF AMERICA, LLC

-- Engage the spindle 10 - 222 A /11 on the rear engine lifting eye.

-- Lightly pretension the engine using the spindle.

-- Remove the left front wheel.

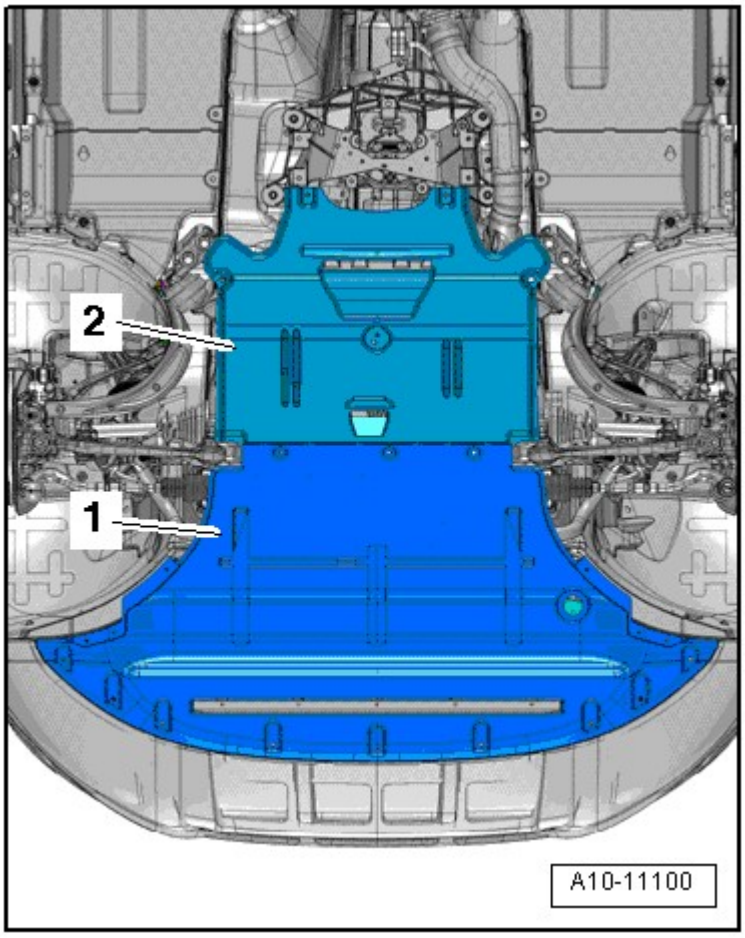

Fig. 63: Identifying Noise Insulation
Courtesy of AUDI OF AMERICA, LLC

-- Remove the front noise insulation -1-. Refer to **Description and Operation** .

-- Remove the left front wheel housing liner. Refer to **Removal and Installation** .

-- Remove the nut -2- and free up the bracket -1-.

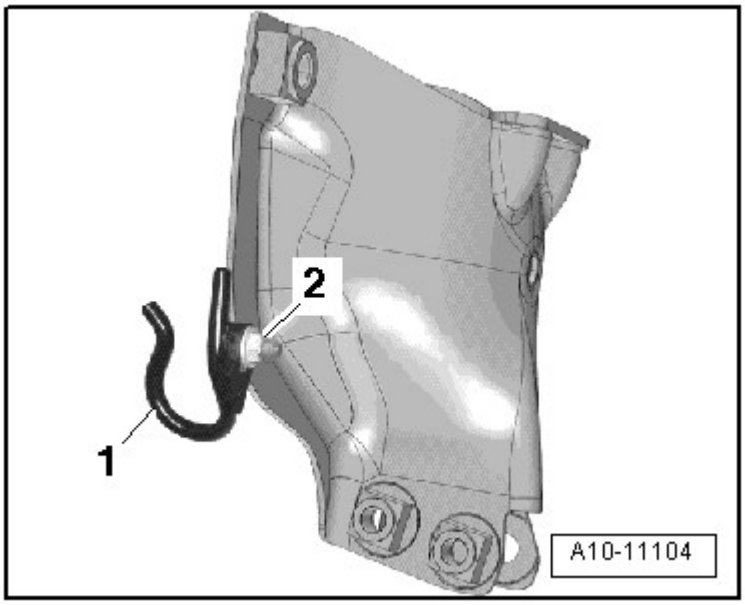

Fig. 64: Identifying Power Steering Fluid Hose Bracket For Vehicles With Hydraulic Power Steering - Tightening Specification
Courtesy of AUDI OF AMERICA, LLC

-- Disconnect and free up the connector -3- for the left electron-hydraulic engine mount solenoid valve -N144-.

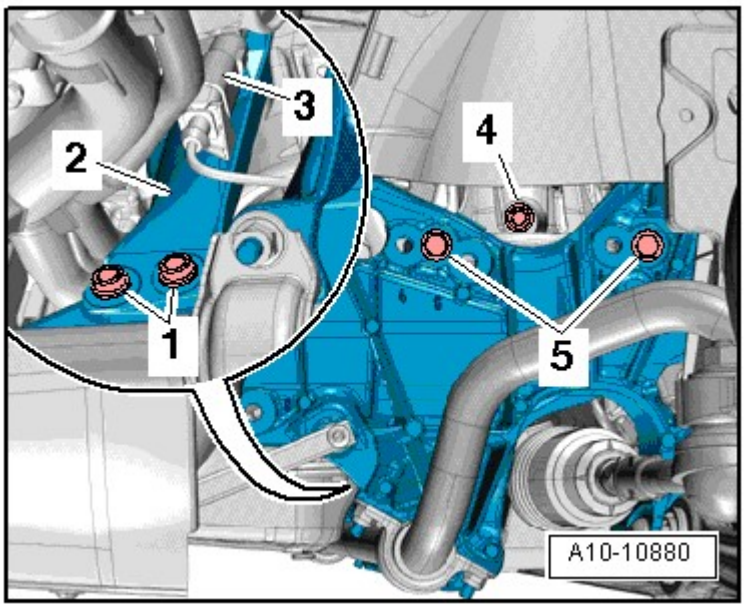

Fig. 65: Identifying Left And Right Engine Mount Bolts
Courtesy of AUDI OF AMERICA, LLC

-- Remove the engine mount bolts -1, 4 and 5-.

-- Move the engine mount retaining plate -2- to the side.

-- Remove the engine mount.

Installing

- For the correct tightening specifications, refer to **SUBFRAME MOUNT OVERVIEW**.

Install in reverse order of removal. Note the following:

NOTE: Replace bolts which have been tightened to an additional torque.

-- Install the wheel housing liner and noise insulation. Refer to **Removal and Installation** .

-- Mount the front wheel. Refer to **Removal and Installation** .

-- Install the tower brace. Refer to **Removal and Installation** .

SPECIAL TOOLS

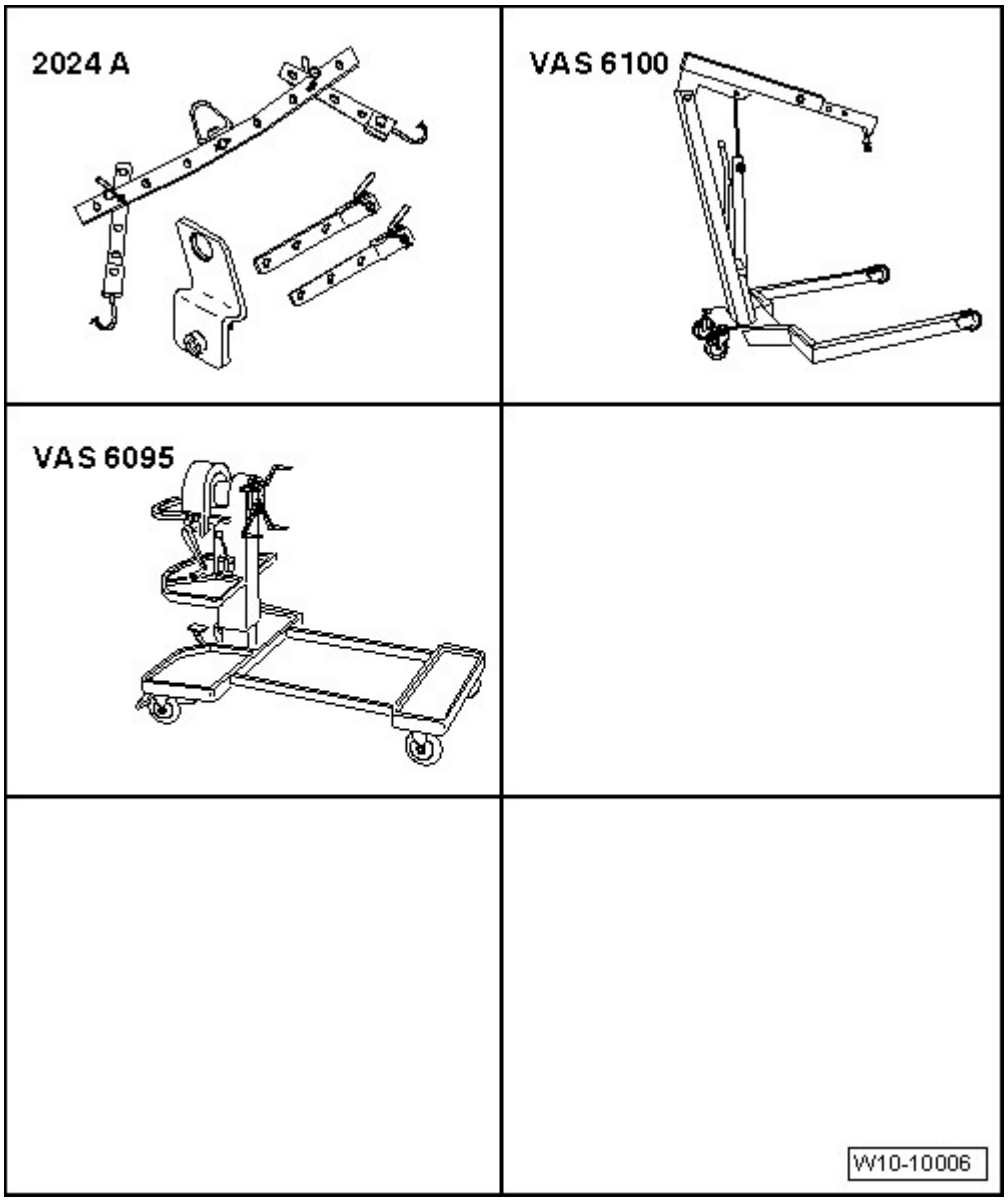

Fig. 66: Identifying Special Tools -- Engine, Securing To Assembly Stand
Courtesy of AUDI OF AMERICA, LLC

Special tools and workshop equipment required

- Engine Sling 2024 A
- Shop Crane VAS 6100
- Engine and Transmission Holder VAS 6095

Special tools and workshop equipment required

- Counter Hold Tool 10 - 201

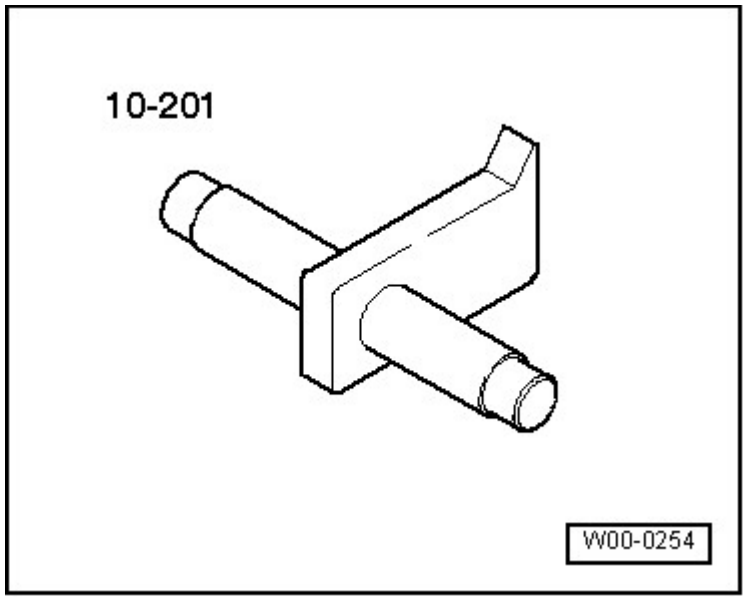

Fig. 67: Identifying Counter-Holder Tool 10 - 201
Courtesy of AUDI OF AMERICA, LLC

- Engine Support Bridge 10 - 222 A

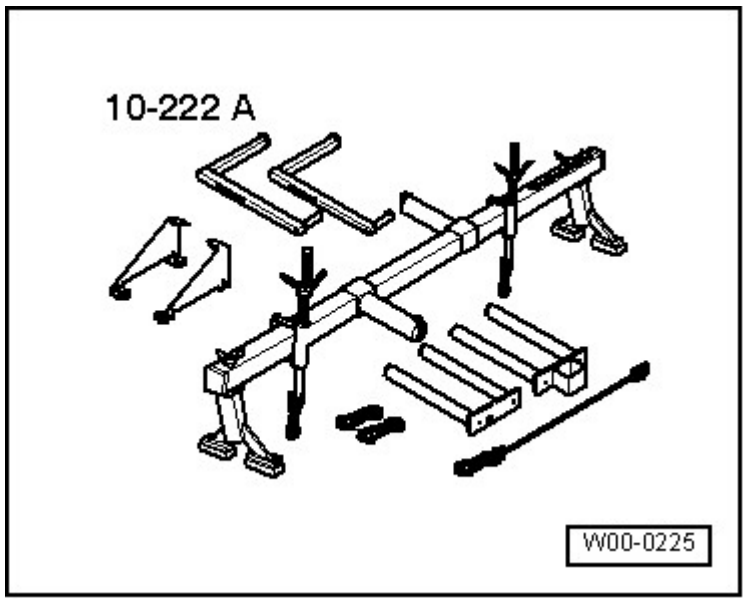

Fig. 68: Identifying Engine Support Bridge 10 - 222 A
Courtesy of AUDI OF AMERICA, LLC

- Shackle 10-222 A/12

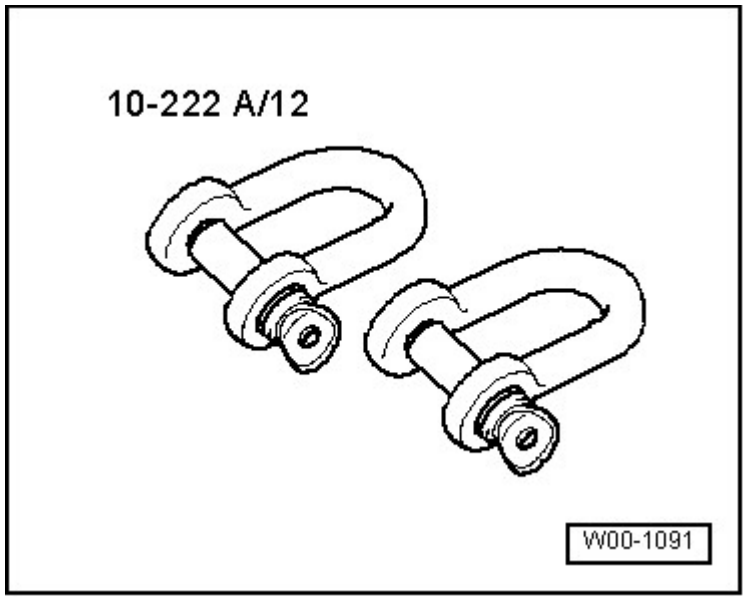

Fig. 69: Identifying Shackle 10 - 222 A/12
Courtesy of AUDI OF AMERICA, LLC

- Pry Lever - Rmv Outside Mirror 80 - 200

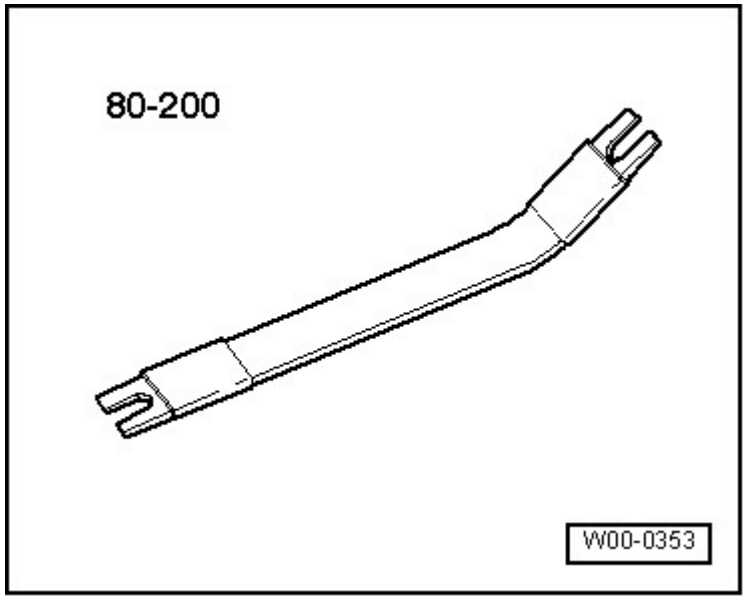

Fig. 70: Identifying Pry Lever 80-200
Courtesy of AUDI OF AMERICA, LLC

- Counter Hold Tool T10355 for vehicles with a DSG transmission

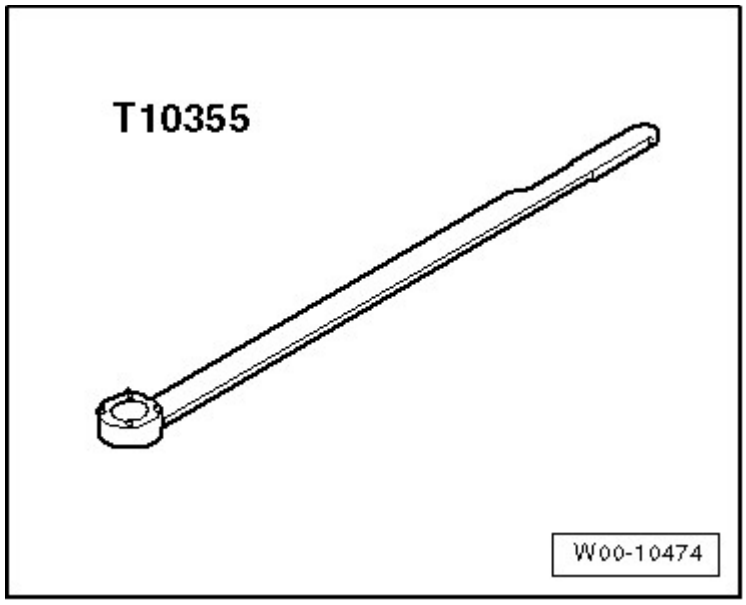

Fig. 71: Identifying Counter-Holder Tool T10355
Courtesy of AUDI OF AMERICA, LLC

- Locking Tool T40098

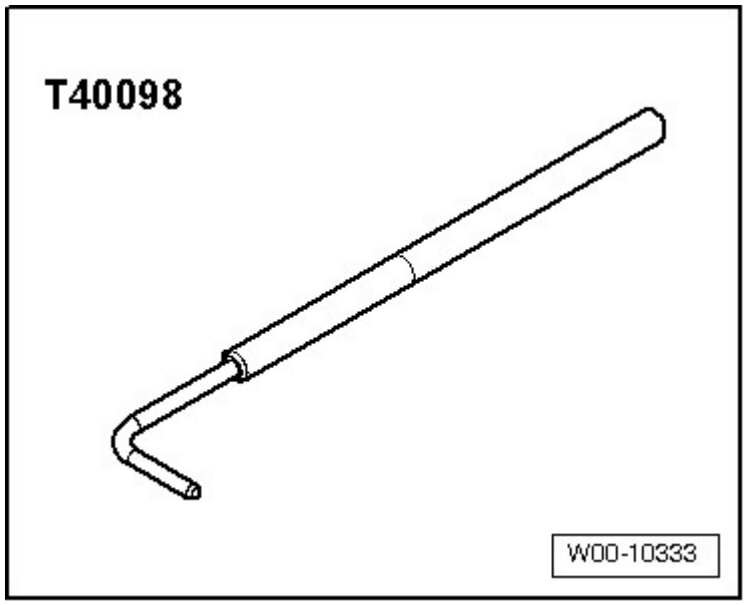

Fig. 72: Identifying Locking Tool T40098
Courtesy of AUDI OF AMERICA, LLC

- Assembly Aid T40169

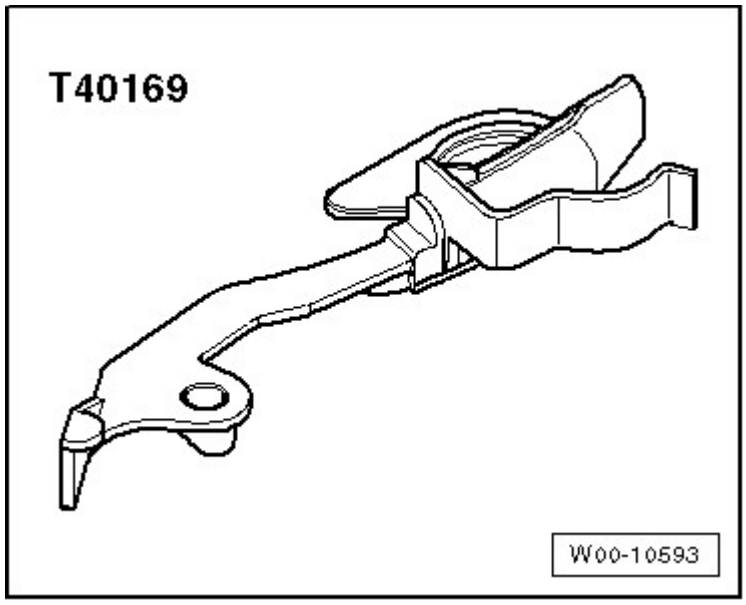

Fig. 73: Identifying Assembly Aid T40169
Courtesy of AUDI OF AMERICA, LLC

- Transportation Lock T40170

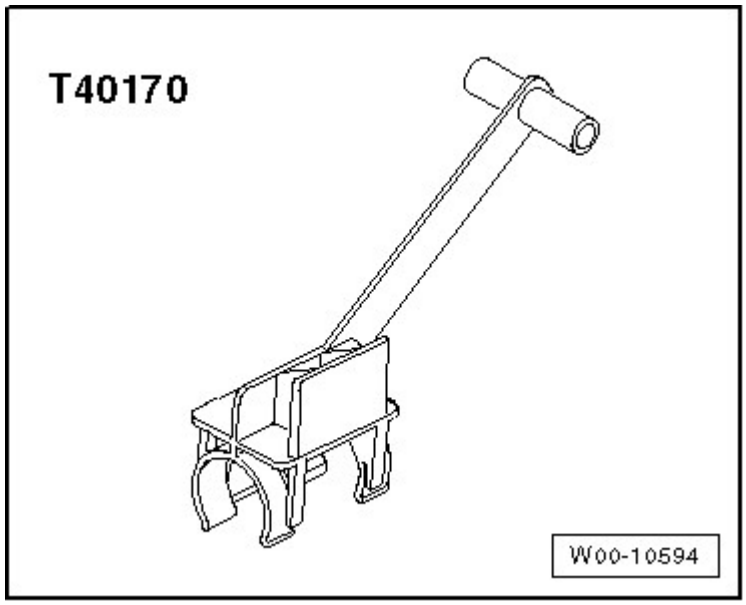

Fig. 74: Identifying Transportation Lock T40170
Courtesy of AUDI OF AMERICA, LLC

- Hose Clip Pliers V.A.G 1921

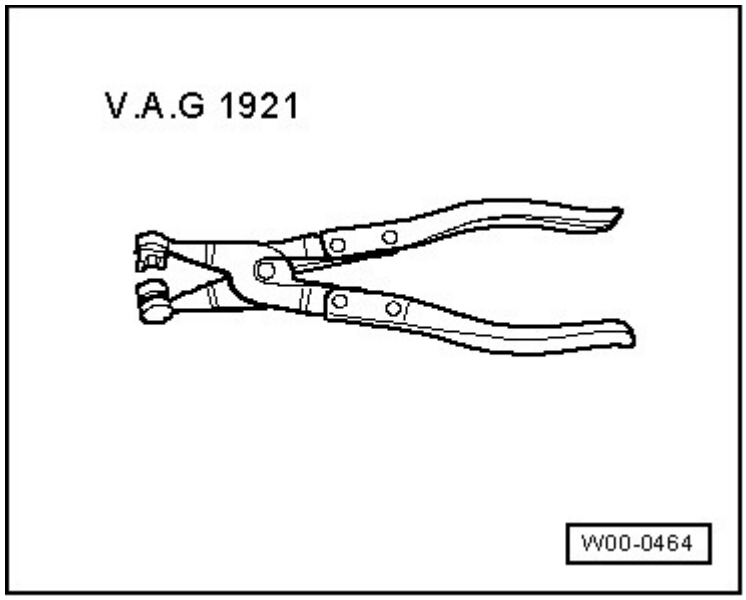

Fig. 75: Identifying Hose Clamp Pliers V.A.G 1921
Courtesy of AUDI OF AMERICA, LLC

- Drip Tray for VAS 6100 VAS 6208

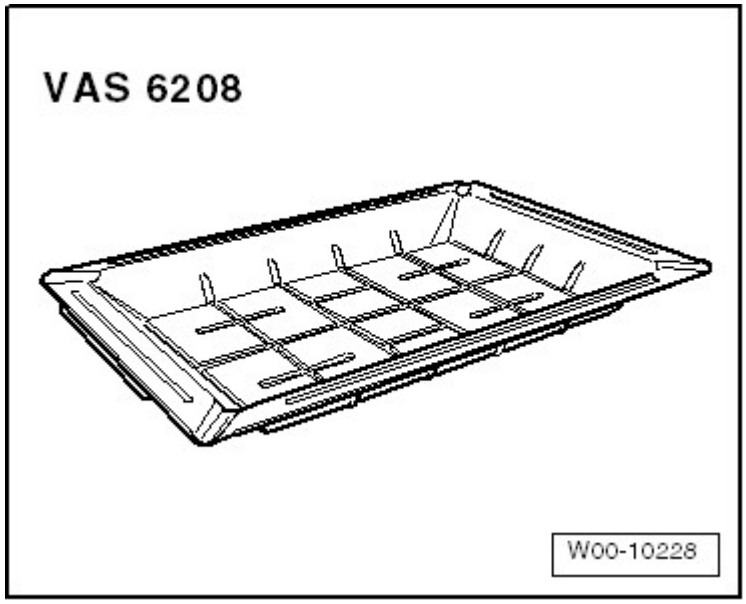

Fig. 76: Identifying VAS 6208, Drip Tray For VAS 6100
Courtesy of AUDI OF AMERICA, LLC

- Not illustrated:
- Gearbox Support T10337
- Release Tool f/ Rev. Light Switch Conn. T40138
- Engine-/Gearbox Jack V.A.G 1383 A

