ENGINE

4.2 Liter 8-Cyl. 5V Engine Mechanical Engine Code(s): BAT, BNK

00 - GENERAL, TECHNICAL DATA

TECHNICAL DATA

Engine number

NOTE:

- **A sticker with "engine code" and "serial number" is affixed to cylinder head cover at right.**
- **The engine code is also located on the vehicle data plate.**
- **The engine number is only visible after a work step.**

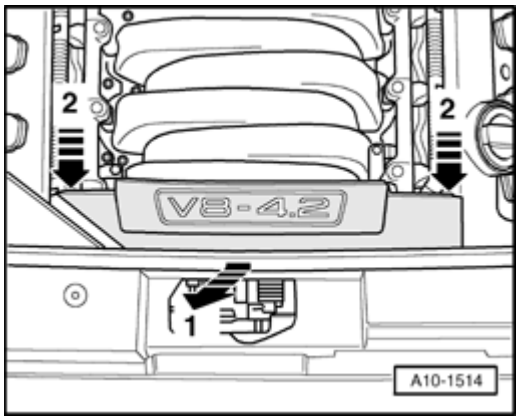

Fig. 1: Removing Front Engine Cover
Courtesy of VOLKSWAGEN UNITED STATES, INC.

- Remove front engine cover - **arrow 1** - and - **arrows 2** -.

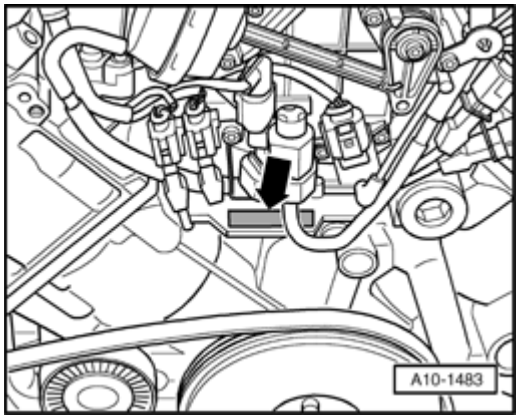

Fig. 2: Locating "Engine Code" And "Serial Number" At Front On Cylinder Block At Top
Courtesy of VOLKSWAGEN UNITED STATES, INC.

Engine number ("engine code" and "serial number") is located at front on cylinder block at top - **arrow** -.

Engine data

Code letters		**BNK**
Displacement	ltr.	4.163
Output	kW at 1/rpm	246/6500
Torque	Nm at rpm	410/3500
Bore	dia. mm	84.5
Stroke	mm	92.8
Compression ratio		11.5
RON		98 * See note
Fuel injection and ignition system		MPI Bosch Motronic
Ignition sequence		1-5-4-8-6-3-7-2
Knock control		Yes
Exhaust gas recirculation		No
Variable intake manifold		Yes
Variable valve timing		Yes
Secondary air injection (AIR)		Yes

* Super unleaded RON 95 is permissible, but with reduced power.

GENERAL REPAIR NOTES

Rules of cleanliness for performing work on fuel injection system

Even minor contaminations can lead to malfunctions in the fuel injection system. Therefore when working on the fuel supply/injection system, pay careful attention to the following rules of cleanliness:

- Before loosening, connections and surrounding areas must be cleaned thoroughly with engine or brake cleaner, and then cleaned area must be dried completely.
- Plug open lines and connections immediately with appropriate protective caps.
- Place parts that have been removed on a clean surface and cover them. Use lint-free cloths.
- Only install clean components: Only unpack replacement parts immediately prior to installation. Do not use parts that have been stored unpackaged (e.g. in tool boxes etc.).
- When the system is open: Do not work with compressed air. Do not move vehicle unless absolutely necessary.

Fuel supply system, checking for leaks

- Let engine run a few minutes at average RPM.
- Switch off ignition.
- Check entire fuel supply system for leaks.

- If there are leaks in spite of correct tightening torque, the corresponding component must be replaced.
- Afterwards, perform test drive, fully depressing accelerator pedal at least once.
- Then, check high pressure areas for leaks again.

10 - ENGINE - ASSEMBLY

ENGINE, REMOVING AND INSTALLING

Engine, removing

NOTE:

- **The engine is removed downward with transmission and subframe.**
- **All cable ties which are opened or cut open when removing engine, must be replaced in the same position when installing engine.**
- **Drained coolant must be stored in a clean container for disposal or reuse.**

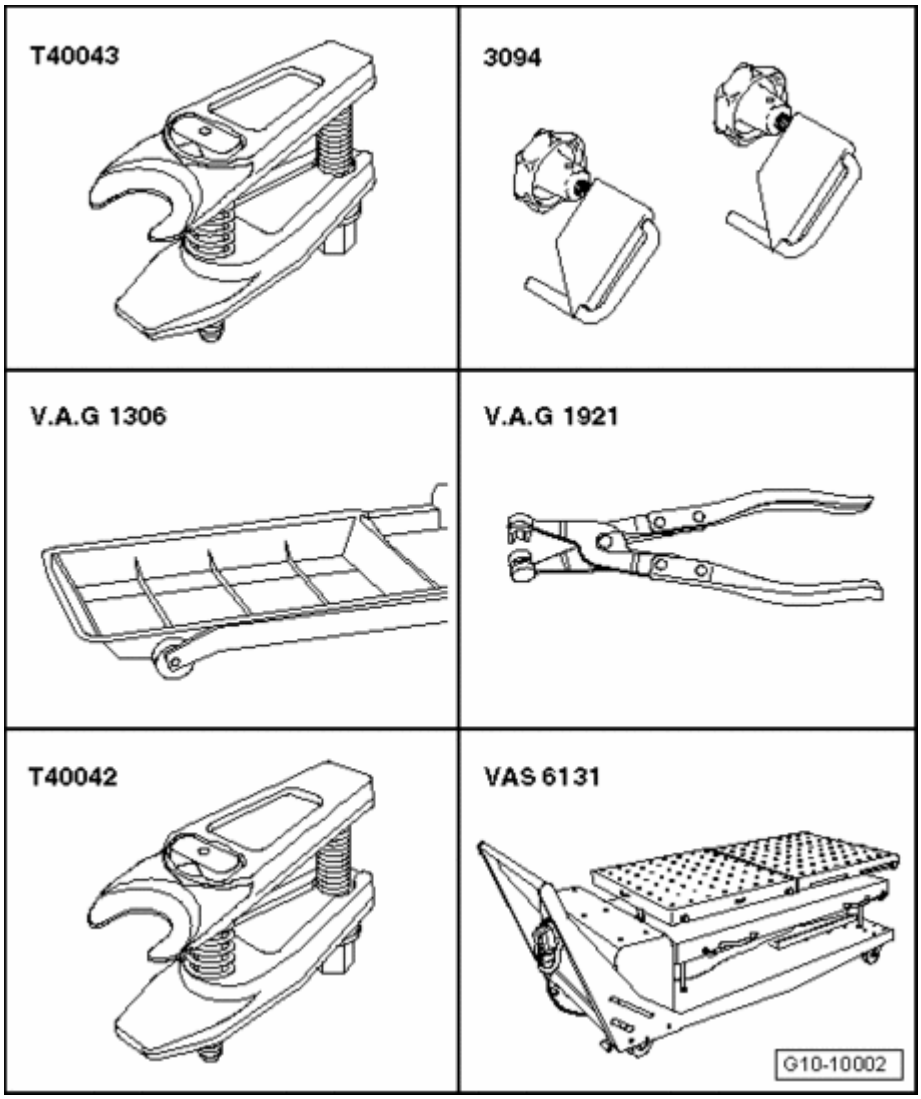

Fig. 3: Identifying Special Tools - Engine, Removing
Courtesy of VOLKSWAGEN UNITED STATES, INC.

Special tools, testers and auxiliary items required

- Ball Joint Puller T40043
- Hose Clamps Up to 25 mm dia. 3094
- Drip tray for workshop crane VAS 6208 or V.A.G 1306
- Hose clamp pliers V.A.G 1921

- Ball Joint Puller T40042
- Scissor lift platform VAS 6131 A with support set for Audi VAS 6131/10

Special tools, testers and auxiliary items required

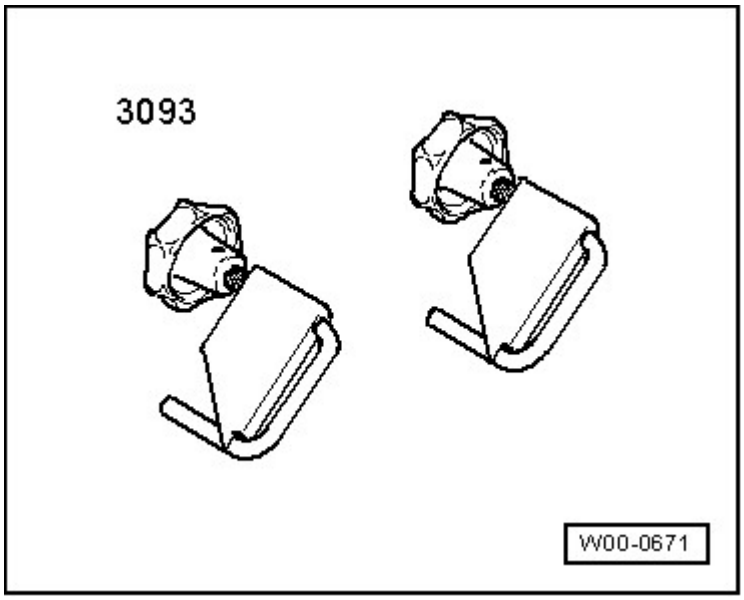

Fig. 4: Hose Clamps 3093
Courtesy of VOLKSWAGEN UNITED STATES, INC.

- Hose Clamps, Up to 40 mm 3093

Work procedure

CAUTION: Before removing engine, secure vehicle against tipping over. For this the luggage compartment must be empty.

CAUTION: Observe safety precautions when disconnecting the battery --> 27 - STARTER, GENERATOR, CRUISE CONTROL .

NOTE:

- **So that the front wheels can still be turned with the battery disconnected, the battery must only be disconnected with ignition key inserted.**

- Remove luggage compartment floor trim.

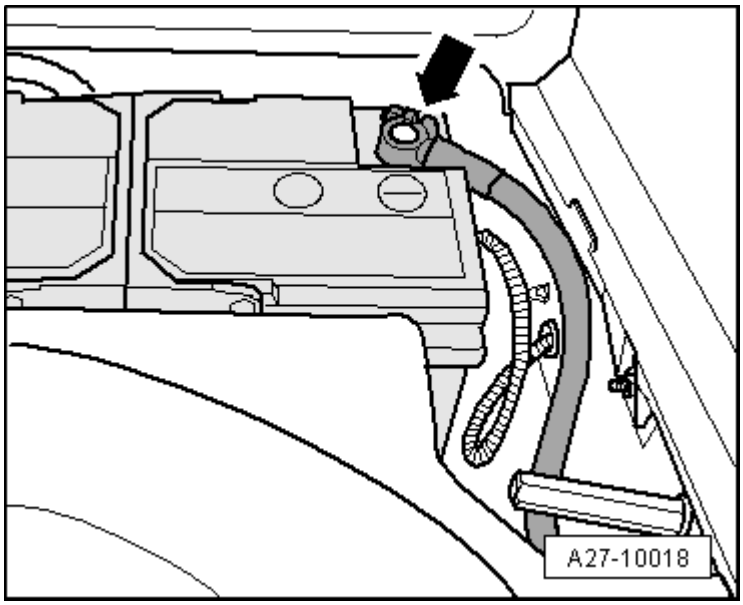

Fig. 5: Disconnecting Ground (GND) Strap At Battery Ground (GND) Terminal
Courtesy of VOLKSWAGEN UNITED STATES, INC.

- Disconnect Ground (GND) strap - **arrow** - at battery.

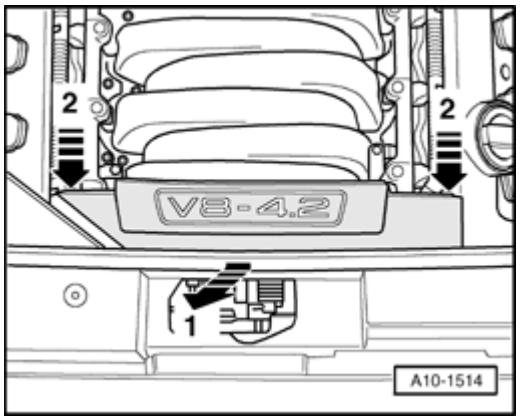

Fig. 6: Removing Front Engine Cover
Courtesy of VOLKSWAGEN UNITED STATES, INC.

- Remove front engine cover - **arrow 1** - and - **arrows 2** -.

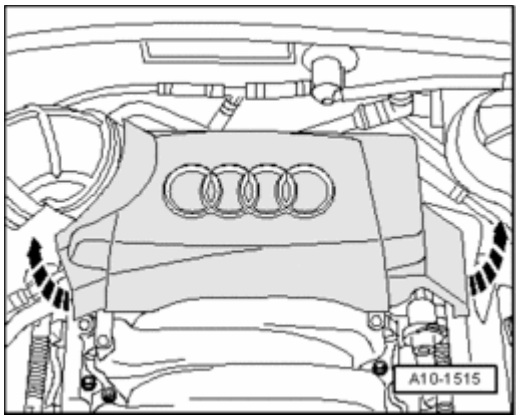

Fig. 7: Removing Rear Engine Cover
Courtesy of VOLKSWAGEN UNITED STATES, INC.

- Remove rear engine cover - **arrows** -.

CAUTION: Cover cap of expansion tank with rag and open carefully, as hot steam i.e. hot coolant may escape when opening.

- Open cap of coolant expansion tank.
- Remove both front wheels.

NOTE:

- **Secure brake discs using a wheel bolts.**

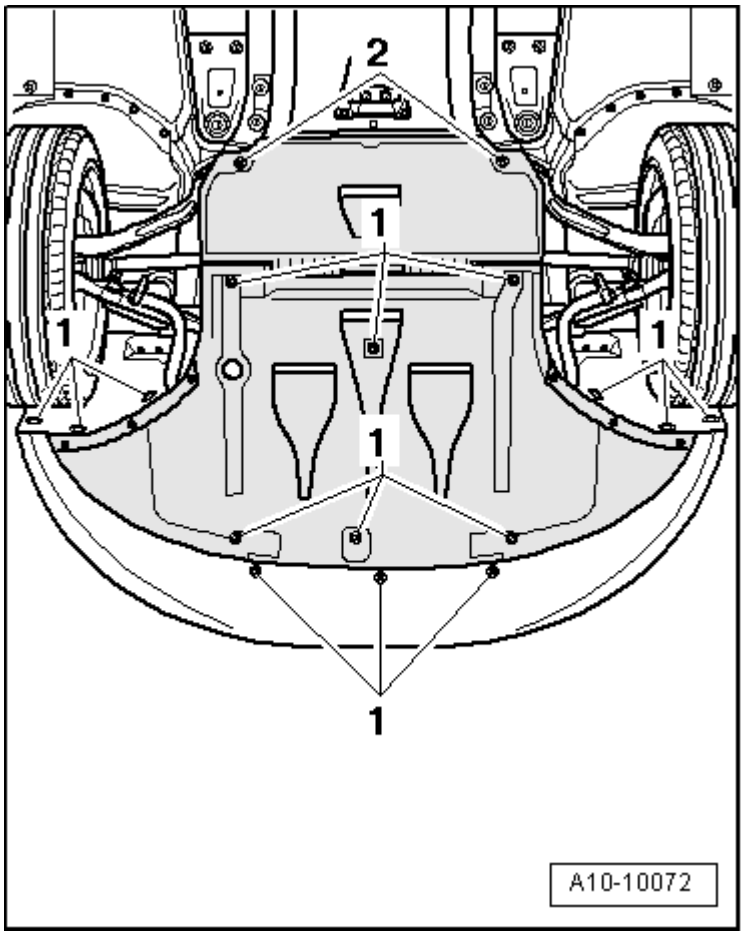

Fig. 8: Identifying Quick-Release Fasteners & Noise Insulation
Courtesy of VOLKSWAGEN UNITED STATES, INC.

- Loosen quick-release fasteners - **1** - and - **2** - and remove noise insulation.
- Place drip tray for workshop crane VAS 6208 under engine.

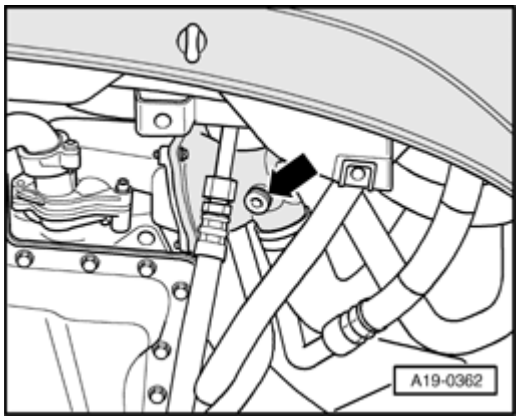

Fig. 9: Removing/Installing Drain Plug On Coolant Thermostat Housing
Courtesy of VOLKSWAGEN UNITED STATES, INC.

- Remove drain plug - **arrow** - on coolant thermostat housing and drain coolant from engine.

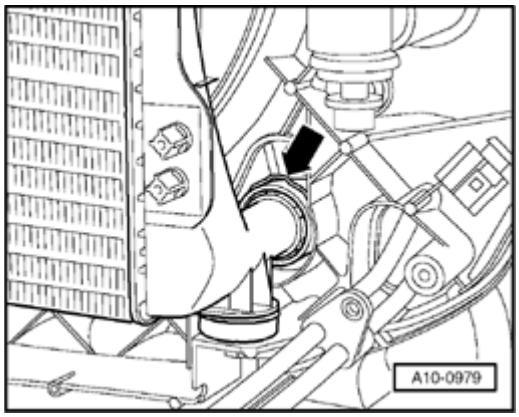

Fig. 10: Disconnecting Lower Coolant Hose From Radiator
Courtesy of VOLKSWAGEN UNITED STATES, INC.

- Disconnect lower coolant hose from radiator - **arrow** - and drain residual coolant.
- Remove bumper --> **63 - BUMPERS** .
- Remove front end --> **50 - BODY - FRONT** .

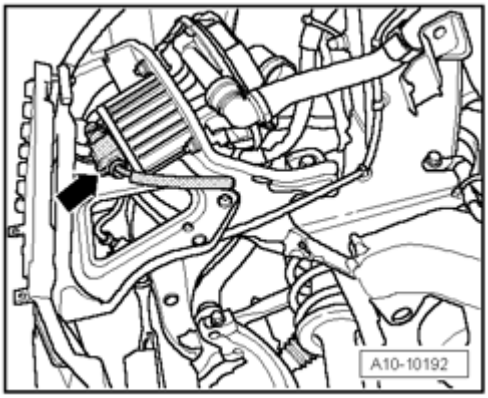

Fig. 11: Disconnecting Connector From Secondary Air Injection Pump And Free Up Wiring
Courtesy of VOLKSWAGEN UNITED STATES, INC.

- Disconnect connector - **arrow** - from secondary air injection pump and free up wiring.

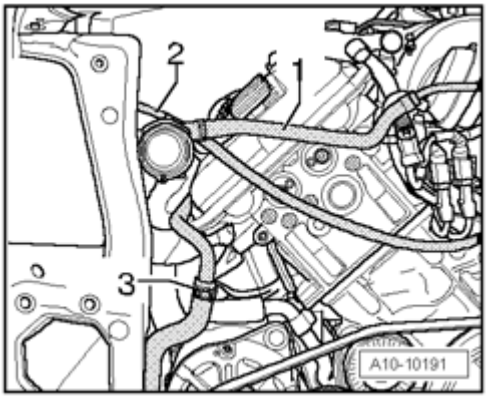

Fig. 12: Identifying Hoses & A/C Line
Courtesy of VOLKSWAGEN UNITED STATES, INC.

- Disconnect coolant hose - **1** - for permanent ventilation.
- Disconnect hose - **2** - for variable intake manifold.
- Disconnect hose - **3** - to Secondary Air Injection (AIR) pump.
- Disconnect A/C line - **1** -.
- Disconnect coolant hose - **2** - from thermostat housing.

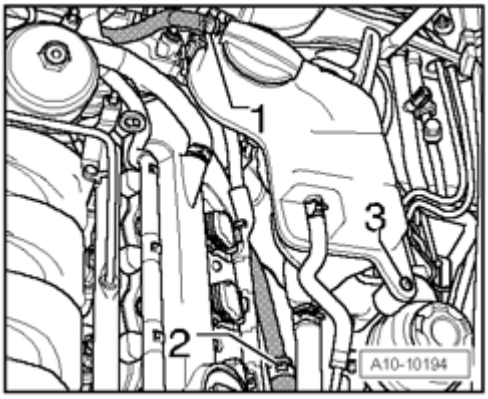

Fig. 13: Identifying Coolant Hoses & Coolant Expansion Tank
Courtesy of VOLKSWAGEN UNITED STATES, INC.

- Disconnect coolant hose - **1** - for permanent ventilation from expansion tank.
- Disconnect hose - **2** - from coolant line.
- Remove coolant expansion tank - **3** -.
- Disconnect electrical connection at Engine Coolant Level (ECL) Warning Switch F66 at bottom of coolant expansion tank.

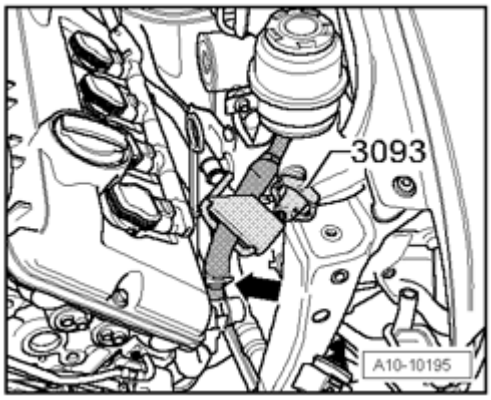

Fig. 14: Disconnecting Hose For Power Steering
Courtesy of VOLKSWAGEN UNITED STATES, INC.

- Clamp off oil line of power steering fluid reservoir with Hose Clamps, Up to 40 mm 3093
- Disconnect hose for power steering - **arrow** -.

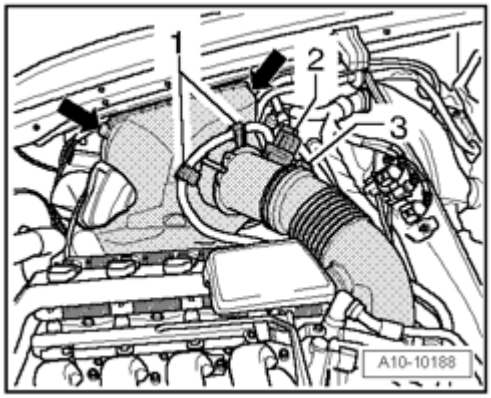

Fig. 15: Disconnecting Mass Air Flow (MAF) Sensor G70 Electrical Harness Connector
Courtesy of VOLKSWAGEN UNITED STATES, INC.

- Unclip fuel hose - **1** -.
- Disconnect electrical connector - **2** - from mass air flow (MAF) sensor.
- Disconnect mass air flow sensor from intake air duct - **3** -.
- Remove upper part of air filter housing with mass air flow (MAF) sensor - **arrows** -.

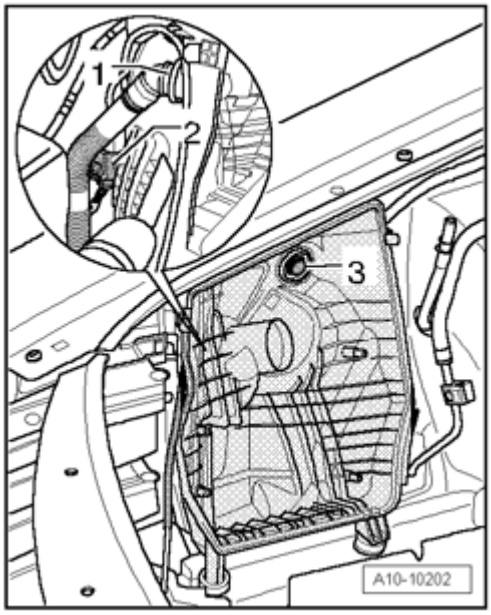

Fig. 16: Identifying Expanding Clip, Hose, And Electrical Harness Connector
Courtesy of VOLKSWAGEN UNITED STATES, INC.

- Separate hose - **1** - for secondary air injection (AIR) system.
- Disconnect electrical connector - **2** - from Air Flap Positioner V63.

- Remove pin from spreader clip - **3** - and remove lower part of air filter housing.

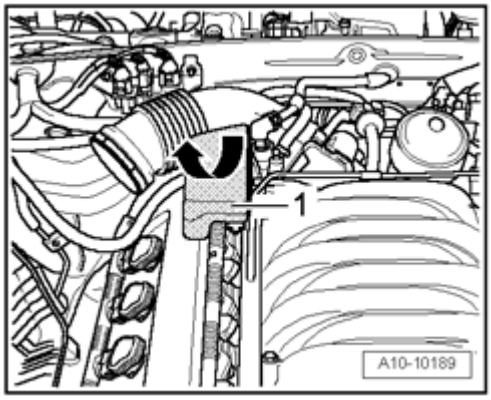

Fig. 17: Removing Resonator
Courtesy of VOLKSWAGEN UNITED STATES, INC.

- Pull resonator - **1** - in direction of - **arrow** - upward and unclip it.

CAUTION: Note rules of cleanliness for working on the fuel injection system --> Rules of cleanliness for performing work on fuel injection system.

CAUTION: Fuel system is under pressure! Before opening the low pressure section of the fuel injection system, wrap a clean rag around the connection and relieve residual pressure by carefully loosening the connection.

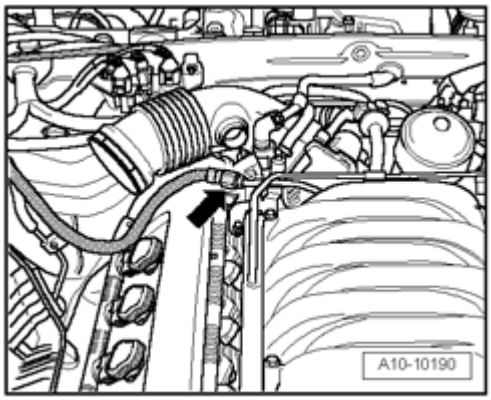

Fig. 18: Disconnecting Fuel Line
Courtesy of VOLKSWAGEN UNITED STATES, INC.

- Disconnect fuel line - **arrow** -.

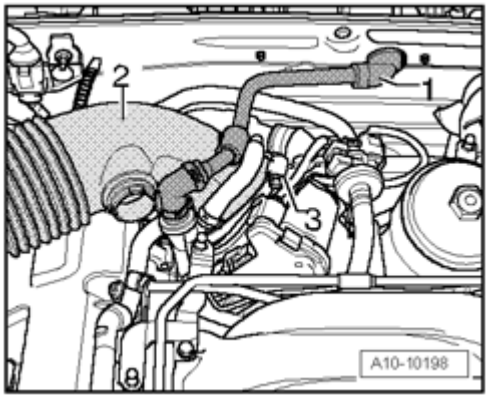

Fig. 19: Identifying Vacuum Hose, Intake Hose & Clamp
Courtesy of VOLKSWAGEN UNITED STATES, INC.

- Disconnect vacuum hose - **1** - for brake booster at bulkhead.
- Remove intake hose - **2** - , thereby loosening clamp - **3** -.

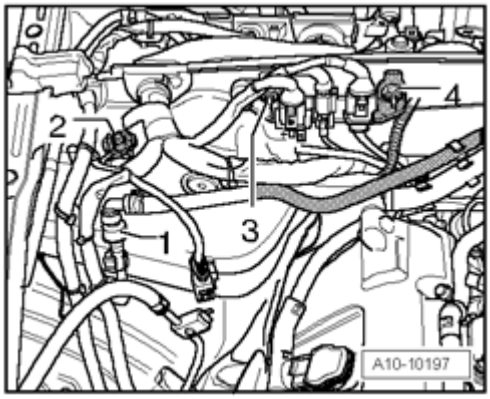

Fig. 20: Identifying Vacuum Hose & Ground (GND) Wire
Courtesy of VOLKSWAGEN UNITED STATES, INC.

- Disconnect vacuum hose - **1** - to EVAP canister.
- Remove Ground (GND) wire - **2** - on right strut tower.
- Remove nuts - **1 and 2** - and remove right bracket for harness connectors from bulkhead.

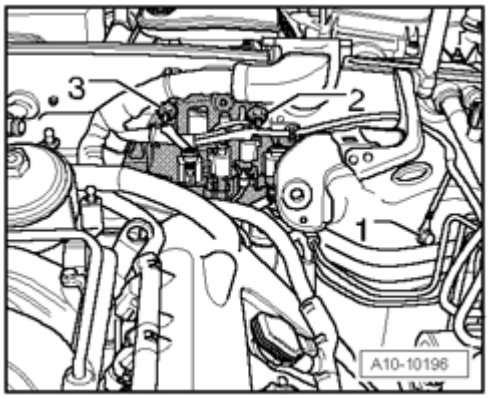

Fig. 21: Identifying Ground (GND) Wire & Nuts
Courtesy of VOLKSWAGEN UNITED STATES, INC.

- Remove Ground (GND) wire - **1** - on left strut tower.
- Remove nuts - **2 and 3** - and remove left bracket for harness connectors from bulkhead.

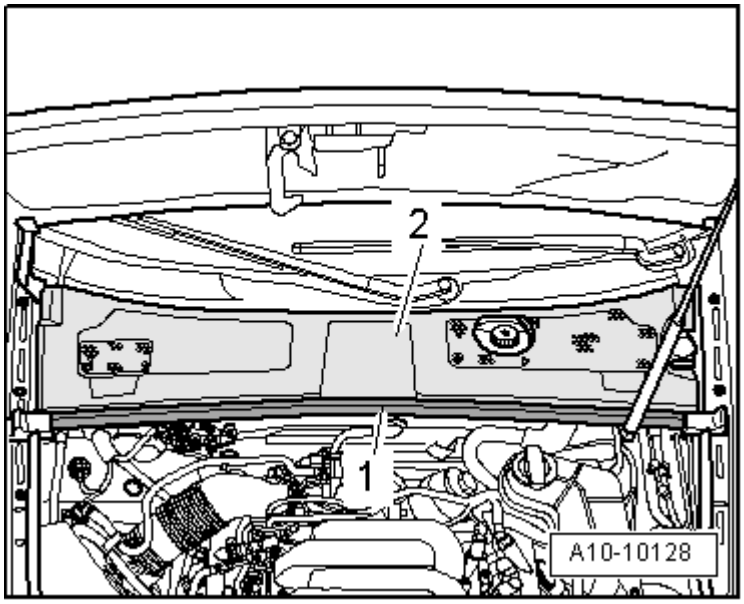

Fig. 22: Removing Rubber Seal For Plenum Chamber Cover & Plenum Chamber Cover
Courtesy of VOLKSWAGEN UNITED STATES, INC.

- Remove rubber seal - **1** - for plenum chamber cover.
- Remove plenum chamber cover - **2** -.
- Pry off caps on wiper arms with a screwdriver and remove nuts.
- Pull off and remove wiper arms from wiper axles.

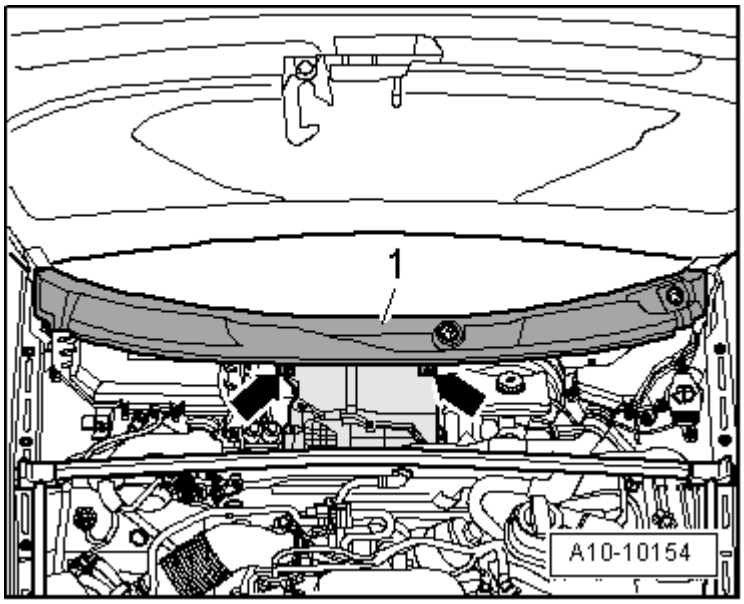

Fig. 23: Removing Bolts For Cowl Grill
Courtesy of VOLKSWAGEN UNITED STATES, INC.

- Remove bolts - **arrows** - for cowl grill - **1** -.
- Remove cowl grill from windshield.

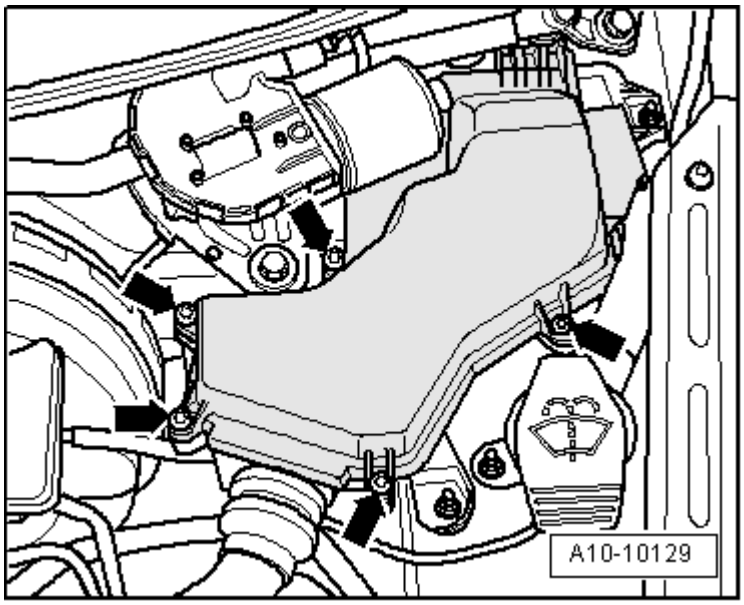

Fig. 24: Removing Bolts And Cover Form E-Box At Left In Engine Compartment
Courtesy of VOLKSWAGEN UNITED STATES, INC.

- Remove bolts - **arrows** - and remove cover form E-box at left in engine compartment.

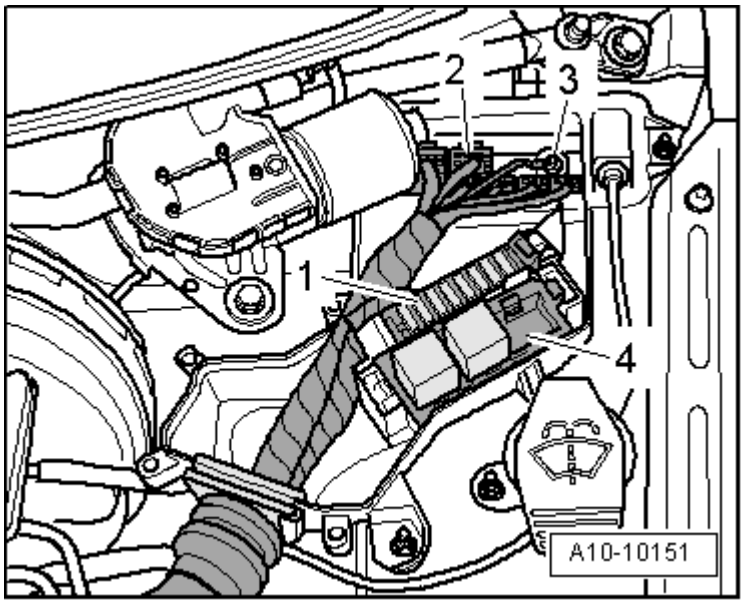

Fig. 25: Identifying Fuse Holder, 3-Socket Relay Carrier, Electrical Wire Connection & Electrical Connections
Courtesy of VOLKSWAGEN UNITED STATES, INC.

- Release retaining tabs and pull fuse holder - **1** - and 3-socket relay carrier - **4** - upward and off.
- Remove electrical wire connection - **3** -.
- Disconnect all electrical connections - **2** - at rear on connector strip.
- Disengage and free up engine wiring harness at E-Box.

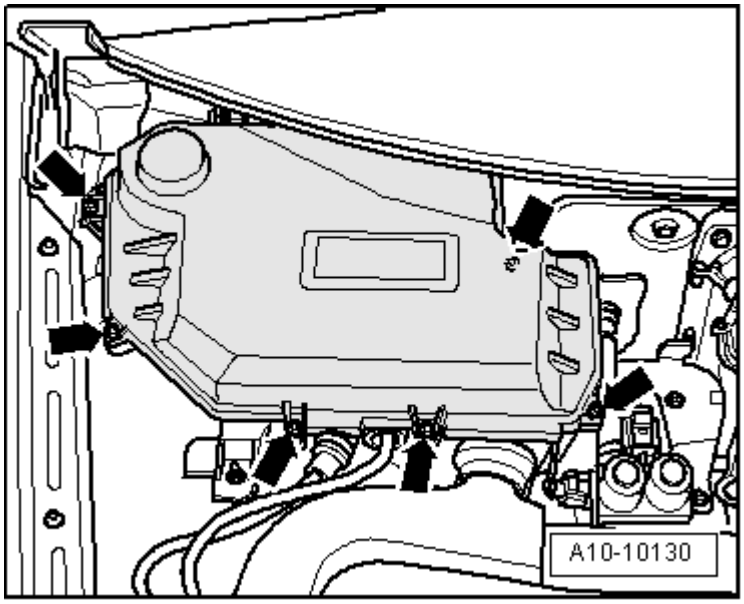

Fig. 26: Removing Bolts And Cover For E-Box At Right In Engine Compartment
Courtesy of VOLKSWAGEN UNITED STATES, INC.

- Remove bolts - **arrows** - and remove cover for E-box at right in engine compartment.

CAUTION: The heater pump valve unit (left of E-box) becomes very hot during operation - Risk of burning!

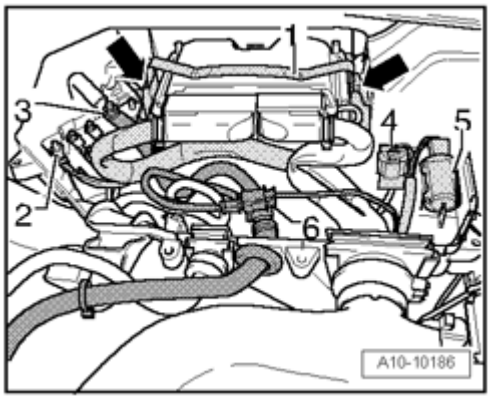

Fig. 27: Prying Off Retaining Clip And Removing ECM From E-Box
Courtesy of VOLKSWAGEN UNITED STATES, INC.

- Carefully pry off retaining clip - **1** - with a screwdriver - **arrows** - and remove ECM from E-box.

NOTE:

- **Engine Control Module (ECM) remains connected at wiring harness.**

- Remove electrical wiring connections - **2** - and - **3** -.
- Disconnect electrical connection - **4** - at rear on connector strip.
- Unclip smoothing capacitor - **5** - from bracket in E-box.
- Disconnect electrical connector - **6** -.

- Unclip relay carrier from E-box.
- Free electrical wiring up to Generator.
- Set both wiring harnesses on engine and secure Engine Control Module (ECM) against falling down.

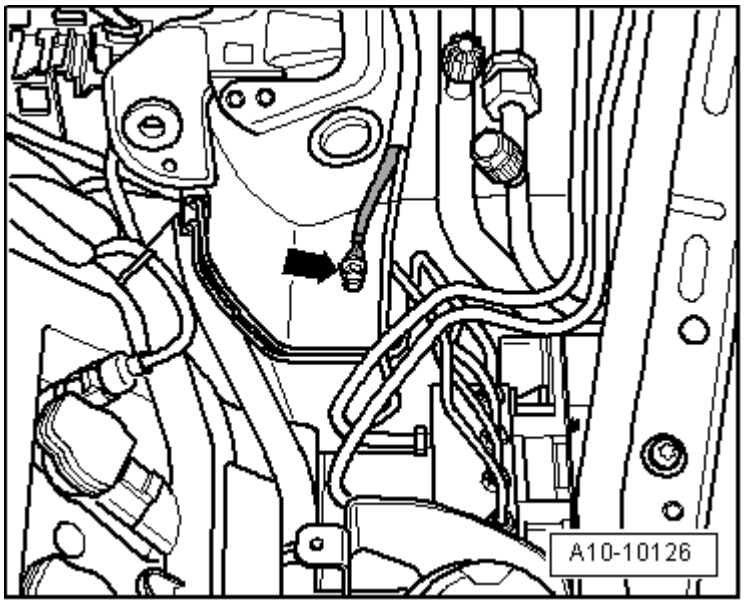

Fig. 28: Removing Ground (GND) Wire On Left Strut Tower
Courtesy of VOLKSWAGEN UNITED STATES, INC.

- Remove Ground (GND) wire - **arrow** - on left strut tower.

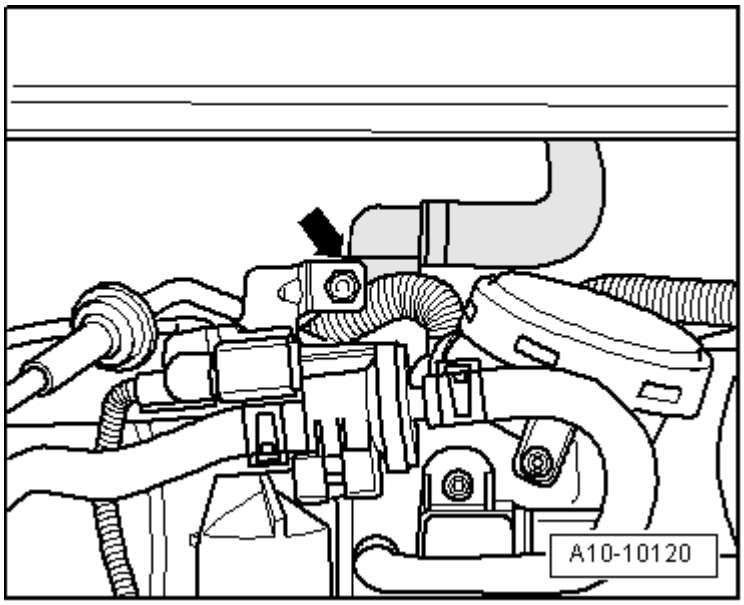

Fig. 29: Disconnecting Coolant Hose To Heater Core On Rear Of Engine
Courtesy of VOLKSWAGEN UNITED STATES, INC.

- Disconnect coolant hose - **arrow** - to heater core on rear of engine.

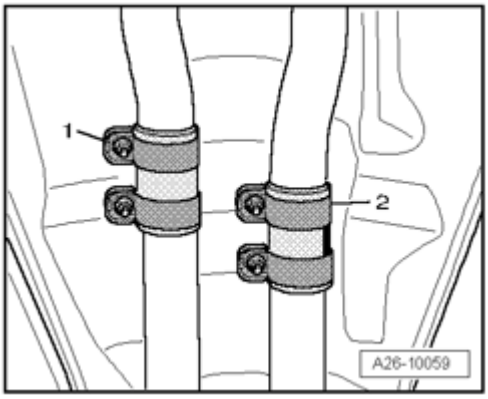

Fig. 30: Loosening Clamping Sleeves
Courtesy of VOLKSWAGEN UNITED STATES, INC.

- Loosen clamping sleeves - **1** - and - **2** -.

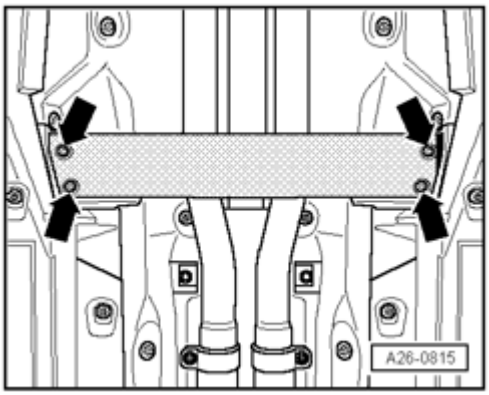

Fig. 31: Removing Front Transverse Beam
Courtesy of VOLKSWAGEN UNITED STATES, INC.

- Remove front transverse beam - **arrows** -.

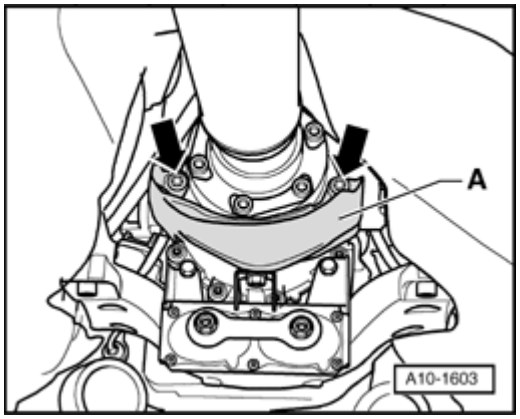

Fig. 32: Removing/Installing Heat Shield For Driveshaft
Courtesy of VOLKSWAGEN UNITED STATES, INC.

- Remove heat shield - **A** - for drive axle - **arrows** -.
- Remove bolts at transmission/driveshaft flange.
- Push driveshaft together with rear final drive. The constant velocity (CV) joints can move axially.

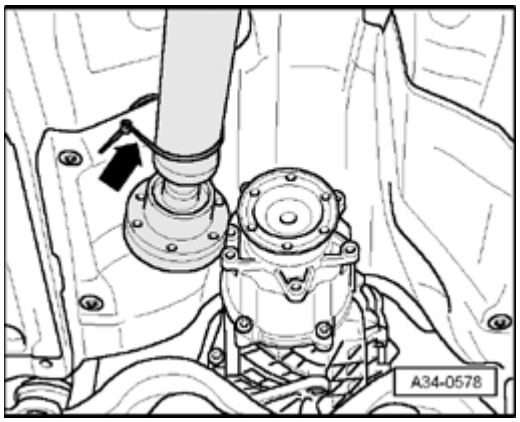

Fig. 33: Drive Shaft Tied To Side, Onto Heat Shield
Courtesy of VOLKSWAGEN UNITED STATES, INC.

- Tie driveshaft up and to side against heat shield - **arrow** -.

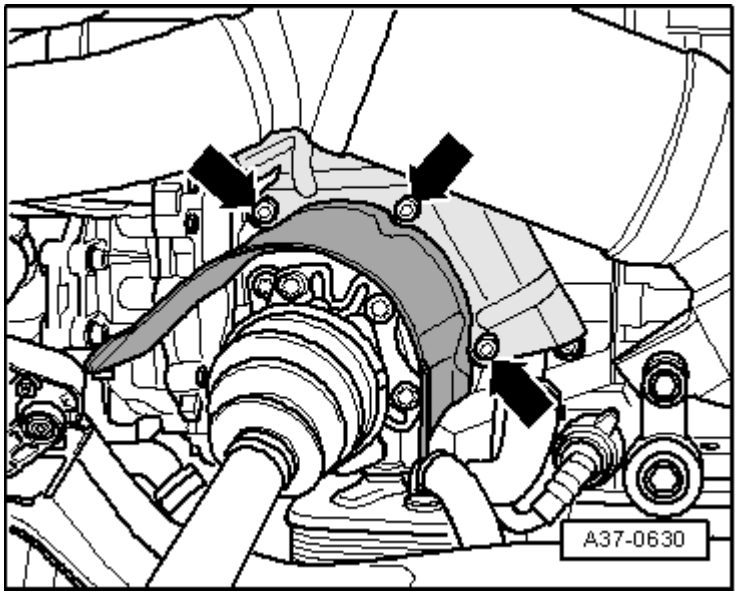

Fig. 34: Removing Heat Shield For Left Drive Axle
Courtesy of VOLKSWAGEN UNITED STATES, INC.

- Remove heat shield for left drive axle - **arrows** -.
- Remove left and right drive axles from transmission.
- Have a second technician press brake pedal.

CAUTION: To loosen collar bolt for drive axle, the wheel bearing must not be under load (vehicle must not be standing on its wheels).

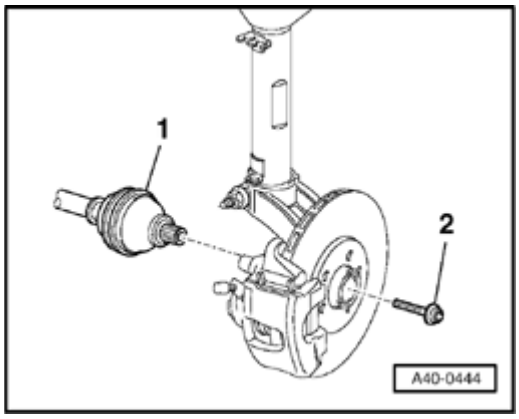

Fig. 35: Identifying Collar Bolt For Right Drive Axle
Courtesy of VOLKSWAGEN UNITED STATES, INC.

- Remove collar bolt - **2** - at left and right drive axles - **1** -.

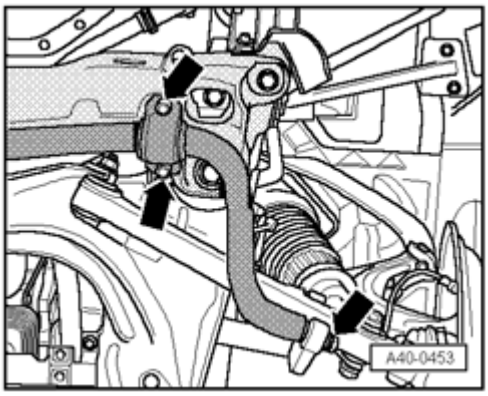

Fig. 36: Removing Bolts Uniformly At Left/Right
Courtesy of VOLKSWAGEN UNITED STATES, INC.

- Remove bolts - **arrows** - uniformly at left and right.
- Remove stabilizer.

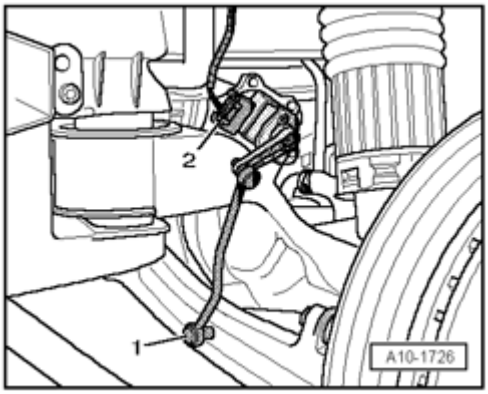

Fig. 37: Disconnecting Electrical Harness Connector At Level Control System Sensor
Courtesy of VOLKSWAGEN UNITED STATES, INC.

- Disconnect electrical harness connector - **2** - at Level Control System Sensor.
- Disconnect connecting link - **1** - at control arm.

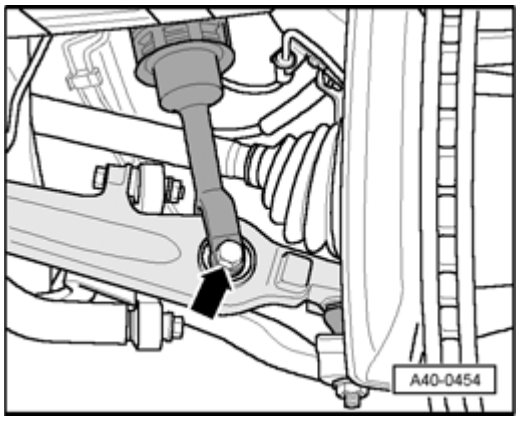

Fig. 38: Removing Suspension Strut From Link
Courtesy of VOLKSWAGEN UNITED STATES, INC.

- Remove suspension strut from control arm - **arrow** -.

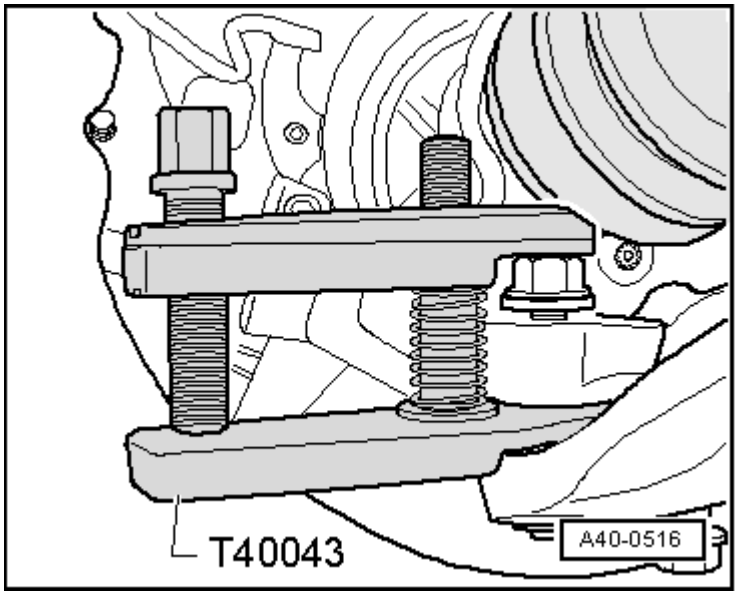

Fig. 39: Using Ball Joint Puller T40043 Press Guide Link Ball Joint Off From Tapered Seat
Courtesy of VOLKSWAGEN UNITED STATES, INC.

- Loosen nut of guide link ball joint so far until it is flush with end of thread.

NOTE:

- **Make sure that the ball joint protective boot does not become damaged when pressing off.**

- **Make sure that both lever arms of ball joint puller are positioned parallel to one another while increasing force.**
- **Secure ball joint puller from falling down.**

- Using ball joint puller T40043 press guide link ball joint off from tapered seat.
- If necessary, counter hold ball joint with a 6 mm Allen key.
- Remove nut and remove ball joint from guide.

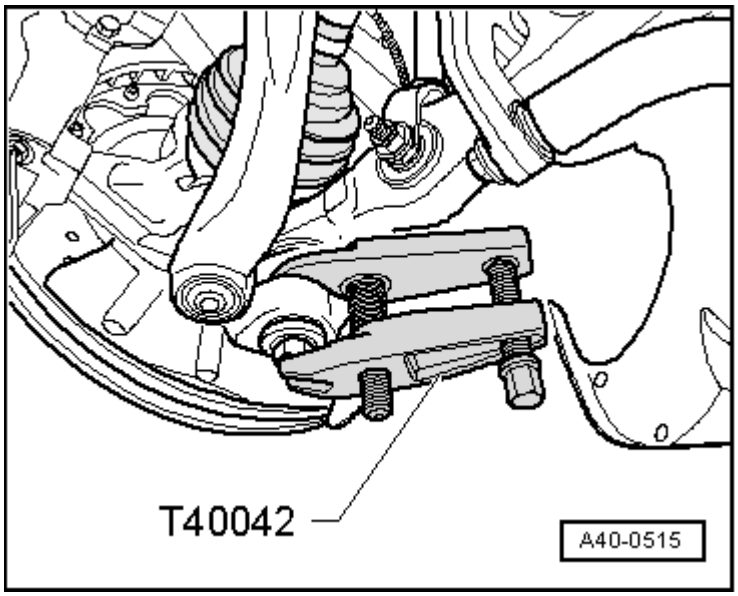

Fig. 40: Using Ball Joint Puller T40042 Press Control Arm Ball Joint Off From Tapered Seat
Courtesy of VOLKSWAGEN UNITED STATES, INC.

- Loosen nut of ball joint at control arm so far until it is flush with end of thread.

NOTE:

- **Make sure that the ball joint protective boot does not become damaged when pressing off.**
- **Make sure that both lever arms of ball joint puller are positioned parallel to one another while increasing force.**
- **Secure ball joint puller from falling down.**

- Using ball joint puller T40042 press control arm ball joint off from tapered seat.
- If necessary, counter hold ball joint with a 6 mm Allen key.
- Remove nut and remove ball joint from control arm.

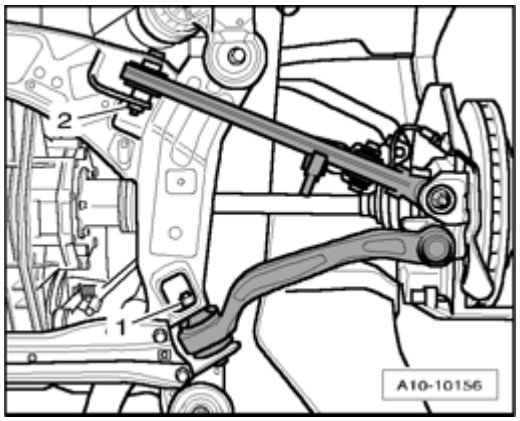

Fig. 41: Removing Guide Control Arm And Control Arm On Subframe
Courtesy of VOLKSWAGEN UNITED STATES, INC.

- Remove guide link - **1** - and control arm - **2** - at subframe and remove them.
- Repeat work procedure on opposite side of vehicle.

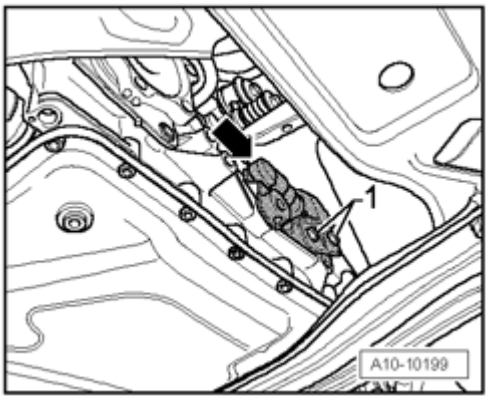

Fig. 42: Removing Bolts For Support Bracket From Transmission & Disengaging Selector Lever Cable
Courtesy of VOLKSWAGEN UNITED STATES, INC.

- Remove bolts - **1** - for support bracket from transmission.
- Disengage selector lever cable - **arrow** -.

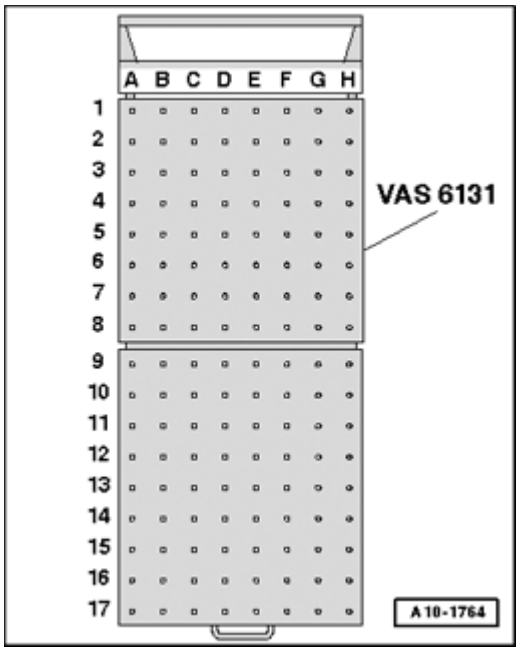

Fig. 43: Identifying Scissor Lift Platform VAS 6131 A
Courtesy of VOLKSWAGEN UNITED STATES, INC.

Prepare scissor lift platform:

- Equip Scissor Lift Platform VAS 6131 A with Support Set For Audi VAS 6131/10 and VAS 6131/11 as follows:

Platform coordinates	Parts from Support Set VAS 6131/10			
B4	/10-1	/10-4	/10-5	/10-12
F4	/10-1	/10-4	/10-5	/10-12
B10	/10-1	/10-2	/10-5	/10-8
G10	/10-1	/10-2	/10-5	/10-8
B15	/10-1	/10-4	/10-5	/111
G15	/10-1	/10-4	/10-5	/111

- Install attachments on scissor lift table by hand first.
- Place scissor lift platform VAS 6131 A in horizontal position.
- Note bubble level (sight glass) on support platform.
- Drive scissor lift platform VAS 6131 A under engine/transmission subassembly.

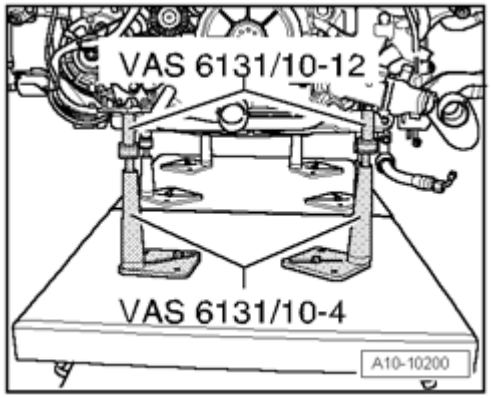

Fig. 44: Positioning Support Elements From Support Set VAS 6131/10 At Front On Engine
Courtesy of VOLKSWAGEN UNITED STATES, INC.

- Position support elements from VAS 6131/10 at front on engine as shown in illustration.

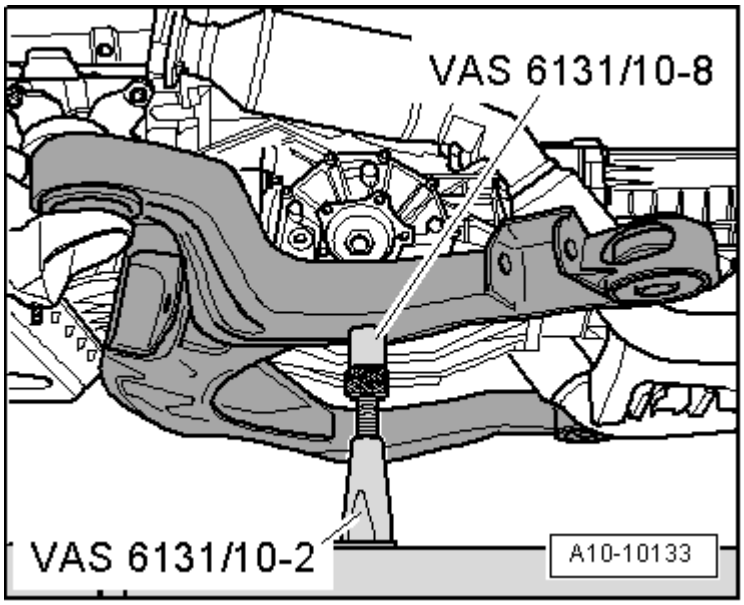

Fig. 45: Positioning Support Elements From VAS 6131/10 At Left/Right On Subframe
Courtesy of VOLKSWAGEN UNITED STATES, INC.

- Position support elements from VAS 6131/10 at left and right on subframe as shown in illustration.

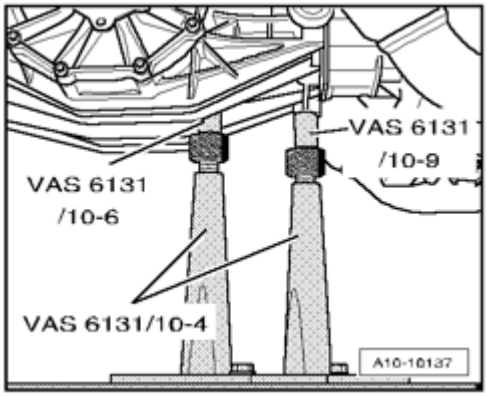

Fig. 46: Positioning Support Elements From Support Set VAS 6131/10 At Rear On Transmission
Courtesy of VOLKSWAGEN UNITED STATES, INC.

- Position support elements from VAS 6131/10 at rear on transmission as shown in illustration.

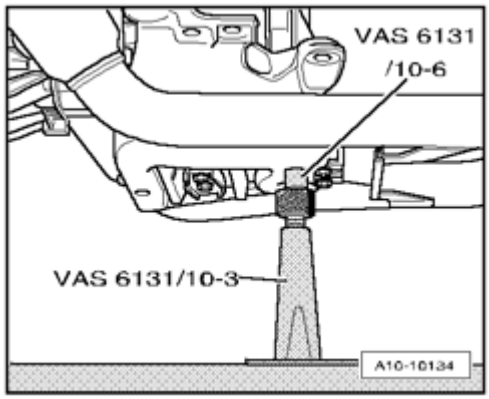

Fig. 47: Positioning Support Elements From Support Set VAS 6131/10 At Rear On Tunnel Cross Member
Courtesy of VOLKSWAGEN UNITED STATES, INC.

- Position support elements from VAS 6131/10 at rear on tunnel cross member, as shown in illustration.
- Twist all spindles of support elements upward far enough until all support pins make contact at support points.
- Tighten base plates for support elements to 20 Nm on scissor lift platform VAS 6131 A.

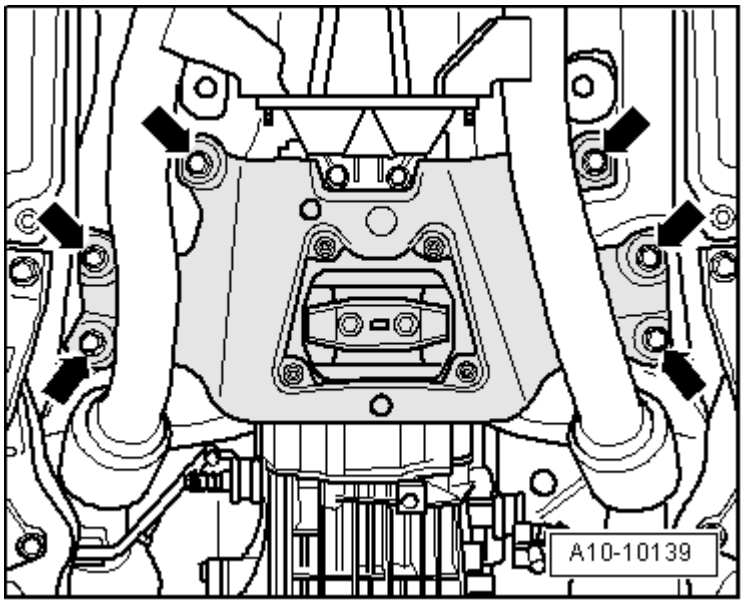

Fig. 48: Removing/Installing Bolts At Tunnel Cross Member
Courtesy of VOLKSWAGEN UNITED STATES, INC.

- Remove bolts - **arrows** - at tunnel cross member.

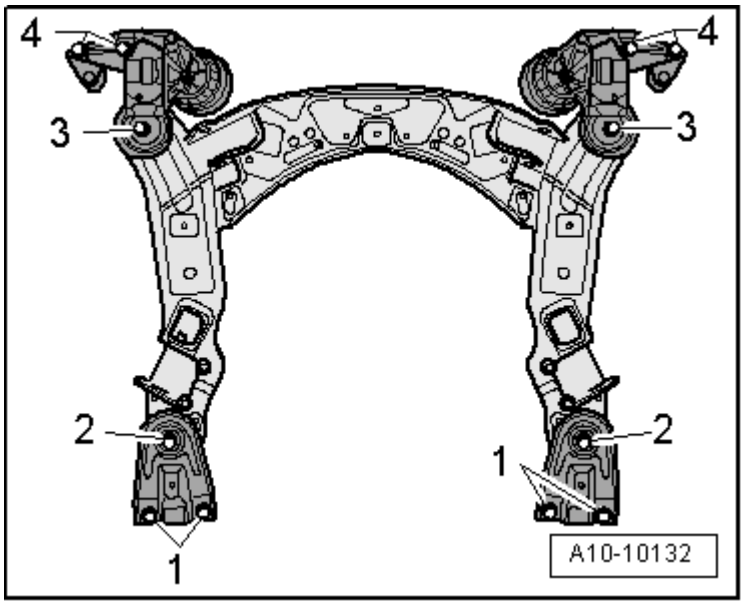

Fig. 49: Engine Mount Plate Bolts Removal/Installing Sequence
Courtesy of VOLKSWAGEN UNITED STATES, INC.

- Remove bolts - **1** -.
- Mark installation position of subframe and of both engine mount plates to long members using a felt-tip marker.
- Remove bolts - **2** - , - **3** - and - **4** - in diagonal sequence and in stages.

NOTE:

- **Verify that all hoses and lines between engine, transmission, subframe and body have been disconnected.**
- **While lowering, carefully guide engine/transmission subassembly with subframe out of engine compartment in order to prevent damage.**

- Slowly lower engine/transmission subassembly downward.
- Remove scissor lift table VAS 6131 A under vehicle.

Engine and transmission, separating

Special tools, testers and auxiliary items required

- Supplementary Set VAS 6131/11 and VAS 6131/12

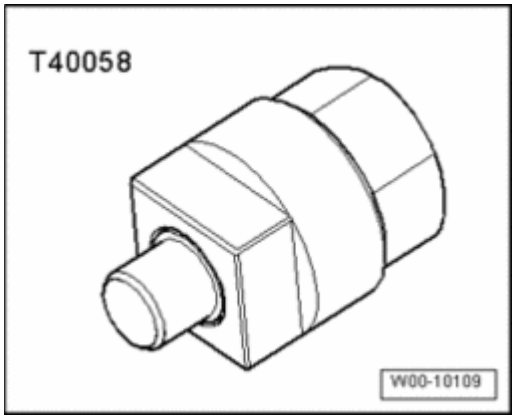

Fig. 50: Adapter T40058
Courtesy of VOLKSWAGEN UNITED STATES, INC.

- Adapter T40058

Work procedure

- Engine/transmission unit removed and attached to scissor lift platform VAS 6131 A.

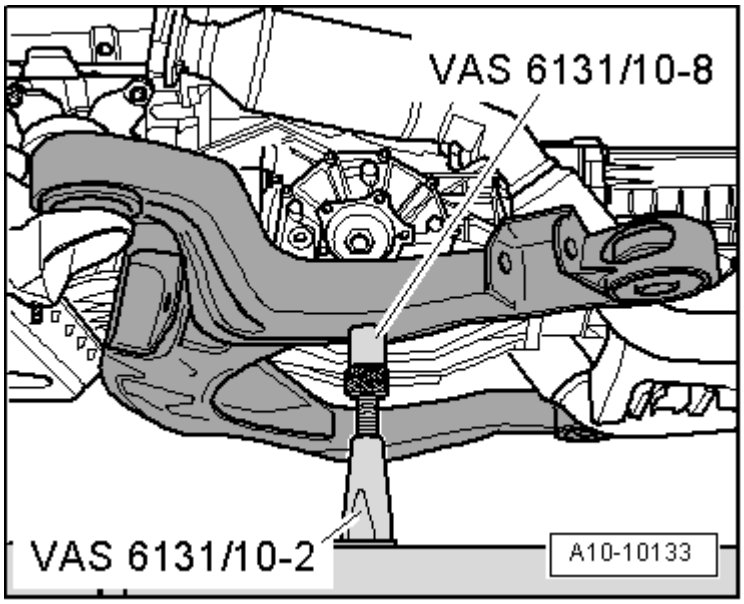

Fig. 51: Positioning Support Elements From VAS 6131/10 At Left/Right On Subframe
Courtesy of VOLKSWAGEN UNITED STATES, INC.

- Twist spindles of support elements from VAS 6131/10 at left and right at subframe completely downward.
- Remove support pins from spindles.
- Remove subframe to side.

NOTE:

- **A second technician is required to remove subframe.**

- Loosen both base plates of subframe support elements on scissor lift table VAS 6131 A.

NOTE:

- **Support points for front of engine, rear of transmission and tunnel cross member remain unchanged.**

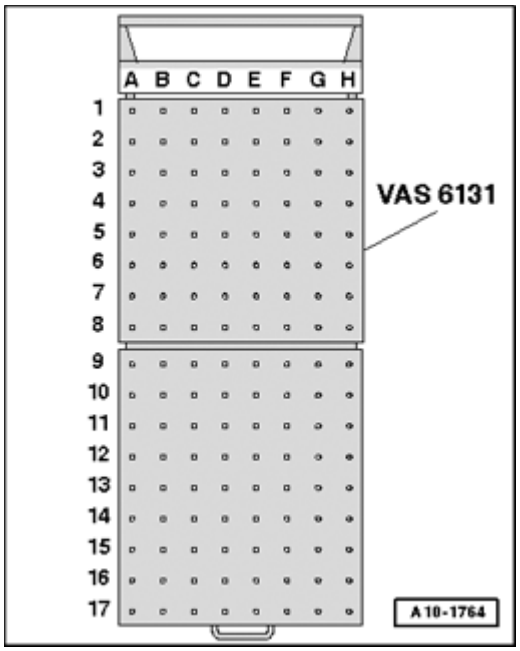

Fig. 52: Identifying Scissor Lift Platform VAS 6131 A
Courtesy of VOLKSWAGEN UNITED STATES, INC.

- Equip scissor lift platform VAS 6131 A with support set for Audi VAS 6131/10 , VAS 6131/11 and VAS 6131/12 as follows:

Platform coordinates	**Parts from Support Set VAS 6131/10 , VAS 6131/11 and VAS 6131/12**			
B4 * See note	/10-1	/10-4	/10-5	/10-12
F4 * See note	/10-1	/10-4	/10-5	/10-12
C6	/10-1	/10-4	/10-5	/11-2
F6	/10-1	/10-4	/10-5	/11-2
C10	/10-1	/10-3	/10-5	/10-12
G10	/10-1	/10-2	/10-5	/11-3
B15 * See note	/10-1	/10-4	/10-5	/11-1
G15 * See note	/10-1	/10-4	/10-5	/11-1

*Support elements remain unchanged.

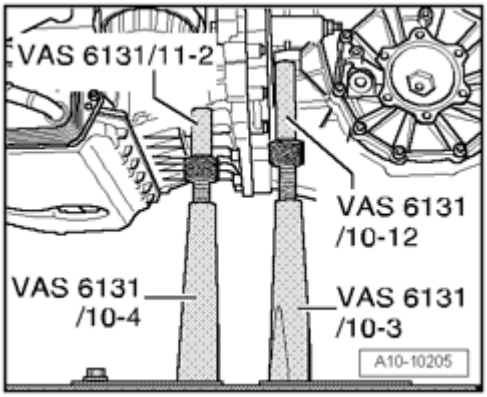

Fig. 53: Positioning Support Elements From Supplementary Set, Audi A8 (D3) VAS 6131/11 And Support Set VAS 6131/10 At Left On Engine/Transmission
Courtesy of VOLKSWAGEN UNITED STATES, INC.

- Position support elements from VAS 6131/11 and VAS 6131/10 at left on engine/transmission as shown in illustration.

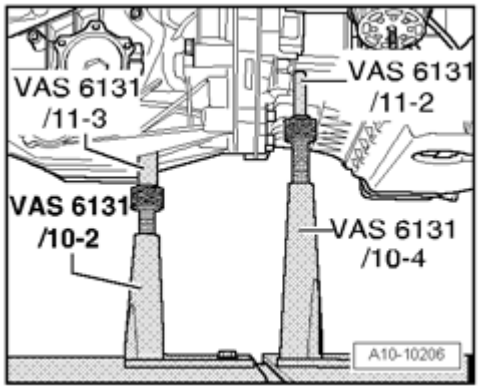

Fig. 54: Positioning Support Elements From Supplementary Set, Audi A8 (D3) VAS 6131/11 At Right On Engine/Transmission
Courtesy of VOLKSWAGEN UNITED STATES, INC.

- Position support elements from VAS 6131/11 at right on engine/transmission as shown in illustration.
- Twist spindles of attachments upward far enough until all support pins make contact at support points.
- Tighten base plates for support elements to 20 Nm on scissor lift platform VAS 6131 A.

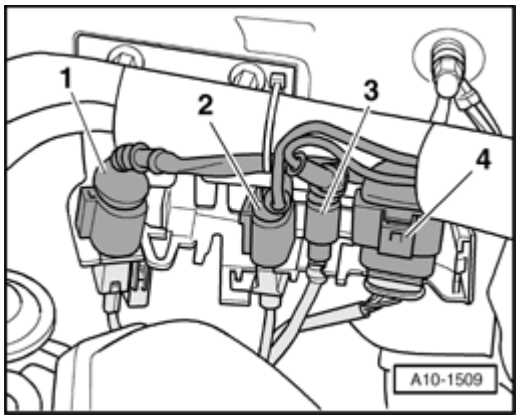

Fig. 55: Disconnecting Scissor Lift Platform VAS 6131 A Electrical Harness Connectors
Courtesy of VOLKSWAGEN UNITED STATES, INC.

- Disconnect electrical harness connectors - **1** - , - **2** - and - **4** -.
- Free up cables.

NOTE:

- **Harness connectors are depicted in the installation position in the illustration.**

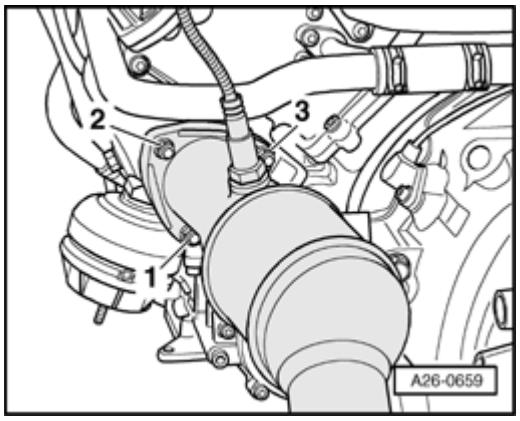

Fig. 56: Removing/Installing Nuts For Left Front Exhaust Pipe/Exhaust Manifold
Courtesy of VOLKSWAGEN UNITED STATES, INC.

- Remove front exhaust pipe from left exhaust manifold nuts - **1 to 3** -.

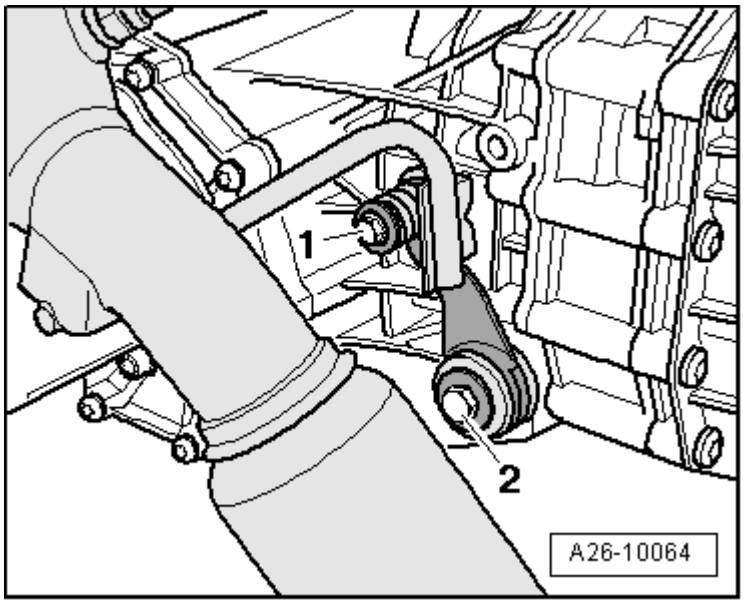

Fig. 57: Removing Bolt At Left Bracket For Front Exhaust Pipe
Courtesy of VOLKSWAGEN UNITED STATES, INC.

- Remove bolt - **1** - at left bracket for front exhaust pipe.

NOTE:

- **Ignore - 2 -.**

NOTE:

- **Flex joint in front exhaust pipe must not be bent more than 10° , otherwise it may be damaged.**

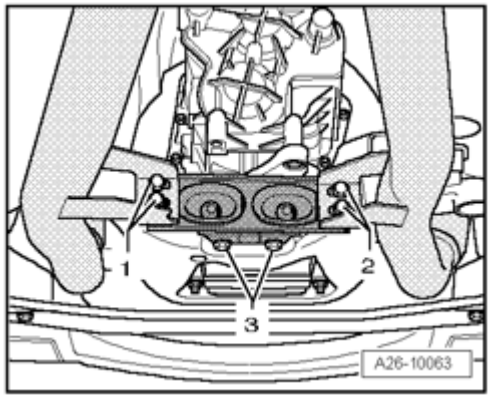

Fig. 58: Removing/Installing Mounting Bolts For Front Exhaust Pipes
Courtesy of VOLKSWAGEN UNITED STATES, INC.

- Remove bolts - **1** - at rear bracket for exhaust system.

NOTE:

- **Ignore - 2 - and - 3 -.**

- Remove left front exhaust pipe with catalytic converter.

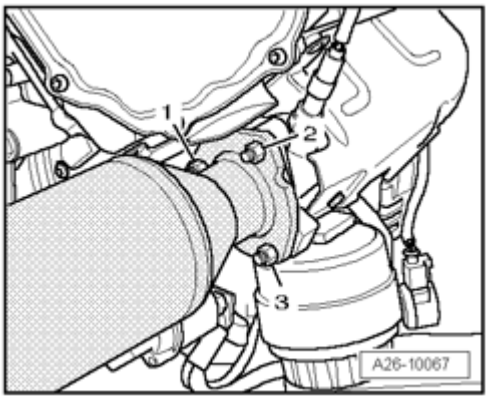

Fig. 59: Removing Nuts & Right Front Exhaust Pipe With Catalytic Converter
Courtesy of VOLKSWAGEN UNITED STATES, INC.

- Remove nuts - **1 to 3** -.

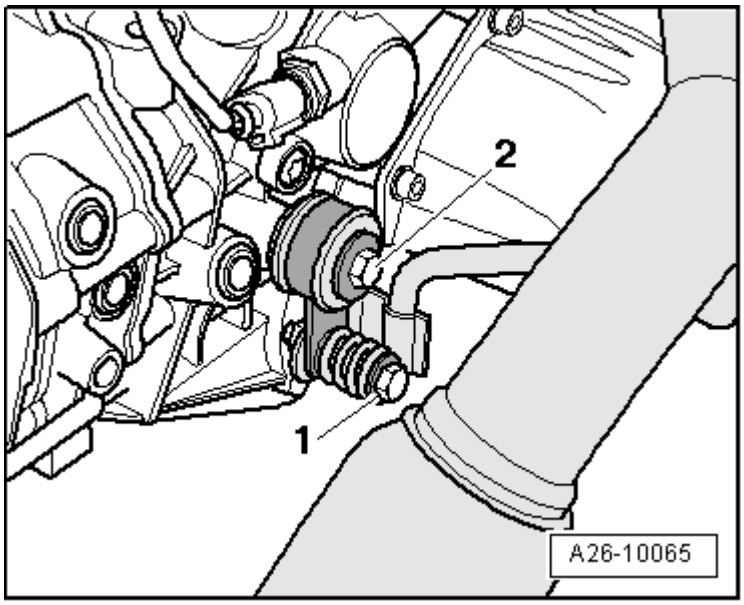

Fig. 60: Removing Bolt At Right Bracket For Front Exhaust Pipe
Courtesy of VOLKSWAGEN UNITED STATES, INC.

- Remove bolt - **1** - at right bracket for front exhaust pipe.

NOTE:

- **Ignore - 2 -.**

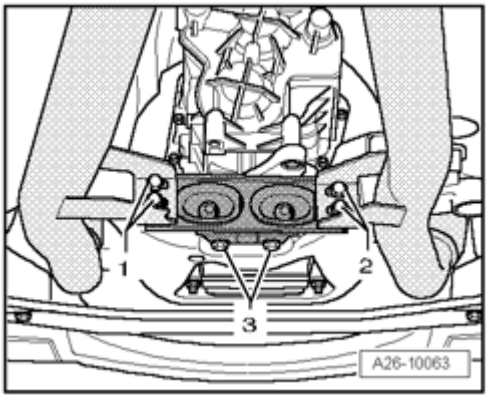

Fig. 61: Removing/Installing Mounting Bolts For Front Exhaust Pipes
Courtesy of VOLKSWAGEN UNITED STATES, INC.

NOTE:

- **Flex joint in front exhaust pipe must not be bent more than 10° , otherwise it may be damaged.**

- Remove bolts - **2** - at rear bracket for exhaust system.

NOTE:

- **Ignore - 1 - and - 3 -.**

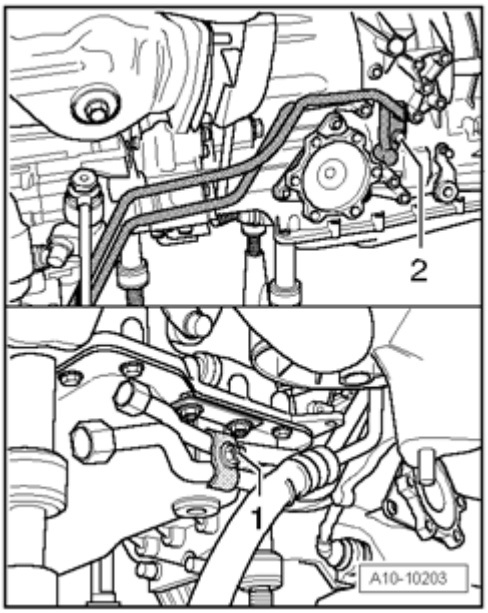

Fig. 62: Removing Oil Lines At Transmission
Courtesy of VOLKSWAGEN UNITED STATES, INC.

- Remove oil lines - **2** - at transmission.
- Remove transmission oil lines from engine and remove.

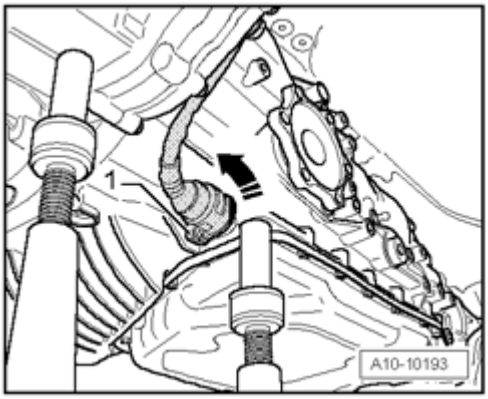

Fig. 63: Separating Electrical Connector
Courtesy of VOLKSWAGEN UNITED STATES, INC.

- Separate electrical connector - **1** - and turn in direction of - **arrow** -.

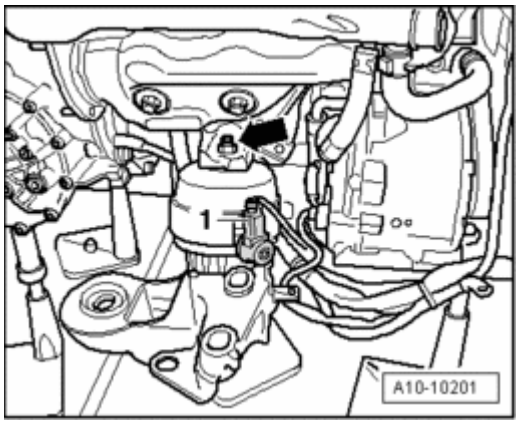

Fig. 64: Disconnecting Electrical Connector & Removing Nut And Right Engine Mount
Courtesy of VOLKSWAGEN UNITED STATES, INC.

- Disconnect electrical connector - **1** -.
- Remove nut - **arrow** - and remove right engine mount.

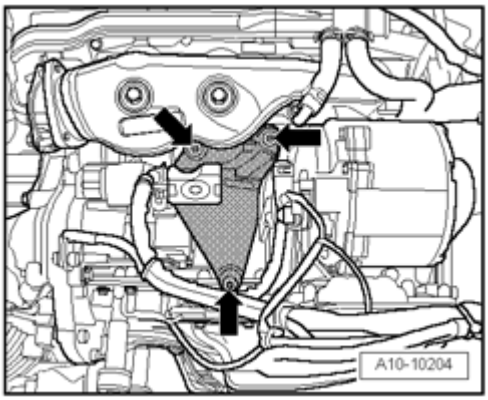

Fig. 65: Removing Bolts And Engine Support

Courtesy of VOLKSWAGEN UNITED STATES, INC.

- Remove nuts - **arrows** - and remove engine support.

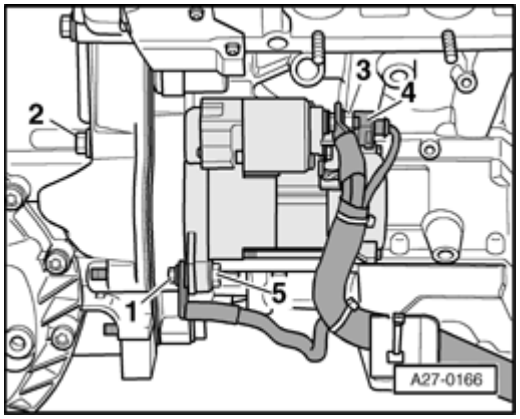

Fig. 66: Identifying Ground (GND) Wire, Starter Electrical Wires, Bolts & Starter
Courtesy of VOLKSWAGEN UNITED STATES, INC.

- Remove Ground (GND) wire - **1** -.
- Disconnect electrical wires - **3** - and - **4** -.
- Remove bolts - **2 and 5** - and remove starter.

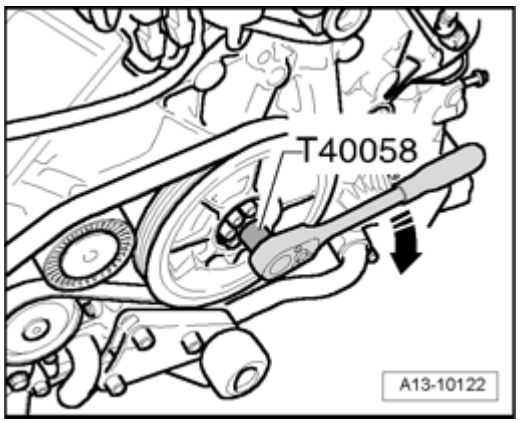

Fig. 67: Counter Holding Crankshaft Using Adapter T40058 To Loosen Torque Converter Bolts
Courtesy of VOLKSWAGEN UNITED STATES, INC.

- Turn engine in rotation direction - **arrow** - with Adapter T40058 until...

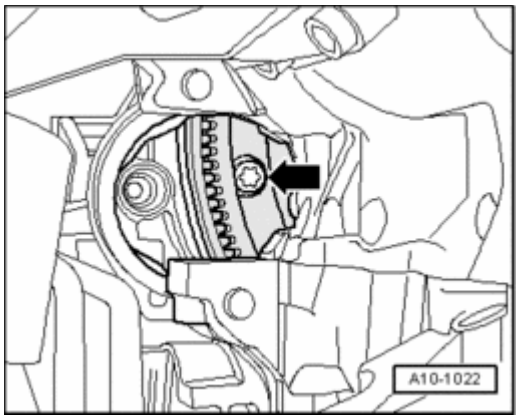

Fig. 68: Torque Converter Bolts
Courtesy of VOLKSWAGEN UNITED STATES, INC.

- ... 3 Torx bolts - **arrow** - of torque converter can be removed through opening of removed starter. (Turn crankshaft $^{1}/_{3}$ rotation in each case using Adapter T40058).

NOTE:

- **To loosen, counter hold torque converter bolts with Adapter T40058.**

- First remove lower and then upper engine/transmission bolts.
- Press off torque converter from drive plate through starter hole in converter housing and at the same time remove engine from transmission.
- Secure torque converter in transmission so that it cannot fall out.

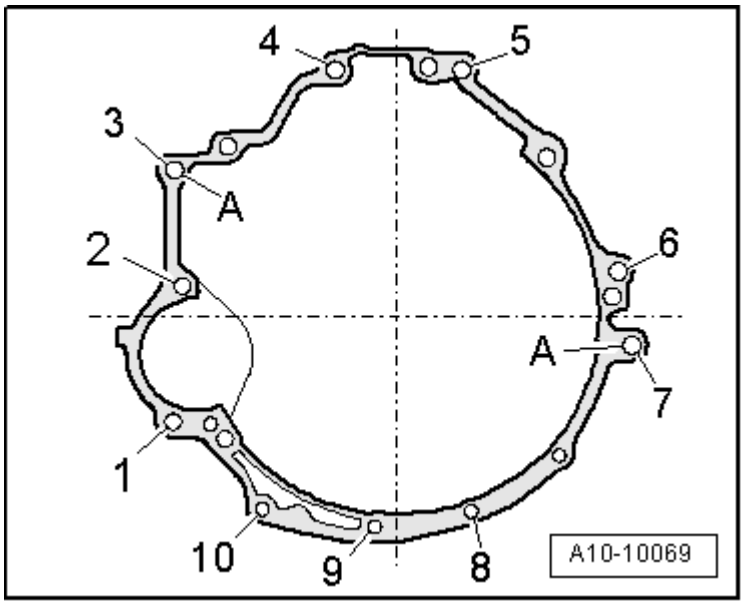

Fig. 69: Identifying Engine/Transmission Threaded Connections
Courtesy of VOLKSWAGEN UNITED STATES, INC.

- Remove engine/transmission threaded connections - **1 to 10** -.

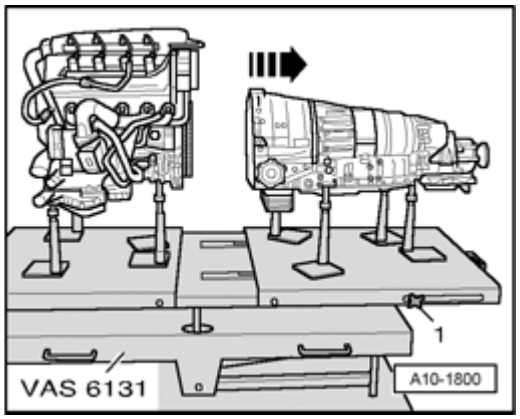

Fig. 70: Loosening Clamping Bolts On Side Of Scissor Lift Table VAS 6131 And Pulling Rear Table Section With Transmission Rearward
Courtesy of VOLKSWAGEN UNITED STATES, INC.

- Loosen clamping bolts - **1** - on side of scissor lift table VAS 6131 A and pull rear table section with transmission rearward - **arrow** -.

Engine, securing to assembly stand

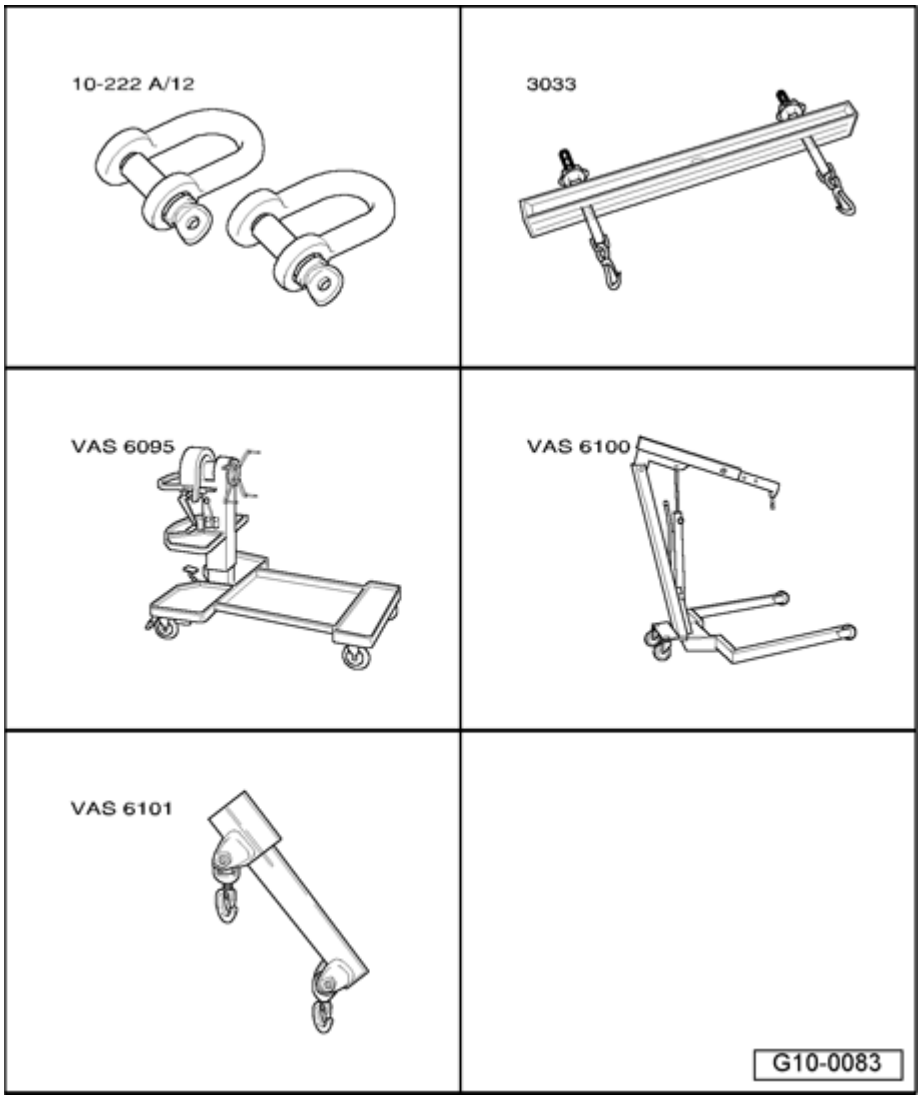

Fig. 71: Identifying Special Tools - Engine, Securing To Assembly Stand
Courtesy of VOLKSWAGEN UNITED STATES, INC.

Special tools, testers and auxiliary items required

- Shackle 10-222 A/12
- Lifting tackle 3033
- Engine and Transmission Holder VAS 6095 with Bracket For V8 Engine VAS 6095/1-6 or VAS 6095/1-6A
- Shop crane VAS 6100
- Lift arm extension for workshop crane VAS 6101

Special tools, testers and auxiliary items required

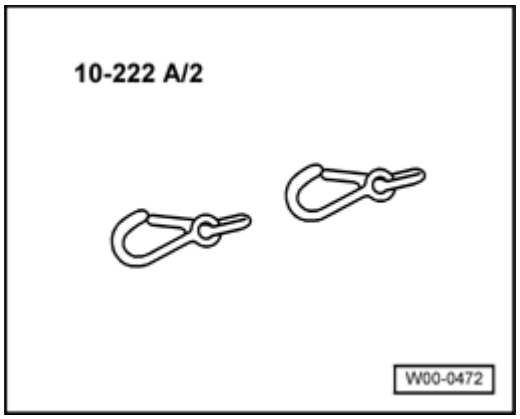

Fig. 72: Additional Hooks 10-222 A/2
Courtesy of VOLKSWAGEN UNITED STATES, INC.

- Additional hooks 10-222 A/2

Work procedure

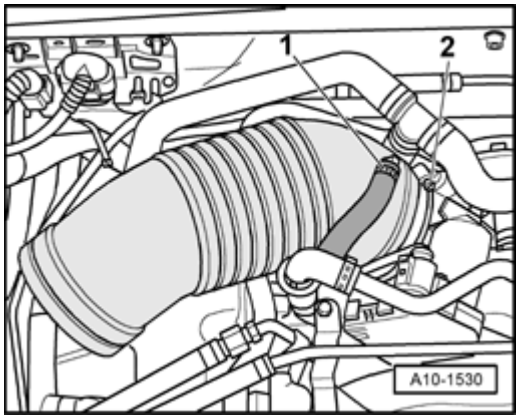

Fig. 73: Disconnecting Vacuum Hose & Air Guide Hose From Throttle Valve Control Module
Courtesy of VOLKSWAGEN UNITED STATES, INC.

- Disconnect vacuum hose - **1** -.
- Disconnect air guide hose - **2** - from throttle valve control module.

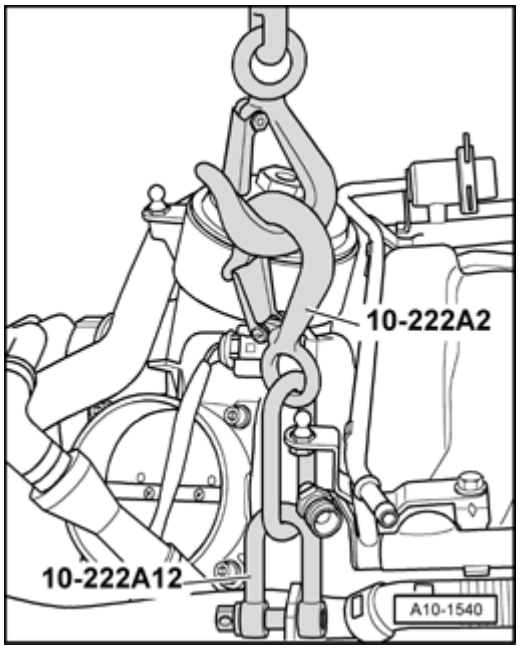

Fig. 74: Securing Shackle 10-222 A/12 To Right Rear Engine Lifting Eyelet & Hooking Additional Hook 10-222 A/2 On Shackle 10-222 A/12
Courtesy of VOLKSWAGEN UNITED STATES, INC.

- Secure shackle 10-222 A/12 to right rear engine lifting eyelet.
- Hook additional hook 10-222 A/2 on shackle 10-222 A/12.

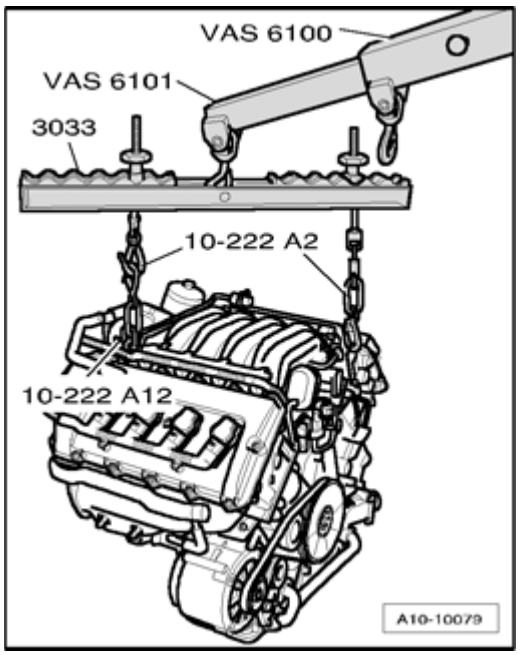

Fig. 75: Engaging Engine Sling 3033 On Additional Hook 10-222 A/2 And On Workshop Crane VAS 6100 With Lift Arm Extension For Workshop Crane VAS 6101
Courtesy of VOLKSWAGEN UNITED STATES, INC.

- Engage engine sling 3033 on additional hook 10-222 A/2 and on workshop crane VAS 6100 with lift arm extension for workshop crane VAS 6101 as shown in the illustration.
- Lift engine from support elements of scissor lift platform VAS 6131.
- Remove engine mount with left engine support.

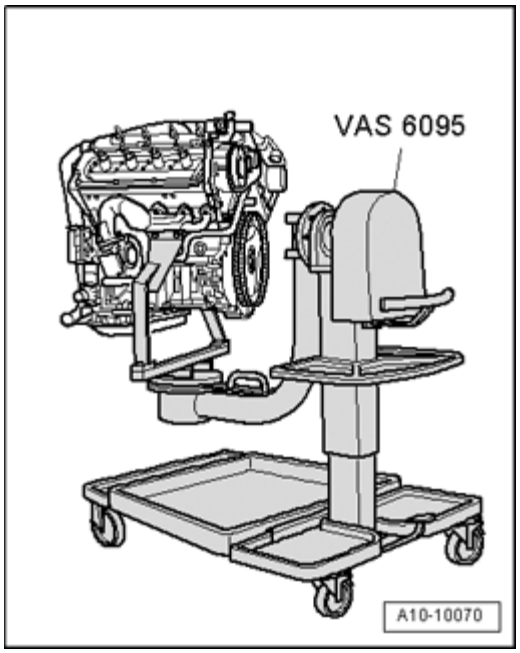

Fig. 76: Securing Engine Using Bracket VAS 6095/1-5 To 40 Nm Engine And Transmission Holder VAS 6095
Courtesy of VOLKSWAGEN UNITED STATES, INC.

- Secure engine with Bracket For V8 Engine VAS 6095/1-6 or VAS 6095/1-6A on Engine and Transmission Holder VAS 6095 as shown in illustration.

Engine, installing

NOTE:

- **During assembly, replace self-locking nuts and bolts.**
- **Always replace bolts that are tightened to torque as well as sealing rings, gaskets and O-rings.**
- **Secure all hose connections using hose clamps appropriate for the model type .**
- **During installation, all cable ties must be re-installed at the same location.**

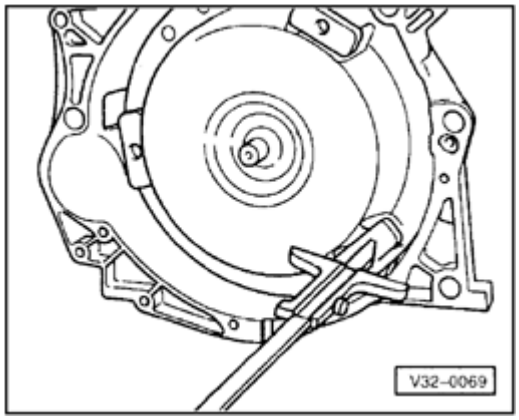

Fig. 77: Checking Torque Converter Is Correctly Positioned
Courtesy of VOLKSWAGEN UNITED STATES, INC.

Installation dimension for torque converter, checking

When torque converter is installed correctly, distance between lower contact surfaces of threaded holes at torque converter and contact surface of bell housing on Automatic Transmission 09L is approx. 19 mm.

CAUTION: If torque converter is incorrectly installed, torque converter coupling and ATF pump could be damaged when transmission and engine are flanged together.

- Make sure alignment sleeves for engine to transmission are installed in cylinder block. Install if necessary.
- Bolt transmission to engine.

CAUTION: Keep checking whether the torque converter behind the drive plate can be turned before and during tightening of the bolts at engine/transmission flange. If the torque converter cannot be turned, it must be assumed that it has not been inserted properly and that the coupling plate of the ATF pump and the transmission will be destroyed during final tightening of the bolts.

NOTE:

- **Torque specifications only apply to lightly greased, oiled, phosphated or blackened nuts and bolts.**
- **Additional lubricants, such as engine or transmission oil are permissible, although lubricants containing graphite are not.**
- **Do not use any degreased parts.**
- **Tolerance for torque specifications ± 15%.**

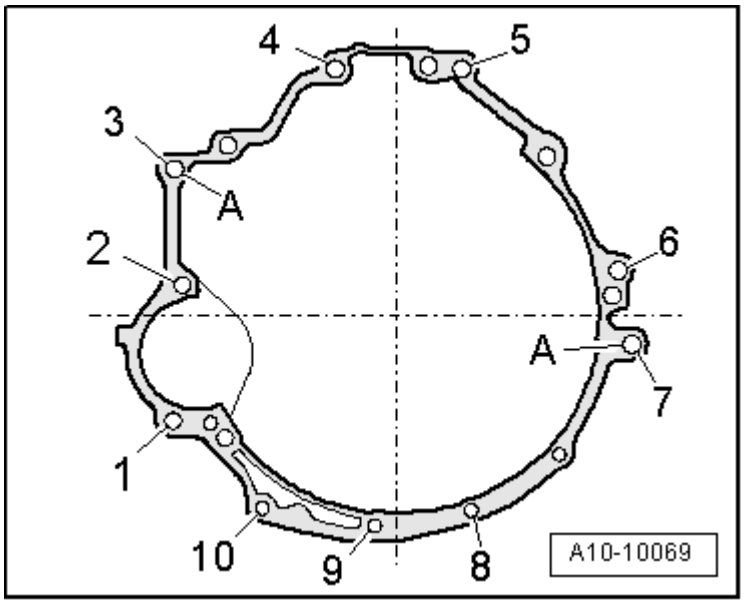

Fig. 78: Identifying Engine/Transmission Threaded Connections
Courtesy of VOLKSWAGEN UNITED STATES, INC.

Engine/transmission, fastening

Item	Bolt	Nm
1	M12x130	65
2	M12x140	65
3, 4, 5	M12x105	65
6	M12x120	65
7	M10x150	65 * See note
8, 9, 10	M10x70	45
A	Alignment sleeves for centering	

*Bolt class 10.9.

Further installation is in reverse order of removal, note the following.

- Install front exhaust pipes: Left --> **Left front exhaust pipe with catalytic converter, removing and installing** , right --> **Right exhaust pipe with catalytic converter, removing and installing**.
- Always clean threaded bores in transmission flanged shaft for crankshaft of locking fluid residue using a tap before installation.

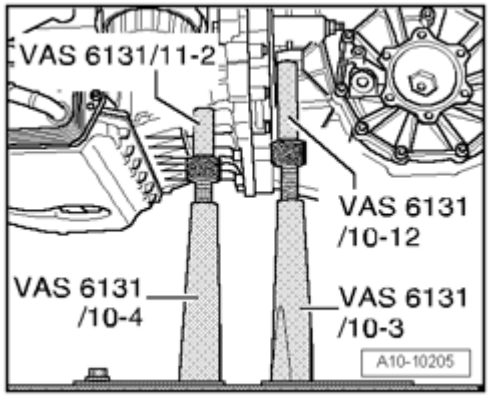

Fig. 79: Positioning Support Elements From Supplementary Set, Audi A8 (D3) VAS 6131/11 And Support Set VAS 6131/10 At Left On Engine/Transmission
Courtesy of VOLKSWAGEN UNITED STATES, INC.

- Rotate spindles of support elements downward at left of engine/transmission assembly.
- Remove both base plates for left support element on scissor lift platform VAS 6131 A.

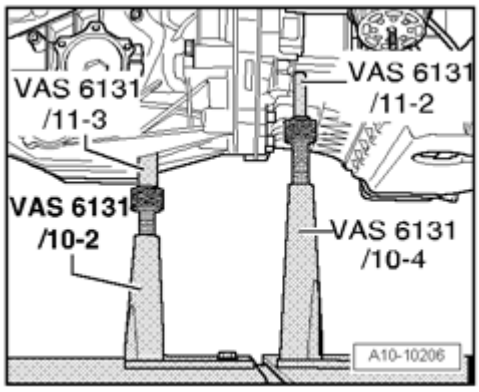

Fig. 80: Positioning Support Elements From Supplementary Set, Audi A8 (D3) VAS 6131/11 At Right On Engine/Transmission
Courtesy of VOLKSWAGEN UNITED STATES, INC.

- Rotate spindles of support elements downward at right of engine/transmission assembly.
- Remove both base plates for left support element on scissor lift platform VAS 6131 A.

NOTE:

- **Support points for front of engine, rear of transmission and tunnel cross member remain unchanged.**

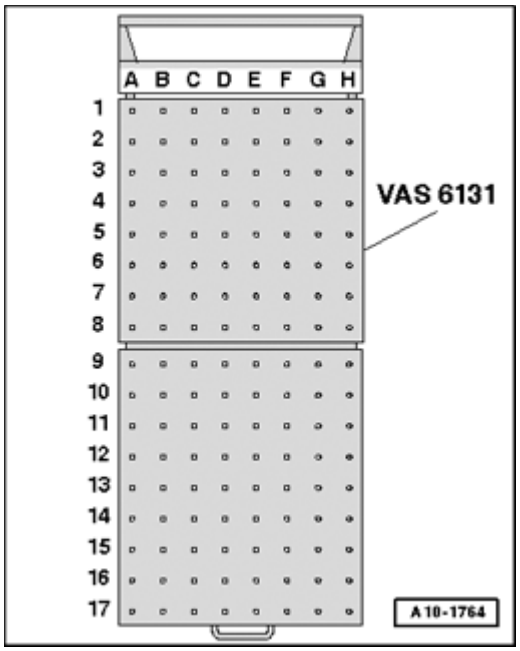

Fig. 81: Identifying Scissor Lift Platform VAS 6131 A
Courtesy of VOLKSWAGEN UNITED STATES, INC.

- Equip scissor lift platform VAS 6131 A with support set for Audi VAS 6131/10 as follows:

Table coordinates	Parts from Support Set VAS 6131/10			
B4 * See note	/10-1	/10-4	/10-5	/10-12
F4 * See note	/10-1	/10-4	/10-5	/10-12
B10	/10-1	/10-2	/10-5	/10-8 * See note
G10	/10-1	/10-2	/10-5	/10-8 * See note
B15 * See note	/10-1	/10-4	/10-5	/11-1
G15 * See note	/10-1	/10-4	/10-5	/11-1

*Support elements remain unchanged.

*Only install support elements after installing subframe.

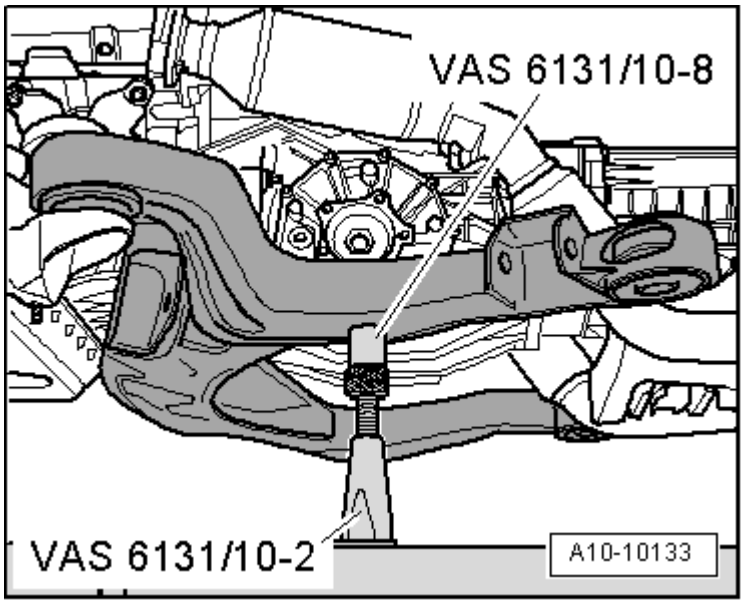

Fig. 82: Positioning Support Elements From VAS 6131/10 At Left/Right On Subframe
Courtesy of VOLKSWAGEN UNITED STATES, INC.

NOTE:

- **A second technician is required to position subframe onto support elements.**

- Position subframe on both attachments VAS 6131/10-8.
- Twist spindles of support elements upward on both sides.
- Tighten base plates for support elements to 20 Nm on scissor lift platform VAS 6131 A.
- Using scissor lift platform VAS 6131 A , slowly guide engine/transmission unit with subframe into body from below.

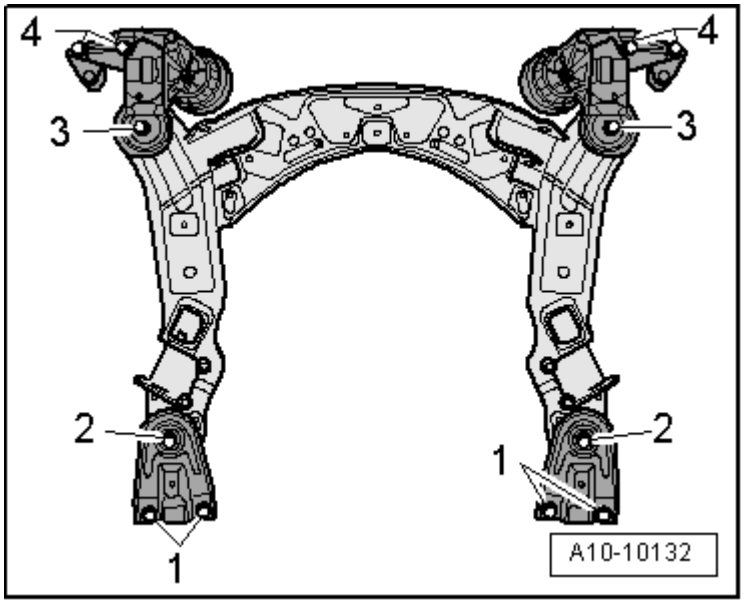

Fig. 83: Engine Mount Plate Bolts Removal/Installing Sequence

Courtesy of VOLKSWAGEN UNITED STATES, INC.

- Align subframe and engine bearing plates according to markings applied on long members during removal.
- Tighten bolts for subframe and engine mount plates only to specified torque. Do not tighten further (tighten bolts only after axle alignment).

1. 50 Nm
2. 150 Nm
3. 150 Nm
4. 75 Nm

CAUTION: Vehicle must not be driven in this condition.

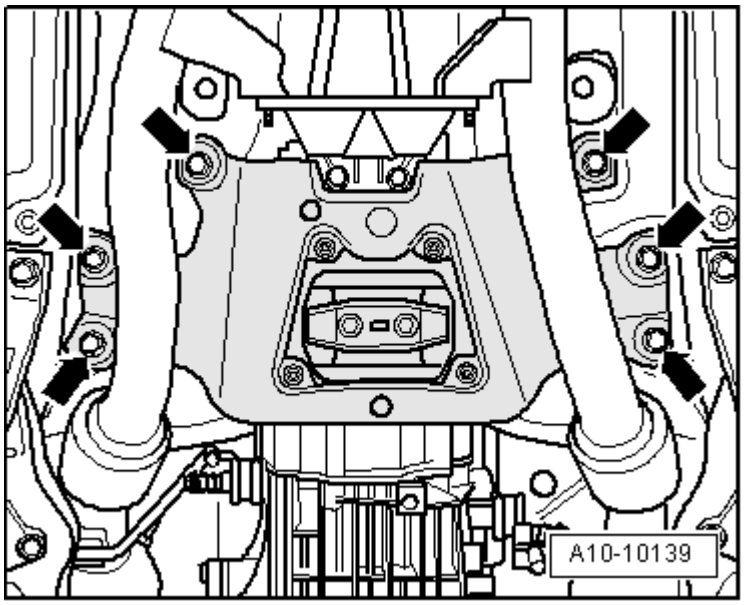

Fig. 84: Removing/Installing Bolts At Tunnel Cross Member
Courtesy of VOLKSWAGEN UNITED STATES, INC.

- Fasten bolts - **arrows** - for tunnel cross member.
- Install selector lever cable, adjust if necessary --> **37 CONTROLS, HOUSING** .
- Install driveshaft -->
  - **39 FINAL DRIVE, REAR DIFFERENTIAL** for REAR FINAL DRIVE 01R
  - **39 - FINAL DRIVE, DIFFERENTIAL** for REAR FINAL DRIVE 0AR

  .
- Fasten ATF lines --> **37 CONTROLS, HOUSING** .
- Install drive axles --> **40 - FRONT SUSPENSION** .

- Install guide control arm, control arm and stabilizer --> **40 - FRONT SUSPENSION** .
- Install power steering oil lines --> **48 - STEERING** .
- Install refrigerant lines --> **87 - AIR CONDITIONING** .

- Install lock carrier with attachments --> **50 - BODY - FRONT** .
- Install front bumper --> **63 - BUMPERS** .
- Adjust headlights --> **94 - LIGHTS, SWITCHES - EXTERIOR** .
- Electrical connections and routing --> Electrical Wiring Diagrams, Troubleshooting and Component Locations.

CAUTION: Do not use a battery charger for starting assistance! There is the risk that the vehicle control modules could be damaged.

NOTE:

- **Be sure to activate vehicle features (radio, radio/navigation system, clock, electric window regulator) according to owners manual when the battery is re-connected.**
- **Deactivate service mode of Telematics Control Module --> 90 - INSTRUMENTS .**
- **Further measures after reconnecting voltage supply --> 24 MULTIPORT FUEL INJECTION (MFI) .**

- Fill refrigerant circuit --> **87 - AIR CONDITIONING** .
- Before starting, check engine oil level.
- Before first engine start, fill hydraulic oil into power steering system reservoir; power steering pump must not run dry.
- Fill with coolant.

NOTE:

- **Only reuse drained coolant if cylinder head or engine block was not replaced.**
- **Dirty coolant must not be re-used.**

- Fill power-steering system oil and bleed steering system --> **48 - STEERING** .
- Check ATF level --> **37 CONTROLS, HOUSING** .

Torque specifications

NOTE:

- **Torque specifications only apply to lightly greased, oiled, phosphated or blackened nuts and bolts.**
- **Additional lubricants, such as engine or transmission oil are permissible, although lubricants containing graphite are not.**
- **Do not use any degreased parts.**

- **Tolerance for torque specifications ± 15%.**

Component			Nm
Bolts/nuts		M6	9
		M8	20
		M10	40
		M12	65
Exceptions:			
B+ wire to starter			16
Ground (GND) wire to starter			22
Right engine support to cylinder block			42
Engine mount to	Engine support		23
	Engine console		23
Hydraulic pressure line to power steering pump			47
Transmission mount to subframe			23
Heat shield for selector lever cable			22
Strap for left front exhaust pipe to transmission			25
Strap for left front exhaust pipe to front exhaust pipe			25
Heat shield to transmission			23
Fuel supply line to fuel rail			25
Ground (GND) wire to chassis			22
Torque support stop to lock carrier			40
Hose clamps for coolant hoses			2

13 - ENGINE - CRANKSHAFT, CYLINDER BLOCK

ENGINE, DISASSEMBLING AND ASSEMBLING

Ribbed belt drive for generator

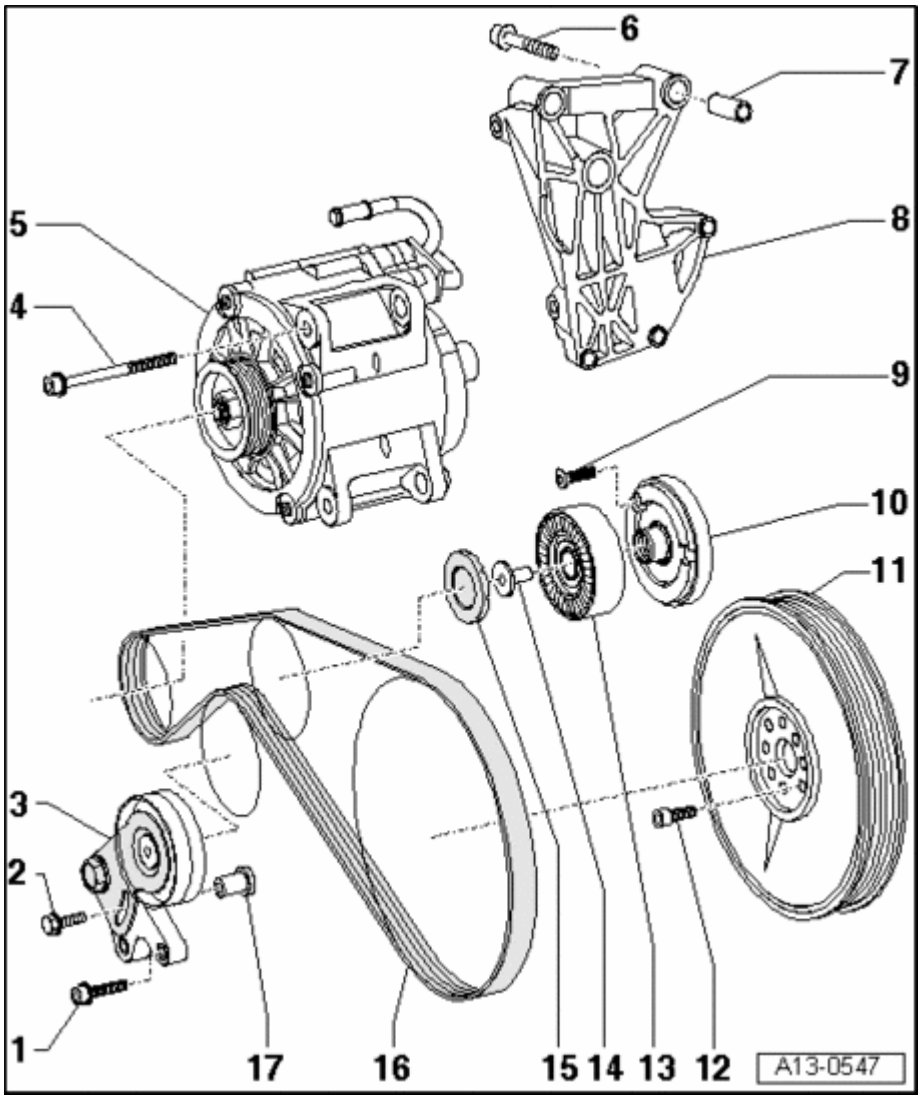

Fig. 85: Ribbed Belt Drive For Generator, Component Overview
Courtesy of VOLKSWAGEN UNITED STATES, INC.

1 - 22 Nm

2 - 22 Nm

3 - Tensioning device for ribbed belt

4 - 22 Nm

5 - Generator

- Removing and installing --> **27 - STARTER, GENERATOR, CRUISE CONTROL**

6 - M8, 22 Nm; M10, 46 Nm

7 - Alignment bushing

- For generator bracket
- 2 pieces

8 - Bracket

- For Generator

9 - 10 Nm

10 - Bracket

- For idler pulley

11 - Vibration damper

- Removing and installing --> **Vibration damper, removing and installing**

12 - 22 Nm plus an additional 45° ($^1/_8$ turn)

- Replace

13 - Idler roller

- For ribbed belt

14 - 22 Nm

15 - Cover cap

16 - Ribbed belt

- Check for wear
- Do not kink
- Before removing, mark direction of rotation using chalk or felt-tip marker. Reversing direction of rotation of a run-in belt can destroy belt
- Removing and installing --> **Ribbed belt, removing and installing**

17 - Threaded bushing

Ribbed belt, removing and installing

Special tools, testers and auxiliary items required

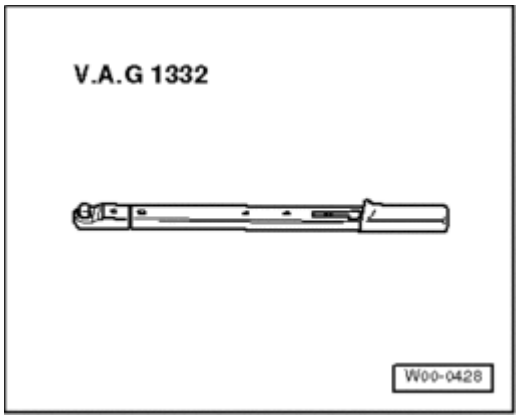

Fig. 86: Torque Wrench V.A.G 1332
Courtesy of VOLKSWAGEN UNITED STATES, INC.

- Torque wrench V.A.G 1332

Removing

- Bring lock carrier into service position --> **50 - BODY - FRONT** .

NOTE:

- **Before removing ribbed belt, mark the turning direction on it with chalk or a felt tip pen. A reversed direction of rotation can cause damage to the belt under operating conditions.**

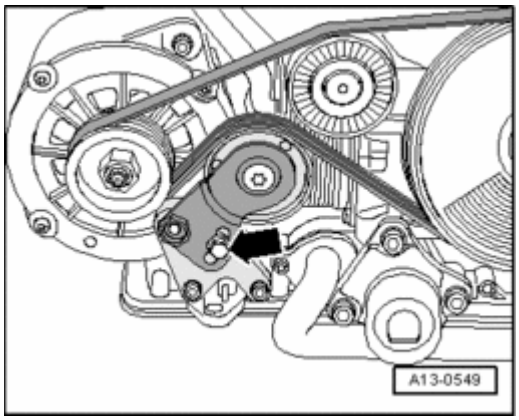

Fig. 87: Loosening Tensioning Bolt And Ribbed Belt
Courtesy of VOLKSWAGEN UNITED STATES, INC.

- Loosen tensioning bolt - **arrow** - and remove ribbed belt.

Installing

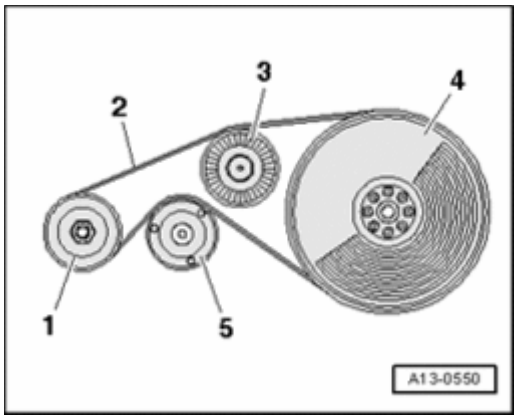

Fig. 88: Placing Ribbed Belt Over Belt Pulley In Specified Sequence
Courtesy of VOLKSWAGEN UNITED STATES, INC.

- Place ribbed belt over belt pulley in specified sequence.

1. Generator
2. Ribbed belt
3. Idler roller
4. Vibration damper
5. Tensioning roller

NOTE:

- **When installing the ribbed belt, make sure it is seated correctly on the pulleys.**

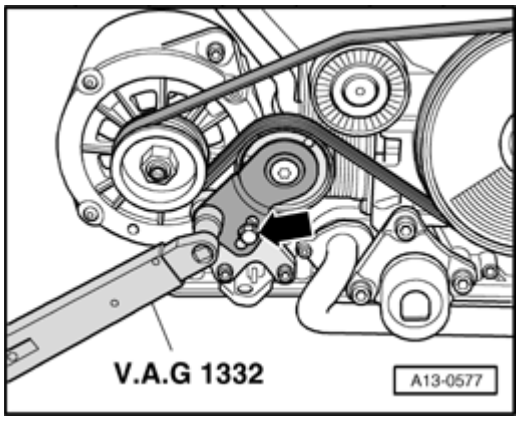

Fig. 89: Positioning Torque Wrench On Belt Tensioner Hex Bolt
Courtesy of VOLKSWAGEN UNITED STATES, INC.

- Position torque wrench on belt tensioner hex bolt and pre-tighten ribbed belt to 70 Nm.
- At the same time, tighten tensioning bolt - **arrow** - to 22 Nm.

Further installation is in reverse order of removal, note the following:

- Install lock carrier with attachments --> **50 - BODY - FRONT** .
- Start engine and check belt running.

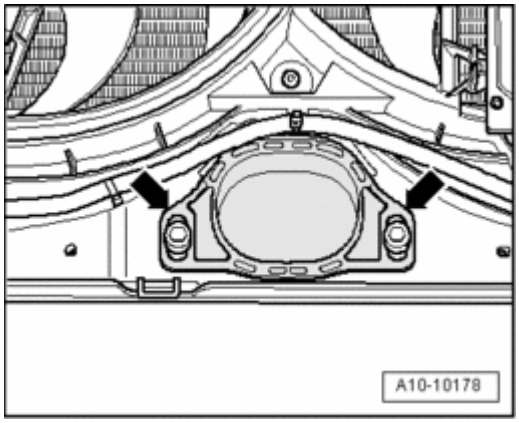

Fig. 90: Placing Torque Support On Rubber Buffer For Torque Support And Tightening Bolts
Courtesy of VOLKSWAGEN UNITED STATES, INC.

- Place torque support on rubber buffer for torque support and tighten bolts - **arrows** -.
- Install front bumper --> **63 - BUMPERS** .
- Adjust headlights --> **MAINTENANCE PROCEDURES** .

Torque specifications

Component	Nm
Tensioning bolt for tensioning roller	22
Torque support stop to lock carrier	40

Vibration damper, removing and installing

Removing

- Bring lock carrier into service position --> **50 - BODY - FRONT** .

NOTE:

- **To loosen and tighten harmonic balancer, counter hold on center nut of generator belt pulley using open end wrench.**

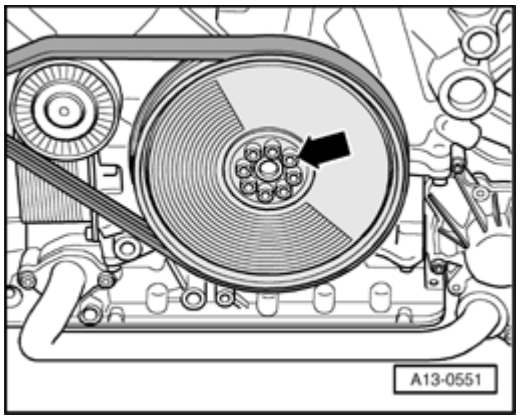

Fig. 91: Loosening Mounting Bolts On Vibration Damper Few Turns
Courtesy of VOLKSWAGEN UNITED STATES, INC.

- Loosen 8 mounting bolts - **arrow** - on vibration damper a few turns.

NOTE:

- **Before removing ribbed belt, mark the turning direction on it with chalk or a felt tip pen. A reversed direction of rotation can cause damage to the belt under operating conditions.**

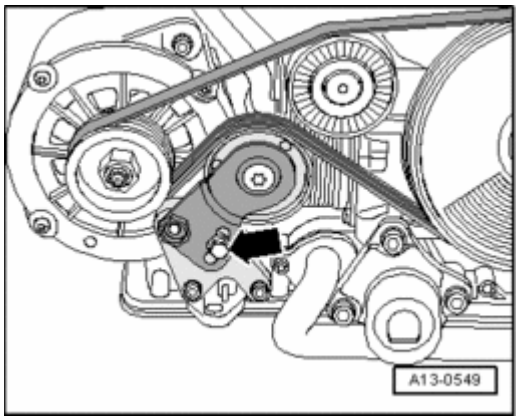

Fig. 92: Loosening Tensioning Bolt And Ribbed Belt
Courtesy of VOLKSWAGEN UNITED STATES, INC.

- Loosen tensioning bolt - **arrow** - and remove ribbed belt.
- Remove vibration damper.

Installing

Installation is in reverse order of removal, note the following:

- Install vibration damper using only original equipment bolts .

- Installation of harmonic balancer is only possible in one position - note alignment bushing.

- Install ribbed belt --> **Ribbed belt, removing and installing** .
- Install lock carrier with attachments --> **50 - BODY - FRONT** .

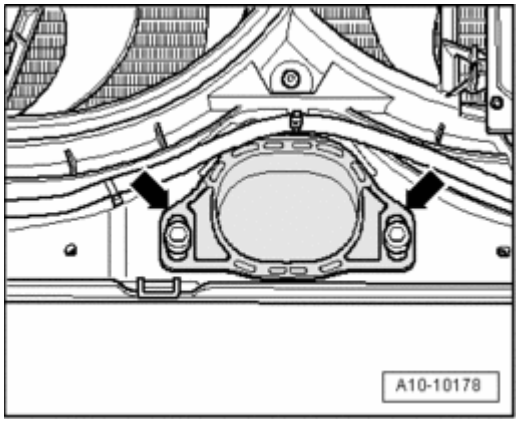

Fig. 93: Placing Torque Support On Rubber Buffer For Torque Support And Tightening Bolts
Courtesy of VOLKSWAGEN UNITED STATES, INC.

- Place torque support on rubber buffer for torque support and tighten bolts - **arrows** -.
- Install front bumper --> - **63 - BUMPERS** .
- Adjust headlights --> **MAINTENANCE PROCEDURES** .

Torque specifications

Component	Nm
Vibration damper to crankshaft	22 + 45° * See note* See note
Torque support stop to lock carrier	40

* 45° corresponds to a 1/8 turn

*Replace bolts.

Seal for crankshaft (ribbed belt side), replacing

Special tools, testers and auxiliary items required

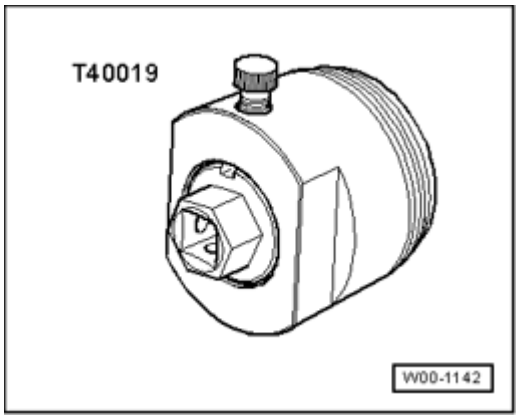

Fig. 94: Seal Remover T40019
Courtesy of VOLKSWAGEN UNITED STATES, INC.

- Seal remover T40019

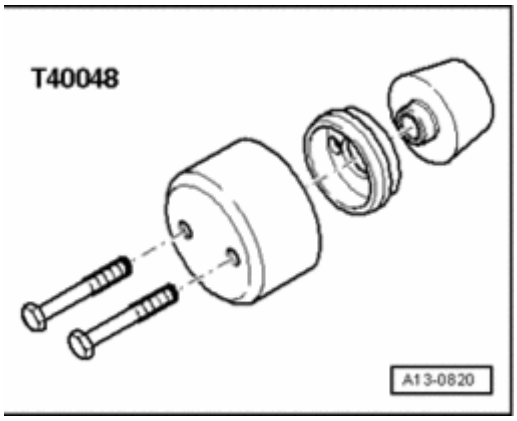

Fig. 95: Assembly Tool T40048
Courtesy of VOLKSWAGEN UNITED STATES, INC.

- Assembly tool T40048
- Bolt M8x55

Removing

- Bring lock carrier into service position --> **50 - BODY - FRONT** .
- Remove vibration damper --> **Vibration damper, removing and installing**.
- Place inner part of seal extractor T40019 flush with outer part and secure using knurled-head screw.

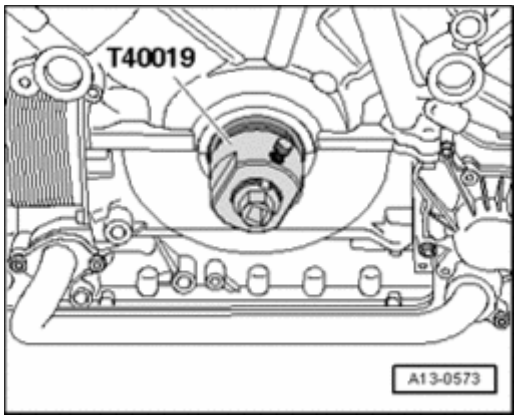

Fig. 96: Installing Oil Seal Extractor T40019
Courtesy of VOLKSWAGEN UNITED STATES, INC.

- Lubricate threaded head of seal extractor, position and with forced pressure install into oil seal as far as possible.
- Loosen knurled thumb screw and turn inner portion against crankshaft until seal is pulled out.
- Secure seal remover in a vise at the flat spots. Remove seal using pliers

Installing

- Clean running and sealing surface.

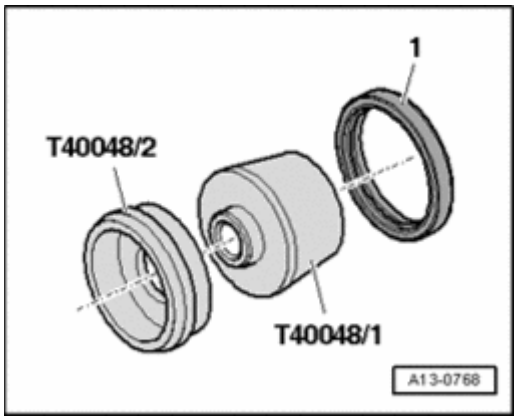

Fig. 97: Inserting Assembly Device T40048/1 Onto Pull Sleeve T40048/2 And Sliding Seal Onto Pull Sleeve
Courtesy of VOLKSWAGEN UNITED STATES, INC.

- Insert assembly device T40048/1 onto pull sleeve T40048/2 and slide seal - **1** - onto pull sleeve.
- Remove assembly device.

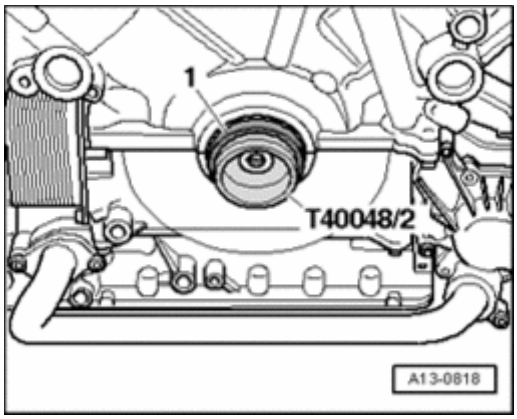

Fig. 98: Placing Pull Sleeve T40048/2 On Crankshaft And Sliding Seal Into Sealing Surface On Engine
Courtesy of VOLKSWAGEN UNITED STATES, INC.

- Place pull sleeve T40048/2 on crankshaft and slide seal - **1** - into sealing surface on engine.

NOTE:

- **Pull sleeve T40048/2 remains on crankshaft for pressing on.**

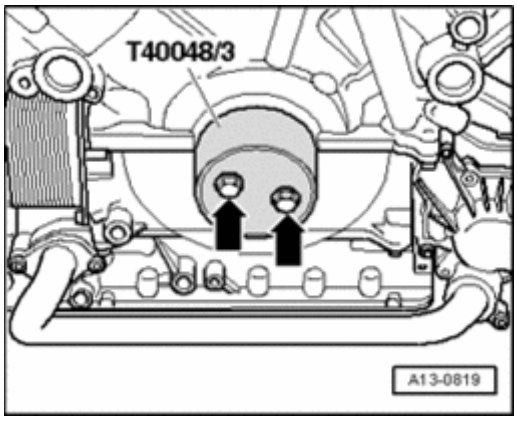

Fig. 99: Positioning Pressure Sleeve T40048/3 With Bolts On Crankshaft
Courtesy of VOLKSWAGEN UNITED STATES, INC.

- Position pressure sleeve T40048/3 with bolts M8x55 mm - **arrows** - on crankshaft.
- Then install bolts by hand.
- Tighten bolts each $^{1}/_{2}$ turn by alternating sides to press in seal until it reaches stop.

Further installation is in reverse order of removal, note the following:

- Install vibration damper --> **Vibration damper, removing and installing**.
- Install lock carrier with attachments --> **50 - BODY - FRONT** .

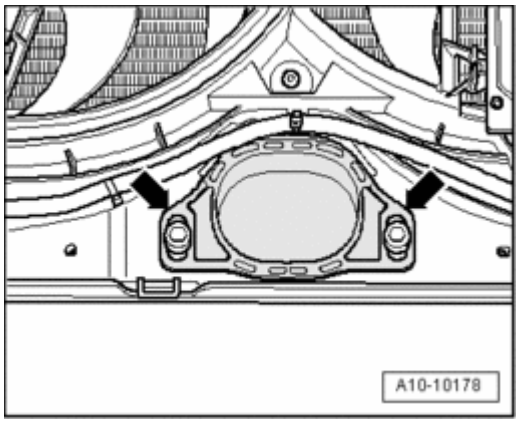

Fig. 100: Placing Torque Support On Rubber Buffer For Torque Support And Tightening Bolts
Courtesy of VOLKSWAGEN UNITED STATES, INC.

- Place torque support on rubber buffer for torque support and tighten bolts - **arrows** -.
- Install front bumper --> **63 - BUMPERS** .
- Adjust headlights --> **MAINTENANCE PROCEDURES** .

Torque specifications

Component	Nm
Torque support stop to lock carrier	40

DRIVE PLATE, REMOVING AND INSTALLING

Drive plate, component overview

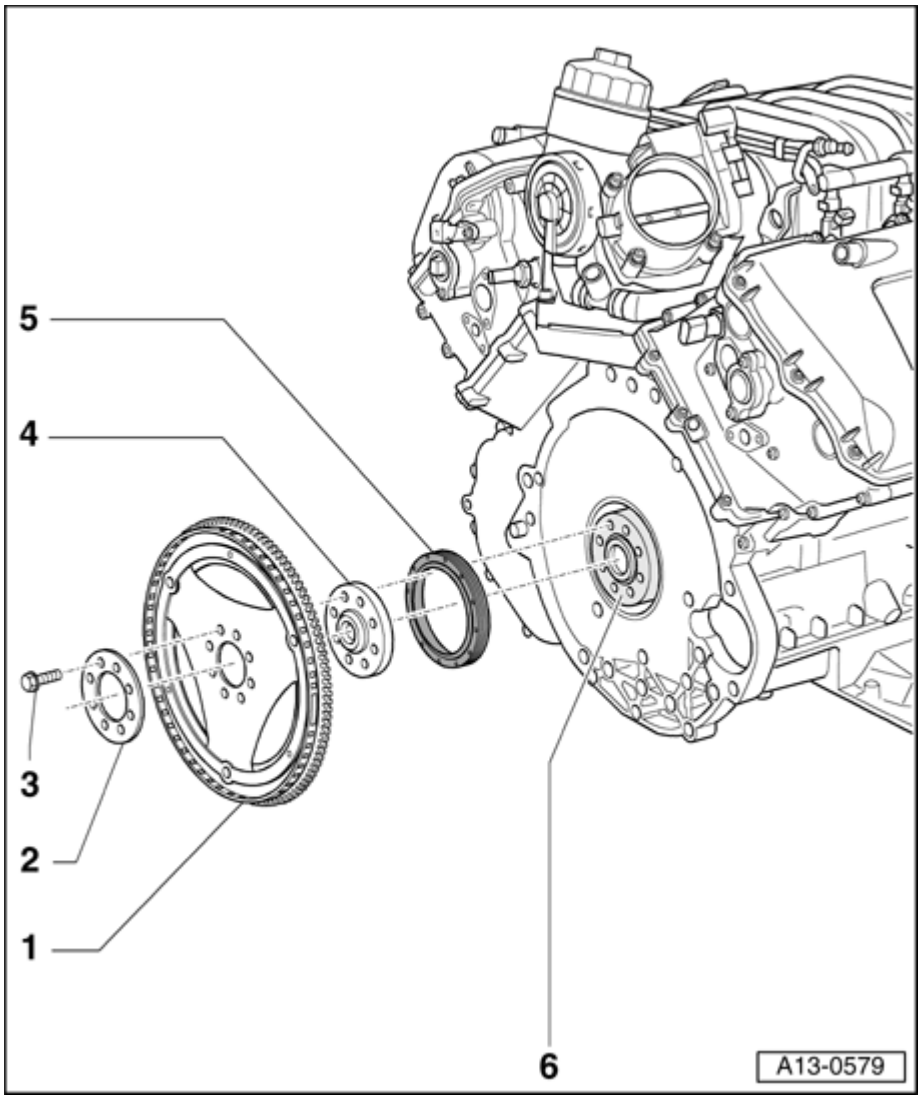

Fig. 101: Drive Plate, Component Overview
Courtesy of VOLKSWAGEN UNITED STATES, INC.

1 - Drive plate

- Removing and installing --> **Drive plate, removing and installing**

2 - Washer

- Mark for re-installation

3 - 30 Nm plus an additional 90° ($^1/_4$ turn)

- Replace

4 - Shim

- Mark for re-installation

5 - Seal

- For crankshaft -timing chain side-
- Removing and installing --> **Crankshaft seal, timing chain side, replacing**

6 - Crankshaft

Drive plate, removing and installing

Special tools, testers and auxiliary items required

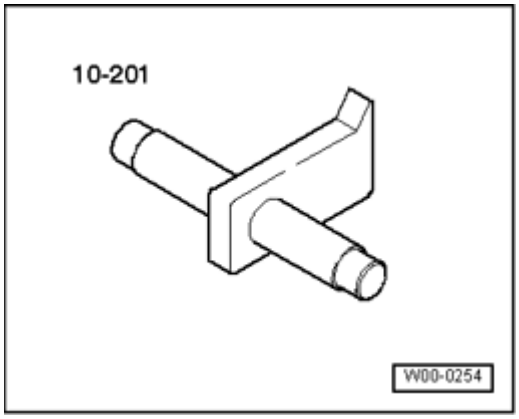

Fig. 102: Counter-Holder Tool 10-201
Courtesy of VOLKSWAGEN UNITED STATES, INC.

- Counter-holder tool 10-201

Removing

- Remove engine --> **Engine, removing and installing**.
- Separate engine/transmission --> **Engine and transmission, separating**.
- Mark drive plate and washer to engine.
- Remove drive plate --> **Drive plate, removing and installing**.

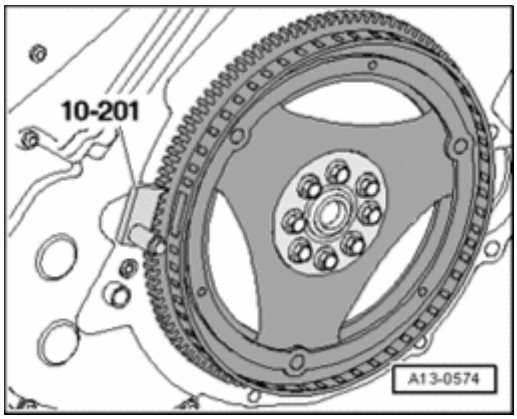

Fig. 103: Inserting Counter Hold Tool 10-201 To Loosen Bolts
Courtesy of VOLKSWAGEN UNITED STATES, INC.

- Insert counter hold tool 10-201 to loosen bolts.
- Remove drive plate.

Installing

Installation is in reverse order of removal, note the following:

- Install drive plate with washer.
- Use new bolts when securing.
- Reposition counter hold tool 10-201 to tighten bolts.
- Bolt transmission to engine and install engine/transmission --> **Engine, installing**.

Torque specifications

Component	Nm
Drive plate to crankshaft	30 + 90° * See note* See note

* 90° corresponds to a 1/4 turn

*Replace bolts.

Crankshaft seal, timing chain side, replacing

Special tools, testers and auxiliary items required

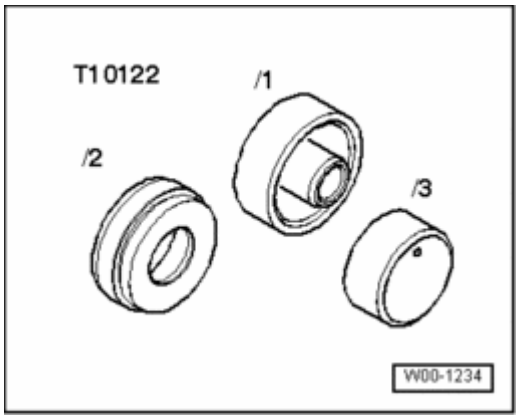

Fig. 104: Pulling Fixture T10122
Courtesy of VOLKSWAGEN UNITED STATES, INC.

- Pulling fixture T10122

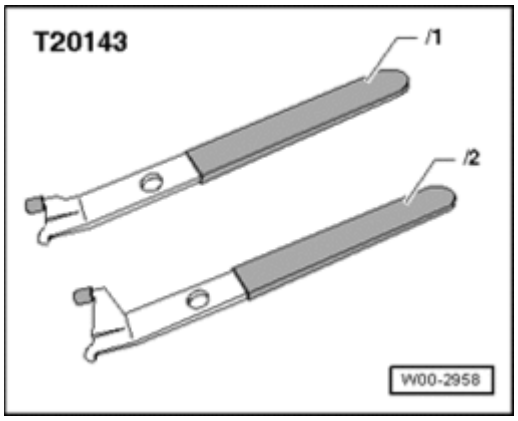

Fig. 105: Identifying Extractor Hook T20143
Courtesy of VOLKSWAGEN UNITED STATES, INC.

- Extractor lever T20143/2

Removing

- Remove engine --> **Engine, removing and installing**.
- Separate engine/transmission --> **Engine and transmission, separating**.
- Remove drive plate --> **Drive plate, removing and installing**.

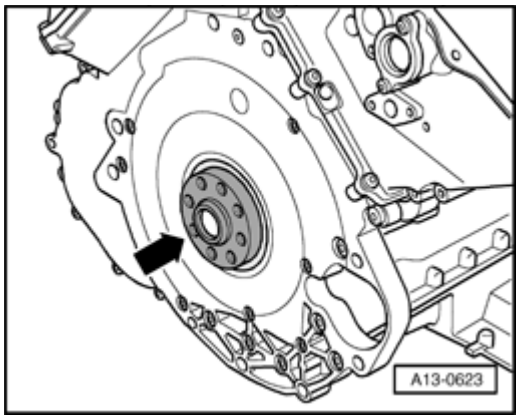

Fig. 106: Removing Shim From Crankshaft
Courtesy of VOLKSWAGEN UNITED STATES, INC.

- Remove shim - **arrow** - from crankshaft.

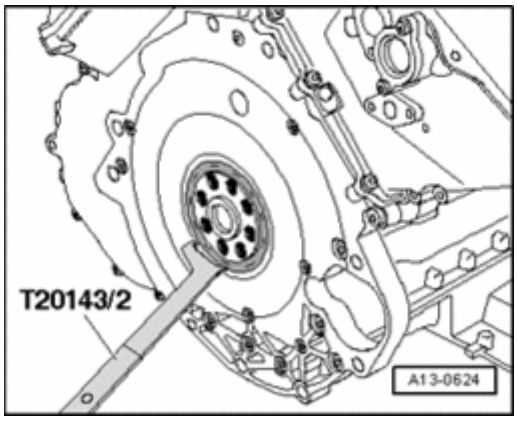

Fig. 107: Prying Out Sealing Ring Using Extractor Lever T20143/2
Courtesy of VOLKSWAGEN UNITED STATES, INC.

- Pry out sealing ring using extractor lever T20143/2.

Installing

- Clean running and sealing surface.

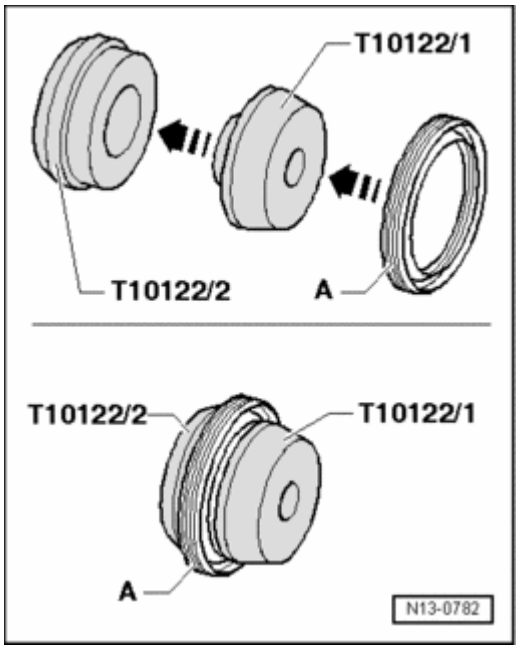

Fig. 108: Identifying Seal, Sleeve T10122/1 And Assembly Tool T10122/2
Courtesy of VOLKSWAGEN UNITED STATES, INC.

- Insert assembly device T10122/1 onto pull sleeve T10122/2 and slide seal - **A** - onto pull sleeve.
- Remove assembly device T10122/1.

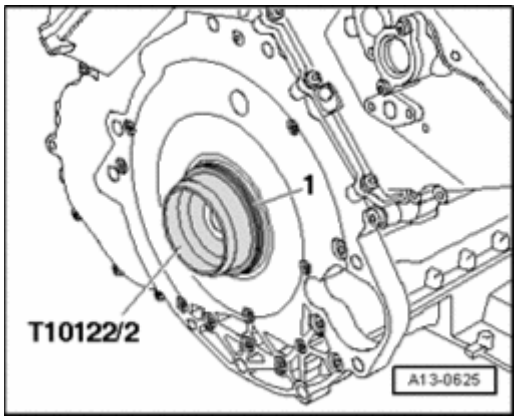

Fig. 109: Installing Pull Sleeve T10122/2 With Sealing Ring Onto Crankshaft
Courtesy of VOLKSWAGEN UNITED STATES, INC.

- Push new seal - **1** - onto pull sleeve T10122/2.
- Install pull sleeve T10122/2 with onto crankshaft.

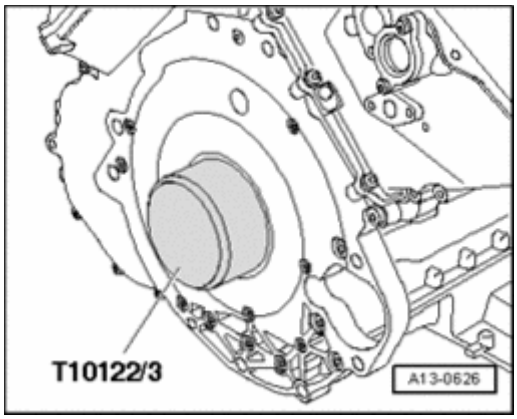

Fig. 110: Pressing In Sealing Ring All Around Evenly And Flush Using Pressure Sleeve T10122/3
Courtesy of VOLKSWAGEN UNITED STATES, INC.

- Press in sealing ring all around evenly and flush using pressure sleeve T10122/3.

Further installation is in reverse order of removal, note the following:

- Install drive plate --> **Drive plate, removing and installing**.
- Bolt transmission to engine and install engine/transmission unit --> **Engine, installing**--> **Engine, installing**.

TIMING CHAIN COVERS

Timing chain covers, component overview

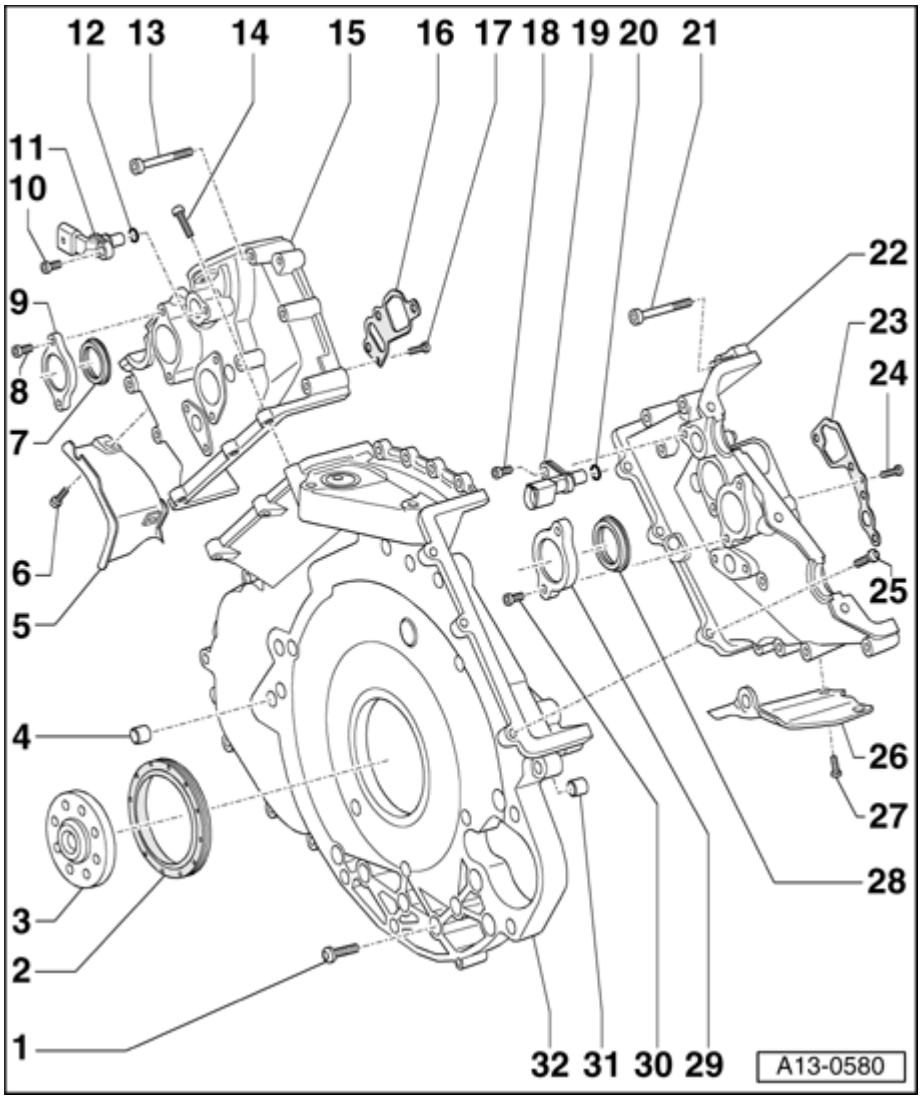

Fig. 111: Timing Chain Covers, Component Overview
Courtesy of VOLKSWAGEN UNITED STATES, INC.

1 - M6, 10 Nm; M8, 22 Nm

- Observe sequence for tightening --> **Fig. 148**

2 - Seal

- For crankshaft timing chain side
- Removing and installing --> **Crankshaft seal, timing chain side, replacing**

3 - Shim

4 - Alignment bushing

- 2 pieces

5 - Heat shield

6 - 10 Nm

7 - Seal

- Replace

8 - 10 Nm

9 - Sealing flange

10 - 10 Nm

11 - Camshaft Position (CMP) Sensor 2 G163

12 - O-ring

- Replace

13 - 10 Nm

- Observe sequence for tightening --> **Fig. 151**

14 - 10 Nm

- Observe sequence for tightening --> **Fig. 151**

15 - Left cover

- For timing chain

16 - Gasket

- Replace

17 - 4 Nm

- Insert with locking fluid
- Locking fluid

18 - 10 Nm

19 - Camshaft Position (CMP) sensor G40

20 - O-ring

- Replace

21 - 10 Nm

- Observe sequence for tightening --> **Fig. 153**

22 - Right cover

- For timing chain

23 - Gasket

- Replace

24 - 4 Nm

- Insert with locking fluid
- Locking fluid

25 - 10 Nm

- Observe sequence for tightening --> **Fig. 153**

26 - Heat shield

27 - 10 Nm

28 - Seal

- Replace

29 - Sealing flange

30 - 10 Nm

31 - Alignment bushing

- 2 pieces

32 - Lower cover

- For timing chain

All covers for timing chain, removing and installing

Special tools, testers and auxiliary items required

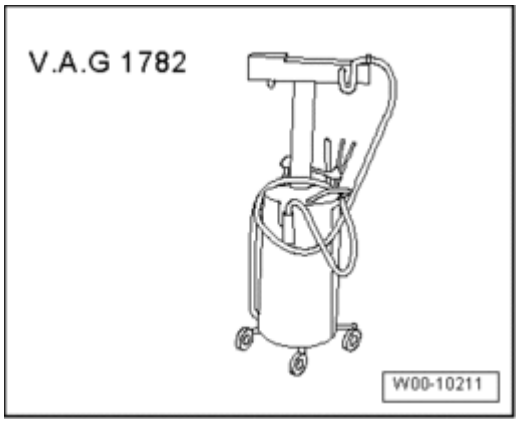

Fig. 112: Identifying Old Oil Collecting And Extracting Device V.A.G 1782
Courtesy of VOLKSWAGEN UNITED STATES, INC.

- Old oil collecting and extracting device V.A.G 1782
- Hand drill with plastic brush attachment
- Protective glasses
- Sealant

Removing

- Drain engine oil --> **MAINTENANCE PROCEDURES** .
- Remove engine --> **Engine, removing and installing**.
- Separate engine/transmission --> **Engine and transmission, separating**.
- Remove drive plate --> **Drive plate, removing and installing**.

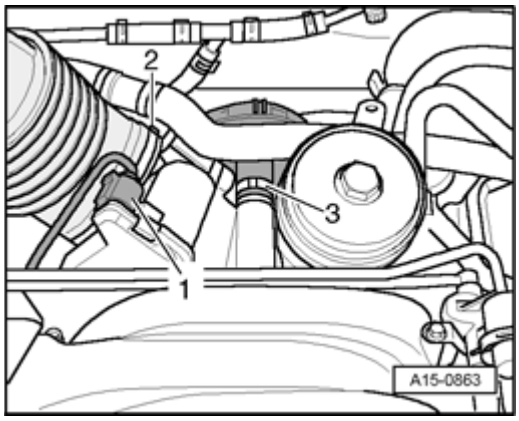

Fig. 113: Disconnecting Electrical Connection At Throttle Valve Control Module J338 & Crankcase Ventilation Hose At Intake Pipe
Courtesy of VOLKSWAGEN UNITED STATES, INC.

- Disconnect electrical connection - **1** - at throttle valve control module J338.
- Disconnect crankcase ventilation hose - **3** - at intake pipe.

NOTE:

- **Ignore - 2 -.**

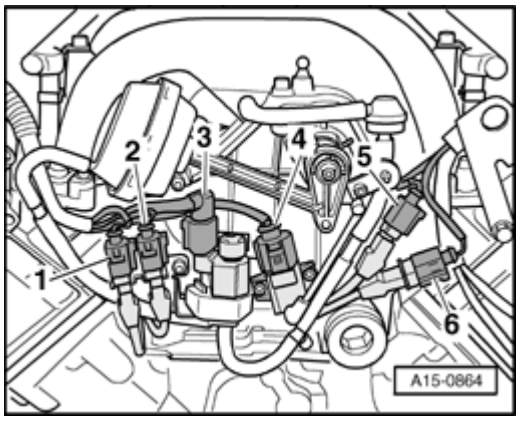

Fig. 114: Remove Electrical Harness Connectors Toward Front From Brackets On Intake Pipe
Courtesy of VOLKSWAGEN UNITED STATES, INC.

- Remove electrical harness connectors - **1** - , - **2** - , - **5** - and - **6** - toward front from brackets on intake pipe.
- Disconnect electrical connectors - **3** - and - **4** -.

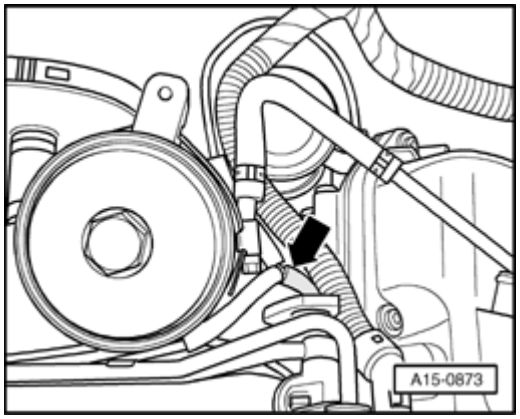

Fig. 115: Disconnecting Vacuum Hose At T-Piece
Courtesy of VOLKSWAGEN UNITED STATES, INC.

- Disconnect vacuum hose - **arrow** - at T-piece.

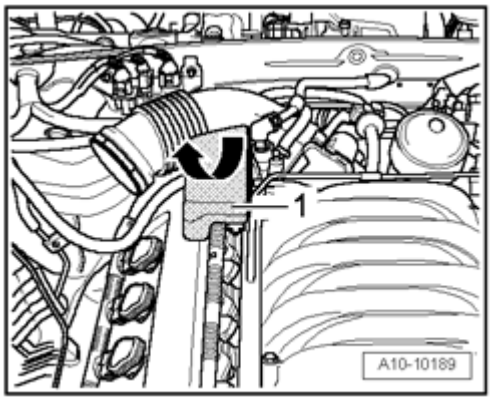

Fig. 116: Removing Resonator
Courtesy of VOLKSWAGEN UNITED STATES, INC.

- Pull resonator - **1** - in direction of - **arrow** - upward and unclip it.

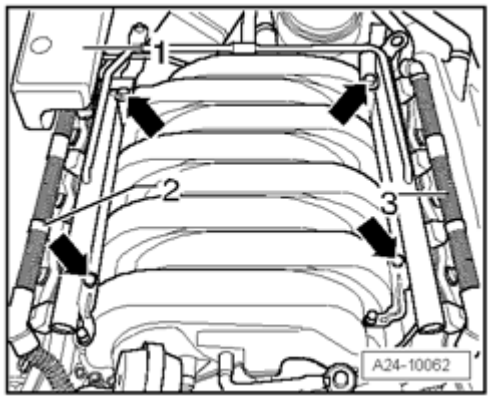

Fig. 117: Pulling Off Connector Strips At Fuel Injectors & Removing Bolts From Fuel Rail
Courtesy of VOLKSWAGEN UNITED STATES, INC.

- Remove connector strips - **2** - and - **3** - at 8 fuel injectors.
- Remove bolts - **arrows** - from fuel rail.
- Pull fuel rail with injectors upward uniformly from intake manifold and set aside in engine compartment on a clean cloth.

NOTE:

- **Carefully protect removed fuel injectors from contamination.**

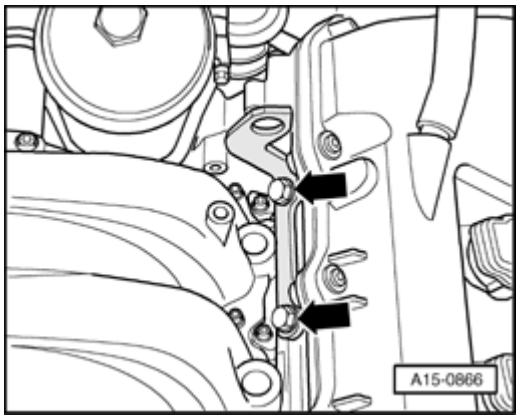

Fig. 118: Removing Left/Rear Engine Lifting Eye
Courtesy of VOLKSWAGEN UNITED STATES, INC.

- Remove left rear engine lifting eye - **arrows** -.

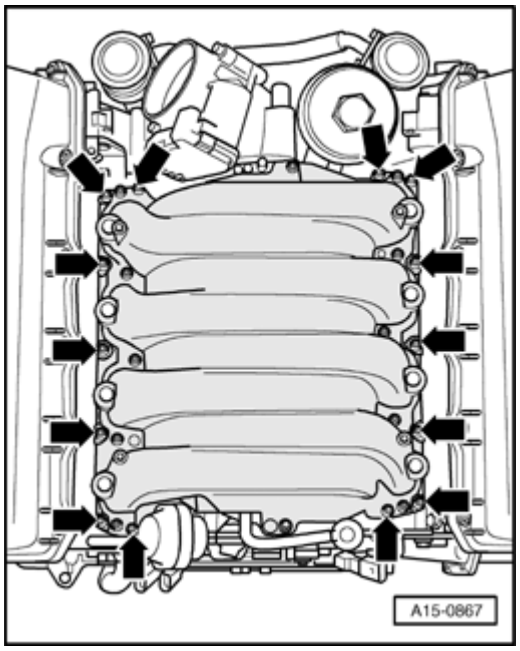

Fig. 119: Removing Intake Manifold Bolts
Courtesy of VOLKSWAGEN UNITED STATES, INC.

- Remove intake manifold bolts - **arrows** - and remove it.

NOTE:

- **Plug intake ports of cylinder head with clean rags.**

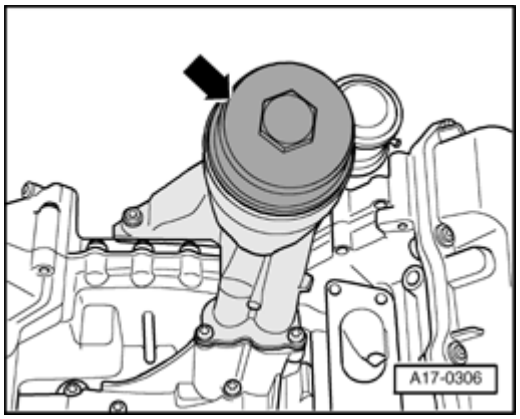

Fig. 120: Removing Cap For Oil Filter Housing
Courtesy of VOLKSWAGEN UNITED STATES, INC.

- Remove cap - **arrow** - for oil filter housing.
- Remove oil filter element.
- Extract engine oil using old oil collecting and extracting device V.A.G 1782 from oil filter housing.

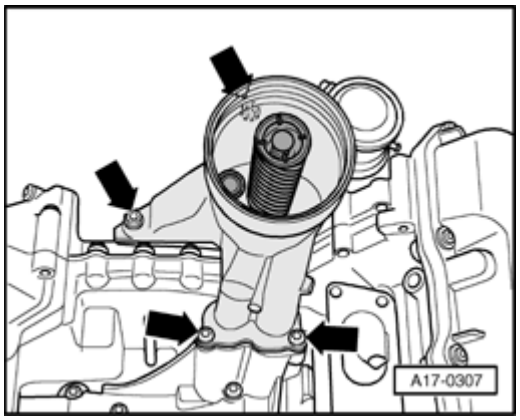

Fig. 121: Removing Bolts & Oil Filter Housing
Courtesy of VOLKSWAGEN UNITED STATES, INC.

NOTE:

- **Place a rag around oil filter housing to catch escaping engine oil.**

- Remove bolts - **arrows** -.
- Remove oil filter housing.

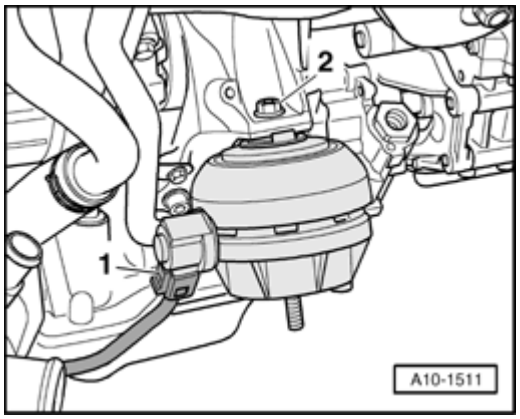

Fig. 122: Disconnecting Electrical Connector, Removing Nut And Engine Mount
Courtesy of VOLKSWAGEN UNITED STATES, INC.

- Disconnect electrical harness connector - **1** - at left engine mount.
- Remove nut - **2** - and remove engine mount.

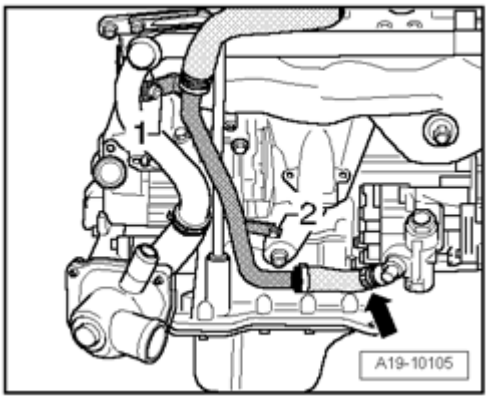

Fig. 123: Removing Bolts & Return Pipe From Power-Steering Pump
Courtesy of VOLKSWAGEN UNITED STATES, INC.

- Remove bolts - **1** - and - **2** -.
- Remove return line from power steering pump - **arrow** -.

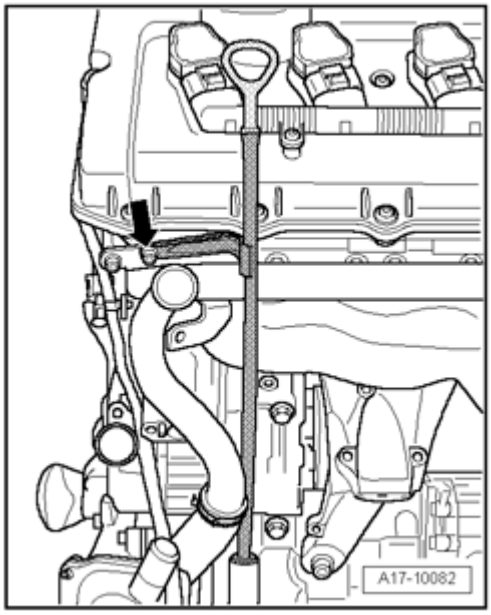

Fig. 124: Removing Guide Pipe For Oil Dipstick At Cylinder Head
Courtesy of VOLKSWAGEN UNITED STATES, INC.

- Remove guide pipe for oil dipstick at cylinder head - **arrow** - , pull up and remove.

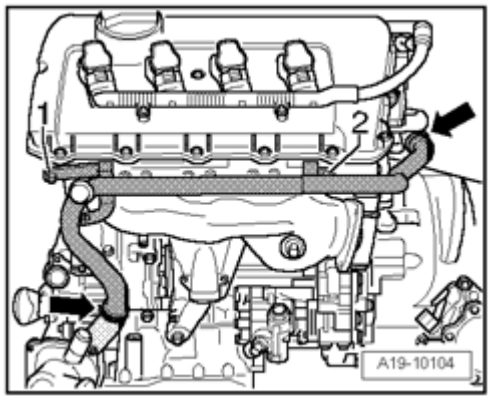

Fig. 125: Removing Bolts & Loosening Hose Clamps And Removing Left Coolant Pipe From Coolant Hoses
Courtesy of VOLKSWAGEN UNITED STATES, INC.

- Remove bolts - **1** - and - **2** -.
- Loosen hose clamps - **arrows** - and remove left coolant pipe from coolant hoses.

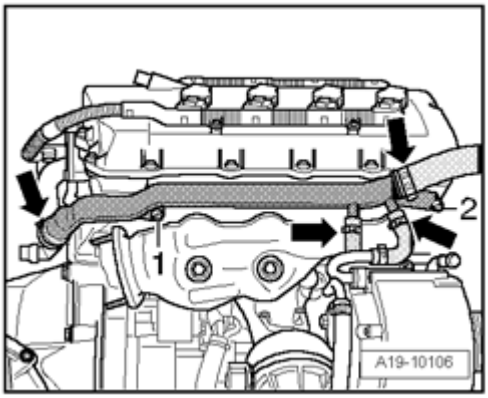

Fig. 126: Removing Bolts & Loosening Hose Clamps And Removing Right Coolant Pipe From Coolant Hoses
Courtesy of VOLKSWAGEN UNITED STATES, INC.

- Remove bolts - **1** - and - **2** -.
- Loosen hose clamps - **arrows** - and remove right coolant pipe from coolant hoses.

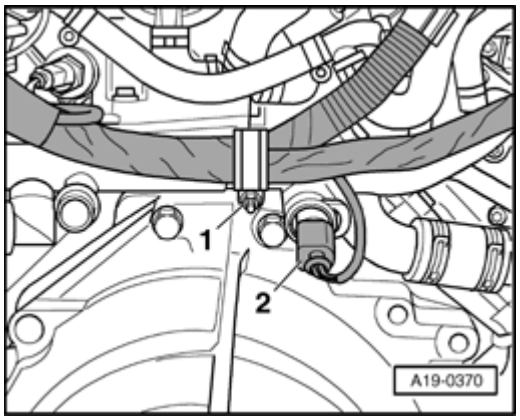

Fig. 127: Disconnecting Electrical Harness Connector On Engine Coolant Temperature (ECT) Gauge Sensor G2/G62
Courtesy of VOLKSWAGEN UNITED STATES, INC.

- Disconnect electrical connector - **2** - on Engine Coolant Temperature (ECT) Sensor G62.
- Remove nut - **1** - and remove electrical wiring harness at rear coolant pipe.

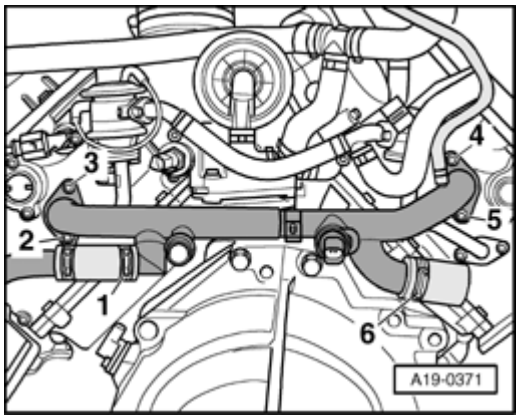

Fig. 128: Removing Bolts & Rear Coolant Pipe
Courtesy of VOLKSWAGEN UNITED STATES, INC.

- Remove bolts - **2 to 5** -.
- Remove rear coolant pipe.

NOTE:

- **Ignore - 1 - and - 6 -.**

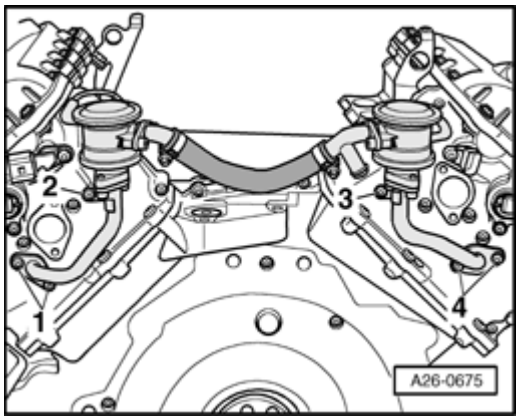

Fig. 129: Removing Secondary Air Injection (AIR) System Combi-Valve Mounting Bolts
Courtesy of VOLKSWAGEN UNITED STATES, INC.

- Remove Secondary Air Injection (AIR) system combi-valve mounting bolts - **1 through 4** -.

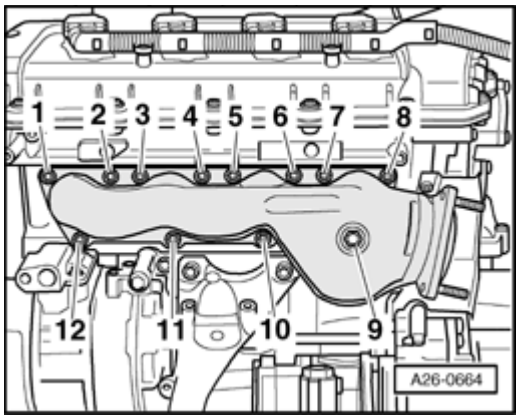

Fig. 130: Removing Nuts And Left Exhaust Manifold
Courtesy of VOLKSWAGEN UNITED STATES, INC.

- Remove nuts - **1 to 12** - and remove left exhaust manifold.

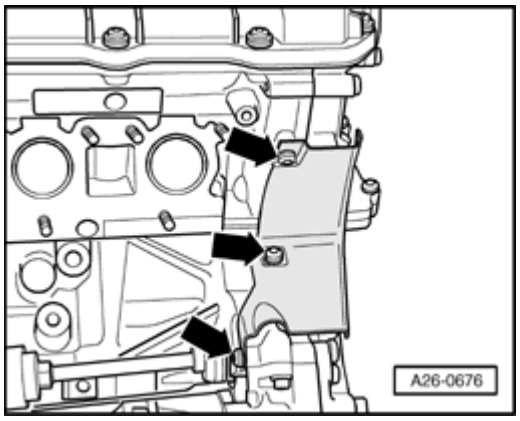

Fig. 131: Removing Left Heat Shield
Courtesy of VOLKSWAGEN UNITED STATES, INC.

- Remove left heat shield - **arrows** -.

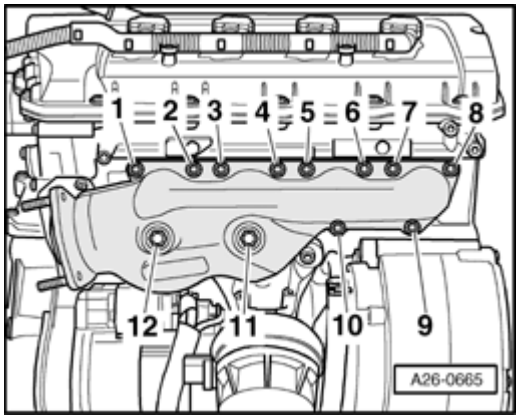

Fig. 132: Removing Nuts And Right Exhaust Manifold
Courtesy of VOLKSWAGEN UNITED STATES, INC.

- Remove nuts - **1 to 12** - and remove right exhaust manifold.

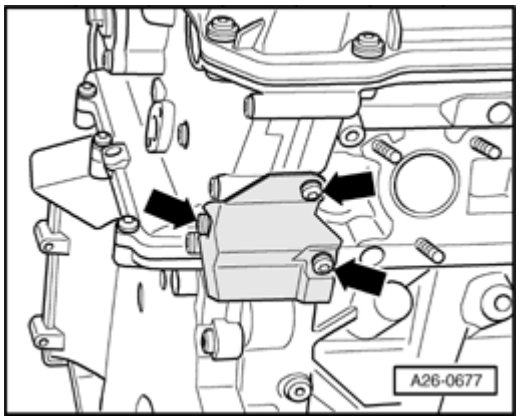

Fig. 133: Removing Right Heat Shield
Courtesy of VOLKSWAGEN UNITED STATES, INC.

- Remove right heat shield - **arrows** -.

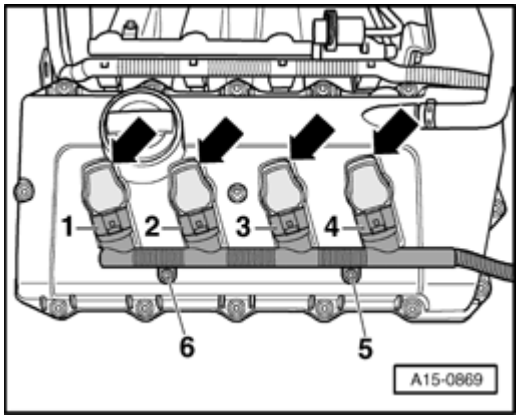

Fig. 134: Removing Bolts On Left Cylinder Head, Disconnecting Electrical Harness Connectors & Removing Ignition Coils
Courtesy of VOLKSWAGEN UNITED STATES, INC.

- Remove bolts - **5** - and - **6** - on left cylinder head.
- Disconnect electrical harness connectors - **1 to 4** -.
- Remove ignition coils - **arrows** -.

NOTE:

- **Puller For Ignition Coil T10094 can be used for removal.**

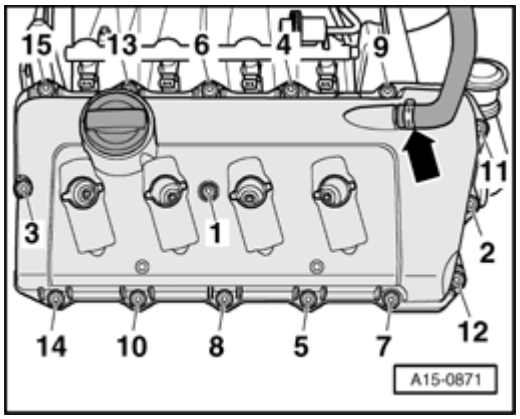

Fig. 135: Disconnecting Hose Of Crankshaft Housing Ventilation & Removing Left Cylinder Head Cover Bolts In Sequence
Courtesy of VOLKSWAGEN UNITED STATES, INC.

- Disconnect hose - **arrow** - of crankshaft housing ventilation.
- Remove left cylinder head cover bolts in sequence - **15 to 1** -.
- Remove cylinder head cover.

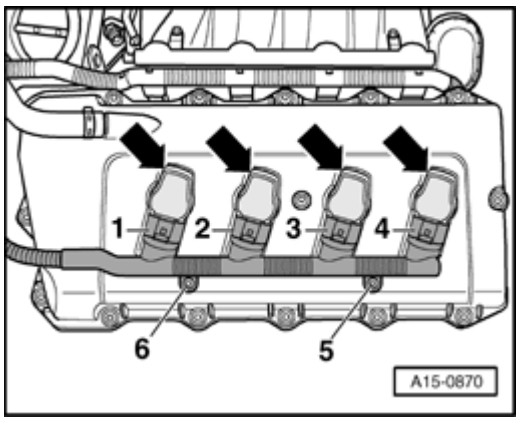

Fig. 136: Removing Bolts On Right Cylinder Head, Disconnecting Electrical Harness Connectors & Removing Ignition Coils
Courtesy of VOLKSWAGEN UNITED STATES, INC.

- Remove bolts - **5** - and - **6** - on right cylinder head.
- Disconnect electrical harness connectors - **1 to 4** -.
- Remove ignition coils - **arrows** -.

NOTE:

- **Puller For Ignition Coil T10094 can be used for removal.**

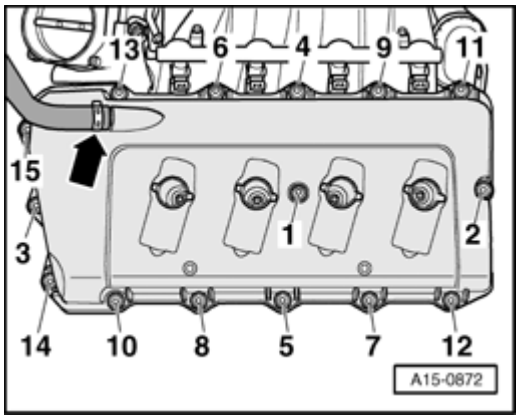

Fig. 137: Disconnecting Hose Of Crankshaft Housing Ventilation & Removing Right Cylinder Head Cover Screws In Sequence
Courtesy of VOLKSWAGEN UNITED STATES, INC.

- Disconnect hose of crankshaft housing ventilation - **arrow** -.
- Remove right cylinder head cover bolts in sequence - **15 to 1** -.
- Remove cylinder head cover.

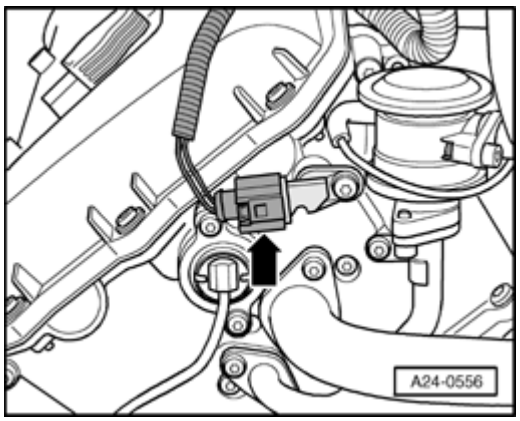

Fig. 138: Disconnecting Electrical Harness Connector For Camshaft Position (CMP) Sensor 2 G163 On Left Cylinder Head
Courtesy of VOLKSWAGEN UNITED STATES, INC.

- Disconnect electrical harness connector - **arrow** - for Camshaft Position (CMP) Sensor 2 G163 on left cylinder head.

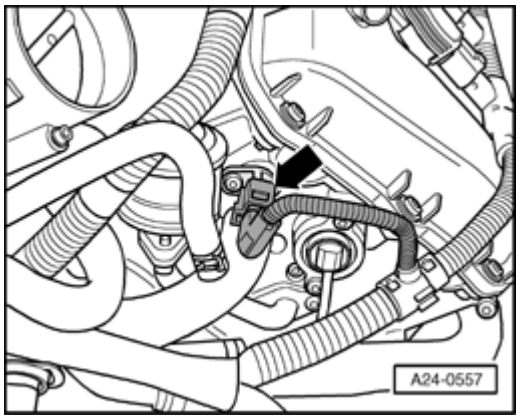

Fig. 139: Disconnecting Electrical Harness Connector For Camshaft Position (CMP) Sensor G40 On Right Cylinder Head
Courtesy of VOLKSWAGEN UNITED STATES, INC.

- Disconnect electrical harness connector - **arrow** - for Camshaft Position (CMP) Sensor G40 on right cylinder head.

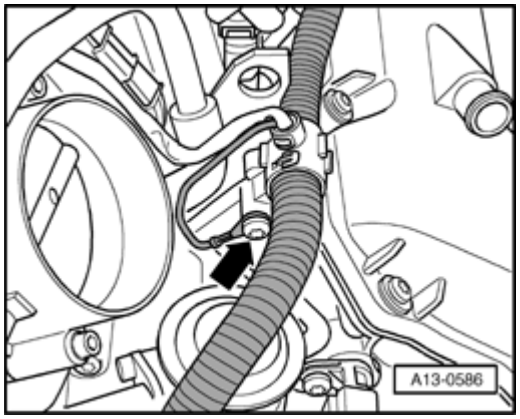

Fig. 140: Removing Ground (GND) Cable On Right Cylinder Head
Courtesy of VOLKSWAGEN UNITED STATES, INC.

- Remove Ground (GND) cable on right cylinder head - **arrow** -.
- Set wiring harness aside.

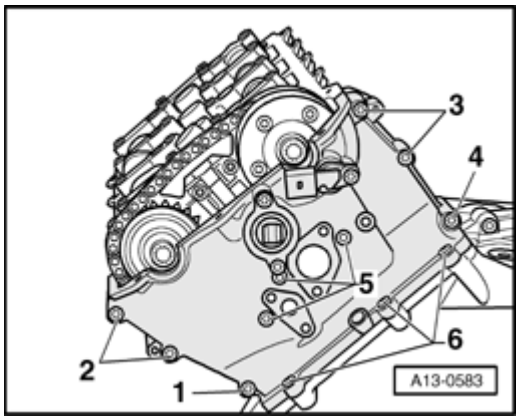

Fig. 141: Removing/Installing Bolts And Left Timing Chain Cover
Courtesy of VOLKSWAGEN UNITED STATES, INC.

- Remove bolts - **1 to 6** - and remove left timing chain cover.

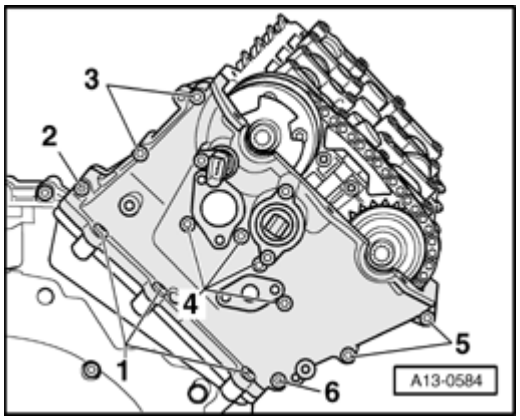

Fig. 142: Removing/Installing Bolts And Right Timing Chain Cover
Courtesy of VOLKSWAGEN UNITED STATES, INC.

- Remove bolts - **1 to 6** - and remove right timing chain cover.

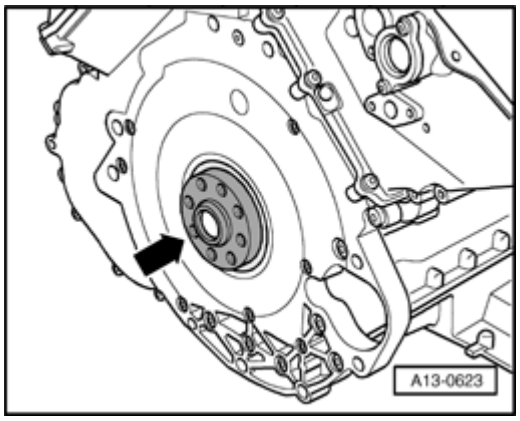

Fig. 143: Removing Shim From Crankshaft
Courtesy of VOLKSWAGEN UNITED STATES, INC.

- Pull off shim - **arrow** - from crankshaft.

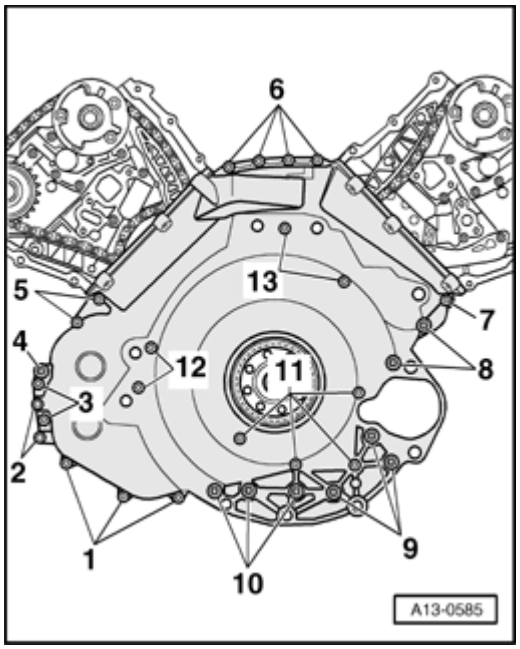

Fig. 144: Removing Bolts And Lower Timing Chain Cover
Courtesy of VOLKSWAGEN UNITED STATES, INC.

- Remove bolts - **1 to 13** - and remove lower timing chain cover.
- Press sealing ring for crankshaft at rear out of cover.

Installing

NOTE:

- **Replace gaskets, seals and O-rings.**

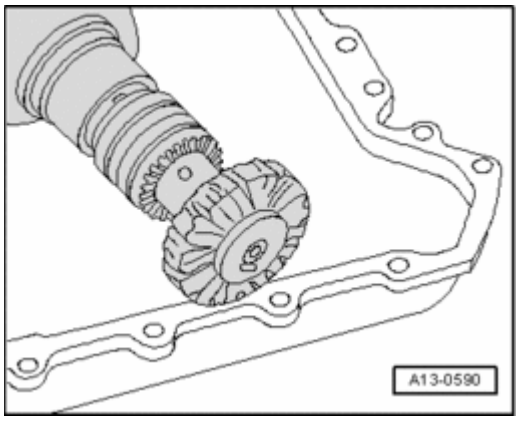

Fig. 145: Using Rotating Plastic Brush To Remove Any Sealant Residue From Sealing Flange, Cylinder Block And Upper Part Of Oil Pan
Courtesy of VOLKSWAGEN UNITED STATES, INC.

- Using e.g. a rotating plastic brush, remove sealant residue on covers for timing chain and on cylinder block and head.

CAUTION: Wear safety glasses.

- Clean sealing surfaces, must be free of oil and grease.

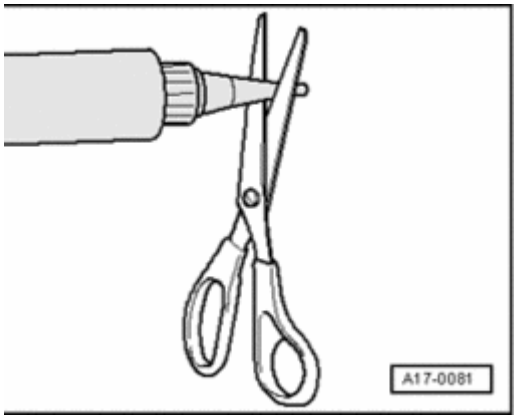

Fig. 146: Cutting Tube Nozzle At Front Marking
Courtesy of VOLKSWAGEN UNITED STATES, INC.

- Cut tube nozzle at front marking (jet dia. approx. 1 mm).

NOTE:

- **Covers for timing chain must be installed within 5 minutes after applying sealant.**

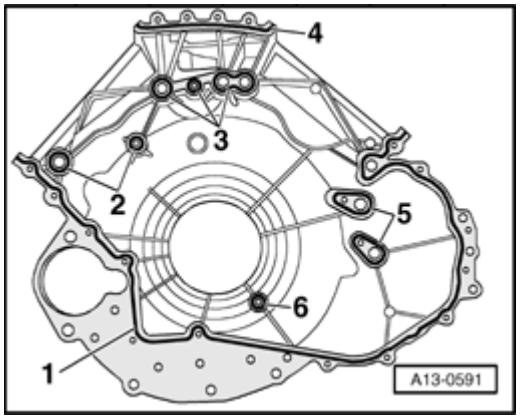

Fig. 147: Applying Sealant Beads On Clean Sealing Surfaces Of Lower Cover For Timing Chain
Courtesy of VOLKSWAGEN UNITED STATES, INC.

- Apply sealant beads - **1 to 6** - , as shown in illustration, on clean sealing surfaces of lower cover for timing chain.
- Thickness of sealant bead: 1.5 to 2.0 mm.
- Check whether 2 alignment bushings are present in cylinder block, install if necessary.

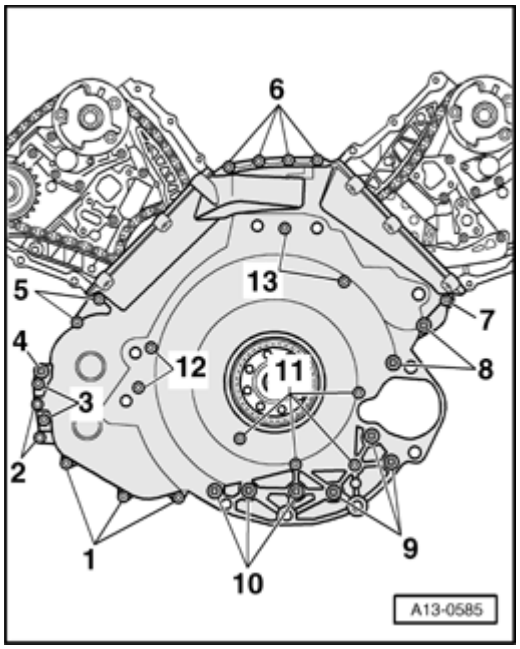

Fig. 148: Removing Bolts And Lower Timing Chain Cover
Courtesy of VOLKSWAGEN UNITED STATES, INC.

- Position lower cover for timing chain and tighten bolts as follows.

Tightening sequence	Bolt	Nm
I	11, 12, 13	10
II	1, 3, 4, 5, 6, 7, 8, 9, 10	10
III	4, 8, 9, 10	22
IV	2 for power steering pump	22

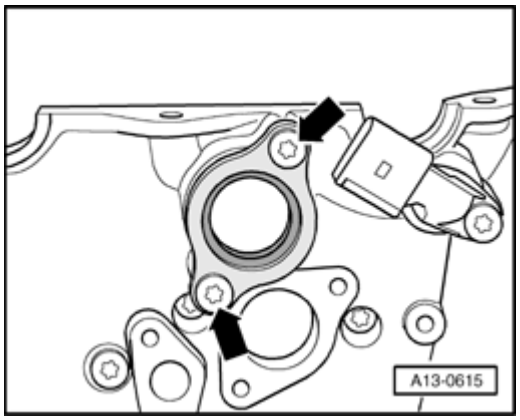

Fig. 149: Removing/Installing Sealing Flanges For Camshaft Adjuster On Left/Right Covers For Timing Chain
Courtesy of VOLKSWAGEN UNITED STATES, INC.

- Remove sealing flanges for camshaft adjuster on left and right covers for timing chain - **arrows** -.

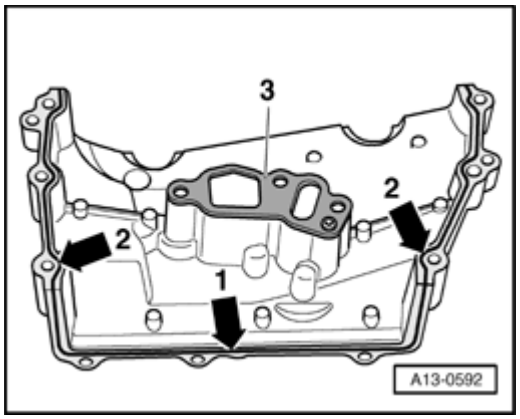

Fig. 150: Applying Sealant Bead On Clean Sealing Surfaces Of Left Cover For Timing Chain
Courtesy of VOLKSWAGEN UNITED STATES, INC.

- Apply sealant bead - **arrow** - , as shown in illustration, on clean sealing surfaces of left cover for timing chain.

- Groove on lower sealing surface - **arrow 1** - must be completely filled with sealant. Sealant bead must stand 1.5 to 2.0 mm above sealing surface.
- Sealant bead on front sealing surface - **arrows 2** - must be 1.5 to 2.0 mm thick.

- Install new seal - **3** - on left cover for timing chain.

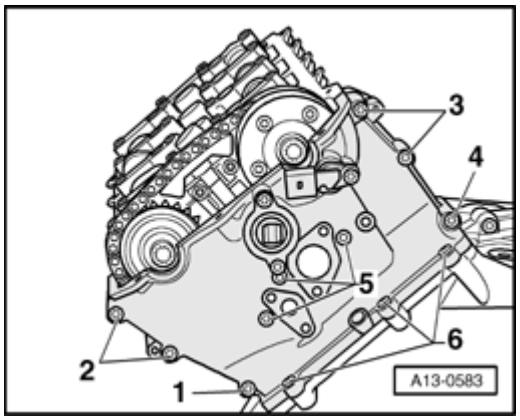

Fig. 151: Removing/Installing Bolts And Left Timing Chain Cover
Courtesy of VOLKSWAGEN UNITED STATES, INC.

- Position left cover for timing chain and tighten bolts as follows.

Tightening sequence	Bolt	Nm
I	1 to 4	5
II	6	10
III	5	10
IV	1 to 4	10

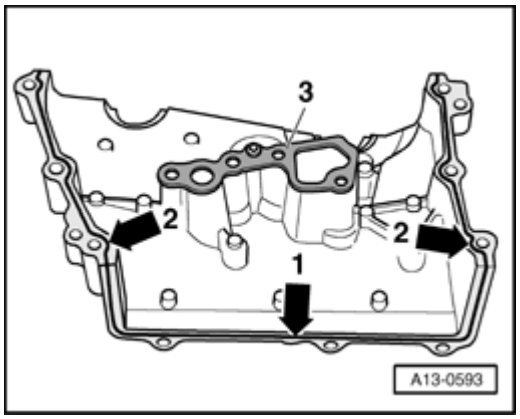

Fig. 152: Applying Sealant Beads On Clean Sealing Surfaces Of Right Cover For Timing Chain
Courtesy of VOLKSWAGEN UNITED STATES, INC.

- Apply sealant beads - **arrows** - , as shown in illustration, on clean sealing surfaces of right cover for timing chain.

- Groove on lower sealing surface - **arrow 1** - must be completely filled with sealant. Sealant bead must stand 1.5 to 2.0 mm above sealing surface.
- Sealant bead on front sealing surface - **arrows 2** - must be 1.5 to 2.0 mm thick.

- Install new seal - **3** - on right cover for timing chain.

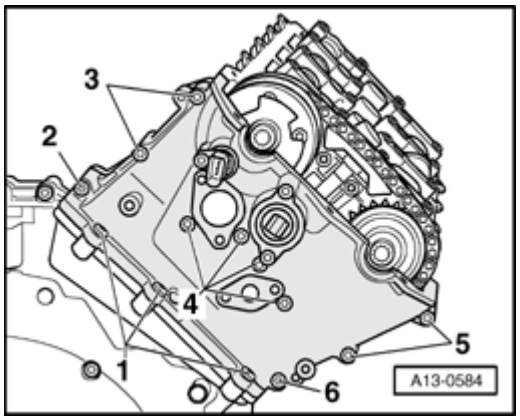

Fig. 153: Removing/Installing Bolts And Right Timing Chain Cover
Courtesy of VOLKSWAGEN UNITED STATES, INC.

- Position right cover for timing chain and tighten bolts as follows.

Tightening sequence	Bolt	Nm
I	2, 3, 5, 6	5
II	1	10
III	4	10
IV	2, 3, 5, 6	10

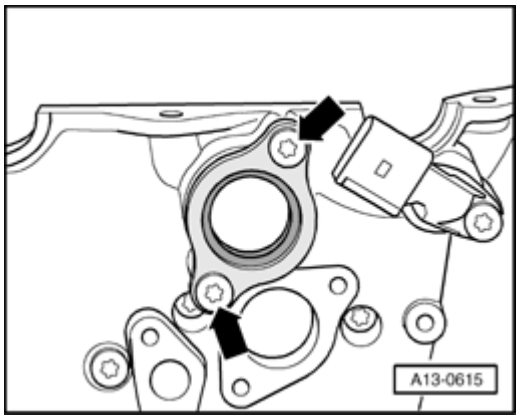

Fig. 154: Removing/Installing Sealing Flanges For Camshaft Adjuster On Left/Right Covers For Timing Chain
Courtesy of VOLKSWAGEN UNITED STATES, INC.

- Install sealing flanges for camshaft adjuster with new sealing rings - **arrows** - on left and right covers for timing chain.

Further installation is in reverse order of removal, note the following:

- Install crankshaft seal, timing chain side --> **Crankshaft seal, timing chain side, replacing**.
- Install cylinder head cover: left **Installing** , right **Installing**.
- Install exhaust manifold: left --> **Left exhaust manifold, removing and installing** , right --> **Right exhaust manifold, removing and installing**.
- Install combination valve for Secondary Air Injection (AIR) system: left --> **Left combination valve for Secondary Air Injection (AIR), removing and installing** , right --> **Right combination valve for Secondary Air Injection (AIR), removing and installing**.

- Install rear coolant pipe --> **Rear coolant line, removing and installing**.
- Install left coolant pipe --> **Left coolant pipe, removing and installing**.
- Install oil filter housing --> **Oil filter housing, removing and installing**.
- Install intake manifold --> **Intake manifold, removing and installing**.

- Install drive plate --> **Drive plate, removing and installing**.
- Bolt transmission to engine and install engine/transmission unit --> **Engine, installing**.
- Add engine oil and check oil level --> **MAINTENANCE PROCEDURES** .

Torque specifications

Component			**Nm**
Lower cover for	Power steering pump		22
Timing chain to	Engine	M6	10
		M8	22
Seal on cover for timing chain			4 * See note

Left and right cover for timing chain on engine	10
Sealing flange on cover for timing chain	10
Hall sensor on cover for timing chain	10
Ground (GND) wire to cylinder head	10
Heat shield to engine	10

* Insert using locking compound .

CAMSHAFT DRIVE

Camshaft drive

NOTE:

- **Crankshaft and camshafts must only be rotated when chain drive is installed completely. Otherwise the valves impact on the pistons danger of damage to valves/piston heads.**

Camshaft timing chain, component overview

Left camshaft timing chain

NOTE:

- **Before removing timing chain, mark direction of travel with paint. Reversing the rotation direction of a used chain can destroy it.**

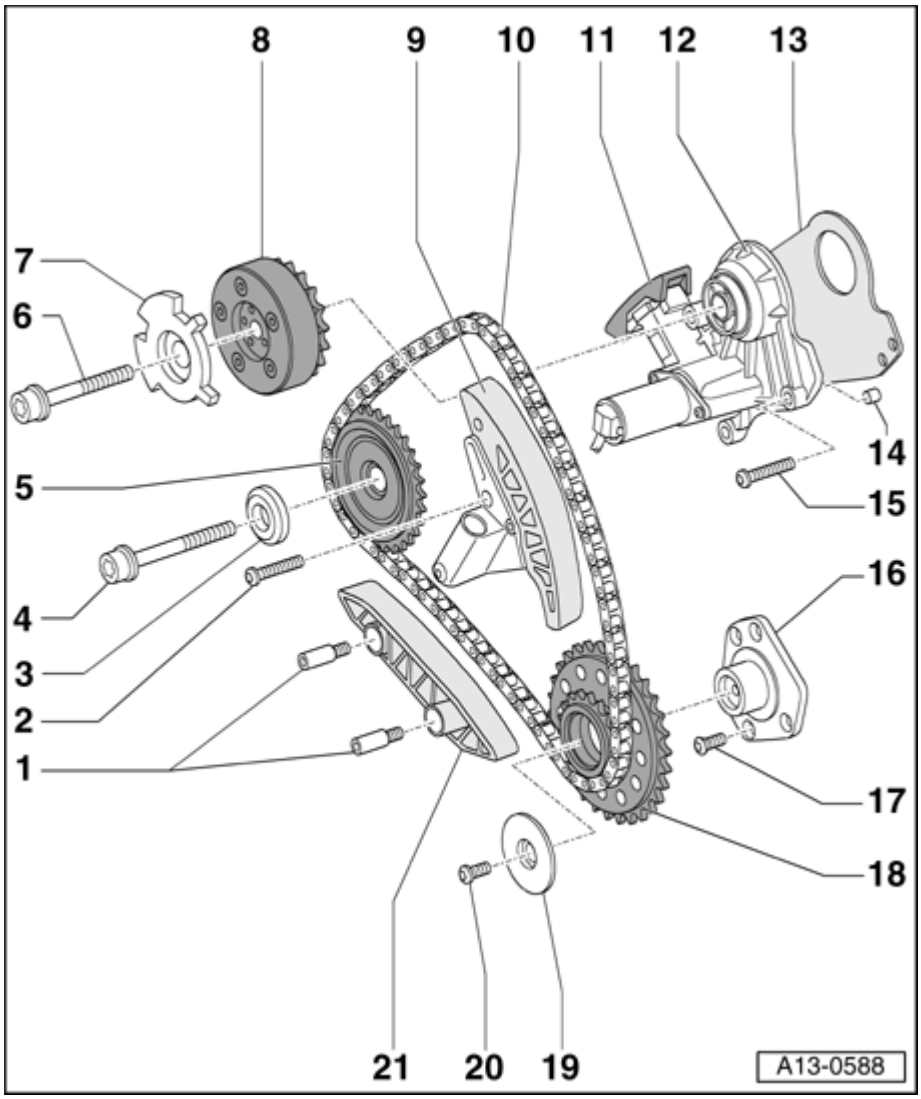

Fig. 155: Camshaft Timing Chain, Component Overview (Left Camshaft Timing Chain)
Courtesy of VOLKSWAGEN UNITED STATES, INC.

1 - Pivot pin, 10 Nm

2 - 5 Nm plus an additional 90° ($^1/_4$ turn)

- Replace

3 - Washer

- Note installation position

4 - Camshaft bolt

- Replace

- Initial tightening torque:
  - 40 Nm
- Final tightening torque:
  - 100 Nm plus an additional 90° ($^1/_4$ turn)

5 - Chain sprocket

- For exhaust camshaft

6 - Camshaft bolt

- Replace
- Initial tightening torque:
  - 40 Nm
- Final tightening torque:
  - 100 Nm plus an additional 90° ($^1/_4$ turn)

7 - Hall sensor wheel

- When installing timing chain, adjust using setting gauge T40047 --> **Fig. 180**

8 - Camshaft adjuster

- For intake camshaft

9 - Chain tensioner

- For left timing chain

10 - Left timing chain

11 - Guide rail

- Can be replaced separately

12 - Control housing

- For camshaft adjuster

13 - Gasket

- Replace

14 - Alignment bushing

- 2 pieces

15 - 5 Nm plus an additional 90° ($^1/_4$ turn)

- Replace

16 - Bracket

- For drive sprocket

17 - 10 Nm

18 - Drive sprocket

- For left timing chain

19 - Thrust washer

- For drive sprocket

20 - 5 Nm plus an additional 90° ($^1/_4$ turn)

- Replace

21 - Guide rail

Right camshaft timing chain

NOTE:

- **Before removing timing chain, mark direction of travel with paint. Reversing the rotation direction of a used chain can destroy it.**

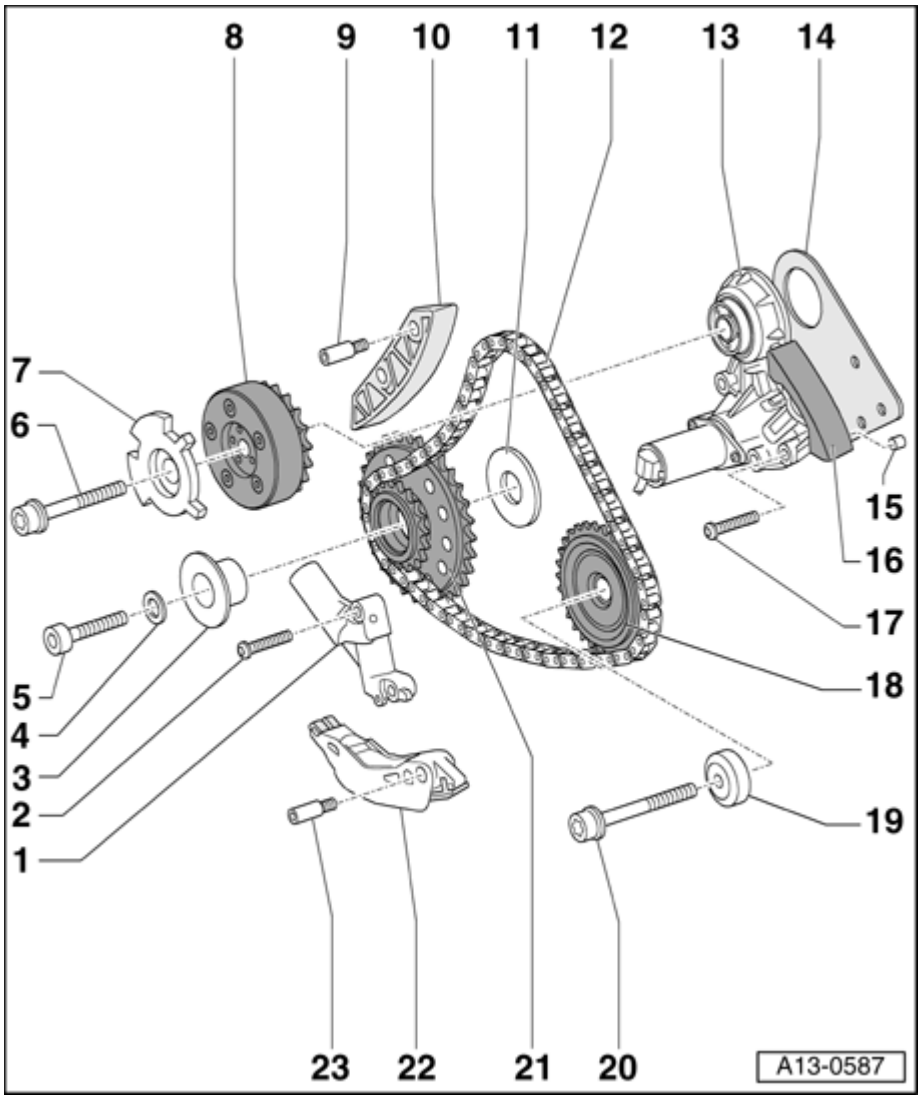

Fig. 156: Camshaft Timing Chain, Component Overview (Right Camshaft Timing Chain)
Courtesy of VOLKSWAGEN UNITED STATES, INC.

1 - Chain tensioner

- For right timing chain

2 - 5 Nm plus an additional 90° ($^1/_4$ turn)

- Replace

3 - Mounting pin

- For drive sprocket

4 - Washer

5 - 42 Nm

6 - Camshaft bolt

- Replace
- Initial tightening torque:
  - 40 Nm
- Final tightening torque:
  - 100 Nm plus an additional 90° ($^{1}/_{4}$ turn)

7 - Hall sensor wheel

- When installing timing chain, adjust using setting gauge T40047 --> **Fig. 181**

8 - Camshaft adjuster

- For intake camshaft

9 - Pivot pin, 10 Nm

10 - Guide rail

11 - Thrust washer

- For drive sprocket

12 - Right timing chain

13 - Control housing

- For camshaft adjuster

14 - Gasket

- Replace

15 - Alignment bushing

- 2 pieces

16 - Guide rail

- Can be replaced separately

17 - 5 Nm plus an additional 90° ($^1/_4$ turn)

- Replace

18 - Chain sprocket

- For exhaust camshaft

19 - Washer

- Note installation position

20 - Camshaft bolt

- Replace
- Initial tightening torque:
  - 40 Nm
- Final tightening torque:
  - 100 Nm plus an additional 90° ($^1/_4$ turn)

21 - Drive sprocket

- For right timing chain

22 - Guide rail

- For timing chain

23 - Pivot pin, 10 Nm

Camshaft timing chain, removing and installing

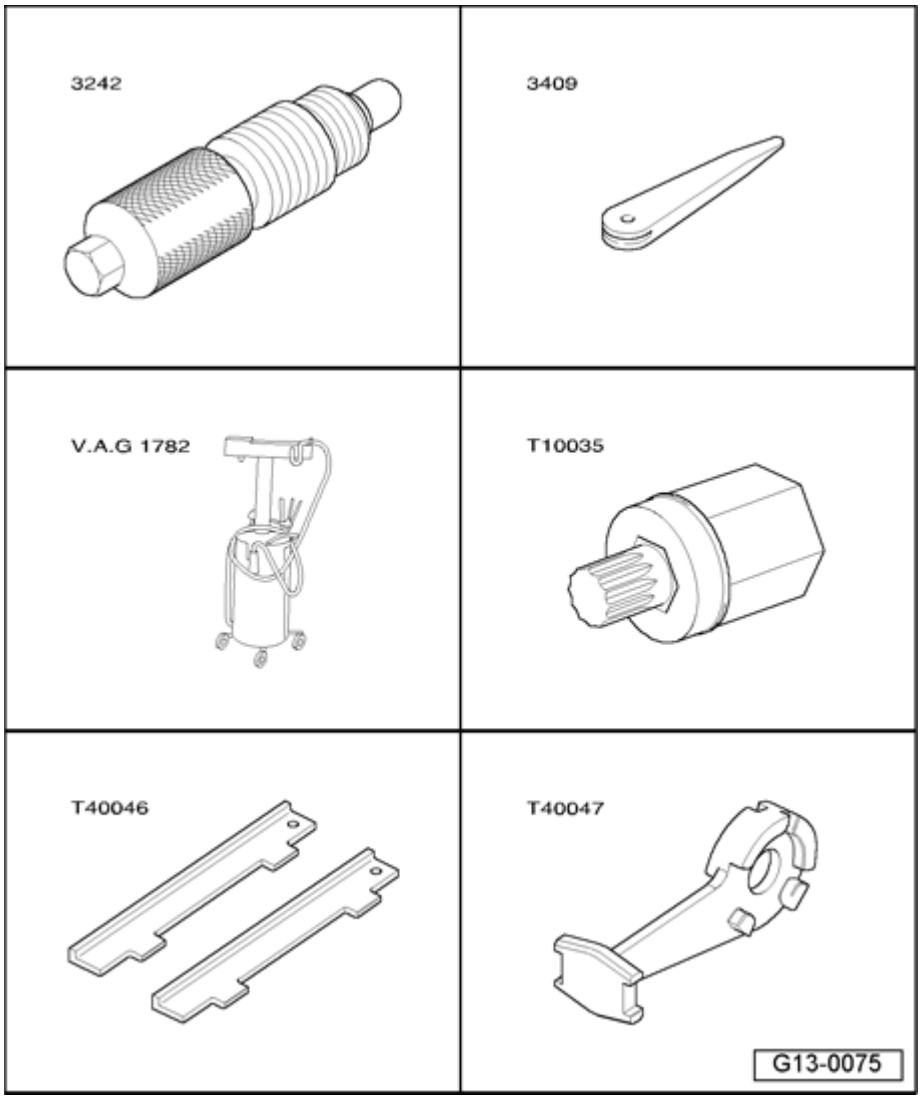

Fig. 157: Identifying Special Tools - Camshaft Timing Chain, Removing And Installing
Courtesy of VOLKSWAGEN UNITED STATES, INC.

Special tools, testers and auxiliary items required

- Locking pin 3242
- Trim removal wedge 3409 (2x)
- Old oil collecting and extracting device V.A.G 1782
- Multi-point socket T10035
- Camshaft locator T40046 (qty. 2)
- Setting gauge T40047

Special tools, testers and auxiliary items required

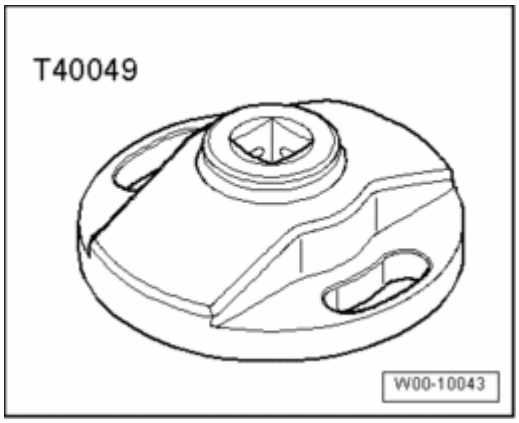

Fig. 158: Wrench T40049
Courtesy of VOLKSWAGEN UNITED STATES, INC.

- Wrench T40049
- Drill bit 3.3 mm dia. (2x)

Removing

- Drain engine oil --> **MAINTENANCE PROCEDURES** .
- Remove engine --> **Engine, removing and installing**.
- Separate engine/transmission --> **Engine and transmission, separating**.
- Remove covers for timing chains --> **All covers for timing chain, removing and installing**.

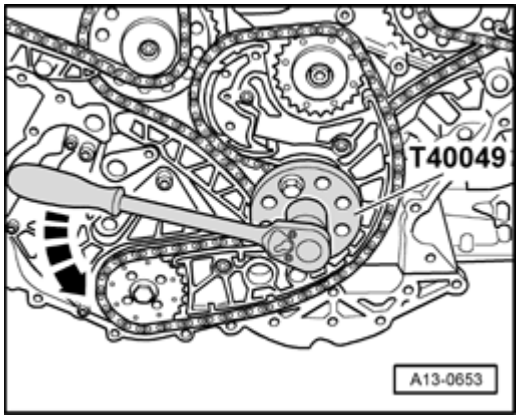

Fig. 159: Rotating Crankshaft To TDC Ignition Timing
Courtesy of VOLKSWAGEN UNITED STATES, INC.

- Install Key T40049 at rear on crankshaft using 2 old drive plate bolts.
- Rotate crankshaft in direction of engine rotation - **arrow** - to TDC ignition timing.

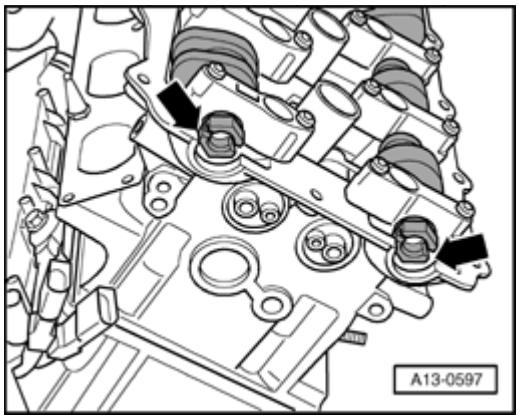

Fig. 160: Identifying Slits At Front In Camshafts Stand Parallel At Same Height With Upper Edge Of Cylinder Head
Courtesy of VOLKSWAGEN UNITED STATES, INC.

- Slits - **arrows** - at front in camshafts must stand parallel at same height with upper edge of cylinder head.

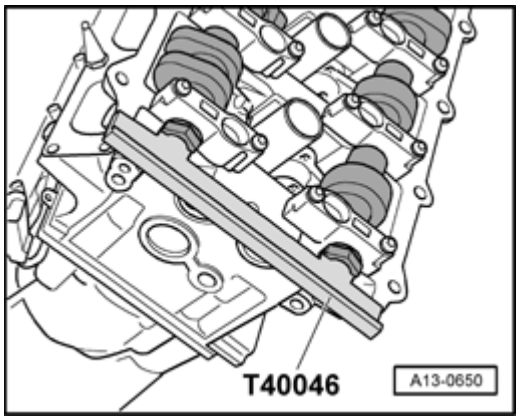

Fig. 161: Removing/Installing Camshaft Locator T40046
Courtesy of VOLKSWAGEN UNITED STATES, INC.

- Rotate camshafts at hex head slightly back and forth if necessary so that camshaft locator T40046 can be inserted.
- If camshaft locator T40046 cannot be inserted, rotate crankshaft 1 rotation (360°) further.
- Remove camshaft locator again.
- Remove drain plug from upper section of oil pan.

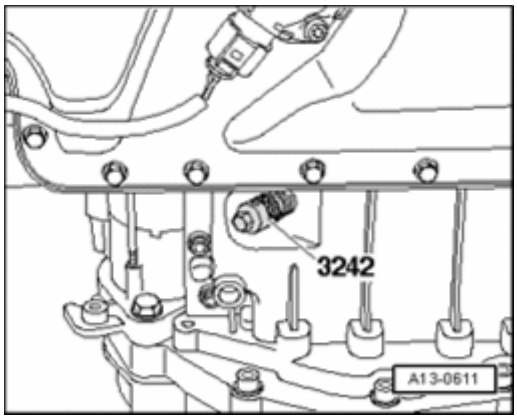

Fig. 162: Removing/Installing Crankshaft Holder 3242 Into Hole
Courtesy of VOLKSWAGEN UNITED STATES, INC.

- Install crankshaft holder 3242 into hole (20 Nm), if necessary rotate crankshaft very slightly back and forth to completely center holder.

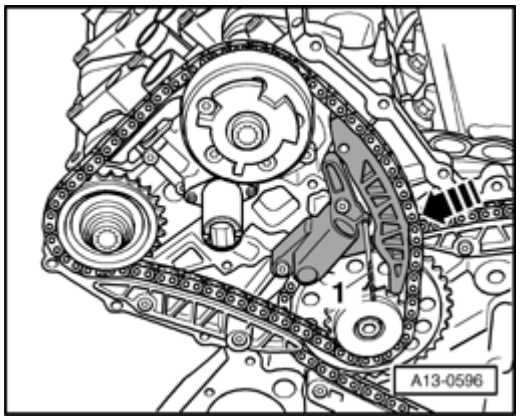

Fig. 163: Pushing Glide Track Of Chain Tensioner For Left Timing Chain
Courtesy of VOLKSWAGEN UNITED STATES, INC.

- Push glide track of chain tensioner for left timing chain in direction of - **arrow** - and pull off chain tensioner using a drill bit 3.3 mm dia. - **1** -.
- Mark running direction of left timing chain with paint.

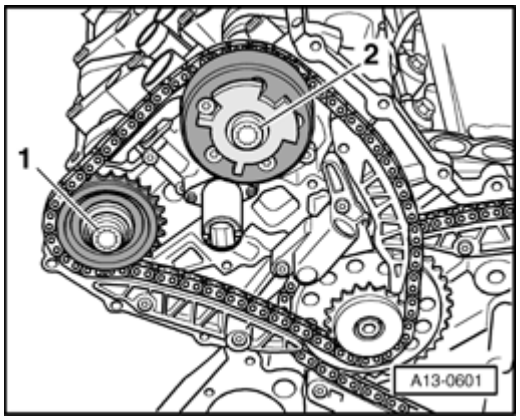

Fig. 164: Removing/Installing Bolts For Camshaft Chain Sprocket Or Camshaft Adjuster Using Multipoint Socket T10035
Courtesy of VOLKSWAGEN UNITED STATES, INC.

- Remove bolts - **1** - and - **2** - for camshaft chain sprocket or camshaft adjuster using multipoint socket T10035.
- Remove camshaft chain sprocket, camshaft adjuster and timing chain.

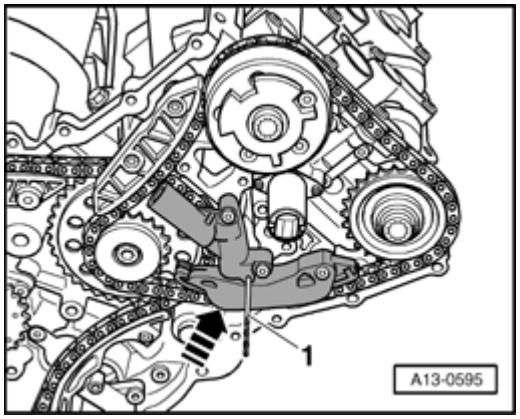

Fig. 165: Pushing Glide Track Of Chain Tensioner For Right Timing Chain
Courtesy of VOLKSWAGEN UNITED STATES, INC.

- Push glide track of chain tensioner for right timing chain in direction of - **arrow** - and pull off chain tensioner using a drill bit 3.3 mm dia. - **1** -.
- Mark running direction of right timing chain with paint.

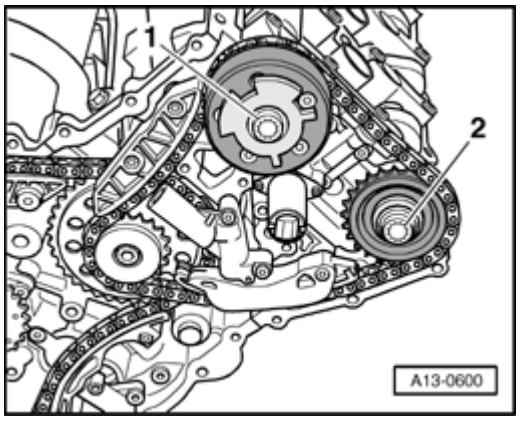

Fig. 166: Removing/Installing Bolts For Camshaft Chain Sprocket Or Camshaft Adjuster Using Multipoint Socket T10035
Courtesy of VOLKSWAGEN UNITED STATES, INC.

- Remove bolts - **1** - and - **2** - for camshaft chain sprocket or camshaft adjuster using multipoint socket T10035.
- Remove camshaft chain sprocket, camshaft adjuster and timing chain.

Installing

- Secure crankshaft in TDC position using crankshaft holder 3242.
- Drive chain for timing mechanism installed --> **Drive chain for timing mechanism, removing and installing**.

NOTE:

- **Always replace bolts that are tightened to torque as well as O-rings and gaskets.**
- **When turning camshaft, crankshaft must not be at TDC for any cylinder. Valves and/or pistons may be damaged.**

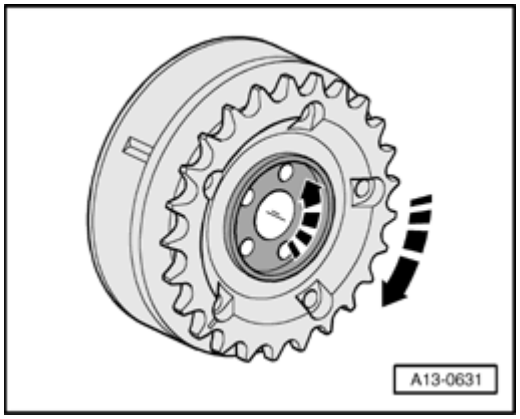

Fig. 167: Rotating Inner Part And Outer Part Of Both Camshaft Adjusters Against Each Other Up To Lock Position
Courtesy of VOLKSWAGEN UNITED STATES, INC.

- Rotate inner part and outer part of both camshaft adjusters - **arrows** - against each other up to lock position.

- Inner part and outer part must not be able to be against each other in lock position (slight play can still be felt)

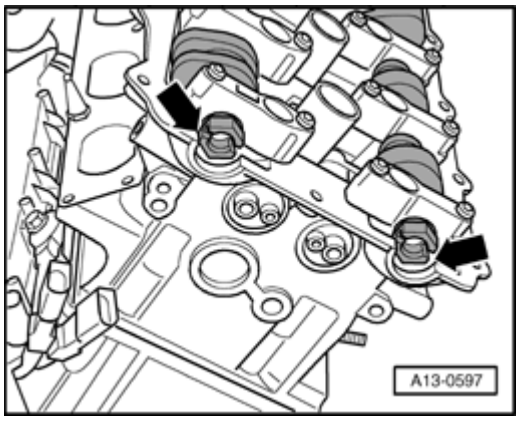

Fig. 168: Identifying Slits At Front In Camshafts Stand Parallel At Same Height With Upper Edge Of Cylinder Head
Courtesy of VOLKSWAGEN UNITED STATES, INC.

- Check whether camshafts of both cylinder heads stand in TDC position.

- Slits - **arrows** - at front in camshafts must stand parallel at same height with upper edge of cylinder head.

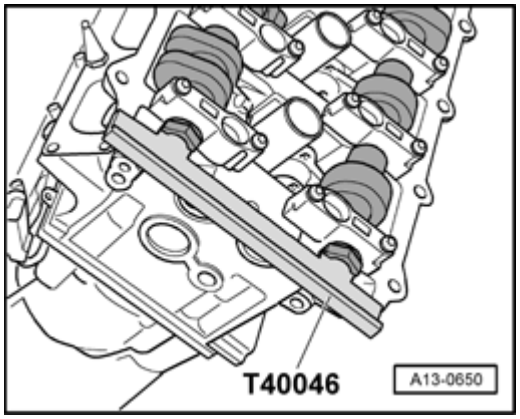

Fig. 169: Removing/Installing Camshaft Locator T40046
Courtesy of VOLKSWAGEN UNITED STATES, INC.

- Insert camshaft locator T40046 into camshafts of left cylinder head, to do so rotate camshafts back or forth at hex head if necessary.

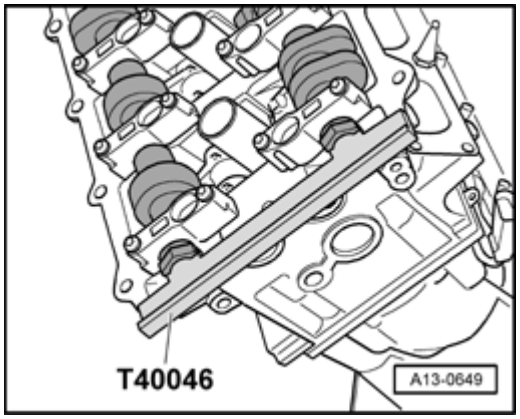

Fig. 170: Removing/Inserting Camshaft Locator T40046 From/Into Camshafts Of Right Cylinder Head
Courtesy of VOLKSWAGEN UNITED STATES, INC.

- Insert camshaft locator T40046 into camshafts of right cylinder head, to do so rotate camshafts back or forth at hex head if necessary.
- Replace all four camshaft bolts.

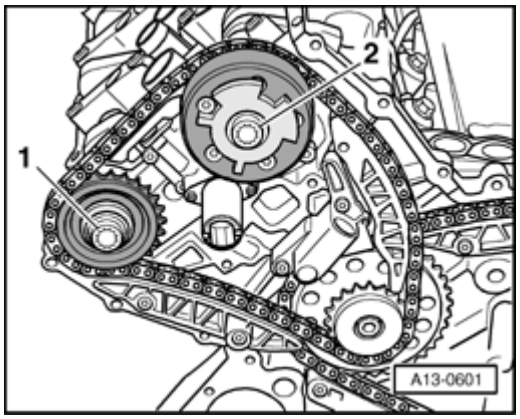

Fig. 171: Removing/Installing Bolts For Camshaft Chain Sprocket Or Camshaft Adjuster Using Multipoint Socket T10035
Courtesy of VOLKSWAGEN UNITED STATES, INC.

- Assemble left timing chain with chain sprocket and camshaft adjuster.
- Loosely install bolts - **1** - and - **2** -.

- Chain sprocket and camshaft adjuster must be able to still be rotated on camshaft and must not tip.

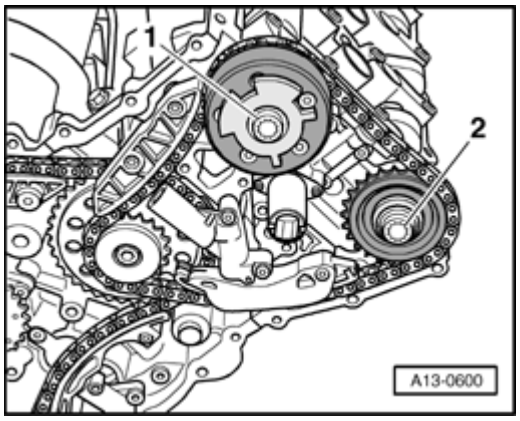

Fig. 172: Removing/Installing Bolts For Camshaft Chain Sprocket Or Camshaft Adjuster Using Multipoint Socket T10035
Courtesy of VOLKSWAGEN UNITED STATES, INC.

- Assemble right timing chain with chain sprocket and camshaft adjuster.
- Loosely install bolts - **1** - and - **2** -.

- Chain sprocket and camshaft adjuster must be able to still be rotated on camshaft and must not tip.

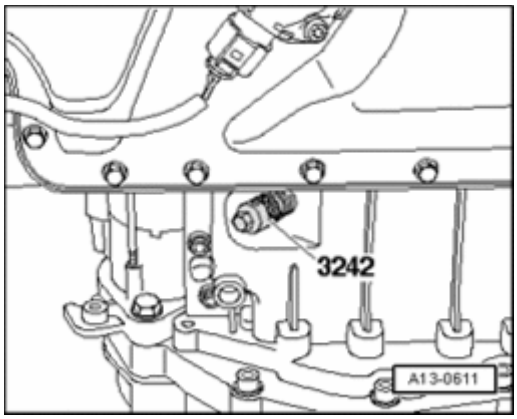

Fig. 173: Removing/Installing Crankshaft Holder 3242 Into Hole
Courtesy of VOLKSWAGEN UNITED STATES, INC.

- Remove crankshaft holder 3242.

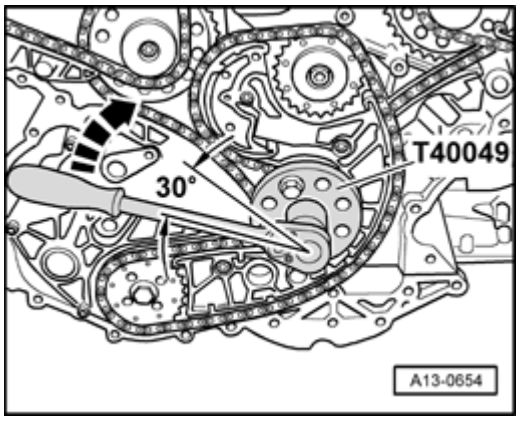

Fig. 174: Using Key T40049 To Rotate Crankshaft In Opposite Direction Of Engine Rotation
Courtesy of VOLKSWAGEN UNITED STATES, INC.

- Using Key T40049 , rotate crankshaft approx. 30° in opposite direction of engine rotation - **arrow** -.
- Pull drill out of alignment hole, which loosens left chain tensioner.

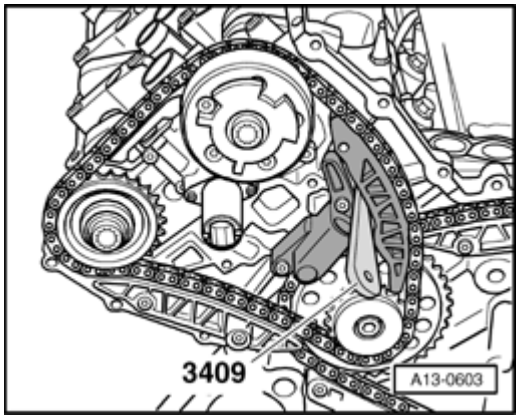

Fig. 175: Inserting Trim Removal Wedge 3409

Courtesy of VOLKSWAGEN UNITED STATES, INC.

- Insert Trim Removal Wedge 3409 as depicted in illustration and bring chain tensioner into contact with wedge.

NOTE:

- **Lightly pressing in an extra 0.5 mm is permitted.**

- Pull drill out of alignment hole, which loosens right chain tensioner.

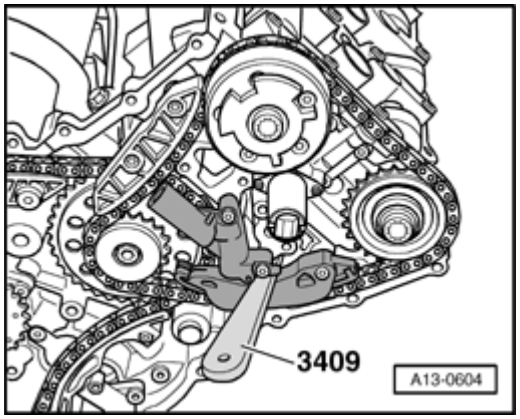

Fig. 176: Insert Trim Removal Wedge 3409
Courtesy of VOLKSWAGEN UNITED STATES, INC.

- Insert trim removal wedge 3409 as depicted in illustration and bring chain tensioner into contact with trim removal wedge 3409.

NOTE:

- **Lightly pressing in an extra 0.5 mm is permitted.**

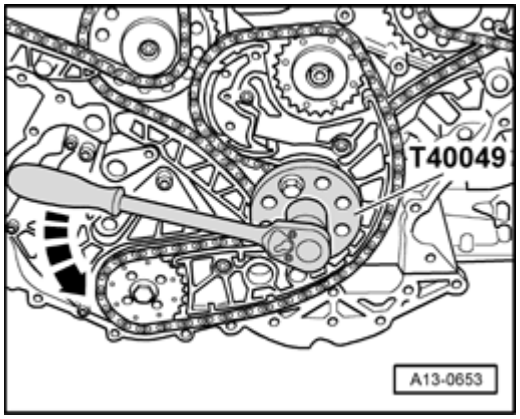

Fig. 177: Rotating Crankshaft To TDC Ignition Timing
Courtesy of VOLKSWAGEN UNITED STATES, INC.

- Using Key T40049 , rotate crankshaft in direction of engine rotation - **arrow** - to TDC ignition timing.

NOTE:

- **If rotated unintentionally beyond TDC, turn back crankshaft again approx. 30° and set to TDC again.**

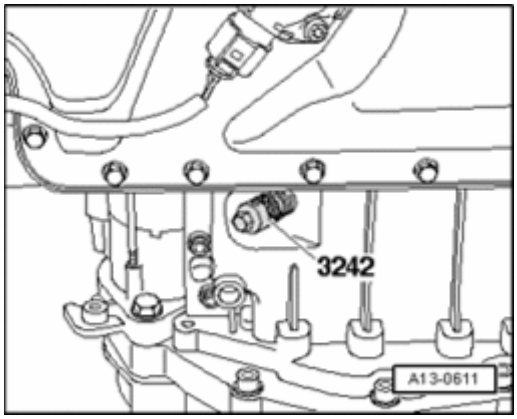

Fig. 178: Removing/Installing Crankshaft Holder 3242 Into Hole
Courtesy of VOLKSWAGEN UNITED STATES, INC.

- Install crankshaft holder 3242 into hole, if necessary rotate crankshaft very slightly back and forth to completely center holder. Torque specification: 20 Nm.

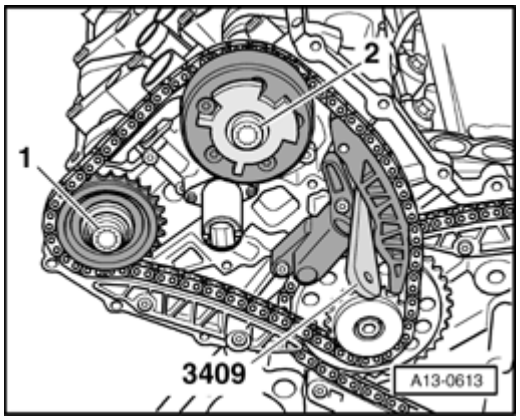

Fig. 179: Tightening Camshaft Bolt On Exhaust Camshaft Of Left Cylinder Head To Initial Tightening Torque
Courtesy of VOLKSWAGEN UNITED STATES, INC.

- Tighten camshaft bolt - **1** - on exhaust camshaft of left cylinder head to initial tightening torque. Torque specification: 40 Nm.

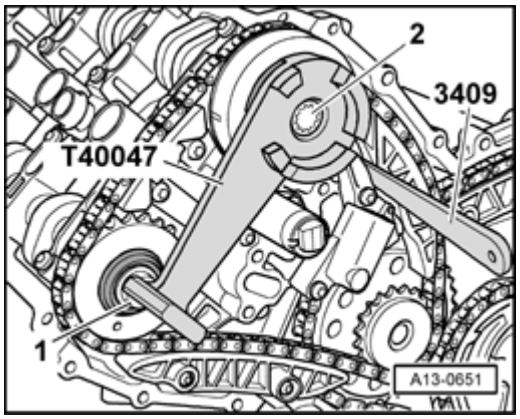

Fig. 180: Securing Hall Sensor Wheel On Camshaft Adjuster Of Intake Camshaft Of Left Cylinder Head Using Setting Gauge T40047
Courtesy of VOLKSWAGEN UNITED STATES, INC.

- Secure Hall sensor wheel on camshaft adjuster of intake camshaft of left cylinder head using setting gauge T40047.
- Place setting gauge T40047 on bolt - **1** -.
- Tighten camshaft bolt - **2** - on intake camshaft to initial tightening torque. Torque specification: 40 Nm

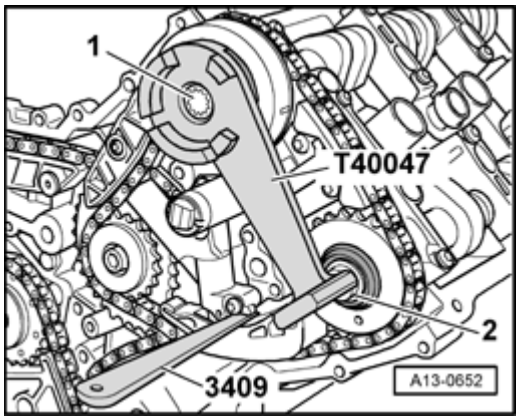

Fig. 181: Securing Hall Sensor Wheel On Camshaft Adjuster Of Intake Camshaft Of Right Cylinder Head Using Setting Gauge T40047
Courtesy of VOLKSWAGEN UNITED STATES, INC.

- Secure Hall sensor wheel on camshaft adjuster of intake camshaft of right cylinder head using setting gauge T40047.
- Place setting gauge T40047 on bolt - **2** -.
- Tighten camshaft bolt - **1** - on intake camshaft to initial tightening torque. Torque specification: 40 Nm.
- Remove setting gauge.

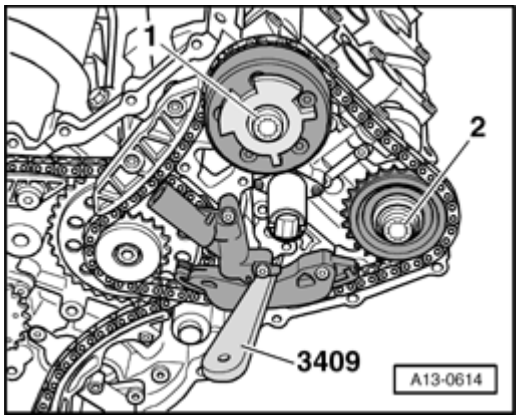

Fig. 182: Tightening Camshaft Bolt On Exhaust Camshaft Of Right Cylinder Head To Initial Tightening Torque
Courtesy of VOLKSWAGEN UNITED STATES, INC.

- Tighten camshaft bolt - **2** - on exhaust camshaft of right cylinder head to initial tightening torque. Torque specification: 40 Nm.

NOTE:

- **Camshaft locators T40046 must not be used as counter holder for final tightening of camshaft bolts.**

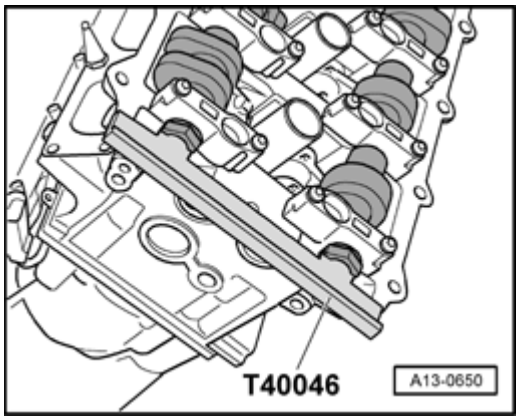

Fig. 183: Removing/Installing Camshaft Locator T40046
Courtesy of VOLKSWAGEN UNITED STATES, INC.

- Remove camshaft locators T40046 on both cylinder heads.

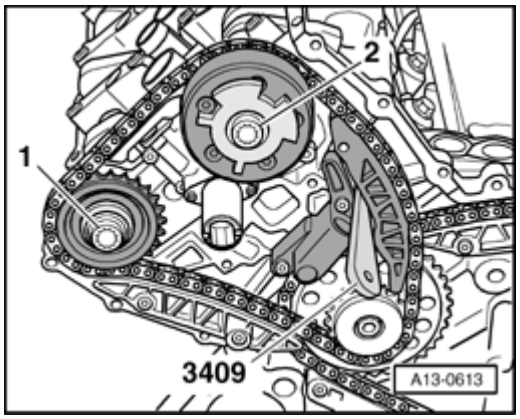

Fig. 184: Tightening Camshaft Bolt On Exhaust Camshaft Of Left Cylinder Head To Initial Tightening Torque
Courtesy of VOLKSWAGEN UNITED STATES, INC.

- Tighten camshaft bolt - **1** - on exhaust camshaft of left cylinder head to final tightening torque. Torque specification: 100 Nm plus an additional 90° ($^1/_4$ turn).

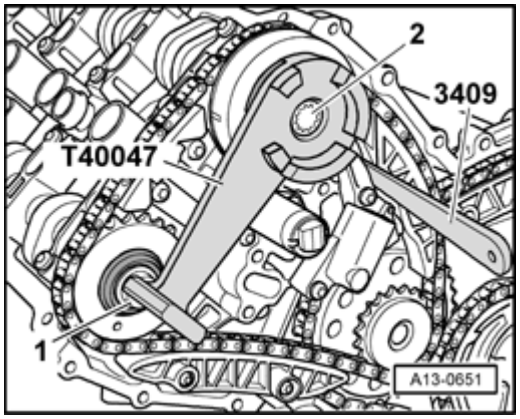

Fig. 185: Securing Hall Sensor Wheel On Camshaft Adjuster Of Intake Camshaft Of Left Cylinder Head Using Setting Gauge T40047
Courtesy of VOLKSWAGEN UNITED STATES, INC.

- Secure Hall sensor wheel on camshaft adjuster of intake camshaft of left cylinder head using setting gauge T40047.
- Place setting gauge T40047 on bolt - **1** -.
- Tighten camshaft bolt - **2** - on intake camshaft to final tightening torque. Torque specification: 100 Nm plus an additional 90° ($^1/_4$ turn).

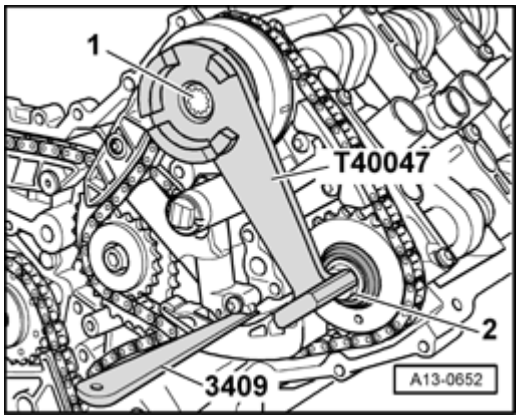

Fig. 186: Securing Hall Sensor Wheel On Camshaft Adjuster Of Intake Camshaft Of Right Cylinder Head Using Setting Gauge T40047
Courtesy of VOLKSWAGEN UNITED STATES, INC.

- Secure Hall sensor wheel on camshaft adjuster of intake camshaft of right cylinder head using setting gauge T40047.
- Place setting gauge T40047 on bolt - **2** -.
- Tighten camshaft bolt - **1** - on intake camshaft to final tightening torque. Torque specification: 100 Nm plus an additional 90° ($^1/_4$ turn).
- Remove setting gauge.

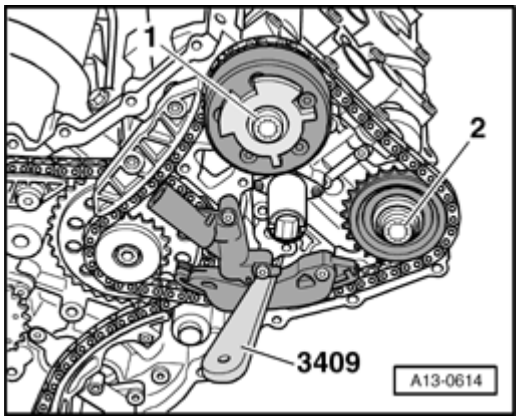

Fig. 187: Tightening Camshaft Bolt On Exhaust Camshaft Of Right Cylinder Head To Initial Tightening Torque
Courtesy of VOLKSWAGEN UNITED STATES, INC.

- Tighten camshaft bolt - **2** - on exhaust camshaft of right cylinder head to final tightening torque. Torque specification: 100 Nm plus an additional 90° ($^1/_4$ turn).

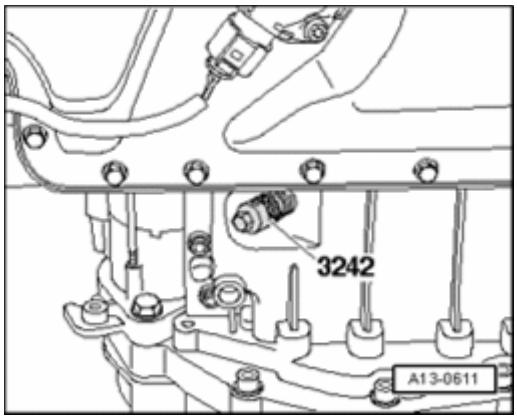

Fig. 188: Removing/Installing Crankshaft Holder 3242 Into Hole
Courtesy of VOLKSWAGEN UNITED STATES, INC.

- Remove crankshaft holder 3242.

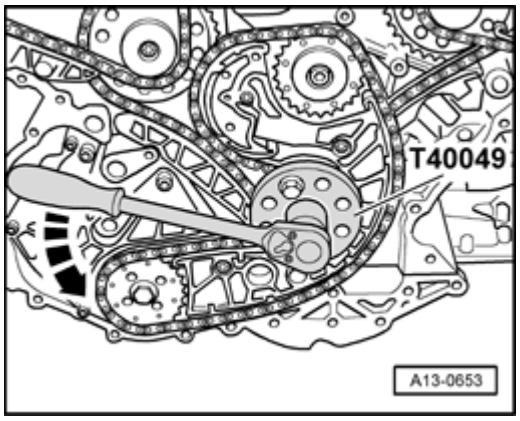

Fig. 189: Rotating Crankshaft To TDC Ignition Timing
Courtesy of VOLKSWAGEN UNITED STATES, INC.

- Using Key T40049 turn crankshaft two complete rotations in direction of engine rotation - **arrow** - until crankshaft stands at TDC again.

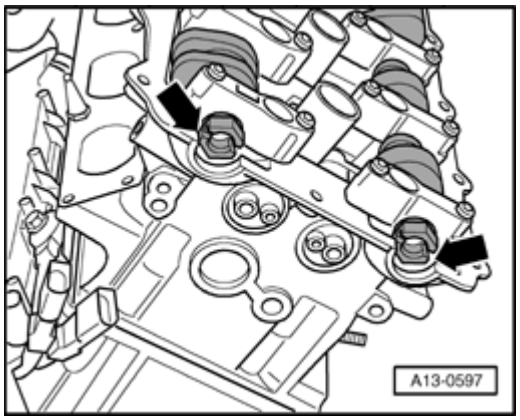

Fig. 190: Identifying Slits At Front In Camshafts Stand Parallel At Same Height With Upper Edge Of Cylinder Head

Courtesy of VOLKSWAGEN UNITED STATES, INC.

- Slits - **arrows** - at front in camshafts must stand parallel at same height with upper edge of cylinder head.

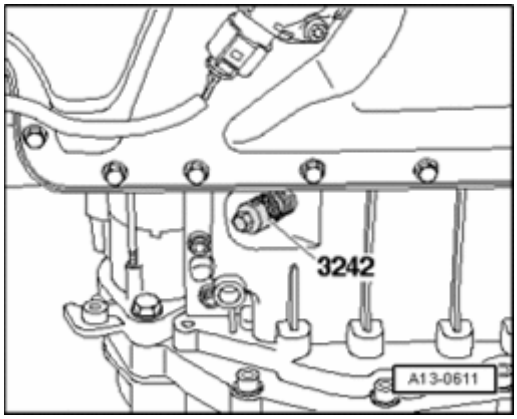

Fig. 191: Removing/Installing Crankshaft Holder 3242 Into Hole
Courtesy of VOLKSWAGEN UNITED STATES, INC.

- Install crankshaft holder 3242 into hole (20 Nm), if necessary rotate crankshaft very slightly back and forth to completely center holder.

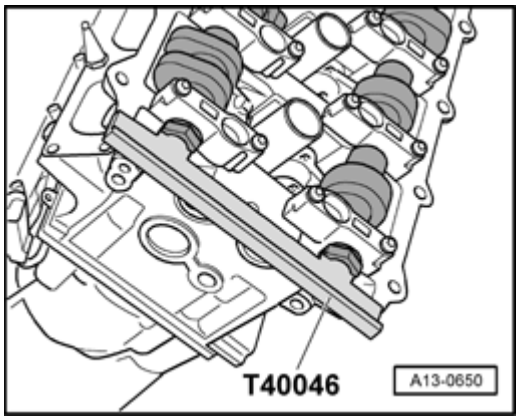

Fig. 192: Removing/Installing Camshaft Locator T40046
Courtesy of VOLKSWAGEN UNITED STATES, INC.

- Insert camshaft locator T40046 into camshafts of left cylinder head.

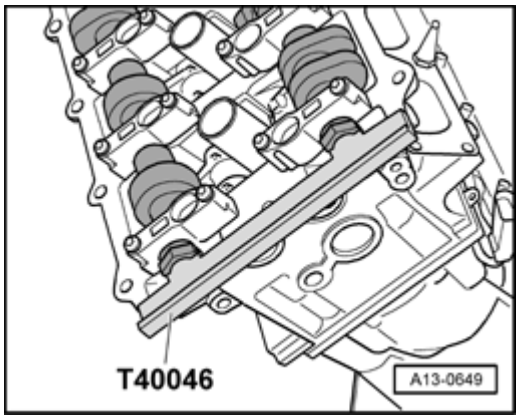

Fig. 193: Removing/Inserting Camshaft Locator T40046 From/Into Camshafts Of Right Cylinder Head
Courtesy of VOLKSWAGEN UNITED STATES, INC.

- Insert camshaft locator T40046 into camshafts of right cylinder head.

NOTE:

- **If camshaft locators cannot be inserted, repeat adjustment.**

- Pull out trim removal wedge 3409.
- Remove camshaft locators T40046 on both cylinder heads.
- Remove crankshaft holder 3242.
- Install sealing plug of TDC-marking with new sealing ring into upper section of oil pan.

Further installation is in reverse order of removal, note the following:

- Install covers for timing chains **Installing**.
- Install drive plate --> **Drive plate, removing and installing**.
- Bolt transmission to engine and install engine/transmission unit --> **Engine, installing**.

Torque specifications

Component	Nm
Camshaft bolts	100 + 90° * See note* See note
Sealing plug in upper section of oil pan	35

* 90° corresponds to a 1/4 turn

*Replace bolts.

Camshaft timing chains, removing from camshafts

NOTE:

- **For the removal of the cylinder head or camshafts, it is sufficient to remove camshaft timing chains only from the camshafts. The chains remain on the engine, the transmission is not disconnected.**

- **Even if work is performed only on one of the cylinder heads, the procedure described must be followed, since then the valve timing at both cylinder heads must be adjusted.**

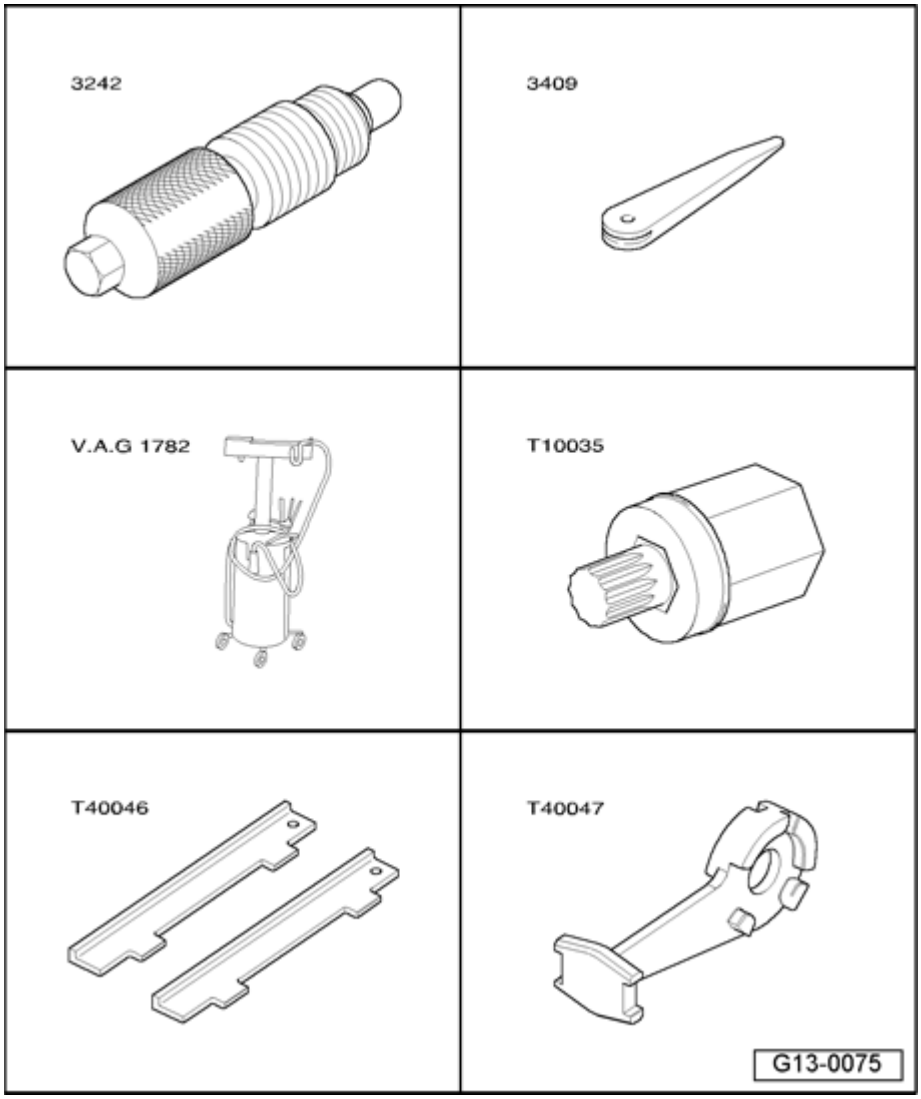

Fig. 194: Identifying Special Tools - Camshaft Timing Chains, Removing From Camshafts
Courtesy of VOLKSWAGEN UNITED STATES, INC.

Special tools, testers and auxiliary items required

- Locking pin 3242
- Trim removal wedge 3409 (2x)
- Old oil collecting and extracting device V.A.G 1782
- Multi-point socket T10035
- Camshaft locator T40046 (qty. 2)

- Setting gauge T40047
- Drill bit 3.3 mm (2x)

Special tools, testers and auxiliary items required

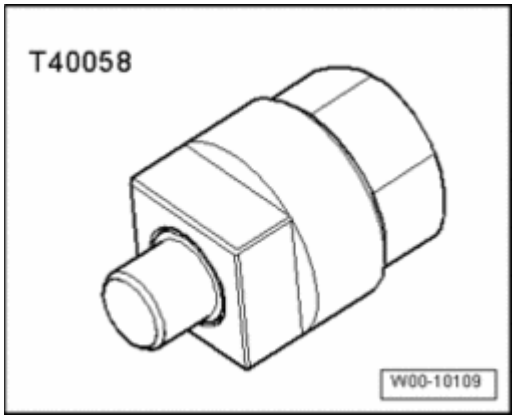

Fig. 195: Adapter T40058
Courtesy of VOLKSWAGEN UNITED STATES, INC.

- Adapter T40058

Work procedure

- Remove engine --> **Engine, removing and installing**.
- Separate engine/transmission --> **Engine and transmission, separating**.

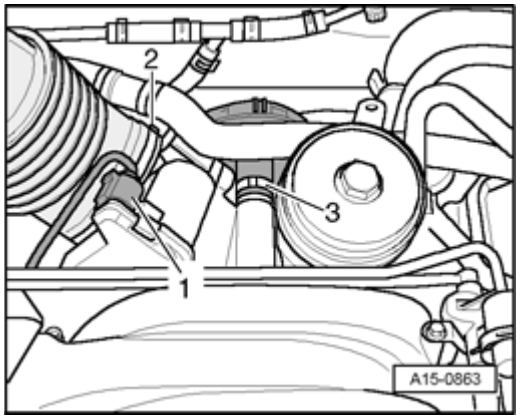

Fig. 196: Disconnecting Electrical Connection At Throttle Valve Control Module J338 & Crankcase Ventilation Hose At Intake Pipe
Courtesy of VOLKSWAGEN UNITED STATES, INC.

- Disconnect electrical connection - **1** - at throttle valve control module J338.
- Disconnect crankcase ventilation hose - **3** - at intake pipe.

NOTE:

- **Ignore - 2 -.**

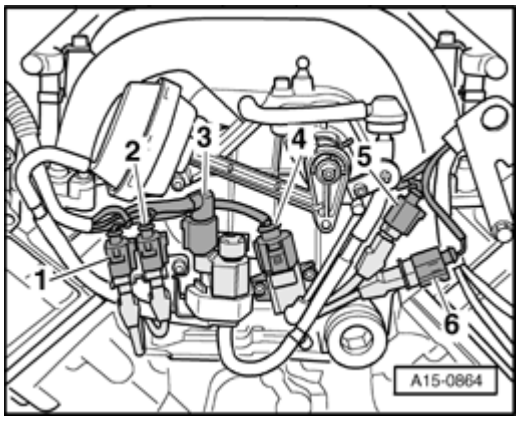

Fig. 197: Remove Electrical Harness Connectors Toward Front From Brackets On Intake Pipe
Courtesy of VOLKSWAGEN UNITED STATES, INC.

- Remove electrical harness connectors - **1** - , - **2** - , - **5** - and - **6** - toward front from brackets on intake pipe.
- Disconnect electrical connectors - **3** - and - **4** -.

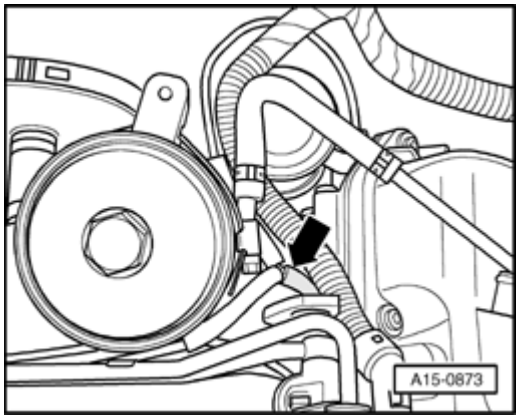

Fig. 198: Disconnecting Vacuum Hose At T-Piece
Courtesy of VOLKSWAGEN UNITED STATES, INC.

- Disconnect vacuum hose - **arrow** - at T-piece.

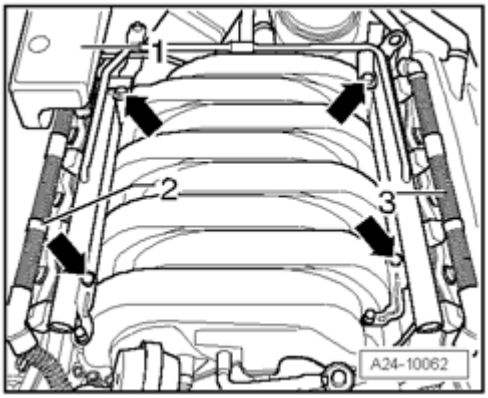

Fig. 199: Pulling Off Connector Strips At Fuel Injectors & Removing Bolts From Fuel Rail
Courtesy of VOLKSWAGEN UNITED STATES, INC.

- Pull off connector strips - **2** - and - **3** - at 8 fuel injectors.
- Remove bolts - **arrows** - from fuel rail.
- Pull fuel rail with injectors upward uniformly from intake manifold and set aside in engine compartment on a clean cloth.

NOTE:

- **Carefully protect removed fuel injectors from contamination.**

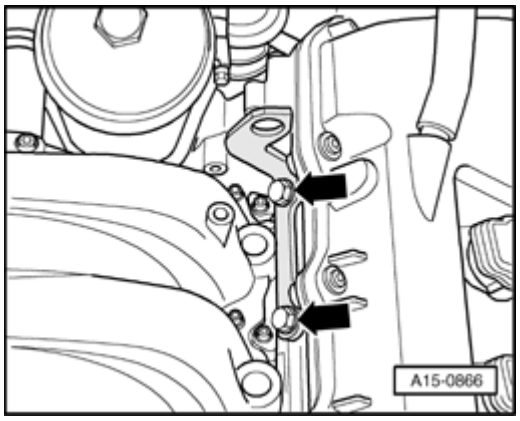

Fig. 200: Removing Left/Rear Engine Lifting Eye
Courtesy of VOLKSWAGEN UNITED STATES, INC.

- Remove left rear engine lifting eye - **arrows** -.

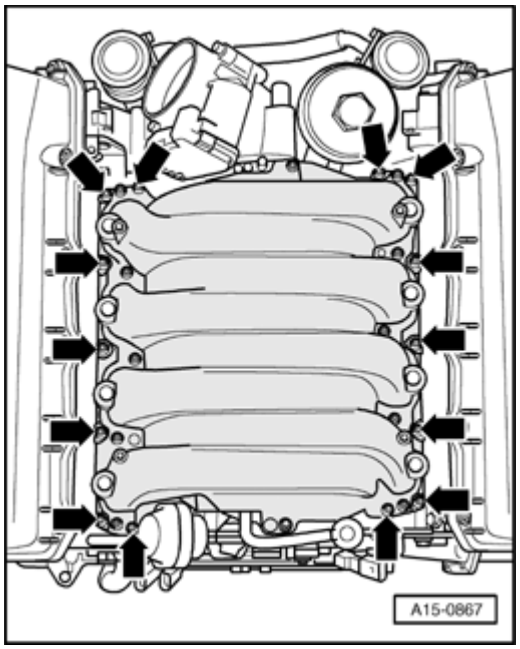

Fig. 201: Removing Intake Manifold Bolts
Courtesy of VOLKSWAGEN UNITED STATES, INC.

- Remove intake manifold - **arrows** - and remove it.

NOTE:

- **Plug the intake ports of the cylinder head with clean rags.**

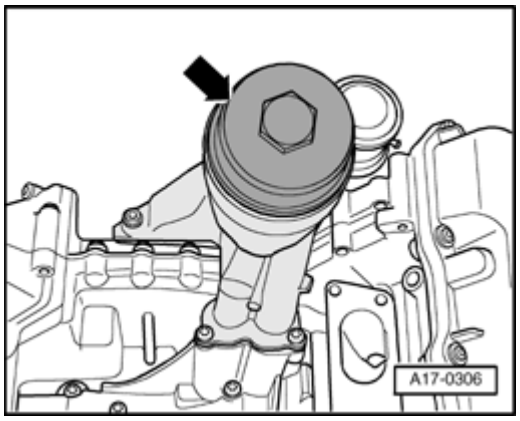

Fig. 202: Removing Cap For Oil Filter Housing
Courtesy of VOLKSWAGEN UNITED STATES, INC.

- Remove cap - **arrow** - for oil filter housing.
- Remove oil filter element.
- Extract engine oil using old oil collecting and extracting device V.A.G 1782 from oil filter housing.

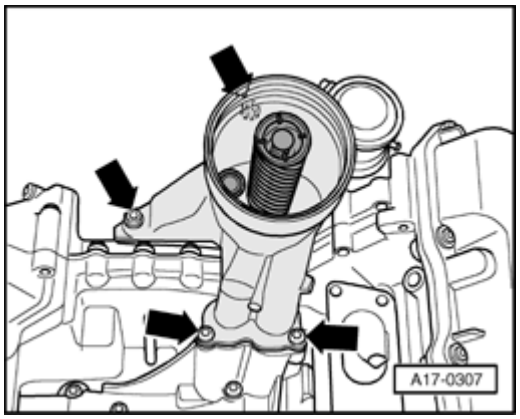

Fig. 203: Removing Bolts & Oil Filter Housing
Courtesy of VOLKSWAGEN UNITED STATES, INC.

NOTE:

- **Place a rag around oil filter housing to catch escaping engine oil.**

- Remove bolts - **arrows** -.
- Remove oil filter housing.

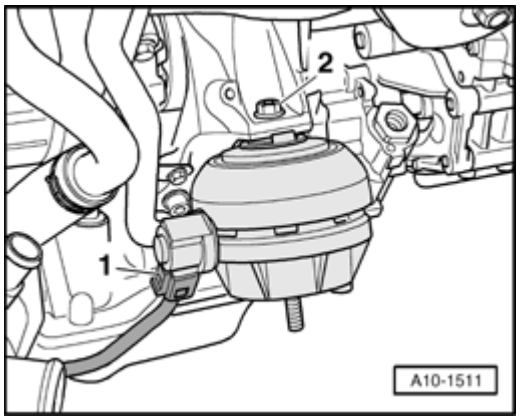

Fig. 204: Disconnecting Electrical Connector, Removing Nut And Engine Mount
Courtesy of VOLKSWAGEN UNITED STATES, INC.

- Disconnect electrical harness connector - **1** - at left engine mount.
- Remove nut - **2** - and remove engine mount.

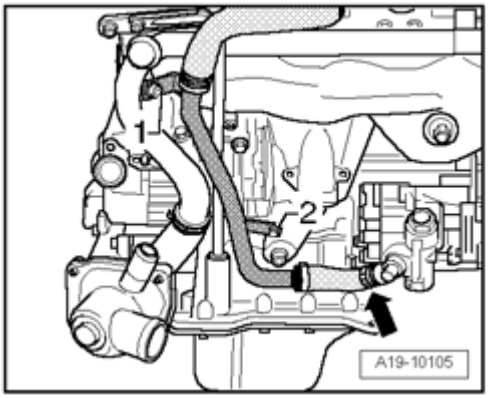

Fig. 205: Removing Bolts & Return Pipe From Power-Steering Pump
Courtesy of VOLKSWAGEN UNITED STATES, INC.

- Remove bolts - **1** - and - **2** -.
- Remove return line from power steering pump - **arrow** -.

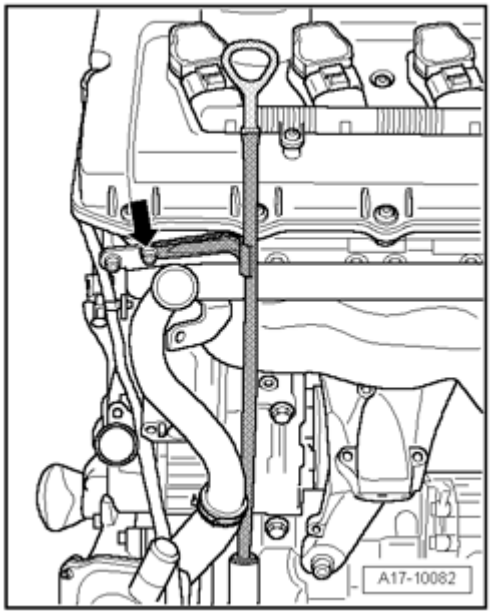

Fig. 206: Removing Guide Pipe For Oil Dipstick At Cylinder Head
Courtesy of VOLKSWAGEN UNITED STATES, INC.

- Remove guide tube for oil dipstick at cylinder head - **arrow** - , pull up and remove.

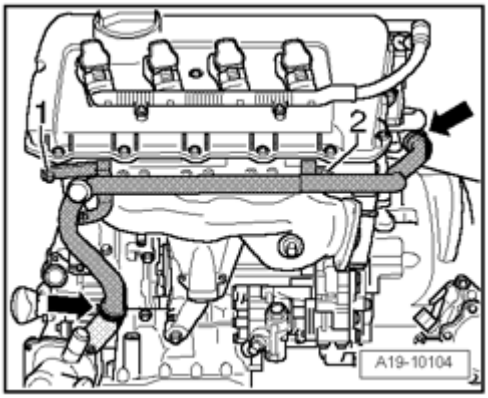

Fig. 207: Removing Bolts & Loosening Hose Clamps And Removing Left Coolant Pipe From Coolant Hoses
Courtesy of VOLKSWAGEN UNITED STATES, INC.

- Remove bolts - **1** - and - **2** -.
- Loosen hose clamps - **arrows** - and remove left coolant pipe from coolant hoses.

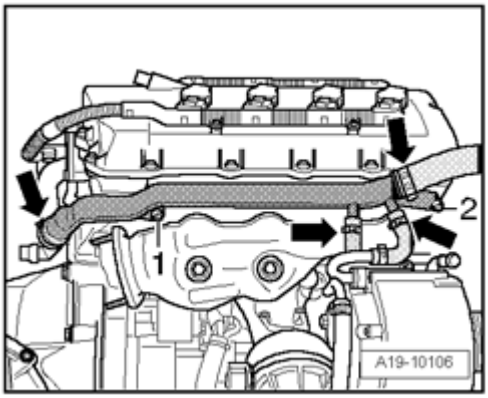

Fig. 208: Removing Bolts & Loosening Hose Clamps And Removing Right Coolant Pipe From Coolant Hoses
Courtesy of VOLKSWAGEN UNITED STATES, INC.

- Remove bolts - **1** - and - **2** -.
- Loosen hose clamps - **arrows** - and remove right coolant pipe from coolant hoses.

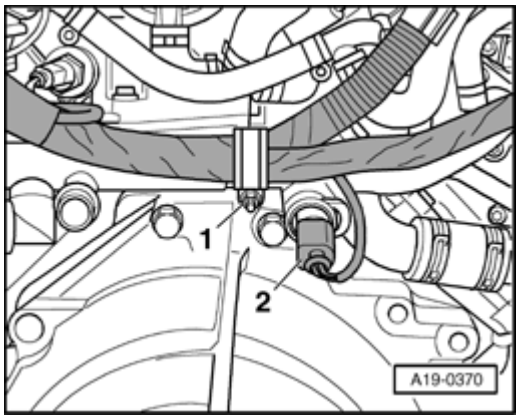

Fig. 209: Disconnecting Electrical Harness Connector On Engine Coolant Temperature (ECT) Gauge Sensor G2/G62
Courtesy of VOLKSWAGEN UNITED STATES, INC.

- Disconnect electrical connector - **2** - on Engine Coolant Temperature (ECT) Sensor G62.
- Remove nut - **1** - and remove electrical wiring harness at rear coolant pipe.

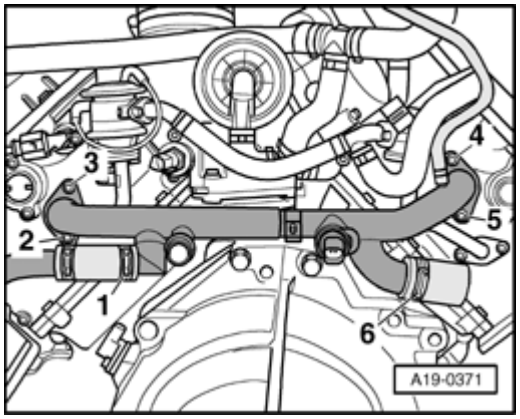

Fig. 210: Removing Bolts & Rear Coolant Pipe
Courtesy of VOLKSWAGEN UNITED STATES, INC.

- Remove bolts - **2 to 5** -.
- Remove rear coolant pipe.

NOTE:

- **Ignore - 1 - and - 6 -.**

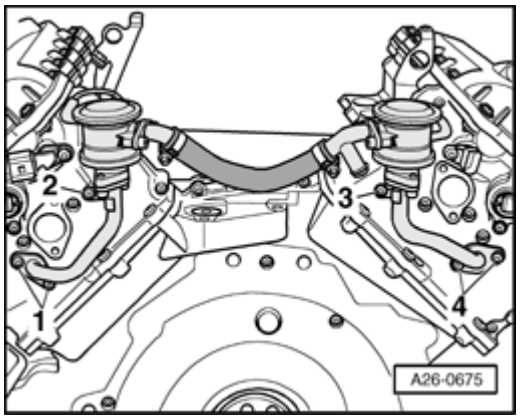

Fig. 211: Removing Secondary Air Injection (AIR) System Combi-Valve Mounting Bolts
Courtesy of VOLKSWAGEN UNITED STATES, INC.

- Remove Secondary Air Injection (AIR) system combi-valve mounting bolts - **1 through 4** -.

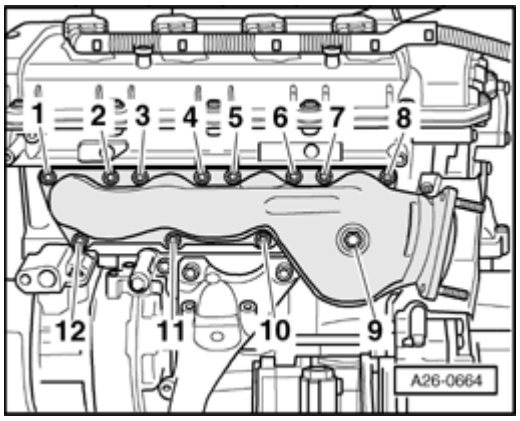

Fig. 212: Removing Nuts And Left Exhaust Manifold
Courtesy of VOLKSWAGEN UNITED STATES, INC.

- Remove nuts - **1 to 12** - and remove left exhaust manifold.

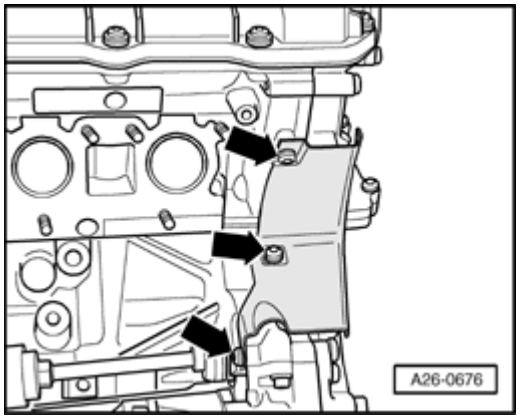

Fig. 213: Removing Left Heat Shield
Courtesy of VOLKSWAGEN UNITED STATES, INC.

- Remove left heat shield - **arrows** -.

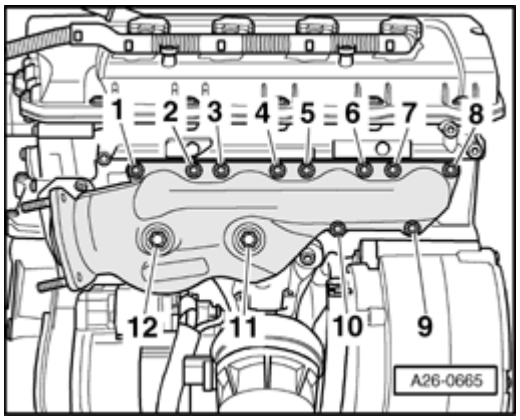

Fig. 214: Removing Nuts And Right Exhaust Manifold
Courtesy of VOLKSWAGEN UNITED STATES, INC.

- Remove nuts - **1 to 12** - and remove right exhaust manifold.

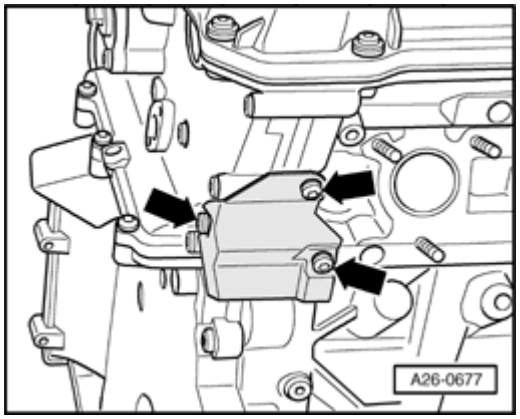

Fig. 215: Removing Right Heat Shield
Courtesy of VOLKSWAGEN UNITED STATES, INC.

- Remove right heat shield - **arrows** -.

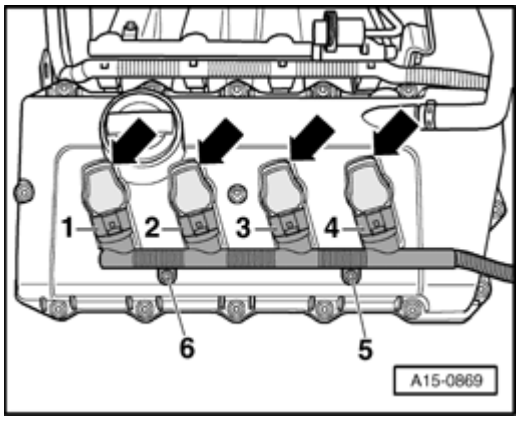

Fig. 216: Removing Bolts On Left Cylinder Head, Disconnecting Electrical Harness Connectors & Removing Ignition Coils
Courtesy of VOLKSWAGEN UNITED STATES, INC.

- Remove bolts - **5** - and - **6** - on left cylinder head.
- Disconnect electrical harness connectors - **1 to 4** -.
- Remove ignition coils - **arrows** -.

NOTE:

- **Puller For Ignition Coil T10094 can be used for removal.**

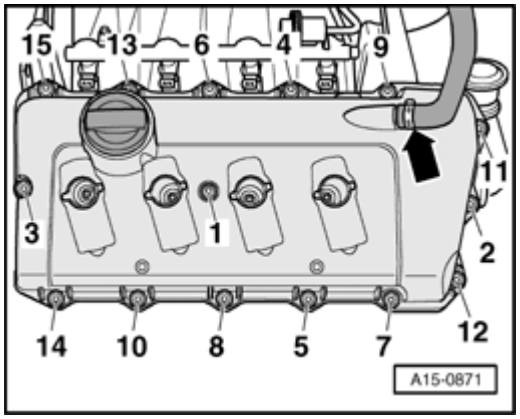

Fig. 217: Disconnecting Hose Of Crankshaft Housing Ventilation & Removing Left Cylinder Head Cover Bolts In Sequence
Courtesy of VOLKSWAGEN UNITED STATES, INC.

- Disconnect hose of crankshaft housing ventilation - **arrow** -.
- Remove left cylinder head cover bolts in sequence - **15 to 1** -.
- Remove cylinder head cover.

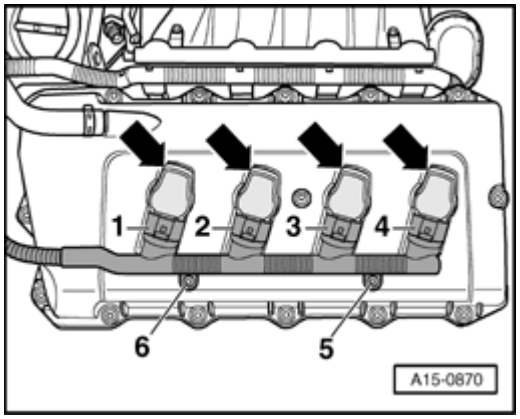

Fig. 218: Removing Bolts On Right Cylinder Head, Disconnecting Electrical Harness Connectors & Removing Ignition Coils
Courtesy of VOLKSWAGEN UNITED STATES, INC.

- Remove bolts - **5** - and - **6** - on right cylinder head.

- Disconnect electrical harness connectors - **1 to 4** -.
- Remove ignition coils - **arrows** -.

NOTE:

- **Puller For Ignition Coil T10094 can be used for removal.**

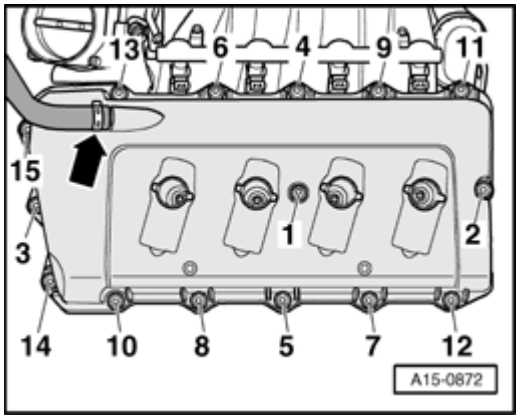

Fig. 219: Disconnecting Hose Of Crankshaft Housing Ventilation & Removing Right Cylinder Head Cover Screws In Sequence
Courtesy of VOLKSWAGEN UNITED STATES, INC.

- Disconnect hose of crankshaft housing ventilation - **arrow** -.
- Remove right cylinder head cover bolts in sequence - **15 to 1** -.
- Remove cylinder head cover.

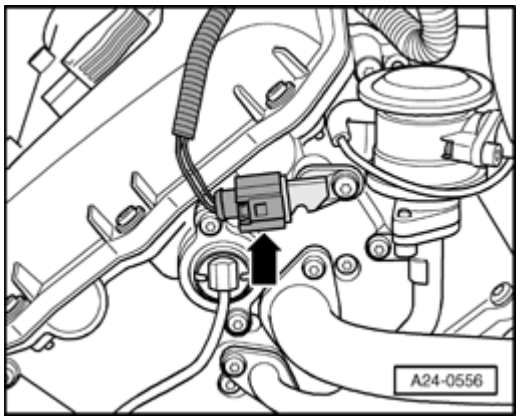

Fig. 220: Disconnecting Electrical Harness Connector For Camshaft Position (CMP) Sensor 2 G163 On Left Cylinder Head
Courtesy of VOLKSWAGEN UNITED STATES, INC.

- Disconnect electrical harness connector - **arrow** - for Camshaft Position (CMP) Sensor 2 G163 on left cylinder head.

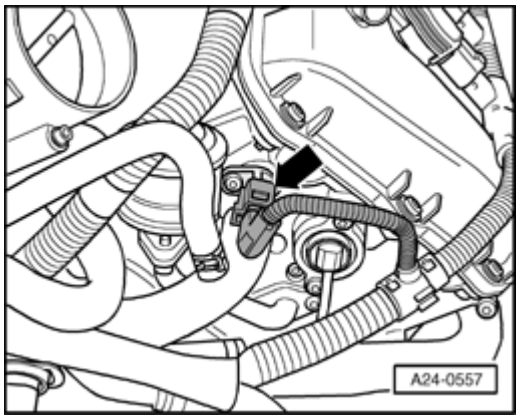

Fig. 221: Disconnecting Electrical Harness Connector For Camshaft Position (CMP) Sensor G40 On Right Cylinder Head
Courtesy of VOLKSWAGEN UNITED STATES, INC.

- Disconnect electrical harness connector - **arrow** - for Camshaft Position (CMP) Sensor G40 on right cylinder head.

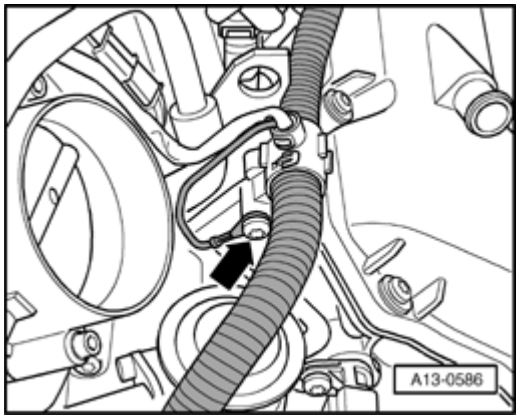

Fig. 222: Removing Ground (GND) Cable On Right Cylinder Head
Courtesy of VOLKSWAGEN UNITED STATES, INC.

- Remove Ground (GND) cable on right cylinder head - **arrow** -.
- Set wiring harness aside.

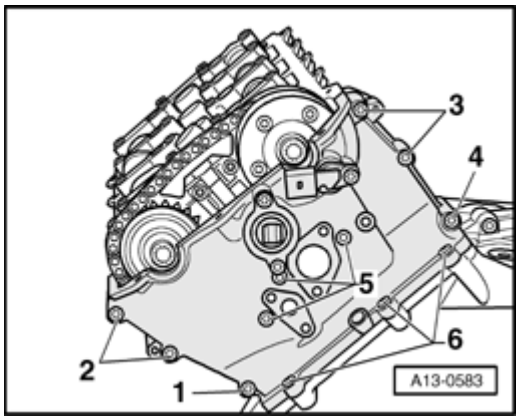

Fig. 223: Removing/Installing Bolts And Left Timing Chain Cover
Courtesy of VOLKSWAGEN UNITED STATES, INC.

- Remove bolts - **1 to 6** - and remove left timing chain cover.

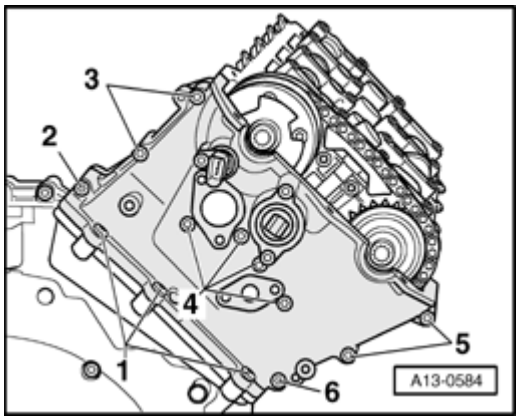

Fig. 224: Removing/Installing Bolts And Right Timing Chain Cover
Courtesy of VOLKSWAGEN UNITED STATES, INC.

- Remove bolts - **1 to 6** - and remove right timing chain cover.

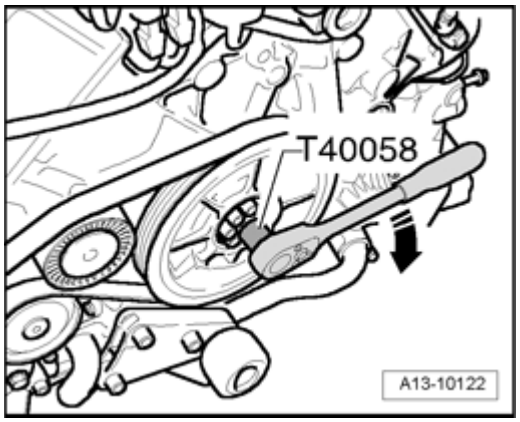

Fig. 225: Counter Holding Crankshaft Using Adapter T40058 To Loosen Torque Converter Bolts
Courtesy of VOLKSWAGEN UNITED STATES, INC.

- Using Key T40058 , rotate crankshaft in direction of engine rotation - **arrow** - to TDC ignition timing.

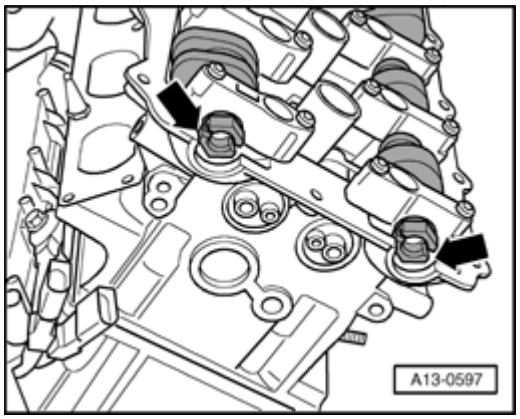

Fig. 226: Identifying Slits At Front In Camshafts Stand Parallel At Same Height With Upper Edge Of Cylinder Head
Courtesy of VOLKSWAGEN UNITED STATES, INC.

- Slits - **arrows** - at front in camshafts must stand parallel at same height with upper edge of cylinder head.

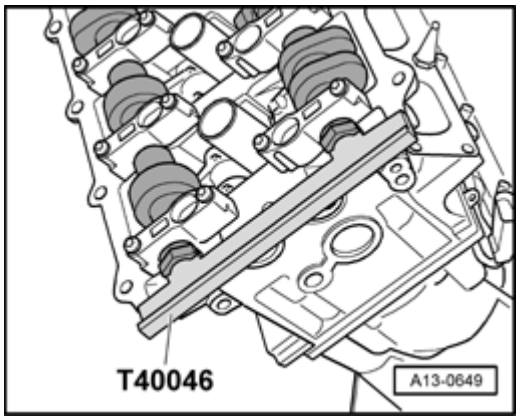

Fig. 227: Removing/Inserting Camshaft Locator T40046 From/Into Camshafts Of Right Cylinder Head
Courtesy of VOLKSWAGEN UNITED STATES, INC.

- Rotate camshafts at hex head slightly back or forth if necessary so that camshaft locator T40046 can be inserted.
- If camshaft locator T40046 cannot be inserted, rotate crankshaft 1 rotation (360°) further.
- Remove camshaft locator again.
- Remove drain plug from upper section of oil pan.

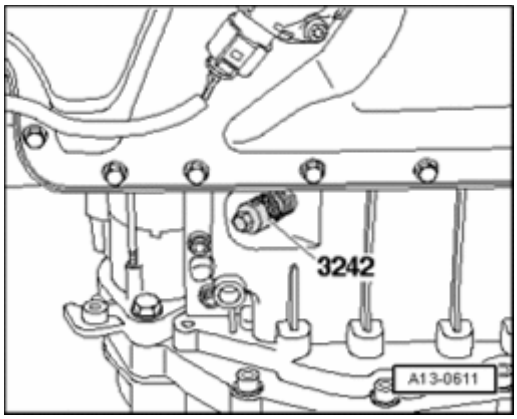

Fig. 228: Removing/Installing Crankshaft Holder 3242 Into Hole
Courtesy of VOLKSWAGEN UNITED STATES, INC.

- Install crankshaft holder 3242 into hole, if necessary rotate crankshaft very slightly back and forth to completely center the holder. Torque specification: 20 Nm.

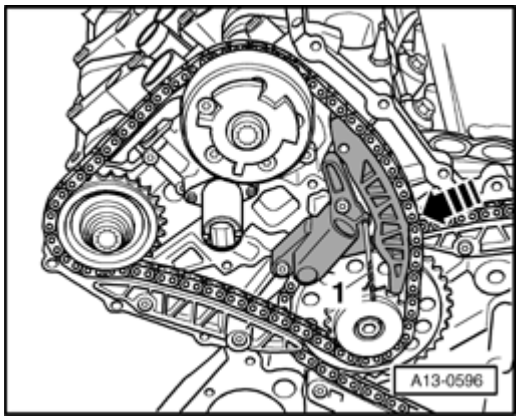

Fig. 229: Pushing Glide Track Of Chain Tensioner For Left Timing Chain
Courtesy of VOLKSWAGEN UNITED STATES, INC.

- Push glide track of chain tensioner for left timing chain in direction of - **arrow** - and pull off chain tensioner using a drill bit 3.3 mm dia. - **1** -.

NOTE:

- **In the following illustration, the timing mechanism is depicted with covers completely removed.**

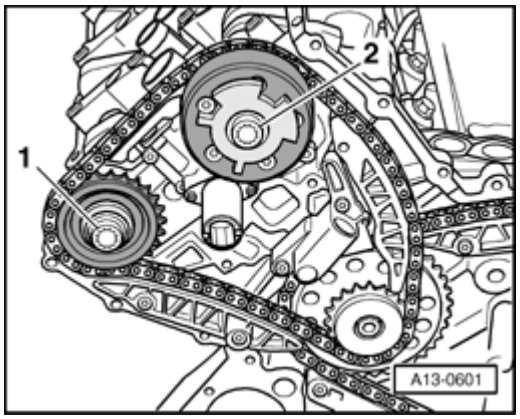

Fig. 230: Removing/Installing Bolts For Camshaft Chain Sprocket Or Camshaft Adjuster Using Multipoint Socket T10035
Courtesy of VOLKSWAGEN UNITED STATES, INC.

- Remove bolts - **1** - and - **2** - for camshaft chain sprocket or camshaft adjuster using multipoint socket T10035.
- Remove camshaft chain sprocket and camshaft adjuster.

NOTE:

- **Camshaft timing chain remains on engine.**
- **Also, if only one of the two cylinder heads is removed, bolts for camshaft gears must be loosened at both cylinder heads.**

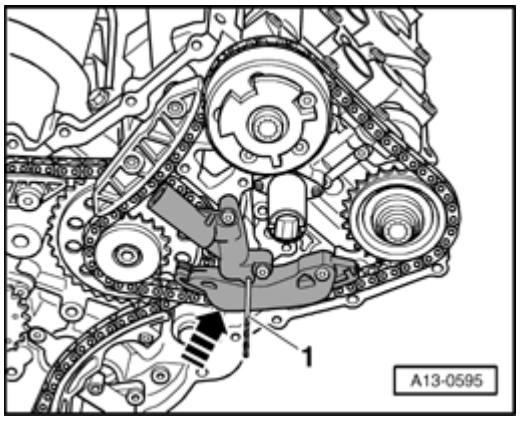

Fig. 231: Pushing Glide Track Of Chain Tensioner For Right Timing Chain
Courtesy of VOLKSWAGEN UNITED STATES, INC.

- Push glide track of chain tensioner for right timing chain in direction of - **arrow** - and pull off chain tensioner using a drill bit 3.3 mm dia. - **1** -.

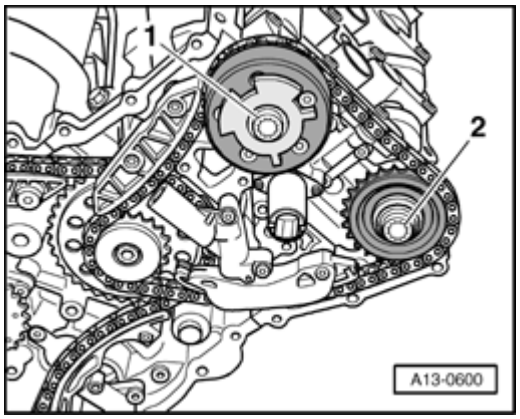

Fig. 232: Removing/Installing Bolts For Camshaft Chain Sprocket Or Camshaft Adjuster Using Multipoint Socket T10035
Courtesy of VOLKSWAGEN UNITED STATES, INC.

- Remove bolts - **1** - and - **2** - for camshaft chain sprocket or camshaft adjuster using multipoint socket T10035.
- Remove camshaft chain sprocket and camshaft adjuster.

NOTE:

- **Camshaft timing chain remains on engine.**
- **Also, if only one of the two cylinder heads is removed, bolts for camshaft gears must be loosened at both cylinder heads.**

Installing

- Secure crankshaft in TDC position using crankshaft holder 3242.

NOTE:

- **During assembly, replace self-locking nuts and bolts.**
- **Always replace bolts that are tightened to torque as well as O-rings and gaskets.**
- **When turning camshaft, crankshaft must not be at TDC for any cylinder. Valves and/or pistons may be damaged.**

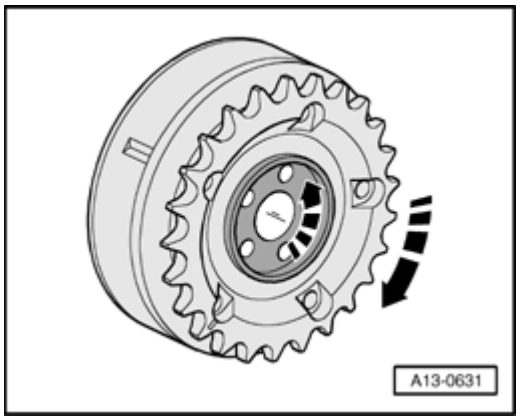

Fig. 233: Rotating Inner Part And Outer Part Of Both Camshaft Adjusters Against Each Other Up To Lock Position
Courtesy of VOLKSWAGEN UNITED STATES, INC.

- Rotate inner part and outer part of both camshaft adjusters against each other up to lock position - **arrows** -.

- Inner part and outer part must not be able to be against each other in lock position (slight play can still be felt).

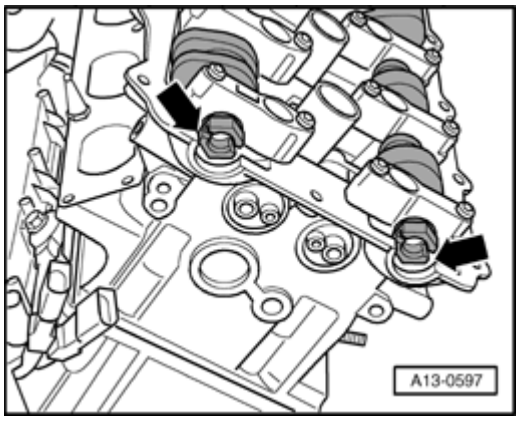

Fig. 234: Identifying Slits At Front In Camshafts Stand Parallel At Same Height With Upper Edge Of Cylinder Head
Courtesy of VOLKSWAGEN UNITED STATES, INC.

- Check whether camshafts of both cylinder heads stand in TDC position.

- Slits - **arrows** - at front in camshafts must stand parallel at same height with upper edge of cylinder head.

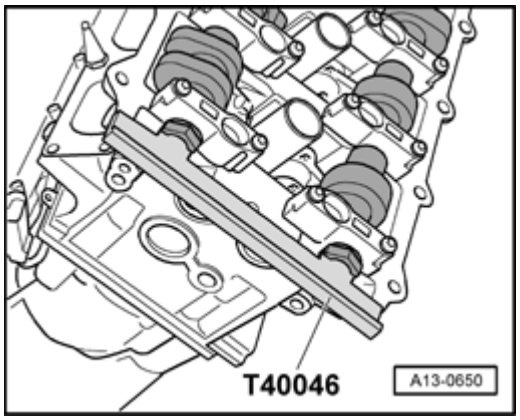

Fig. 235: Removing/Installing Camshaft Locator T40046
Courtesy of VOLKSWAGEN UNITED STATES, INC.

- Insert camshaft locator T40046 into camshafts of left cylinder head, to do so rotate camshafts back or forth at hex head if necessary.

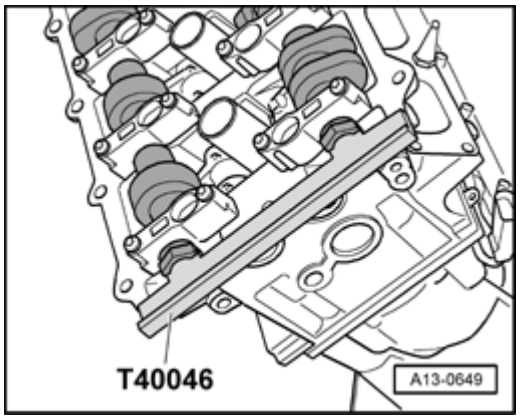

Fig. 236: Removing/Inserting Camshaft Locator T40046 From/Into Camshafts Of Right Cylinder Head
Courtesy of VOLKSWAGEN UNITED STATES, INC.

- Insert camshaft locator T40046 into camshafts of right cylinder head, to do so rotate camshafts back and forth at hex head if necessary.
- Replace all four camshaft bolts.

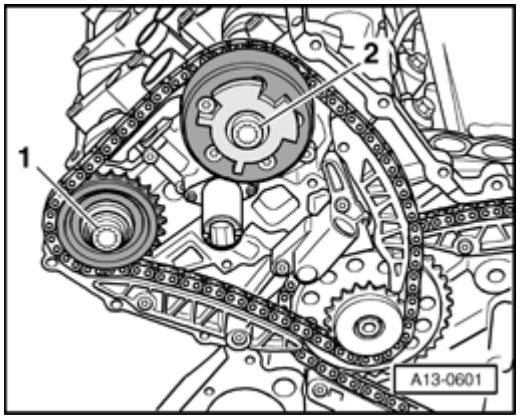

Fig. 237: Removing/Installing Bolts For Camshaft Chain Sprocket Or Camshaft Adjuster Using Multipoint Socket T10035
Courtesy of VOLKSWAGEN UNITED STATES, INC.

- Assemble left timing chain with chain sprocket and camshaft adjuster.
- Loosely install bolts - **1** - and - **2** -.

- Chain sprocket and camshaft adjuster must be able to still be rotated on camshaft and must not tip.

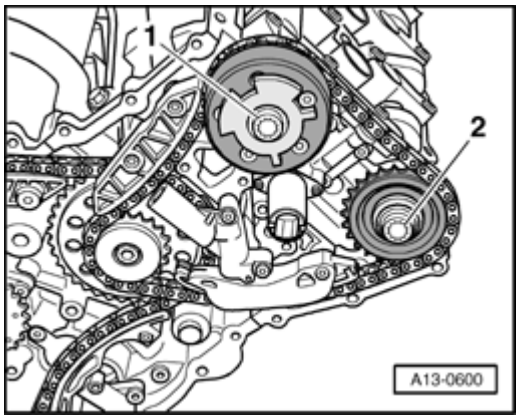

Fig. 238: Removing/Installing Bolts For Camshaft Chain Sprocket Or Camshaft Adjuster Using Multipoint Socket T10035
Courtesy of VOLKSWAGEN UNITED STATES, INC.

- Assemble right timing chain with chain sprocket and camshaft adjuster.
- Loosely install bolts - **1** - and - **2** -.

- Chain sprocket and camshaft adjuster must be able to still be rotated on camshaft and must not tip.

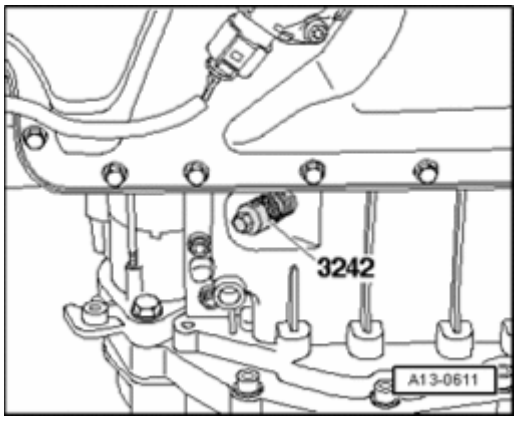

Fig. 239: Removing/Installing Crankshaft Holder 3242 Into Hole
Courtesy of VOLKSWAGEN UNITED STATES, INC.

- Remove crankshaft holder 3242.

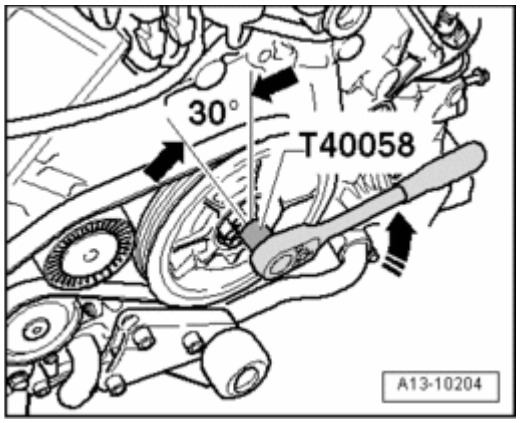

Fig. 240: Using Socket T40058 To Rotate Crankshaft In Opposite Direction Of Engine Rotation
Courtesy of VOLKSWAGEN UNITED STATES, INC.

- Using Key T40058 , rotate crankshaft approx. 30° in opposite direction of engine rotation - **arrow** -.
- Pull drill out of alignment hole, which loosens left chain tensioner.

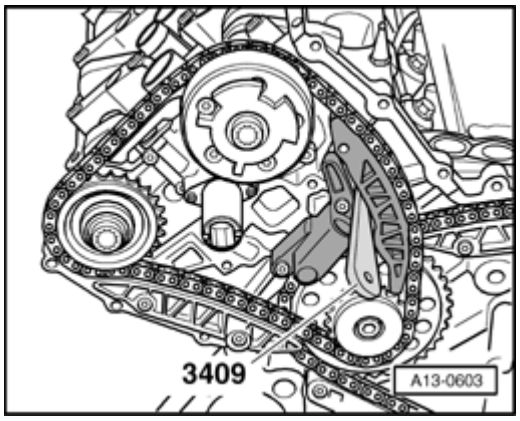

Fig. 241: Inserting Trim Removal Wedge 3409
Courtesy of VOLKSWAGEN UNITED STATES, INC.

- Insert trim removal wedge 3409 as depicted in illustration and bring chain tensioner into contact with trim removal wedge 3409.

NOTE:

- **Lightly pressing in an extra 0.5 mm is permitted.**

- Pull drill out of alignment hole, which loosens right chain tensioner.

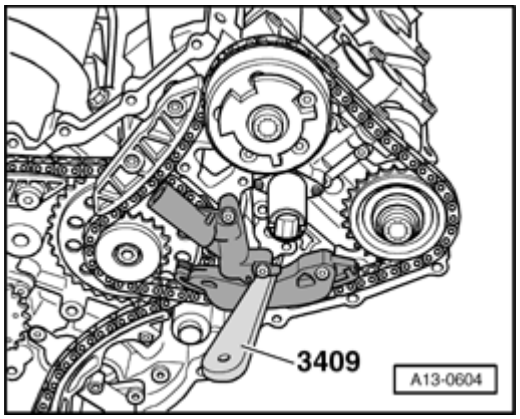

Fig. 242: Insert Trim Removal Wedge 3409
Courtesy of VOLKSWAGEN UNITED STATES, INC.

- Insert trim removal wedge 3409 as depicted in illustration and bring chain tensioner into contact with trim removal wedge 3409.

NOTE:

- **Lightly pressing in an extra 0.5 mm is permitted.**

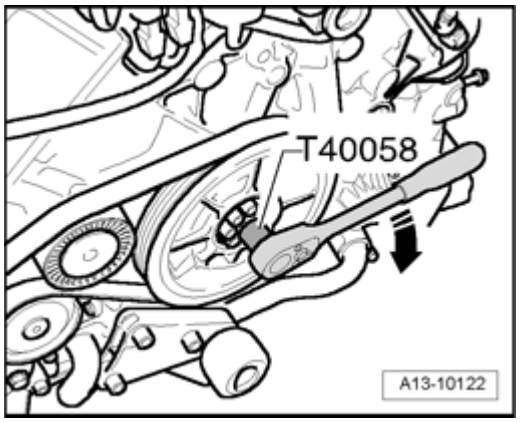

Fig. 243: Counter Holding Crankshaft Using Adapter T40058 To Loosen Torque Converter Bolts
Courtesy of VOLKSWAGEN UNITED STATES, INC.

- Using Key T40058 , rotate crankshaft in direction of engine rotation - **arrow** - to TDC ignition timing.

NOTE:

- **If rotated unintentionally beyond TDC, turn back crankshaft again approx. 30° and set to TDC again.**

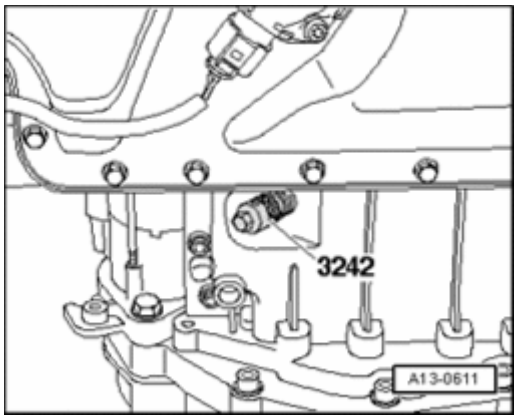

Fig. 244: Removing/Installing Crankshaft Holder 3242 Into Hole
Courtesy of VOLKSWAGEN UNITED STATES, INC.

- Install crankshaft holder 3242 into hole, if necessary rotate crankshaft very slightly back and forth to completely center holder. Torque specification: 20 Nm.

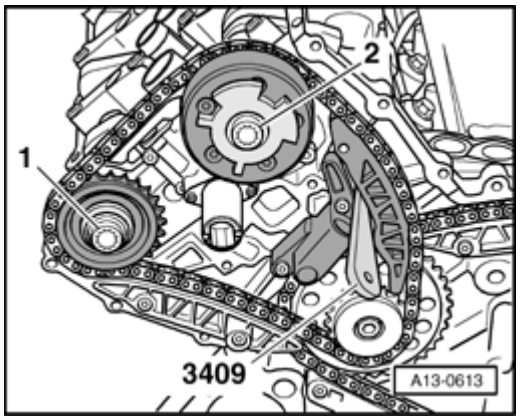

Fig. 245: Tightening Camshaft Bolt On Exhaust Camshaft Of Left Cylinder Head To Initial Tightening Torque
Courtesy of VOLKSWAGEN UNITED STATES, INC.

- Tighten camshaft bolt - **1** - on exhaust camshaft of left cylinder head to initial tightening torque. Torque specification: 40 Nm.

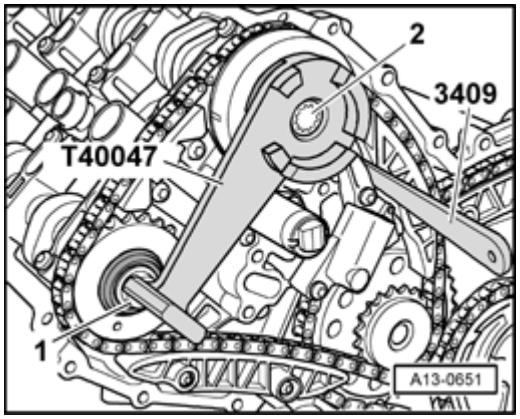

Fig. 246: Securing Hall Sensor Wheel On Camshaft Adjuster Of Intake Camshaft Of Left Cylinder Head Using Setting Gauge T40047
Courtesy of VOLKSWAGEN UNITED STATES, INC.

- Secure Hall sensor wheel on camshaft adjuster of intake camshaft of left cylinder head using setting gauge T40047.
- Place setting gauge T40047 on bolt - **1** -.
- Tighten camshaft bolt - **2** - on intake camshaft to initial tightening torque. Torque specification: 40 Nm.

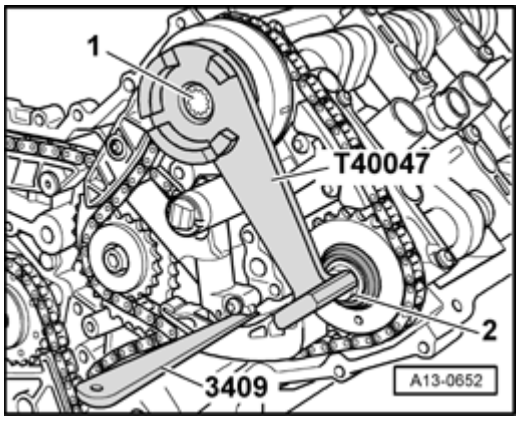

Fig. 247: Securing Hall Sensor Wheel On Camshaft Adjuster Of Intake Camshaft Of Right Cylinder Head Using Setting Gauge T40047
Courtesy of VOLKSWAGEN UNITED STATES, INC.

- Secure Hall sensor wheel on camshaft adjuster of intake camshaft of right cylinder head using setting gauge T40047.
- Place setting gauge T40047 on bolt - **2** -.
- Tighten camshaft bolt - **1** - on intake camshaft to initial tightening torque. Torque specification: 40 Nm.
- Remove setting gauge.

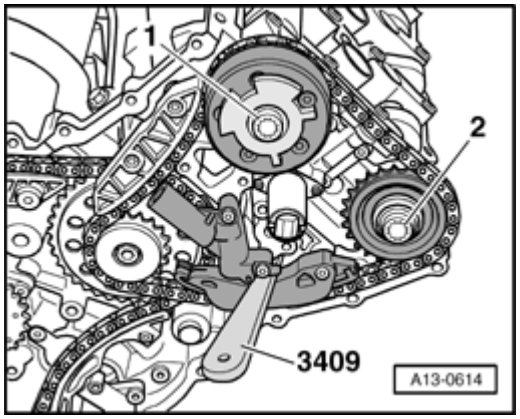

Fig. 248: Tightening Camshaft Bolt On Exhaust Camshaft Of Right Cylinder Head To Initial Tightening Torque
Courtesy of VOLKSWAGEN UNITED STATES, INC.

- Tighten camshaft bolt - **2** - on exhaust camshaft of right cylinder head to initial tightening torque. Torque specification: 40 Nm.

NOTE:

- **Camshaft locators T40046 must not be used as counter holder for final tightening of camshaft bolts.**

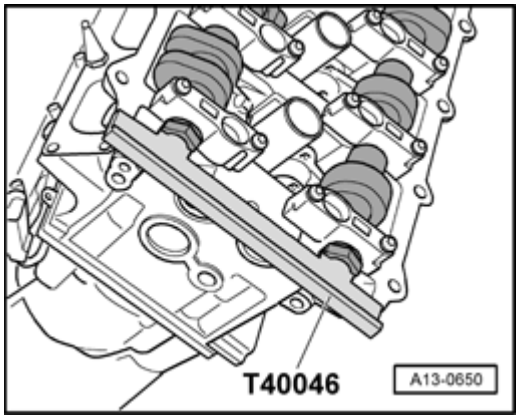

Fig. 249: Removing/Installing Camshaft Locator T40046
Courtesy of VOLKSWAGEN UNITED STATES, INC.

- Remove camshaft locators T40046 on both cylinder heads.

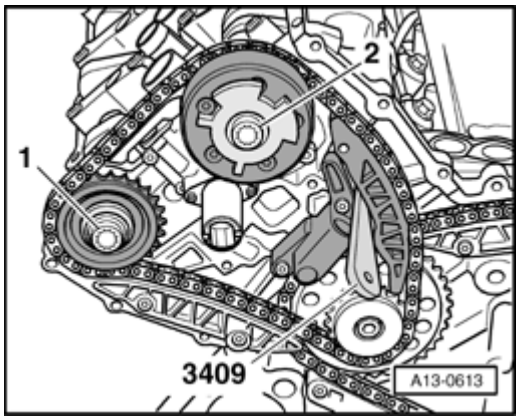

Fig. 250: Tightening Camshaft Bolt On Exhaust Camshaft Of Left Cylinder Head To Initial Tightening Torque
Courtesy of VOLKSWAGEN UNITED STATES, INC.

- Tighten camshaft bolt - **1** - on exhaust camshaft of left cylinder head to final tightening torque. Torque specification: 100 Nm plus an additional 90° ($^1/_4$ turn).

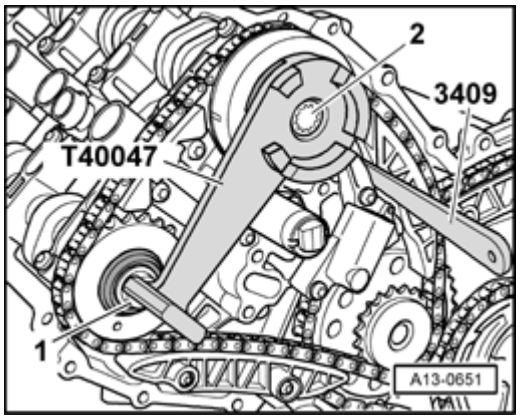

Fig. 251: Securing Hall Sensor Wheel On Camshaft Adjuster Of Intake Camshaft Of Left Cylinder Head Using Setting Gauge T40047
Courtesy of VOLKSWAGEN UNITED STATES, INC.

- Secure Hall sensor wheel on camshaft adjuster of intake camshaft of left cylinder head using setting gauge T40047.
- Place setting gauge T40047 on bolt - **1** -.
- Tighten camshaft bolt - **2** - on intake camshaft to final tightening torque. Torque specification: 100 Nm plus an additional 90° ($^1/_4$ turn).

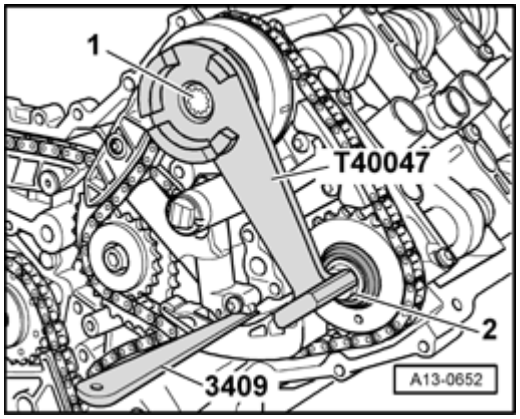

Fig. 252: Securing Hall Sensor Wheel On Camshaft Adjuster Of Intake Camshaft Of Right Cylinder Head Using Setting Gauge T40047
Courtesy of VOLKSWAGEN UNITED STATES, INC.

- Secure Hall sensor wheel on camshaft adjuster of intake camshaft of right cylinder head using setting gauge T40047.
- Place setting gauge T40047 on bolt - **2** -.
- Tighten camshaft bolt - **1** - on intake camshaft to final tightening torque. Torque specification: 100 Nm plus an additional 90° ($^1/_4$ turn).
- Remove setting gauge.

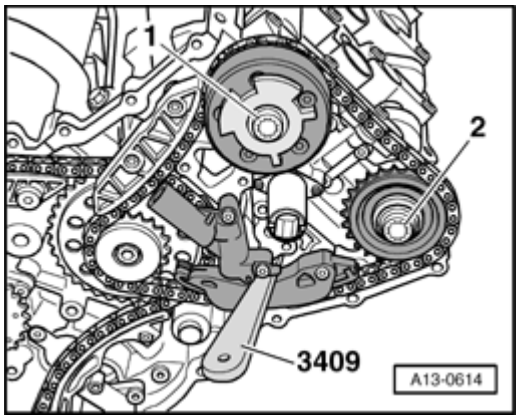

Fig. 253: Tightening Camshaft Bolt On Exhaust Camshaft Of Right Cylinder Head To Initial Tightening Torque
Courtesy of VOLKSWAGEN UNITED STATES, INC.

- Tighten camshaft bolt - **2** - on exhaust camshaft of right cylinder head to final tightening torque. Torque specification: 100 Nm plus an additional 90° ($^1/_4$ turn).

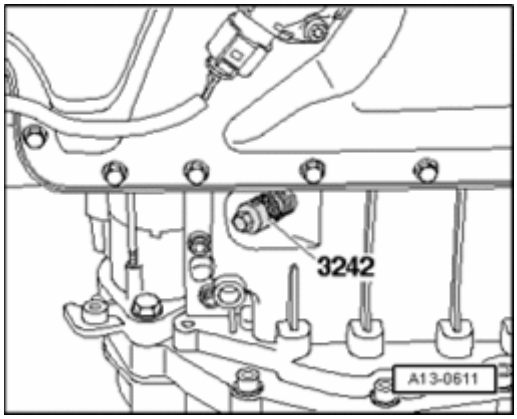

Fig. 254: Removing/Installing Crankshaft Holder 3242 Into Hole
Courtesy of VOLKSWAGEN UNITED STATES, INC.

- Remove crankshaft holder 3242.

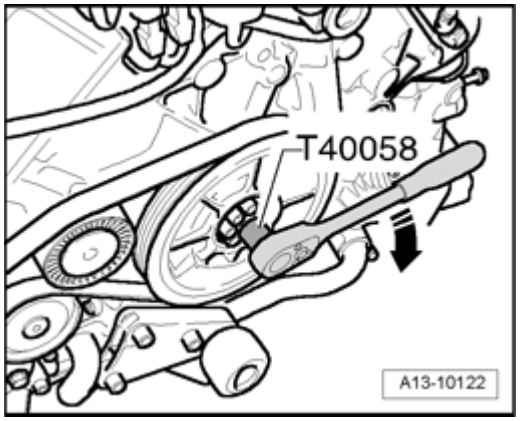

Fig. 255: Counter Holding Crankshaft Using Adapter T40058 To Loosen Torque Converter Bolts
Courtesy of VOLKSWAGEN UNITED STATES, INC.

- Using Key T40058 turn crankshaft two complete rotations in direction of engine rotation - **arrow** - until crankshaft stands at TDC again.

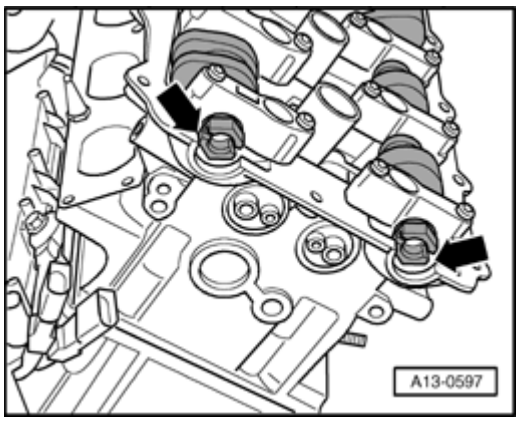

Fig. 256: Identifying Slits At Front In Camshafts Stand Parallel At Same Height With Upper Edge Of Cylinder Head
Courtesy of VOLKSWAGEN UNITED STATES, INC.

- Slits - **arrows** - at front in camshafts must stand parallel at same height with upper edge of cylinder head.

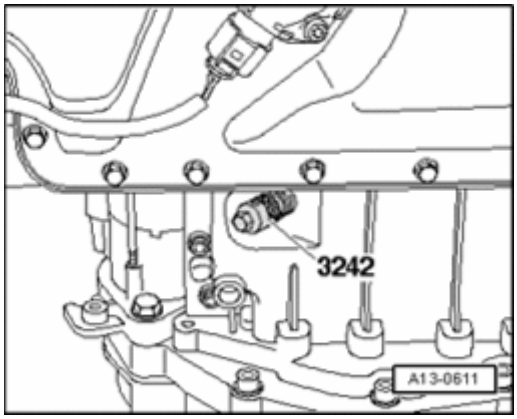

Fig. 257: Removing/Installing Crankshaft Holder 3242 Into Hole
Courtesy of VOLKSWAGEN UNITED STATES, INC.

- Install crankshaft holder 3242 into hole (20 Nm), if necessary rotate crankshaft very slightly back and forth to completely center holder.

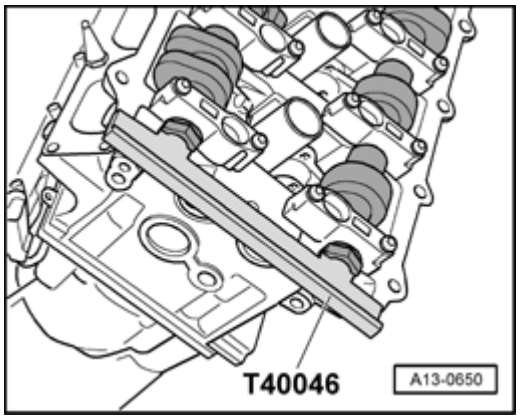

Fig. 258: Removing/Installing Camshaft Locator T40046
Courtesy of VOLKSWAGEN UNITED STATES, INC.

- Insert camshaft locator T40046 into camshafts of left cylinder head.

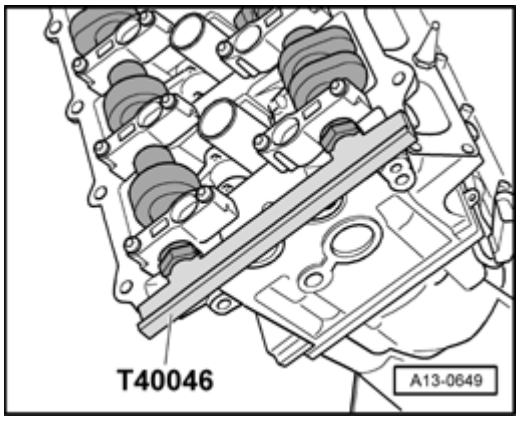

Fig. 259: Removing/Inserting Camshaft Locator T40046 From/Into Camshafts Of Right Cylinder Head
Courtesy of VOLKSWAGEN UNITED STATES, INC.

- Insert camshaft locator T40046 into camshafts of right cylinder head.

NOTE:

- **If camshaft locators T40046 cannot be inserted, repeat adjustment.**

- Pull out trim removal wedge 3409.
- Remove camshaft locators T40046 on both cylinder heads.
- Remove crankshaft holder 3242.
- Install sealing plug of TDC-marking with new sealing ring into upper section of oil pan.

Further installation is in reverse order of removal, note the following:

- Install covers for timing chains **Installing**.
- Bolt transmission to engine and install engine/transmission unit --> **Engine, installing**.

Torque specifications

Component	Nm
Camshaft bolts	100 + 90° * See note* See note
Sealing plug in upper section of oil pan	35

* 90° corresponds to a 1/4 turn

*Replace bolts.

Drive chain for timing mechanism, component overview

NOTE:

- **Before removing timing chain, mark direction of travel with paint. Reversing the rotation direction of a used chain can destroy it.**

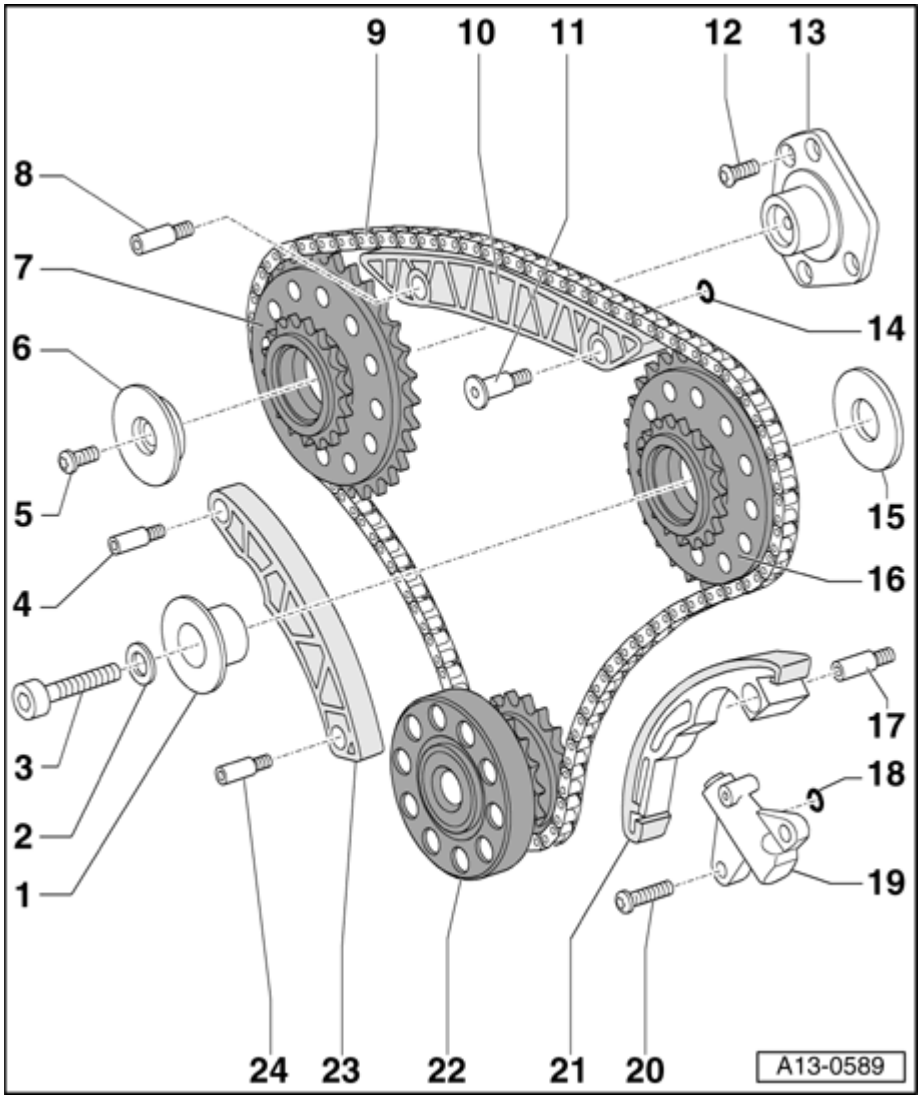

Fig. 260: Drive Chain For Timing Mechanism, Component Overview

Courtesy of VOLKSWAGEN UNITED STATES, INC.

1 - Mounting pin

- For drive sprocket

2 - Washer

3 - 42 Nm

4 - Pivot pin, 10 Nm

5 - 5 Nm plus an additional 90° ($^{1}/_{4}$ turn)

- Replace

6 - Thrust washer

- For drive sprocket

7 - Drive sprocket

- For left timing chain

8 - Pivot pin, 10 Nm

9 - Drive chain

- For timing mechanism

10 - Guide rail

11 - Pivot pin, 10 Nm

12 - 10 Nm

13 - Bracket

- For drive sprocket

14 - O-ring

- Replace

15 - Thrust washer

16 - Drive sprocket

- For right timing chain

17 - Pivot pin, 10 Nm

18 - O-ring

- Replace

19 - Chain tensioner

20 - 10 Nm

21 - Guide rail

- For timing chain

22 - Crankshaft

23 - Guide rail

24 - Pivot pin, 10 Nm

Drive chain for timing mechanism, removing and installing

Removing

- Remove camshaft timing chains --> **Camshaft timing chain, removing and installing**.
- Remove chain for power take-off --> **Chain for power take-off, removing and installing**.

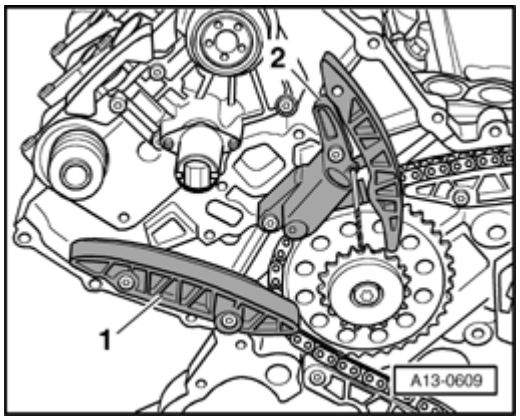

Fig. 261: Removing Glide Track At Left Cylinder Head & Chain Tensioner
Courtesy of VOLKSWAGEN UNITED STATES, INC.

- Remove glide track - **1** - at left cylinder head.
- Remove chain tensioner - **2** -.

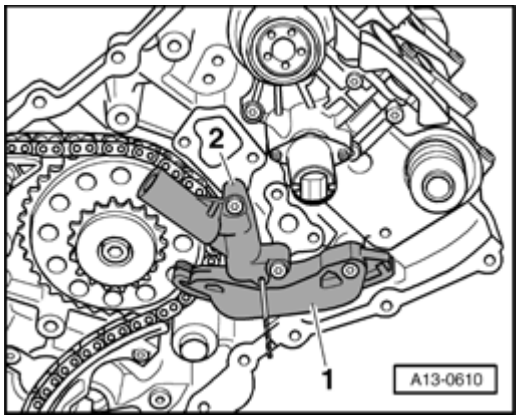

Fig. 262: Removing Glide Track At Right Cylinder Head & Chain Tensioner
Courtesy of VOLKSWAGEN UNITED STATES, INC.

- Remove glide track - **1** - at right cylinder head.
- Remove chain tensioner - **2** -.

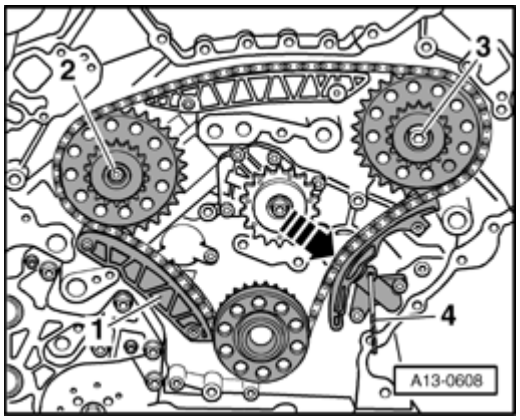

Fig. 263: Pushing Glide Track Of Chain Tensioner For Chain Drive And Pull
Courtesy of VOLKSWAGEN UNITED STATES, INC.

- Push glide track of chain tensioner for chain drive in direction of - **arrow** - and pull off chain tensioner using a drill bit 3.3 mm dia. - **4** -.
- Mark running direction of timing chain with paint.
- Remove bolts - **2** - and - **3** - and remove chain sprockets with drive chain and glide track - **1** -.

Installing

Installation is in the reverse order of removal, note the following:

NOTE:

- **Replace bolts which have been tightened to torque.**

- Install chain for power take-off --> **Chain for power take-off, removing and installing**.
- Install camshaft timing chains **Installing**.

Torque specifications

Component	Nm
Left drive sprocket to mounting bracket	5 + 90° * See note* See note
Right drive sprocket to cylinder block	42
Chain tensioner for left camshaft timing chain to cylinder head	5 + 90° * See note* See note
Chain tensioner for right camshaft timing chain to cylinder head	5 + 90° * See note* See note

* 90° corresponds to a 1/4 turn

*Replace bolts.

POWER TAKE-OFF

Chain for power take-off, component overview

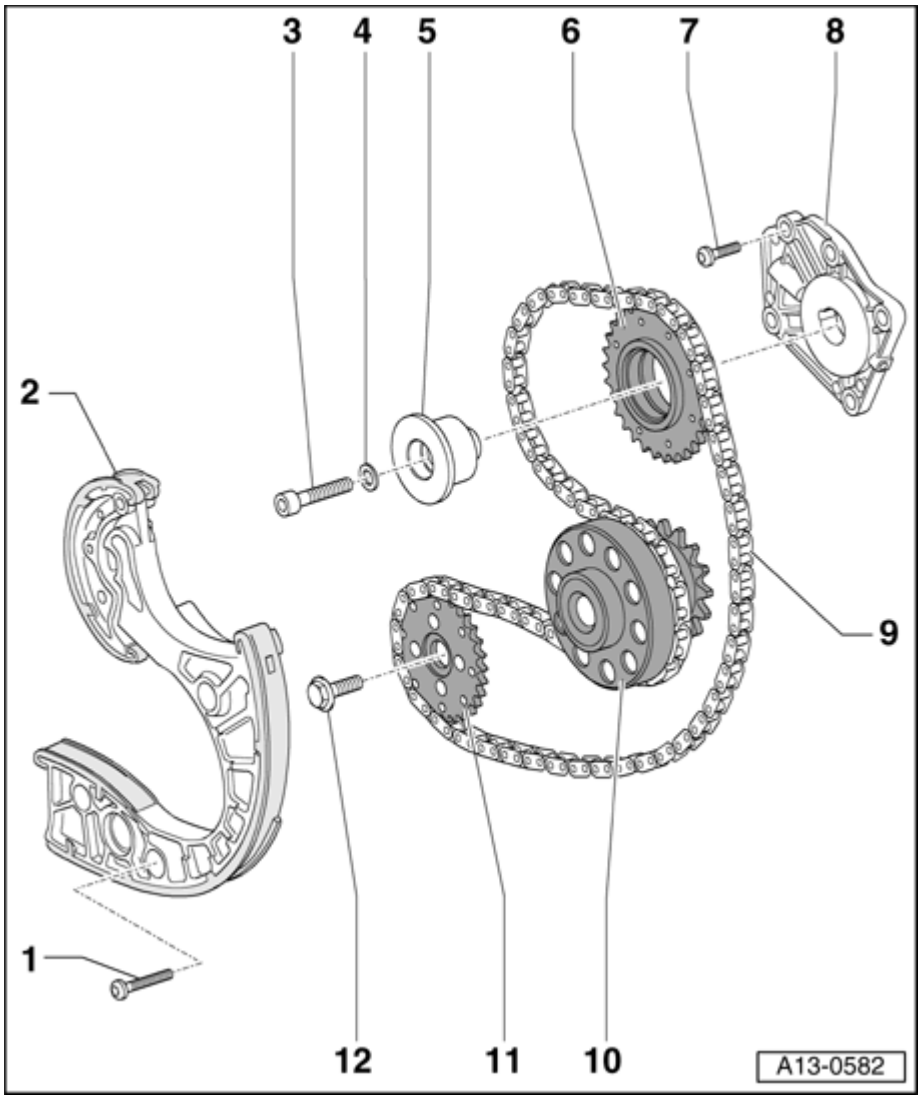

Fig. 264: Chain For Power Take-Off, Component Overview
Courtesy of VOLKSWAGEN UNITED STATES, INC.

1 - 10 Nm

2 - Chain tensioner

- With glide track

3 - 42 Nm

4 - Washer

5 - Mounting pin

- For idler sprocket

6 - Idler sprocket

- For chain for power take-off

7 - 10 Nm

8 - Bracket

- For idler sprocket

9 - Chain

- For power take-off
- Removing and installing --> **Chain for power take-off, removing and installing**

10 - Crankshaft

11 - Drive sprocket

- For power take-off

12 - 62 Nm

Chain for power take-off, removing and installing

Removing

- Drain engine oil --> **MAINTENANCE PROCEDURES** .
- Remove engine --> **Engine, removing and installing**.
- Separate engine/transmission unit --> **Engine and transmission, separating**.
- Remove camshaft timing chains from camshafts --> **Camshaft timing chains, removing from camshafts**.
- Remove drive plate --> **Drive plate, removing and installing**.
- Remove covers for timing chains --> **All covers for timing chain, removing and installing**.

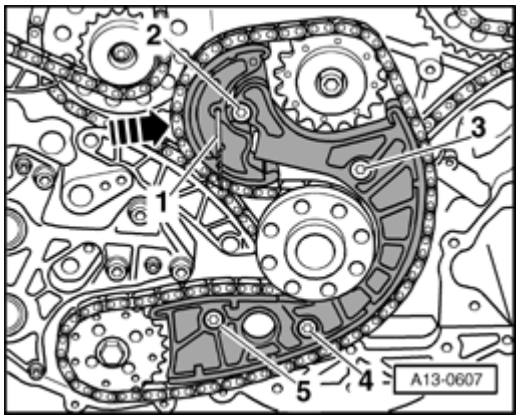

Fig. 265: Pushing Glide Track Of Chain Tensioner And Pulling Off Chain Tensioner
Courtesy of VOLKSWAGEN UNITED STATES, INC.

- Push glide track of chain tensioner in direction of - **arrow** - and pull off chain tensioner using a drill bit 3.3 mm dia. - **1** -.

NOTE:

- **If chain sprocket for power take-off is to be removed, mounting bolt must be loosened before removing chain.**

- Mark running direction of chain for power take-off with paint.
- Remove bolts - **2 to 5** - and remove chain tensioner.
- Remove chain for power take-off.

Installing

Installation is in reverse order of removal, note the following:

NOTE:

- **Replace bolts which have been tightened to torque.**

- First install chain for power take-off.
- Install chain tensioner starting at top on engine.
- Install covers for timing chains **Installing**.
- Install drive plate --> **Drive plate, removing and installing**.
- Bolt transmission to engine and install engine/transmission unit --> **Engine, installing**.

Torque specifications

Component	Nm
Chain tensioner on cylinder block	10

Power take-off, component overview

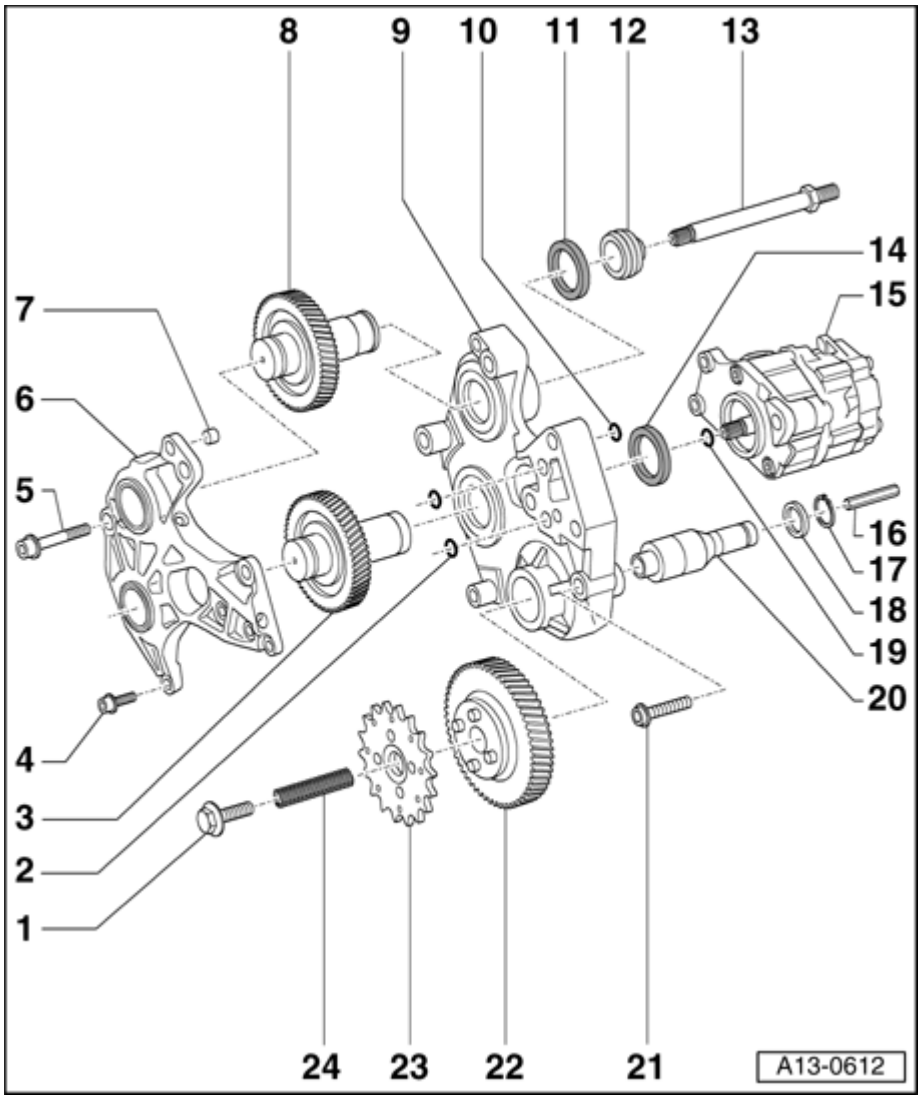

Fig. 266: Power Take-Off, Component Overview
Courtesy of VOLKSWAGEN UNITED STATES, INC.

1 - 62 Nm

2 - O-ring

- Replace

3 - Spur gear

- For power steering pump drive

4 - 10 Nm

5 - 22 Nm

6 - Rear bearing cap

- For spur gear unit

7 - Alignment bushing

- 2 pieces

8 - Spur gear

- For A/C compressor drive

9 - Front bearing cap

- For spur gear unit

10 - O-ring

- Replace

11 - Seal

- For A/C compressor drive
- Replacing --> **Seals for power take-off, replacing**.

12 - Protective dust cap

- For A/C compressor drive

13 - Input shaft

- For air conditioning compressor
- Tighten to 60 Nm

14 - Seal

- For power steering pump drive
- Replacing --> **Seals for power take-off, replacing**.

15 - Power steering pump

- For power steering

16 - Input shaft

- For oil pump

17 - Circlip

18 - Thrust washer

19 - O-ring

- Replace

20 - Shaft for drive spur gear

21 - 22 Nm

22 - Drive spur gear

- For power take-off

23 - Drive sprocket

- For power take-off

24 - Spring

Seals for power take-off, replacing

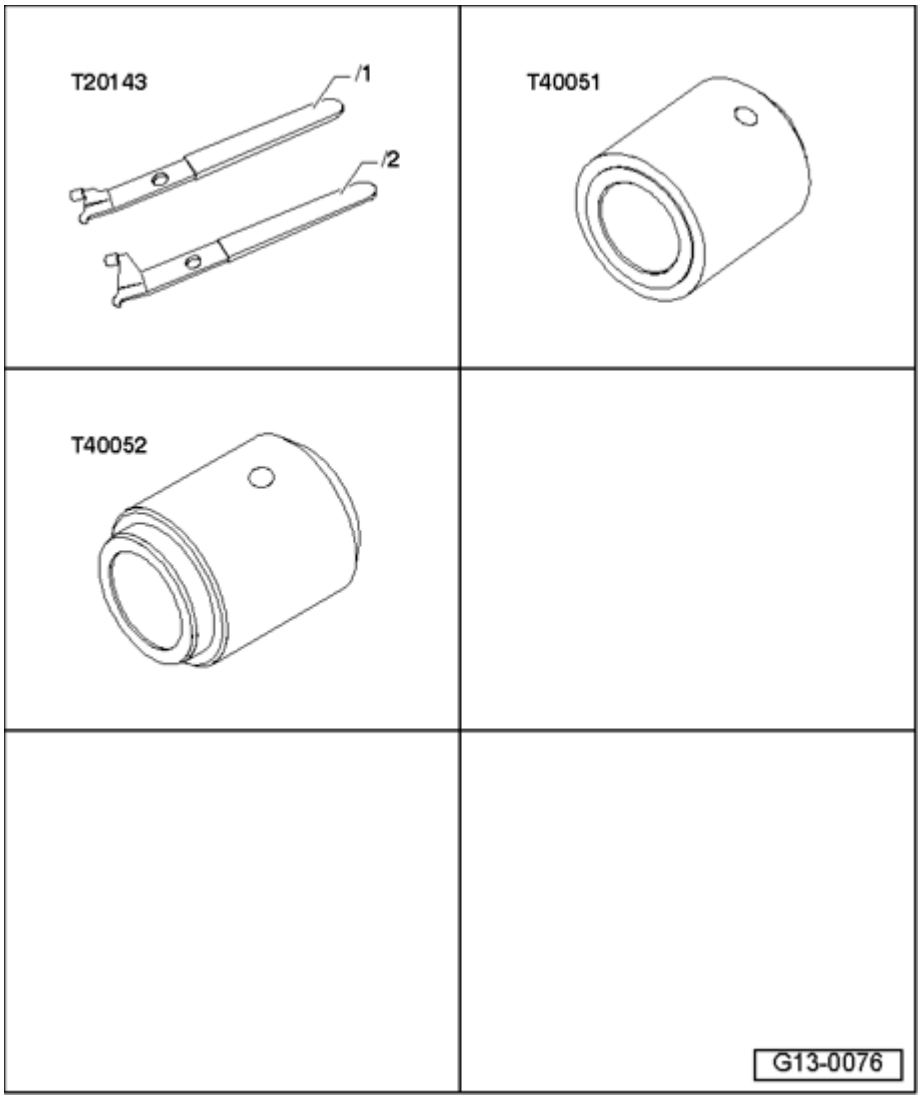

Fig. 267: Identifying Special Tools - Seals For Power Take-Off, Replacing
Courtesy of VOLKSWAGEN UNITED STATES, INC.

Special tools, testers and auxiliary items required

- Extractor hook T20143/1
- Pressure piece T40051
- Pressure piece T40052

Work procedure

- Remove air conditioning compressor --> **87 - AIR CONDITIONING** .
- Remove power steering vane pump --> **48 - STEERING** .

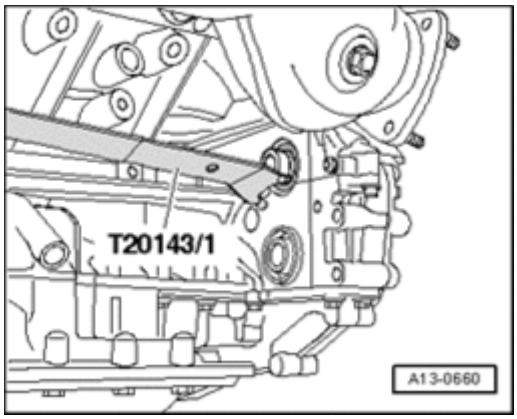

Fig. 268: Prying Out Sealing Ring For A/C Compressor Drive Using Pulling Hook T20143/1
Courtesy of VOLKSWAGEN UNITED STATES, INC.

- Pry out sealing ring for A/C compressor drive using extractor lever T20143/1.

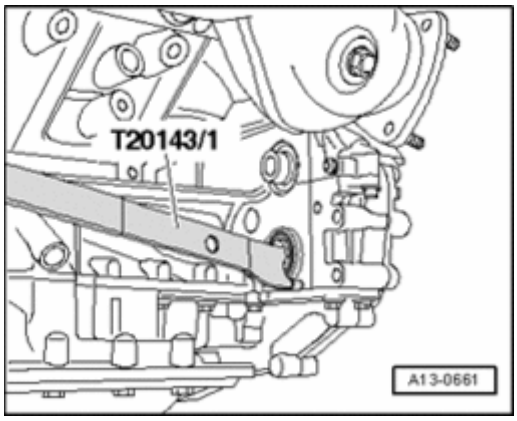

Fig. 269: Prying Out Power-Steering Pump Drive Seal Using Pulling Hook T20143/1
Courtesy of VOLKSWAGEN UNITED STATES, INC.

- Pry out seal for power steering pump drive using extractor lever T20143/1.

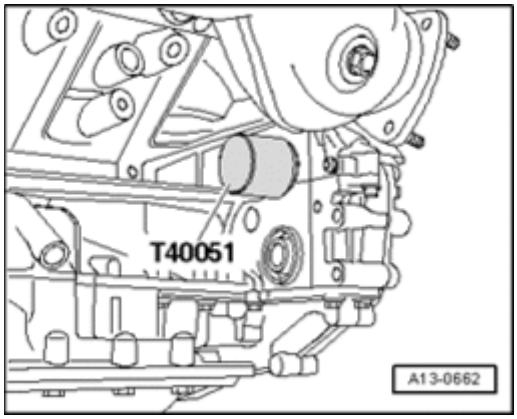

Fig. 270: Driving In Sealing Ring For A/C Compressor Drive Using Thrust Piece T40051
Courtesy of VOLKSWAGEN UNITED STATES, INC.

- Drive in seal for A/C compressor drive using thrust piece T40051.

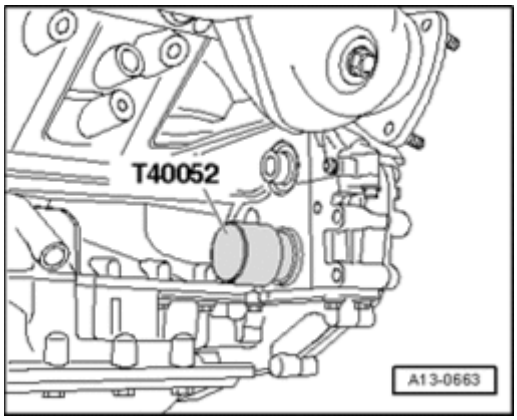

Fig. 271: Driving In Sealing Ring For Power-Steering Pump Drive Using Thrust Piece T40052
Courtesy of VOLKSWAGEN UNITED STATES, INC.

- Drive in seal for power steering pump drive using thrust piece T40052.

Further installation is in reverse order of removal, note the following:

- Install power steering vane pump --> **48 - STEERING** .
- Install A/C compressor --> **87 - AIR CONDITIONING** .

Spur gear unit, removing and installing

Special tools, testers and auxiliary items required

- Sealant

Removing

- Drain engine oil --> **MAINTENANCE PROCEDURES** .
- Remove engine --> **Engine, removing and installing**.
- Separate engine/transmission --> **Engine and transmission, separating**.
- Remove drive plate --> **Drive plate, removing and installing**.

- Remove covers for timing chains --> **All covers for timing chain, removing and installing**.
- Remove power steering pump from cylinder block.

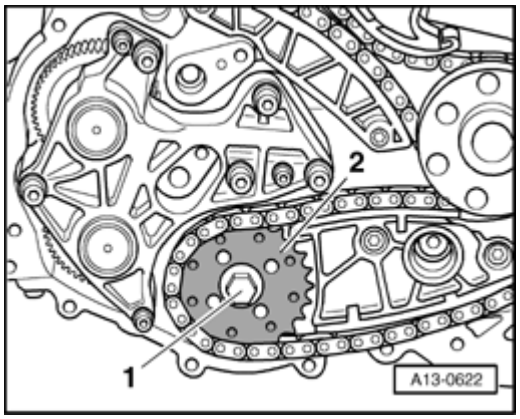

Fig. 272: Loosening/Tightening Bolt On Drive Sprocket
Courtesy of VOLKSWAGEN UNITED STATES, INC.

- Loosen bolt - **1** - on drive sprocket - **2** - a few turns.
- Remove chain for power take-off --> **Chain for power take-off, removing and installing**.
- Remove drive sprocket for power take-off.

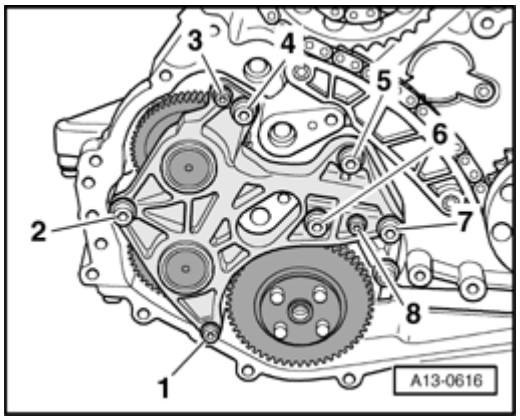

Fig. 273: Removing Bolts & Spur Gear Unit Rear Bearing Cap
Courtesy of VOLKSWAGEN UNITED STATES, INC.

- Remove bolts - **1 to 8** -.
- Remove spur gear unit rear bearing cap.

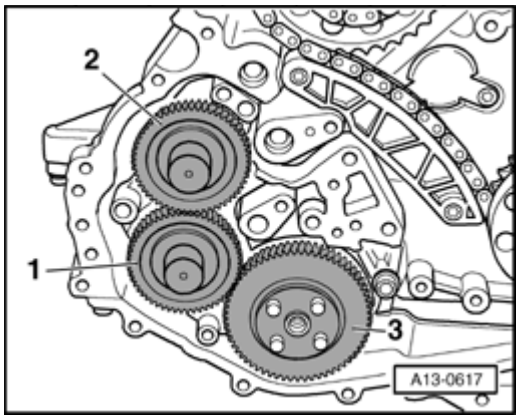

Fig. 274: Removing/Installing Spur Gears In Sequence
Courtesy of VOLKSWAGEN UNITED STATES, INC.

- Remove spur gears in sequence - **1 to 3** -.

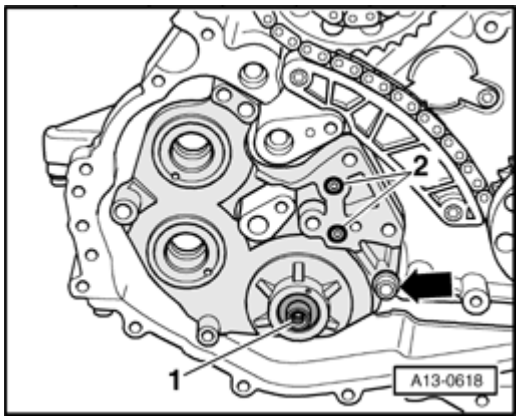

Fig. 275: Removing/Installing Compression Spring From/To Shaft For Drive Spur Gear, O-Rings, Bolts & Front Bearing Cap From Cylinder Block
Courtesy of VOLKSWAGEN UNITED STATES, INC.

- Remove compression spring - **1** - from shaft for drive spur gear.
- Remove O-rings - **2** -.
- Remove bolt - **arrow** -.
- Remove front bearing cap from cylinder block.

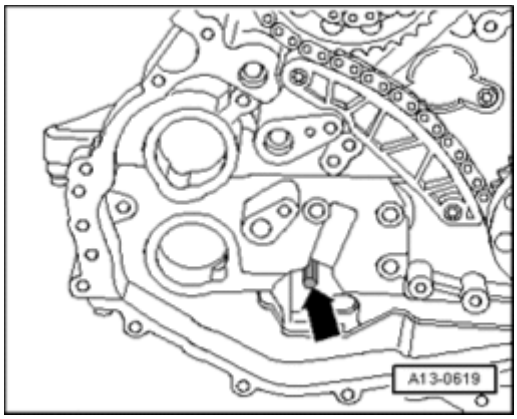

Fig. 276: Removing/Installing Drive Shaft For Oil Pump
Courtesy of VOLKSWAGEN UNITED STATES, INC.

- Remove drive shaft - **arrow** - for oil pump.

Installing

NOTE:

- **Replace seals and O-rings.**

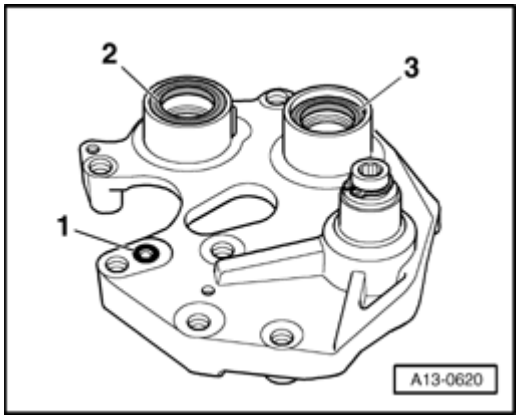

Fig. 277: Driving Out Sealing Rings (For A/C Compressor Drive) And (For Power-Steering Pump Drive) Using Drift
Courtesy of VOLKSWAGEN UNITED STATES, INC.

- Drive out seals - **2** - (for A/C compressor drive) and - **3** - (for power steering pump drive) from front using a drift.
- Remove O-ring - **1** -.
- Remove remaining sealant on front bearing cap and on cylinder block.
- Clean sealing surfaces, must be free of oil and grease.

- Drive in seal for power steering pump drive and A/C compressor drive --> **Seals for power take-off, replacing**.

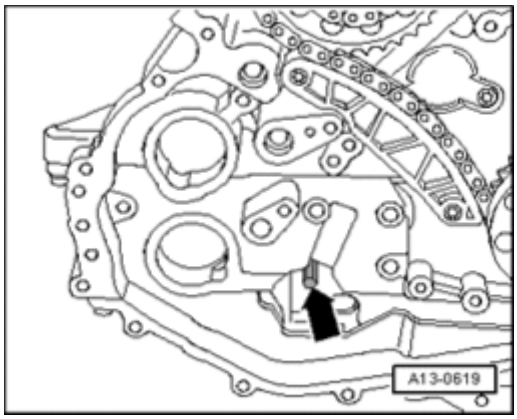

Fig. 278: Removing/Installing Drive Shaft For Oil Pump
Courtesy of VOLKSWAGEN UNITED STATES, INC.

- Insert drive shaft - **arrow** - for oil pump into guide on oil pump.

NOTE:

- **To guarantee that the drive shaft engages correctly in oil pump, insert drive shaft only into oil pump, do not install together with front bearing cap.**

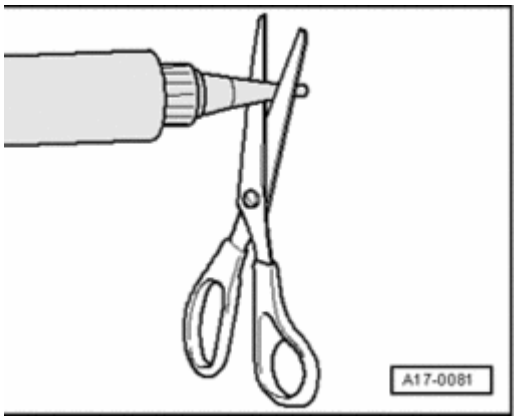

Fig. 279: Cutting Tube Nozzle At Front Marking
Courtesy of VOLKSWAGEN UNITED STATES, INC.

- Cut tube nozzle at front marking (jet dia. approx. 1 mm).

NOTE:

- **Covers for timing chain must be installed within 5 minutes after applying sealant.**

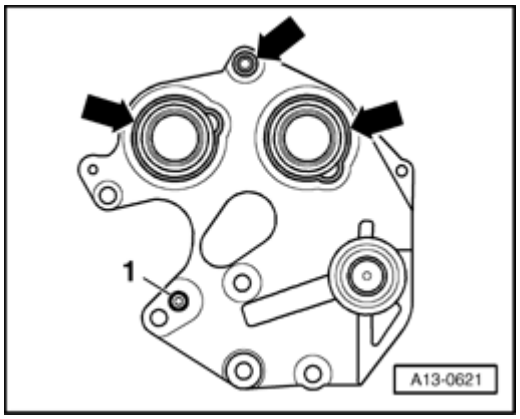

Fig. 280: Applying Sealant Beads On Clean Sealing Surfaces Of Front Bearing Cap
Courtesy of VOLKSWAGEN UNITED STATES, INC.

- Apply sealant beads - **arrows** - to clean sealing surfaces of front bearing cap as depicted in illustration.
- Thickness of sealant bead: 1.5 to 2.0 mm.
- Install O-ring - **1** - and secure using some grease.

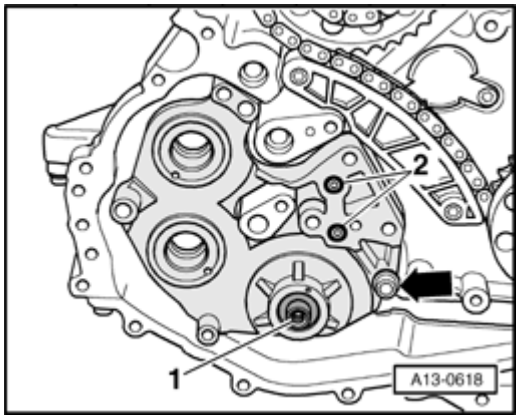

Fig. 281: Removing/Installing Compression Spring From/To Shaft For Drive Spur Gear, O-Rings, Bolts & Front Bearing Cap From Cylinder Block
Courtesy of VOLKSWAGEN UNITED STATES, INC.

- Install front bearing cap and tighten bolt - **arrow** - hand-tight.
- Insert compression spring - **1** -.
- Install O-rings - **2** - and secure using some grease.

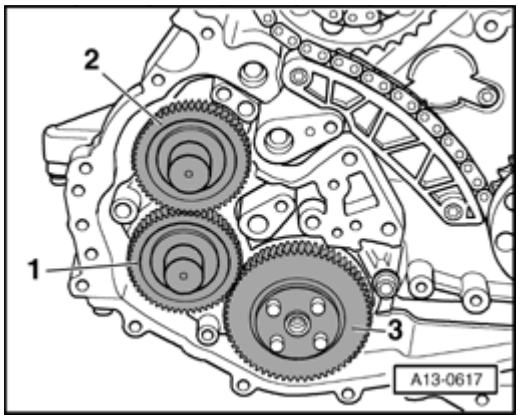

Fig. 282: Removing/Installing Spur Gears In Sequence
Courtesy of VOLKSWAGEN UNITED STATES, INC.

- Insert spur gears - **1 to 3** -.

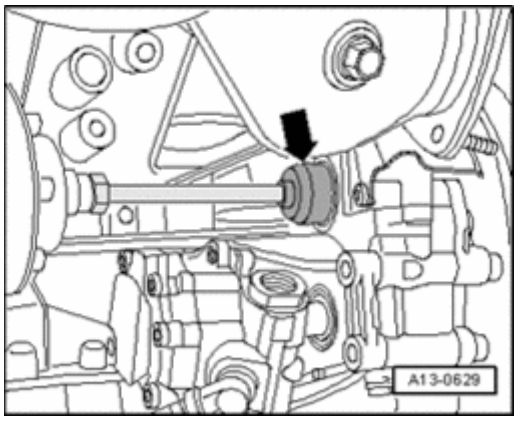

Fig. 283: Sliding Dust Seal Cap Onto Shaft End Of A/C Compressor Drive Spur Gear
Courtesy of VOLKSWAGEN UNITED STATES, INC.

- Slide dust seal cap - **arrow** - onto shaft end of A/C compressor drive spur gear.
- Check whether 2 alignment bushings are present in rear bearing cap, install if necessary.

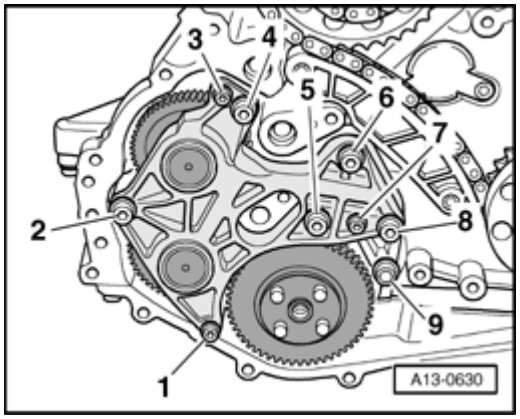

Fig. 284: Rear Bearing Cap Bolts Tighten Sequence

Courtesy of VOLKSWAGEN UNITED STATES, INC.

- Install rear bearing cap and tighten bolts as follows.

Tightening sequence	Bolt	Nm
I	1, 3, 7	10
II	2, 4, 5, 6, 8, 9	Tighten lastly to 22 Nm in diagonal sequence and in stages

- Fasten drive sprocket for power take-off hand-tight.
- Install chain for power take-off --> **Chain for power take-off, removing and installing**.

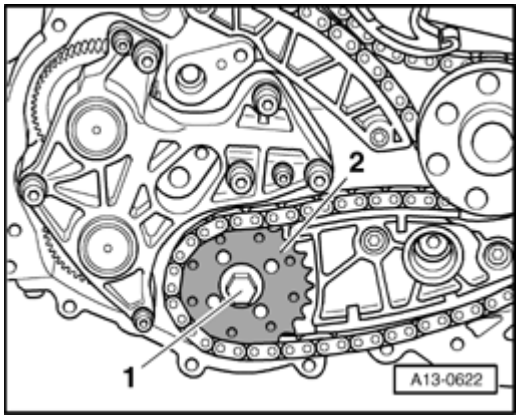

Fig. 285: Loosening/Tightening Bolt On Drive Sprocket
Courtesy of VOLKSWAGEN UNITED STATES, INC.

- Tighten drive sprocket - **2** - for power take-off to 62 Nm.
- Push power steering pump with new O-ring onto spur gear for power steering pump drive.

Further installation is in reverse order of removal, note the following:

- Install covers for timing chains **Installing**.
- Install drive plate --> **Drive plate, removing and installing**.
- Bolt transmission to engine and install engine/transmission --> **Engine, installing**.
- Add engine oil and check oil level --> **MAINTENANCE PROCEDURES** .

Torque specifications

Component		Nm
Front bearing cap to cylinder block		22
Bearing cap	Front bearing cap	10
at rear on	Cylinder block	22
Drive sprocket for power take-off to shaft		62

CRANKSHAFT, REMOVING AND INSTALLING

Crankshaft, component overview

NOTE:

- **To perform assembly work, secure engine with Bracket For V8 Engine VAS 6095/1-6 or VAS 6095/1-6A to Engine and Transmission Holder VAS 6095 --> Engine, securing to assembly stand.**

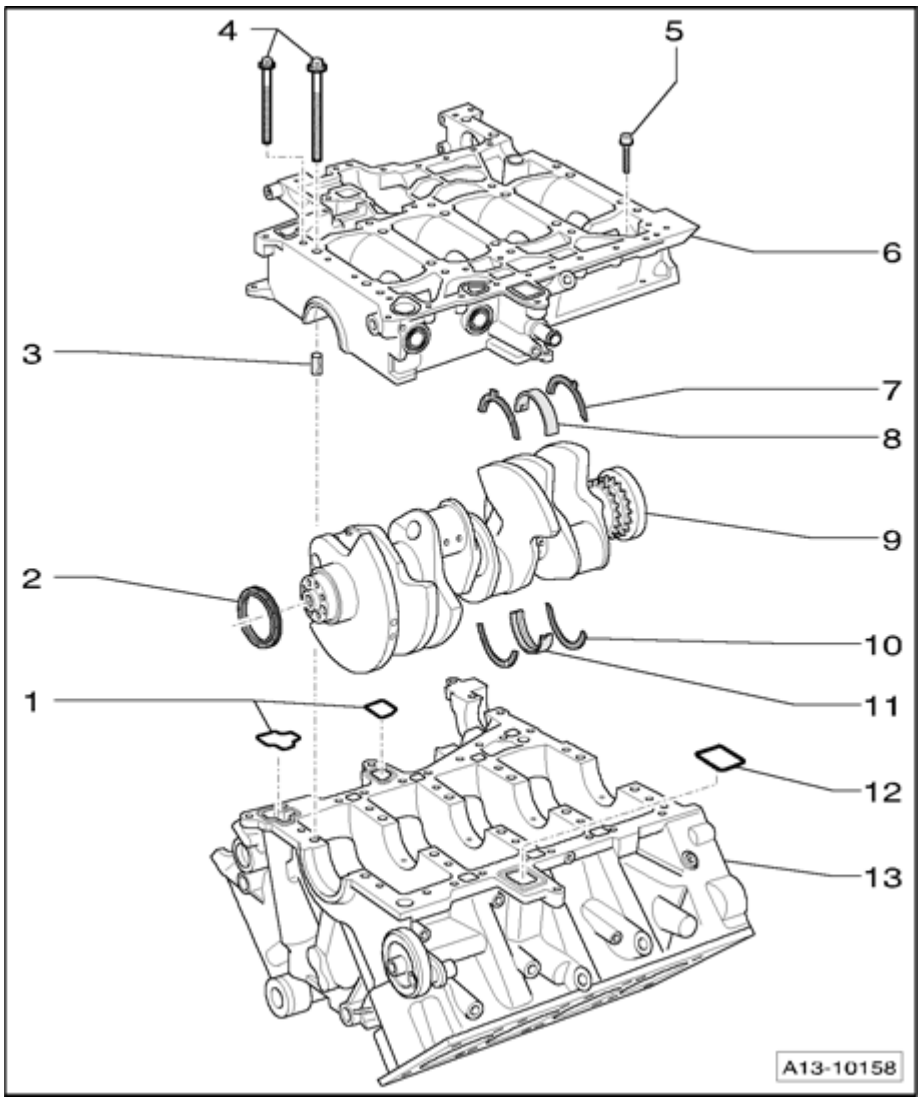

Fig. 286: Crankshaft, Component Overview
Courtesy of VOLKSWAGEN UNITED STATES, INC.

1 - Seals

- Replace

2 - Seal for crankshaft - ribbed belt side-

- Replacing --> **Seal for crankshaft (ribbed belt side), replacing**.

3 - Alignment bushing

- 3 pieces
- Insert into guide frame
- Installed location **Sealant applied on cylinder block (for guide frame)**

4 - bolts

- For guide frame
- Replace
- Different bolt sizes
- Tightening order **Installing guide frame**

5 - Bolt

- For sealing surfaces of cylinder block/guide frame
- Different bolt lengths
- Tightening order **Installing guide frame**

6 - Bearing bracket

- Sealant applied on cylinder block (for guide frame) **Sealant applied on cylinder block (for guide frame)**
- Tightening sequence for manifold mounting bolts **Installing guide frame**

7 - Thrust washer

- Only at 4th crankshaft bearing
- Lubricating grooves face outward
- Note locating point in guide frame
- Measuring crankshaft axial clearance --> **Axial clearance, measuring**

8 - Bearing shell

- For guide frame without lubricating groove
- Do not interchange used bearing shells (mark)
- Insert new bearing shells for guide frame with proper color marking --> **Allocation of main bearing shells for new crankshafts** or --> **Allocation of main bearing shells for used and reworked crankshafts**

9 - Crankshaft

- Measuring axial play --> **Axial clearance, measuring**
- Radial clearance, measuring --> **Radial clearance, measuring**
- Do not turn crankshaft when measuring radial play
- Crankshaft dimensions --> **Crankshaft dimensions**

10 - Thrust washer

- Only at 4th crankshaft bearing
- Lubricating grooves face outward
- Measuring crankshaft axial clearance --> **Axial clearance, measuring**

11 - Bearing shell

- For cylinder block with oil groove
- Do not interchange used bearing shells (mark)
- Insert new bearing shells for cylinder block with proper color marking --> **Allocation of main bearing shells for new crankshafts** or --> **Allocation of main bearing shells for used and reworked crankshafts**

12 - Gasket

- Replace

13 - Cylinder block

- Sealant applied on cylinder block (for guide frame) **Sealant applied on cylinder block (for guide frame)**

Sealant applied on cylinder block (for guide frame)

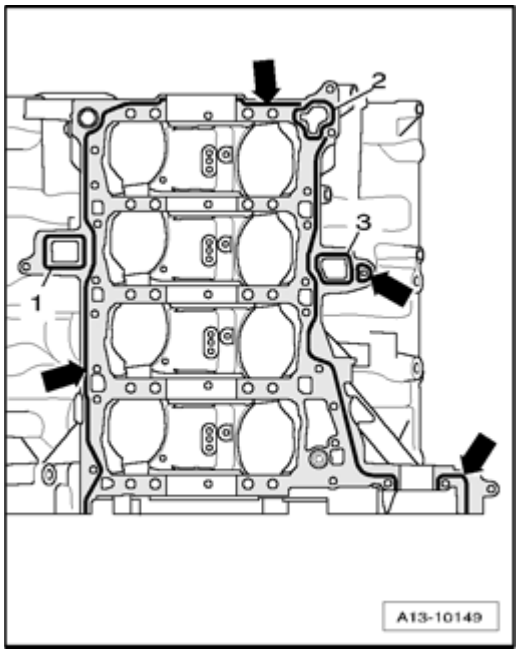

Fig. 287: Sealant Applied On Cylinder Block (For Guide Frame)
Courtesy of VOLKSWAGEN UNITED STATES, INC.

- Clean sealing surfaces, they must be free of oil and grease.
- Apply sealant beads - **arrows** - on clean sealing surfaces of guide frame as shown in illustration.

- Thickness of sealant beads: 1.5 to 2.0 mm.

- Install seals - **1 to 3** -.

Installation position of alignment bushings

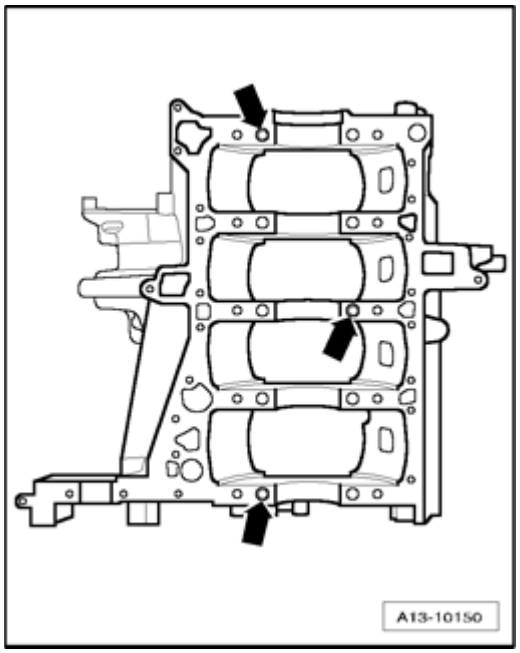

Fig. 288: Installation Position Of Alignment Bushings
Courtesy of VOLKSWAGEN UNITED STATES, INC.

- Check whether alignment bushings - **arrows** - are inserted at locations in guide frame as shown in the illustration.

Installing guide frame

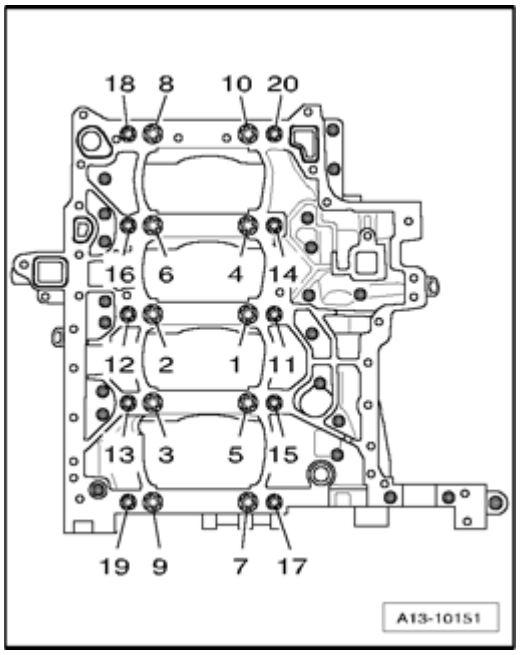

Fig. 289: Installing Guide Frame
Courtesy of VOLKSWAGEN UNITED STATES, INC.

- Replace bolts - **1 to 20** -.
- Tighten bolts for guide frame as follows:
- Tighten bolts - **1 to 10** - to 30 Nm with torque wrench.
- Tighten bolts - **11 to 20** - to 20 Nm with torque wrench.

- Tighten bolts - **1 to 10** - to 50 Nm with torque wrench.
- Tighten bolts - **11 to 20** - to 30 Nm with torque wrench.
- Tighten bolts - **1 to 10** - 90° ($^1/_4$ turn) using a rigid wrench.
- Tighten bolts - **11 to 20** - 90° ($^1/_4$ turn) using a rigid wrench.

- Tighten bolts for sealing surfaces of cylinder block/guide frame - **dark hatching in the illustration** - to 9 Nm in diagonal sequence.

Allocation of main bearing shells for new crankshafts

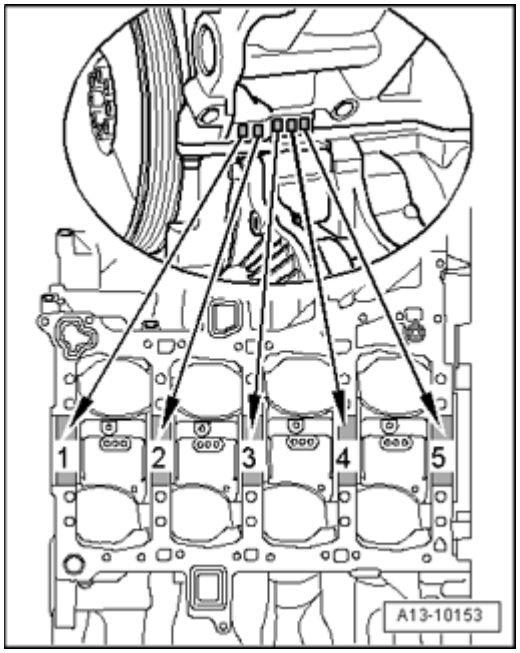

Fig. 290: Allocation Of Crankshaft Bearing Shells For Cylinder Block
Courtesy of VOLKSWAGEN UNITED STATES, INC.

Allocation of crankshaft bearing shells for cylinder block

- Bearing shells with correct thickness are allocated to cylinder block in factory. Colored dots on sides of bearing shells serve for identifying bearing shell thickness.
- Allocation of bearing shells to cylinder block is marked by one letter each at left front on cylinder block (can be read from outside) as shown in the illustration.

Letter on cylinder block		Color of bearing

R	=	Red
G	=	Yellow
B	=	Blue

NOTE:

- **In addition, the letters are also stamped on the guide frame.**

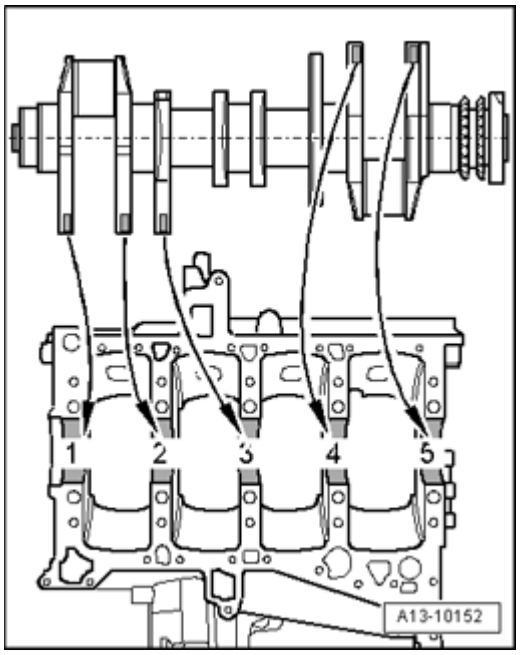

Fig. 291: Allocation Of Crankshaft Bearing Shells For Guide Frame - Crankshaft Manufactured By Alfing
Courtesy of VOLKSWAGEN UNITED STATES, INC.

Allocation of crankshaft bearing shells for guide frame - crankshaft manufactured by Alfing

- Bearing shells with correct thickness are allocated to the guide frame in the factory. Colored dots on sides of bearing shells serve for identifying bearing shell thickness.
- Allocation of bearing shells to guide frame is marked by one colored dot each on crankshaft counterweight as shown in the illustration.
- Crankshafts manufactured by Alfing have no manufacturers identification.

Colored dot on crankshaft	Color of bearing
Red	Red
Yellow	Yellow
Blue	Blue

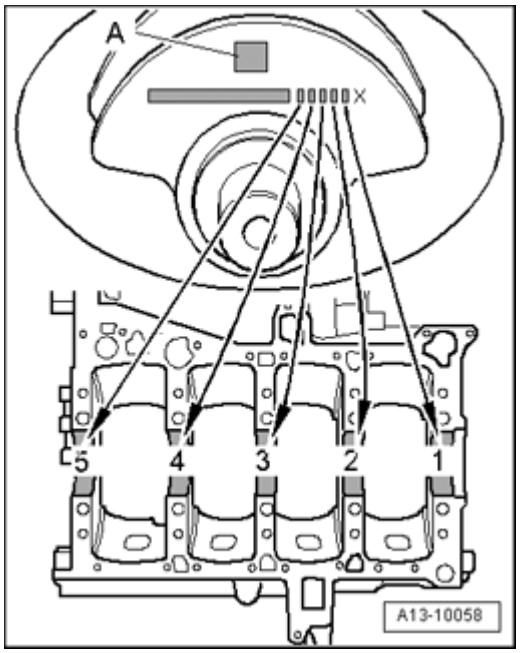

Fig. 292: Allocation Of Crankshaft Bearing Shells For Guide Frame - Crankshaft Manufactured By Weber
Courtesy of VOLKSWAGEN UNITED STATES, INC.

Allocation of crankshaft bearing shells for guide frame - crankshaft manufactured by Weber

- Bearing shells with correct thickness are allocated to guide frame in the factory. Colored dots on sides of bearing shells serve for identifying bearing shell thickness.
- Allocation of bearing shells to guide frame is marked by one colored dot each on front crankshaft counterweight as shown in the illustration. The "X" marks the end of the letter series and stand next to color identification for bearing 1 belt pulley side.
- Crankshafts manufactured by Weber have a manufacturers identification - **A** - on front crankshaft counterweight.

NOTE:

- **The letter series begins at left with bearing 5 flywheel side.**

Letter on crankshaft		Color of bearing
R	=	Red
G	=	Yellow
B	=	Blue

Allocation of main bearing shells for used and reworked crankshafts

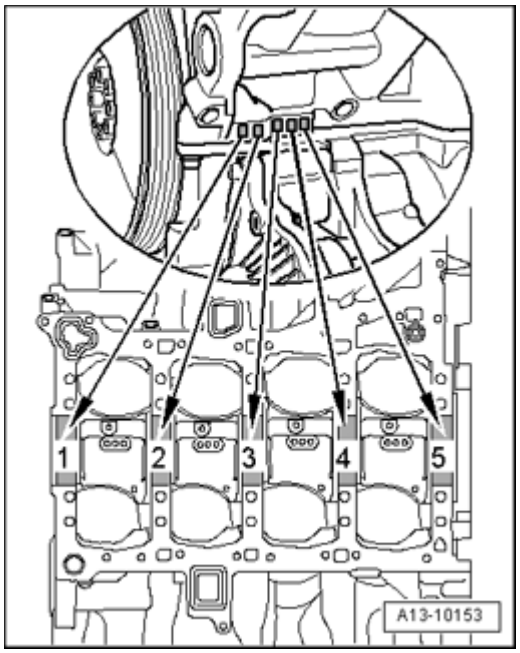

Fig. 293: Allocation Of Crankshaft Bearing Shells For Cylinder Block
Courtesy of VOLKSWAGEN UNITED STATES, INC.

Allocation of crankshaft bearing shells for cylinder block

- Bearing shells are allocated to cylinder block corresponding to color markings stamped into cylinder block.
- For used and reworked crankshafts, the main crankshaft journals must be measured in order to allocate the matching bearing shells.
- Basic dimension of main crankshaft journals = dia. 65 mm.
- Repair stage of main crankshaft journals = dia. 64.75 mm.

- Thicker over-sized bearing shells are available for reworked crankshafts. These have the same color markings as the original-size bearing shells.

Letter on cylinder block		Color of bearing
R	=	Red
G	=	Yellow
B	=	Blue

Allocation of crankshaft bearing shells for guide frame

- For used and reworked crankshafts, the main crankshaft journals must be measured in order to allocate the matching bearing shells.
- Any other markings on the crankshaft are invalid when reworking crankshafts.
- Allocate bearing shells to determined diameter of main crankshaft journals according to the following table.

Main crankshaft journals diameter	Color identification of bearing shells for guide frame		
Dimensions in mm	Red	Yellow	Blue
Basic dimension 65 * See note	64.978 to 64.972	64.972 to 64.965	64.965 to 64.958
Repair stage 64.75 * See note	64.728 to 64.722	64.722 to 64.715	64.715 to 64.708

*Colored markings on bearing shells do not indicate if they are for new or used crankshafts.

Crankshaft dimensions

Reconditioning dimension in mm	Crankshaft journal diameter		Connecting rod journal diameter	
Basic dimension	65.00	0.022 0.042	54.00	0.022 0.042
Repair stage	64.75	0.022 0.042	53.75	0.022 0.042

Axial clearance, measuring

Special tools, testers and auxiliary items required

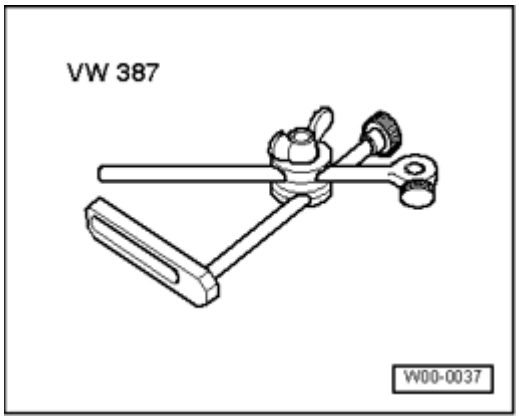

Fig. 294: Dial Gauge Holder VW 387
Courtesy of VOLKSWAGEN UNITED STATES, INC.

- Dial gauge holder VW 387

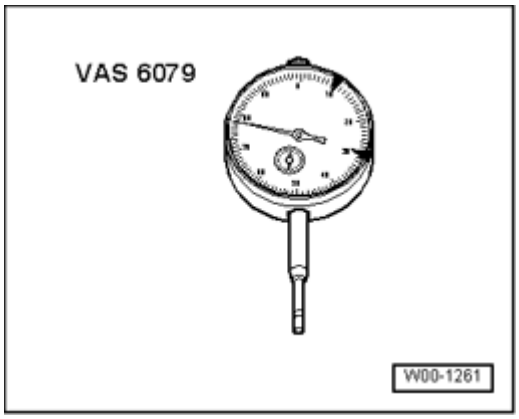

Fig. 295: Dial Gauge VAS 6079
Courtesy of VOLKSWAGEN UNITED STATES, INC.

- Dial gauge VAS 6079

Work procedure

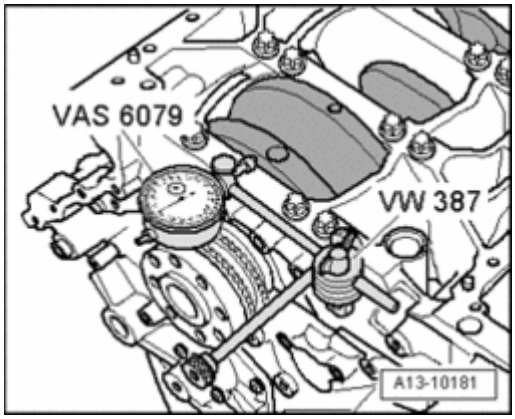

Fig. 296: Attaching Dial Indicator VAS 6079 Together With Dial Gauge Holder VW 387 To Cylinder Block And Setting Indicator Against Crankshaft Counterweight
Courtesy of VOLKSWAGEN UNITED STATES, INC.

- Attach dial indicator VAS 6079 together with dial gauge holder VW 387 to cylinder block and set indicator against crankshaft counterweight.
- Press crankshaft against dial indicator by hand, set indicator to "0".
- Press crankshaft off dial indicator and read off value:

- Axial clearance: 0.090 to 0.251 mm.

Radial clearance, measuring

Special tools, testers and auxiliary items required

- Plastigage

Work procedure

NOTE:

- **Do not interchange used bearings**
- **Bearing shells that are worn down to the nickel layer must be replaced.**

- Remove guide frame and clean journals.
- Place Plastigage over entire width of bearing journal or into bearing shells.

- Plastigage must rest in center of bearing shell.

- Install guide frame and tighten to 30 Nm. Do not turn crankshaft.
- Remove guide frame again.
- Compare width of Plastigage with measuring scale:

- Radial clearance, new: 0.010 to 0.039 mm.
- Radial clearance wear limit: 0.08 mm.

PISTON AND CONNECTING ROD, DISASSEMBLING AND ASSEMBLING

Piston and connecting rod, component overview

NOTE:

- **Oil injector jet for piston cooling Oil spray jet for piston cooling**

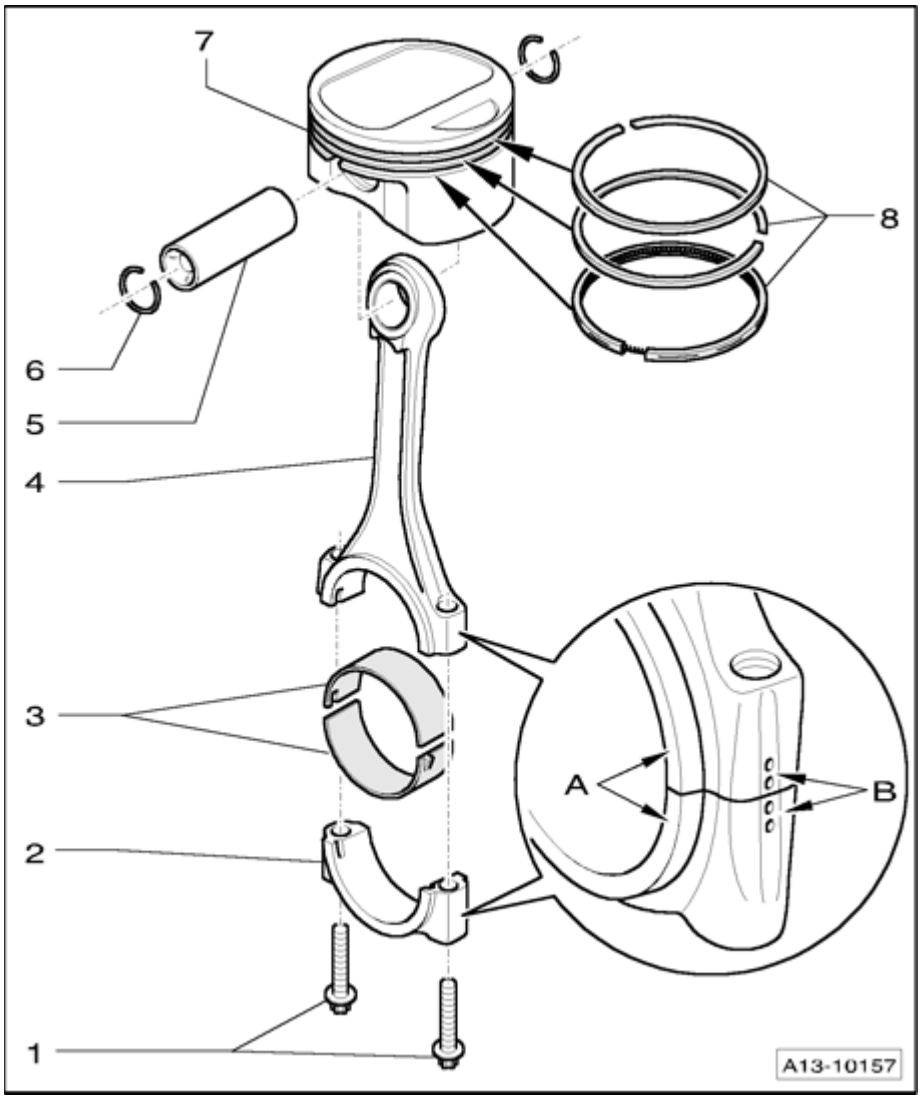

Fig. 297: Piston And Connecting Rod, Component Overview
Courtesy of VOLKSWAGEN UNITED STATES, INC.

1 - Connecting rod bolt - 30 Nm plus an additional 90° ($^1/_4$ turn)

- Replace
- Lubricate threads and contact surface
- Tighten to 30 Nm to measure radial play, do not turn further

2 - Connecting rod bearing cap

- Do not interchange
- Mark allocation to cylinder using a color marker - **B** - **Mark connecting rod**
- When installing bearing cap, observe: The wide thrust flange - **A** - must point to same side on connecting rod and connecting rod bearing cap

- Installation position of connecting rod pairs **Connecting rod, installed location**

3 - Bearing shells

- Check that retaining tabs are secured
- Do not interchange used bearing shells (mark, but not on the running surface)
- Radial clearance, measuring --> **Radial clearance of connecting rod, measuring**
- Over-sized bearings are available for reworked crankshaft connecting rod journals

4 - Connecting rod

- Only replace as set
- Mark allocation to cylinder with paint - **B** - **Mark connecting rod**
- When installing bearing cap, observe: The wide thrust flange - **A** - must point to the same side on connecting rod and connecting rod bearing cap
- Installation position of connecting rod pairs **Connecting rod, installed location**

- Axial play for each new connecting rod pair: 0.20 to 0.38 mm
- Axial play wear limit: 0.60 mm
- Radial clearance, measuring --> **Radial clearance of connecting rod, measuring**

5 - Piston pin

- If tight, heat piston to 60° C
- Removing and installing using a drift VW 222 A

6 - Circlip

7 - Piston

- Installation position of pistons **Piston installation position**
- Piston and cylinder dimension, piston allocation to cylinder bore --> **Piston and cylinder dimensions**
- Checking **Checking piston**
- Install with piston ring compressor

- Measuring cylinder bore **Measuring cylinder bore**

8 - Piston rings

- Offset gaps by 120°
- Use piston ring pliers for removal and installation
- "TOP" marking or inscribed side must point to piston head
- Gap, measuring **Piston ring end gap, measuring**

- Measuring side clearance **Measuring piston ring side clearance**

Piston ring end gap, measuring

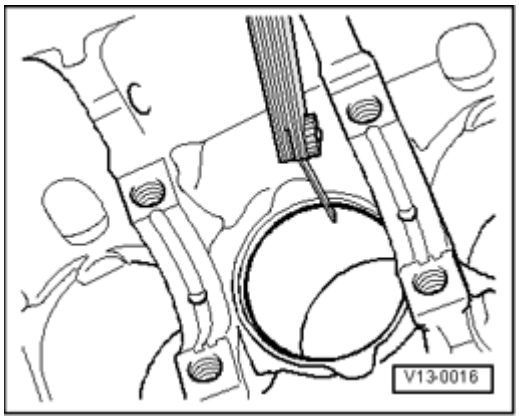

Fig. 298: Piston Ring End Gap, Measuring
Courtesy of VOLKSWAGEN UNITED STATES, INC.

- Push ring squarely from above down to approx. 15 mm from bottom end of cylinder. To do this use a piston without piston rings.

Piston ring dimensions in mm	New	Wear limit
1. Compression ring	0.25 to 0.40	0.8
2. Compression ring	0.20 to 0.40	0.8
Oil scraping ring		0.4

Measuring piston ring side clearance

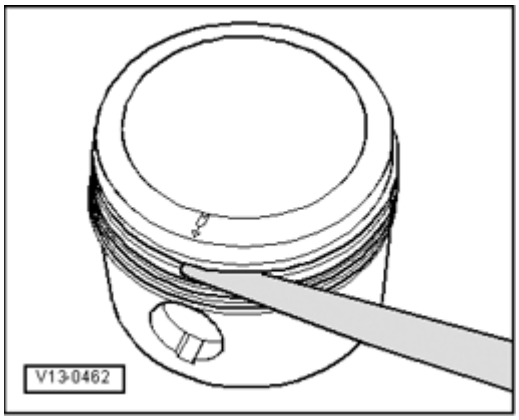

Fig. 299: Measuring Piston Ring Side Clearance
Courtesy of VOLKSWAGEN UNITED STATES, INC.

- Clean the ring groove of piston before checking.

Piston ring dimensions in mm	New	Wear limit

1. Compression ring	0.04 to 0.08	0.20
2. Compression ring	0.005 to 0.045	0.20
Oil scraping ring	0.01 to 0.05	0.15

Checking piston

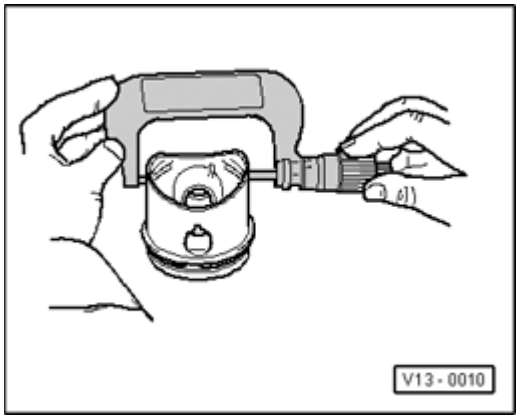

Fig. 300: Checking Piston
Courtesy of VOLKSWAGEN UNITED STATES, INC.

- Measure approx. 10 mm from lower edge, at a 90° angle to piston pin axis using an external micrometer 75 to 100 mm.

- Maximum deviation from nominal dimension: 0.04 mm.

Nominal dimension --> **Piston and cylinder dimensions**.

Measuring cylinder bore

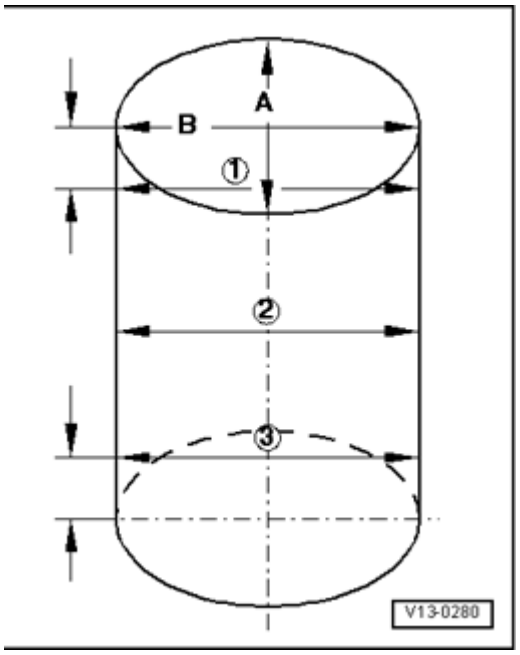

Fig. 301: Measuring Cylinder Bore
Courtesy of VOLKSWAGEN UNITED STATES, INC.

- Using an internal dial gauge 50 to 100 mm, measure at 3 points in diagonal sequence horizontally - **A** - and vertically - **B** -.

- Maximum deviation from nominal dimension: 0.08 mm.

Nominal dimension --> **Piston and cylinder dimensions**.

Piston installation position

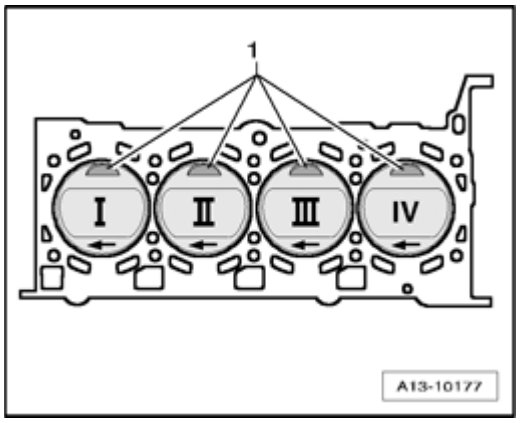

Fig. 302: Piston Installation Position
Courtesy of VOLKSWAGEN UNITED STATES, INC.

- Mark allocation to cylinder on piston head using chalk or water-proof felt pen.

NOTE:

- **Do not use a center punch or scribe, since the piston head coating will be damaged.**

Installed location:

- Arrows on piston heads point to belt pulley side.
- Valve recesses - **1** - point toward center of engine.

Mark connecting rod

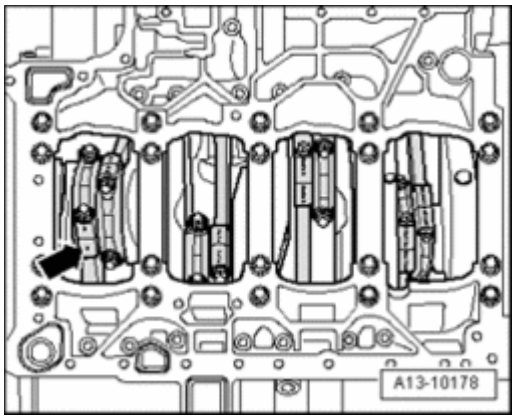

Fig. 303: Mark Connecting Rod
Courtesy of VOLKSWAGEN UNITED STATES, INC.

NOTE:

- **Only replace connecting rod as a set.**
- **Do not interchange connecting rod bearings.**

- Before removing, mark allocation of connecting rod and connecting rod bearing caps to each other and to cylinder with paint - **arrow** -.

Connecting rod, installed location

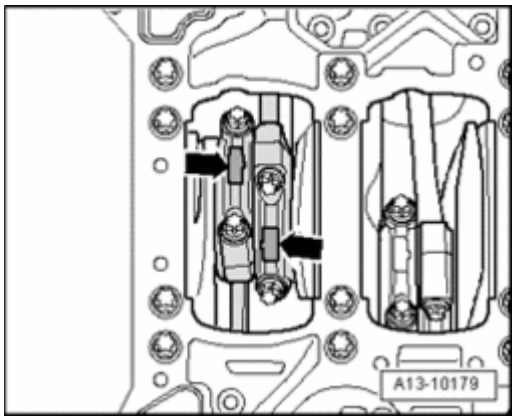

Fig. 304: Connecting Rod, Installed Location
Courtesy of VOLKSWAGEN UNITED STATES, INC.

- Molded tabs - **arrows** - at beveled surfaces of connecting rod pairs 1 and 2, 3 and 4, 5 and 6 as well as 7 and 8 must point toward each other.

Oil spray jet for piston cooling

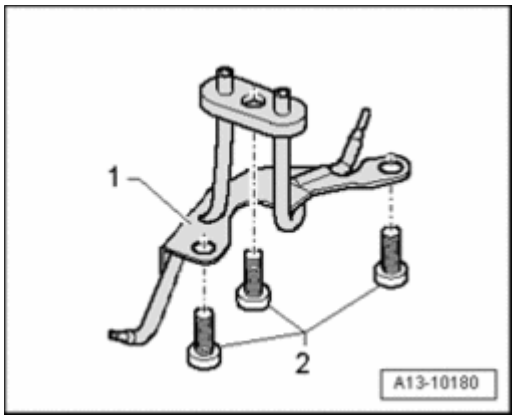

Fig. 305: Oil Spray Jet For Piston Cooling
Courtesy of VOLKSWAGEN UNITED STATES, INC.

1. Oil injector jet (opening pressure 2 to 2.4 bar positive pressure)
2. Bolts - 9 Nm. Insert using locking compound; locking compound

Piston and cylinder dimensions

Matching pistons are allocated to different manufacturing stages of cylinder block.

Cylinder bore dia. mm	Piston dia. mm
84.51 ± 0.005	84.49 ± 0.010 * See note
84.61 ± 0.005	84.59 ± 0.010 * See note
84.71 ± 0.005	84.69 ± 0.010 * See note

*Dimensions with coating (thickness 0.01 mm). The coating wears off.

Radial clearance of connecting rod, measuring

Special tools, testers and auxiliary items required

- Plastigage

Test sequence

- Remove connecting rod bearing caps.
- Clean bearing caps and journals
- Place Plastigage over entire width of bearing journal or into bearing shells.
- Install connecting rod bearing cap and tighten to 30 Nm. Do not turn crankshaft.

- Remove connecting rod bearing caps again.
- Compare width of Plastigage with measuring scale:

Radial clearance

- New: 0.028 to 0.077 mm.
- Wear limit: 0.12 mm.

- Replace bolts for connecting rod bearings.

15 - ENGINE - CYLINDER HEAD, VALVETRAIN

CYLINDER HEAD, REMOVING AND INSTALLING

Cylinder head, removing and installing

NOTE:

- **Replace cylinder head bolts.**
- **During assembly, replace self-locking nuts and bolts.**
- **Always replace bolts that are tightened to torque as well as O-rings and gaskets.**
- **When installing a replacement cylinder head with camshafts installed, oil contact surfaces between roller rocker levers and cam running surfaces after installing cylinder head.**
- **Do not remove plastic bases protecting exposed valves until immediately before installing cylinder head.**
- **When replacing the cylinder head or cylinder head gasket, coolant must be completely replaced.**
- **Cylinder heads with cracks between the valve seats, or between the valve seat and the spark plug threads, can continue to be used without reducing the service life, as long as the cracks have a width of max. 0.3 mm, or only the first 4 threads of the spark plug threads are cracked.**

Cylinder head, component overview

NOTE:

- **Right cylinder head is depicted in illustration.**

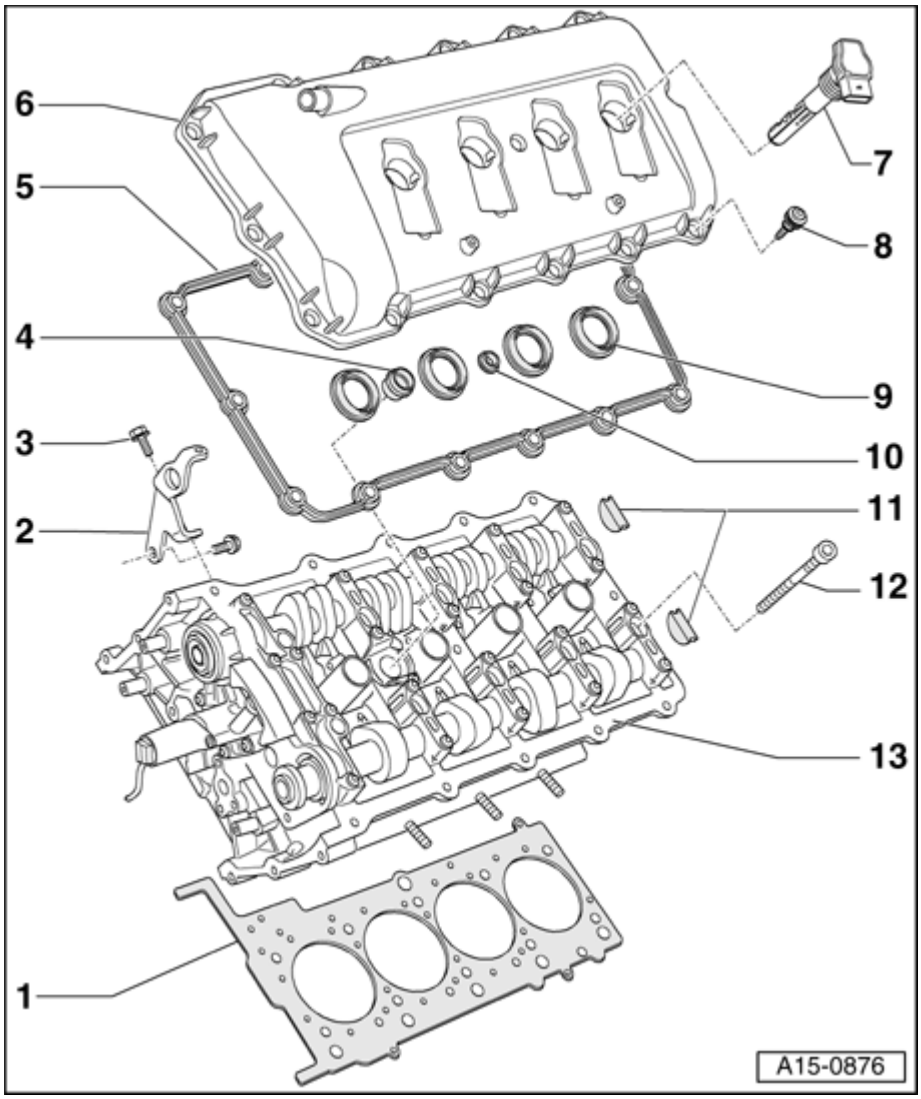

Fig. 306: Cylinder Head, Component Overview (Right Cylinder Head)
Courtesy of VOLKSWAGEN UNITED STATES, INC.

1 - Cylinder head gasket

- Replacing --> **Cylinder head, removing and installing**.
- Installed location: Part Number, points to cylinder head
- After replacing, change engine oil and coolant

2 - Lifting eye

3 - 22 Nm

4 - Gasket

- Replace if damaged or leaking

5 - Cylinder head cover gasket

- Replace if damaged or leaking

6 - Cylinder head cover

- Removing and installing left cylinder head cover --> **Left cylinder head cover, removing and installing**
- Removing and installing right cylinder head cover --> **Right cylinder head cover, removing and installing**

7 - Ignition coil

8 - Special bolt, 10 Nm

- Replace if damaged or leaking
- Observe sequence for tightening --> **Fig. 318**

9 - Cylinder head cover gaskets

- Replace if damaged or leaking

10 - Cylinder head cover gasket

- Replace if damaged or leaking

11 - Semicircular seal

- Replace if damaged or leaking

12 - Cylinder head bolt

- Replace
- Observe sequence for loosening --> **Fig. 330**
- Observe sequence for tightening --> **Fig. 334**

13 - Cylinder head

- Removing and installing --> **Cylinder head, removing and installing**
- Check for distortion **Checking cylinder head for distortion**
- Reworking dimension **Reworking dimension, cylinder head**
- After replacing, change engine oil and coolant

Checking cylinder head for distortion

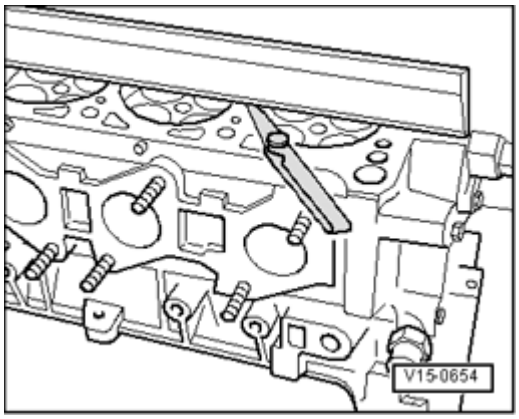

Fig. 307: Checking Cylinder Head For Distortion
Courtesy of VOLKSWAGEN UNITED STATES, INC.

- Check cylinder head at multiple points for distortion, using straight edge and feeler gauges.
- Permissible distortion: max. 0.1 mm.

Reworking dimension, cylinder head

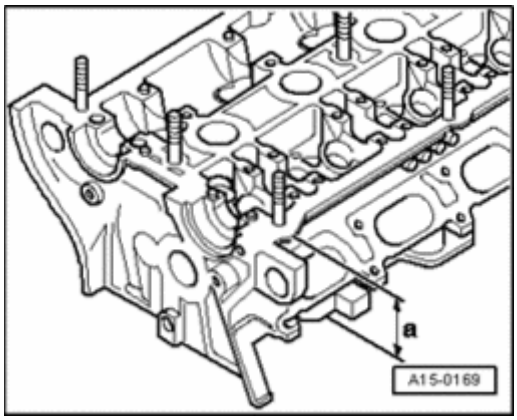

Fig. 308: Reworking Dimension, Cylinder Head
Courtesy of VOLKSWAGEN UNITED STATES, INC.

- Resurfacing cylinder head (face grinding) is only permissible to minimum dimension - **a** -.
- Minimum dimension: - **a** - = 139.25 mm.

Left cylinder head cover, removing and installing

Special tools, testers and auxiliary items required

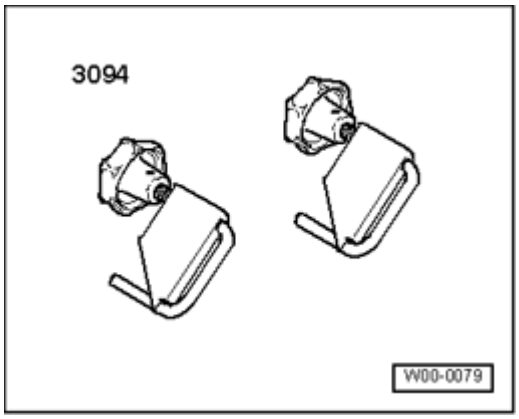

Fig. 309: Identifying Hose Clamps 3094
Courtesy of VOLKSWAGEN UNITED STATES, INC.

- Hose Clamps Up to 25 mm dia. 3094

Removing

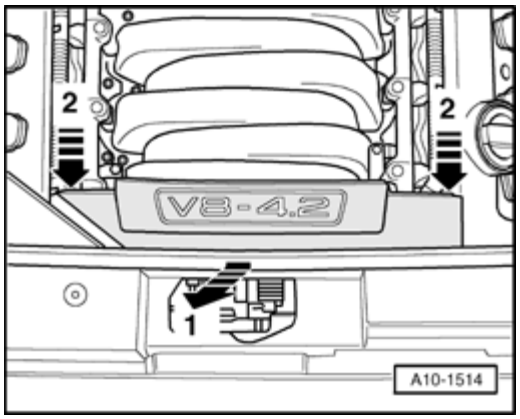

Fig. 310: Removing Front Engine Cover
Courtesy of VOLKSWAGEN UNITED STATES, INC.

- Remove front engine cover - **arrow 1** - and - **arrows 2** -.

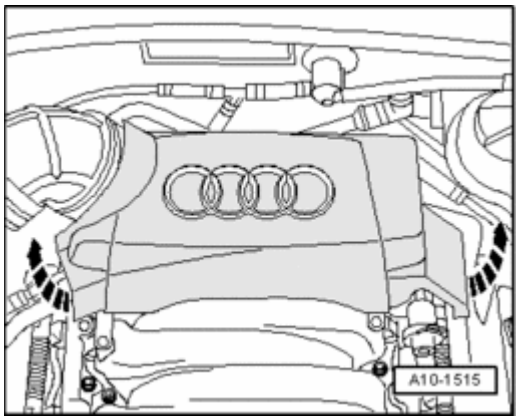

Fig. 311: Removing Rear Engine Cover

Courtesy of VOLKSWAGEN UNITED STATES, INC.

- Remove rear engine cover - **arrows** -.

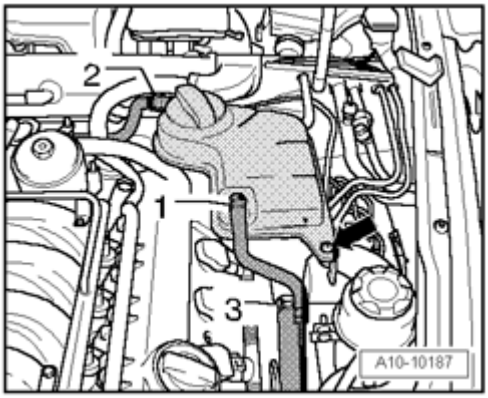

Fig. 312: Removing Coolant Hoses & Coolant Expansion Tank
Courtesy of VOLKSWAGEN UNITED STATES, INC.

- Clamp off coolant hose - **2** - using Hose Clamps Up to 25 mm dia. 3094 and disconnect from coolant expansion tank.
- Remove coolant expansion tank - **arrow** -.
- Disconnect electrical wire to Engine Coolant Level (ECL) Warning Switch F66 on bottom of expansion tank and set aside coolant expansion tank with coolant hoses - **1 and 3** - connected.
- If necessary, seal connection using an appropriate plug.

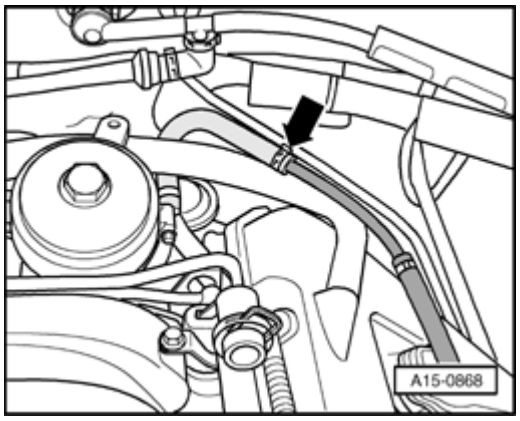

Fig. 313: Disconnecting Vacuum Hose
Courtesy of VOLKSWAGEN UNITED STATES, INC.

- Disconnect vacuum hose at position indicated by - **arrow** -.

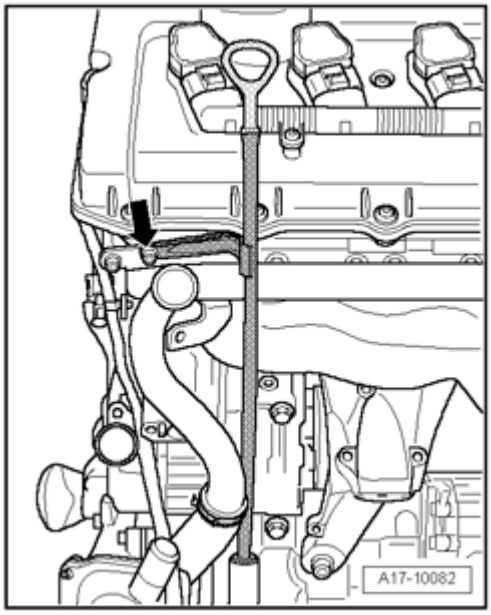

Fig. 314: Removing Guide Pipe For Oil Dipstick At Cylinder Head
Courtesy of VOLKSWAGEN UNITED STATES, INC.

- Remove bolt - **arrow** - at oil dipstick guide tube.

NOTE:

- **Guide tube remains inserted in upper part of oil pan.**

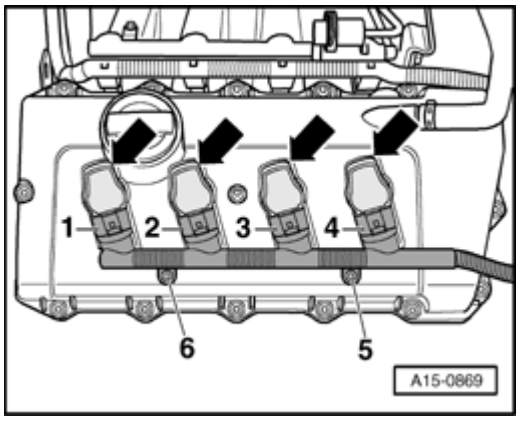

Fig. 315: Removing Bolts On Left Cylinder Head, Disconnecting Electrical Harness Connectors & Removing Ignition Coils
Courtesy of VOLKSWAGEN UNITED STATES, INC.

- Remove bolts - **5** - and - **6** -.
- Disconnect electrical harness connectors - **1 to 4** -.
- Remove ignition coils - **arrows** -.

NOTE:

- **Puller For Ignition Coil T10094 can be used for removal.**

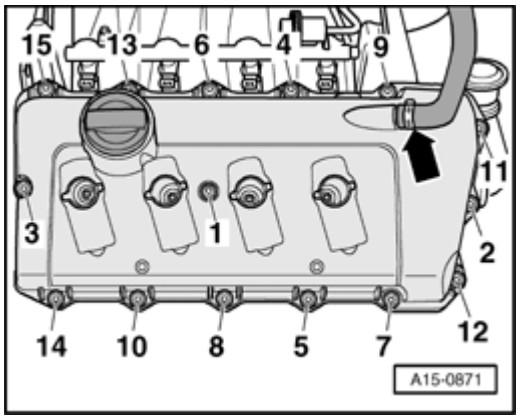

Fig. 316: Disconnecting Hose Of Crankshaft Housing Ventilation & Removing Left Cylinder Head Cover Bolts In Sequence
Courtesy of VOLKSWAGEN UNITED STATES, INC.

- Disconnect hose of crankshaft housing ventilation - **arrow** -.
- Remove left cylinder head cover bolts in sequence - **15 to 1** -.
- Remove cylinder head cover.

Installing

Installation is in reverse order of removal, note the following:

NOTE:

- **Replace cylinder head cover gaskets if damaged.**
- **Replace bolts for cylinder head cover if gasket is damaged.**

- Clean sealing surfaces, must be free of oil and grease.

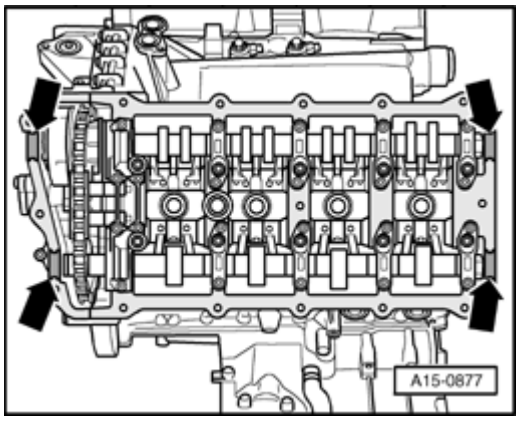

Fig. 317: Coating Semicircular Seals Lightly With Oil And Insert
Courtesy of VOLKSWAGEN UNITED STATES, INC.

- Coat semicircular seals - **arrows** - lightly with oil and insert.

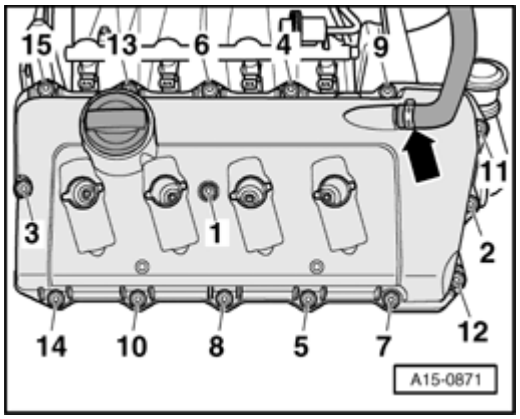

Fig. 318: Disconnecting Hose Of Crankshaft Housing Ventilation & Removing Left Cylinder Head Cover Bolts In Sequence
Courtesy of VOLKSWAGEN UNITED STATES, INC.

- Tighten cylinder head cover in sequence - **1 to 15** -.

Torque specifications

Component	Nm
Cylinder head cover to cylinder head	10
Wiring for ignition coils at cylinder head cover	5 * See note
Oil dip stick guide tube to cylinder head	10

* Insert using locking compound; locking compound .

Right cylinder head cover, removing and installing

Removing

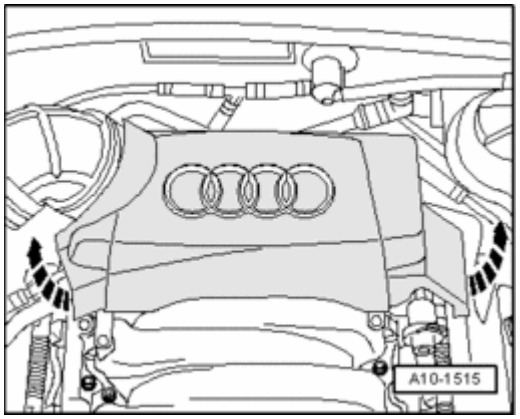

Fig. 319: Removing Rear Engine Cover
Courtesy of VOLKSWAGEN UNITED STATES, INC.

- Remove rear engine cover - **arrows** -.

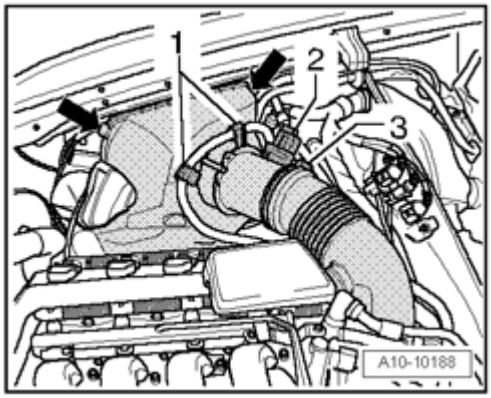

Fig. 320: Disconnecting Mass Air Flow (MAF) Sensor G70 Electrical Harness Connector
Courtesy of VOLKSWAGEN UNITED STATES, INC.

- Unclip fuel hose - **1** -.
- Disconnect electrical connector - **2** - from mass air flow (MAF) sensor.
- Disconnect mass air flow sensor from intake air duct - **3** -.
- Remove upper part of air filter housing with mass air flow (MAF) sensor - **arrows** -.

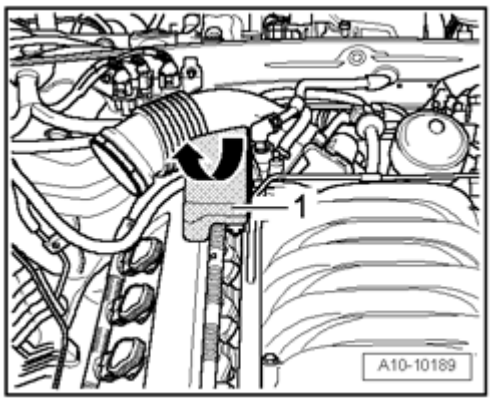

Fig. 321: Removing Resonator
Courtesy of VOLKSWAGEN UNITED STATES, INC.

- Pull resonator - **1** - in direction of - **arrow** - upward and unclip it.

CAUTION: Note rules of cleanliness for working on the fuel injection system --> Rules of cleanliness for performing work on fuel injection system.

CAUTION: Fuel system is under pressure! Before opening the low pressure section of the fuel injection system, wrap a clean rag around the connection and relieve residual pressure by carefully loosening the connection.

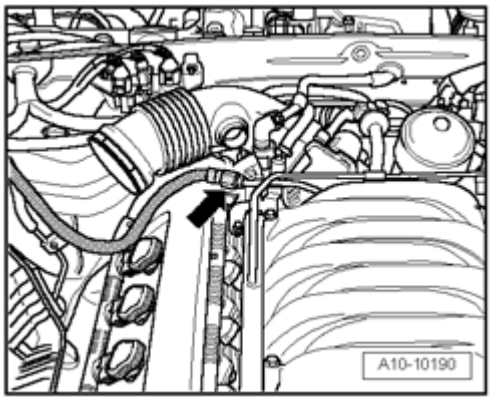

Fig. 322: Disconnecting Fuel Line
Courtesy of VOLKSWAGEN UNITED STATES, INC.

- Disconnect fuel line - **arrow** -.

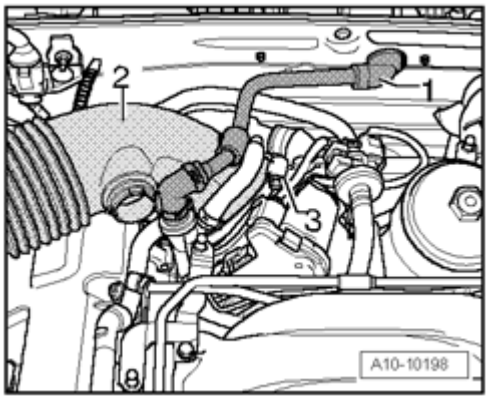

Fig. 323: Identifying Vacuum Hose, Intake Hose & Clamp
Courtesy of VOLKSWAGEN UNITED STATES, INC.

- Disconnect vacuum hose - **1** - for brake booster at bulkhead.
- Remove intake hose - **2** - , thereby loosening clamp - **3** -.

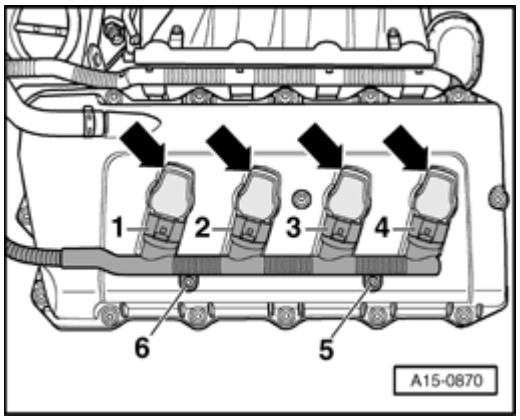

Fig. 324: Removing Bolts On Right Cylinder Head, Disconnecting Electrical Harness Connectors &

Removing Ignition Coils
Courtesy of VOLKSWAGEN UNITED STATES, INC.

- Remove bolts - **5** - and - **6** - on right cylinder head.
- Disconnect electrical harness connectors - **1 to 4** -.
- Remove ignition coils - **arrows** -.

NOTE:

- **Puller For Ignition Coil T10094 can be used for removal.**

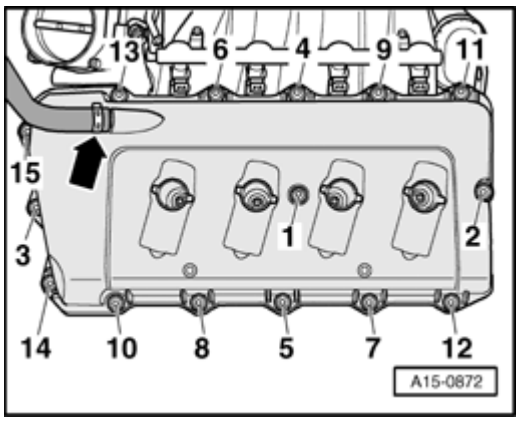

Fig. 325: Disconnecting Hose Of Crankshaft Housing Ventilation & Removing Right Cylinder Head Cover Screws In Sequence
Courtesy of VOLKSWAGEN UNITED STATES, INC.

- Disconnect hose of crankshaft housing ventilation - **arrow** -.
- Remove right cylinder head cover bolts in sequence - **15 to 1** -.
- Remove cylinder head cover.

Installing

Installation is in reverse order of removal, note the following:

NOTE:

- **Replace cylinder head cover gaskets if damaged.**
- **Replace bolts for cylinder head cover if gasket is damaged.**

- Clean sealing surfaces, must be free of oil and grease.

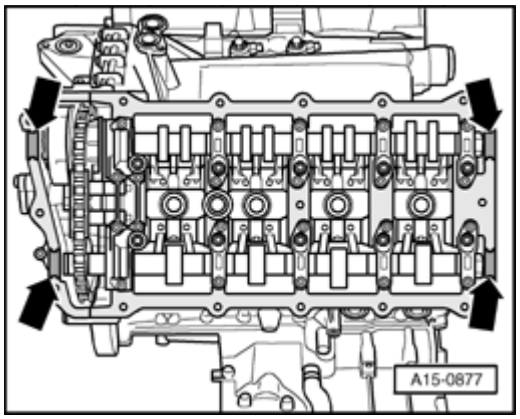

Fig. 326: Coating Semicircular Seals Lightly With Oil And Insert
Courtesy of VOLKSWAGEN UNITED STATES, INC.

- Coat semicircular seals - **arrows** - lightly with oil and insert.

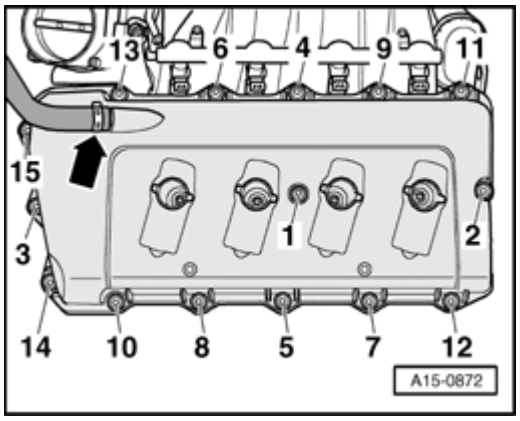

Fig. 327: Disconnecting Hose Of Crankshaft Housing Ventilation & Removing Right Cylinder Head Cover Screws In Sequence
Courtesy of VOLKSWAGEN UNITED STATES, INC.

- Tighten cylinder head cover in sequence - **1 to 15** -.

Torque specifications

Component	Nm
Cylinder head cover to cylinder head	10
Wiring for ignition coils at cylinder head cover	5 * See note

* Insert using locking compound; locking compound .

Cylinder head, removing and installing

Removing

- Remove engine --> **Engine, removing and installing**.

- Remove camshaft timing chains from camshafts --> **Camshaft timing chains, removing from camshafts**.

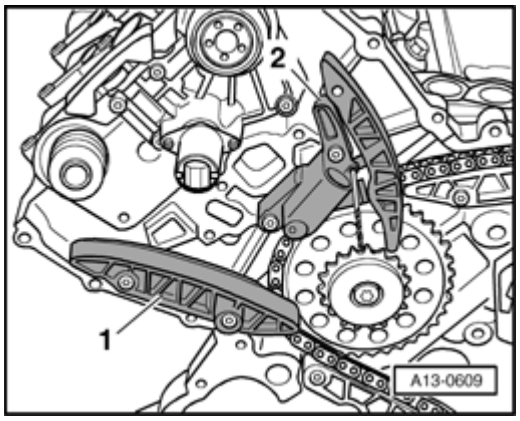

Fig. 328: Removing Glide Track At Left Cylinder Head & Chain Tensioner
Courtesy of VOLKSWAGEN UNITED STATES, INC.

- Remove glide track - **1** - at left cylinder head.
- Remove chain tensioner - **2** -.

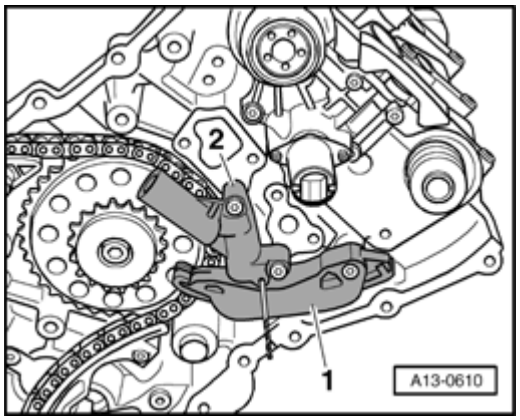

Fig. 329: Removing Glide Track At Right Cylinder Head & Chain Tensioner
Courtesy of VOLKSWAGEN UNITED STATES, INC.

- Remove glide track - **1** - at right cylinder head.
- Remove chain tensioner - **2** -.

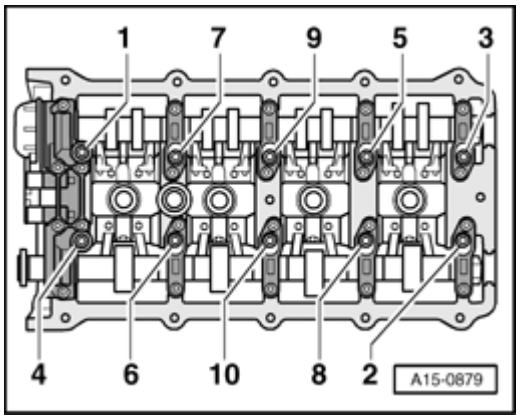

Fig. 330: Loosening Cylinder Head Bolts In Sequence
Courtesy of VOLKSWAGEN UNITED STATES, INC.

- Follow sequence - **1 to 10** - when loosening cylinder head bolts.
- Remove cylinder head and place it on a soft surface (foam).

Installing

NOTE:

- **Replace cylinder head bolts.**
- **During assembly, replace self-locking nuts and bolts.**
- **Always replace bolts that are tightened to torque as well as O-rings and gaskets.**
- **Carefully remove residual sealant from cylinder head and cylinder block. Make sure that no long scrapes or scratches result.**
- **Carefully remove all grinding and sanding residue.**
- **There must be no oil or coolant in the blind holes for the cylinder head bolts in the cylinder block.**
- **When installing a replacement cylinder head with camshafts installed, oil contact surfaces between roller rocker levers and cam running surfaces after installing cylinder head.**
- **Do not remove plastic bases protecting exposed valves until immediately before installing cylinder head.**
- **When replacing cylinder head or cylinder head seal, engine oil and coolant must be changed.**
- **Cylinder heads with cracks between the valve seats, or between the valve seat and the spark plug threads, can continue to be used without reducing the service life, as long as the cracks have a width of max. 0.3 mm, or only the first 4 threads of the spark plug threads are cracked.**
- **Only unpack new cylinder head gasket immediately prior to installation.**
- **Handle gasket carefully. Damages to the silicone layer and in areas of recesses may result in leaks.**
- **Install cylinder head gasket onto guide sleeves. Marking "oben" (top) or**

part number must face toward cylinder head.

- **Secure all hose connections using hose clamps appropriate for the model type .**
- **After working on the valvetrain and lifters, carefully rotate the crankshaft by hand at least 2 full revolutions before starting to be sure that valves do not strike the pistons.**
- **All cable ties which are opened or cut open when removing, must be replaced in the same position when installing.**

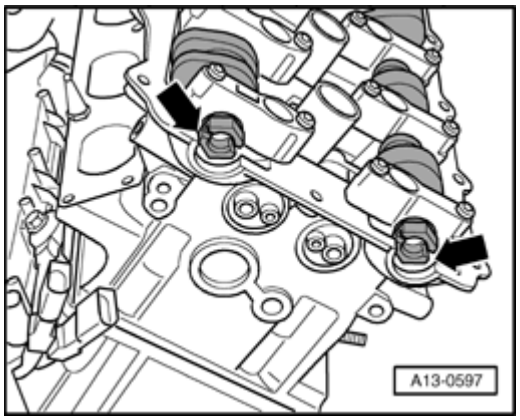

Fig. 331: Identifying Slits At Front In Camshafts Stand Parallel At Same Height With Upper Edge Of Cylinder Head
Courtesy of VOLKSWAGEN UNITED STATES, INC.

- Check whether camshafts of both cylinder heads stand in TDC position.

- Slits - **arrows** - at front in camshafts must stand parallel at same height with upper edge of cylinder head.

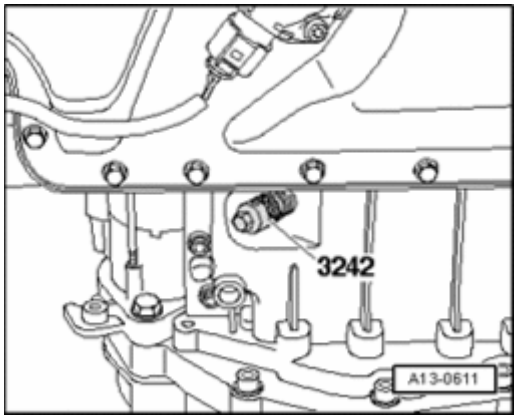

Fig. 332: Removing/Installing Crankshaft Holder 3242 Into Hole
Courtesy of VOLKSWAGEN UNITED STATES, INC.

- Crankshaft holder 3242 must be installed.

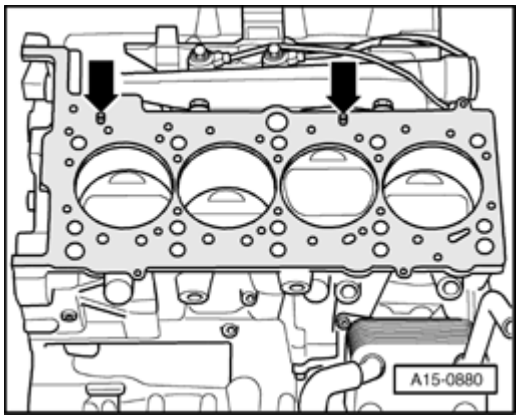

Fig. 333: Setting Cylinder Head Gasket In Place
Courtesy of VOLKSWAGEN UNITED STATES, INC.

- Set cylinder head gasket in place.

- Pay close attention to alignment bushings in cylinder block - **arrows** -.
- Pay attention to installation position of cylinder head gasket, marking "oben" (top) or part number must face toward cylinder head.

- Set cylinder head in place.
- Insert new cylinder head bolts and tighten by hand.

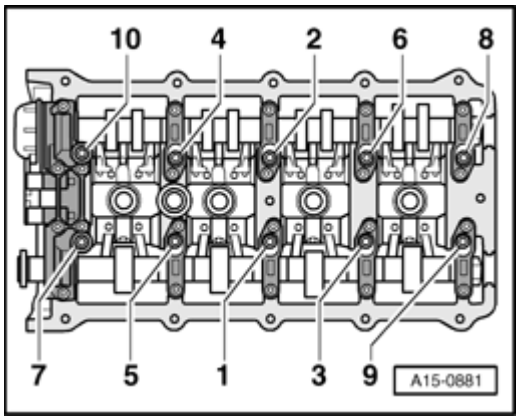

Fig. 334: Tightening Cylinder Head Bolts In 4 Stages In Tightening Sequence
Courtesy of VOLKSWAGEN UNITED STATES, INC.

- Tighten cylinder head in sequence indicated, in four stages as follows:

Step	Tighten
I	Using torque wrench, tighten to 30 Nm.
II	Using torque wrench, tighten to 60 Nm.
III	With Torx key, 90° ($^1/_4$ turn) additional turn.

IV	○ With Torx key, 90° ($^1/_4$ turn) additional turn.

NOTE:

- **There is no requirement to retighten the cylinder head bolts after repairs.**

Further installation is in reverse order of removal, note the following:

- Install camshaft timing chains **Installing**.
- Install engine --> **Engine, installing**.
- Change engine oil --> **MAINTENANCE PROCEDURES** .
- Replace coolant.

Torque specifications

Component	Nm
Chain tensioner to cylinder head	5 + 90° * See note* See note

* 90° corresponds to a 1/4 turn

*Replace bolts.

Compression pressures, checking

Special tools, testers and auxiliary items required

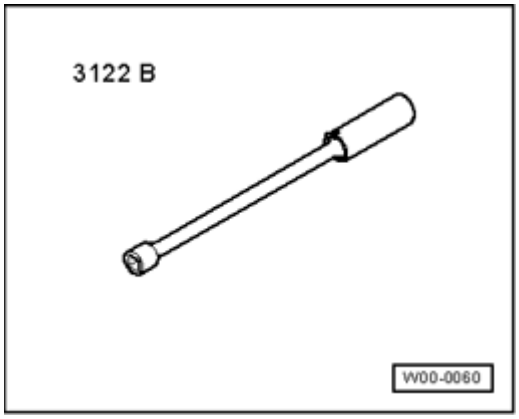

Fig. 335: Spark Plug Removal Tool 3122 B
Courtesy of VOLKSWAGEN UNITED STATES, INC.

- Spark plug removal tool 3122 B

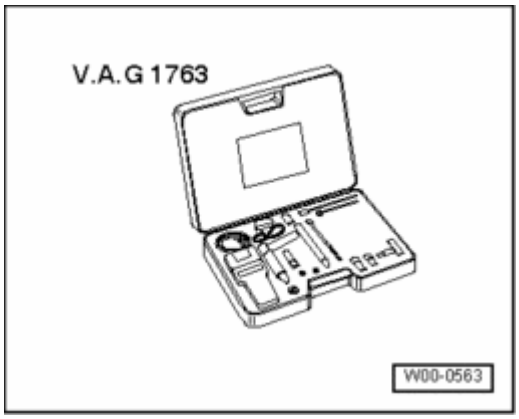

Fig. 336: Compression Tester V.A.G 1763
Courtesy of VOLKSWAGEN UNITED STATES, INC.

- Compression tester V.A.G 1763

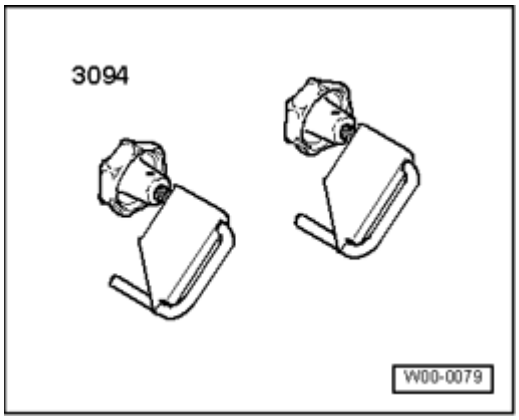

Fig. 337: Identifying Hose Clamps 3094
Courtesy of VOLKSWAGEN UNITED STATES, INC.

- Hose Clamps Up to 25 mm dia. 3094

Test conditions

- Engine oil temperature min. 30° C.
- Battery voltage at least 12.5 V.

Test sequence

- Switch off ignition.

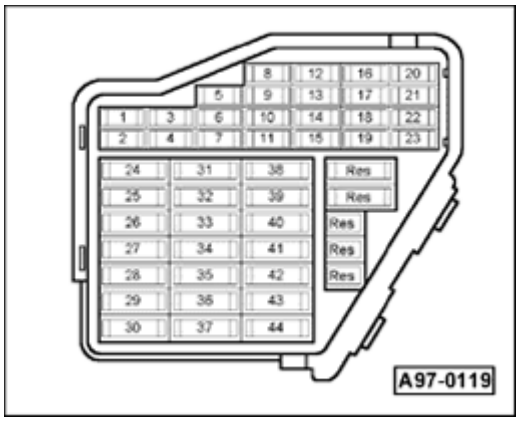

Fig. 338: Main Fuse Case
Courtesy of VOLKSWAGEN UNITED STATES, INC.

- Remove fuse for Fuel Pump (FP) from socket "28".

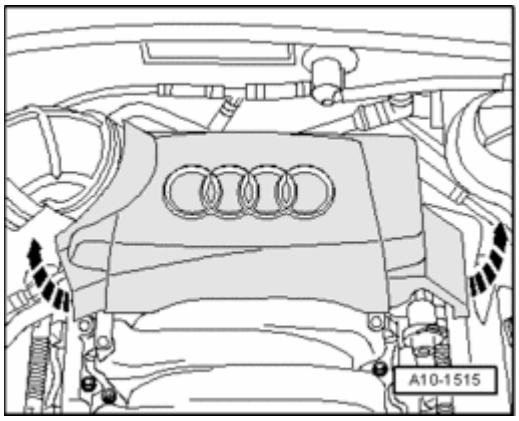

Fig. 339: Removing Rear Engine Cover
Courtesy of VOLKSWAGEN UNITED STATES, INC.

- Remove rear engine cover - **arrows** -.

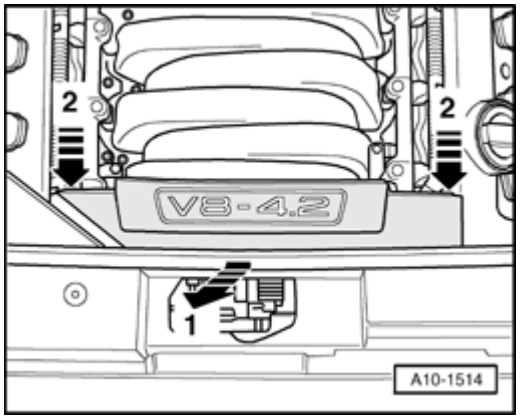

Fig. 340: Removing Front Engine Cover
Courtesy of VOLKSWAGEN UNITED STATES, INC.

- Remove front engine cover - **arrow 1** - and - **arrows 2** -.

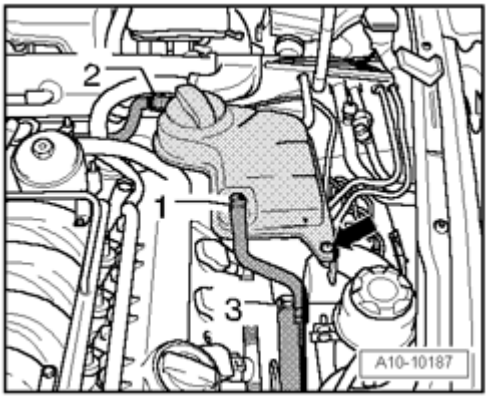

Fig. 341: Removing Coolant Hoses & Coolant Expansion Tank
Courtesy of VOLKSWAGEN UNITED STATES, INC.

- Clamp off coolant hose - **2** - using Hose Clamps Up to 25 mm dia. 3094 and disconnect from coolant expansion tank.
- Remove coolant expansion tank - **arrow** -.
- Disconnect electrical wire to Engine Coolant Level (ECL) Warning Switch F66 on bottom of expansion tank and set aside coolant expansion tank with coolant hoses - **1 and 3** - connected.
- If necessary, seal connection using an appropriate plug.

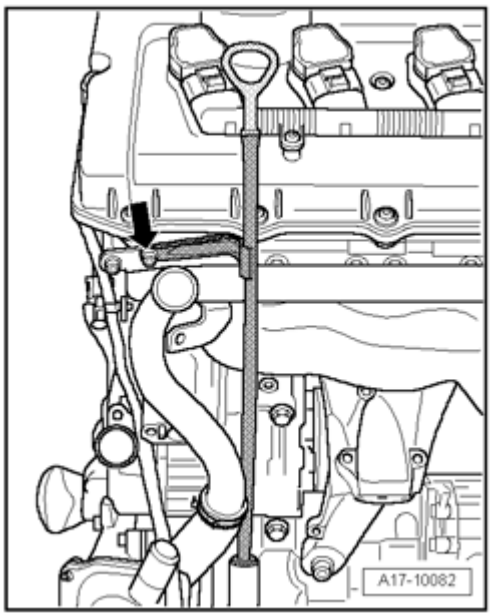

Fig. 342: Removing Guide Pipe For Oil Dipstick At Cylinder Head
Courtesy of VOLKSWAGEN UNITED STATES, INC.

- Remove bolt - **arrow** - at oil dipstick guide tube.

NOTE:

- **Guide tube remains inserted in upper part of oil pan.**

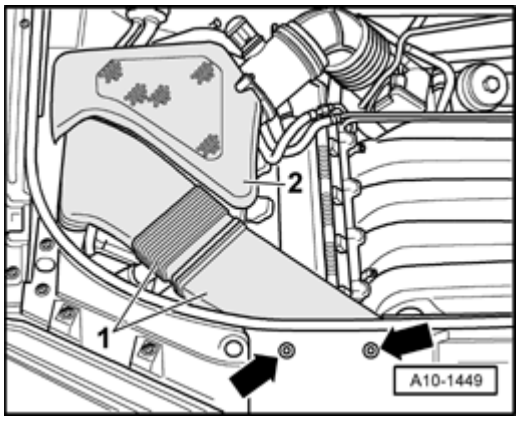

Fig. 343: Identifying Air Filter Cover & Air Duct
Courtesy of VOLKSWAGEN UNITED STATES, INC.

- Remove air filter cover - **2** -.
- Remove air duct - **1** -.

NOTE:

- **To pull out clips - arrows - , use Pry Lever - Rmv Outside Mirror 80-200.**
- **If necessary, use silicon-free spray lubricant to facilitate removal.**

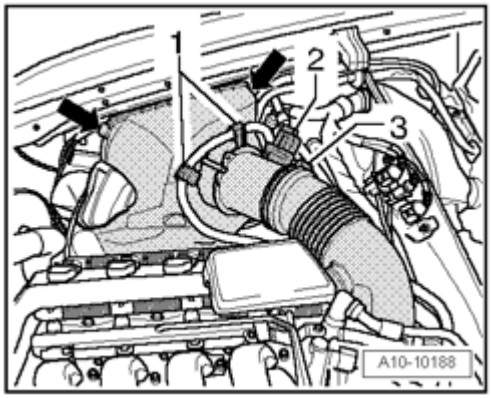

Fig. 344: Disconnecting Mass Air Flow (MAF) Sensor G70 Electrical Harness Connector
Courtesy of VOLKSWAGEN UNITED STATES, INC.

- Unclip fuel hose - **1** -.
- Disconnect electrical connector - **2** - from mass air flow (MAF) sensor.
- Disconnect mass air flow sensor from intake air duct - **3** -.
- Remove upper part of air filter housing with mass air flow (MAF) sensor - **arrows** -.

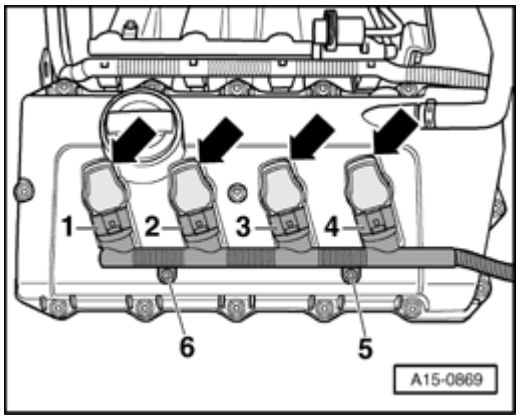

Fig. 345: Removing Bolts On Left Cylinder Head, Disconnecting Electrical Harness Connectors & Removing Ignition Coils
Courtesy of VOLKSWAGEN UNITED STATES, INC.

- Remove bolts - **5** - and - **6** - on left cylinder head.
- Disconnect electrical harness connectors - **1 to 4** -.
- Remove ignition coils - **arrows** -.

NOTE:

- **Puller For Ignition Coil T10094 can be used for removal.**

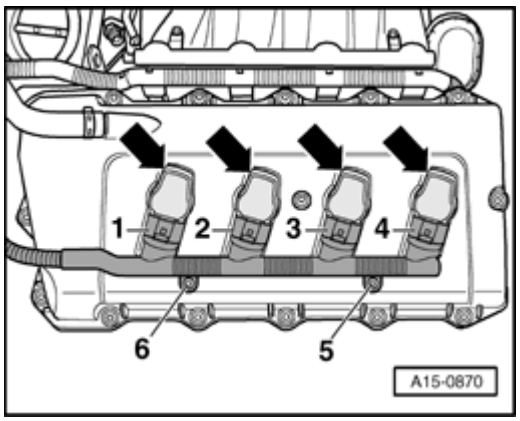

Fig. 346: Removing Bolts On Right Cylinder Head, Disconnecting Electrical Harness Connectors & Removing Ignition Coils
Courtesy of VOLKSWAGEN UNITED STATES, INC.

- Remove bolts - **5** - and - **6** - on right cylinder head.
- Disconnect electrical harness connectors - **1 to 4** -.
- Remove ignition coils - **arrows** -.

NOTE:

- **Puller For Ignition Coil T10094 can be used for removal.**

- Using spark plug removal tool 3122 B , remove spark plugs.
- Open throttle valve completely.

- Check compression pressure using compression tester V.A.G 1763.

NOTE:

- **Using tester operating instructions.**

- Operate starter until tester shows no further pressure increase.

Compression pressure:

New bar positive pressure	Wear limit bar positive pressure	Difference between cylinders bar positive pressure
10.0 to 14.0	9.0	Max. 3.0

Assembly is in reverse order of removal, note the following:

- Install sparks plugs --> **MAINTENANCE PROCEDURES** .

The following work step must be performed after the engine compression test.

- As a final step, check DTC memory of Engine Control Module (ECM) and erase it , since malfunctions were stored by removing the fuse.

Torque specifications

Component	Nm
Wiring for ignition coils at cylinder head cover	5 * See note
Oil dip stick guide tube to cylinder head	10

* Insert using locking compound; locking compound .

INTAKE MANIFOLD, REMOVING AND INSTALLING

Intake manifold, component overview

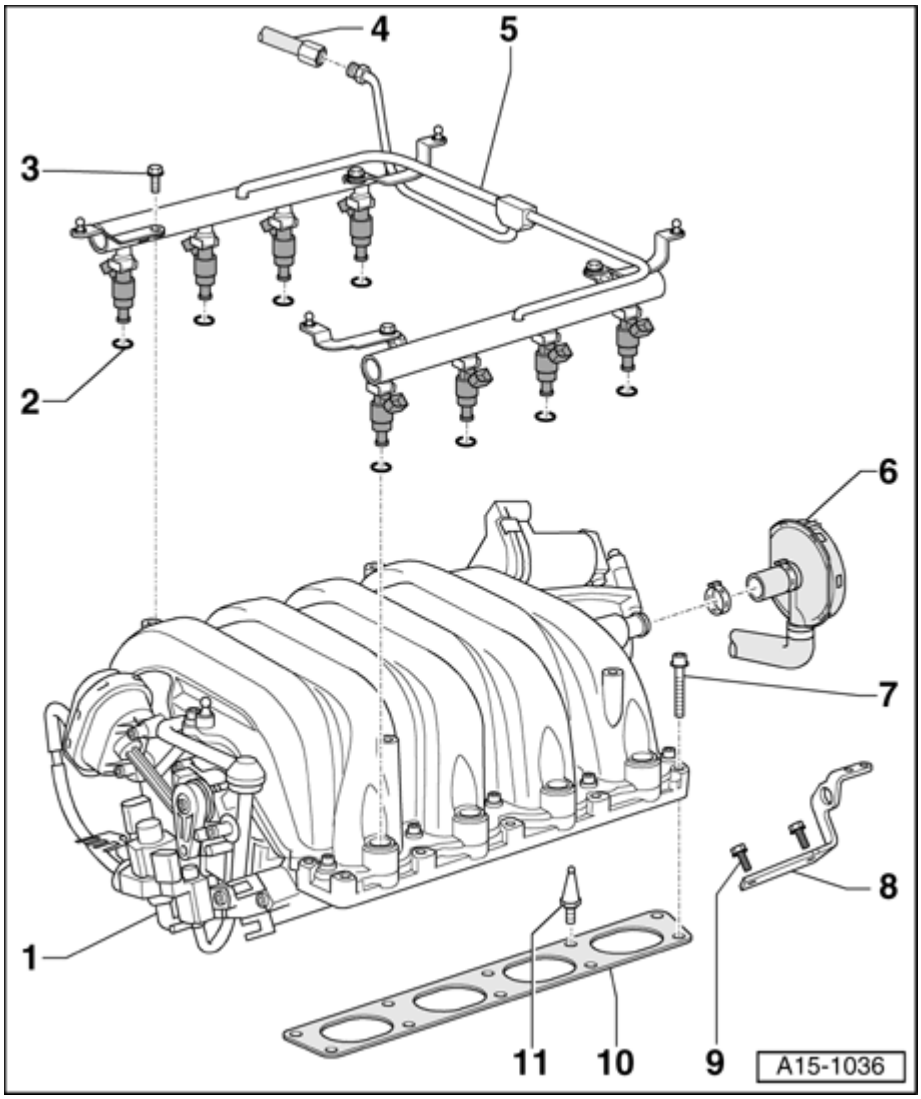

Fig. 347: Intake Manifold, Component Overview
Courtesy of VOLKSWAGEN UNITED STATES, INC.

1 - Intake manifold

- Removing and installing --> **Intake manifold, removing and installing**

2 - O-rings

- For fuel injectors
- Replace

3 - 10 Nm

4 - Fuel supply line

- Tighten union nut to 25 Nm

5 - Fuel rail

6 - Pressure regulator valve

- For crankcase ventilation

7 - 10 Nm

- Fasten diagonally in steps

8 - Lifting eye

9 - 23 Nm

10 - Gasket

- For intake manifold
- Replace

11 - Locking pin, 0.6 Nm

Intake manifold, removing and installing

Removing

NOTE:

- **All cable ties which are opened or cut open when removing, must be replaced in the same position when installing.**

- Remove engine compartment cover.
- Disconnect vacuum hose - **3** - to brake booster at bulkhead.

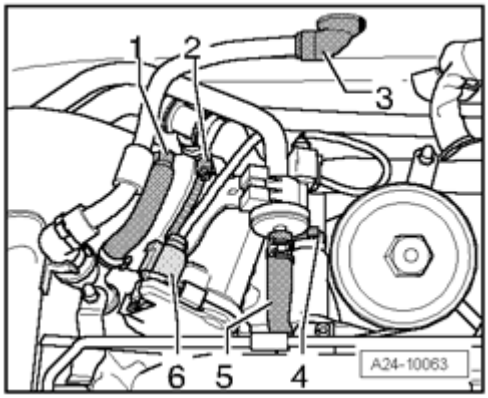

Fig. 348: Disconnecting Throttle Valve Control Module J338 Electrical Harness Connector
Courtesy of VOLKSWAGEN UNITED STATES, INC.

- Disconnect vacuum hose - **1** -.
- Disconnect electrical connection - **6** - at throttle valve control module J338.
- Release hose clamp - **2** - and pull out air duct hose.
- Pull off vacuum hose - **4** - from crankcase breather at intake manifold.

- Disconnect vacuum hose - **5** - from intake manifold.

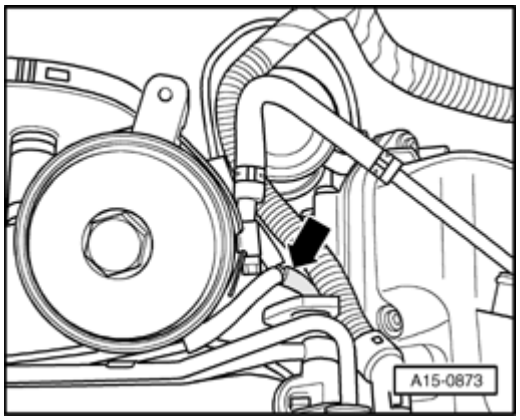

Fig. 349: Disconnecting Vacuum Hose At T-Piece
Courtesy of VOLKSWAGEN UNITED STATES, INC.

- Disconnect vacuum hose - **arrow** - at T-piece.

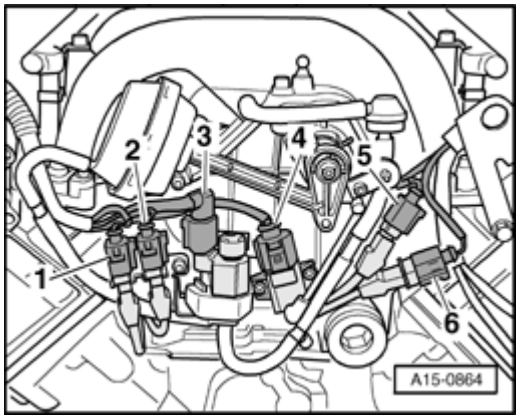

Fig. 350: Remove Electrical Harness Connectors Toward Front From Brackets On Intake Pipe
Courtesy of VOLKSWAGEN UNITED STATES, INC.

- Remove electrical harness connectors - **1 to 4** - toward front from brackets on intake pipe.

NOTE:

- **The electrical connections must not be separated.**

- Remove connector strips - **2** - and - **3** - at 8 fuel injectors.

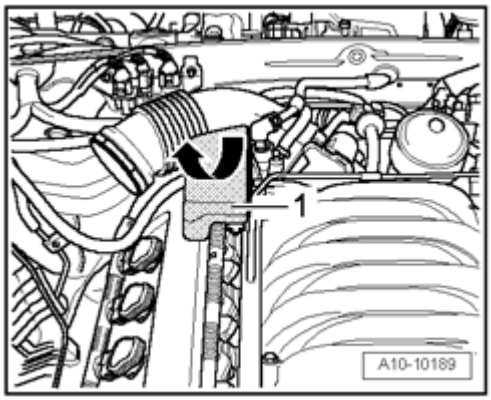

Fig. 351: Removing Resonator
Courtesy of VOLKSWAGEN UNITED STATES, INC.

- Pull resonator - **1** - in direction of - **arrow** - upward and unclip it.

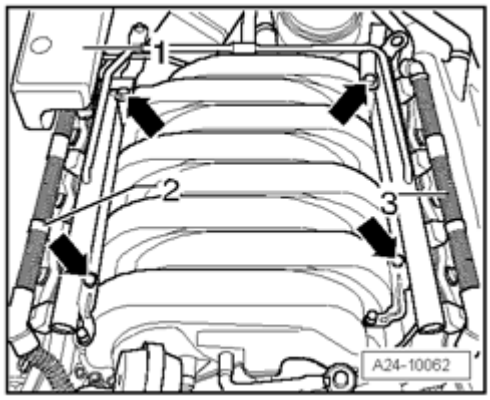

Fig. 352: Pulling Off Connector Strips At Fuel Injectors & Removing Bolts From Fuel Rail
Courtesy of VOLKSWAGEN UNITED STATES, INC.

- Remove bolts - **arrows** - from fuel rail.
- Pull fuel rail with injectors upward uniformly from intake manifold and set aside in engine compartment on a clean cloth.

NOTE:

- **Carefully protect the removed fuel injectors from contamination.**

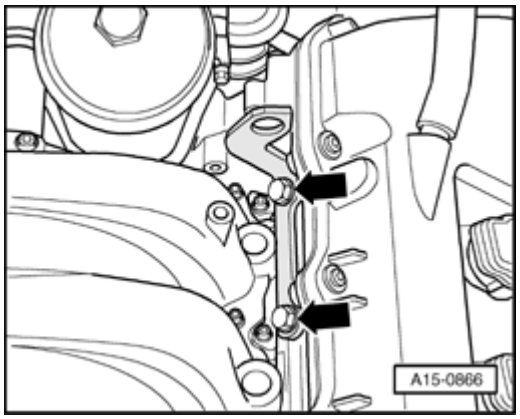

Fig. 353: Removing Left/Rear Engine Lifting Eye
Courtesy of VOLKSWAGEN UNITED STATES, INC.

- Unbolt left rear engine lifting eye - **arrows** -.

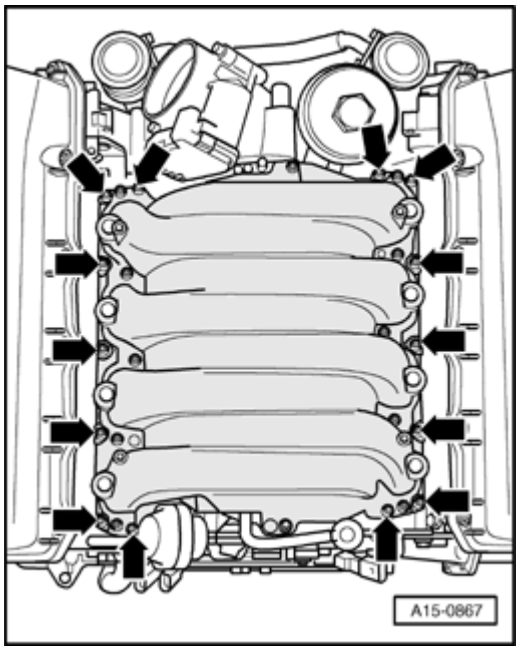

Fig. 354: Removing Intake Manifold Bolts
Courtesy of VOLKSWAGEN UNITED STATES, INC.

- Unbolt intake manifold - **arrows** - and remove it.

NOTE:

- **Plug the intake ports of the cylinder head with clean rags.**

Installing

Installation is in reverse order of removal, note the following:

NOTE:

- **Replace gaskets and O-rings.**

- **During installation, all cable ties must be re-installed at the same location.**
- **Secure all hose connections using hose clamps appropriate for the model type**

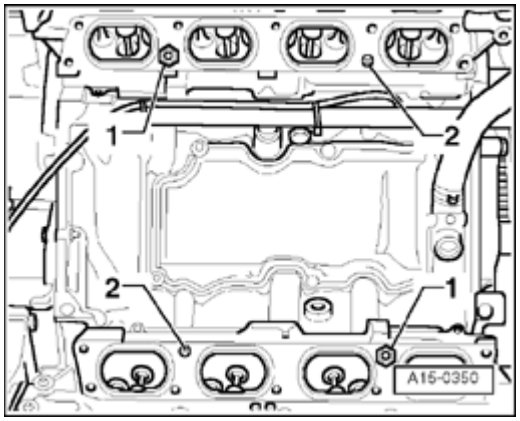

Fig. 355: Replacing Intake Manifold Gaskets, Thereby Removing Locking Bolt
Courtesy of VOLKSWAGEN UNITED STATES, INC.

- Replace intake manifold gaskets, thereby removing locking bolt - **1** -.
- Be aware of alignment pins - **2** - when setting intake manifold in place.

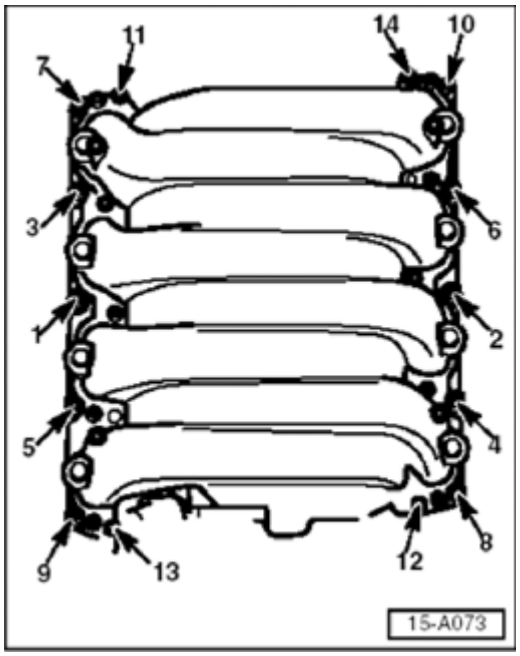

Fig. 356: Tightening Intake Manifold Bolts In Stages And In Sequence
Courtesy of VOLKSWAGEN UNITED STATES, INC.

- Tighten intake manifold bolts - **arrows** - in stages and in sequence as shown.
- Reconnect all vacuum lines.
- Make sure electrical connections are securely seated.

- Bleed fuel system --> **Fuel system, bleeding**

Torque specifications

Component	Nm
Locking bolt to cylinder head	0,6
Intake manifold to cylinder head	10
Engine lifting eye to cylinder head	22
Fuel rail to intake manifold	10

VALVETRAIN, SERVICING

Valvetrain, servicing

NOTE:

- **Cylinder heads with cracks between the valve seats, or between the valve seat and the spark plug threads, can continue to be used without reducing the service life, as long as the cracks have a width of max. 0.3 mm, or only the first 4 threads of the spark plug threads are cracked.**
- **After installing the camshafts, the engine may not be started for approx. 30 minutes. The hydraulic equalization elements must seat themselves (otherwise the valves will crash into the pistons).**
- **After working on the valvetrain, carefully rotate engine by hand at least 2 full revolutions to ensure that valves do not strike the pistons when starting.**
- **Always replace seals, sealing rings and O-rings.**

Valvetrain, component overview

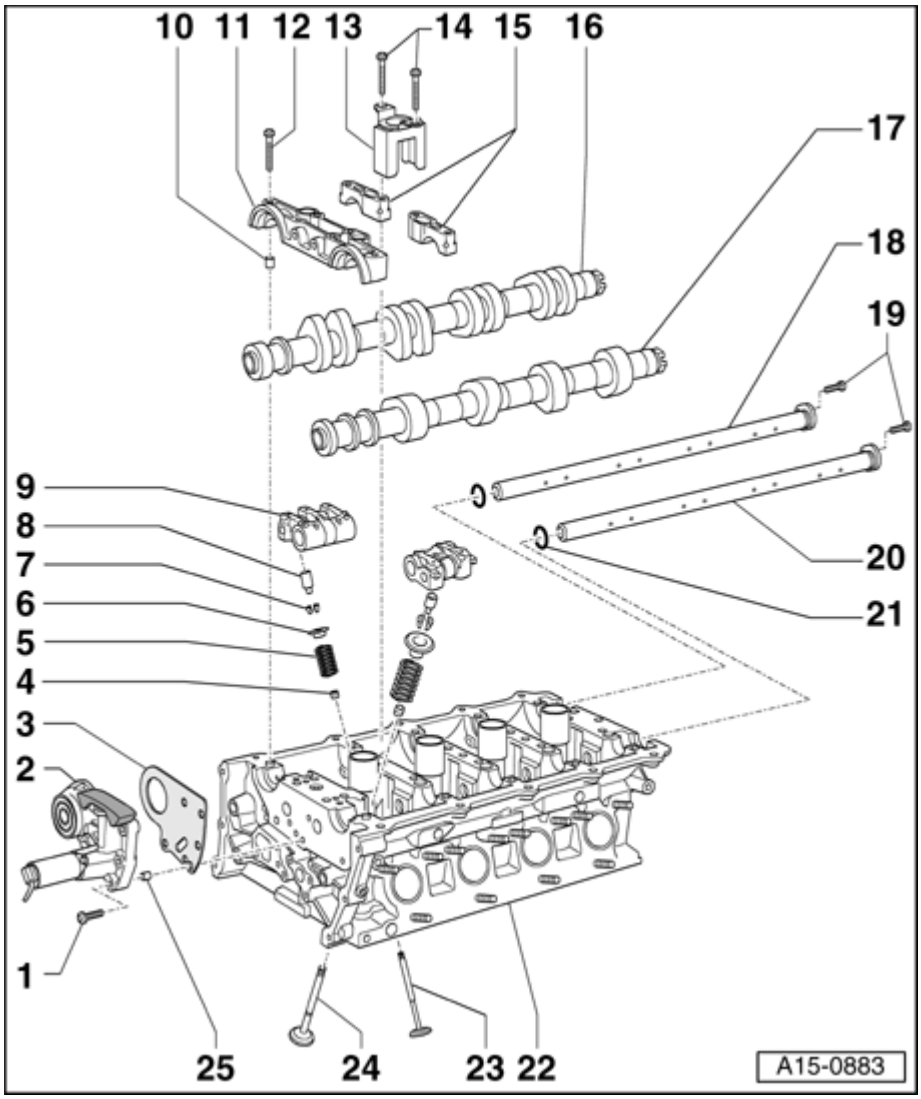

Fig. 357: Valvetrain, Component Overview
Courtesy of VOLKSWAGEN UNITED STATES, INC.

1 - 5 Nm plus an additional 90° ($^1/_4$ turn)

- Replace

2 - Housing for camshaft adjustment solenoid valve

3 - Gasket

- Replace

4 - Valve stem seal

- Replacing --> **Valve stem seals, replacing**.

5 - Valve spring

6 - Valve spring plate

7 - Valve keepers

8 - Hydraulic valve lifter

- Pressed into roller rocker lever
- Not removable without being damaged

9 - Roller rocker lever

- Removing and installing --> **Roller rocker lever, removing and installing**

10 - Alignment bushing

- 2 pieces

11 - Double bearing cap

12 - 5 Nm plus an additional 90° ($^1/_4$ turn)

- Replace

13 - Oil deflector

- On cylinder head at right between bearing cap E4 and A4
- On cylinder head at left between bearing cap E2 and A2

14 - 5 Nm plus an additional 90° ($^1/_4$ turn)

- Replace

15 - Bearing cap

- Note installation position and allocation --> **Fig. 361**

16 - Intake camshaft

- Removing and installing --> **Camshafts, removing and installing**
- Checking axial play --> **Camshafts, checking axial clearance**
- Check radial clearance using Plastigage (roller rocker lever removed)
- Radial clearance wear limit: 0.1 mm

- Radial clearance run-out: max. 0.01 mm

17 - Exhaust camshaft

- Removing and installing --> **Camshafts, removing and installing**
- Checking axial play --> **Camshafts, checking axial clearance**
- Check radial clearance using Plastigage (roller rocker lever removed)
- Radial clearance wear limit: 0.1 mm

- Radial clearance run-out: max. 0.01 mm

18 - Shaft for roller rocker lever, intake side

- Removing and installing --> **Roller rocker lever, removing and installing**

19 - 10 Nm

20 - Shaft for roller rocker lever, exhaust side

- Removing and installing --> **Roller rocker lever, removing and installing**

21 - O-ring

- For roller rocker lever shaft
- Replace

22 - Cylinder head

- See note --> **Valvetrain, servicing**
- Check valve guides, grind valve seats --> **Valve guides, checking**
- Rework valve seats --> **Valve seats, reworking**

23 - Intake valve

- Do not rework, only lapping is permitted
- Valve dimensions --> **Valve dimensions**
- Checking valve guides, hand-lapping valve seats --> **Valve guides, checking**

24 - Exhaust valve

- Do not rework, only lapping is permitted
- Valve dimensions --> **Valve dimensions**
- Checking valve guides, hand-lapping valve seats --> **Valve guides, checking**

25 - Alignment bushing

- 2 pieces

Camshafts, removing and installing

Removing

NOTE:

- **Here, removal and installation at right cylinder head is depicted in the following description.**

- Remove engine --> **Engine, removing and installing**.
- Separate engine/transmission --> **Engine and transmission, separating**.
- Remove camshaft timing chains from camshafts --> **Camshaft timing chains, removing from camshafts**.

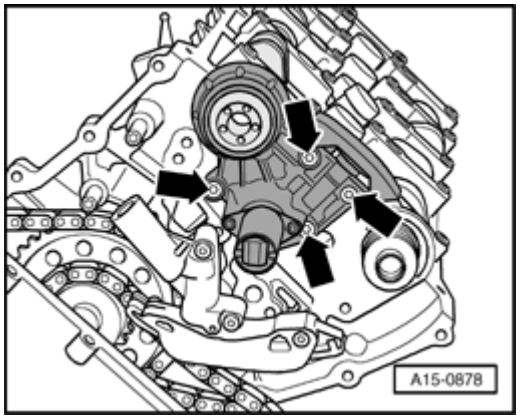

Fig. 358: Removing Housing For Camshaft Adjustment Solenoid Valves
Courtesy of VOLKSWAGEN UNITED STATES, INC.

- Remove housing for camshaft adjuster - **arrows** -.

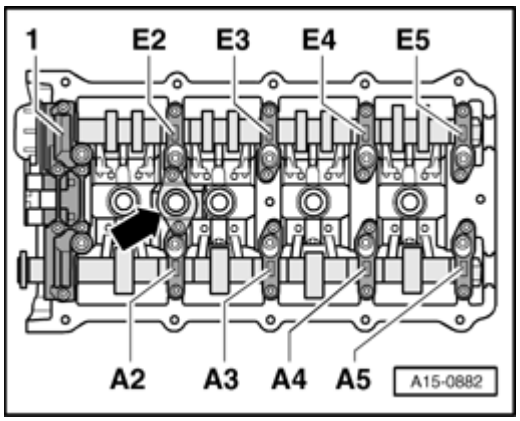

Fig. 359: Removing/Installing Bearing Caps
Courtesy of VOLKSWAGEN UNITED STATES, INC.

- Remove bearing caps - **1** - , - **E3** - , - **E5** - , - **A3** - and - **A5** -.
- Remove oil deflector - **arrow** -.
- Loosen and remove bearing caps - **E2** - , - **E4** - , - **A2** - and - **A4** - for intake and exhaust camshafts, alternating and in diagonal sequence.
- Remove intake and exhaust camshaft.

Installing

- Secure crankshaft in TDC position using crankshaft holder 3242

NOTE:

- **Always replace bolts that are tightened to torque as well as O-rings and gaskets.**

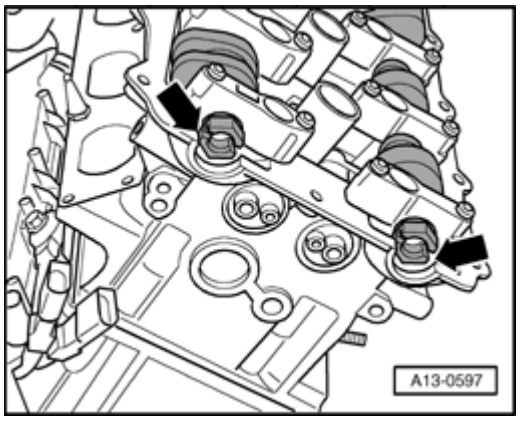

Fig. 360: Identifying Slits At Front In Camshafts Stand Parallel At Same Height With Upper Edge Of Cylinder Head
Courtesy of VOLKSWAGEN UNITED STATES, INC.

- Install camshafts at TDC position into cylinder head.

- Slits - **arrows** - at front in camshafts must stand parallel at same height with upper edge of cylinder head.

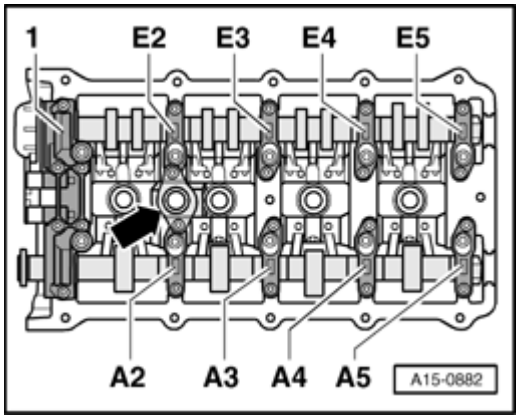

Fig. 361: Removing/Installing Bearing Caps
Courtesy of VOLKSWAGEN UNITED STATES, INC.

- Install bearing caps - **E2** - , - **E4** - , - **A2** - and - **A4** -.
- Install oil deflector - **arrow** - :

- On cylinder head at right between bearing cap - **E4** - and - **A4** -.
- On cylinder head at left between bearing cap - **E2** - and - **A2** -.

- Tighten bearing caps - **E2** - , - **E4** - , - **A2** - and - **A4** - for intake and exhaust camshafts, alternating and in diagonal sequence.
- Tighten remaining bearing caps in diagonal sequence.

NOTE:

- **Note alignment bushing on bearing cap - 1 -.**

Further installation is in reverse order of removal, note the following:

- Install camshaft timing chains **Installing**.
- Install engine --> **Engine, installing**.

Torque specifications

Component	Nm
Bearing cap to cylinder head	5 + 90° * See note* See note
Housing for camshaft adjustment solenoid valve	5 + 90° * See note* See note

* 90° corresponds to a 1/4 turn

* Replace bolts

Camshafts, checking axial clearance

Special tools, testers and auxiliary items required

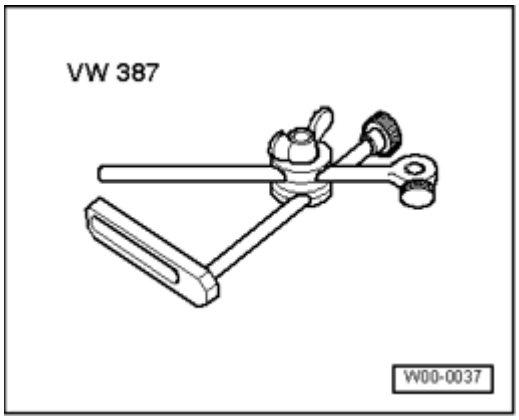

Fig. 362: Dial Gauge Holder VW 387
Courtesy of VOLKSWAGEN UNITED STATES, INC.

- Dial gauge holder VW 387
- Dial gauge

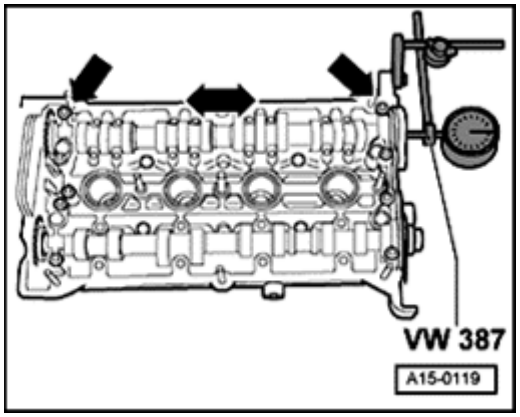

Fig. 363: Camshaft Axial Clearance, Checking - Intake Camshaft
Courtesy of VOLKSWAGEN UNITED STATES, INC.

Test sequence

- Camshafts removed --> **Camshafts, removing and installing**.
- Roller rocker lever removed --> **Roller rocker lever, removing and installing**.

  - Insert camshafts in cylinder head and tighten with outer bearing caps - **arrows** -.
  - Secure dial gauge holder VW 387 to dial gauge on cylinder head:

- Wear limit for intake and exhaust camshaft: max. 0.20 mm.

Roller rocker lever, removing and installing

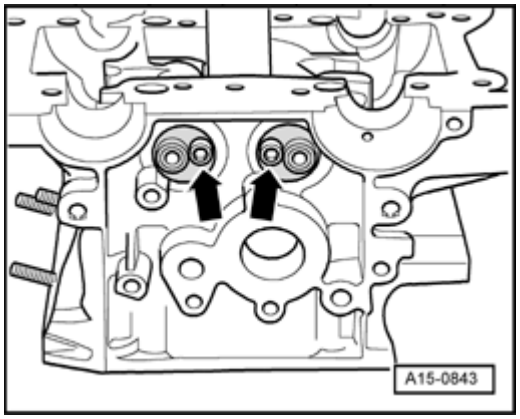

Fig. 364: Removing bolts
Courtesy of VOLKSWAGEN UNITED STATES, INC.

Removing

- Remove engine --> **Engine, removing and installing**.
- Remove camshafts --> **Camshafts, removing and installing**.
- Mark allocation of roller rocker lever and shafts for roller cam follower for re-installation.
- Remove bolts - **arrows** -.

- Thread a M6-bolt into hole in shaft for roller rocker lever.
- Remove shaft from cylinder head and remove roller rocker lever.

Installing

Installation is in reverse order of removal, note the following:

NOTE:

- **Replace O-rings.**

- Before installing, oil bearing areas for roller rocker lever.
- Install camshafts --> **Camshafts, removing and installing**.
- Install engine --> **Engine, installing**.

Torque specifications

Component	Nm
Shaft for roller rocker lever to cylinder head	10

Valve stem seals, replacing

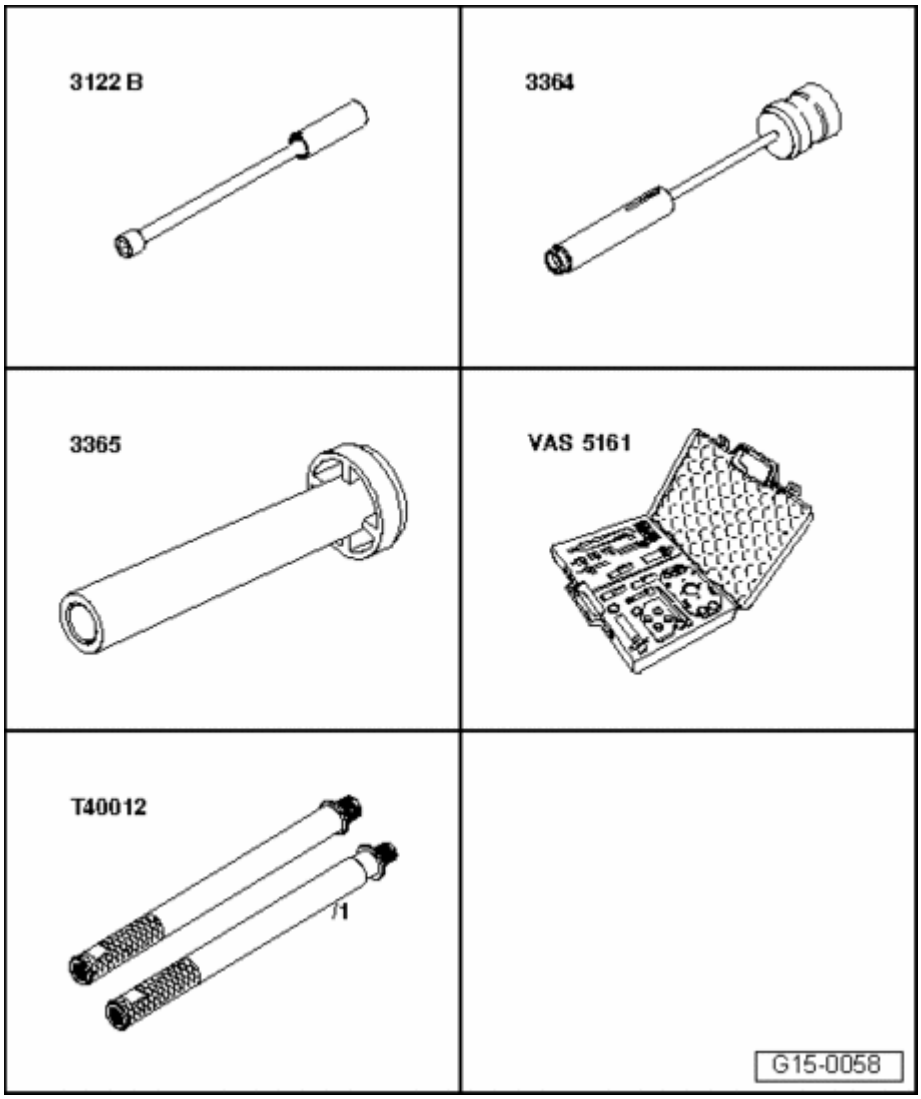

Fig. 365: Identifying Special Tools - Valve Stem Seals, Replacing
Courtesy of VOLKSWAGEN UNITED STATES, INC.

Special tools, testers and auxiliary items required

- Spark plug removal tool 3122 B
- Valve seal removal tool 3364
- Valve stem seal driver 3365
- Valve cotter disassembly and assembly device VAS 5161
- Adapter T40012

Work procedure

- Remove engine --> **Engine, removing and installing**.
- Remove camshafts --> **Camshafts, removing and installing**.

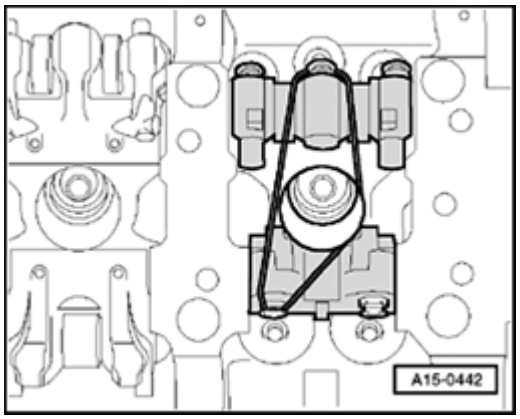

Fig. 366: Turning Roller Rocker Lever Upward And Securing With A Rubber Band
Courtesy of VOLKSWAGEN UNITED STATES, INC.

- Using spark plug removal tool 3122 B , remove spark plugs.
- Turn roller rocker lever upward and secure it with a rubber band.

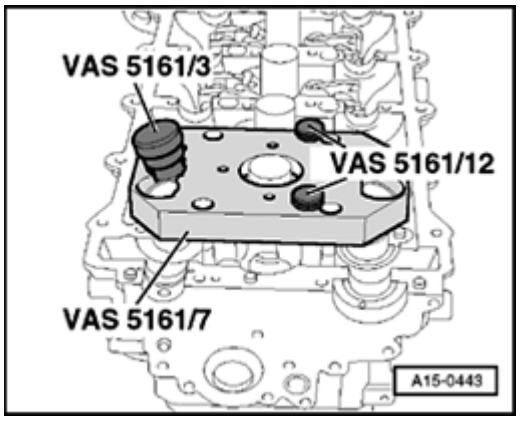

Fig. 367: Placing Guide Plate VAS 5161/7 From VAS 5161 Onto Cylinder Head & Securing Guide Plate VAS 5161/7 With Knurled Screws VAS 5161/12
Courtesy of VOLKSWAGEN UNITED STATES, INC.

- Place guide plate VAS 5161/7 from VAS 5161 onto cylinder head.
- Secure guide plate VAS 5161/7 with knurled screws VAS 5161/12.

NOTE:

- **If guide plate cannot be installed, drill mounting bores to approx. 0.5 mm.**

- Insert drift VAS 5161/3 into guide plate and loosen stuck valve keepers using a plastic hammer.

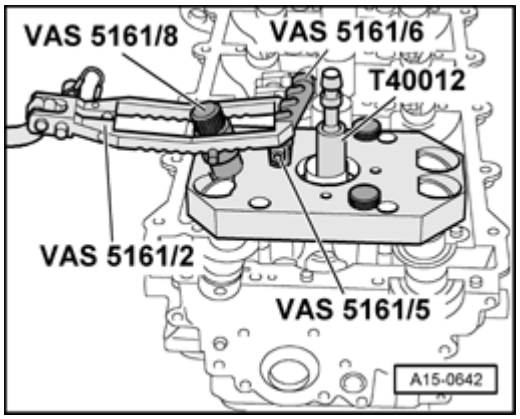

Fig. 368: Installing Engaging Device VAS 5161/6 With Installation Forks VAS 5161/5 Into Guide Plate VAS 5161/7
Courtesy of VOLKSWAGEN UNITED STATES, INC.

- Install engaging device VAS 5161/6 with VAS 5161/5 into guide plate VAS 5161/7.
- Guide installation cartridge VAS 5161/8 into guide plate VAS 5161/7.
- Install adapter T40012 with gasket by hand into respective spark plug thread and apply constant pressure.

- Minimum pressure: 6 bar positive pressure.

- Engage pressure fork VAS 5161/2 at engaging device VAS 5161/6 and press down installation cartridge.
- At the same time, turn knurled bolt of installation cartridge to right, until points engage in valve keepers.
- Lightly move knurled bolt back and forth, causing valve keepers to be pressed apart and be captured in the installation cartridge.
- Release pressure fork.

- Take out installation cartridge.
- Remove guide plate.

- Pressurized air hose remains connected.

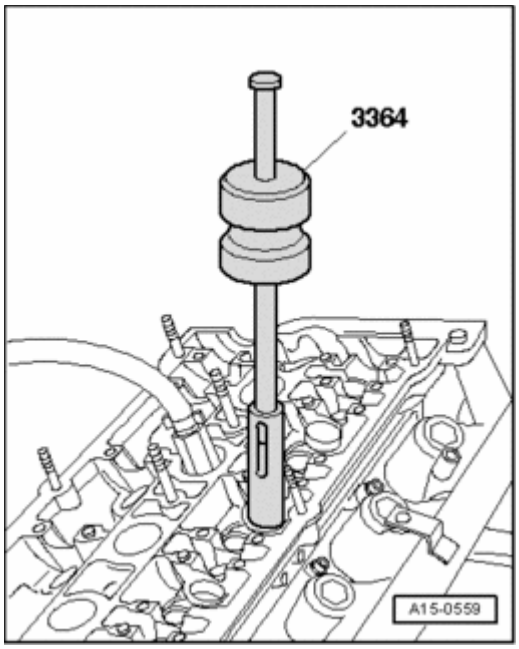

Fig. 369: Identifying Valve Seal Removal Tool 3364
Courtesy of VOLKSWAGEN UNITED STATES, INC.

- Remove valve stem seals with valve seal removal tool 3364.

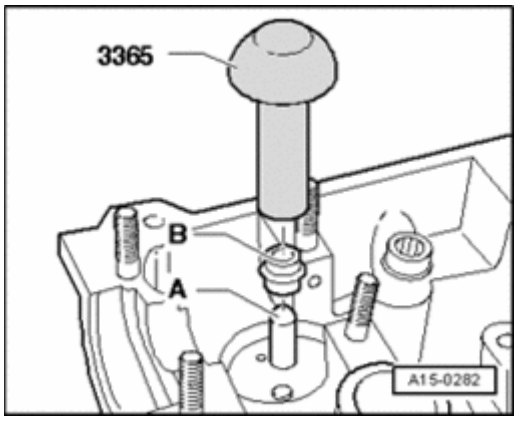

Fig. 370: Identifying Plastic Sleeve, Valve Stem Oil Seal & Valve Stem Seal Driver 3365
Courtesy of VOLKSWAGEN UNITED STATES, INC.

NOTE:

- **For pressing on valve stem seals from delivery program, the valve stem seal driver 3365 must be drilled to dia. 10.5 mm.**
- **A plastic sleeve - A - is supplied with the new valve shaft seals.**

- Place plastic sleeve - **A** - on valve stem to prevent damage to new valve stem oil seals - **B** -.
- Lightly oil valve stem seal.
- Push valve stem seal onto plastic sleeve.
- Carefully press valve stem oil seal onto valve guide using valve stem seal driver 3365.

- Remove plastic sleeve again.

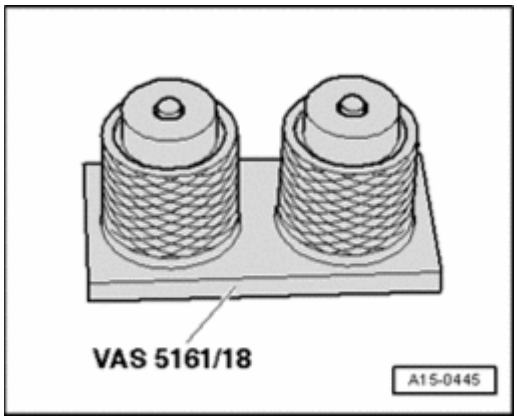

Fig. 371: Identifying Installation Cartridge VAS 5161/8
Courtesy of VOLKSWAGEN UNITED STATES, INC.

- If valve keys were removed from installation cartridge, they must be inserted into insertion device VAS 5161/18 next.

NOTE:

- **The large diameter of valve keepers points upward.**

- Insert valve spring and valve spring plate.
- Install Guide Plate VAS 5161/7 onto cylinder head again.

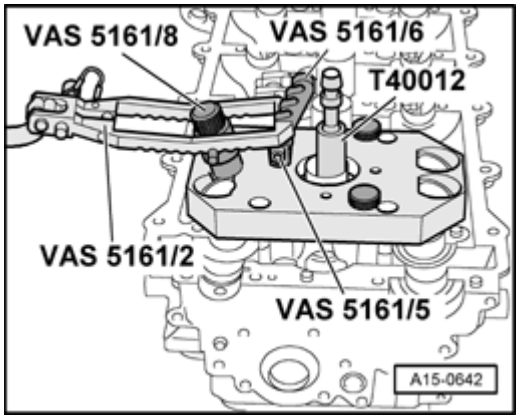

Fig. 372: Installing Engaging Device VAS 5161/6 With Installation Forks VAS 5161/5 Into Guide Plate VAS 5161/7
Courtesy of VOLKSWAGEN UNITED STATES, INC.

- Insert installation cartridge VAS 5161/8 into guide plate.
- Press down pressure fork and pull knurled-head screw upward - thereby valve keepers are inserted.
- Release pressure fork with knurled bolt still pulled.
- Install camshafts --> **Camshafts, removing and installing**.

- Install engine --> **Engine, installing**.

NOTE:

- **After installing the camshaft, the engine may not be started for approx. 30 minutes. The hydraulic equalization elements must seat themselves (otherwise the valves will crash into the pistons).**
- **After working on the valvetrain and lifters, carefully rotate the crankshaft by hand at least 2 full revolutions before starting to be sure that valves do not strike the pistons.**

Valve guides, checking

Special tools, testers and auxiliary items required

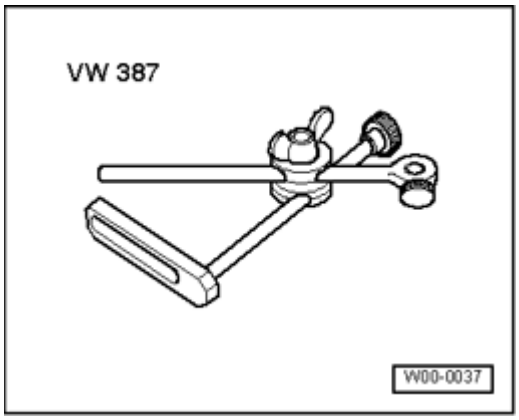

Fig. 373: Dial Gauge Holder VW 387
Courtesy of VOLKSWAGEN UNITED STATES, INC.

- Dial gauge holder VW 387
- Dial gauge

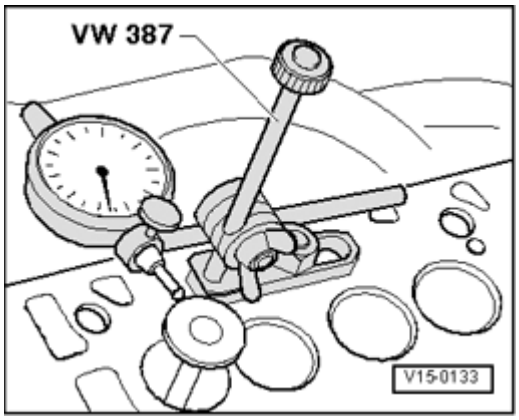

Fig. 374: Identifying Special Tool - VW 387 Installed
Courtesy of VOLKSWAGEN UNITED STATES, INC.

Test sequence

- Insert valve into guide. The end of the valve stem must be flush with guide. Due to slight difference in stem dimensions, ensure that only an intake valve is used in intake guide and an exhaust valve in exhaust guide.
- Determine tip clearance.

- Wear limit of intake and exhaust valve guide: 0.80 mm.

NOTE:

- **If wear limit is exceeded, re-measure using new valves. If wear limit is still exceeded, replace cylinder head. The valve guides cannot be replaced.**
- **If the valve is to be replaced as part of a repair, use a new valve for the calculation.**

Valves, checking

- Visually check for signs of wear on stem and on seating surface. Replace valve if it shows significant signs of wear.

Valve dimensions

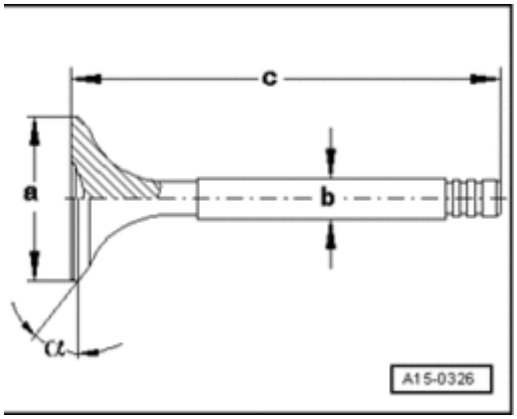

Fig. 375: Valve Dimensions
Courtesy of VOLKSWAGEN UNITED STATES, INC.

NOTE:

- **Valves must not be reworked. Only lapping is permitted.**

Dimension	Intake valve	Exhaust valve
a = dia. mm	26.8 to 27.0	29.8 to 30.0
b =dia. mm	5.956 to 5.970	5.936 to 5.950
c = mm	96.39 to 96.59	94.79 to 94.99
a = Angle°	45	45

CAUTION:

- **Worn sodium-filled exhaust valves must not be scrapped without first being properly treated.**

- **Using a metal saw, the valves must be cut into two pieces between the shaft center and valve head. While doing this, do not come into contact with water. At the very most, throw 10 of the prepared valves into a bucket filled with water. Then, move quickly away, because a sudden chemical reaction will occur during which the sodium is burnt away.**
- **The treated parts may then be discarded through conventional disposal channels.**

Valve seats, reworking

NOTE:

- **If a perfect contact pattern is not achieved by lapping the valve seats, rework the valve seats.**

Special tools, testers and auxiliary items required

- Depth gauge
- Valve seat refacing tool

NOTE:

- **When repairing engines with leaking valves, it is not sufficient to rework or replace valve seats and valves. It is particularly important to check valve guides for wear on engines with higher mileage performance --> Valve guides, checking.**
- **Only reface valve seats enough until a perfect contact pattern is obtained.**
- **The maximum permissible reworking dimension must be calculated before work is carried out.**
- **If the reworking dimension is exceeded, the function of the hydraulic lifters can no longer be guaranteed and therefore the cylinder head should be replaced.**

Calculating maximum allowable reworking dimension

- Insert valve and press it firmly against valve seat.

NOTE:

- **If the valve is to be replaced as part of a repair, use a new valve for the calculation.**

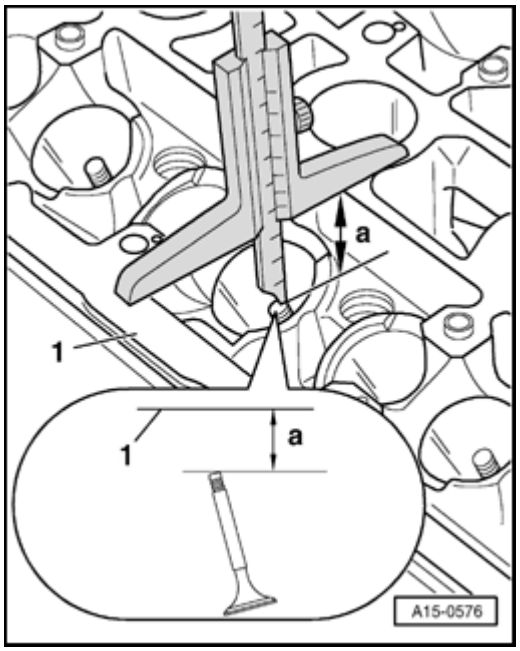

Fig. 376: Measuring Distance Between Valve Stem End (Upper Edge) And Top Surface Of Cylinder Head Using Depth Gauge
Courtesy of VOLKSWAGEN UNITED STATES, INC.

- Measure distance - **a** - between end of valve stem and camshaft center axle (camshaft center axle is located at the level of cylinder head upper edge).
- Calculate max. permissible reworking dimension from measured distance and minimum dimension.

Minimum dimensions		
Outer intake valves	Center intake valves	Exhaust valves
39.3 mm	41.0 mm	39.9 mm

Measured distance minus minimum dimension = max. permissible reworking dimension.

Example for outer intake valve:		
	Measured distance - **a** -	39.7 mm
-	Minimum dimension	-39.3 mm
=	Max. perm. rework dimension	= 0.4 mm

NOTE:

- **If the maximum permissible reworked dimension is 0 mm or less than 0 mm, repeat measurement using new valve. If measurement result is still 0 mm or less than 0 mm, replace cylinder head.**

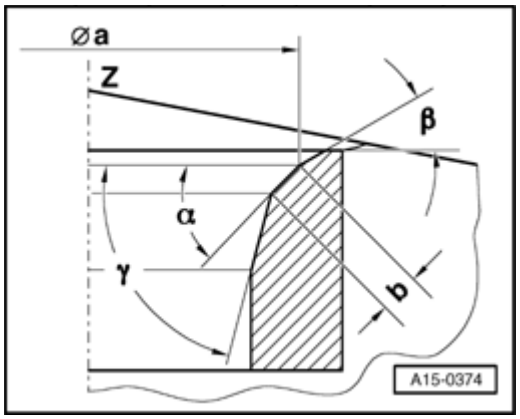

Fig. 377: Refacing Valve Seats Dimension
Courtesy of VOLKSWAGEN UNITED STATES, INC.

Valve seats, reworking

Intake valve seat		
a	=	Dia. 26.6 mm
b	=	Approx. 1.0 mm
Z	=	Cylinder head lower edge
a	=	45° valve seat angle
ß	=	30° upper correction angle
g	=	60° lower correction angle

Exhaust valve seat		
a	=	Dia. 26.0 mm
b	=	Approx. 1.0 mm
Z	=	Cylinder head lower edge
a	=	45° valve seat angle
ß	=	30° upper correction angle
g	=	60° lower correction angle

17 - ENGINE - LUBRICATION

LUBRICATION SYSTEM COMPONENTS, REMOVING AND INSTALLING

Lubrication system components, removing and installing

NOTE:

- **If large quantities of metal shavings or abraded material are found in the engine oil while servicing the engine, the oil passages must be carefully cleaned to prevent resulting damage and the oil cooler must be replaced.**
- **The oil level must not be above the max. mark - danger of damage to catalytic converter!**

- **Oil quantities, oil specifications and viscosity classes Maintenance tables.**

Oil pump, lower section of oil pan, component overview

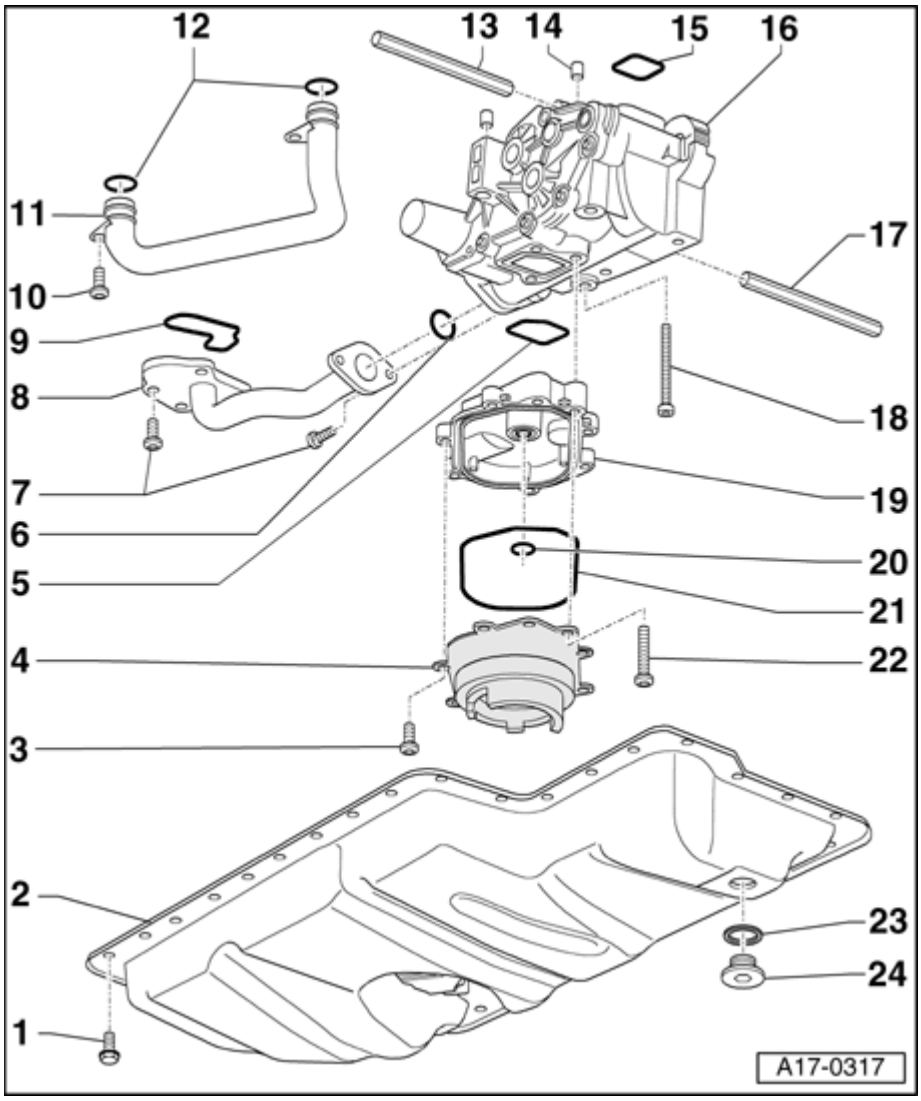

Fig. 378: Oil Pump, Lower Section Of Oil Pan, Component Overview
Courtesy of VOLKSWAGEN UNITED STATES, INC.

1 - 10 Nm

2 - Oil pan (lower section)

- Removing and installing --> **Lower part of oil pan, removing and installing**
- With Oil Level Thermal Sensor G266
- Oil Level Thermal Sensor G266 , removing and installing --> **Oil Level Thermal Sensor G266 , removing and installing**

3 - 10 Nm

4 - Intake tube

- With oil strainer

5 - Seal

- Replace

6 - O-ring

- Replace

7 - 10 Nm

8 - Oil pipe

9 - Seal

- Replace

10 - 10 Nm

11 - Oil pipe

12 - O-rings

- Replace

13 - Input shaft

- For coolant pump

14 - Fitting sleeves

- 2 pieces

15 - Seal

- Replace

16 - Oil pump

- Do not disassemble
- With relief valve approx. 4 bar
- Removing and installing --> **Oil pump, removing and installing**

17 - Input shaft

- For oil pump

18 - 10 Nm

19 - Housing for intake tube

20 - O-ring

- Replace

21 - Seal

- Replace

22 - 10 Nm

23 - Seal

- Replace

24 - Oil drain plug, 50 Nm

Oil Level Thermal Sensor G266 , removing and installing

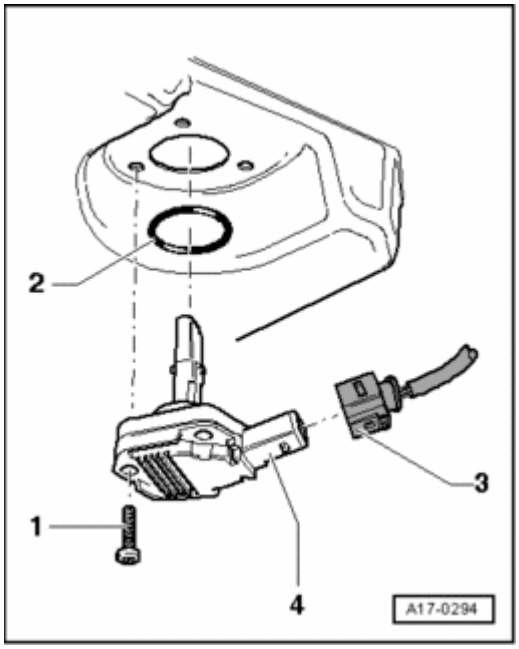

Fig. 379: Oil Level Thermal Sensor G266 , Removing And Installing
Courtesy of VOLKSWAGEN UNITED STATES, INC.

1. Bolt, 10 Nm; Self-locking, replace
2. Sealing ring; replace
3. Electrical harness connector
4. Oil Level Thermal Sensor G266

Lower part of oil pan, removing and installing

Special tools, testers and auxiliary items required

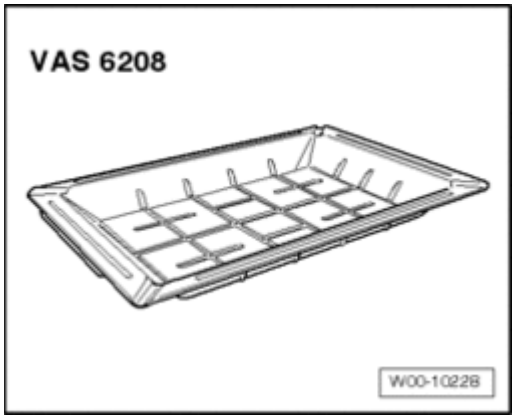

Fig. 380: Drip Tray For VAS 6100, VAS 6208
Courtesy of VOLKSWAGEN UNITED STATES, INC.

- Drip tray for workshop crane VAS 6208

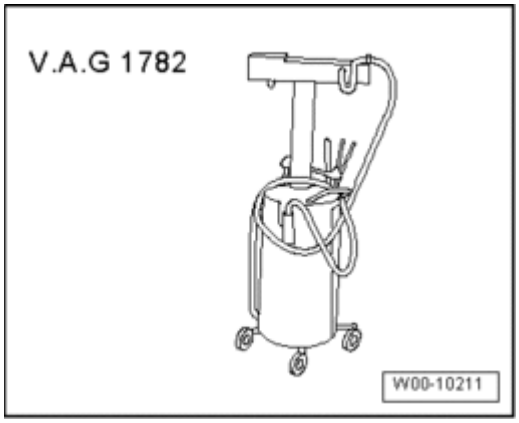

Fig. 381: Identifying Old Oil Collecting And Extracting Device V.A.G 1782
Courtesy of VOLKSWAGEN UNITED STATES, INC.

- Old oil collecting and extracting device V.A.G 1782
- Hand drill with plastic brush attachment
- Protective glasses
- Sealant

Removing

- Drain coolant --> **Cooling system, draining and filling**.
- Drain engine oil --> **MAINTENANCE PROCEDURES** .
- Bring lock carrier into service position --> **50 - BODY - FRONT** .

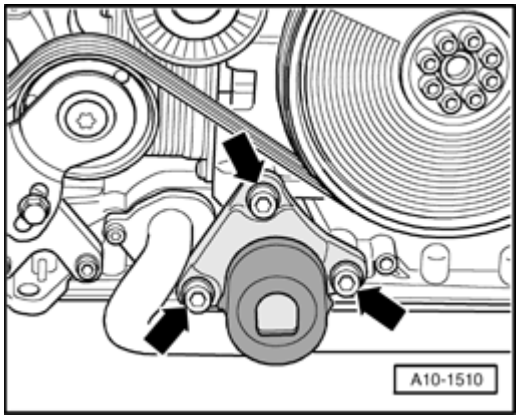

Fig. 382: Removing Bolts And Torque Support From Engine
Courtesy of VOLKSWAGEN UNITED STATES, INC.

- Remove bolts - **arrows** - and remove torque support from engine.

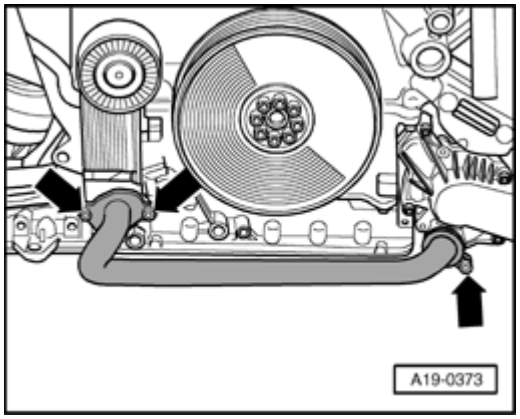

Fig. 383: Removing Front Coolant Pipe On Engine
Courtesy of VOLKSWAGEN UNITED STATES, INC.

- Place drip tray VAS 6208 under engine.
- Remove front coolant pipe on engine - **arrows** -.

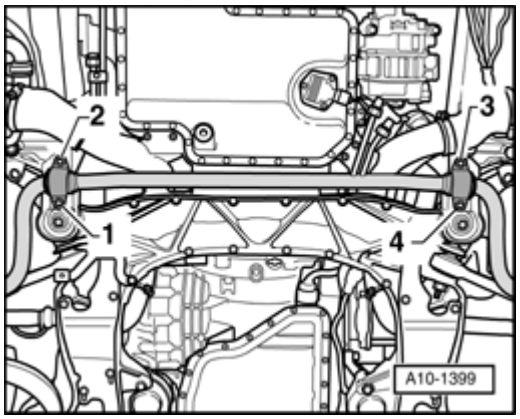

Fig. 384: Removing Nuts For Left/Right Stabilizer Mounts
Courtesy of VOLKSWAGEN UNITED STATES, INC.

- Remove nuts - **1 to 4** - for left and right stabilizer mounts.

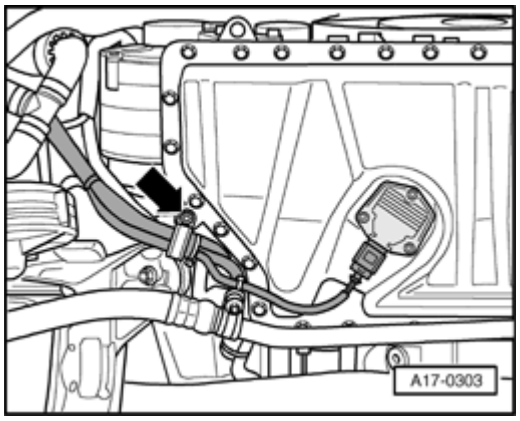

Fig. 385: Removing Guide On Lower Section Of Oil Pan
Courtesy of VOLKSWAGEN UNITED STATES, INC.

- Remove guide - **arrow** - on lower section of oil pan.

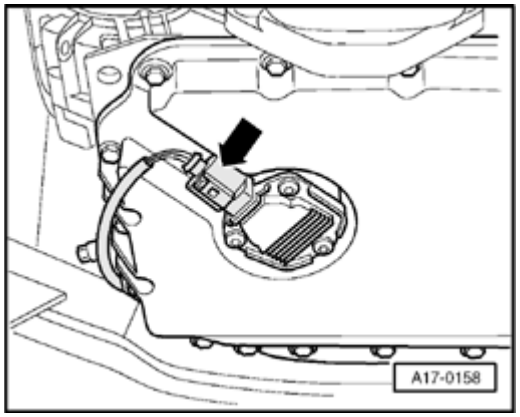

Fig. 386: Disconnecting Electrical Connector On Oil Level Thermal Sensor G266
Courtesy of VOLKSWAGEN UNITED STATES, INC.

- Disconnect electrical connector on Oil Level Thermal Sensor G266 - **arrow** - and free up wire.

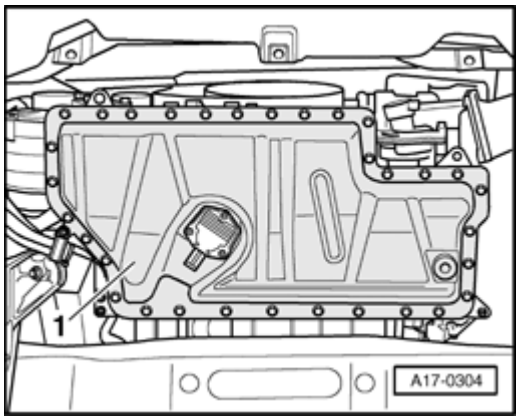

Fig. 387: Removing Oil Pan (Lower Part)
Courtesy of VOLKSWAGEN UNITED STATES, INC.

- Place old oil collecting and extracting device V.A.G 1782 under engine.
- Remove oil pan (lower part) - **1** - and pry out carefully.

NOTE:

- **There is still a residual amount of oil in lower section of oil pan.**

Installing

NOTE:

- **Replace seals.**

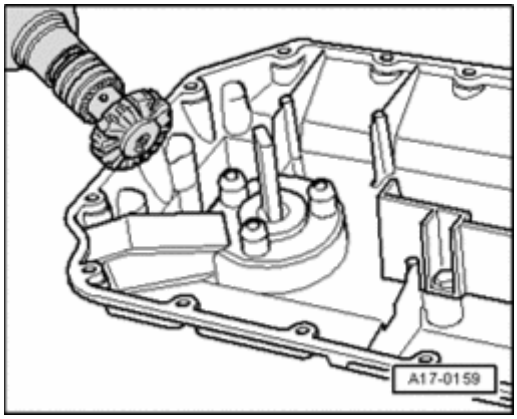

Fig. 388: Using Rotating Plastic Brush To Remove Any Remaining Sealant From Oil Pan (Lower Part) And At Upper Part
Courtesy of VOLKSWAGEN UNITED STATES, INC.

- Using rotating plastic brush, remove any remaining sealant from lower part of oil pan and upper part.

CAUTION: Wear safety glasses.

- Clean sealing surfaces, must be free of oil and grease.

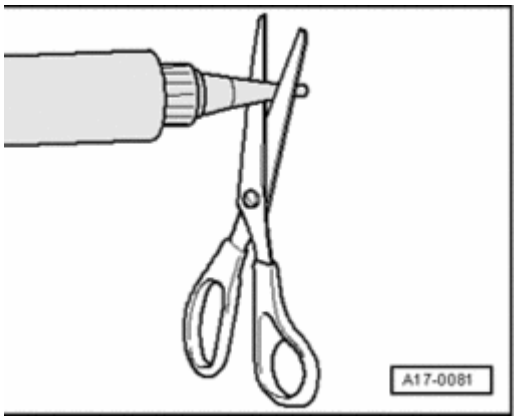

Fig. 389: Cutting Tube Nozzle At Front Marking
Courtesy of VOLKSWAGEN UNITED STATES, INC.

- Cut tube nozzle at front marking (jet dia. approx. 1 mm).

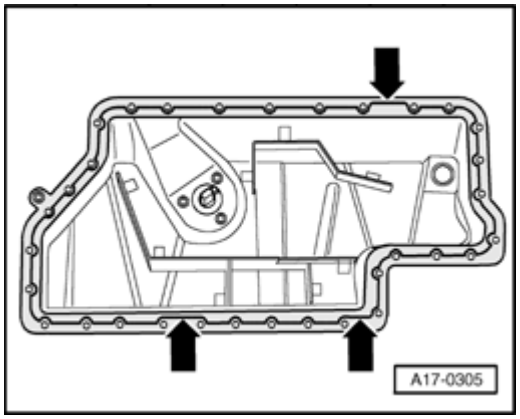

Fig. 390: Applying Sealant Bead On Clean Sealing Surface Of Lower Section Of Oil Pan
Courtesy of VOLKSWAGEN UNITED STATES, INC.

- Apply sealant bead to clean sealing surfaces of oil pan (lower part) as shown in illustration.

- Thickness of sealant bead: 1.5 to 2.0 mm

NOTE:

- **Observe the position of the sealant bead at areas indicated with - arrows -.**
- **The oil pan (lower part) must be installed within 5 minutes after application of sealant.**
- **Sealant bead must not be thicker than specified, otherwise excess sealant may get into lower section of oil pan and clog strainer in intake tube.**

- Set lower part of oil pan in place and fasten all bolts in diagonal sequence to 5 Nm.
- Fasten bolts for lower part of oil pan in a diagonal sequence to 10 Nm.

Further installation is in reverse order of removal, note the following:

- Install stabilizer bar --> **40 - FRONT SUSPENSION** .
- Install front coolant pipe --> **Front coolant line, removing and installing**.
- Install lock carrier with attachments --> **50 - BODY - FRONT** .

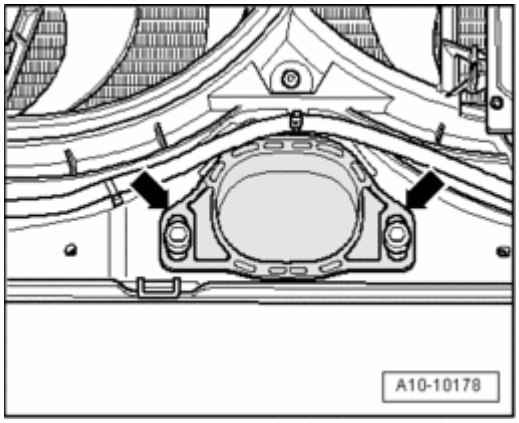

Fig. 391: Placing Torque Support On Rubber Buffer For Torque Support And Tightening Bolts
Courtesy of VOLKSWAGEN UNITED STATES, INC.

- Place torque support on rubber buffer for torque support and tighten bolts - **arrows** -.
- Install front bumper --> **63 - BUMPERS** .
- Add engine oil and check oil level --> **MAINTENANCE PROCEDURES** .
- Fill with coolant.

- Adjust headlights --> **MAINTENANCE PROCEDURES** .

Torque specifications

Component	Nm
Lower part of oil pan to upper part of oil pan	10
Oil drain plug	50
Torque support stop to lock carrier	40

Oil pump, removing and installing

Special tools, testers and auxiliary items required

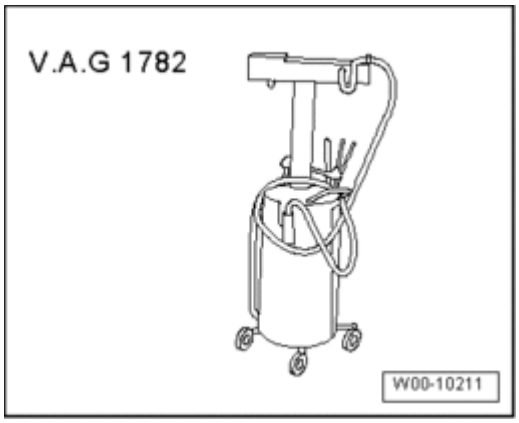

Fig. 392: Identifying Old Oil Collecting And Extracting Device V.A.G 1782
Courtesy of VOLKSWAGEN UNITED STATES, INC.

- Old oil collecting and extracting device V.A.G 1782

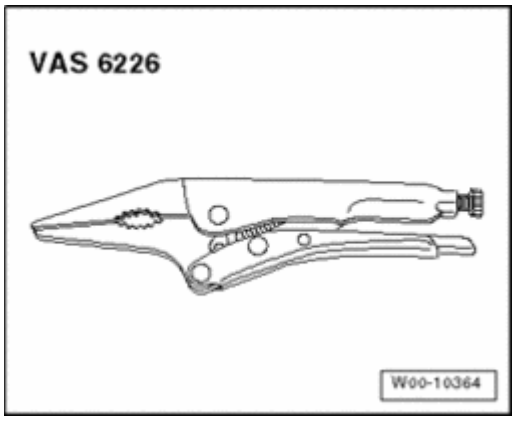

Fig. 393: Long-Nose Gripping Pliers VAS 6226
Courtesy of VOLKSWAGEN UNITED STATES, INC.

- Long-nose gripping pliers VAS 6226

Removing

- Remove lower section of oil pan --> **Lower part of oil pan, removing and installing**.

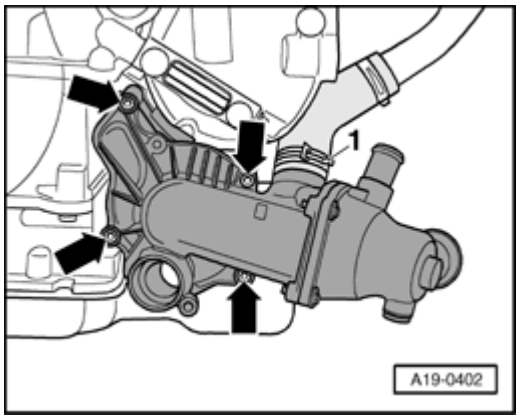

Fig. 394: Disconnecting Coolant Hose & Removing Coolant Pump
Courtesy of VOLKSWAGEN UNITED STATES, INC.

- Disconnect coolant hose - **1** -.
- Remove coolant pump - **arrows** -.

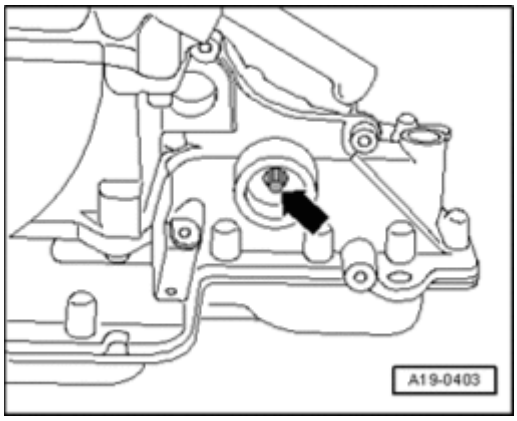

Fig. 395: Removing/Installing Drive Shaft For Coolant Pump From Oil Pump
Courtesy of VOLKSWAGEN UNITED STATES, INC.

- Remove drive shaft - **arrow** - for coolant pump from oil pump.
- Place Old oil collecting and extracting device V.A.G 1782 underneath.

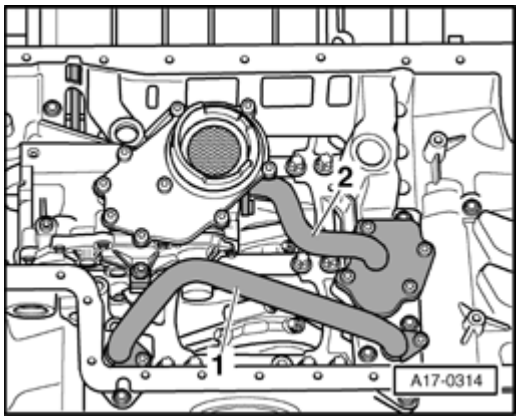

Fig. 396: Removing Bolts And Oil Pipes
Courtesy of VOLKSWAGEN UNITED STATES, INC.

- Remove bolts and remove oil pipes - **1** - and - **2** -.

NOTE:

- **Oil escapes when removing oil pipes.**

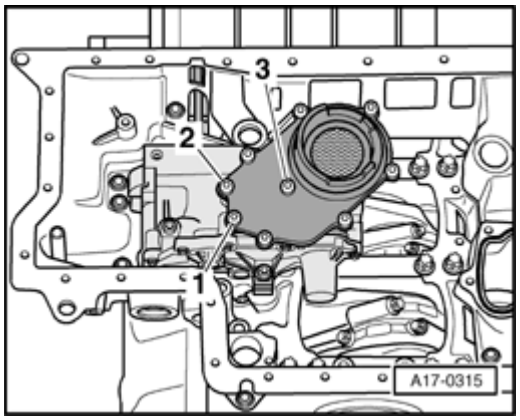

Fig. 397: Removing Bolts And Intake Tube With Housing
Courtesy of VOLKSWAGEN UNITED STATES, INC.

- Remove bolts - **1 to 3** - and remove intake tube with housing.

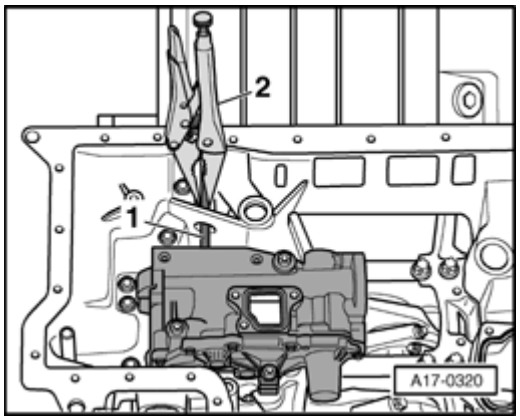

Fig. 398: Pressing Back Drive Shaft For Oil Pump Against Spring Force And Clamping Tightly Using Long-Nose Gripping Pliers VAS 6226
Courtesy of VOLKSWAGEN UNITED STATES, INC.

- Press back drive shaft - **1** - for oil pump against spring force and clamp tightly using Long-nose gripping pliers VAS 6226 - **2** -.

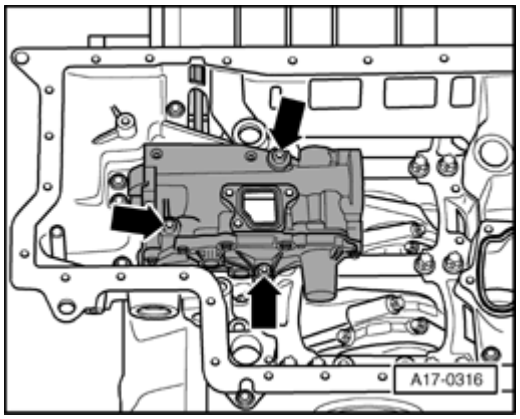

Fig. 399: Removing Bolts And Oil Pump
Courtesy of VOLKSWAGEN UNITED STATES, INC.

- Remove bolts - **arrows** - and remove oil pump.

Installing

NOTE:

- **Replace seals and O-rings.**

- Check whether 2 alignment bushings are present in cylinder block, install if necessary.
- Tighten oil pump - **arrows** -.

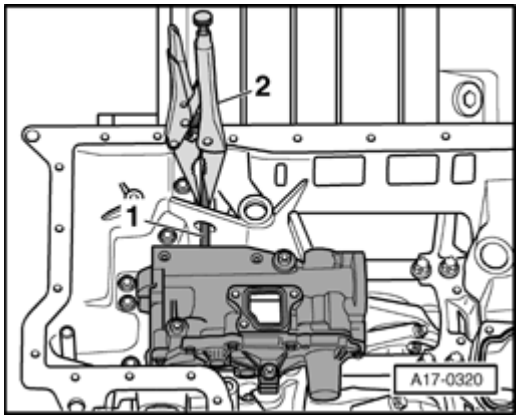

Fig. 400: Pressing Back Drive Shaft For Oil Pump Against Spring Force And Clamping Tightly Using Long-Nose Gripping Pliers VAS 6226
Courtesy of VOLKSWAGEN UNITED STATES, INC.

- Unlock gripping pliers - **2** - and let drive shaft - **1** - glide into oil pump.

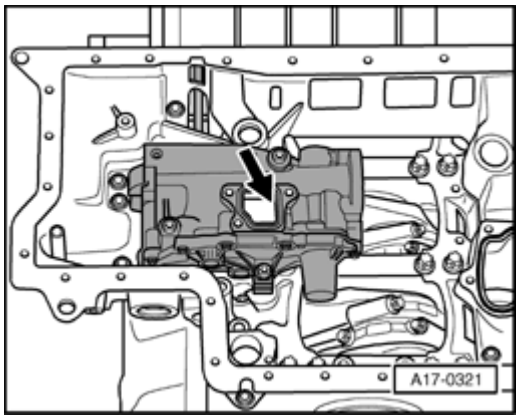

Fig. 401: Checking Whether Drive Shaft Is Friction Locked To Oil Pump
Courtesy of VOLKSWAGEN UNITED STATES, INC.

- Check whether drive shaft is friction locked to oil pump. To do so, reach into intake opening - **arrow** - of oil pump and try to rotate oil pump gears.

- Toothed gears must not be able to be rotated

Further installation is in reverse order of removal, note the following:

- Install coolant pump --> **Coolant pump, removing and installing**.
- Install oil pan (lower part) --> **Lower part of oil pan, removing and installing**.

Torque specifications

Component	Nm
Oil pump to cylinder block	10
Housing for intake tube to oil pump	10
Oil pipes to upper section of oil pan and oil pump	10

Upper section of oil pan, component overview

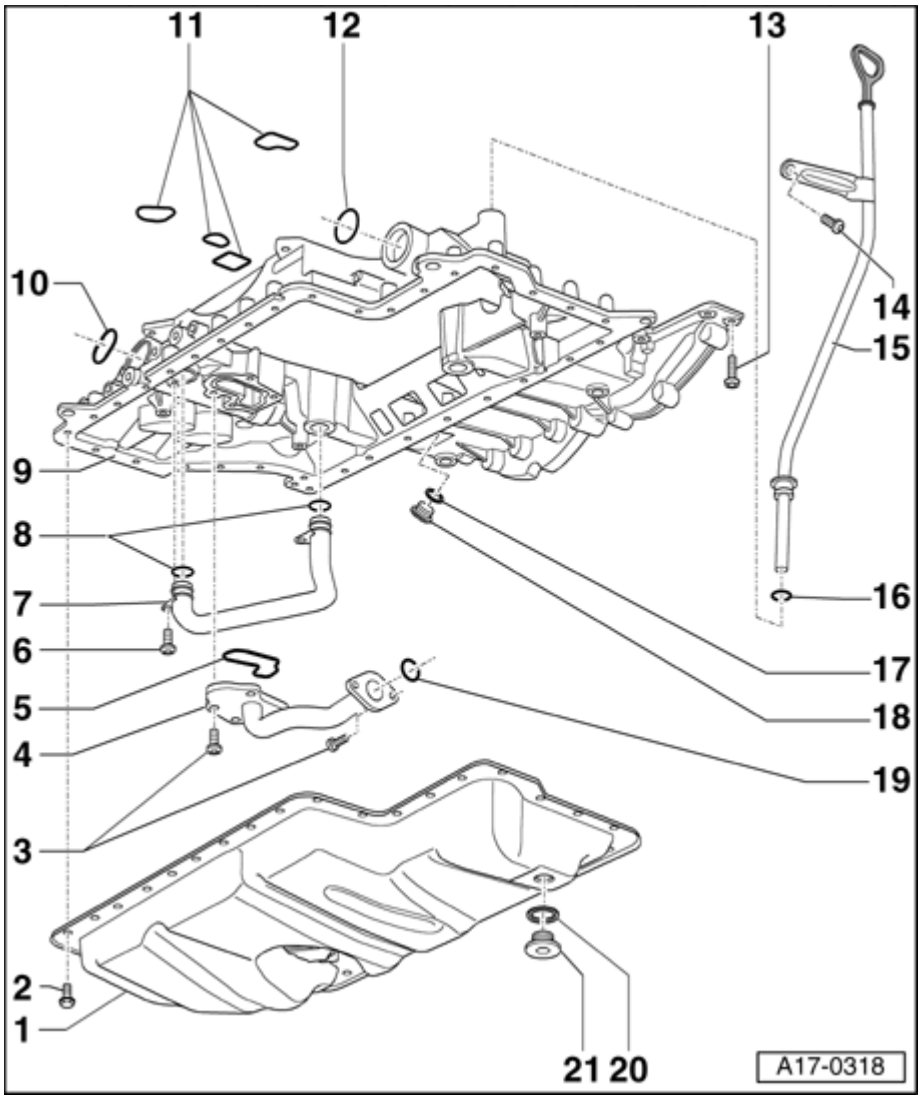

Fig. 402: Upper Section Of Oil Pan, Component Overview
Courtesy of VOLKSWAGEN UNITED STATES, INC.

1 - Oil pan (lower section)

- Removing and installing --> **Lower part of oil pan, removing and installing**
- With Oil Level Thermal Sensor G266
- Oil Level Thermal Sensor G266 , removing and installing --> **Oil Level Thermal Sensor G266 , removing and installing**

2 - 10 Nm

3 - 10 Nm

4 - Oil pipe

5 - Gasket

- Replace

6 - 10 Nm

7 - Oil pipe

8 - O-rings

- Replace

9 - Oil pan (upper section)

- Removing and installing --> **Upper part of oil pan, removing and installing**

10 - Seal

- Replace

11 - Gasket

- Replace

12 - O-ring

- Replace

13 - 15 Nm

14 - 10 Nm

15 - Guide tube for oil dipstick

16 - O-ring

- Replace

17 - Seal

- Replace

18 - Locking bolt, 35 Nm

19 - O-ring

- Replace

20 - Seal

- Replace

21 - Oil drain plug, 50 Nm

Upper part of oil pan, removing and installing

Special tools, testers and auxiliary items required

- Protective glasses
- Hand drill with plastic brush attachment
- Sealant

Removing

- Drain engine oil --> **MAINTENANCE PROCEDURES** .
- Remove engine --> **Engine, removing and installing**.
- Separate engine/transmission --> **Engine and transmission, separating**.
- Remove covers for timing chains --> **All covers for timing chain, removing and installing**.

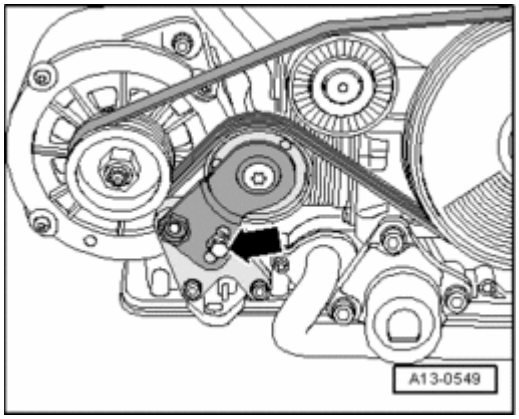

Fig. 403: Loosening Tensioning Bolt And Ribbed Belt
Courtesy of VOLKSWAGEN UNITED STATES, INC.

NOTE:

- **Before removing ribbed belt, mark the turning direction on it with chalk or a felt tip pen. A reversed direction of rotation can cause damage to the belt under operating conditions.**

- Loosen tensioning bolt - **arrow** - and remove ribbed belt.

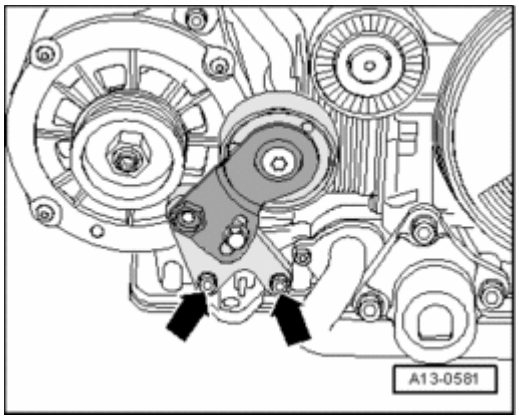

Fig. 404: Removing Tensioning Roller
Courtesy of VOLKSWAGEN UNITED STATES, INC.

- Remove tensioning roller - **arrows** -.

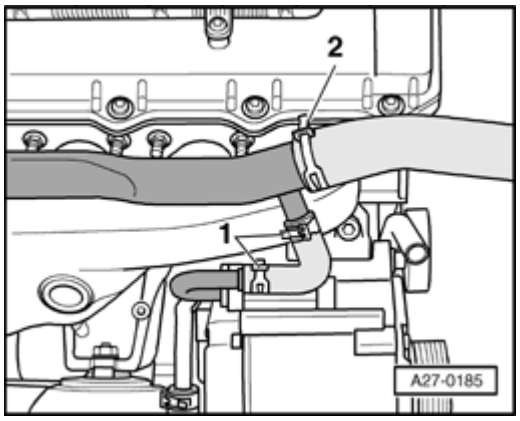

Fig. 405: Removing Hose Clamps And Disconnecting Coolant Hose
Courtesy of VOLKSWAGEN UNITED STATES, INC.

- Remove hose clamps - **1** - and disconnect coolant hose.

NOTE:

- **Ignore - 2 -.**

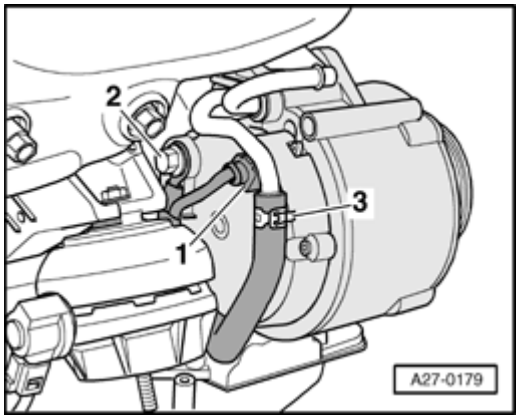

Fig. 406: Disconnecting Coolant Hose On Generator, Electrical Connector & Removing Electrical Wire On Generator
Courtesy of VOLKSWAGEN UNITED STATES, INC.

- Disconnect coolant hose - **3** - on generator.
- Disconnect electrical connector - **1** -.
- Remove electrical wire - **2** - on generator.

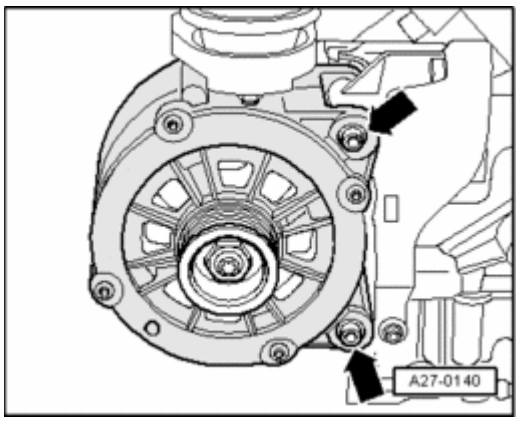

Fig. 407: Removing Generator Bolts
Courtesy of VOLKSWAGEN UNITED STATES, INC.

- Remove bolts - **arrows** -.

NOTE:

- **If generator is stuck in its bracket, install mounting bolt again up to 2 rotations.**
- **Carefully strike on bolt heads using flat side of hammer - doing this loosens threaded sleeves of generator mount.**

- Remove generator.

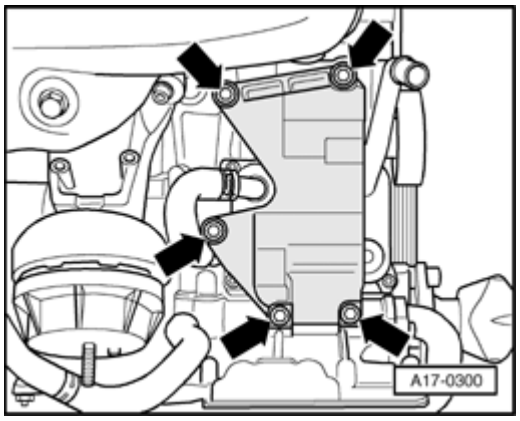

Fig. 408: Removing Bolts & Bracket For Generator
Courtesy of VOLKSWAGEN UNITED STATES, INC.

- Remove bolts - **arrows** -.
- Remove bracket for generator.

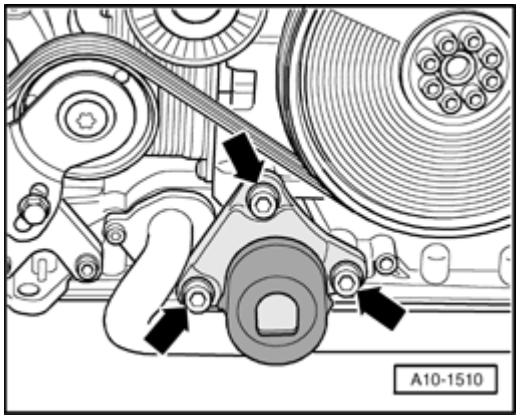

Fig. 409: Removing Bolts And Torque Support From Engine
Courtesy of VOLKSWAGEN UNITED STATES, INC.

- Remove bolts - **arrows** - and remove torque support from engine.

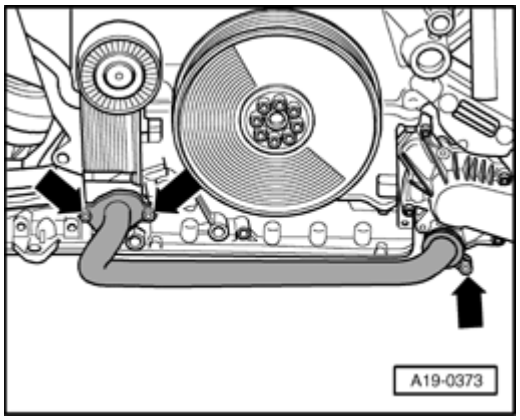

Fig. 410: Removing Front Coolant Pipe On Engine
Courtesy of VOLKSWAGEN UNITED STATES, INC.

- Remove front coolant pipe on engine - **arrows** -.

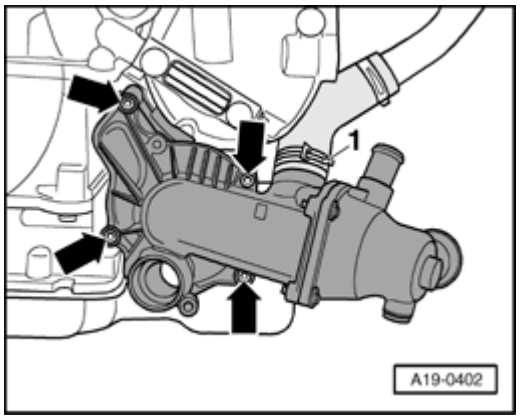

Fig. 411: Disconnecting Coolant Hose & Removing Coolant Pump
Courtesy of VOLKSWAGEN UNITED STATES, INC.

- Disconnect coolant hose - **1** -.
- Remove coolant pump - **arrows** -.

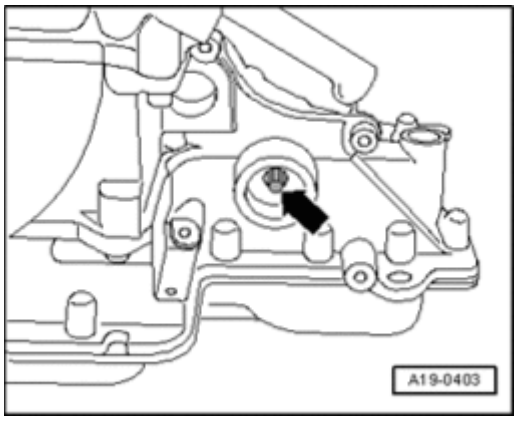

Fig. 412: Removing/Installing Drive Shaft For Coolant Pump From Oil Pump
Courtesy of VOLKSWAGEN UNITED STATES, INC.

- Remove drive shaft - **arrow** - for coolant pump from oil pump.

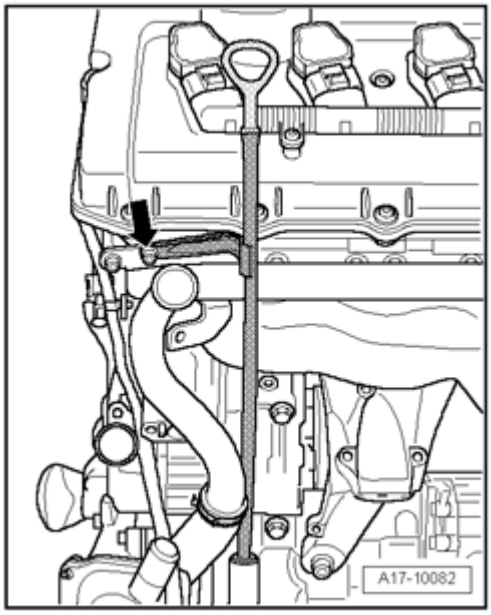

Fig. 413: Removing Guide Pipe For Oil Dipstick At Cylinder Head
Courtesy of VOLKSWAGEN UNITED STATES, INC.

- Remove guide tube for oil dipstick at cylinder head - **arrow** - , pull up and remove.

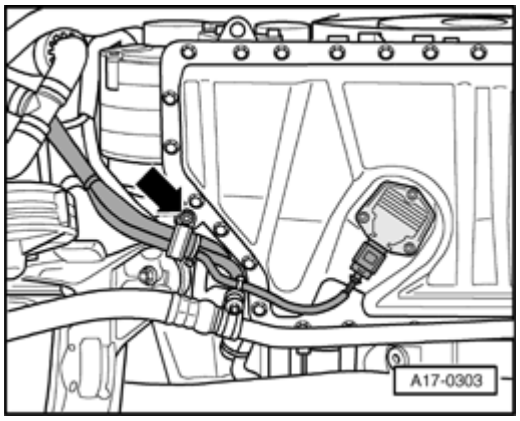

Fig. 414: Removing Guide On Lower Section Of Oil Pan
Courtesy of VOLKSWAGEN UNITED STATES, INC.

- Remove guide - **arrow** - on lower section of oil pan.

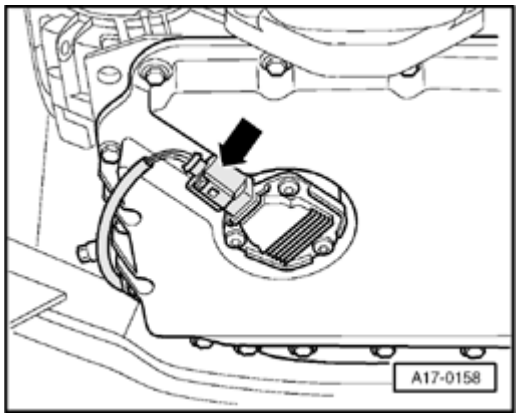

Fig. 415: Disconnecting Electrical Connector On Oil Level Thermal Sensor G266
Courtesy of VOLKSWAGEN UNITED STATES, INC.

- Disconnect electrical connector on Oil Level Thermal Sensor G266 - **arrow** - and free up wire.

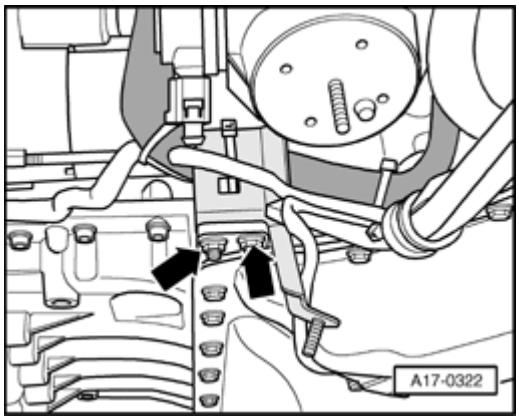

Fig. 416: Removing Wiring Harness Bracket On Lower Section Of Oil Pan
Courtesy of VOLKSWAGEN UNITED STATES, INC.

- Remove wiring harness bracket - **arrow** - on lower section of oil pan.

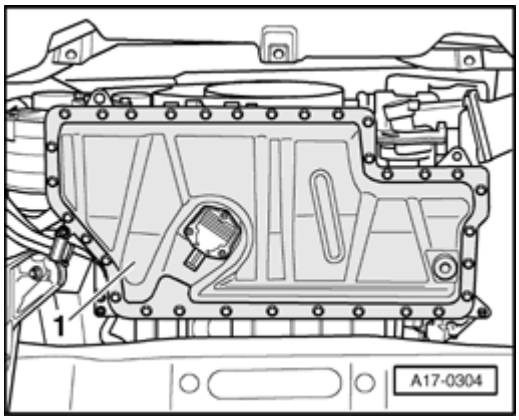

Fig. 417: Removing Oil Pan (Lower Part)
Courtesy of VOLKSWAGEN UNITED STATES, INC.

- Remove oil pan (lower part) - **1** - and pry out carefully.

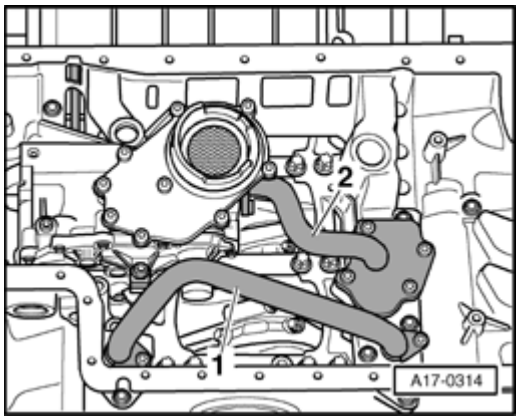

Fig. 418: Removing Bolts And Oil Pipes
Courtesy of VOLKSWAGEN UNITED STATES, INC.

- Remove bolts and remove oil pipes - **1** - and - **2** -.

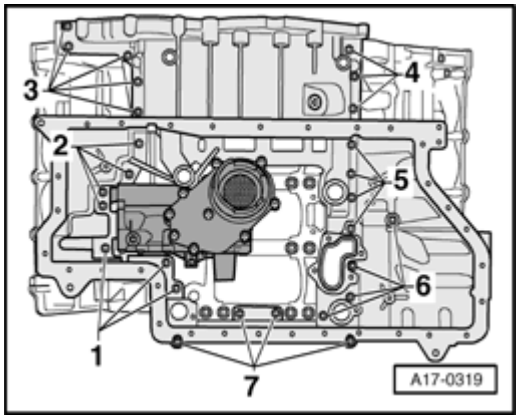

Fig. 419: Removing/Installing Bolts For Upper Section Of Oil Pan
Courtesy of VOLKSWAGEN UNITED STATES, INC.

- Remove bolts - **1 to 7** - for upper section of oil pan.
- Press upper part of oil pan from alignment pins of cylinder block.

Installing

NOTE:

- **Replace seals and O-rings.**

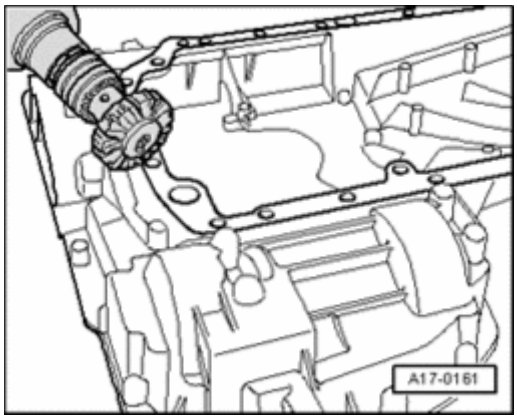

Fig. 420: Using Rotating Plastic Brush To Remove Any Remaining Sealant From Upper Part Of Oil Pan And Cylinder Block
Courtesy of VOLKSWAGEN UNITED STATES, INC.

- Using rotating plastic brush, remove any remaining sealant from upper part of oil pan and cylinder block.

  CAUTION: Wear safety glasses.

- Clean sealing surfaces, must be free of oil and grease.

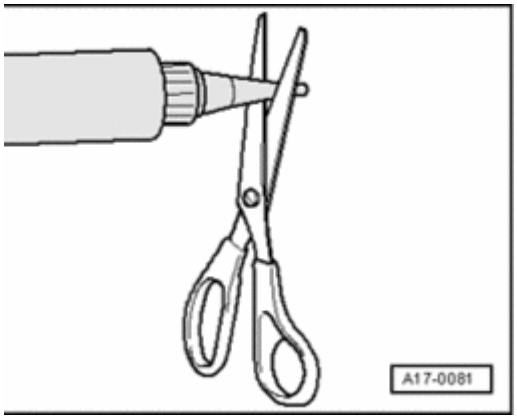

Fig. 421: Cutting Tube Nozzle At Front Marking
Courtesy of VOLKSWAGEN UNITED STATES, INC.

- Cut tube nozzle at front marking (jet dia. approx. 1 mm).

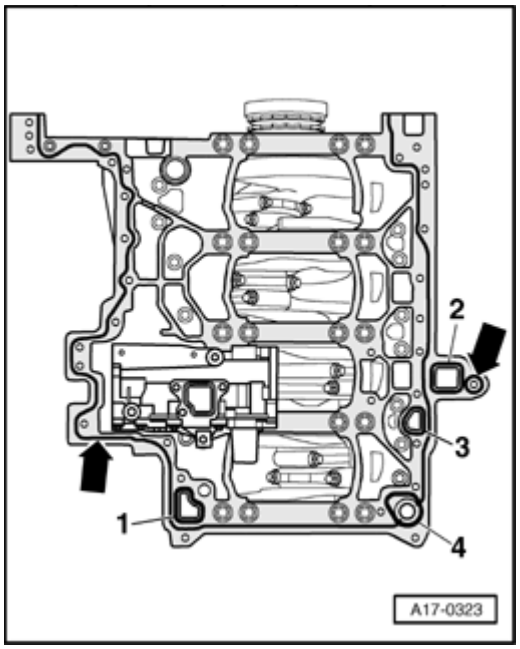

Fig. 422: Inserting New Seals Into Grooves On Cylinder Block
Courtesy of VOLKSWAGEN UNITED STATES, INC.

- Insert new seals - **1 to 4** - into grooves on cylinder block.
- Apply sealant beads - **arrows** - to clean sealing surface of cylinder block as depicted in illustration.

- Thickness of sealant bead: 1.5 to 2.0 mm.

NOTE:

- **The oil pan (upper part) must be installed within 5 minutes after application of sealant.**
- **Sealant bead must not be thicker than specified, otherwise sealant could get into oil pan and clog the strainer on intake tube.**

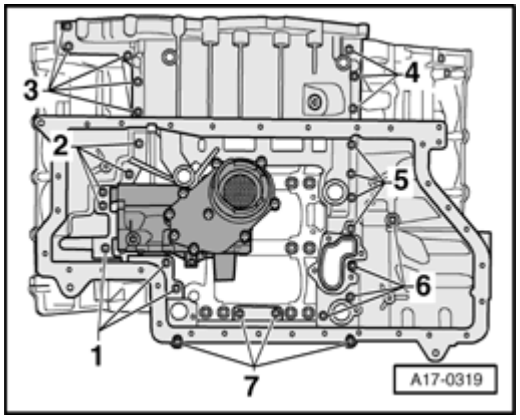

Fig. 423: Removing/Installing Bolts For Upper Section Of Oil Pan
Courtesy of VOLKSWAGEN UNITED STATES, INC.

- With a second technician, position upper section of oil pan and pre-tighten bolts - **1 to 7** - to 5 Nm in

diagonal sequence.
- Tighten bolts - **1 to 7** - diagonally to 15 Nm.

Further installation is in reverse order of removal, note the following:

- Install oil pan (lower part).
- Replace O-ring at guide tube for oil dipstick and insert guide tube into hole in oil pan (upper part).
- Bolt transmission to engine and install engine/transmission unit --> **Engine, installing**.
- When installing generator bracket, note the two alignment bushings.

- Install ribbed belt --> **Ribbed belt, removing and installing** .
- Add engine oil and check oil level --> **MAINTENANCE PROCEDURES** .

Torque specifications

Component					**Nm**
Oil pipes to upper section of oil pan					10
Coolant pump housing to upper section of oil pan					10
Oil dip stick guide tube to cylinder head					10
Coolant line	Coolant pump				10
Front to	Oil pan (upper section)				10
Torque bracket to upper part of oil pan					42
Generator bracket				M8	22
To engine				M10	45
Generator to generator bracket					23
Terminal 30/B+ to generator					16

Oil check valves and spray nozzle valve, component overview

NOTE:

- **If irregular valve noise occurs repeatedly during short journeys and disappears after extended driving, the oil check valves must be replaced.**

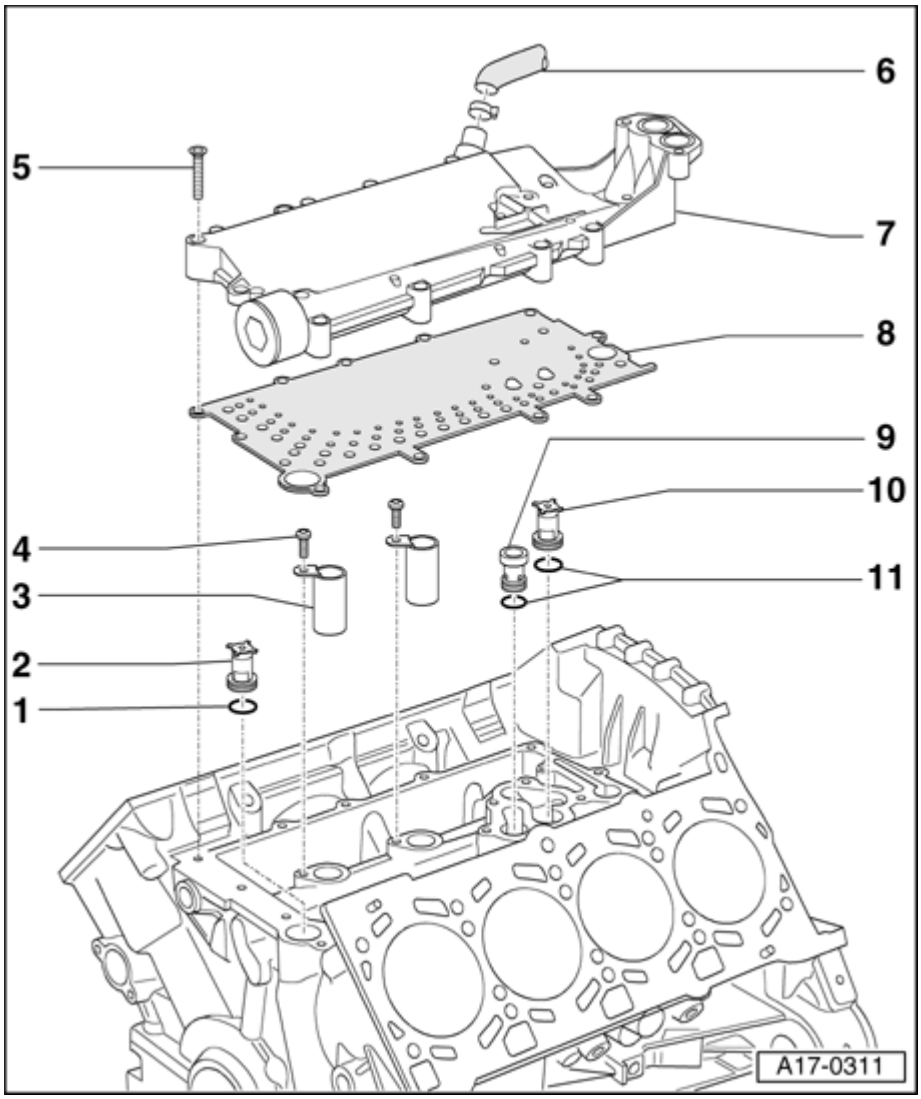

Fig. 424: Oil Check Valves And Spray Nozzle Valve, Component Overview
Courtesy of VOLKSWAGEN UNITED STATES, INC.

1 - O-ring

- Replace

2 - Oil check valve

- Removing and installing --> **Oil check valves and spray nozzle valve, removing and installing**

3 - Ventilation pipe

4 - 10 Nm

- Insert with locking fluid
- Locking fluid

5 - 10 Nm

6 - Hose

- To pressure regulating valve for crankshaft housing ventilation

7 - Cover

8 - Gasket

- Replace

9 - Spray nozzle valve

- Removing and installing --> **Oil check valves and spray nozzle valve, removing and installing**

10 - Oil check valve

- Removing and installing --> **Oil check valves and spray nozzle valve, removing and installing**

11 - O-rings

- Replace

Oil check valves and spray nozzle valve, removing and installing

NOTE:

- **If irregular valve noise occurs repeatedly during short journeys and disappears after extended driving, the oil check valves must be replaced.**

Removing

- Remove intake manifold --> **Intake manifold, removing and installing**.
- Remove oil filter housing --> **Oil filter housing, removing and installing**.

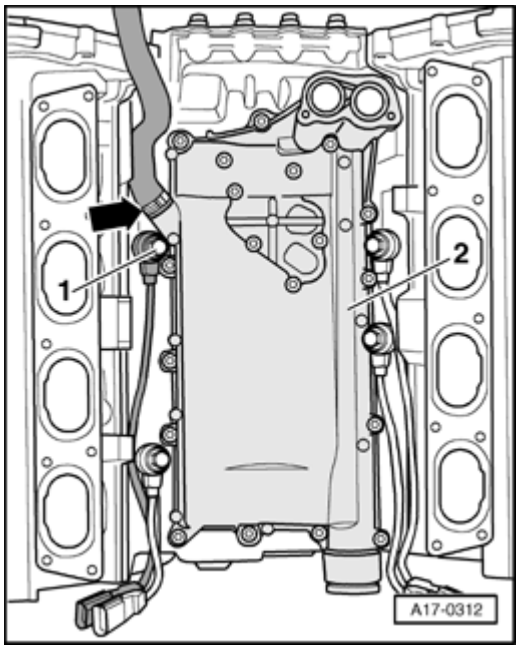

Fig. 425: Identifying Right Rear Knock Sensor Bolt, Crankshaft Housing Ventilation & Oil Check Valves Cover
Courtesy of VOLKSWAGEN UNITED STATES, INC.

- Remove right rear knock sensor, to do so remove bolt - **1** -.
- Remove hose of crankshaft housing ventilation - **arrow** -.
- Remove cover - **2** - for oil check valves.
- Remove seal.

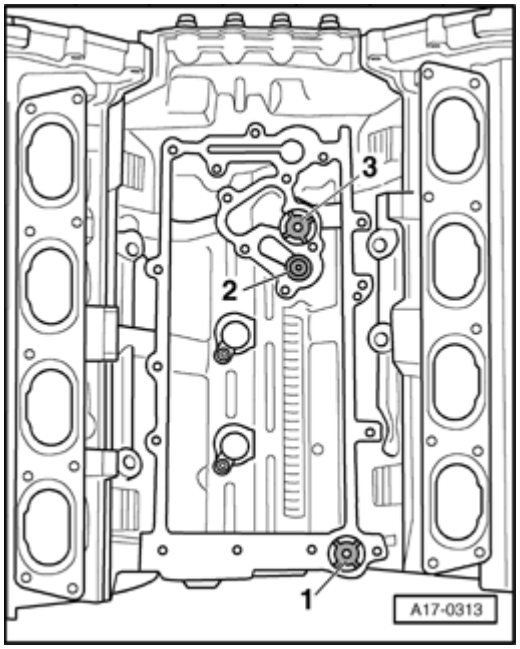

Fig. 426: Removing Oil Check Valves & Spray Nozzle Valve
Courtesy of VOLKSWAGEN UNITED STATES, INC.

- Remove oil check valves - **1** - and - **3** -.
- Remove spray nozzle valve - **2** -.

Installing

Installation is in reverse order of removal, note the following:

NOTE:

- **Replace gaskets and O-rings.**
- **Secure all hose connections using hose clamps appropriate for the model type .**

- Install oil filter housing --> **Oil filter housing, removing and installing**.
- Install intake manifold --> **Intake manifold, removing and installing**.

Torque specifications

Component	Nm
Cover for oil check valves to cylinder block	10
Knock sensor to cylinder block	25 * See note

*Do not oil bolt

Oil filter housing, component overview

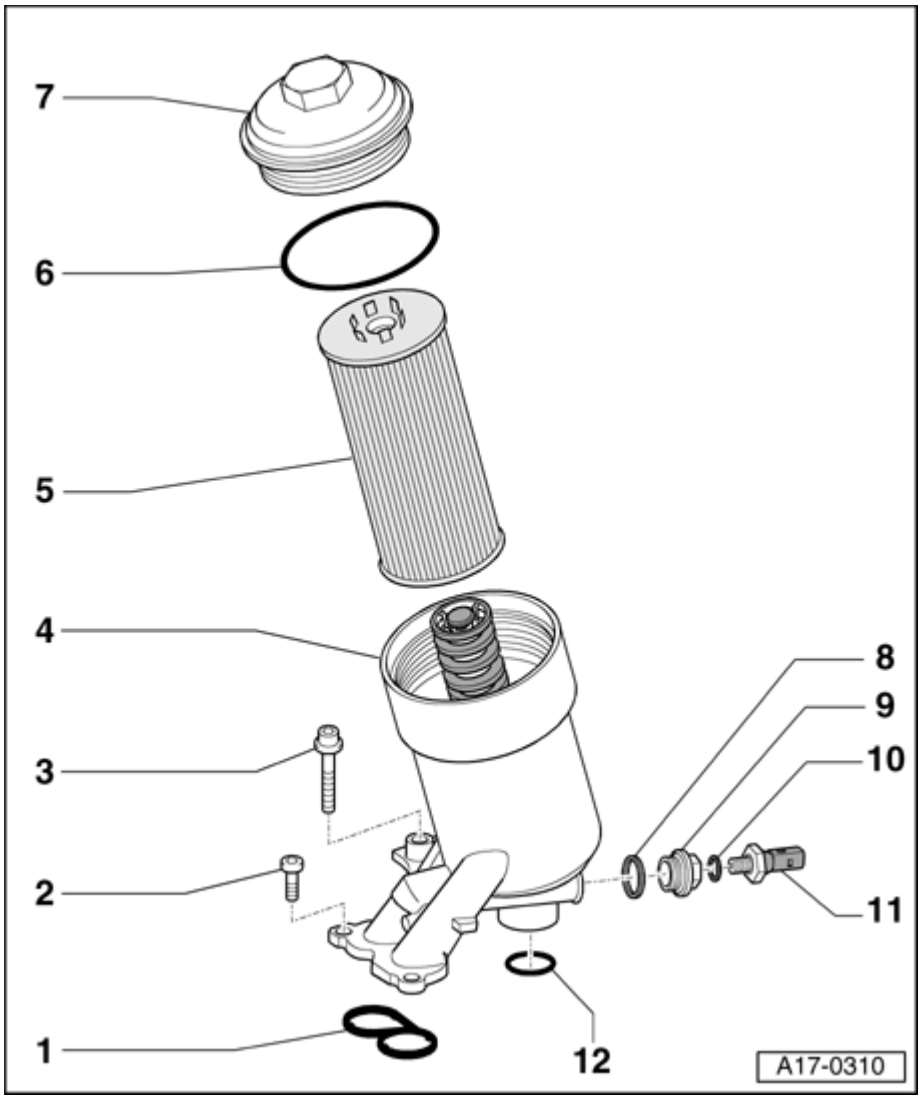

Fig. 427: Oil Filter Housing, Component Overview
Courtesy of VOLKSWAGEN UNITED STATES, INC.

1 - Gasket

- Replace

2 - 10 Nm

3 - 22 Nm

4 - Oil filter housing

5 - Oil filter element

- Note change intervals Fluid Capacity Chart

6 - O-ring

- Replace

7 - Cap, 25 Nm

- Loosen and tighten using socket wrench 36 mm.

8 - Seal

- Replace

9 - Locking bolt, 50 Nm

10 - Seal

- Replace

11 - Oil Pressure Switch F1 , 1.4 bar, 25 Nm

- Black insulation
- Checking --> **Oil pressure and oil pressure switch, checking**

12 - O-ring

- Replace

Oil filter housing, removing and installing

Special tools, testers and auxiliary items required

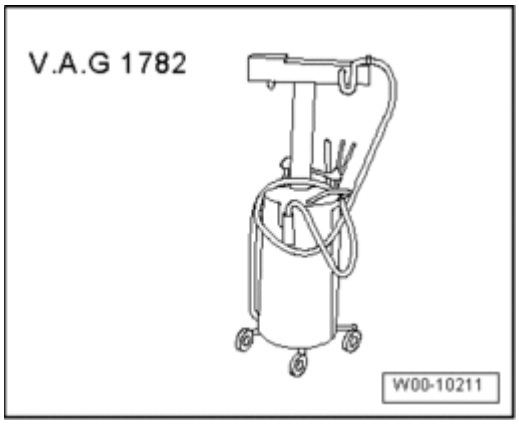

Fig. 428: Identifying Old Oil Collecting And Extracting Device V.A.G 1782
Courtesy of VOLKSWAGEN UNITED STATES, INC.

- Old oil collecting and extracting device V.A.G 1782

Removing

- Remove intake manifold --> **Intake manifold, removing and installing**.

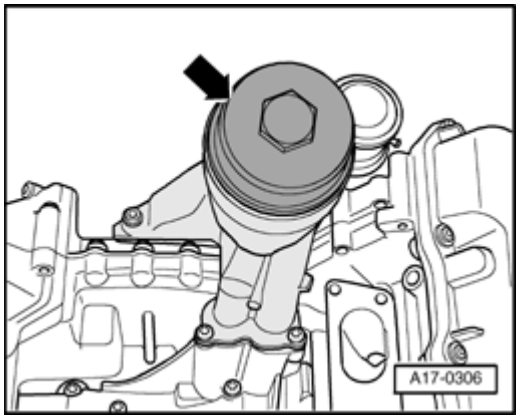

Fig. 429: Removing Cap For Oil Filter Housing
Courtesy of VOLKSWAGEN UNITED STATES, INC.

- Remove cap - **arrow** - for oil filter housing.
- Remove oil filter element.
- Extract engine oil using old oil collecting and extracting device V.A.G 1782 from oil filter housing.

NOTE:

- **Place a rag around oil filter housing to catch escaping engine oil.**

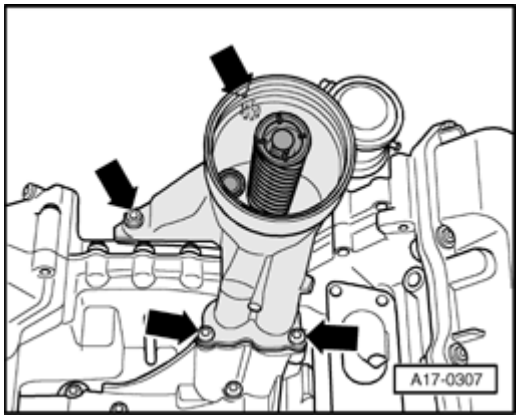

Fig. 430: Removing Bolts & Oil Filter Housing
Courtesy of VOLKSWAGEN UNITED STATES, INC.

- Remove bolts - **arrows** -.
- Remove oil filter housing.

Installing

Installation is in reverse order of removal, note the following:

NOTE:

- **Replace seals and O-rings.**

- Install intake manifold --> **Intake manifold, removing and installing**.
- Add engine oil and check oil level --> **MAINTENANCE PROCEDURES** .

Torque specifications

Component		Nm
Oil filter housing	Cylinder block	10
To	Cover for timing chain	22
Cap to oil filter housing		25

Oil cooler, removing and installing

Special tools, testers and auxiliary items required

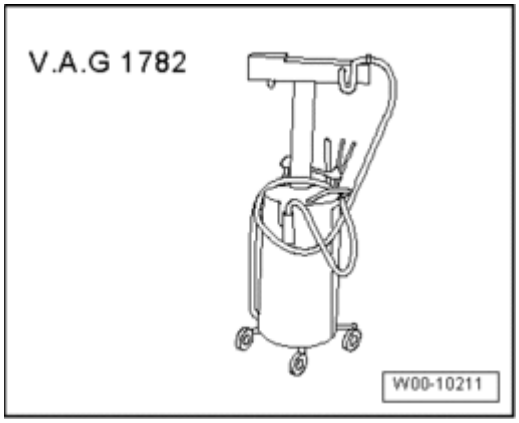

Fig. 431: Identifying Old Oil Collecting And Extracting Device V.A.G 1782
Courtesy of VOLKSWAGEN UNITED STATES, INC.

- Old oil collecting and extracting device V.A.G 1782

Removing

- Remove generator --> **27 - STARTER, GENERATOR, CRUISE CONTROL** .

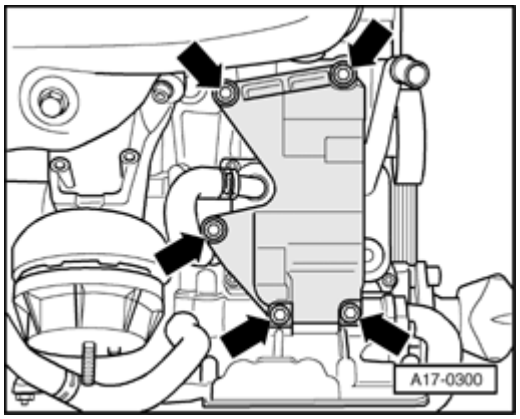

Fig. 432: Removing Bolts & Bracket For Generator
Courtesy of VOLKSWAGEN UNITED STATES, INC.

- Remove bolts - **arrows** -.
- Remove bracket for generator.

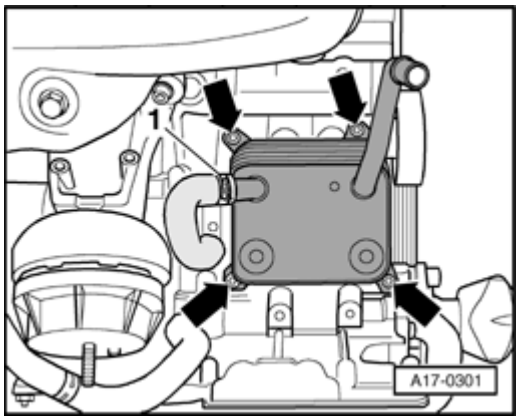

Fig. 433: Disconnecting Coolant Hose From Oil Cooler & Removing Bolts And Oil Cooler
Courtesy of VOLKSWAGEN UNITED STATES, INC.

- Place Old oil collecting and extracting device V.A.G 1782 underneath.
- Disconnect coolant hose - **1** - from oil cooler.
- Remove bolts - **arrows** - and remove oil cooler.

Installing

Installation is in reverse order of removal, note the following:

NOTE:

- **Replace O-rings.**
- **Secure all hose connections using hose clamps appropriate for the model type .**

- When installing generator bracket, note two alignment bushings.

- Install generator --> **27 - STARTER, GENERATOR, CRUISE CONTROL** .

Torque specifications

Component		Nm
Oil cooler to cylinder block		10
Generator bracket	M8	22
To engine	M10	45

Oil pressure and oil pressure switch, checking

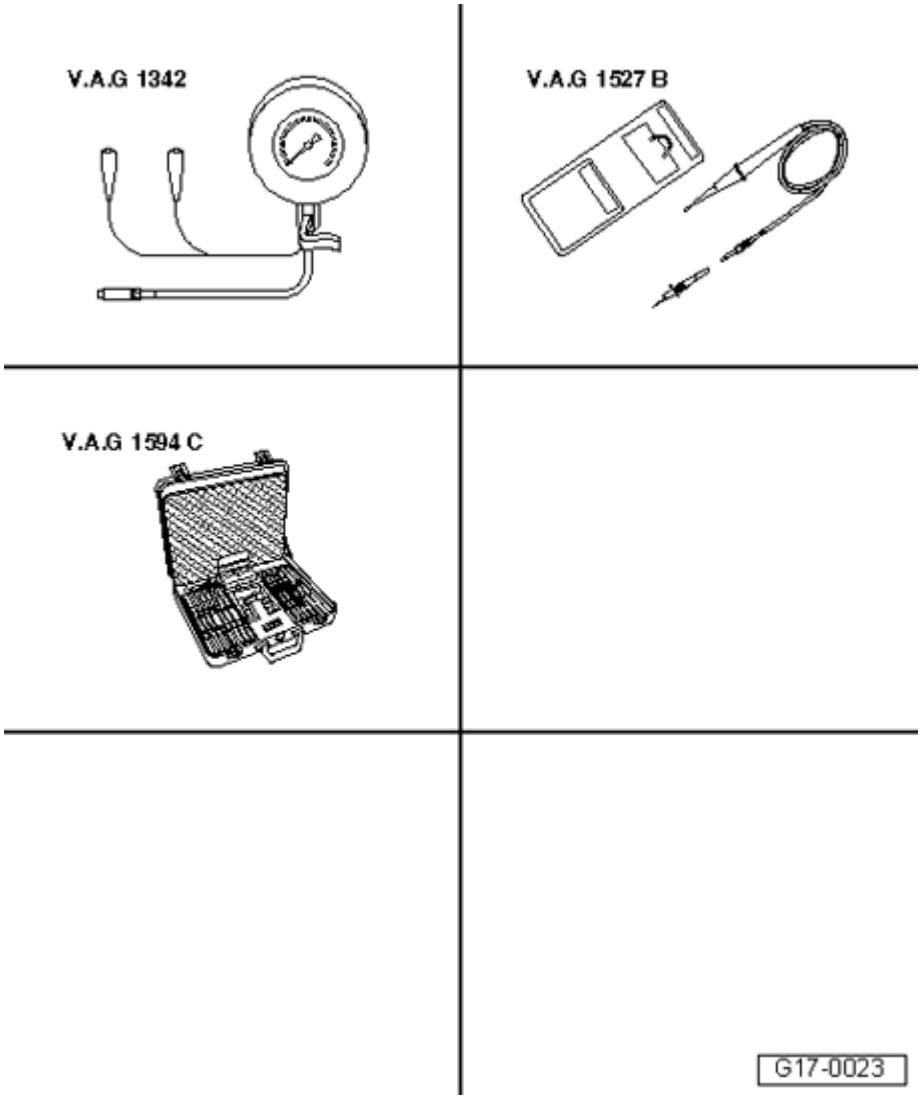

Fig. 434: Identifying Special Tools - Oil Pressure And Oil Pressure Switch, Checking
Courtesy of VOLKSWAGEN UNITED STATES, INC.

Special tools, testers and auxiliary items required

- Oil pressure gauge V.A.G 1342 with adapter V.A.G 1342/14
- Voltage tester V.A.G 1527 B
- Connector test set V.A.G 1594 C

Test conditions

- Oil level OK
- Engine oil temperature approximately 90° C.

Test sequence

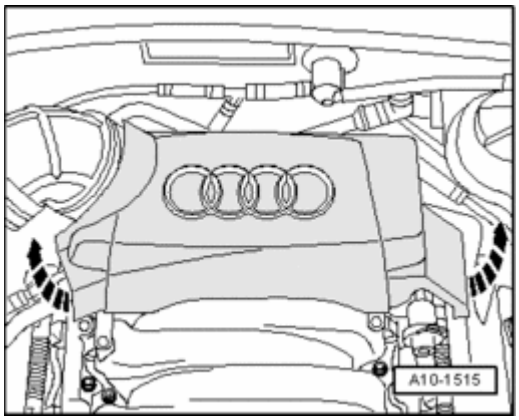

Fig. 435: Removing Rear Engine Cover
Courtesy of VOLKSWAGEN UNITED STATES, INC.

- Remove rear engine cover - **arrows** -.

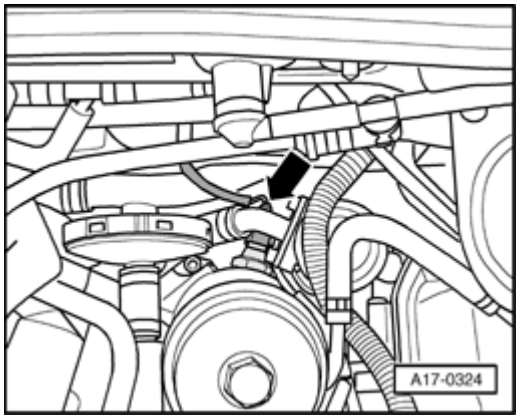

Fig. 436: Disconnecting Electrical Harness Connector From Oil Pressure Switch
Courtesy of VOLKSWAGEN UNITED STATES, INC.

- Disconnect electrical harness connector from oil pressure switch - **arrow** -.
- Remove oil pressure switch.

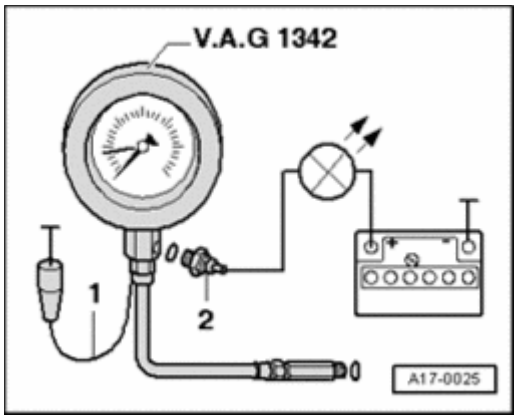

Fig. 437: Connecting Oil Pressure Gauge V.A.G 1342 With Adapter V.A.G 1342/14 To Hole For Oil Pressure Switch
Courtesy of VOLKSWAGEN UNITED STATES, INC.

- Connect oil pressure gauge V.A.G 1342 with adapter V.A.G 1342/14 to hole for oil pressure switch.
- Thread oil pressure switch - **2** - into oil pressure tester V.A.G 1342.

Oil pressure switch, checking

- Connect brown wire - **1** - of tester to Ground ("").
- Connect voltage tester V.A.G 1527 B using adapter cables from connector test kit V.A.G 1594 C to oil pressure switch and battery plus ("+").

- LED must not light up

- If LED is lit, oil pressure switch must be replaced.
- Start engine.

NOTE:

- **While starting engine, watch Pressure Tester and LED as oil pressure switch may open during start.**
- **At 1.2 to 1.6 bar pressure, LED must light up.**

- If LED is not lit, oil pressure switch must be replaced.

Oil pressure, checking

- Start engine (engine oil temperature approximately 90° C).

- Oil pressure at 2000 RPM: min. 2.0 bar.
- Oil pressure at 3500 RPM: min. 3.5 bar.

NOTE:

- **Replace sealing ring when installing oil pressure switch.**

Torque specifications

Component	Nm
Oil pressure switch to oil filter housing	25

Engine oil

Oil quantities, oil specifications and viscosity classes Fluid Capacity Chart.

Oil level, checking

Test conditions

- Engine oil temperature min. 60° C.
- Vehicle in level position.
- After stopping engine, wait a few minutes to allow oil to flow back into oil pan.

Test sequence

- Pull out oil dipstick, wipe off with a clean cloth and re-insert dipstick again up to stop.
- Withdraw dipstick again and read oil level.

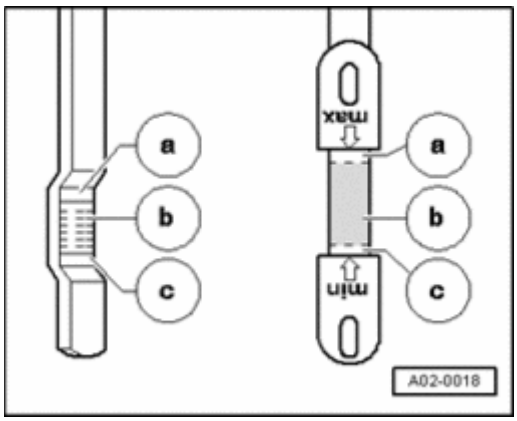

Fig. 438: Range Of Markings On Dipstick
Courtesy of VOLKSWAGEN UNITED STATES, INC.

Range of markings on dipstick:

a - Oil must not be added.

b - Oil may be topped off. After topping off, oil may be in range - **a** -.

c - Oil must be added. After topping off, it is sufficient if oil level is somewhere in range - **b** - (shaded area).

NOTE:

- **Oil level must not exceed mark - a - on oil dipstick.**

19 - ENGINE - COOLING SYSTEM

COOLING SYSTEM COMPONENTS, REMOVING AND INSTALLING

Cooling system components, removing and installing

CAUTION: Cover cap of expansion tank with rag and open carefully, as hot steam i.e. hot coolant may escape when opening.

NOTE:

- **When the engine is warm the cooling system is under pressure. If necessary release pressure before commencing repair work.**
- **Secure all hose connections using hose clamps appropriate for the model type .**
- **Always replace gaskets and seals.**
- **Arrows on coolant pipes and coolant hoses must line up across from each other.**

Coolant hose connection diagram

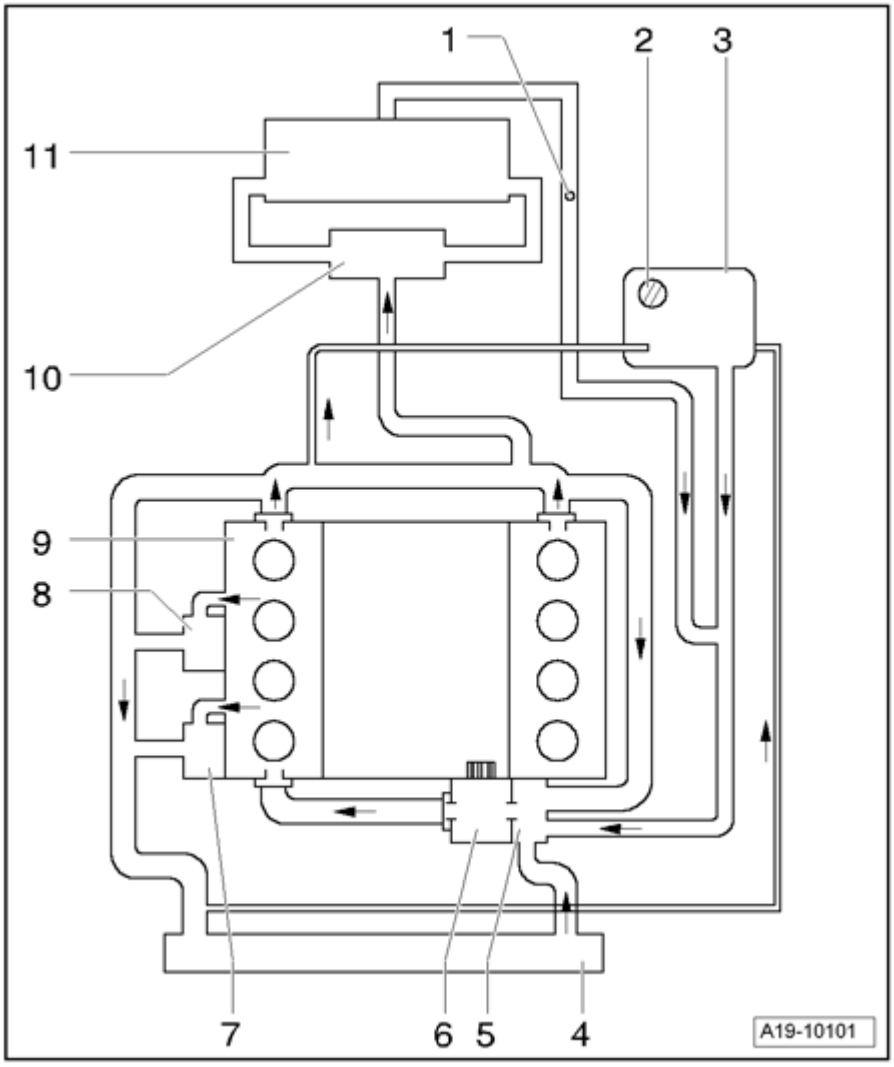

Fig. 439: Coolant Hose Connection Diagram
Courtesy of VOLKSWAGEN UNITED STATES, INC.

1 - Bleeder screw

- Tighten by hand

2 - Cap

- Pressure relief valve in cap, checking **Pressure relief valve in cap, checking**

3 - Expansion tank

4 - Radiator

- Removing and installing --> **Radiator, removing and installing**
- Replace coolant after replacing

5 - Coolant thermostat

- Removing and installing --> **Coolant thermostat, removing and installing**

6 - Coolant pump

- Removing and installing --> **Coolant pump, removing and installing**

7 - Generator

8 - Oil cooler

- Removing and installing --> **Oil cooler, removing and installing**

9 - Cylinder head/cylinder block

- Replace coolant after replacing

10 - Pump valve unit

- Checking, removing and installing --> **87 - AIR CONDITIONING**

11 - Heater unit heat exchanger

- Replace coolant after replacing

Cooling system, draining and filling

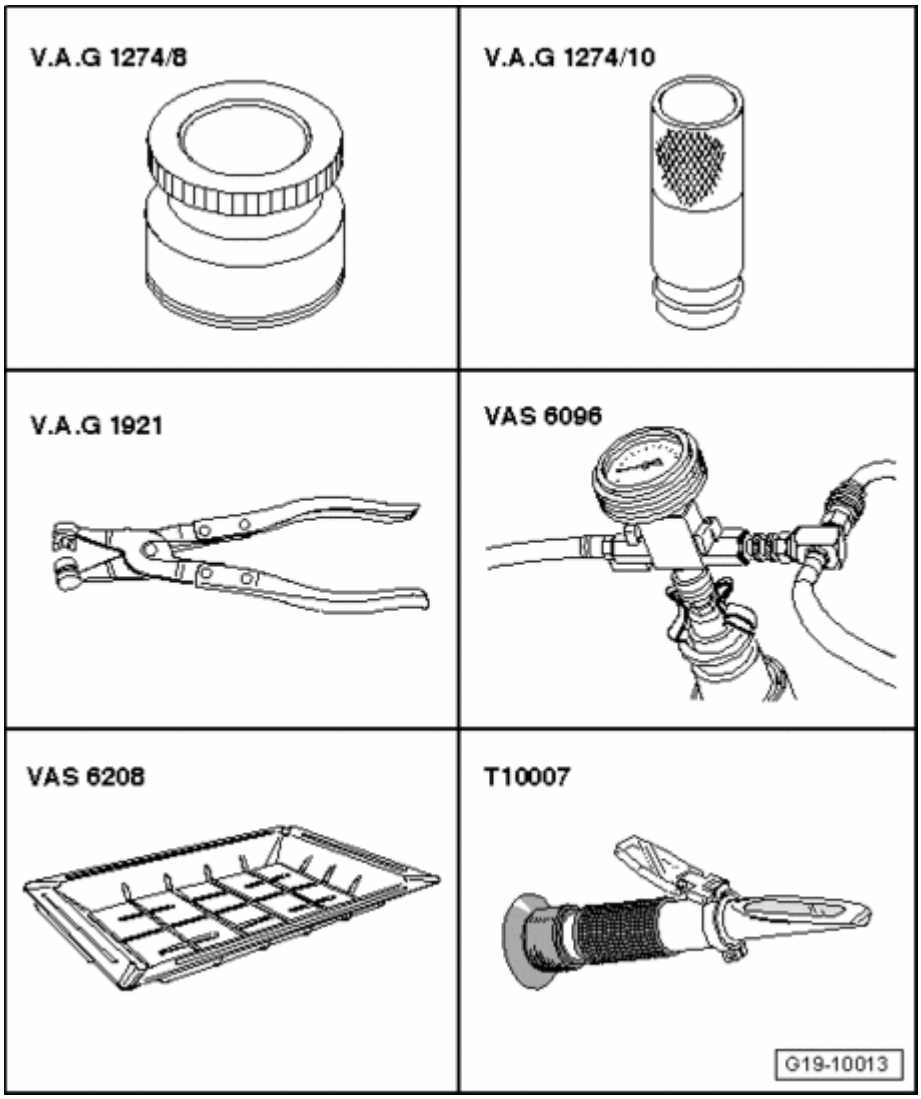

Fig. 440: Identifying Special Tools - Cooling System, Draining And Filling
Courtesy of VOLKSWAGEN UNITED STATES, INC.

Special tools, testers and auxiliary items required

- Adapter V.A.G 1274/8
- Adapter V.A.G 1274 tester V.A.G 1274/10
- Hose clamp pliers V.A.G 1921
- Cooling system charge unit VAS 6096
- Drip tray for workshop crane VAS 6208
- Refractometer T10007

Draining

NOTE:

- **Drained coolant must be stored in a clean container for disposal or reuse.**

CAUTION: Cover cap of expansion tank with rag and open carefully, as hot steam i.e. hot coolant may escape when opening.

- Open cap of coolant expansion tank.

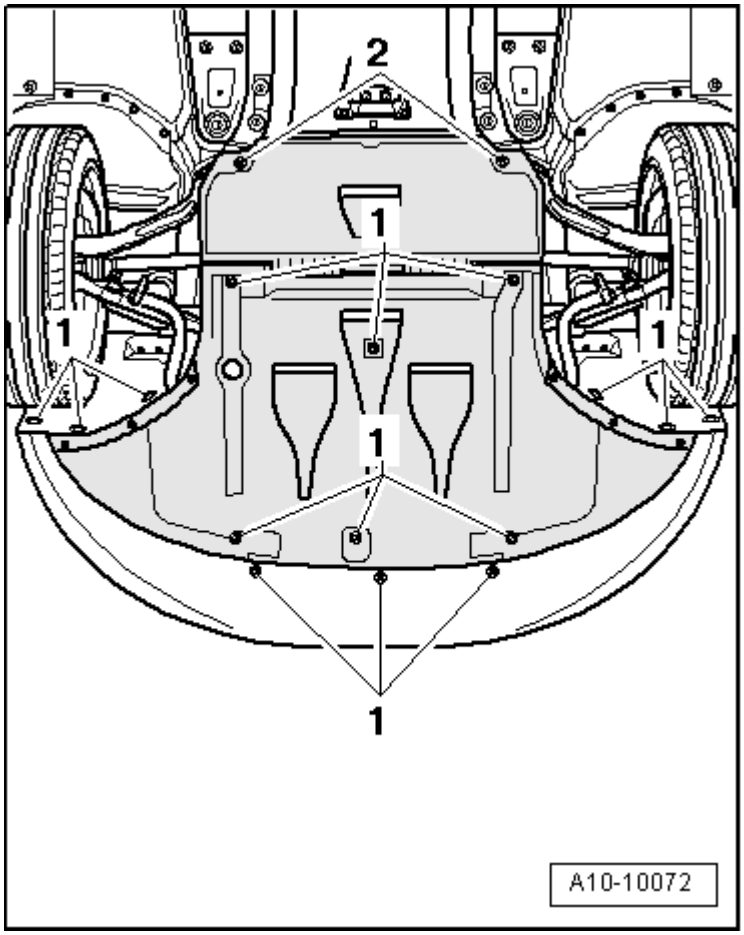

Fig. 441: Identifying Quick-Release Fasteners & Noise Insulation
Courtesy of VOLKSWAGEN UNITED STATES, INC.

- Loosen quick-release fasteners - **1** - and - **2** - and remove front noise insulation.

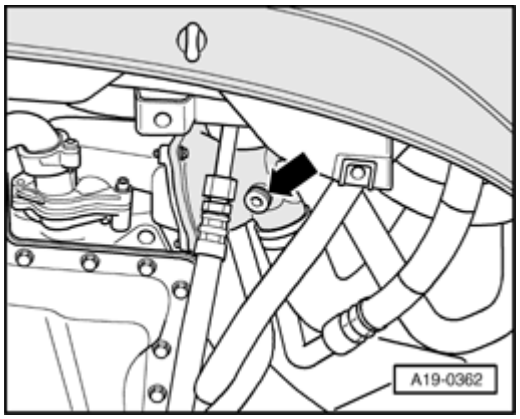

Fig. 442: Removing/Installing Drain Plug On Coolant Thermostat Housing
Courtesy of VOLKSWAGEN UNITED STATES, INC.

- Place drip tray VAS 6208 under engine.
- Remove drain plug - **arrow** - on coolant thermostat housing and drain coolant from engine.

Filling

- Ignition switched off.

NOTE:

- **The cooling system is filled all year round with a mixture of frost and corrosion protection additives and water.**
- **Use only *coolant additive Plus G 012 A8F A1* (short: G12+) "according to TL VW 774 F". Other coolant additives may above all reduce the corrosion protection effect significantly. The damage resulting from this may lead to loss of coolant and consequently to severe engine damage.**
- **Coolant additive G12+ can be combined with additives G11 and G12.**
- **G12+ and coolant additives with the designation "according to TL VW 774 F" reduce frost and corrosion damage as well as lime deposits. They also raise the boiling point. For this reason the system must be filled all year round with frost and corrosion protection additives.**
- **Because of its high boiling point, the coolant improves engine reliability under heavy loads, particularly in countries with tropical climates.**
- **Protection against frost must be assured to about -25° C (in arctic climatic countries to about -35° C).**
- **The coolant concentration must not be reduced by adding water even in warmer seasons and in warmer countries. The coolant additive portion must be at least 40%.**
- **If for climatic reasons greater frost protection is required, the amount of G12+ can be increased, but only up to 60% (frost protection to about -40° C), otherwise frost protection and cooling effectiveness will be reduced.**
- **Only clean drinking water may be used for mixing coolant.**
- **If the radiator, heater core, cylinder head and cylinder head gasket or**

cylinder block is replaced, completely replace the engine coolant.

- **Dirty coolant must not be re-used.**
- **For coolant G12+ , use refractometer T10007 to test frost protection in cooling system.**

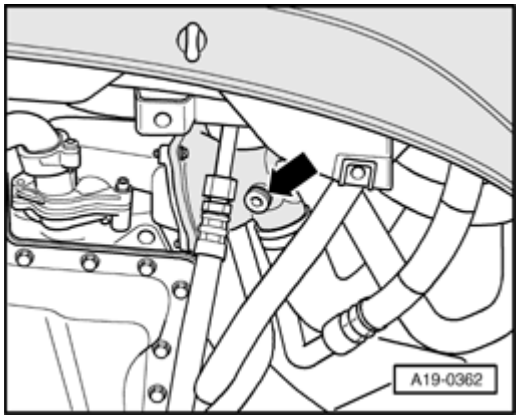

Fig. 443: Removing/Installing Drain Plug On Coolant Thermostat Housing
Courtesy of VOLKSWAGEN UNITED STATES, INC.

- Re-install drain plug - **arrow** - with new sealing ring.

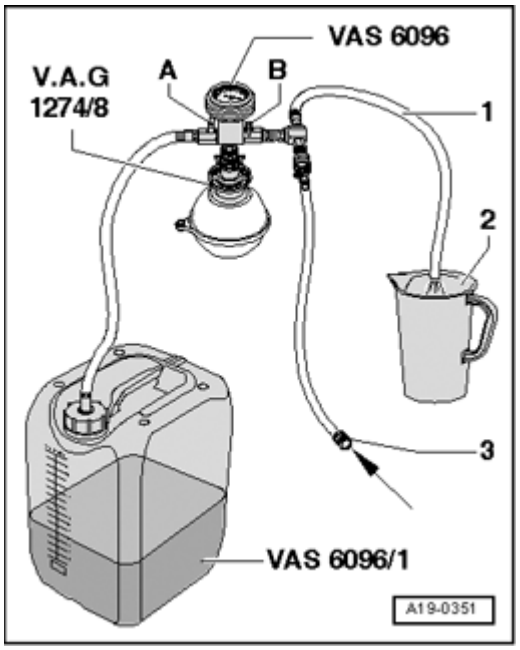

Fig. 444: Filling Reservoir VAS 6096/1 With At Least 12 Liters Of Premixed Coolant
Courtesy of VOLKSWAGEN UNITED STATES, INC.

- Fill replacement reservoir VAS 6096/1 with at least 12 liters of pre-mixed coolant with correct mixture ratio:

- G12+ (40%) and water (60%) for frost protection up to -25° C

- G12+ (50%) and water (50%) for frost protection up to -35° C
- G12+ (60%) and water (40%) for frost protection up to -40° C

- Install adapter V.A.G 1274/8 onto expansion tank.
- Assemble Cooling System Charge Unit VAS 6096 on adapter V.A.G 1274/8.
- Place air outlet hose - **1** - into a small container - **2** -. (A small amount of coolant is drawn off which should be reserved with discharged air.)
- Close both valves - **A** - and - **B** - by turning lever perpendicular to direction of flow.

- Connect hose - **3** - to pressurized air.

- Pressure: 6 to 10 bar positive pressure.

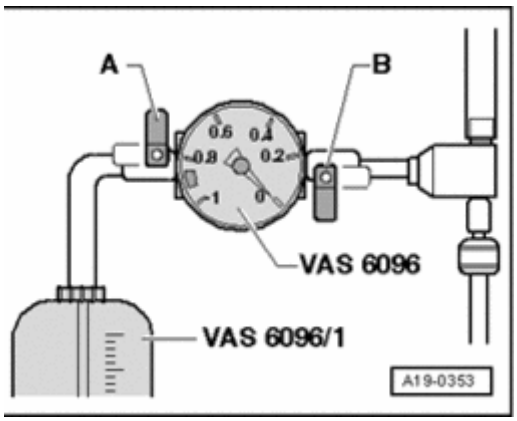

Fig. 445: Cooling System, Draining And Filling
Courtesy of VOLKSWAGEN UNITED STATES, INC.

- Open valve - **B** - , turn lever in direction of flow to do this.

- A vacuum is created in cooling system by suction jet pump.
- Needle on instrument display must travel into green region.

- Also briefly open valve - **A** - , turn lever in direction of flow to do this, so that hose of the replacement reservoir VAS 6096/1 is filled with coolant.
- Close valve - **A** - again.
- Let valve - **B** - remain open another 2 minutes.

- A further vacuum is created in cooling system by suction jet pump.
- Needle on instrument display must still remain in green region.

- Close valve - **B** -.

- Needle in display instrument must remain in green region, then sufficient vacuum in cooling system is obtained for upcoming filling.

- If needle stands below green region, repeat procedure.
- If vacuum decreases, cooling system is leaking.

  - Disconnect pressurized air hose.
  - Open valve - **A** -.

- The vacuum in cooling system has effect of extracting coolant from coolant reservoir VAS 6096/1 ; cooling system is filled.

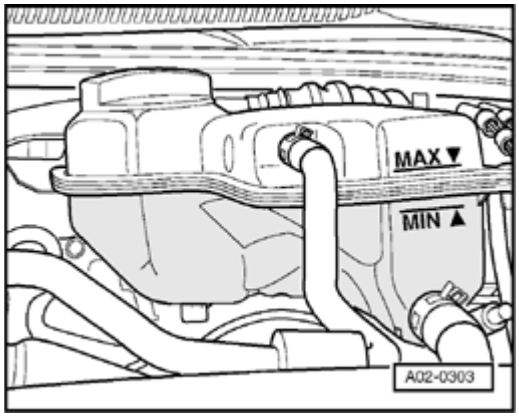

Fig. 446: Checking Coolant Level
Courtesy of VOLKSWAGEN UNITED STATES, INC.

  - Check coolant level and add coolant up to MAX-marking.

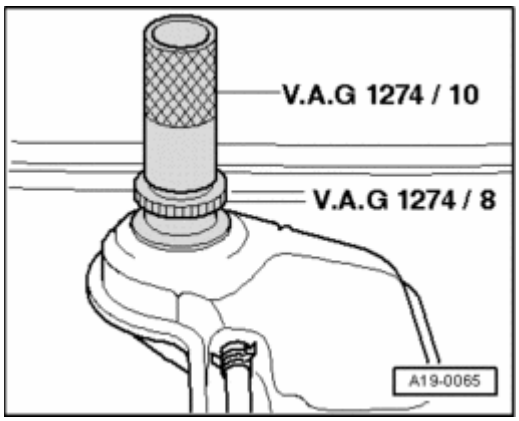

Fig. 447: Connecting Pipe For Cooling System Tester V.A.G 1274/10 To Adapter
Courtesy of VOLKSWAGEN UNITED STATES, INC.

  - Install adapter V.A.G 1274/8 onto expansion tank.
  - Connect pipe V.A.G 1274/10 to adapter.

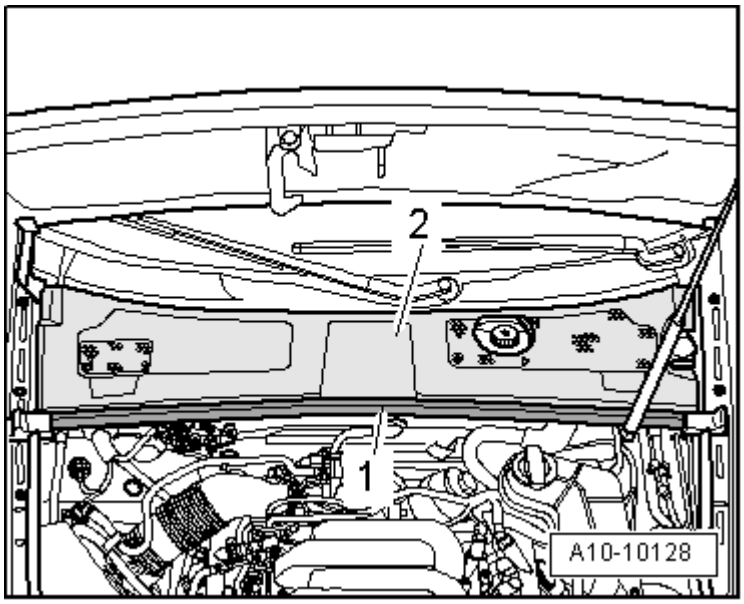

Fig. 448: Removing Rubber Seal For Plenum Chamber Cover & Plenum Chamber Cover
Courtesy of VOLKSWAGEN UNITED STATES, INC.

- Remove rubber seal for plenum chamber cover - **1** -.
- Remove plenum chamber cover - **2** - toward front.

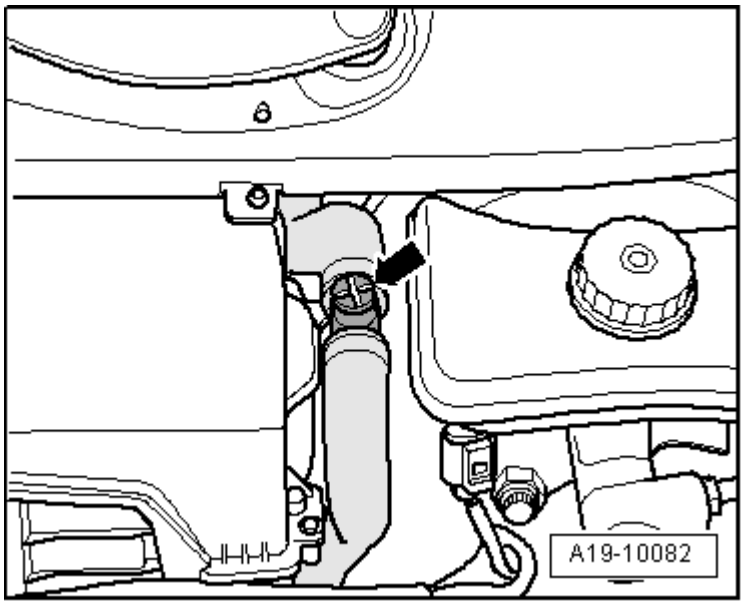

Fig. 449: Opening Bleeder Screw
Courtesy of VOLKSWAGEN UNITED STATES, INC.

- Open bleeder screw - **arrow** - in coolant hose.
- Fill up coolant until it escapes from the coolant hose bleeder screw without bubbles.
- Close coolant hose bleeder screw.
- If present, switch on auxiliary heater for about 30 seconds.

- Twist expansion tank cap closed.
- Start engine.
- Set heating air conditioning system to "HI" on both sides.
- Let engine run at 2000 RPM for 3 minutes.

- Heating effect must be noticeable at the latest as soon as the needle on the coolant temperature gauge moves.

- Shut off engine.

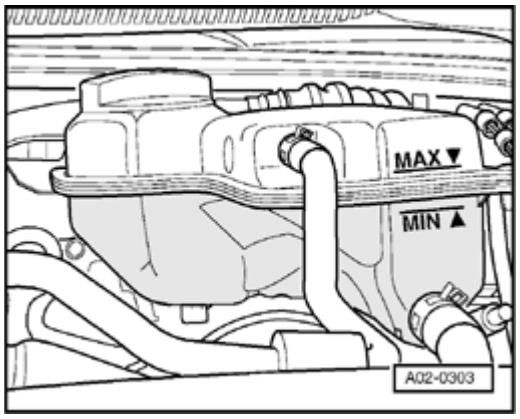

Fig. 450: Checking Coolant Level
Courtesy of VOLKSWAGEN UNITED STATES, INC.

- Check coolant level.

- Coolant level may be above MAX marking with engine at operating temperature.

Coolant pump and coolant regulator, component overview

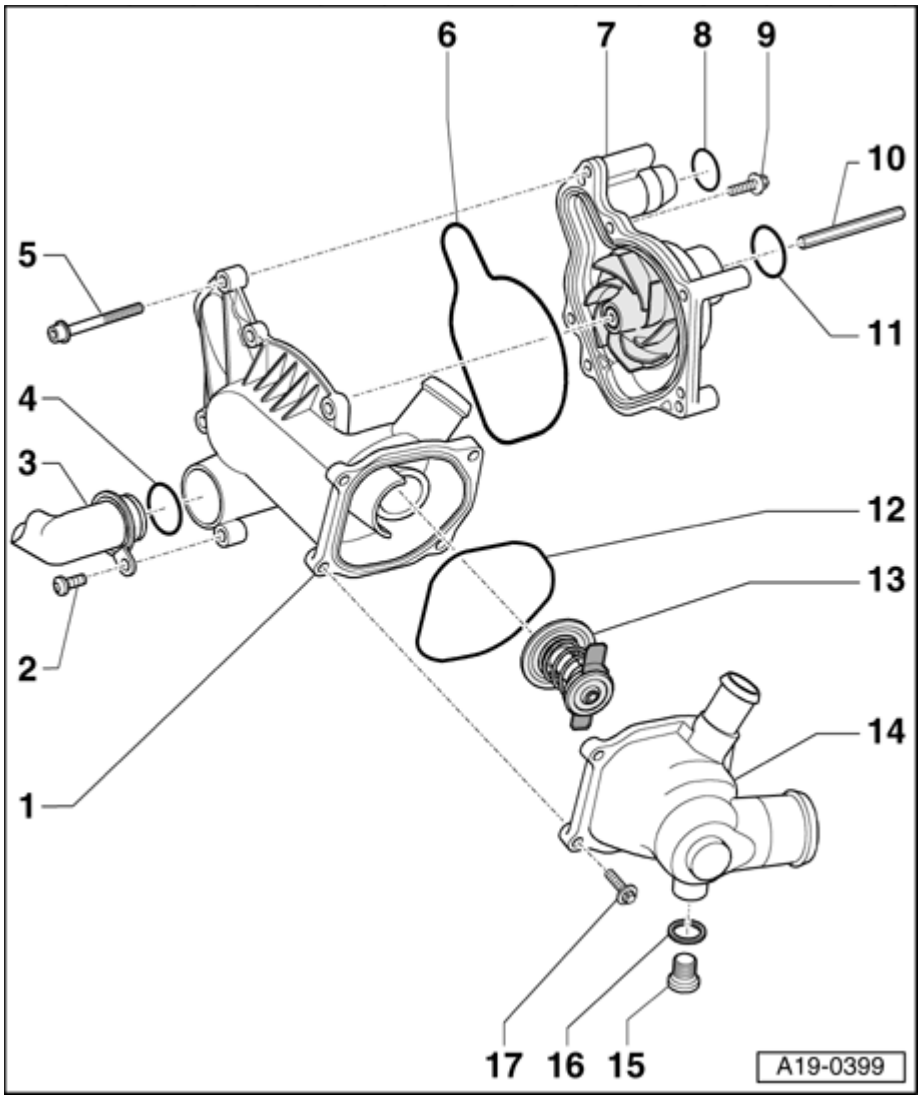

Fig. 451: Coolant Pump And Coolant Regulator, Component Overview
Courtesy of VOLKSWAGEN UNITED STATES, INC.

1 - Housing

- For coolant pump
- Removing and installing --> **Coolant pump, removing and installing**

2 - 10 Nm

3 - Front coolant line

- Removing and installing --> **Front coolant line, removing and installing**

4 - O-ring

- Replace

5 - 10 Nm

6 - Seal

- Replace

7 - Coolant pump

- Removing and installing --> **Coolant pump, removing and installing**

8 - O-ring

- Replace

9 - 10 Nm

10 - Input shaft

- For oil pump

11 - O-ring

- Replace

12 - Seal

- Replace

13 - Coolant thermostat

- Removing and installing --> **Coolant thermostat, removing and installing**
- Installed location **Coolant thermostat installation location**
- Checking --> **Thermostat, checking**

14 - Housing

- For thermostat
- Removing and installing --> **Coolant thermostat, removing and installing**

15 - Drain plug, 25 Nm

16 - Seal

- Replace

17 - 10 Nm

Coolant thermostat installation location

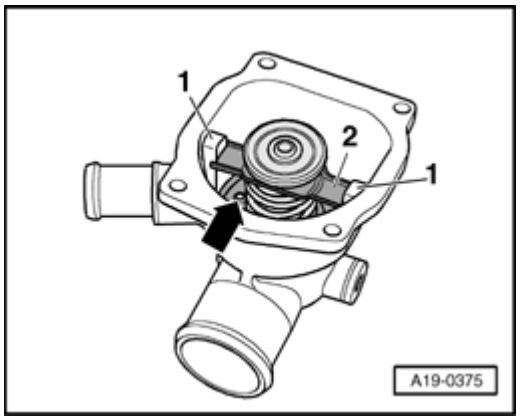

Fig. 452: Installed Location Of Bleeder Valve
Courtesy of VOLKSWAGEN UNITED STATES, INC.

- Bleeder valve - **arrow** - toward top.

NOTE:

- **Ignore - 1 - and - 2 -.**

Coolant pump, removing and installing

Removing

- Bring the lock carrier into service position --> **50 - BODY - FRONT** .
- Remove front coolant pipe --> **Front coolant line, removing and installing**.

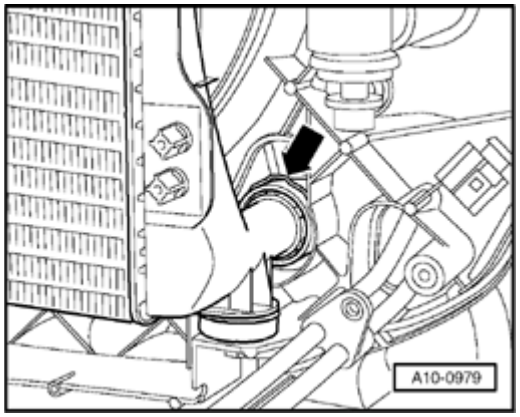

Fig. 453: Disconnecting Lower Coolant Hose From Radiator
Courtesy of VOLKSWAGEN UNITED STATES, INC.

- Disconnect lower coolant hose from radiator - **arrow** - and drain residual coolant.

NOTE:

- **After disconnecting the coolant hose, lock carrier can be pulled farther forward.**

- Disconnect coolant hoses at coolant regulator housing.

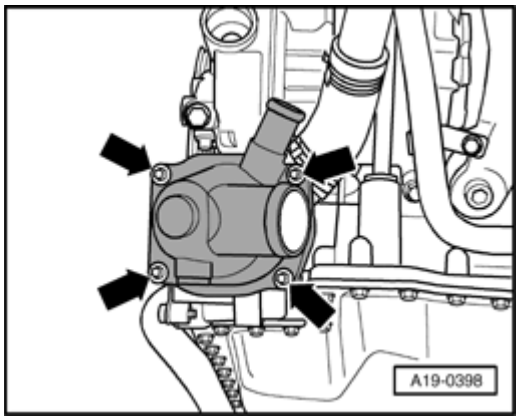

Fig. 454: Removing Bolts & Coolant Regulator Housing
Courtesy of VOLKSWAGEN UNITED STATES, INC.

- Remove bolts - **arrows** -.
- Remove coolant regulator housing.

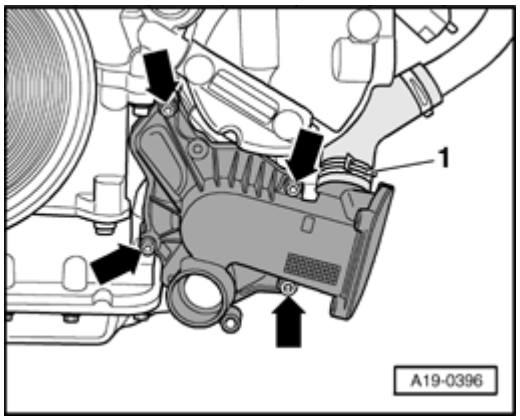

Fig. 455: Identifying Coolant Hose & Coolant Pump Housing Bolts
Courtesy of VOLKSWAGEN UNITED STATES, INC.

- Disconnect coolant hose - **1** -.
- Remove bolts - **arrows** -.
- Remove coolant pump housing toward front, pay attention to drive shaft for coolant pump while doing this.

NOTE:

- **Illustration is shown with lock carrier removed.**

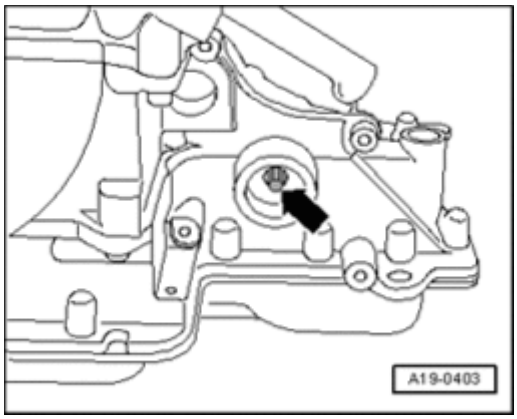

Fig. 456: Removing/Installing Drive Shaft For Coolant Pump From Oil Pump
Courtesy of VOLKSWAGEN UNITED STATES, INC.

- Remove drive shaft - **arrow** - for coolant pump from guide on oil pump.

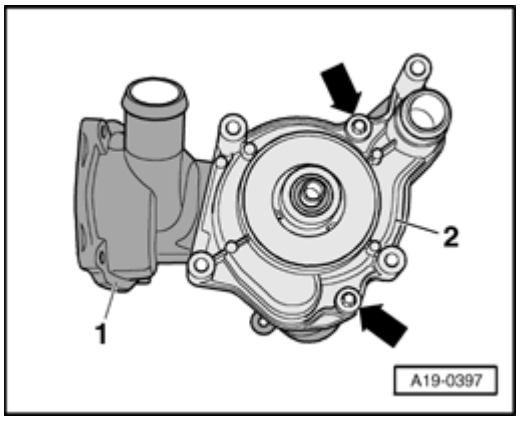

Fig. 457: Removing Bolts & Coolant Pump From Housing
Courtesy of VOLKSWAGEN UNITED STATES, INC.

- Remove bolts - **arrows** -.
- Remove coolant pump - **2** - from housing - **1** -.

Installing

NOTE:

- **Replace seals and O-rings.**
- **Secure all hose connections using hose clamps appropriate for the model type .**

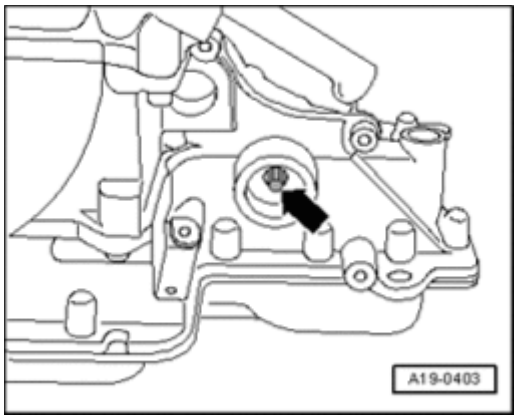

Fig. 458: Removing/Installing Drive Shaft For Coolant Pump From Oil Pump
Courtesy of VOLKSWAGEN UNITED STATES, INC.

- Insert drive shaft - **arrow** - for coolant pump into oil pump mount on engine.
- Slide coolant pump into mounts on upper section of oil pan.

NOTE:

- **To connect drive flange onto hex head of drive shaft, reach with the finger into the lower pipe connection of coolant pump and twist at impeller until coolant pump can be inserted completely.**

Further installation is in reverse order of removal, note the following:

- Install coolant regulator --> **Coolant thermostat, removing and installing**.
- Install front coolant pipe --> **Front coolant line, removing and installing**.
- Install lock carrier with attachments --> **50 - BODY - FRONT** .

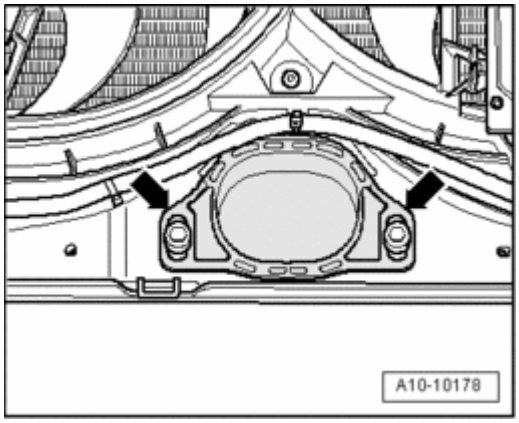

Fig. 459: Placing Torque Support On Rubber Buffer For Torque Support And Tightening Bolts
Courtesy of VOLKSWAGEN UNITED STATES, INC.

- Place torque support on rubber buffer for torque support and tighten bolts - **arrows** -.
- Install front bumper --> **63 - BUMPERS** .
- Fill with coolant.

- Adjust headlights --> **MAINTENANCE PROCEDURES** .

Torque specifications

Component	Nm
Coolant pump to housing	10
Coolant pump housing to upper section of oil pan	10
Torque support stop to lock carrier	40

Coolant thermostat, removing and installing

Special tools, testers and auxiliary items required

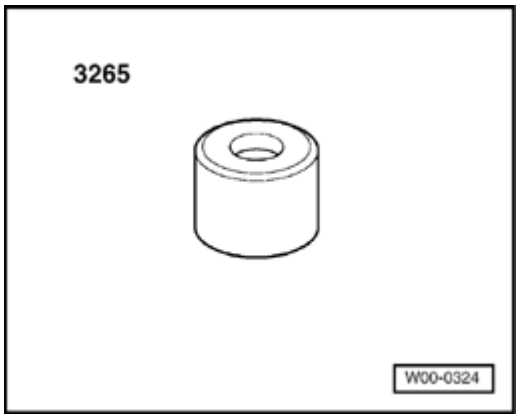

Fig. 460: Fitting Sleeve 3265
Courtesy of VOLKSWAGEN UNITED STATES, INC.

- Fitting sleeve 3265

Removing

- Drain coolant --> **Cooling system, draining and filling**.

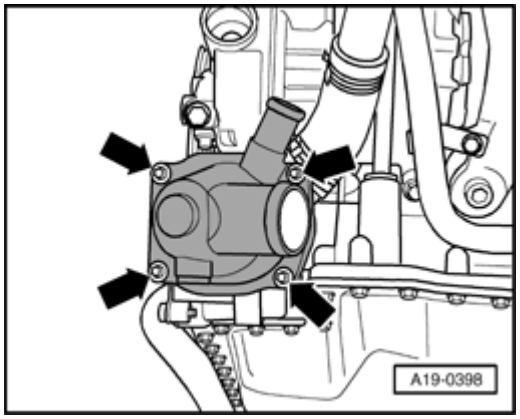

Fig. 461: Removing Bolts & Coolant Regulator Housing

Courtesy of VOLKSWAGEN UNITED STATES, INC.

- Disconnect coolant hoses at coolant regulator housing.
- Remove bolts - **arrows** -.
- Remove coolant regulator housing.

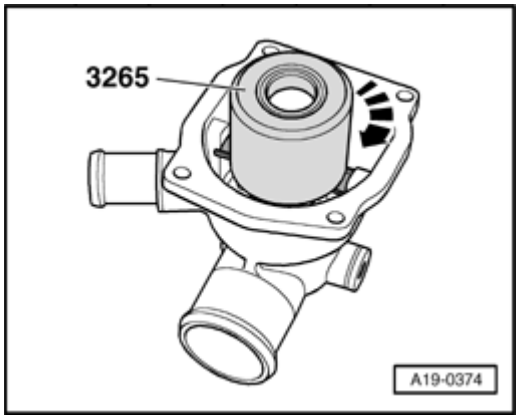

Fig. 462: Pressing Down Retaining Bracket Using Seal Installer 3265
Courtesy of VOLKSWAGEN UNITED STATES, INC.

- Push down retaining bracket using seal installer 3265 and twist retaining bracket clockwise.

Installing

Installation is in reverse order of removal, note the following:

NOTE:

- **Replace seals.**
- **Secure all hose connections using hose clamps appropriate for the model type .**

- Clean and smooth sealing surface.

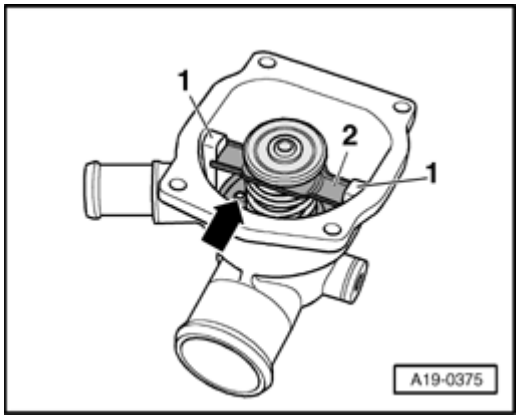

Fig. 463: Installed Location Of Bleeder Valve
Courtesy of VOLKSWAGEN UNITED STATES, INC.

- Note location of coolant thermostat.
- Installed location: Bleeder valve - **arrow** - toward top.
- Push down and twist retaining bracket - **2** - using seal installer 3265.
- Retaining bracket must be engaged beneath pin - **1** - of connection.
- Fill with coolant.

Torque specifications

Component	Nm
Coolant regulator housing to coolant pump housing	10

Thermostat, checking

- Heat up removed thermostat in water.

Opening begins	Opening ends	Opening lift
approx. 87° C	approx. 10° C [1)]	min. 8 mm
• [1)] Cannot be tested.		

Coolant pipes, component overview

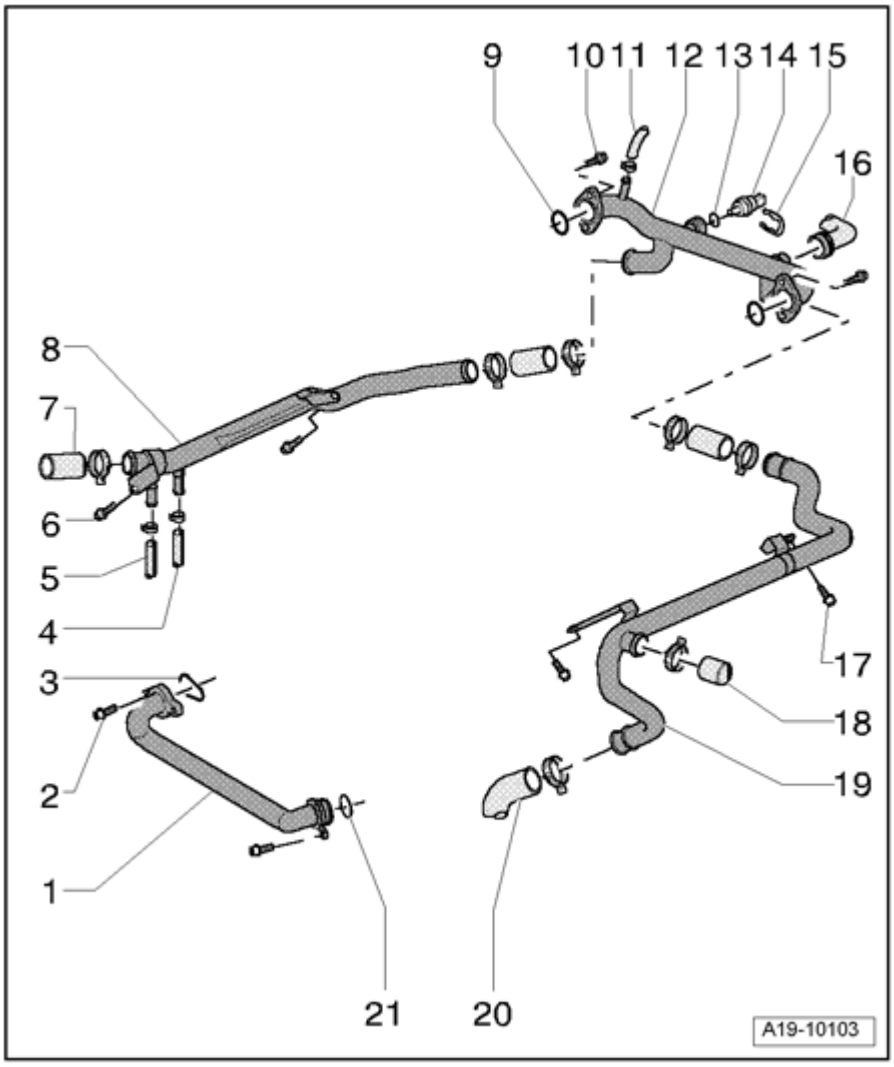

Fig. 464: Coolant Pipes, Component Overview
Courtesy of VOLKSWAGEN UNITED STATES, INC.

1 - Front coolant line

- Removing and installing --> **Front coolant line, removing and installing**

2 - 10 Nm

3 - Seal

- Replace

4 - Coolant hose

- To oil cooler

5 - Coolant hose

- To generator

6 - 10 Nm

7 - Coolant hose

- To upper radiator

8 - Right coolant line

9 - O-ring

- Replace

10 - 10 Nm

11 - Coolant hose

- To expansion tank

12 - Rear coolant pipe

- Removing and installing --> **Rear coolant line, removing and installing**

13 - O-ring

- Replace

14 - Engine Coolant Temperature (ECT) Sensor G62

15 - Retaining clip

16 - Coolant hose

- To heat exchanger for heater unit

17 - 10 Nm

18 - Plug

19 - Left coolant line

- Removing and installing --> **Left coolant pipe, removing and installing**

20 - Coolant hose

- To coolant regulator housing

21 - O-ring

- Replace

Front coolant line, removing and installing

Special tools, testers and auxiliary items required

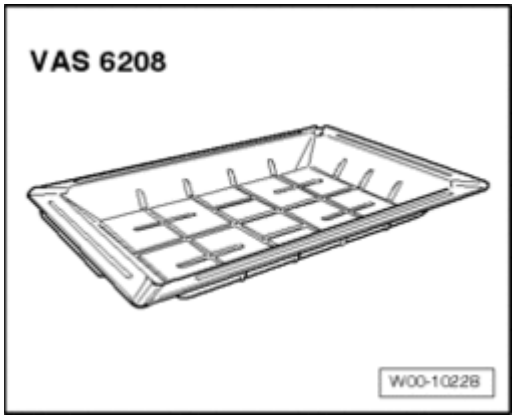

Fig. 465: Drip Tray For VAS 6100, VAS 6208
Courtesy of VOLKSWAGEN UNITED STATES, INC.

- Drip tray for workshop crane VAS 6208

Removing

- Drain coolant --> **Cooling system, draining and filling**.
- Bring lock carrier into service position --> **50 - BODY - FRONT** .

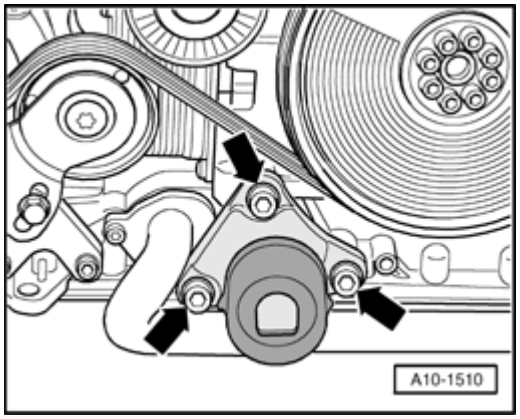

Fig. 466: Removing Bolts And Torque Support From Engine
Courtesy of VOLKSWAGEN UNITED STATES, INC.

- Remove bolts - **arrows** - and remove torque support from engine.

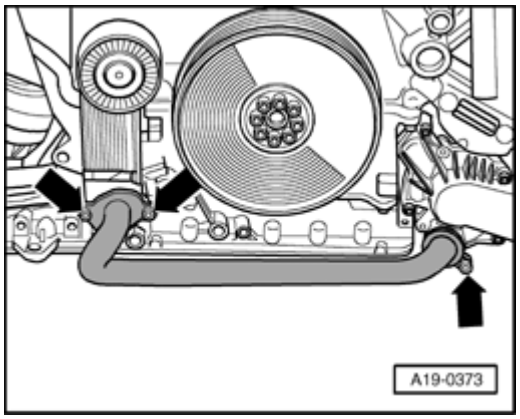

Fig. 467: Removing Front Coolant Pipe On Engine
Courtesy of VOLKSWAGEN UNITED STATES, INC.

- Place drip tray VAS 6208 under engine.
- Remove front coolant pipe on engine - **arrows** -.

Installing

Installation is in reverse order of removal, note the following:

NOTE:

- **Replace seals and O-rings.**
- **Secure all hose connections using hose clamps appropriate for the model type .**

- Install lock carrier with attachments --> **50 - BODY - FRONT** .

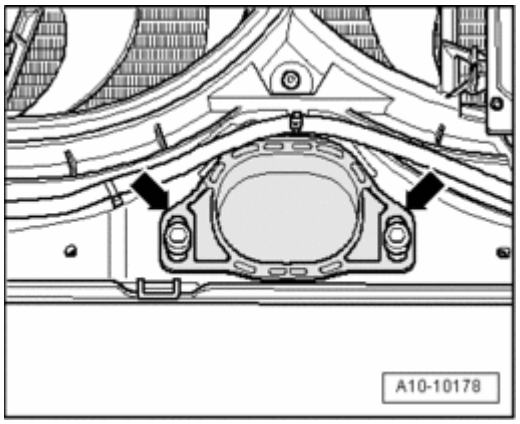

Fig. 468: Placing Torque Support On Rubber Buffer For Torque Support And Tightening Bolts
Courtesy of VOLKSWAGEN UNITED STATES, INC.

- Place torque support on rubber buffer for torque support and tighten bolts - **arrows** -.
- Install front bumper --> **63 - BUMPERS** .
- Fill with coolant.

- Adjust headlights --> **MAINTENANCE PROCEDURES** .

Torque specifications

Component		Nm
Coolant line	Coolant pump	10
Front to	Oil pan (upper section)	10
Torque bracket to upper part of oil pan		40
Torque support stop to lock carrier		40

Rear coolant line, removing and installing

Special tools, testers and auxiliary items required

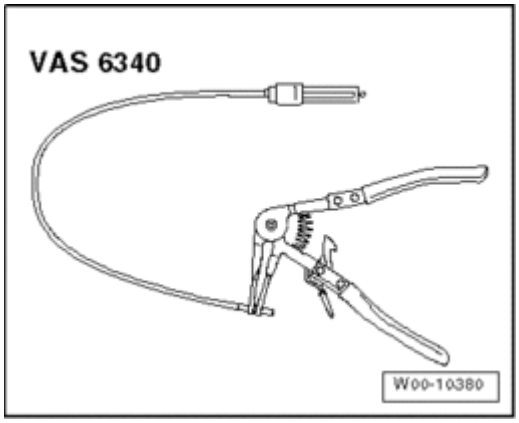

Fig. 469: Identifying Spring-Type Clip Pliers VAS 6340
Courtesy of VOLKSWAGEN UNITED STATES, INC.

- Hose clamp pliers VAS 6340

Removing

NOTE:

- **All cable ties which are opened or cut open when removing, must be replaced in the same position when installing.**

- Drain coolant --> **Cooling system, draining and filling**.
- Remove right coolant pipe.
- Remove engine support bridge 10-222 A from engine compartment.

NOTE:

- **Engine support bridge was necessary to remove right coolant pipe, but it hinders the following work sequence.**

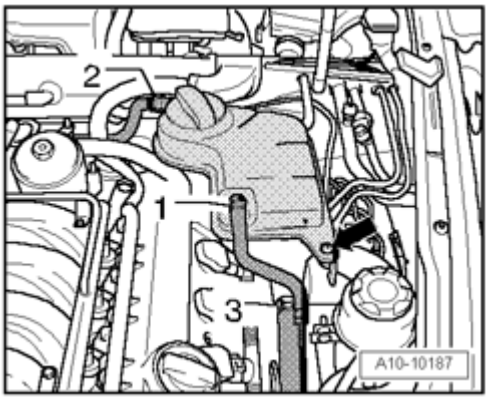

Fig. 470: Removing Coolant Hoses & Coolant Expansion Tank
Courtesy of VOLKSWAGEN UNITED STATES, INC.

- Remove coolant hoses - **1** - through - **3** -.
- Remove coolant expansion tank - **arrow** -.
- Disconnect electrical wiring to Engine Coolant Level (ECL) Warning Switch F66 at bottom of expansion tank.

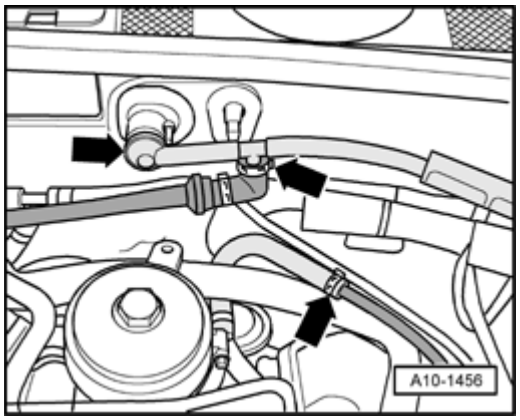

Fig. 471: Disconnecting Vacuum Hoses
Courtesy of VOLKSWAGEN UNITED STATES, INC.

- Disconnect vacuum hoses at positions indicated by - **arrows** -.

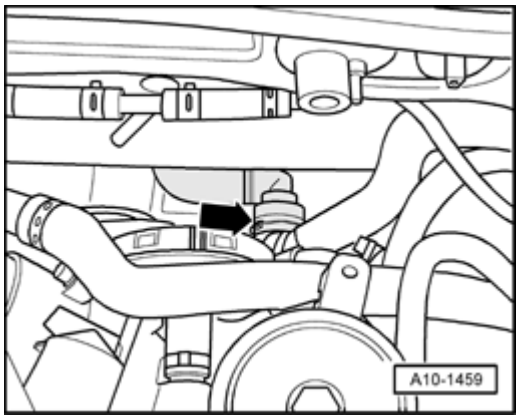

Fig. 472: Disconnecting Coolant Hose To Heater Core At Rear Coolant Pipe On Engine
Courtesy of VOLKSWAGEN UNITED STATES, INC.

- Disconnect coolant hose to heater core at rear coolant pipe on engine - **arrow** -.

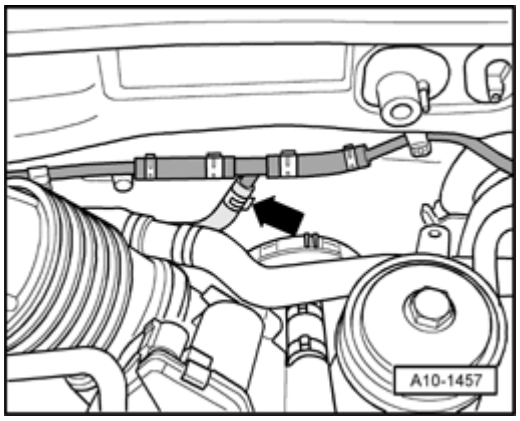

Fig. 473: Disconnecting Coolant Hose From Y-Connector
Courtesy of VOLKSWAGEN UNITED STATES, INC.

- Disconnect coolant hose from Y-connector - **arrow** -.

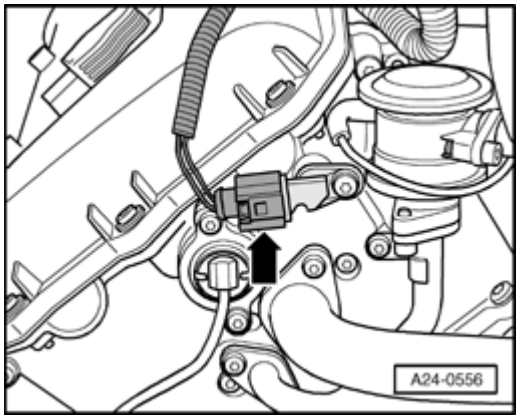

Fig. 474: Disconnecting Electrical Harness Connector For Camshaft Position (CMP) Sensor 2 G163 On Left Cylinder Head
Courtesy of VOLKSWAGEN UNITED STATES, INC.

- Disconnect electrical harness connector - **arrow** - for Camshaft Position (CMP) Sensor 2 G163 on left cylinder head.

NOTE:

- **The following illustration depicts the engine removed from behind.**

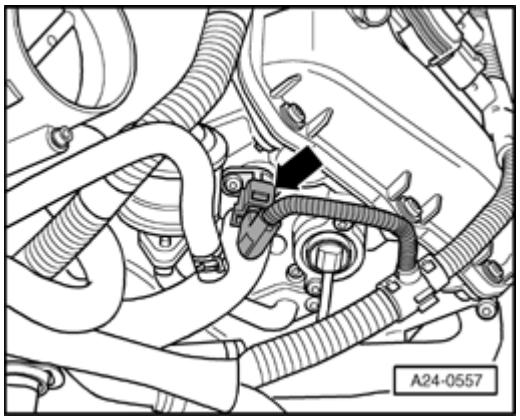

Fig. 475: Disconnecting Electrical Harness Connector For Camshaft Position (CMP) Sensor G40 On Right Cylinder Head
Courtesy of VOLKSWAGEN UNITED STATES, INC.

- Disconnect electrical harness connector - **arrow** - for Camshaft Position (CMP) Sensor G40 on right cylinder head.

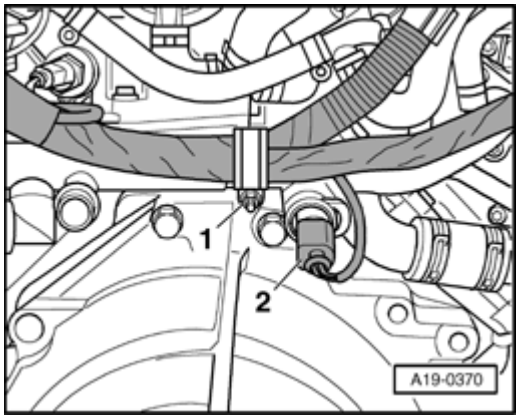

Fig. 476: Disconnecting Electrical Harness Connector On Engine Coolant Temperature (ECT) Gauge Sensor G2/G62
Courtesy of VOLKSWAGEN UNITED STATES, INC.

- Disconnect electrical connector - **2** - on Engine Coolant Temperature (ECT) Sensor G62.
- Remove nut - **1** - and remove electrical wiring harness at rear coolant pipe.

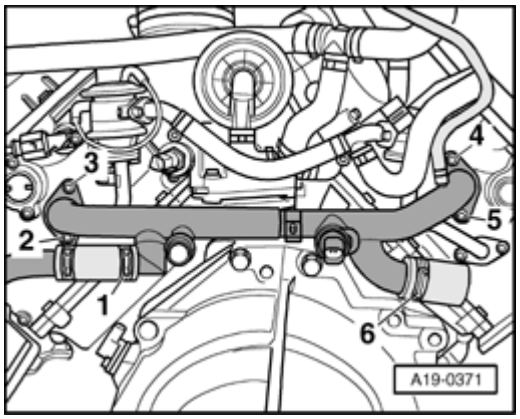

Fig. 477: Removing Bolts & Rear Coolant Pipe
Courtesy of VOLKSWAGEN UNITED STATES, INC.

- Loosen hose clamps - **1** - and - **6** - with Hose Clip Pliers VAS 6340.
- Disconnect coolant hoses at coolant pipe.
- Remove bolts - **2 to 5** -.
- Remove rear coolant pipe.

Installing

Installation is in reverse order of removal, note the following:

NOTE:

- **Replace O-rings.**
- **During installation, all cable ties must be re-installed at the same location.**
- **Secure all hose connections using hose clamps appropriate for the model type .**

- Clean and/or smooth O-rings sealing surface before installing.
- Coat new O-rings with non-corrosive lubricant (Vaseline), install rear coolant pipe and tighten.
- Install right coolant pipe.
- Fill with coolant.

Torque specifications

Component	Nm
Rear coolant pipe to cylinder head	10
Retaining clamps to rear coolant pipe	10

Left coolant pipe, removing and installing

Special tools, testers and auxiliary items required

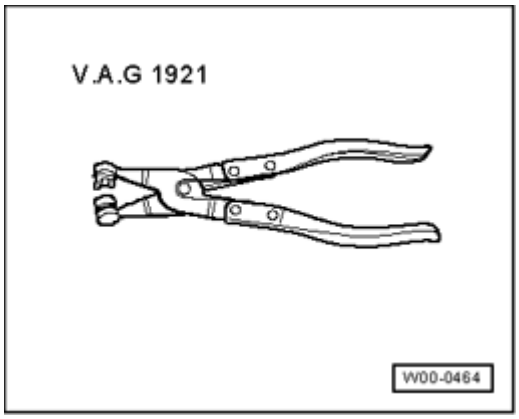

Fig. 478: Hose Clip Pliers V.A.G 1921
Courtesy of VOLKSWAGEN UNITED STATES, INC.

- Hose clamp pliers V.A.G 1921

Removing

- Remove engine --> **Engine, removing and installing**.

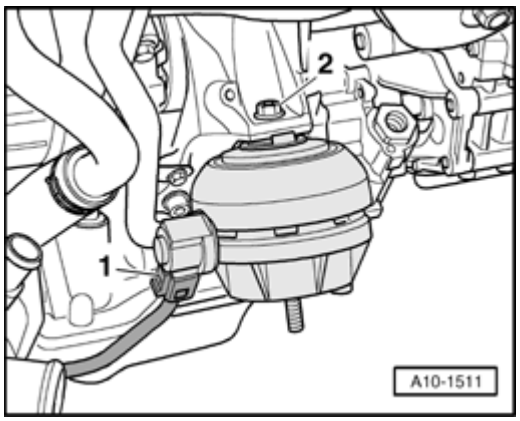

Fig. 479: Disconnecting Electrical Connector, Removing Nut And Engine Mount
Courtesy of VOLKSWAGEN UNITED STATES, INC.

- Disconnect electrical harness connector - **1** - at left engine mount.
- Remove nut - **2** - and remove engine mount.

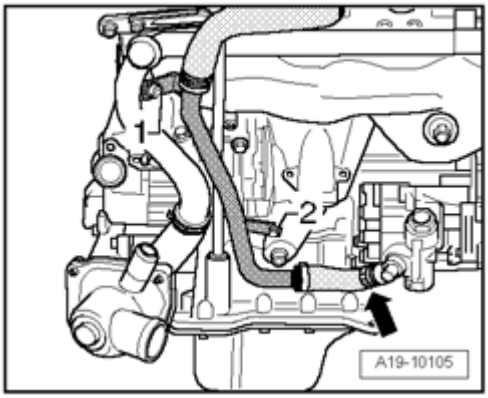

Fig. 480: Removing Bolts & Return Pipe From Power-Steering Pump
Courtesy of VOLKSWAGEN UNITED STATES, INC.

- Remove bolts - **1** - and - **2** -.

NOTE:

- **To prevent oil from escaping, the hose - arrow - remains connected to power steering.**

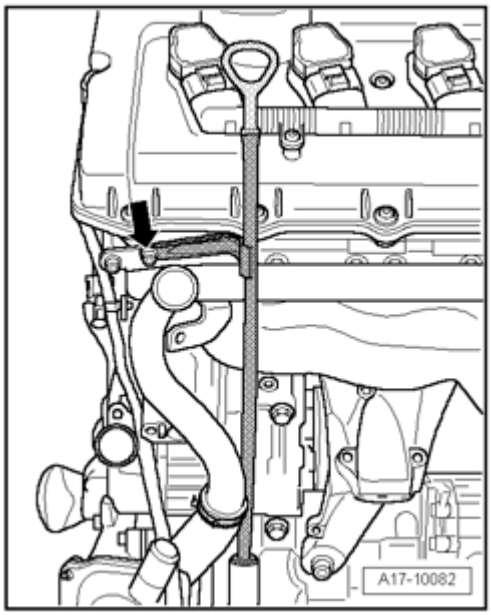

Fig. 481: Removing Guide Pipe For Oil Dipstick At Cylinder Head
Courtesy of VOLKSWAGEN UNITED STATES, INC.

- Remove guide pipe for oil dipstick at cylinder head - **arrow** - , pull up and remove.

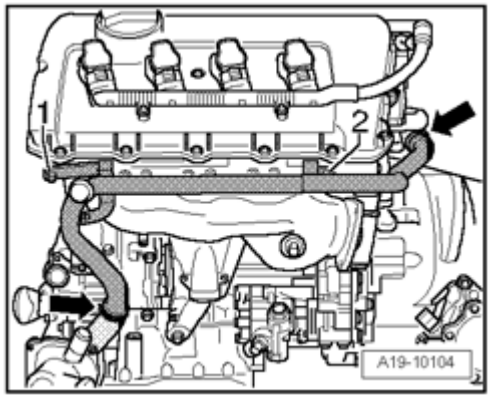

Fig. 482: Removing Bolts & Loosening Hose Clamps And Removing Left Coolant Pipe From Coolant Hoses
Courtesy of VOLKSWAGEN UNITED STATES, INC.

- Remove bolts - **1** - and - **2** -.
- Loosen hose clamps - **arrows** - and remove right coolant pipe from coolant hoses.

Installing

Installation is in reverse order of removal, note the following:

NOTE:

- **Replace O-ring.**
- **Secure all hose connections using hose clamps appropriate for the model type .**

- Replace O-ring at guide tube for oil dipstick and insert guide tube into hole in oil pan (upper part).
- Install engine --> **Engine, installing**.

Torque specifications

Component		Nm
Left coolant pipe to cylinder head		10
Oil dip stick guide tube to cylinder head		10
Return line of	Bracket	10
Power-steering to	Engine support	10

Radiator and coolant fan, component overview

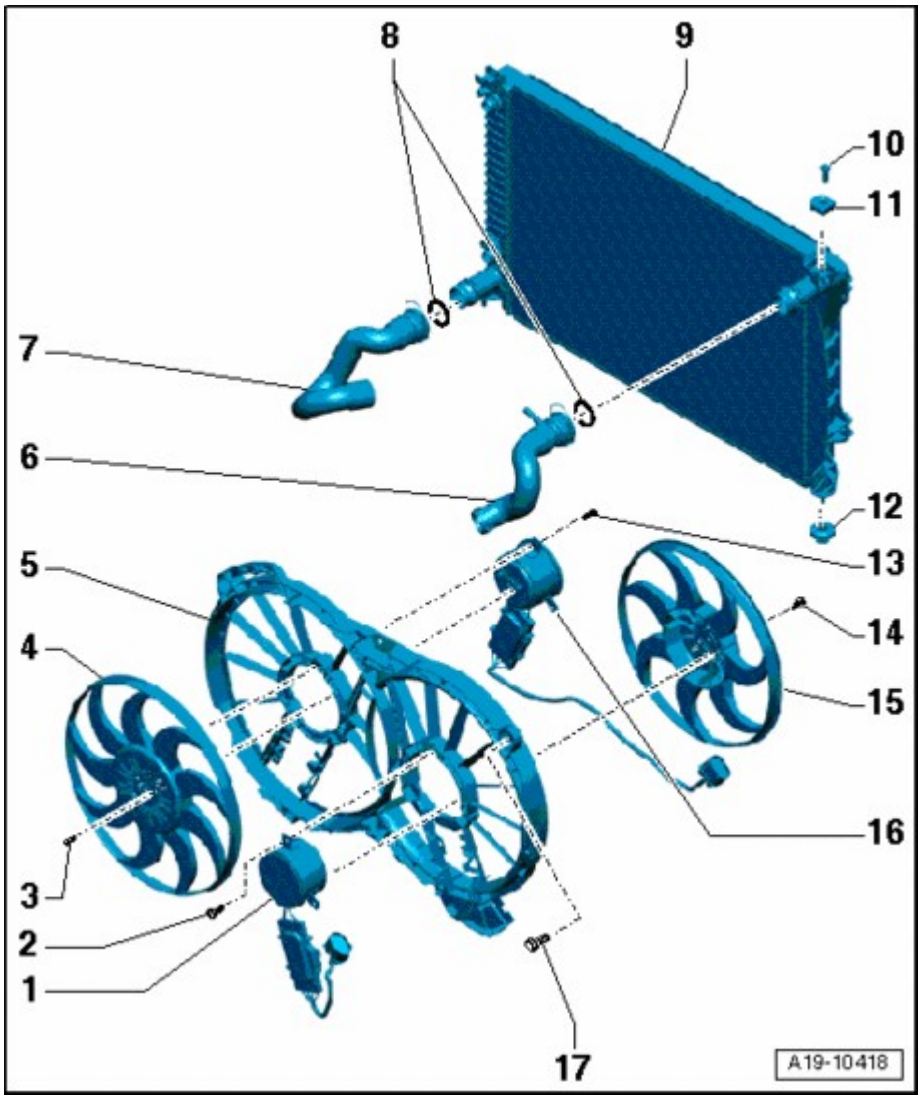

Fig. 483: Radiator And Coolant Fan, Component Overview
Courtesy of VOLKSWAGEN UNITED STATES, INC.

1 - Coolant Fan V7

- With Coolant Fan Control (FC) Control Module J293
- Removing and installing --> **Coolant fan, removing and installing**

2 - 5 Nm

3 - 3.5 Nm

4 - Fan wheel

- Not delivered separately

5 - Fan rib

- Removing and installing --> **Fan shroud, removing and installing**

6 - Coolant hose

- To pull off, disengage retaining clip

7 - Coolant hose

- To pull off, disengage retaining clip

8 - O-rings

- Replace

9 - Radiator

- Removing and installing --> **Radiator, removing and installing**
- After replacing, replace entire amount of coolant

10 - Retaining pin

11 - Rubber buffer

- Disengage and remove using screwdriver

12 - Rubber bushing

13 - 4.5 Nm

14 - 3.5 Nm

15 - Fan wheel

- Not delivered separately

16 - Coolant Fan 2 V177

- With Coolant Fan Control (FC) Control Module 2 J671
- Removing and installing --> **Coolant fan, removing and installing**

17 - 2 Nm

Radiator, removing and installing

Special tools, testers and auxiliary items required

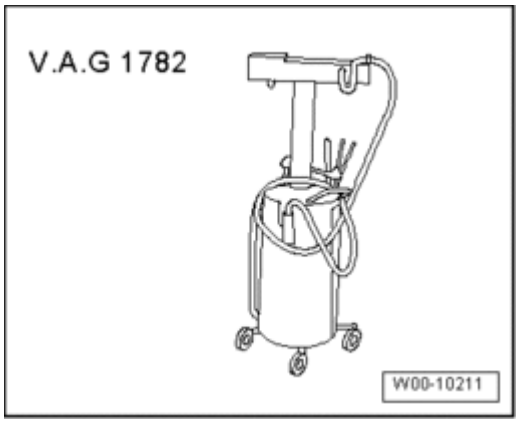

Fig. 484: Identifying Old Oil Collecting And Extracting Device V.A.G 1782
Courtesy of VOLKSWAGEN UNITED STATES, INC.

- Old oil collecting and extracting device V.A.G 1782

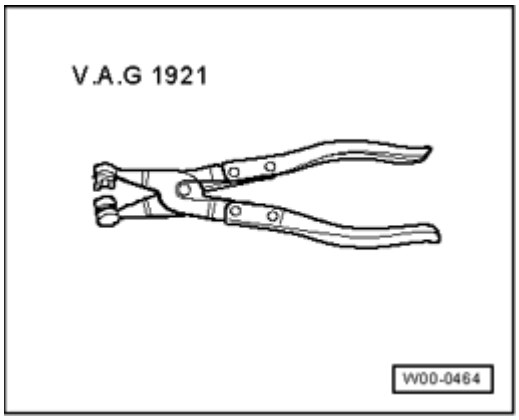

Fig. 485: Hose Clip Pliers V.A.G 1921
Courtesy of VOLKSWAGEN UNITED STATES, INC.

- Hose clamp pliers V.A.G 1921

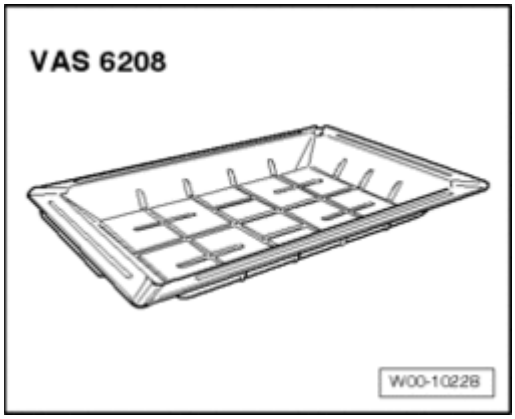

Fig. 486: Drip Tray For VAS 6100, VAS 6208
Courtesy of VOLKSWAGEN UNITED STATES, INC.

- Drip tray for workshop crane VAS 6208

Removing

NOTE:

- **Drained coolant must be stored in a clean container for disposal or reuse.**

CAUTION: Cover cap of expansion tank with rag and open carefully, as hot steam i.e. hot coolant may escape when opening.

- Open cap of coolant expansion tank.

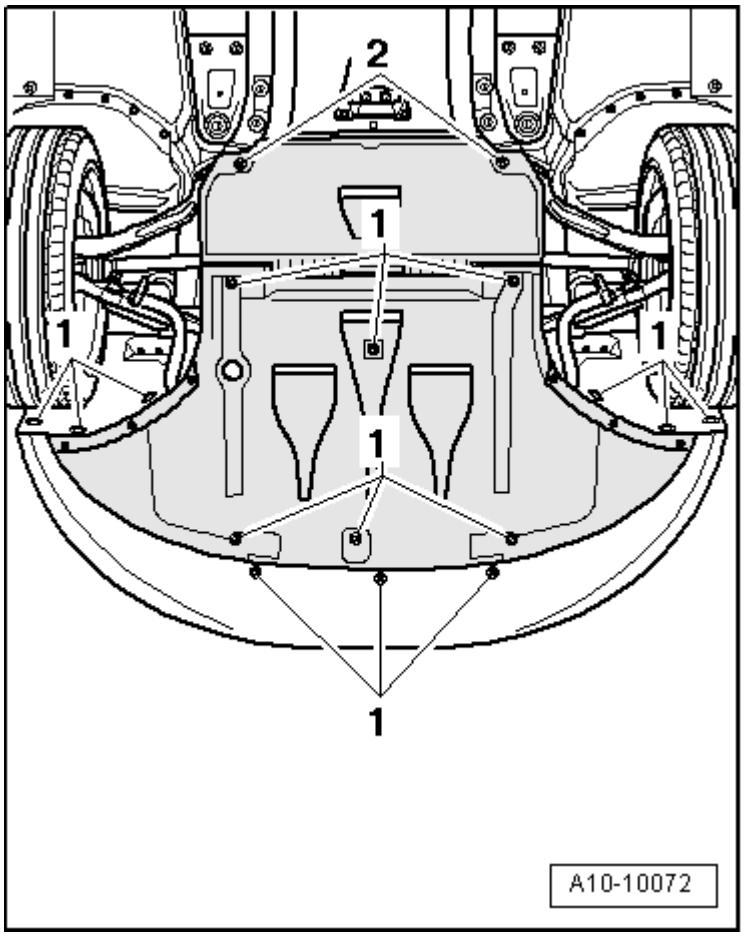

Fig. 487: Identifying Quick-Release Fasteners & Noise Insulation
Courtesy of VOLKSWAGEN UNITED STATES, INC.

- Loosen quick-release fasteners - **1** - and - **2** - and remove noise insulation.
- Remove front left and right wheel housing liners --> **66 - EXTERIOR EQUIPMENT** .
- Remove front bumper --> **63 - BUMPERS** .

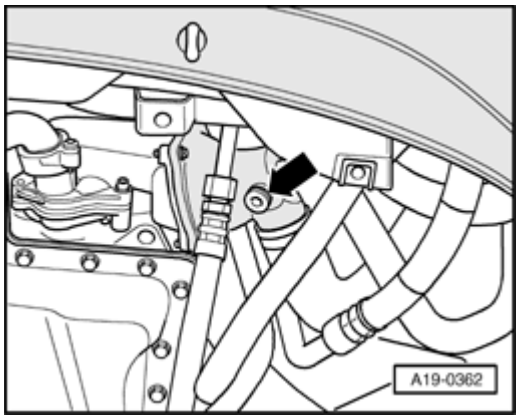

Fig. 488: Removing/Installing Drain Plug On Coolant Thermostat Housing
Courtesy of VOLKSWAGEN UNITED STATES, INC.

- Place drip tray VAS 6208 under engine.
- Remove drain plug - **arrow** - on coolant thermostat housing and drain coolant from engine.

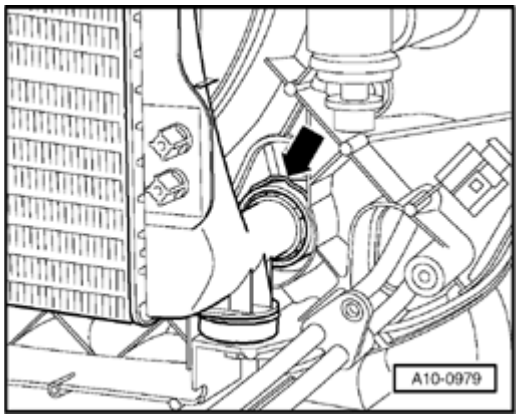

Fig. 489: Disconnecting Lower Coolant Hose From Radiator
Courtesy of VOLKSWAGEN UNITED STATES, INC.

- Disconnect lower coolant hose from radiator - **arrow** - and drain residual coolant.

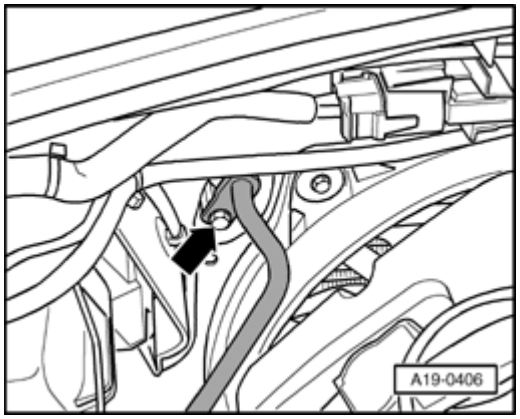

Fig. 490: Removing Upper/Lower ATF Line From Radiator

Courtesy of VOLKSWAGEN UNITED STATES, INC.

- Place old oil collecting and extracting device V.A.G 1782 under engine.

NOTE:

- **Observe the rules of cleanliness for working on automatic transmissions -->**
  - **00 TECHNICAL DATA for AUTOMATIC TRANSMISSION 09L, ALL WHEEL DRIVE**
  - **00 - GENERAL, TECHNICAL DATA for 6 SPD. AUTOMATIC TRANSMISSION 09E ALL WHEEL DRIVE**

.

- Remove upper and lower ATF line from radiator - **arrow** - --> -
  - **37 - AUTOMATIC TRANSMISSION - CONTROLS, HOUSING** for 6 SPD. AUTOMATIC TRANSMISSION 09E ALL WHEEL DRIVE
  - **37 CONTROLS, HOUSING** for AUTOMATIC TRANSMISSION 09L, ALL WHEEL DRIVE

.

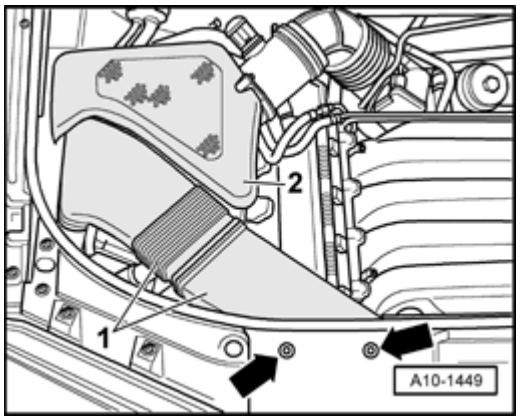

Fig. 491: Identifying Air Filter Cover & Air Duct
Courtesy of VOLKSWAGEN UNITED STATES, INC.

- Remove air filter cover - **2** -.
- Remove air duct - **1** -.

NOTE:

- **To pull out clips - arrows - , use Pry Lever - Rmv Outside Mirror 80-200.**
- **If necessary, use silicon-free spray lubricant to facilitate removal.**

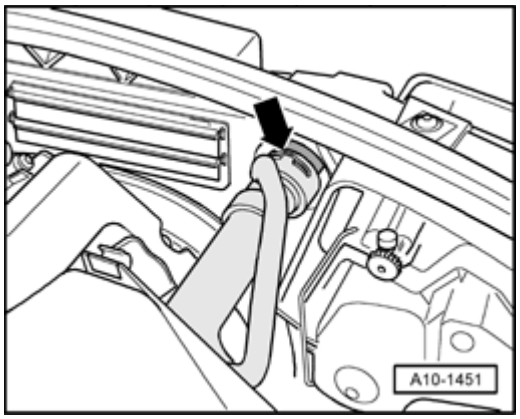

Fig. 492: Disconnecting Top Coolant Hose From Radiator
Courtesy of VOLKSWAGEN UNITED STATES, INC.

- Disconnect top coolant hose - **arrow** - from radiator.

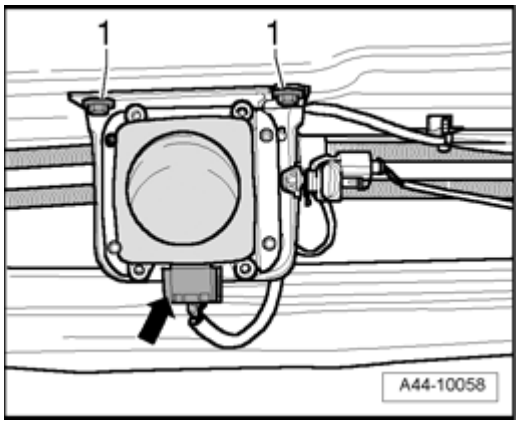

Fig. 493: Disconnecting Electrical Connector On Distance Regulation Control Module J428
Courtesy of VOLKSWAGEN UNITED STATES, INC.

- On a vehicle with distance regulation, disconnect electrical connector - **arrow** - on Distance Regulation Control Module J428.

NOTE:

- **Ignore - 1 -.**

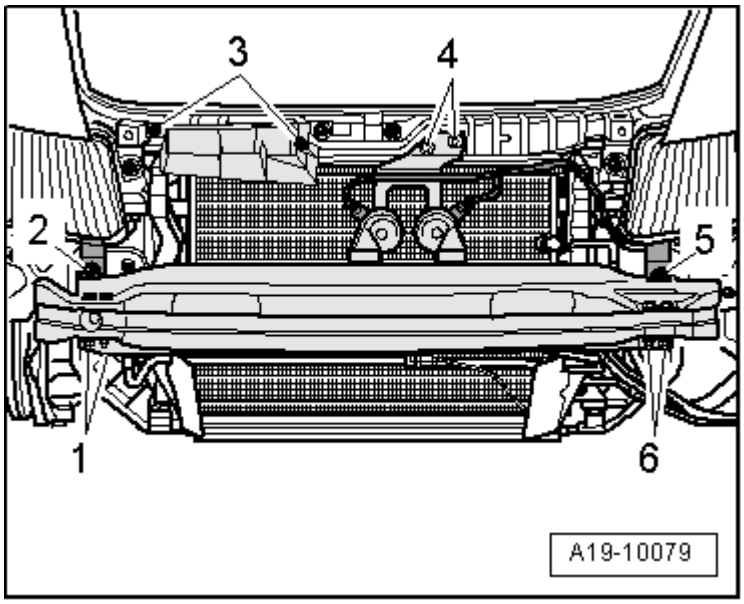

Fig. 494: Identifying Bolts, Brackets, Bumper & Air Duct
Courtesy of VOLKSWAGEN UNITED STATES, INC.

- Remove bolts - **3** - and remove air duct.
- Remove bolts - **4** - and remove bracket for horns; leave electrical connections intact.
- Unfasten bracket - **2** - and - **5** - for headlight.
- Remove nuts - **1** - and - **6** - and remove bumper.

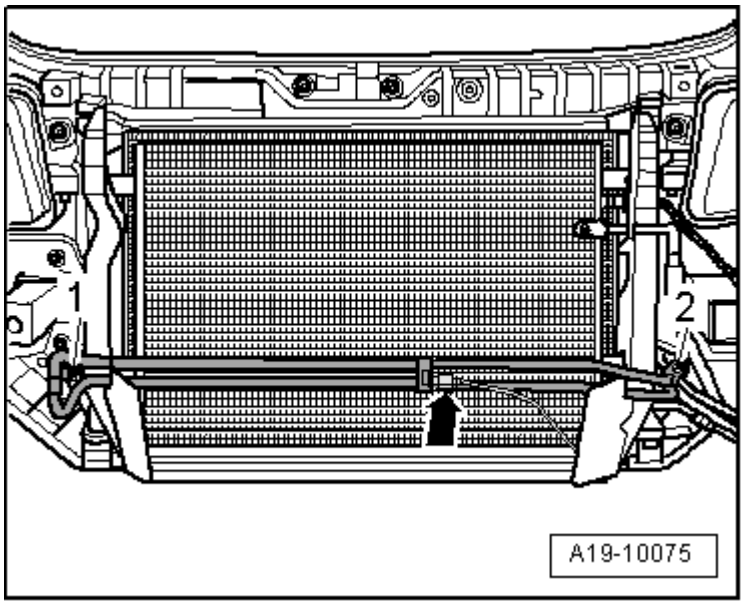

Fig. 495: Uncliping Outside Air Temperature Sensor G17 From Bracket & Removing Power Steering Cooling Coil Bolts
Courtesy of VOLKSWAGEN UNITED STATES, INC.

- Unclip Outside Air Temperature Sensor G17 - **arrow** - from bracket.

- Remove power steering cooling coil bolts - **1** - and - **2** - hydraulic hoses remain connected.

CAUTION: The air conditioning refrigerant circuit must not be opened.

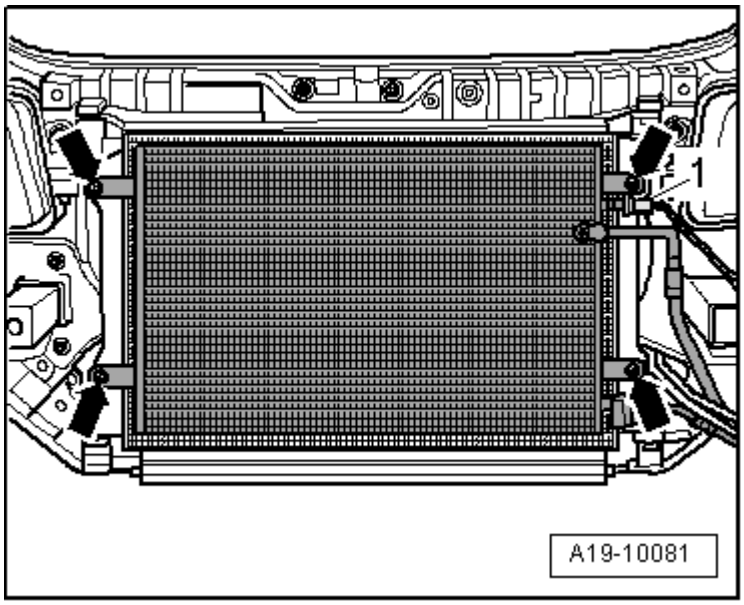

Fig. 496: Separating Electrical Connector & Removing Bolts
Courtesy of VOLKSWAGEN UNITED STATES, INC.

- Disconnect electrical connector - **1** -.
- Remove bolts - **arrows** -.

NOTE:

- **Do not bend or stretch lines or hoses as A/C compressor and/or refrigerant lines/hoses may be damaged.**

- Pivot condenser downward with lines connected.

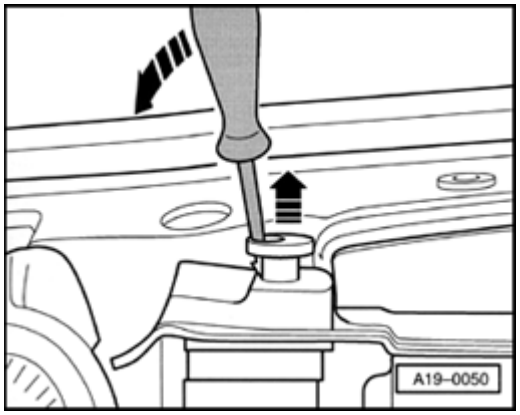

Fig. 497: Releasing Both Radiator Retaining Pins And Removing By Pulling Upward

Courtesy of VOLKSWAGEN UNITED STATES, INC.

- Release both radiator retaining pins and remove by pulling upward - **arrows** -.
- Tilt radiator at upper edge forward, pull up and remove.

Installing

Installation is in reverse order of removal, note the following:

- Fill with coolant.

NOTE:

- **Complete coolant must be replaced if the radiator was replaced.**
- **Secure all hose connections using hose clamps appropriate for the model type .**

- Fasten the ATF lines --> **37 CONTROLS, HOUSING** .
- Install front bumper --> **63 - BUMPERS** .
- Check ATF level --> **37 CONTROLS, HOUSING** .
- If Distance Regulation Control Module J428 was removed, an adjustment must be made after reinstallation --> **44 - WHEELS, TIRES, WHEEL ALIGNMENT** and in "Guided Functions" operating mode.

Torque specifications

Component	Nm
Condenser to radiator	10
Cooling coil to radiator	10

Fan shroud, removing and installing

Removing

- Bring lock carrier into service position --> **50 - BODY - FRONT** .

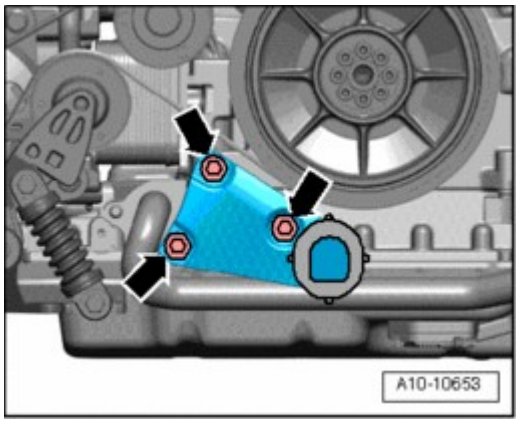

Fig. 498: Removing Bolts For Torque Support
Courtesy of VOLKSWAGEN UNITED STATES, INC.

- Remove bolts - **arrows** - for torque support.

NOTE:

- **The torque support remains in installation location.**

CAUTION: Risk of injury from coolant fan starting by itself.

- **Before working in fan shroud area, disconnect electrical connectors.**

- Disconnect electrical connectors - **1** - to coolant fans.

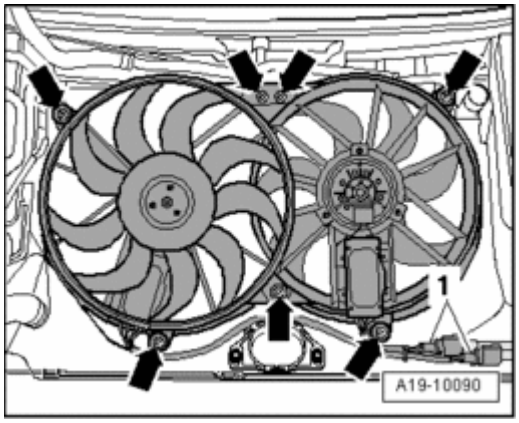

Fig. 499: Removing Bolts And Fan Shroud Upward And Out
Courtesy of VOLKSWAGEN UNITED STATES, INC.

- Remove bolts - **arrows** - and remove fan shroud upward and out.

Installing

Installation is in reverse order of removal, note the following:

NOTE:

- **Secure all hose connections using hose clamps appropriate for the model type .**

- Install lock carrier with attachments --> **50 - BODY - FRONT** .

Torque specifications

Component	Nm
Fan shroud to radiator	2
Torque bracket to upper part of oil pan	40

Cooling system, checking for leaks

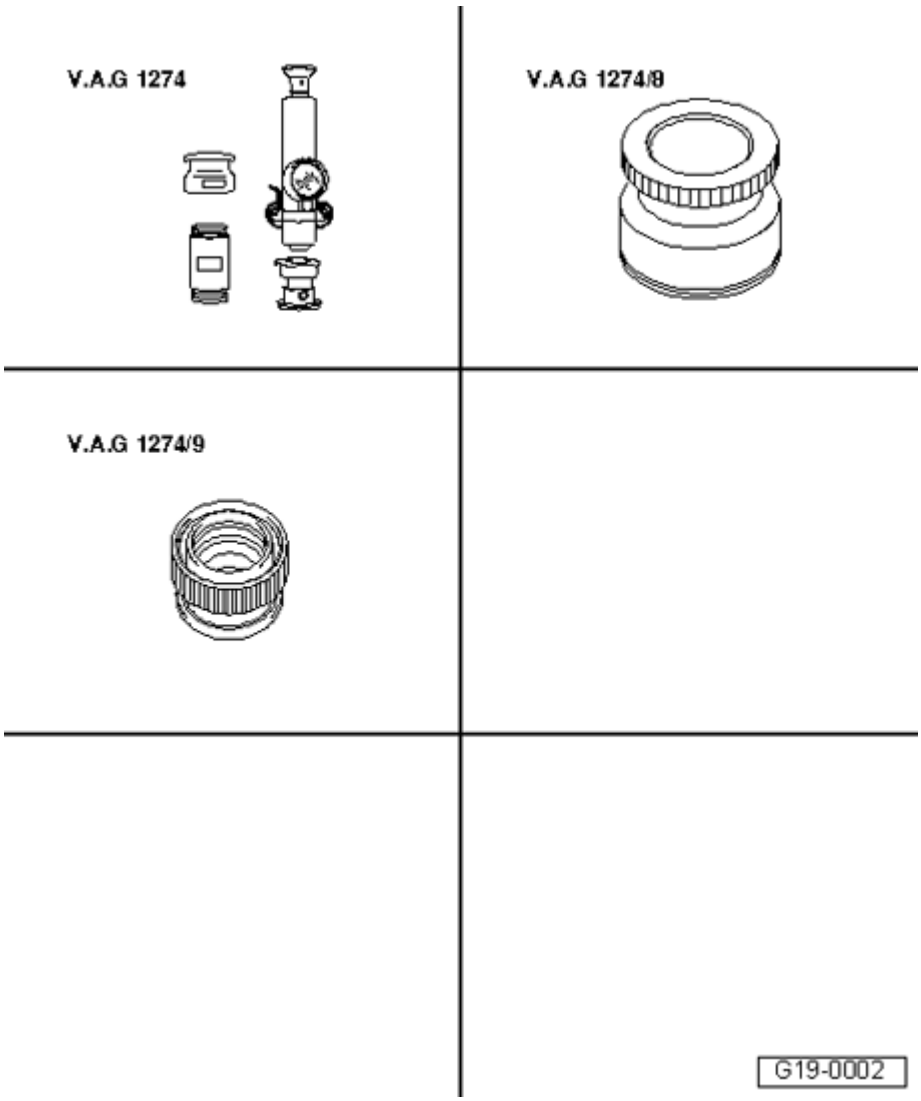

Fig. 500: Identifying Special Tools - Cooling System, Checking For Leaks
Courtesy of VOLKSWAGEN UNITED STATES, INC.

Special tools, testers and auxiliary items required

- Cooling system tester V.A.G 1274
- Adapter V.A.G 1274/8
- Adapter V.A.G 1274/9

Test conditions

- Engine at operating temperature.

Test sequence

CAUTION: Cover cap of expansion tank with rag and open carefully, as hot steam i.e. hot coolant may escape when opening.

- Open cap of coolant expansion tank.

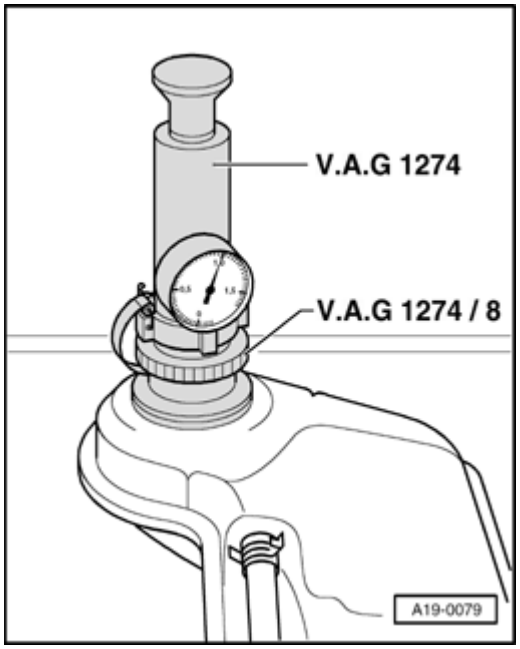

Fig. 501: Attaching Cooling System Tester V.A.G 1274 With Adapter V.A.G 1274/8 To Expansion Tank
Courtesy of VOLKSWAGEN UNITED STATES, INC.

- Attach cooling system tester V.A.G 1274 with adapter V.A.G 1274/8 to expansion tank.
- Generate a positive pressure of approx. 1.0 bar using hand pump of cooling system tester.
- If pressure decreases, search for leaking areas and repair malfunction.

Pressure relief valve in cap, checking

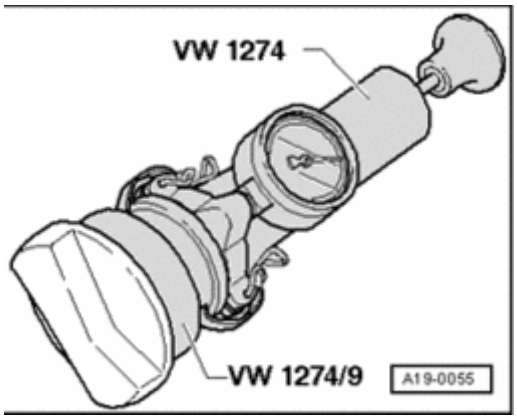

Fig. 502: Pressure Relief Valve In Cap, Checking
Courtesy of VOLKSWAGEN UNITED STATES, INC.

- Attach cooling system tester V.A.G 1274 with adapter V.A.G 1274/9 to sealing cap.
- Operate hand pump.

- Pressure release valve must open at a positive pressure of 1.4 to 1.6 bar.

Coolant fan, removing and installing

Removing

NOTE:

- **During installation, all cable ties must be re-installed at the same location.**

- Bring lock carrier into service position --> **50 - BODY - FRONT** .
- Remove fan shroud --> **Fan shroud, removing and installing**.

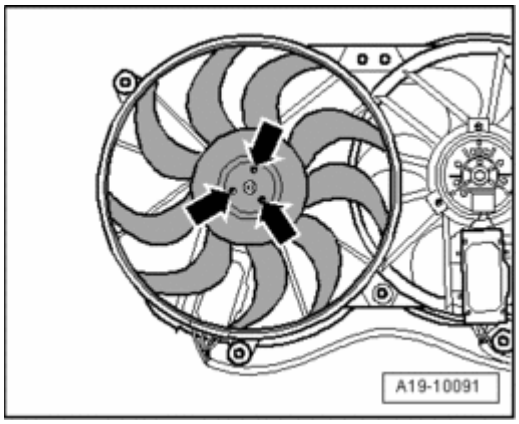

Fig. 503: Removing Bolts And Fan Wheel
Courtesy of VOLKSWAGEN UNITED STATES, INC.

Coolant Fan V7 (left):

- Remove bolts - **arrows** - and remove fan wheel.

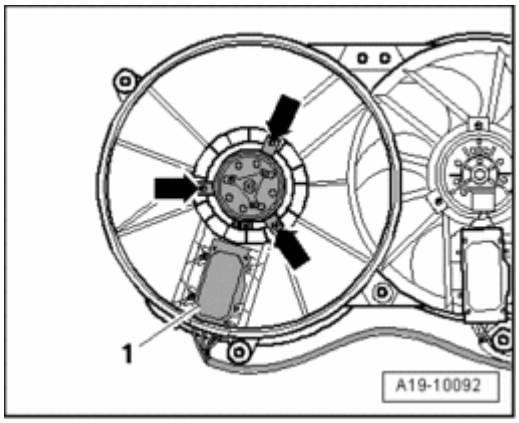

Fig. 504: Removing Bolts, Unclipping Coolant Fan Control (FC) Control Module J293 And Removing Coolant Fan And Coolant Fan Control Module
Courtesy of VOLKSWAGEN UNITED STATES, INC.

- Remove bolts - **arrows** -.
- Unclip Coolant Fan Control (FC) Control Module J293 - **1** - and remove coolant fan and coolant fan control module.

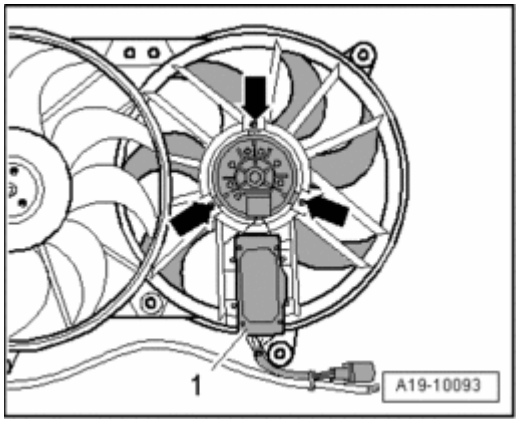

Fig. 505: Removing Bolts, Unclipping Coolant Fan Control (FC) Control Module 2 J671 And Removing Coolant Fan And Coolant Fan Control Module
Courtesy of VOLKSWAGEN UNITED STATES, INC.

Coolant Fan 2 V177 (right):

- Remove bolts - **arrows** -.
- Unclip Coolant Fan Control (FC) Control Module 2 J671 - **1** - and remove coolant fan and coolant fan control module.

Installing

Installation is in reverse order of removal, note the following:

NOTE:

- **Secure all hose connections using hose clamps appropriate for the model**

type .

- **During installation, all cable ties must be re-installed at the same location.**

- Install fan shroud --> **Fan shroud, removing and installing**.
- Install lock carrier with attachments --> **50 - BODY - FRONT** .

Torque specifications

Component	Nm
Coolant Fan V7 to fan shroud	5
Coolant Fan 2 V177 to fan shroud	4.5
Fan wheel to coolant fan	3.5

24 - MULTIPORT FUEL INJECTION (MFI)

MOTRONIC FUEL INJECTION SYSTEM, SERVICING

Safety precautions

Observe the following if test and measuring instruments are required during a test drive:

CAUTION:

- **Test and measuring equipment must always be secured to the rear seat and be operated from there by a second person.**
- **If test and measuring instruments are operated from the front passengers seat and the vehicle is involved in an accident, there is a possibility that the person sitting in this seat may receive serious injuries when the airbag is triggered.**

To reduce risk of personal injury and/or damage to the fuel injection and ignition system, always observe the following:

- Only disconnect and reconnect wires for injection and ignition system, including test leads, when ignition is switched off.
- If engine is to be cranked at starting RPM without starting (e.g. for compression testing), disconnect connectors from power output stage for ignition coils and from fuel injectors.
- It is possible that the control module will recognize a malfunction and store a DTC during some tests. Therefore after completing all checks and repairs the DTC memory must be checked and if necessary erased.
- Cleaning the engine should only be performed with ignition switched off.

- The battery must only be disconnected and connected with the ignition switched off, since the Engine Control Module (ECM) can otherwise be damaged.

CAUTION: Fuel system is under pressure! Before loosening hose connections or

opening the test connection (for fuel pressure testing), place rags around the connection area. Then release pressure by carefully loosening the connection.

When working on the fuel supply/injection system, pay careful attention to the following "6 rules" of cleanliness:

- Thoroughly clean all connections and surrounding area before disconnecting.
- Place parts that have been removed on a clean surface and cover them. Use lint-free cloths.
- Carefully cover over opened components or seal, if repairs are not performed immediately.
- Only install clean components: Only unpack replacement parts immediately prior to installation. Do not use parts that have been stored loose (e.g. in tool boxes etc.).
- When the system is open: Avoid working with compressed air if possible. Do not move vehicle unless absolutely necessary.
- Separated electrical connections: Protect from dirt and moisture. Connect only when dry.

Component locations, overview

Components A through H are not depicted in exploded view illustration.

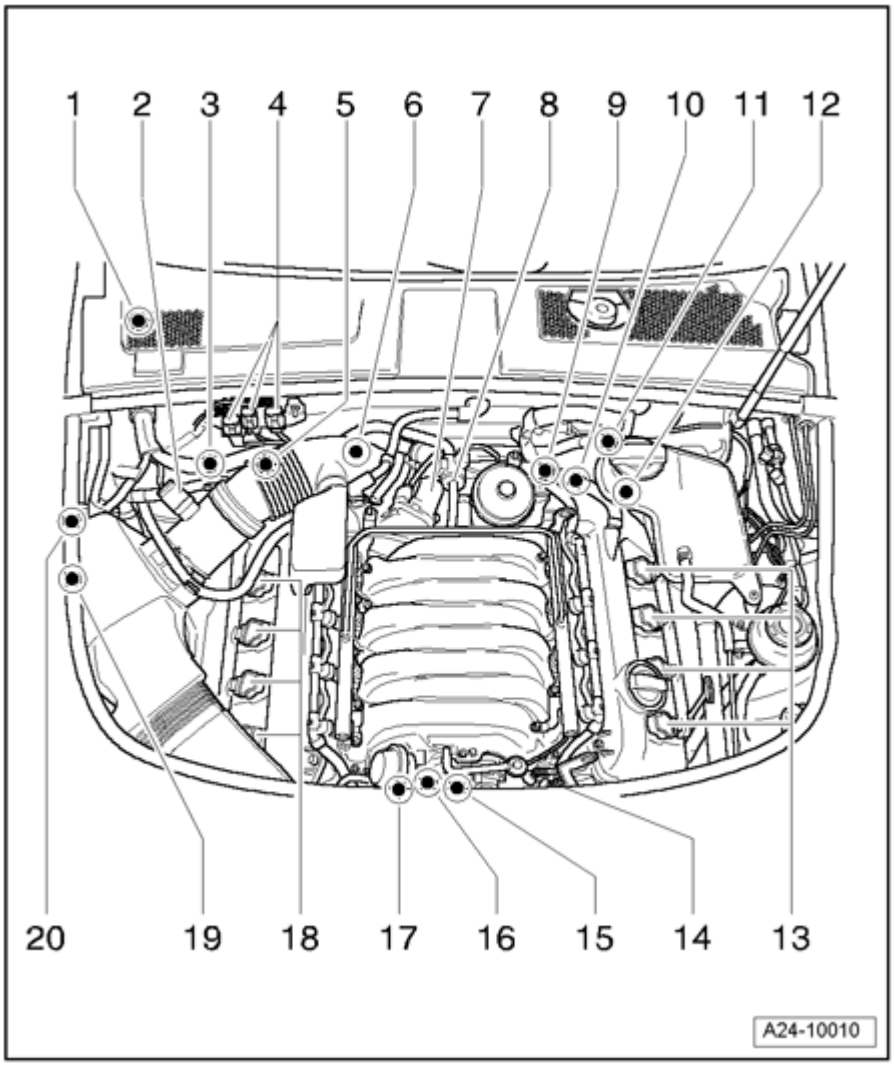

Fig. 506: Motronic Fuel Injection System, Servicing - Component Locations, Overview
Courtesy of VOLKSWAGEN UNITED STATES, INC.

1 - Engine control module J623

- Component location: In E-box in right plenum chamber

2 - Mass air flow (MAF) sensor G70 with intake air temperature (IAT) sensor G42

- Removing and installing --> **Mass air flow (MAF) sensor, removing and installing**

3 - Camshaft Adjustment Valve 1 N205

- **Engine viewed from rear**

4 - Connector strip

- Connector assignment **Connector strip on right side of bulkhead**

5 - Camshaft Position (CMP) sensor G40

- Cylinder bank 1
- **Engine viewed from rear**

6 - Engine coolant temperature (ECT) sensor G62

7 - Throttle valve control module J338

- With Throttle Drive (for Electronic Power Control (EPC)) G186 , Throttle Drive Angle Sensor 1 (for Electronic Power Control (EPC)) G187 and Throttle Drive Angle Sensor 2 (for Electronic Power Control (EPC)) G188
- **Engine viewed from rear**

8 - Evaporative Emission (EVAP) Canister Purge Solenoid Valve N80

9 - Oil pressure switch F1

- **Engine viewed from rear**

10 - Camshaft position (CMP) sensor 2 G163

- Cylinder bank 2
- **Engine viewed from rear**

11 - Connector strip

- Connector assignment
- **Connector strip beneath coolant reservoir**

12 - Camshaft Adjustment Valve 2 N208

- **Engine viewed from rear**

13 - Ignition coils with power output stages

- Cylinder bank 2
- To remove, puller for ignition coil T10094 can be used.

14 - 3-pin harness connector

- For Knock Sensor (KS) 3 G198
- For Knock Sensor (KS) 4 G199

15 - Secondary Air Injection (AIR) Solenoid Valve N112

- **Engine viewed from front**

16 - Intake Manifold Change-Over Valve N156

- **Engine viewed from front**

17 - 3-pin harness connector

- For Knock Sensor (KS) 1 G61
- For Knock Sensor (KS) 2 G66
- **Engine viewed from front**

18 - Ignition coils with power output stages

- Cylinder bank 1
- To remove, puller for ignition coil T10094 can be used.

19 - Intake air switch-over valve N335

- For controlling a flap in air filter housing
- The intake air switch-over valve N335 is located behind air filter housing. The air filter housing must be completely removed to test the valve.

20 - Secondary Air Injection (AIR) Pump Motor V101

- Front bottom in driving direction
- Refer to --> **Secondary Air Injection (AIR) Pump Motor V101**

A - Throttle position (TP) sensor G79 and Accelerator Pedal Position Sensor 2 G185

- In footwell on accelerator pedal (both sensors are integrated into one housing)

B - Brake light switch F

- In footwell on pedal mount near brake pedal

C - Clutch pedal switch F36

- In footwell on pedal mount near clutch pedal

D - Fuel pump (FP) relay J17

- In 3-socket relay carrier in plenum chamber, left side, relay position 2
- **Component located on 3-socket relay carrier in left plenum chamber**

E - Motronic engine control module (ECM) power supply relay J271

- In 3-socket relay carrier in plenum chamber, left side, relay position 3
- **Component located on 3-socket relay carrier in left plenum chamber**

F - Secondary Air Injection (AIR) Pump Relay J299

- In 4-socket relay carrier in E-box, in right side of plenum chamber, relay position 3
- **Component located on 4-socket relay carrier in E-box of right plenum chamber**

G - Data Link connector (DLC)

- Located in knee bolster on drivers side

H - Engine Speed (RPM) Sensor G28

- In transmission housing over ring gear

Emissions Malfunction Indicator Lamp (MIL)

- The Malfunction Indicator Lamp (MIL) lights up when emissions-related malfunctions are recognized by the Engine Control Module (ECM).
- Component location of emissions MIL (CHECK): In instrument cluster

NOTE:

- **The emissions MIL can blink or remain lit continuously. In any case, DTC memory must be checked.**

If malfunction indicator lamp (MIL) is blinking

- A malfunction exists that, under these driving conditions, may damage the catalytic converters. In this case, driving may only be continued at a reduced load (until the MIL goes out or remains constantly lit) and malfunction must be eliminated as quickly as possible!

If malfunction indicator lamp (MIL) is constantly lit

- A malfunction exists that causes increased emissions. Interrogate DTC memory of engine control module (ECM) or transmission.
- For driveability problems or customer complaints where the emissions MIL is not lit, DTC memory must be checked after a function test of the MIL because malfunctions can be stored without causing the MIL to light up immediately.

EPC warning lamp

- "EPC" is an abbreviation and stands for Electronic Power Control, also known as electronic performance regulation (E-Gas).

- Component location of EPC warning lamp: In instrument cluster

With ignition on, the engine control module (ECM) switches EPC lamp on.

After engine is started, engine control module (ECM) tests all components important to function of EPC system.

While these components are being tested, EPC lamp stays lit for approx. 3 seconds. If a malfunction is detected during these tests, the lamp will remain lit constantly.

If malfunctions are detected in EPC system during engine operation, the ECM switches on the EPC warning lamp. The malfunction is stored in DTC memory of ECM at the same time.

Component located on 3-socket relay carrier in left plenum chamber

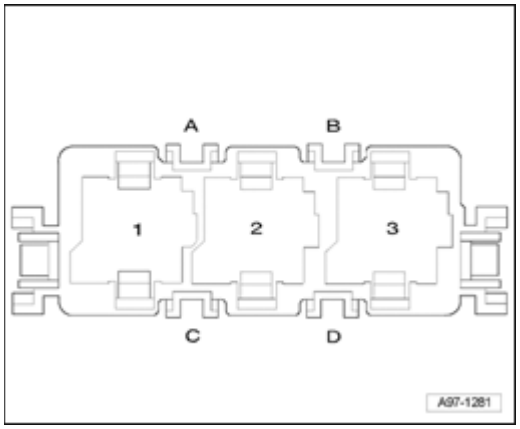

Fig. 507: Component Located On 3-Socket Relay Carrier In Left Plenum Chamber
Courtesy of VOLKSWAGEN UNITED STATES, INC.

2 - Fuel pump (FP) relay J17

3 - Motronic engine control module (ECM) power supply relay J271

Component located on 4-socket relay carrier in E-box of right plenum chamber

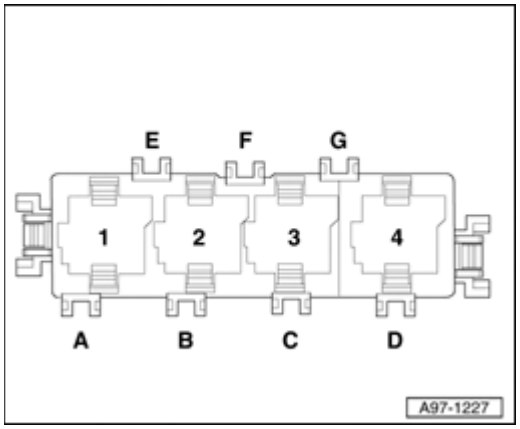

Fig. 508: Component Located On 4-Socket Relay Carrier In E-Box Of Right Plenum Chamber

Courtesy of VOLKSWAGEN UNITED STATES, INC.

3 - Secondary Air Injection (AIR) Pump Relay J299

Connector strip on right side of bulkhead

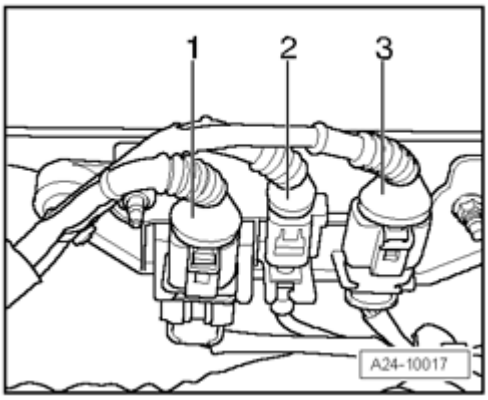

Fig. 509: Connecting Electrical Connector
Courtesy of VOLKSWAGEN UNITED STATES, INC.

1 - 6-pin connection for heated oxygen sensor (HO2S) G39 and oxygen sensor heater Z19 before catalytic converter of bank 1

2 - 2-pin connection for bank 1 Camshaft Adjustment Valve 1 N205

3 - 4-pin connection for oxygen sensor (O2S) behind three way catalytic converter (TWC) G130 and oxygen sensor (O2S) heater 1 (behind three way catalytic converter (TWC)) Z29 of bank 1

Connector strip beneath coolant reservoir

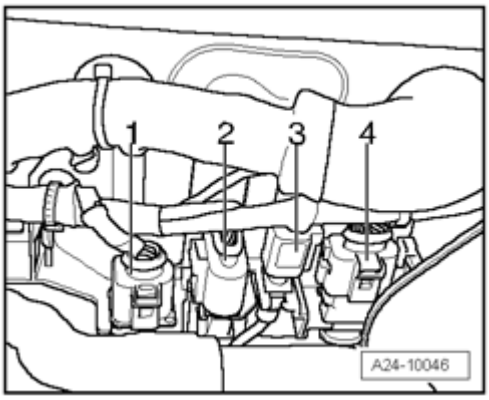

Fig. 510: Identifying Bulkhead Electrical Connector
Courtesy of VOLKSWAGEN UNITED STATES, INC.

1 - 6-pin connection for heated oxygen sensor (HO2S) 2 G108 and oxygen sensor (O2S) heater 2 Z28 before catalytic converter of bank 2

2 - 3-pin connection (gray) for engine speed (RPM) sensor G28

3 - 2-pin connection for bank 2 Camshaft Adjustment Valve 2 N208

4 - 4-pin connection for oxygen sensor (O2S) 2 behind three way catalytic converter (TWC) G131 and oxygen sensor (O2S) heater 2 (behind three way catalytic converter (TWC)) Z30 of bank 2

Engine viewed from front

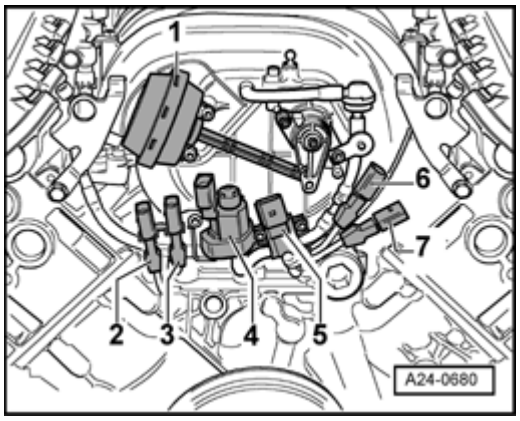

Fig. 511: Engine Viewed From Front
Courtesy of VOLKSWAGEN UNITED STATES, INC.

1 - Vacuum diaphragm for intake manifold change-over

2 - Knock sensor (KS) 1 G61

3 - Knock sensor (KS) 2 G66

4 - Intake Manifold Change-Over Valve N156

5 - Secondary Air Injection (AIR) Solenoid Valve N112

6 - Knock sensor (KS) 3 G198

7 - Knock sensor (KS) 4 G199

Engine viewed from rear

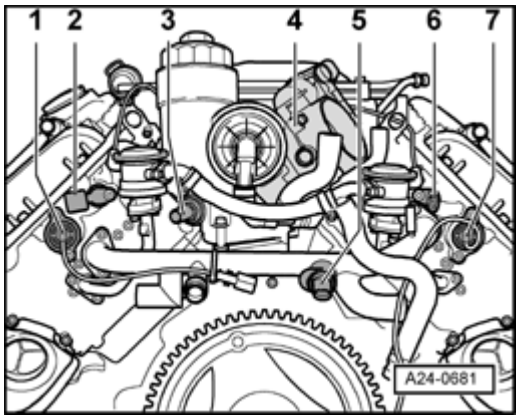

Fig. 512: Engine Viewed From Rear
Courtesy of VOLKSWAGEN UNITED STATES, INC.

1 - Camshaft Adjustment Valve 2 N208

2 - Camshaft position (CMP) sensor 2 G163 cylinder bank 2

3 - Oil pressure switch F1

4 - Throttle valve control module J338

5 - Engine coolant temperature (ECT) sensor G62

6 - Camshaft position (CMP) sensor G40 cylinder bank 1

7 - Camshaft Adjustment Valve 1 N205

Secondary Air Injection (AIR) Pump Motor V101

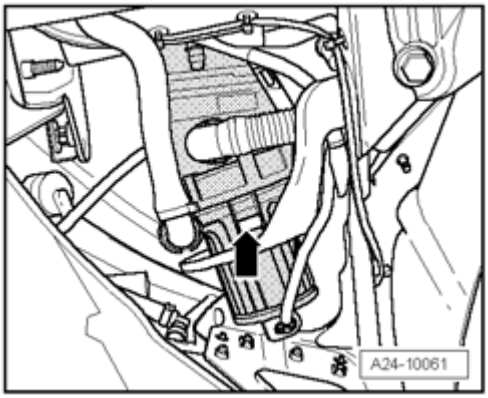

Fig. 513: Secondary Air Injection (AIR) Pump Motor V101
Courtesy of VOLKSWAGEN UNITED STATES, INC.

- Lower right, in driving direction

Air filter, overview

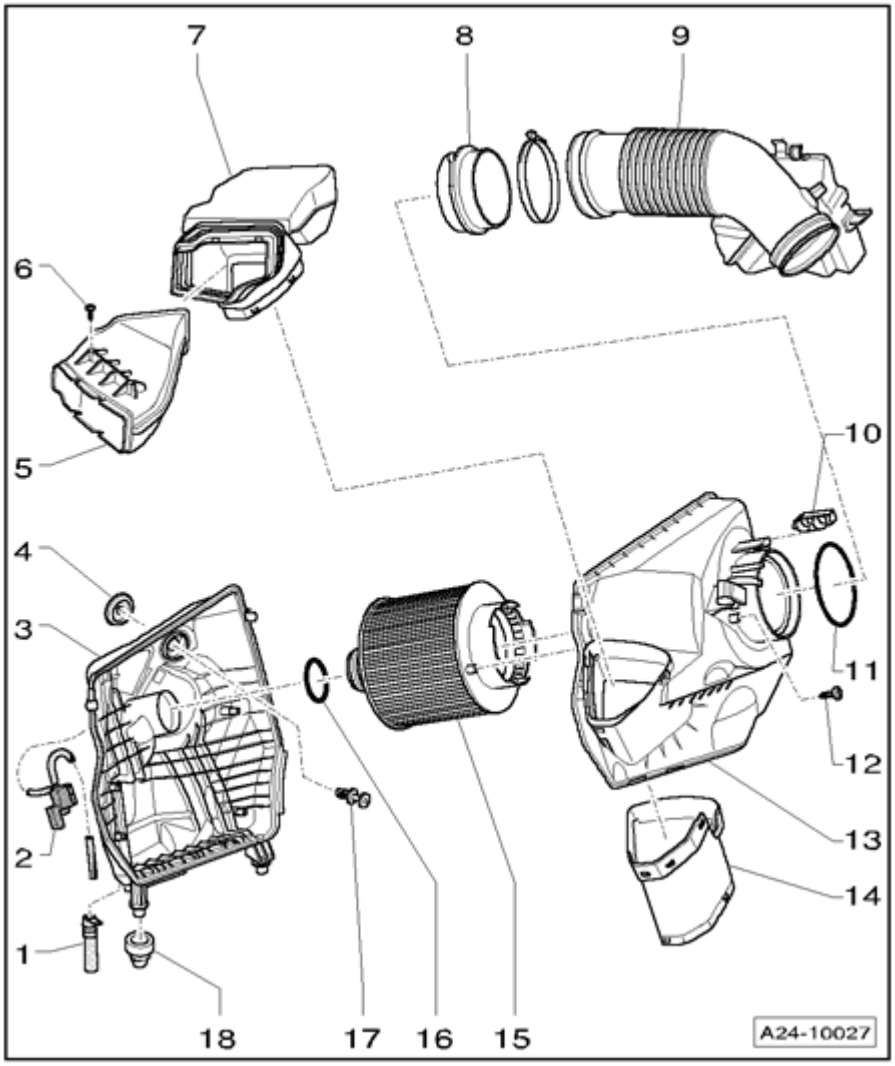

Fig. 514: Air Filter, Overview
Courtesy of VOLKSWAGEN UNITED STATES, INC.

1 - Vent hose

2 - Intake air switch-over valve N335

3 - Lower part of air filter housing

- Clean air filter housing of salt residue, dirt and leaves

4 - Rubber grommet

5 - Air duct

- Check air duct for dirt and leaves

6 - 1.5 Nm

7 - Air duct

- Check air duct for dirt and leaves

8 - Connection

9 - Air duct hose to Throttle Valve Control Module J338

- With resonator

10 - Wiring router

11 - O-ring

- Replace

12 - 1.5 Nm

- For securing air filter element

13 - Upper part of air filter housing

- Clean air filter housing of salt residue, dirt and leaves

14 - Air duct

- Clipped into upper part of air filter housing

15 - Air filter element

- Always use a genuine air filter element

16 - O-ring

- Replace

17 - Spreader clip

18 - Grommet

Air filter, removing and installing

Removing

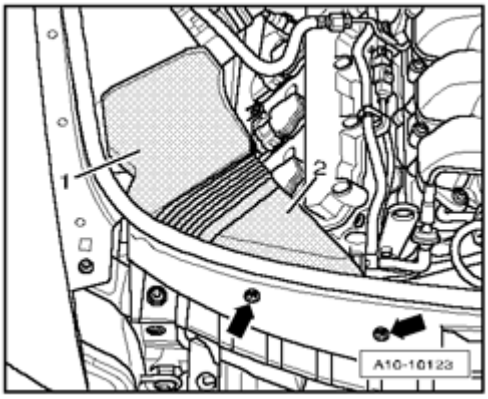

Fig. 515: Removing Bolts & Air Duct
Courtesy of VOLKSWAGEN UNITED STATES, INC.

- Remove bolts - **arrow** -.
- Remove air duct - **1** - and - **2** -.
- Unclip fuel hose - **1** -.

NOTE:

- **The fuel hose is routed behind the air duct hose - 3 -.**

- Disconnect electrical connector - **2** - from mass air flow (MAF) sensor G70.
- Disconnect mass air flow (MAF) sensor G70 from air duct hose - **3** -.

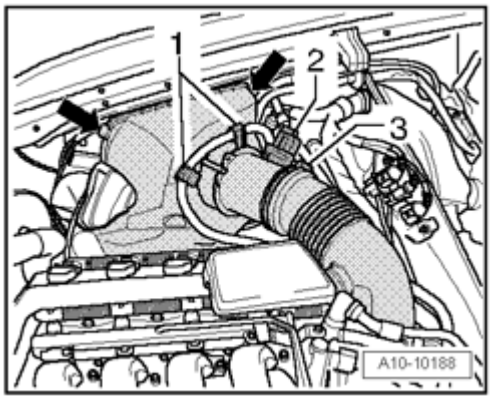

Fig. 516: Disconnecting Mass Air Flow (MAF) Sensor G70 Electrical Harness Connector
Courtesy of VOLKSWAGEN UNITED STATES, INC.

- Open clips - **arrows** - and remove upper part of air filter housing with mass air flow (MAF) sensor G70.

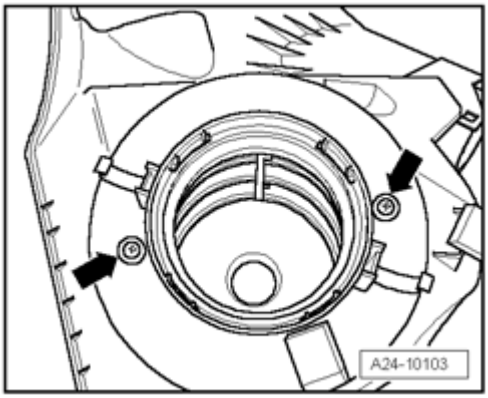

Fig. 517: Identifying Air Filter Insert Securing Screws
Courtesy of VOLKSWAGEN UNITED STATES, INC.

- Remove 2 bolts - **arrows** - from air filter element.

Removing lower part of air filter housing

- Separate hose connections at lower part of air filter housing.

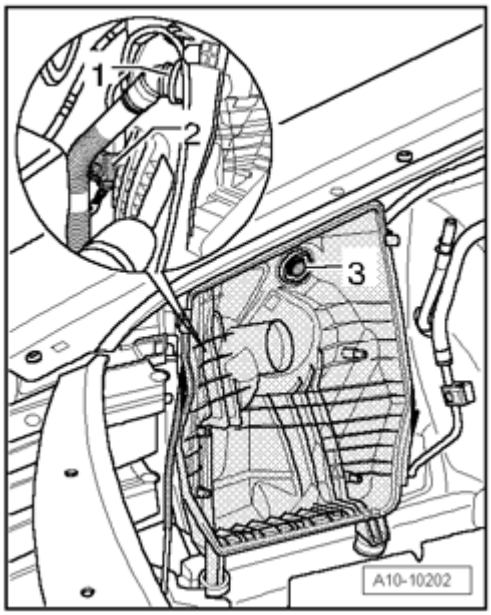

Fig. 518: Identifying Expanding Clip, Hose, And Electrical Harness Connector
Courtesy of VOLKSWAGEN UNITED STATES, INC.

- Remove pin from spreader clip - **3** -.
- Remove lower part of air filter housing and, on backside, disconnect electrical connection - **2** - at intake air switch-over valve N335.

Installing

For problem-free operation of mass air flow (MAF) sensor G70 it is very important to observe the following notes and procedures.

NOTE:

- **If the air filter element is very dirty or soaked, dirt particles or moisture may have contaminated the Mass Air Flow (MAF) Sensor G70 and may be causing false mass air flow values. This results in a reduction of power, since a lower injection quantity is calculated.**
- **Always use an original equipment air filter element.**
- **Use a lubricant (silicone-free) for installing the intake hose.**
- **Secure all hose connections using hose clamps appropriate for the model type**

- Using compressed air, blow through water drain hose in lower part of air filter housing.
- Clean air filter housing (upper and lower sections) of salt residue, dirt or leaves (use vacuum cleaner if necessary).
- Check MAF sensor and intake hose (intake air side) for salt residue, dirt, and leaves.
- Check intake ducting up to air filter element for dirt.

- Make sure that air filter element is properly centered when placed into mounting of lower part of air filter housing.

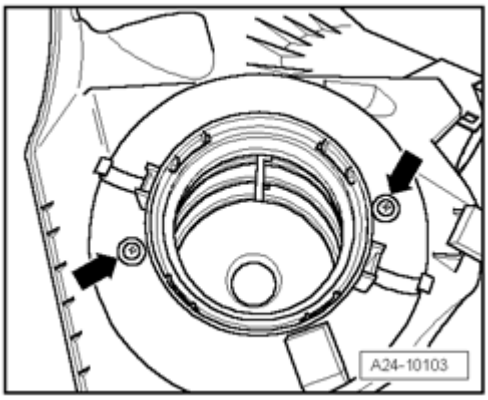

Fig. 519: Identifying Air Filter Insert Securing Screws
Courtesy of VOLKSWAGEN UNITED STATES, INC.

- Secure air filter element again with both bolts - **arrows** -.
- Set upper part of air filter housing onto lower part of air filter housing, without using much force. When doing this, make sure that the upper part of air filter housing is not placed crooked onto air filter element. Pay attention to sealing lip of air filter element (false air).
- Then, attach upper part of air filter housing to lower part of air filter housing.
- Further installation is performed in reverse order.

Intake manifold, overview

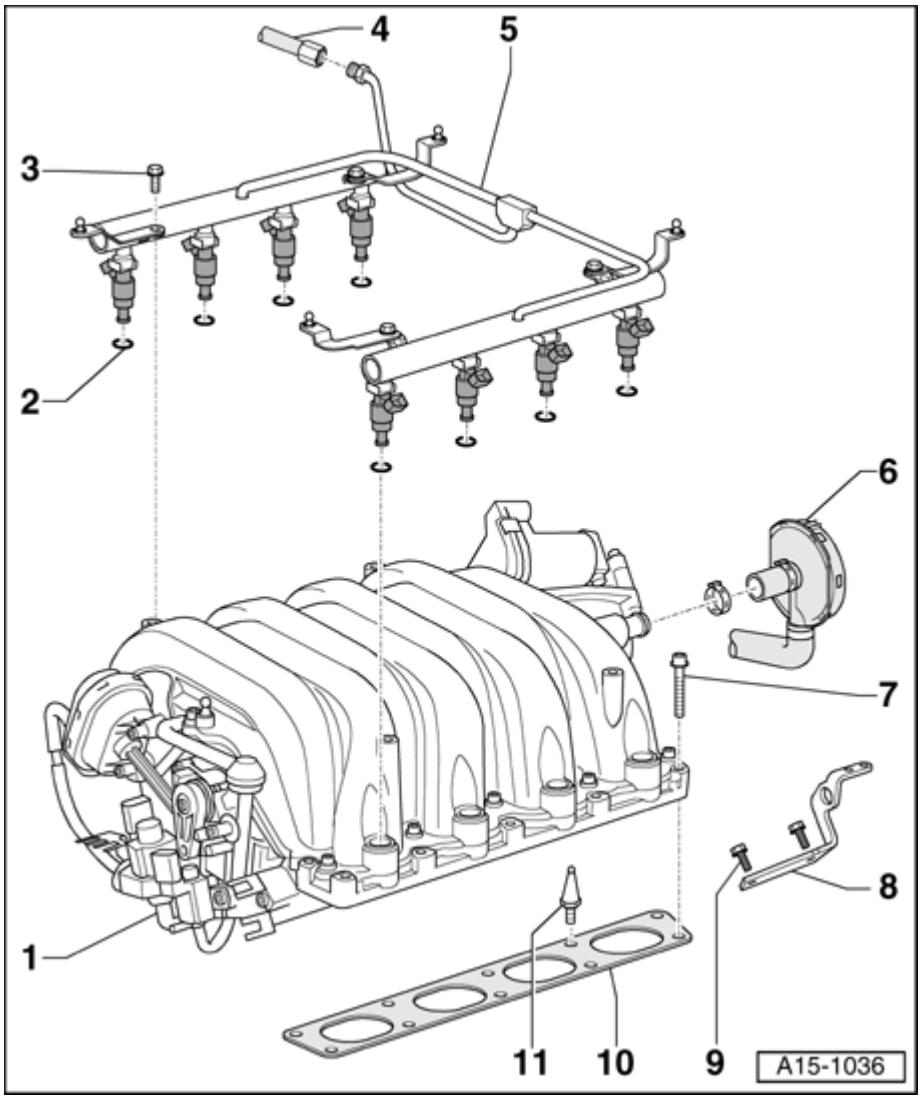

Fig. 520: Intake Manifold, Overview
Courtesy of VOLKSWAGEN UNITED STATES, INC.

1 - Intake manifold

- Removing and installing --> **Intake manifold, removing and installing**

2 - O-rings

- For fuel injectors
- Replace

3 - 10 Nm

4 - Fuel supply line

- Tighten union nut to 25 Nm

5 - Fuel rail

6 - Pressure regulator valve

- For crankcase ventilation

7 - 10 Nm

- Fasten diagonally in steps

8 - Lifting eye

9 - 23 Nm

10 - Gasket

- For intake manifold
- Replace

11 - Locking pin, 0.6 Nm

Intake manifold, removing and installing

Removing

NOTE:

- **All cable ties which are opened or cut open when removing, must be replaced in the same position when installing.**

- Remove front and rear engine covers.
- Disconnect vacuum hose - **3** - to brake booster at bulkhead.

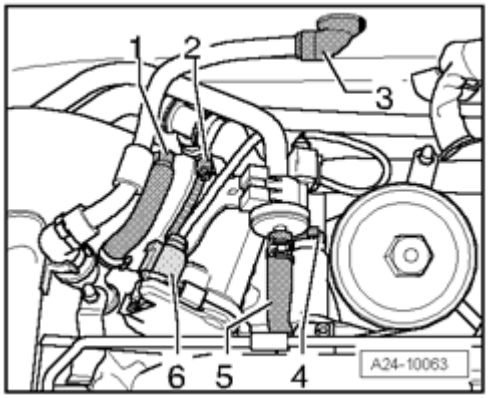

Fig. 521: Disconnecting Throttle Valve Control Module J338 Electrical Harness Connector
Courtesy of VOLKSWAGEN UNITED STATES, INC.

- Disconnect vacuum hose - **1** -.
- Disconnect electrical connection - **6** - at throttle valve control module J338.

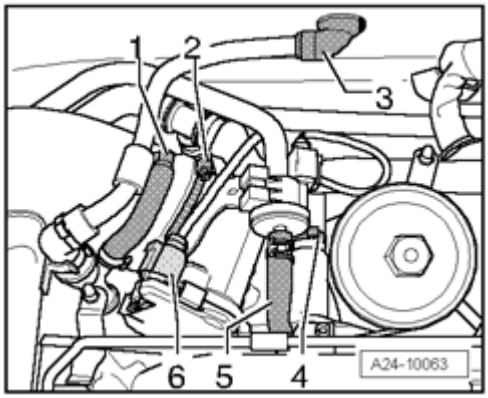

Fig. 522: Disconnecting Throttle Valve Control Module J338 Electrical Harness Connector
Courtesy of VOLKSWAGEN UNITED STATES, INC.

- Release hose clamp - **2** - and pull out air duct hose.
- Pull off vacuum hose - **4** - from crankcase breather at intake manifold.

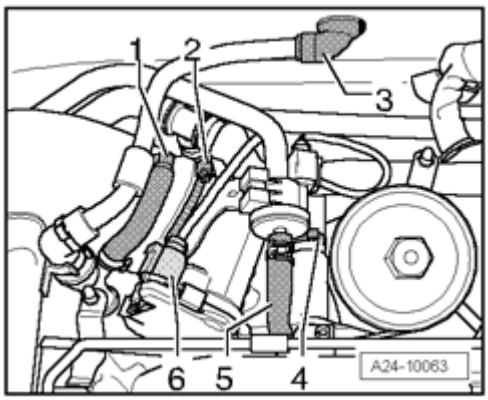

Fig. 523: Disconnecting Throttle Valve Control Module J338 Electrical Harness Connector
Courtesy of VOLKSWAGEN UNITED STATES, INC.

- Disconnect vacuum hose - **5** - at intake manifold.

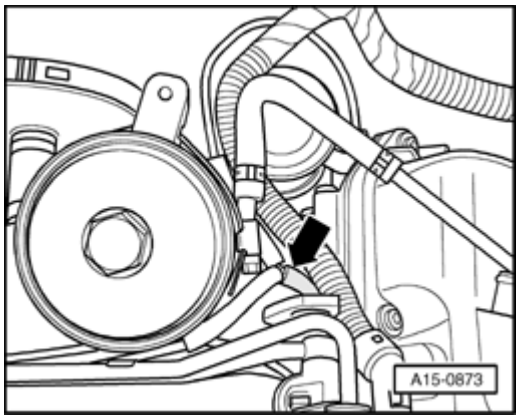

Fig. 524: Disconnecting Vacuum Hose At T-Piece
Courtesy of VOLKSWAGEN UNITED STATES, INC.

- Disconnect vacuum hose - **arrow** - at T-piece.

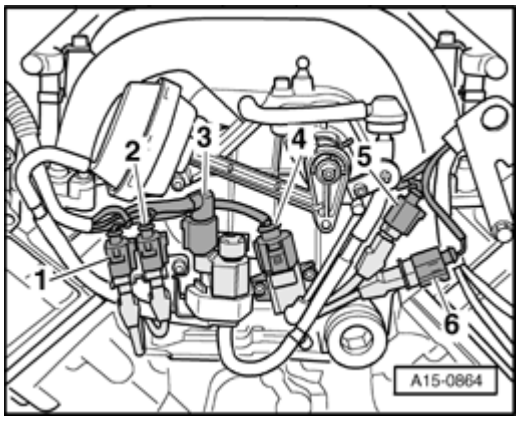

Fig. 525: Remove Electrical Harness Connectors Toward Front From Brackets On Intake Pipe
Courtesy of VOLKSWAGEN UNITED STATES, INC.

- Remove electrical connections 1 through 4 forward from their retainers and off of intake manifold.

NOTE:

- **The electrical connections must not be separated.**

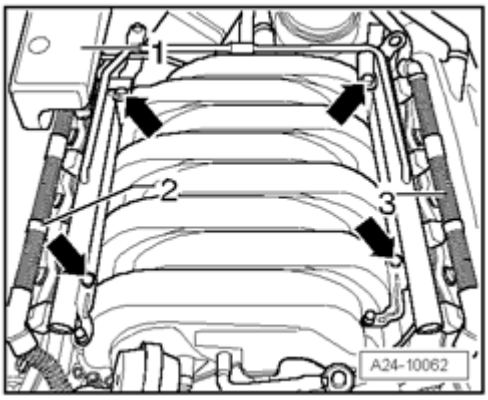

Fig. 526: Pulling Off Connector Strips At Fuel Injectors & Removing Bolts From Fuel Rail
Courtesy of VOLKSWAGEN UNITED STATES, INC.

- Remove connector strips - **2** - and - **3** - at 8 fuel injectors.
- Remove resonance container - **1** -.
- Remove bolts - **arrows** - from fuel rail.
- Pull fuel rail with injectors upward uniformly from intake manifold and set aside in engine compartment on a clean cloth.

NOTE:

- **Carefully protect the removed fuel injectors from contamination.**

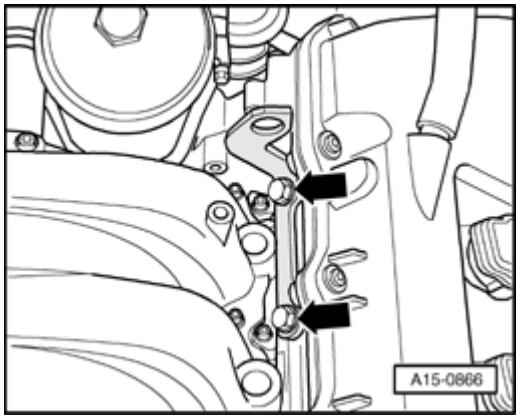

Fig. 527: Removing Left/Rear Engine Lifting Eye
Courtesy of VOLKSWAGEN UNITED STATES, INC.

- Remove left rear engine lifting eye - **arrows** -.

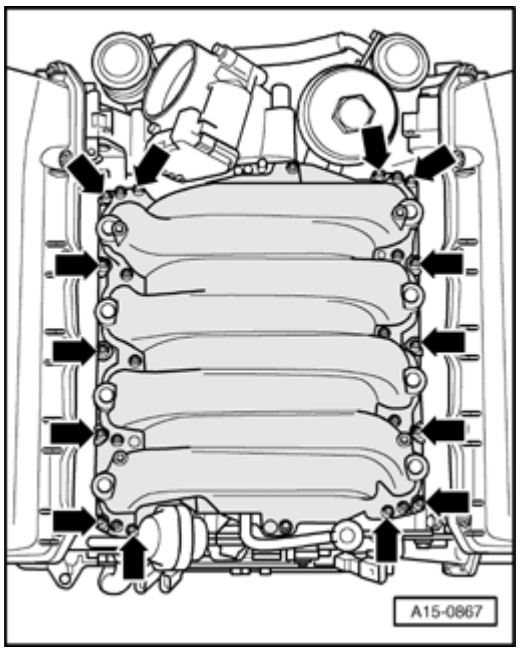

Fig. 528: Removing Intake Manifold Bolts
Courtesy of VOLKSWAGEN UNITED STATES, INC.

- Remove intake manifold bolts - **arrows** - and remove it.

NOTE:

- **Plug intake ports of the cylinder head with clean rags.**

Installing

Installation is in reverse order of removal, note the following:

NOTE:

- **Replace gaskets and O-rings.**
- **During installation, all cable ties must be re-installed at the same location.**
- **Secure all hose connections using hose clamps appropriate for the model type**

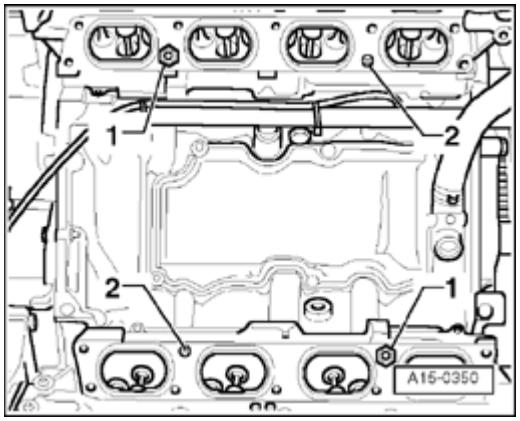

Fig. 529: Replacing Intake Manifold Gaskets, Thereby Removing Locking Bolt
Courtesy of VOLKSWAGEN UNITED STATES, INC.

- Replace intake manifold gaskets, thereby removing locking bolt - **1** -.
- Be aware of alignment pins - **2** - when setting intake manifold in place.

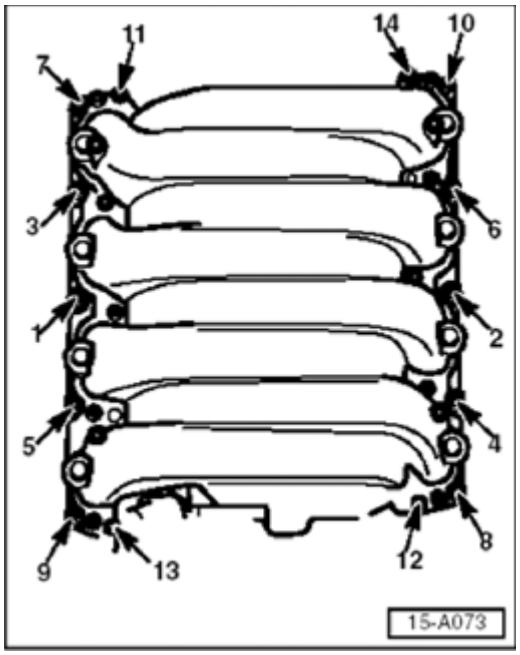

Fig. 530: Tightening Intake Manifold Bolts In Stages And In Sequence
Courtesy of VOLKSWAGEN UNITED STATES, INC.

- Tighten intake manifold bolts - **arrows** - in stages and in sequence shown.

Intake manifold torque: 11 Nm

- Reconnect all vacuum lines.
- Make sure electrical connections are securely seated.
- Bleed fuel system --> **Fuel system, bleeding**

Torque specifications

Component	Nm
Locking bolt to cylinder head	0.6
Intake manifold to cylinder head	11
Engine lifting eye to cylinder head	22
Fuel rail to intake manifold	10

Fuel system, bleeding

- Start engine and allow engine to run several minutes at average RPM and then turn off again.

NOTE:

- **At the beginning, engine may run roughly due to air in fuel supply system.**

- Start engine and allow engine to run several minutes at average RPM and then turn off again.
- Check fuel system for leaks.

- Check DTC memory and, if necessary, erase.

CAUTION:

- **Test and measuring equipment must always be secured to the rear seat and be operated from there by a second person.**
- **If test and measuring instruments are operated from the front passengers seat and the vehicle is involved in an accident, there is a possibility that the person sitting in this seat may receive serious injuries when the airbag is triggered.**

- Perform a road test with at least one acceleration at Wide Open Throttle (WOT), and then check fuel system again for leaks.
- After the road test, check DTC memory again.

Fuel pressure regulator and residual pressure, checking

NOTE:

- **The fuel pressure regulator is located in the fuel filter under the fuel tank.**

Special tools, testers and auxiliary items required

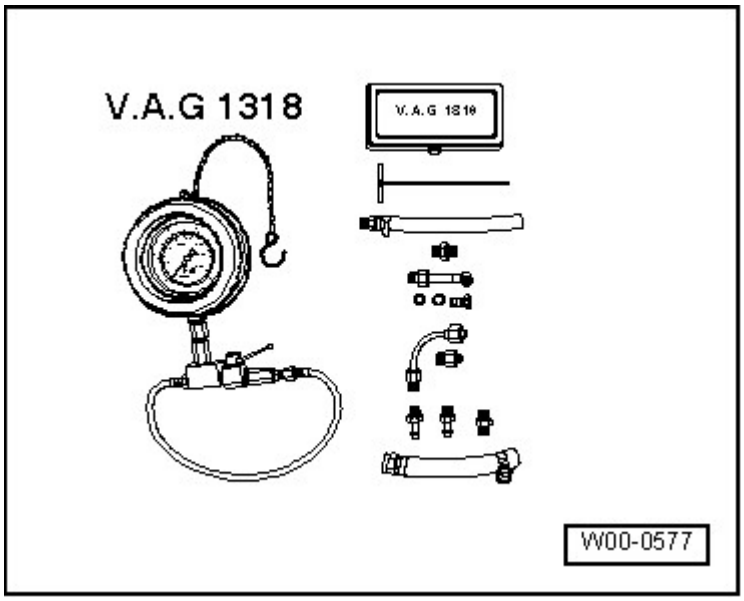

Fig. 531: Identifying Pressure Gauge V.A.G 1318
Courtesy of VOLKSWAGEN UNITED STATES, INC.

- Fuel injection pressure gauge V.A.G 1318 with V.A.G 1318/6 and V.A.G 1318/7

Test conditions

- Fuel Pump (FP) Relay OK.
- Fuel Pump (FP) OK.

- Fuel filter OK.
- Battery voltage at least 11 Volts.
- Vehicles with automatic transmission: Selector lever in position P or N

- Briefly open fuel filler cap (pressure release).
- Remove engine cover.

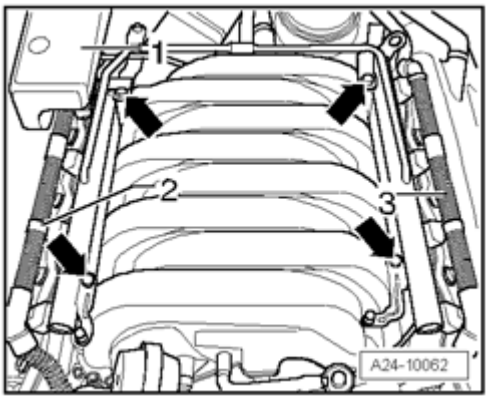

Fig. 532: Pulling Off Connector Strips At Fuel Injectors & Removing Bolts From Fuel Rail
Courtesy of VOLKSWAGEN UNITED STATES, INC.

- Remove resonance container - **1** -.

CAUTION: Fuel system is under pressure! Before loosening hose connections or opening the test connection (for fuel pressure testing), place rags around the connection area. Then release pressure by carefully loosening the connection.

- Cover threaded connections that hold fuel pressure (fuel supply) with a shop rag.

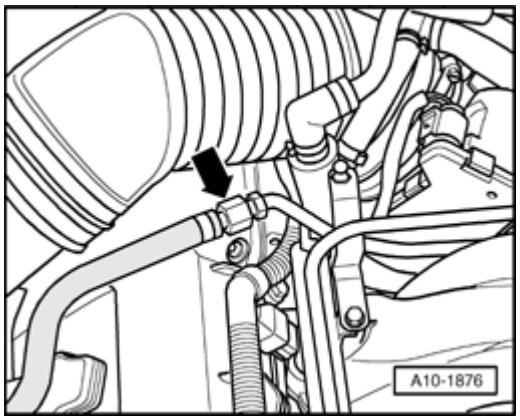

Fig. 533: Identifying Threaded Connection
Courtesy of VOLKSWAGEN UNITED STATES, INC.

- Open threaded connection - **arrow** - and catch escaping fuel using a shop rag.

NOTE:

- **The fuel line is routed differently.**

- Install fuel injection pressure gauge V.A.G 1318 with adapters V.A.G 1318/6 and 1318/7 between fuel supply line and fuel rail.

NOTE:

- **The shut-off valve of fuel injection pressure gauge V.A.G 1318 must be installed on the tank-side (fuel supply line)!**

- Open shut-off valve of pressure gauge. The lever points in direction of flow.
- Start engine and run at idle speed.
- Measure fuel pressure.

Specified value: approx. 4 bar positive pressure

- Switch off ignition.
- Check for leaks and for residual pressure by observing pressure loss on pressure gauge.

After 10 minutes there must be a residual pressure of at least 2.5 bar.

The holding pressure drops below 2.5 bar:

- Start engine and run at idle speed.

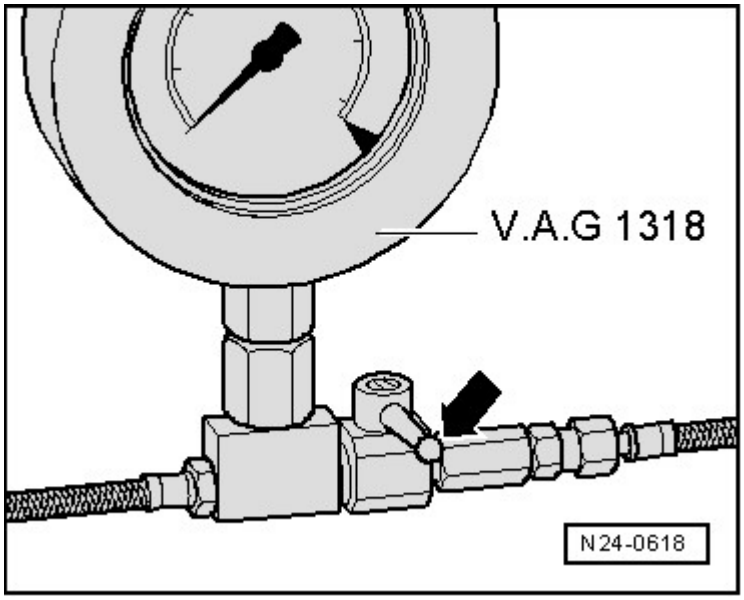

Fig. 534: Locating V.A.G 1318 Shut-Off Tap
Courtesy of VOLKSWAGEN UNITED STATES, INC.

- Wait until pressure has built up, then switch off ignition. Simultaneously close shut-off valve of fuel injection pressure gauge V.A.G 1318 (lever perpendicular to direction of flow).
- Watch pressure drop on gauge.

If pressure drops again:

- There is a leak in threaded connection between pressure gauge and fuel supply line.
- Check pressure gauge for leaks.
- Check line connections, O-rings at fuel rail and fuel injectors for leaks.

If the pressure does not drop:

- Replace fuel filter. --> **20 - FUEL SUPPLY**
- Test check-valve of Fuel Pump (FP) --> **20 - FUEL SUPPLY**

Checking for leaks, injection quantity and spray pattern of fuel injectors

Test conditions

- Fuel pressure OK.

Fuel rail, removing and installing

CAUTION: Fuel system is under pressure! Before loosening hose connections or opening the test connection (for fuel pressure testing), place rags around the connection area. Then release pressure by carefully loosening the connection.

- Remove engine cover.
- Remove connectors from fuel injectors.

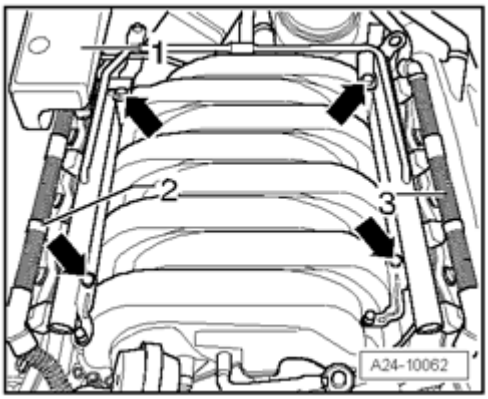

Fig. 535: Pulling Off Connector Strips At Fuel Injectors & Removing Bolts From Fuel Rail
Courtesy of VOLKSWAGEN UNITED STATES, INC.

- Remove resonance container - **1** -.
- Cover threaded connections that hold fuel pressure (fuel supply) with a shop rag.
- Open threaded connection - **arrow** - and catch escaping fuel using a shop rag.

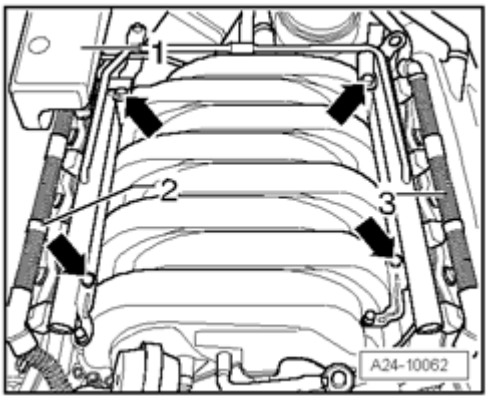

Fig. 536: Pulling Off Connector Strips At Fuel Injectors & Removing Bolts From Fuel Rail
Courtesy of VOLKSWAGEN UNITED STATES, INC.

- Remove fuel rail from intake manifold - **arrows** - and pull it with fuel injectors upward and off from intake manifold.

Installation of fuel rail with fuel injectors is the same in reverse order. Observe the following points when installing:

- Replace O-rings at all opened connection points. (To replace front O-rings, push O-rings over plastic cap at head of the injector - under no circumstances may plastic cap be removed).
- Lubricate O-rings with clean engine oil.
- Check clips for proper seating.
- Fasten fuel rail to intake manifold with 10 Nm.

Injectors, checking for leaks

- Remove engine cover.
- Disconnect connectors from fuel injectors.

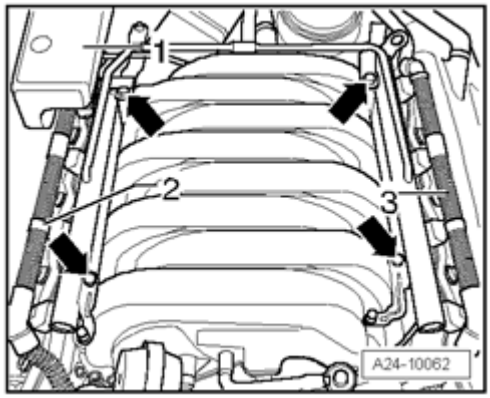

Fig. 537: Pulling Off Connector Strips At Fuel Injectors & Removing Bolts From Fuel Rail
Courtesy of VOLKSWAGEN UNITED STATES, INC.

- Remove resonance container - **1** -.
- Remove fuel rail from intake manifold - **arrows** - and pull it with fuel injectors upward and off from intake manifold.

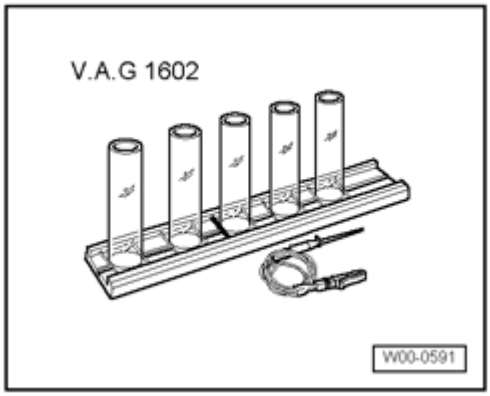

Fig. 538: Identifying Injection Quantity Tester VAG 1602
Courtesy of VOLKSWAGEN UNITED STATES, INC.

- Insert fuel injector to be tested into measuring container of fuel injection quantity tester V.A.G 1602.
- Connect test box V.A.G 1598/31 at wiring harness to engine control module (ECM), do not connect ECM --> **Wiring and components, checking with adapter cable (121-pin) V.A.G 1598/31 test box**.
- Bridge terminals 1 and 65 at test box using adapter cables from connector test set V.A.G 1594 C (this step supplies Ground (GND) to one side of relay coil of Fuel Pump -FP- relay).
- Switch ignition on.

NOTE:

- **After switching ignition on, Fuel Pump (FP) will run continuously, even with engine not running for the following reason: after switching ignition on, Fuel Pump (FP) relay supplies continuous B+ via central electronics. Ground is supplied to the FP relay via the bridge in test box.**

- Check fuel injector for leaks (visual check). Only 1 to 2 drops per minute may emit from each valve when fuel pump is running.
- If fuel loss is greater, stop Fuel Pump (FP) from running (switch off ignition) and replace faulty fuel injector.

Injection quantity, checking

- Insert fuel injector to be tested into measuring container of fuel injection quantity tester V.A.G 1602.

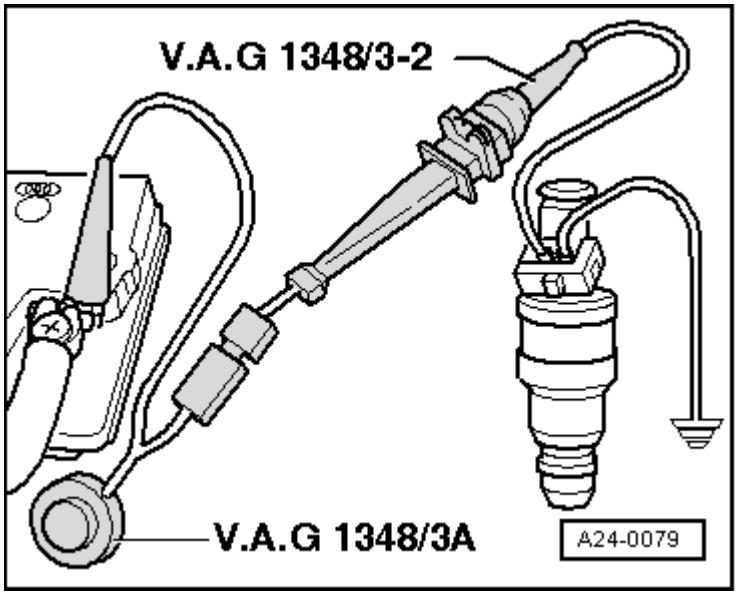

Fig. 539: Connecting Second Injector Contact To Remote Control V.A.G 1348/3 With V.A.G 1348/3-2
Courtesy of VOLKSWAGEN UNITED STATES, INC.

- Connect one terminal of fuel injector to engine Ground (GND) using an adapter cable and an alligator clip from connector test set V.A.G 1594 C.
- Connect second contact of fuel injector with remote control for VAG 1348 V.A.G 1348/3 A , adapter cable V.A.G 1348/3 - 2 and assisting cable to Positive (B+).
- Bridge terminals 1 and 65 at test box using wires from connector test set V.A.G 1594 C.
- Switch ignition on.

- Fuel Pump (FP) must run.

- Operate remote control for VAG 1348 V.A.G 1348/3 A for 30 seconds.
- Perform measurement with all fuel injectors.
- After all 4 fuel injectors have been activated, place measuring containers on a level surface.

Specified value per fuel injector: 105 to 125 ml

If specified value is not obtained for all fuel injectors:

- Check fuel pressure --> **Fuel pressure regulator and residual pressure, checking**.

If specified value is not obtained for only one fuel injector:

- Replace appropriate fuel injector.

NOTE:

- **While checking the injection quantity, the spray pattern should also be checked. Spray pattern must be the same for all injectors.**

Installation of fuel rail with fuel injectors is the same in reverse order. Observe the following points when installing:

- Replace O-rings at all opened connection points. (To replace the front O-rings, push the O-rings over the plastic cap at the head of the injector - under no circumstances may the plastic cap be removed).
- Lubricate O-rings with clean engine oil.
- Check clips for proper seating.
- Fasten fuel rail to intake manifold with 10 Nm.

Wiring and components, checking with adapter cable (121-pin) V.A.G 1598/31 test box

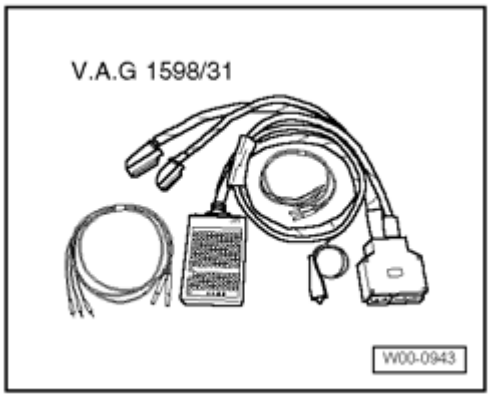

Fig. 540: V.A.G 1598/31 Test Box
Courtesy of VOLKSWAGEN UNITED STATES, INC.

NOTE:

- **The test box adapter cable (121-pin) V.A.G 1598/31 is designed so that it can be connected simultaneously to the engine control module harness and the engine control module itself.**
- **This is advantageous because electronic engine control remains fully functional (e.g. measurement of signals with engine running) when the test box is attached.**
- **The procedures will indicate whether the engine control module is to remain connected to the test box or not.**
- **To connect testing devices to the test box V.A.G 1598/31 , always use adapters from connector test set V.A.G 1594 C.**

CAUTION: To avoid damaging electronic components, switch to the corresponding measuring range and observe all test conditions before connecting the test leads.

Special tools, testers and auxiliary items required

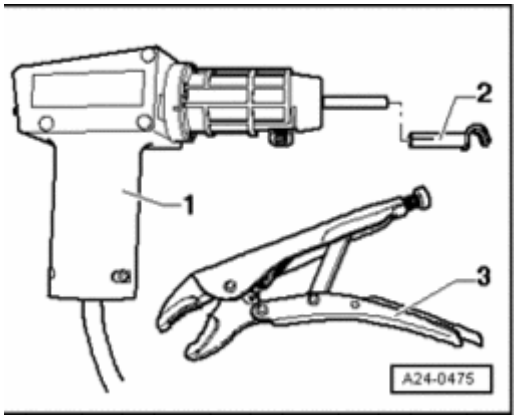

Fig. 541: Heat Gun, Adapter Nozzle And Pliers
Courtesy of VOLKSWAGEN UNITED STATES, INC.

- Heat gun - **1** - from wiring harness repair kit VAS 1978
- Nozzle attachment - **2** - also from wiring harness repair kit VAS 1978
- Small, commercially available locking pliers (vise grips)

CAUTION: By heating the threads, the retaining tabs, shear bolts and parts of the metal housing become very hot. Do not burn yourself on this! Make sure that only the threads are heated as much as possible, and not any of the surrounding parts. Possibly cover these parts.

Work steps

- Switch off ignition.
- Remove rubber seal - **1** - for plenum chamber cover.

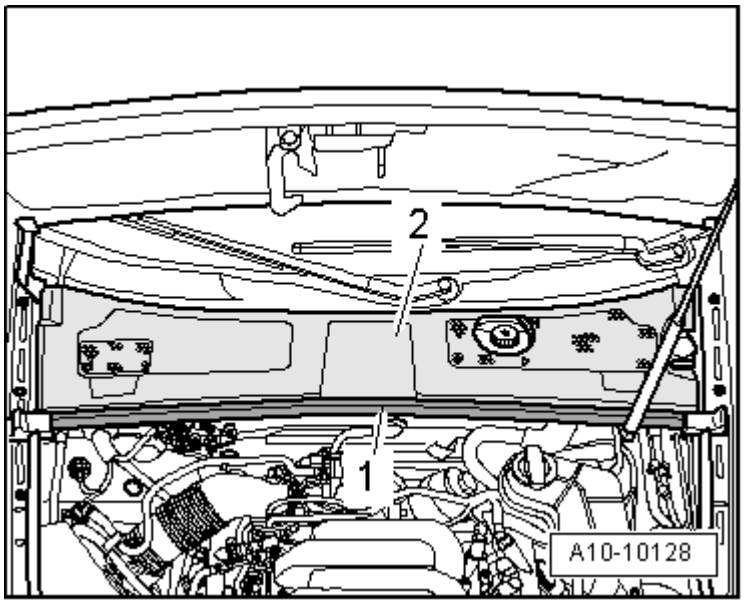

Fig. 542: Removing Rubber Seal For Plenum Chamber Cover & Plenum Chamber Cover
Courtesy of VOLKSWAGEN UNITED STATES, INC.

- Remove plenum chamber cover - **2** -.
- Pry off caps on wiper arms with a screwdriver and remove nuts.
- Pull wiper arms from wiper axles.

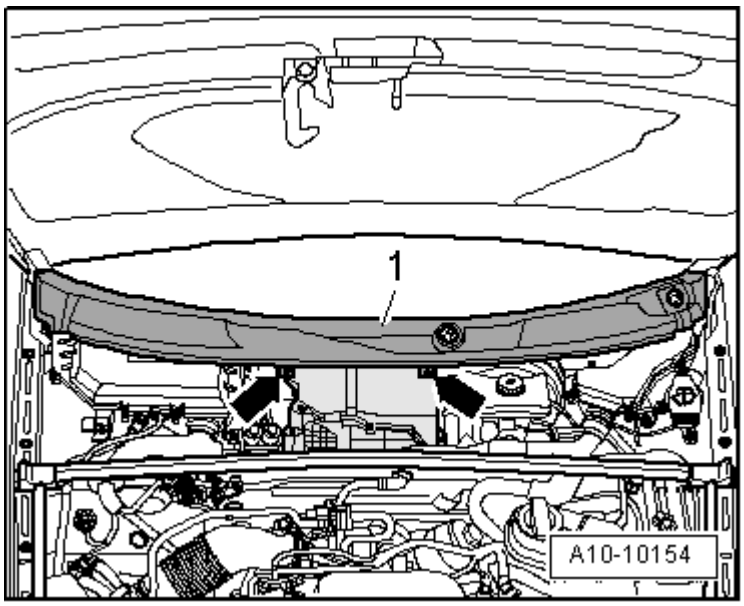

Fig. 543: Removing Bolts For Cowl Grill
Courtesy of VOLKSWAGEN UNITED STATES, INC.

- Remove left and right bolt - **arrows** - from cowl - **1** -.

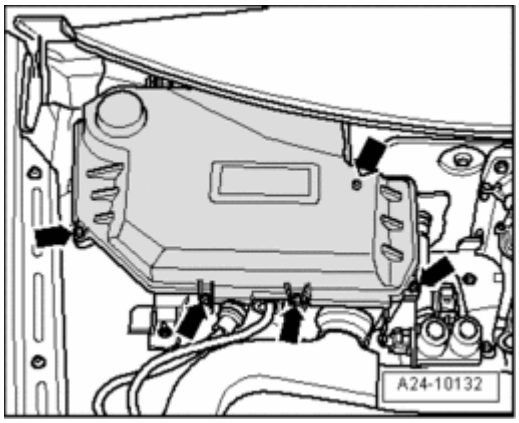

Fig. 544: Removing Bolts And Cover Form E-Box
Courtesy of VOLKSWAGEN UNITED STATES, INC.

- Remove bolts - **arrows** - and remove cover form E-box.

CAUTION: The heater pump valve unit (left of E-box) becomes very hot during operation - Risk of burning!

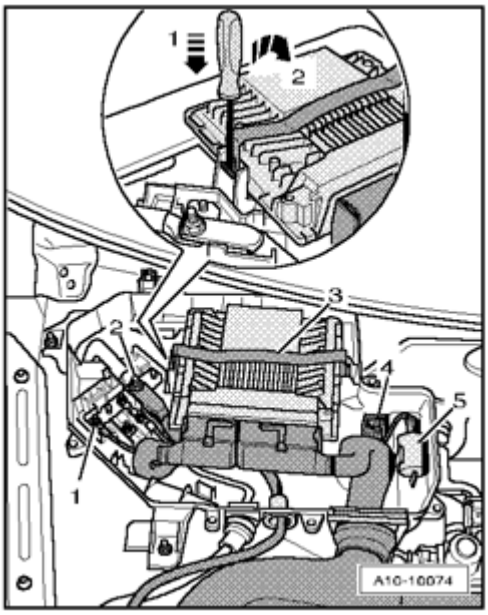

Fig. 545: Prying Off Retaining Clip With Screwdriver And Removing ECM From E-Box
Courtesy of VOLKSWAGEN UNITED STATES, INC.

- Carefully pry off retaining clip - **3** - with a screwdriver - **arrows 1 and 2** - and remove ECM from E-box.

To increase difficulty with which ECM connectors can be accessed, the ECM is secured in a metal housing with retaining tabs and shear bolts.

The threads of shear bolts - **1** - (that are not installed into the ECM) are coated with a locking compound. For

this reason, threads must be heated with heat gun to remove both bolts.

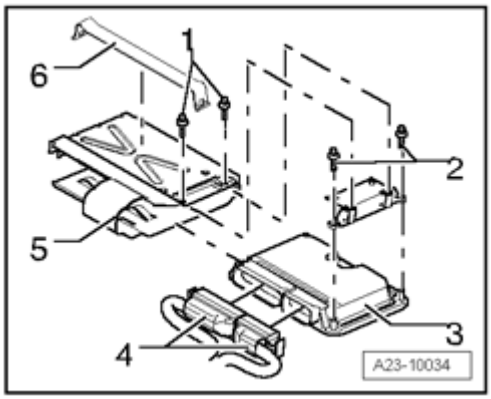

Fig. 546: Identifying ECM Shear Bolts
Courtesy of VOLKSWAGEN UNITED STATES, INC.

The threads of both shear bolts - **2** - , that are installed into the ECM, are not coated with a locking compound. The threads in the ECM housing must not be heated and do not require to be heated (unintentional heating of the ECM).

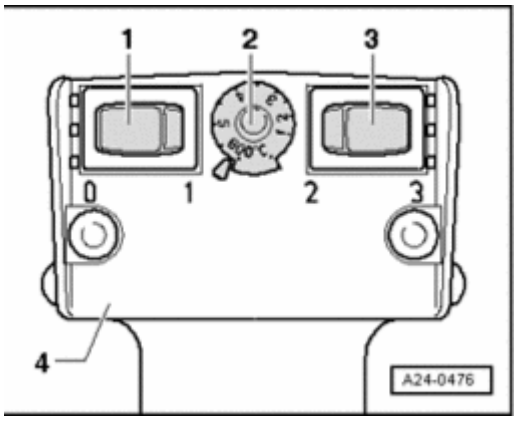

Fig. 547: Performing Adjustments On Hot Air Gun
Courtesy of VOLKSWAGEN UNITED STATES, INC.

- Set adjustment on heat gun as shown in the illustration, with temperature potentiometer - **2** - set to maximum heat and two-stage air flow switch - **3** - set to level 3.

CAUTION: By heating the threads, the retaining tabs, shear bolts and parts of the metal housing become very hot. Do not burn yourself on this! Make sure that only the threads are heated as much as possible, and not any of the surrounding parts. Possibly cover these parts.

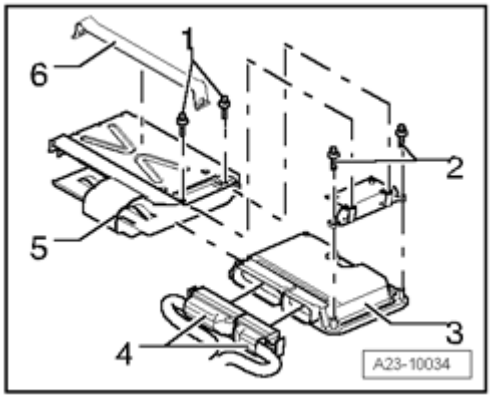

Fig. 548: Identifying ECM Shear Bolts
Courtesy of VOLKSWAGEN UNITED STATES, INC.

- Heat threads of both shear bolts - **1** - for approx. 25 to 30 seconds.
- Remove shear bolts with locking pliers.
- Both shear bolts that are installed into the ECM do not require heating to be removed. They can be removed without heat.
- Disconnect metal retainers from ECM connectors.

- Release and pull off connector from engine control module (ECM).
- Connect adapter cable (121-pin) V.A.G 1598/31 to wiring harness connector. Ground (GND) clip at test box must be clipped to battery minus. The procedures will indicate whether engine control module is to be connected to test box.
- Perform test as described in relevant repair sequences.

Installing engine control module (ECM) J623

Installation is in reverse order of removal.

- The ECM must be equipped with metal retainer again.
- New shear bolts must always be used.
- Clean threaded holes of residue and locking compound for new shear bolts. Cleaning can be performed with a thread cutter (tap).
- Check DTC memory and, if necessary, erase. Vehicle diagnostic, testing, and information system VAS 5051

Engine Control Module (ECM) J623 , replacing

NOTE:

- **When connector is disconnected from the Engine Control Module (ECM), adaptation values are erased and content of DTC memory remains intact.**

Special tools, testers and auxiliary items required

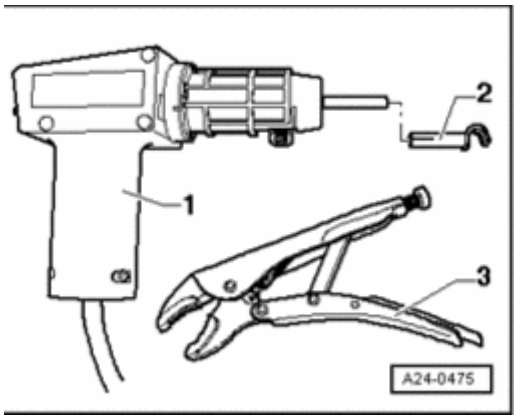

Fig. 549: Heat Gun, Adapter Nozzle And Pliers
Courtesy of VOLKSWAGEN UNITED STATES, INC.

- Heat gun - **1** - from wiring harness repair kit VAS 1978
- Nozzle attachment - **2** - also from wiring harness repair kit VAS 1978
- Small, commercially available locking pliers (vise grips)

Removing

- Connect vehicle diagnostic, testing, and information system VAS 5051 A and select vehicle system "01 - Engine electronics". Thereby, the ignition must be switched on.

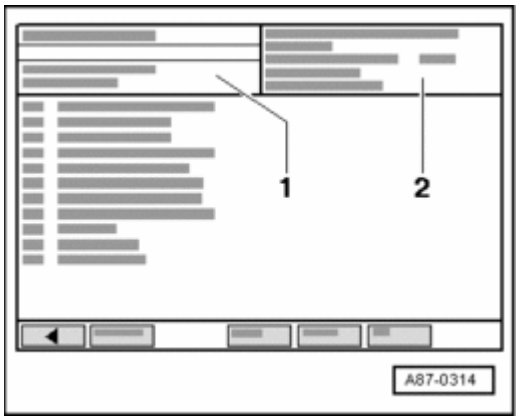

Fig. 550: Locating Control Module Identification With Code Indicated On Display
Courtesy of VOLKSWAGEN UNITED STATES, INC.

On the screen of vehicle diagnostic, testing, and information system VAS 5051 A , the control module identification and coding - **2** - are displayed.

- Allow control module identification to be displayed and then print it out.
- Switch off ignition.
- Remove rubber seal - **1** - for plenum chamber cover.

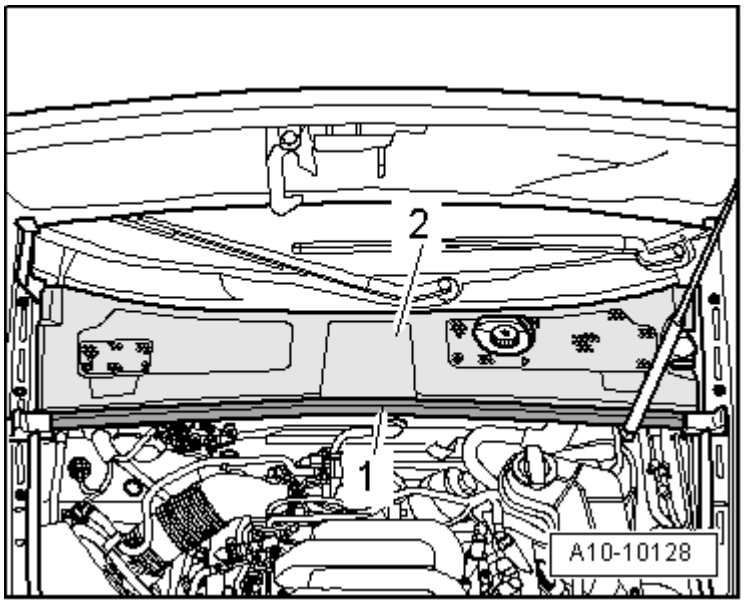

Fig. 551: Removing Rubber Seal For Plenum Chamber Cover & Plenum Chamber Cover
Courtesy of VOLKSWAGEN UNITED STATES, INC.

- Remove plenum chamber cover - **2** -.
- Pry off caps on wiper arms with a screwdriver and remove nuts.
- Pull wiper arms from wiper axles.

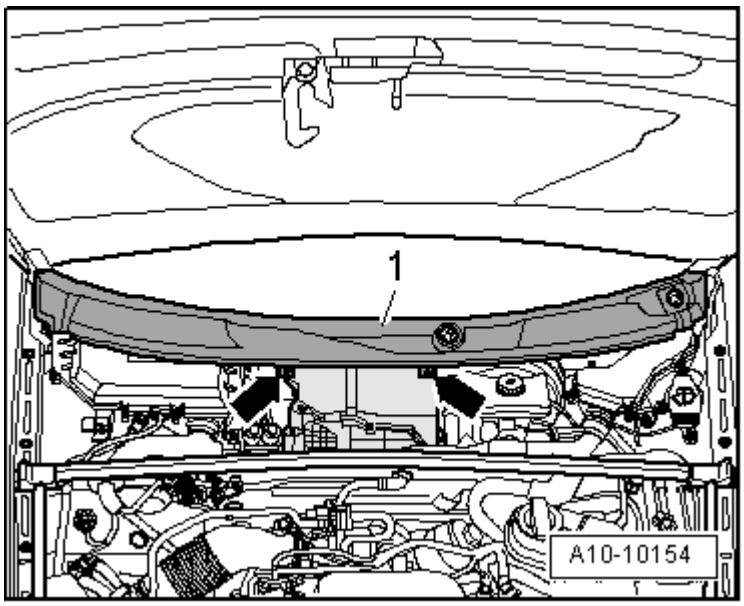

Fig. 552: Removing Bolts For Cowl Grill
Courtesy of VOLKSWAGEN UNITED STATES, INC.

- Remove left and right bolt - **arrows** - from cowl - **1** -.

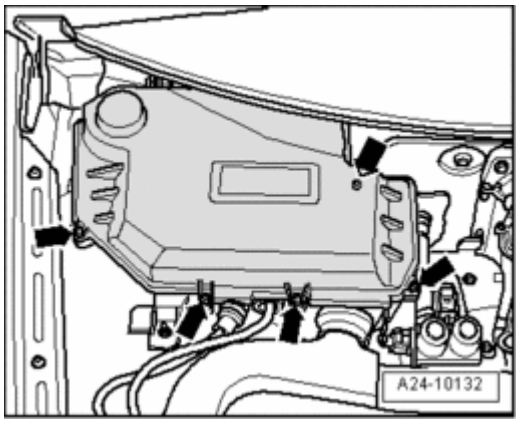

Fig. 553: Removing Bolts And Cover Form E-Box
Courtesy of VOLKSWAGEN UNITED STATES, INC.

- Remove bolts - **arrows** - and remove cover form E-box.

CAUTION: The heater pump valve unit (left of E-box) becomes very hot during operation - Risk of burning!

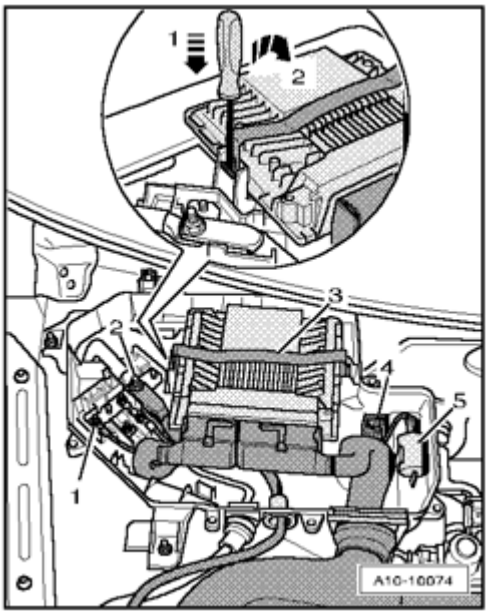

Fig. 554: Prying Off Retaining Clip With Screwdriver And Removing ECM From E-Box
Courtesy of VOLKSWAGEN UNITED STATES, INC.

- Carefully pry off retaining clip - **3** - with a screwdriver - **arrows 1 and 2** - and remove ECM from E-box.

To increase difficulty with which the ECM connectors can be accessed, the ECM is secured in a metal housing with retaining tabs and shear bolts.

The threads of shear bolts - **1** - (that are not installed into the ECM) are coated with a locking compound. For

this reason, the threads must be heated with heat gun to remove both bolts.

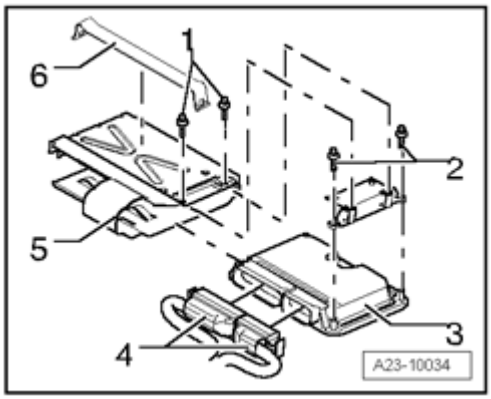

Fig. 555: Identifying ECM Shear Bolts
Courtesy of VOLKSWAGEN UNITED STATES, INC.

The threads of both shear bolts - **2** - , that are installed into the ECM, are not coated with a locking compound. The threads in ECM housing must not be heated and do not require to be heated (unintentional heating of ECM).

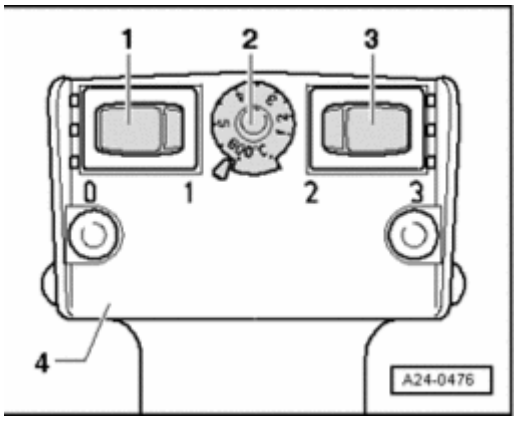

Fig. 556: Performing Adjustments On Hot Air Gun
Courtesy of VOLKSWAGEN UNITED STATES, INC.

- Set adjustment on heat gun as shown in the illustration, with temperature potentiometer - **2** - set to maximum heat and two-stage air flow switch - **3** - set to level 3.

CAUTION: By heating the threads, the retaining tabs, shear bolts and parts of the metal housing become very hot. Do not burn yourself on this! Make sure that only the threads are heated as much as possible, and not any of the surrounding parts. Possibly cover these parts.

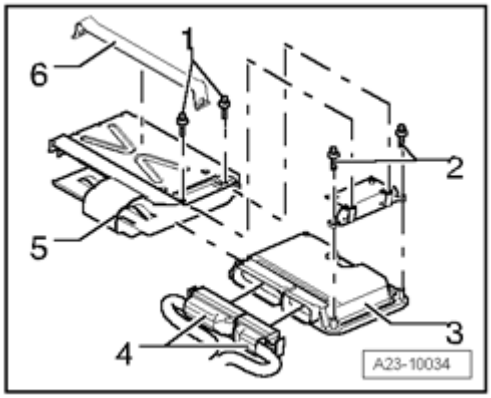

Fig. 557: Identifying ECM Shear Bolts
Courtesy of VOLKSWAGEN UNITED STATES, INC.

- Heat threads of both shear bolts - **1** - for approx. 25 to 30 seconds.
- Remove shear bolts with locking pliers.
- Both shear bolts that are installed into ECM do not require heating to be removed. They can be removed without heat.
- Disconnect metal retainers from ECM connectors.

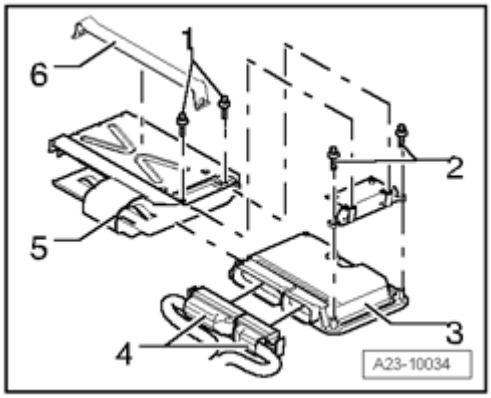

Fig. 558: Identifying ECM Shear Bolts
Courtesy of VOLKSWAGEN UNITED STATES, INC.

- Release connector - **4** - from ECM and disconnect it.
- Remove old engine control module (ECM) J623 and install engine control module (ECM) J623.

Installing

Installation is in reverse order of removal.

- The ECM must be equipped with metal retainer again.
- New shear bolts must always be used.
- Clean threaded holes of residue and locking compound for new shear bolts. Cleaning can be performed

with a thread cutter (tap).

The procedures to follow after connecting the new ECM are described in Guided Fault Finding and Guided Functions.

- Enter correct vehicle into Guided Fault Finding
- Press "Go to" button
- Select "Function/component selection"
- Select "powertrain"

- Select "engine code"
- "01 - On Board Diagnostic (OBD) capable systems
- "Motronic fuel injection and ignition system"
- Select "Engine Functions"

- Select "Engine Control Module (ECM)"

Mass air flow (MAF) sensor, removing and installing

Removing

- Disconnect connector from mass air flow (MAF) sensor G70 - **2** -.

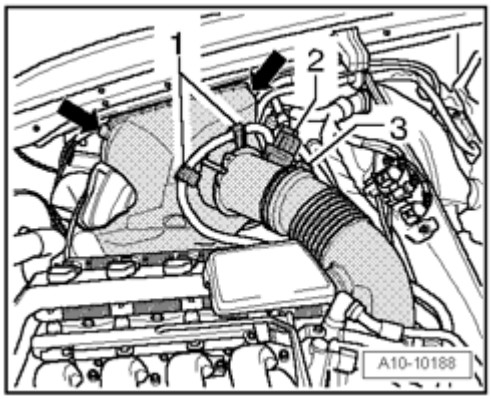

Fig. 559: Disconnecting Mass Air Flow (MAF) Sensor G70 Electrical Harness Connector
Courtesy of VOLKSWAGEN UNITED STATES, INC.

- Open hose clamp - **3** - and clips of mass air flow (MAF) sensor G70 and remove mass air flow (MAF) sensor G70.

Installing

For problem-free operation of mass air flow (MAF) sensor G70 it is very important to observe the following notes and procedures.

NOTE:

- **If the air filter element is very dirty or soaked, dirt particles or moisture may have contaminated the Mass Air Flow (MAF) Sensor G70 and may be causing false mass air flow values. This results in a reduction of power, since a lower injection quantity is calculated.**
- **Always use an original equipment air filter element.**
- **Use a lubricant (silicone-free) for installing the intake hose.**
- **Secure all hose connections using hose clamps appropriate for the model type**

- Check MAF sensor and intake hose (intake air side) for salt residue, dirt, and leaves.
- Check intake ducting up to air filter element for dirt. If any contaminants are discovered, clean air filter housing (upper and lower parts) of salt residue, dirt and leaves (if necessary, clean by washing or vacuuming). Air filter, removing and installing --> **Air filter, removing and installing**
- If air filter element was removed, blow out water in lower part of air filter housing with compressed air.

Further installation is in reverse order of removal.

OXYGEN SENSORS, REMOVING AND INSTALLING

Oxygen sensors, removing and installing

Special tools, testers and auxiliary items required

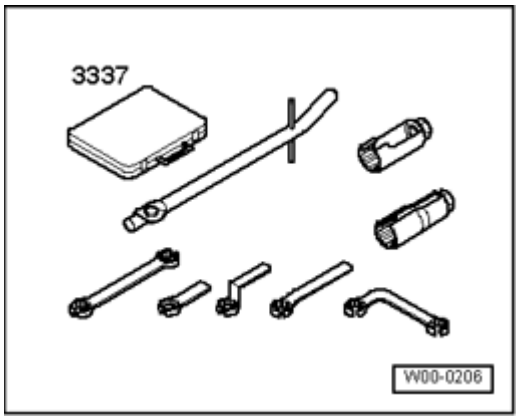

Fig. 560: Identifying Ring Spanner 7-Piece Set 3337
Courtesy of VOLKSWAGEN UNITED STATES, INC.

- Ring spanner 7-piece set 3337 for oxygen sensor

Heated oxygen sensor (HO2S) G39 before catalytic converter, bank 1 (right), removing and installing

NOTE:

- **All cable ties which are opened or cut open when removing, must be replaced in the same position when installing.**

- Remove engine cover.
- Remove MAF sensor with air duct hose between air filter and throttle valve control module J338.

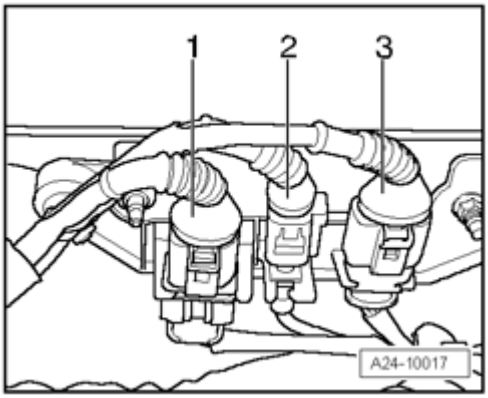

Fig. 561: Connecting Electrical Connector
Courtesy of VOLKSWAGEN UNITED STATES, INC.

- Connect electrical connector - **1** -.
- Free up oxygen sensor wire up to oxygen sensor.
- Remove oxygen sensor from between engine and bulkhead, using tool from Ring spanner 7-piece set 3337.

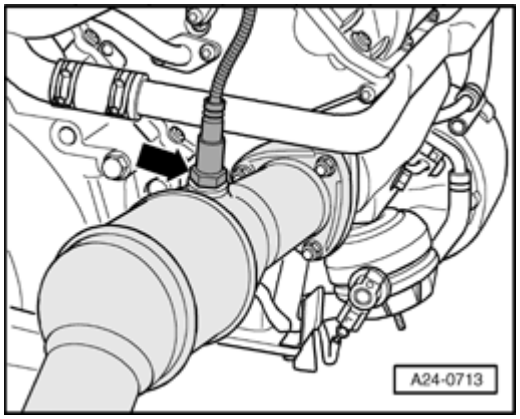

Fig. 562: Removing Heated Oxygen Sensor (HO2S) Using Special Tool 3337
Courtesy of VOLKSWAGEN UNITED STATES, INC.

NOTE:

- **Shown in illustration with engine removed.**

Installing

Installation is in reverse order of removal, note the following:

NOTE:

- **New oxygen sensor threads are coated with an assembly paste. This paste must not contact sensor openings.**

- **For a used oxygen sensor, only grease threads with hot bolt paste. This paste must not contact sensor openings; Hot bolt paste**
- **During installation, all cable ties must be re-installed at the same location to prevent the oxygen sensor wiring from contacting the exhaust manifold.**

Torque specifications

Component	Nm
Oxygen sensor	55

Heated oxygen sensor (HO2S) 2 G108 before catalytic converter, bank 2 (left), removing and installing

Special tools, testers and auxiliary items required

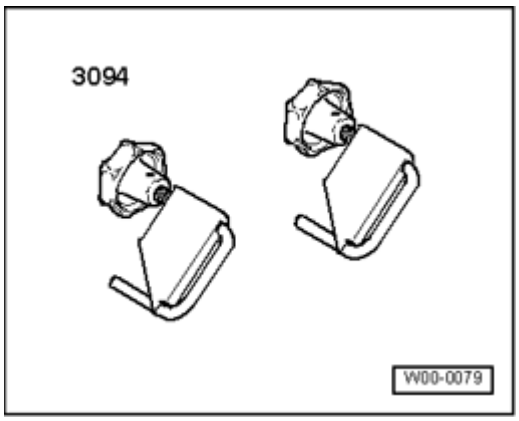

Fig. 563: Identifying Hose Clamps 3094
Courtesy of VOLKSWAGEN UNITED STATES, INC.

- Hose Clamps Up to 25 mm dia. 3094

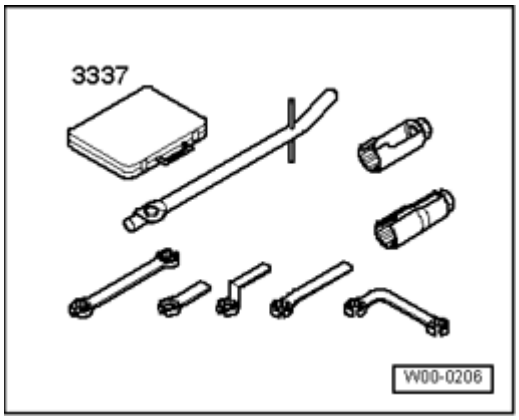

Fig. 564: Identifying Ring Spanner 7-Piece Set 3337
Courtesy of VOLKSWAGEN UNITED STATES, INC.

- Ring spanner 7-piece set 3337 for oxygen sensor

Removing

- Remove engine cover.
- Clamp off coolant hose - **2** - using Hose Clamps Up to 25 mm dia. 3094 and pull off coolant hose.
- If necessary, seal connection using an appropriate plug.

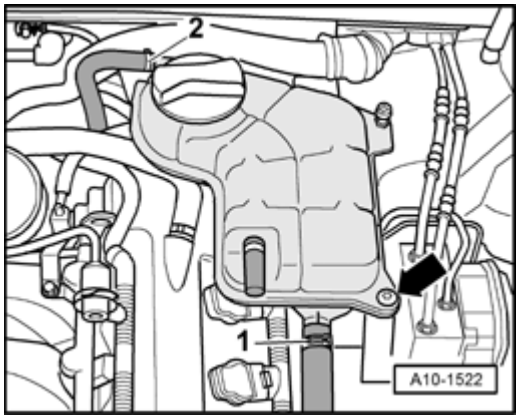

Fig. 565: Removing Coolant Hoses & Coolant Expansion Tank
Courtesy of VOLKSWAGEN UNITED STATES, INC.

- Remove coolant reservoir. - **arrow** -.
- Disconnect electrical wire from engine coolant level (ECL) warning switch F66 at bottom on coolant reservoir and set aside coolant reservoir with coolant hose - **1** - connected.

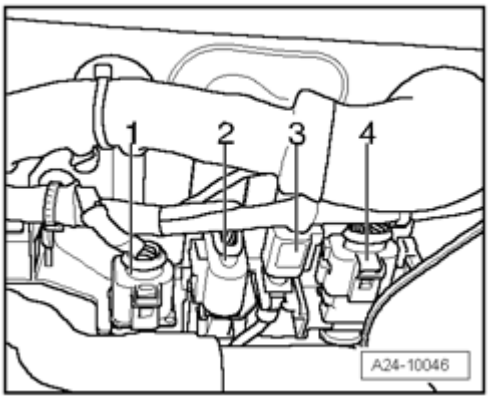

Fig. 566: Identifying Bulkhead Electrical Connector
Courtesy of VOLKSWAGEN UNITED STATES, INC.

- Disconnect electrical connector - **1** -.
- Remove retainer for 4 electrical connections on bulkhead (to simplify removal and installation of oxygen sensor).
- Free up oxygen sensor wire up to oxygen sensor.
- Remove oxygen sensor from between engine and bulkhead, using tool from Ring spanner 7-piece set 3337.

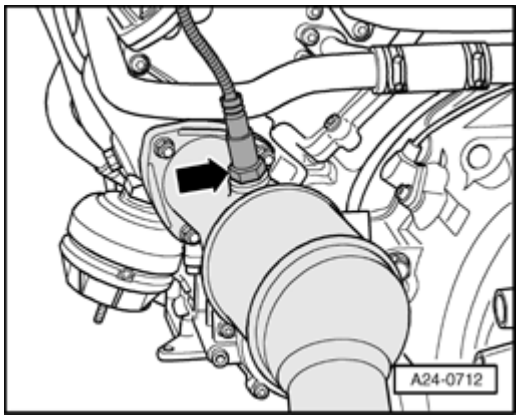

Fig. 567: Removing Heated Oxygen Sensor (HO2S) Using Special Tool 3337
Courtesy of VOLKSWAGEN UNITED STATES, INC.

NOTE:

- **Shown in illustration with engine removed.**

Installing

Installation is in reverse order of removal, note the following:

NOTE:

- **New oxygen sensor threads are coated with an assembly paste. This paste must not contact sensor openings.**
- **For a used oxygen sensor, only grease threads with hot bolt paste. This paste must not contact sensor openings; Hot bolt paste**
- **During installation, all cable ties must be re-installed at the same location to prevent the oxygen sensor wiring from contacting the exhaust manifold.**
- **Secure all hose connections using hose clamps appropriate for the model type**

Torque specifications

Component	Nm
Oxygen sensor	55

Oxygen sensor (O2S) behind three way catalytic converter (TWC) G130 , bank 1 (right), removing and installing

Special tools, testers and auxiliary items required

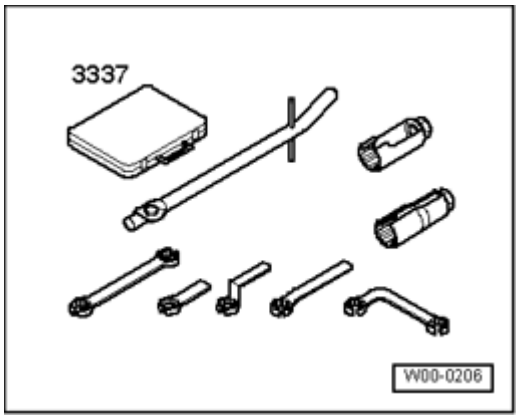

Fig. 568: Identifying Ring Spanner 7-Piece Set 3337
Courtesy of VOLKSWAGEN UNITED STATES, INC.

- Ring spanner 7-piece set 3337 for oxygen sensor

Removing

NOTE:

- **All cable ties which are opened or cut open when removing, must be replaced in the same position when installing.**

- Remove engine cover.
- Remove air duct hose with mass airflow (MAF) sensor and set it aside.

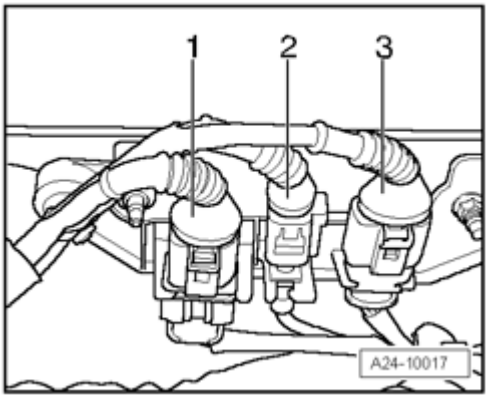

Fig. 569: Connecting Electrical Connector
Courtesy of VOLKSWAGEN UNITED STATES, INC.

- Disconnect electrical connector - **3** -.
- Free up oxygen sensor wire up to oxygen sensor.
- Remove noise insulation.
- Remove right front exhaust pipe --> **26 - EXHAUST SYSTEM, EMISSION CONTROLS**

- Remove oxygen sensor using tool from Ring spanner 7-piece set 3337.

Installing

Installation is in reverse order of removal, note the following:

NOTE:

- **New oxygen sensor threads are coated with an assembly paste. This paste must not contact sensor openings.**
- **For a used oxygen sensor, only grease threads with hot bolt paste. This paste must not contact sensor openings; Hot bolt**
- **During installation, all cable ties and clips on transmission must be re-installed at the same location to prevent the oxygen sensor wiring from contacting the exhaust manifold.**

- Install exhaust system so it is free of tension. --> **26 - EXHAUST SYSTEM, EMISSION CONTROLS**

Torque specifications

Component	Nm
Oxygen sensor at catalytic converter	55

Oxygen Sensor (O2S) 2 Behind Three Way Catalytic Converter (TWC) G131 , bank 2 (left), removing and installing

Special tools, testers and auxiliary items required

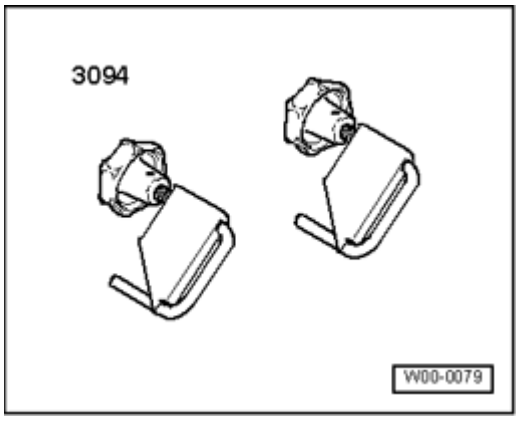

Fig. 570: Identifying Hose Clamps 3094
Courtesy of VOLKSWAGEN UNITED STATES, INC.

- Hose Clamps Up to 25 mm dia. 3094

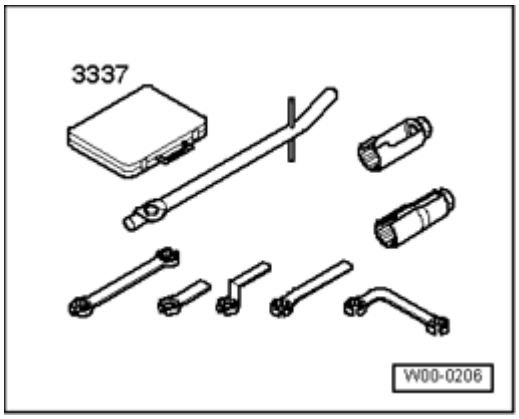

Fig. 571: Identifying Ring Spanner 7-Piece Set 3337
Courtesy of VOLKSWAGEN UNITED STATES, INC.

- Ring spanner 7-piece set 3337 for oxygen sensor

Removing

NOTE:

- **All cable ties which are opened or cut open when removing, must be replaced in the same position when installing.**

- Remove engine cover.
- Clamp off coolant hose - **2** - using Hose Clamps Up to 25 mm dia. 3094 and pull off coolant hose.
- If necessary, seal connection using an appropriate plug.

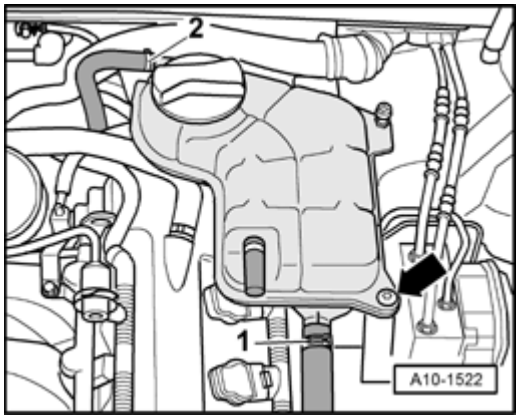

Fig. 572: Removing Coolant Hoses & Coolant Expansion Tank
Courtesy of VOLKSWAGEN UNITED STATES, INC.

- Remove coolant reservoir. - **arrow** -.
- Disconnect electrical wire from engine coolant level (ECL) warning switch F66 at bottom on coolant reservoir and set aside coolant reservoir with coolant hose - **1** - connected.

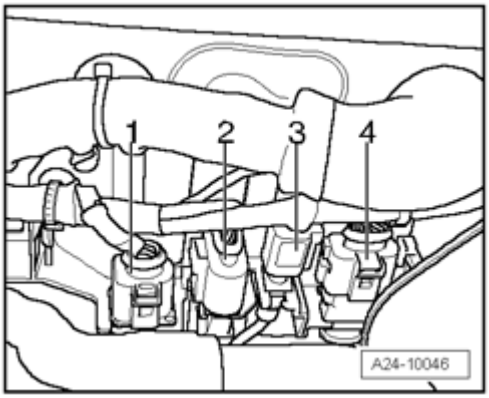

Fig. 573: Identifying Bulkhead Electrical Connector
Courtesy of VOLKSWAGEN UNITED STATES, INC.

- Disconnect electrical connector - **4** -.
- Remove retainer for 4 electrical connections on bulkhead (to simplify removal and installation of oxygen sensor).
- Free up oxygen sensor wire up to oxygen sensor.
- Remove rear noise insulation.

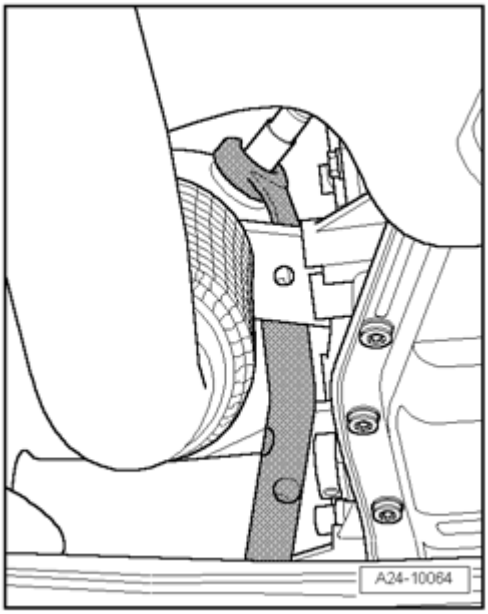

Fig. 574: Removing Oxygen Sensor Using Tool 3337/5 And Extension 3337/6 From Ring Spanner 7-Piece Set 3337
Courtesy of VOLKSWAGEN UNITED STATES, INC.

- Remove oxygen sensor using tool 3337/5 and the extension 3337/6 from Ring spanner 7-piece set 3337.

Installing

Installation is in reverse order of removal, not the following:

NOTE:

- **New oxygen sensor threads are coated with an assembly paste. This paste must not contact sensor openings.**
- **For a used oxygen sensor, only grease threads with hot bolt paste. This paste must not contact sensor openings; Hot bolt paste**
- **During installation, all cable ties and clips on transmission must be re-installed at the same location to prevent the oxygen sensor wiring from contacting the exhaust manifold.**
- **Secure all hose connections using hose clamps appropriate for the model type**

Torque specifications

Component	Nm
Oxygen sensor	55

26 - EXHAUST SYSTEM, EMISSION CONTROLS

EXHAUST SYSTEM COMPONENTS, REMOVING AND INSTALLING

Exhaust system components, removing and installing

NOTE:

- **Replace gaskets and self-locking nuts.**
- **After exhaust system repairs, make sure exhaust system is not under stress and is far enough from the body. If necessary, loosen clamping sleeves and align mufflers and exhaust pipes so that there is adequate distance to vehicle body, and weight is evenly distributed among the exhaust hangers.**
- **Flex joint in front exhaust pipe must not be bent more than 10° , otherwise it may be damaged.**
- **The following illustration shows the exhaust system for a vehicle with all-wheel drive. The exhaust system for a vehicle with front-wheel drive varies only slightly.**

Exhaust system, component overview

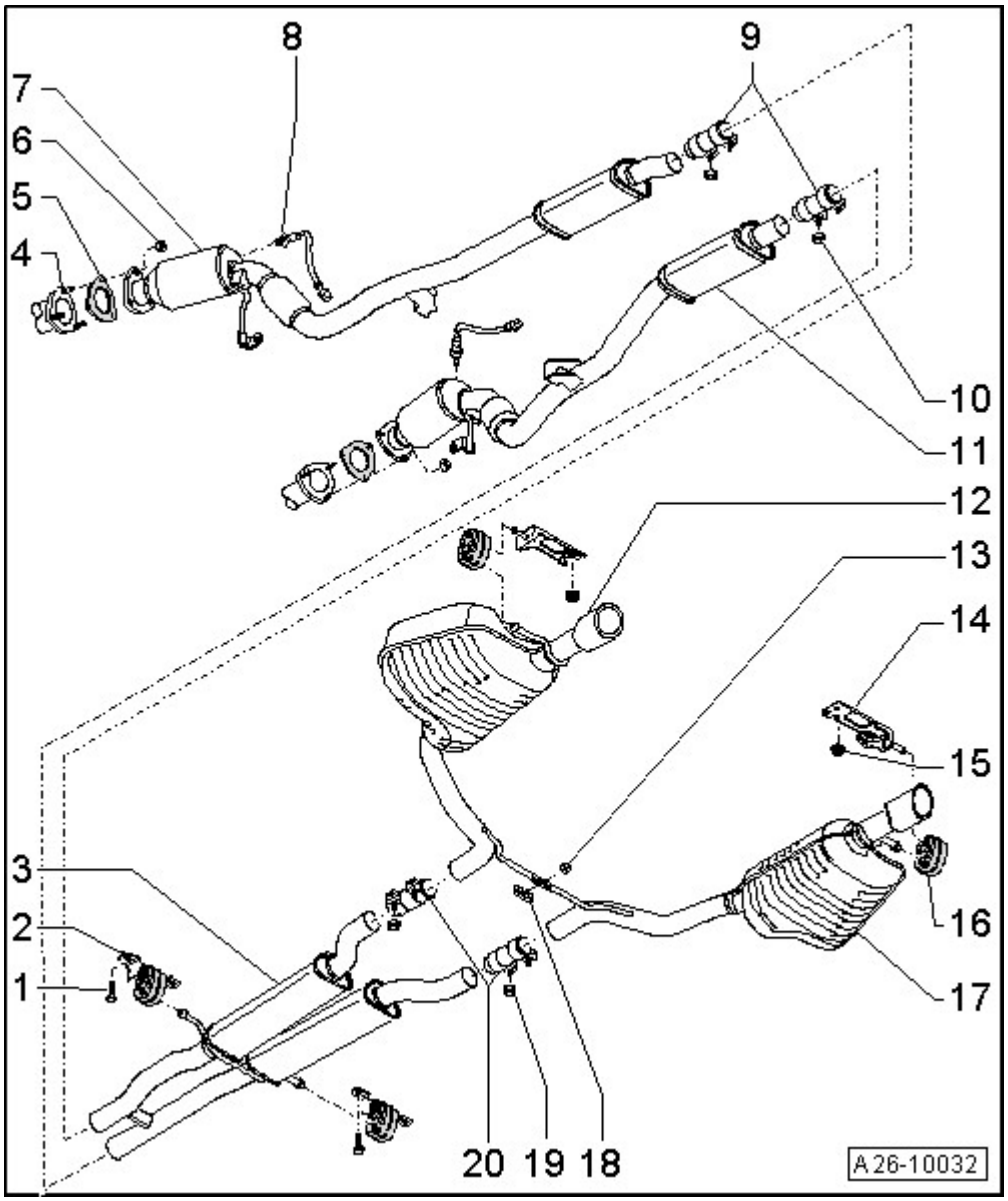

Fig. 575: Identifying Special Tools - Exhaust System, Component Overview
Courtesy of VOLKSWAGEN UNITED STATES, INC.

1 - 23 Nm

2 - Suspended mount

- Replace if damaged

3 - Center muffler

- Original equipment as one unit with rear muffler. For repairs, replace each separately.
- Separating point: Vehicles with front-wheel drive --> **Fig. 582** , Vehicles with all-wheel drive --> **Fig. 585**

- Install exhaust system free of stress --> **Exhaust system, installing free of tension**

4 - Exhaust manifold

- Removing and installing: Left --> **Left exhaust manifold, removing and installing** , right --> **Right exhaust manifold, removing and installing**

5 - Gasket

- Replace

6 - 23 Nm

- Replace

7 - Front exhaust pipe with catalytic converter and front muffler

- For cylinder bank 2 (left)
- With decoupling element; Decoupling element must not be bent more than 10° otherwise it may be damaged
- Protect from shocks and impact stress
- Removing and installing --> **Left front exhaust pipe with catalytic converter, removing and installing**
- Individual components of suspension **Individual suspension components, left side**
- Install exhaust system free of stress --> **Exhaust system, installing free of tension**

8 - Oxygen Sensor (O2S) Behind Three Way Catalytic Converter (TWC)

- The threads of new oxygen sensors are coated with assembly paste; the paste must not get into slots of oxygen sensor body
- When re-using the old oxygen sensor, grease threads with hot bolt paste; the paste must not get into slots of oxygen sensor body; hot bolt paste
- Removing and installing --> **Oxygen sensor (O2S) behind three way catalytic converter (TWC) G130 , bank 1 (right), removing and installing**
- Tighten to 55 Nm

9 - Front clamping sleeves

- Installed location **Installed position of front double clamps**
- Before tightening, align exhaust system so that it is tension-free --> **Exhaust system, installing free of tension**
- Tighten threaded connections evenly.

10 - 23 Nm

11 - Front exhaust pipe with catalytic converter and front muffler

- For cylinder bank 1 (right)
- With decoupling element; Decoupling element must not be bent more than 10° otherwise it may be damaged
- Protect from shocks and impact stress
- Removing and installing --> **Right exhaust pipe with catalytic converter, removing and installing**
- Individual components of suspension **Individual components of suspension, right side**
- Install exhaust system free of stress --> **Exhaust system, installing free of tension**

12 - Rear muffler

- Left side of vehicle
- Original equipment as one unit with center muffler. For repairs, replace each separately.
- Separating point: Vehicles with front-wheel drive --> **Fig. 582** , Vehicles with all-wheel drive --> **Fig. 585**
- Install exhaust system free of stress --> **Exhaust system, installing free of tension**

13 - 23 Nm

- Replace

14 - Suspended mount

15 - 23 Nm

16 - Suspended mount

- Replace if damaged

17 - Rear muffler

- Right side of vehicle
- Original equipment as one unit with center muffler. For repairs, replace each separately.
- Separating point: Vehicles with front-wheel drive --> **Fig. 582** , Vehicles with all-wheel drive --> **Fig. 585**
- Install exhaust system free of stress --> **Exhaust system, installing free of tension**

18 - Bracket

19 - 23 Nm

20 - Rear clamping sleeves

- For individual replacement of center and rear mufflers
- Position clamping sleeve centrally to separation point
- Installed location **Installed position of rear double clamps**
- Before tightening, align exhaust system so that it is tension-free --> **Exhaust system, installing free of tension**
- Tighten threaded connections evenly.

Installed position of front double clamps

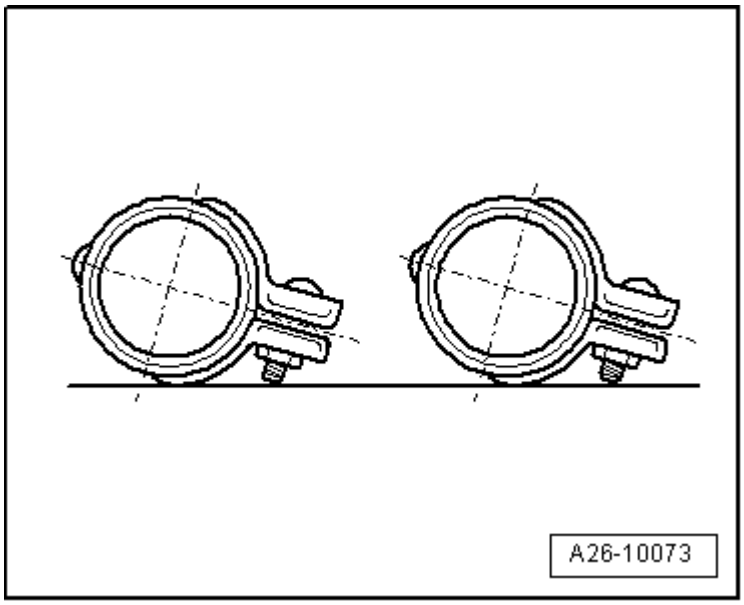

Fig. 576: Installed Position Of Front Double Clamps
Courtesy of VOLKSWAGEN UNITED STATES, INC.

- Install double clamps so that the bolt ends do not project over lower edge of double clamp.
- Threaded connections point toward right.

Installed position of rear double clamps

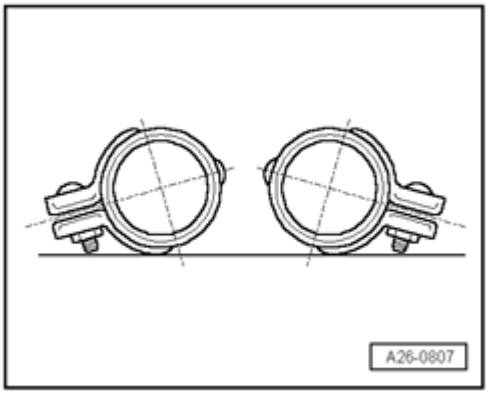

Fig. 577: Installing Double Clamps So That Bolt Ends Do Not Project Over Lower Edge Of Double Clamp
Courtesy of VOLKSWAGEN UNITED STATES, INC.

- Install double clamps so that bolt ends do not project over lower edge of double clamp.
- Threaded connections point toward outside.

Individual suspension components, left side

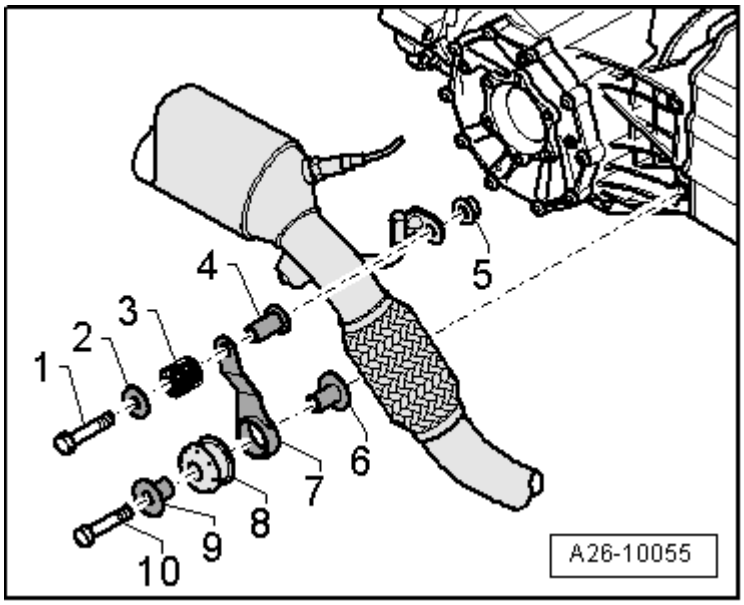

Fig. 578: Individual Suspension Components, Left Side
Courtesy of VOLKSWAGEN UNITED STATES, INC.

1. Bolt
2. Washer
3. Spring
4. Spacing sleeve
5. Nut, 23 Nm

6. Spacing sleeve
7. Tab
8. Buffer
9. Spacing sleeve
10. Bolt, 23 Nm

Individual components of suspension, right side

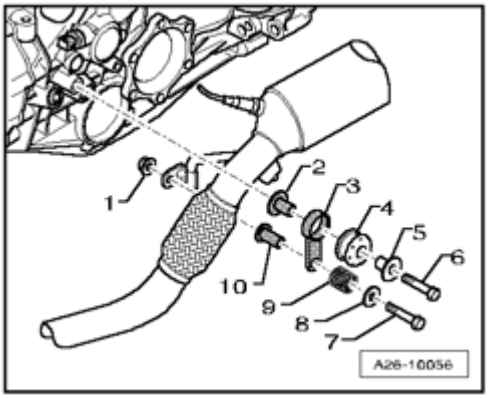

Fig. 579: Individual Components Of Suspension, Right Side
Courtesy of VOLKSWAGEN UNITED STATES, INC.

1. Nut, 23 Nm
2. Spacing sleeve
3. Tab
4. Buffer
5. Spacing sleeve
6. Bolt, 23 Nm
7. Bolt
8. Washer
9. Spring
10. Spacing sleeve

Individual components of center bracket mounting for front exhaust pipe

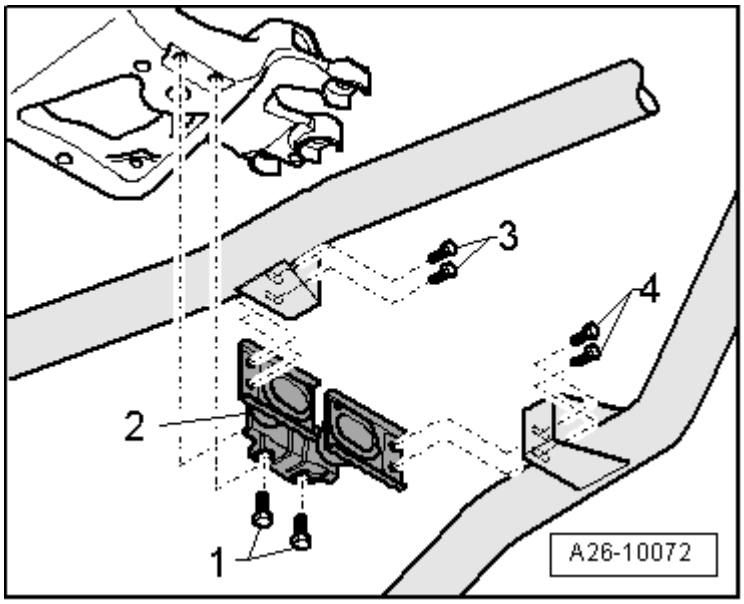

Fig. 580: Individual Components Of Center Bracket Mounting For Front Exhaust Pipe
Courtesy of VOLKSWAGEN UNITED STATES, INC.

1. 23 Nm
2. Bracket
3. 23 Nm
4. 23 Nm

Center muffler and rear muffler, separating

A separating point has been provided in connecting pipe for individual replacement of center or rear muffler.

The separating point is marked by depressions around circumference of exhaust pipe.

Special tools, testers and auxiliary items required

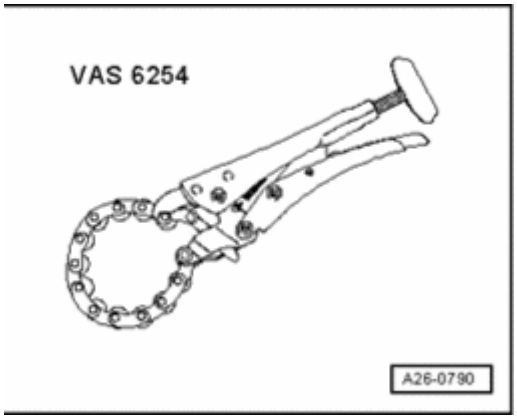

Fig. 581: Chain Pipe Cutter VAS 6254
Courtesy of VOLKSWAGEN UNITED STATES, INC.

- Chain pipe cutter VAS 6254

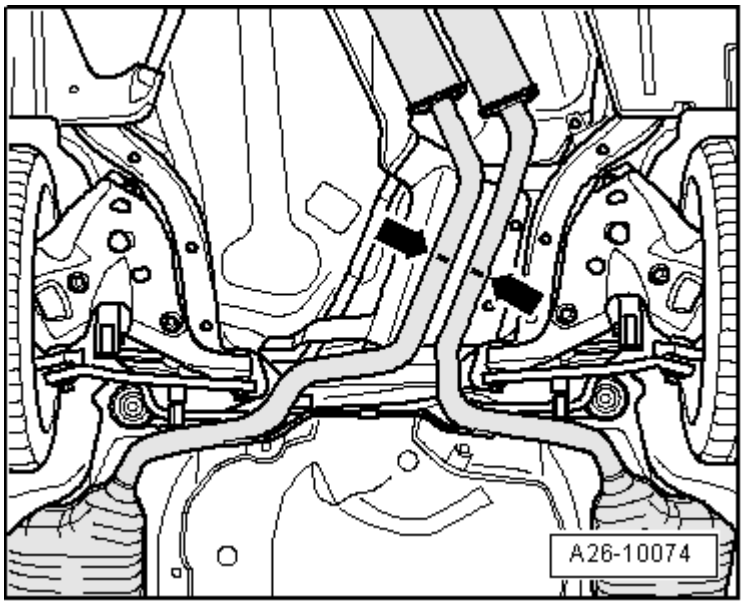

Fig. 582: Separating Exhaust Pipes At A Right Angle At Separating Point Using Chain Pipe Cutter VAS 6254
Courtesy of VOLKSWAGEN UNITED STATES, INC.

Work procedure - Vehicles with front-wheel drive

- Separate exhaust pipes at a right angle at separating point - **arrow** - using chain pipe cutter VAS 6254.

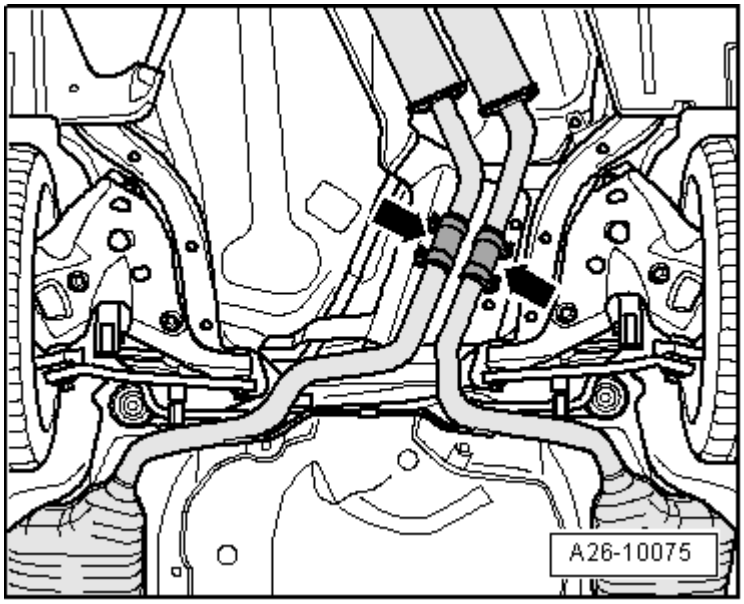

Fig. 583: Positioning Clamping Sleeves Centrally On Separation Point
Courtesy of VOLKSWAGEN UNITED STATES, INC.

- When installing, position clamping sleeves - **arrows** - centrally on separation point.

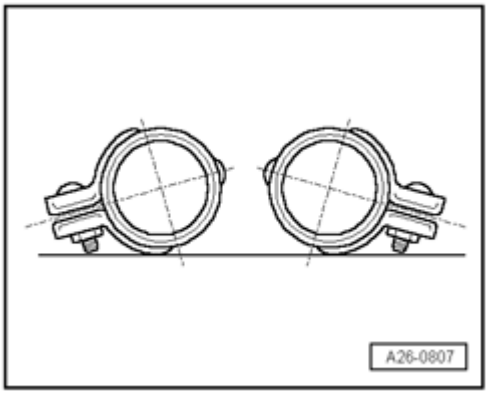

Fig. 584: Installing Double Clamps So That Bolt Ends Do Not Project Over Lower Edge Of Double Clamp
Courtesy of VOLKSWAGEN UNITED STATES, INC.

- Install double clamps so that the bolt ends do not project over lower edge of double clamp.
- Threaded connections point toward outside.
- Align exhaust system free of tension --> **Exhaust system, installing free of tension**.

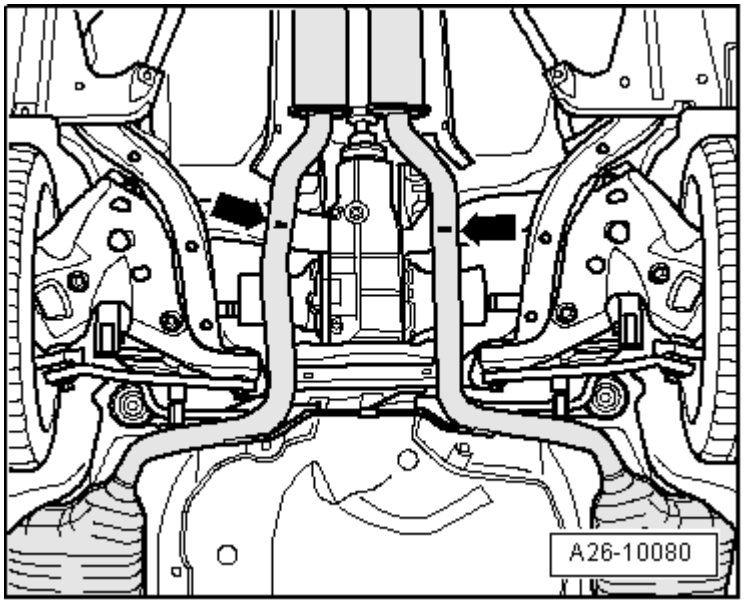

Fig. 585: Separating Exhaust Pipes At Separating Point Using Chain Pipe Cutter VAS 6254 At Right Angle
Courtesy of VOLKSWAGEN UNITED STATES, INC.

Work procedure - Vehicles with all-wheel drive

- Separate exhaust pipes at a right angle at separating point - **arrow** - using chain pipe cutter VAS 6254.

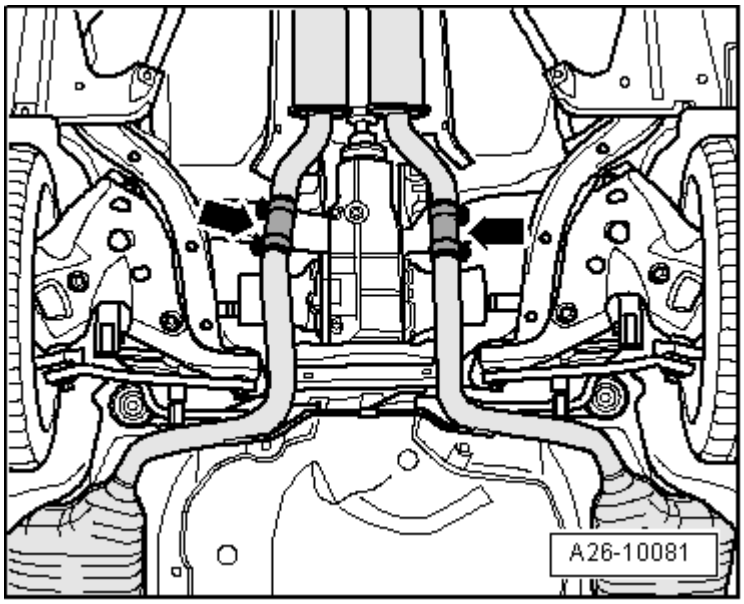

Fig. 586: Positioning Clamping Sleeves At Center Of Separating Cut
Courtesy of VOLKSWAGEN UNITED STATES, INC.

- When installing, position clamping sleeves - **arrows** - centrally on separation point.

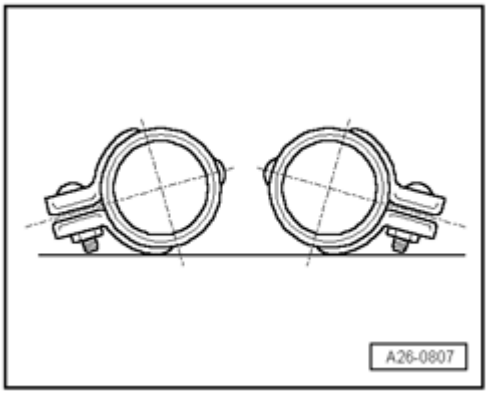

Fig. 587: Installing Double Clamps So That Bolt Ends Do Not Project Over Lower Edge Of Double Clamp
Courtesy of VOLKSWAGEN UNITED STATES, INC.

- Install double clamps so that the bolt ends do not project over lower edge of double clamp.
- Threaded connections point toward outside.
- Align exhaust system free of tension --> **Exhaust system, installing free of tension**.

Left front exhaust pipe with catalytic converter, removing and installing

Special tools, testers and auxiliary items required

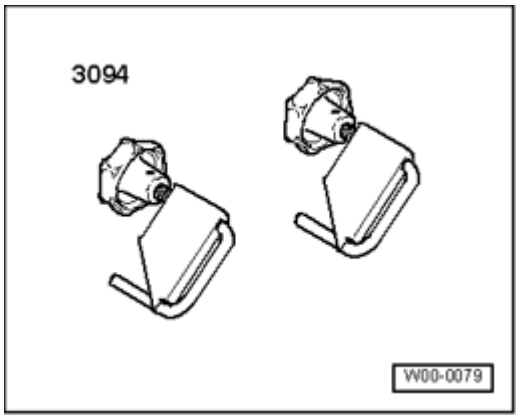

Fig. 588: Identifying Hose Clamps 3094
Courtesy of VOLKSWAGEN UNITED STATES, INC.

- Hose Clamps Up to 25 mm dia. 3094

Removing

NOTE:

- **All cable ties which are opened or cut open when removing, must be replaced in the same position when installing.**

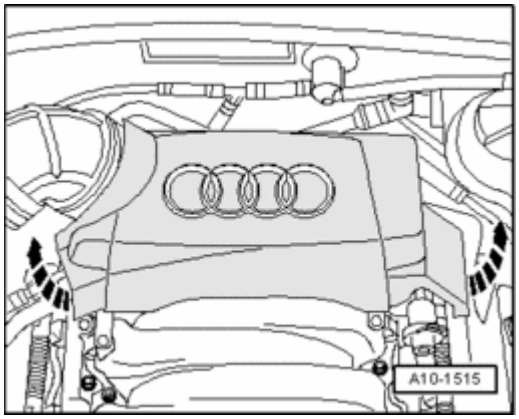

Fig. 589: Removing Rear Engine Cover
Courtesy of VOLKSWAGEN UNITED STATES, INC.

- Remove rear engine cover - **arrows** -.

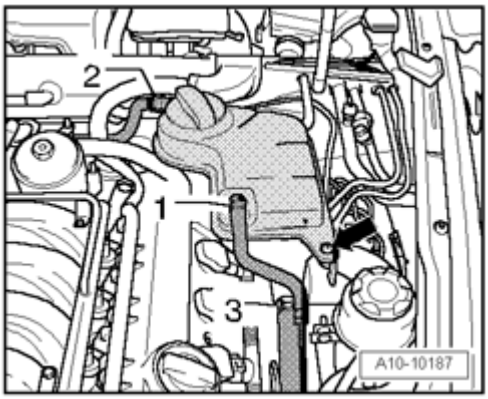

Fig. 590: Removing Coolant Hoses & Coolant Expansion Tank
Courtesy of VOLKSWAGEN UNITED STATES, INC.

- Clamp off coolant hose - **2** - using Hose Clamps Up to 25 mm dia. 3094 and disconnect from coolant expansion tank.
- Remove coolant expansion tank - **arrow** -.
- Disconnect electrical wire to Engine Coolant Level (ECL) Warning Switch F66 on bottom of expansion tank and set aside coolant expansion tank with coolant hoses - **1 and 3** - connected.
- If necessary, seal connection using an appropriate plug.

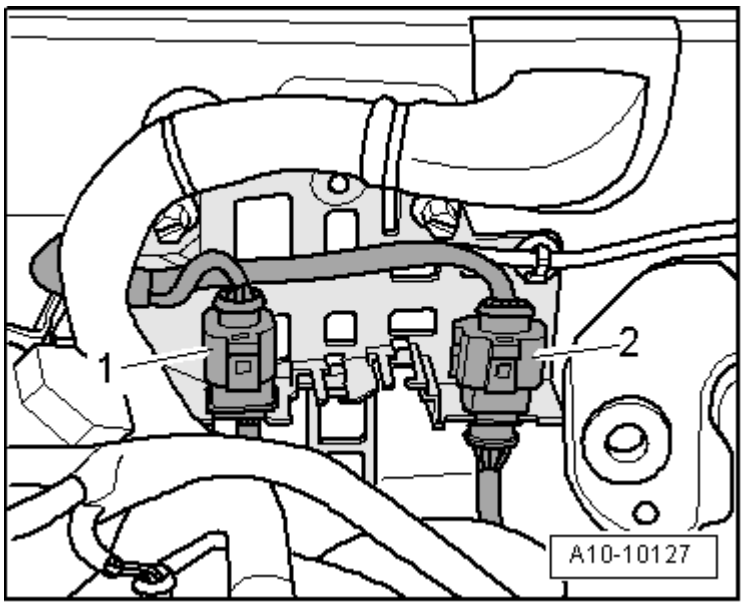

Fig. 591: Disconnecting Electrical Harness Connector For Oxygen Sensor (O2S) 2 Behind Three Way Catalytic Converter (TWC) G131
Courtesy of VOLKSWAGEN UNITED STATES, INC.

- Disconnect electrical harness connector - **2** - for Oxygen Sensor (O2S) 2 Behind Three Way Catalytic Converter (TWC) G131 and free up wiring.

NOTE:

- **Ignore - 1 -.**

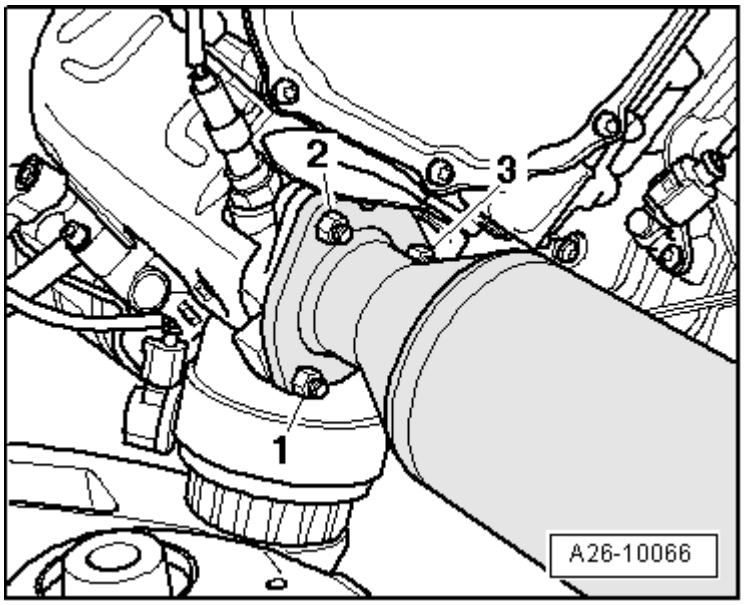

Fig. 592: Removing Nuts & Left Front Exhaust Pipe With Catalytic Converter
Courtesy of VOLKSWAGEN UNITED STATES, INC.

- Remove nut - **2** - which is accessible from top for front exhaust pipe/exhaust manifold.

NOTE:

- **To improve clarity, the removed engine is shown from the rear.**

- Remove left front wheel.

NOTE:

- **Secure brake disc with a wheel bolt.**

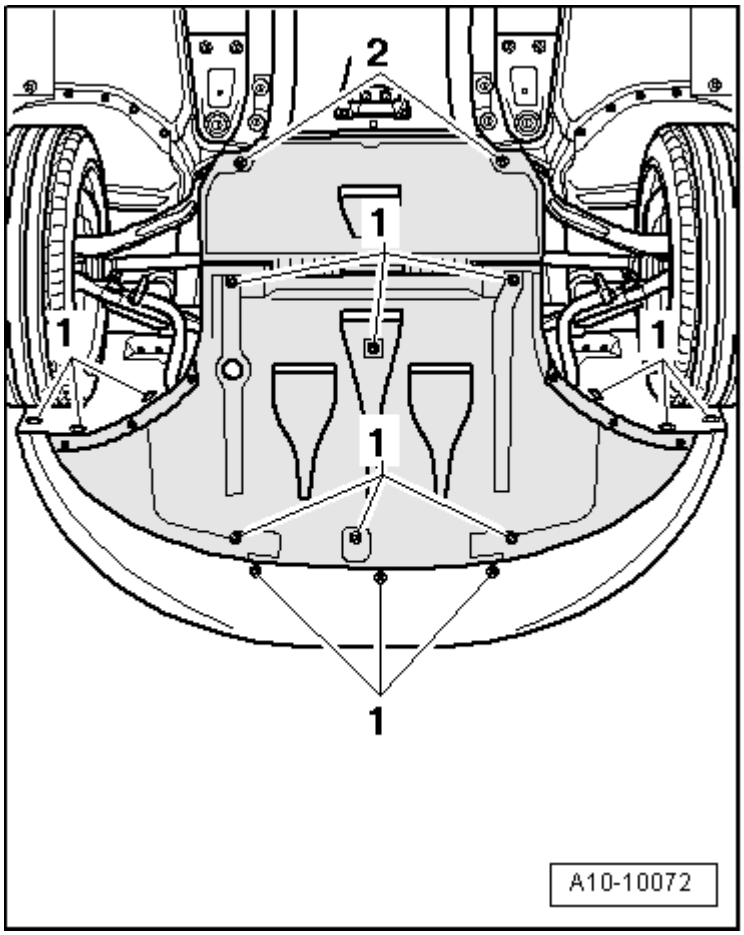

Fig. 593: Identifying Quick-Release Fasteners & Noise Insulation
Courtesy of VOLKSWAGEN UNITED STATES, INC.

- Loosen quick-release fasteners - **1** - and - **2** - and remove noise insulation.

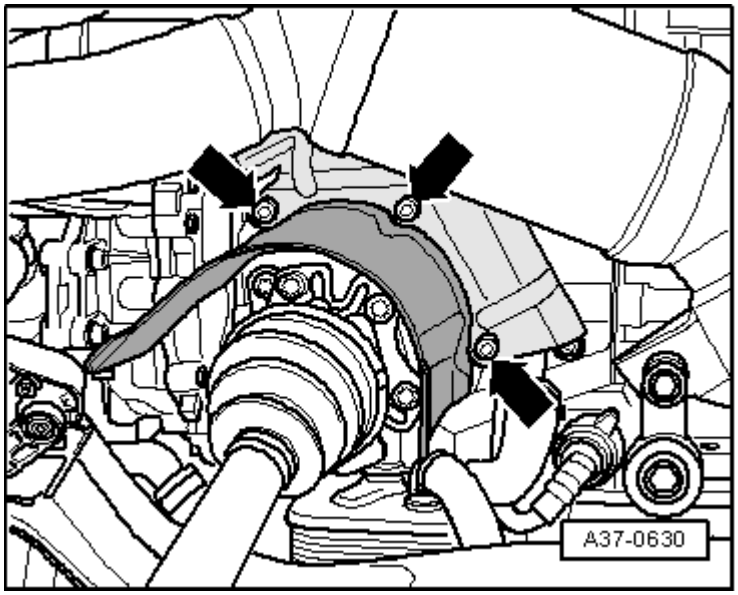

Fig. 594: Removing Heat Shield For Left Drive Axle
Courtesy of VOLKSWAGEN UNITED STATES, INC.

- Remove heat shield - **arrows** - for left drive axle.

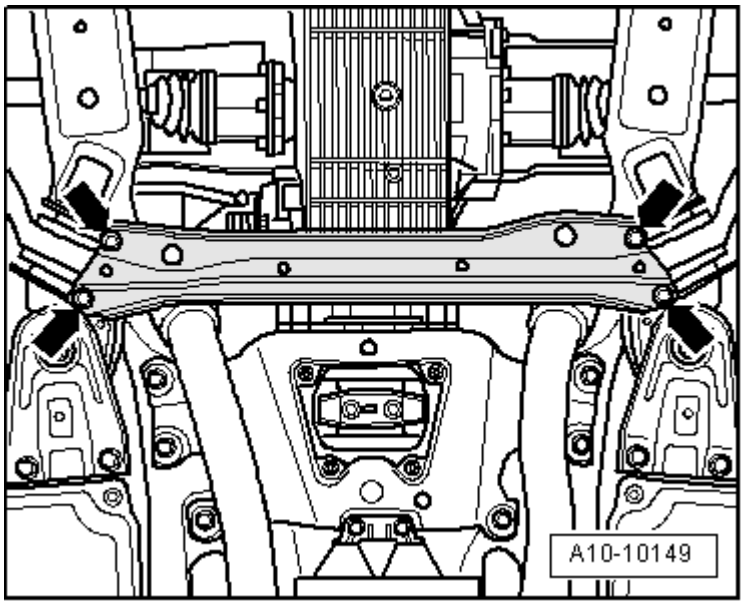

Fig. 595: Removing Subframe Transverse Beam
Courtesy of VOLKSWAGEN UNITED STATES, INC.

- Remove subframe transverse beam - **arrows** -.

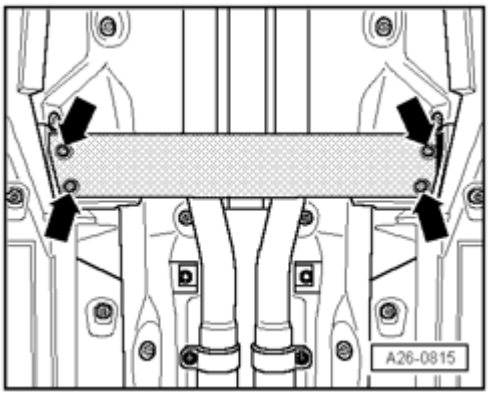

Fig. 596: Removing Front Transverse Beam
Courtesy of VOLKSWAGEN UNITED STATES, INC.

- Remove front transverse beam - **arrows** -.

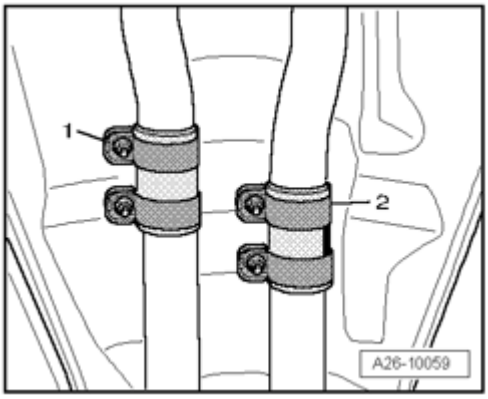

Fig. 597: Loosening Clamping Sleeves
Courtesy of VOLKSWAGEN UNITED STATES, INC.

Separate exhaust system at left clamping sleeve - **2** -.

NOTE:

- **Ignore - 1 -.**

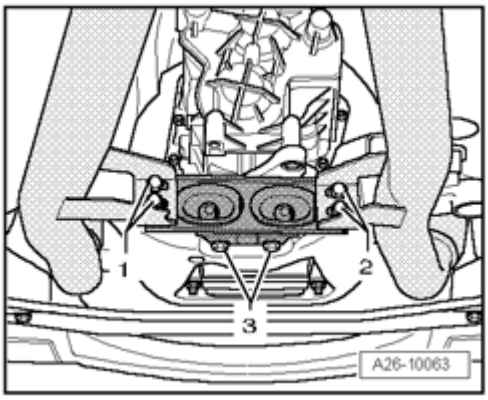

Fig. 598: Removing/Installing Mounting Bolts For Front Exhaust Pipes
Courtesy of VOLKSWAGEN UNITED STATES, INC.

NOTE:

- **Flex joint in front exhaust pipe must not be bent more than 10° , otherwise it may be damaged.**

- Remove bolts - **1** - at rear bracket for front exhaust pipe.

NOTE:

- **Ignore - 2 - and - 3 -.**

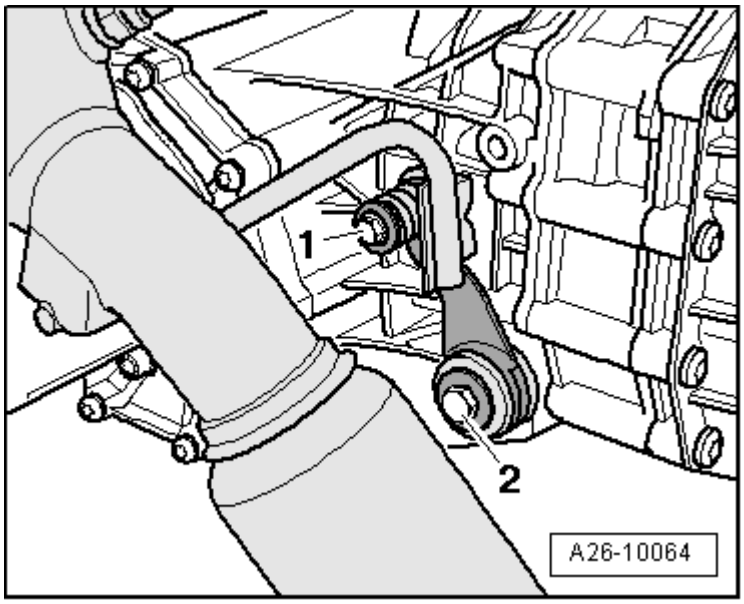

Fig. 599: Removing Bolt At Left Bracket For Front Exhaust Pipe
Courtesy of VOLKSWAGEN UNITED STATES, INC.

- Remove bolt - **1** - at left bracket for front exhaust pipe.

NOTE:

- **Ignore - 2 -.**

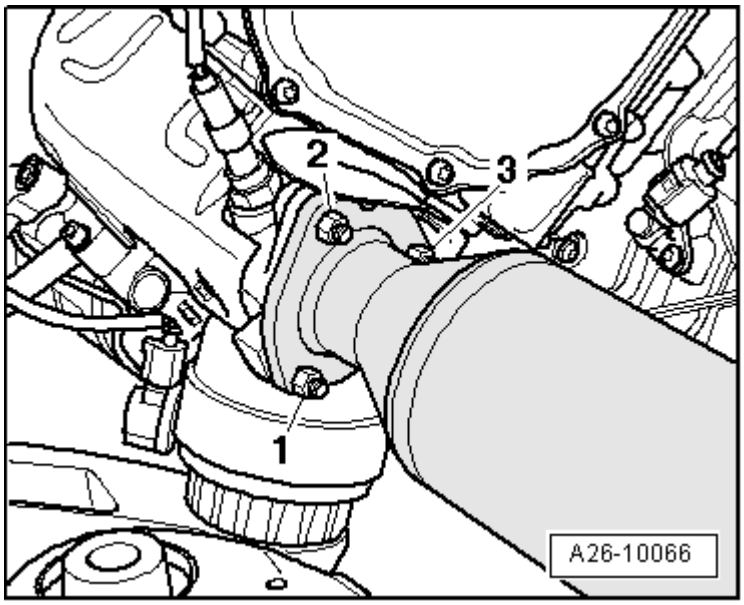

Fig. 600: Removing Nuts & Left Front Exhaust Pipe With Catalytic Converter
Courtesy of VOLKSWAGEN UNITED STATES, INC.

- Remove nuts - **1** - and - **3** - which are accessible from bottom for front exhaust pipe/exhaust manifold.

NOTE:

- **To improve clarity, the removed engine is shown.**

- Remove front exhaust pipe with catalytic converter.

Installing

Installation is in reverse order of removal, note the following:

NOTE:

- **Replace gaskets and self-locking nuts.**
- **During installation, all cable ties must be re-installed at the same location.**
- **Electrical wire of oxygen sensor must always be secured in the same position when installing so that contact with the exhaust pipe is avoided.**

- Install subframe cross member --> **40 - FRONT SUSPENSION** .
- Install front cross member --> **50 - BODY - FRONT** .
- Align exhaust system free of tension --> **Exhaust system, installing free of tension**.

NOTE:

- **Individual components of exhaust system mounting Individual suspension components, left side**

Torque specifications

Component	Nm
Front exhaust pipe with catalytic converter to exhaust manifold	23 * See note
Mounting strap to front exhaust pipe	23
Front exhaust pipe to bracket	23
Heat shield for drive shaft to transmission	23

*Replace bolts and nuts.

Right exhaust pipe with catalytic converter, removing and installing

Removing

NOTE:

- **All cable ties which are opened or cut open when removing, must be replaced in the same position when installing.**

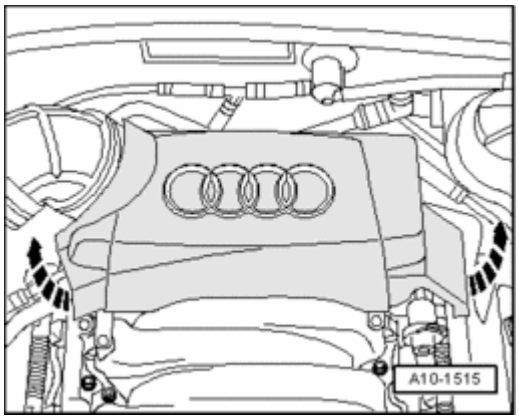

Fig. 601: Removing Rear Engine Cover
Courtesy of VOLKSWAGEN UNITED STATES, INC.

- Remove rear engine cover - **arrows** -.

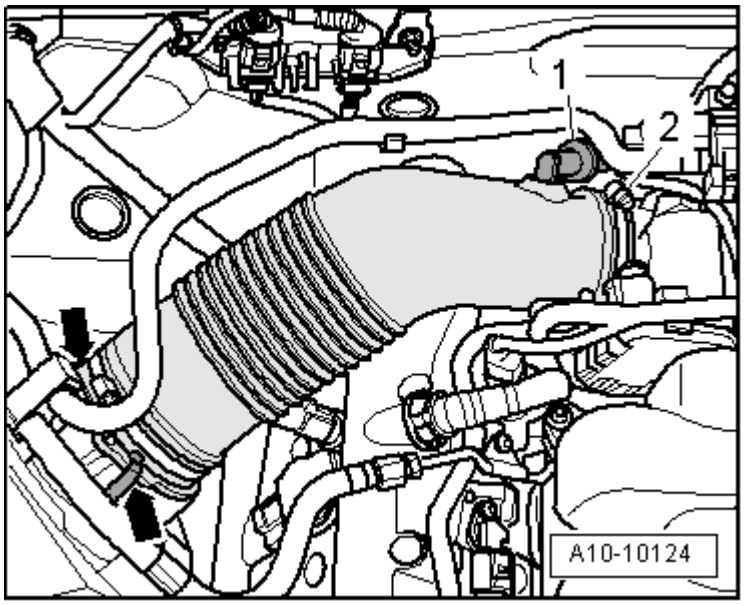

Fig. 602: Disconnecting Check Valve From Connection At Air Duct Hose & Removing Air Duct Hose
Courtesy of VOLKSWAGEN UNITED STATES, INC.

- Disconnect check valve - **1** - from air duct hose.
- Remove air duct hose, thereby loosening hose clamp - **2** - and opening clips - **arrows** -.

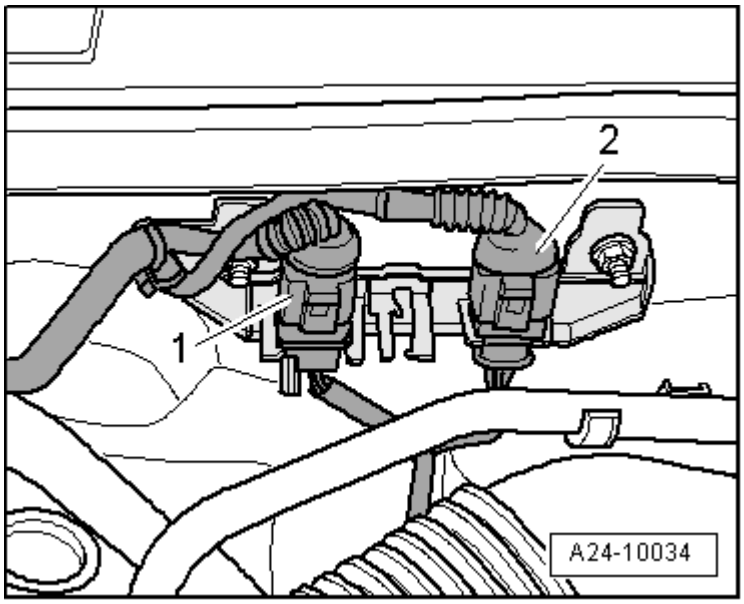

Fig. 603: Disconnecting Electrical Harness Connector For Oxygen Sensor (O2S) Behind Three Way Catalytic Converter (TWC) G130
Courtesy of VOLKSWAGEN UNITED STATES, INC.

- Disconnect electrical harness connector - **2** - for Oxygen Sensor (O2S) Behind Three Way Catalytic Converter (TWC) G130 and free up wiring.

NOTE:

- **Ignore - 1 -.**

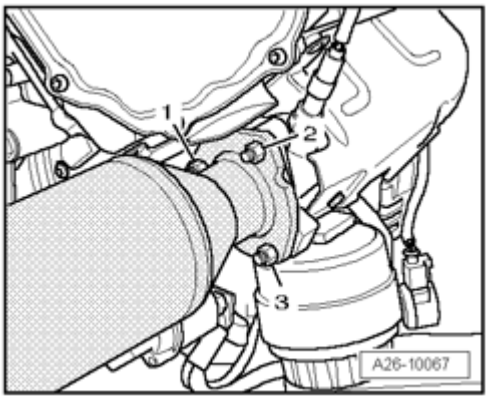

Fig. 604: Removing Nuts & Right Front Exhaust Pipe With Catalytic Converter
Courtesy of VOLKSWAGEN UNITED STATES, INC.

- Remove nut - **2** - which is accessible from top for front exhaust pipe/exhaust manifold.

NOTE:

- **To improve clarity, the removed engine is shown from rear.**

- Remove right front wheel.

NOTE:

- **Secure brake disc with a wheel bolt.**

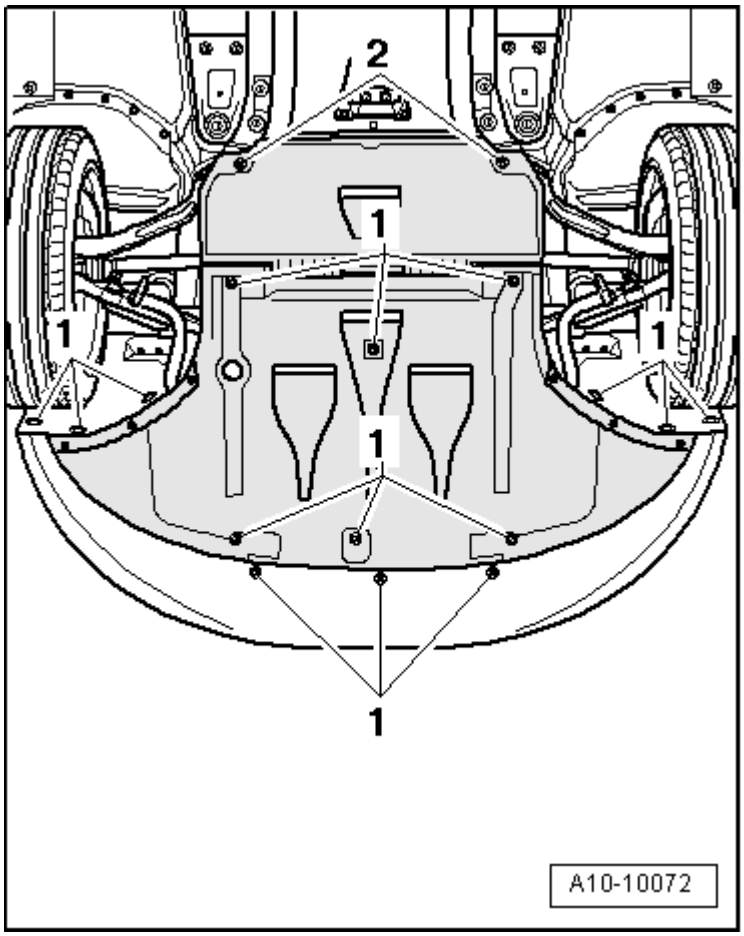

Fig. 605: Identifying Quick-Release Fasteners & Noise Insulation
Courtesy of VOLKSWAGEN UNITED STATES, INC.

- Loosen quick-release fasteners - **1** - and - **2** - and remove noise insulation.

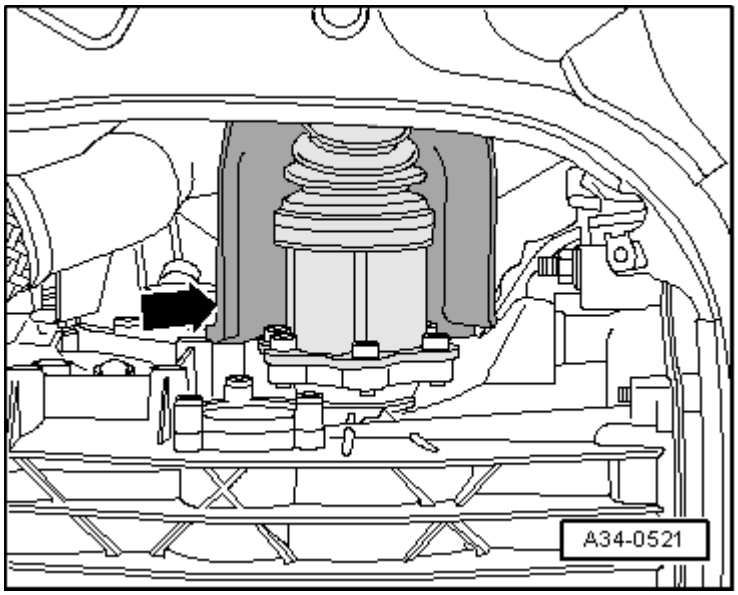

Fig. 606: Removing Heat Shield For Right Drive Axle
Courtesy of VOLKSWAGEN UNITED STATES, INC.

- Remove heat shield - **arrow** - for right drive axle.

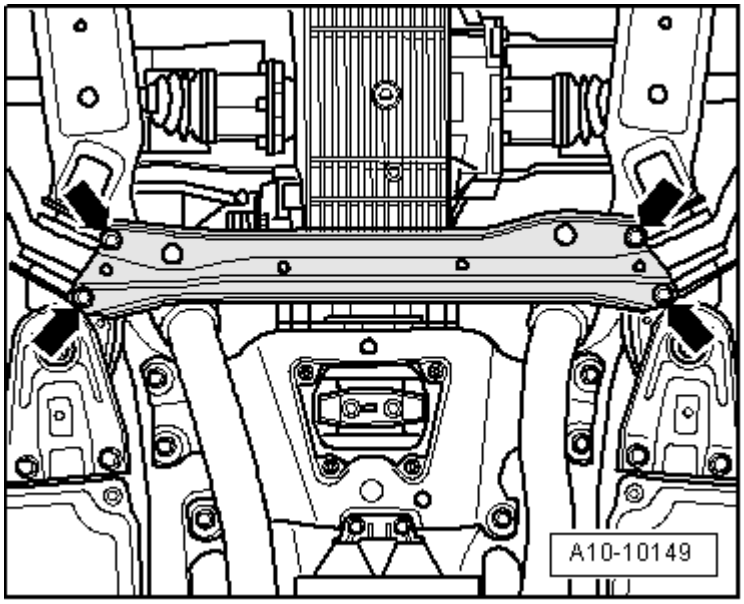

Fig. 607: Removing Subframe Transverse Beam
Courtesy of VOLKSWAGEN UNITED STATES, INC.

- Remove subframe transverse beam - **arrows** -.

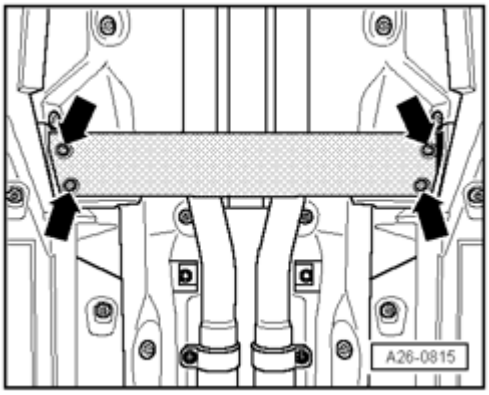

Fig. 608: Removing Front Transverse Beam
Courtesy of VOLKSWAGEN UNITED STATES, INC.

- Remove front transverse beam - **arrows** -.

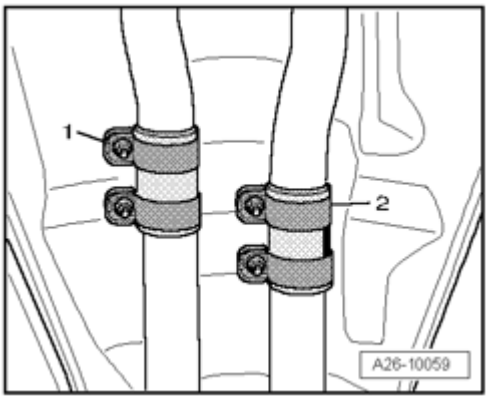

Fig. 609: Loosening Clamping Sleeves
Courtesy of VOLKSWAGEN UNITED STATES, INC.

Separate exhaust system at right clamping sleeve - **1** -.

NOTE:

- **Ignore - 2 -.**

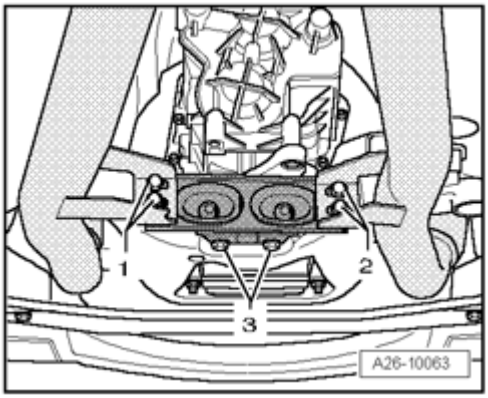

Fig. 610: Removing/Installing Mounting Bolts For Front Exhaust Pipes
Courtesy of VOLKSWAGEN UNITED STATES, INC.

NOTE:

- **Flex joint in front exhaust pipe must not be bent more than 10° , otherwise it may be damaged.**

- Remove bolts - **2** - at rear bracket for front exhaust pipe.

NOTE:

- **Ignore - 1 - and - 3 -.**

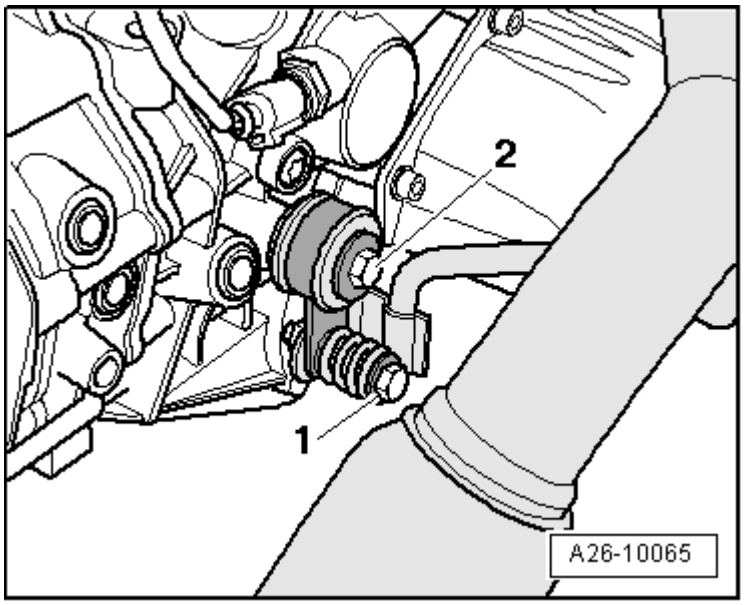

Fig. 611: Removing Bolt At Right Bracket For Front Exhaust Pipe
Courtesy of VOLKSWAGEN UNITED STATES, INC.

- Remove bolt - **1** - at right bracket for front exhaust pipe.

NOTE:

- **Ignore - 2 -.**

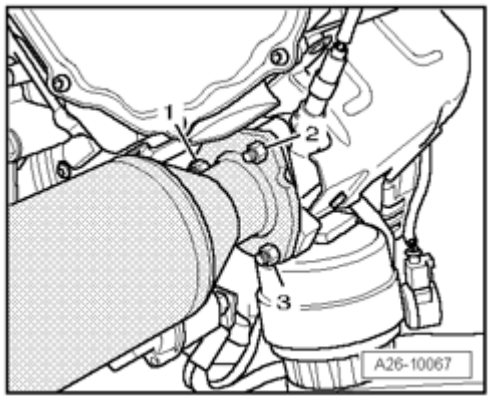

Fig. 612: Removing Nuts & Right Front Exhaust Pipe With Catalytic Converter
Courtesy of VOLKSWAGEN UNITED STATES, INC.

- Remove nuts - **1** - and - **3** - which are accessible from bottom for front exhaust pipe/exhaust manifold.

NOTE:

- **To improve clarity, the removed engine is shown.**

- Remove front exhaust pipe with catalytic converter.

Installing

Installation is in reverse order of removal, note the following:

NOTE:

- **Replace gaskets, O-rings and self-locking nuts.**
- **Secure all hose connections using hose clamps appropriate for the model type .**
- **During installation, all cable ties must be re-installed at the same location.**
- **Electrical wire of oxygen sensor must always be secured in the same position when installing so that contact with the exhaust pipe is avoided.**

- Install subframe cross member --> **40 - FRONT SUSPENSION** .
- Install front cross member --> **50 - BODY - FRONT** .
- Align exhaust system free of tension --> **Exhaust system, installing free of tension**.

NOTE:

- **Individual components of exhaust system mounting Individual components of suspension, right side**

Torque specifications

Component	Nm
Front exhaust pipe with catalytic converter to exhaust manifold	23 * See note
Mounting strap to front exhaust pipe	23
Front exhaust pipe to bracket	23
Heat shield for drive shaft to transmission	23
Hose clamps 9 mm wide	3

*Replace bolts and nuts.

Left exhaust manifold, removing and installing

Removing

- Remove engine --> **Engine, removing and installing**.

NOTE:

- **All cable ties which are opened or cut open when removing, must be replaced in the same position when installing.**

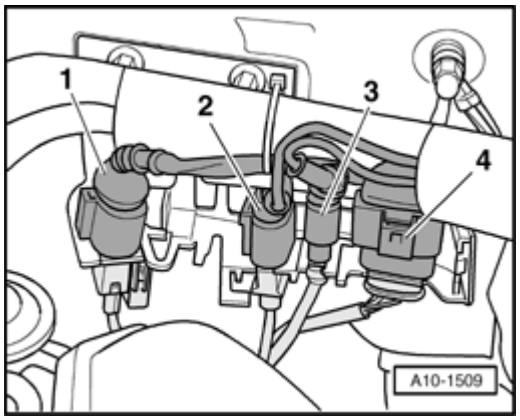

Fig. 613: Disconnecting Scissor Lift Platform VAS 6131 A Electrical Harness Connectors
Courtesy of VOLKSWAGEN UNITED STATES, INC.

- Disconnect electrical harness connectors - **1** - and - **4** - for oxygen sensors.
- Free up cables.

NOTE:

- **Harness connectors are depicted in the installation position in the illustration.**

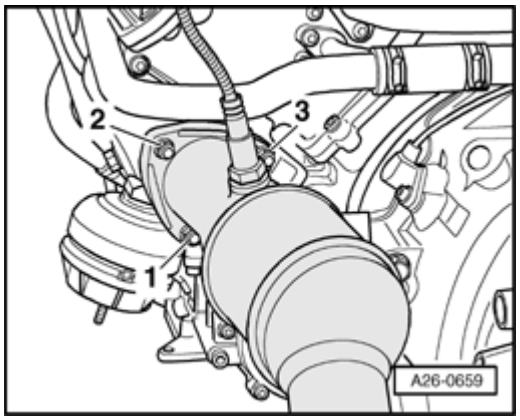

Fig. 614: Removing/Installing Nuts For Left Front Exhaust Pipe/Exhaust Manifold
Courtesy of VOLKSWAGEN UNITED STATES, INC.

- Remove front exhaust pipe from left exhaust manifold nuts - **1 to 3** -.
- Remove left coolant pipe --> **Left coolant pipe, removing and installing**.

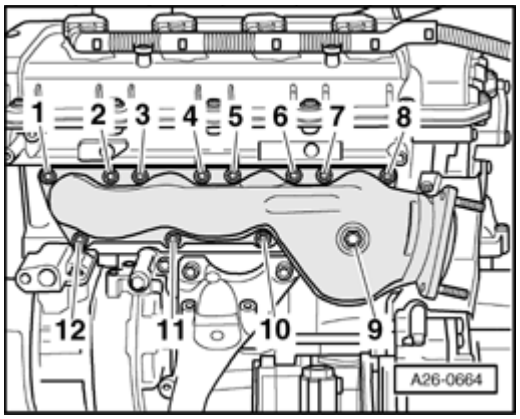

Fig. 615: Removing Nuts And Left Exhaust Manifold
Courtesy of VOLKSWAGEN UNITED STATES, INC.

- Remove nuts - **1 to 12** - and remove left exhaust manifold.

Installing

Installation is in reverse order of removal, note the following:

NOTE:

- **Replace gaskets and self-locking nuts.**
- **During installation, all cable ties must be re-installed at the same location.**

- Install left coolant pipe --> **Left coolant pipe, removing and installing**.
- Install left front exhaust pipe with pre- and main catalytic converters --> **Left front exhaust pipe with catalytic converter, removing and installing**.
- Install engine --> **Engine, installing**.

Torque specifications

Component	Nm
Exhaust manifold to cylinder head	25 * See note

* Replace nuts

Right exhaust manifold, removing and installing

Removing

NOTE:

- **All cable ties which are opened or cut open when removing, must be replaced in the same position when installing.**

- Remove engine --> **Engine, removing and installing**.

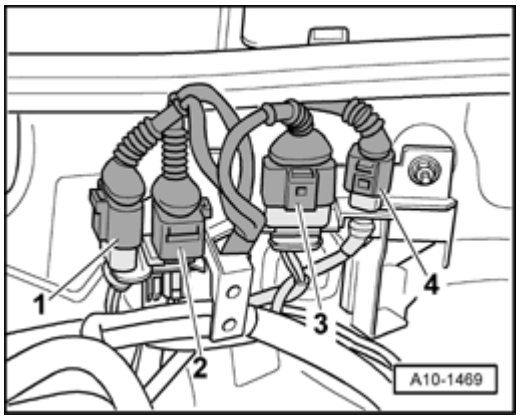

Fig. 616: Disconnecting Electrical Harness Connectors For Oxygen Sensors
Courtesy of VOLKSWAGEN UNITED STATES, INC.

- Disconnect electrical harness connectors - **1** - and - **2** - for oxygen sensors.
- Free up cables.

NOTE:

- **Harness connectors are depicted in the installation position in the illustration.**

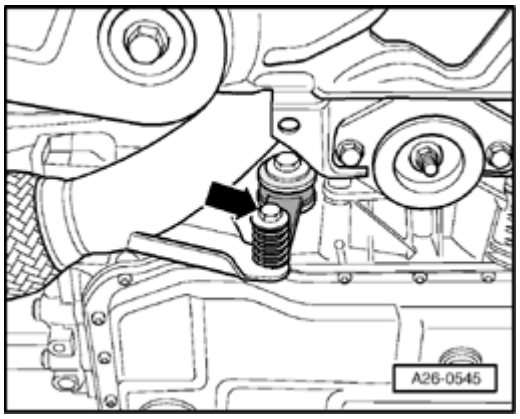

Fig. 617: Removing Bolt At Strap For Right Front Exhaust Pipe
Courtesy of VOLKSWAGEN UNITED STATES, INC.

- Remove bolt - **arrow** - at strap for right front exhaust pipe.

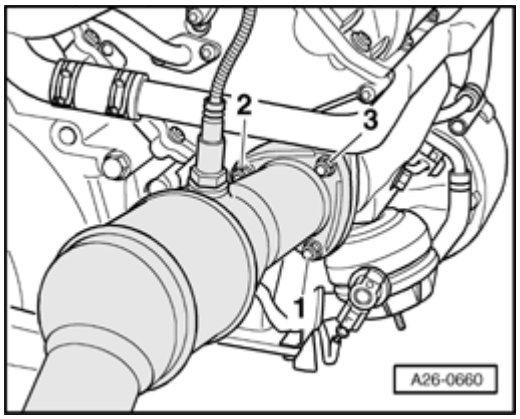

Fig. 618: Removing/Installing Nuts For Right Front Exhaust Pipe/Exhaust Manifold
Courtesy of VOLKSWAGEN UNITED STATES, INC.

- Remove front exhaust pipe from right exhaust manifold nuts - **1 to 3** -.

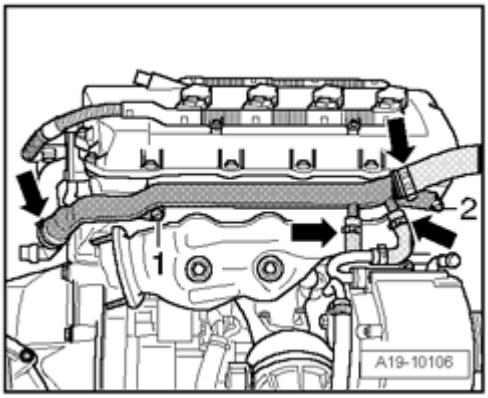

Fig. 619: Removing Bolts & Loosening Hose Clamps And Removing Right Coolant Pipe From Coolant Hoses
Courtesy of VOLKSWAGEN UNITED STATES, INC.

- Remove bolts - **1** - and - **2** -.
- Loosen hose clamps - **arrows** - and remove right coolant pipe from coolant hoses.

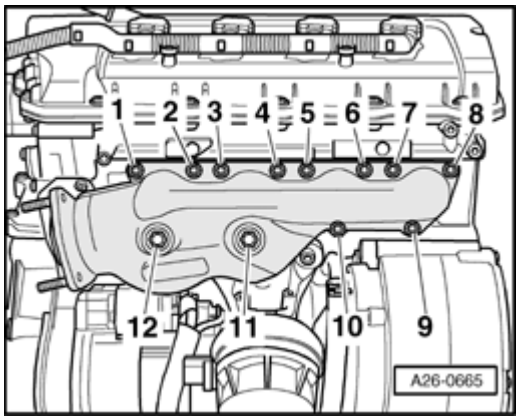

Fig. 620: Removing Nuts And Right Exhaust Manifold
Courtesy of VOLKSWAGEN UNITED STATES, INC.

- Remove nuts - **1 to 12** - and remove right exhaust manifold.

Installing

Installation is in reverse order of removal, note the following:

NOTE:
- **Replace gaskets and self-locking nuts.**
- **During installation, all cable ties must be re-installed at the same location.**

- Install right coolant pipe.
- Install right front exhaust pipe with pre- and main catalytic converters --> **Right exhaust pipe with catalytic converter, removing and installing**.
- Install engine --> **Engine, installing**.

Torque specifications

Component	Nm
Exhaust manifold to cylinder head	25 * See note

* Replace nuts

Exhaust system, installing free of tension

NOTE:
- **Align exhaust system when cold.**

Vehicles without double clamps between center and rear muffler

- Loosen bolts of clamping sleeves.

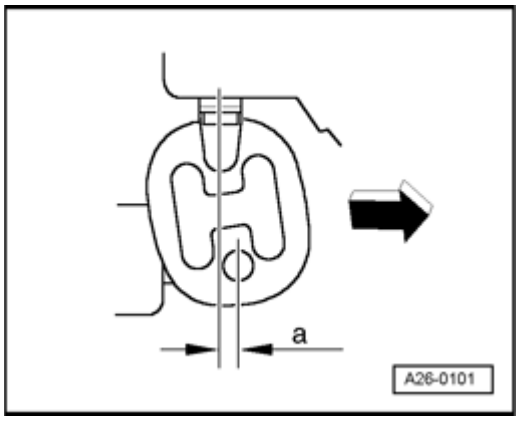

Fig. 621: Pushing Exhaust System Toward Front Of Vehicle

Courtesy of VOLKSWAGEN UNITED STATES, INC.

- Press exhaust system far enough forward - **arrow** - until pre-load on retaining loops at right on rear mufflers is - **a** - = 5 to 9 mm.
- Tighten clamping sleeve connections evenly to 23 Nm.
- Align end pipes --> **Tail pipes, aligning**.

Vehicles with double clamps between center and rear muffler

NOTE:

- **Only for vehicles with clamping sleeves between center and rear mufflers, the center muffler must also be aligned.**

- Loosen bolts of clamping sleeves and.

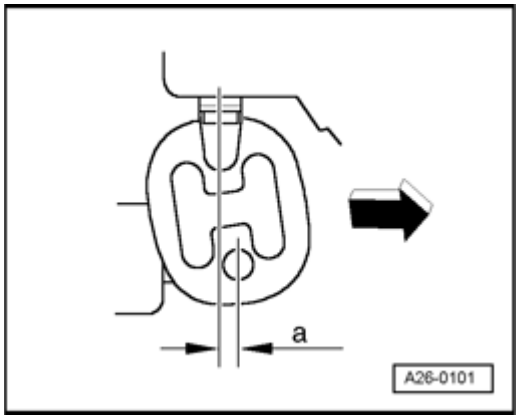

Fig. 622: Pushing Exhaust System Toward Front Of Vehicle
Courtesy of VOLKSWAGEN UNITED STATES, INC.

- Slide front section of exhaust system far enough forward - **arrow** - until pre-load on retaining loops at center muffler - **a** - = 5 to 9 mm.
- Tighten from clamping sleeve connections evenly to 23 Nm.

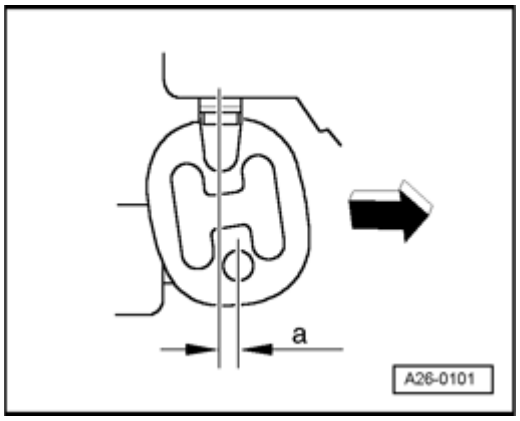

Fig. 623: Pushing Exhaust System Toward Front Of Vehicle
Courtesy of VOLKSWAGEN UNITED STATES, INC.

- Press rear part of exhaust system far enough forward - **arrow** - so that the pre-tension at rear retaining loops of rear mufflers is - **a** - = 5 to 9 mm.
- Align rear muffler horizontally.
- Tighten bolts for rear clamping sleeve uniformly to 23 Nm.
- Align end pipes --> **Tail pipes, aligning**.

Tail pipes, aligning

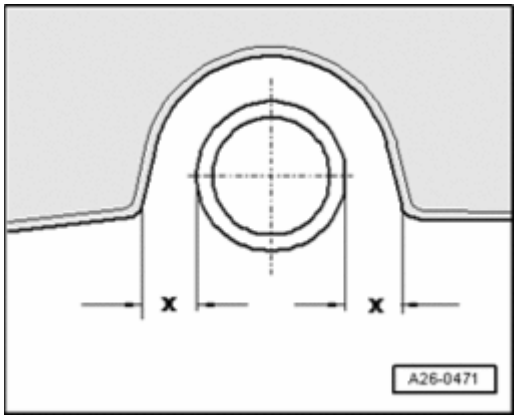

Fig. 624: Checking Distance Of End Pipes At Left/Right To Bumper
Courtesy of VOLKSWAGEN UNITED STATES, INC.

- Check distance of end pipes at left and right to bumper:

- Dimension - **x** - left = dimension - **x** - right

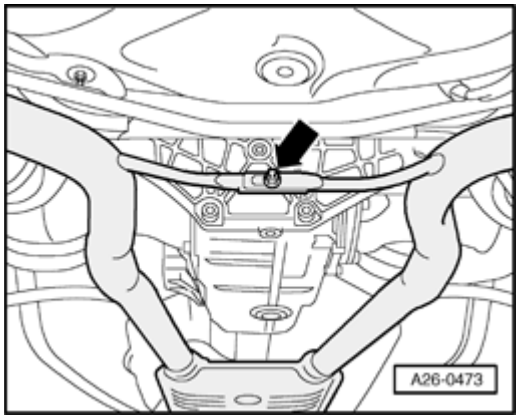

Fig. 625: Loosening Nut Of Brace Between Exhaust Pipes
Courtesy of VOLKSWAGEN UNITED STATES, INC.

If necessary, correct dimension - **x** - as follows:

- Loosen threaded connections - **arrow** - of brace between exhaust pipes.
- Adjust distance between rear mufflers.
- Tighten threaded fastener to 25 Nm.

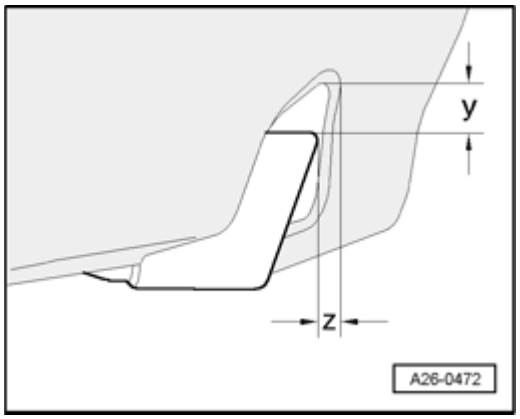

Fig. 626: Checking Distances Of End Pipes To Bumper
Courtesy of VOLKSWAGEN UNITED STATES, INC.

- Check distances - **y** - and - **z** - of end pipes to bumper:

- Dimension - **y** - = 17 to 19 mm.
- Dimension - **z** - = 0 ± 2 mm.

- If necessary, check whether the exhaust system is aligned tension-free --> **Exhaust system, installing free of tension**.

Exhaust system, checking for leaks

- Start engine and let run at idle.
- Seal tailpipes with cloths or plug for duration of leak test.
- Check for leaks by listening at connection areas of cylinder head/exhaust manifold, exhaust manifold/front exhaust pipe etc.
- Repair leaks detected.

SECONDARY AIR INJECTION (AIR), SERVICING

Secondary Air Injection (AIR), servicing

- The Secondary Air Injection (AIR) system heats up the engine faster, and thereby the catalytic converter achieves operation readiness earlier after a cold start.
- Due to rich mixture during cold start phase, the exhaust emissions contain an increased level of unburned hydrocarbons. The Secondary Air Injection (AIR) system improves the secondary oxidation within the catalytic converter, thereby reducing harmful emissions. The heat released by secondary oxidation shortens the start-up time of the catalytic converter considerably, as well as significantly improves emissions quality during the cold-running phase.

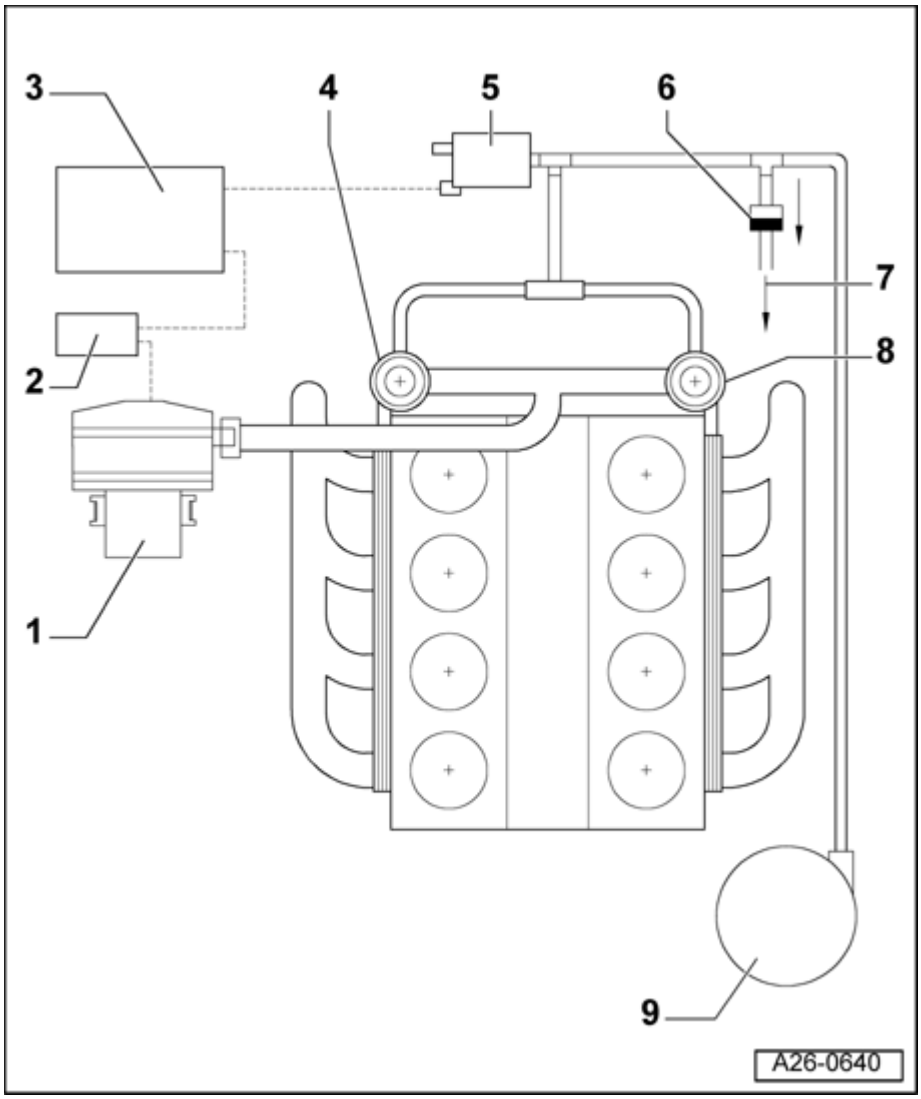

Fig. 627: Secondary Air Injection (Air), Component Overview
Courtesy of VOLKSWAGEN UNITED STATES, INC.

- In cold start phase, Motronic Engine Control Module (ECM) J220 - **3** - via Secondary Air Injection (AIR) Pump Relay J299 - **2** - activates Secondary Air Injection (AIR) Pump Motor V101 - **1** -. Air reaches combination valves for Secondary Air Injection (AIR) - **4** - and - **8** -.
- The Secondary Air Injection (AIR) Solenoid Valve N112 - **5** - is activated in parallel, which allows the vacuum to reach the combination valves for secondary air injection - **4** - and - **8** -. The appropriate combination valve for Secondary Air Injection (AIR) thereby opens the path for secondary air to exhaust channels of cylinder head.

Secondary Air Injection (AIR) system, overview

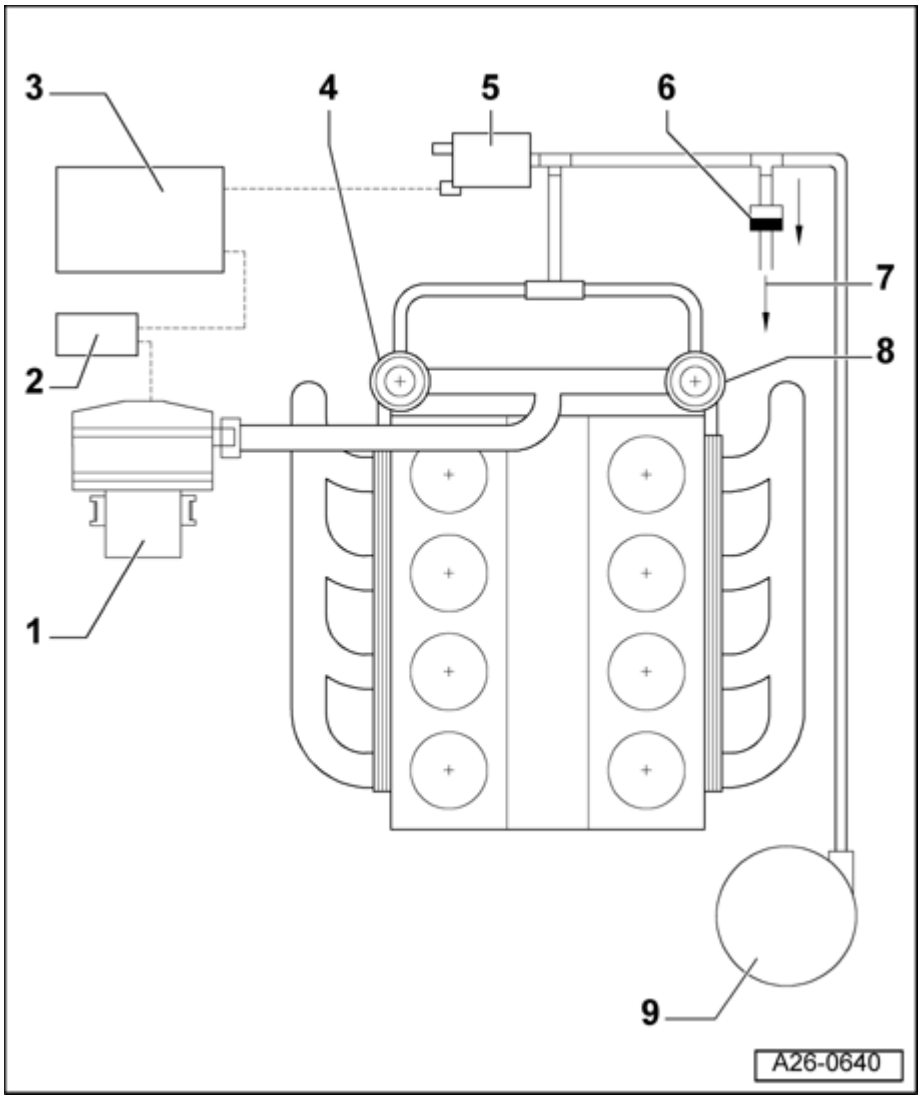

Fig. 628: Secondary Air Injection (Air), Component Overview
Courtesy of VOLKSWAGEN UNITED STATES, INC.

1 - Secondary Air Injection (AIR) Pump Motor V101

- Component location --> **Component location of Secondary Air Injection (AIR) Pump Motor V101**
- Removing and installing --> **Secondary Air Injection (AIR) Pump Motor V101 , removing and installing**

2 - Secondary Air Injection (AIR) Pump Relay J299

- Component location --> **Component location for Secondary Air Injection (AIR) Pump Relay J299**

3 - Motronic engine control module J220

4 - Right combination valve for Secondary Air Injection (AIR)

- Component location **Combination valve for Secondary Air Injection (AIR)**
- Checking --> **Combination valve for Secondary Air Injection (AIR), checking for function and leaks**
- Removing and installing --> **Right combination valve for Secondary Air Injection (AIR), removing and installing**

5 - Secondary air injection (AIR) solenoid valve N112

- Component location --> **Installation location of Secondary Air Injection (AIR) Solenoid Valve N112**

6 - Non-return valve

- Installed location: Arrow points in direction of flow, as shown in **Fig. 628**.

7 - to Intake manifold

8 - Left combination valve for Secondary Air Injection (AIR)

- Component location **Combination valve for Secondary Air Injection (AIR)**
- Checking --> **Combination valve for Secondary Air Injection (AIR), checking for function and leaks**
- Removing and installing --> **Left combination valve for Secondary Air Injection (AIR), removing and installing**

9 - Vacuum reservoir

- Component location: In left front wheel housing behind wheel housing liner

Installation location of Secondary Air Injection (AIR) Solenoid Valve N112

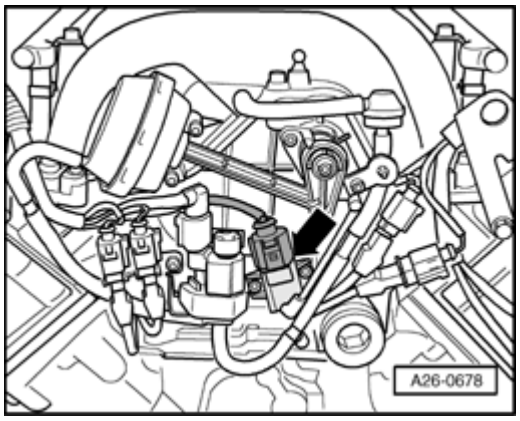

Fig. 629: Installation Location Of Secondary Air Injection (Air) Solenoid Valve N112
Courtesy of VOLKSWAGEN UNITED STATES, INC.

- Front at intake manifold - **arrow** -.

Component location of Secondary Air Injection (AIR) Pump Motor V101

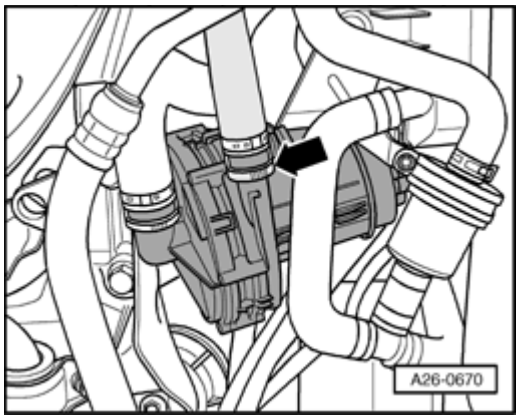

Fig. 630: Secondary Air Injection (AIR) Pump Motor -V101-
Courtesy of VOLKSWAGEN UNITED STATES, INC.

- At right front in engine compartment below long member.

Component location for Secondary Air Injection (AIR) Pump Relay J299

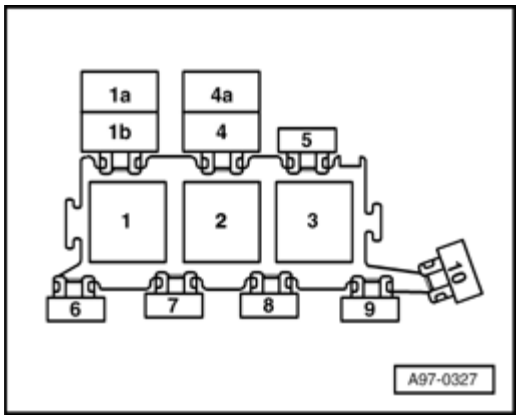

Fig. 631: Component Location For Secondary Air Injection (AIR) Pump Relay J299
Courtesy of VOLKSWAGEN UNITED STATES, INC.

- At position 2 in 3-socket relay carrier in E-box, plenum chamber.

Combination valve for Secondary Air Injection (AIR)

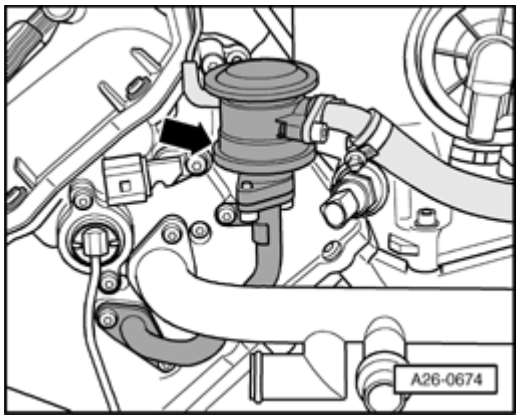

Fig. 632: Combination Valve For Secondary Air Injection (AIR)
Courtesy of VOLKSWAGEN UNITED STATES, INC.

- At rear of cylinder heads.

NOTE:

- **Left valve is displayed in illustration.**

Secondary Air Injection (AIR) Pump Motor V101 , removing and installing

Removing

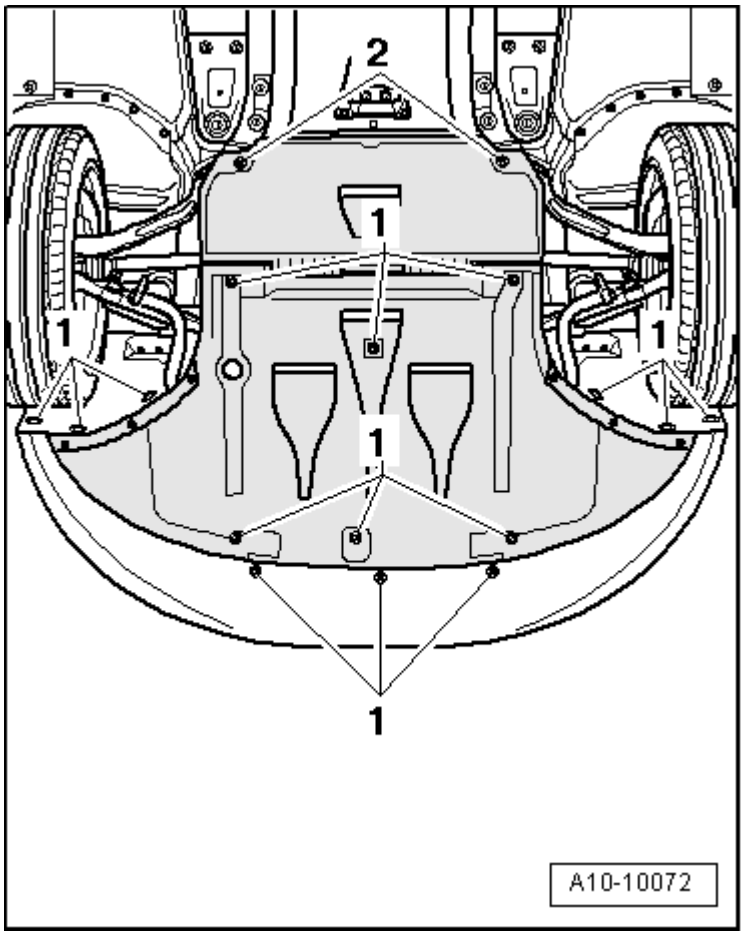

Fig. 633: Identifying Quick-Release Fasteners & Noise Insulation
Courtesy of VOLKSWAGEN UNITED STATES, INC.

- Loosen quick-release fasteners - **1** - and - **2** - and remove front noise insulation.
- Remove front bumper --> **63 - BUMPERS** .

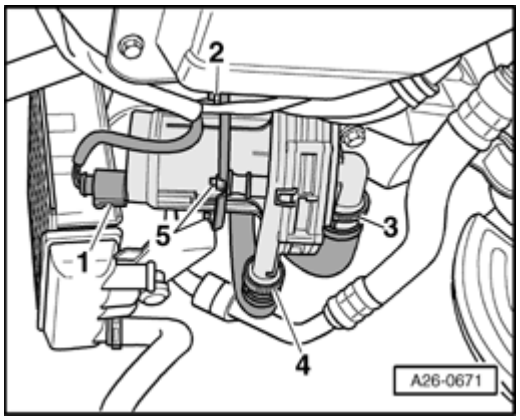

Fig. 634: Identifying Hoses, Electrical Connector, Nuts & Secondary Air Injection (AIR) Pump Motor V101
Courtesy of VOLKSWAGEN UNITED STATES, INC.

- Disconnect hoses - **3** - and - **4** - at Secondary Air Injection (AIR) Pump Motor V101.
- Disconnect electrical connector - **1** -.
- Remove nuts - **2** - and - **5** - and remove Secondary Air Injection (AIR) pump motor V101 from bracket.

Installing

Installation is in reverse order of removal, note the following:

- Install front bumper --> **63 - BUMPERS** .

Torque specifications

Component	Nm
Secondary Air Injection (AIR) pump to bracket	10

Combination valve for Secondary Air Injection (AIR), checking for function and leaks

Special tools, testers and auxiliary items required

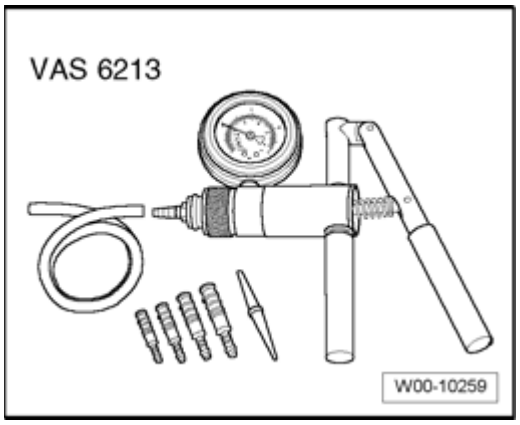

Fig. 635: Identifying Hand Vacuum Pump VAS 6213
Courtesy of VOLKSWAGEN UNITED STATES, INC.

- Hand vacuum pump VAS 6213

Test conditions

- Vacuum lines and hose connections free of leaks.
- Vacuum lines not plugged.

Test sequence

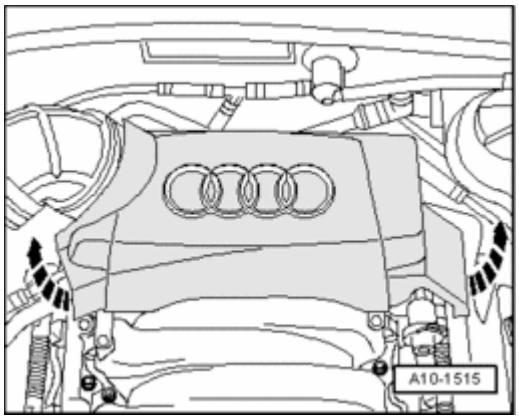

Fig. 636: Removing Rear Engine Cover
Courtesy of VOLKSWAGEN UNITED STATES, INC.

- Remove rear engine cover - **arrows** -.

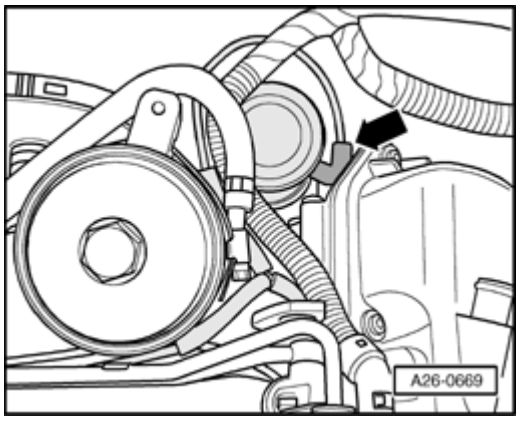

Fig. 637: Disconnecting Vacuum Hose At Combination Valve To Be Tested
Courtesy of VOLKSWAGEN UNITED STATES, INC.

- Disconnect vacuum hose - **arrow** - at combination valve to be tested.

NOTE:

- **Left combination valve is shown in illustration.**

- Connect hand vacuum pump VAS 6213 to vacuum hose of combination valve to be checked.

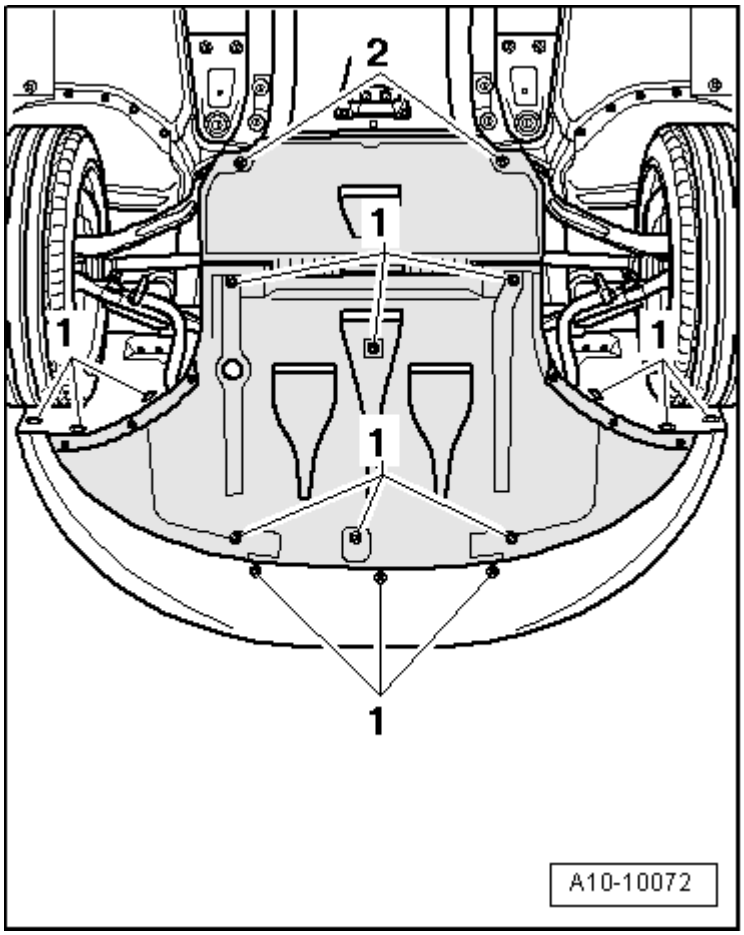

Fig. 638: Identifying Quick-Release Fasteners & Noise Insulation
Courtesy of VOLKSWAGEN UNITED STATES, INC.

- Loosen quick-release fasteners - **1** - and - **2** - and remove front noise insulation.

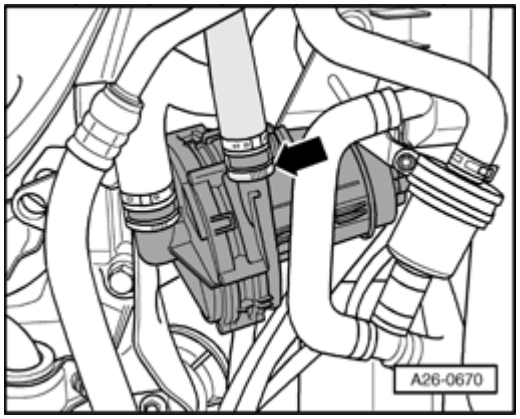

Fig. 639: Secondary Air Injection (AIR) Pump Motor -V101-
Courtesy of VOLKSWAGEN UNITED STATES, INC.

- Disconnect pressure hose - **arrow** - at Secondary Air Injection (AIR) Pump Motor V101.
- Blow with light pressure into pipe (do not use pressurized air).

- Both combination valves must be closed, it must not be possible to blow through hose.
  - Operate hand vacuum pump.
- The relevant combination valve must open, it must not be possible to blow through

If relevant combination valve does not open:

- Replace combi-valve --> **Left combination valve for Secondary Air Injection (AIR), removing and installing** and --> **Right combination valve for Secondary Air Injection (AIR), removing and installing**.

Left combination valve for Secondary Air Injection (AIR), removing and installing

Special tools, testers and auxiliary items required

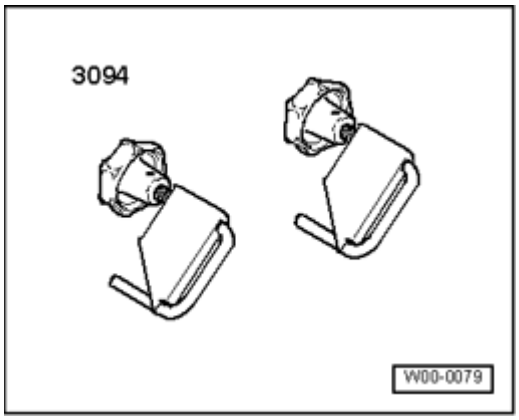

Fig. 640: Identifying Hose Clamps 3094
Courtesy of VOLKSWAGEN UNITED STATES, INC.

- Hose Clamps Up to 25 mm dia. 3094

Removing

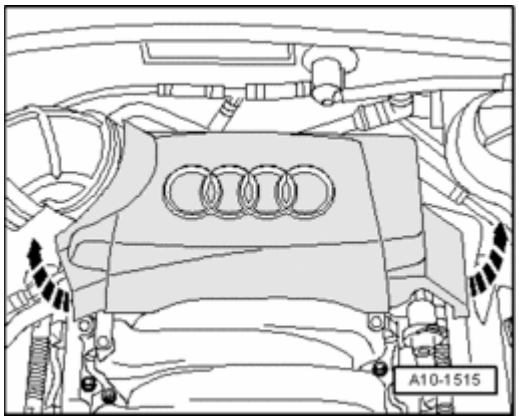

Fig. 641: Removing Rear Engine Cover

Courtesy of VOLKSWAGEN UNITED STATES, INC.

- Remove rear engine cover - **arrows** -.

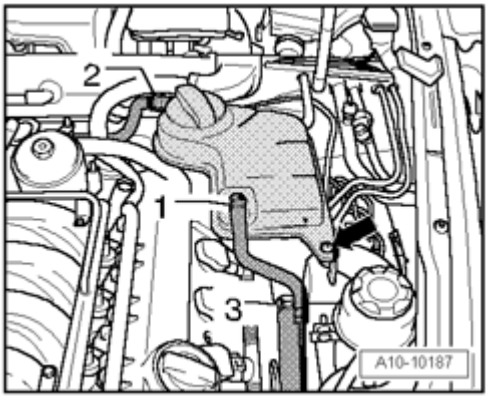

Fig. 642: Removing Coolant Hoses & Coolant Expansion Tank
Courtesy of VOLKSWAGEN UNITED STATES, INC.

- Clamp off coolant hose - **2** - using Hose Clamps Up to 25 mm dia. 3094 and disconnect from coolant expansion tank.
- Remove coolant expansion tank - **arrow** -.
- Disconnect electrical wire to Engine Coolant Level (ECL) Warning Switch F66 on bottom of expansion tank and set aside coolant expansion tank with coolant hoses - **1 and 3** - connected.
- If necessary, seal connection using an appropriate plug.

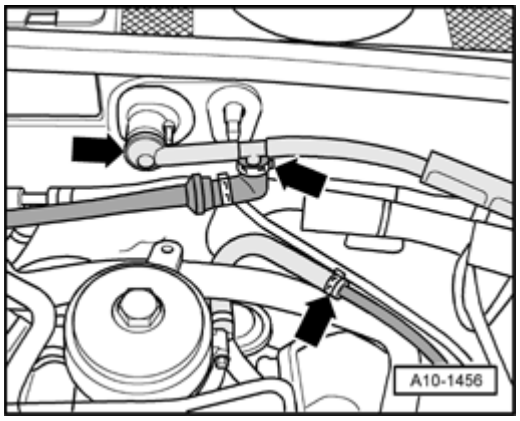

Fig. 643: Disconnecting Vacuum Hoses
Courtesy of VOLKSWAGEN UNITED STATES, INC.

- Disconnect vacuum hoses at positions indicated by - **arrows** -.
- Disconnect hose for crankcase ventilation at left cylinder head cover.

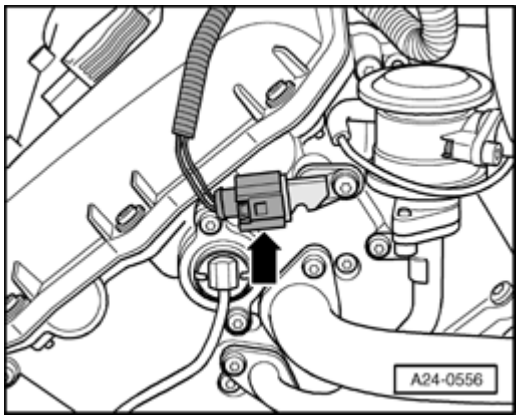

Fig. 644: Disconnecting Electrical Harness Connector For Camshaft Position (CMP) Sensor 2 G163 On Left Cylinder Head
Courtesy of VOLKSWAGEN UNITED STATES, INC.

- Disconnect electrical harness connector - **arrow** - for Camshaft Position (CMP) Sensor 2 G163 on left cylinder head.

NOTE:

- **Illustration depicts engine from rear.**

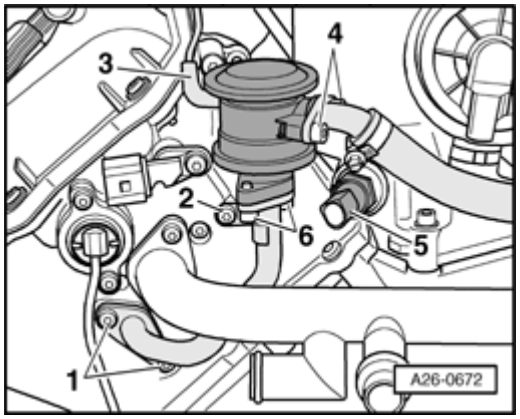

Fig. 645: Disconnect Vacuum Hose, Electrical Harness Connector From Oil Pressure Switch F1, Removing Bolts & Oil Pressure Switch
Courtesy of VOLKSWAGEN UNITED STATES, INC.

- Disconnect vacuum hose - **3** -.
- Remove bolts - **4** -.
- Disconnect electrical harness connector from oil pressure switch - **5** -.
- Remove oil pressure switch.

- Remove bolts - **1** - and - **2** -.
- Swing combination valve and remove bolts - **6** -.
- Remove combination valve and connecting tube.

NOTE:

- **Fig. 645 depicts engine from rear.**

Installing

Installation is in reverse order of removal, note the following:

NOTE:

- **Always replace gaskets and seals.**
- **Note installation position of seal between cylinder head and connecting tube.**
- **Secure all hose connections using hose clamps appropriate for the model type .**

- Check coolant level.

Torque specifications

Component		Nm
Connecting pipe	Cylinder head	10
To	Combi-valve	10
Oil pressure switch to oil filter housing		25

Right combination valve for Secondary Air Injection (AIR), removing and installing

Removing

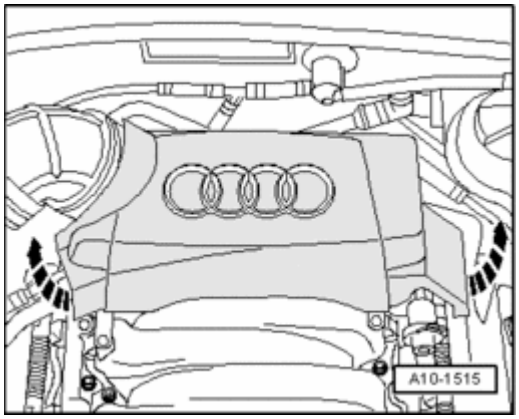

Fig. 646: Removing Rear Engine Cover
Courtesy of VOLKSWAGEN UNITED STATES, INC.

- Remove rear engine cover - **arrows** -.

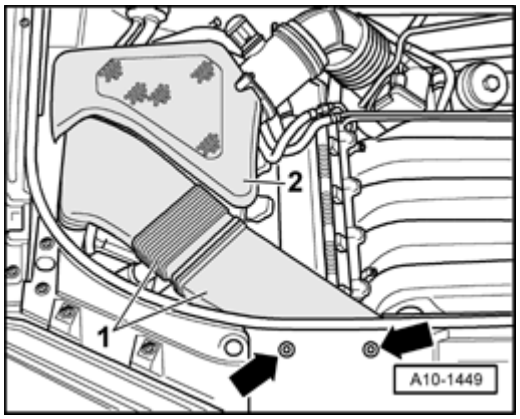

Fig. 647: Identifying Air Filter Cover & Air Duct
Courtesy of VOLKSWAGEN UNITED STATES, INC.

- Remove air filter cover - **2** -.
- Remove air duct - **1** -.

NOTE:

- **To pull out clips - arrows - , use Pry Lever - Rmv Outside Mirror 80-200.**
- **If necessary, use silicon-free spray lubricant to facilitate removal.**

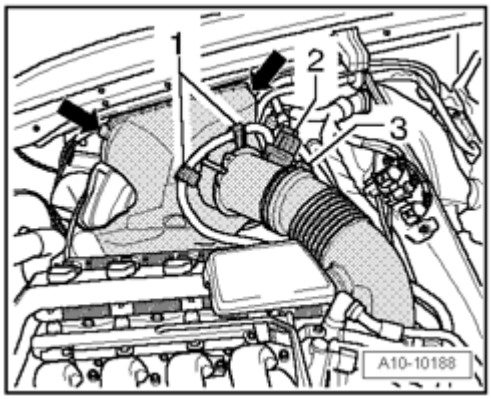

Fig. 648: Disconnecting Mass Air Flow (MAF) Sensor G70 Electrical Harness Connector
Courtesy of VOLKSWAGEN UNITED STATES, INC.

- Unclip fuel hose - **1** -.
- Separate electrical connector - **2** - from mass air flow (MAF) sensor.
- Disconnect mass air flow sensor from intake air duct - **3** -.
- Remove upper part of air filter housing with mass air flow (MAF) sensor - **arrows** -.

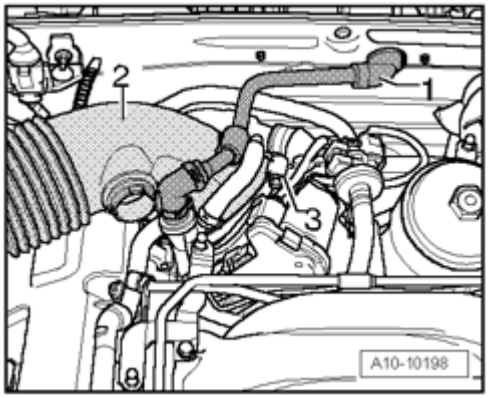

Fig. 649: Identifying Vacuum Hose, Intake Hose & Clamp
Courtesy of VOLKSWAGEN UNITED STATES, INC.

- Remove intake hose - **2** - , thereby loosening clamp - **3** -.

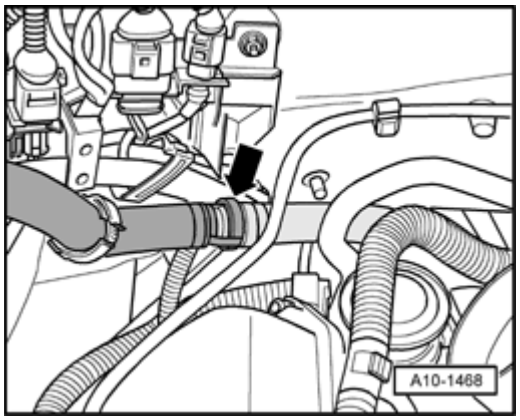

Fig. 650: Disconnecting Air Hose To Combination Valves For Secondary Air Injection (AIR)
Courtesy of VOLKSWAGEN UNITED STATES, INC.

- Disconnect air hose - **arrow** - to combination valves for Secondary Air Injection (AIR).

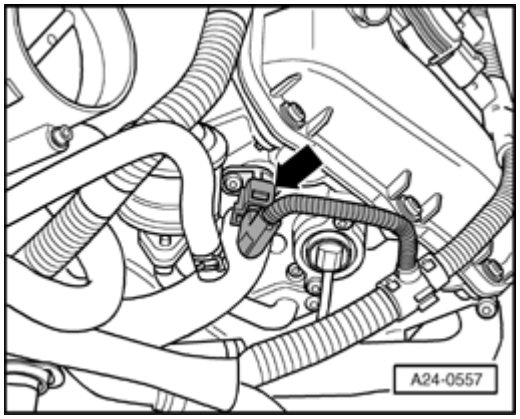

Fig. 651: Disconnecting Electrical Harness Connector For Camshaft Position (CMP) Sensor G40 On Right Cylinder Head

Courtesy of VOLKSWAGEN UNITED STATES, INC.

- Disconnect electrical harness connector - **arrow** - for Camshaft Position (CMP) Sensor G40 on right cylinder head.

NOTE:

- **Illustration depicts engine from rear.**

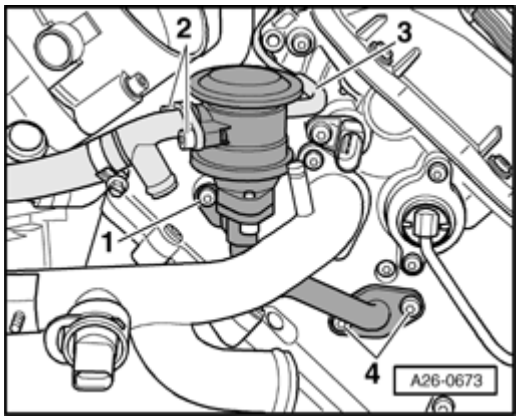

Fig. 652: Disconnecting Vacuum Hose And Remove Bolts & Combination Valve
Courtesy of VOLKSWAGEN UNITED STATES, INC.

- Disconnect vacuum hose - **3** -.
- Remove bolts - **1** - , - **2** - and - **4** - and remove combination valve.

NOTE:

- **Illustration depicts engine from rear.**

Installing

Installation is in reverse order of removal, note the following:

NOTE:

- **Replace seals.**
- **Secure all hose connections using hose clamps appropriate for the model type .**

Torque specifications

Component		Nm
Connecting pipe	Cylinder head	10
To	Combi-valve	10

28 - IGNITION/GLOW PLUG SYSTEM

IGNITION SYSTEM, CHECKING

Ignition system, general information

- The engine control module is equipped with On Board Diagnostics (OBD).
- For electric components to work properly, a voltage of at least 11.5 Volts is required.
- It is possible that the control module will recognize a malfunction and store a DTC during some tests. Therefore after completing all checks and repairs DTC memory must be checked and if necessary erased.
- If engine only starts briefly and then turns off again after troubleshooting, repair or checking of the components, it may be that the immobilizer is blocking the Engine Control Module (ECM). DTC memory must then be checked and if necessary, control module must be adapted.

Safety precautions

To reduce risk of personal injury and/or damage to the fuel injection and ignition system, always observe the following:

- Do not touch or remove ignition wires when engine is running or turning at starter speed.
- The battery must only be disconnected and connected with ignition switched off, since Engine Control Module (ECM) can otherwise be damaged.
- The ignition must be switched off before connecting or disconnecting injection and ignition system wiring or tester cables.
- If engine is to be cranked at starting RPM without starting (e.g. for compression testing), disconnect connectors from power output stage for ignition coils and from fuel injectors. After performing work, check and erase DTC memory.
- Cleaning engine should only be performed with ignition switched off.

Technical data

Engine data	**4.2L/235 kW Engine**
Engine idle speed	650 to 750/min * See note
Ignition timing Not adjustable, determined in the control module	
Ignition system	Single coil ignition system with 6 ignition coils (output stages integrated) that are connected directly to spark plugs via the ignition cables.
Spark plugs , removing and installing --> **MAINTENANCE PROCEDURES**	Torque specification 30 Nm
Ignition sequence	1-5-3-6-2-4

*Not adjustable.

IGNITION COILS, REMOVING AND INSTALLING

Ignition coils, removing and installing

Special tools, testers and auxiliary items required

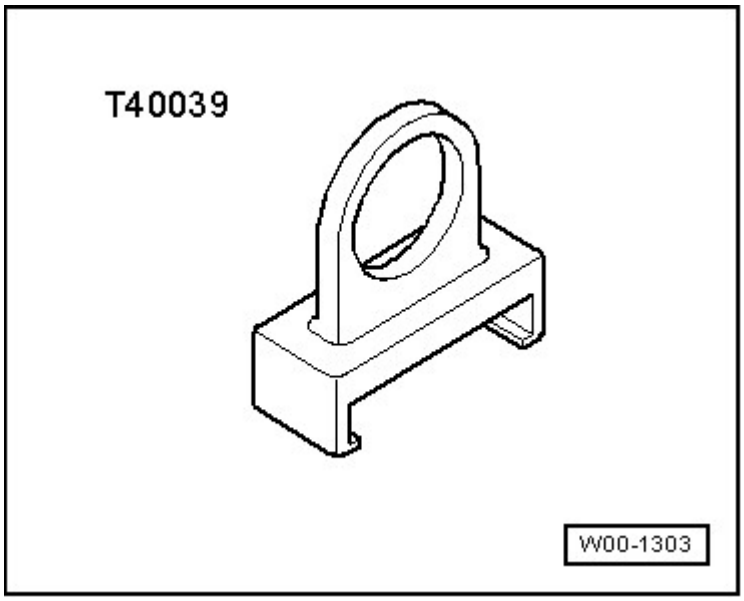

Fig. 653: Identifying Ignition Coil Puller T40039
Courtesy of VOLKSWAGEN UNITED STATES, INC.

- Ignition Coil Puller T40039

Removing from cylinder 1:

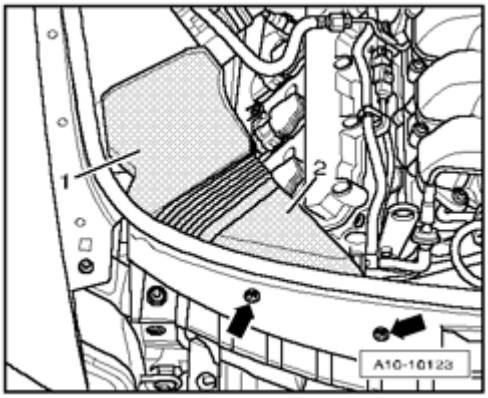

Fig. 654: Removing Bolts & Air Duct
Courtesy of VOLKSWAGEN UNITED STATES, INC.

- Remove air duct - **1** - and - **2** - , thereby removing bolts - **arrows** -.

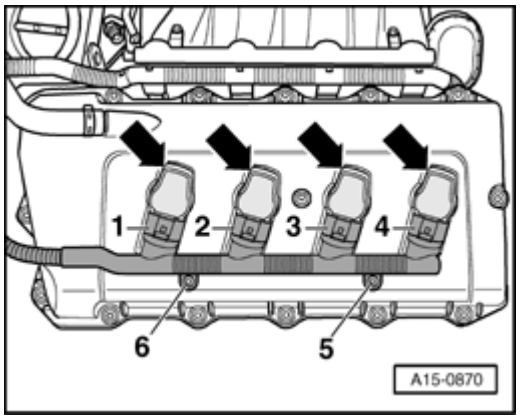

Fig. 655: Removing Bolts On Right Cylinder Head, Disconnecting Electrical Harness Connectors & Removing Ignition Coils
Courtesy of VOLKSWAGEN UNITED STATES, INC.

- Remove the bolts - **5 and 6** - and disconnect electrical connections at ignition coils.

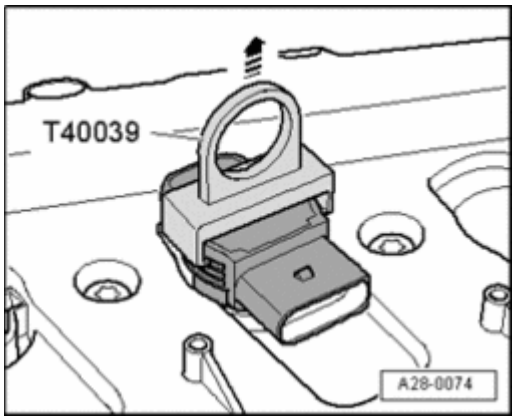

Fig. 656: Removing Ignition Coils Using Ignition Coil Puller T40039
Courtesy of VOLKSWAGEN UNITED STATES, INC.

- Remove ignition coil (cylinder 1) using Ignition Coil Puller T40039.

Removing from cylinder 2 and 3:

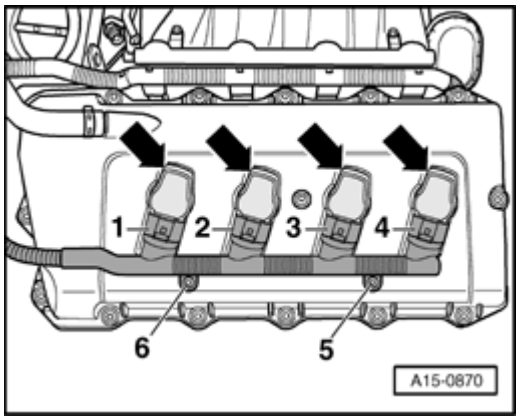

Fig. 657: Removing Bolts On Right Cylinder Head, Disconnecting Electrical Harness Connectors & Removing Ignition Coils
Courtesy of VOLKSWAGEN UNITED STATES, INC.

- Remove bolts - **5 and 6** - and disconnect electrical connections at ignition coils.

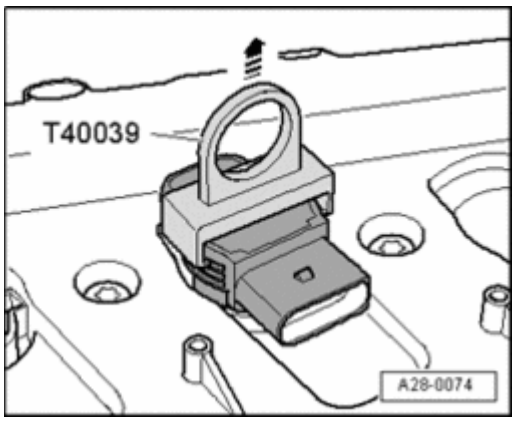

Fig. 658: Removing Ignition Coils Using Ignition Coil Puller T40039
Courtesy of VOLKSWAGEN UNITED STATES, INC.

- Remove the ignition coils (cylinder 2 and 3) using Ignition Coil Puller T40039.

Removing from cylinder 4:

- Remove air duct hose between air filter and throttle valve control module J338.

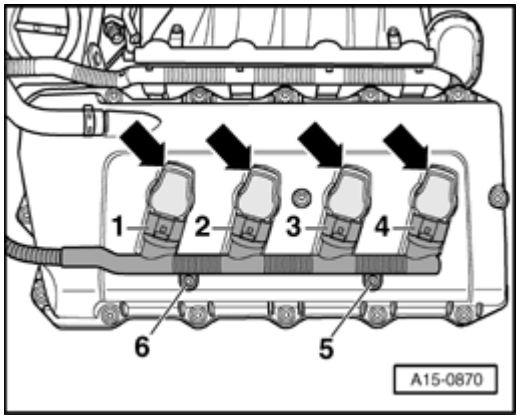

Fig. 659: Removing Bolts On Right Cylinder Head, Disconnecting Electrical Harness Connectors & Removing Ignition Coils
Courtesy of VOLKSWAGEN UNITED STATES, INC.

- Remove bolts - **5 and 6** - and disconnect electrical connections at ignition coils.

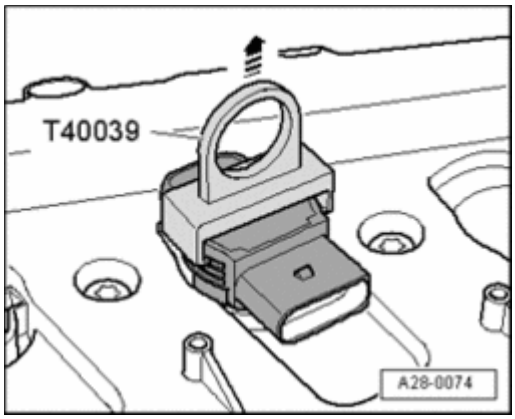

Fig. 660: Removing Ignition Coils Using Ignition Coil Puller T40039
Courtesy of VOLKSWAGEN UNITED STATES, INC.

- Remove ignition coil (cylinder 4) using Ignition Coil Puller T40039.

Removing from cylinder 5 and 6:

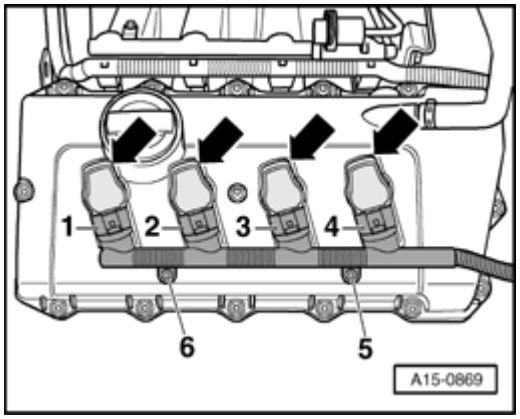

Fig. 661: Removing Bolts On Left Cylinder Head, Disconnecting Electrical Harness Connectors & Removing Ignition Coils
Courtesy of VOLKSWAGEN UNITED STATES, INC.

- Remove bolts - **5 and 6** - and disconnect electrical connections at ignition coils.

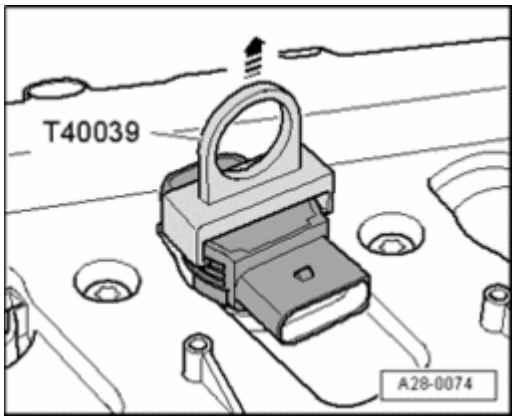

Fig. 662: Removing Ignition Coils Using Ignition Coil Puller T40039
Courtesy of VOLKSWAGEN UNITED STATES, INC.

- Remove ignition coils (cylinder 5 and 6) using Ignition Coil Puller T40039.

Removing from cylinder 7 and 8:

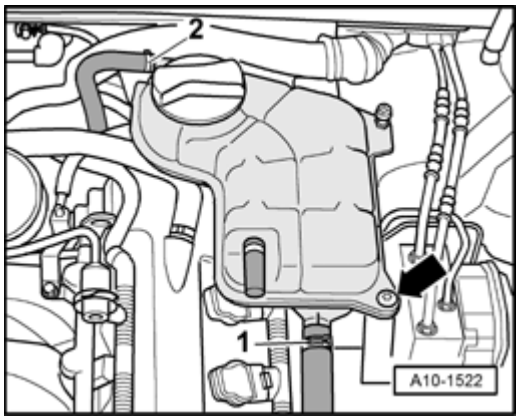

Fig. 663: Removing Coolant Hoses & Coolant Expansion Tank
Courtesy of VOLKSWAGEN UNITED STATES, INC.

- Remove coolant reservoir - **arrow** - and set it aside with coolant hoses - **1** - and - **2** -.

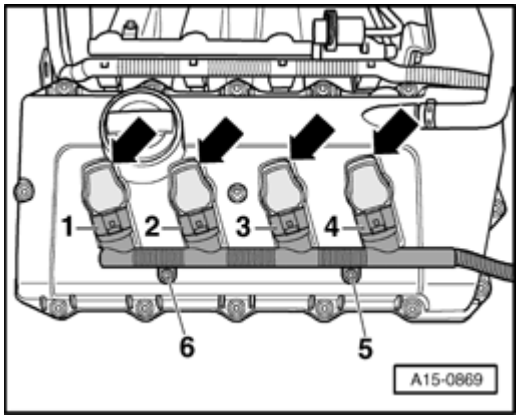

Fig. 664: Removing Bolts On Left Cylinder Head, Disconnecting Electrical Harness Connectors & Removing Ignition Coils
Courtesy of VOLKSWAGEN UNITED STATES, INC.

- Remove bolts - **5 and 6** - and disconnect electrical connections at ignition coils.

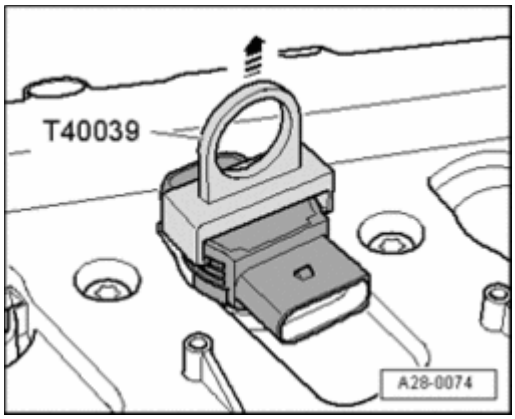

Fig. 665: Removing Ignition Coils Using Ignition Coil Puller T40039
Courtesy of VOLKSWAGEN UNITED STATES, INC.

- Remove ignition coils (cylinder 7 and 8) using ignition coil puller T40039.

Installing the ignition coils

Installation is in reverse order of removal.

