ENGINE

Engine - Repair Instructions - N51/N52K 6-Cylinder (3-Series)

ENGINE, GENERAL

SAFETY INFORMATION FOR WORKING ON VEHICLES WITH AUTOMATIC ENGINE START-STOP FUNCTION (MSA)

See **SAFETY INFORMATION FOR WORKING ON VEHICLES WITH AUTOMATIC ENGINE START-STOP FUNCTION (MSA)** .

11 00... SERVICE - ENGINE OIL (N51)

See **ENGINE OIL SERVICE INCL. SUPPLEMENTARY SERVICE (N51)** .

11 00... ENGINE OIL SERVICE (N52K)

See **ENGINE OIL SERVICE (N52K)** .

11 00 REMOVING AND INSTALLING/REPLACING ACOUSTIC COVER (N51)

Necessary preliminary tasks:

- **Remove Microfilter Housing**

Unfasten screws.

For tightening torque refer to 11 12 6AZ in **11 12 CYLINDER HEAD WITH COVER** .

Remove acoustic cover (1).

NOTE: For purposes of improved clarity, illustration and descriptions shows wiring harness and tension strut removed.

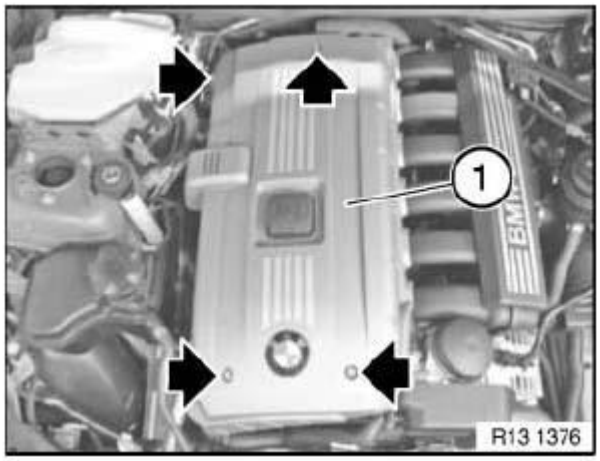

Fig. 1: Acoustic Cover And Screws
Courtesy of BMW OF NORTH AMERICA, INC.

11 00 REMOVING AND INSTALLING/REPLACING ACOUSTIC COVER (N52/N52K)

IMPORTANT: Aluminium-magnesium materials.

No steel screws/bolts may be used due to the threat of electrochemical corrosion.

A magnesium crankcase requires aluminium screws/bolts exclusively.

Aluminium screws/bolts must be replaced each time they are released .

Aluminium screws/bolts are permitted with and without color coding (blue).

For reliable identification:

Aluminium screws/bolts are not magnetic .

Jointing torque and angle of rotation must be observed without fail (risk of damage).

Unfasten screws (1 and 3).

If necessary, release oil cap (2) in direction of arrow.

Lift off acoustic cover (4)

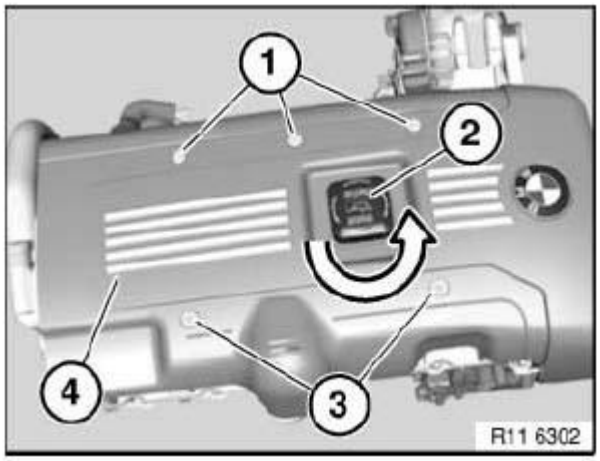

Fig. 2: Releasing Oil Cap
Courtesy of BMW OF NORTH AMERICA, INC.

Necessary preliminary tasks:

- Remove microfilter housing
- Remove tension strut

Release screws.

Tightening torque: see 7AZ in **11 12 CYLINDER HEAD WITH COVER (1AZ-9AZ) [N52K]** .

Remove acoustic cover.

NOTE: For purposes of improved clarity, illustration and descriptions shows wiring harness and tension strut removed.

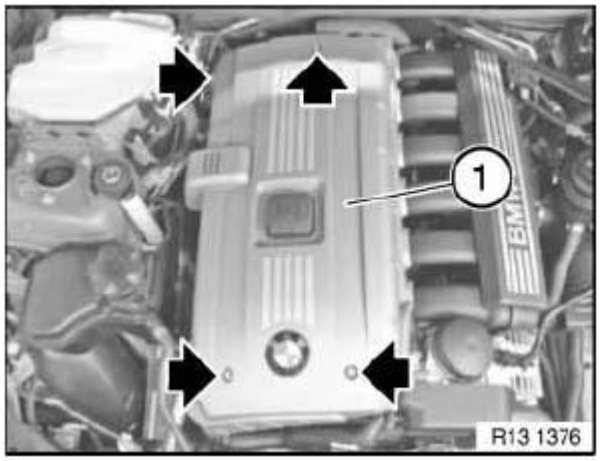

Fig. 3: Locating Acoustic Cover Screws
Courtesy of BMW OF NORTH AMERICA, INC.

11 00 REMOVING AND INSTALLING/REPLACING IGNITION COIL COVER (N52K)

Necessary preliminary tasks:

- **Remove Microfilter Housing**

Release screws (arrow).

For tightening torque refer to 11 12 6AZ in **11 12 CYLINDER HEAD WITH COVER (1AZ-12AZ) [N52K]** .

Remove ignition coil cover (1) towards top.

NOTE: For purposes of improved clarity, picture and descriptions show wiring harness and tension strut removed.

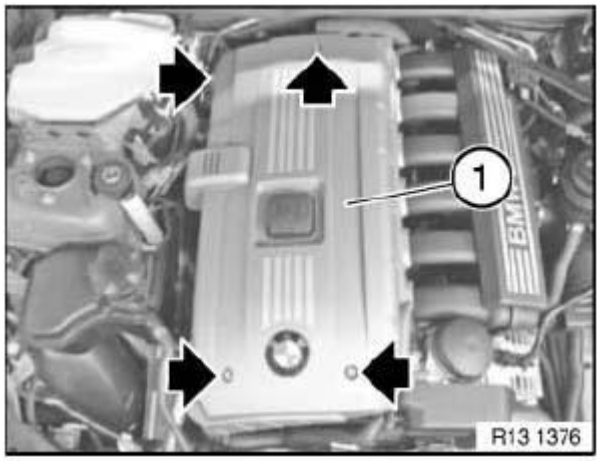

Fig. 4: Ignition Coil Cover And Retaining Screws
Courtesy of BMW OF NORTH AMERICA, INC.

11 00 050 REMOVING AND INSTALLING ENGINE (N51)

Special tools required:

- 11 0 020

IMPORTANT: Aluminium-magnesium materials.

No steel screws/bolts may be used due to the threat of electrochemical corrosion.

A magnesium crankcase requires aluminium screws/bolts exclusively.

Aluminium screws/bolts must be replaced each time they are released .

Aluminium screws/bolts are permitted with and without color coding (blue).

For reliable identification:

Aluminium screws/bolts are not magnetic .

Jointing torque and angle of rotation must be observed without fail (risk of damage).

Necessary preliminary tasks:

- Lift engine hood into **assembly position.**
- Remove exhaust system.
- Remove transmission.
- Drain **engine oil.**
- Disconnect negative battery lead.
- Remove air cleaner housing.
- Remove fan cowl with electric fan.
- Remove radiator.
- Remove **Water Pump.**
- Remove **Thermostat.**
- Detach all coolant hoses from engine.
- Remove left and right **Fresh Air Duct.**
- Remove intake air manifold.
- Detach vacuum line from brake booster.
- Unfasten ignition wiring harness and lay to one side.
- Unfasten engine wiring harness and lay to one side.
- Remove fuel injector rail and place to one side.

Release A/C compressor (1) and set down on front axle carrier.

IMPORTANT: A/C lines are pressurized.

Do not disconnect A/C lines.

Do not disconnect coolant pipe from crankcase.

NOTE: Illustrations show E60.

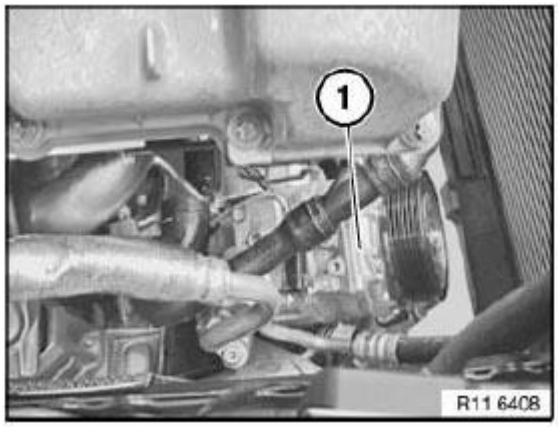

Fig. 5: A/C Compressor
Courtesy of BMW OF NORTH AMERICA, INC.

Release power steering pump (1) and set down on front axle carrier.

NOTE: Do not disconnect hydraulic lines.

If Dynamic Drive optional extra is fitted, release bracket.

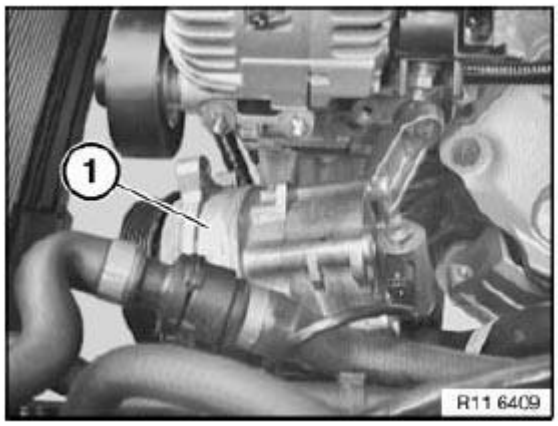

Fig. 6: Power Steering Pump
Courtesy of BMW OF NORTH AMERICA, INC.

Screw in towing hook (1).

Suspend special tool 11 0 020 from engine crane.

Suspend special tool 11 0 020 from the designated mounting eyelets (2) only.

Lift engine out with engine crane.

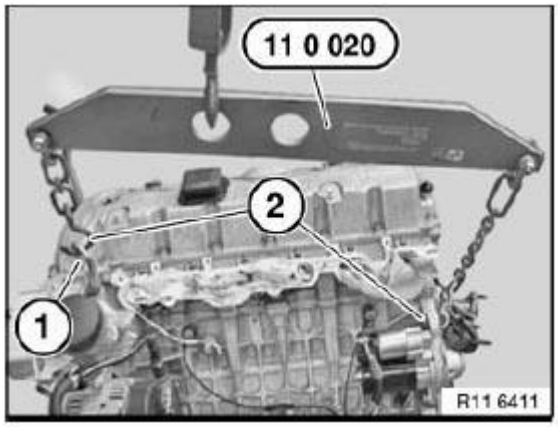

Fig. 7: Towing Eye, Mounting Eyelets And Special Tool (11 0 020)
Courtesy of BMW OF NORTH AMERICA, INC.

NOTE: For vehicles with optional extra SA205 (automatic transmission), engine must be raised approx. 10 cm.

Release screws (1).

Remove lines (2) with oil-water heat exchanger in direction of arrow.

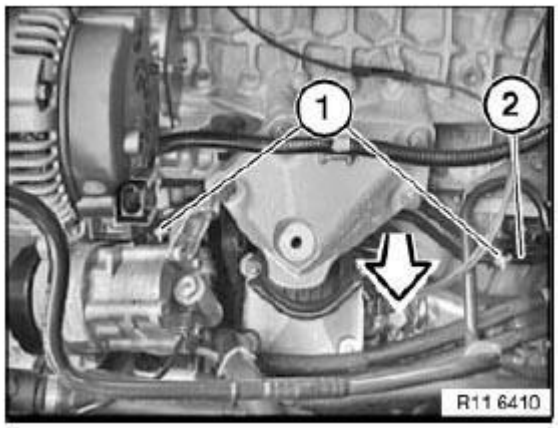

Fig. 8: Oil-Water Heat Exchanger Line, Screw And Removal Direction
Courtesy of BMW OF NORTH AMERICA, INC.

Assemble engine.

Check function of DME.

11 00 050 REMOVING AND INSTALLING ENGINE (N52K)

Special tools required:

- 11 0 020

IMPORTANT: Aluminium-magnesium materials.

No steel screws/bolts may be used due to the threat of electrochemical corrosion.

A magnesium crankcase requires aluminium screws/bolts exclusively.

Aluminium screws/bolts must be replaced each time they are released .

Aluminium screws/bolts are permitted with and without color coding (blue).

For reliable identification:

Aluminium screws/bolts are not magnetic .

Jointing torque and angle of rotation must be observed without fail (risk of damage).

Necessary preliminary tasks:

- Move **Engine Hood/Bonnet** into service position
- Remove **Exhaust System**
- Remove transmission. See **MANUAL TRANSMISSION** or **AUTOMATIC TRANSMISSION** .
- Drain off **Engine Oil**
- Disconnect **Battery Negative Lead**
- Remove **Intake Filter Housing**
- Remove **Fan Cowl** with electric fan
- Remove **Radiator**
- Remove water pump
- Remove **Coolant Thermostat**
- Detach all coolant hoses from engine
- Remove **Microfilter Housing**
- Remove **Intake Air Manifold**
- Detach vacuum line from **Brake Booster**
- Unfasten **Ignition Wiring Harness** and lay to one side
- Unfasten **Engine Wiring Harness** and lay to one side
- Remove **Injection Pipe** and place to one side

Release A/C compressor (1) and set down on front axle carrier.

NOTE: E60/E61 only.

IMPORTANT: A/C lines are pressurized.

Do not disconnect A/C lines.

Do not disconnect coolant pipe from crankcase.

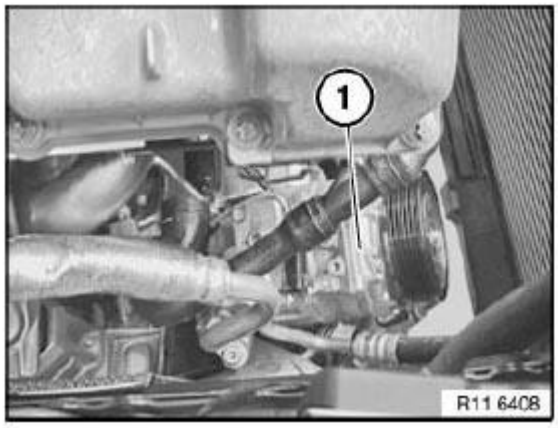

Fig. 9: A/C Compressor
Courtesy of BMW OF NORTH AMERICA, INC.

Release power steering pump (1) and set down on front axle carrier.

NOTE: Do not disconnect hydraulic lines.

NOTE: For vehicles with optional extra SA229 (Dynamic Drive), bracket must be released.

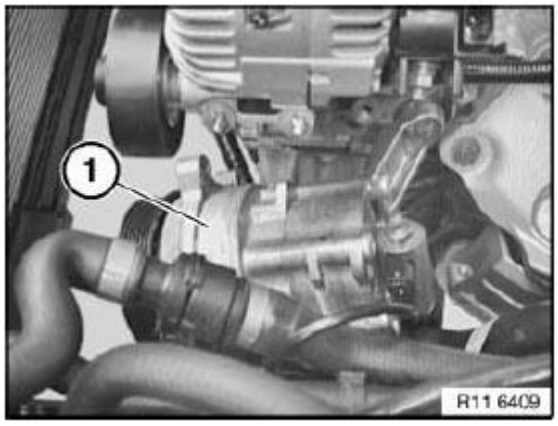

Fig. 10: Power Steering Pump
Courtesy of BMW OF NORTH AMERICA, INC.

Screw towing eye (1) into cylinder head.

For tightening torque refer to 11 12 9AZ in **11 12 CYLINDER HEAD WITH COVER (1AZ-12AZ) [N52K]** .

Suspend special tool 11 0 020 from engine crane.

Suspend special tool 11 0 020 from the designated mounting eyelets (2) only.

Lift engine out with engine crane.

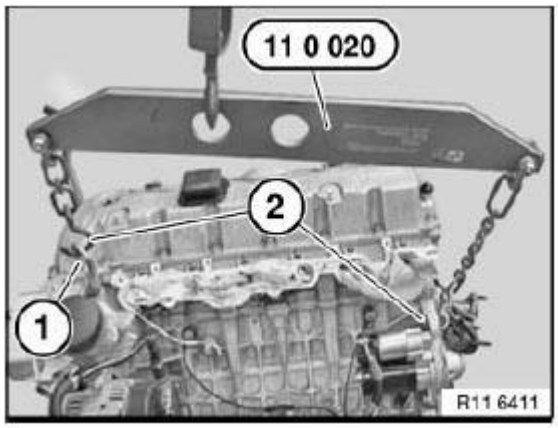

Fig. 11: Towing Eye, Mounting Eyelets And Special Tool (11 0 020)
Courtesy of BMW OF NORTH AMERICA, INC.

NOTE: For vehicles with optional extra SA205 (automatic transmission), engine must be raised approx. 10 cm.

Release screws (1).

Remove lines (2) with oil-water heat exchanger in direction of arrow.

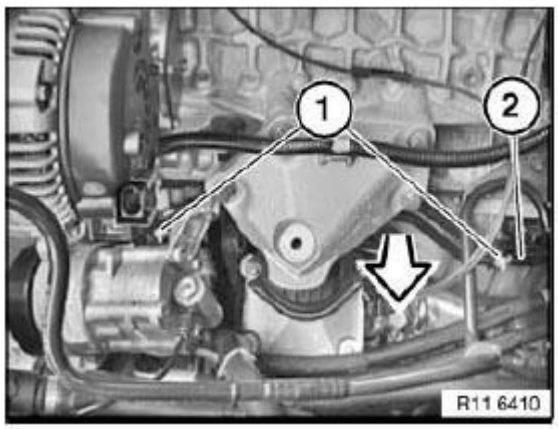

Fig. 12: Oil-Water Heat Exchanger Line, Screw And Removal Direction

Courtesy of BMW OF NORTH AMERICA, INC.

Assemble engine.

Check function of DME.

11 00 670 SECURING ENGINE IN INSTALLATION POSITION (N51)

Special tools required:

- 00 0 200
- 00 0 202
- 00 0 204
- 00 0 208
- 11 0 020
- 64 1 020

WARNING: Danger of injury!

Observe following instructions relating to special tool:

1. **Prior to each use, check the special tools for defects, modifications and operational reliability.**
2. **Damaged/modified special tools must not be used!**
3. **No changes or modifications may be made to the special tools!**
4. **Keep special tools dry, clean and free of grease.**

Necessary preliminary tasks:

- Secure engine **Bonnet/Hood In Service Position**
- Remove **Cowl Panel Cover**
- **Remove Both Tension Struts From Spring Strut Dome**
- Remove **Intake Filter Housing**
- Remove ignition coil cover

Release screws (1, 2).

Remove bulkhead (3).

Installation:

Make sure bulkhead is correctly seated.

M6x20 screw must be fitted in middle.

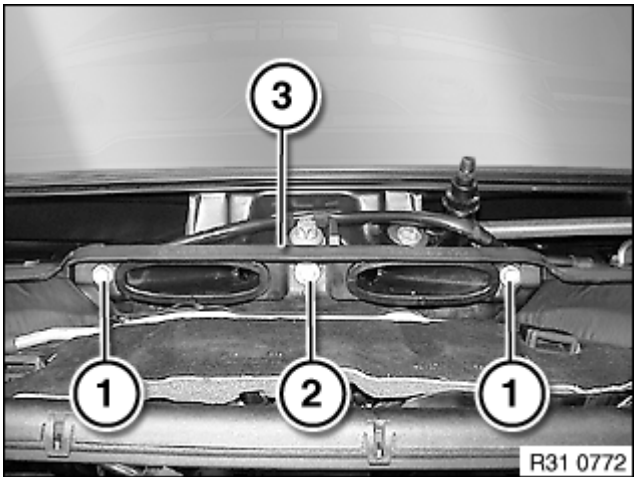

Fig. 13: Release Screws And Bulkhead
Courtesy of BMW OF NORTH AMERICA, INC.

Only on E92, E93:

Unclip two cover caps (1) on left and right of side panel screw connection with special tool 64 1 020.

Installation:

Replace damaged cover caps.

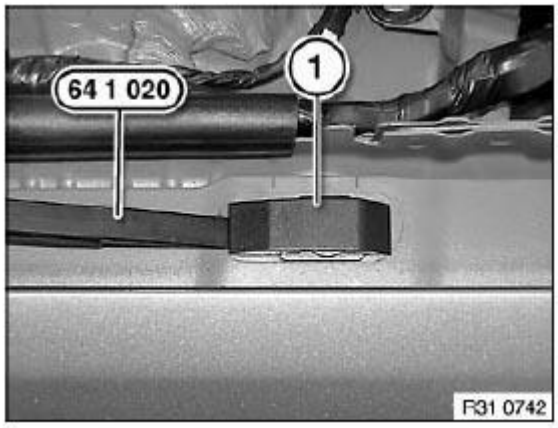

Fig. 14: Special Tool (64 1 020) And Cover Caps
Courtesy of BMW OF NORTH AMERICA, INC.

Assemble cross member 00 0 200 with special tools 00 0 202, 00 0 204, 00 0 208.

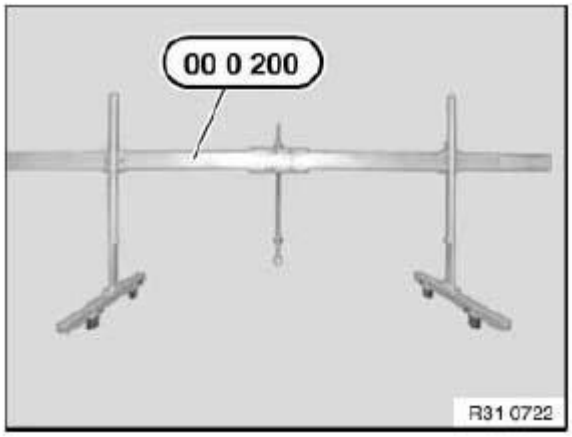

Fig. 15: Special Tool (00 0 200)
Courtesy of BMW OF NORTH AMERICA, INC.

NOTE: Use towing hook (72 15 8 108 670).

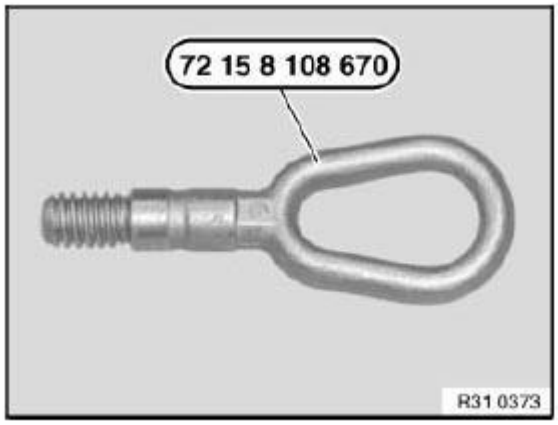

Fig. 16: Towing Hook (72 15 8 108 670)
Courtesy of BMW OF NORTH AMERICA, INC.

IMPORTANT: Avoid a change of engine position in the transverse or longitudinal direction.

Always make sure there is sufficient clearance between the engine (or its attachment parts) and the body.

IMPORTANT: Risk of damage!

With the aid of an assistant and the supports, place cross member 00 0 200 on the screw connections of the side panels.

Screw in towing hook (1) and tighten down to approx. 30 Nm.

Secure special tool 11 0 020 to spindle 00 0 202.

Fit suitable chains to special tool 11 0 020 and attach to towing hook (1) or engine lifting eye.

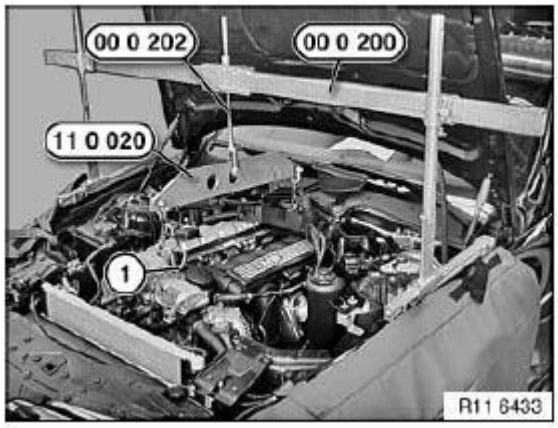

Fig. 17: Special Tools (00 0 202), (00 0 200) And (11 0 020)
Courtesy of BMW OF NORTH AMERICA, INC.

WARNING: **Danger of injury!**

Tighten down all adjusting screws and nuts on cross member 00 0 200.

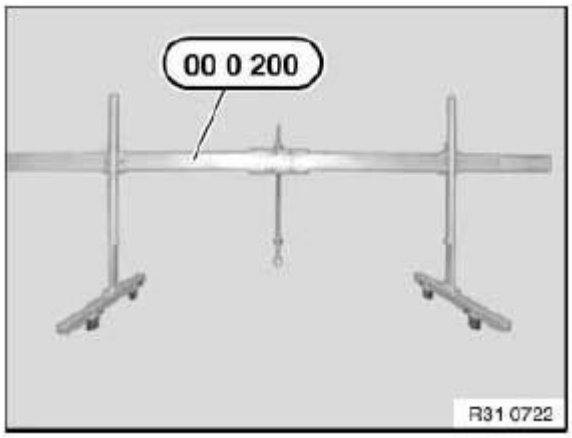

Fig. 18: Special Tool (00 0 200)
Courtesy of BMW OF NORTH AMERICA, INC.

Unscrew nuts (1).

Raise engine approx. 10 mm with cross member.

Installation:

Replace self-locking nuts.

For tightening torque refer to 22 11 2AZ in **22 11 ENGINE SUSPENSION** .

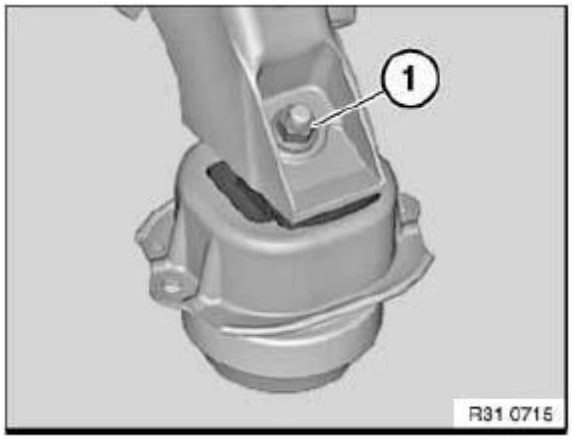

Fig. 19: Nut
Courtesy of BMW OF NORTH AMERICA, INC.

11 00 670 SECURING ENGINE IN INSTALLATION POSITION (N52K, N53)

WARNING: Risk of injury!
Observe following instructions relating to special tool:

1. **Prior to each use, check the special tools for defects, modifications and operational reliability.**
2. **Damaged/modified special tools must not be used!**
3. **No changes or modifications may be made to the special tools!**
4. **Keep special tools dry, clean and free of grease.**

IMPORTANT: Before lifting the engine, check the lifting lugs for damage (cracks) and to ensure they are seated securely.

Necessary preliminary tasks:

- Secure **ENGINE BONNET/HOOD IN SERVICE POSITION**
- Remove **INTAKE FILTER HOUSING**

Only on E92, E93:

Unclip two cover caps (1) on left and right of side panel screw connection with special tool **64 1 020** .

Installation:

Replace damaged cover caps.

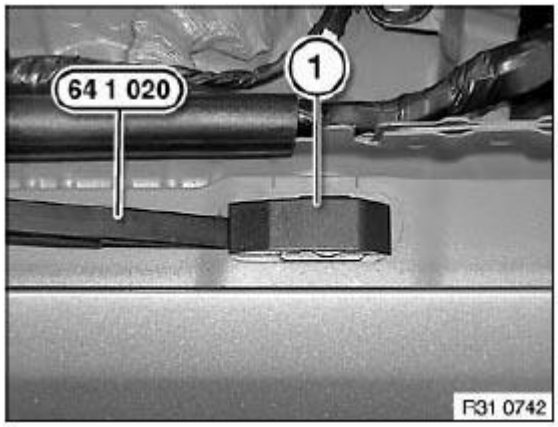

Fig. 20: Removing Cover Caps Using Special Tool (64 1 020)
Courtesy of BMW OF NORTH AMERICA, INC.

Assemble transverse member 00 6 000 with special tools:

- 00 6 051 (profile strips)
- 00 6 070 (supports)
- 00 6 052 (supports)
- 00 6 031 (connections)

complete.

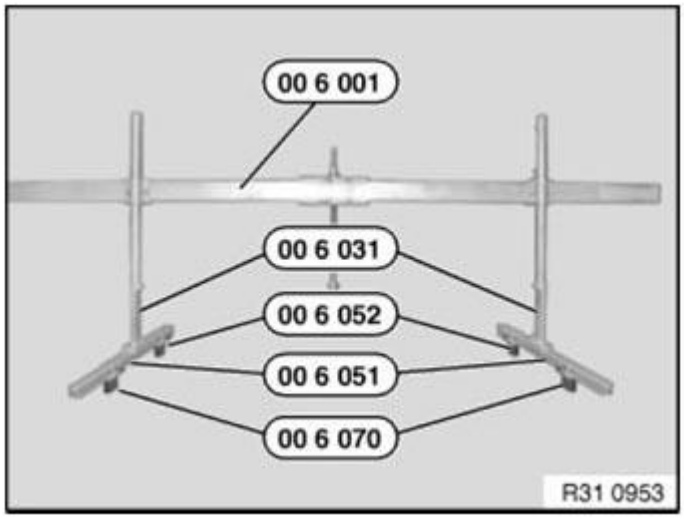

Fig. 21: Identifying Profile Strips, Supports And Connections
Courtesy of BMW OF NORTH AMERICA, INC.

NOTE: Use towing hook (72 15 8 108 670).

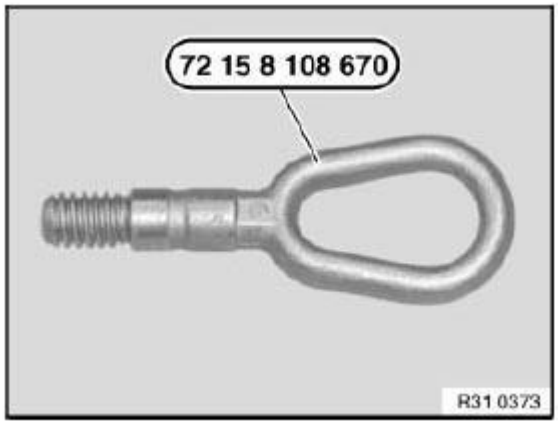

Fig. 22: Identifying Towing Hook (72 15 8 108 670)
Courtesy of BMW OF NORTH AMERICA, INC.

IMPORTANT: Avoid a change of engine position in the transverse or longitudinal direction. Always make sure there is sufficient clearance between the engine (or its attachment parts) and the body.

IMPORTANT: Aluminium-magnesium materials.

No steel screws/bolts may be used due to the threat of electrochemical corrosion.

A magnesium crankcase requires aluminium screws/bolts exclusively.

Aluminium screws/bolts must be replaced each time they are released .

Aluminium screws/bolts are permitted with and without color coding (blue).

For reliable identification:

Aluminium screws/bolts are not magnetic .

Jointing torque and angle of rotation must be observed without fail (risk of damage).

Release front screws (1) on acoustic cover (2).

Tightening torque (N52K): 4 Nm

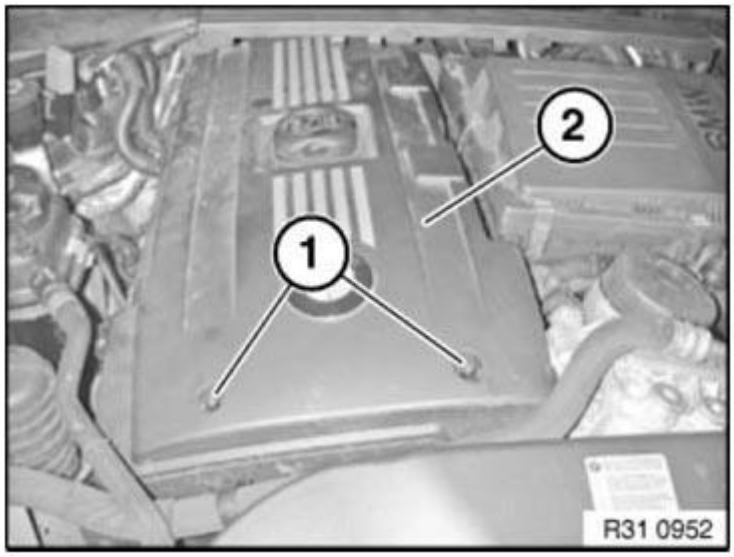

Fig. 23: Identifying Front Screws On Acoustic Cover
Courtesy of BMW OF NORTH AMERICA, INC.

Raise acoustic cover (1) slightly.

Screw in towing hook (2) and tighten down to approx. 30 Nm.

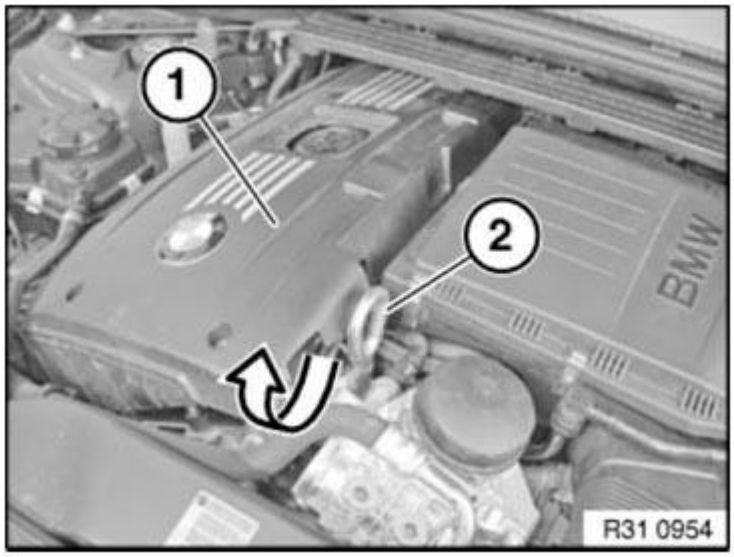

Fig. 24: Raising Acoustic Cover
Courtesy of BMW OF NORTH AMERICA, INC.

Release screw (1) on front panel (2).

Tightening torque: 12 Nm

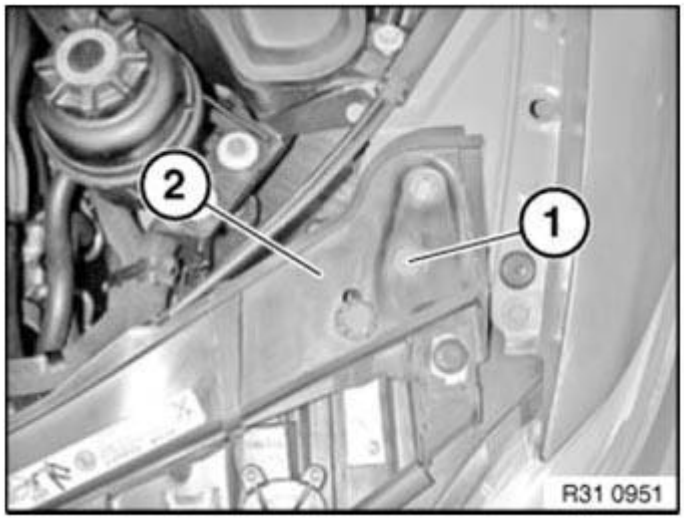

Fig. 25: Identifying Screw On Front Panel
Courtesy of BMW OF NORTH AMERICA, INC.

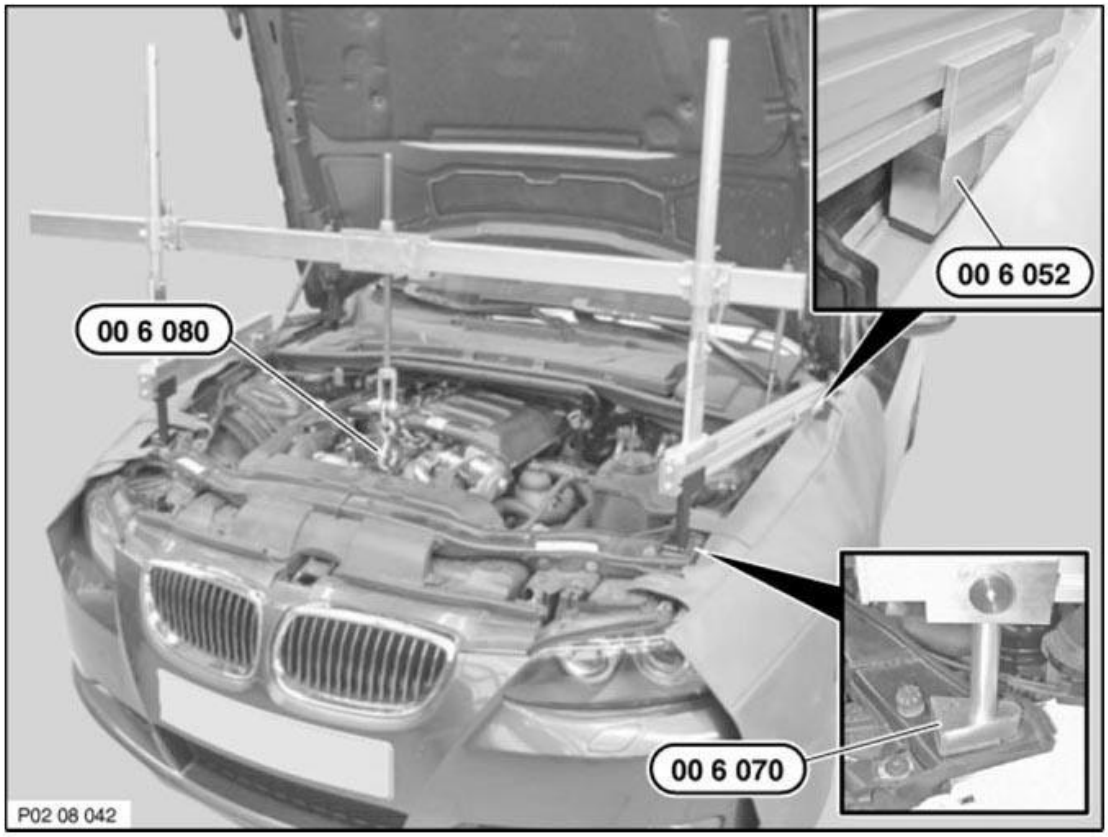

Fig. 26: Identifying Special Tools
Courtesy of BMW OF NORTH AMERICA, INC.

IMPORTANT: Risk of damage!
Fit transverse member 00 6 000 with a 2nd person helping.

Place supports in front in the area of front panel attachment and in the rear on the fasteners of the side panels.
Bolt connections of transverse member 00 6 001 must point to windscreen.

Adapt bevel of special tool 00 6 052 to inclination of side panels.

Special tool 00 6 070 consists of a left and right support.

Secure chain with coat hook 00 6 080 to spindle 00 6 002 and align centrally over towing hook.

Attach special tool to towing hook.

WARNING: **Risk of injury!**
Tighten down all adjusting screws and nuts on transverse member 00 6 000.

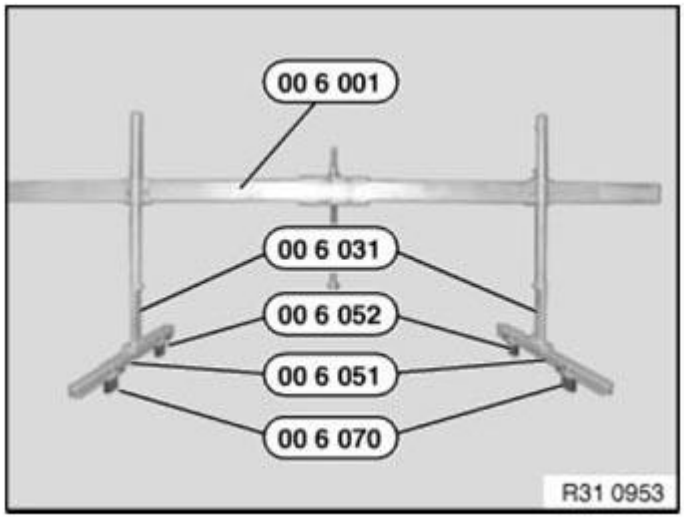

Fig. 27: Identifying Profile Strips, Supports And Connections Of Special Tool
Courtesy of BMW OF NORTH AMERICA, INC.

Unscrew nuts (1).

Raise engine approx. 10 mm with transverse member.

Installation:

Replace self-locking nuts.

Tightening torque:

- M10 10.9: 56 Nm
- M12: 68 Nm

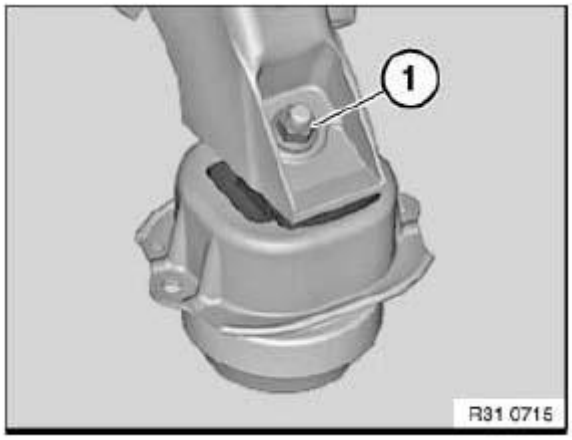

Fig. 28: Identifying Engine Mounting Nut
Courtesy of BMW OF NORTH AMERICA, INC.

11 00 670 SECURING ENGINE IN INSTALLATION POSITION (N52K, N53)

Special tools required:

- 00 0 200
- 00 0 202
- 00 0 204
- 00 0 208
- 11 0 020
- 64 1 020

WARNING: Danger of injury!

Observe following instructions relating to special tool:

1. **Prior to each use, check the special tools for defects, modifications and operational reliability.**
2. **Damaged/modified special tools must not be used!**
3. **No changes or modifications may be made to the special tools!**
4. **Keep special tools dry, clean and free of grease.**

Necessary preliminary tasks:

- Secure engine **Bonnet/Hood In Service Position**
- Remove **Cowl Panel Cover**
- **Remove Both Tension Struts From Spring Strut Dome**
- Remove **Intake Filter Housing**
- Remove **Ignition Coil Cover**

Release screws (1, 2).

Remove bulkhead (3).

Installation:

Make sure bulkhead is correctly seated.

M6x20 screw must be fitted in middle.

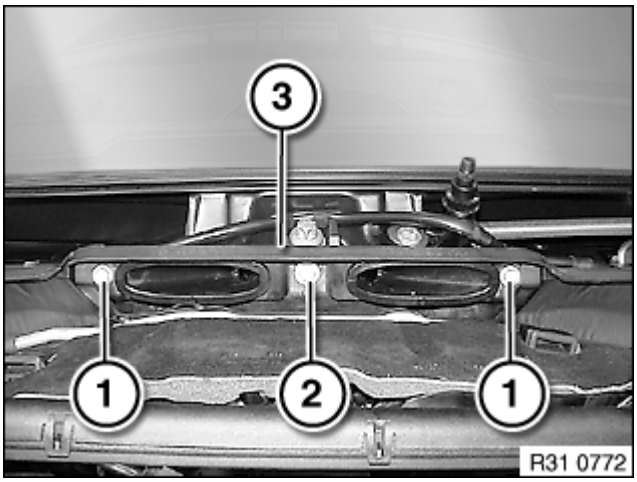

Fig. 29: Release Screws And Bulkhead
Courtesy of BMW OF NORTH AMERICA, INC.

Only on E92, E93:

Unclip two cover caps (1) on left and right of side panel screw connection with special tool 64 1 020.

Installation:

Replace damaged cover caps.

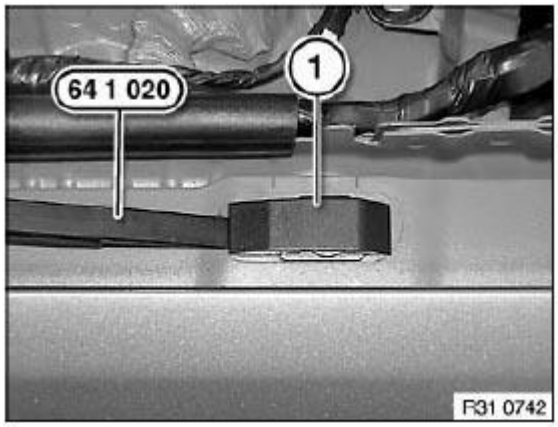

Fig. 30: Special Tool (64 1 020) And Cover Caps
Courtesy of BMW OF NORTH AMERICA, INC.

Assemble cross member 00 0 200 with special tools 00 0 202, 00 0 204, 00 0 208.

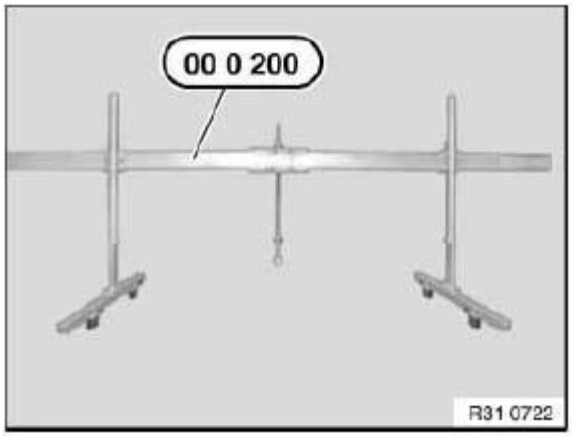

Fig. 31: Special Tool (00 0 200)
Courtesy of BMW OF NORTH AMERICA, INC.

NOTE: Use towing hook (72 15 8 108 670).

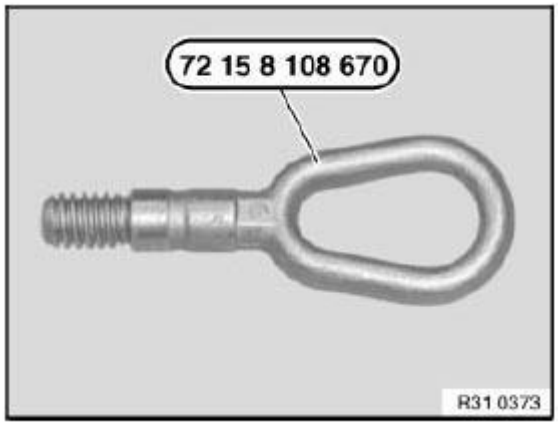

Fig. 32: Towing Hook (72 15 8 108 670)
Courtesy of BMW OF NORTH AMERICA, INC.

IMPORTANT: Avoid a change of engine position in the transverse or longitudinal direction.

Always make sure there is sufficient clearance between the engine (or its attachment parts) and the body.

IMPORTANT: Risk of damage!

With the aid of an assistant and the supports, place cross member 00 0 200 on

the screw connections of the side panels.

Screw in towing hook (1) and tighten down to approx. 30 Nm.

Secure special tool 11 0 020 to spindle 00 0 202.

Fit suitable chains to special tool 11 0 020 and attach to towing hook (1) or engine lifting eye.

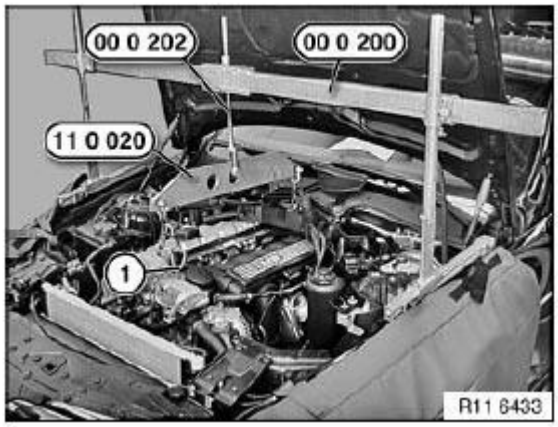

Fig. 33: Special Tools (00 0 202), (00 0 200) And (11 0 020)
Courtesy of BMW OF NORTH AMERICA, INC.

WARNING: **Danger of injury!**

Tighten down all adjusting screws and nuts on cross member 00 0 200.

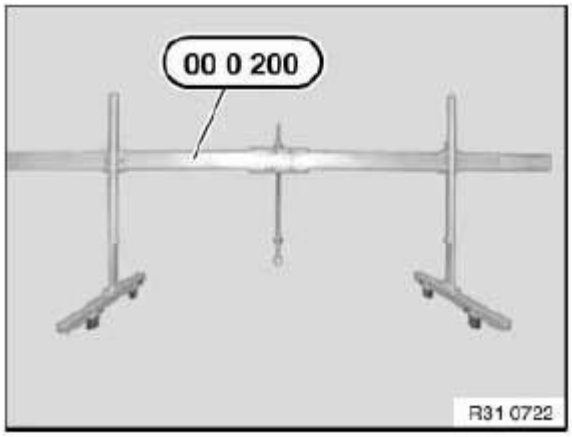

Fig. 34: Special Tool (00 0 200)
Courtesy of BMW OF NORTH AMERICA, INC.

Unscrew nuts (1).

Raise engine approx. 10 mm with cross member.

Installation:

Replace self-locking nuts.

For tightening torque refer to 22 11 2AZ in **22 11 ENGINE SUSPENSION** .

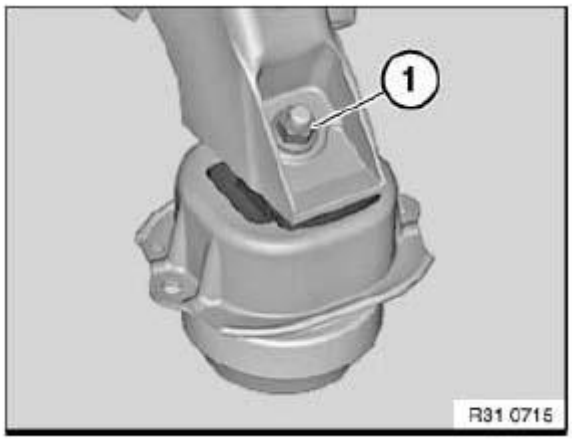

Fig. 35: Nut
Courtesy of BMW OF NORTH AMERICA, INC.

ENGINE IDENTIFICATION

Drive in engine numbers at marked surface with impact tool.

M47 / M47TU / M47T2

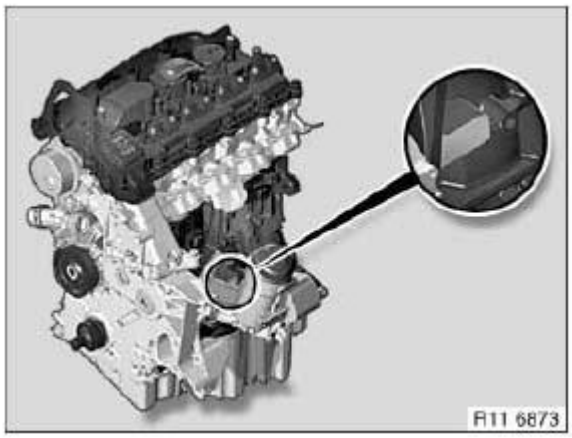

Fig. 36: Engine Identification Number - M47 / M47TU / M47T2
Courtesy of BMW OF NORTH AMERICA, INC.

M57 / M57TU / M57T2

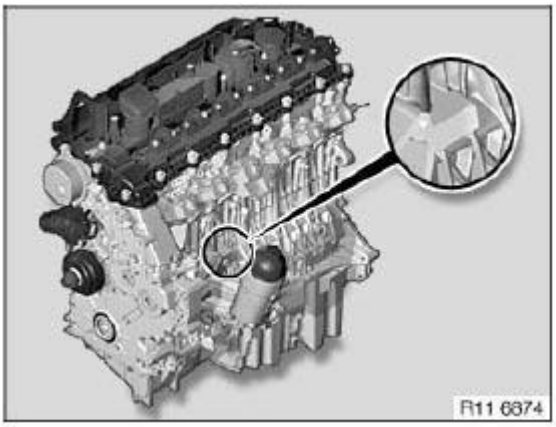

Fig. 37: Engine Identification Number - M57 / M57TU / M57T2
Courtesy of BMW OF NORTH AMERICA, INC.

M67 / M67TU

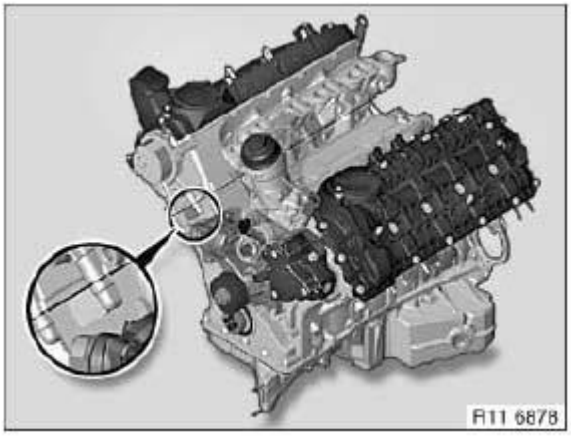

Fig. 38: Engine Identification Number - M67 / M67TU
Courtesy of BMW OF NORTH AMERICA, INC.

N47

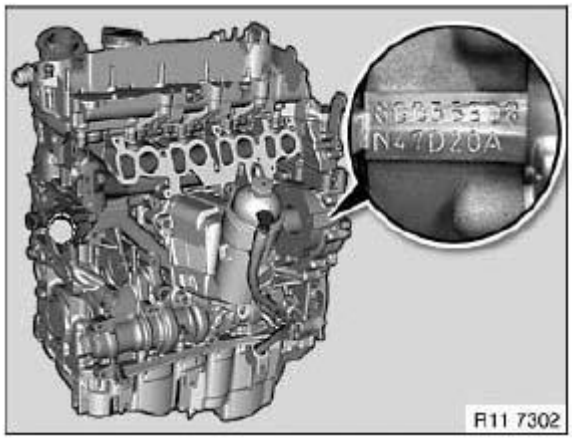

Fig. 39: Engine Identification Number - N47
Courtesy of BMW OF NORTH AMERICA, INC.

M52 / M52TU

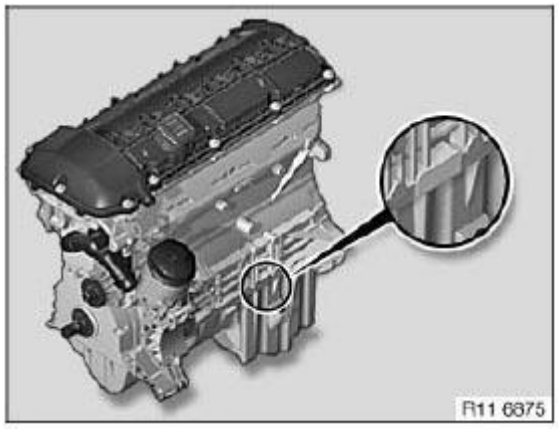

Fig. 40: Engine Identification Number - M52 / M52TU
Courtesy of BMW OF NORTH AMERICA, INC.

M54

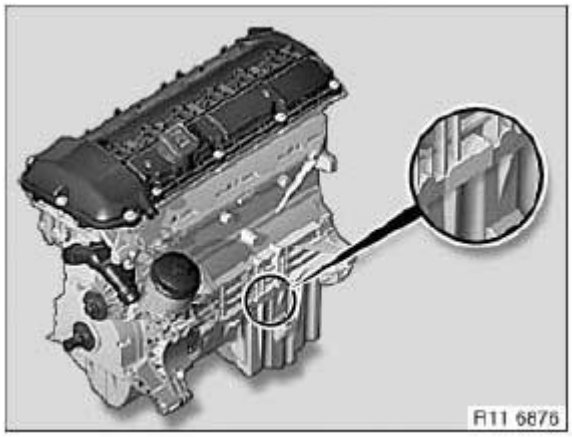

Fig. 41: Engine Identification Number - M54
Courtesy of BMW OF NORTH AMERICA, INC.

M56

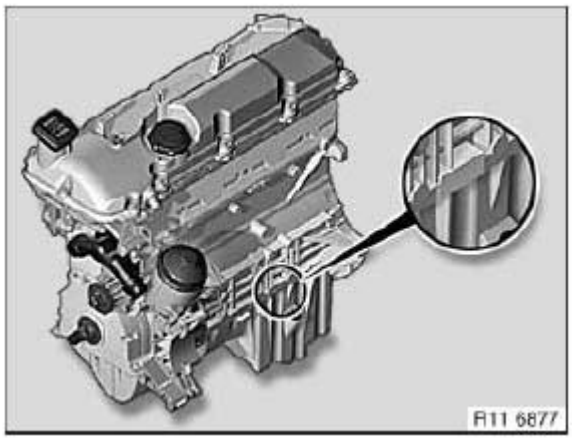

Fig. 42: Engine Identification Number - M56
Courtesy of BMW OF NORTH AMERICA, INC.

N40 / N45

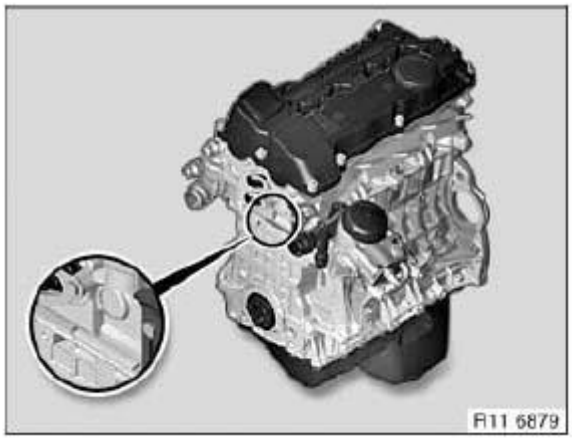

Fig. 43: Engine Identification Number - N40 / N45
Courtesy of BMW OF NORTH AMERICA, INC.

N42 / N46 / N46T

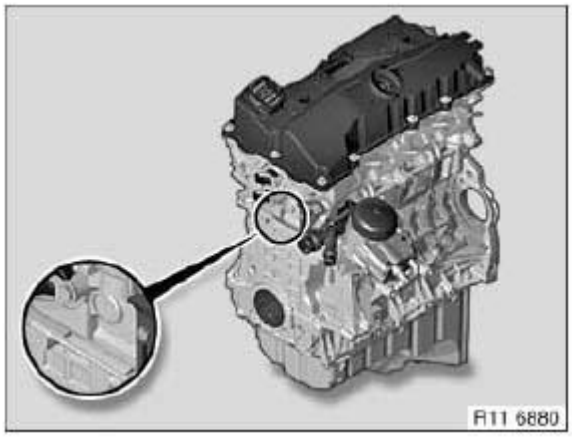

Fig. 44: Engine Identification Number - N42 / N46 / N46T
Courtesy of BMW OF NORTH AMERICA, INC.

N51 / N52 / N52K / N53 / N54

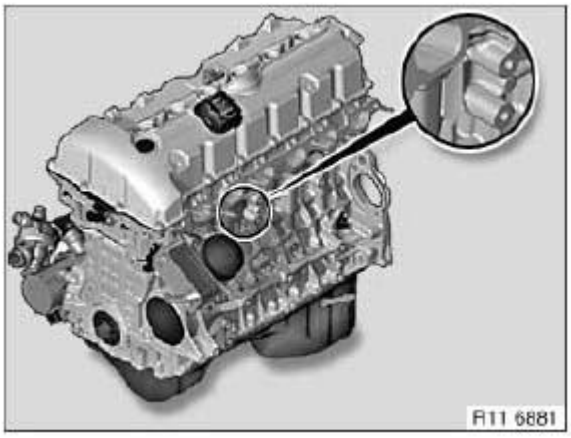

Fig. 45: Engine Identification Number - N51 / N52 / N52K / N53 / N54
Courtesy of BMW OF NORTH AMERICA, INC.

N62

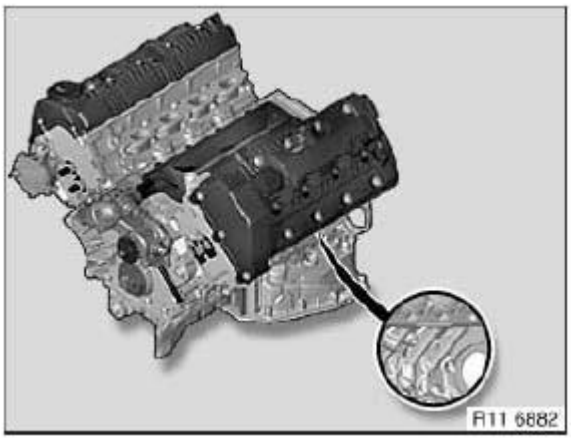

Fig. 46: Engine Identification Number - N62
Courtesy of BMW OF NORTH AMERICA, INC.

N73

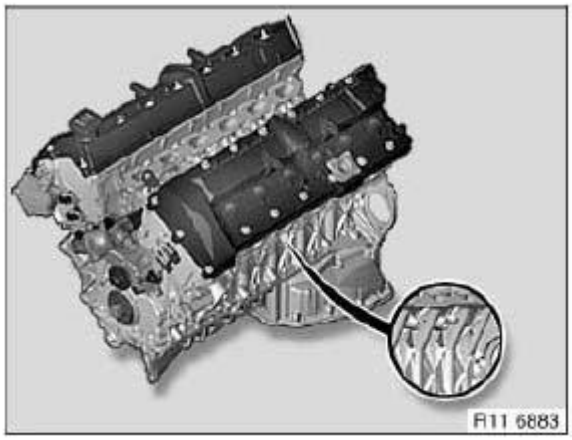

Fig. 47: Engine Identification Number - N73
Courtesy of BMW OF NORTH AMERICA, INC.

S54

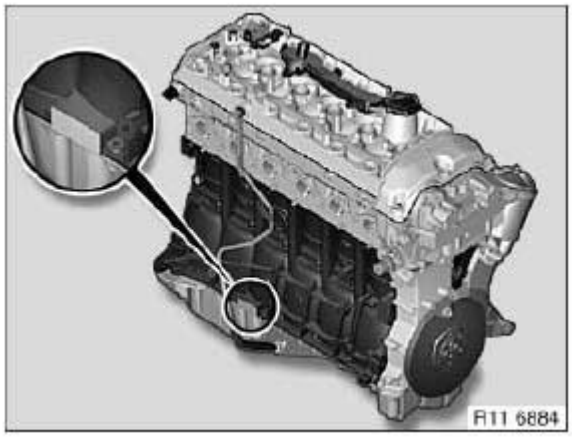

Fig. 48: Engine Identification Number - S54
Courtesy of BMW OF NORTH AMERICA, INC.

S85

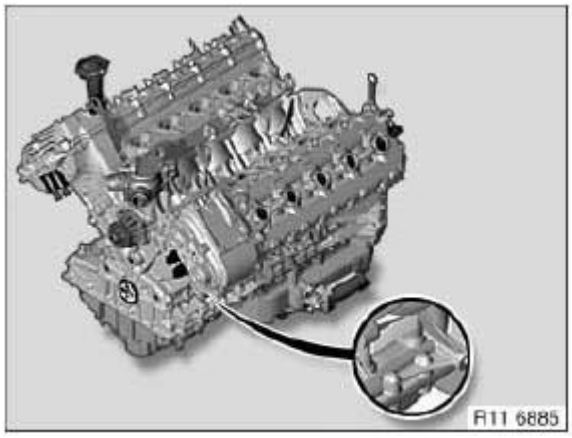

Fig. 49: Engine Identification Number - S85
Courtesy of BMW OF NORTH AMERICA, INC.

W10 / W11

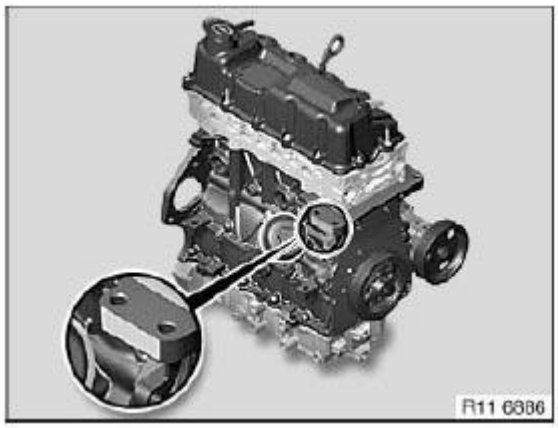

Fig. 50: Engine Identification Number - W10 / W11
Courtesy of BMW OF NORTH AMERICA, INC.

W17

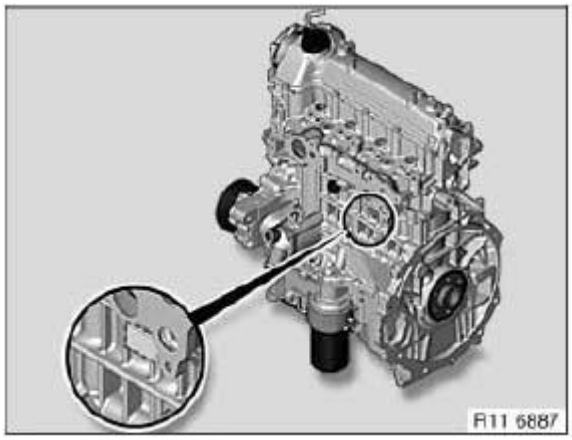

Fig. 51: Engine Identification Number - W17
Courtesy of BMW OF NORTH AMERICA, INC.

Assemble engine.

MOUNTING ENGINE ON ASSEMBLY STAND (N51)

Special tools required:

- 00 1 450
- 11 3 370
- 11 4 440
- 11 9 261
- 11 9 265

IMPORTANT: Aluminium-magnesium materials.

No steel screws/bolts may be used due to the threat of electrochemical corrosion.

A magnesium crankcase requires aluminium screws/bolts exclusively.

Aluminium screws/bolts must be replaced each time they are released .

Aluminium screws/bolts are permitted with and without color coding (blue).

For reliable identification:

Aluminium screws/bolts are not magnetic .

Jointing torque and angle of rotation must be observed without fail (risk of damage).

Necessary preliminary tasks:

- Remove engine

Bolt engine or engine block with steel bolts (1) and aluminium bolts (2) to special tool 11 4 440.

To release central bolt, bolt on special tools 11 9 261 and 11 9 265 as well.

Mount engine with special tool 11 3 370 to special tool 00 1 450.

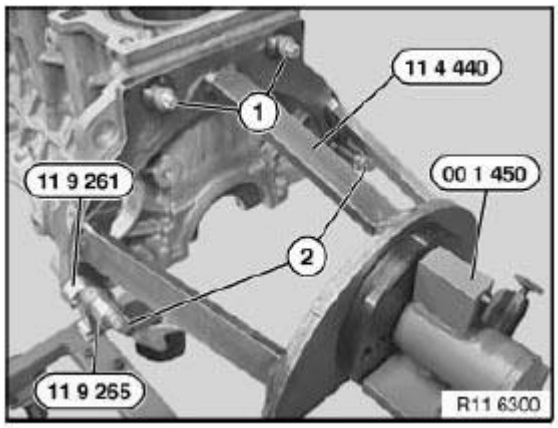

Fig. 52: Special Tools (11 9 261), (11 4 440), (00 1 450), Steel Bolts And Aluminium Bolts
Courtesy of BMW OF NORTH AMERICA, INC.

MOUNTING ENGINE ON ASSEMBLY STAND (N52K)

Special tools required:

- 00 1 450
- 11 3 370
- 11 4 440
- 11 9 261
- 11 9 265

IMPORTANT: Aluminium-magnesium materials.

No steel screws/bolts may be used due to the threat of electrochemical corrosion.

A magnesium crankcase requires aluminium screws/bolts exclusively.

Aluminium screws/bolts must be replaced each time they are released .

Aluminium screws/bolts are permitted with and without color coding (blue).

For reliable identification:

Aluminium screws/bolts are not magnetic .

Jointing torque and angle of rotation must be observed without fail (risk of damage).

Necessary preliminary tasks:

- Remove **Engine**

Bolt engine or engine block with steel bolts (1) and aluminium bolts (2) to special tool 11 4 440.

To release central bolt, bolt on special tools 11 9 261 and 11 9 265 as well.

Mount engine with special tool 11 3 370 to special tool 00 1 450.

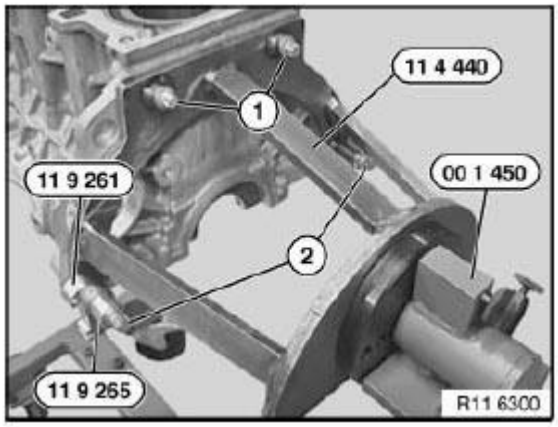

Fig. 53: Special Tools (11 9 261), (11 4 440), (00 1 450), Steel Bolts And Aluminium Bolts
Courtesy of BMW OF NORTH AMERICA, INC.

CYLINDER HEAD WITH COVER

11 12 000 REMOVING AND INSTALLING/SEALING CYLINDER HEAD COVER (N51)

IMPORTANT: Aluminium-magnesium materials.

No steel screws/bolts may be used due to the threat of electrochemical corrosion.

A magnesium crankcase requires aluminium screws/bolts exclusively.

Aluminium screws/bolts must be replaced each time they are released .

Aluminium screws/bolts are permitted with and without color coding (blue).

For reliable identification:

Aluminium screws/bolts are not magnetic .

Jointing torque and angle of rotation must be observed without fail (risk of damage).

Necessary preliminary tasks:

- Remove acoustic cover.
- Remove rod-type ignition coils
- Unclip wiring harness for fuel injectors.
- Remove **Tension Strut**
- Remove **Clean Air Duct.**

Unlock and detach vent hose (1).

If necessary, pull off metal bracket (2) in direction of arrow.

Release screws (3).

For tightening torque refer to 11 37 3AZ in **11 37 VARIABLE VALVE GEAR** .

Remove servodrive (4) in direction of arrow.

If necessary, release nuts (5).

If necessary, remove secondary air valve (6).

Installation:

Replace aluminium screws.

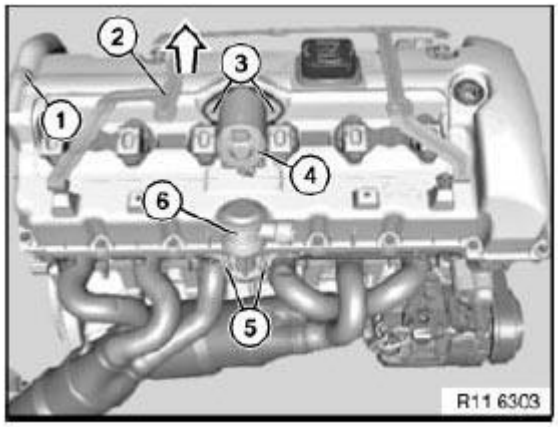

Fig. 54: Vent Hose, Bracket, Screw, Nuts, Secondary Air Valve And Servodrive
Courtesy of BMW OF NORTH AMERICA, INC.

Release screws in area (1).

Installation:

Replace aluminium screws.

For tightening torque refer to 11 12 4AZ in **11 12 CYLINDER HEAD WITH COVER (1AZ-12AZ) [N51]** .

Unfasten screws (2).

For tightening torque refer to 11 12 4AZ in **11 12 CYLINDER HEAD WITH COVER (1AZ-12AZ) [N51]** .

Installation:

Replace aluminium screws.

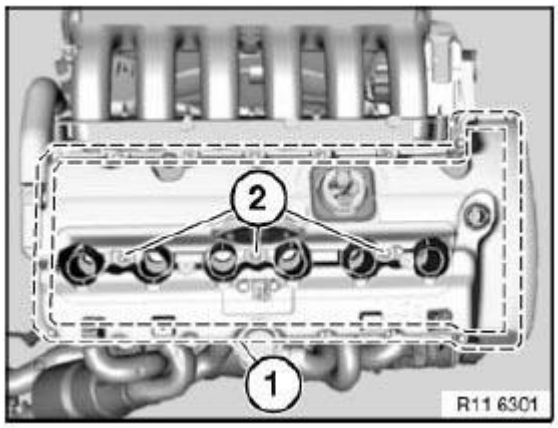

Fig. 55: Threaded Pin And Engine Screws
Courtesy of BMW OF NORTH AMERICA, INC.

Replace seal (1).

Replace seal (2).

Installation:

Clean all sealing faces (1 and 2).

IMPORTANT: Do not use any metal-cutting tools.

Installation:

Replace gaskets (1 and 2).

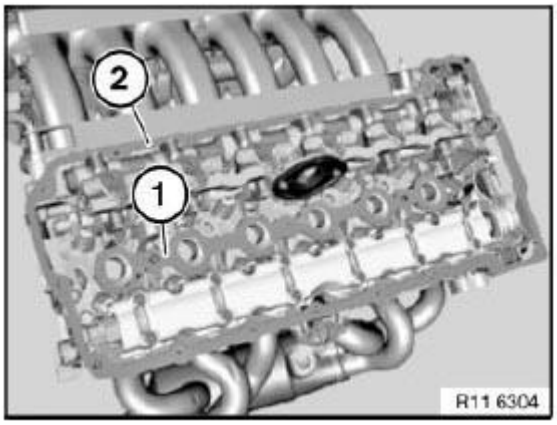

Fig. 56: Cylinder Head Gaskets
Courtesy of BMW OF NORTH AMERICA, INC.

Assemble engine.

11 12 000 REMOVING AND INSTALLING/SEALING CYLINDER HEAD COVER (N52K)

IMPORTANT: Aluminium-magnesium materials.

No steel screws/bolts may be used due to the threat of electrochemical corrosion.

A magnesium crankcase requires aluminium screws/bolts exclusively.

Aluminium screws/bolts must be replaced each time they are released .

Aluminium screws/bolts are permitted with and without color coding (blue).

For reliable identification:

Aluminium screws/bolts are not magnetic .

Jointing torque and angle of rotation must be observed without fail (risk of damage).

Necessary preliminary tasks:

- Remove **Ignition Coils**
- Release **Ignition Wiring Harness** in cylinder head cover area
- Remove **Tension Strut**

Unlock and detach vent hose (1).

If necessary, pull off metal bracket (2) in direction of arrow.

Release screws (3) on electric servomotor.

For tightening torque refer to 11 37 3AZ in **11 37 VARIABLE VALVE GEAR** .

NOTE: A further screw, which cannot be seen in the picture, must be released under the electric servomotor (4).

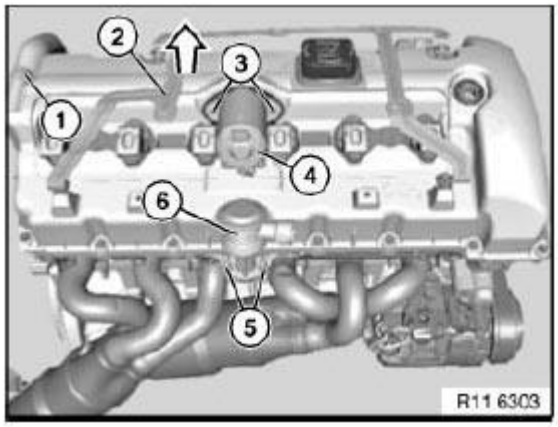

Fig. 57: Identifying Vent Hose, Bracket, Screw, Nuts And Electric Servomotor
Courtesy of BMW OF NORTH AMERICA, INC.

Release screw on electric servomotor.

For tightening torque refer to 11 37 3AZ in **11 37 VARIABLE VALVE GEAR** .

Remove servomotor (4) in direction of arrow.

If necessary, release nuts (5).

For tightening torque refer to 11 72 1AZ in **11 72 AIR PUMP, LINES AND CONTROL VALVES** .

If necessary, remove secondary air valve (6).

IMPORTANT: Observe different screw lengths.

Installation location of screws (1 and 2) is specified by the different bushing shapes.

Release screws in area (1).

For tightening torque refer to 11 12 5AZ in **11 12 CYLINDER HEAD WITH COVER (1AZ-12AZ) [N52K]** .

Installation:

Replace aluminium screws.

Release threaded pin (2).

For tightening torque refer to 11 12 5AZ in **11 12 CYLINDER HEAD WITH COVER (1AZ-12AZ) [N52K]** .

Installation:

Replace aluminium screws.

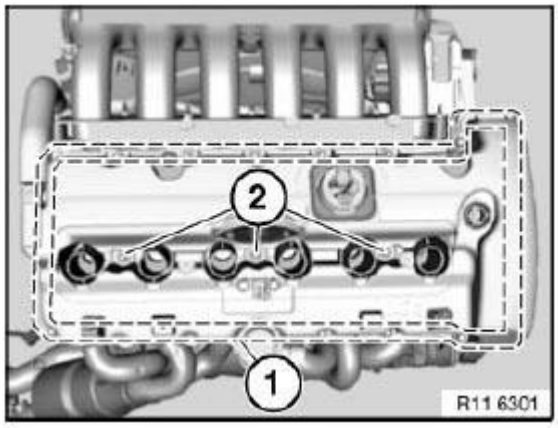

Fig. 58: Threaded Pin And Engine Screws
Courtesy of BMW OF NORTH AMERICA, INC.

Installation:

Slotted sleeves (2) for guiding ignition coils in cylinder head cover (1) must be replaced.

Remove slotted sleeves (2).

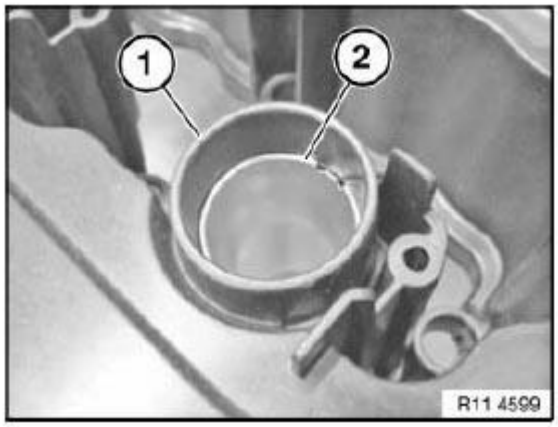

Fig. 59: Slotted Sleeves And Cylinder Head Cover
Courtesy of BMW OF NORTH AMERICA, INC.

Installation:

Clean all sealing faces (1 and 2).

IMPORTANT: Do not use any metal-cutting tools.

Installation:

Replace gaskets (1 and 2).

Assemble engine.

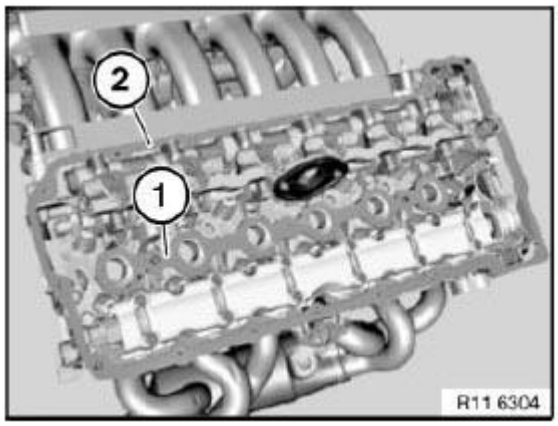

Fig. 60: Cylinder Head Gaskets
Courtesy of BMW OF NORTH AMERICA, INC.

11 12 100 REMOVING AND INSTALLING/SEALING CYLINDER HEAD (N51)

Special tools required:

- 11 0 320
- 11 4 420
- 11 4 430
- 11 4 471
- 11 4 472
- 11 8 580

IMPORTANT: Aluminium-magnesium materials.

No steel screws/bolts may be used due to the threat of electrochemical corrosion.

A magnesium crankcase requires aluminium screws/bolts exclusively.

Aluminium screws/bolts must be replaced each time they are released .

Aluminium screws/bolts are permitted with and without color coding (blue).

For reliable identification:

Aluminium screws/bolts are not magnetic .

Jointing torque and angle of rotation must be observed without fail (risk of damage).

Necessary preliminary tasks:

- Remove exhaust system.
- Drain Coolant
- Drain off **Engine Oil**
- Remove both exhaust manifolds
- Remove **Intake Air Manifold**
- Detach coolant hoses from cylinder head
- Remove **Cylinder Head Cover.**
- Remove **Intake And Exhaust Adjustment Unit**

IMPORTANT: Fit new cylinder head screws.

Do not wash off bolt coating.

There must be no coolant, water or engine oil in the pocket holes.

Risk of corrosion and cracking!

Release screws (1).

Unclip timing chain module (2) at junction (3) and remove towards top.

Do not allow timing chain to drop down.

Installation:

Only during assembly is the timing chain lifted out with a hook.

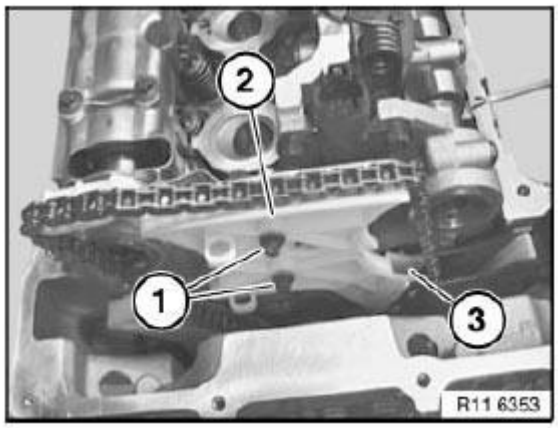

Fig. 61: Timing Chain Module, Junction And Screw
Courtesy of BMW OF NORTH AMERICA, INC.

Unfasten screws (2).

Remove eccentric shaft sensor (1) towards front.

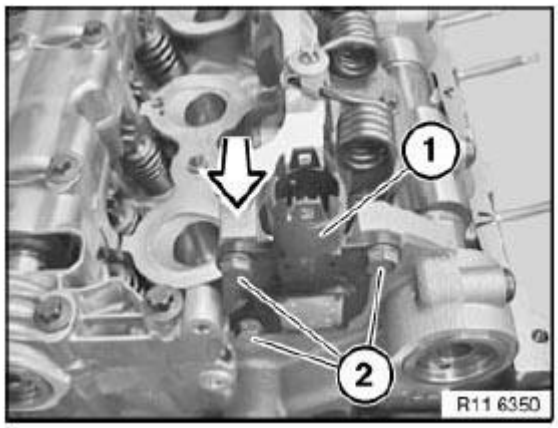

Fig. 62: Bolts, Eccentric Shaft Sensor And Removal Direction
Courtesy of BMW OF NORTH AMERICA, INC.

Release screw (1).

Remove magnet wheel (2) towards front.

IMPORTANT: Magnet wheel (2) is extremely magnetic..

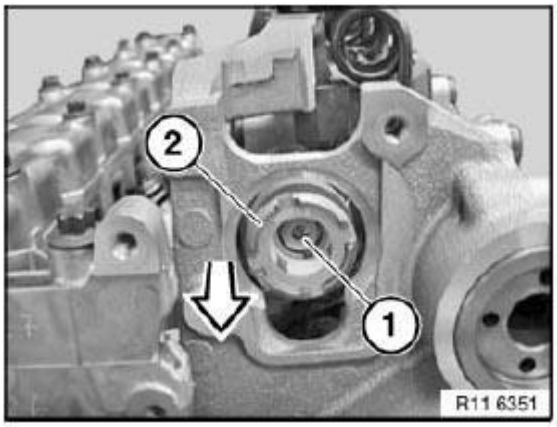

Fig. 63: Magnet Wheel, Screw And Removal Direction
Courtesy of BMW OF NORTH AMERICA, INC.

IMPORTANT: After removing, pack magnet wheel (1) away immediately in a plastic bag (2) for safety reasons.

Magnet wheel must be protected against metal chips.

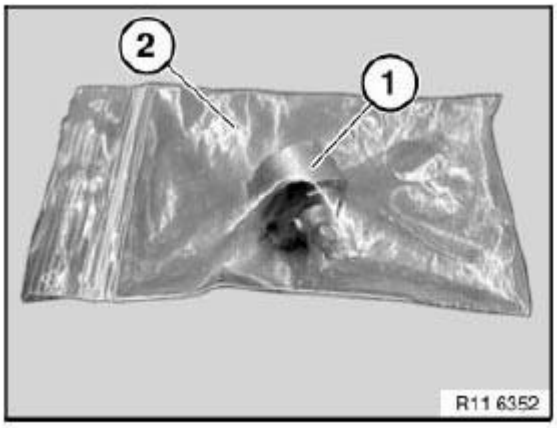

Fig. 64: Placing Magnet Wheel In Plastic Bag
Courtesy of BMW OF NORTH AMERICA, INC.

Pretension eccentric shaft (1) upwards in direction of arrow.

Remove stop screw between 1st and 2nd cylinders.

For tightening torque refer to 11 37 5AZ in **11 37 VARIABLE VALVE GEAR** .

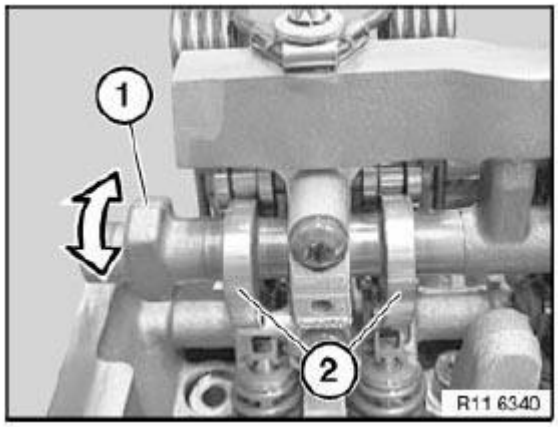

Fig. 65: Eccentric Shaft And Pretensioning Directions
Courtesy of BMW OF NORTH AMERICA, INC.

Release screws (1).

For tightening torque refer to 11 12 3AZ in **11 12 CYLINDER HEAD WITH COVER (1AZ-12AZ) [N51]** .

Screw (2) can only be released when the chain module is pressed forward slightly.

IMPORTANT: Secure screw (2) with a gripper against falling out and remove.

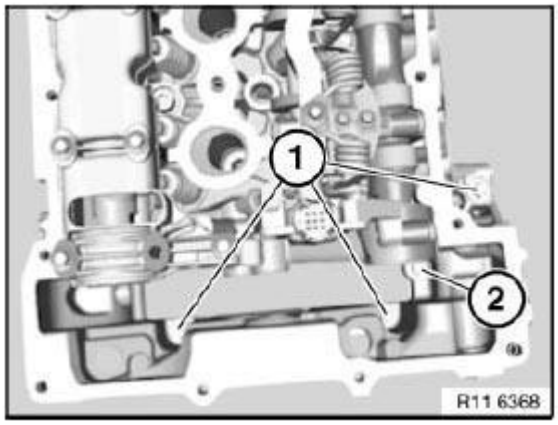

Fig. 66: Timing Chain Module Bolt And Screw
Courtesy of BMW OF NORTH AMERICA, INC.

IMPORTANT: Different screw heads

M 10 screw (1) is released with special tool 11 8 580.

M 9 screw (2) is released with special tool 11 4 420.

NOTE: Illustration shows camshaft removed.

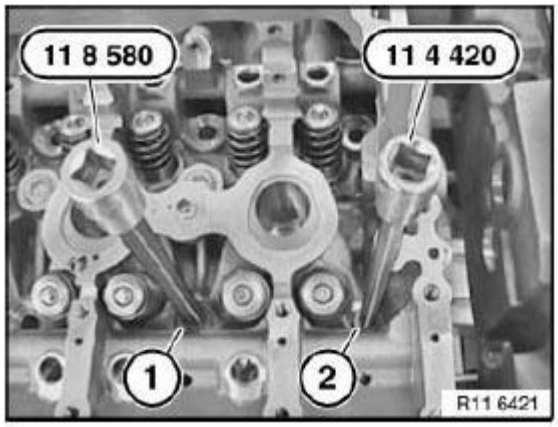

Fig. 67: Special Tool (11 8 580), (11 4 420), M10 And M9 Cylinder Head Bolts
Courtesy of BMW OF NORTH AMERICA, INC.

Release screws (1 and 3) with special tool 11 4 420.

For tightening torque refer to 11 12 2AZ in **11 12 CYLINDER HEAD WITH COVER (1AZ-12AZ) [N51]** .

Release screws (2) with special tool 11 8 580 from outside inwards.

For tightening torque refer to 11 12 1AZ in **11 12 CYLINDER HEAD WITH COVER (1AZ-12AZ) [N51]** .

IMPORTANT: All screws must be replaced.

Jointing torque and angle of rotation must be observed without fail.

Risk of damage!

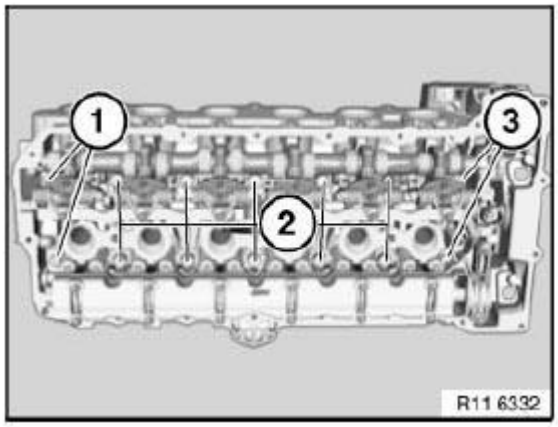

Fig. 68: Cylinder Head Screws
Courtesy of BMW OF NORTH AMERICA, INC.

Secure special tool 11 0 320 with old cylinder head cover bolts (1).

For tightening torque refer to 11 12 5AZ in **11 12 CYLINDER HEAD WITH COVER (1AZ-12AZ) [N51]** .

IMPORTANT: Weight of cylinder head with add-on parts is approx. 40 kg.

Remove and install cylinder head with two persons.

Do not rest cylinder head on sealing surface. Risk of damage to valves!

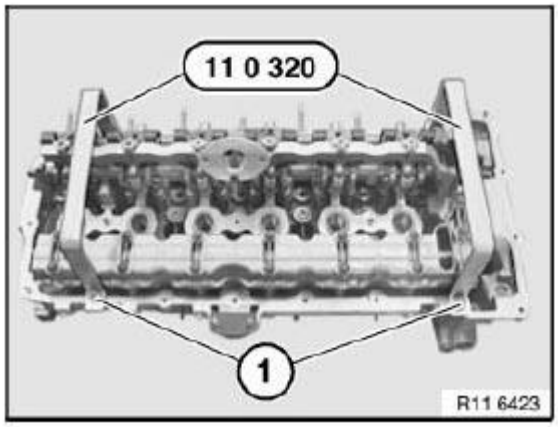

Fig. 69: Special Tool (11 0 320) And Cylinder Head Cover Bolts
Courtesy of BMW OF NORTH AMERICA, INC.

Insert special tool 11 4 430 into bores.

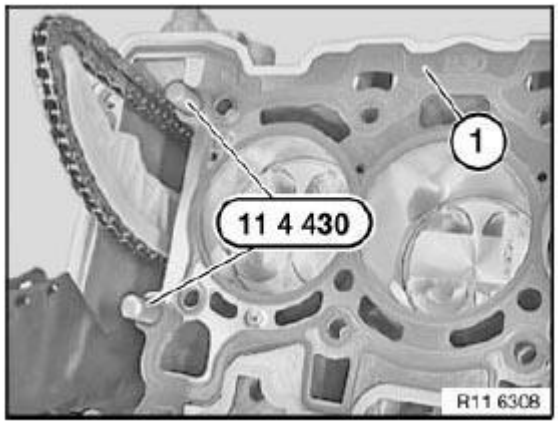

Fig. 70: Special Tool (11 4 430)
Courtesy of BMW OF NORTH AMERICA, INC.

Use special tool 11 4 471 to remove coarse gasket remnants from sealing faces of cylinder head and crankcase.

IMPORTANT: Do not use any metal-cutting tools.

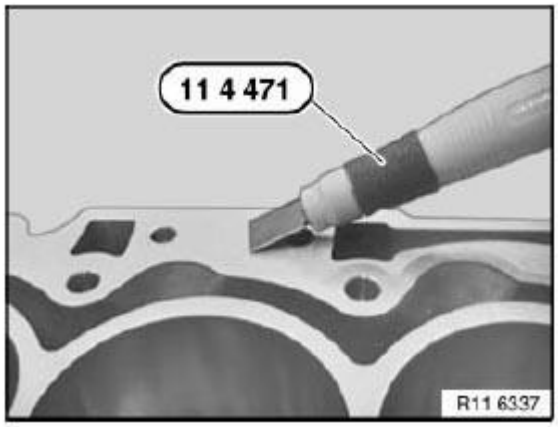

Fig. 71: Special Tool (11 4 471)
Courtesy of BMW OF NORTH AMERICA, INC.

Remove fine gasket remnants with special tool 11 4 472.

IMPORTANT: Do not use any metal-cutting tools.

There must be no coolant, water or engine oil in the pocket holes.

Risk of corrosion and cracking!

Clean all pocket holes.

Replace **Cylinder Head Gasket.**

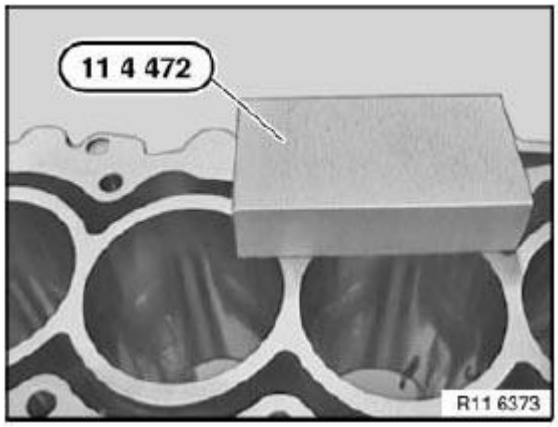

Fig. 72: Special Tool (11 4 472)
Courtesy of BMW OF NORTH AMERICA, INC.

IMPORTANT: Observe tightening sequence.

Fit new cylinder head screws.

Insert screws (1 to 10) with special tool 11 5 190.

For tightening torque refer to 11 12 1AZ in **11 12 CYLINDER HEAD WITH COVER (1AZ-12AZ) [N51]** .

Insert cylinder head bolts (11 to 14) with special tool 11 4 420.

For tightening torque refer to 11 12 2AZ in **11 12 CYLINDER HEAD WITH COVER (1AZ-12AZ) [N51]** .

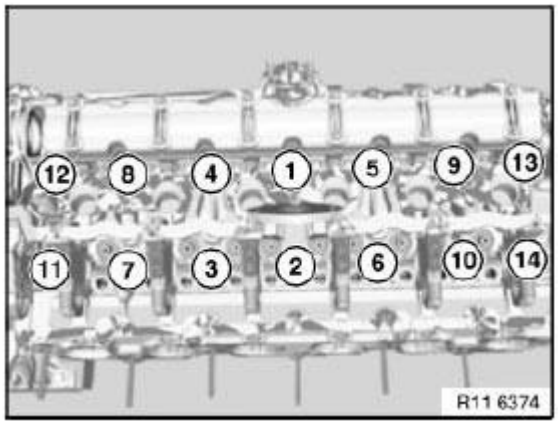

Fig. 73: Cylinder Head Bolts Tightening Sequence
Courtesy of BMW OF NORTH AMERICA, INC.

NOTE: Illustration shows camshafts removed.

Observe tightening sequence.

Installation:

- Jointing torque:
  1. Angle of rotation: Screws 1 to 14 / 1x 90°
  2. Angle of rotation: Screws 1 to 10 / 1x 90°
  3. Angle of rotation: Screws 1 to 14 / 1x 45°

Replace screws (1).

For tightening torque refer to 11 12 4AZ in **11 12 CYLINDER HEAD WITH COVER (1AZ-12AZ) [N51]** .

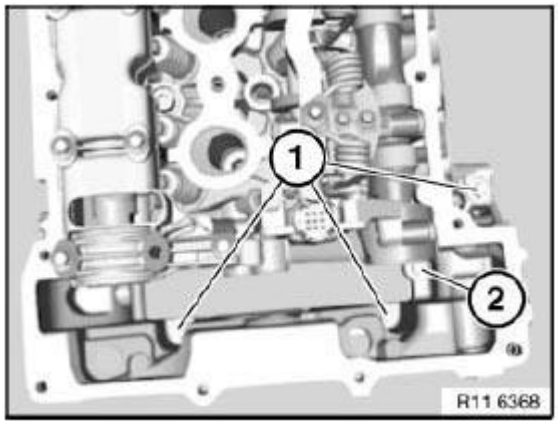

Fig. 74: Bolts
Courtesy of BMW OF NORTH AMERICA, INC.

IMPORTANT: Secure screw (2) with a gripper against falling out.

Installation:

Replace aluminium screws.

Assemble engine.

11 12 100 REMOVING AND INSTALLING CYLINDER HEAD (N52K)

Special tools required:

- 11 0 320
- 11 4 420
- 11 4 430
- 11 4 471
- 11 4 472
- 11 8 580

IMPORTANT: Aluminium-magnesium materials.

No steel screws/bolts may be used due to the threat of electrochemical corrosion.

A magnesium crankcase requires aluminium screws/bolts exclusively.

Aluminium screws/bolts must be replaced each time they are released .

Aluminium screws/bolts are permitted with and without color coding (blue).

For reliable identification:

Aluminium screws/bolts are not magnetic .

Jointing torque and angle of rotation must be observed without fail (risk of damage).

Necessary preliminary tasks:

- Remove **Exhaust System.**
- Drain **Coolant**
- Drain off **Engine Oil**
- Remove both **Exhaust Manifolds**
- Remove **Intake Air Manifold**
- Detach coolant hoses from cylinder head
- Remove intake and **Exhaust Adjustment Unit**

IMPORTANT: Fit new cylinder head screws.

Do not wash off bolt coating.

There must be no coolant, water or engine oil in the pocket holes.

Risk of corrosion and cracking!

Release screws (1).

Unclip timing chain module (2) at junction (3) and remove towards top.

Set down timing chain.

IMPORTANT: If the timing chain is stowed in the gearcase, the crankshaft must no longer be rotated.

This would cause the timing chain on the crankshaft sprocket wheel to jam or jump.

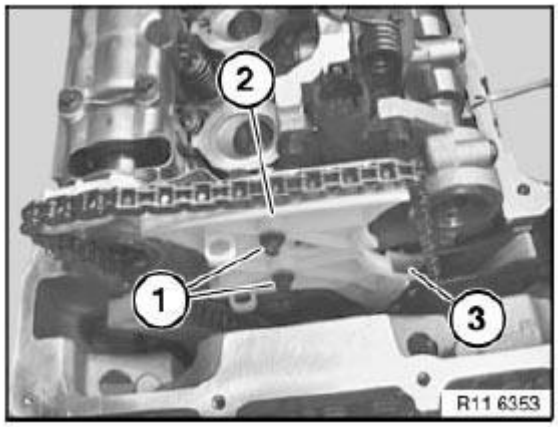

Fig. 75: Timing Chain Module, Junction And Screw
Courtesy of BMW OF NORTH AMERICA, INC.

Installation:

The timing chain is lifted out with a hook only during assembly.

Release bolts (2) for eccentric shaft sensor (1).

Remove eccentric shaft sensor (1) towards front.

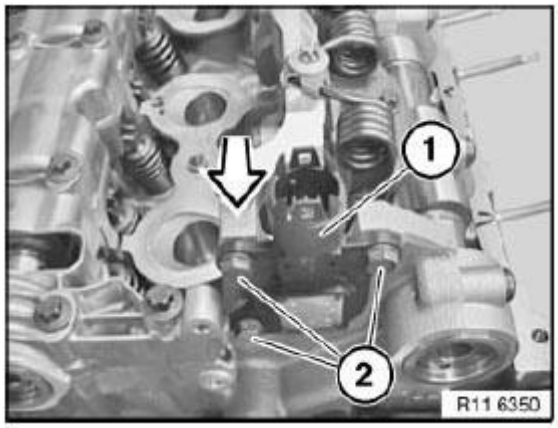

Fig. 76: Bolts, Eccentric Shaft Sensor And Removal Direction
Courtesy of BMW OF NORTH AMERICA, INC.

IMPORTANT: Screw (1) is not magnetic and must be secured against falling down.

Release screw (1).

Remove magnet wheel (2) towards front.

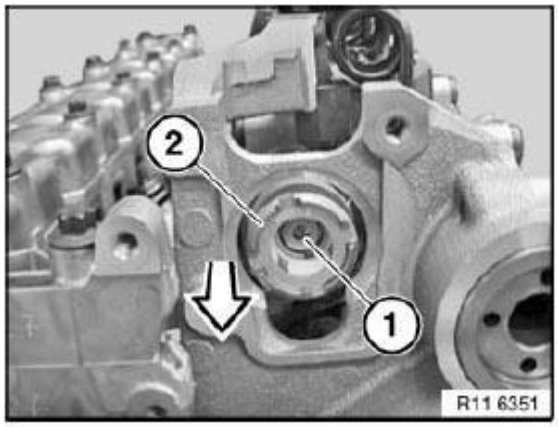

Fig. 77: Magnet Wheel, Screw And Removal Direction
Courtesy of BMW OF NORTH AMERICA, INC.

IMPORTANT: Magnet wheel (1) is highly magnetic and must be protected against metal filings/borings.

After removing, place magnet wheel (1) in a plastic bag (2) with a seal.

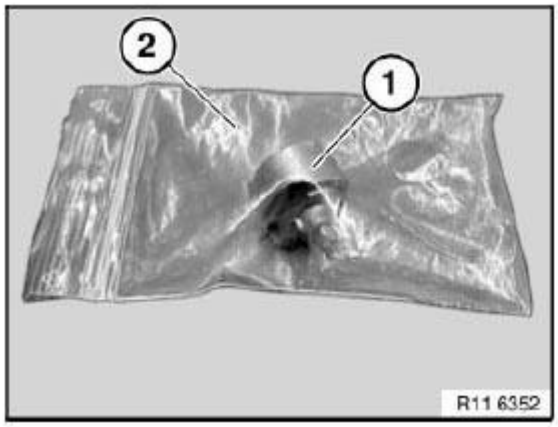

Fig. 78: Placing Magnet Wheel In Plastic Bag
Courtesy of BMW OF NORTH AMERICA, INC.

Pretension eccentric shaft (1) upwards in direction of arrow.

Remove stop screw between 1st and 2nd cylinders.

For tightening torque refer to 11 37 5AZ in **11 37 VARIABLE VALVE GEAR** .

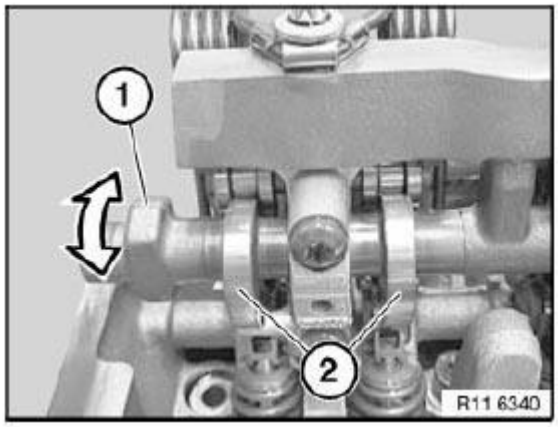

Fig. 79: Eccentric Shaft And Pretensioning Directions
Courtesy of BMW OF NORTH AMERICA, INC.

NOTE: Bolt (2) can only be released when the timing chain module is pressed forward slightly.

IMPORTANT: Secure bolt (2) with a gripper against falling down.

Installation:

Replace aluminium screws.

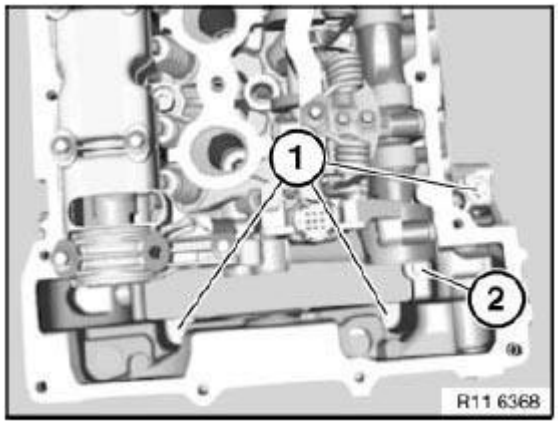

Fig. 80: Timing Chain Module Bolt And Screw
Courtesy of BMW OF NORTH AMERICA, INC.

Release screw (2).

For tightening torque refer to 11 12 3AZ in **11 12 CYLINDER HEAD WITH COVER (1AZ-12AZ) [N52K]** .

Release screws (1).

For tightening torque refer to 11 12 4AZ in **11 12 CYLINDER HEAD WITH COVER (1AZ-12AZ) [N52K]** .

Installation:

Replace aluminium screws.

IMPORTANT: Observe different bolt heads.

Release M10 cylinder head bolts (1) with special tool 11 8 580.

Release M9 cylinder head bolts (2) with special tool 11 4 420.

NOTE: Picture shows intake and exhaust camshafts removed.

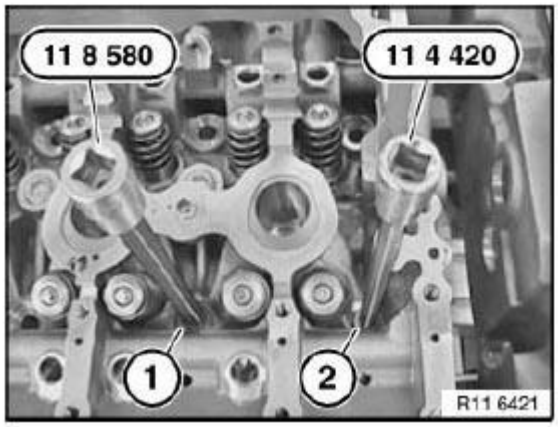

Fig. 81: Special Tool (11 8 580), (11 4 420), M10 And M9 Cylinder Head Bolts
Courtesy of BMW OF NORTH AMERICA, INC.

IMPORTANT: Observe different M9 bolt lengths (1 and 3).

Release M9 cylinder head bolts (1 and 3) with special tool 11 4 420.

For tightening torque refer to 11 12 2AZ in **11 12 CYLINDER HEAD WITH COVER (1AZ-12AZ) [N52K]** .

Release M10 cylinder head bolts (2) with special tool 11 8 580 from outside inwards.

For tightening torque refer to 11 12 1AZ in **11 12 CYLINDER HEAD WITH COVER (1AZ-12AZ) [N52K]** .

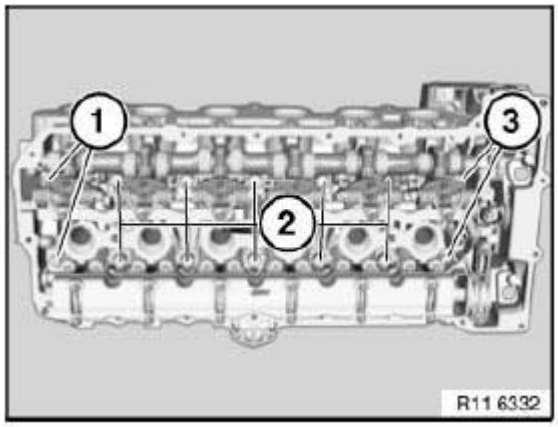

Fig. 82: Identifying Cylinder Head Bolts
Courtesy of BMW OF NORTH AMERICA, INC.

IMPORTANT: All cylinder head bolts (1, 2 and 3) must be replaced.

Jointing torque and angle of rotation must be observed without fail.

Risk of damage!

Secure special tool 11 0 320 with existing cylinder head cover bolts (1).

For tightening torque refer to 11 12 5AZ in **11 12 CYLINDER HEAD WITH COVER (1AZ-12AZ) [N52K]** .

IMPORTANT: Removing and install cylinder head with a second person helping.

Weight of cylinder head with add-on parts is approx. 40 kg.

Do not rest cylinder head on sealing surface. Risk of damage to valves!

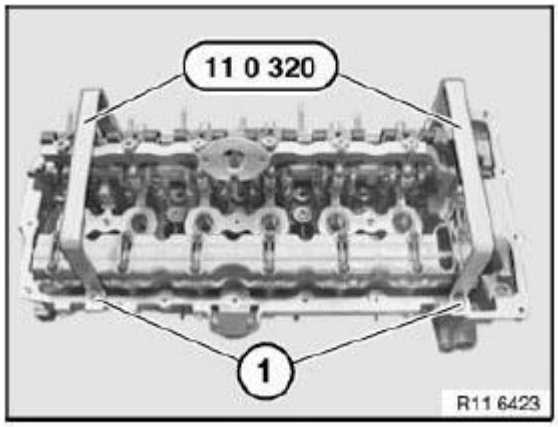

Fig. 83: Special Tool (11 0 320) And Cylinder Head Cover Bolts
Courtesy of BMW OF NORTH AMERICA, INC.

Insert special tool 11 4 430 into bores.

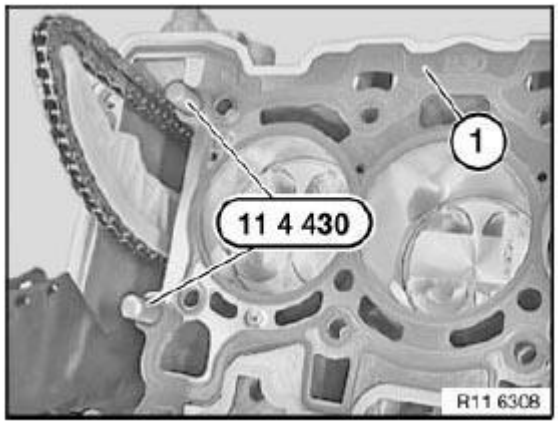

Fig. 84: Special Tool (11 4 430)
Courtesy of BMW OF NORTH AMERICA, INC.

Remove coarse residues on sealing faces with special tool 11 4 471 from cylinder head and crankcase.

IMPORTANT: Do not use any metal-cutting tools.

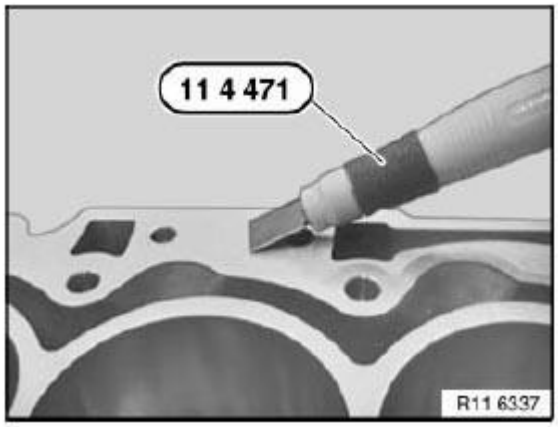

Fig. 85: Identifying Special Tool (11 4 471)
Courtesy of BMW OF NORTH AMERICA, INC.

Remove fine residues on sealing faces with special tool 11 4 472 from cylinder head and crankcase.

IMPORTANT: Do not use any metal-cutting tools.

There must be no coolant, water or engine oil in the pocket holes.

Risk of corrosion and cracking!

Clean all pocket holes.

Replace **Cylinder Head Gasket.**

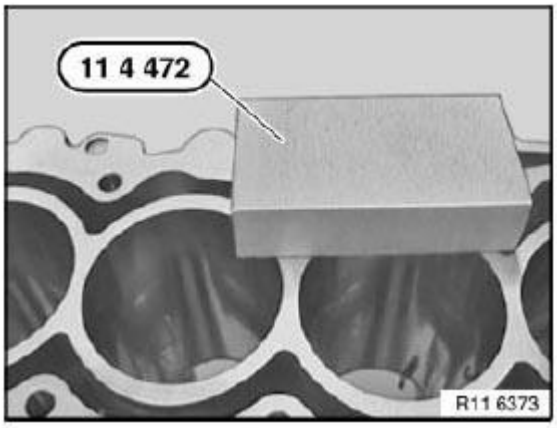

Fig. 86: Identifying Special Tool (11 4 472)
Courtesy of BMW OF NORTH AMERICA, INC.

IMPORTANT: Observe sequence for tightening cylinder head bolts without fail.

Fit new cylinder head screws.

Insert cylinder head bolts (1 to 10) with special tool 11 8 580.

For tightening torque refer to 11 12 1AZ in **11 12 CYLINDER HEAD WITH COVER (1AZ-9AZ) [N52K]** .

Insert cylinder head bolts (11 to 14) with special tool 11 4 420.

For tightening torque refer to 11 12 2AZ in **11 12 CYLINDER HEAD WITH COVER (1AZ-9AZ) [N52K]** .

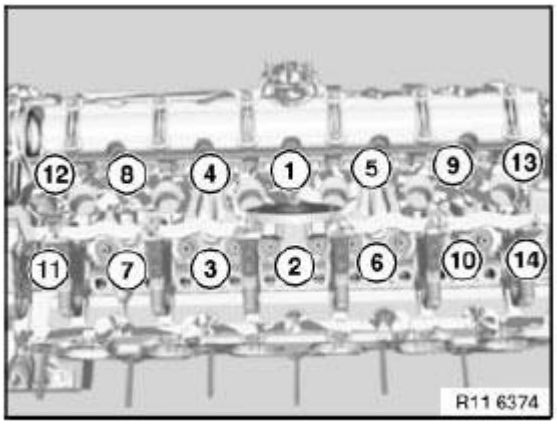

Fig. 87: Cylinder Head Bolts Tightening Sequence
Courtesy of BMW OF NORTH AMERICA, INC.

NOTE: Picture shows intake and exhaust camshafts removed.

Observe sequence for tightening cylinder head bolts without fail.

IMPORTANT: The 2nd torsion angle relates only to cylinder head bolts 1 to 10.

Installation:

- Jointing torque:

  All cylinder head bolts 1 to 14 to 30 Nm

- 1st angle of rotation:

  All cylinder head bolts 1 to 14 to 90°

- 2nd angle of rotation:

Only cylinder head bolts 1 to 10 to 90°

- 3rd angle of rotation:

  All cylinder head bolts 1 to 14 to 45°

Insert bolts (1).

For tightening torque refer to 11 12 4AZ in **11 12 CYLINDER HEAD WITH COVER (1AZ-9AZ) [N52K]** .

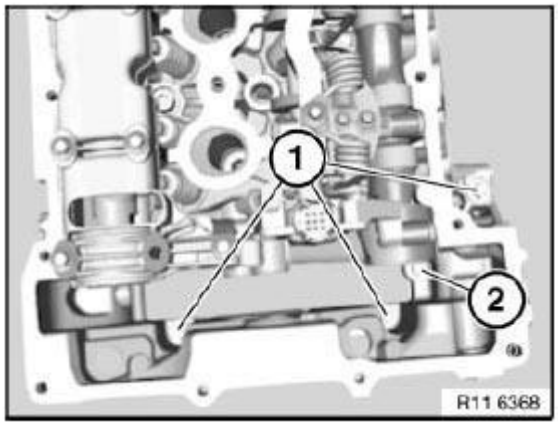

Fig. 88: Identifying Bolts
Courtesy of BMW OF NORTH AMERICA, INC.

IMPORTANT: Secure bolt (2) with a gripper against falling down.

Insert bolt (2).

For tightening torque refer to 11 12 3AZ in **11 12 CYLINDER HEAD WITH COVER (1AZ-9AZ) [N52K]** .

Installation:

Replace aluminium screws.

Assemble engine.

11 12 101 REPLACING CYLINDER HEAD GASKET (N51)

Special tools required:

- 11 4 430
- 11 4 470

IMPORTANT: Aluminium-magnesium materials.

No steel screws/bolts may be used due to the threat of electrochemical corrosion.

A magnesium crankcase requires aluminium screws/bolts exclusively.

Aluminium screws/bolts must be replaced each time they are released .

Aluminium screws/bolts are permitted with and without color coding (blue).

For reliable identification:

Aluminium screws/bolts are not magnetic .

Jointing torque and angle of rotation must be observed without fail (risk of damage).

Necessary preliminary tasks:

- Remove **Cylinder Head**.

Insert special tool 11 4 430 into bores.

Remove head gasket.

IMPORTANT: Check identification (1) on cylinder head gasket (N51).

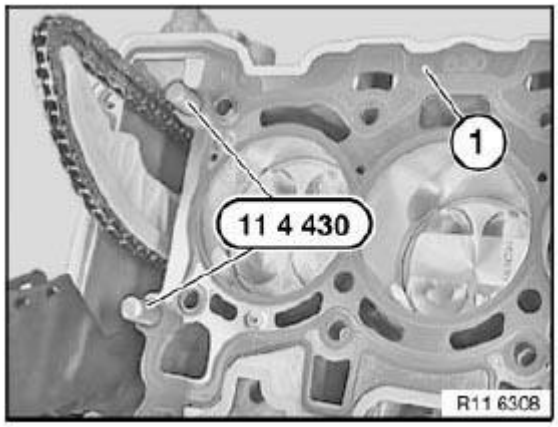

Fig. 89: Special Tool (11 4 430) And Cylinder Head Gasket Marking
Courtesy of BMW OF NORTH AMERICA, INC.

Remove remnants of oil and dirt from pocket holes (1).

IMPORTANT: Work on sealing face on engine block and on cylinder head with special tool 11 4 470 only.

Do not use any metal-cutting tools.

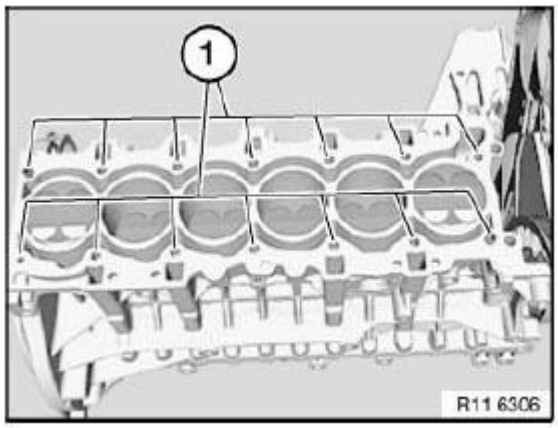

Fig. 90: Cylinder Head Pocket Holes
Courtesy of BMW OF NORTH AMERICA, INC.

Identification (1) of head gasket.

IMPORTANT: Rubber coating (2) on cylinder head gasket (3) must not under any circumstances be damaged (electrochemical corrosion).

Cylinder head gasket (3) is a sheet-metal gasket.

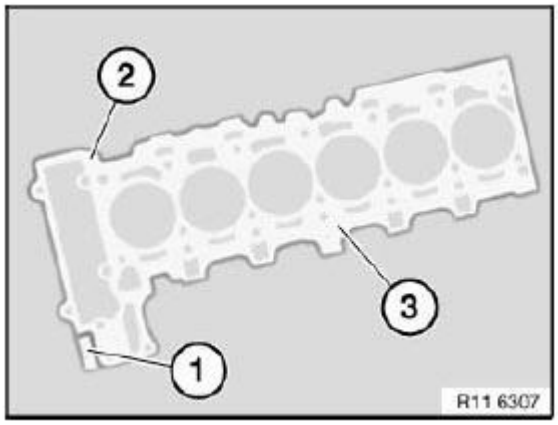

Fig. 91: Cylinder Head Gasket, Gasket Identification And Rubber Coating
Courtesy of BMW OF NORTH AMERICA, INC.

Check adapter sleeves (1) for damage and firm seating.

Place cylinder head gasket (2) in direction of arrow on engine block.

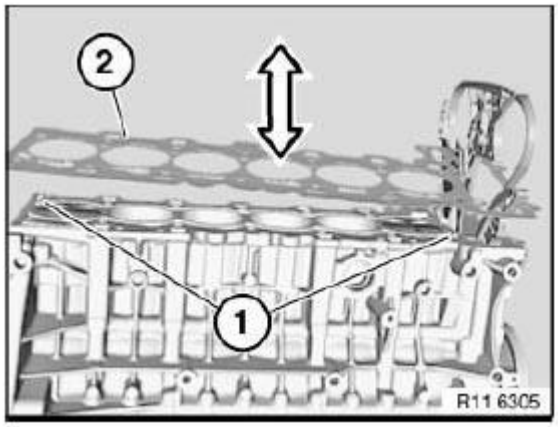

Fig. 92: Adapter Sleeves And Cylinder Head Gasket
Courtesy of BMW OF NORTH AMERICA, INC.

NOTE: Check cylinder head for Deviation From Flatness.

Check cylinder head for Water Leaks.

Assemble engine.

11 12 101 REPLACING CYLINDER HEAD GASKET (N52K)

Special tools required:

- 11 4 430

- 11 4 470

IMPORTANT: Aluminium-magnesium materials.

No steel screws/bolts may be used due to the threat of electrochemical corrosion.

A magnesium crankcase requires aluminium screws/bolts exclusively.

Aluminium screws/bolts must be replaced each time they are released .

Aluminium screws/bolts are permitted with and without color coding (blue).

For reliable identification:

Aluminium screws/bolts are not magnetic .

Jointing torque and angle of rotation must be observed without fail (risk of damage).

Necessary preliminary tasks:

- Remove **Cylinder Head**.

Insert special tool 11 4 430 into bores.

Remove cylinder head seal.

IMPORTANT: Check marking (1) on cylinder head gasket (B25 or B30).

- B = gasoline engine
- 30 = displacement (3 liters)

Do not mix them up as this will cause **engine damage.**

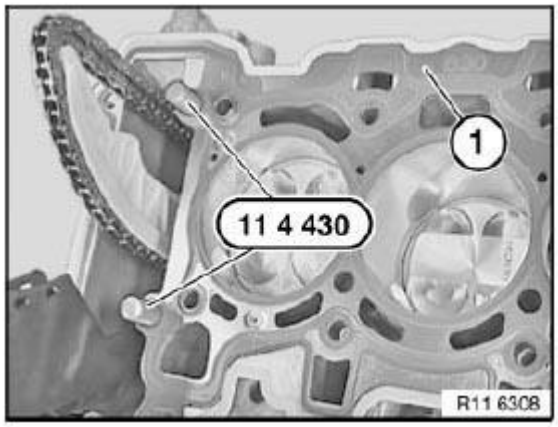

Fig. 93: Special Tool (11 4 430) And Cylinder Head Gasket Marking
Courtesy of BMW OF NORTH AMERICA, INC.

Remove remnants of oil and dirt from pocket holes (1).

IMPORTANT: Work on sealing face on engine block and on cylinder head with special tool 11 4 470 only.

Do not use any metal-cutting tools.

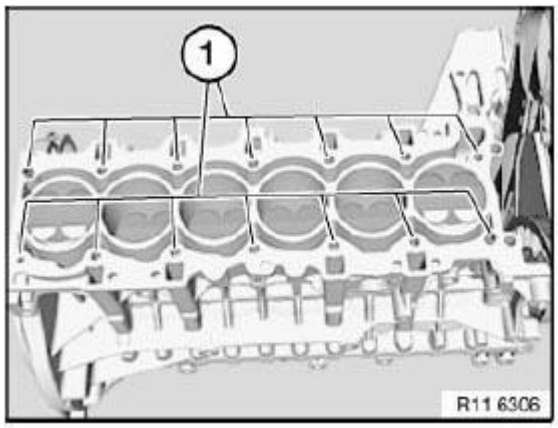

Fig. 94: Cylinder Head Pocket Holes
Courtesy of BMW OF NORTH AMERICA, INC.

IMPORTANT: Rubber coating (2) on cylinder head gasket (3) must not under any circumstances be damaged (electrochemical corrosion).

Cylinder head gasket (3) is a sheet-metal gasket.

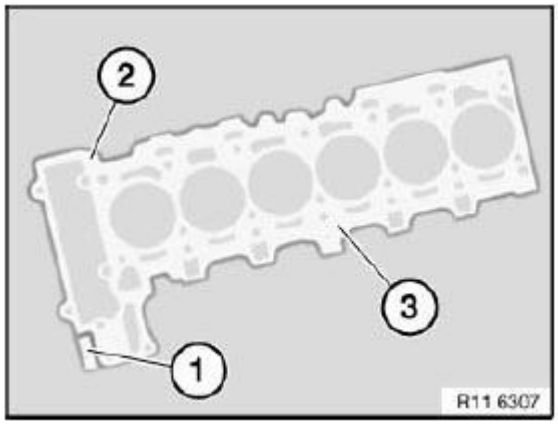

Fig. 95: Cylinder Head Gasket And Rubber Coating
Courtesy of BMW OF NORTH AMERICA, INC.

Check adapter sleeves (1) for damage and firm seating.

Place cylinder head gasket (2) in direction of arrow on engine block.

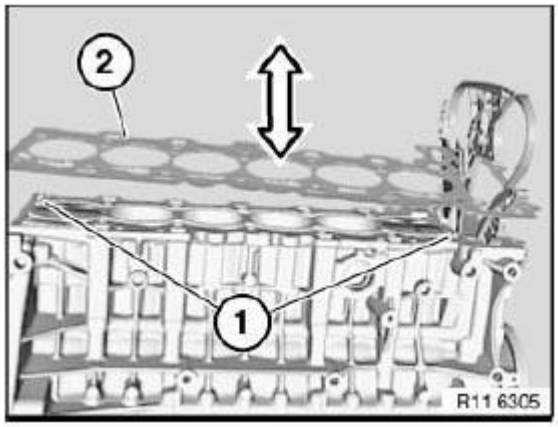

Fig. 96: Adapter Sleeves And Cylinder Head Gasket
Courtesy of BMW OF NORTH AMERICA, INC.

NOTE: **Check cylinder head for Deviation From Flatness.**

Check cylinder head for Water Leaks.

Assemble engine.

11 12 719 RESURFACING CYLINDER HEAD SEALING FACE (N51)

Necessary preliminary tasks:

- Remove **Cylinder Head**

- Remove **Exhaust Camshaft.**
- Remove **Intermediate Lever** on intake side

Check evenness of cylinder head sealing faces with a standard straight-edge (1).

NOTE: Max. deviation from level (longitudinal) 0.10 mm

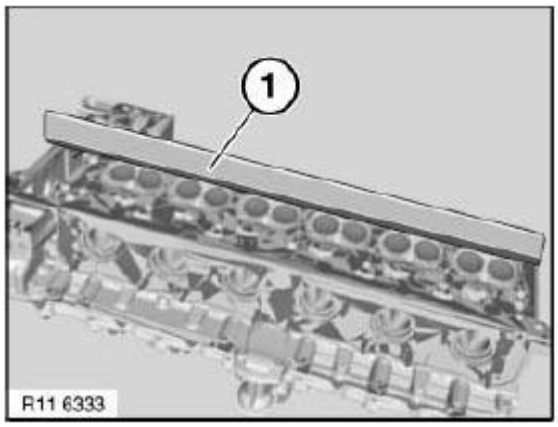

Fig. 97: Checking Evenness Of Longitudinal Cylinder Head Sealing Faces With Standard Straight-Edge
Courtesy of BMW OF NORTH AMERICA, INC.

Check evenness of cylinder head sealing faces with a standard straight-edge (1).

NOTE: Max. deviation from level (transversal) 0.05 mm

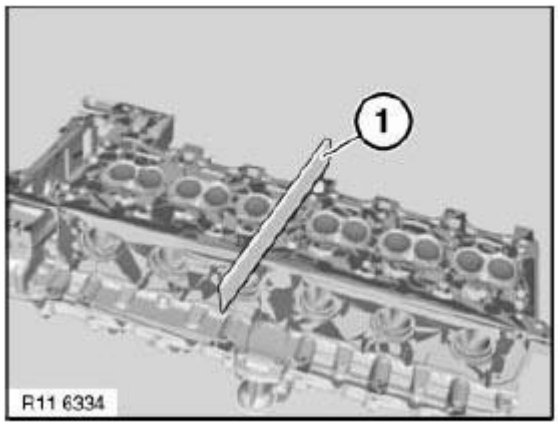

Fig. 98: Checking Evenness Of Transversal Cylinder Head Sealing Faces With Standard Straight-Edge
Courtesy of BMW OF NORTH AMERICA, INC.

Check cylinder head for **Water Leaks**

Assemble engine.

11 12 719 RESURFACING CYLINDER HEAD SEALING FACE (N52K)

Necessary preliminary tasks:

- Remove **Cylinder Head**
- Remove **11 31 028 Removing and installing/replacing exhaust camshaft (N52K)**.
- Remove **Intermediate Lever** on intake side

Check evenness of cylinder head sealing faces with a standard straight-edge (1).

NOTE: Max. deviation from level (longitudinal) 0.10 mm

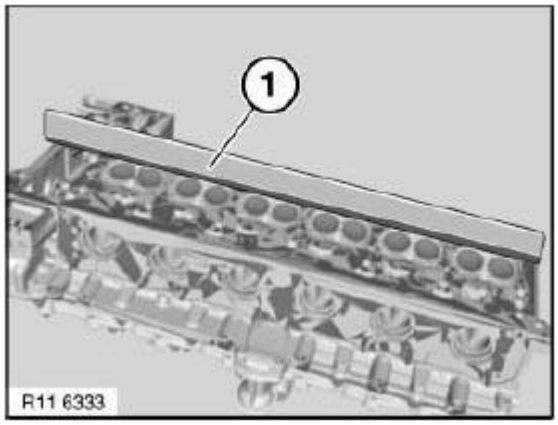

Fig. 99: Checking Evenness Of Longitudinal Cylinder Head Sealing Faces With Standard Straight-Edge
Courtesy of BMW OF NORTH AMERICA, INC.

Check evenness of cylinder head sealing faces with a standard straight-edge (1).

NOTE: Max. deviation from level (transversal) 0.05 mm

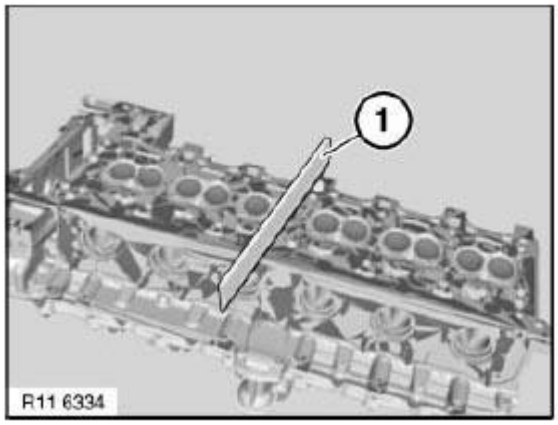

Fig. 100: Checking Evenness Of Transversal Cylinder Head Sealing Faces With Standard Straight-Edge
Courtesy of BMW OF NORTH AMERICA, INC.

Check cylinder head for **Water Leaks**.

Assemble engine.

11 12 729 CHECKING CYLINDER HEAD FOR LEAKS (N51)

Special tools required:

- 11 4 341
- 11 4 342
- 11 4 344
- 11 4 345

IMPORTANT: Pressure-test cylinder head to max. 3 bar.

Heat cylinder head to 60°.

Check for bubble formation in a water bath.

Necessary preliminary tasks:

- Remove **Cylinder Head**
- Remove **All Engine Valves.**

NOTE: Observe mounting of special tool 11 4 341 on cylinder.

Secure special tool 11 4 341 with bolts 11 4 345 to 25 Nm.

Installation:

Cylinder no. 1 is marked.

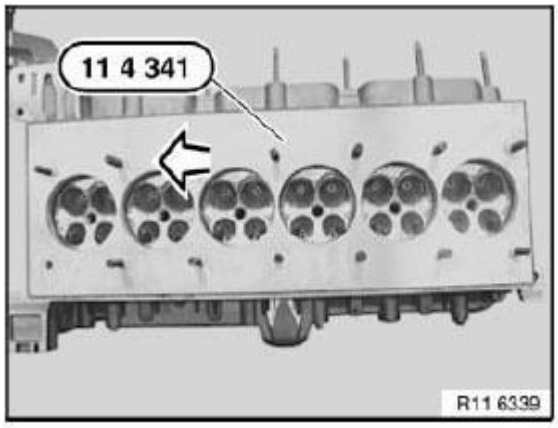

Fig. 101: Special Tool (11 4 341) And Removal Direction

Courtesy of BMW OF NORTH AMERICA, INC.

Fit special tool 11 4 342 with bolts (1). Screw in knurled screw in direction of arrow.

Sealing flange must rest flat.

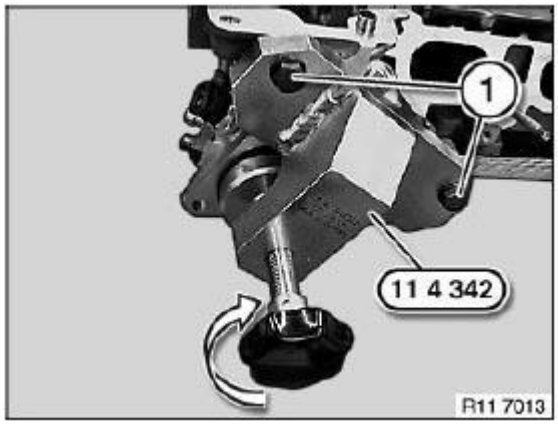

Fig. 102: Special Tool (11 4 342) And Bolts
Courtesy of BMW OF NORTH AMERICA, INC.

Secure special tool 11 4 344 with bolts (1).

NOTE: Compressed air at valve max. 3 bar.

Heat cylinder head to 60°.

Check for bubble formation in a water bath.

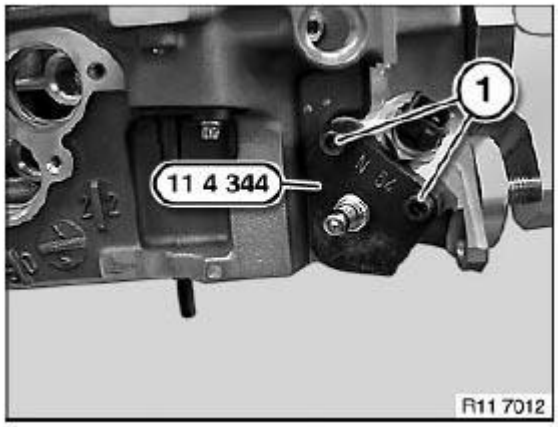

Fig. 103: Special Tool (11 4 344) And Bolts
Courtesy of BMW OF NORTH AMERICA, INC.

Assemble engine.

11 12 729 CHECKING CYLINDER HEAD FOR WATER LEAKS (N52K)

Special tools required:

- 11 4 341
- 11 4 342
- 11 4 344
- 11 4 345

IMPORTANT: Pressure-test cylinder head to max. 3 bar.

Heat cylinder head to 60°.

Check for bubble formation in a water bath.

Necessary preliminary tasks:

- Remove **Cylinder Head**
- Disassemble **Cylinder Head**

NOTE: Observe mounting of special tool 11 4 341 on cylinder.

Secure special tool 11 4 341 with bolts 11 4 345 to 25 Nm.

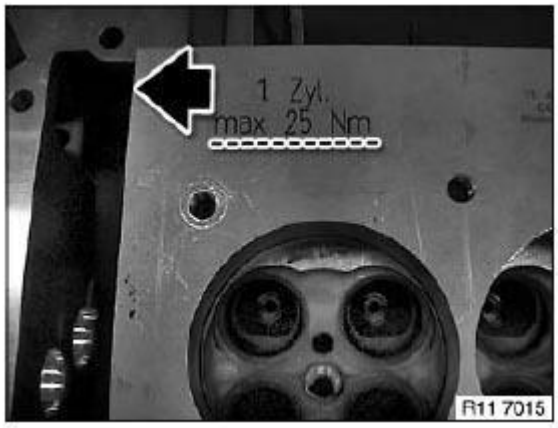

Fig. 104: Max Torque Value On Cylinder Block
Courtesy of BMW OF NORTH AMERICA, INC.

Install special tool 11 4 341 with special tool 11 4 345.

Installation:

Cylinder no. 1 is marked.

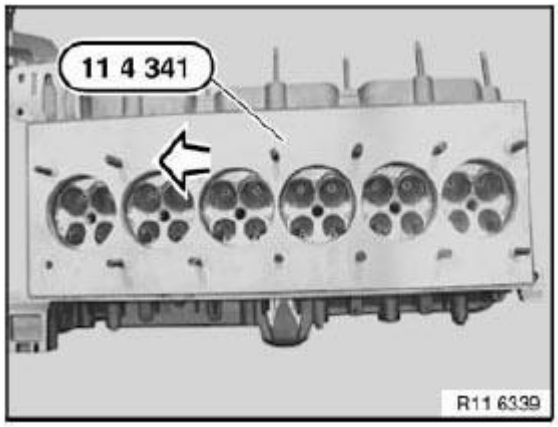

Fig. 105: Special Tool (11 4 341) And Removal Direction
Courtesy of BMW OF NORTH AMERICA, INC.

Fit special tool 11 4 342 with bolts (1). Screw in knurled screw in direction of arrow.

Sealing flange must rest flat.

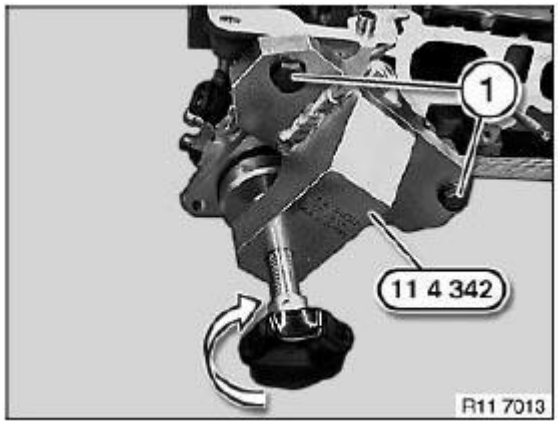

Fig. 106: Special Tool (11 4 342) And Bolts
Courtesy of BMW OF NORTH AMERICA, INC.

Secure special tool 11 4 344 with bolts (1).

NOTE: **Compressed air at valve max. 3 bar.**

Heat cylinder head to 60°.

Check for bubble formation in a water bath.

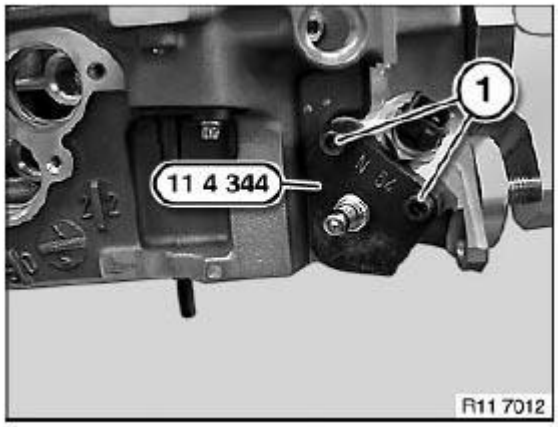

Fig. 107: Special Tool (11 4 344) And Bolts
Courtesy of BMW OF NORTH AMERICA, INC.

Assemble engine.

OIL SUMP

11 13 000 REMOVING AND INSTALLING, SEALING OR REPLACING OIL SUMP (N51)

IMPORTANT: Aluminium-magnesium materials.

No steel screws/bolts may be used due to the threat of electrochemical corrosion.

A magnesium crankcase requires aluminium screws/bolts exclusively.

Aluminium screws/bolts must be replaced each time they are released .

Aluminium screws/bolts are permitted with and without color coding (blue).

For reliable identification:

Aluminium screws/bolts are not magnetic .

Jointing torque and angle of rotation must be observed without fail (risk of damage).

Necessary preliminary tasks:

- Remove engine splash guard.
- Secure engine in **Installation Position.**
- Lower **Front Axle.**
- **In all-wheel-drive vehicles:**

Remove drive shafts.

Remove front axle differential.

NOTE: The lines must be detached from the engine oil sump in the case of the optional extra automatic transmission; if necessary, detach vane pump and place to one side.

Release bolts (3) on transmission.

Detach return hose (2).

Release screws along line (1).

For tightening torque refer to 11 13 1AZ in **11 13 OIL PAN** .

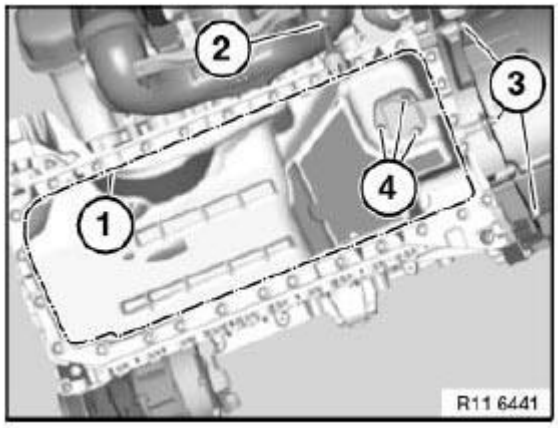

Fig. 108: Screw, Screw Release Line And Return Hose
Courtesy of BMW OF NORTH AMERICA, INC.

Installation:

Replace aluminium screws.

If necessary, unfasten screws (4). Remove oil level sensor.

Installation:

Replace all seals.

Assemble engine.

11 13 000 REMOVING AND INSTALLING, SEALING OR REPLACING OIL SUMP (N52K)

IMPORTANT: Aluminium-magnesium materials.

No steel screws/bolts may be used due to the threat of electrochemical corrosion.

A magnesium crankcase requires aluminium screws/bolts exclusively.

Aluminium screws/bolts must be replaced each time they are released .

Aluminium screws/bolts are permitted with and without color coding (blue).

For reliable identification:

Aluminium screws/bolts are not magnetic .

Jointing torque and angle of rotation must be observed without fail (risk of damage).

Necessary preliminary tasks:

- **Lower Front Axle**

NOTE: **The lines must be detached from the oil sump on vehicles with optional extra SA205 (automatic transmission); if necessary, detach oil pump and place to one side.**

Unclip electric leads (2) of oxygen monitor sensors from holder (3).

Disconnect plug connections (1) of oxygen monitor sensors and lay to one side.

Release bolts (5) on transmission.

For tightening torque refer to 11 13 7AZ in **11 13 OIL PAN** .

Disconnect plug connection (4) on oil level sensor.

Lay holder (3) to one side.

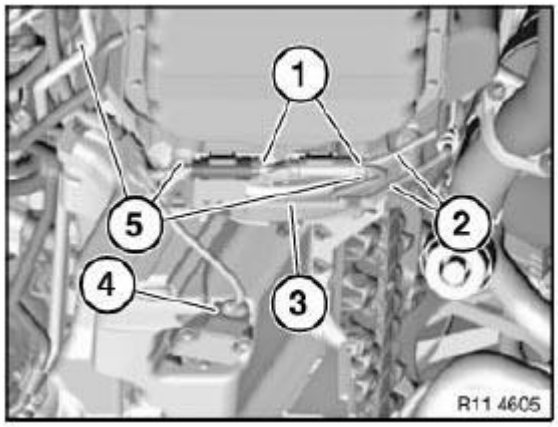

Fig. 109: Oxygen Monitor Sensors, Electric Leads, Holder, Plug Connection And Bolts
Courtesy of BMW OF NORTH AMERICA, INC.

Detach return hose (2).

IMPORTANT: For vehicles with optional extra SA205 (automatic transmission), bolts of different lengths are installed for mounting the oil sump.

Observe different tightening torques.

Release screws along line (1).

For vehicles with optional extra SA205 (automatic transmission):

For tightening torque refer to 11 13 2AZ in **11 13 OIL PAN** .

For tightening torque refer to 11 13 3AZ in **11 13 OIL PAN** .

For vehicles without optional extra SA205 (automatic transmission):

For tightening torque refer to 11 13 5AZ in **11 13 OIL PAN** .

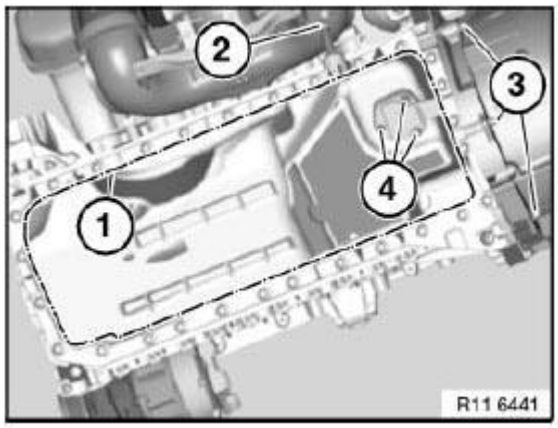

Fig. 110: Screw And Return Hose
Courtesy of BMW OF NORTH AMERICA, INC.

Installation:

Replace aluminium screws.

If necessary, unfasten screws (4). Remove oil level sensor.

IMPORTANT: There must be no adhesive residues in the oil sump retaining threads.

Clean retaining threads.

Installation:

Replace all seals.

Assemble engine.

HOUSING COVER

11 14 005 REPLACING FRONT CRANKSHAFT SEAL (N51)

Necessary preliminary tasks:

- Remove **Vibration Damper**

IMPORTANT: Do not release central bolt.

If the central bolt is released, the sprocket wheels of the timing chain and the oil pump will no longer be non-positively connected to the crankshaft. The camshafts to the crankshaft can warp **(risk of damage).**

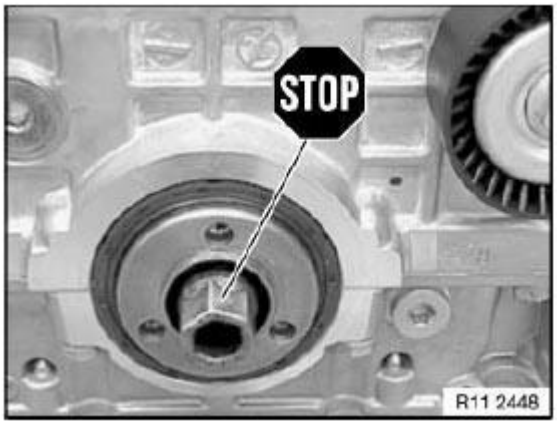

Fig. 111: Caution For Releasing Central Bolt
Courtesy of BMW OF NORTH AMERICA, INC.

Turn back special tool 11 9 222.

Push special tool 11 9 221 onto crankshaft.

IMPORTANT: When screws are tightened down (special tool 11 9 224), crankshaft seal is pressed inwards approx. 1 mm and thus slackened for subsequent removal.

Insert screws (special tool 11 9 224) and tighten down to approx. 20 Nm.

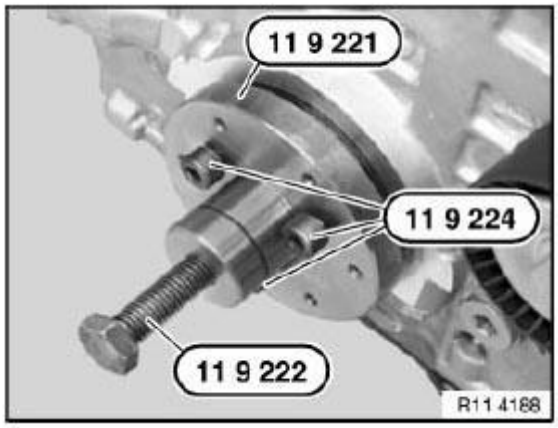

Fig. 112: Tightening Screws Using Special Tool (11 9 224)
Courtesy of BMW OF NORTH AMERICA, INC.

Screw special tool 11 0 371 to 80 Nm into crankshaft seal.

Screw in spindle 11 0 372.

Release crankshaft seal from housing.

Repeat the operation several times if necessary.

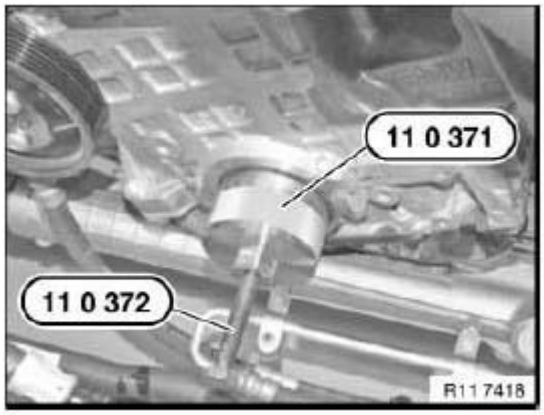

Fig. 113: Identifying Special Tools (11 0 372 And 11 0 371)
Courtesy of BMW OF NORTH AMERICA, INC.

Carefully saw open crankshaft seal (1) at cutting line (2).

Remove crankshaft seal (1) from special tool 11 0 371.

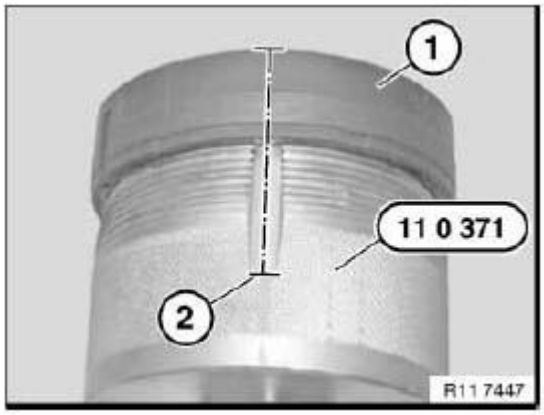

Fig. 114: Identifying Crankshaft Radial Seal At Cutting Line
Courtesy of BMW OF NORTH AMERICA, INC.

IMPORTANT: The following text describes installation and sealing between the engine block and crankshaft seal.
The engine block will not be leakproof at the outside of the crankshaft seal if you fail to comply with the individual work steps and the work sequence.

Installation:

Clean sealing surface (1) and degrease thoroughly in area of housing partition.

Apply a light coat of oil to running surface (2) of crankshaft seal.

Illustration N42.

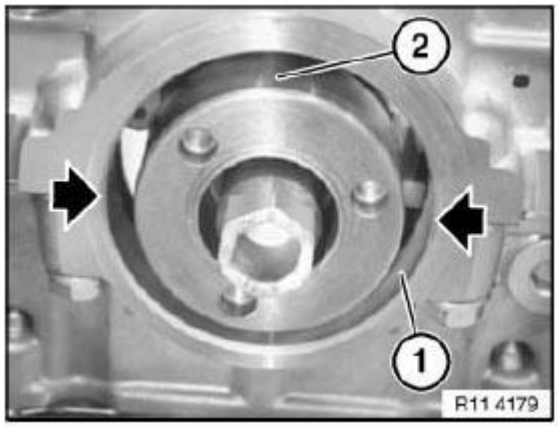

Fig. 115: Locating Sealing Surface
Courtesy of BMW OF NORTH AMERICA, INC.

Screw special tool 11 9 232 with screws (special tool 11 9 234) to crankshaft.

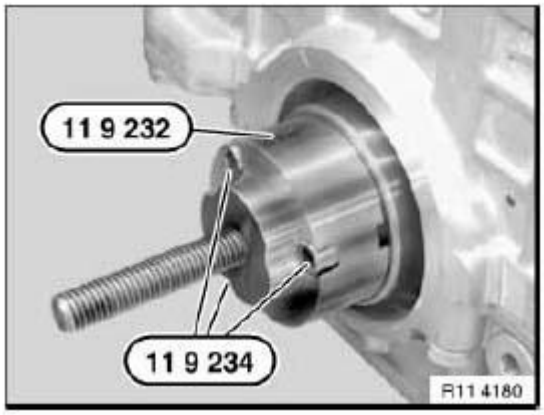

Fig. 116: Identifying Special Tools (11 9 232 And 11 9 234)
Courtesy of BMW OF NORTH AMERICA, INC.

NOTE: **Support sleeve (1) is supplied with crankshaft seal (2).**
When crankshaft seal (2) is installed, only support sleeve (1) may be used as a slip sleeve.
Crankshaft seal (2) has a groove on both left and right sides.

IMPORTANT: After installation, the grooves must be filled with sealing compound.

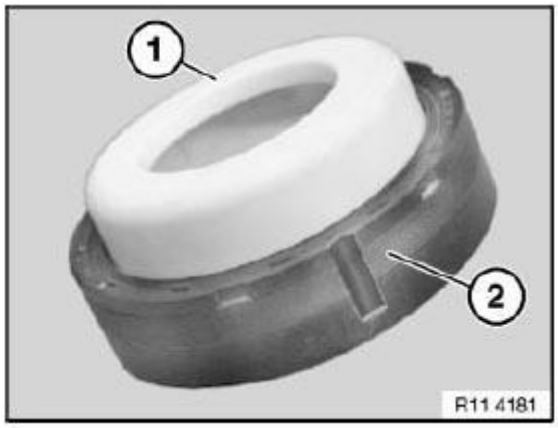

Fig. 117: Identifying Crankshaft Seal And Support Sleeve
Courtesy of BMW OF NORTH AMERICA, INC.

NOTE: **The required parts are available from the BMW Parts Service.**

Remove screw caps (1) from injector (2).

Screw on metering needle.

Insert piston for pressing out.

Injector (2) contains the sealing compound Loctite, manufacturer's number 128357.

Bottle (3) contains the primer Loctite, manufacturer's number 171000.

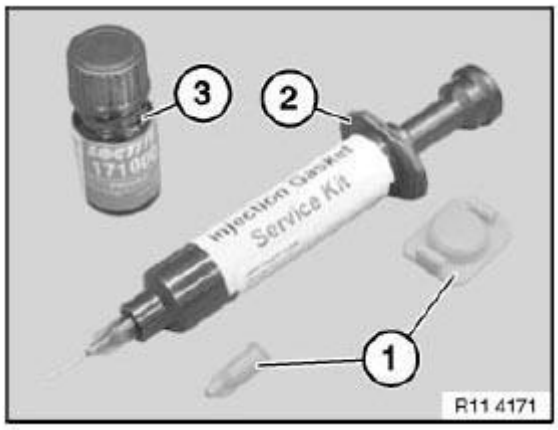

Fig. 118: Identifying Sealing Compound And Bottle Of Injector
Courtesy of BMW OF NORTH AMERICA, INC.

Push support sleeve (1) with radial shaft seal (2) onto special tool 11 9 232.

IMPORTANT: Support sleeve (1) remains on special tool 11 9 232, until crankshaft seal is drawn in.

Align groove (3) centrally to housing partition (4).

Coat both grooves (3) on crankshaft seal (2) with Loctite primer, manufacturer's number 171000, and expose to air for approx. one minute.

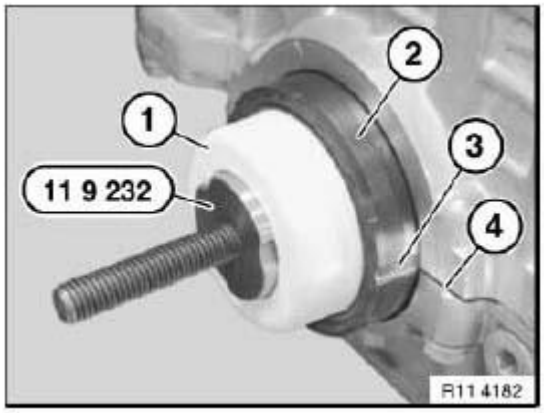

Fig. 119: Identifying Sleeve, Crankshaft Seal, Groove And Housing Partition And Special Tool (11 9 232)
Courtesy of BMW OF NORTH AMERICA, INC.

Draw in crankshaft seal with special tool 11 9 231 in conjunction with special tool 11 9 233 until flush.

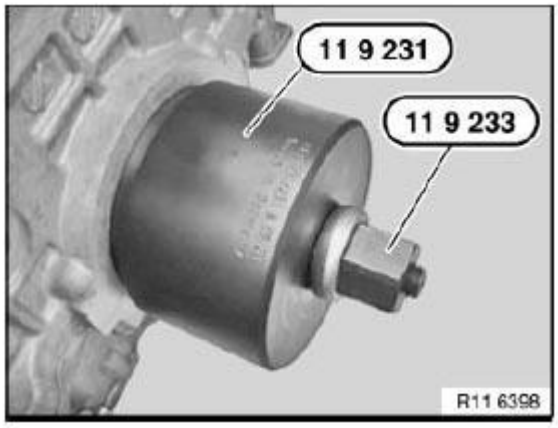

Fig. 120: Identifying Special Tools (11 9 231 And 11 9 233)
Courtesy of BMW OF NORTH AMERICA, INC.

Before filling with sealing compound:

Insert brush with Loctite primer, manufacturer's number 171000, as far as possible into grooves (1) on crankshaft seal and coat housing partition on engine block.

Illustration N42.

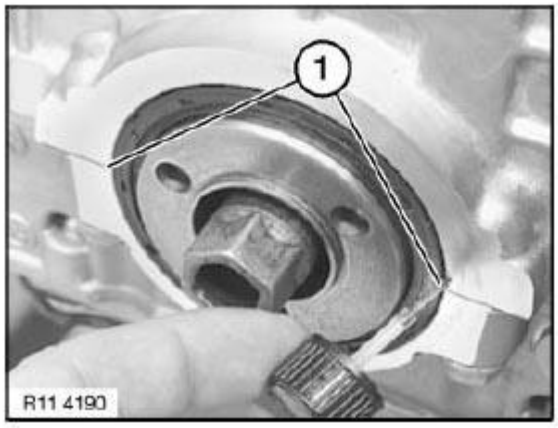

Fig. 121: Inserting Brush Into Groove
Courtesy of BMW OF NORTH AMERICA, INC.

Using injector (2), fill both grooves (3) flush with Loctite sealing compound, manufacturer's number 128357.

Illustration N42.

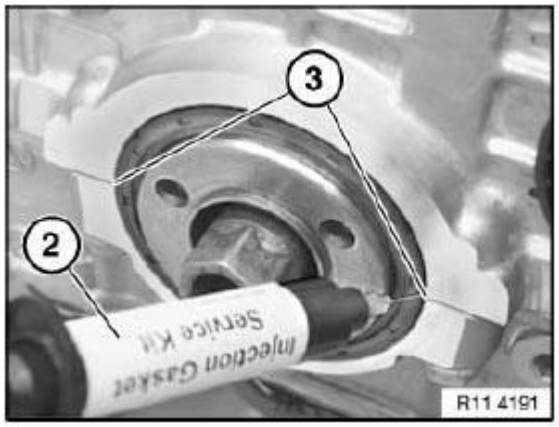

Fig. 122: Filling Grooves Flush With Sealant Using Injector
Courtesy of BMW OF NORTH AMERICA, INC.

NOTE: Loctite primer, manufacturer's number 171000, binds the Loctite sealing compound, manufacturer's number 128357, and prevents leakage.

Coat surface of sealing compound in both grooves (1) with Loctite primer, manufacturer's number 171000.

Illustration N42.

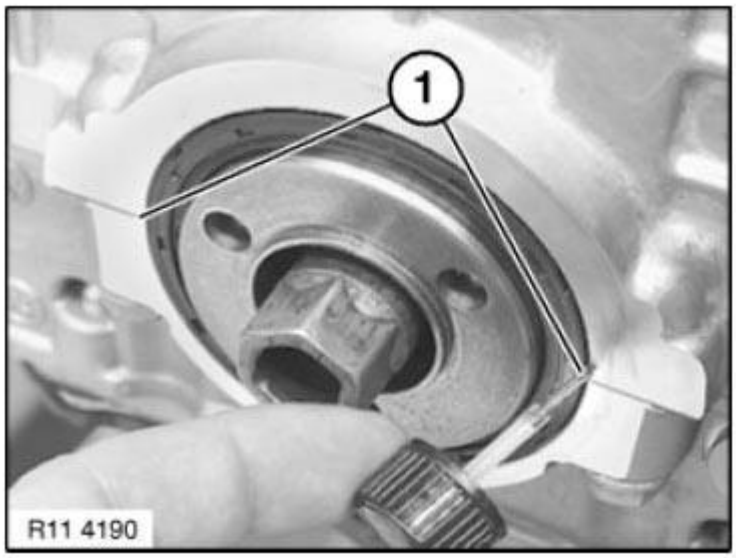

Fig. 123: Inserting Brush Into Groove
Courtesy of BMW OF NORTH AMERICA, INC.

Assemble engine.

11 14 005 REPLACING FRONT CRANKSHAFT SEAL (N52K)

Necessary preliminary tasks:

- Remove **Vibration Damper**

IMPORTANT: Do not release central bolt.

If the central bolt is released, the sprocket wheels of the timing chain and the oil pump will no longer be non-positively connected to the crankshaft. Intake and exhaust camshafts can turn in relation to crankshaft.

Risk of damage!

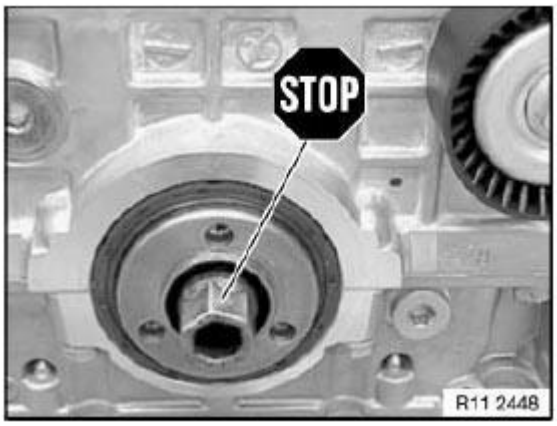

Fig. 124: Identifying Central Bolt
Courtesy of BMW OF NORTH AMERICA, INC.

Turn back special tool 11 9 222.

Push special tool 11 9 221 onto crankshaft.

IMPORTANT: When screws are tightened down (special tool 11 9 224), crankshaft seal is pressed inwards approx. 1 mm and thus slackened for subsequent removal.

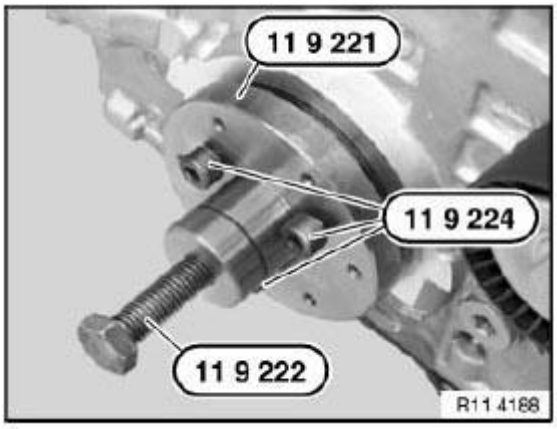

Fig. 125: Pushing Special Tool 11 9 221 Onto Crankshaft
Courtesy of BMW OF NORTH AMERICA, INC.

Insert screws (special tool 11 9 224) and tighten down to approx. 20 Nm.

Screw special tool 11 0 371 to 80 Nm into crankshaft seal.

Screw in spindle 11 0 372.

Release crankshaft seal from housing.

Repeat the operation several times if necessary.

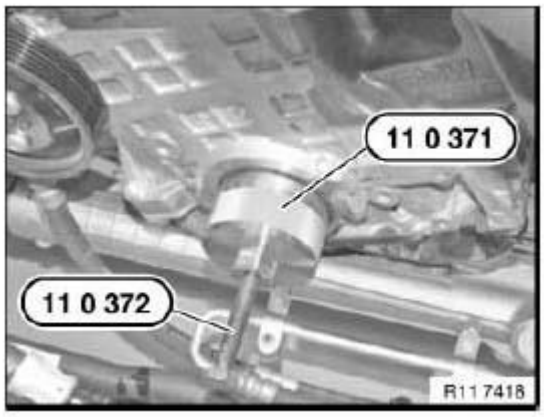

Fig. 126: Mounting Special Tool 11 0 371 Into Crankshaft Seal
Courtesy of BMW OF NORTH AMERICA, INC.

Carefully saw open crankshaft seal (1) at cutting line (2).

Remove crankshaft seal (1) from special tool 11 0 371.

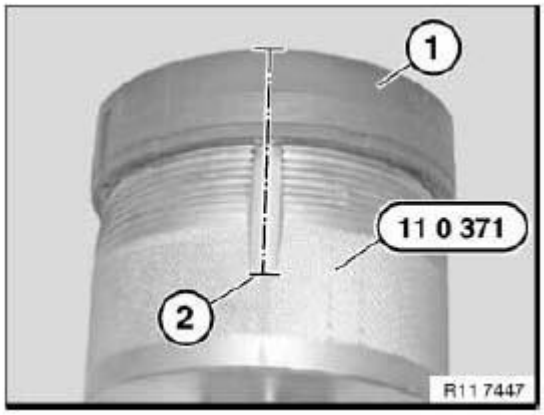

Fig. 127: Identifying Crankshaft Seal At Cutting Line
Courtesy of BMW OF NORTH AMERICA, INC.

IMPORTANT: The following text describes installation and sealing between the engine block and crankshaft seal.

The engine block will not be leakproof at the outside of the crankshaft seal if you fail to comply with the individual work steps and the work sequence.

Installation:

Clean sealing surface (1) and degrease thoroughly in area of housing partition.

Apply a light coat of oil to running surface (2) of crankshaft seal.

Illustration N42.

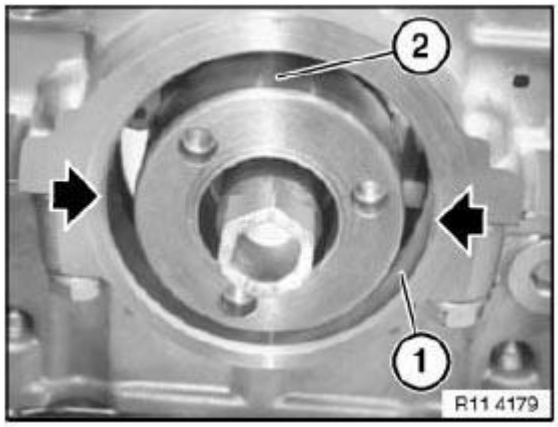

Fig. 128: Identifying Sealing Surface And Running Surface
Courtesy of BMW OF NORTH AMERICA, INC.

Screw special tool 11 9 232 with screws (special tool 11 9 234) to crankshaft.

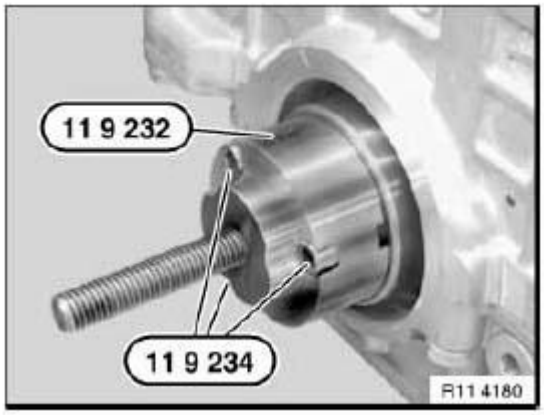

Fig. 129: Mounting Special Tool 11 9 232 With Screws To Crankshaft
Courtesy of BMW OF NORTH AMERICA, INC.

NOTE: Support sleeve (1) is supplied with crankshaft seal (2).

When crankshaft seal (2) is installed, only support sleeve (1) may be used as a slip sleeve.

Crankshaft seal (2) has a groove on both left and right sides.

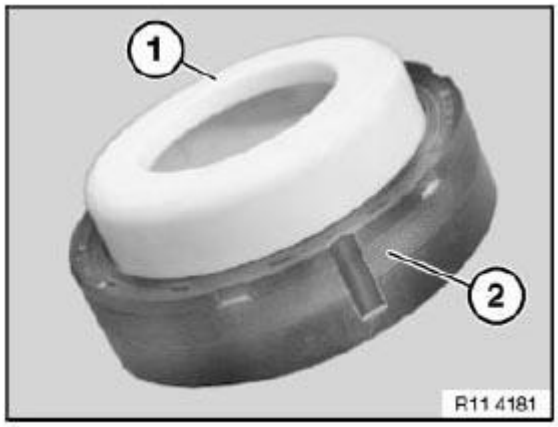

Fig. 130: Identifying Crankshaft Seal And Sleeve
Courtesy of BMW OF NORTH AMERICA, INC.

IMPORTANT: After installation, the grooves must be filled with sealing compound.

NOTE: The required parts are available from the BMW Parts Service (Electronic Parts Catalogue ETK).

Remove screw caps (1) from injector (2).

Screw on metering needle.

Insert piston for pressing out.

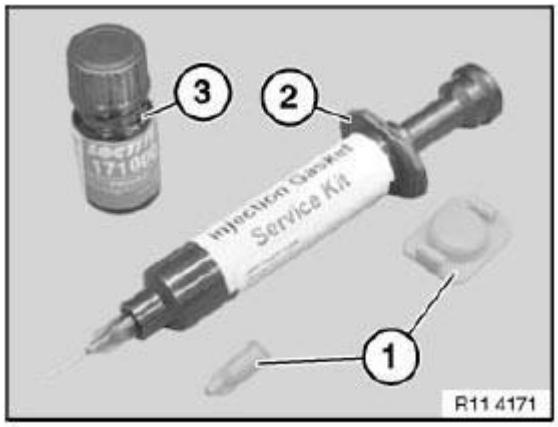

Fig. 131: Identifying Primer Loctite Bottle, Injector And Screw Caps
Courtesy of BMW OF NORTH AMERICA, INC.

Injector (2) contains the sealing compound Loctite, manufacturer's number 128357.

Bottle (3) contains the primer Loctite, manufacturer's number 171000.

Push support sleeve (1) with crankshaft seal (2) onto special tool 11 9 232.

IMPORTANT: Support sleeve (1) remains on special tool 11 9 232, until crankshaft seal is drawn in.

Align groove (3) centrally to housing partition (4).

Coat both grooves (3) on crankshaft seal (2) with Loctite primer, manufacturer's number 171000, and expose to air for approx. one minute.

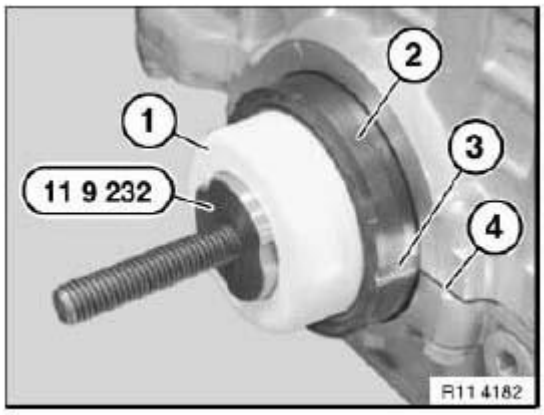

Fig. 132: Pushing Support Sleeve With Crankshaft Seal Onto Special Tool 11 9 232
Courtesy of BMW OF NORTH AMERICA, INC.

Draw in crankshaft seal with special tool 11 9 231 in conjunction with special tool 11 9 233 until flush.

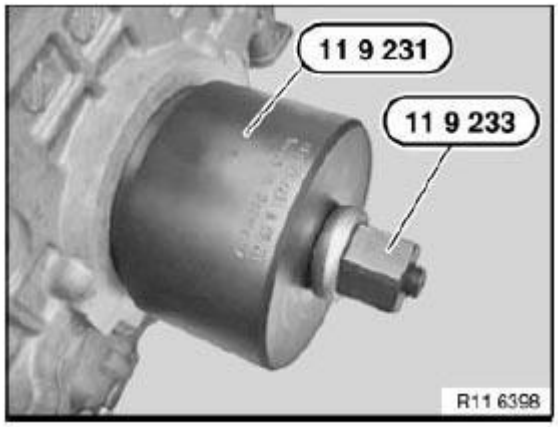

Fig. 133: Installing Crankshaft Seal With Special Tool 11 9 231 In Conjunction With Special Tool 11 9 233
Courtesy of BMW OF NORTH AMERICA, INC.

Before filling with sealing compound:

Moisten brush with Loctite primer, manufacturer's number 171000. Insert brush as far as possible into grooves (1) on crankshaft seal in order to coat housing partition on engine block.

Illustration N42.

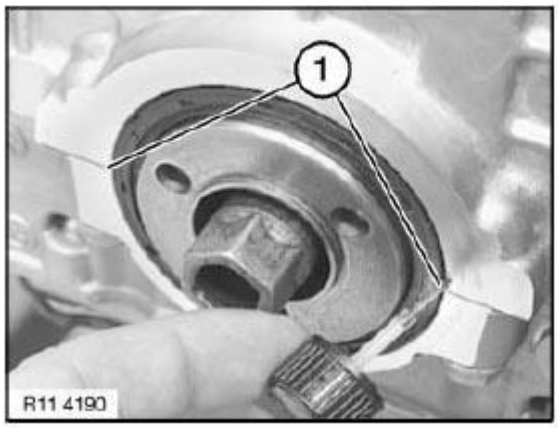

Fig. 134: Coating Housing Partition On Engine Block Using Brush Moistened With Loctite Primer
Courtesy of BMW OF NORTH AMERICA, INC.

Using injector (2), fill both grooves (3) flush with Loctite sealing compound, manufacturer's number 128357.

Illustration N42.

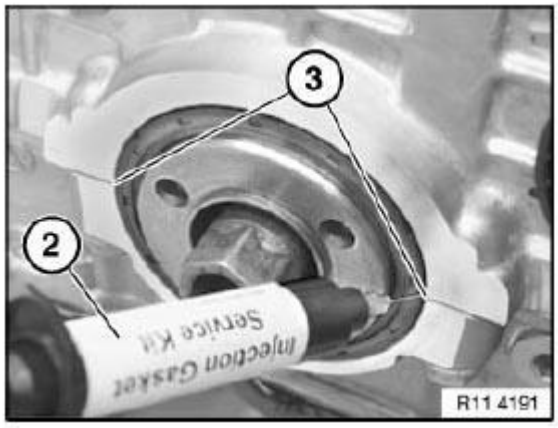

Fig. 135: Filling Both Grooves With Loctite Sealing Compound Using Injector
Courtesy of BMW OF NORTH AMERICA, INC.

NOTE: Loctite primer, manufacturer's number 171000, binds the Loctite sealing compound, manufacturer's number 128357, and prevents leakage.

Coat surface of sealing compound in both grooves (1) with Loctite primer, manufacturer's number 171000.

Illustration N42.

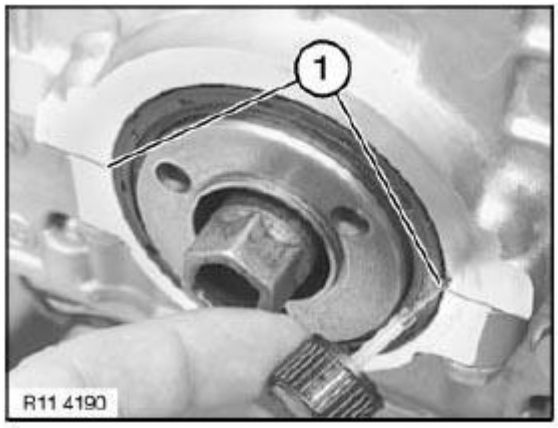

Fig. 136: Coating Surface Of Sealing Compound In Both Grooves With Loctite Primer
Courtesy of BMW OF NORTH AMERICA, INC.

Assemble engine.

11 14 010 REPLACING VACUUM PUMP SEALING COVER (N51)

Special tools required:

- 11 4 361
- 11 4 362
- 11 4 363
- 11 4 364
- 11 9 200

Necessary preliminary tasks:

- Remove **Fan Cowl**
- Remove alternator **Drive Belt**.
- Remove **Tensioner** for drive belt.

NOTE: The procedure is the same as for the crankshaft radial seal.

Expose removal openings on sealing cover.

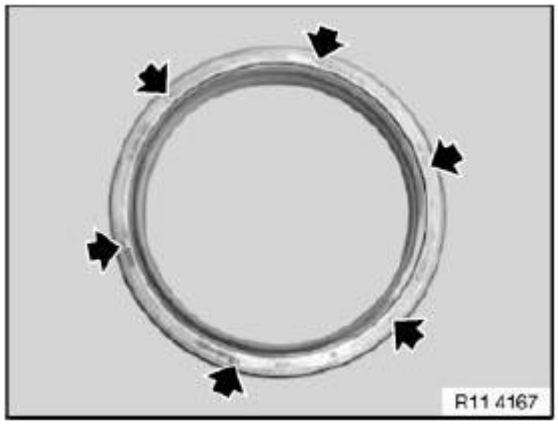

Fig. 137: Crankshaft Radial Seal
Courtesy of BMW OF NORTH AMERICA, INC.

Convert special tool **11 9 200** (see **Fig. 138**).

Screw special tool **11 9 200** onto sealing cover.

NOTE: Insert screws until flush only with special tool 11 9 200 .

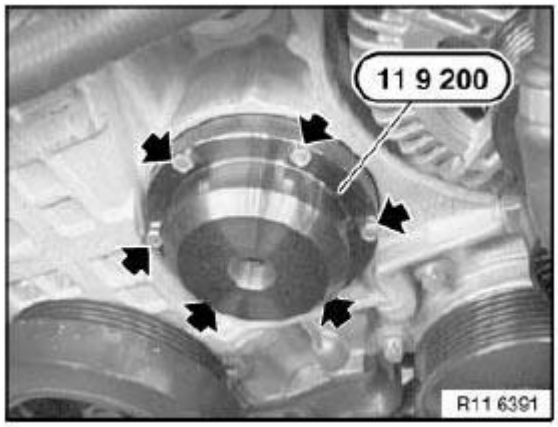

Fig. 138: Special Tool (11 9 200) And Screws
Courtesy of BMW OF NORTH AMERICA, INC.

Screw in special tool 11 4 362.

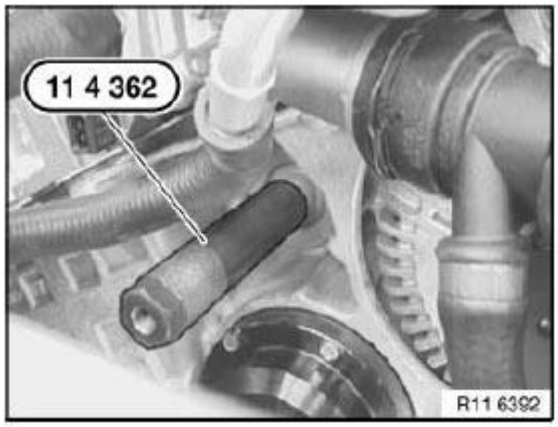

Fig. 139: Special Tool (11 4 362)
Courtesy of BMW OF NORTH AMERICA, INC.

Attach special tool 11 4 361 to bedplate construction screw connection (see arrow in **Fig. 140**).

Secure with knurled screw (1).

Screw special tool 11 4 364 into special tool **11 9 200** and screw out in direction of arrow.

NOTE: For purposes of clarity, the picture shows the alternator and power steering pump removed.

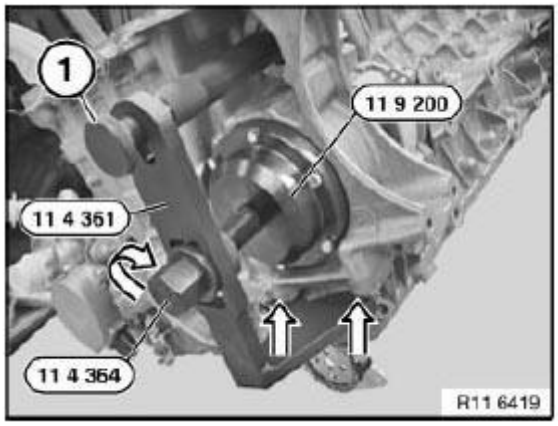

Fig. 140: Special Tools (11 9 200), (11 4 364), (11 4 361), Knurled Screw And Removal Direction
Courtesy of BMW OF NORTH AMERICA, INC.

Prepare new sealing cover (1) with special tool **11 9 200** **without** screws.

Screw in sealing cover with special tool 11 4 363 until it is flush.

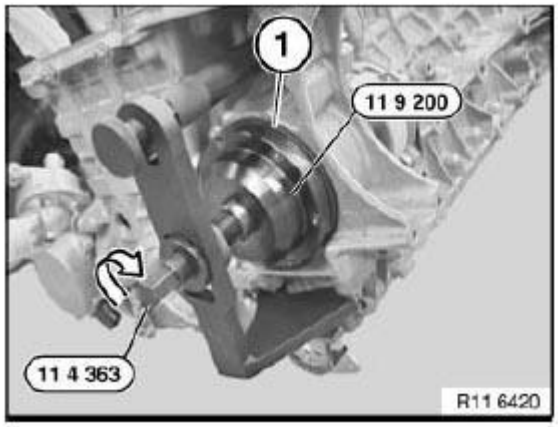

Fig. 141: Special Tools (11 9 200), (11 4 363), Sealing Cover And Removal Direction
Courtesy of BMW OF NORTH AMERICA, INC.

Assemble engine.

11 14 010 REPLACING SEALING COVER FOR VACUUM PUMP (N52K)

Necessary preliminary tasks:

- Remove **Fan Cowl** with electric fan
- Remove alternator **Drive Belt**
- Remove **Drive Belt Tensioner**

NOTE: For purposes of clarity, graphics show alternator and power steering pump removed.

Secure special tools 11 8 535, 11 8 531, 11 8 537 and special tool 11 9 266.

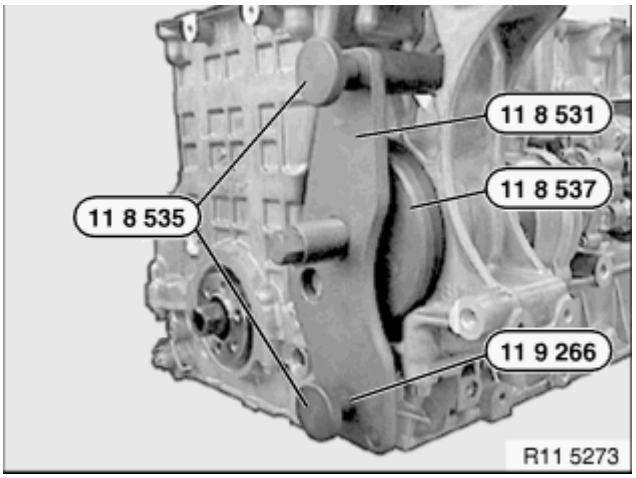

Fig. 142: Secure special tools 11 8 535, 11 8 531, 11 8 537 and special tool 11 9 266
Courtesy of BMW OF NORTH AMERICA, INC.

Position special tool 11 8 537 by hand on sealing cap. Screw in special tool 11 8 534.

NOTE: The sealing cap is pressed out diagonally during this work step.

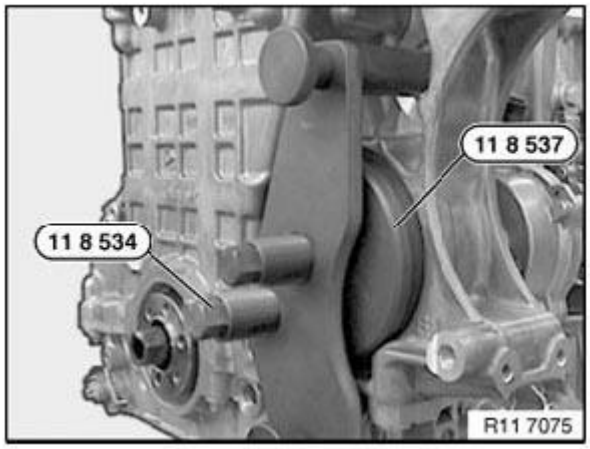

Fig. 143: Identifying Special Tools (11 8 537, 11 8 534)
Courtesy of BMW OF NORTH AMERICA, INC.

Screw in new sealing cap (1) with special tools **11 8 532 and 11 8 533** until flush with crankcase upper part.

Assemble engine.

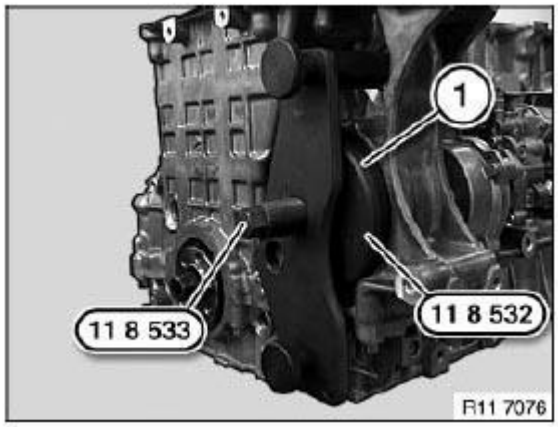

Fig. 144: Identifying Special Tool (11 8 533) And (11 8 532)
Courtesy of BMW OF NORTH AMERICA, INC.

11 14 151 REPLACING CRANKSHAFT SEAL (N52K) (UP TO 12/31/08)

Necessary preliminary tasks

- Remove **AUTOMATIC TRANSMISSION** or **MANUAL TRANSMISSION**
- Remove **FLYWHEEL**

NOTE: **Crankshaft radial seal has six removal openings for removal with special tool 11 9 200 .**

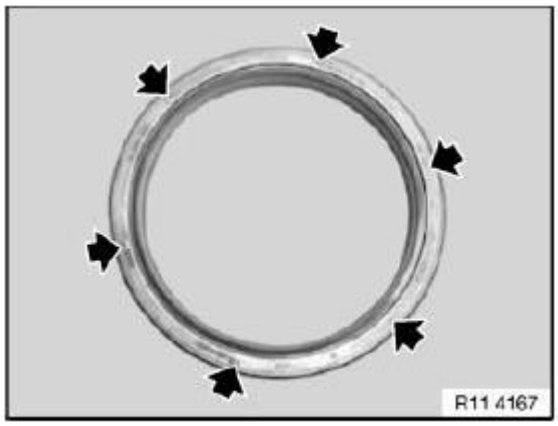

Fig. 145: Locating Crankshaft Radial Seal Removal Openings
Courtesy of BMW OF NORTH AMERICA, INC.

NOTE: **If necessary, remove rubber coating (1) on top side of crankshaft radial seal and expose a removal opening (2) (see illustration).**

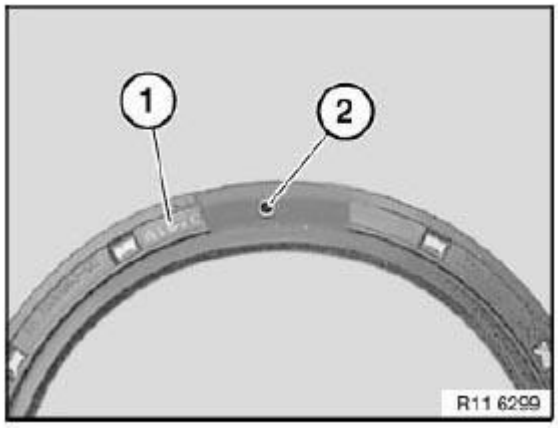

Fig. 146: Identifying Rubber Coating And Removal Opening
Courtesy of BMW OF NORTH AMERICA, INC.

Fit special tool **11 9 200** . Insert sheet metal screws into removal opening of crankshaft radial seal and fasten without play (do **not** overtighten sheet metal screws).

Screw in spindle (1) slowly and carefully and detach crankshaft radial seal.

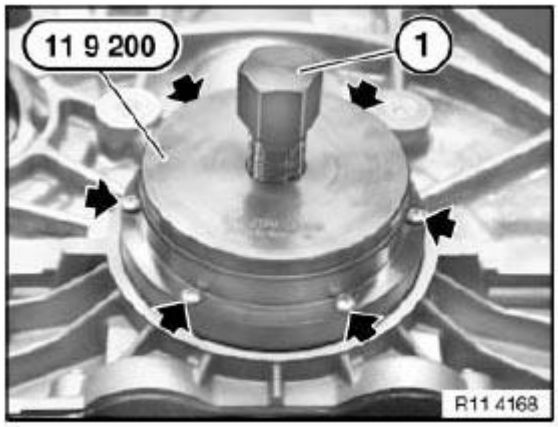

Fig. 147: Fitting Special Tool (11 9 200)
Courtesy of BMW OF NORTH AMERICA, INC.

Installation:

Clean sealing surface (1) and degrease thoroughly in area of housing partition.

Apply a light coat of oil to running surface (2) of crankshaft radial seal.

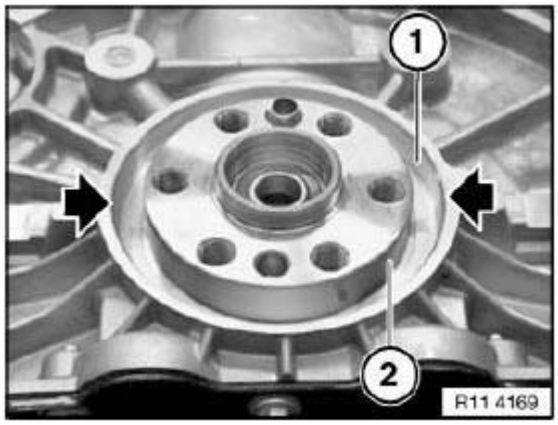

Fig. 148: Locating Oil Running Surface
Courtesy of BMW OF NORTH AMERICA, INC.

NOTE: Support bushing (4) is contained in scope of delivery of crankshaft radial seal (1).

When crankshaft radial seal (1) is installed, only support bushing (4) may be used as a slip bushing.

Crankshaft radial seal (1) has a groove (2) on both left and right sides.

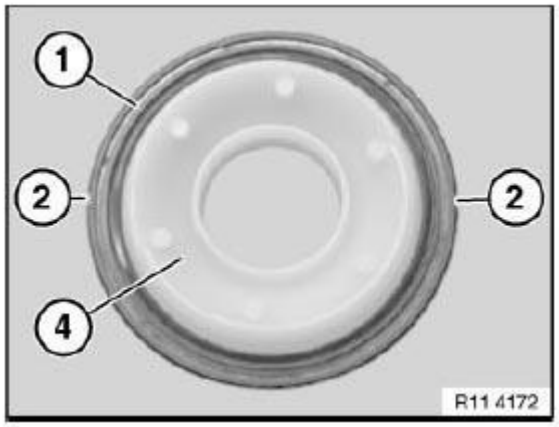

Fig. 149: Identifying Radial Seal, Bushings And Groove
Courtesy of BMW OF NORTH AMERICA, INC.

IMPORTANT: After installation, grooves (2) must be filled with sealing compound.

IMPORTANT: The following text describes installation and sealing between the engine block and crankshaft radial seal.
The engine block will not be leakproof at the outside of the crankshaft radial seal if you fail to comply with the individual work steps and the work sequence.

NOTE: The required parts are available from the BMW Parts Department (Electronic Parts Catalogue).

Remove screw caps (1) from injector (2).

Screw on metering needle.

Insert piston for pressing out.

Syringe (2) contains the sealing compound Loctite, manufacturer's number 128357.

Bottle (3) contains the primer Loctite, manufacturer's number 171000.

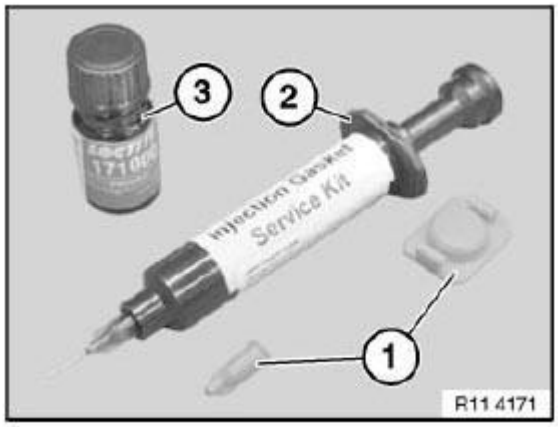

Fig. 150: Identifying Primer Loctite Bottle, Injector And Screw Caps
Courtesy of BMW OF NORTH AMERICA, INC.

Installation:

Fit support bushing (4) with crankshaft radial seal (1) on crankshaft.

Align groove (2) centrally to housing partition (3).

Coat both grooves (2) on crankshaft radial seal (1) with Loctite primer, manufacturer's number 171000, and expose to air for approx. one minute.

Push crankshaft radial seal (1) by hand as far as possible onto running surface.

Carefully remove support bush (4).

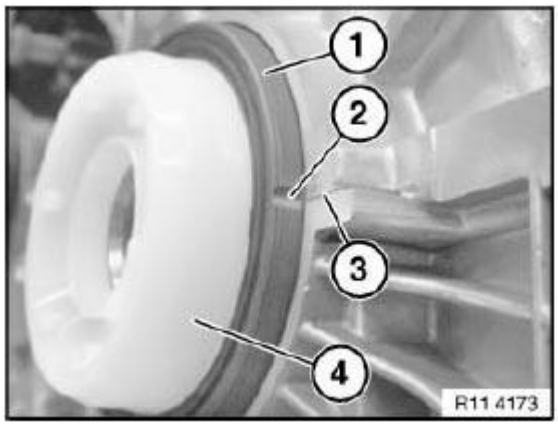

Fig. 151: Identifying Radial Seal, Groove Housing Partition And Bush
Courtesy of BMW OF NORTH AMERICA, INC.

NOTE: Spacer ring (1) is supplied with radial shaft seal.

Screw special tool **11 9 182** with screws (special tool **11 9 184**) to the crankshaft.

Fit spacer ring (1) on pre-assembled radial shaft seal.

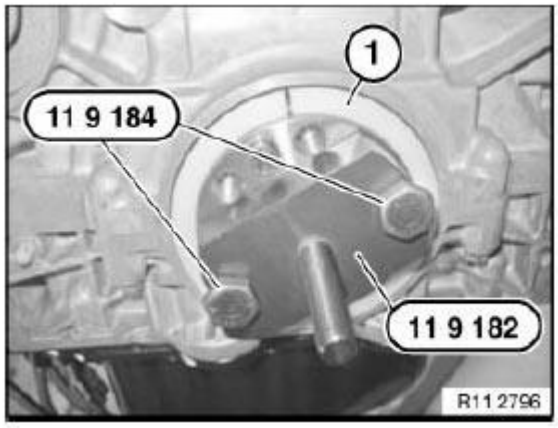

Fig. 152: Mounting Special Tool 11 9 182 With Screws To Crankshaft
Courtesy of BMW OF NORTH AMERICA, INC.

Draw in radial shaft seal and spacer ring with special tool **11 9 181** in conjunction with special tool **11 9 183** .

Then remove spacer ring again.

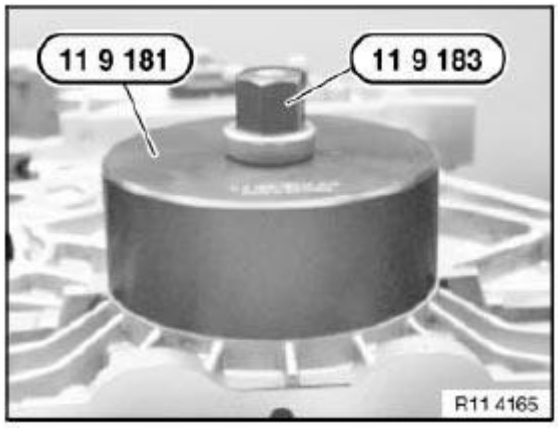

Fig. 153: Installing Radial Shaft Seal And Spacer Ring Using Special Tools
Courtesy of BMW OF NORTH AMERICA, INC.

Before filling with sealing compound:

Moisten brush with Loctite primer, manufacturer's number 171000. Insert brush as far as possible into grooves (1) on crankshaft radial seal in order to coat housing partition on engine block.

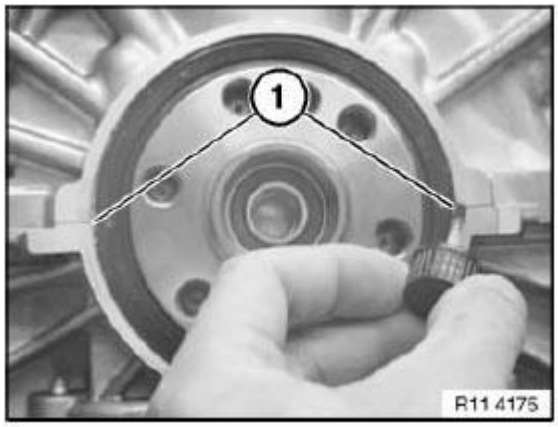

Fig. 154: Inserting Brush Into Grooves
Courtesy of BMW OF NORTH AMERICA, INC.

Using syringe, fill both grooves (1) flush with Loctite sealing compound, manufacturer's number 128357.

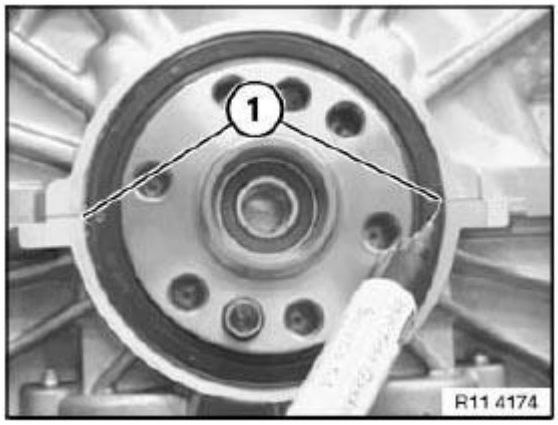

Fig. 155: Filing Grooves With Loctite Sealing Compound Using Injector
Courtesy of BMW OF NORTH AMERICA, INC.

NOTE: Loctite primer, manufacturer's number 171000, binds the Loctite sealing compound, manufacturer's number 128357, and prevents leakage.

Coat surface of sealing compound in both grooves (1) with Loctite primer, manufacturer's number 171000.

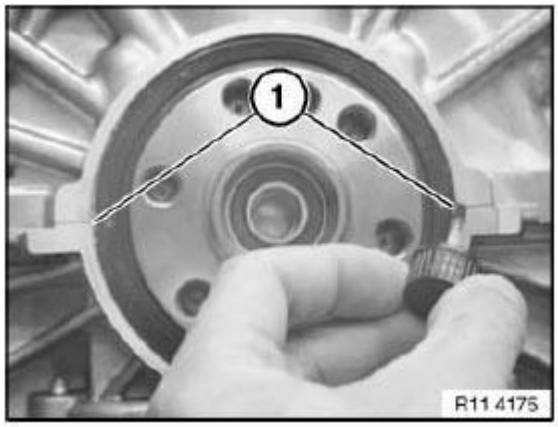

Fig. 156: Coating Sealing Compound Surface Using Loctite Primer
Courtesy of BMW OF NORTH AMERICA, INC.

Assemble engine.

11 14 151 REPLACING CRANKSHAFT SEAL (N52K) ON TRANSMISSION SIDE (FROM 1/1/09)

Necessary preliminary tasks:

- Remove **FLYWHEEL**

IMPORTANT: Magnet wheel (1) is magnetic.

Keep magnet wheel (1) in a plastic bag away from metallic debris.

Remove magnet wheel (1) from crankshaft.

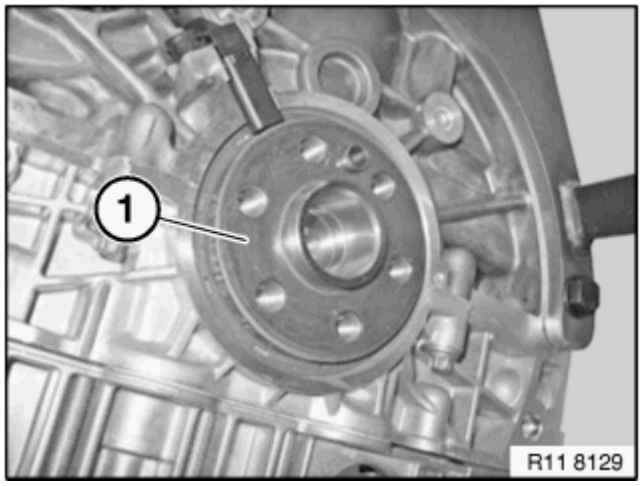

Fig. 157: Identifying Magnet Wheel
Courtesy of BMW OF NORTH AMERICA, INC.

Release screw on pulse sensor (1).

Slide **PULSE SENSOR** (2) upwards.

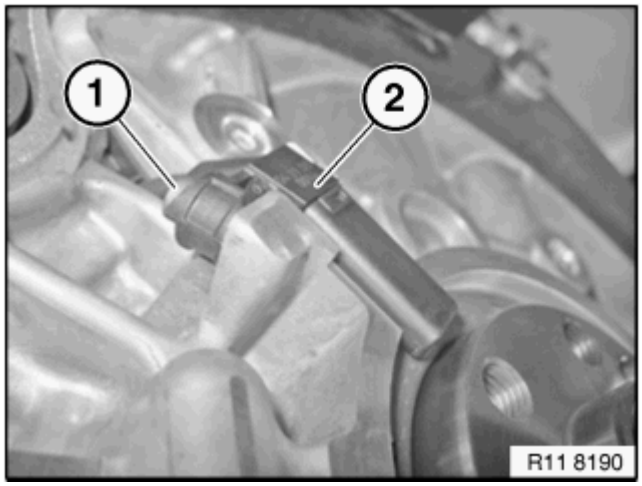

Fig. 158: Identifying Pulse Sensor And Screw
Courtesy of BMW OF NORTH AMERICA, INC.

IMPORTANT: Drill size maximum 2.5 millimeters.

Remove shavings immediately.

Drill a hole with a drill (1) in the radial shaft seal (see arrow).

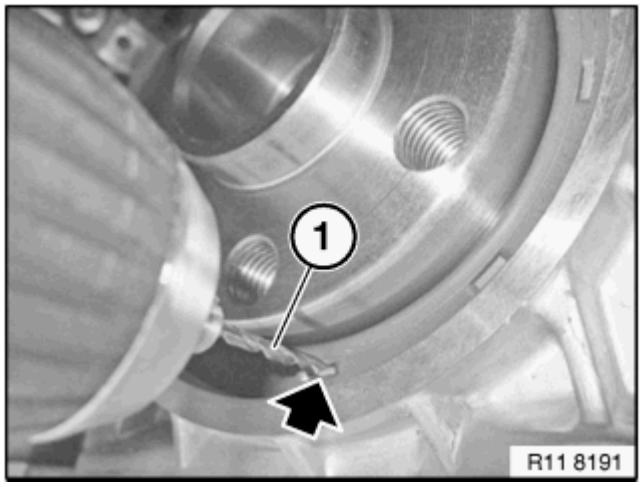

Fig. 159: Drilling Hole In Radial Shaft Seal Using Drill
Courtesy of BMW OF NORTH AMERICA, INC.

Immediately carefully remove shavings on the radial shaft seal (1).

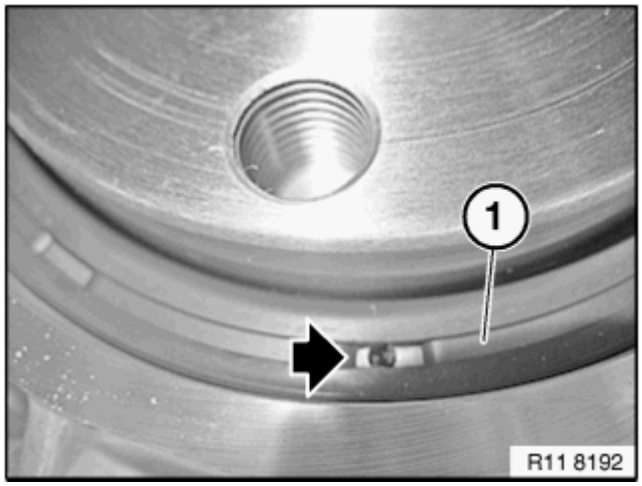

Fig. 160: Identifying Radial Shaft Seal
Courtesy of BMW OF NORTH AMERICA, INC.

Screw in special tool **23 0 490** in direction of arrow.

Drive out radial shaft seal with impact weight in direction of arrow.

IMPORTANT: Immediately carefully remove residual shavings.

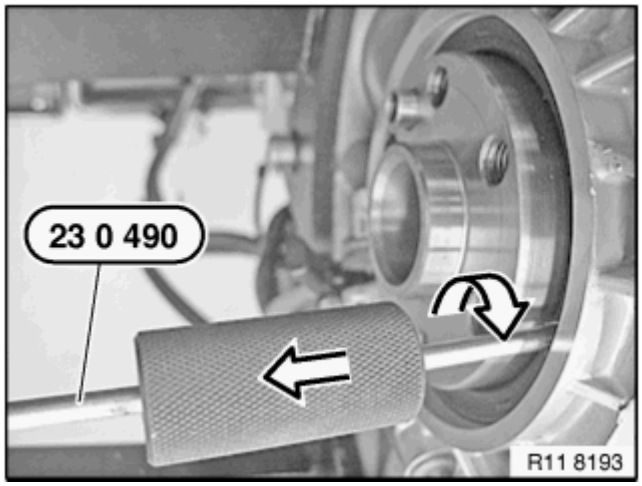

Fig. 161: Screwing In Special Tool 23 0 490 In Clockwise Direction
Courtesy of BMW OF NORTH AMERICA, INC.

Prepare radial shaft seal (1) on special tool 11 8 220.

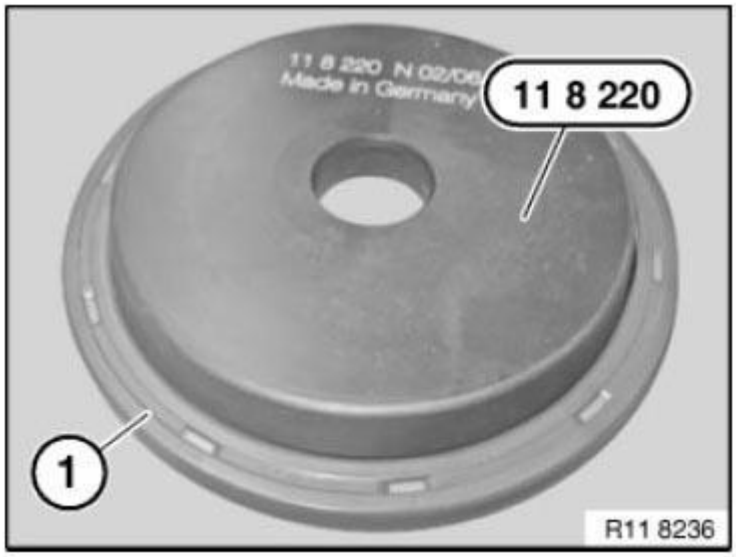

Fig. 162: Identifying Radial Shaft Seal On Special Tool 11 8 220
Courtesy of BMW OF NORTH AMERICA, INC.

Position the radial shaft seal (1) with special tool 11 8 220 on the crankshaft.

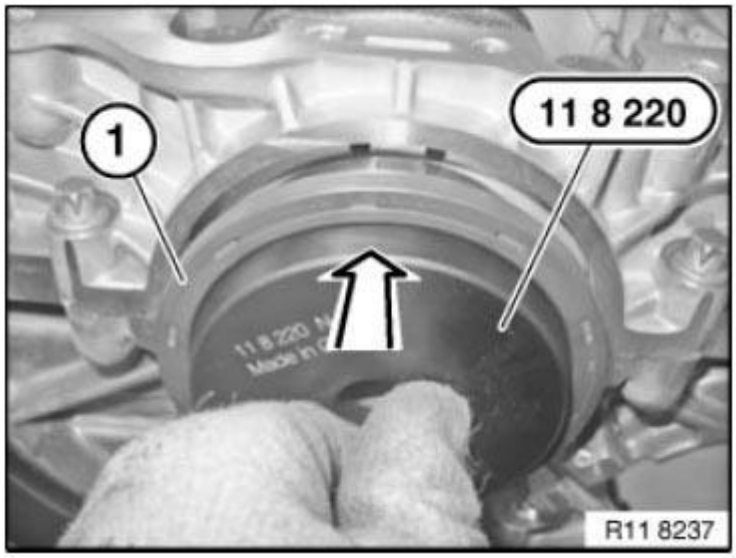

Fig. 163: Positioning Radial Shaft Seal Using Special Tool 11 8 220 On Crankshaft
Courtesy of BMW OF NORTH AMERICA, INC.

Brush radial shaft seal (1) over the special tool 11 8 220.

Move radial shaft seal (1) parallel up against the crankcase.

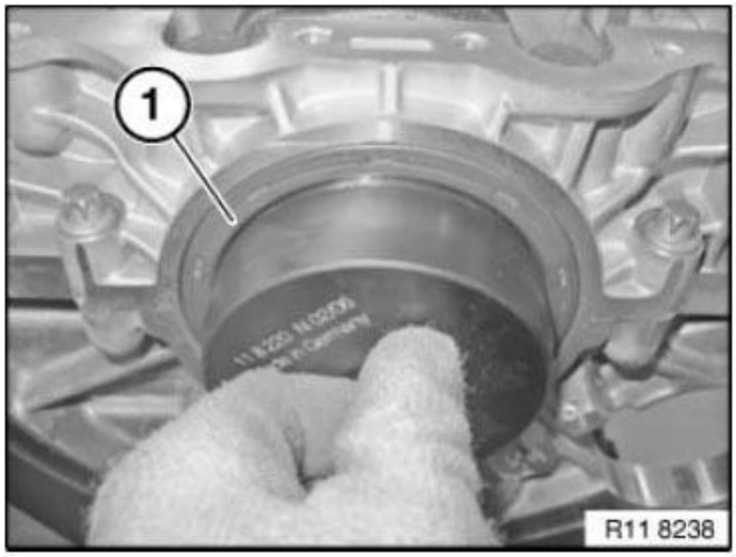

Fig. 164: Moving Radial Shaft Seal Parallel Up Against Crankcase
Courtesy of BMW OF NORTH AMERICA, INC.

Fasten special tool **11 9 182** (synchronizing key) with special tool **11 9 184** (screw) on the crankshaft.

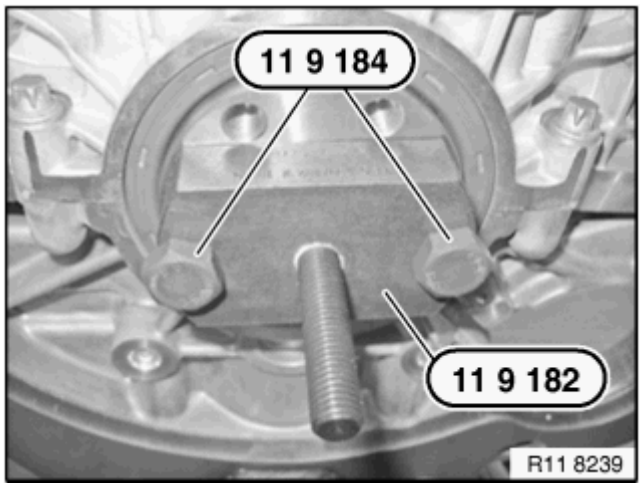

Fig. 165: Fastening Special Tool 11 9 182 With Special Tool 11 9 184 On Crankshaft
Courtesy of BMW OF NORTH AMERICA, INC.

Installation note:

Prepare special tool **11 9 181** (bush) for installation.

Connect special tool **11 9 185** (ring) onto special tool **11 9 181** (bush).

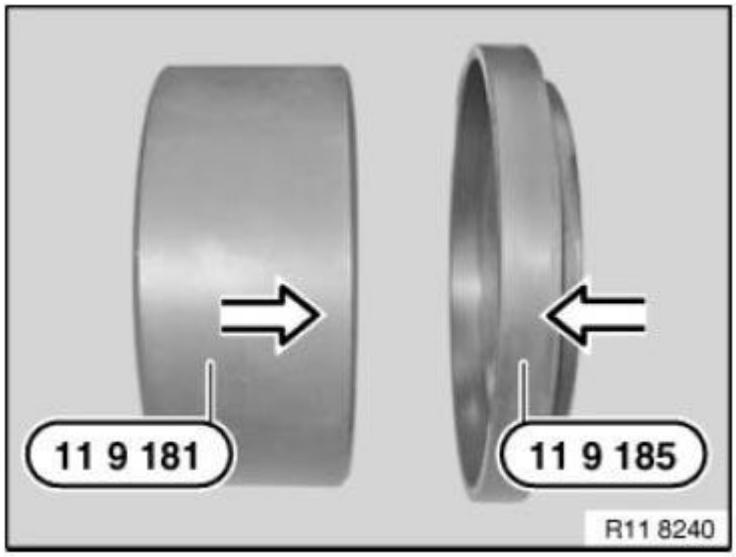

Fig. 166: Connecting Special Tool 11 9 185 Onto Special Tool 11 8 181
Courtesy of BMW OF NORTH AMERICA, INC.

Pull on radial shaft seal with special tools **11 9 181** (bush) and **11 9 185** (ring) in combination with special tool **11 9 183** (nut).

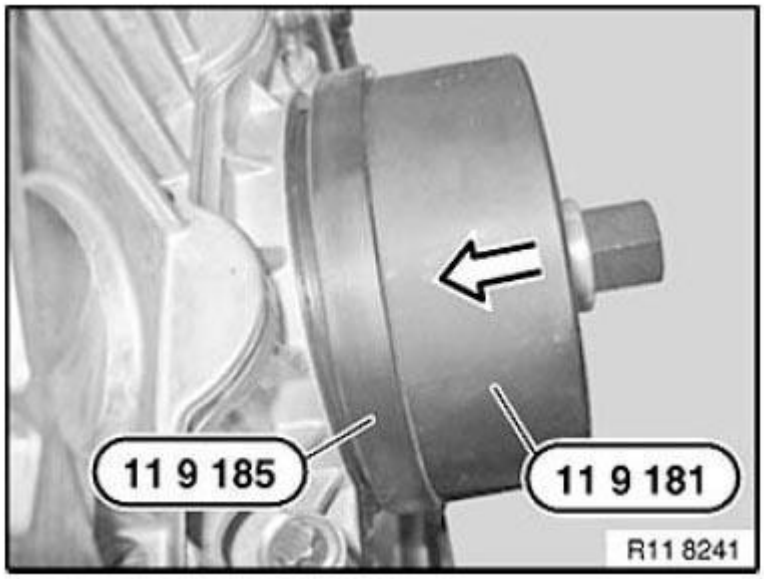

Fig. 167: Installing Rear Crankshaft Seal Using Tool 119 180/181
Courtesy of BMW OF NORTH AMERICA, INC.

Screw on radial shaft seal with special tool **11 9 183** (nut) to limit position.

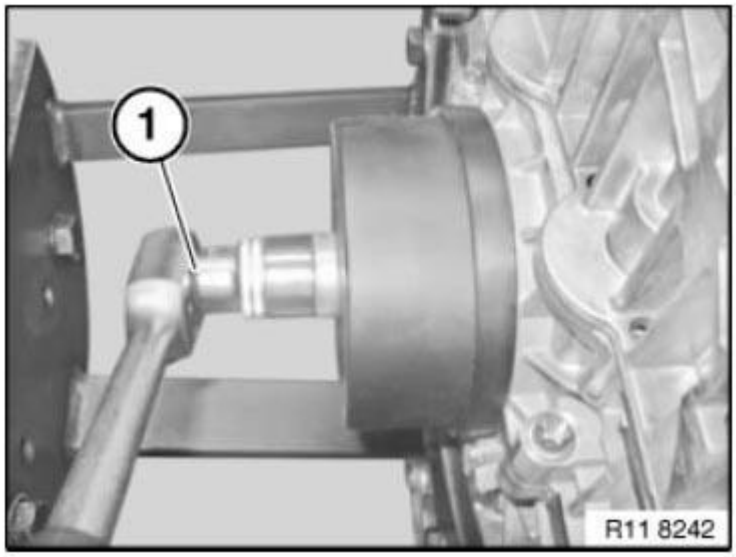

Fig. 168: Screwing On Radial Shaft Seal Using Special Tool 11 9 183
Courtesy of BMW OF NORTH AMERICA, INC.

Remove all special tools.

Assemble engine.

11 14 151 REPLACING CRANKSHAFT SEAL ON TRANSMISSION SIDE (N51) (UP TO 12/31/08)

Special tools required:

- 11 9 181
- 11 9 182
- 11 9 183
- 11 9 184
- 11 9 200

Necessary preliminary tasks:

- Remove **transmission** . See **MANUAL TRANSMISSION** or **AUTOMATIC TRANSMISSION** .
- Remove **Flywheel**

NOTE: Crankshaft radial seal has six removal openings for removal with special tool 11 9 200 .

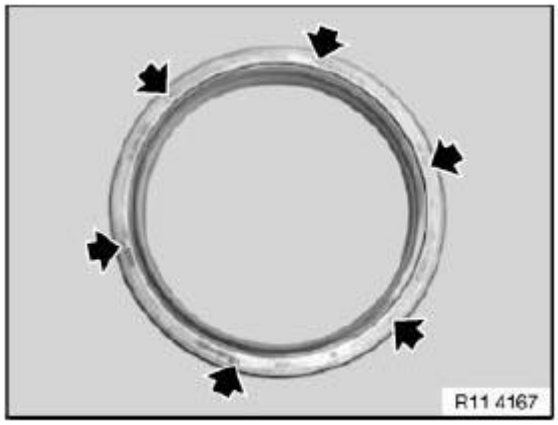

Fig. 169: Crankshaft Radial Seal
Courtesy of BMW OF NORTH AMERICA, INC.

NOTE: **If necessary, remove rubber coating (1) on top side of crankshaft radial seal and expose a removal opening (2).**

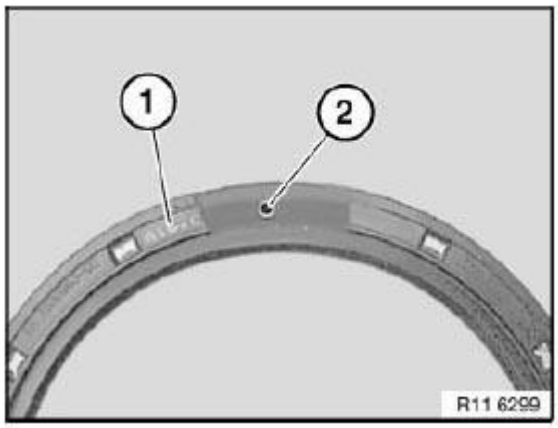

Fig. 170: Rubber Coating And Removal Opening
Courtesy of BMW OF NORTH AMERICA, INC.

Fit special tool **11 9 200** . Insert sheet metal screws into removal opening of crankshaft radial seal and fasten without play (do **not** overtighten sheet metal screws).

Screw in spindle (1) slowly and carefully and detach crankshaft radial seal.

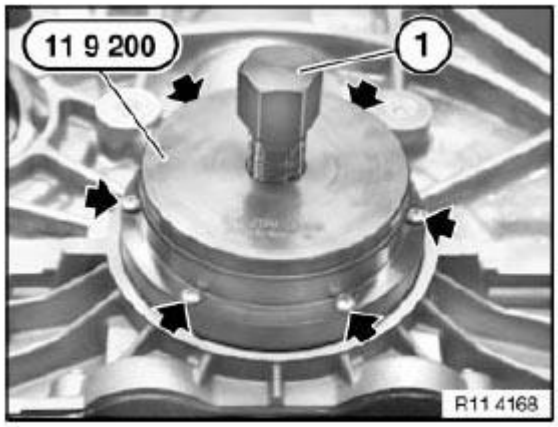

Fig. 171: Special Tool (11 9 200) And Spindle
Courtesy of BMW OF NORTH AMERICA, INC.

Installation:

Clean sealing surface (1) and degrease thoroughly in area of housing partition.

Apply a light coat of oil to running surface (2) of crankshaft radial seal.

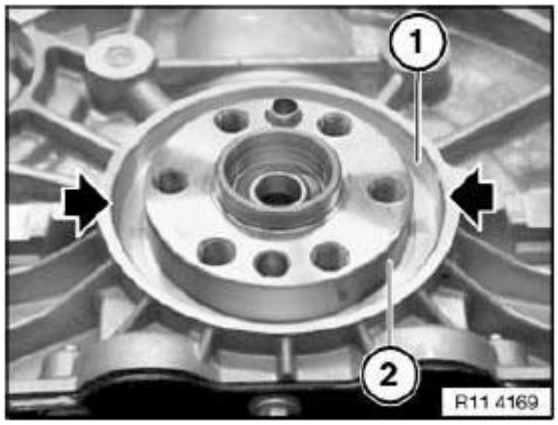

Fig. 172: Crankshaft Radial Seal Running Surface And Sealing Surface
Courtesy of BMW OF NORTH AMERICA, INC.

NOTE: **Support bushing (4) is contained in scope of delivery of crankshaft radial seal (1).**

When crankshaft radial seal (1) is installed, only support bushing (4) may be used as a slip bushing.

Crankshaft radial seal (1) has a groove (2) on both left and right sides.

IMPORTANT: After installation, grooves (2) must be filled with sealing compound.

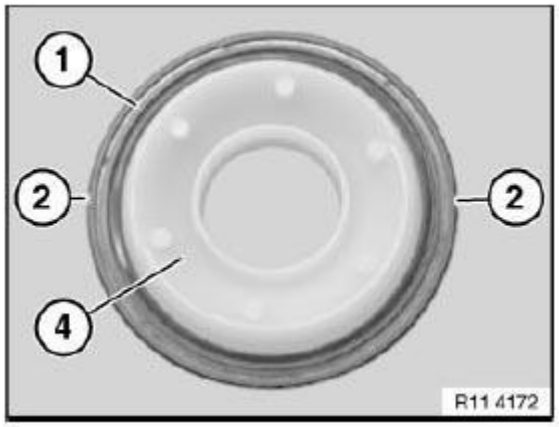

Fig. 173: Crankshaft Radial Seal, Support Bushing And Groove
Courtesy of BMW OF NORTH AMERICA, INC.

IMPORTANT: The seal between the engine block and radial seal is described below.

The engine block will not be leakproof at the outside of the radial seal if you fail to comply with the individual work steps and the work sequence

Remove screw caps (1) from injector (2).

Screw on metering needle.

Insert piston for pressing out.

Injector (2) contains the sealing compound Loctite, manufacturer's number 128357.

Bottle (3) contains the primer Loctite, manufacturer's number 171000.

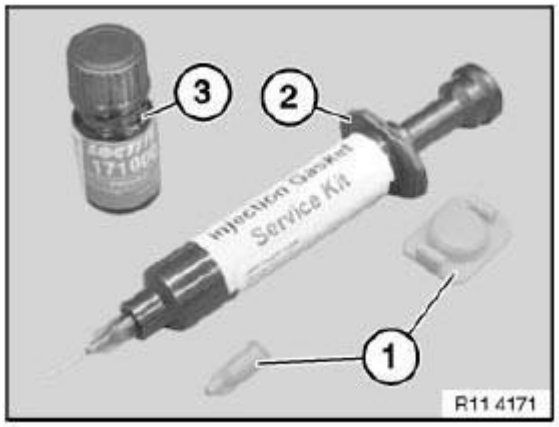

Fig. 174: Screw Caps, Bottle And Injector
Courtesy of BMW OF NORTH AMERICA, INC.

Installation:

Fit support bushing (4) with crankshaft radial seal (1) on crankshaft.

Align groove (2) centrally to housing partition (3).

Coat both grooves (2) on crankshaft radial seal (1) with Loctite primer, manufacturer's number 171000, and expose to air for approx. one minute.

Push crankshaft radial seal (1) by hand as far as possible onto running surface.

Carefully remove support sleeve (4).

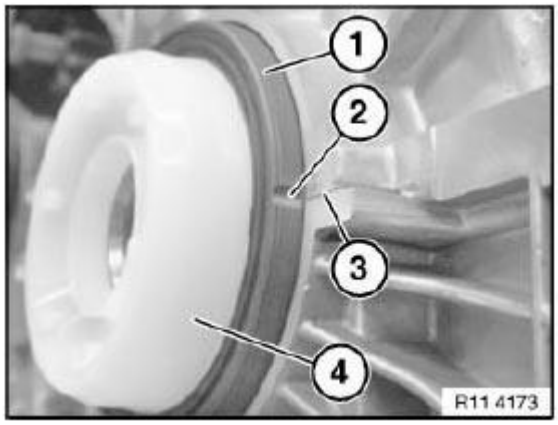

Fig. 175: Crankshaft Radial Seal, Bushing, Groove And Support Sleeve
Courtesy of BMW OF NORTH AMERICA, INC.

NOTE: **Spacer ring (1) is supplied with radial shaft seal.**

Screw special tool 11 9 182 with screws (special tool 11 9 184) to crankshaft.

Fit spacer ring (1) on pre-assembled radial shaft seal.

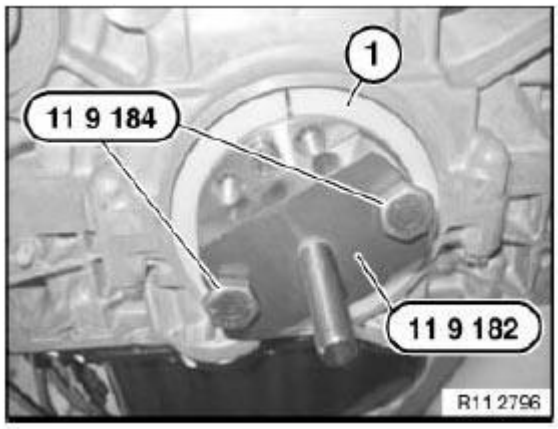

Fig. 176: Special Tools (11 9 182), (11 9 184) And Spacer Ring
Courtesy of BMW OF NORTH AMERICA, INC.

Draw in radial shaft seal and spacer ring with special tool **11 9 181** in conjunction with special tool **11 9 183** .

Then remove spacer ring again.

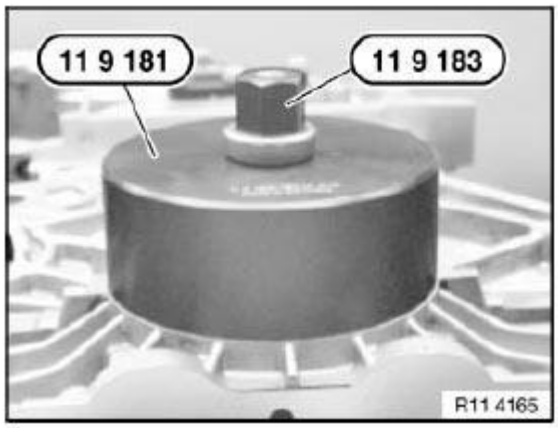

Fig. 177: Special Tools (11 9 181) And (11 9 183)
Courtesy of BMW OF NORTH AMERICA, INC.

Before filling with sealing compound:

Moisten brush with Loctite primer, manufacturer's number 171000. Insert brush as far as possible into grooves (1) on crankshaft radial seal in order to coat housing partition on engine block.

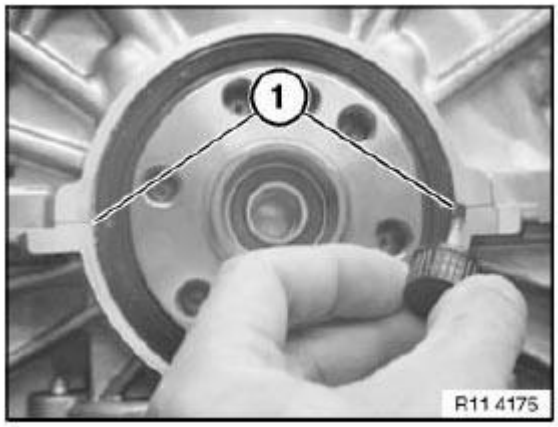

Fig. 178: Brushing Sealing Compound Into Grooves On Crankshaft Radial Seal
Courtesy of BMW OF NORTH AMERICA, INC.

Fill both grooves (1) flush with Loctite sealing compound, manufacturer's number 128357.

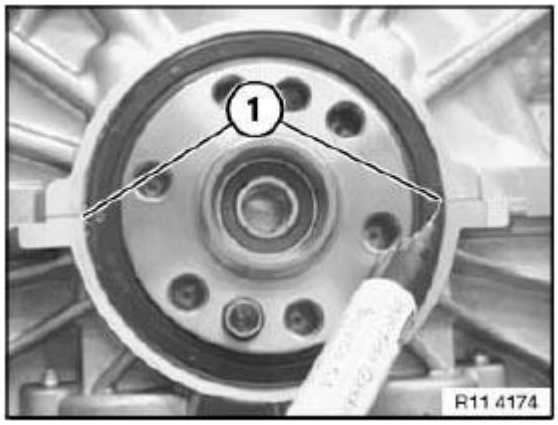

Fig. 179: Injecting Sealing Compound Into Grooves On Crankshaft Radial Seal
Courtesy of BMW OF NORTH AMERICA, INC.

Coat surface of sealing compound in both grooves (1) with Loctite primer, manufacturer's number 171000.

NOTE: Loctite primer, manufacturer's number 171000, binds the Loctite sealing compound, manufacturer's number 128357, and prevents leakage.

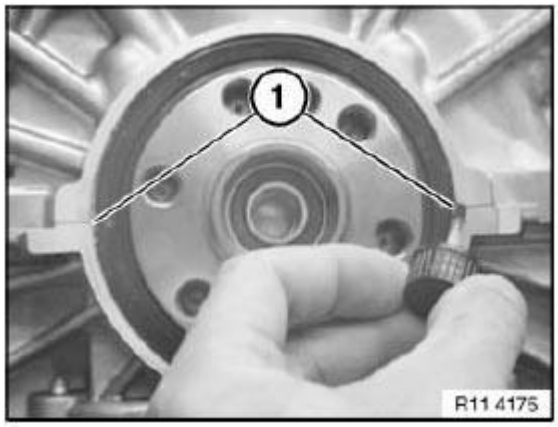

Fig. 180: Brushing Sealing Compound Into Grooves On Crankshaft Radial Seal
Courtesy of BMW OF NORTH AMERICA, INC.

Assemble engine.

11 14 151 REPLACING RADIAL CRANKSHAFT SEAL ON TRANSMISSION SIDE (N51) (FROM 1/1/09)

Necessary preliminary tasks:

- Remove **FLYWHEEL**

IMPORTANT: Magnet wheel (1) is magnetic.

Keep magnet wheel (1) in a plastic bag away from metallic debris.

Remove magnet wheel (1) from crankshaft.

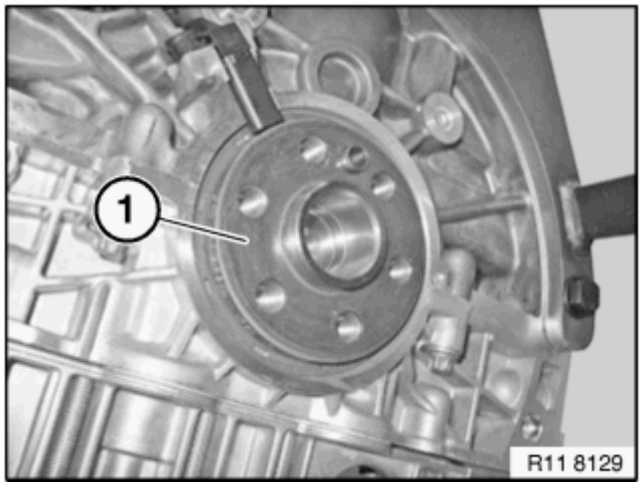

Fig. 181: Identifying Magnet Wheel
Courtesy of BMW OF NORTH AMERICA, INC.

Release screw on pulse sensor (1).

Slide **PULSE SENSOR** (2) upwards.

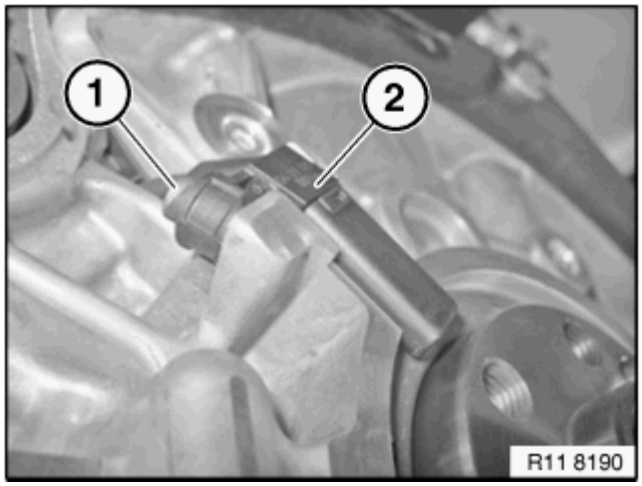

Fig. 182: Identifying Pulse Sensor And Screw
Courtesy of BMW OF NORTH AMERICA, INC.

IMPORTANT: Drill size maximum 2.5 millimeters.

Remove shavings immediately.

Drill a hole with a drill (1) in the radial shaft seal (see arrow).

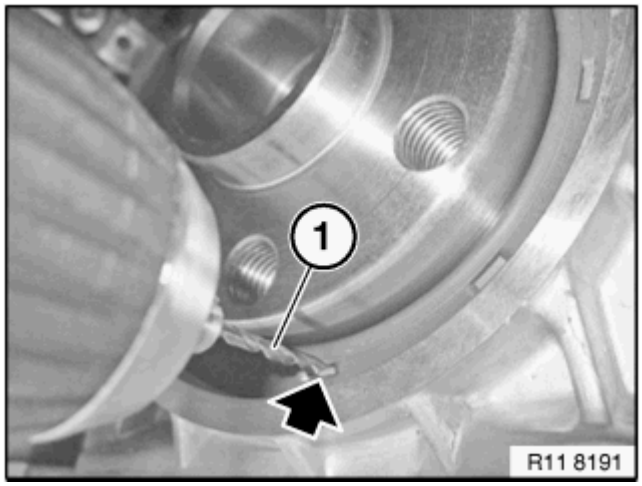

Fig. 183: Drilling Hole In Radial Shaft Seal Using Drill
Courtesy of BMW OF NORTH AMERICA, INC.

Immediately carefully remove shavings on the radial shaft seal (1).

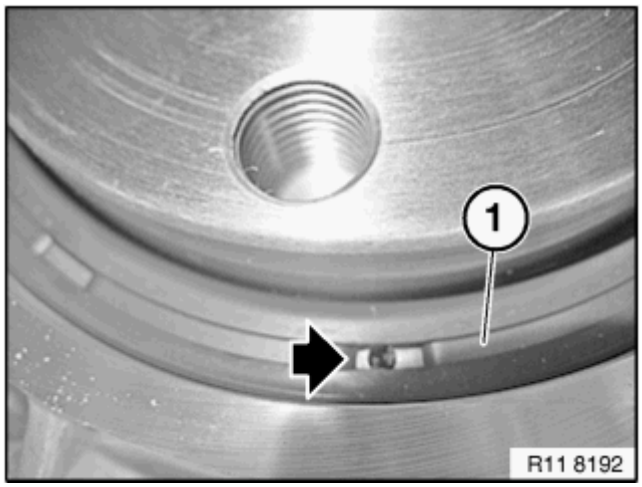

Fig. 184: Identifying Radial Shaft Seal
Courtesy of BMW OF NORTH AMERICA, INC.

Screw in special tool **23 0 490** in direction of arrow.

Drive out radial shaft seal with impact weight in direction of arrow.

IMPORTANT: Immediately carefully remove residual shavings.

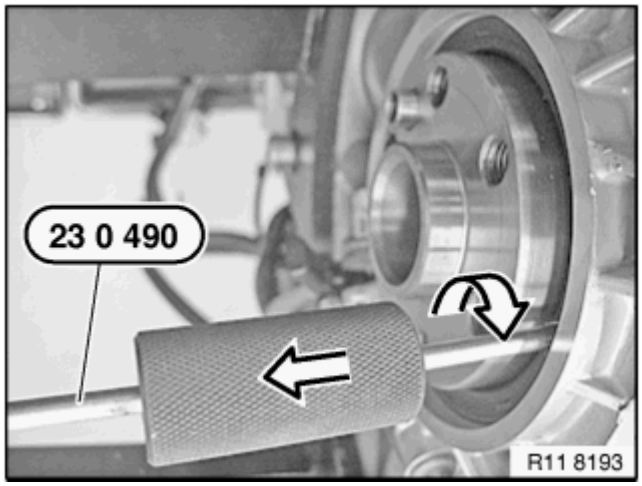

Fig. 185: Screwing In Special Tool 23 0 490 In Clockwise Direction
Courtesy of BMW OF NORTH AMERICA, INC.

Prepare radial shaft seal (1) on special tool 11 8 220.

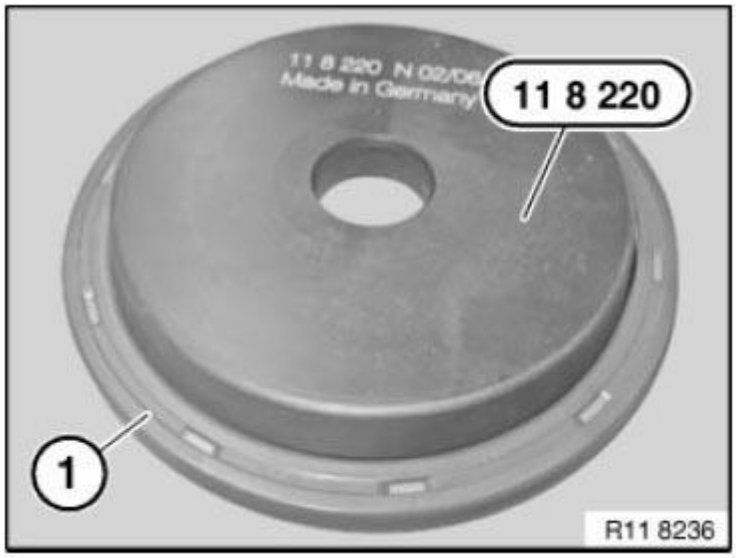

Fig. 186: Identifying Radial Shaft Seal On Special Tool 11 8 220
Courtesy of BMW OF NORTH AMERICA, INC.

Position the radial shaft seal (1) with special tool 11 8 220 on the crankshaft.

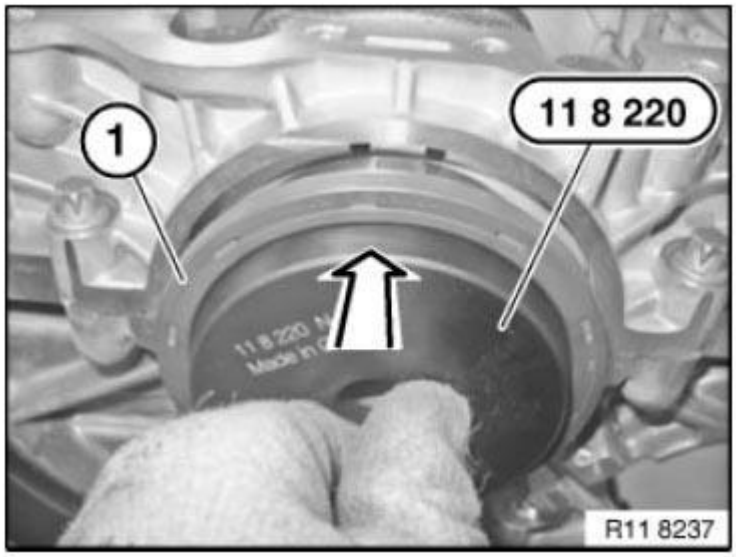

Fig. 187: Positioning Radial Shaft Seal Using Special Tool 11 8 220 On Crankshaft
Courtesy of BMW OF NORTH AMERICA, INC.

Brush radial shaft seal (1) over the special tool 11 8 220.

Move radial shaft seal (1) parallel up against the crankcase.

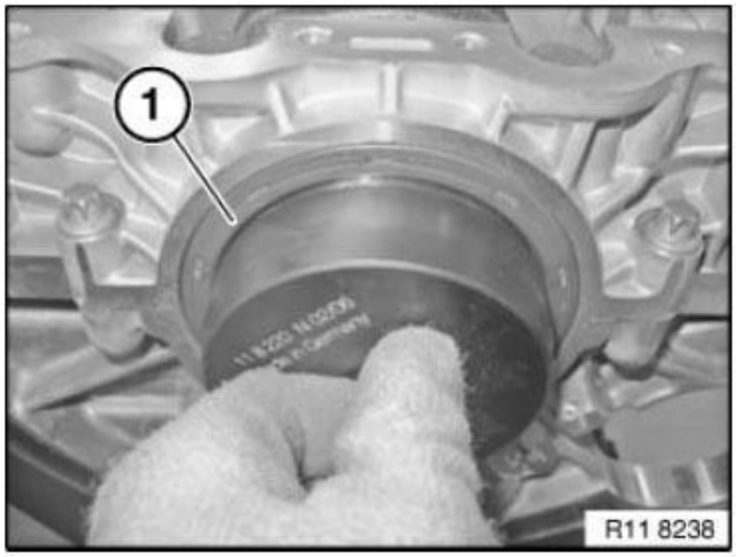

Fig. 188: Moving Radial Shaft Seal Parallel Up Against Crankcase
Courtesy of BMW OF NORTH AMERICA, INC.

Fasten special tool **11 9 182** (synchronizing key) with special tool **11 9 184** (screw) on the crankshaft.

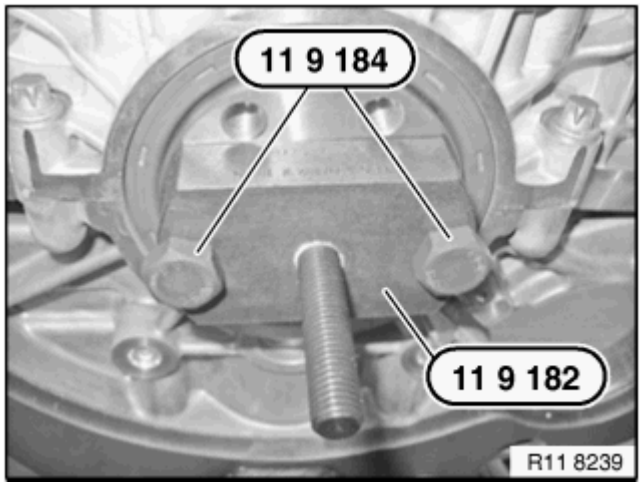

Fig. 189: Fastening Special Tool 11 9 182 With Special Tool 11 9 184 On Crankshaft
Courtesy of BMW OF NORTH AMERICA, INC.

Installation note:

Prepare special tool **11 9 181** (bush) for installation.

Connect special tool **11 9 185** (ring) onto special tool **11 9 181** (bush).

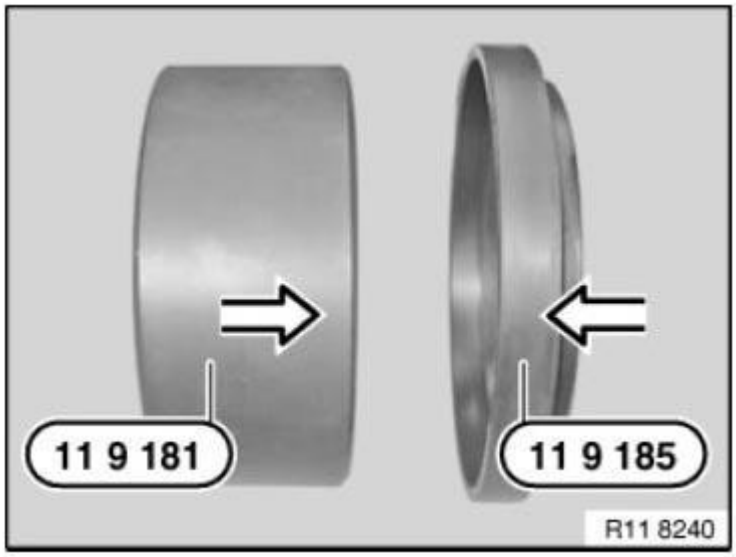

Fig. 190: Connecting Special Tool 11 9 185 Onto Special Tool 11 8 181
Courtesy of BMW OF NORTH AMERICA, INC.

Pull on radial shaft seal with special tools **11 9 181** (bush) and **11 9 185** (ring) in combination with special tool **11 9 183** (nut).

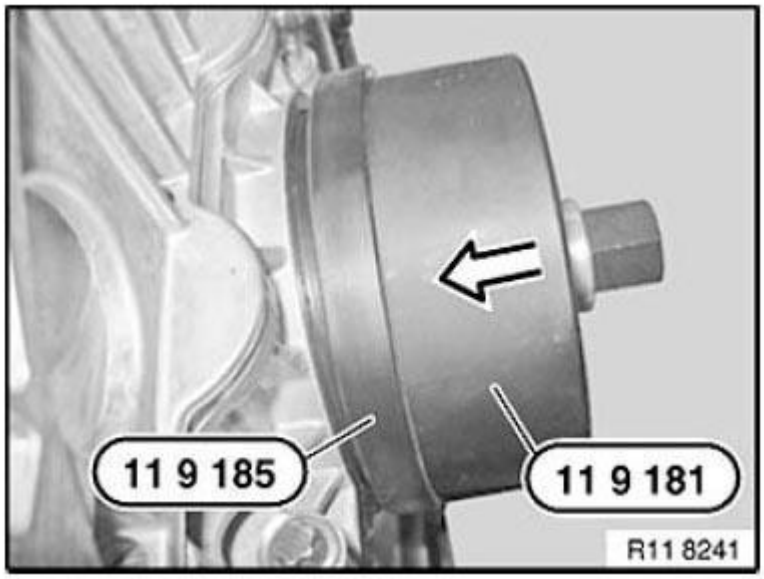

Fig. 191: Installing Rear Crankshaft Seal Using Tool 119 180/181
Courtesy of BMW OF NORTH AMERICA, INC.

Screw on radial shaft seal with special tool **11 9 183** (nut) to limit position.

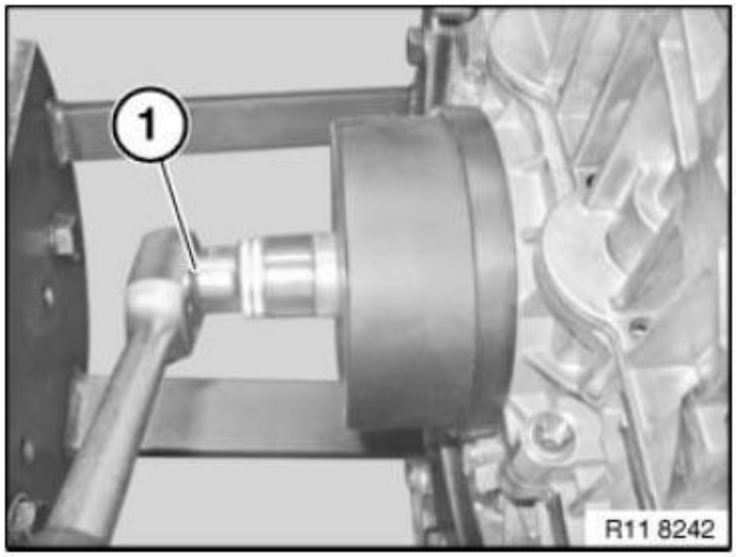

Fig. 192: Screwing On Radial Shaft Seal Using Special Tool 11 9 183
Courtesy of BMW OF NORTH AMERICA, INC.

Remove all special tools.

Assemble engine.

CRANKSHAFT WITH BEARINGS

11 21 500 REPLACING CRANKSHAFT (N51)

Special tools required:

- 00 2 510
- 00 9 120
- 11 4 370
- 11 4 440
- 11 9 360

IMPORTANT: Aluminium-magnesium materials.

No steel screws/bolts may be used due to the threat of electrochemical corrosion.

A magnesium crankcase requires aluminium screws/bolts exclusively.

Aluminium screws/bolts must be replaced each time they are released .

Aluminium screws/bolts are permitted with and without color coding (blue).

For reliable identification:

Aluminium screws/bolts are not magnetic .

Jointing torque and angle of rotation must be observed without fail (risk of damage).

Necessary preliminary tasks:

- Remove **Engine**
- Mount engine on **Assembly Stand**
- Remove **Vibration Damper**
- Remove **Oil Pan.**
- Remove **Oil Pump**
- Remove oil pump/vacuum pump **Chain Module**
- Remove **Timing Chain Module**
- Remove **Cylinder Head**
- Remove **Flywheel**
- Removing **All Pistons**

Release screws (1).

For tightening torque refer to 11 13 5AZ in **11 13 OIL PAN** .

Installation:

Replace aluminium screws.

Remove oil deflector (2).

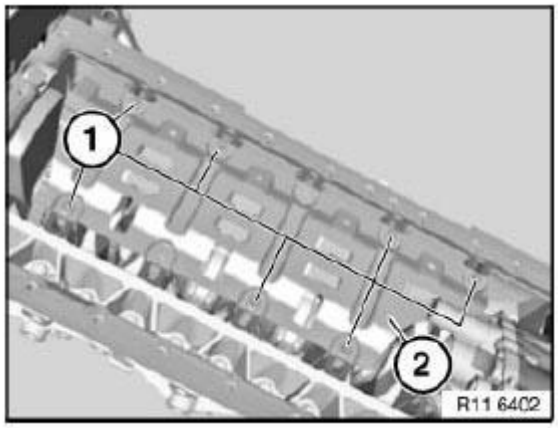

Fig. 193: Oil Deflector And Mounting Screws
Courtesy of BMW OF NORTH AMERICA, INC.

Release screws (1).

For tightening torque refer to 11 11 2AZ in **11 11 CRANKCASE** .

Release screws (2).

For tightening torque refer to 11 11 3AZ in **11 11 CRANKCASE** .

Installation:

Replace aluminium screws.

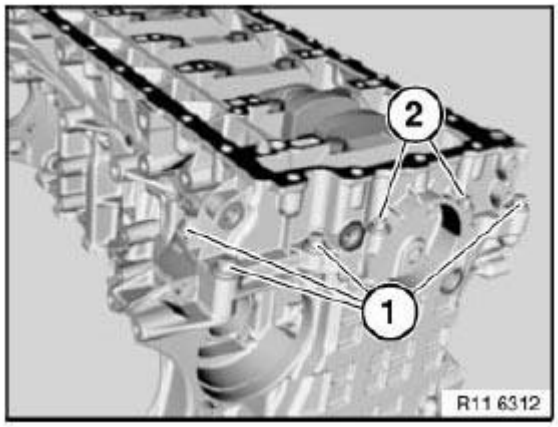

Fig. 194: Cylinder Block Screws
Courtesy of BMW OF NORTH AMERICA, INC.

Release screws (1).

For tightening torque refer to 11 11 1AZ in **11 11 CRANKCASE** .

Release screws (2).

For tightening torque refer to 11 11 4AZ in **11 11 CRANKCASE** .

Installation:

Replace aluminium screws.

Release steel screws (1 to 14) from outside inwards.

For tightening torque refer to 11 11 1AZ in **11 11 CRANKCASE** .

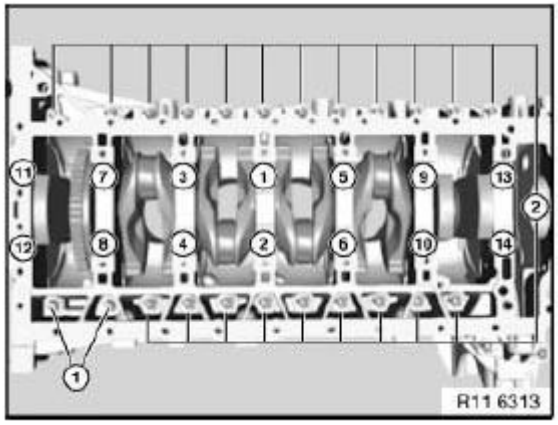

Fig. 195: Engine Screws Tightening Sequence
Courtesy of BMW OF NORTH AMERICA, INC.

Release screws (1).

For tightening torque refer to 11 11 3AZ in **11 11 CRANKCASE** .

Installation:

Replace aluminium screws.

Remove crankcase lower section in upward direction.

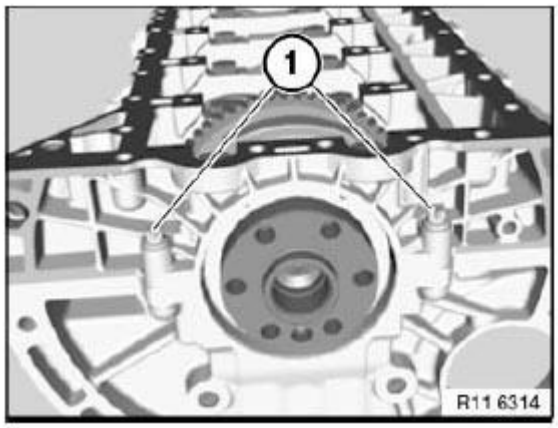

Fig. 196: Engine Bedpan Screws
Courtesy of BMW OF NORTH AMERICA, INC.

Remove crankshaft (1) in direction of arrow.

IMPORTANT: Remove crankshaft with aid of a second person.

Weight of crankshaft approx. 25 kg.

Remove **Bearing Shells** (2) and guide bearing shell (3), replace if necessary.

Clean all sealing faces with special tool 11 4 470.

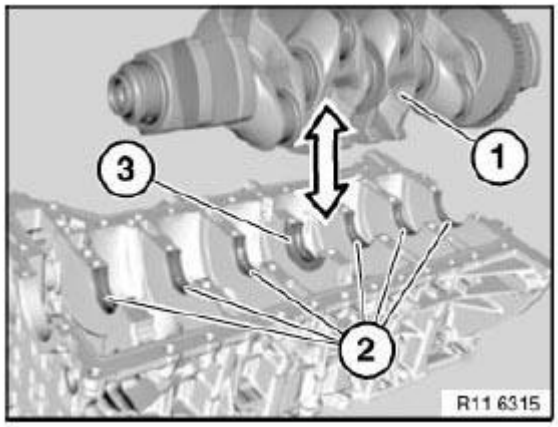

Fig. 197: Bearing Shells, Crankshaft, Removal Direction And Guide Bearing Shell
Courtesy of BMW OF NORTH AMERICA, INC.

Check adapter sleeves (1) for damage and secure seating; replace if necessary.

Install all **Bearing Shells**

Installation:

Lubricate all bearing points with engine oil.

NOTE: Picture shows N46.

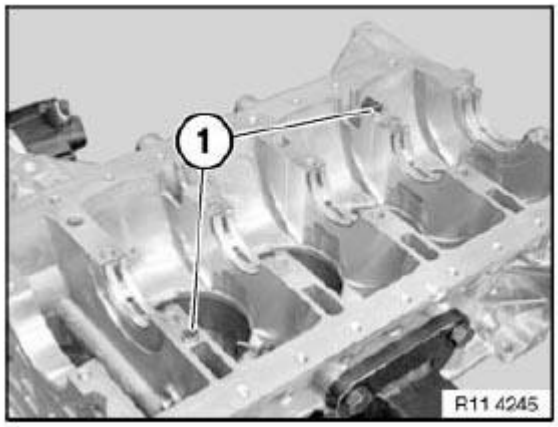

Fig. 198: Adapter Sleeves
Courtesy of BMW OF NORTH AMERICA, INC.

Insert crankshaft (1).

IMPORTANT: Install crankshaft with aid of a second person.

Weight of crankshaft approx. 25 kg.

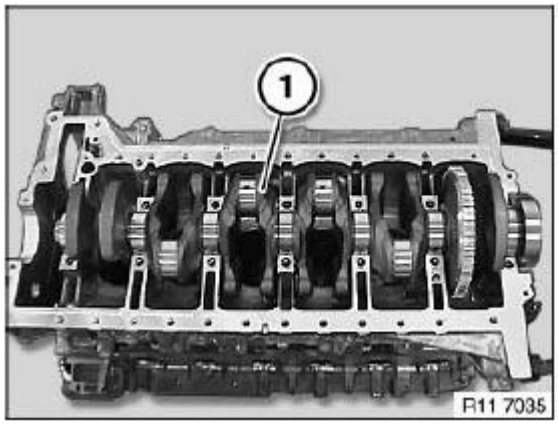

Fig. 199: Crankshaft
Courtesy of BMW OF NORTH AMERICA, INC.

Tighten steel screws (1 to 14) from inside outwards.

For tightening torque refer to 11 11 1AZ in **11 11 CRANKCASE** .

Tighten screws (2) from inside outwards.

For tightening torque refer to 11 11 4AZ in **11 11 CRANKCASE** .

Tighten screws (1).

For tightening torque refer to 11 11 2AZ in **11 11 CRANKCASE** .

Installation:

Replace aluminium screws.

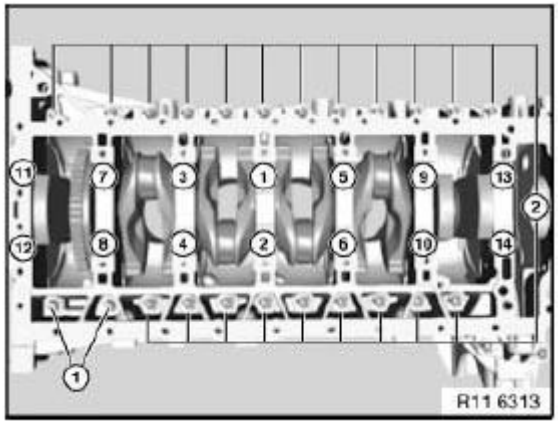

Fig. 200: Engine Screws Tightening Sequence
Courtesy of BMW OF NORTH AMERICA, INC.

Tighten aluminium screws exclusively with special tool 00 9 120.

IMPORTANT: In the case of aluminium screws, jointing torque and angle of rotation must be observed without fail.

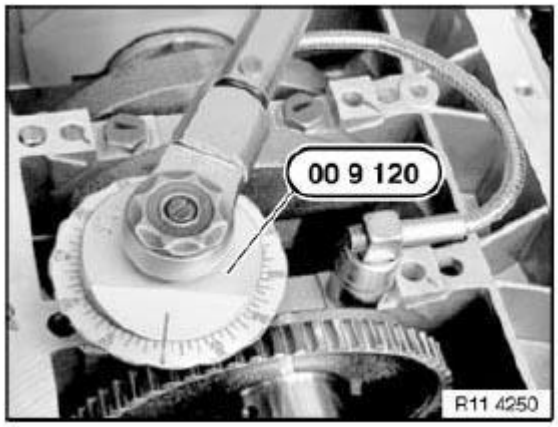

Fig. 201: Special Tool (00 9 120)
Courtesy of BMW OF NORTH AMERICA, INC.

Set up stand with magnetic foot (1) on special tool 11 4 440.

Set up special tool 00 2 510 on stand.

Position special tool 00 2 510 on crankshaft.

Move crankshaft in direction of arrow.

Determine **Bearing Play** .

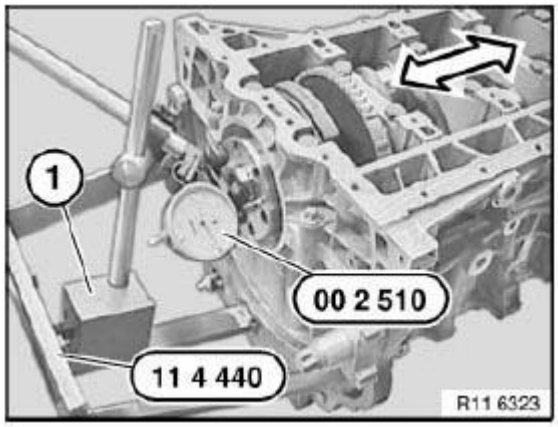

Fig. 202: Special Tools (00 2 510), (11 4 440) And Magnetic Foot
Courtesy of BMW OF NORTH AMERICA, INC.

Drive in both nozzles (1) with special tool 11 9 360 on left and right into crankcase.

Installation:

Always replace nozzles (1).

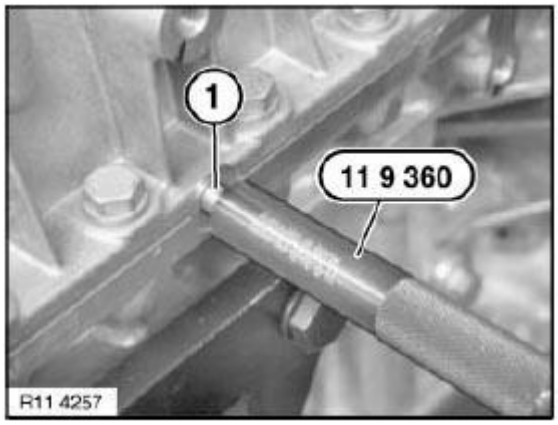

Fig. 203: Special Tool (11 9 360) And Nozzles
Courtesy of BMW OF NORTH AMERICA, INC.

Installation:

Prepare sealing compound (1) in special tool 11 4 370.

Screw on nozzle (2) for injecting sealing compound.

Slowly insert sealing compound (1) with special tool 11 4 370 in direction of arrow.

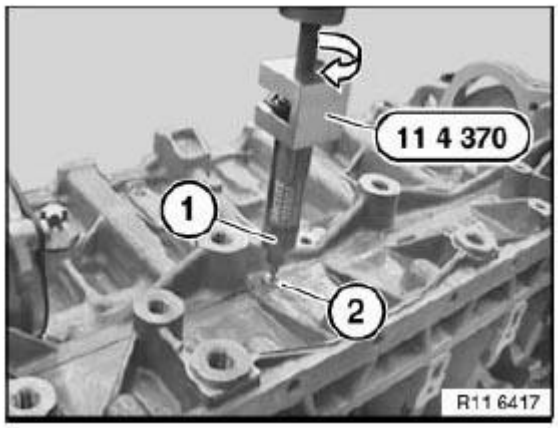

Fig. 204: Identifying Special Tool (11 4 370)
Courtesy of BMW OF NORTH AMERICA, INC.

Replace radial shaft seal at **Front.**

Replace radial shaft seal at **Rear.**

Assemble engine.

11 21 500 REPLACING CRANKSHAFT (N52K)

Special tools required:

- 00 2 510
- 00 9 120
- 11 4 370
- 11 4 440
- 11 4 470
- 11 9 360

IMPORTANT: Aluminium-magnesium materials.

No steel screws/bolts may be used due to the threat of electrochemical corrosion.

A magnesium crankcase requires aluminium screws/bolts exclusively.

Aluminium screws/bolts must be replaced each time they are released .

Aluminium screws/bolts are permitted with and without color coding (blue).

For reliable identification:

Aluminium screws/bolts are not magnetic .

Jointing torque and angle of rotation must be observed without fail (risk of damage).

Necessary preliminary tasks:

- Remove **Engine**
- Mount engine on **Assembly Stand**
- Remove **Vibration Damper**
- Remove **Oil Sump**
- Remove **Oil Pump**
- Remove oil pump/vacuum pump **Chain Module**
- Remove timing **Chain Module**
- Remove **Cylinder Head**

- Remove **Flywheel**
- Removing all **Pistons**

Release screws (1).

For tightening torque refer to 11 13 6AZ in **11 13 OIL PAN** .

Installation:

Replace aluminium screws.

Remove oil deflector (2).

NOTE: Picture shows the screw connection of the oil deflector (2) for vehicles with optional extra SA203 (all-wheel drive).

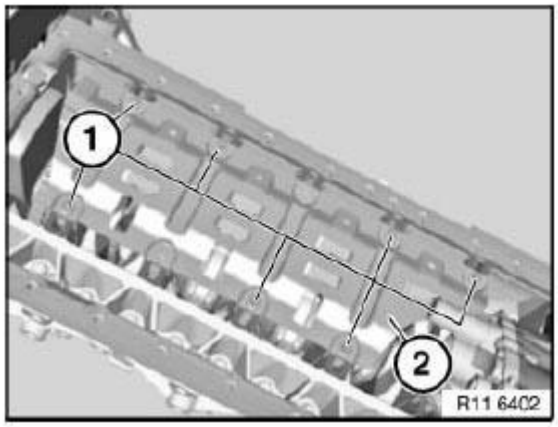

Fig. 205: Oil Deflector And Mounting Screws
Courtesy of BMW OF NORTH AMERICA, INC.

Release screws (1).

For tightening torque refer to 11 11 2AZ in **11 11 CRANKCASE** .

Release screws (2).

For tightening torque refer to 11 11 3AZ in **11 11 CRANKCASE** .

Installation:

Replace aluminium screws.

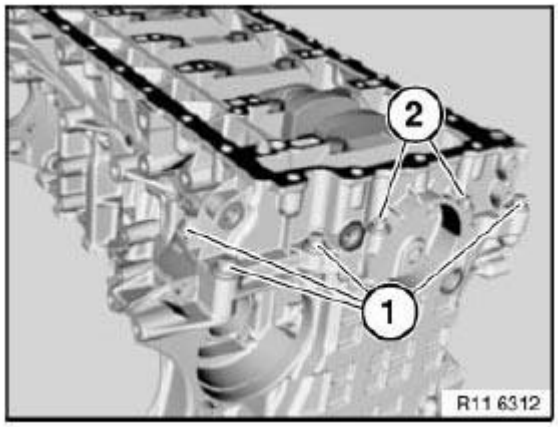

Fig. 206: Cylinder Block Screws
Courtesy of BMW OF NORTH AMERICA, INC.

Release screws (1).

For tightening torque refer to 11 11 4AZ in **11 11 CRANKCASE** .

Release screws (2).

For tightening torque refer to 11 11 2AZ in **11 11 CRANKCASE** .

Installation:

Replace aluminium screws.

Release steel screws (1 to 14) from outside inwards.

For tightening torque refer to 11 11 1AZ in **11 11 CRANKCASE** .

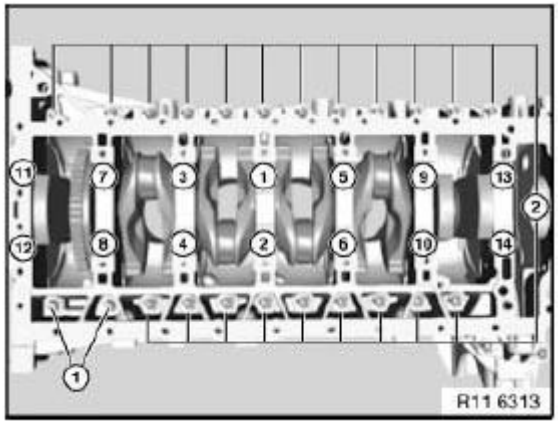

Fig. 207: Engine Screws Tightening Sequence
Courtesy of BMW OF NORTH AMERICA, INC.

Release screws (1).

For tightening torque refer to 11 11 3AZ in **11 11 CRANKCASE** .

Installation:

Replace aluminium screws.

Lift out bedplate.

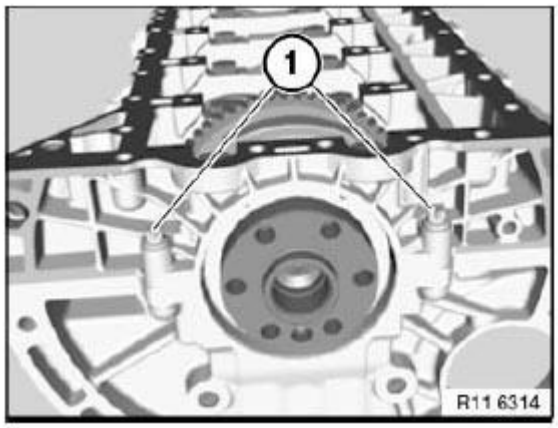

Fig. 208: Engine Bedpan Screws
Courtesy of BMW OF NORTH AMERICA, INC.

Remove crankshaft (1) in direction of arrow.

IMPORTANT: Remove crankshaft with aid of a second person.

Weight of crankshaft approx. 25 kg.

Remove **Bearing Shells** (2) and guide bearing shell (3), replace if necessary.

Clean all sealing faces with special tool 11 4 470.

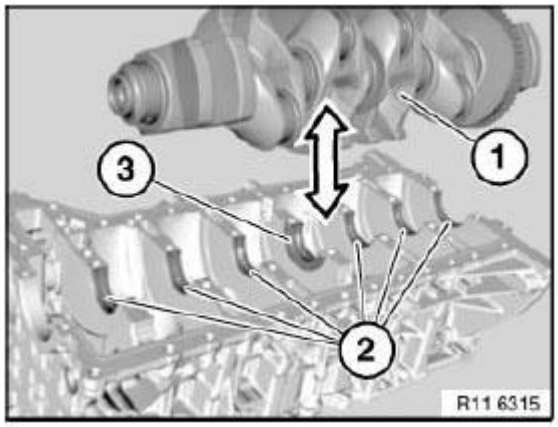

Fig. 209: Bearing Shells, Crankshaft, Removal Direction And Guide Bearing Shell
Courtesy of BMW OF NORTH AMERICA, INC.

Check adapter sleeves (1) for damage and secure seating; replace if necessary.

Install all **Bearing Shells.**

Installation:

Lubricate all bearing points with engine oil.

NOTE: Picture shows N46.

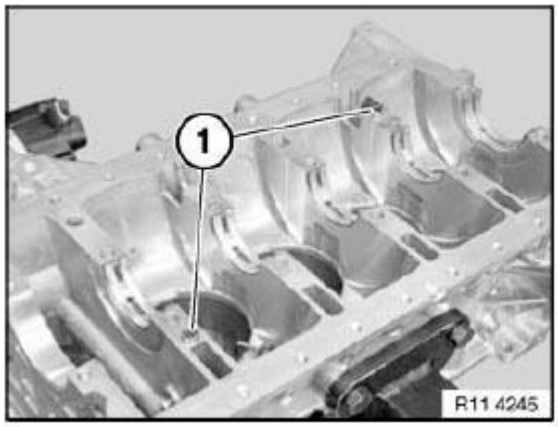

Fig. 210: Adapter Sleeves
Courtesy of BMW OF NORTH AMERICA, INC.

Insert crankshaft (1).

IMPORTANT: Install crankshaft with aid of a second person.

Weight of crankshaft approx. 25 kg.

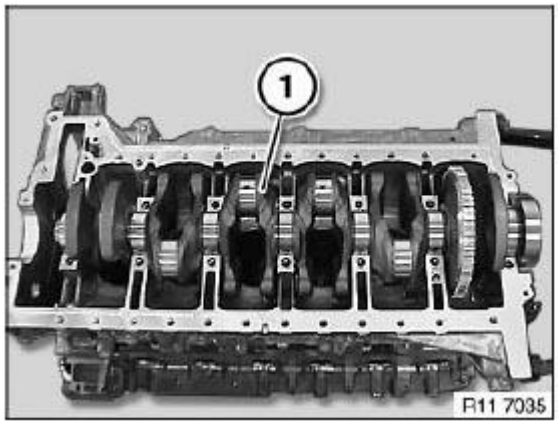

Fig. 211: Crankshaft
Courtesy of BMW OF NORTH AMERICA, INC.

Tighten steel screws (1 to 14) from inside outwards.

For tightening torque refer to 11 11 1AZ in **11 11 CRANKCASE** .

Tighten screws (2) from inside outwards.

For tightening torque refer to 11 11 2AZ in **11 11 CRANKCASE** .

Tighten screws (1).

For tightening torque refer to 11 11 4AZ in **11 11 CRANKCASE** .

Installation:

Replace aluminium screws.

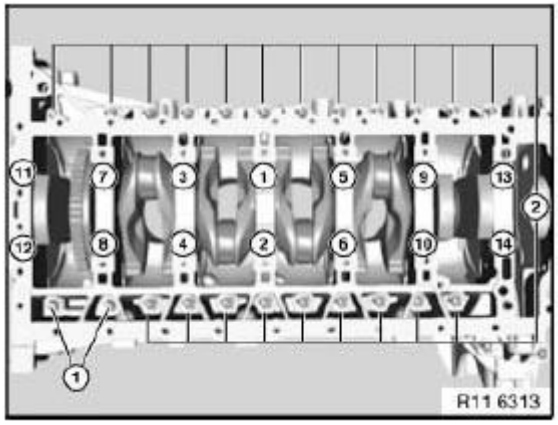

Fig. 212: Engine Screws Tightening Sequence
Courtesy of BMW OF NORTH AMERICA, INC.

Tighten aluminium screws exclusively with special tool 00 9 120.

IMPORTANT: In the case of aluminium screws, jointing torque and angle of rotation must be observed without fail.

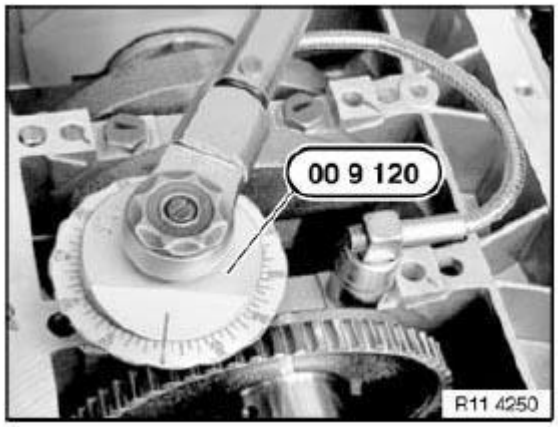

Fig. 213: Special Tool (00 9 120)
Courtesy of BMW OF NORTH AMERICA, INC.

Set up stand with magnetic foot (1) on special tool 11 4 440.

Set up special tool 00 2 510 on stand.

Position special tool 00 2 510 on crankshaft.

Move crankshaft in direction of arrow.

Determine **Bearing Play** .

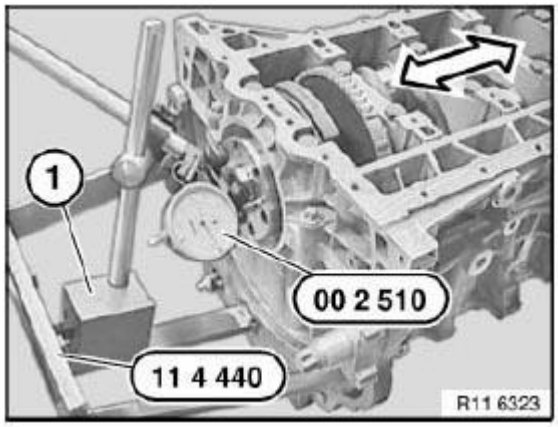

Fig. 214: Special Tools (00 2 510), (11 4 440) And Magnetic Foot
Courtesy of BMW OF NORTH AMERICA, INC.

Drive in both nozzles (1) with special tool 11 9 360 on left and right into crankcase.

Installation:

Always replace nozzles (1).

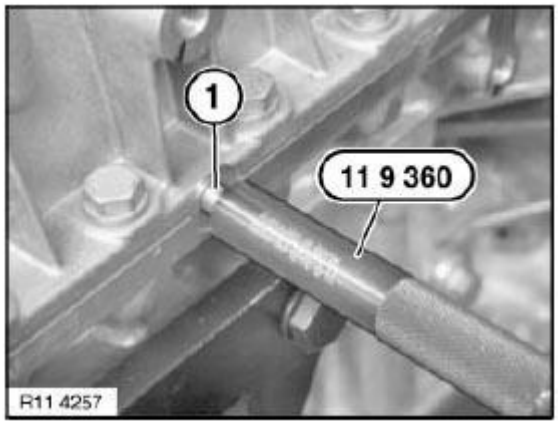

Fig. 215: Special Tool (11 9 360) And Nozzles
Courtesy of BMW OF NORTH AMERICA, INC.

Installation:

Prepare sealing compound (1) in special tool 11 4 370.

Screw on nozzle (2) for injecting sealing compound.

Slowly insert sealing compound (1) with special tool 11 4 370 in direction of arrow.

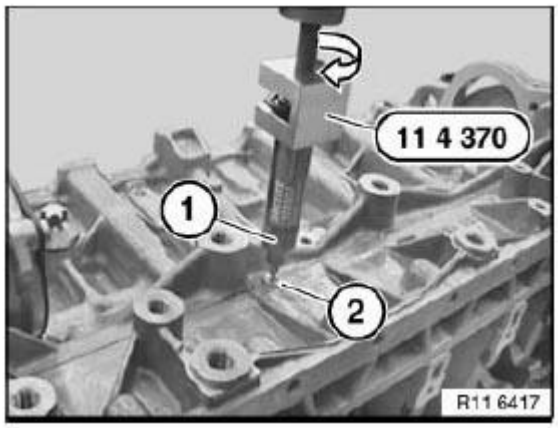

Fig. 216: Identifying Special Tool (11 4 370)
Courtesy of BMW OF NORTH AMERICA, INC.

Replace **Crankshaft Radial Seal** at front.

Replace **Crankshaft Radial Seal** (transmission side).

Assemble engine.

11 21 505 SEALING CRANKCASE LOWER SECTION (N51)

IMPORTANT: Aluminium-magnesium materials.

No steel screws/bolts may be used due to the threat of electrochemical corrosion.

A magnesium crankcase requires aluminium screws/bolts exclusively.

Aluminium screws/bolts must be replaced each time they are released .

Aluminium screws/bolts are permitted with and without color coding (blue).

For reliable identification:

Aluminium screws/bolts are not magnetic .

Jointing torque and angle of rotation must be observed without fail (risk of damage).

IMPORTANT: Changed procedure.
It is not necessary to remove the cylinder head and the crankshaft.

Necessary preliminary tasks:

- Remove **ENGINE**.
- Mount engine on **ASSEMBLY STAND**.
- Remove **CLUTCH** (if fitted).
- Remove left and right engine support arm. See **LEFT ENGINE SUPPORT ARM** and **RIGHT ENGINE SUPPORT ARM** .
- Remove **OIL SUMP**.

Release screws (1).

Pull out oil pump intake pipe (2).

Tightening torque: **11 41 1AZ** .

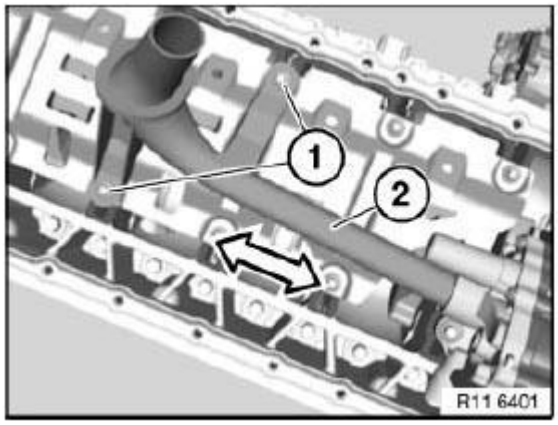

Fig. 217: Pulling Out Oil Pump Intake Pipe
Courtesy of BMW OF NORTH AMERICA, INC.

Release screws (1).

Tightening torque: **11 13 5AZ** .

Installation:

Replace aluminum screws

Remove oil deflector (2).

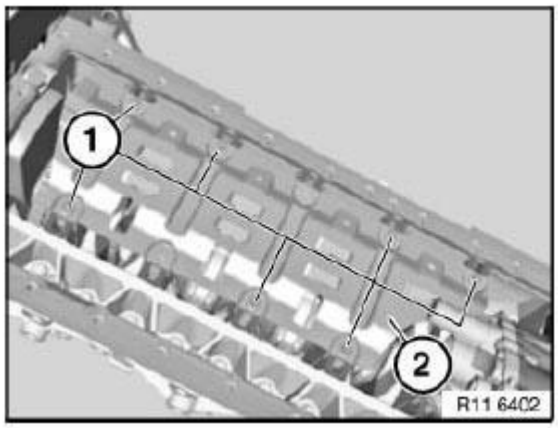

Fig. 218: Identifying Oil Deflector With Screws
Courtesy of BMW OF NORTH AMERICA, INC.

Secure oil pump sprocket with steel pin _ 6.0 mm (3) to oil pump.

IMPORTANT: Release central bolt (2) only together with steel pin 6.0 mm (3). Do not remove sprocket.

Release central bolt (2).

Tightening torque: **11 41 4AZ** .

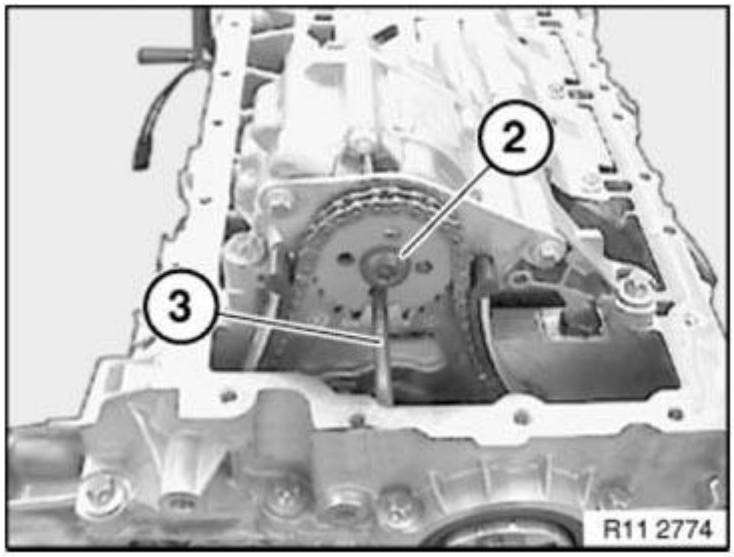

Fig. 219: Identifying Oil Pump Sprocket Steel Pin (6.0 mm) And Central Bolt
Courtesy of BMW OF NORTH AMERICA, INC.

Unfasten screws (2).

Tightening torque: **11 41 5AZ** .

Installation:

Replace aluminum screws.

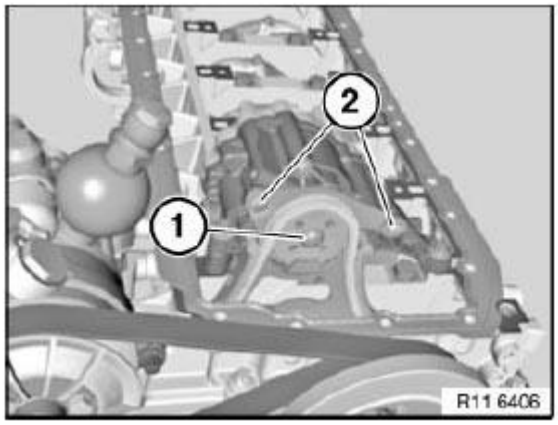

Fig. 220: Identifying Aluminum Screws
Courtesy of BMW OF NORTH AMERICA, INC.

Remove screw plug (1) from crankcase at front.

NOTE: Replace gasket.

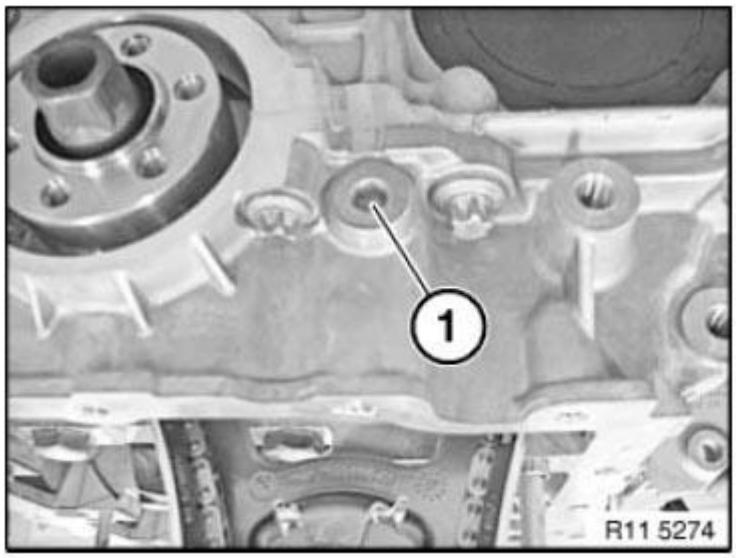

Fig. 221: Identifying Crankcase Screws Plug
Courtesy of BMW OF NORTH AMERICA, INC.

Release screw (1) for oil pump triangular drive with special tool 11 8 640.

NOTE: It is not necessary to remove the triangular drive.

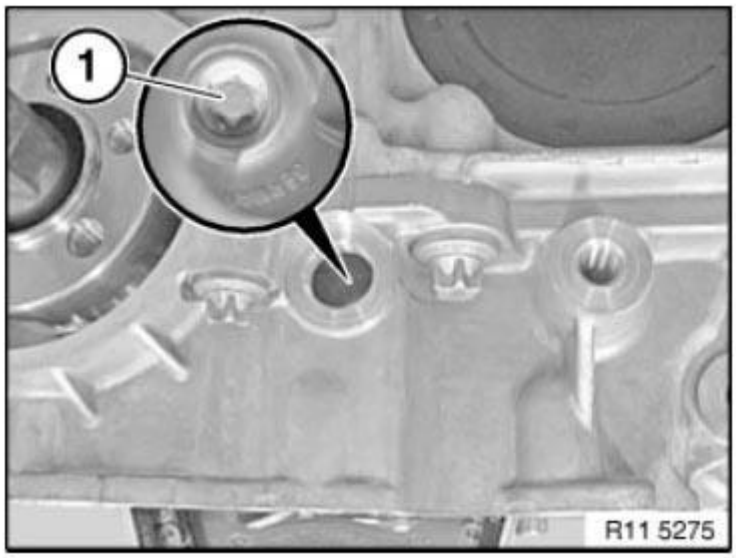

Fig. 222: Identifying Oil Pump Screw
Courtesy of BMW OF NORTH AMERICA, INC.

Version 1:

Attention!

Observe different screw lengths.

Release screws (1).

Tightening torque **11 41 2AZ** .

Installation:

Replace aluminum screws.

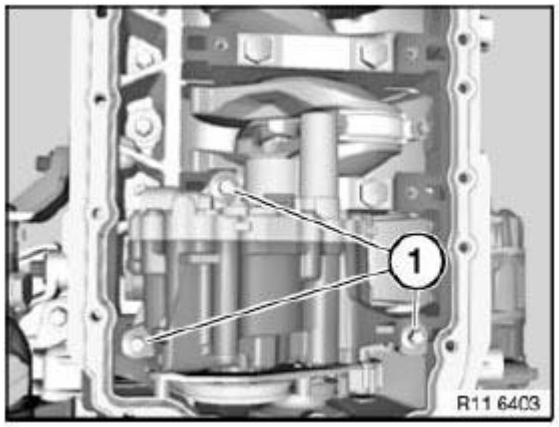

Fig. 223: Identifying Screws
Courtesy of BMW OF NORTH AMERICA, INC.

Version 2:

Attention!

Observe different screw lengths.

Release oil pump screws (1).

Tightening torque: **11 41 2AZ** .

Installation:

Replace aluminum screws.

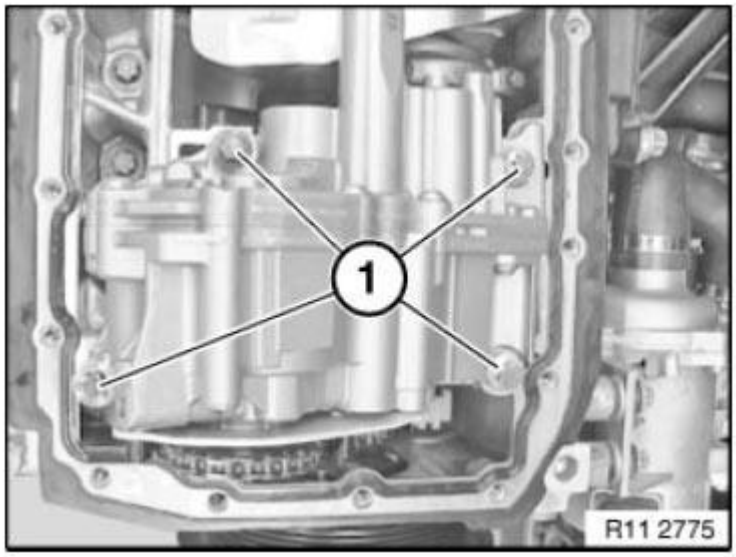

Fig. 224: Identifying Oil Pump Screws
Courtesy of BMW OF NORTH AMERICA, INC.

Detach sprocket (1) in direction of arrow.

NOTE: The chain tensioner pushes the timing chain (3) of the triangular drive upward.

Do **not** remove camshaft sprocket.

Remove oil pump (2) in direction of arrow.

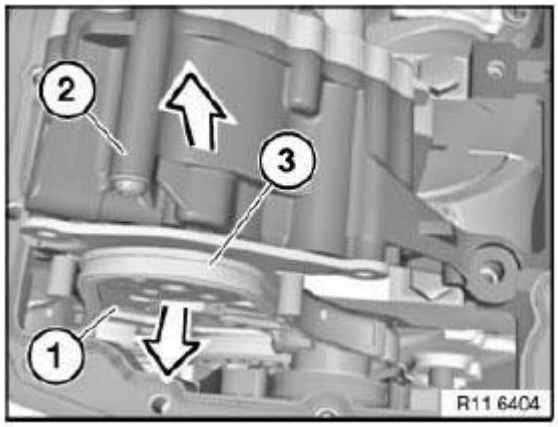

Fig. 225: Detaching Sprocket
Courtesy of BMW OF NORTH AMERICA, INC.

Installation:

Check spacer bushings (1) for secure seating and damage; replace if necessary.

Align twin surface (3) on oil pump (2) to sprocket wheel.

Install oil pump (2).

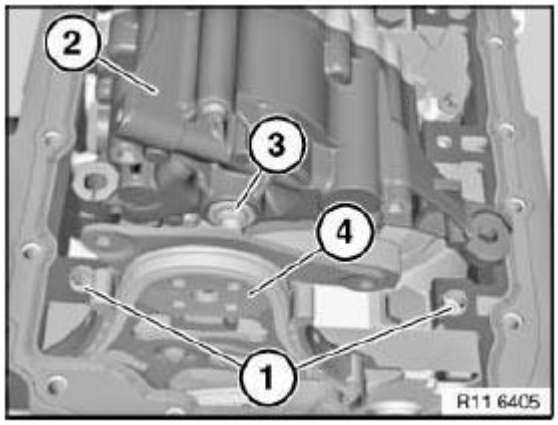

Fig. 226: Identifying Spacer Bushings And Oil Pump
Courtesy of BMW OF NORTH AMERICA, INC.

NOTE: The special tool bore for the TDC position is located on the intake side underneath the starter motor.
Rotate engine at central bolt and secure flywheel in position with special tool 11 0 300 .

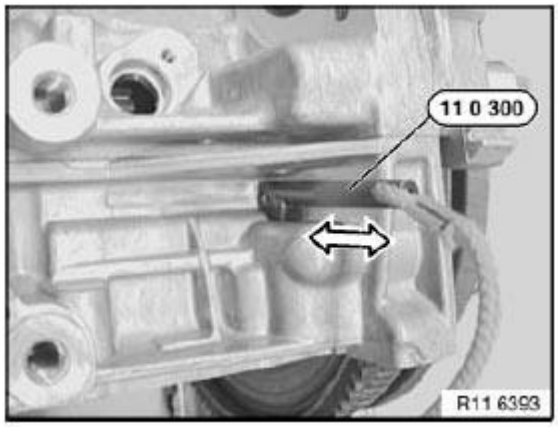

Fig. 227: Rotating Engine At Central Bolt Using Special Tool (11 0 300)
Courtesy of BMW OF NORTH AMERICA, INC.

Secure flywheel with special tool **11 9 260 and 11 9 266** (1 and 2 in illustration).

Tightening torque

NOTE: Make sure that the special tool (1) completely engages in the flywheel teeth (see arrow)

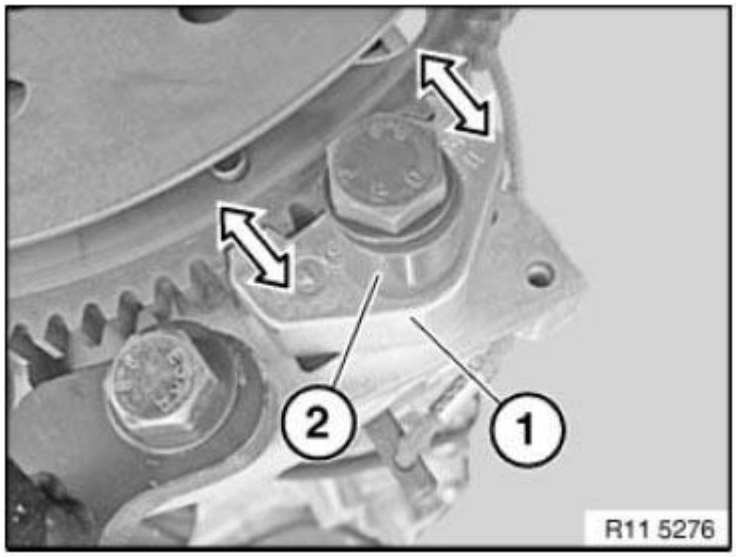

Fig. 228: Installing Flywheel Using Special Tool (11 9 260)
Courtesy of BMW OF NORTH AMERICA, INC.

Automatic transmission

Release flywheel bolts (1).

Release special tool (2).

Remove flywheel (3).

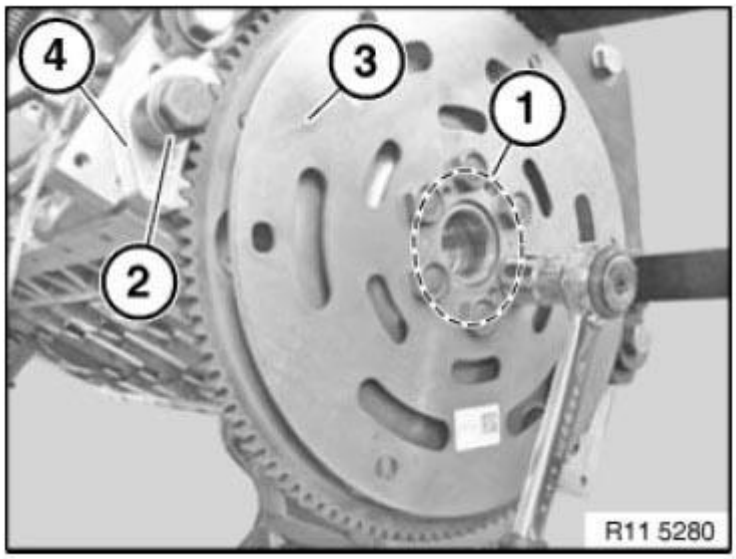

Fig. 229: Releasing Flywheel Bolts
Courtesy of BMW OF NORTH AMERICA, INC.

Manual gearbox

IMPORTANT: Position crankshaft at TDC.
Remove dual-mass flywheel.
Secure flywheel with special tool 11 9 260 .
Remove VIBRATION DAMPER.
Release flywheel bolts with special tool 11 4 180 SCREWDRIVER INSERT .

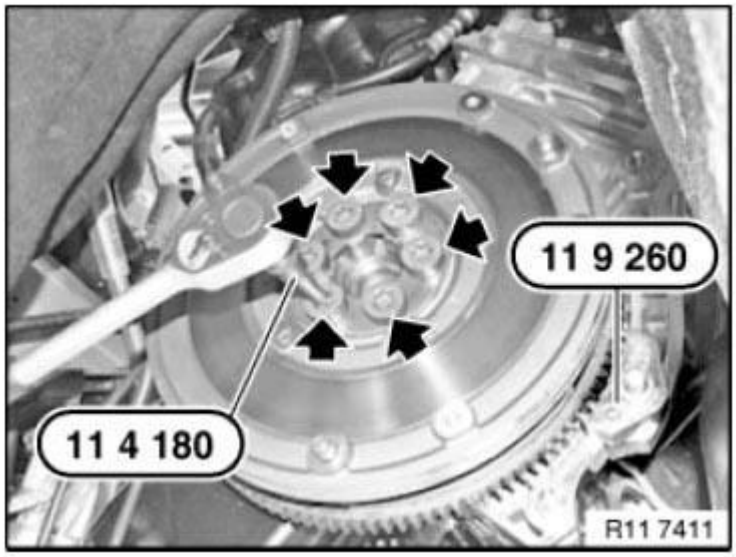

Fig. 230: Locating Flywheel Bolts
Courtesy of BMW OF NORTH AMERICA, INC.

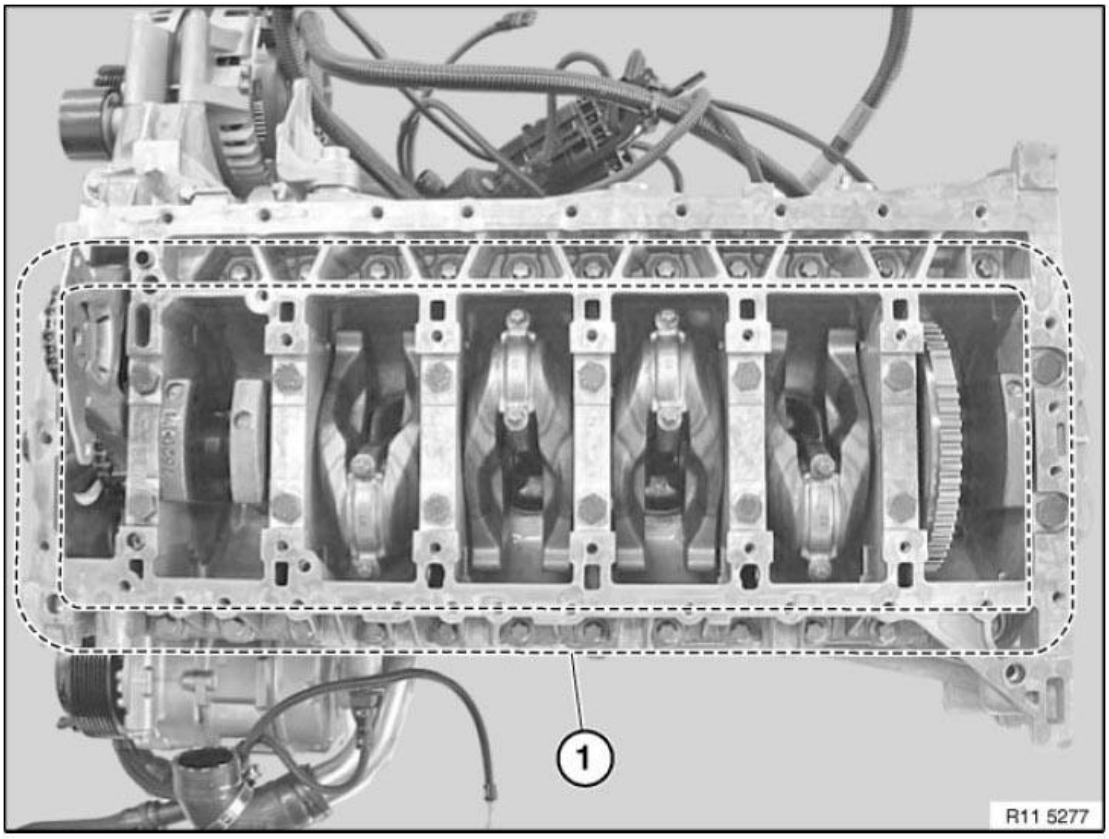

Fig. 231: Identifying Crankcase Bolts Line
Courtesy of BMW OF NORTH AMERICA, INC.

Release all crankcase bolts (1) along line (2).

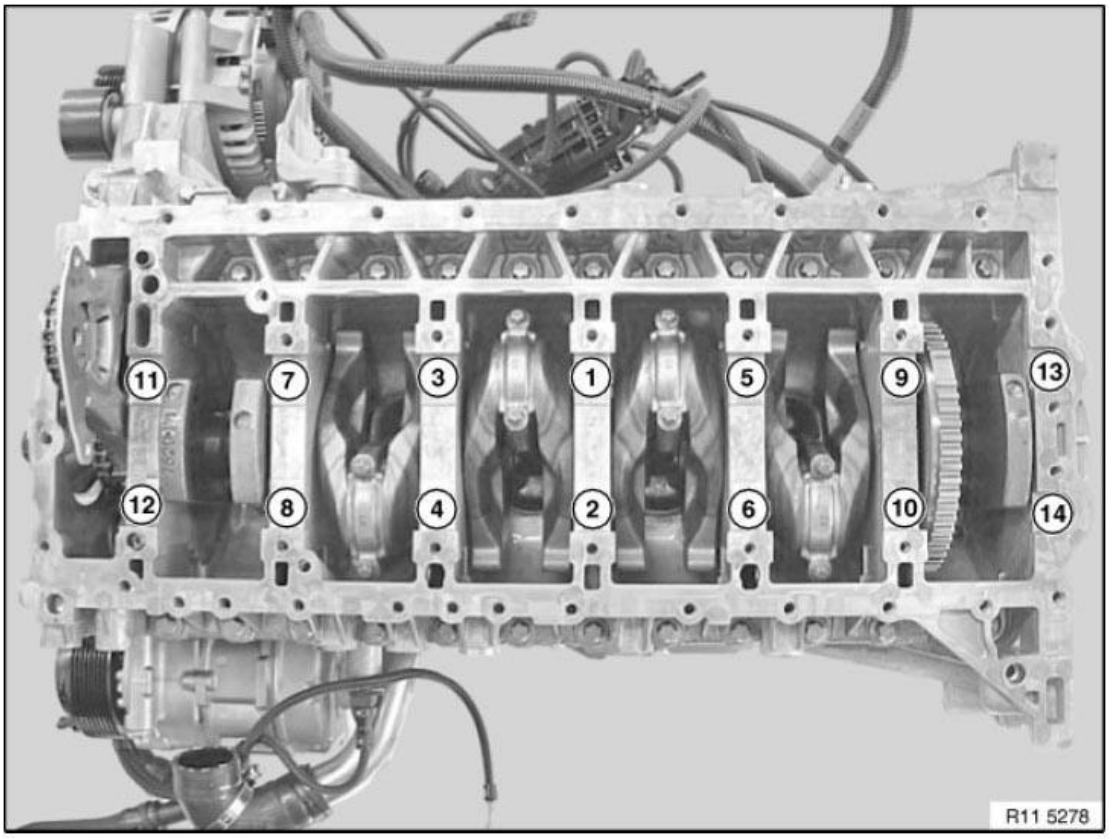

Fig. 232: Crankcase Bolts Removing Sequence
Courtesy of BMW OF NORTH AMERICA, INC.

Release crankcase bolts M10 in sequence 14 to 1.

Release crankcase lower section (1) from crankcase upper section (2) with suitable tool (3)

Remove crankcase lower section (1) upwards.

IMPORTANT: Do not rotate crankshaft without crankcase lower section (1) (risk of damage).

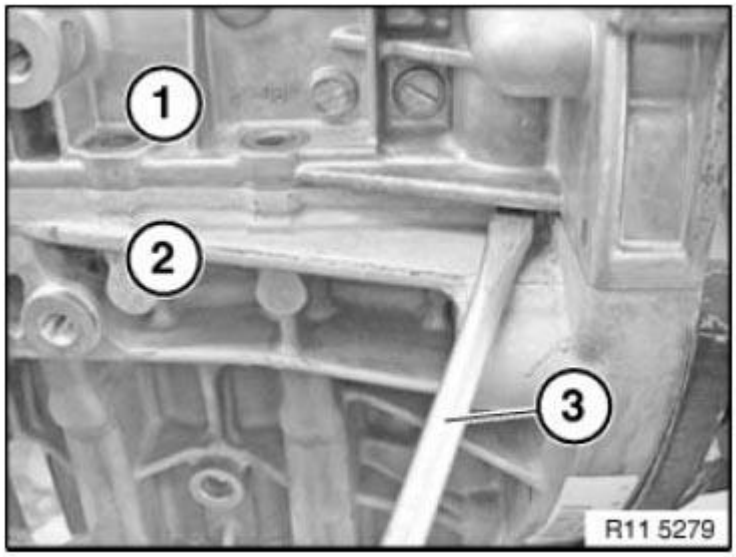

Fig. 233: Releasing Crankcase Lower Section From Crankcase Upper Section Using Tool
Courtesy of BMW OF NORTH AMERICA, INC.

IMPORTANT: Timing chain is pre-tensioned.
Do not raise crankshaft.

Carefully remove radial shaft seal (1).

Catch escaping engine oil with a cloth (2).

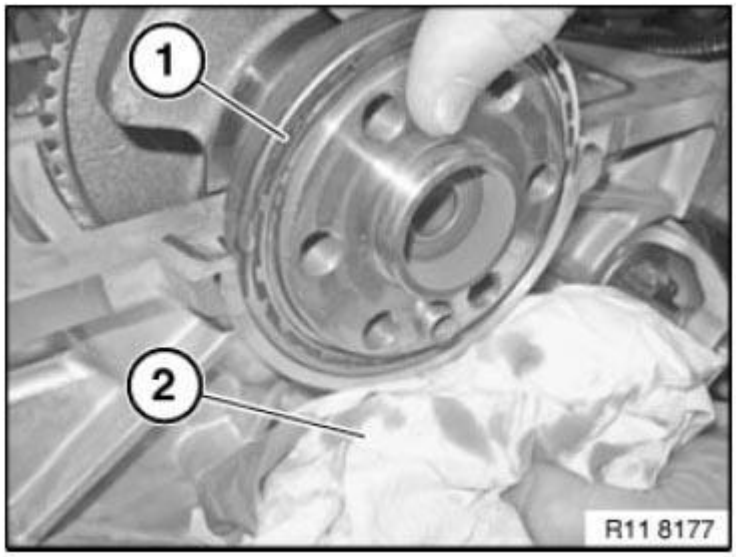

Fig. 234: Removing Radial Shaft Seal
Courtesy of BMW OF NORTH AMERICA, INC.

Carefully remove radial shaft seal (1) towards front.

Catch escaping engine oil with a cloth (2).

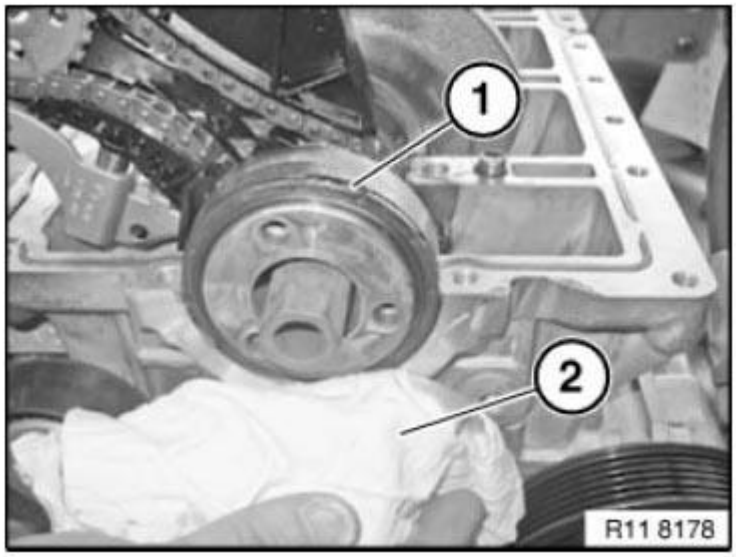

Fig. 235: Catching Escaping Engine Oil With Cloth
Courtesy of BMW OF NORTH AMERICA, INC.

IMPORTANT: Protect crankcase against sealant residues with a cloth (1).

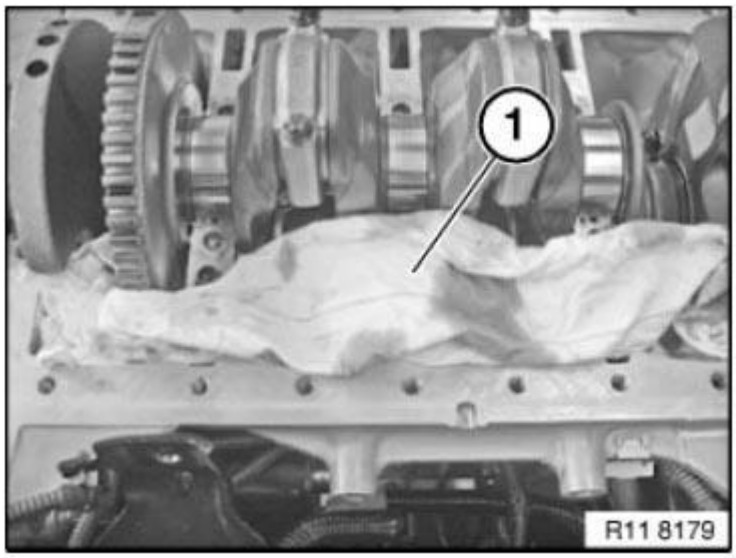

Fig. 236: Identifying Cloth For Protect Crankcase
Courtesy of BMW OF NORTH AMERICA, INC.

Remove sealant residues (1) with special tool **11 4 470 TOOL** .

Remove injector nozzles (2) for liquid sealing compound on left and right.

Installation:

Replace injector nozzles (2).

Clean all threads with compressed air.

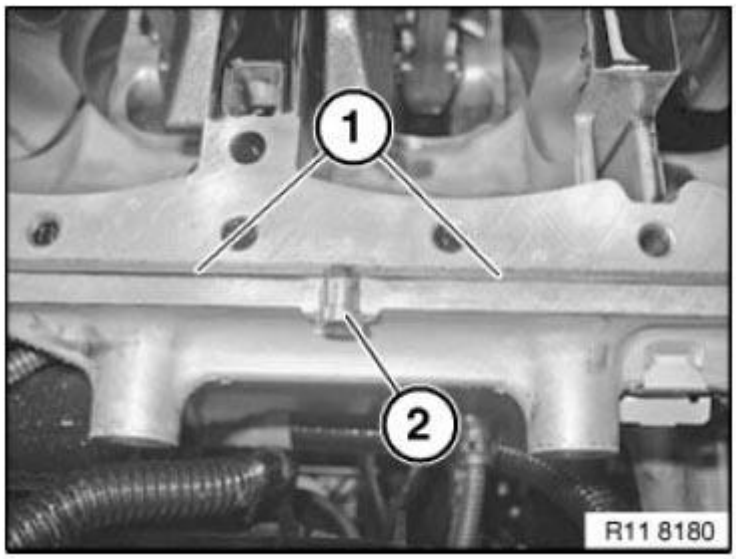

Fig. 237: Identifying Sealant Residues On Injector Nozzle
Courtesy of BMW OF NORTH AMERICA, INC.

Position crankcase lower section (1) on crankcase upper section.

Screw in all M10 crankcase bolts.

Joint all M10 crankcase bolts (1) from inside outwards.

Jointing Torque: **11 11 1AZ**

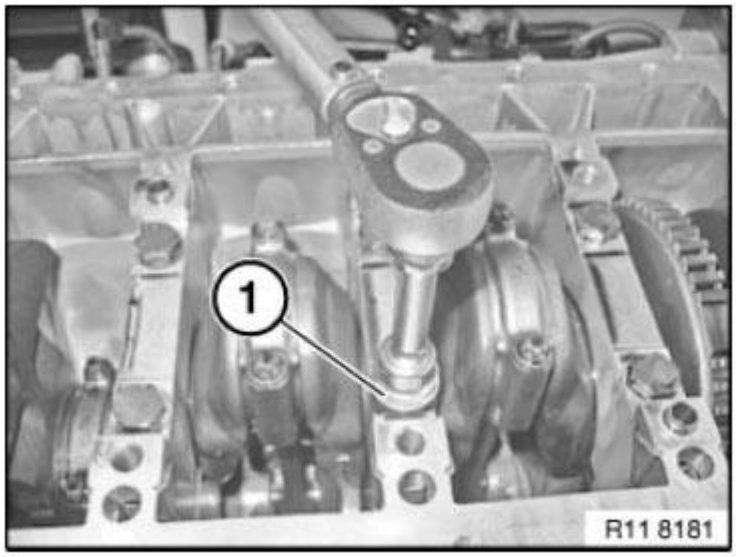

Fig. 238: Identifying Crankcase Lower Section
Courtesy of BMW OF NORTH AMERICA, INC.

Identify all M10 crankcase bolts with a colored marking (1) for checking.

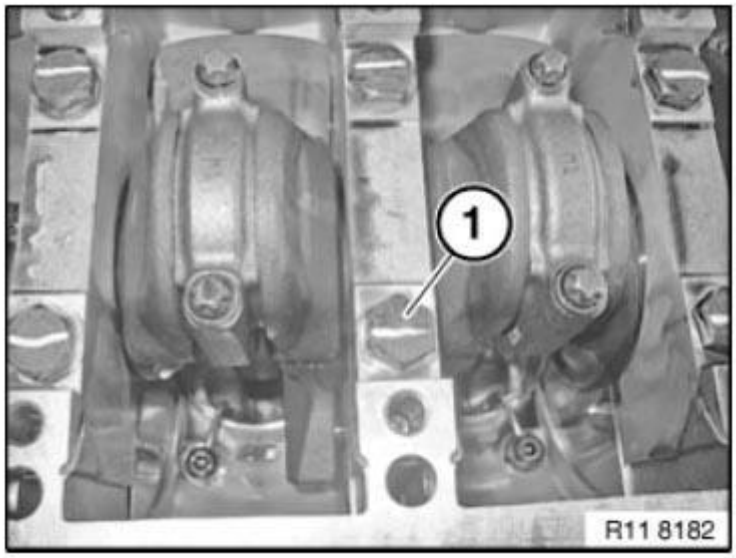

Fig. 239: Identifying M10 Crankcase Bolt Colored Marking
Courtesy of BMW OF NORTH AMERICA, INC.

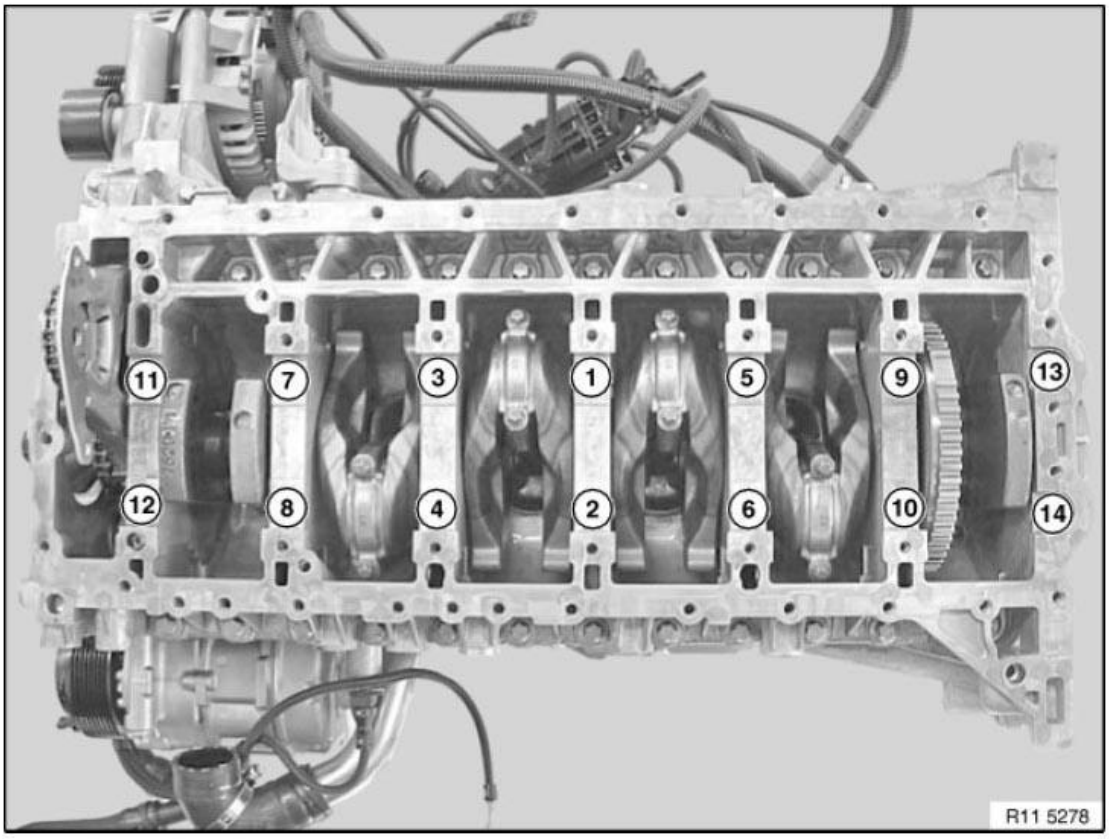

Fig. 240: Crankcase Bolts Installing Sequence
Courtesy of BMW OF NORTH AMERICA, INC.

Secure crankcase bolts M10 in sequence 1 to 14 with special tool 00 9 120.

Tightening torque: **11 11 1AZ** .

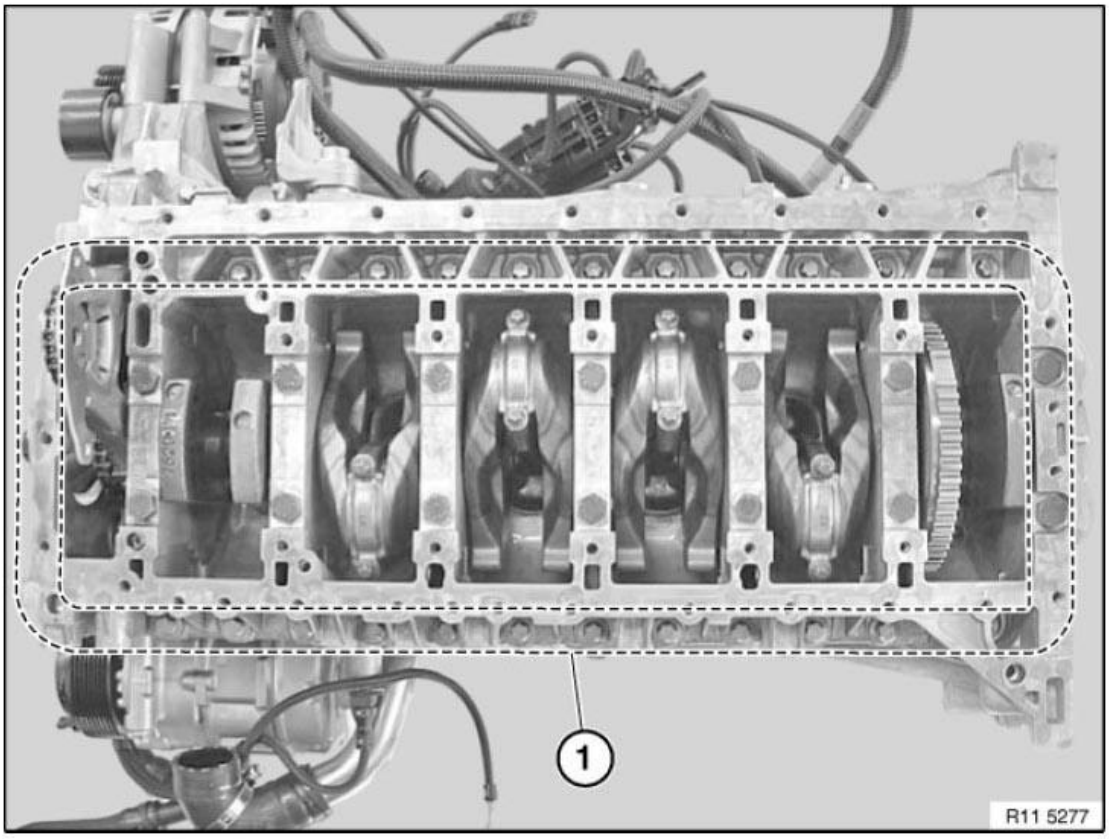

Fig. 241: Identifying Crankcase Bolts
Courtesy of BMW OF NORTH AMERICA, INC.

Insert all crankcase bolts (1).

IMPORTANT: Observe different lengths and sizes of the bolts.
Tightening torque: 11 11 2, 3 AND 4AZ .

Tighten screw (1) for oil pump triangular drive with special tool 11 8 640.

NOTE: Replace screw.

Tightening torque: **11 41 3AZ** .

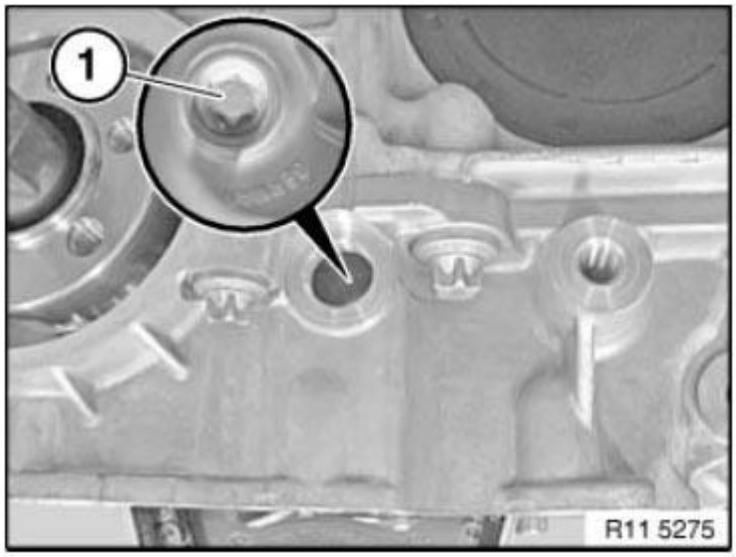

Fig. 242: Identifying Oil Pump Screw
Courtesy of BMW OF NORTH AMERICA, INC.

Tighten screw plug on front of crankcase.

Tightening torque: **11 11 8AZ** .

Installation:

Replace sealing ring.

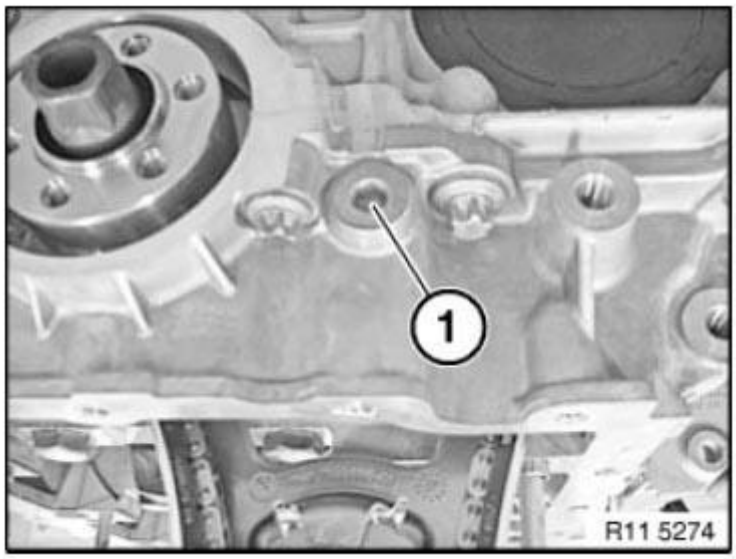

Fig. 243: Identifying Screw Plug On Crankcase
Courtesy of BMW OF NORTH AMERICA, INC.

Prepare radial shaft seal (1) on special tool 11 8 220.

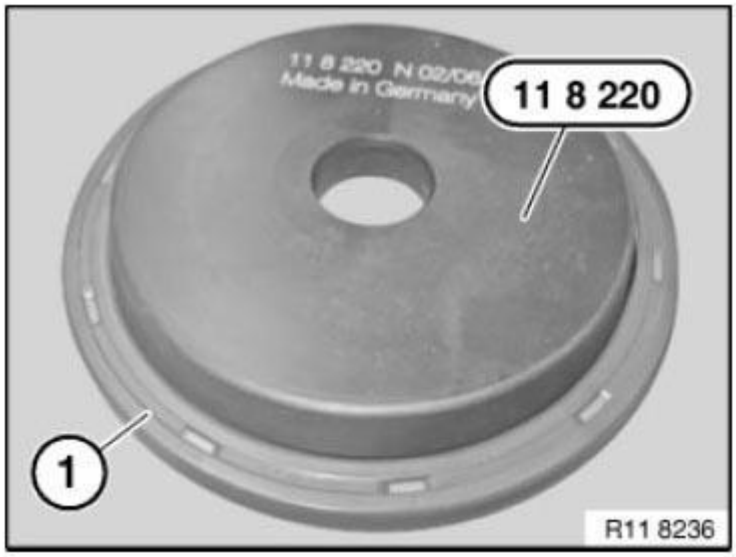

Fig. 244: Identifying Radial Shaft Seal And Special Tool (11 8 220)
Courtesy of BMW OF NORTH AMERICA, INC.

Position radial shaft seal (1) with special tool 11 8 220 on the crankshaft.

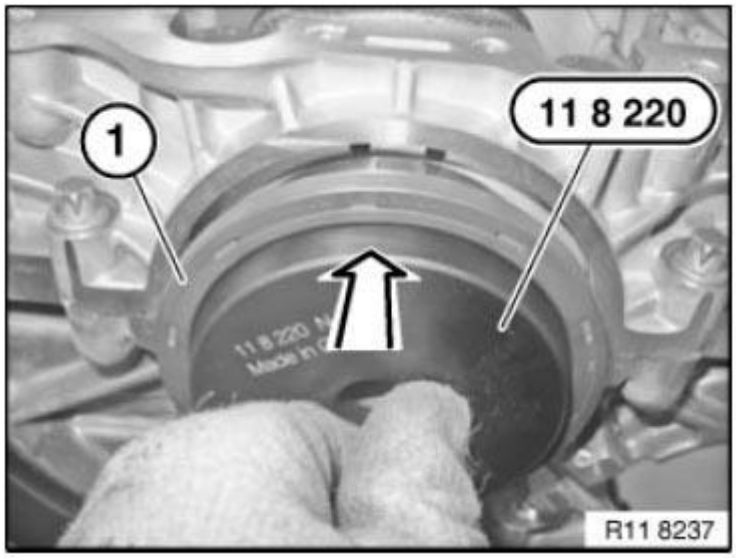

Fig. 245: Positioning Radial Shaft Seal On Crankshaft Using Special Tool (11 8 220)
Courtesy of BMW OF NORTH AMERICA, INC.

Brush radial shaft seal (1) over the special tool 11 8 220.

Move radial shaft seal (1) parallel up against the crankcase.

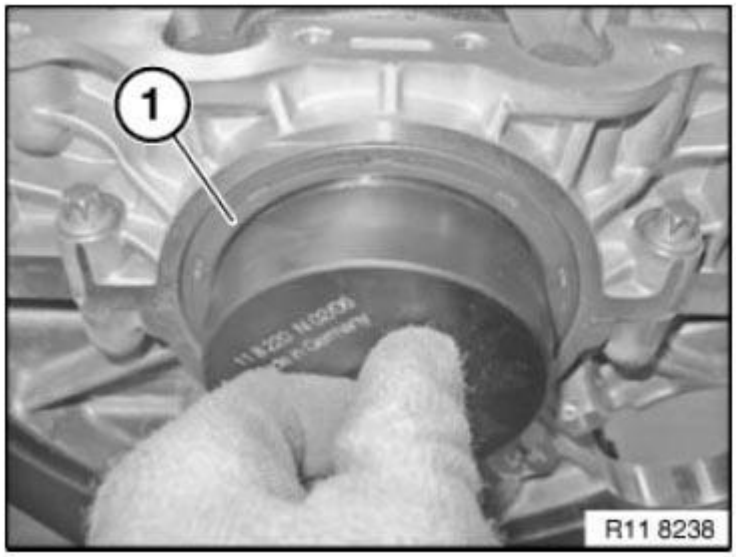

Fig. 246: Moving Radial Shaft Seal
Courtesy of BMW OF NORTH AMERICA, INC.

Screw special tool 11 9 182 with screws (special tool 11 9 184) to crankshaft.

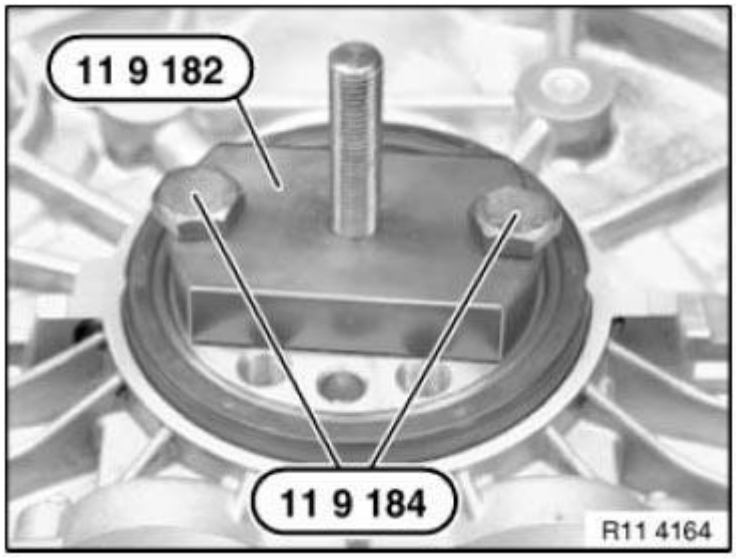

Fig. 247: Identifying Special Tools (11 9 182 And 11 9 184)
Courtesy of BMW OF NORTH AMERICA, INC.

Installation:

Prepare special tool 11 9 181 for installation.

Connect special tool 11 9 185 onto special tool 11 8 181.

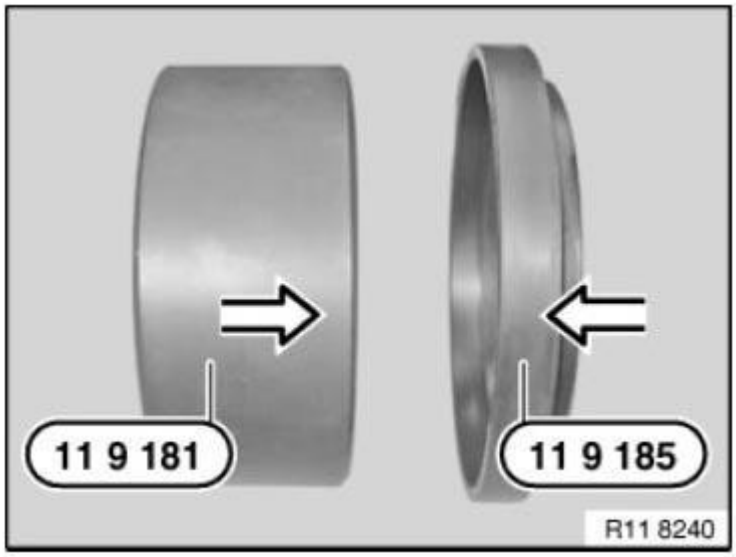

Fig. 248: Connecting Special Tool (11 9 185) Onto Special Tool (11 8 181)
Courtesy of BMW OF NORTH AMERICA, INC.

Pull on radial shaft seal with special tool 11 9 181 and 11 9 185 in combination with special tool 11 9 183.

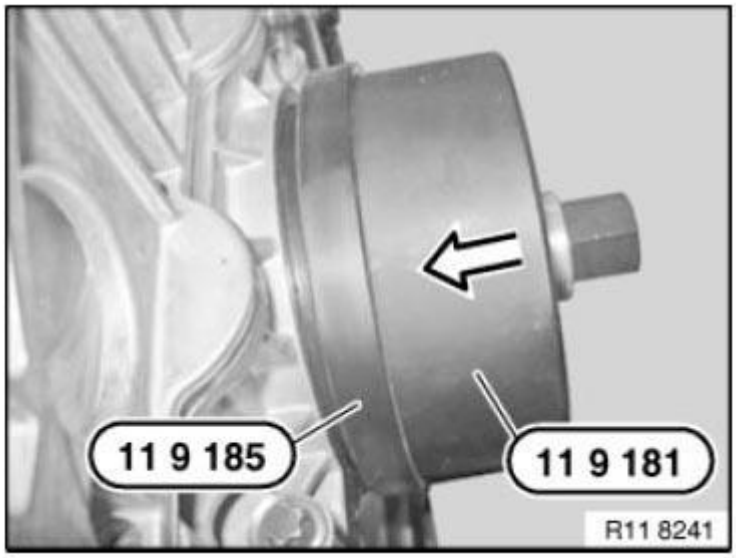

Fig. 249: Pulling On Radial Shaft Seal Using Special Tool (11 9 181)
Courtesy of BMW OF NORTH AMERICA, INC.

Screw on radial shaft seal with special tool 11 9 183 to limit position.

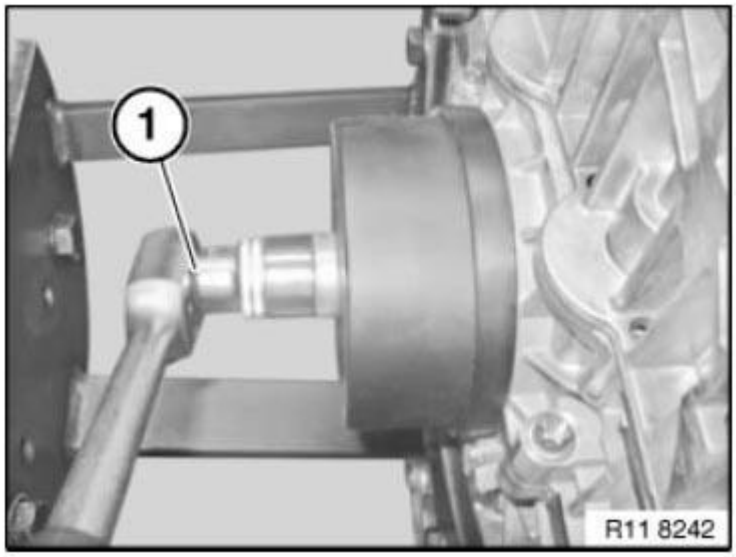

Fig. 250: Identifying Special Tool (11 9 183)
Courtesy of BMW OF NORTH AMERICA, INC.

Installation:

Clean sealing surface (1) and degrease thoroughly in area of housing partition.

Apply a light coat of oil to running surface (2) of radial seal.

NOTE: Graphic N42.

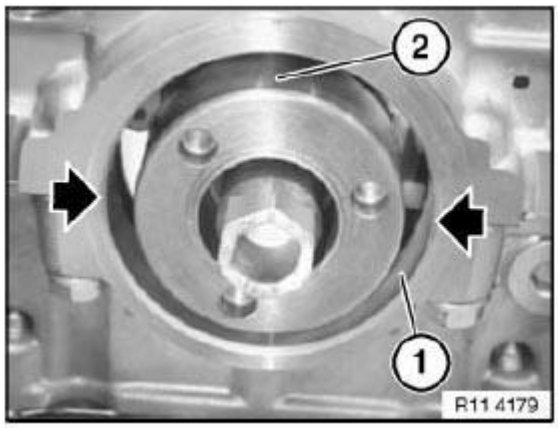

Fig. 251: Locating Sealing Surface
Courtesy of BMW OF NORTH AMERICA, INC.

Push radial shaft seal (1) carefully in direction of arrow on the special tool 11 9 235.

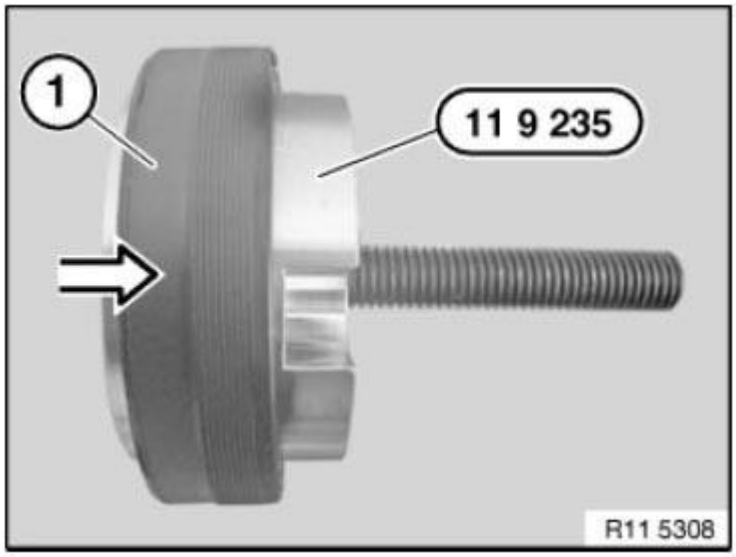

Fig. 252: Pushing Radial Shaft Seal On Special Tool (11 9 235)
Courtesy of BMW OF NORTH AMERICA, INC.

IMPORTANT: Special tool 11 9 235 can only be attached with 2 opposite bolts.
Determine hole pattern on special tool.

Screw special tool 11 9 235 with special tool 11 9 234 on crankshaft.

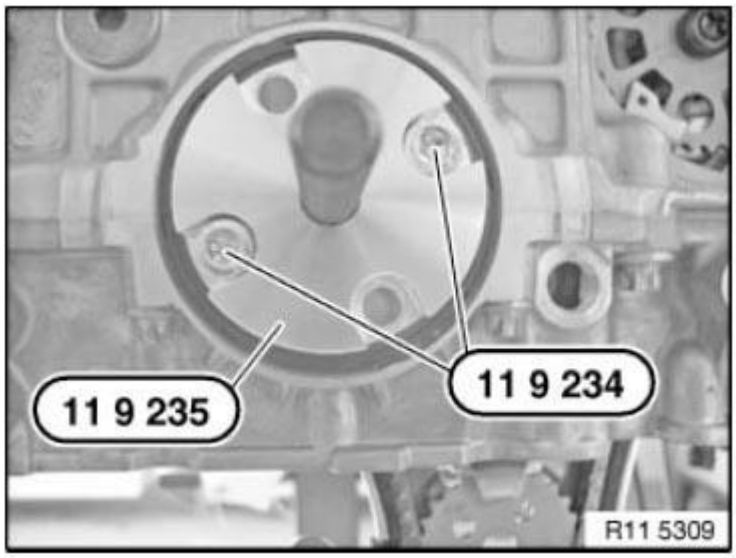

Fig. 253: Identifying Special Tools (11 9 234 And 11 9 235)
Courtesy of BMW OF NORTH AMERICA, INC.

Align groove (2) of radial shaft seal (1) centered to the housing partition (3.

IMPORTANT: After installation, the grooves must be filled with sealing compound.

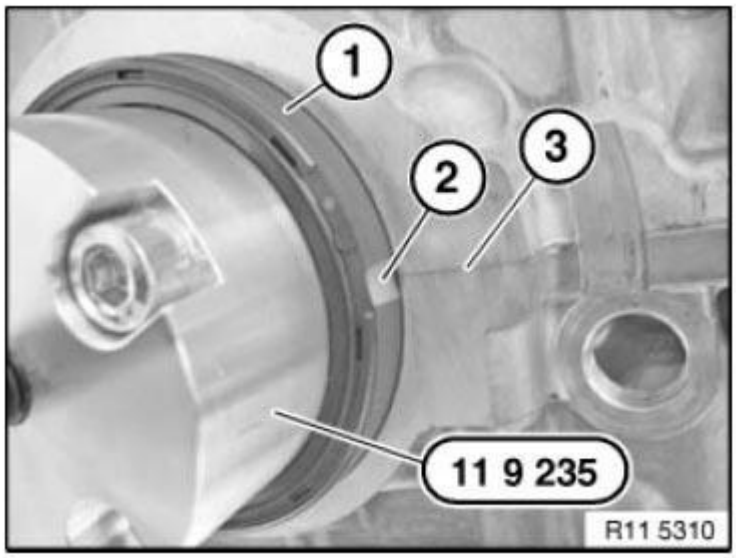

Fig. 254: Aligning Radial Shaft Seal Groove Centered To Housing Partition
Courtesy of BMW OF NORTH AMERICA, INC.

Draw in radial seal with special tool 11 9 231 in conjunction with special tool 11 9 233 until flush.

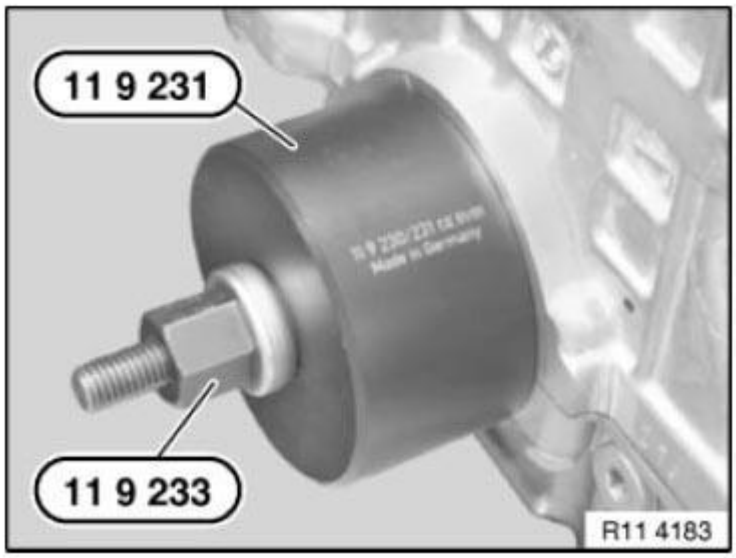

Fig. 255: Identifying Special Tools (11 9 231 And 11 9 233)
Courtesy of BMW OF NORTH AMERICA, INC.

Drive both injector nozzles (1) on left and right with special tool **11 9 360 MANDREL** into crankcase up to stop.

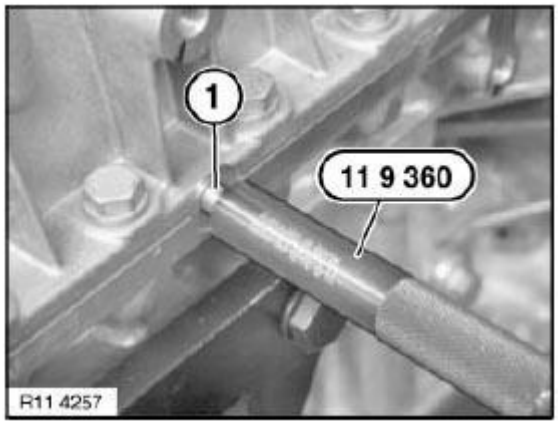

Fig. 256: Driving Nozzles Using Special Tool (11 9 360)
Courtesy of BMW OF NORTH AMERICA, INC.

After fitting both sealing rings, check both sealing ducts for clearance.

Blow compressed air (1) at max. 6 bar into injector nozzle (2).

Compressed air must emerge at both sealing rings on left and right from the outlet bores.

IMPORTANT: If the compressed air does not flow out of all ducts. the crankcase must again be taken apart and cleaned.

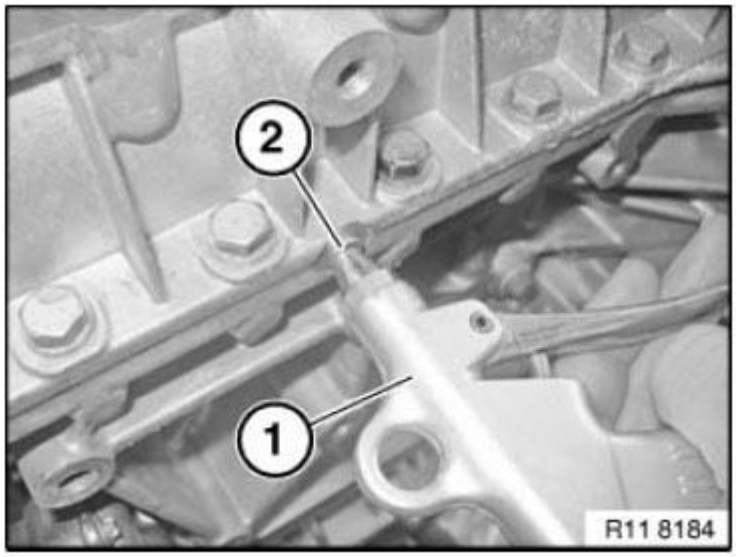

Fig. 257: Identifying Blow Compressed Air Onto Injector Nozzle
Courtesy of BMW OF NORTH AMERICA, INC.

Installation:

Use primer 1.3 and liquid seal 1.4 (refer to BMW parts catalogue).

Prepare liquid sealing compound (1) in special tool **11 4 370 DEVICE** .

Injector nozzles for injecting sealing compound are not required.

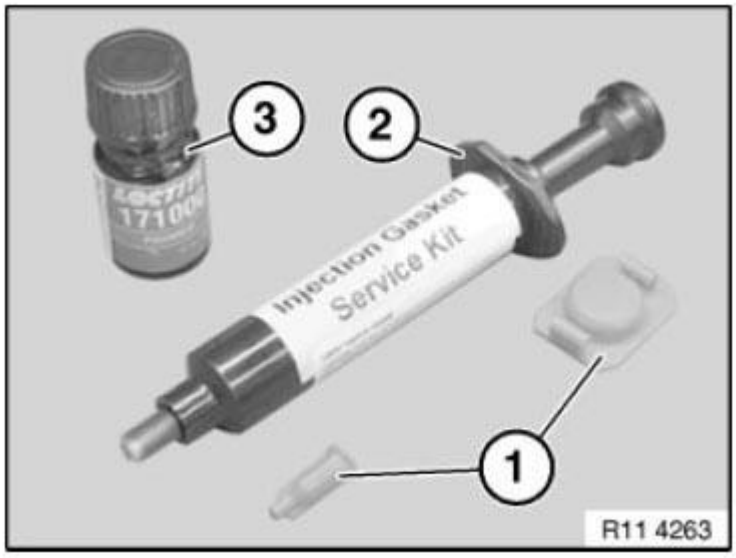

Fig. 258: Identifying Liquid Sealing Compound Of Injector Nozzles
Courtesy of BMW OF NORTH AMERICA, INC.

Slowly insert liquid sealing compound (1) with special tool **11 4 370 DEVICE** in direction of arrow.

Liquid sealing compound must emerge at radial shaft seals at front and rear.

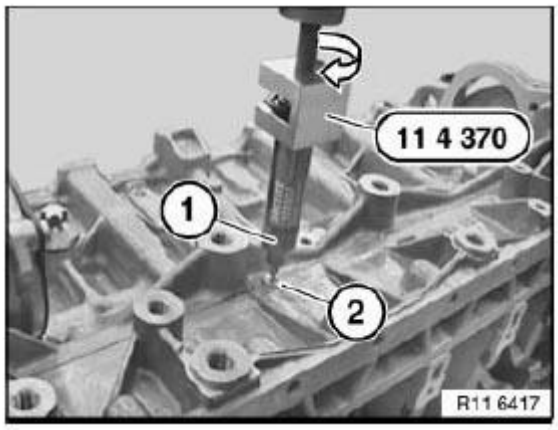

Fig. 259: Inserting Liquid Gasket Using Special Tool 11 4 370
Courtesy of BMW OF NORTH AMERICA, INC.

Stop (seal off) escaping liquid gasket with primer 1.3.

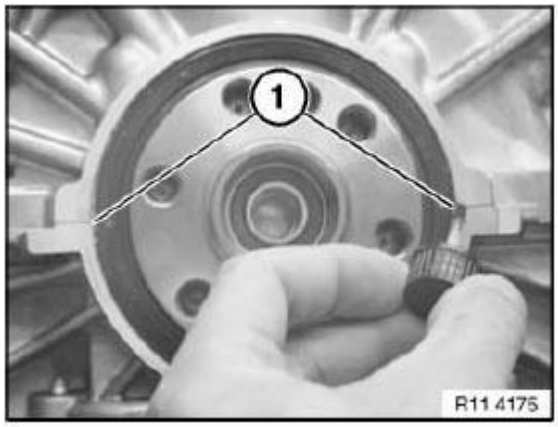

Fig. 260: Inserting Brush Into Grooves Using Loctite Primer
Courtesy of BMW OF NORTH AMERICA, INC.

Stop (seal off) escaping liquid gasket with primer 1.3.

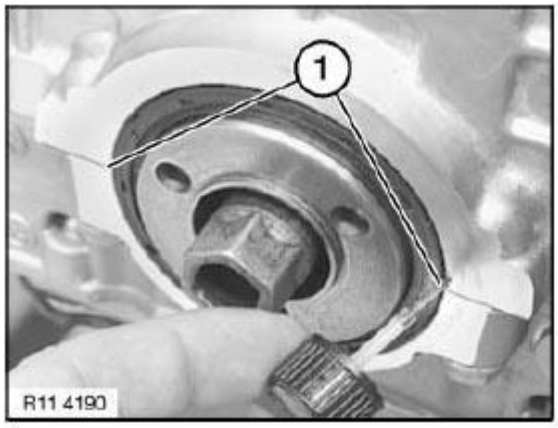

Fig. 261: Inserting Brush Into Groove
Courtesy of BMW OF NORTH AMERICA, INC.

Assemble engine.

11 21 505 SEALING CRANKCASE LOWER SECTION (N52K)

IMPORTANT: Aluminium-magnesium materials.

No steel screws/bolts may be used due to the threat of electrochemical corrosion.

A magnesium crankcase requires aluminium screws/bolts exclusively.

Aluminium screws/bolts must be replaced each time they are released .

Aluminium screws/bolts are permitted with and without color coding (blue).

For reliable identification:

Aluminium screws/bolts are not magnetic .

Jointing torque and angle of rotation must be observed without fail (risk of damage).

IMPORTANT: Changed procedure.
It is not necessary to remove the cylinder head and the crankshaft.

Necessary preliminary tasks:

- Remove **ENGINE**.
- Mount engine on **ASSEMBLY STAND**.
- Remove **CLUTCH** (if fitted).
- Remove left and right engine support arm. See **LEFT ENGINE SUPPORT ARM** and **RIGHT ENGINE SUPPORT ARM** .
- Remove **OIL SUMP**.

Release screws (1).

Pull out oil pump intake pipe (2).

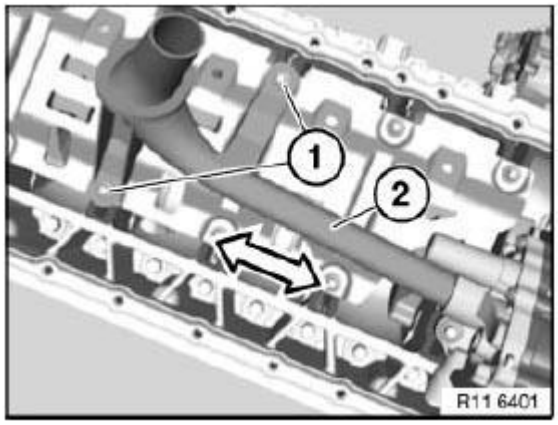

Fig. 262: Pulling Oil Pump Intake Pipe
Courtesy of BMW OF NORTH AMERICA, INC.

Release screws (1).

Jointing torque: 4 Nm ; Angle of rotation: 90°

Installation:

Replace aluminum screws.

Remove oil deflector (2).

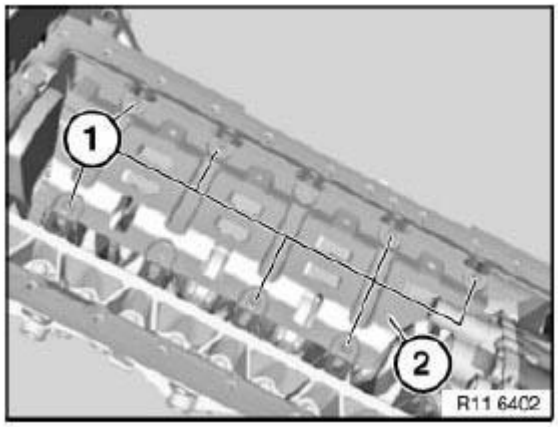

Fig. 263: Identifying Oil Deflector And Screws
Courtesy of BMW OF NORTH AMERICA, INC.

Secure oil pump sprocket with steel pin 6.0 mm (3) to oil pump.

IMPORTANT: Release central bolt (2) only together with steel pin 6.0 mm (3). Do not remove sprocket.

Release central bolt (2).

Jointing torque: 20 Nm ; Angle of rotation: 45°

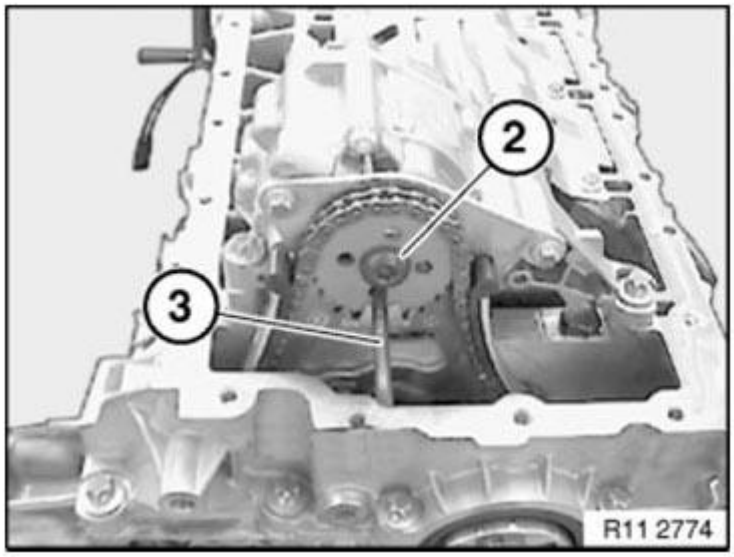

Fig. 264: Identifying Oil Pump Sprocket Steel Pin And Central Bolt
Courtesy of BMW OF NORTH AMERICA, INC.

Unfasten screws (2).

Jointing torque: 4 Nm ; Angle of rotation: 45°

Installation:

Replace aluminum screws.

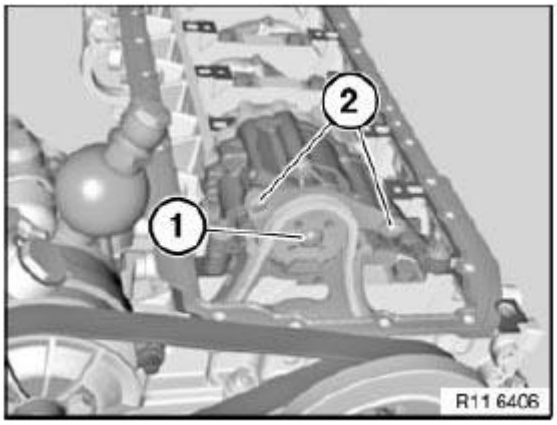

Fig. 265: Identifying Aluminum Screws
Courtesy of BMW OF NORTH AMERICA, INC.

Remove screw plug (1) from crankcase at front.

NOTE: Replace gasket.

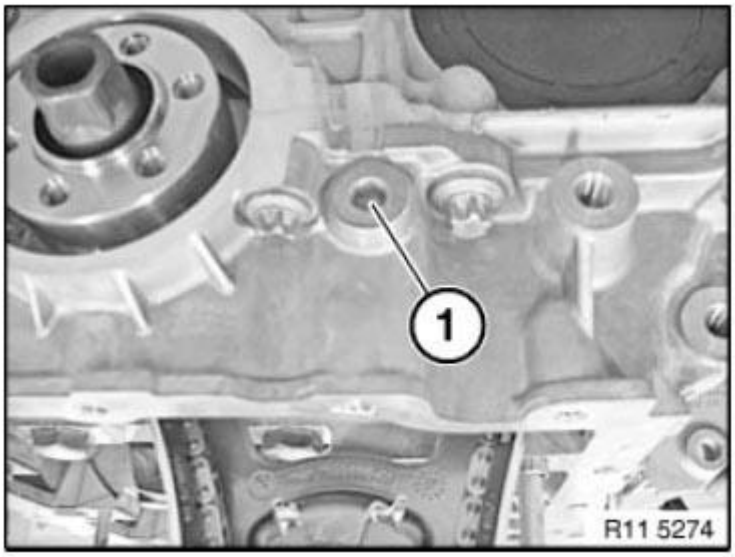

Fig. 266: Identifying Crankcase Screws Plug
Courtesy of BMW OF NORTH AMERICA, INC.

Release screw (1) for oil pump triangular drive with special tool 11 8 640.

NOTE: It is not necessary to remove the triangular drive.

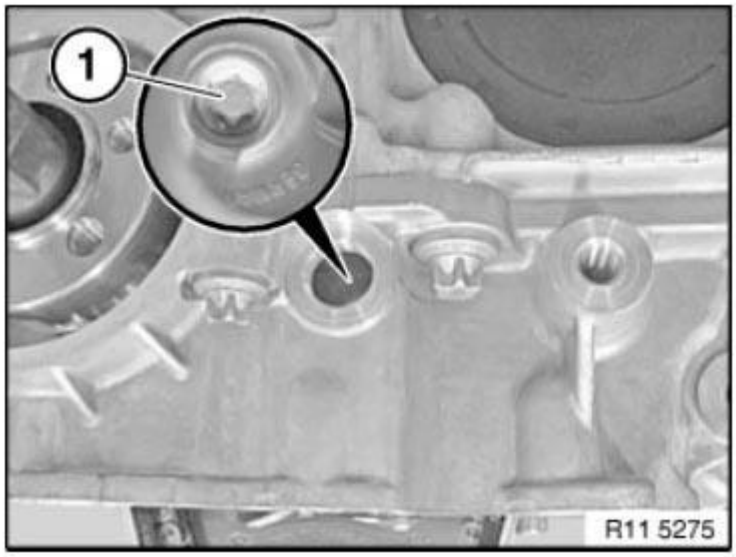

Fig. 267: Identifying Oil Pump Screw
Courtesy of BMW OF NORTH AMERICA, INC.

Version 1

IMPORTANT: Observe different screw lengths.
Release screws (1).
M8 x 123: Jointing torque 10 Nm ; Angle of rotation 180°
M8 x 31: Jointing torque 10 Nm ; Angle of rotation 90°

Installation:

Replace aluminum screws.

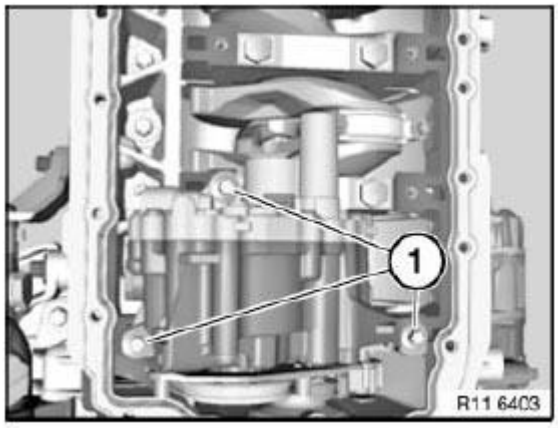

Fig. 268: Identifying Oil Pump Screws
Courtesy of BMW OF NORTH AMERICA, INC.

Version 2

IMPORTANT: Observe different screw lengths.
Release oil pump screws (1).
Jointing torque: 10 Nm ; Angle of rotation: 180°

Installation:

Replace aluminum screws.

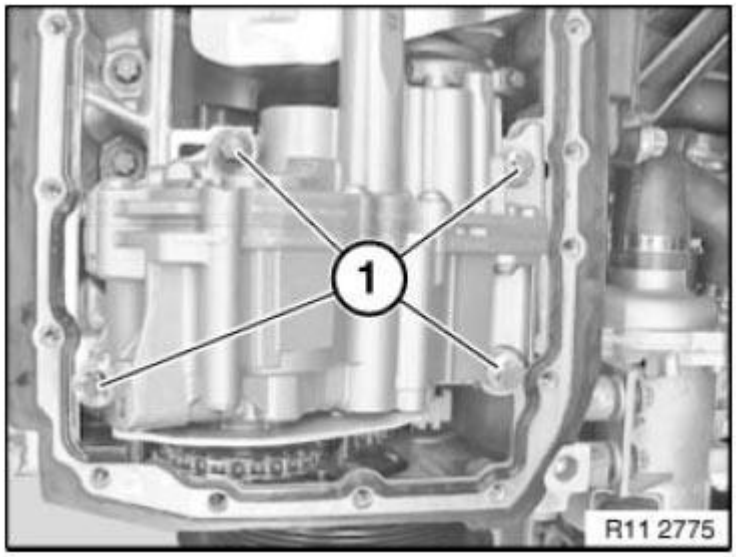

Fig. 269: Identifying Oil Pump Mounting Screws
Courtesy of BMW OF NORTH AMERICA, INC.

Detach sprocket (1) in direction of arrow.

NOTE: The chain tensioner pushes the timing chain (3) of the triangular drive upward.
Do not remove camshaft sprocket.

Remove oil pump (2) in direction of arrow.

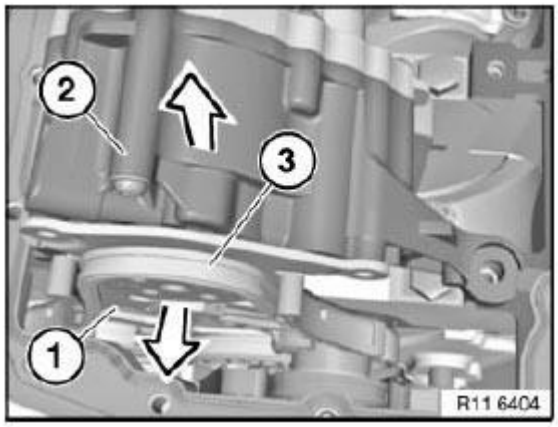

Fig. 270: Removing Sprocket Wheel
Courtesy of BMW OF NORTH AMERICA, INC.

Installation:

Check spacer bushings (1) for secure seating and damage; replace if necessary.

Align twin surface (3) on oil pump (2) to sprocket wheel.

Install oil pump (2).

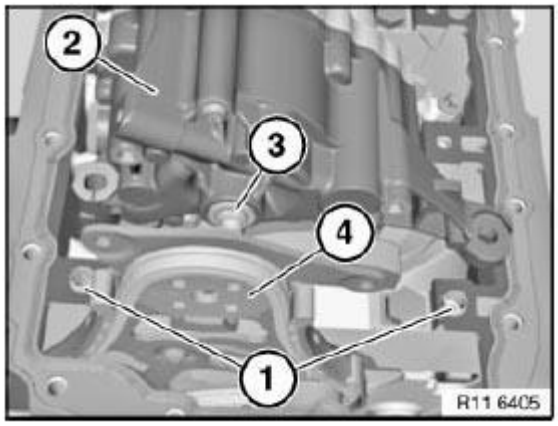

Fig. 271: Identifying Spacer Bushings And Oil Pump
Courtesy of BMW OF NORTH AMERICA, INC.

NOTE: The special tool bore for the TDC position is located on the intake side underneath the starter motor.

Rotate engine at central bolt and secure flywheel in position with special tool 11 0 300.

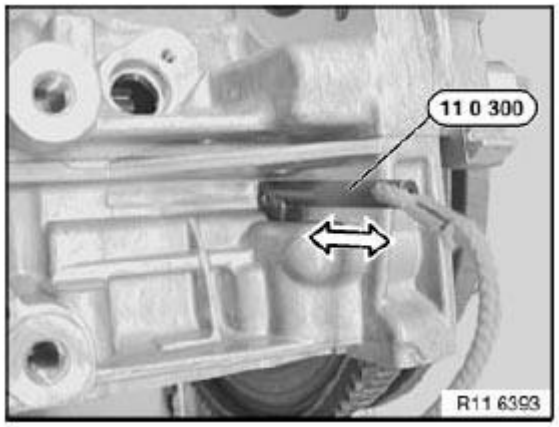

Fig. 272: Rotating Engine Central Bolt
Courtesy of BMW OF NORTH AMERICA, INC.

Secure flywheel with special tool (1) 11 9 260 and special tool (2) 11 9 266.

NOTE: Make sure that the special tool (1) completely engages in the flywheel teeth (see arrow)

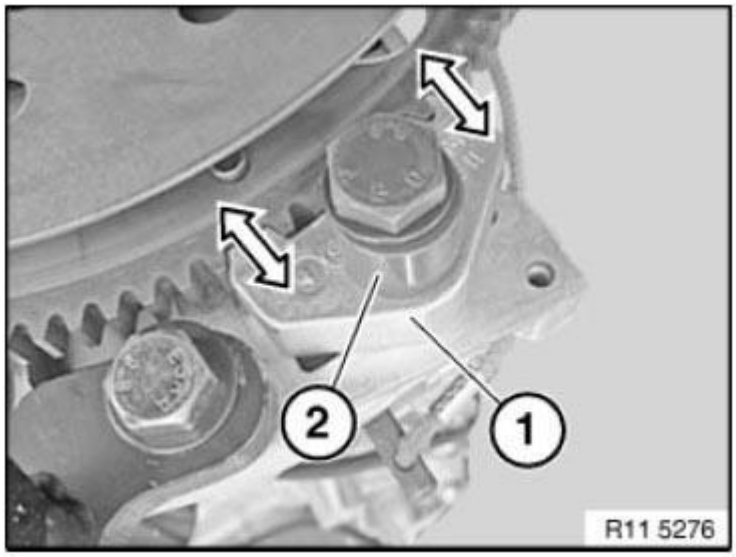

Fig. 273: Engaging Flywheel Teeth With Special Tool (11 9 260)
Courtesy of BMW OF NORTH AMERICA, INC.

Automatic transmission

Release flywheel bolts (1).

Release special tool (2).

Remove flywheel (3).

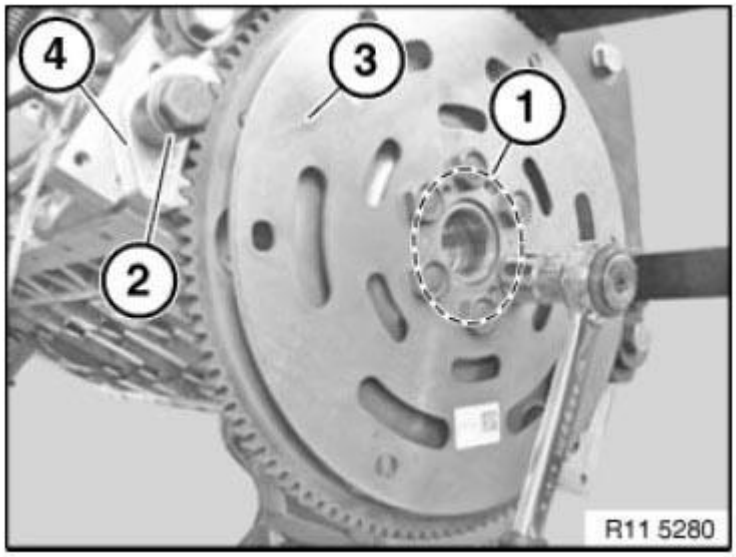

Fig. 274: Releasing Flywheel Bolts
Courtesy of BMW OF NORTH AMERICA, INC.

Manual gearbox

IMPORTANT: Position crankshaft at TDC.

Remove dual-mass flywheel.

Secure flywheel with special tool 11 9 260.

Remove **VIBRATION DAMPER**.

Release flywheel bolts with special tool 11 4 180

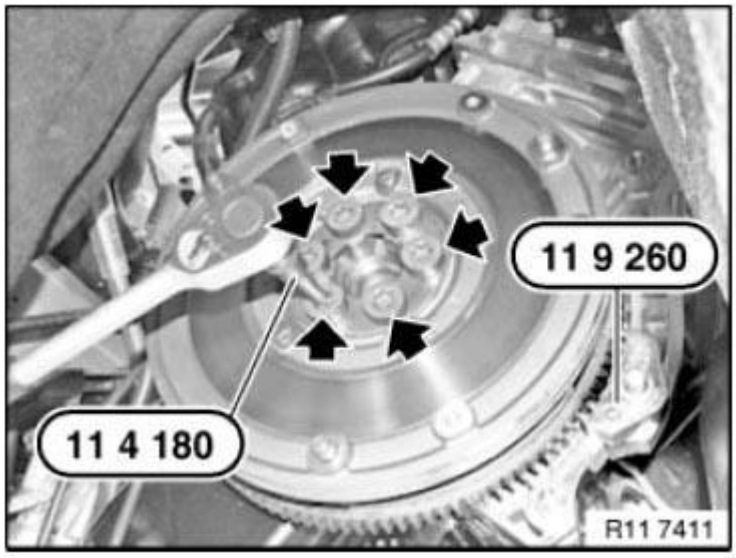

Fig. 275: Releasing Flywheel Bolt Using Special Tool (11 4 180)
Courtesy of BMW OF NORTH AMERICA, INC.

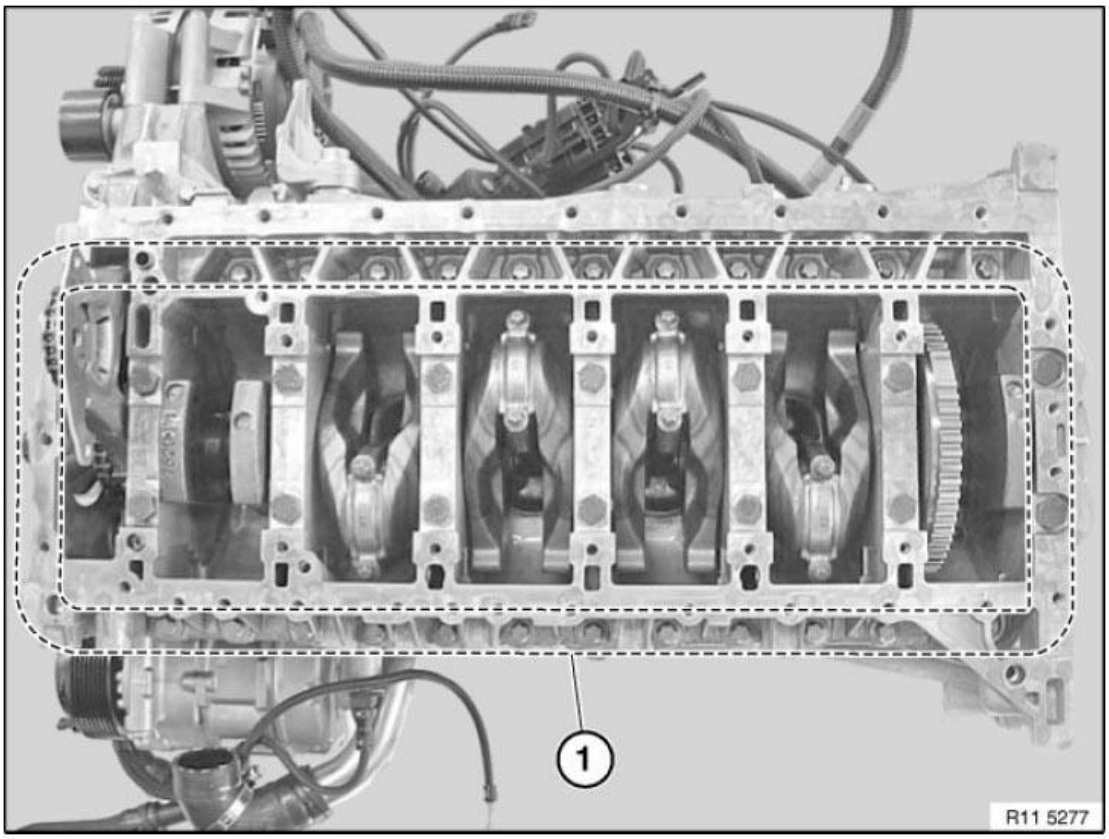

Fig. 276: Identifying Crankcase Bolts
Courtesy of BMW OF NORTH AMERICA, INC.

Release all crankcase bolts (1) along line (2).

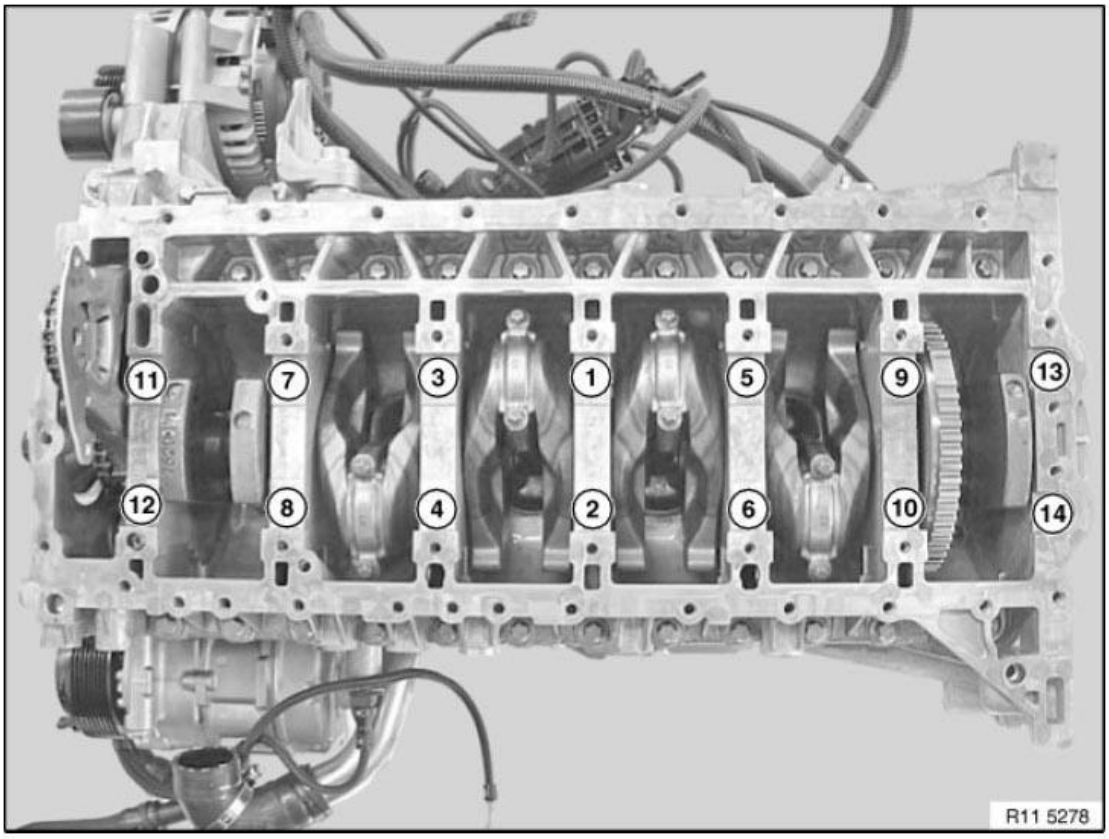

Fig. 277: Crankcase Bolts Removing Order
Courtesy of BMW OF NORTH AMERICA, INC.

Release crankcase bolts M10 in sequence 14 to 1.

Release crankcase lower section (1) from crankcase upper section (2) with suitable tool (3)

Remove crankcase lower section (1) upwards.

IMPORTANT: Do not rotate crankshaft without crankcase lower section (1) (risk of damage).

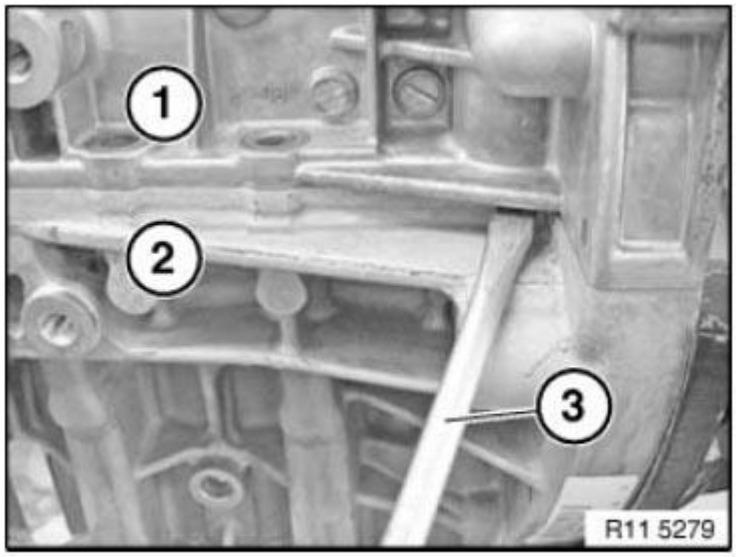

Fig. 278: Releasing Crankcase Lower Section From Crankcase Upper Section Using Tool
Courtesy of BMW OF NORTH AMERICA, INC.

IMPORTANT: Timing chain is pre-tensioned.
Do not raise crankshaft.

Carefully remove radial shaft seal (1).

Catch escaping engine oil with a cloth (2).

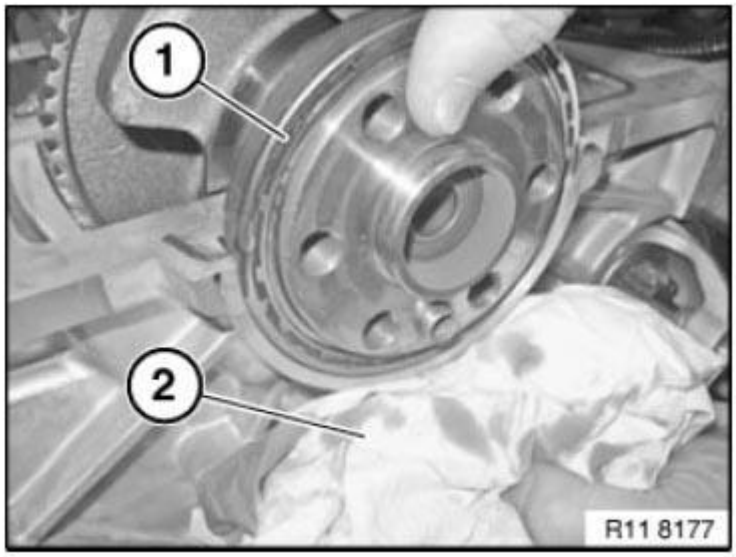

Fig. 279: Removing Radial Shaft Seal
Courtesy of BMW OF NORTH AMERICA, INC.

Carefully remove radial shaft seal (1) towards front.

Catch escaping engine oil with a cloth (2).

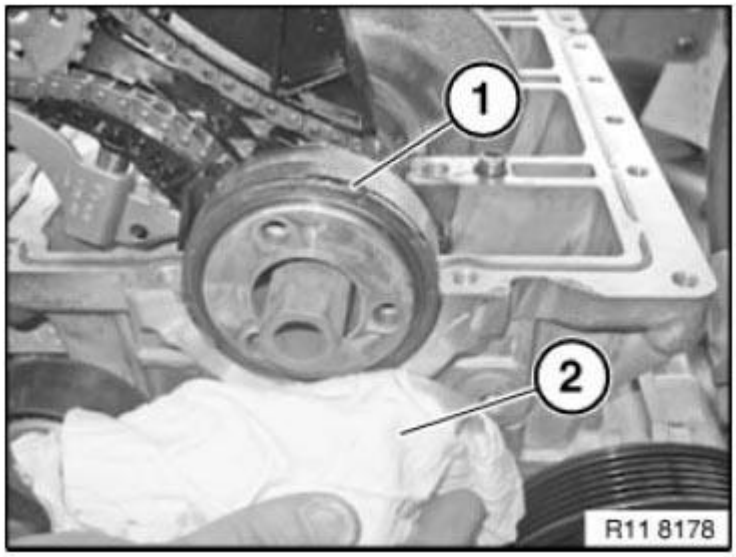

Fig. 280: Stopping Engine Oil Using Cloth
Courtesy of BMW OF NORTH AMERICA, INC.

IMPORTANT: Protect crankcase against sealant residues with a cloth (1).

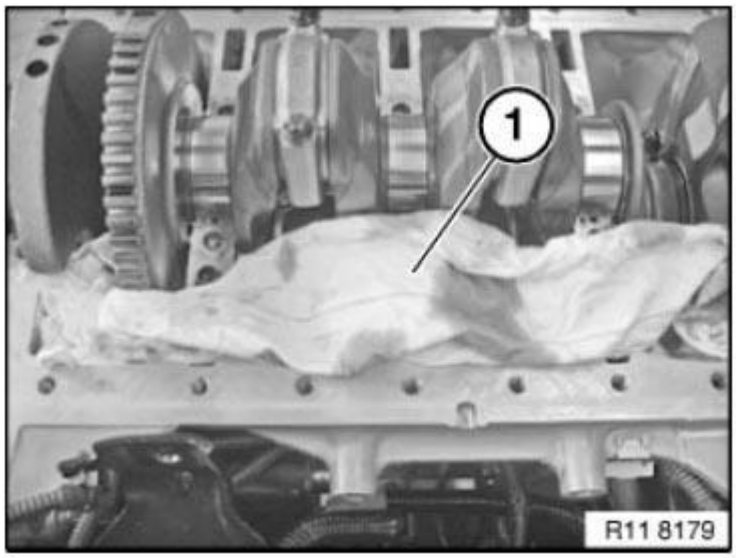

Fig. 281: Identifying Cloth For Protecting Crankcase
Courtesy of BMW OF NORTH AMERICA, INC.

Remove sealant residues (1) with special tool 11 4 470.

Remove injector nozzles (2) for liquid sealing compound on left and right.

Installation:

Replace injector nozzles (2).

Clean all threads with compressed air.

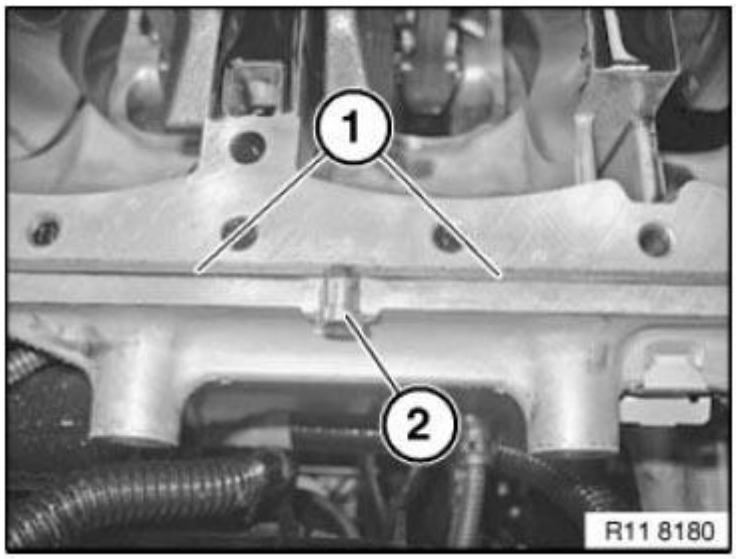

Fig. 282: Identifying Injector Nozzle And Sealant Residue
Courtesy of BMW OF NORTH AMERICA, INC.

Position crankcase lower section (1) on crankcase upper section.

Screw in all M10 crankcase bolts.

Joint all M10 crankcase bolts (1) **20 Nm** from inside outwards.

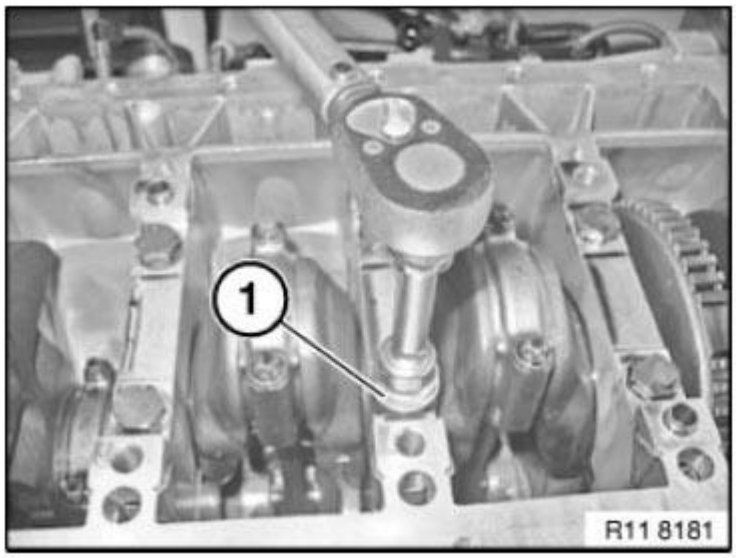

Fig. 283: Tightening M10 Crankcase Bolts
Courtesy of BMW OF NORTH AMERICA, INC.

Identify all M10 crankcase bolts with a colored marking (1) for checking.

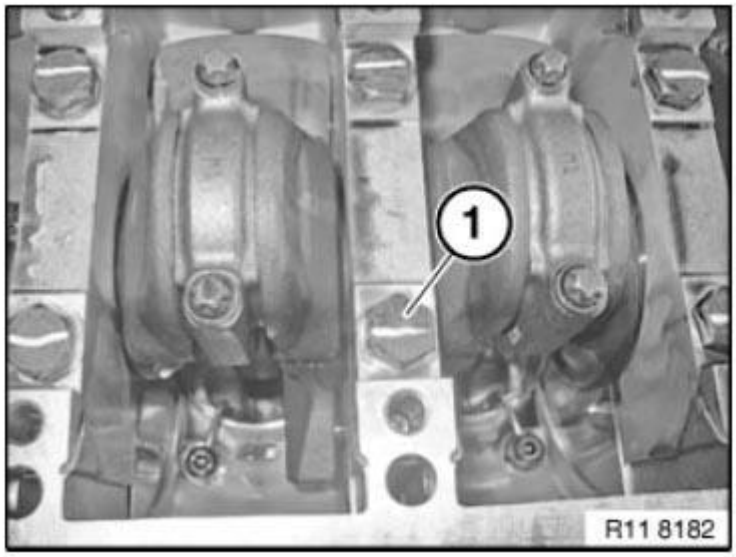

Fig. 284: Identifying Marking On M10 Crankcase Bolts
Courtesy of BMW OF NORTH AMERICA, INC.

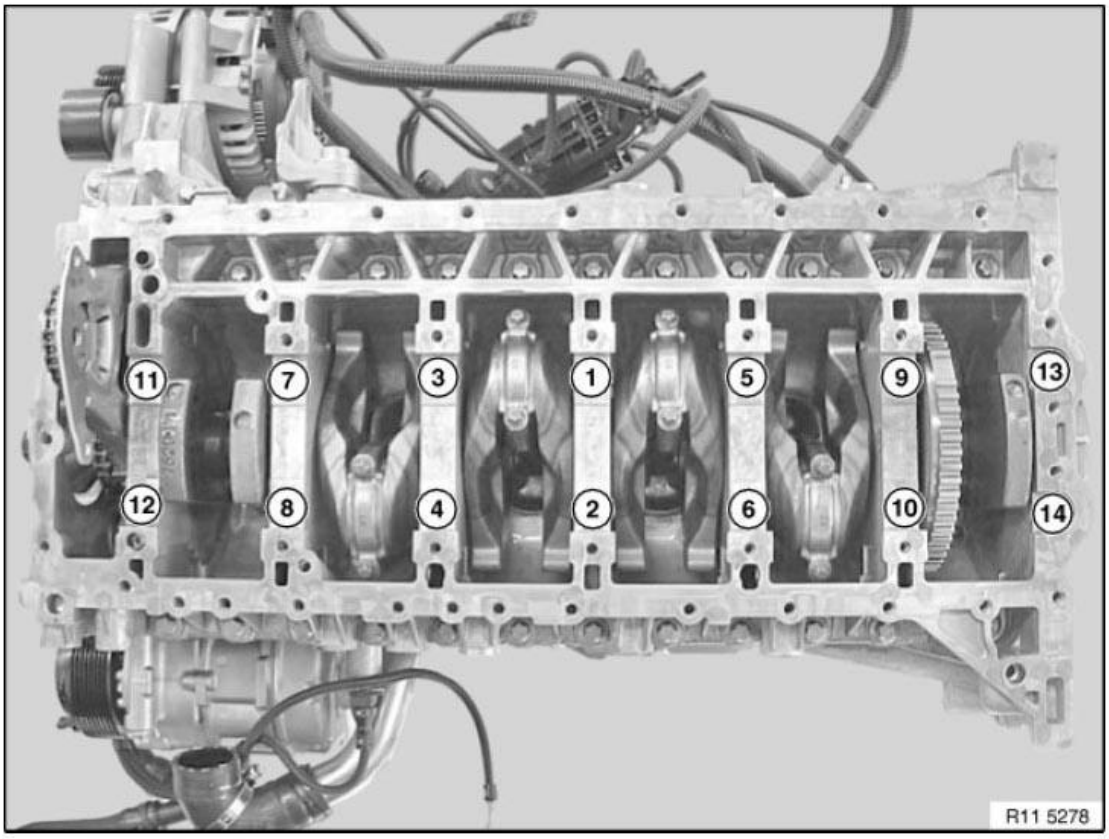

Fig. 285: Crankcase Bolts Tightening Sequence
Courtesy of BMW OF NORTH AMERICA, INC.

Secure crankcase bolts M10 in sequence 1 to 14 with special tool 00 9 120.

Jointing torque: 20 Nm ; Torque angle: 70°

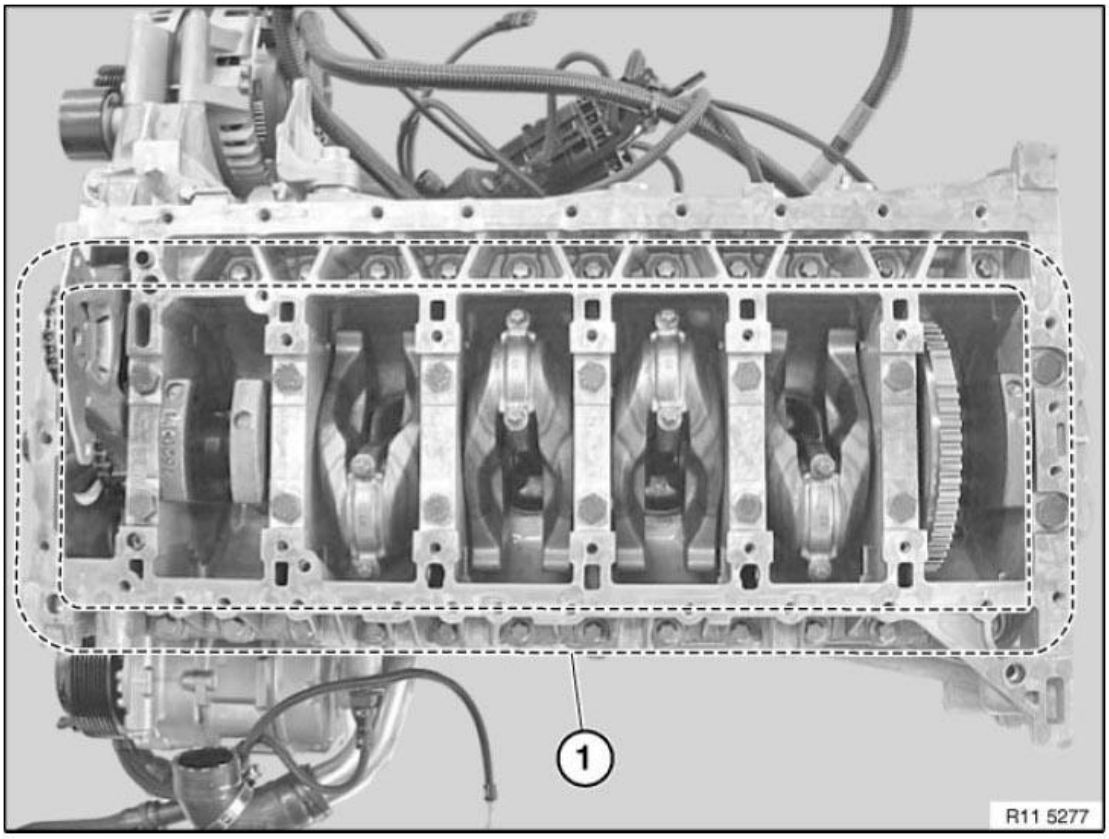

Fig. 286: Identifying Crankcase Bolts
Courtesy of BMW OF NORTH AMERICA, INC.

Insert all crankcase bolts (1).

IMPORTANT: Observe different lengths and sizes of the bolts.
Tightening torque:

- **M10 x 27: Jointing torque 15 Nm ; Torque angle: 90°**
- **M8 x 37: Jointing torque 8 Nm ; Torque angle: 90°**
- **M10 x 41: Jointing torque: 15 Nm ; Torque angle: 90°**

Tighten screw (1) for oil pump triangular drive with special tool 11 8 640.

NOTE: Replace screw.
Jointing torque: 4 Nm ; Angle of rotation: 45°

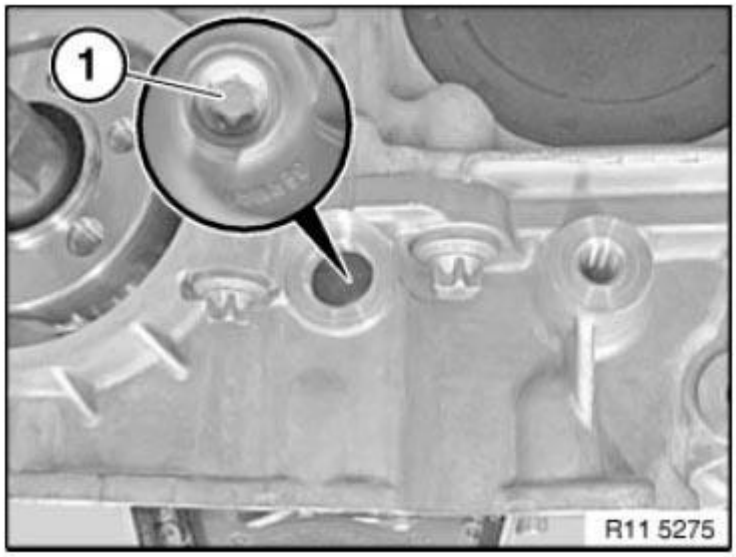

Fig. 287: Identifying Oil Pump Screw
Courtesy of BMW OF NORTH AMERICA, INC.

Tighten screw plug on front of crankcase.

Tightening torque: 27 Nm

Installation:

Replace sealing ring.

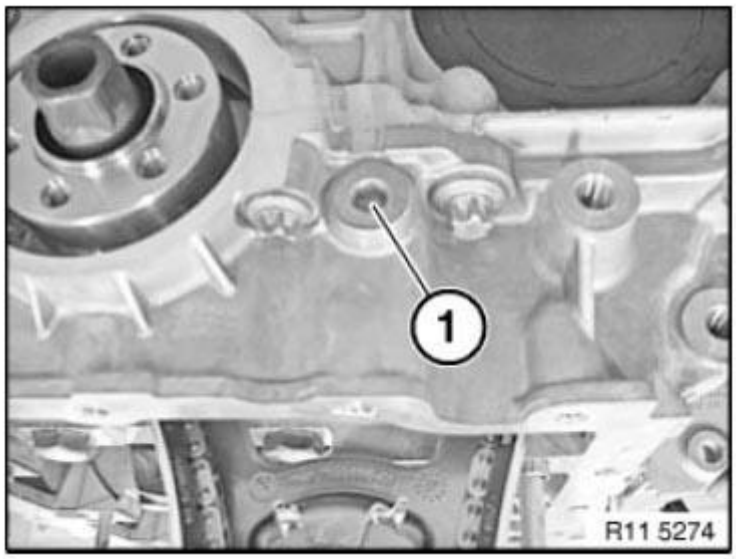

Fig. 288: Identifying Crankcase Screws Plug
Courtesy of BMW OF NORTH AMERICA, INC.

Prepare radial shaft seal (1) on special tool 11 8 220.

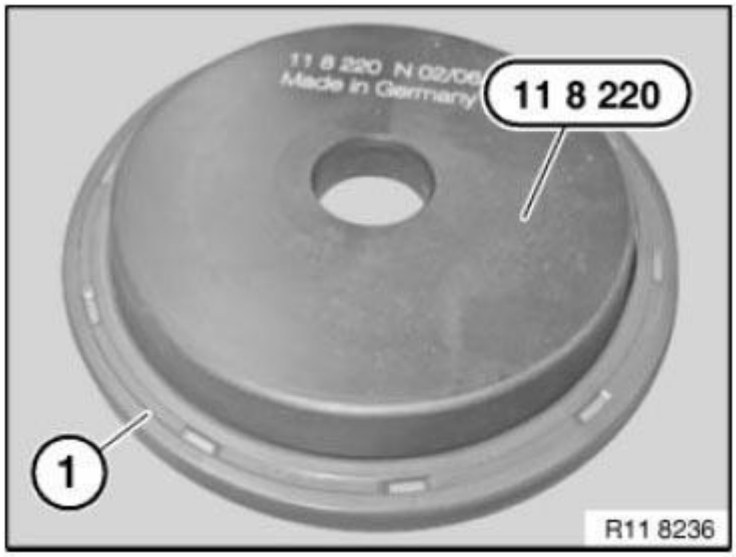

Fig. 289: Identifying Radial Shaft Seal On Special Tool (11 8 220)
Courtesy of BMW OF NORTH AMERICA, INC.

Position radial shaft seal (1) with special tool 11 8 220 on the crankshaft.

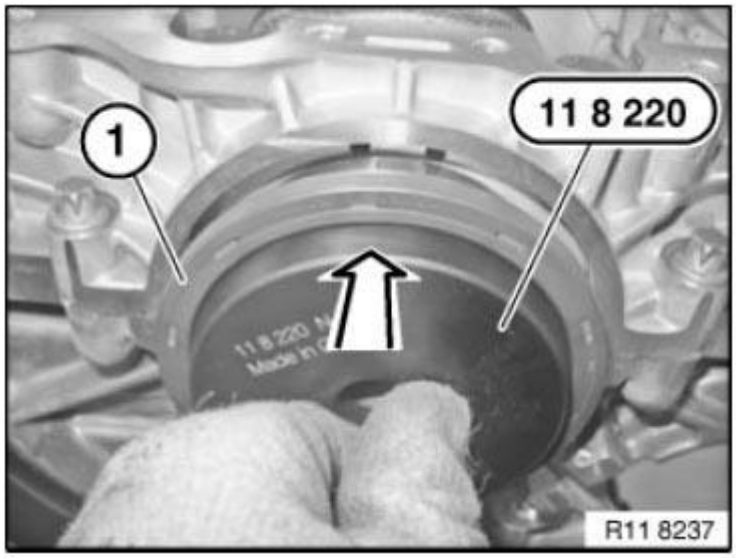

Fig. 290: Positioning Radial Shaft Seal On Crankshaft Using Special Tool (11 8 220)
Courtesy of BMW OF NORTH AMERICA, INC.

Brush radial shaft seal (1) over the special tool 11 8 220.

Move radial shaft seal (1) parallel up against the crankcase.

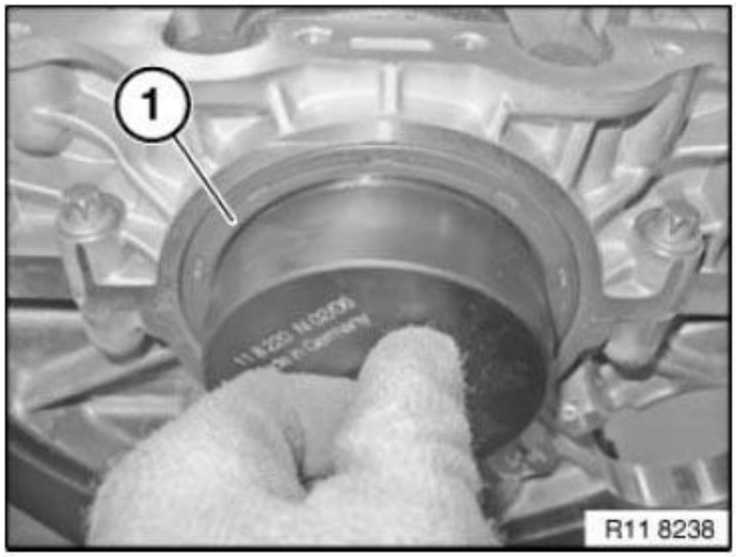

Fig. 291: Moving Radial Shaft Seal
Courtesy of BMW OF NORTH AMERICA, INC.

Screw special tool 11 9 182 with screws (special tool 11 9 184) to crankshaft.

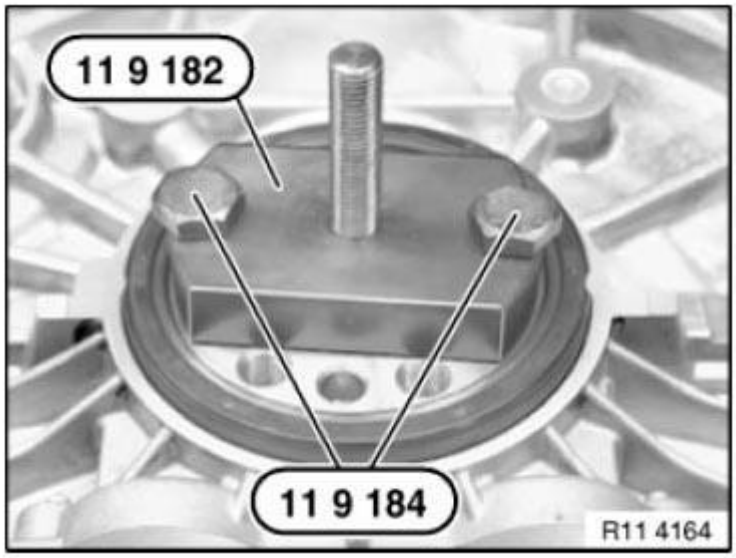

Fig. 292: Identifying Special Tools (11 9 182 And 11 9 184)
Courtesy of BMW OF NORTH AMERICA, INC.

Installation:

Prepare special tool 11 9 181 for installation. Connect special tool 11 9 185 onto special tool 11 8 181.

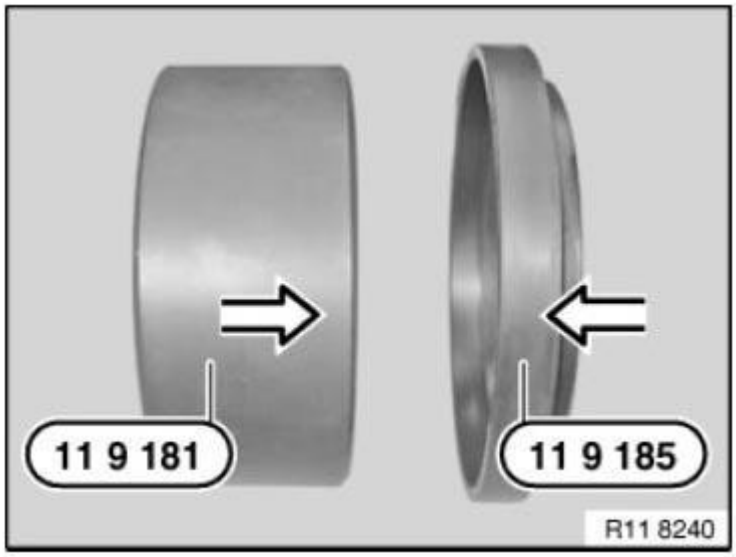

Fig. 293: Connecting Special Tool (11 9 185) Onto Special Tool (11 8 181)
Courtesy of BMW OF NORTH AMERICA, INC.

Pull on radial shaft seal with special tool 11 9 181 and 11 9 185 in combination with special tool 11 9 183.

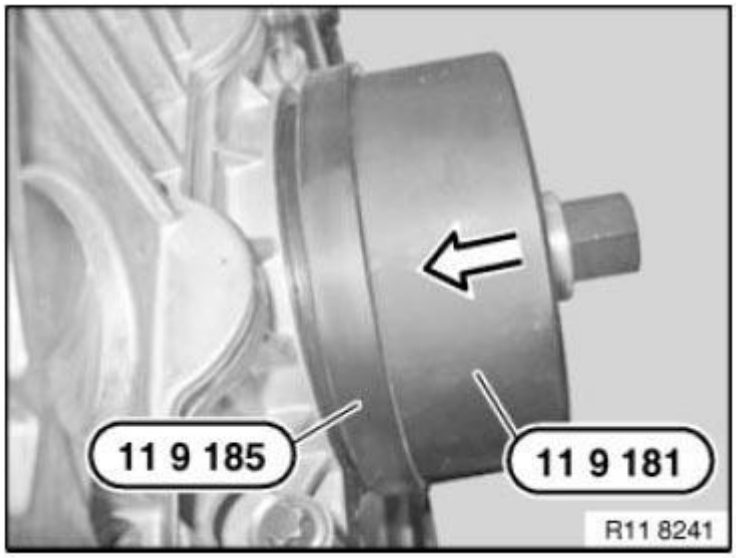

Fig. 294: Pulling Radial Shaft Seal Using Special Tool (11 9 181)
Courtesy of BMW OF NORTH AMERICA, INC.

Screw on radial shaft seal with special tool 11 9 183 to limit position.

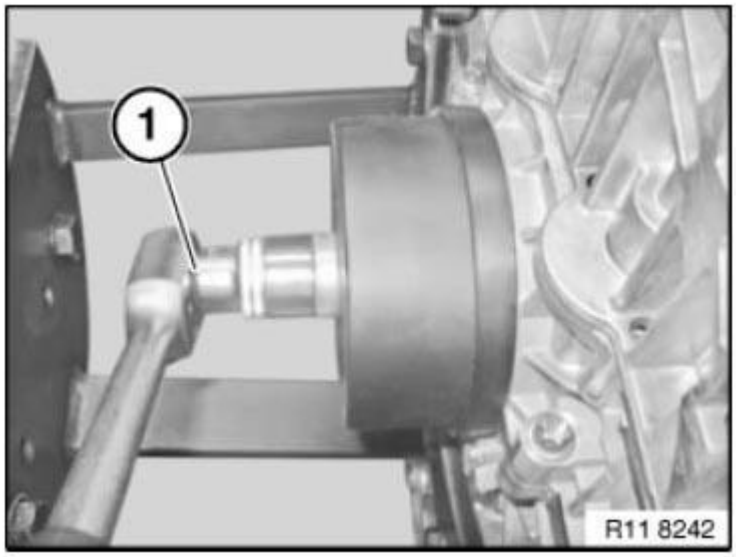

Fig. 295: Tightening Radial Shaft Seal
Courtesy of BMW OF NORTH AMERICA, INC.

Installation:

Clean sealing surface (1) and degrease thoroughly in area of housing partition.

Apply a light coat of oil to running surface (2) of radial seal.

NOTE: Graphic N42.

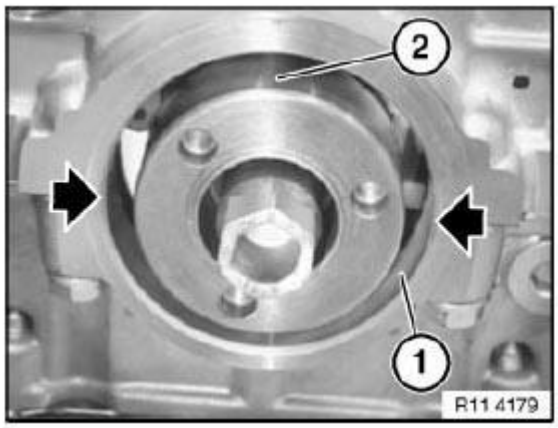

Fig. 296: Identifying Radial Seal Running And Sealing Surfaces
Courtesy of BMW OF NORTH AMERICA, INC.

Push radial shaft seal (1) 11 9 235carefully in direction of arrow on the special tool.

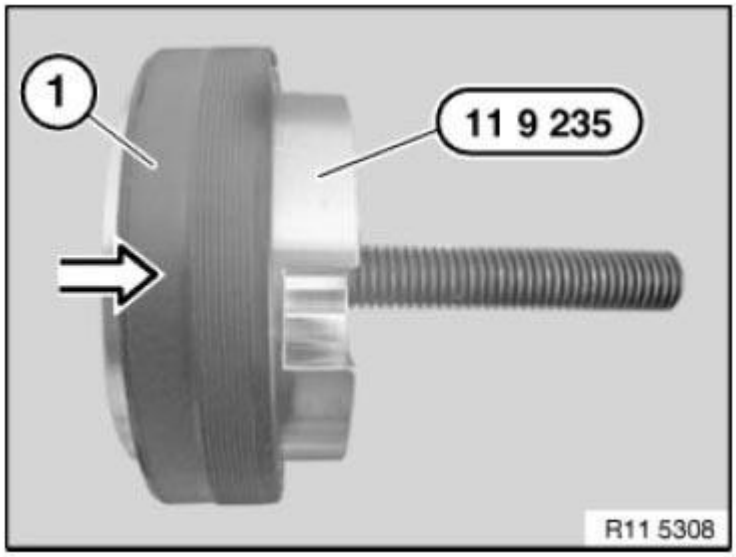

Fig. 297: Pushing Radial Shaft Seal
Courtesy of BMW OF NORTH AMERICA, INC.

IMPORTANT: 11 9 235Special tool can only be fastened with 2 opposite bolts.
Determine hole pattern on special tool.

Screw special tool 11 9 235 with special tool 11 9 234 on crankshaft.

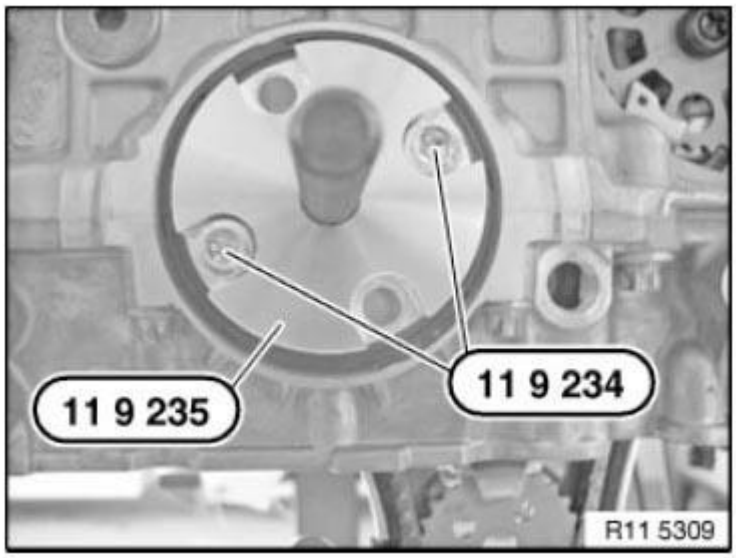

Fig. 298: Identifying Special Tools (11 9 234 And 11 9 235)
Courtesy of BMW OF NORTH AMERICA, INC.

Align groove (2) of radial shaft seal (1) centered to the housing partition (3.

IMPORTANT: After installation, the grooves must be filled with sealing compound.

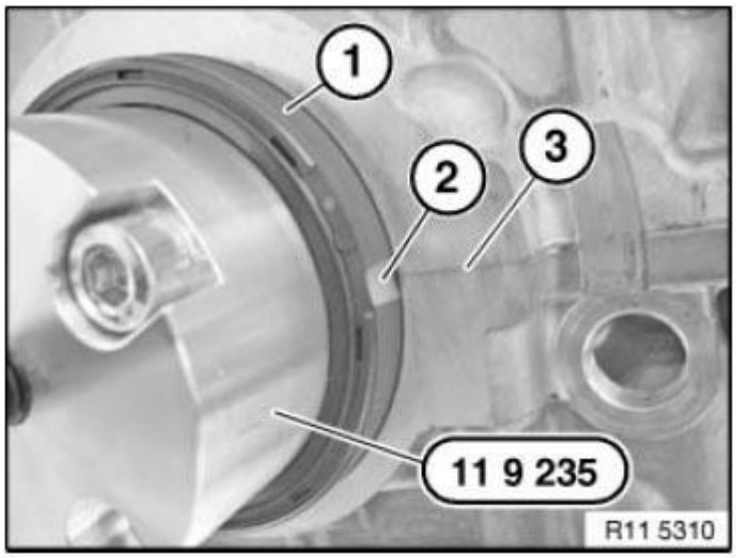

Fig. 299: Aligning Groove Of Radial Shaft Seal
Courtesy of BMW OF NORTH AMERICA, INC.

Draw in radial seal with special tool 11 9 231 in conjunction with special tool 11 9 233 until flush.

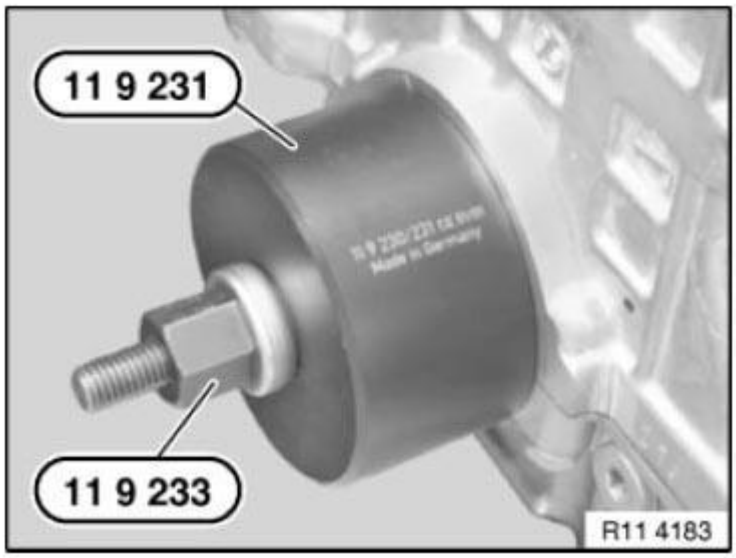

Fig. 300: Installing Radial Seal Using Special Tools (11 9 231)
Courtesy of BMW OF NORTH AMERICA, INC.

Drive both injector nozzles (1) on left and right with special tool 11 9 360 into crankcase up to stop.

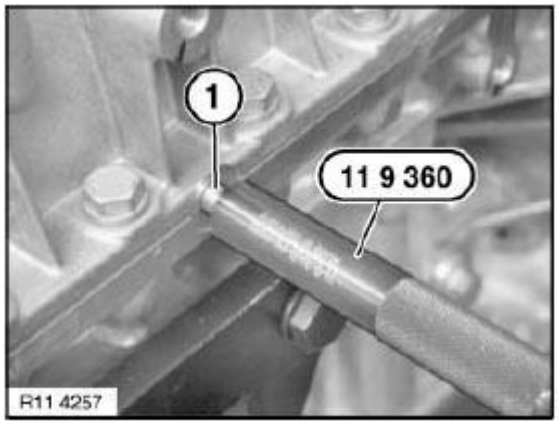

Fig. 301: Installing Nozzles On Crankcase Using Special Tool (11 9 360)
Courtesy of BMW OF NORTH AMERICA, INC.

After fitting both sealing rings, check both sealing ducts for clearance.

Blow compressed air (1) at max. 6 bar into injector nozzle (2).

Compressed air must emerge at both sealing rings on left and right from the outlet bores.

IMPORTANT: If the compressed air does not flow out of all ducts. the crankcase must again be taken apart and cleaned.

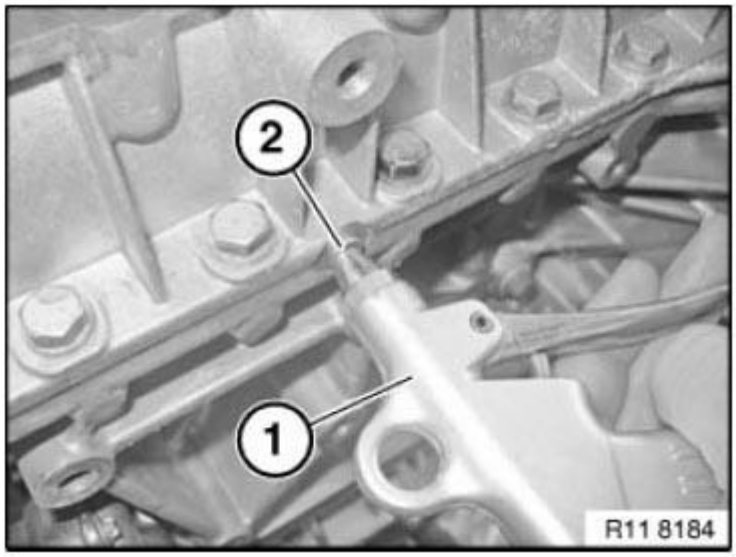

Fig. 302: Blowing Compressed Air Into Injector Nozzle
Courtesy of BMW OF NORTH AMERICA, INC.

Installation:

Use Loctite 171000 primer and Loctite 193140 liquid gasket.

Prepare liquid sealing compound (1) in special tool 11 4 370.

Injector nozzles for injecting sealing compound are not required.

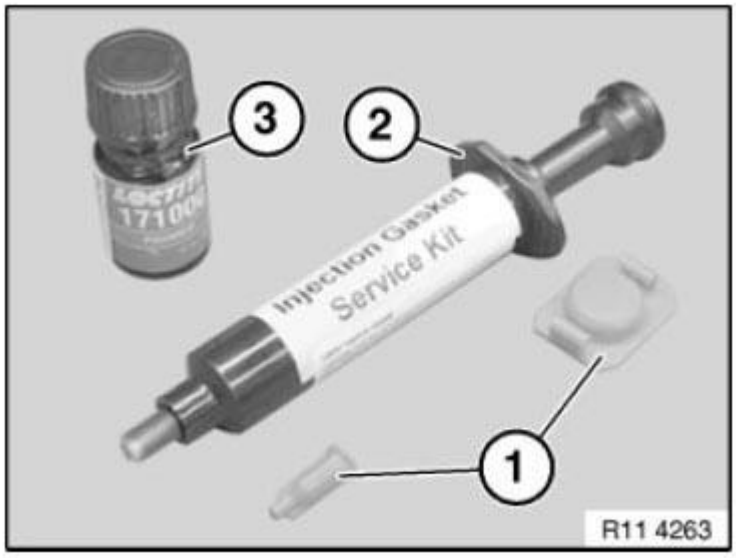

Fig. 303: Identifying Injector With Primer Bottle
Courtesy of BMW OF NORTH AMERICA, INC.

Slowly insert liquid sealing compound (1) with special tool 11 4 370 in direction of arrow.

Liquid sealing compound must emerge at radial shaft seals at front and rear.

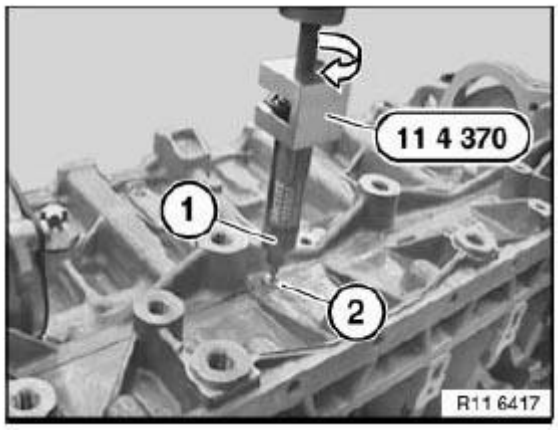

Fig. 304: Inserting Liquid Gasket Using Special Tool (11 4 370)
Courtesy of BMW OF NORTH AMERICA, INC.

Stop (seal off) escaping liquid gasket with primer 1.3.

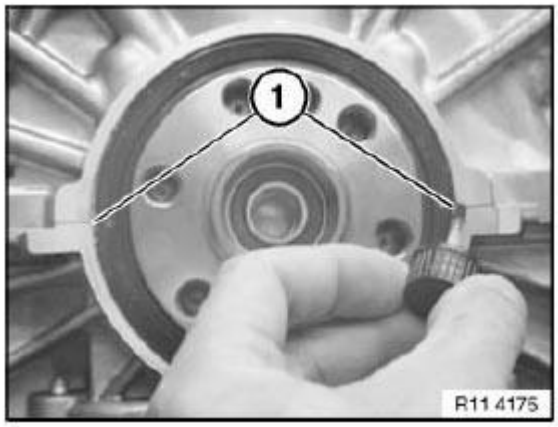

Fig. 305: Sealing Liquid Gasket Using Primer 1.3
Courtesy of BMW OF NORTH AMERICA, INC.

Stop (seal off) escaping liquid gasket with primer 1.3.

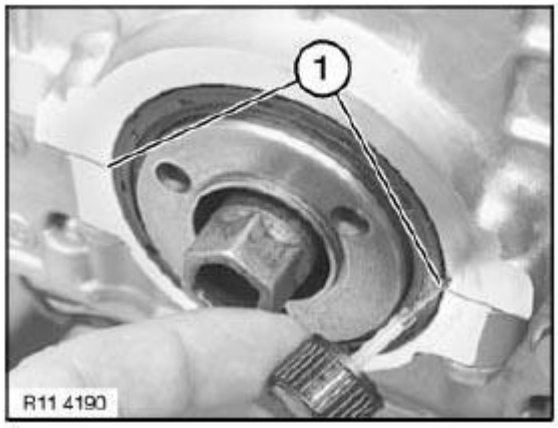

Fig. 306: Sealing Liquid Gasket Using Primer 1.3
Courtesy of BMW OF NORTH AMERICA, INC.

Assemble engine.

11 21 531 REPLACING ALL CRANKSHAFT MAIN BEARINGS (N51)

Special tools required:

- 00 2 590
- 11 4 251
- 11 4 252
- 11 4 470

IMPORTANT: Aluminium-magnesium materials.

No steel screws/bolts may be used due to the threat of electrochemical corrosion.

A magnesium crankcase requires aluminium screws/bolts exclusively.

Aluminium screws/bolts must be replaced each time they are released .

Aluminium screws/bolts are permitted with and without color coding (blue).

For reliable identification:

Aluminium screws/bolts are not magnetic .

Jointing torque and angle of rotation must be observed without fail (risk of damage).

Necessary preliminary tasks:

- Remove **Crankshaft**

Check setting of oil spray nozzles, adjusting if necessary:

Attach special tool 11 4 251 to screw connection on main bearing.

NOTE: Special tool 11 4 252 must be pre-installed at the seventh main bearing block.

For tightening torque refer to 5AZ in **11 11 CRANKCASE** .

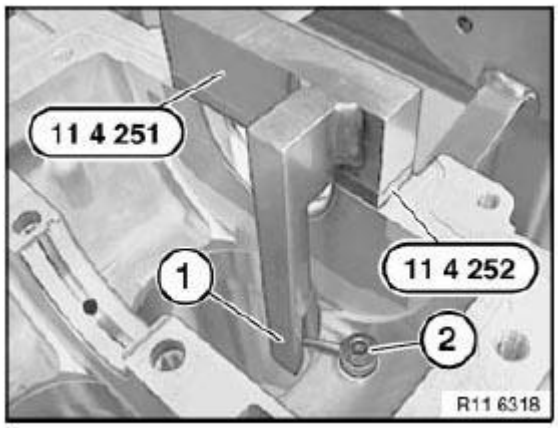

Fig. 307: Special Tools (11 4 252), (11 4 251), Spray Nozzle And Position
Courtesy of BMW OF NORTH AMERICA, INC.

Remove crankshaft (1).

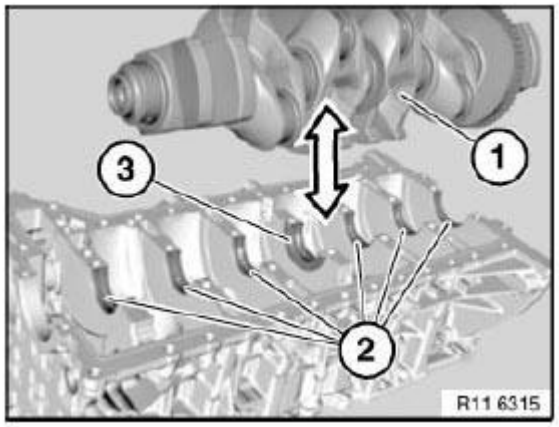

Fig. 308: Bearing Shells And Guide Bearing Shell
Courtesy of BMW OF NORTH AMERICA, INC.

NOTE: Pilot bearing shell (1) at the fourth bearing block is a thrust bearing.

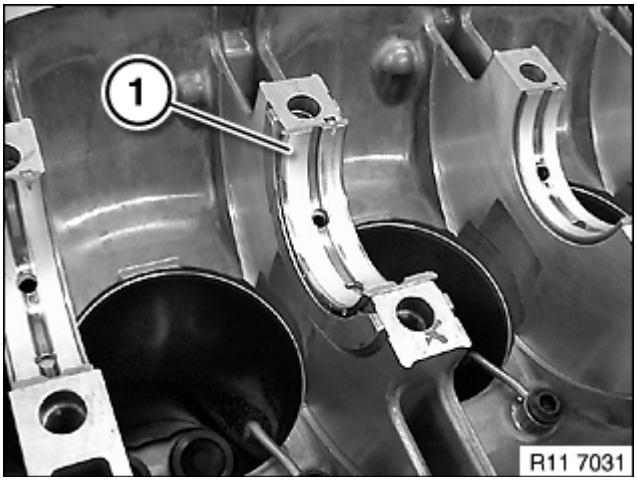

Fig. 309: Pilot Bearing Shell
Courtesy of BMW OF NORTH AMERICA, INC.

Remove bearing shells (1).

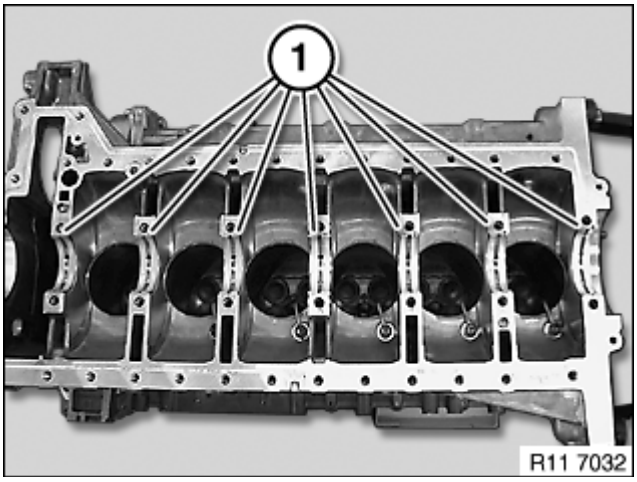

Fig. 310: Bearing Shells
Courtesy of BMW OF NORTH AMERICA, INC.

Installation:

Bearing shell (1) with lubricant groove must be fitted in crankcase upper section.

Bearing shell (2) without lubricant groove must be fitted in crankcase lower section (bedplate).

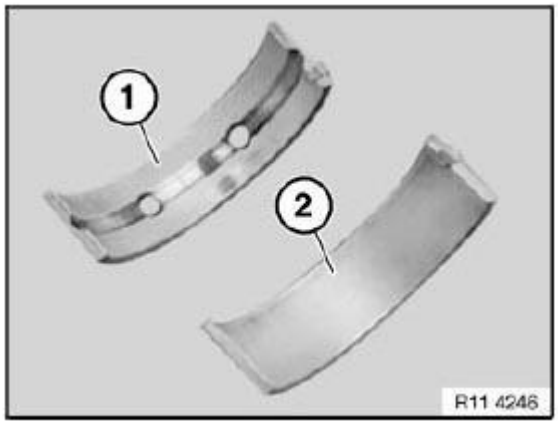

Fig. 311: Bearing Shells With And Without Lubricant Groove
Courtesy of BMW OF NORTH AMERICA, INC.

IMPORTANT: Bearing classification (1) on crankcase lower section (values from 1 to 3).

Bearing classification (2) of **connecting rod bearings** (b/r).

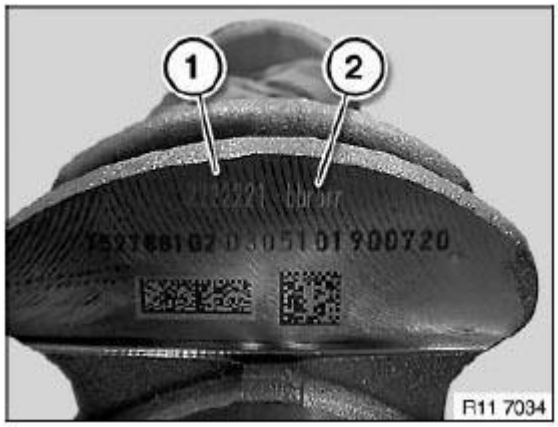

Fig. 312: Connecting Rod Bearing Classification
Courtesy of BMW OF NORTH AMERICA, INC.

Bearing classification (1) on crankcase (see **table**: values of A/B/C).

Installation:

When all the letters and number code have been determined, the color of the bearing shells must be allocated (see **table**).

IMPORTANT: Engine damage will result if a small bearing play is determined.

The color combination Yellow and Red must not be fitted. Possible color combinations (see table).

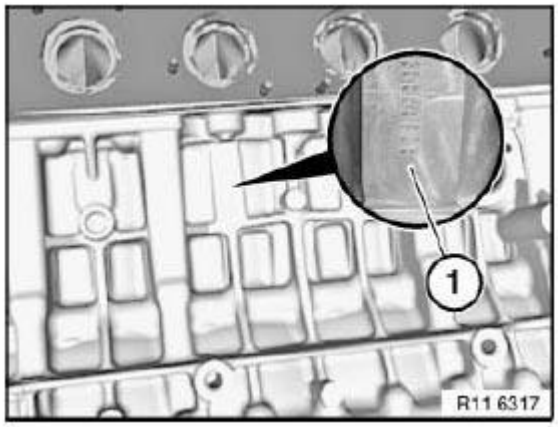

Fig. 313: Bearing Classification
Courtesy of BMW OF NORTH AMERICA, INC.

BEDPLATE SPECIFICATION

(A1) Bedplate / Yellow	(B1) Bedplate / Yellow	(C1) Bedplate / Green
(A1) Crankcase / Yellow	(B1) Crankcase / Green	(C1) Crankcase / Green

(A2) Bedplate / Green	(B2) Bedplate / Green	(C2) Bedplate / Green
(A2) Crankcase / Yellow	(B2) Crankcase / Green	(C2) Crankcase / Red
(A3) Bedplate / Green	(B3) Bedplate / Red	(C3) Bedplate / Red
(A3) Crankcase / Green	(B3) Crankcase / Green	(C3) Crankcase / Red

Clean sealing faces (1).

IMPORTANT: Do not use any metal-cutting tools.

Clean sealing faces with special tool 11 4 470 only.

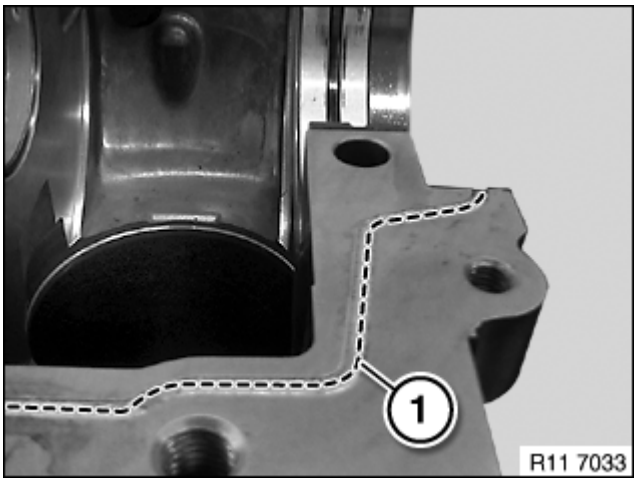

Fig. 314: Sealing Surfaces
Courtesy of BMW OF NORTH AMERICA, INC.

Insert all bearing shells (2 and 3).

NOTE: Bearing shell at the fourth bearing block is a thrust bearing.

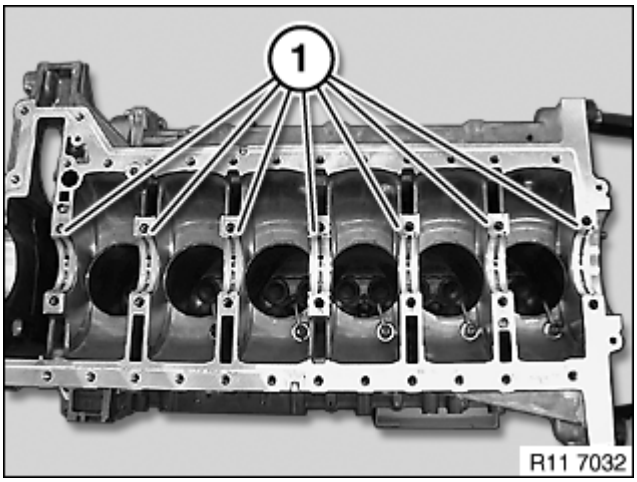

Fig. 315: Bearing Shells

Courtesy of BMW OF NORTH AMERICA, INC.

Determine bearing play with special tool 00 2 590.

Installation:

All measuring points must be free from oil and grease.

Use used screws to determine bearing play.

Set up **Crankcase Lower Section** with bearing shells.

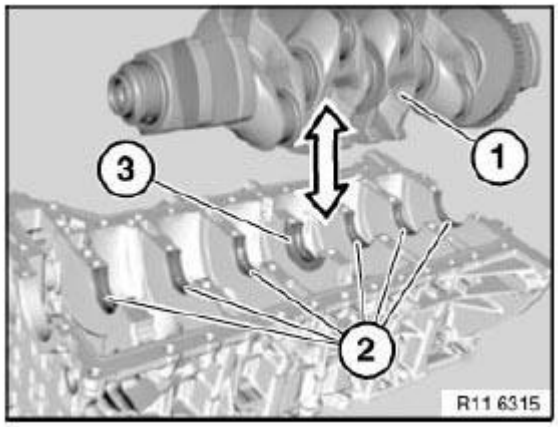

Fig. 316: Bearing Shells And Guide Bearing Shell
Courtesy of BMW OF NORTH AMERICA, INC.

Remove lower crankcase.

Read off bearing play at width of flattened plastic thread and measurement scale.

Crankshaft bearing clearance radial.

Installation:

Remove plastic thread.

Apply a light coat of oil to bearing shells and crankshaft.

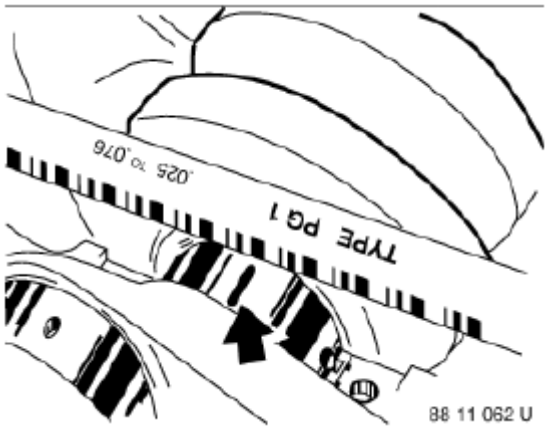

Fig. 317: Checking Bearing Play
Courtesy of BMW OF NORTH AMERICA, INC.

Install **Crankcase Lower Section.**

Assemble engine.

11 21 531 REPLACING ALL MAIN CRANKSHAFT BEARING SHELLS (N52K)

Special tools required:

- 00 2 590
- 11 4 251
- 11 4 252
- 11 4 470

IMPORTANT: Aluminium-magnesium materials.

No steel screws/bolts may be used due to the threat of electrochemical corrosion.

A magnesium crankcase requires aluminium screws/bolts exclusively.

Aluminium screws/bolts must be replaced each time they are released .

Aluminium screws/bolts are permitted with and without color coding (blue).

For reliable identification:

Aluminium screws/bolts are not magnetic .

Jointing torque and angle of rotation must be observed without fail (risk of damage).

Necessary preliminary tasks:

- Remove **Crankshaft**

Checking position of oil spray nozzles:

Insert special tool 11 4 251 in screw connection of main bearing.

NOTE: Special tool 11 4 252 must be pre-installed at the seventh main bearing.

Check position of oil spray nozzle (2) according to position (1) on special tool 11 4 251.

If necessary, adjust and secure oil spray nozzle (2).

For tightening torque refer to 5AZ in **11 11 CRANKCASE** .

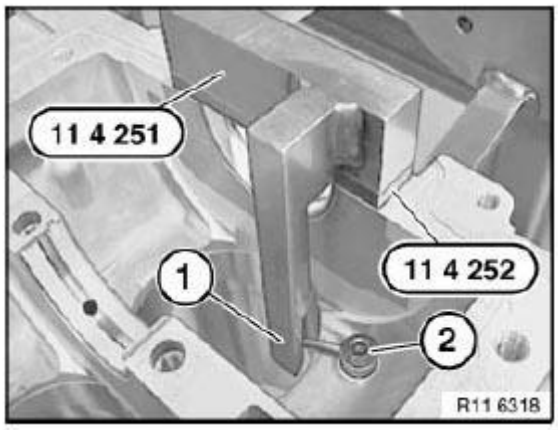

Fig. 318: Special Tools (11 4 252), (11 4 251), Spray Nozzle And Position
Courtesy of BMW OF NORTH AMERICA, INC.

Remove bearing shells (2) and guide bearing shell (3).

NOTE: Guide bearing shell (3) is a thrust bearing.

Observe Bearing Classification .

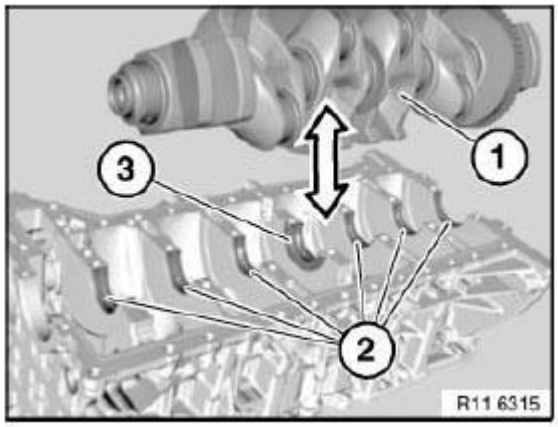

Fig. 319: Bearing Shells And Guide Bearing Shell
Courtesy of BMW OF NORTH AMERICA, INC.

Installation:

Bearing shell (1) with lubricant groove must be fitted in crankcase.

Bearing shell (2) without lubricant groove must be fitted in bedplate.

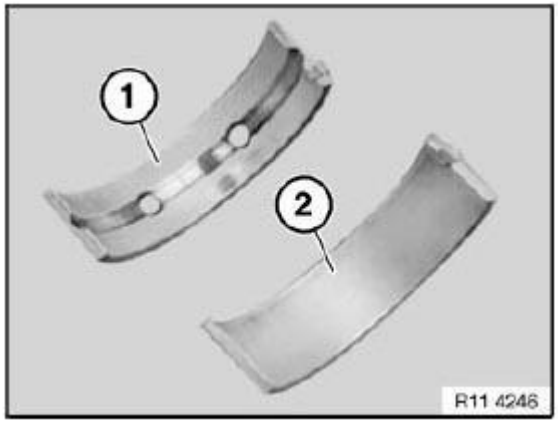

Fig. 320: Bearing Shells With And Without Lubricant Groove
Courtesy of BMW OF NORTH AMERICA, INC.

IMPORTANT: It is not possible to re-machine the crankshaft.

Surface (1) for marking.

Seven-digit part number (2).

Bearing classification (3) on bedplate (see **table**: values of 1/2/3).

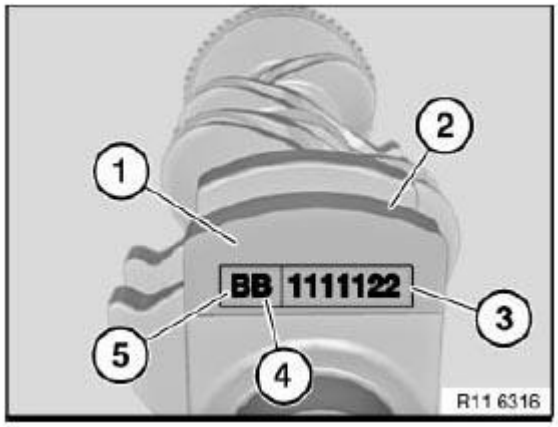

Fig. 321: Crankshaft Surface, Seven-Digit Number And Bearing Classification
Courtesy of BMW OF NORTH AMERICA, INC.

Bearing classification (1) on crankcase (see **table**: values of A/B/C).

Installation:

When all the letters and number code have been determined, the color of the bearing shells must be allocated (see **table**).

IMPORTANT: Excessively small bearing play will result in engine damage.

The color combination Yellow and Red must not be fitted. Possible color combinations (see table).

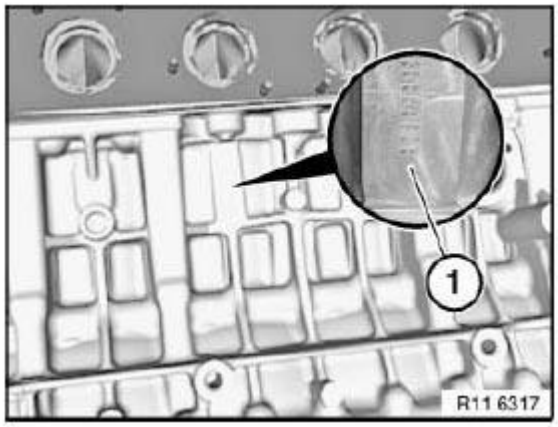

Fig. 322: Bearing Classification
Courtesy of BMW OF NORTH AMERICA, INC.

BEDPLATE SPECIFICATION

(A1) Bedplate / Yellow	(B1) Bedplate / Yellow	(C1) Bedplate / Green
(A1) Crankcase / Yellow	(B1) Crankcase / Green	(C1) Crankcase / Green

(A2) Bedplate / Green	(B2) Bedplate / Green	(C2) Bedplate / Green
(A2) Crankcase / Yellow	(B2) Crankcase / Green	(C2) Crankcase / Red
(A3) Bedplate / Green	(B3) Bedplate / Red	(C3) Bedplate / Red
(A3) Crankcase / Green	(B3) Crankcase / Green	(C3) Crankcase / Red

Install bearing shells (2) and guide bearing shell (3).

Installation:

Clean all sealing surfaces.

IMPORTANT: Do not use any metal-cutting tools.

Clean sealing faces with special tool 11 4 470 only.

Determine bearing play with special tool 00 2 590.

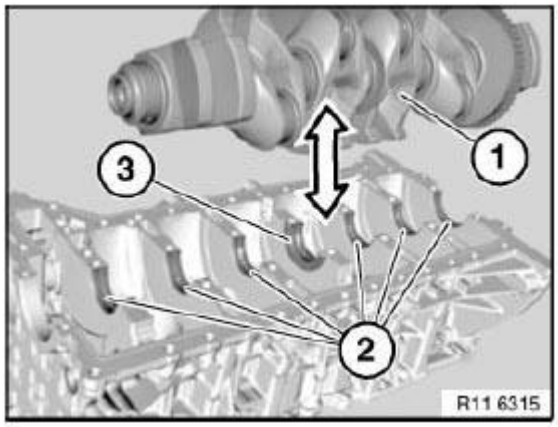

Fig. 323: Bearing Shells And Guide Bearing Shell
Courtesy of BMW OF NORTH AMERICA, INC.

Installation:

All measuring points must be clean and free from oil and grease. If necessary, clean all measuring points.

Use the existing screws to determine the bearing play.

Set up **bedplate** with bearing shells.

Remove bedplate.

Read off bearing play at width of flattened plastic thread and measurement scale.

Installation:

Remove plastic thread.

Apply a light coat of oil to bearing shells and crankshaft.

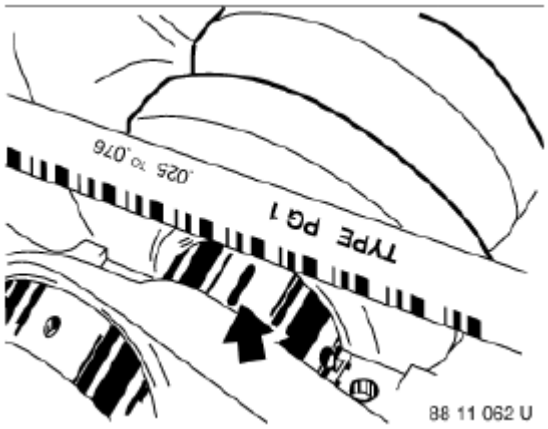

Fig. 324: Checking Bearing Play
Courtesy of BMW OF NORTH AMERICA, INC.

Install **Bedplate.**

Assemble engine.

11 21 571 REPLACING ROLLER BALL BEARING IN CRANKSHAFT (N52K)

Necessary preliminary tasks

- Remove clutch.

Remove guide bearing with special tool 11 2 340.

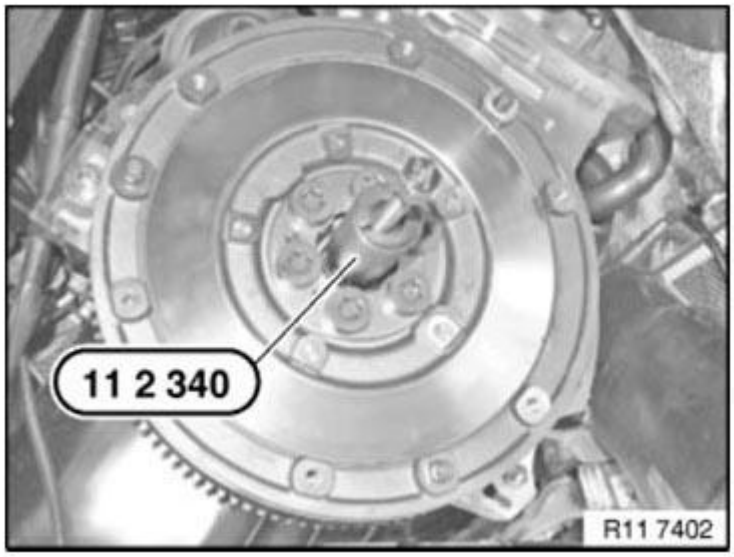

Fig. 325: Removing Guide Bearing Using Special Tool (11 2 340)
Courtesy of BMW OF NORTH AMERICA, INC.

Install new thrust bearing and drive firmly home with special tool 11 2 350 in conjunction with special tool **00 5 500** .

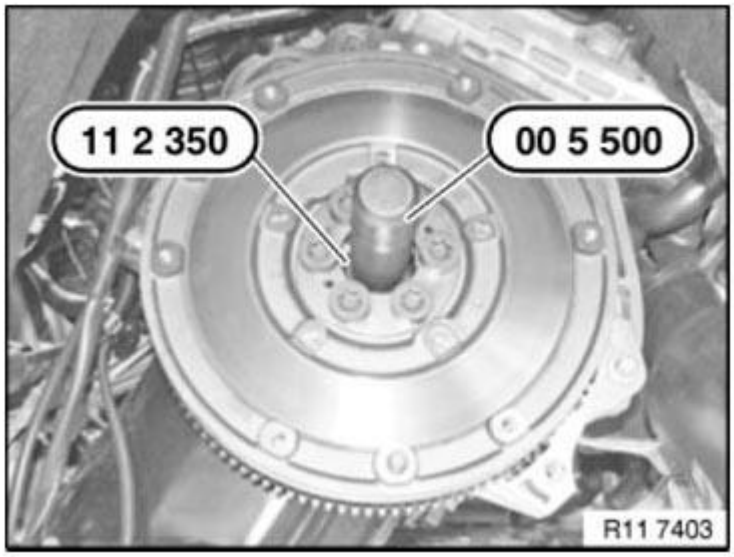

Fig. 326: Installing Thrust Bearing Using Special Tool (11 2 350)
Courtesy of BMW OF NORTH AMERICA, INC.

Assemble engine.

FLYWHEEL

11 22 500 REMOVING AND INSTALLING OR REPLACING FLYWHEEL (N51)

Special tools required:

- 11 4 180
- 11 9 260
- 11 9 265

IMPORTANT: Aluminium-magnesium materials.

No steel screws/bolts may be used due to the threat of electrochemical corrosion.

A magnesium crankcase requires aluminium screws/bolts exclusively.

Aluminium screws/bolts must be replaced each time they are released .

Aluminium screws/bolts are permitted with and without color coding (blue).

For reliable identification:

Aluminium screws/bolts are not magnetic .

Jointing torque and angle of rotation must be observed without fail (risk of damage).

Necessary preliminary tasks:

- Remove **transmission** . See **MANUAL TRANSMISSION** or **AUTOMATIC TRANSMISSION** .
- Remove **Clutch**

Block flywheel (1) with special tool **11 9 260** , use an old transmission screw for this purpose.

Installation:

Replace aluminium screws.

Unfasten flywheel screws.

For tightening torque refer to 11 22 1AZ in **11 22 FLYWHEEL** .

Installation:

Flywheel (1) is secured with an alignment pin.

Fit new flywheel screws.

Clean all threads for flywheel screws in crankshaft.

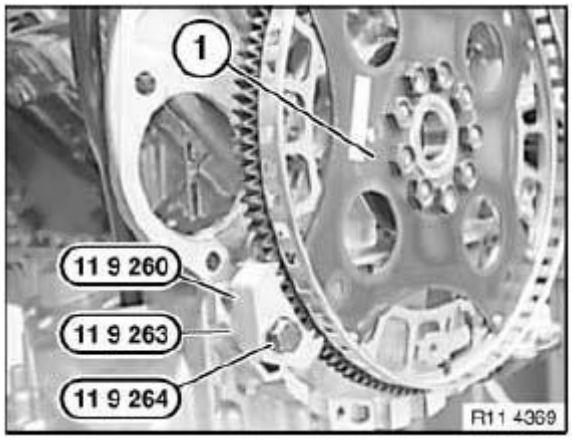

Fig. 327: Flywheel, Special Tools (11 9 260), (11 9 263) And (11 9 264)
Courtesy of BMW OF NORTH AMERICA, INC.

Secure flywheel with existing transmission bolt (1) and special tools **11 9 260 and 11 9 265** .

Installation:

Replace aluminium screws.

Release flywheel screws with special tool 11 4 180.

Installation:

Flywheel is secured with a dowel pin.

Fit new flywheel screws.

For tightening torque refer to 11 22 2AZ in **11 22 FLYWHEEL** .

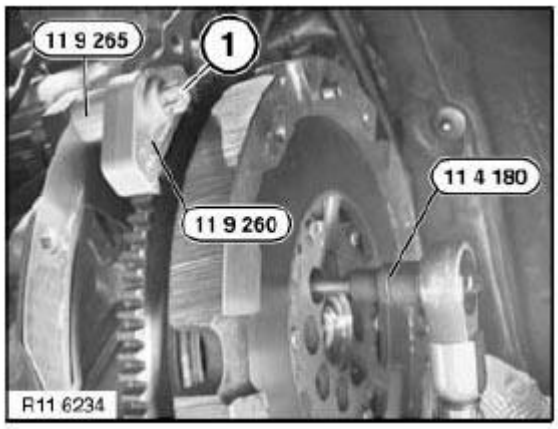

Fig. 328: Special Tools (11 4 180), (11 9 260), (11 9 265) And Flywheel
Courtesy of BMW OF NORTH AMERICA, INC.

Assemble engine.

11 22 500 REMOVING AND INSTALLING/REPLACING FLYWHEEL (N52K)

Special tools required:

- 11 4 180
- 11 9 260
- 11 9 265

IMPORTANT: Aluminium-magnesium materials.

No steel screws/bolts may be used due to the threat of electrochemical corrosion.

A magnesium crankcase requires aluminium screws/bolts exclusively.

Aluminium screws/bolts must be replaced each time they are released .

Aluminium screws/bolts are permitted with and without color coding (blue).

For reliable identification:

Aluminium screws/bolts are not magnetic .

Jointing torque and angle of rotation must be observed without fail (risk of damage).

Necessary preliminary tasks:

- Remove **transmission** . See **MANUAL TRANSMISSION** or **AUTOMATIC TRANSMISSION** .
- Remove **Clutch**

For vehicles with optional extra SA205 (automatic transmission):

Secure flywheel (1) with existing transmission bolt (2) and special tool **11 9 260** .

Installation:

Replace aluminium screws.

Unfasten flywheel screws.

For tightening torque refer to 11 22 1AZ in **11 22 FLYWHEEL** .

Installation:

Flywheel (1) is secured with an alignment pin.

Fit new flywheel screws.

Clean all threads for flywheel screws in crankshaft.

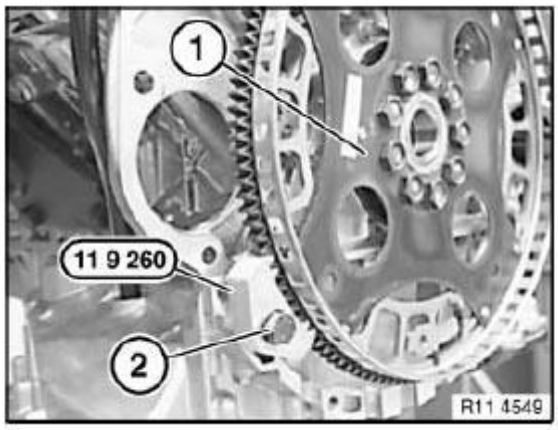

Fig. 329: Special Tool (11 9 260), Flywheel And Existing Transmission Bolt
Courtesy of BMW OF NORTH AMERICA, INC.

For vehicles without optional extra SA205 (automatic transmission):

Secure flywheel with existing transmission bolt (1) and special tools **11 9 260 and 11 9 265** .

Installation:

Replace aluminium screws.

Release flywheel screws with special tool 11 4 180.

For tightening torque refer to 11 22 2AZ in **11 22 FLYWHEEL** .

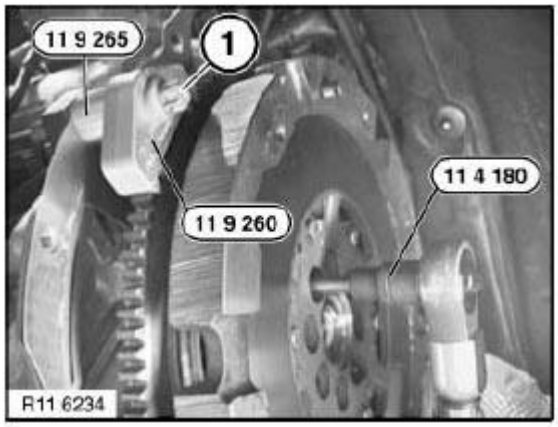

Fig. 330: Special Tools (11 4 180), (11 9 260), (11 9 265) And Flywheel

Courtesy of BMW OF NORTH AMERICA, INC.

Installation:

Flywheel is secured with a dowel pin.

Fit new flywheel screws.

Clean all threads for flywheel screws in crankshaft.

Assemble engine.

VIBRATION DAMPER

11 23 010 REMOVING AND INSTALLING OR REPLACING VIBRATION DAMPER (N51)

Necessary preliminary tasks:

- Remove **Underbody Protection.**
- Remove **Drive Belt**

Release screws (1).

For tightening torque refer to 11 23 1AZ in **11 23 VIBRATION DAMPER** .

Remove vibration damper (2).

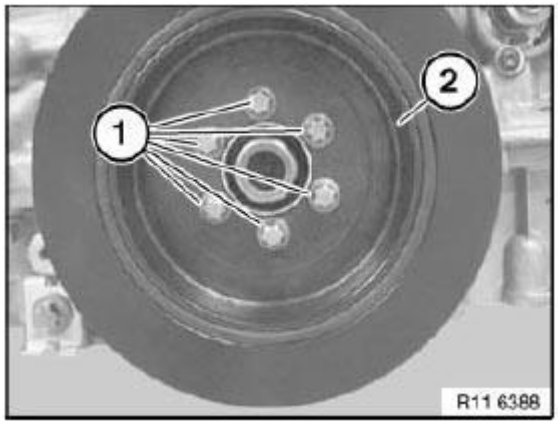

Fig. 331: Vibration Damper And Screws
Courtesy of BMW OF NORTH AMERICA, INC.

Assemble engine.

11 23 010 REMOVING AND INSTALLING/REPLACING VIBRATION DAMPER (N52K)

Necessary preliminary tasks:

- Remove **Underbody Protection.**
- Remove **Drive Belt**

Release screws (1).

For tightening torque refer to 11 23 1AZ in **11 23 VIBRATION DAMPER** .

Remove vibration damper (2).

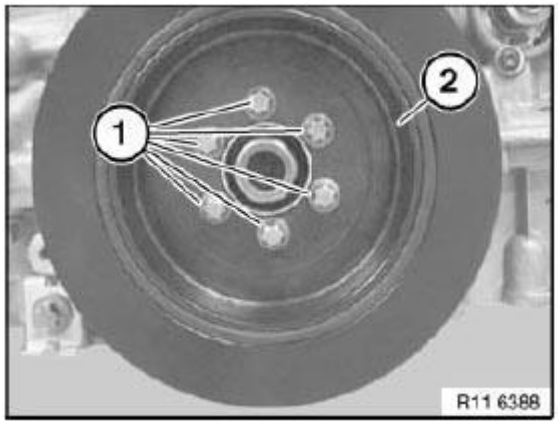

Fig. 332: Vibration Damper And Screws
Courtesy of BMW OF NORTH AMERICA, INC.

Assemble engine.

CONNECTING ROD WITH BEARINGS

11 24 571 REPLACING ALL CONNECTING ROD BEARINGS (N51)

Special tools required:

- 00 2 590
- 00 9 120

IMPORTANT: Aluminium-magnesium materials.

No steel screws/bolts may be used due to the threat of electrochemical corrosion.

A magnesium crankcase requires aluminium screws/bolts exclusively.

Aluminium screws/bolts must be replaced each time they are released .

Aluminium screws/bolts are permitted with and without color coding (blue).

For reliable identification:

Aluminium screws/bolts are not magnetic .

Jointing torque and angle of rotation must be observed without fail (risk of damage).

Necessary preliminary tasks:

- Remove **Oil Pan**

IMPORTANT: All crankshaft crank pins are classified.

Possible classifications per connecting rod at top and bottom:

r: Red
b: Blue

Only **one** color may be fitted per big end bearing cap and connecting rod.

In direction of arrow from (1 to 2) crank pin (1 to 6).

Example:

Possible classification: rbbrrb

1. Cylinder Classification Red / Red
2. Cylinder Classification Blue / Blue
3. Cylinder Classification Blue / Blue
4. Cylinder Classification Red / Red
5. Cylinder Classification Red / Red
6. Cylinder Classification Blue / Blue

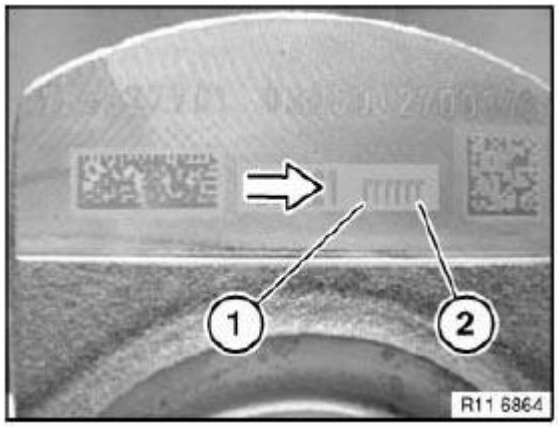

Fig. 333: Big End Bearing Cap Mark
Courtesy of BMW OF NORTH AMERICA, INC.

Release conrod bolts (1).

Remove connecting rod bearing cap (2).

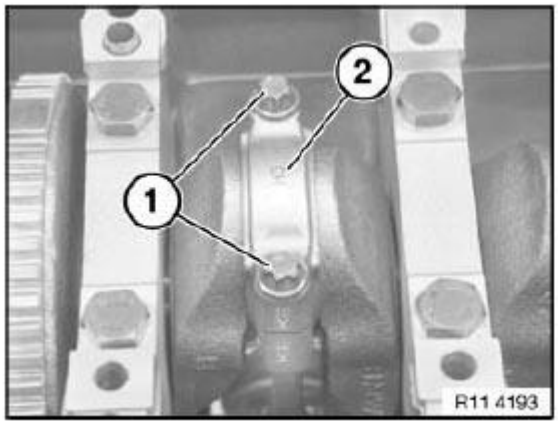

Fig. 334: Connecting Rod Bearing Cap And Conrod Bolts
Courtesy of BMW OF NORTH AMERICA, INC.

IMPORTANT: Risk of damage to cylinder wall and to crankshaft.

Gently release connecting rod from crankshaft.

Remove connecting rod bearing shells (1 and 2).

Install new conrod bearing shells.

Installation:

Pay attention to guide lugs during installation.

IMPORTANT: All crankshaft crank pins are classified.

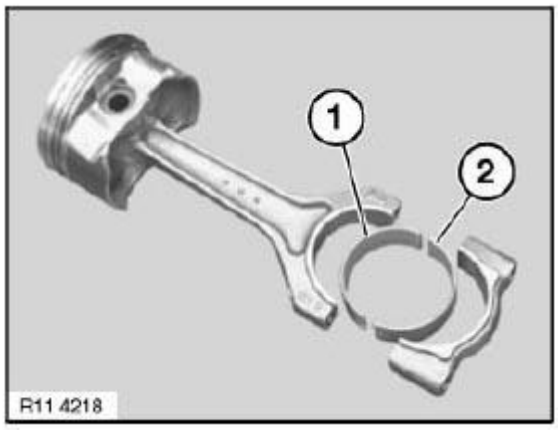

Fig. 335: Connecting Rod Bearing Shells And Connecting Rod
Courtesy of BMW OF NORTH AMERICA, INC.

In each case insert only one color of connecting rod bearing shell (1 and 2) for each connecting rod.

Check conrod bearing clearance.

Piston in BDC position.

Determine bearing clearance, ensure that bearing points are free from oil and grease.

Fit special tool 00 2 590 (Plastigage Type PG 1) to the oil-free crankshaft.

Fit conrod bearing cap so that pairing letters match up.

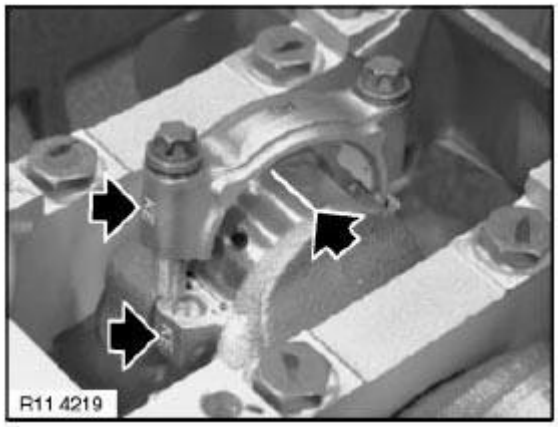

Fig. 336: Locating Bearing Cap
Courtesy of BMW OF NORTH AMERICA, INC.

IMPORTANT: Do not distort conrods or crankshaft.

Use the old conrod bolts to check conrod clearance.

Tighten down conrod bolts with special tool 00 9 120.

For tightening torque refer to 11 24 1AZ in **11 24 CONNECTING RODS AND BEARINGS** .

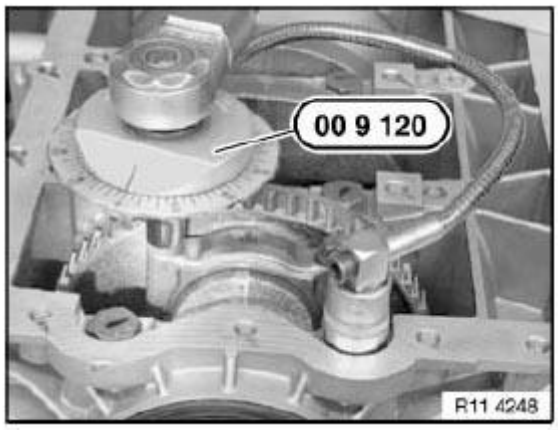

Fig. 337: Special Tool (00 9 120)
Courtesy of BMW OF NORTH AMERICA, INC.

Remove bearing cap. Read off bearing clearance at width of crushed plastic thread (Plastigage) with aid of measuring scale.

Conrod **Bearing Clearance** .

- Remove Plastigage
- Coat crankshaft and connecting rod bearing shells with oil
- Install new conrod bolts and tighten down with special tool 00 9 120.

For tightening torque refer to 11 24 1AZ in **11 24 CONNECTING RODS AND BEARINGS** .

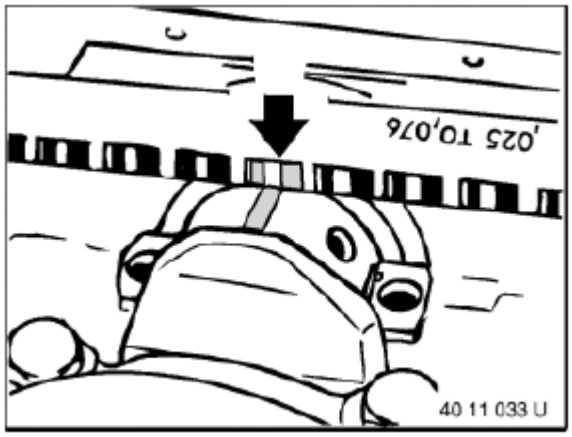

Fig. 338: Checking Bearing Play

Courtesy of BMW OF NORTH AMERICA, INC.

Assemble engine.

11 24 571 REPLACING ALL CONNECTING ROD BEARING SHELLS (N52K)

Special tools required:

- 00 2 590
- 00 9 120

IMPORTANT: All crank pins are connected with the crankshaft.

Modified procedure: The colors of the connecting rod bearing shells are the same at the top and bottom.

The Blue / Red connecting rod bearing shell colors are no longer fitted in combination.

Necessary preliminary tasks:

- Remove **Oil Sump**

IMPORTANT: All crankshaft crank pins are classified.

Possible classifications per connecting rod at top and bottom:

r: Red
b: Blue

Only one color may be fitted per big end bearing cap and connecting rod.

In direction of arrow from (1 to 2) crank pin (1 to 6).

Example:

Possible classification: rbbrrb

1. Cylinder Classification Red / Red
2. Cylinder Classification Blue / Blue
3. Cylinder Classification Blue / Blue
4. Cylinder Classification Red / Red
5. Cylinder Classification Red / Red
6. Cylinder Classification Blue / Blue

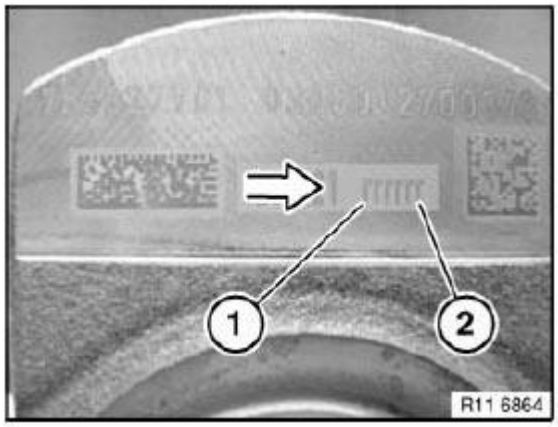

Fig. 339: Big End Bearing Cap Mark
Courtesy of BMW OF NORTH AMERICA, INC.

Release conrod bolts (1).

Remove connecting rod bearing cap (2).

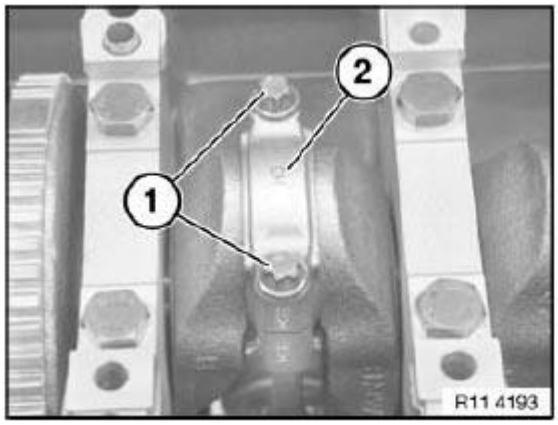

Fig. 340: Connecting Rod Bearing Cap And Conrod Bolts
Courtesy of BMW OF NORTH AMERICA, INC.

IMPORTANT: Risk of damage to cylinder wall and to crankshaft.

Gently release connecting rod from crankshaft.

Remove connecting rod bearing shells (1 and 2).

Install new conrod bearing shells.

Installation:

Pay attention to guide lugs during installation.

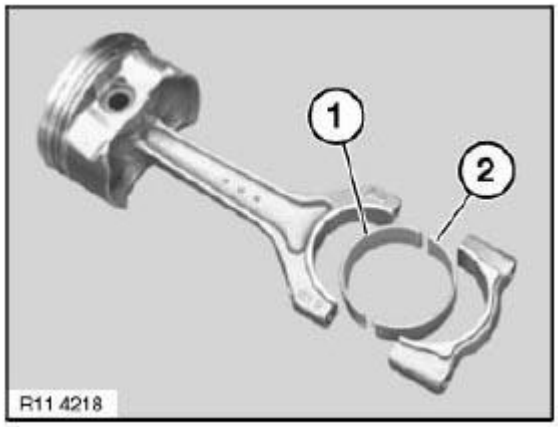

Fig. 341: Connecting Rod Bearing Shells And Connecting Rod
Courtesy of BMW OF NORTH AMERICA, INC.

IMPORTANT: All crankshaft crank pins are classified.

In each case insert only one color of connecting rod bearing shell (1 and 2) for each connecting rod.

Check conrod bearing clearance.

Piston in BDC position.

To determine the connecting rod bearing play, make sure that the bearing points are clean and free from oil and grease.

Fit special tool 00 2 590 (Plastigage Type PG 1) to the oil-free crankshaft.

Fit conrod bearing cap so that pairing letters match up.

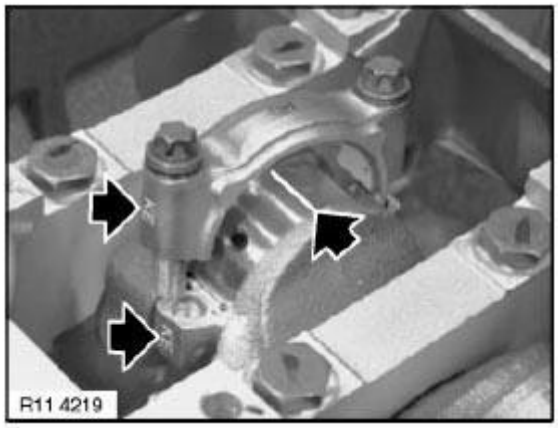

Fig. 342: Locating Bearing Cap
Courtesy of BMW OF NORTH AMERICA, INC.

IMPORTANT: Do not distort conrods or crankshaft.

Use the old conrod bolts to check conrod clearance.

Tighten down conrod bolts with special tool 00 9 120.

For tightening torque refer to 11 24 1AZ in **11 24 CONNECTING RODS AND BEARINGS** .

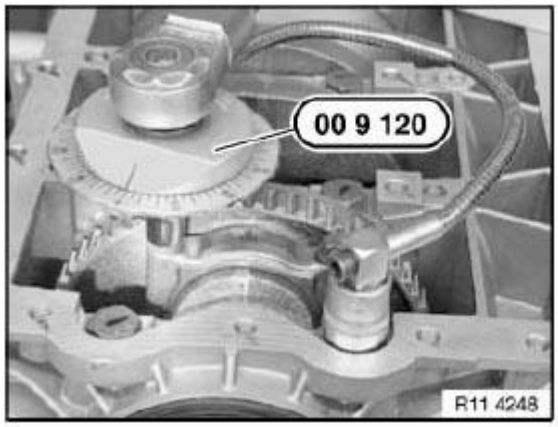

Fig. 343: Special Tool (00 9 120)
Courtesy of BMW OF NORTH AMERICA, INC.

Unscrew conrod bearing cover. Read off conrod bearing play at width of flattened plastic thread on measurement scale.

Conrod **Bearing Clearance** .

- Remove Plastigage
- Coat crankshaft and connecting rod bearing shells with oil
- Install new conrod bolts and tighten down with special tool 00 9 120.

For tightening torque refer to 11 24 1AZ in **11 24 CONNECTING RODS AND BEARINGS** .

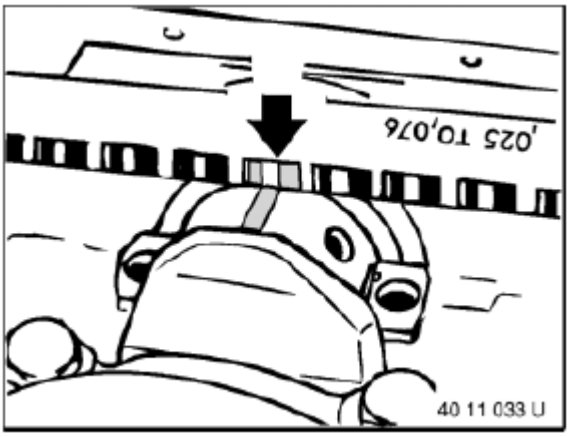

Fig. 344: Checking Bearing Play
Courtesy of BMW OF NORTH AMERICA, INC.

Assemble engine.

PISTON WITH RINGS AND PIN

11 25 530 REMOVING AND INSTALLING/REPLACING ALL PISTONS (N51)

Special tools required:

- 00 9 120
- 11 4 491
- 11 4 492
- 11 4 493
- 11 4 494
- 11 6 241
- 11 6 261
- 11 8 330

WARNING: Protective goggles must be worn when working on the piston pin circlip.

IMPORTANT: If pistons, conrods and bearing shells are reused, they must be reinstalled in the same places.

Individual conrod replacement is not permitted; they are classified according to weight categories.

Conrods and conrod bearing caps are denoted with the same pairing letters; mixing them up will result in engine damage.

Piston and piston pins are paired and must not be fitted individually.

Necessary preliminary tasks:

- Remove **Engine**
- Mount engine on **Assembly Stand**
- Remove **Intake Air manifold**
- Remove **Cylinder Head.**
- Remove **Oil Sump**
- Remove **Oil Pump**

NOTE: In event of heavy oil carbon residue:

Carefully remove oil carbon residue from cylinder wall.

NOTE: Illustrations show N46.

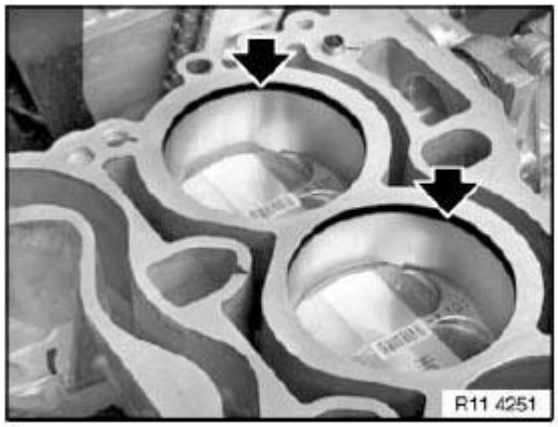

Fig. 345: Cylinder Walls
Courtesy of BMW OF NORTH AMERICA, INC.

Do **not** release screw (1) of oil spray nozzle (2).

Oil spray nozzle (2) must not be maladjusted or bent **(risk of damage).**

Readjust if necessary.

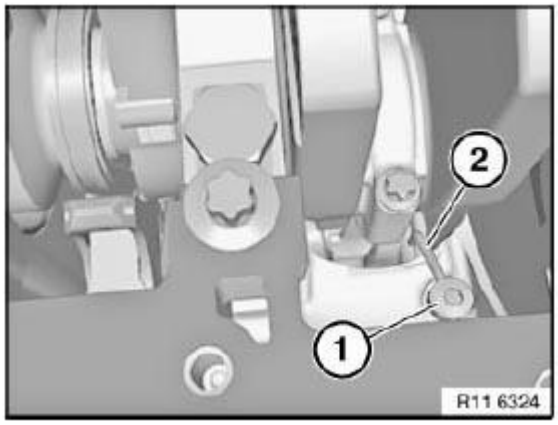

Fig. 346: Oil Spray Nozzle And Screw
Courtesy of BMW OF NORTH AMERICA, INC.

Release conrod bolts (1).

For tightening torque refer to 11 24 1AZ in **11 24 CONNECTING RODS AND BEARINGS** .

Remove conrod bearing cap (2) in direction of arrow.

IMPORTANT: Conrods and conrod bearing caps are denoted with the same pairing letters; mixing them up will result in engine damage.

Danger of engine damage!

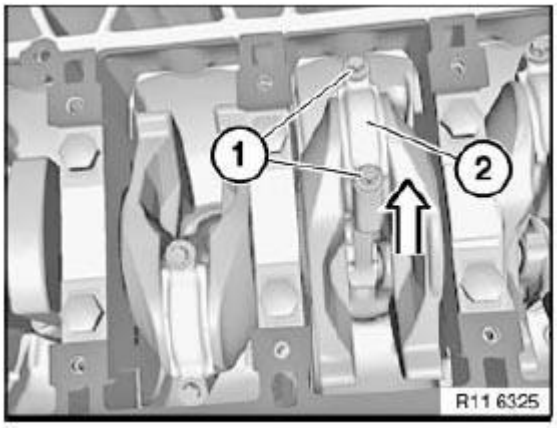

Fig. 347: Conrod Bearing Cap And Bolts
Courtesy of BMW OF NORTH AMERICA, INC.

Attach special tool 11 8 330 to connecting rod.

Press out conrod and piston to cylinder head side.

IMPORTANT: Risk of damage to oil spray nozzle.

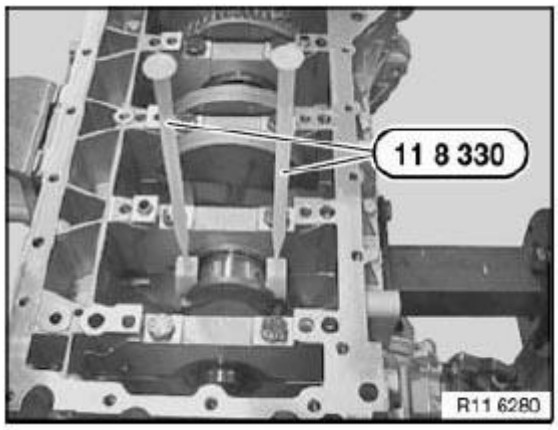

Fig. 348: Special Tool (11 8 330)
Courtesy of BMW OF NORTH AMERICA, INC.

Preliminary work:

Clamp special tool 11 4 491 in vice.

Secure piston (1) with connecting rod to special tool 11 4 491.

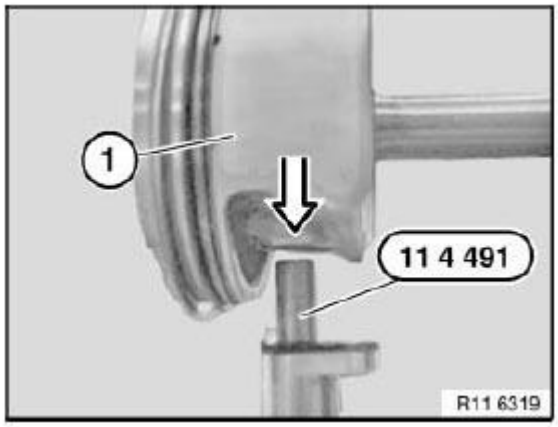

Fig. 349: Special Tool (11 4 491), Piston And Removal Direction
Courtesy of BMW OF NORTH AMERICA, INC.

WARNING: **Protective goggles must be worn for the next work step.**

WARNING: **Protective goggles must be worn.**

Lever out piston pin circlip with special tool 11 4 492 in direction of arrow.

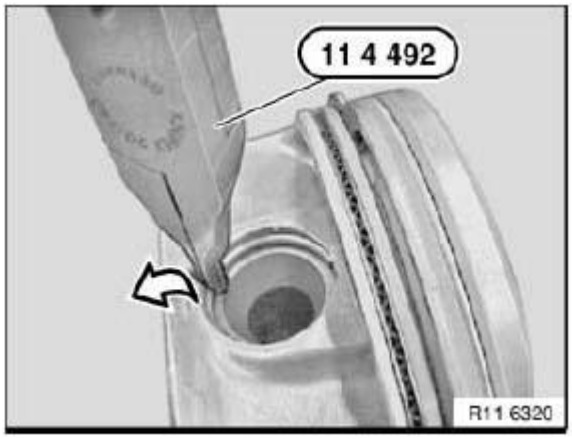

Fig. 350: Special Tool (11 4 492) And Removal Direction
Courtesy of BMW OF NORTH AMERICA, INC.

If necessary, replace connecting rods.

IMPORTANT: Connecting rods are divided into weight categories and are only available as a set.

Old and new connecting rods must not be installed in mixed combinations.

Installation:

The piston pin must be able to be pressed through the liner by hand with little force and must not display any significant play.

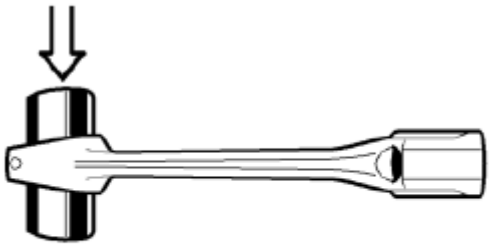

R11 4212

Fig. 351: Locating Piston Pin
Courtesy of BMW OF NORTH AMERICA, INC.

Measure piston installation clearance:

Measure piston diameter with micrometer at measuring point A from bottom edge of piston and offset at 90° to

the axis of the piston pin.

Piston diameter at measuring point "A".

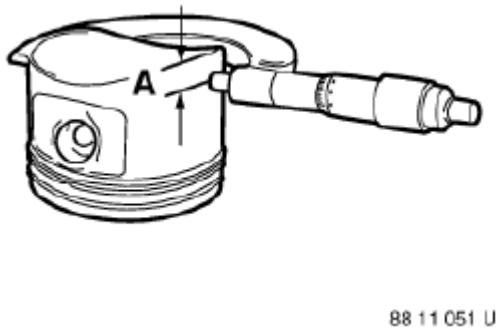

Fig. 352: Measuring Piston Diameter
Courtesy of BMW OF NORTH AMERICA, INC.

Adjust micrometer to cylinder bore of engine block. Set internal caliper on micrometer to zero. Measure bottom, center and top of cylinder bore in direction of travel and direction of engine rotation.

Diameter of cylinder bore.

Piston installation clearance.

Total permissible wear tolerance.

If necessary, replace piston.

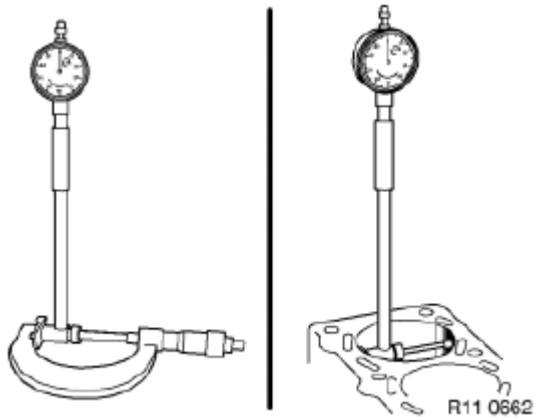

Fig. 353: Measuring Diameter Of Cylinder Bore
Courtesy of BMW OF NORTH AMERICA, INC.

WARNING: **Protective goggles must be worn.**

Insert piston pin circlip (2) into groove (1) of special tool 11 4 493.

Move piston pin circlip (2) into installation position.

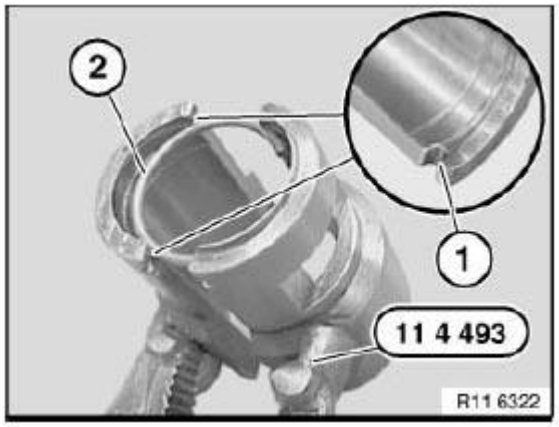

Fig. 354: Special Tool (11 4 493), Piston Circlip And Groove
Courtesy of BMW OF NORTH AMERICA, INC.

WARNING: **Protective goggles must be worn.**

Guide lug and cutout on special tool 11 4 493 must point to piston crown. Only then can special tool 11 4 494 be correctly fitted.

When special tools 11 4 493 and 11 4 494 are correctly positioned, the piston pin circlip must be driven in with a plastic hammer in the direction of the arrow.

NOTE: See illustration.

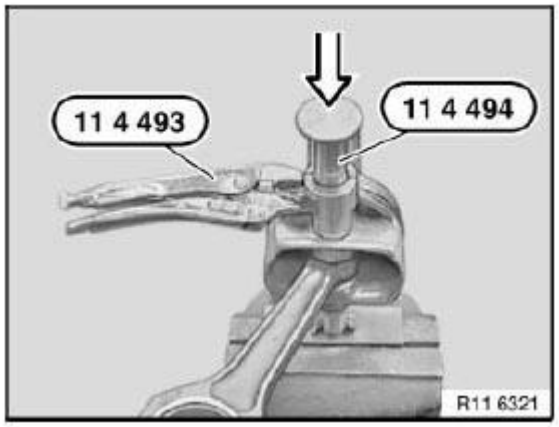

Fig. 355: Special Tools (11 4 493) And (11 4 494)
Courtesy of BMW OF NORTH AMERICA, INC.

NOTE: For vehicles with B30 engines.

Install all **Piston Rings.**

Install all **Bearing Shells.**

Coat piston and piston rings with oil.

Pre-install piston (2) in special tool 11 6 261.

Attach special tool 11 8 330 in conrod (2).

Installation:

Check protective lugs on special tool 11 8 330 for correct position and damage.

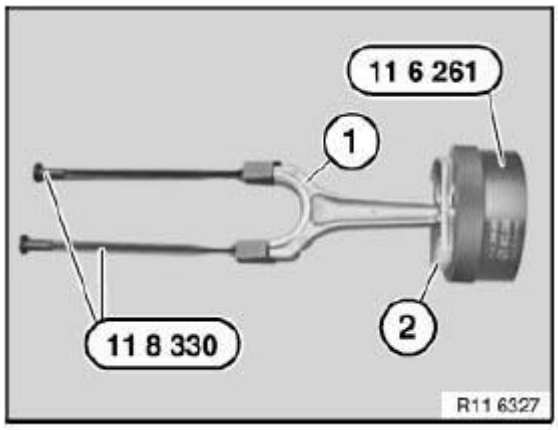

Fig. 356: Special Tools (11 8 330), (11 6 261), Piston And Connecting Rod
Courtesy of BMW OF NORTH AMERICA, INC.

Insert piston with conrod in cylinder.

IMPORTANT: Risk of damage to oil spray nozzle

Danger of piston ring failure.

Press in piston with finger pressure only, do not drive in (see arrows in Fig. 375

Insert piston (1) so that arrow (2) on piston crown points to camshaft drive.

Press in piston (1) with special tool 11 6 261.

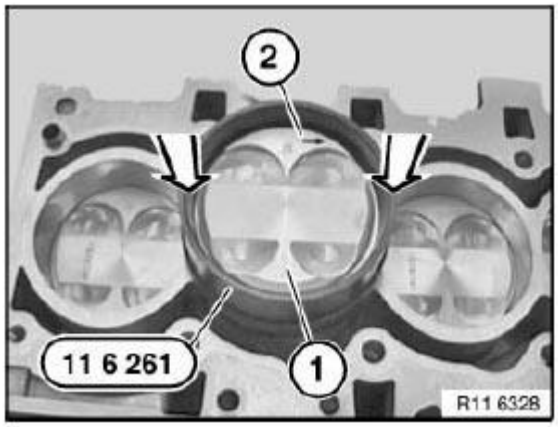

Fig. 357: Special Tool (11 6 261), Piston, Arrow And Installation Direction
Courtesy of BMW OF NORTH AMERICA, INC.

IMPORTANT: Connecting rod and big end bearing cap are marked with identical pairing letters (1) and must not be mixed up.

Mixing them up or incorrectly fitting the big end bearing cap on the connecting rod will result in engine damage.

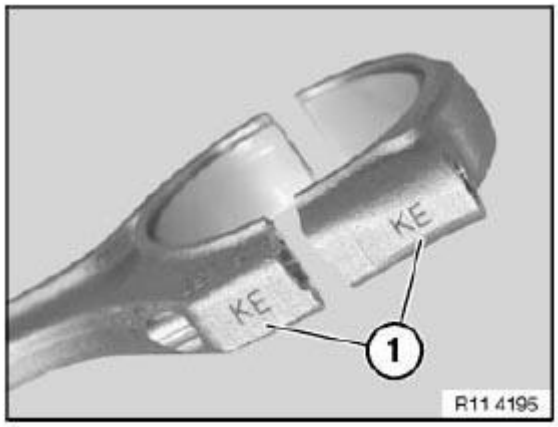

Fig. 358: Connecting Rod And Big End Bearing Cap Pairing Letters
Courtesy of BMW OF NORTH AMERICA, INC.

Apply a light coat of oil to crank pin.

Assemble conrod and crank pin.

Detach special tool 11 8 330.

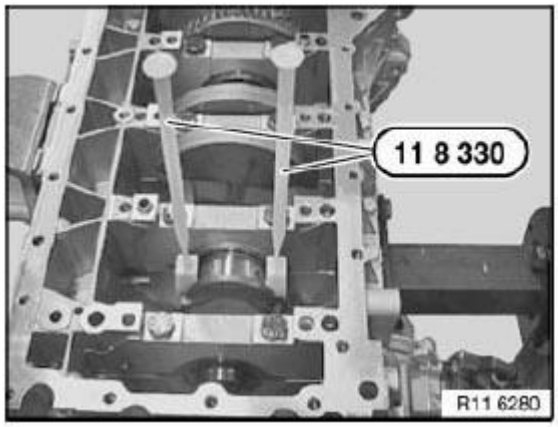

Fig. 359: Special Tool (11 8 330)
Courtesy of BMW OF NORTH AMERICA, INC.

Fit conrod bearing caps (2) so that pairing letters match up.

Install new conrod bolts (1).

For tightening torque refer to 11 24 1AZ in **11 24 CONNECTING RODS AND BEARINGS** .

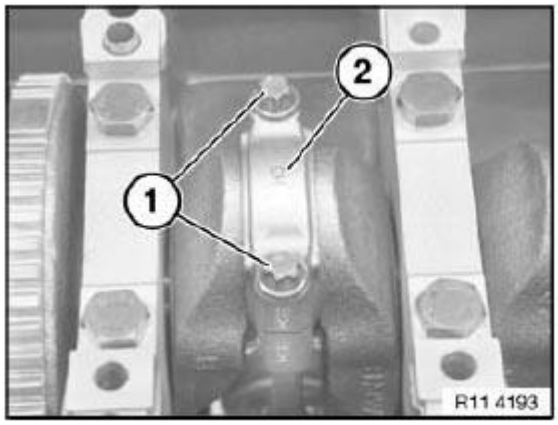

Fig. 360: Conrod Bearing Caps And Bolts
Courtesy of BMW OF NORTH AMERICA, INC.

Adjust torsion angle of conrod with special tool 00 9 120 (see **Fig. 379**).

For tightening torque refer to 11 24 1AZ in **11 24 CONNECTING RODS AND BEARINGS** .

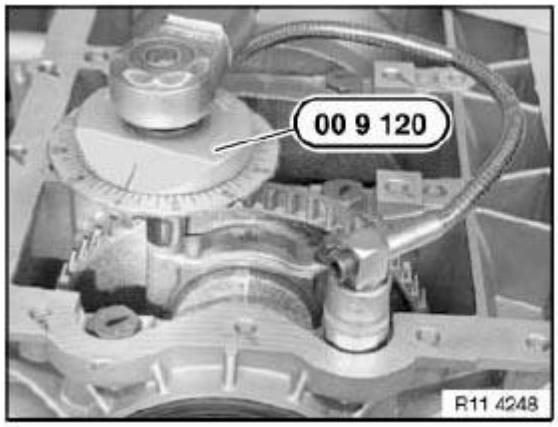

Fig. 361: Special Tool (00 9 120)
Courtesy of BMW OF NORTH AMERICA, INC.

Assemble engine.

11 25 530 REMOVING AND INSTALLING/REPLACING ALL PISTONS (N52K)

Special tools required:

- 00 9 120
- 11 4 491
- 11 4 492
- 11 4 493
- 11 4 494
- 11 6 241
- 11 6 261
- 11 8 330

WARNING: Danger of injury!

Carry out work on piston pin circlip wearing protective goggles only.

IMPORTANT: If piston, connecting rod, big end bearing cap and connecting rod bearing shell are to be reused, they must be installed in the same position.

Individual replacement of a connecting rod is not permitted. Connecting rods are classified by weight categories and are only available as a set for all cylinders.

Connecting rod and big end bearing cap are marked with identical pairing letters and must not be mixed up.

Danger of engine damage!

Piston and piston pins are paired and must not be fitted individually.

Necessary preliminary tasks:

- Remove **Engine**
- Mount engine on **Assembly Stand**
- Remove intake air **Manifold**
- Remove **Cylinder Head**.
- Remove **Oil Sump**
- Remove **Oil Pump**

NOTE: Carefully remove heavy oil carbon residues from the cylinder wall (arrow).

IMPORTANT: Do not use any metal-cutting tools.

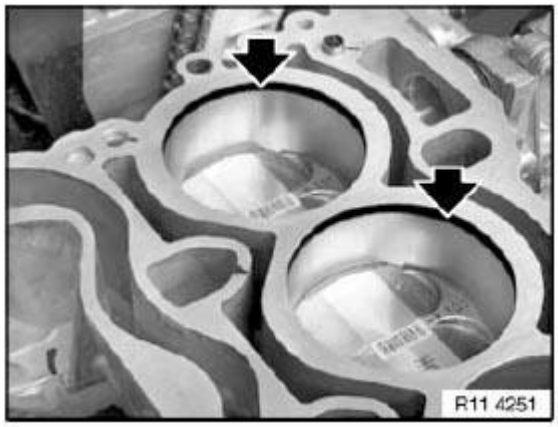

Fig. 362: Cylinder Walls
Courtesy of BMW OF NORTH AMERICA, INC.

IMPORTANT: Oil spray nozzle (2) must not be maladjusted or bent.

Risk of damage!

Do not release screw (1) of oil spray nozzle (2).

If necessary, readjust **oil spray nozzle**(2).

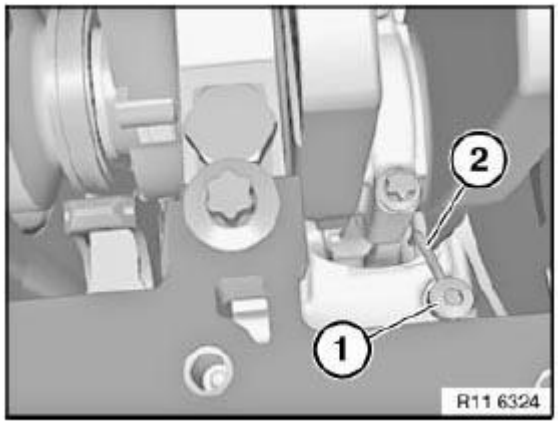

Fig. 363: Oil Spray Nozzle And Screw
Courtesy of BMW OF NORTH AMERICA, INC.

Release conrod bolts (1).

For tightening torque refer to 11 24 1AZ in **11 24 CONNECTING RODS AND BEARINGS** .

Installation:

Replace screws.

Remove conrod bearing cap (2) in direction of arrow.

IMPORTANT: Connecting rod and big end bearing cap (2) are marked with identical pairing letters and must not be mixed up.

Danger of engine damage!

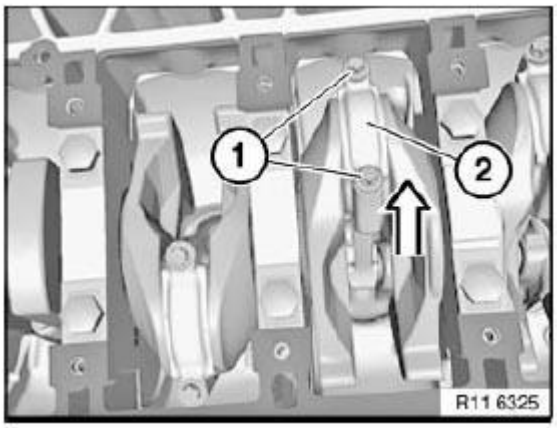

Fig. 364: Conrod Bearing Cap And Bolts
Courtesy of BMW OF NORTH AMERICA, INC.

Attach special tool 11 8 330 to connecting rod.

Press out connecting rod and piston with special tool 11 8 330 to cylinder head side.

NOTE: Special tool 11 8 330 simultaneously serves to prevent connecting rod and piston from falling down.

IMPORTANT: Do not touch the oil spray nozzle when removing the components.

Risk of damage!

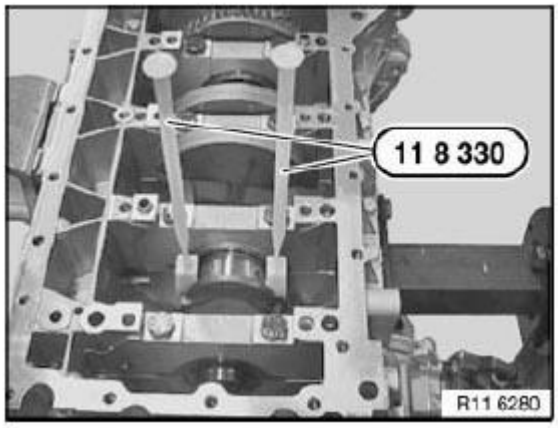

Fig. 365: Special Tool (11 8 330)
Courtesy of BMW OF NORTH AMERICA, INC.

Preliminary work:

Clamp special tool 11 4 491 in vice.

Secure piston (1) with connecting rod to special tool 11 4 491.

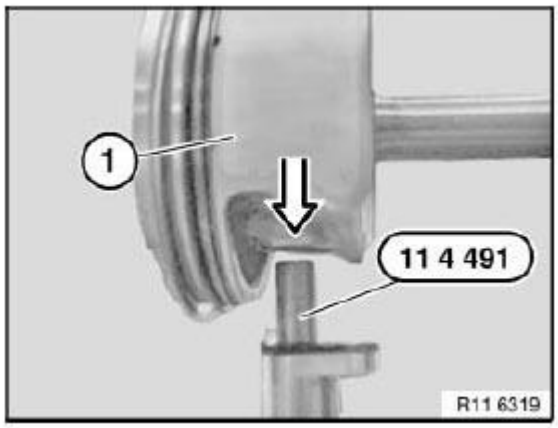

Fig. 366: Special Tool (11 4 491), Piston And Removal Direction
Courtesy of BMW OF NORTH AMERICA, INC.

WARNING: Danger of injury!

Carry out work on piston pin circlip wearing protective goggles only.

WARNING: Protective goggles must be worn.

Lever out piston pin circlip with special tool 11 4 492 in direction of arrow.

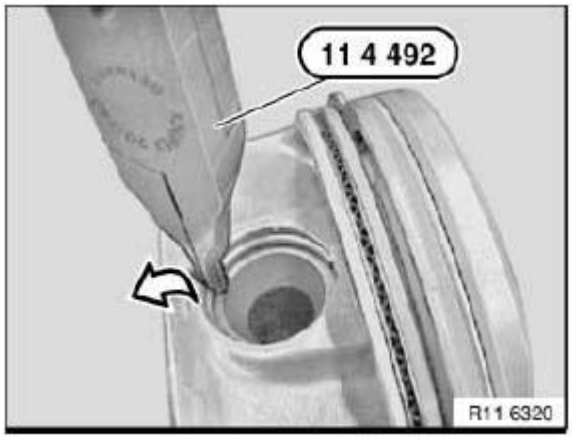

Fig. 367: Special Tool (11 4 492) And Removal Direction
Courtesy of BMW OF NORTH AMERICA, INC.

If necessary, replace connecting rods.

IMPORTANT: Individual replacement of a connecting rod is not permitted. Connecting rods are classified by weight categories and are only available as a set for all cylinders.

Existing and new connecting rods must not be installed in mixed combinations.

Installation:

It must be possible for the piston pin to be pressed with minimal force by hand through the small end bushing. There must be no noticeable play.

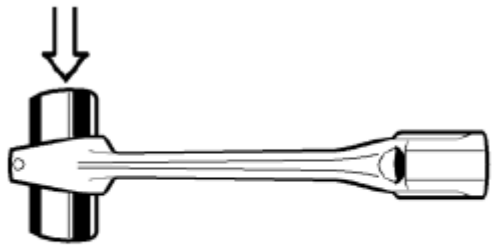

R11 4212

Fig. 368: Locating Piston Pin
Courtesy of BMW OF NORTH AMERICA, INC.

Measure piston installation clearance:

Measure piston diameter with micrometer at measuring point "A" from lower edge of piston and offset by 90° to piston pin axis.

Piston diameter at measuring point "A".

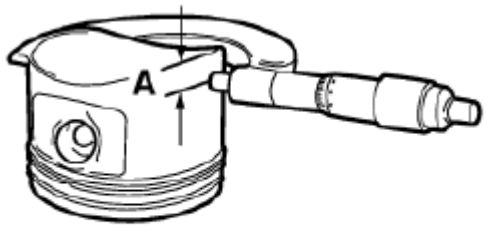

88 11 051 U

Fig. 369: Measuring Piston Diameter
Courtesy of BMW OF NORTH AMERICA, INC.

Adjust micrometer to cylinder bore of crankcase. Set internal caliper on micrometer to "zero". Measure bottom, center and top of cylinder bore in direction of travel and direction of engine rotation.

Diameter of cylinder bore.

Piston installation clearance.

Total permissible wear tolerance.

If necessary, replace piston.

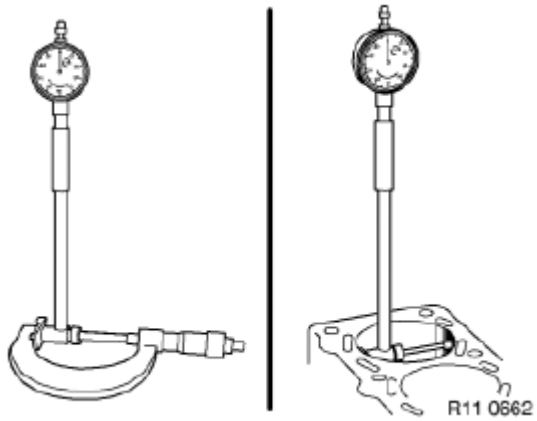

Fig. 370: Measuring Diameter Of Cylinder Bore
Courtesy of BMW OF NORTH AMERICA, INC.

WARNING: Protective goggles must be worn.

Insert piston pin circlip (2) into groove (1) of special tool 11 4 493.

Move piston pin circlip (2) into installation position.

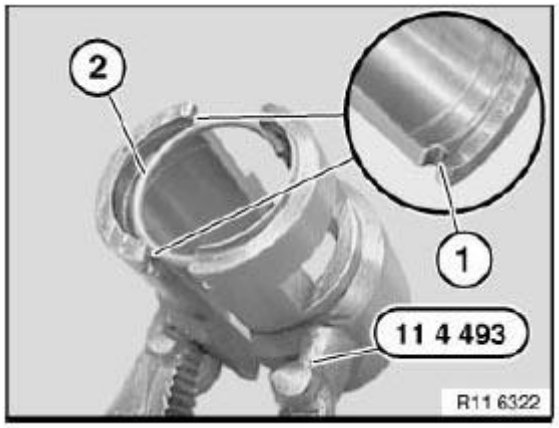

Fig. 371: Special Tool (11 4 493), Piston Circlip And Groove
Courtesy of BMW OF NORTH AMERICA, INC.

WARNING: Protective goggles must be worn.

Guide lug and cutout on special tool 11 4 493 must point to piston crown. Only then can special tool 11 4 494 be correctly fitted.

When special tools 11 4 493 and 11 4 494 are correctly positioned, the piston pin circlip must be driven in with a plastic hammer in the direction of the arrow.

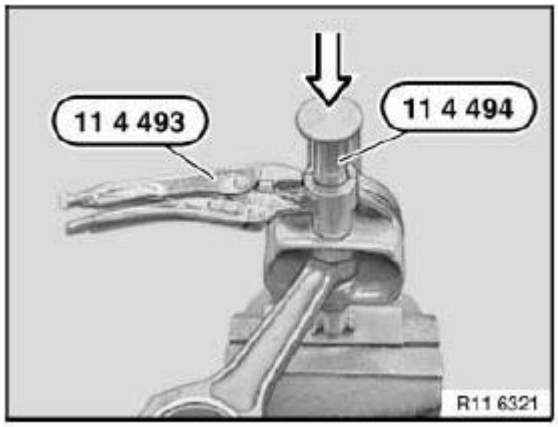

Fig. 372: Special Tools (11 4 493) And (11 4 494)
Courtesy of BMW OF NORTH AMERICA, INC.

NOTE: For vehicles with B30 engines.

Install all **piston rings.**

Install all **connecting rod bearing shells**.

Coat piston (2) and piston rings with oil.

Pre-install piston (2) in special tool 11 6 261.

Attach special tool 11 8 330 to connecting rod (1).

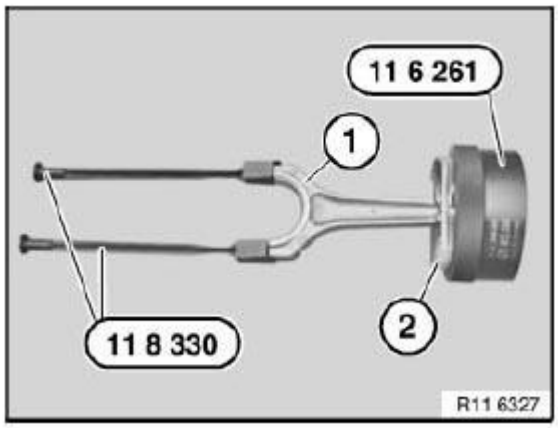

Fig. 373: Special Tools (11 8 330), (11 6 261), Piston And Connecting Rod
Courtesy of BMW OF NORTH AMERICA, INC.

Installation:

Check protective lugs on special tool 11 8 330 for correct position and damage.

NOTE: For vehicles with B25 engines.

Install all piston rings.

Install all connecting rod bearing shells.

Coat piston (2) and piston rings with oil.

Pre-install piston (2) in special tool 11 6 241.

Attach special tool 11 8 330 to connecting rod (1).

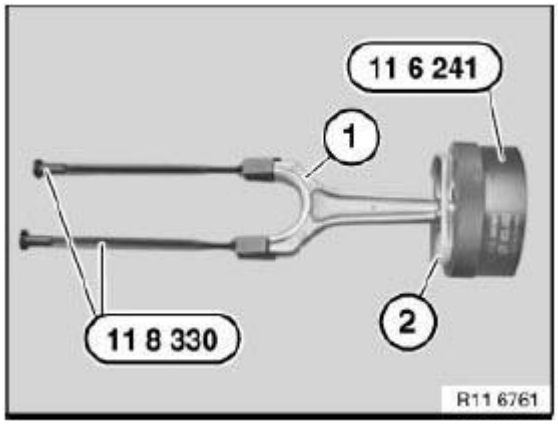

Fig. 374: Special Tools (11 8 330), (11 6 261), Piston And Connecting Rod
Courtesy of BMW OF NORTH AMERICA, INC.

Installation:

Check protective lugs on special tool 11 8 330 for correct position and damage.

Insert piston (1) with connecting rod in cylinder.

IMPORTANT: Do not touch the oil spray nozzle when installing the components.

Risk of damage!

Danger of piston ring failure.

Press in piston (1) at marked points (see arrows) with finger pressure only, do not drive in.

Insert piston (1) so that arrow (2) on piston crown points to camshaft drive.

Press in piston (1) with special tools 11 6 261 / 11 6 241.

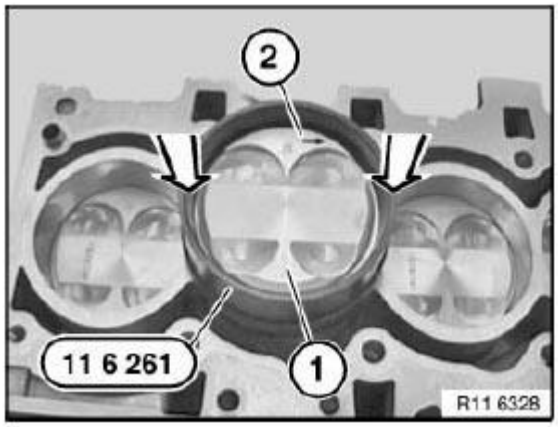

Fig. 375: Special Tool (11 6 261), Piston, Arrow And Installation Direction
Courtesy of BMW OF NORTH AMERICA, INC.

IMPORTANT: Connecting rod and big end bearing cap are marked with identical pairing letters (1) and must not be mixed up.

Mixing them up or incorrectly fitting the big end bearing cap on the connecting rod will result in engine damage.

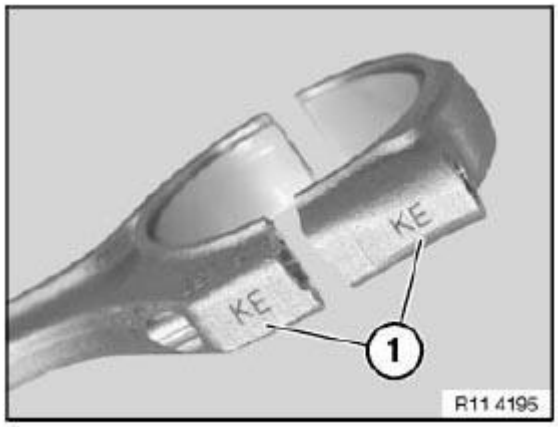

Fig. 376: Connecting Rod And Big End Bearing Cap Pairing Letters
Courtesy of BMW OF NORTH AMERICA, INC.

Apply a light coat of oil to connecting rod bearing journal.

Join connecting rod and connecting rod bearing journal.

Detach special tool 11 8 330.

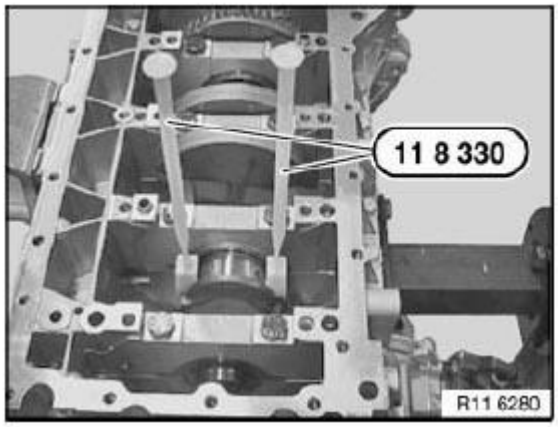

Fig. 377: Special Tool (11 8 330)
Courtesy of BMW OF NORTH AMERICA, INC.

Fit conrod bearing caps (2) so that pairing letters match up.

Installation:

Replace screws.

Install new conrod bolts (1).

IMPORTANT: Jointing torque and angle of rotation must be observed without fail.

Risk of damage!

For tightening torque refer to 11 24 1AZ in **11 24 CONNECTING RODS AND BEARINGS** .

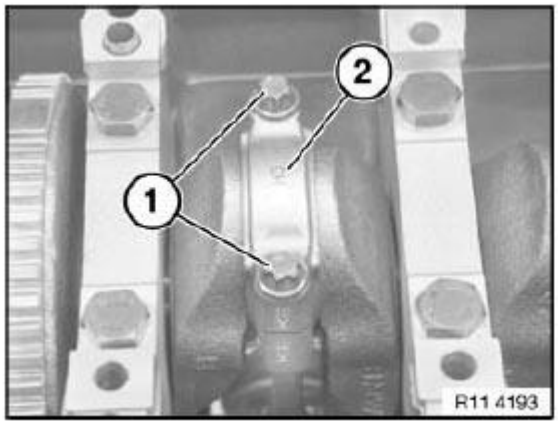

Fig. 378: Conrod Bearing Caps And Bolts
Courtesy of BMW OF NORTH AMERICA, INC.

If necessary, tighten connecting rod bolts to torsion angle with special tool 00 9 120.

For tightening torque refer to 11 24 1AZ in **11 24 CONNECTING RODS AND BEARINGS** .

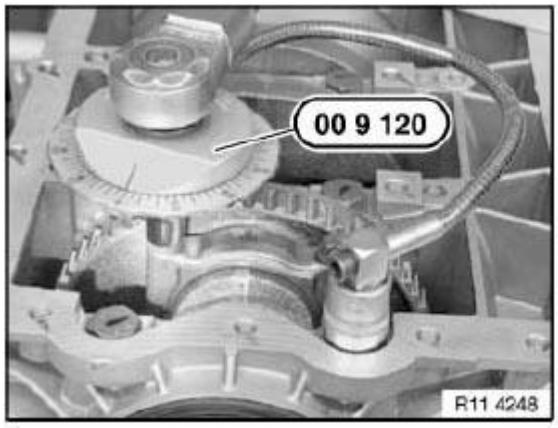

Fig. 379: Special Tool (00 9 120)
Courtesy of BMW OF NORTH AMERICA, INC.

Assemble engine.

11 25 671 REPLACING PISTON RINGS ON ALL PISTONS (N51)

Necessary preliminary tasks:

- Removing all **Pistons**

Measuring axial clearance of piston rings in piston ring groove.

Technical Data.

NOTE: It is not possible to measure the axial clearance of the U-flex rings.

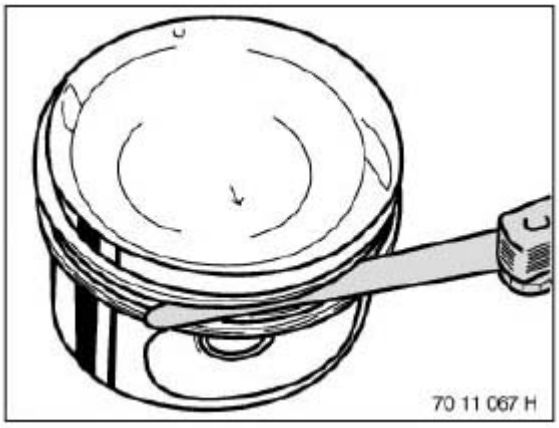

Fig. 380: Measuring Axial Clearance Of Piston Rings In Piston Ring Groove
Courtesy of BMW OF NORTH AMERICA, INC.

Remove plain compression ring and stepped ring upwards with piston ring pliers.

Oil scraper ring comprises two steel band rings and a support spring.

NOTE: Oil scraper ring cannot be removed with piston ring pliers.

Put aside all piston rings in correct sequence and installation position.

It might not be possible to find the identification on used piston rings.

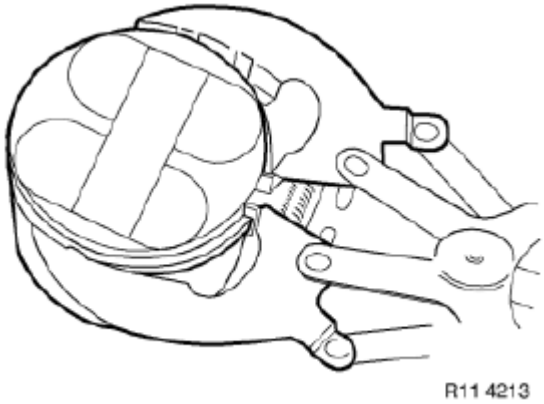

Fig. 381: Removing Plain Compression Ring And Stepped Ring Upwards With Piston Ring Pliers
Courtesy of BMW OF NORTH AMERICA, INC.

Installation:

New pistons may only be installed together with new piston rings.

Determine **Gap** with a feeler gauge.

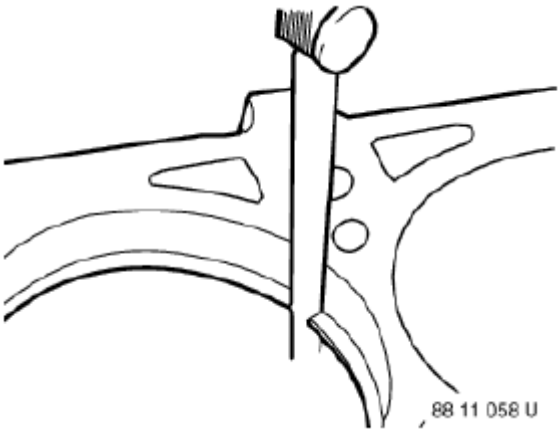

Fig. 382: Measuring Piston Rings End Clearance With Feeler Gauge
Courtesy of BMW OF NORTH AMERICA, INC.

NOTE: Schematic diagram of piston rings.

Installation:

Piston rings with "TOP" identification must point to piston crown.

1. Plain compression ring
2. Stepped ring "TOP"
3. Two-part oil scraper ring

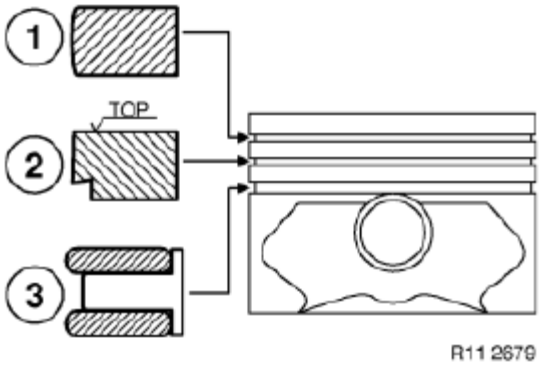

Fig. 383: Plain Compression Ring, Stepped Ring "Top" And Two-Part Oil Scraper Ring
Courtesy of BMW OF NORTH AMERICA, INC.

NOTE: Oil control ring comprises two steel band rings (1) and a support spring (2).

Installation:

Insert support spring (2) into piston ring groove and then fit steel band rings (1) so that contact points are offset by approx. 120°.

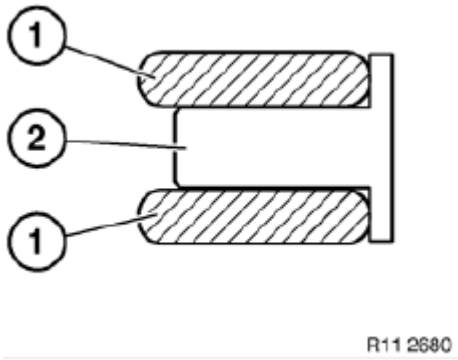

Fig. 384: Piston Steel Band Rings And Support Spring
Courtesy of BMW OF NORTH AMERICA, INC.

Offset the contact points (1) of the piston rings by approx. 120° to each other but do not position above the

piston pin boss.

NOTE: Illustration shows N52.

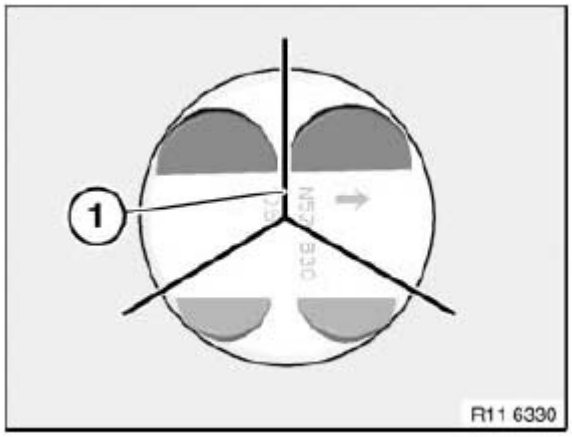

Fig. 385: Contact Points Of Piston Rings
Courtesy of BMW OF NORTH AMERICA, INC.

Assemble engine.

11 25 671 REPLACING PISTON RINGS ON ALL PISTONS (N52K)

Necessary preliminary tasks:

- Removing all **Pistons**

Measuring axial clearance of piston rings in piston ring groove.

Technical Data.

NOTE: It is not possible to measure the axial clearance of the U-flex rings.

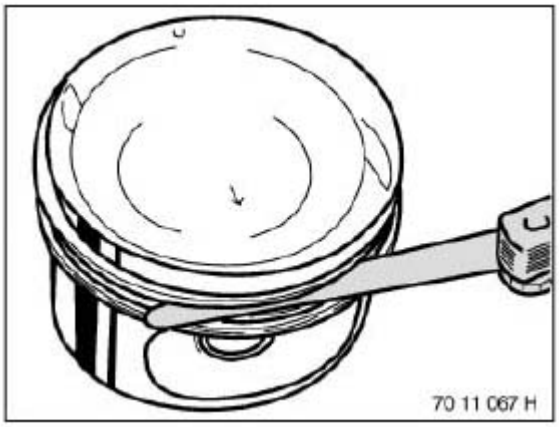

Fig. 386: Measuring Axial Clearance Of Piston Rings In Piston Ring Groove
Courtesy of BMW OF NORTH AMERICA, INC.

Remove plain compression ring and stepped ring upwards with piston ring pliers.

The U-flex ring comprises two steel band rings and a support spring.

NOTE: The U-flex ring cannot be removed with piston ring pliers.

Put aside all piston rings in correct sequence and installation position.

It might not be possible to find the identification on used piston rings.

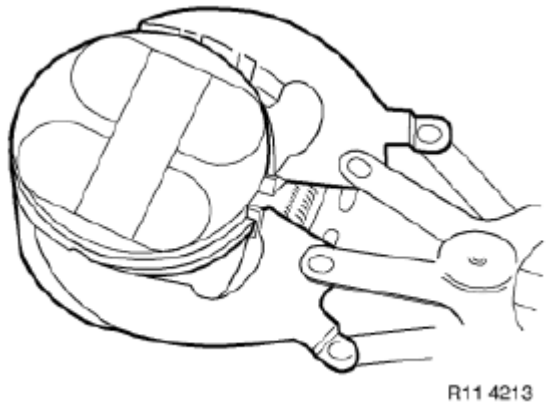

Fig. 387: Removing Plain Compression Ring And Stepped Ring Upwards With Piston Ring Pliers
Courtesy of BMW OF NORTH AMERICA, INC.

Installation:

New pistons may only be installed together with new piston rings.

Determine **End Clearance** with a feeler gauge.

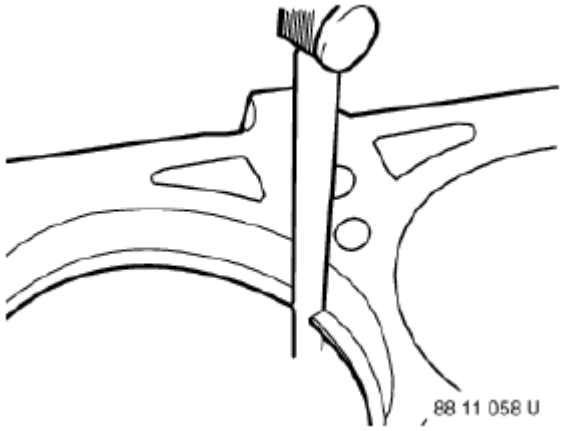

Fig. 388: Measuring Piston Rings End Clearance With Feeler Gauge
Courtesy of BMW OF NORTH AMERICA, INC.

NOTE: Schematic diagram of piston rings.

Installation:

Piston rings with "TOP" identification must point to piston crown.

1. Plain compression ring
2. Stepped ring "TOP"
3. U-flex ring

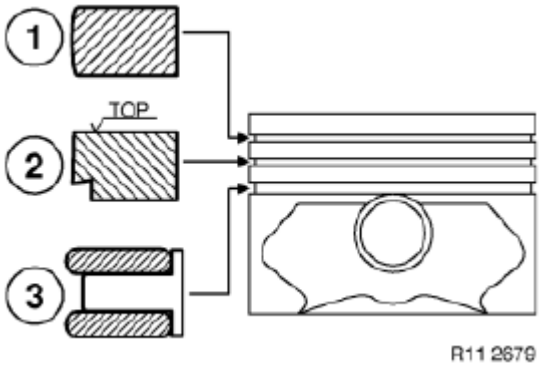

Fig. 389: Plain Compression Ring, Stepped Ring "Top" And U-Flex Ring Installation Order
Courtesy of BMW OF NORTH AMERICA, INC.

NOTE: The U-flex ring comprises two steel band rings (1) and a support spring (2).

Installation:

Insert support spring (2) into piston ring groove and then fit steel band rings (1) so that contact points are offset by approx. 120°.

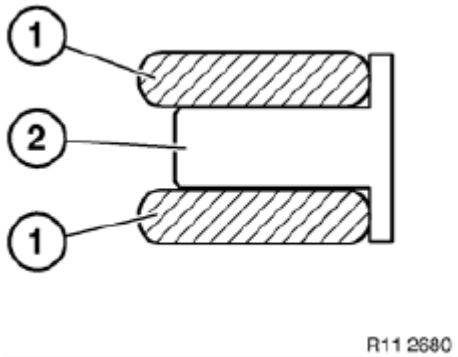

Fig. 390: Piston Steel Band Rings And Support Spring

Courtesy of BMW OF NORTH AMERICA, INC.

The contact points (1) of the piston rings must be arranged offset by approx. 120°. However, the contact points (1) must not be arranged over the piston pin boss.

NOTE: Picture shows N52.

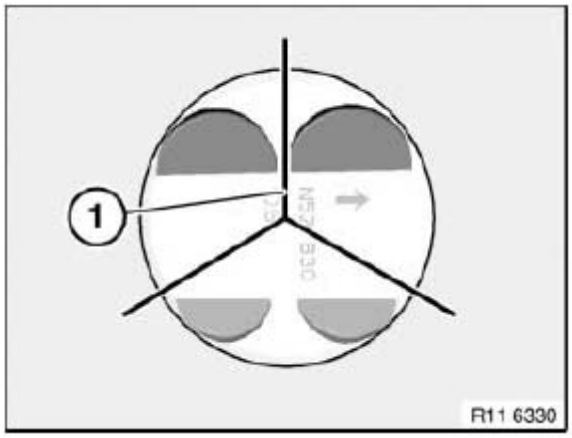

Fig. 391: Contact Points Of Piston Rings
Courtesy of BMW OF NORTH AMERICA, INC.

Assemble engine.

V-RIBBED BELT WITH TENSIONER / DEFLECT ELEMENT

11 28 010 REPLACING ALTERNATOR DRIVE BELT (N51)

Special tools required:

- 11 3 340

IMPORTANT: Aluminium-magnesium materials.

No steel screws/bolts may be used due to the threat of electrochemical corrosion.

A magnesium crankcase requires aluminium screws/bolts exclusively.

Aluminium screws/bolts must be replaced each time they are released .

Aluminium screws/bolts are permitted with and without color coding (blue).

For reliable identification:

Aluminium screws/bolts are not magnetic .

Jointing torque and angle of rotation must be observed without fail (risk of damage).

Necessary preliminary tasks:

- Remove **Fan Cowl** with electric fan

NOTE: Mark the direction of rotation of the drive belt if it is to be reused.

Layout of drive belt.

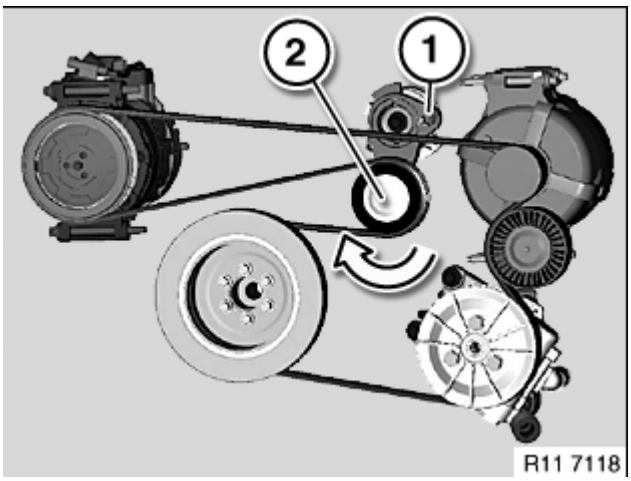

Fig. 392: Drive Belt Tensioner, Mounting Screw And Removal Direction
Courtesy of BMW OF NORTH AMERICA, INC.

Turn belt tensioner (4) in direction of arrow until bore (2) is flush on housing.

Hold belt tensioner (4) under tension.

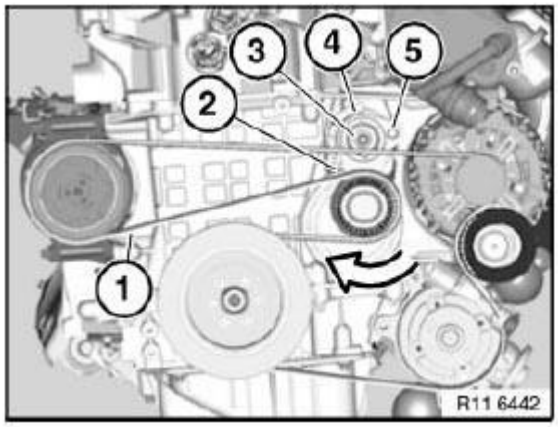

Fig. 393: Belt Tensioner And Bore

Courtesy of BMW OF NORTH AMERICA, INC.

Secure belt tensioner with special tool 11 3 340.

NOTE: Illustration N42.

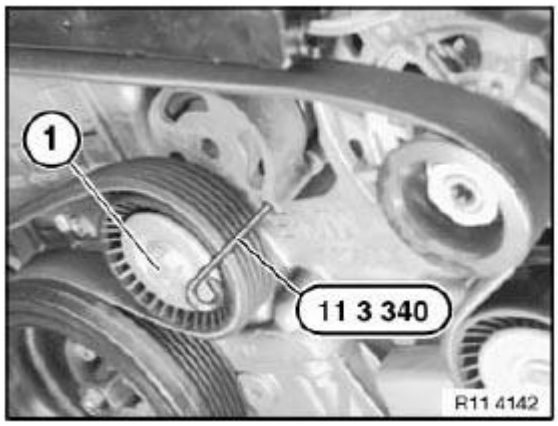

Fig. 394: Special Tool (11 3 340) And Belt Tensioner
Courtesy of BMW OF NORTH AMERICA, INC.

Remove drive belt (1) towards top.

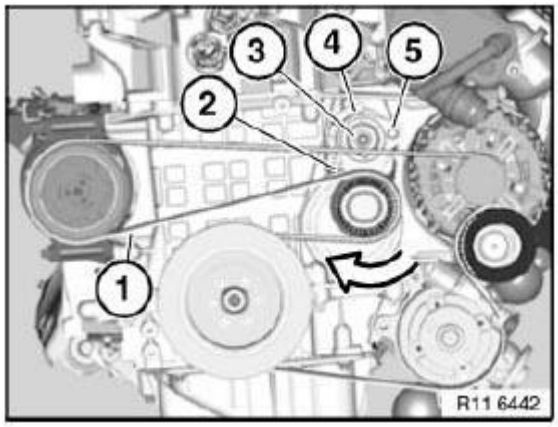

Fig. 395: Identifying Belt Tensioner
Courtesy of BMW OF NORTH AMERICA, INC.

Assemble engine.

Installation:

Check that drive belt for is in correct installation position - **risk of damage.**

11 28 010 REPLACING ALTERNATOR DRIVE BELT (N52K)

Special tools required:

- 11 3 340

IMPORTANT: Aluminium-magnesium materials.

No steel screws/bolts may be used due to the threat of electrochemical corrosion.

A magnesium crankcase requires aluminium screws/bolts exclusively.

Aluminium screws/bolts must be replaced each time they are released .

Aluminium screws/bolts are permitted with and without color coding (blue).

For reliable identification:

Aluminium screws/bolts are not magnetic .

Jointing torque and angle of rotation must be observed without fail (risk of damage).

Necessary preliminary tasks:

- Remove **Fan Cowl** with electric fan

NOTE: Mark the direction of rotation of the drive belt if it is to be reused.

Course of E9x drive belt:

Turn belt tensioner (4) in direction of arrow until bore (2) is flush on housing.

Hold belt tensioner (4) under tension.

Load is removed from tensioning pulley.

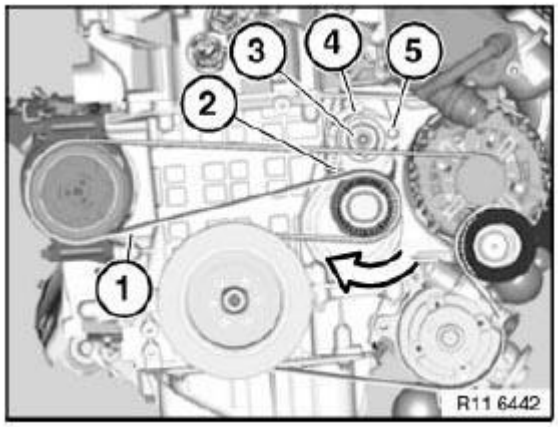

Fig. 396: Belt Tensioner And Bore
Courtesy of BMW OF NORTH AMERICA, INC.

Course of E85 drive belt:

Turn belt tensioner (1) in direction of arrow until bore is flush on housing.

Hold belt tensioner (1) under tension.

Load is removed from tensioning pulley (2).

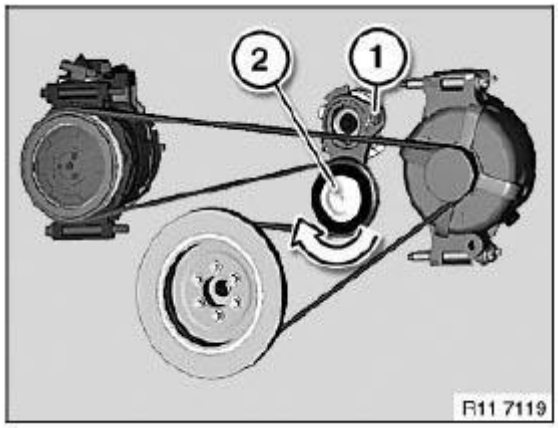

Fig. 397: Belt Tensioner And Tensioning Pulley
Courtesy of BMW OF NORTH AMERICA, INC.

All:

Secure belt tensioner (1) with special tool 11 3 340.

Remove drive belt upwards.

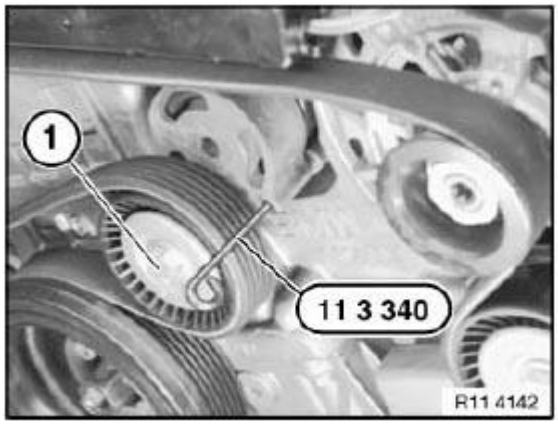

Fig. 398: Special Tool (11 3 340) And Belt Tensioner
Courtesy of BMW OF NORTH AMERICA, INC.

Assemble engine.

Installation:

Check that drive belt for is in correct installation position - **risk of damage.**

11 28 020 REPLACING TENSIONING DEVICE FOR ALTERNATOR DRIVE BELT (N51)

Special tools required:

- 11 3 340

IMPORTANT: Aluminium-magnesium materials.

No steel screws/bolts may be used due to the threat of electrochemical corrosion.

A magnesium crankcase requires aluminium screws/bolts exclusively.

Aluminium screws/bolts must be replaced each time they are released .

Aluminium screws/bolts are permitted with and without color coding (blue).

For reliable identification:

Aluminium screws/bolts are not magnetic .

Jointing torque and angle of rotation must be observed without fail (risk of damage).

Necessary preliminary tasks:

- Remove **Drive Belt**

Remove special tool 11 3 340.

Release screw (3).

For tightening torque refer to 11 28 1AZ in **11 28 RIBBED V-BELT WITH TENSION AND DEFLECTION SYSTEM** .

Installation:

Replace aluminium screws.

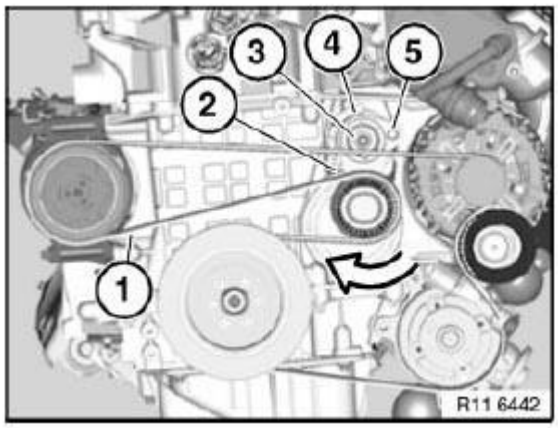

Fig. 399: Belt Tensioner And Belt Tensioner Screw
Courtesy of BMW OF NORTH AMERICA, INC.

Assemble engine.

11 28 020 REPLACING TENSIONING DEVICE FOR ALTERNATOR DRIVE BELT (N52K)

Special tools required:

- 11 3 340

IMPORTANT: Aluminium-magnesium materials.

No steel screws/bolts may be used due to the threat of electrochemical corrosion.

A magnesium crankcase requires aluminium screws/bolts exclusively.

Aluminium screws/bolts must be replaced each time they are released .

Aluminium screws/bolts are permitted with and without color coding (blue).

For reliable identification:

Aluminium screws/bolts are not magnetic .

Jointing torque and angle of rotation must be observed without fail (risk of damage).

Necessary preliminary tasks:

- Remove **Drive Belt**

E9x only:

Remove special tool 11 3 340.

Release screw (3) on belt tensioner (4).

For tightening torque refer to 11 28 1AZ in **11 28 RIBBED V-BELT WITH TENSION AND DEFLECTION SYSTEM** .

Installation:

Replace aluminium screws.

Remove belt tensioner (4).

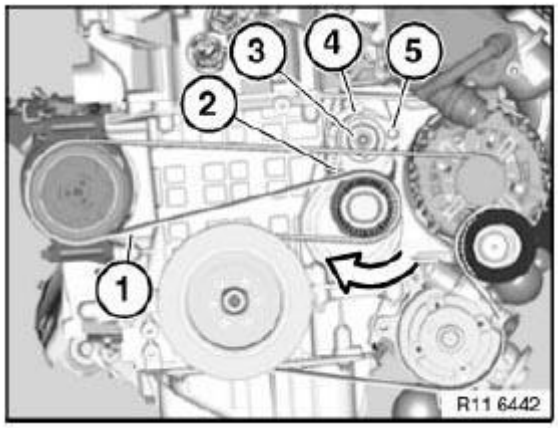

Fig. 400: Belt Tensioner And Belt Tensioner Screw
Courtesy of BMW OF NORTH AMERICA, INC.

E85 only:

Remove special tool 11 3 340.

Release screw on belt tensioner (1).

For tightening torque refer to 11 28 1AZ in **11 28 RIBBED V-BELT WITH TENSION AND DEFLECTION SYSTEM** .

Installation:

Replace aluminium screws.

Remove belt tensioner (1).

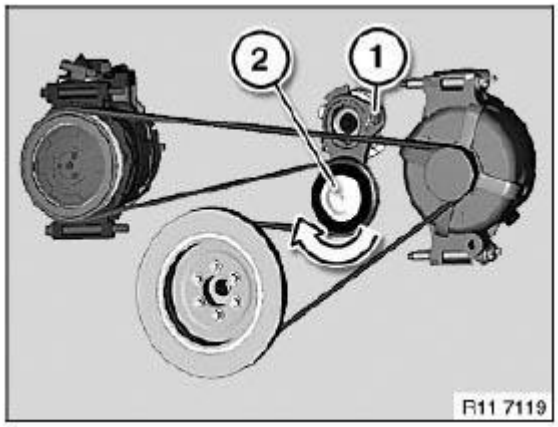

Fig. 401: Belt Tensioner And Drive Belt
Courtesy of BMW OF NORTH AMERICA, INC.

Assemble engine.

CAMSHAFT

11 31 005 CHECKING CAMSHAFT TIMING

Special tools required:

- 11 0 300
- 11 4 281
- 11 4 282
- 11 4 283

Necessary preliminary tasks:

- Remove **Cylinder Head Cover**
- Remove **Underbody Protection.**

Remove fastener (1) in direction of arrow.

Installation:

Install fastener (1) with bore facing outwards.

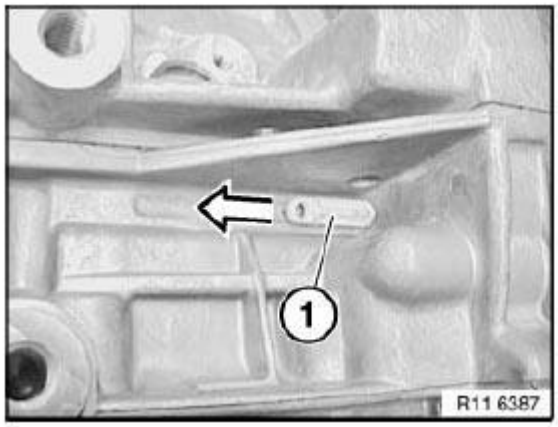

Fig. 402: Fastener And Removal Direction
Courtesy of BMW OF NORTH AMERICA, INC.

Rotate crankshaft at central bolt into TDC position.

Slide special tool 11 0 300 in direction of arrow into special tool bore and secure crankshaft.

IMPORTANT: On engines with automatic transmissions, there is shortly before the special tool bore for the TDC position a large bore which can be confused with the special tool bore.

If the flywheel is secured in the correct special tool bore with special tool 11 0 300, the engine can no longer be moved at the central bolt.

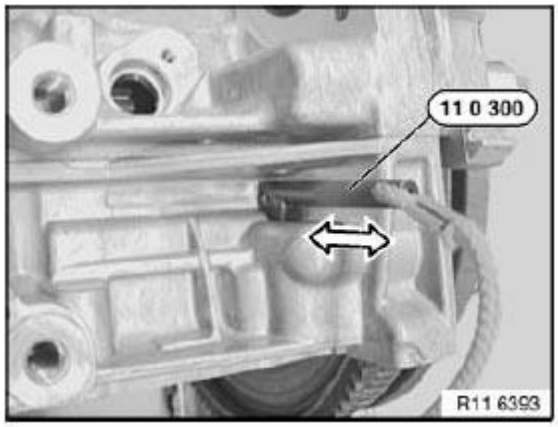

Fig. 403: Special Tool (11 0 300) And Removal Direction
Courtesy of BMW OF NORTH AMERICA, INC.

The timings are correct when the part number (2) can be read from above on the camshafts (1).

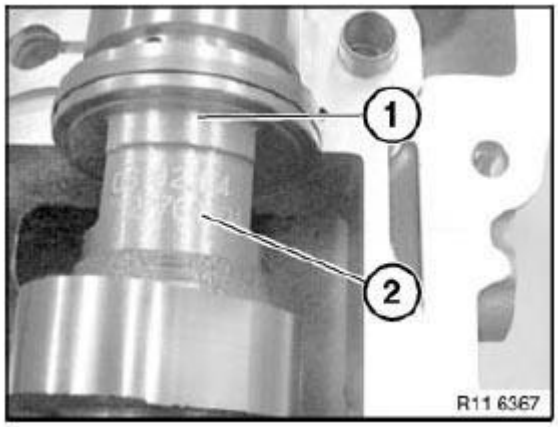

Fig. 404: Part Numbers And Camshaft
Courtesy of BMW OF NORTH AMERICA, INC.

With 1st cylinder in firing TDC position, cams of intake camshaft (1) at 1st cylinder point upwards at an angle.

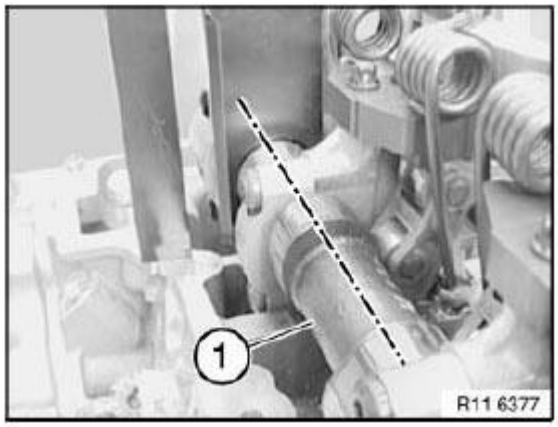

Fig. 405: Inlet Camshaft
Courtesy of BMW OF NORTH AMERICA, INC.

With 1st cylinder in firing TDC position, cams of exhaust camshaft (3) at 6th cylinder point downwards at an angle.

Roller cam follower (1) is not actuated.

NOTE: If the timing is checked while the engine is installed, the position of the camshaft can only be checked with a mirror.

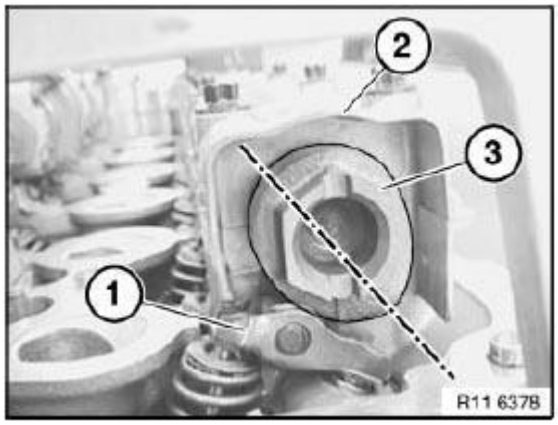

Fig. 406: Exhaust Camshaft And Cam Follower
Courtesy of BMW OF NORTH AMERICA, INC.

Secure special tool 11 4 283 to cylinder head with screws (1).

NOTE: Fit special tool 11 4 282 underneath on intake side.

Mount special tool 11 4 281 on intake and exhaust camshafts.

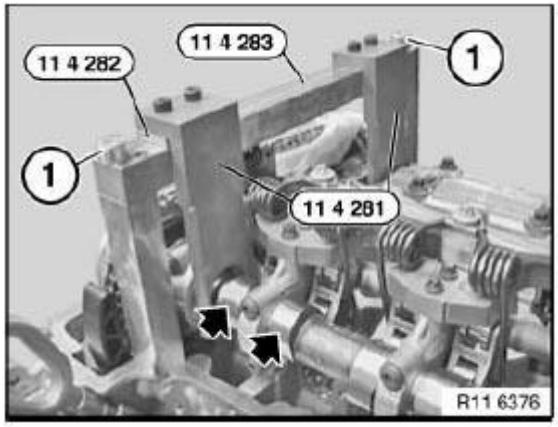

Fig. 407: Special Tools (11 4 281), (11 4 282) (11 4 283) And Bolts
Courtesy of BMW OF NORTH AMERICA, INC.

If necessary, adjust **Valve Timing.**

Assemble engine.

11 31 005 CHECKING TIMING OF CAMSHAFT(S) (N52K)

Special tools required:

- 11 0 300

- 11 4 281
- 11 4 282
- 11 4 283

Necessary preliminary tasks:

- Remove **Cylinder Head Cover**
- Remove **Underbody Protection.**

Remove fastener (1) in direction of arrow.

Installation:

Install fastener (1) with bore facing outwards.

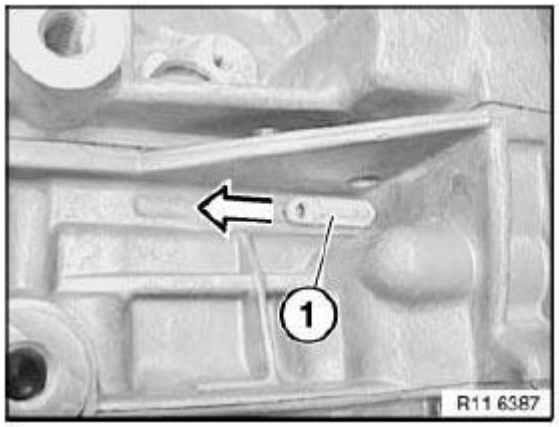

Fig. 408: Fastener And Removal Direction
Courtesy of BMW OF NORTH AMERICA, INC.

Rotate crankshaft at central bolt into TDC position.

Slide special tool 11 0 300 in direction of arrow into special tool bore and secure crankshaft.

IMPORTANT: On vehicles with optional extra SA205 (automatic transmission), there is a large bore for the TDC position shortly before the special tool bore. This bore can be confused with the special tool bore.

If the flywheel is secured in the correct special tool bore with special tool 11 0 300, the engine can no longer be moved at the central bolt.

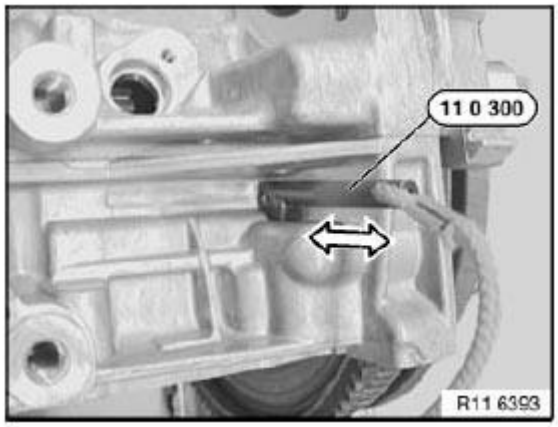

Fig. 409: Special Tool (11 0 300) And Removal Direction
Courtesy of BMW OF NORTH AMERICA, INC.

With 1st cylinder in firing TDC position, cams of intake camshaft (1) at 1st cylinder point upwards at an angle.

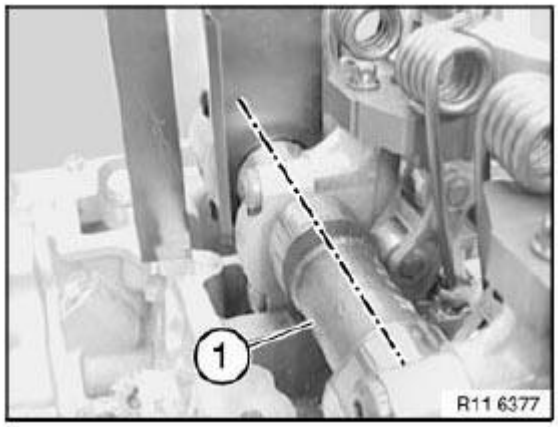

Fig. 410: Inlet Camshaft
Courtesy of BMW OF NORTH AMERICA, INC.

The timings are correct when the part numbers (2) on the intake and exhaust camshafts (1) point upwards.

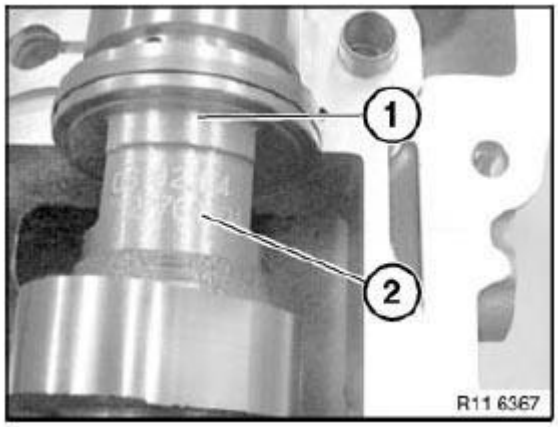

Fig. 411: Part Numbers And Camshaft
Courtesy of BMW OF NORTH AMERICA, INC.

With 1st cylinder in firing TDC position, cams of exhaust camshaft (3) at 6th cylinder point downwards at an angle.

Cam follower (1) is not actuated.

NOTE: When the engine is installed, the position of the exhaust camshaft (3) for the timing can only be checked with a mirror.

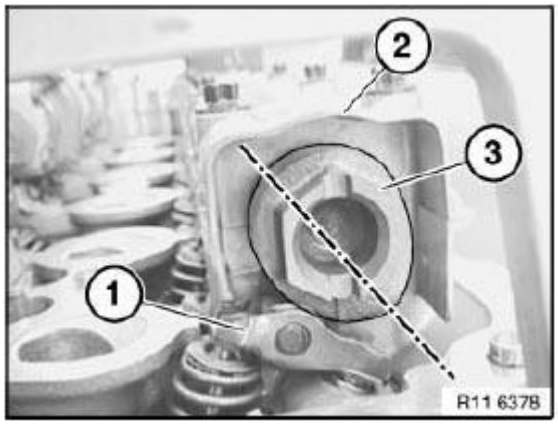

Fig. 412: Exhaust Camshaft And Cam Follower
Courtesy of BMW OF NORTH AMERICA, INC.

Secure special tool 11 4 283 to cylinder head with bolts (1).

NOTE: Fit special tool 11 4 282 underneath on side of intake camshaft.

Mount special tool 11 4 281 on intake and exhaust camshafts.

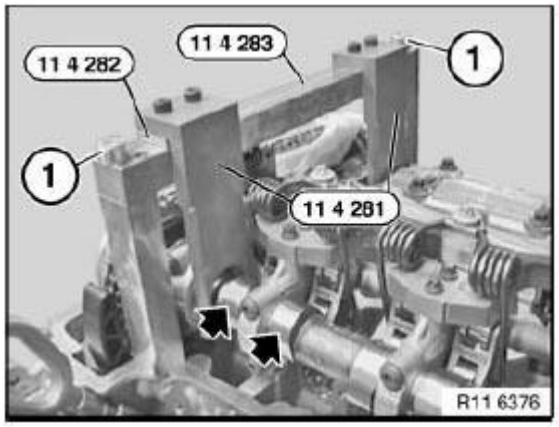

Fig. 413: Special Tools (11 4 281), (11 4 282) (11 4 283) And Bolts
Courtesy of BMW OF NORTH AMERICA, INC.

If necessary, adjust **Valve Timing.**

Assemble engine.

11 31 025 REMOVING AND INSTALLING/REPLACING INTAKE CAMSHAFT (N51)

Special tools required:

- 11 4 281
- 11 4 481

IMPORTANT: Aluminium-magnesium materials.

No steel screws/bolts may be used due to the threat of electrochemical corrosion.

A magnesium crankcase requires aluminium screws/bolts exclusively.

Aluminium screws/bolts must be replaced each time they are released .

Aluminium screws/bolts are permitted with and without color coding (blue).

For reliable identification:

Aluminium screws/bolts are not magnetic .

Jointing torque and angle of rotation must be observed without fail (risk of damage).

Necessary preliminary tasks:

- Remove **Cylinder Head Cover**
- Remove **Adjusting Unit** for intake camshaft
- Remove **Intermediate Lever**
- Adjust **Valve Timing.**

Bearing cap (1) is a thrust bearing.

Release screws on bearing caps 1 to 6 (1 and 2).

Set all bearing caps down in special tool 11 4 481 in a tidy and orderly fashion.

For tightening torque refer to 11 31 1AZ in **11 31 CAMSHAFT** .

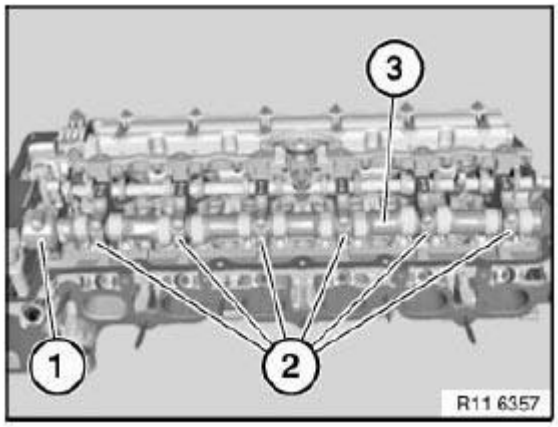

Fig. 414: Bearing Caps
Courtesy of BMW OF NORTH AMERICA, INC.

Lift out camshaft (2.

Installation:

Clean all bearing points and lubricate with oil.

Check plain compression rings (1) for damage and replace if necessary.

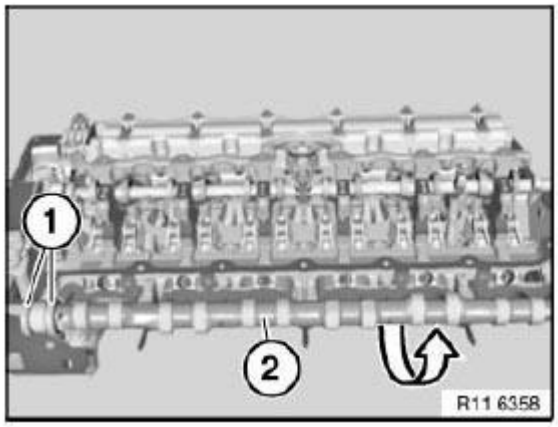

Fig. 415: Inlet Camshaft And Plain Compression Rings
Courtesy of BMW OF NORTH AMERICA, INC.

Metal plain rectangular compression ring:

IMPORTANT: Plain rectangular compression rings (1) can easily break.

Only replace plain rectangular compression rings (1) when they are broken.

The plain rectangular compression rings have catches at the joint.

Press plain rectangular compression rings (1) apart upwards and downwards and removed towards front.

Make sure plain rectangular compression rings (1) can move freely.

Installation note:

When exhaust camshafts are inserted, no joint must point to a separating joint.

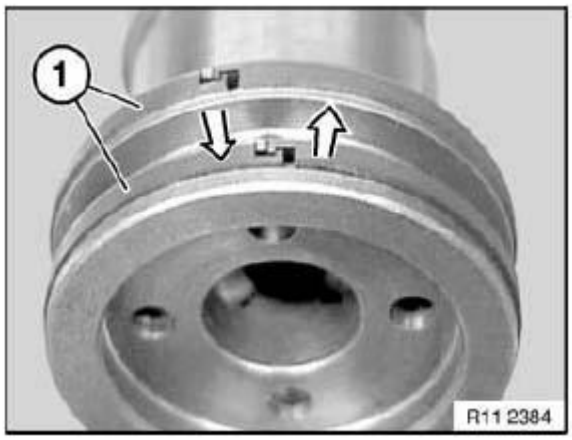

Fig. 416: Identifying Compression Rings
Courtesy of BMW OF NORTH AMERICA, INC.

Plastic plain rectangular compression ring:

Installation note:

The plastic plain rectangular compression ring is maintenance free and does not have to be replaced.

Insert plastic rectangular compression ring (1) into groove of exhaust camshaft (2) (see arrow in **Fig. 417**). Lightly oil plastic rectangular compression ring (1) and rotate in direction of arrow until compression ring (1) is positioned on the exhaust camshaft.

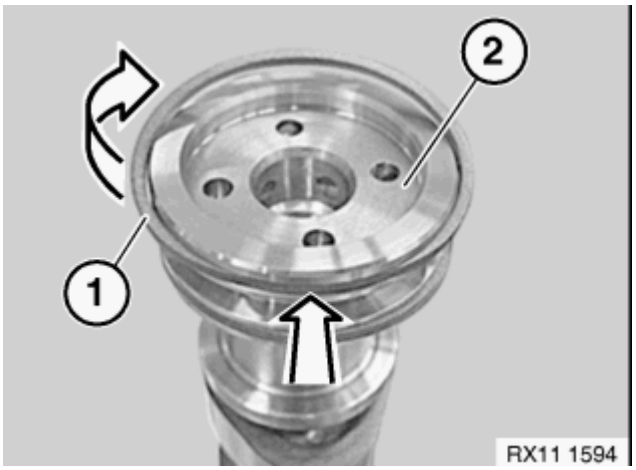

Fig. 417: Installing Plastic Plain Rectangular Compression Ring
Courtesy of BMW OF NORTH AMERICA, INC.

Check plastic plain rectangular compression ring (1 and 2) for freedom of movement.

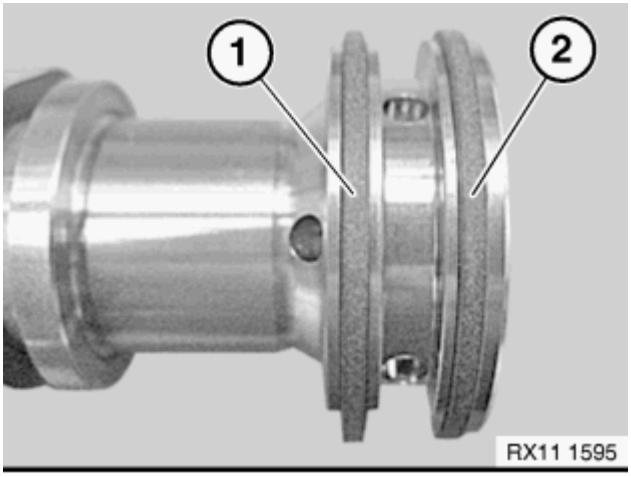

Fig. 418: Checking Ring For Freedom Of Movement
Courtesy of BMW OF NORTH AMERICA, INC.

IMPORTANT: Both camshafts have different identifications. Markings of intake and exhaust camshafts are different.

Mixing up the intake and exhaust camshaft will result in engine damage.

A Exhaust camshaft.
E intake camshaft

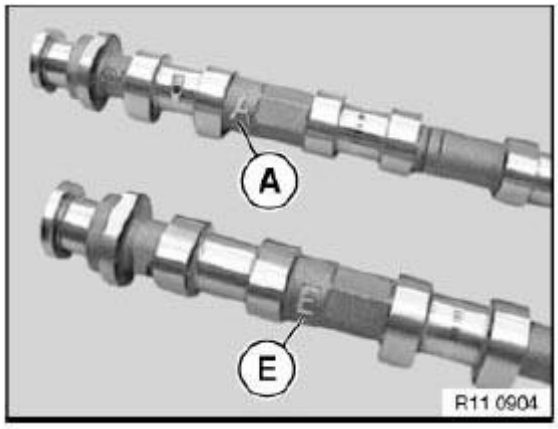

Fig. 419: Exhaust Camshaft And Inlet Camshaft
Courtesy of BMW OF NORTH AMERICA, INC.

Insert intake camshaft (1) so that part number on twin surface points upwards.

Position intake camshaft (1) so that cams point upwards at an angle.

Attach special tool 11 4 281 to mounting flats.

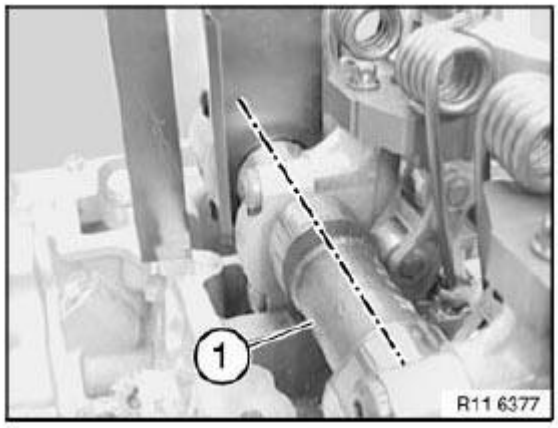

Fig. 420: Inlet Camshaft
Courtesy of BMW OF NORTH AMERICA, INC.

Assemble engine.

11 31 025 REMOVING AND INSTALLING/REPLACING INTAKE CAMSHAFT (N52K)

Special tools required:

- 11 4 281
- 11 4 481

IMPORTANT: Aluminium-magnesium materials.

No steel screws/bolts may be used due to the threat of electrochemical corrosion.

A magnesium crankcase requires aluminium screws/bolts exclusively.

Aluminium screws/bolts must be replaced each time they are released .

Aluminium screws/bolts are permitted with and without color coding (blue).

For reliable identification:

Aluminium screws/bolts are not magnetic .

Jointing torque and angle of rotation must be observed without fail (risk of damage).

Necessary preliminary tasks:

- Remove **Cylinder Head Cover**
- Remove **Intake Adjustment Unit**
- Remove **Intermediate Lever**
- Adjust **Valve Timing.**

NOTE: All bearing caps (1 and 2) are marked with numbers from 1 to 6.

Bearing cap (1) is a thrust bearing.

Release screws on bearing caps 1 to 6 (1 and 2).

For tightening torque refer to 11 31 2AZ in **11 31 CAMSHAFT** .

Set all bearing caps down in special tool 11 4 481 in a tidy and orderly fashion.

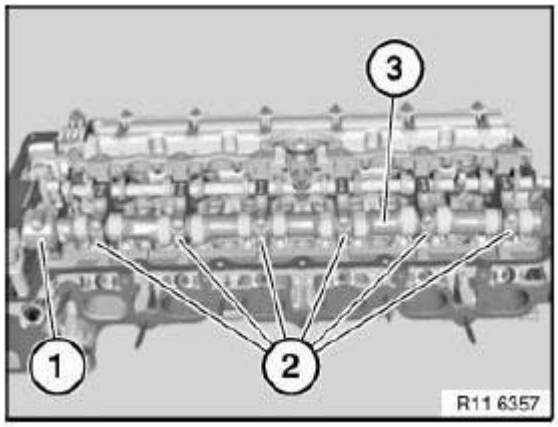

Fig. 421: Bearing Caps
Courtesy of BMW OF NORTH AMERICA, INC.

Remove intake camshaft (2) towards top.

Installation:

Clean all bearing points and lubricate with oil.

Check plain compression rings (1) for damage and replace if necessary.

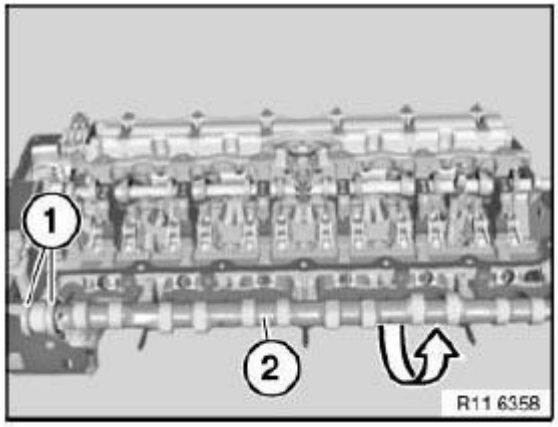

Fig. 422: Inlet Camshaft And Plain Compression Rings
Courtesy of BMW OF NORTH AMERICA, INC.

Metal plain rectangular compression ring:

IMPORTANT: Plain rectangular compression rings (1) can easily break.

Only replace plain rectangular compression rings (1) when they are broken.

The plain rectangular compression rings have catches at the joint.

Press plain rectangular compression rings (1) apart upwards and downwards and removed towards front.

Make sure plain rectangular compression rings (1) can move freely.

Installation note:

When exhaust camshafts are inserted, no joint must point to a separating joint.

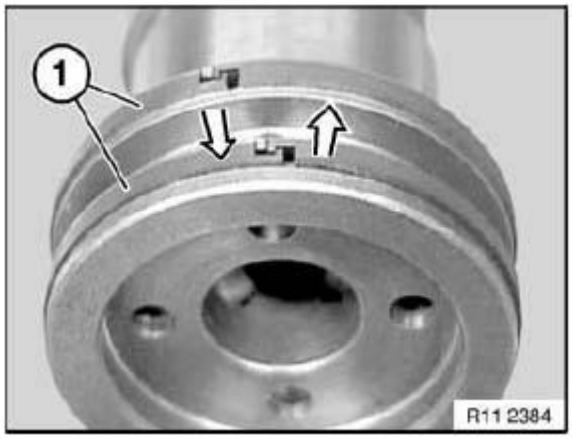

Fig. 423: Identifying Compression Rings
Courtesy of BMW OF NORTH AMERICA, INC.

Plastic plain rectangular compression ring:

Installation note:

The plastic plain rectangular compression ring is maintenance free and does not have to be replaced.

Insert plastic rectangular compression ring (1) into groove of exhaust camshaft (2) (see arrow in **Fig. 424**). Lightly oil plastic rectangular compression ring (1) and rotate in direction of arrow until compression ring (1) is positioned on the exhaust camshaft.

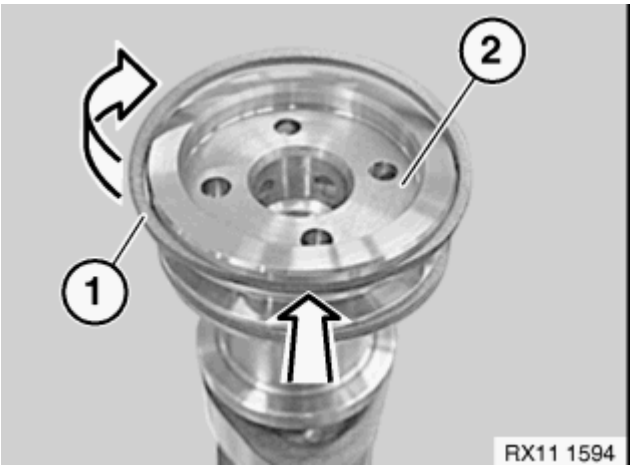

Fig. 424: Installing Plastic Plain Rectangular Compression Ring
Courtesy of BMW OF NORTH AMERICA, INC.

Check plastic plain rectangular compression ring (1 and 2) for freedom of movement.

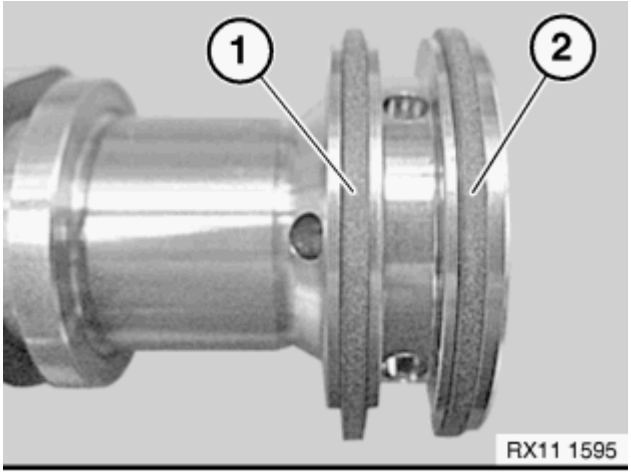

Fig. 425: Checking Ring For Freedom Of Movement
Courtesy of BMW OF NORTH AMERICA, INC.

IMPORTANT: Markings of intake and exhaust camshafts are different.

Mixing up the intake and exhaust camshaft will result in engine damage.

A Exhaust camshaft.
E intake camshaft

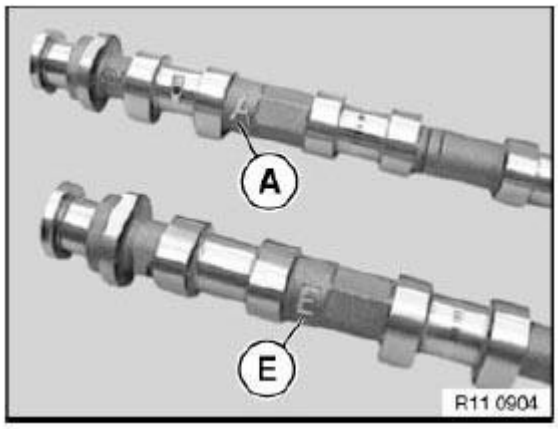

Fig. 426: Exhaust Camshaft And Inlet Camshaft
Courtesy of BMW OF NORTH AMERICA, INC.

Insert intake camshaft (1) so that part number on twin surface points upwards.

Position intake camshaft (1) so that cams point upwards at an angle.

Attach special tool 11 4 281 to mounting flats.

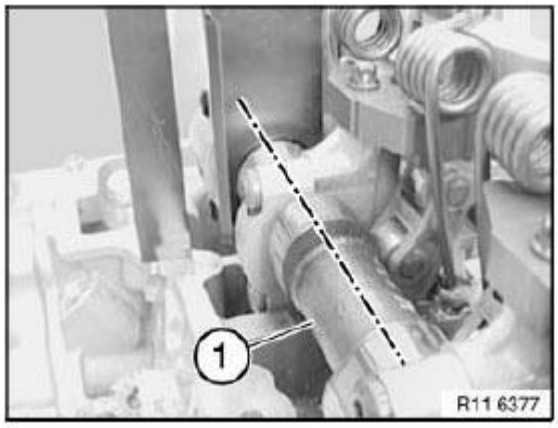

Fig. 427: Inlet Camshaft
Courtesy of BMW OF NORTH AMERICA, INC.

Assemble engine.

11 31 028 REMOVING AND INSTALLING/REPLACING EXHAUST CAMSHAFT (N51)

IMPORTANT: It is absolutely essential to follow an exact procedure for removing and installing the exhaust camshaft.

Risk of damage!

The upper and lower bearing banks must be tensioned with a total of six special tools 11 4 461.

Necessary preliminary tasks:

- Remove **Cylinder Head Cover**
- Remove **Exhaust Adjusting Unit** for exhaust camshaft.
- Adjust **Valve Timing.**

Release bearing cap screw connections from outside inwards.

Lift out upper and lower bearing banks (1) with exhaust camshaft.

Remove upper bearing bank (1).

Remove exhaust camshaft from lower bearing bank.

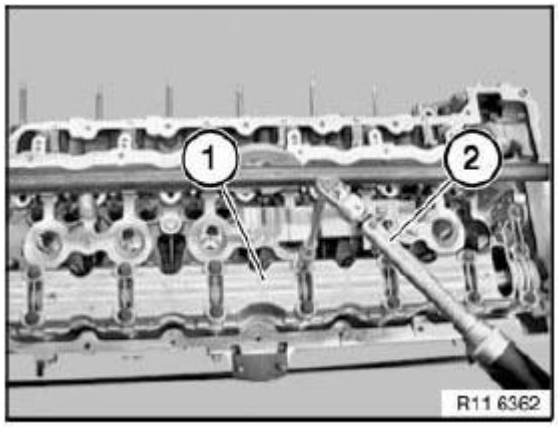

Fig. 428: Removing Upper Bearing Bank
Courtesy of BMW OF NORTH AMERICA, INC.

IMPORTANT: Markings of intake and exhaust camshafts are different. Mixing up the intake and exhaust camshaft will result in engine damage .

A = Exhaust camshaft

E = Intake camshaft

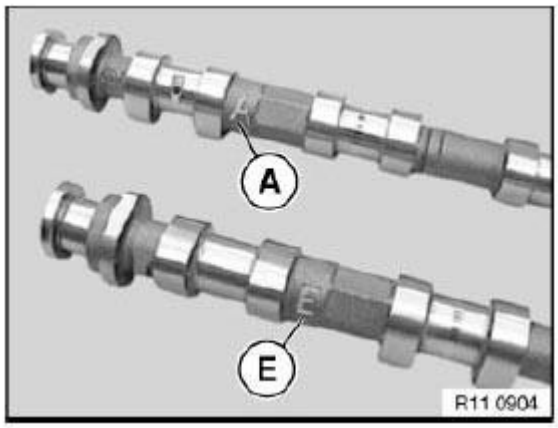

Fig. 429: Identifying Exhaust Camshaft And Inlet Camshaft
Courtesy of BMW OF NORTH AMERICA, INC.

Metal plain rectangular compression ring:

IMPORTANT: Plain rectangular compression rings (1) can easily break.

Only replace plain rectangular compression rings (1) when they are broken.

The plain rectangular compression rings have catches at the joint.

Press plain rectangular compression rings (1) apart upwards and downwards and removed towards front.

Make sure plain rectangular compression rings (1) can move freely.

Installation note:

When exhaust camshafts are inserted, no joint must point to a separating joint.

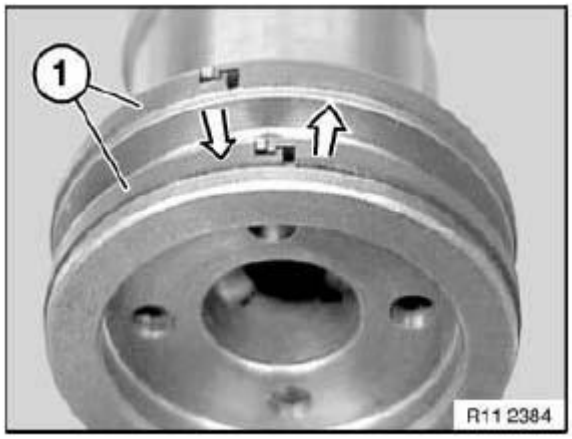

Fig. 430: Identifying Compression Rings
Courtesy of BMW OF NORTH AMERICA, INC.

Plastic plain rectangular compression ring:

Installation note:

The plastic plain rectangular compression ring is maintenance free and does not have to be replaced.

Insert plastic rectangular compression ring (1) into groove of exhaust camshaft (2) (see arrow in **Fig. 431**). Lightly oil plastic rectangular compression ring (1) and rotate in direction of arrow until compression ring (1) is positioned on the exhaust camshaft.

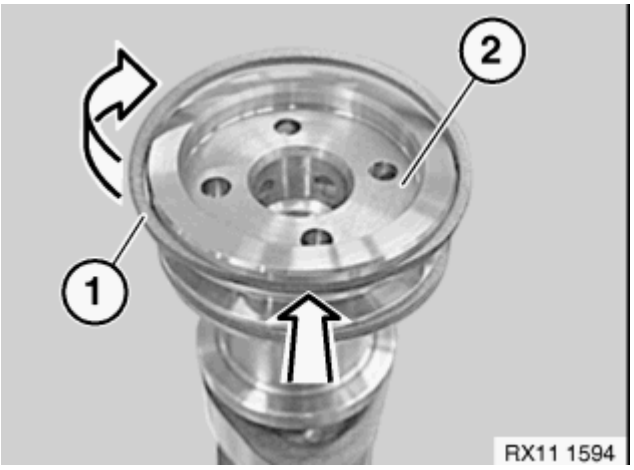

Fig. 431: Installing Plastic Plain Rectangular Compression Ring
Courtesy of BMW OF NORTH AMERICA, INC.

Check plastic plain rectangular compression ring (1 and 2) for freedom of movement.

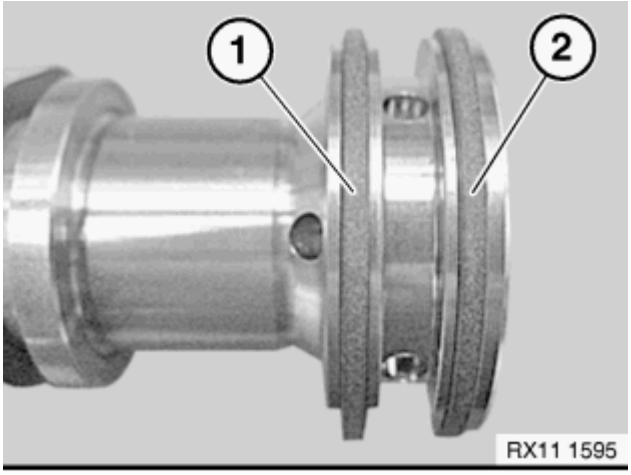

Fig. 432: Checking Ring For Freedom Of Movement
Courtesy of BMW OF NORTH AMERICA, INC.

IMPORTANT: Removal on engine:
Set engine to firing TDC at 1st cylinder.
Removed cylinder head:
When using special tool 11 9 000, it will be necessary to remove the aluminum profile insert.

Mounting bearing strip:

Pre-install special tool 11 4 462 on cylinder no. 2.

Insert special tool 11 4 463 in screw connection of cylinder head cover.

IMPORTANT: Special tool 11 4 463 is a special screw.

Press down cam followers (3) on cylinder no. 2 with spindle nut (2) of special tool 11 4 462.

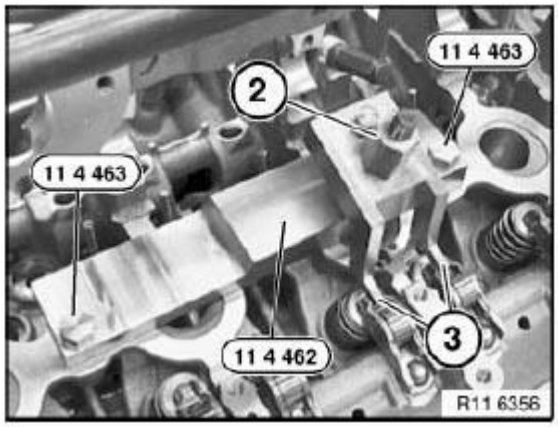

Fig. 433: Identifying Cam Followers And Spindle Nut With Special Tools (11 4 463 And 11 4 462)
Courtesy of BMW OF NORTH AMERICA, INC.

Installation note:

Before mounting the exhaust camshaft on the correct cam follower seat (1), pay attention to the hydraulic valve clearance adjustment element and the valve.

Refer to **REMOVING AND INSTALLING/REPLACING ALL ROCKER ARMS (N51)**.

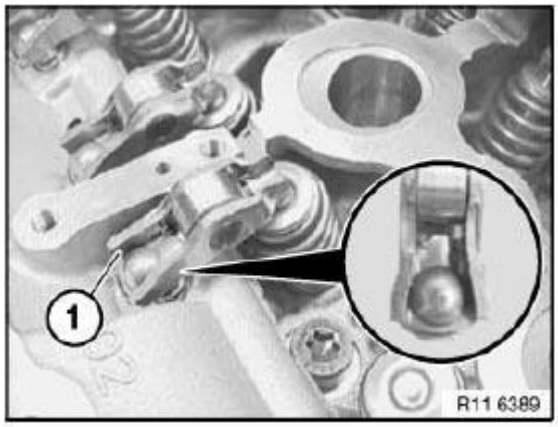

Fig. 434: Identifying Cam Follower Seat
Courtesy of BMW OF NORTH AMERICA, INC.

Position lower bearing bank (1) with exhaust camshaft (2) cam followers.

Align exhaust camshaft (2).

Cylinder nos. 2 and 4 are at valve overlap.

Cams (3) on cylinder no. 1 point upwards at an angle.

Part number (4) on twin surface of exhaust camshaft (2) points upwards.

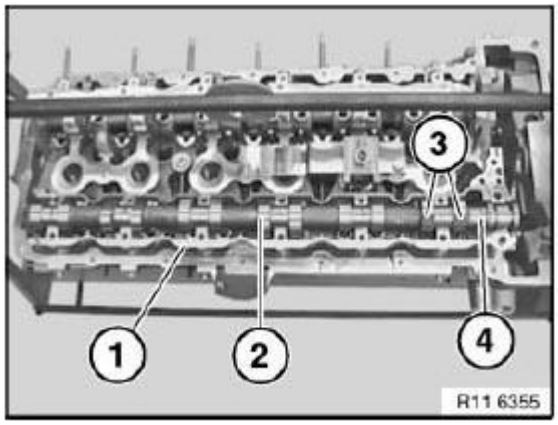

Fig. 435: Identifying Lower Bearing Bank, Exhaust Camshaft And Cam
Courtesy of BMW OF NORTH AMERICA, INC.

IMPORTANT: There must be no adhesive residues in the cylinder head tapped holes. Clean threaded holes.

Fit upper bearing bank (1).

Insert bolts dry.

Tension down upper bearing bank (1) with exhaust camshaft at bearing points 3 and 5 through a 1/2 bolt turn.

Join exhaust camshaft to upper and lower bearing banks (1) with torque wrench (2) from inside outwards to **8 Nm.**

Release all screws of upper bearing bank (1) from outside inwards by 90°.

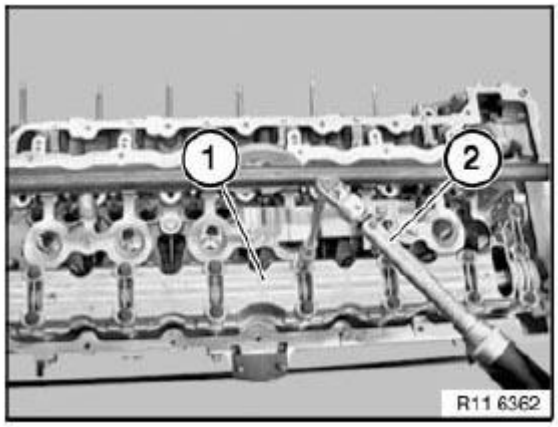

Fig. 436: Removing Upper Bearing Bank
Courtesy of BMW OF NORTH AMERICA, INC.

Installation note:

Upper and lower bearing banks must be aligned to each other at ground surfaces (1 and 2).

Make sure that the synchronizing key and the legs of special tools 11 4 461 rest on the milled surfaces.

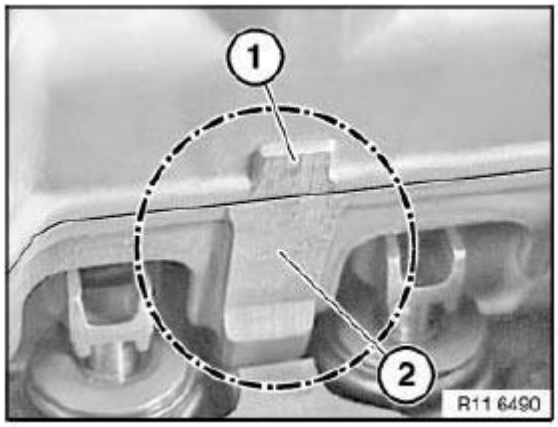

Fig. 437: Identifying Bearing Banks
Courtesy of BMW OF NORTH AMERICA, INC.

NOTE: Schematic depiction of special tool 11 4 461 at upper bearing bank (1) and lower bearing bank (2).
Pretension all special tools 11 4 461 with special tool 11 4 350 only.

IMPORTANT: Tighten screw (3) on synchronizing key to 2 Nm (risk of damage)

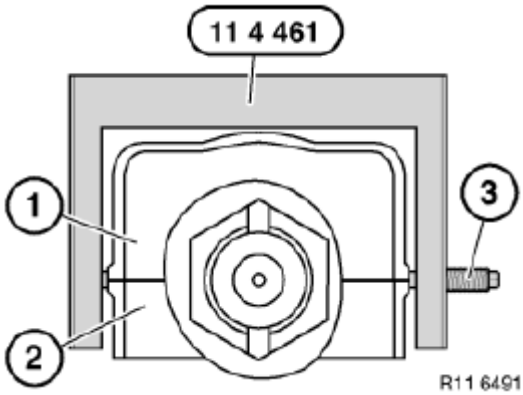

Fig. 438: Identifying Screw, Upper And Lower Bearing Bank With Special Tool (11 4 461)
Courtesy of BMW OF NORTH AMERICA, INC.

Position special tool 11 4 461 over screw connection of bearing banks.

Make sure that the legs rest exactly on the ground surfaces of the upper bearing bank (2) and lower bearing bank (1).

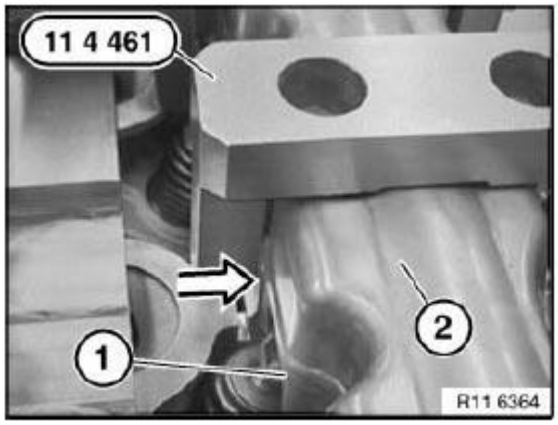

Fig. 439: Identifying Upper And Lower Bearing Bank With Special Tool (11 4 461)
Courtesy of BMW OF NORTH AMERICA, INC.

Initially tighten screw of special tool 11 4 461 to ground surfaces of upper bearing bank (1) and lower bearing bank (2).

IMPORTANT: Tighten screws on synchronizing key to 2 Nm (risk of damage)

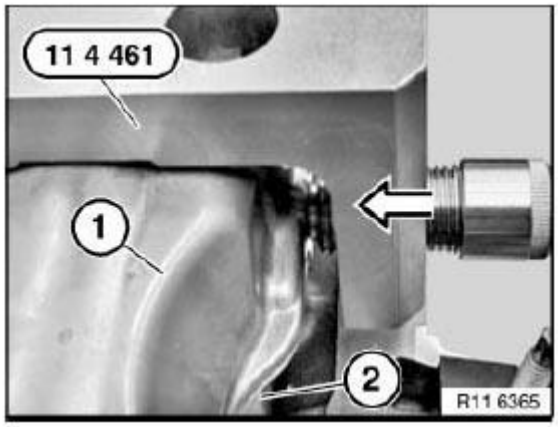

Fig. 440: Tightening Screw Of Special Tool 11 4 461 To Ground Surfaces
Courtesy of BMW OF NORTH AMERICA, INC.

IMPORTANT: Set special tool 11 4 350 to 2 Nm.
Pretension all special tools 11 4 461 with special tool 11 4 350 only.

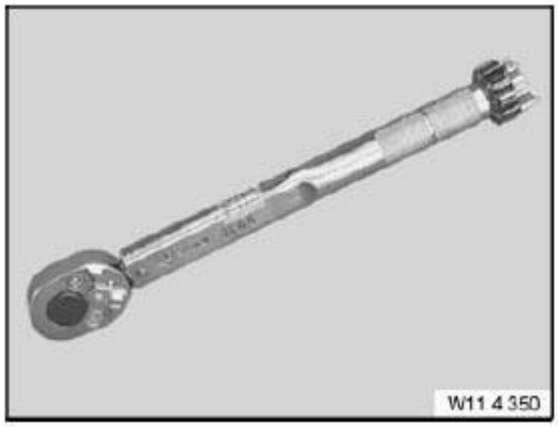

Fig. 441: Identifying Special Tools 11 4 461
Courtesy of BMW OF NORTH AMERICA, INC.

Mount special tools 11 4 461 with screw (1) to inside of cylinder head.

Mount special tool 11 4 461 with screw facing outwards on cylinder no. 2.

Position special tools 11 4 461 so that screw connections (2) of bearing bank are easily accessible.

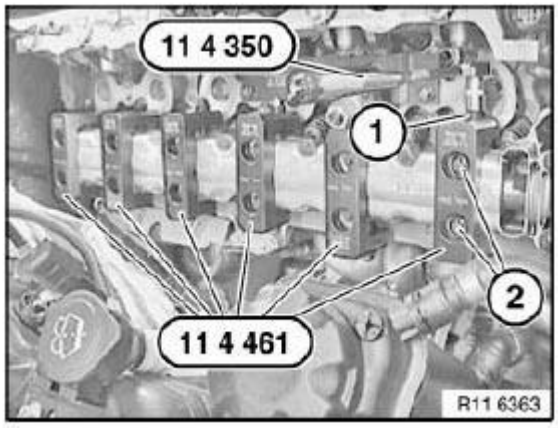

Fig. 442: Identifying Screws With Special Tools (11 4 350 And 11 4 461)
Courtesy of BMW OF NORTH AMERICA, INC.

Tighten upper and lower bearing banks with special tool 00 9 120.

Tightening torque: see 1AZ in **11 31 CAMSHAFT** .

IMPORTANT: Remove special tool 11 4 461 only when exhaust camshaft screw connection is completed .

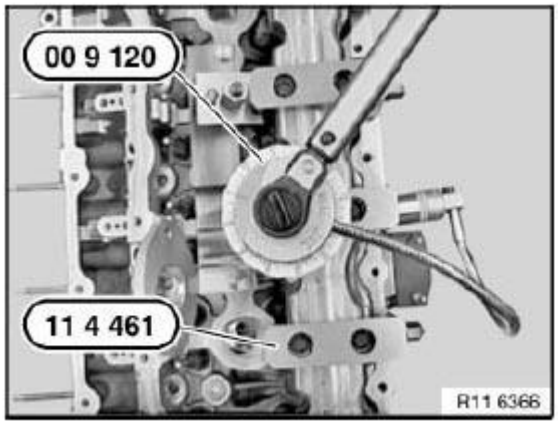

Fig. 443: Identifying Special Tools (00 9 120 And 11 4 461)
Courtesy of BMW OF NORTH AMERICA, INC.

Assemble engine.

11 31 028 REMOVING AND INSTALLING/REPLACING EXHAUST CAMSHAFT (N52K)

IMPORTANT: It is absolutely essential to follow an exact procedure for removing and installing the exhaust camshaft.

Risk of damage!

The upper and lower bearing banks must be tensioned with a total of six special tools 11 4 461.

Necessary preliminary tasks:

- Remove **Cylinder Head Cover**
- Remove **Exhaust Adjustment Unit**
- Adjust **Valve Timing.**

Release bearing cap screw connections from outside inwards.

Lift out upper and lower bearing banks (1) with exhaust camshaft.

Remove upper bearing bank (1).

Remove exhaust camshaft from lower bearing bank.

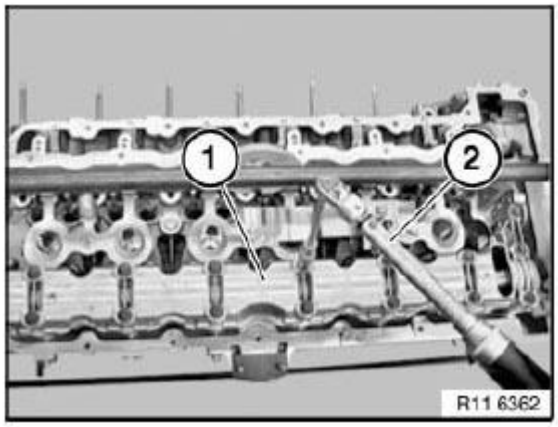

Fig. 444: Removing Upper Bearing Bank
Courtesy of BMW OF NORTH AMERICA, INC.

IMPORTANT: Markings of intake and exhaust camshafts are different. Mixing up the intake and exhaust camshaft will result in engine damage .

A = Exhaust camshaft

E = Intake camshaft

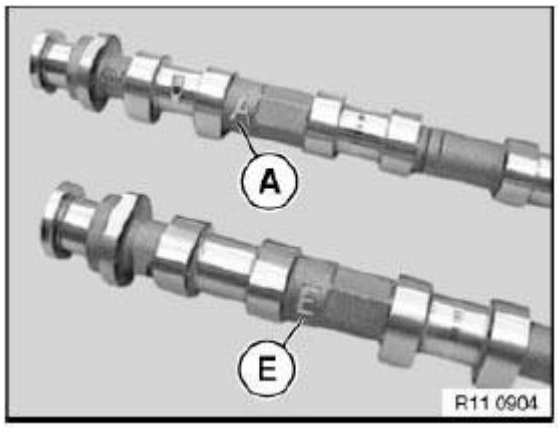

Fig. 445: Identifying Exhaust Camshaft And Inlet Camshaft
Courtesy of BMW OF NORTH AMERICA, INC.

Metal plain rectangular compression ring:

IMPORTANT: Plain rectangular compression rings (1) can easily break.

Only replace plain rectangular compression rings (1) when they are broken.

The plain rectangular compression rings have catches at the joint.

Press plain rectangular compression rings (1) apart upwards and downwards and removed towards front.

Make sure plain rectangular compression rings (1) can move freely.

Installation note:

When exhaust camshafts are inserted, no joint must point to a separating joint.

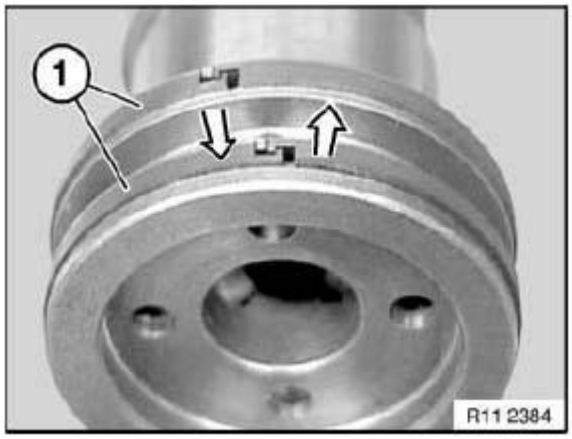

Fig. 446: Identifying Compression Rings
Courtesy of BMW OF NORTH AMERICA, INC.

Plastic plain rectangular compression ring:

Installation note:

The plastic plain rectangular compression ring is maintenance free and does not have to be replaced.

Insert plastic rectangular compression ring (1) into groove of exhaust camshaft (2) (see arrow in **Fig. 447**). Lightly oil plastic rectangular compression ring (1) and rotate in direction of arrow until compression ring (1) is positioned on the exhaust camshaft.

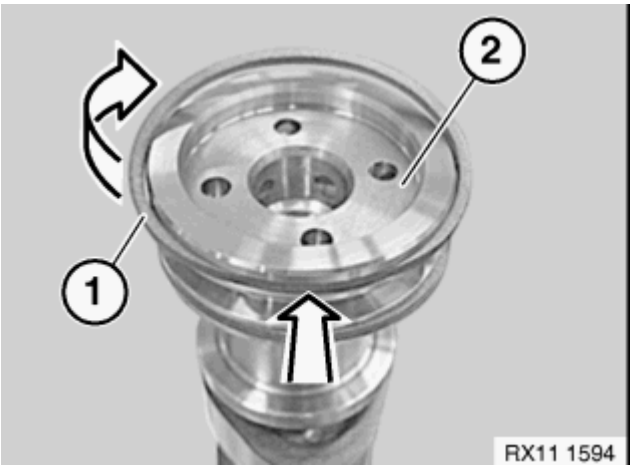

Fig. 447: Installing Plastic Plain Rectangular Compression Ring
Courtesy of BMW OF NORTH AMERICA, INC.

Check plastic plain rectangular compression ring (1 and 2) for freedom of movement.

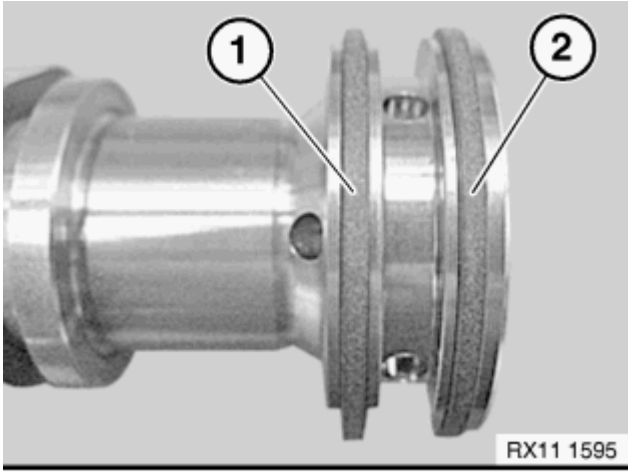

Fig. 448: Checking Ring For Freedom Of Movement
Courtesy of BMW OF NORTH AMERICA, INC.

IMPORTANT: Removal on engine:
Set engine to firing TDC at 1st cylinder.
Removed cylinder head:
When using special tool 11 9 000, it will be necessary to remove the aluminum profile insert.

Mounting bearing strip:

Pre-install special tool 11 4 462 on cylinder no. 2.

Insert special tool 11 4 463 in screw connection of cylinder head cover.

IMPORTANT: Special tool 11 4 463 is a special screw.

Press down cam followers (3) on cylinder no. 2 with spindle nut (2) of special tool 11 4 462.

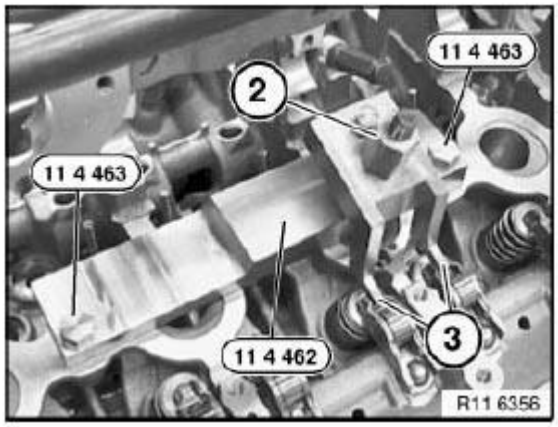

Fig. 449: Identifying Cam Followers And Spindle Nut With Special Tools (11 4 463 And 11 4 462)
Courtesy of BMW OF NORTH AMERICA, INC.

Installation note:

Before mounting the exhaust camshaft on the correct cam follower seat (1), pay attention to the hydraulic valve clearance adjustment element and the valve.

Refer to **REMOVING AND INSTALLING/REPLACING ALL ROCKER ARMS (N52K)**.

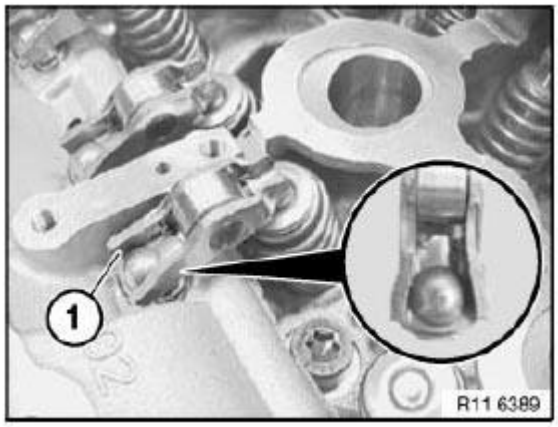

Fig. 450: Identifying Cam Follower Seat
Courtesy of BMW OF NORTH AMERICA, INC.

Position lower bearing bank (1) with exhaust camshaft (2) cam followers.

Align exhaust camshaft (2).

Cylinder nos. 2 and 4 are at valve overlap.

Cams (3) on cylinder no. 1 point upwards at an angle.

Part number (4) on twin surface of exhaust camshaft (2) points upwards.

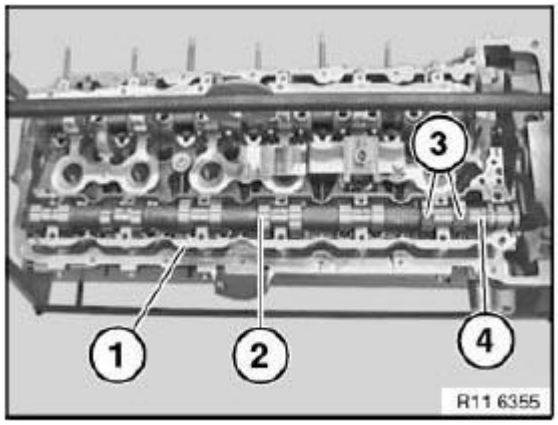

Fig. 451: Identifying Lower Bearing Bank, Exhaust Camshaft And Cam
Courtesy of BMW OF NORTH AMERICA, INC.

IMPORTANT: There must be no adhesive residues in the cylinder head tapped holes. Clean threaded holes.

Fit upper bearing bank (1).

Insert bolts dry.

Tension down upper bearing bank (1) with exhaust camshaft at bearing points 3 and 5 through a 1/2 bolt turn.

Join exhaust camshaft to upper and lower bearing banks (1) with torque wrench (2) from inside outwards to **8 Nm.**

Release all screws of upper bearing bank (1) from outside inwards by 90°.

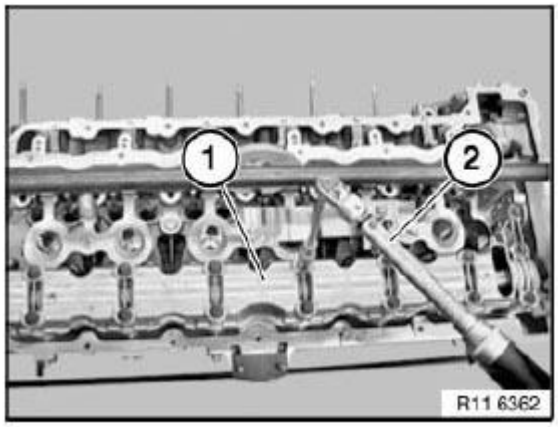

Fig. 452: Removing Upper Bearing Bank
Courtesy of BMW OF NORTH AMERICA, INC.

Installation note:

Upper and lower bearing banks must be aligned to each other at ground surfaces (1 and 2).

Make sure that the synchronizing key and the legs of special tools 11 4 461 rest on the milled surfaces.

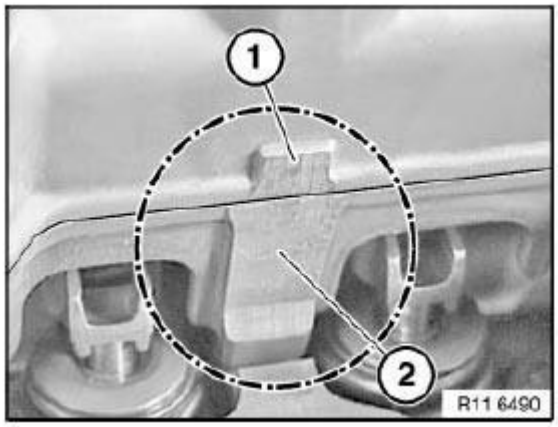

Fig. 453: Identifying Bearing Banks
Courtesy of BMW OF NORTH AMERICA, INC.

NOTE: Schematic depiction of special tool 11 4 461 at upper bearing bank (1) and lower bearing bank (2).
Pretension all special tools 11 4 461 with special tool 11 4 350 only.

IMPORTANT: Tighten screw (3) on synchronizing key to 2 Nm (risk of damage)

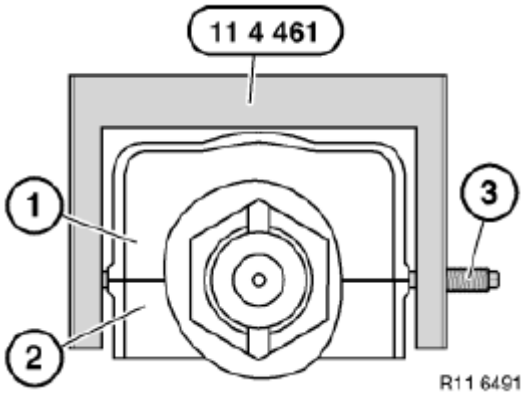

Fig. 454: Identifying Screw, Upper And Lower Bearing Bank With Special Tool (11 4 461)
Courtesy of BMW OF NORTH AMERICA, INC.

Position special tool 11 4 461 over screw connection of bearing banks.

Make sure that the legs rest exactly on the ground surfaces of the upper bearing bank (2) and lower bearing bank (1).

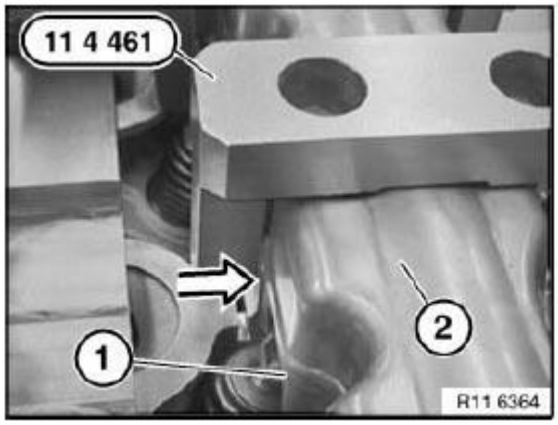

Fig. 455: Identifying Upper And Lower Bearing Bank With Special Tool (11 4 461)
Courtesy of BMW OF NORTH AMERICA, INC.

Initially tighten screw of special tool 11 4 461 to ground surfaces of upper bearing bank (1) and lower bearing bank (2).

IMPORTANT: Tighten screws on synchronizing key to 2 Nm (risk of damage)

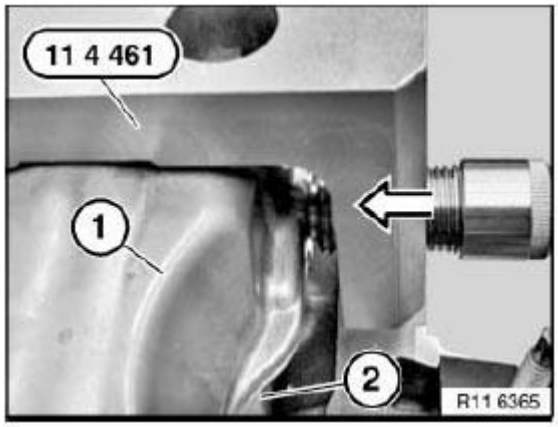

Fig. 456: Tightening Screw Of Special Tool 11 4 461 To Ground Surfaces
Courtesy of BMW OF NORTH AMERICA, INC.

IMPORTANT: Set special tool 11 4 350 to 2 Nm.
Pretension all special tools 11 4 461 with special tool 11 4 350 only.

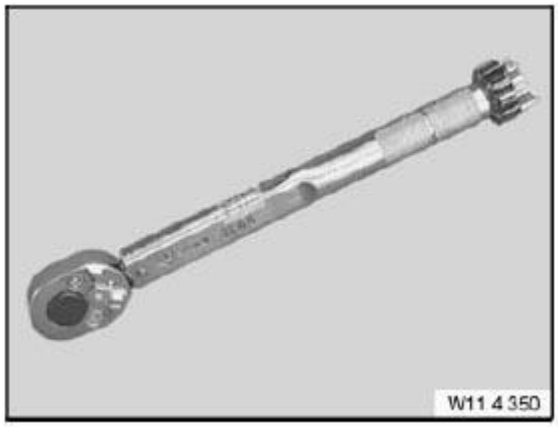

Fig. 457: Identifying Special Tools 11 4 461
Courtesy of BMW OF NORTH AMERICA, INC.

Mount special tools 11 4 461 with screw (1) to inside of cylinder head.

Mount special tool 11 4 461 with screw facing outwards on cylinder no. 2.

Position special tools 11 4 461 so that screw connections (2) of bearing bank are easily accessible.

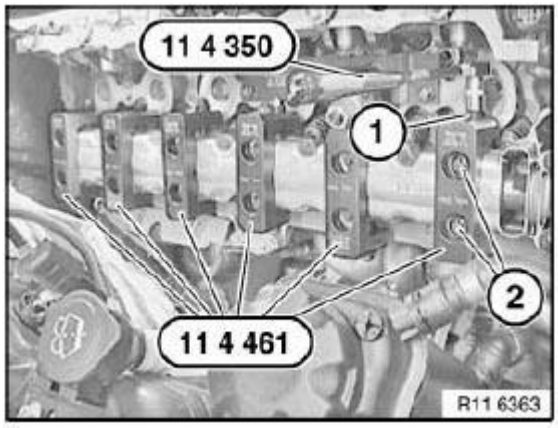

Fig. 458: Identifying Screws With Special Tools (11 4 350 And 11 4 461)
Courtesy of BMW OF NORTH AMERICA, INC.

Tighten upper and lower bearing banks with special tool 00 9 120.

NOTE: Insert screws dry.
Tighten screws from inside outwards.
Jointing torque and angle of rotation must be observed without fail.

Jointing torque: 8 Nm ; Angle of rotation: 60°

IMPORTANT: Remove special tool 11 4 461 only when exhaust camshaft screw connection is

completed .

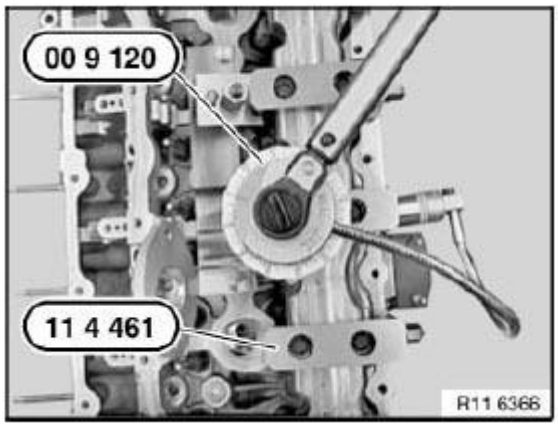

Fig. 459: Identifying Special Tools (00 9 120 And 11 4 461)
Courtesy of BMW OF NORTH AMERICA, INC.

Assemble engine.

11 31 051 REPLACING TIMING CHAIN (N51)

Special tools required:

- 11 0 300
- 11 4 280
- 11 4 360
- 11 4 362
- 11 5 200
- 11 9 280

Necessary preliminary tasks:

- Remove **Cylinder Head Cover**
- Remove all **Spark Plugs**
- Remove **Chain Tensioner.**
- Remove **Radial Shaft Seal** at front.
- Remove **Belt Tensioner**
- Remove **Vibration Damper**

Remove fastener (1) in direction of arrow.

Installation:

Install fastener (1) with bore facing outwards.

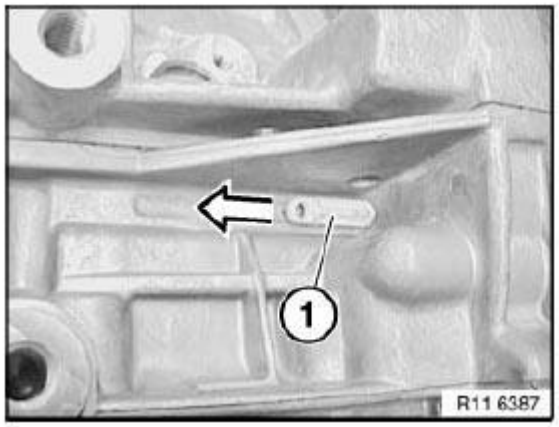

Fig. 460: Fastener And Removal Direction
Courtesy of BMW OF NORTH AMERICA, INC.

Secure crankshaft during entire repair operation with special tool 11 0 300.

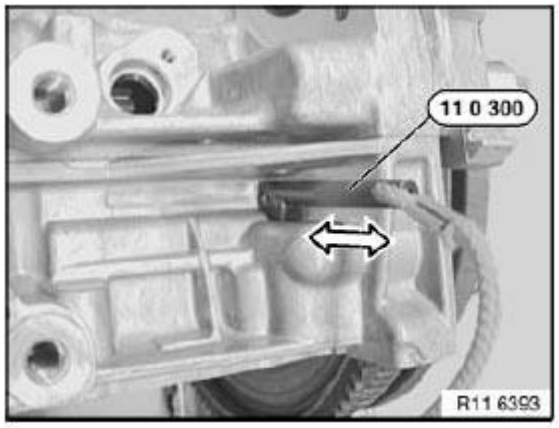

Fig. 461: Special Tool (11 0 300)
Courtesy of BMW OF NORTH AMERICA, INC.

Do not remove special tool 11 4 280.

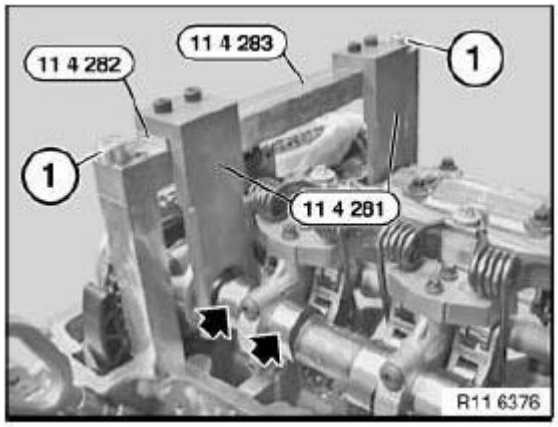

Fig. 462: Special Tool (11 4 281), (11 4 282) And (11 4 283)
Courtesy of BMW OF NORTH AMERICA, INC.

IMPORTANT: Do not remove special tool 11 0 300 to release central bolt (1).

Employ a second person for gripping when releasing central bolt (1).

Mount special tool 11 9 280 on hub for vibration damper.

Release central bolt (1).

For tightening torque refer to 11 21 1AZ in **21 CRANKSHAFT WITH BEARINGS** .

Remove central bolt with hub towards front.

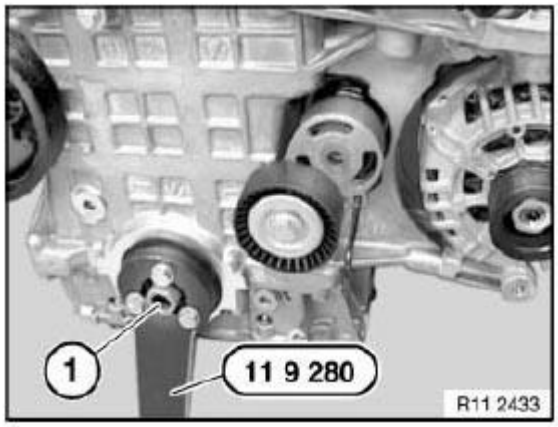

Fig. 463: Special Tool (11 9 280) And Central Bolt
Courtesy of BMW OF NORTH AMERICA, INC.

Open plug (1).

For tightening torque refer to 11 31 6AZ in **11 31 CAMSHAFT** .

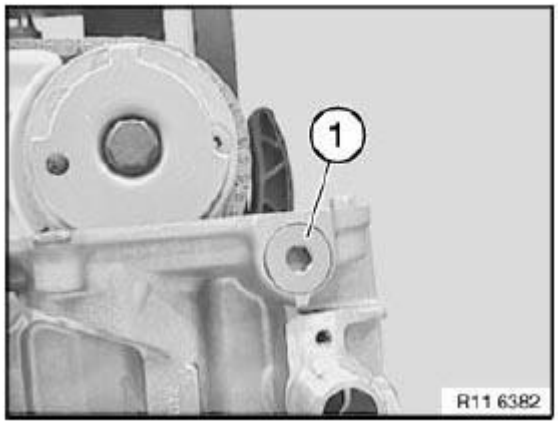

Fig. 464: Plug
Courtesy of BMW OF NORTH AMERICA, INC.

Open plug (1).

For tightening torque refer to 11 11 6AZ in **11 11 CRANKCASE** .

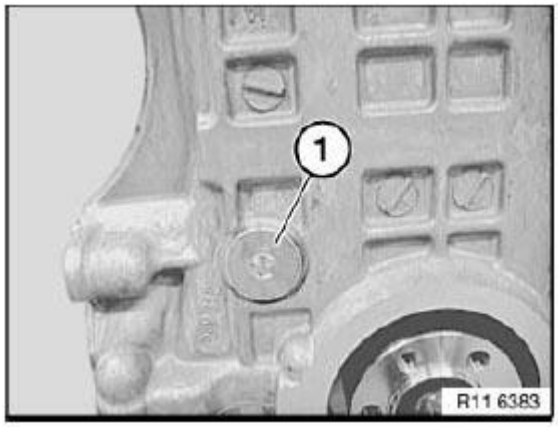

Fig. 465: Plug
Courtesy of BMW OF NORTH AMERICA, INC.

Release screw (1) on chain drive at top.

For tightening torque refer to 11 31 2AZ in **11 31 CAMSHAFT** .

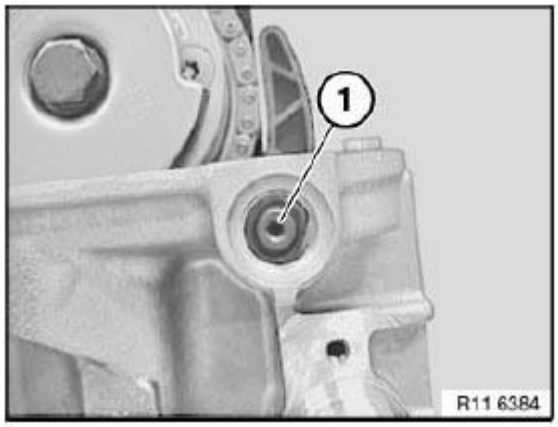

Fig. 466: Bearing Pin
Courtesy of BMW OF NORTH AMERICA, INC.

Release screw (1) on chain drive at bottom.

For tightening torque refer to 11 31 3AZ in **11 31 CAMSHAFT** .

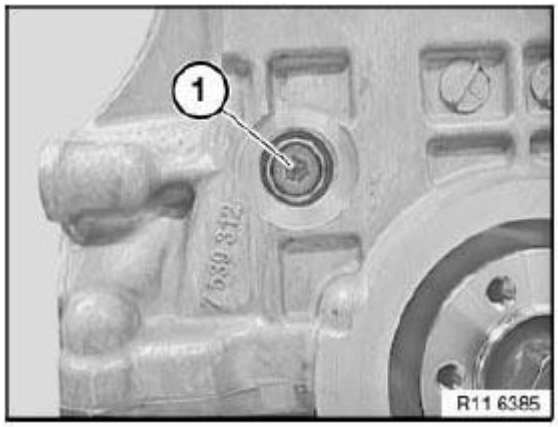

Fig. 467: Crankcase Bearing Pin
Courtesy of BMW OF NORTH AMERICA, INC.

Remove both **Adjusting Units**

Release screws (1).

For tightening torque refer to 11 31 2AZ in **11 31 CAMSHAFT** .

Remove chain module with timing chain and sprocket wheel upwards in direction of arrow.

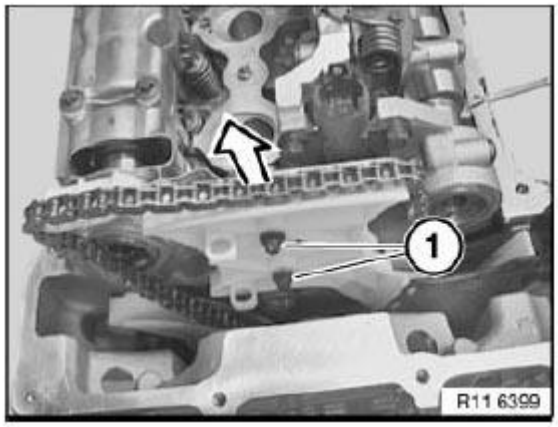

Fig. 468: Timing Chain Module Bolts
Courtesy of BMW OF NORTH AMERICA, INC.

IMPORTANT: Note installation direction of sprocket wheel (2).

Collar (see arrow) on sprocket wheel (2) points to crankshaft.

Incorrect assembly will result in engine damage.

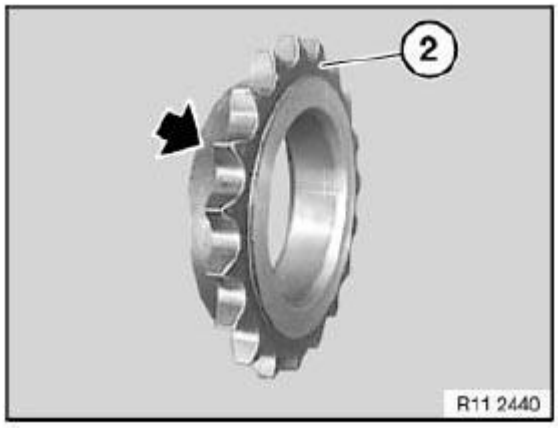

Fig. 469: Sprocket Wheel
Courtesy of BMW OF NORTH AMERICA, INC.

Pull timing chain (1) upwards until sprocket wheel (2) engages chain guide (3).

Install timing chain (1) and sprocket wheel (2) in this position.

Installation:

Always hold timing chain (1) under tension. Timing chain (1) may jam on chain guide (3).

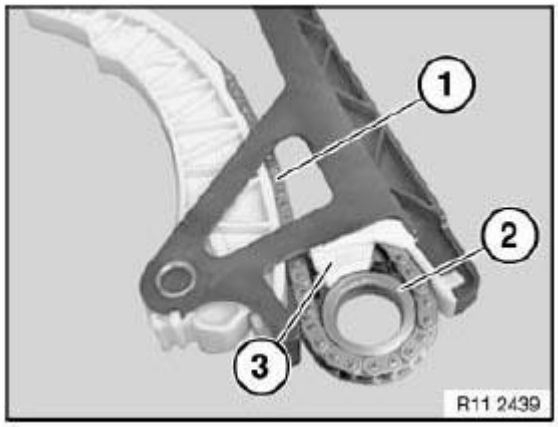

Fig. 470: Timing Chain, Sprocket Wheel And Chain Guide
Courtesy of BMW OF NORTH AMERICA, INC.

Install hub with central bolt.

Tighten down special tool 11 5 200 with screws (1) to hub.

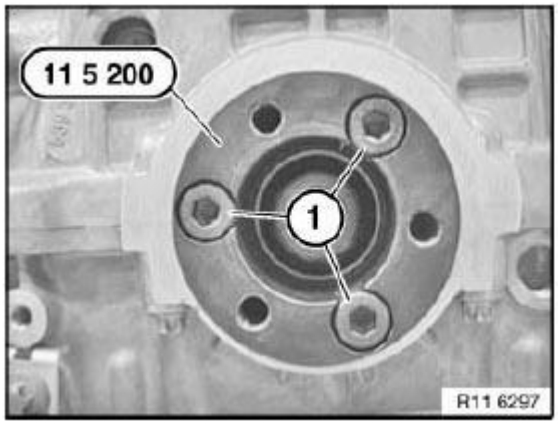

Fig. 471: Special Tool (11 5 200) And Hub Screws
Courtesy of BMW OF NORTH AMERICA, INC.

Remove **Belt Tensioner**.

Screw in special tool 11 4 362 from special tool kit 11 4 360.

Mount special tool 11 9 280 on 11 5 200.

Support special tool 11 9 280 on special tool 11 4 362.

Special tool 11 0 300 secures crankshaft.

Tighten central bolt to jointing torque.

For tightening torque refer to 11 21 1AZ in **21 CRANKSHAFT WITH BEARINGS** .

Mark central bolt and hub with paint.

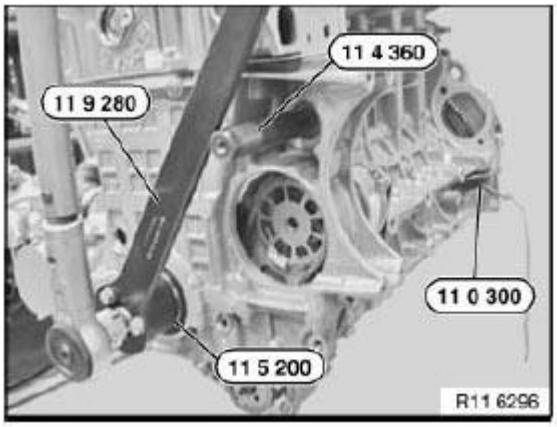

Fig. 472: Special Tools (11 9 280), (11 5 200). 11 4 360) And (11 0 300)
Courtesy of BMW OF NORTH AMERICA, INC.

Apply stroke of paint (1) for torsion angle tightening to tool.

See **Fig. 473**.

IMPORTANT: Do not remove the special tool while tightening the central bolt to torsion angle.

Risk of damage!

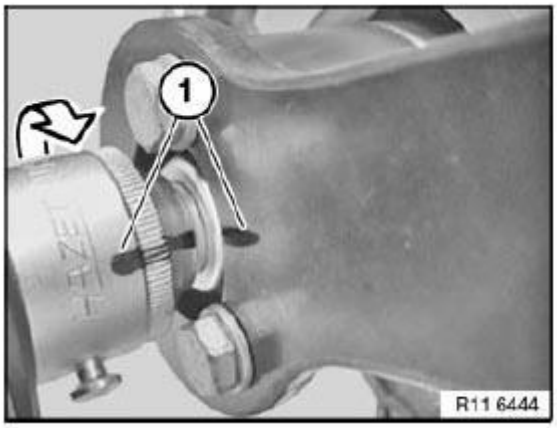

Fig. 473: Special Tools With Colored Line
Courtesy of BMW OF NORTH AMERICA, INC.

Tighten central bolt with two persons.

For tightening torque refer to 11 21 1AZ in **21 CRANKSHAFT WITH BEARINGS** .

Install both **Adjusting Units.**.

Install **Chain Tensioner**.

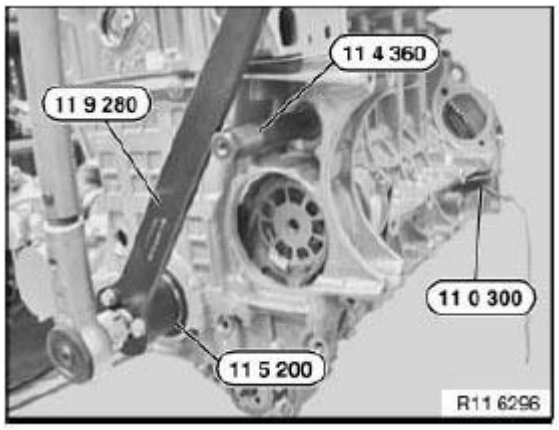

Fig. 474: Identifying Special Tool (11 9 280), (11 5 200) And (11 0 300)
Courtesy of BMW OF NORTH AMERICA, INC.

Crank engine twice.

Check **Timing.**

Assemble engine.

11 31 051 REPLACING TIMING CHAIN (N52K)

Special tools required:

- 00 9 140
- 11 0 300
- 11 4 280
- 11 4 281
- 11 4 282
- 11 4 283
- 11 4 360
- 11 4 362
- 11 5 200
- 11 9 280

Necessary preliminary tasks:

- Remove **Cylinder Head Cover**
- Remove all **Spark Plugs**
- Remove **Chain Tensioner.**
- Remove **Crankshaft Radial Seal** at front
- Remove **Drive Belt Tensioner**
- Remove **Vibration Damper**

Remove fastener (1) in direction of arrow.

Installation:

Install fastener (1) with bore facing outwards.

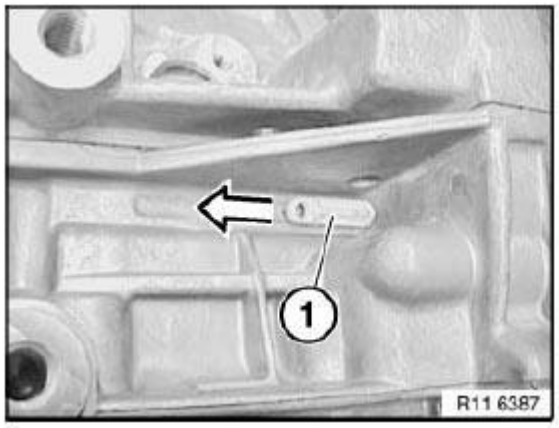

Fig. 475: Fastener And Removal Direction
Courtesy of BMW OF NORTH AMERICA, INC.

Rotate crankshaft at central bolt into TDC position.

Slide special tool 11 0 300 in direction of arrow into special tool bore and secure crankshaft.

IMPORTANT: On vehicles with optional extra SA205 (automatic transmission), there is a large bore for the TDC position shortly before the special tool bore. This bore can be confused with the special tool bore.

If the flywheel is secured in the correct special tool bore with special tool 11 0 300, the engine can no longer be moved at the central bolt.

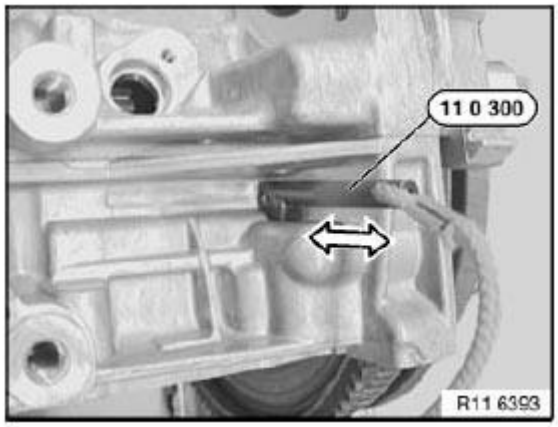

Fig. 476: Special Tool (11 0 300)
Courtesy of BMW OF NORTH AMERICA, INC.

IMPORTANT: Do not remove special tool 11 0 300 to release central bolt (1).

Employ a second person for gripping when releasing central bolt (1).

Screw special tool 11 9 280 onto hub of vibration damper.

Release central bolt (1).

For tightening torque refer to 11 21 1AZ in **21 CRANKSHAFT WITH BEARINGS** .

Remove hub towards front.

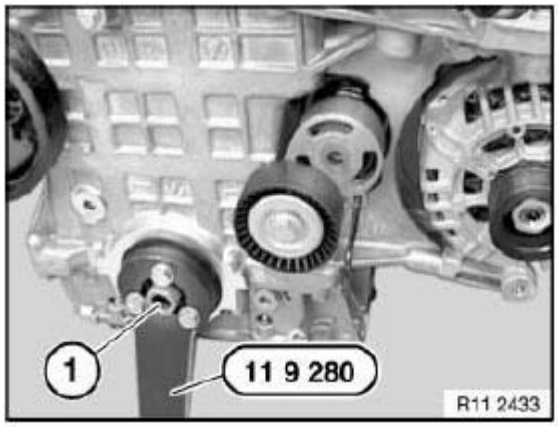

Fig. 477: Special Tool (11 9 280) And Central Bolt
Courtesy of BMW OF NORTH AMERICA, INC.

Open plug (1).

For tightening torque refer to 11 31 7AZ in **11 31 CAMSHAFT** .

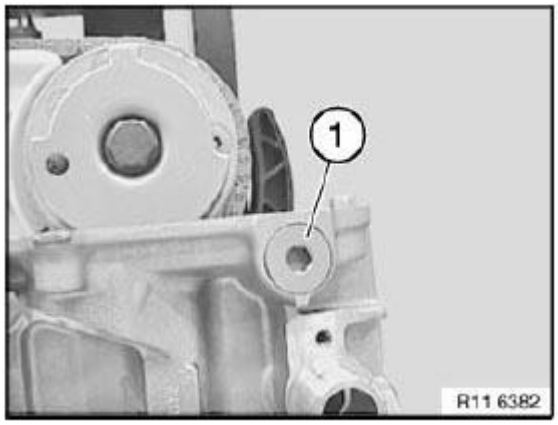

Fig. 478: Plug
Courtesy of BMW OF NORTH AMERICA, INC.

Open plug (1).

For tightening torque refer to 11 11 7AZ in **11 11 CRANKCASE** .

Installation:

Replace aluminium screws.

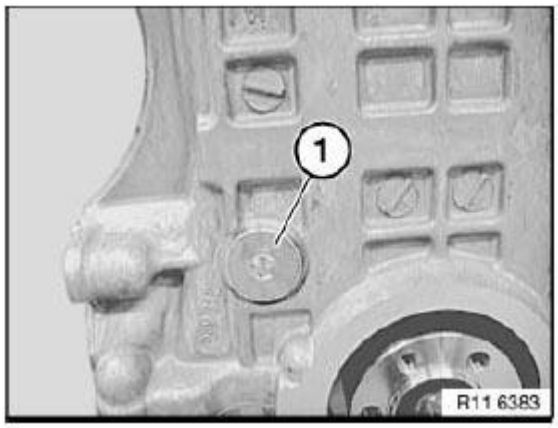

Fig. 479: Plug
Courtesy of BMW OF NORTH AMERICA, INC.

Release bearing pin (1) from timing chain module on cylinder head.

For tightening torque refer to 11 31 5AZ in **11 31 CAMSHAFT** .

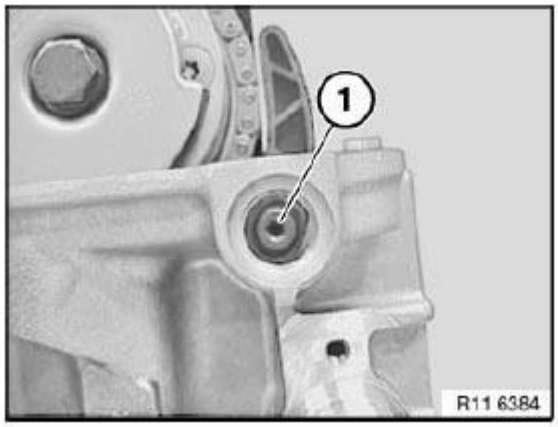

Fig. 480: Bearing Pin
Courtesy of BMW OF NORTH AMERICA, INC.

Release bearing pin (1) from timing chain module on crankcase.

For tightening torque refer to 11 31 4AZ in **11 31 CAMSHAFT** .

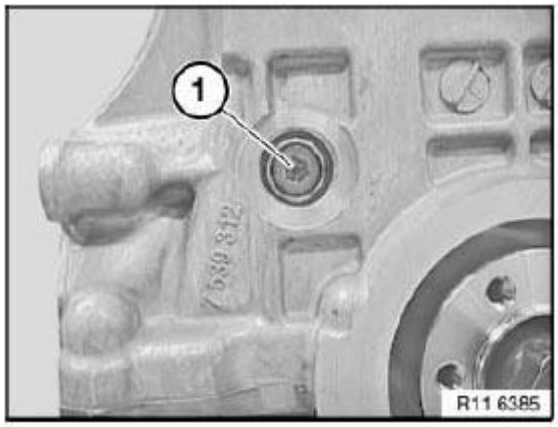

Fig. 481: Crankcase Bearing Pin
Courtesy of BMW OF NORTH AMERICA, INC.

IMPORTANT: Install special tool 11 4 280 to release the central bolts on the intake and exhaust adjustment units.

Secure special tool 11 4 283 to cylinder head with bolts (1).

NOTE: Fit special tool 11 4 282 underneath on side of intake camshaft.

Mount special tool 11 4 281 on intake and exhaust camshafts.

Do not remove special tool 11 4 280.

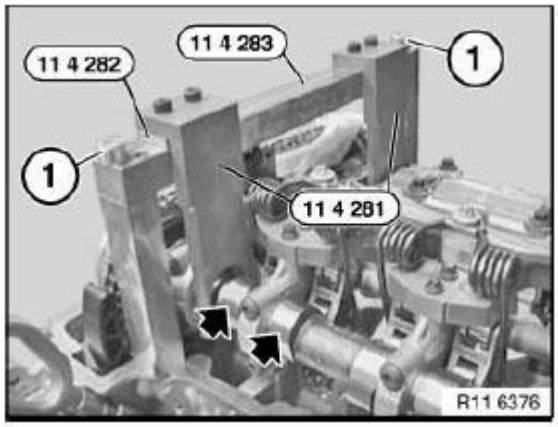

Fig. 482: Bolts, Special Tools (11 4 280), (11 4 281) And (11 4 282)
Courtesy of BMW OF NORTH AMERICA, INC.

Remove **Intake And Exhaust Adjustment Unit.**

Release bolts (1) from timing chain module on cylinder head.

For tightening torque refer to 11 31 3AZ in **11 31 CAMSHAFT** .

Remove chain module with timing chain and sprocket wheel upwards in direction of arrow.

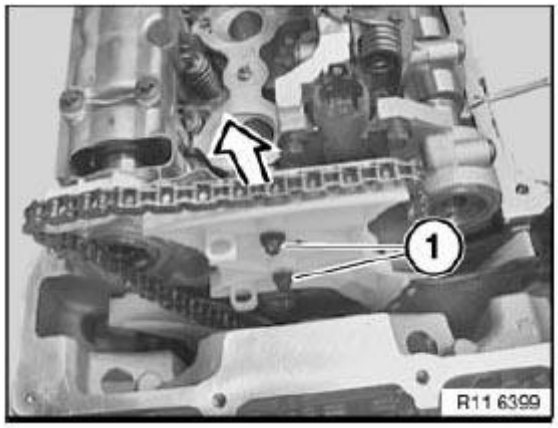

Fig. 483: Timing Chain Module Bolts
Courtesy of BMW OF NORTH AMERICA, INC.

IMPORTANT: Note installation direction of sprocket wheel (2).

Collar (see arrow) on sprocket wheel (2) points to engine.

Incorrect assembly will result in engine damage.

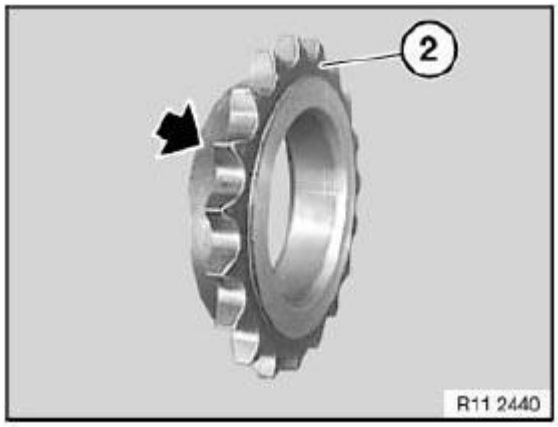

Fig. 484: Sprocket Wheel
Courtesy of BMW OF NORTH AMERICA, INC.

Pull timing chain (1) upwards until sprocket wheel (2) engages chain guide (3).

Install timing chain (1) and sprocket wheel (2) in this position.

Installation:

Always hold timing chain (1) under tension. Timing chain (1) may jam on chain guide (3).

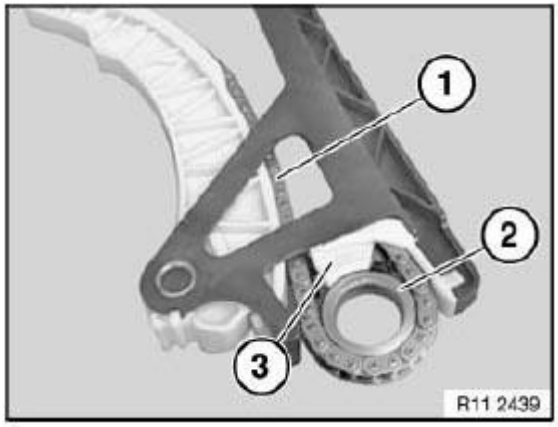

Fig. 485: Timing Chain, Sprocket Wheel And Chain Guide
Courtesy of BMW OF NORTH AMERICA, INC.

Install hub with central bolt.

Tighten down special tool 11 5 200 with screws (1) to hub.

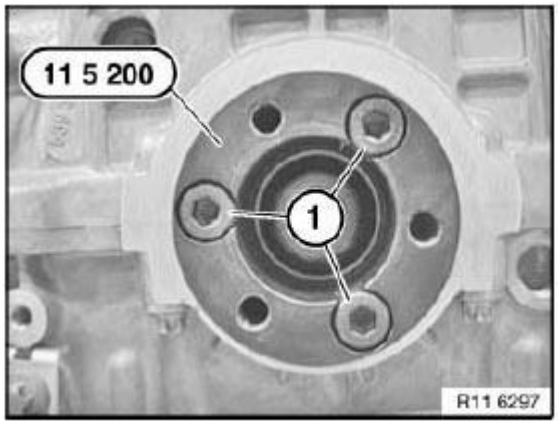

Fig. 486: Special Tool (11 5 200) And Hub Screws
Courtesy of BMW OF NORTH AMERICA, INC.

Remove **Tensioner** for drive belt.

Screw in special tool 11 4 362 from special tool kit 11 4 360.

Mount special tool 11 9 280 on 11 5 200.

Support special tool 11 9 280 on special tool 11 4 362.

Special tool 11 0 300 secures crankshaft.

Tighten central bolt to jointing torque.

For tightening torque refer to 11 21 1AZ in **21 CRANKSHAFT WITH BEARINGS** .

Mark central bolt and hub with paint.

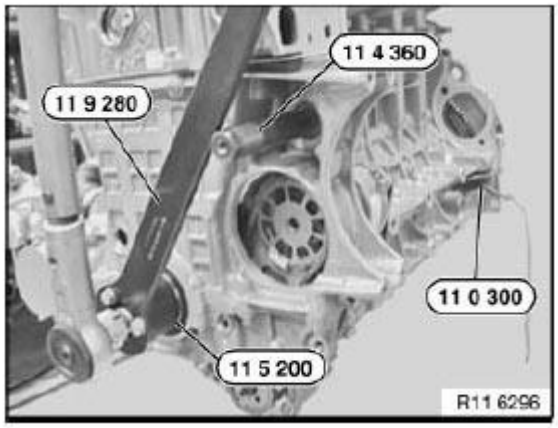

Fig. 487: Special Tools (11 9 280), (11 5 200). 11 4 360) And (11 0 300)
Courtesy of BMW OF NORTH AMERICA, INC.

Mark special tools with colored line (1).

See **Fig. 488**.

IMPORTANT: Do not remove the special tool while tightening the central bolt to torsion angle.

Risk of damage!

If necessary, tighten central bolt to torsion angle with special tool 00 9 140.

For tightening torque refer to 11 21 1AZ in **21 CRANKSHAFT WITH BEARINGS** .

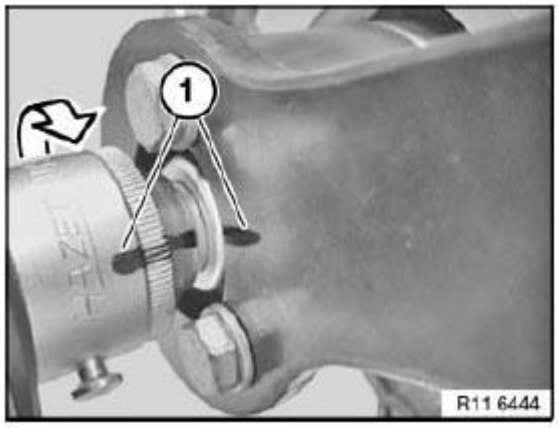

Fig. 488: Special Tools With Colored Line
Courtesy of BMW OF NORTH AMERICA, INC.

Tighten central bolt with a second person helping.

For tightening torque refer to 11 21 1AZ in **21 CRANKSHAFT WITH BEARINGS** .

Install **Intake And Exhaust Adjustment Units**.

Install **Chain Tensioner**.

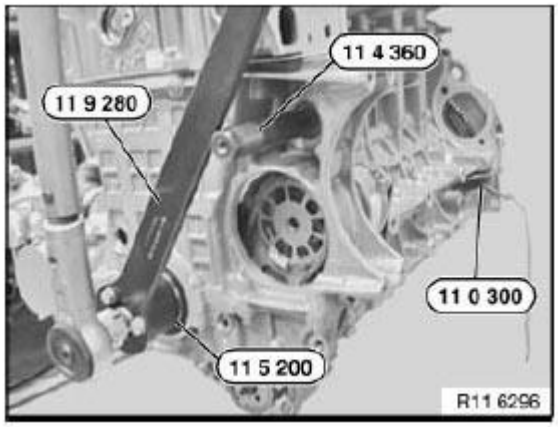

Fig. 489: Identifying Special Tool (11 9 280), (11 5 200) And (11 0 300)
Courtesy of BMW OF NORTH AMERICA, INC.

Crank engine twice.

Check **Timing.**

If necessary, adjust **Valve Timing.**

Assemble engine.

11 31 090 INSTALLING AND REMOVING/REPLACING CHAIN TENSIONER PISTON (N51)

Release chain tensioner (1).

For tightening torque refer to 11 31 5AZ in **11 31 CAMSHAFT** .

IMPORTANT: Have a cleaning cloth ready. A small quantity of engine oil will emerge after the screw connection has been released.

Make sure no engine oil runs onto belt drive.

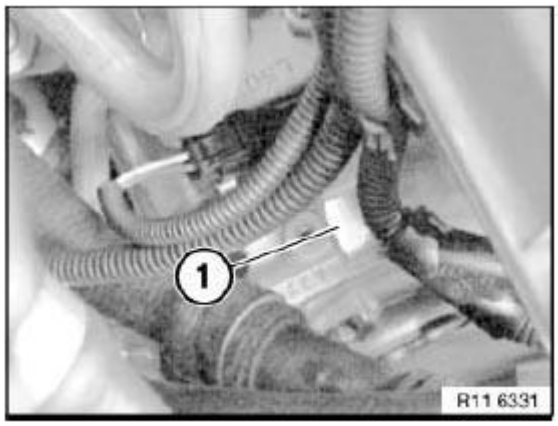

Fig. 490: Chain Tensioner
Courtesy of BMW OF NORTH AMERICA, INC.

Installation:

No sealing ring is fitted during series-production assembly.

A sealing ring must be fitted by service personnel when the chain tensioner is fitted.

If the chain tensioner is reused, its oil chamber must be drained. Place chain tensioner on a level working surface and slowly compress.

Repeat procedure twice.

Fig. 491: Compressing Chain Tensioner
Courtesy of BMW OF NORTH AMERICA, INC.

Assemble engine.

11 31 090 INSTALLING AND REMOVING/REPLACING CHAIN TENSIONER PISTON (N52K)

Release chain tensioner (1).

For tightening torque refer to 11 31 6AZ in **11 31 CAMSHAFT** .

IMPORTANT: Have a cleaning cloth ready. A small quantity of engine oil will emerge after the screw connection has been released.

Make sure no engine oil runs onto belt drive.

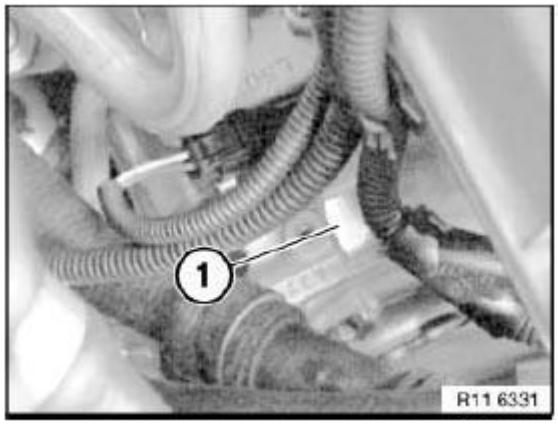

Fig. 492: Chain Tensioner
Courtesy of BMW OF NORTH AMERICA, INC.

Installation:

No sealing ring is fitted during series-production assembly.

A sealing ring must be fitted by service personnel when the chain tensioner is fitted.

If the chain tensioner is reused, its oil chamber must be drained. Place chain tensioner on a level working surface and slowly compress.

Repeat procedure twice.

Fig. 493: Compressing Chain Tensioner
Courtesy of BMW OF NORTH AMERICA, INC.

Assemble engine.

11 31 505 ADJUSTING CAMSHAFT TIMING (N51)

Special tools required:

- 00 9 120
- 00 9 250
- 11 0 300
- 11 4 280
- 11 4 281
- 11 4 282
- 11 4 283
- 11 4 290
- 11 9 340

Necessary preliminary tasks:

- Remove **Cylinder Head Cover**

Remove fastener (1) in direction of arrow.

Installation:

Install fastener (1) with bore facing outwards.

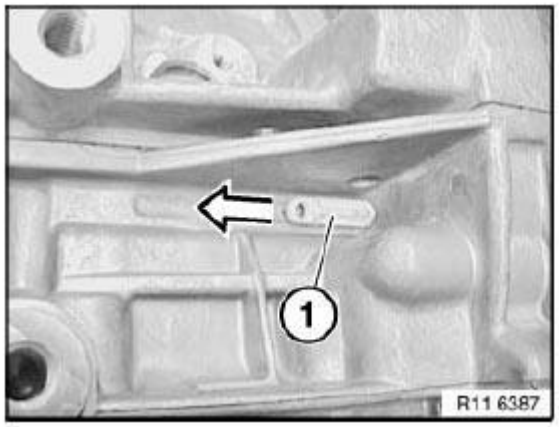

Fig. 494: Fastener And Removal Directions
Courtesy of BMW OF NORTH AMERICA, INC.

Rotate crankshaft at central bolt into TDC position.

Slide special tool 11 0 300 in direction of arrow into special tool bore and secure crankshaft.

IMPORTANT: On engines with automatic transmissions, there is shortly before the special tool bore for the TDC position a large bore which can be confused with the special tool bore.

If the flywheel is secured in the correct special tool bore with special tool 11 0 300, the engine can no longer be

moved at the central bolt.

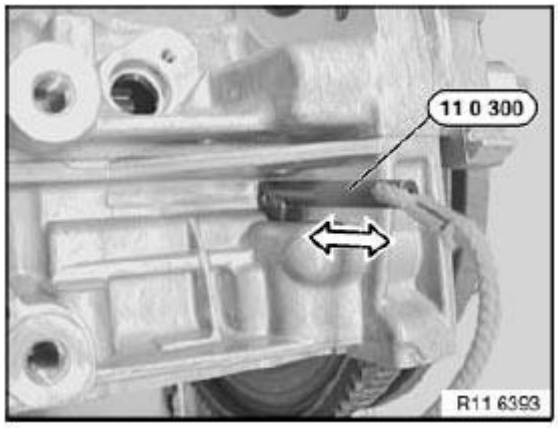

Fig. 495: Special Tool (11 0 300)
Courtesy of BMW OF NORTH AMERICA, INC.

With 1st cylinder in firing TDC position, cams of intake camshaft (1) at 1st cylinder point upwards at an angle.

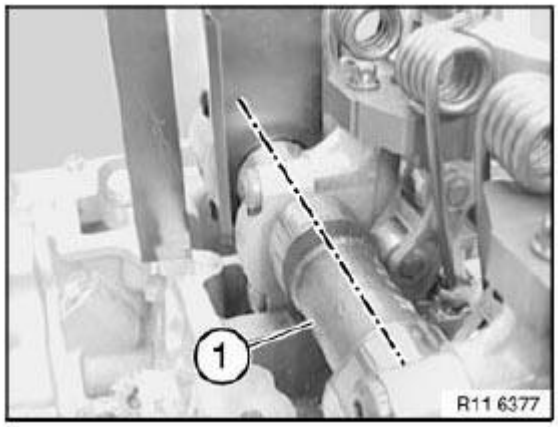

Fig. 496: Inlet Camshaft
Courtesy of BMW OF NORTH AMERICA, INC.

Part numbers (2) on intake and exhaust camshafts (1) point upwards.

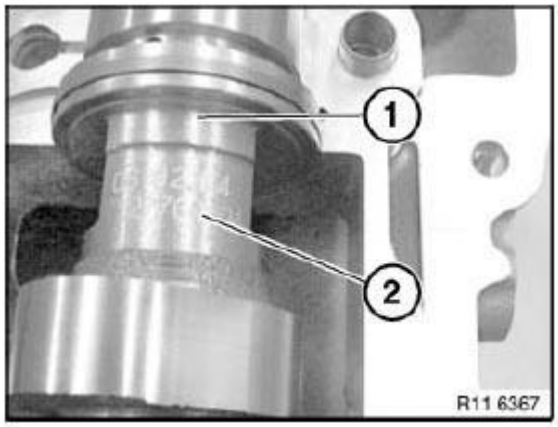

Fig. 497: Part Number And Camshaft
Courtesy of BMW OF NORTH AMERICA, INC.

With 1st cylinder in firing TDC position, cams of exhaust camshaft (3) at 6th cylinder point downwards at an angle.

NOTE: If the timing is checked while the engine is installed, the position of the camshaft can only be checked with a mirror.

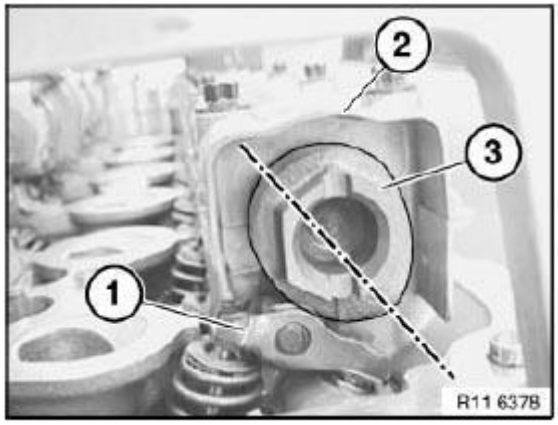

Fig. 498: Exhaust Camshaft And Cam Follower
Courtesy of BMW OF NORTH AMERICA, INC.

IMPORTANT: Risk of damage!

To open central bolt, mount special tools 11 4 283 11 4 281 and 11 4 282 on camshaft.

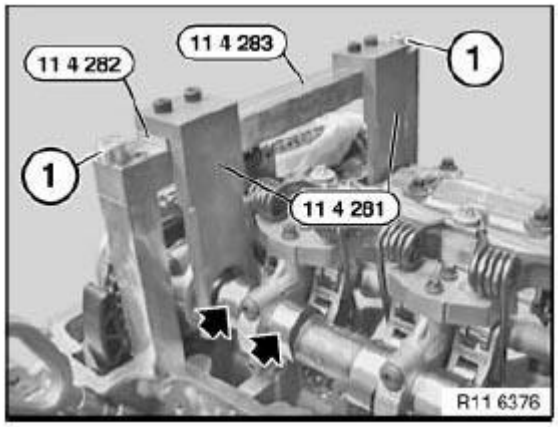

Fig. 499: Bolts, Special Tools (11 4 281), (11 4 282) And (11 4 283)
Courtesy of BMW OF NORTH AMERICA, INC.

Release central bolts (1).

Release central bolts (1) with special tool 11 4 280 only.

Release chain tensioner (2) (have a cleaning cloth ready).

NOTE: Illustrations in CAD and does not show special tools.

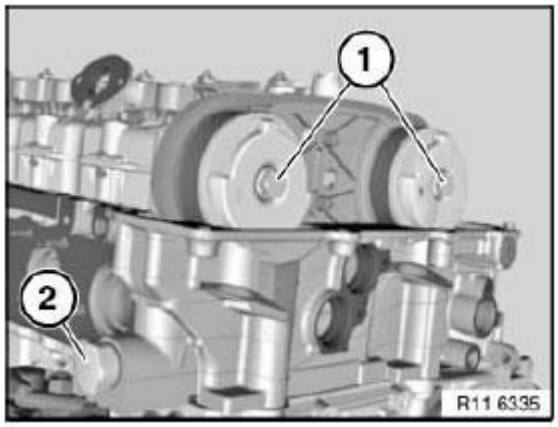

Fig. 500: Identifying Central Bolts And Chain Tensioner
Courtesy of BMW OF NORTH AMERICA, INC.

Turn sensor gears (2) in direction of arrow until locating pins (1) on special tool 11 4 290 match up.

Slide on special tool 11 4 290 in direction of arrow.

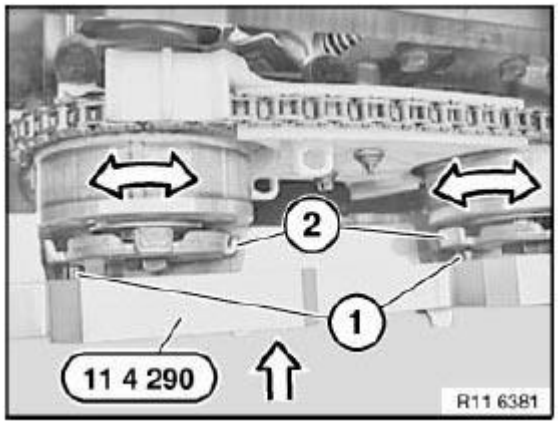

Fig. 501: Special Tool (11 4 290), Sensor Gears And Locating Pins
Courtesy of BMW OF NORTH AMERICA, INC.

Secure special tool 11 4 290 with bolts (1).

Screw special tool 11 9 340 into cylinder head.

Pretension timing chain with special tool 00 9 250 to **0.6 Nm.**

Secure both central bolts of adjustment units to camshafts with special tool 00 9 120.

For tightening torque refer to 11 36 1AZ in **11 36 VARIABLE CAMSHAFT CONTROL VANOS** .

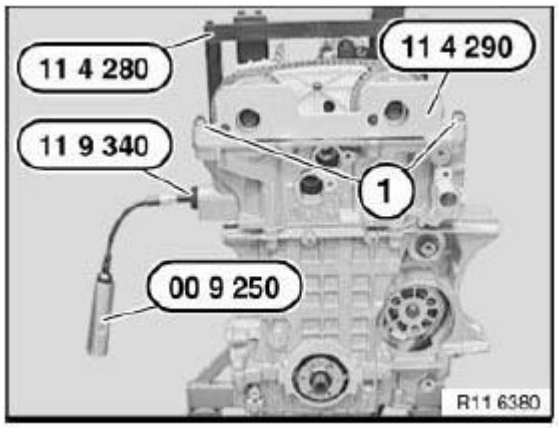

Fig. 502: Bolts, Special Tool (11 4 290), (11 9 340), (11 4 280) And (00 9 120)
Courtesy of BMW OF NORTH AMERICA, INC.

Assemble engine.

11 31 505 ADJUSTING TIMING OF CAMSHAFT(S) (N52K)

Special tools required:

- 00 9 120
- 00 9 250
- 11 0 300
- 11 4 280
- 11 4 281
- 11 4 282
- 11 4 283
- 11 4 290
- 11 9 340

Necessary preliminary tasks:

- Remove **Cylinder Head Cover**

Remove fastener (1) in direction of arrow.

Installation:

Install fastener (1) with bore facing outwards.

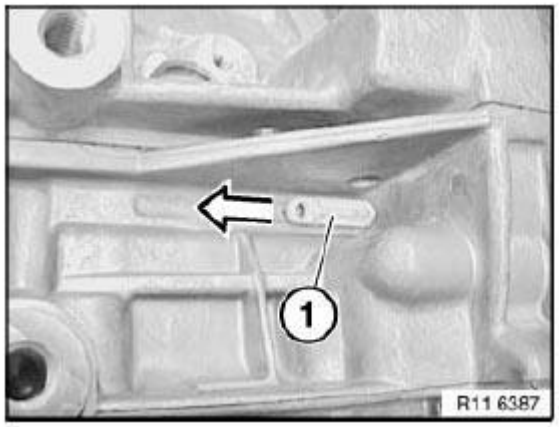

Fig. 503: Fastener And Removal Directions
Courtesy of BMW OF NORTH AMERICA, INC.

Rotate crankshaft at central bolt into TDC position.

Slide special tool 11 0 300 in direction of arrow into special tool bore and secure crankshaft.

IMPORTANT: On vehicles with optional extra SA205 (automatic transmission), there is a large bore for the TDC position shortly before the special tool bore. This bore can be confused with the special tool bore.

If the flywheel is secured in the correct special tool bore with special tool 11 0 300, the engine can no longer be

moved at the central bolt.

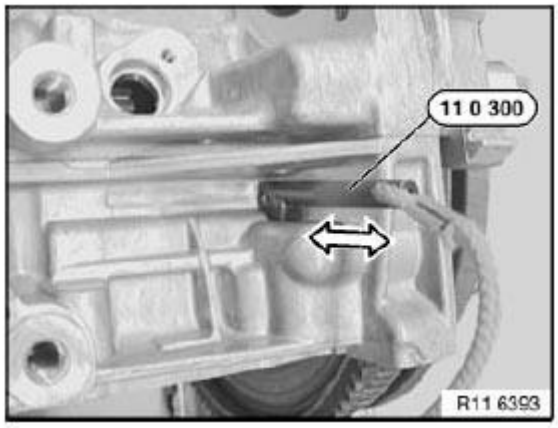

Fig. 504: Special Tool (11 0 300)
Courtesy of BMW OF NORTH AMERICA, INC.

With 1st cylinder in firing TDC position, cams of intake camshaft (1) at 1st cylinder point upwards at an angle.

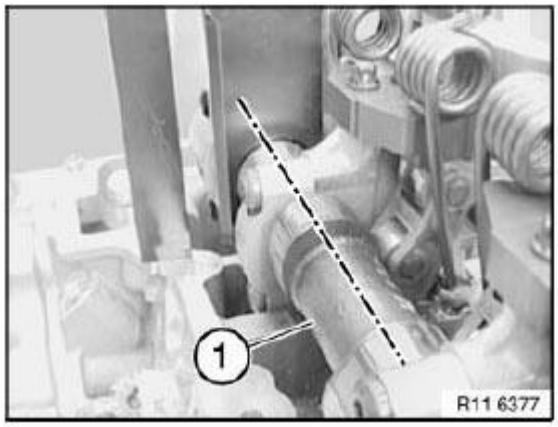

Fig. 505: Inlet Camshaft
Courtesy of BMW OF NORTH AMERICA, INC.

Part numbers (2) on intake and exhaust camshafts (1) point upwards.

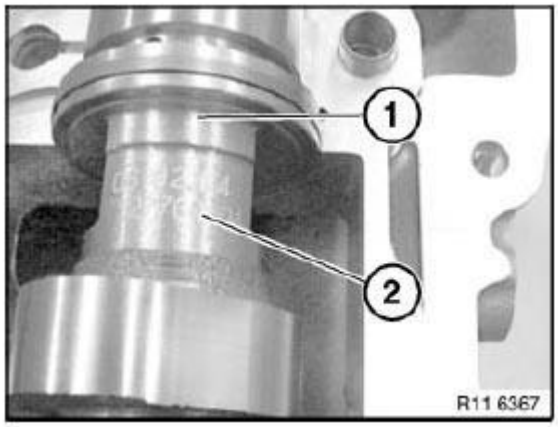

Fig. 506: Part Number And Camshaft
Courtesy of BMW OF NORTH AMERICA, INC.

With 1st cylinder in firing TDC position, cams of exhaust camshaft (3) at 6th cylinder point downwards at an angle.

Cam follower (1) is not actuated.

NOTE: When the engine is installed, the position of the exhaust camshaft (3) for the timing can only be checked with a mirror.

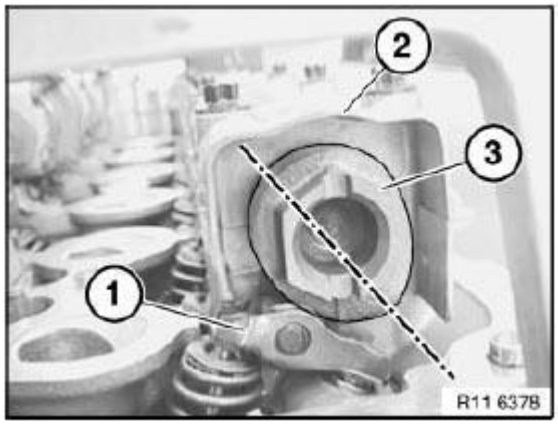

Fig. 507: Exhaust Camshaft And Cam Follower
Courtesy of BMW OF NORTH AMERICA, INC.

Secure special tool 11 4 283 to cylinder head with bolts (1).

NOTE: Fit special tool 11 4 282 underneath on side of intake camshaft.

Mount special tool 11 4 281 on intake and exhaust camshafts.

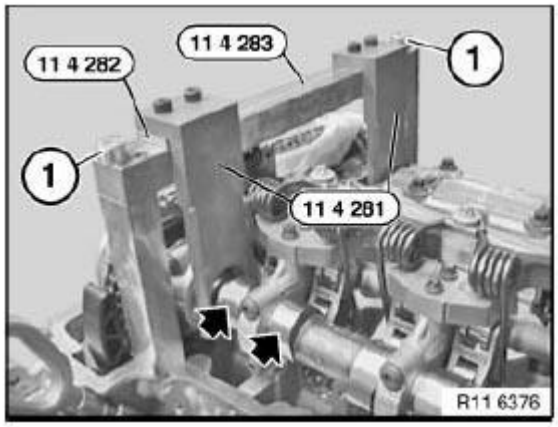

Fig. 508: Bolts, Special Tools (11 4 281), (11 4 282) And (11 4 283)
Courtesy of BMW OF NORTH AMERICA, INC.

Release central bolts (1).

Release central bolts (1) with special tool 11 4 280 only.

Release chain tensioner (2) (have a cleaning cloth ready).

NOTE: Picture in CAD and does not show special tools.

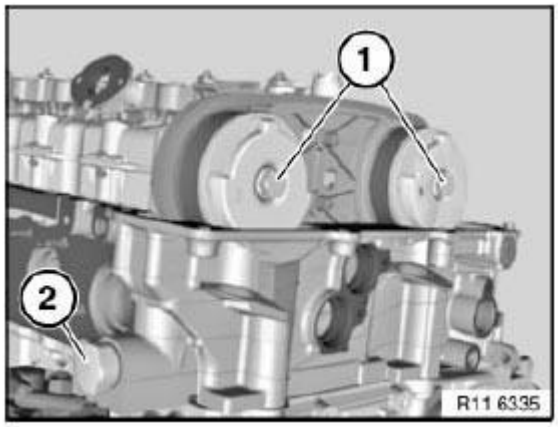

Fig. 509: Identifying Central Bolts And Chain Tensioner
Courtesy of BMW OF NORTH AMERICA, INC.

Turn sensor gears (2) in direction of arrow until locating pins (1) on special tool 11 4 290 match up.

Slide on special tool 11 4 290 in direction of arrow.

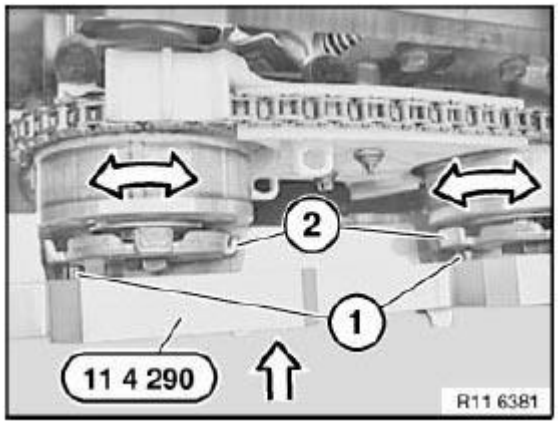

Fig. 510: Special Tool (11 4 290), Sensor Gears And Locating Pins
Courtesy of BMW OF NORTH AMERICA, INC.

Secure special tool 11 4 290 with bolts (1).

Screw special tool 11 9 340 into cylinder head.

Pretension timing chain with special tool 00 9 250 to **0.6 Nm.**

Secure both central bolts of intake and exhaust adjustment units with special tool 00 9 120 to intake and exhaust camshafts.

For tightening torque refer to 11 36 1AZ in **11 36 VARIABLE CAMSHAFT CONTROL VANOS** .

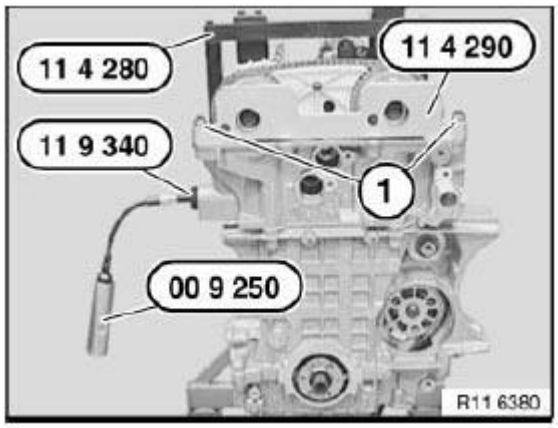

Fig. 511: Bolts, Special Tool (11 4 290), (11 9 340), (11 4 280) And (00 9 120)
Courtesy of BMW OF NORTH AMERICA, INC.

Assemble engine.

ROCKER ARM WITH BEARINGS MOUNT

11 33 050 REMOVING AND INSTALLING/REPLACING ALL ROCKER ARMS (N51)

Special tools required:

- 11 4 480

Necessary preliminary tasks:

- Remove **Cylinder Head Cover**
- Remove **Intermediate Lever**
- Remove **Exhaust Camshaft**.

IMPORTANT: Rocker arms (1) are divided into bearing categories.

The tolerance classes are marked according to the picture in numbers from 1 to 5.

Already used rocker arms (1) may only be reused in the same position.

Detach cam followers (1) from HVCA element and remove.

Set down all cam followers (1) in neat order in special tool 11 4 480.

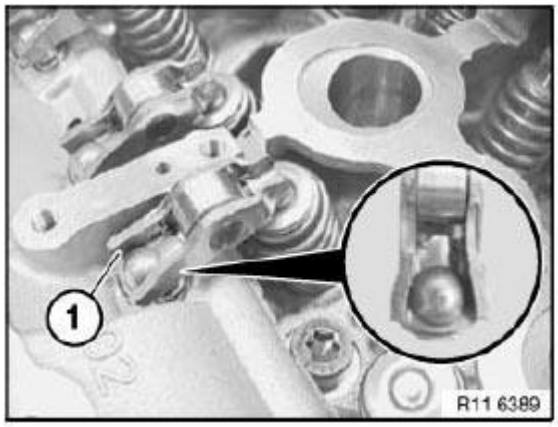

Fig. 512: Cam Followers
Courtesy of BMW OF NORTH AMERICA, INC.

Installation:

Before installing exhaust camshaft or intermediate levers, make sure cam followers (1) are correctly seated.

Remove HVCA element (1) in direction of arrow.

Installation:

If the HVC elements are to be reused, set them down in special tool 11 4 480 in a tidy and orderly fashion with the roller cam followers.

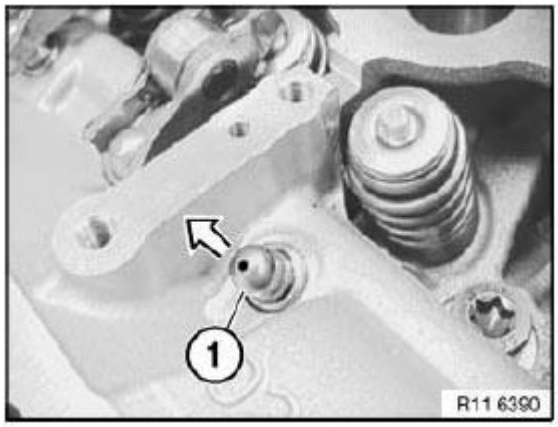

Fig. 513: HVCA Elements And Removal Direction
Courtesy of BMW OF NORTH AMERICA, INC.

Assemble engine.

Check function of DME; if necessary, readjust uniform mixture distribution.

11 33 050 REMOVING AND INSTALLING/REPLACING ALL ROCKER ARMS (N52K)

Special tools required:

- 11 4 480

Necessary preliminary tasks:

- Remove **Cylinder Head Cover**
- Remove **Intermediate Lever**
- Remove **11 31 028 Removing and installing/replacing exhaust camshaft (N52K)**.

IMPORTANT: Rocker arms (1) are divided into bearing categories.

The tolerance classes are marked according to the picture in numbers from 1 to 5.

Already used rocker arms (1) may only be reused in the same position.

Detach cam followers (1) from HVCA element and remove.

Set down all cam followers (1) in neat order in special tool 11 4 480.

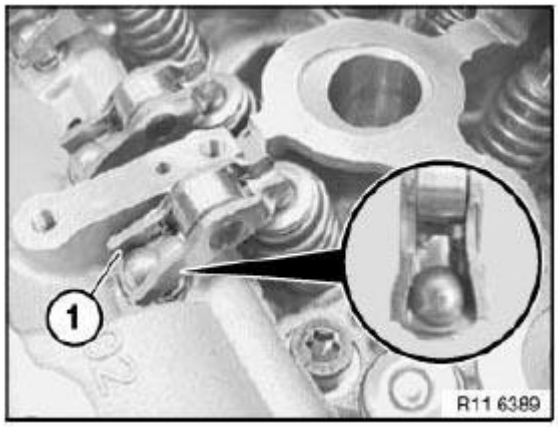

Fig. 514: Cam Followers
Courtesy of BMW OF NORTH AMERICA, INC.

Installation:

Before installing exhaust camshaft or intermediate levers, make sure cam followers (1) are correctly seated.

Remove HVCA element (1) in direction of arrow.

Installation:

If the HVCA elements (1) are reused, they must be placed together with the cam followers in neat order in special tool 11 4 480.

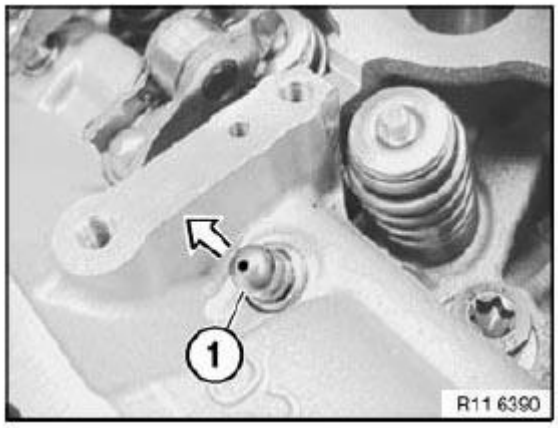

Fig. 515: HVCA Elements And Removal Direction
Courtesy of BMW OF NORTH AMERICA, INC.

Assemble engine.

Check function of DME; if necessary, readjust uniform mixture distribution.

VALVES WITH SPRINGS

11 34 552 REMOVING AND INSTALLING OR REPLACING ALL VALVES (N51)

Special tools required:

- 11 4 480

Necessary preliminary tasks:

- Remove **Cylinder Head**
- Remove **Intermediate Lever**
- Remove **Eccentric Shaft**
- Remove **intake camshaft**
- Remove Exhaust Camshaft**11 31 028 Removing and installing/replacing exhaust camshaft (N52K)**
- Remove **Roller Cam Followers**
- Remove **Valve Springs**
- Remove **Valve Stem Seals**

Arrangement:

1. Valve
2. Valve stem seal with spring plate, bottom
3. Valve spring
4. Top plate spring
5. Valve tapers

If the valves are to be reused, set then down in special tool 11 4 480 in a tidy and orderly fashion

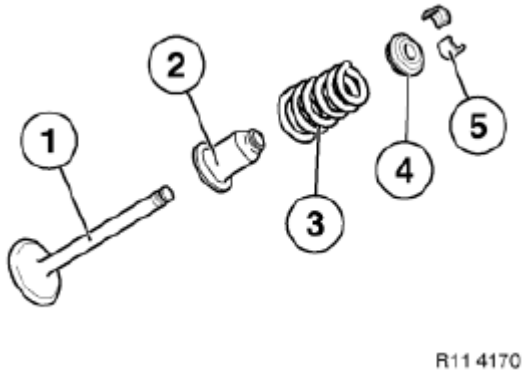

Fig. 516: Valve Spring, Upper Spring Plate, Valve Tapers And Valve
Courtesy of BMW OF NORTH AMERICA, INC.

Assemble engine.

Check function of DME; if necessary, readjust uniform mixture distribution.

11 34 552 REMOVING AND INSTALLING/REPLACING ALL VALVES (N52K)

Special tools required:

- 11 4 480

Necessary preliminary tasks:

- Remove **Cylinder Head**
- Remove **Intermediate Lever**
- Remove **Eccentric Shaft**
- Remove **intake camshaft**
- Remove **11 31 028 Removing and installing/replacing exhaust camshaft (N52K)**
- Remove **Cam Followers**
- Remove **Valve Springs**
- Remove **Valve Stem Seals**

Arrangement:

1. Valve
2. Valve stem seal with lower spring plate
3. Valve spring
4. Upper spring plate
5. Valve tapers

If the valves are to be reused, they must be placed in neat order in special tool 11 4 480.

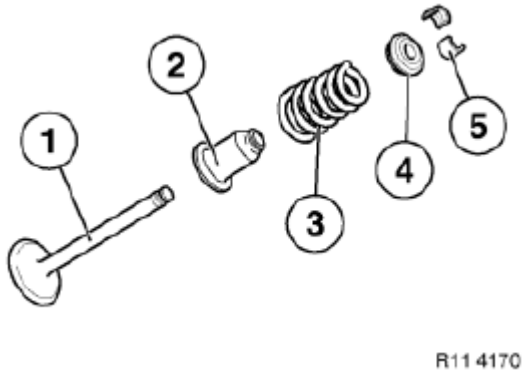

Fig. 517: Valve Spring, Upper Spring Plate, Valve Tapers And Valve
Courtesy of BMW OF NORTH AMERICA, INC.

Assemble engine.

Check function of DME; if necessary, readjust uniform mixture distribution.

11 34 560 REPLACING ALL VALVE STEM SEALS (N51)

Special tools required:

- 11 1 480
- 11 6 380

Necessary preliminary tasks:

- Remove **Cylinder Head**.
- Remove **Intermediate Lever**.
- Remove **Eccentric Shaft**.
- Remove **intake camshaft**.
- Remove **Exhaust Camshaft**.
- Remove **Roller Cam Followers**.

Firmly press special tool 11 1 480 onto old valve stem seals.

Detach valve stem seal from valve stem by turning and simultaneously pulling special tool 11 1 480.

Installation:

Insert all **Valves.**

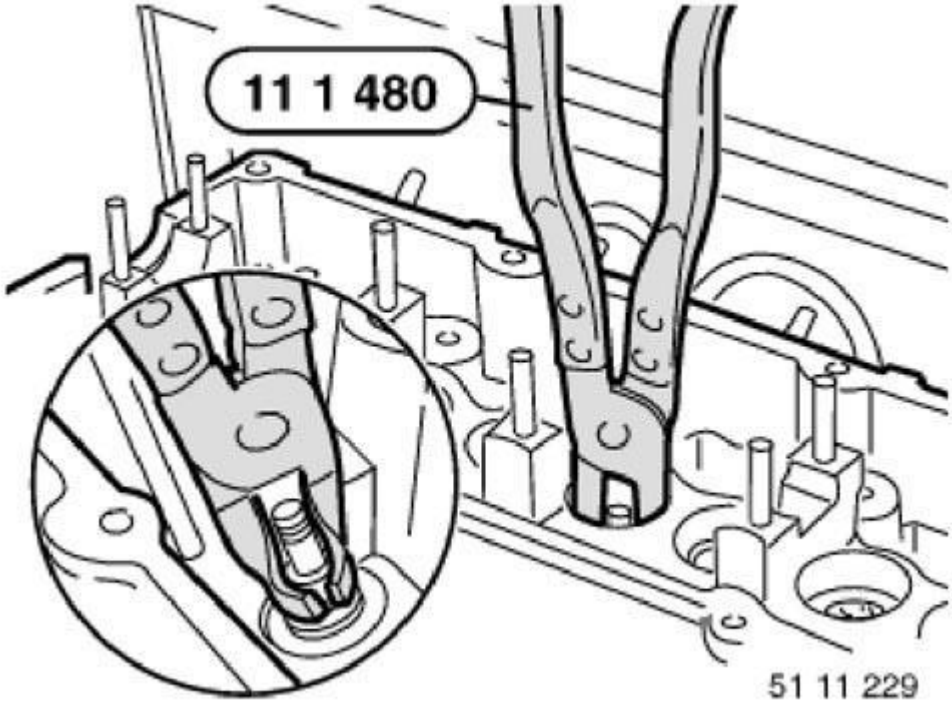

Fig. 518: Special Tool (11 1 480)
Courtesy of BMW OF NORTH AMERICA, INC.

NOTE: **For use on the N51 engine, special tool 11 6 380 must be re-machined according to the sketch with a 10mm dia. drill bit to a depth of B = approx. 23 mm.**

This modification has already been taken into account for reordering.

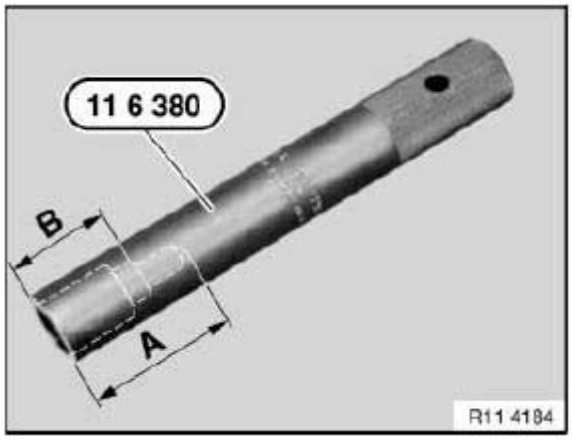

Fig. 519: Special Tool (11 6 380)
Courtesy of BMW OF NORTH AMERICA, INC.

IMPORTANT: Different diameters at valve stem.

All valve stem seals are color-coded.

For 5 mm dia. valves, the valve stem seal is marked red or brown.

For 6 mm dia. valves, the valve stem seal is marked green or light green.

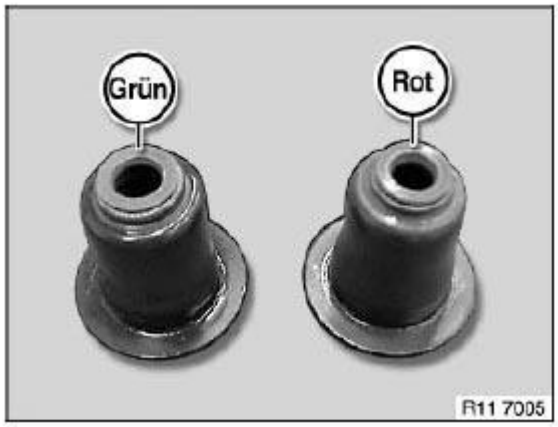

Fig. 520: Valve Stem Seal Mark
Courtesy of BMW OF NORTH AMERICA, INC.

Installation:

Fit the mounting sleeves (plastic sleeves) contained in the delivery specification on the valve stem end.

Lubricate mounting sleeve.

Press on valve stem seal by hand with special tool 11 6 380 as far as it will go.

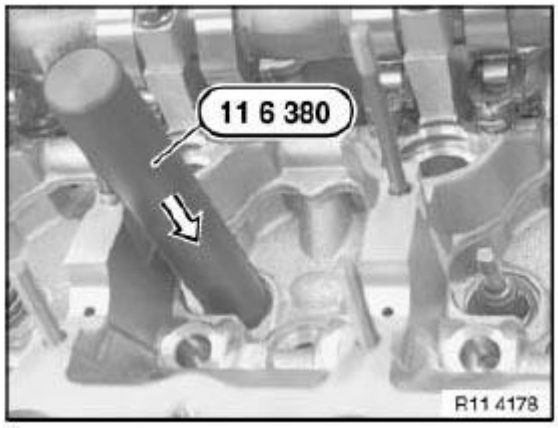

Fig. 521: Special Tool (11 6 380) And Installation Direction
Courtesy of BMW OF NORTH AMERICA, INC.

Assemble engine.

11 34 560 REPLACING ALL VALVE STEM SEALS (N52K)

Special tools required:

- 11 1 480
- 11 6 380

Necessary preliminary tasks:

- Remove **Cylinder Head**.
- Remove **Intermediate Lever**
- Remove **Eccentric Shaft**
- Remove **intake camshaft**
- Remove **11 31 028 Removing and installing/replacing exhaust camshaft (N52K)**.
- Remove **Cam Followers**

Firmly press special tool 11 1 480 onto old valve stem seals.

Detach valve stem seal from valve stem by turning and simultaneously pulling special tool 11 1 480.

Installation:

Insert all valves.

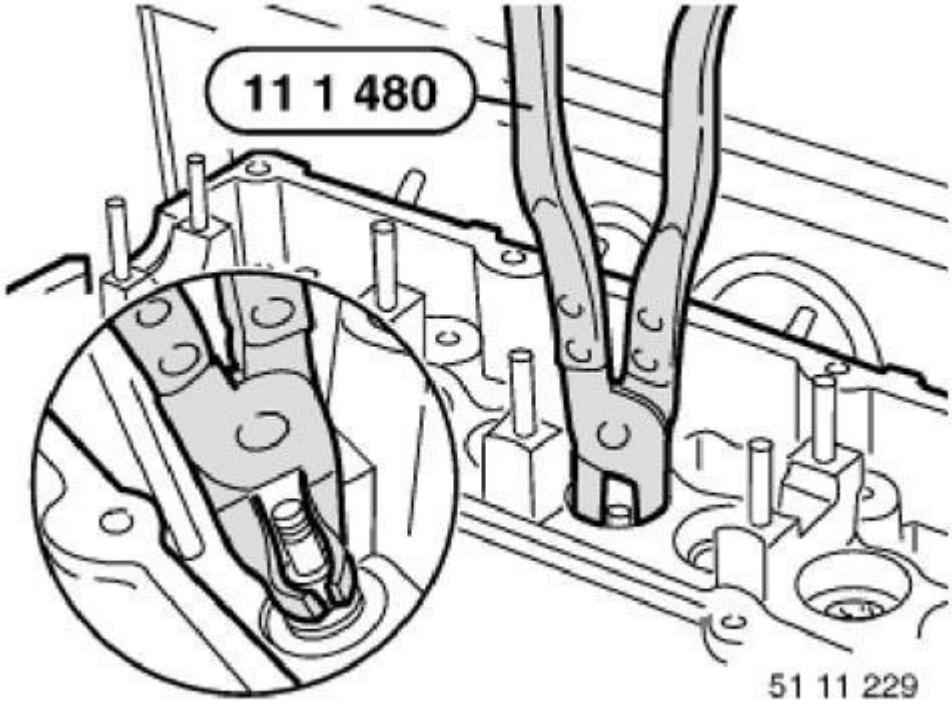

Fig. 522: Special Tool (11 1 480)
Courtesy of BMW OF NORTH AMERICA, INC.

NOTE: **For use on the N52K engine, special tool 11 6 380 must be re-machined according to the picture with a 10 mm dia. drill bit to a depth of B = approx. 23 mm.**

This modification has already been taken into account for reordering.

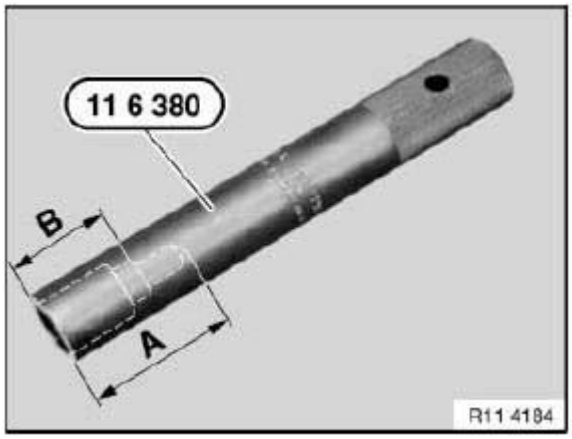

Fig. 523: Special Tool (11 6 380)

Courtesy of BMW OF NORTH AMERICA, INC.

IMPORTANT: Different diameters at valve stem.

All valve stem seals are color-coded.

For 5 mm dia. valves, the valve stem seal is marked red or brown.

For 6 mm dia. valves, the valve stem seal is marked green or light green.

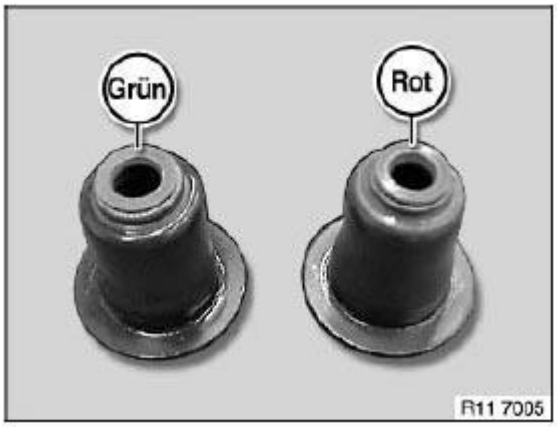

Fig. 524: Valve Stem Seal Mark
Courtesy of BMW OF NORTH AMERICA, INC.

Installation:

Fit the mounting sleeves (plastic sleeves) contained in the delivery specification on the valve stem end.

Lubricate mounting sleeve.

Press on valve stem seal by hand with special tool 11 6 380 as far as it will go.

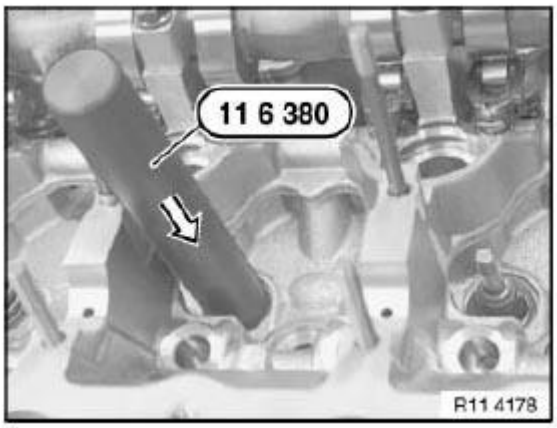

Fig. 525: Special Tool (11 6 380) And Installation Direction
Courtesy of BMW OF NORTH AMERICA, INC.

Assemble engine.

11 34 715 REPLACING ALL VALVE SPRINGS (N51)

Special tools required:

- 11 0 346
- 11 4 480
- 11 9 000
- 11 9 017

Necessary preliminary tasks:

- Remove **Cylinder Head Cover**
- Remove **Cylinder Head**.
- Remove **Exhaust Camshaft**.
- Remove **Intermediate Lever**
- Remove **intake camshaft**
- Remove **Roller Cam Followers**

Place cylinder head on special tool 11 9 000.

Press down **intake valves** with special tool 11 9 017.

Exhaust valves with special tool 11 0 346

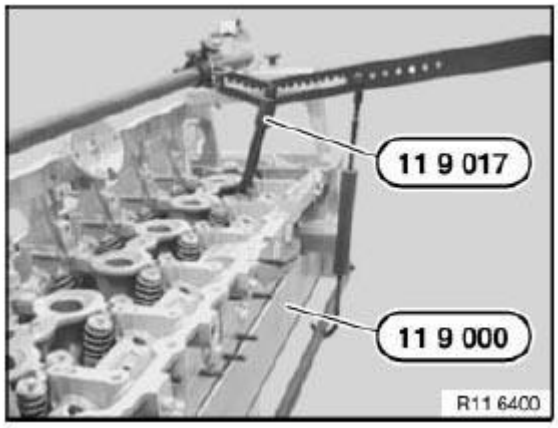

Fig. 526: Special Tools (11 9 000) And (11 9 017)
Courtesy of BMW OF NORTH AMERICA, INC.

Remove valve cotters with a magnet.

Remove valve spring with spring plates.

Set down on special tool 11 4 480 in a tidy and orderly fashion.

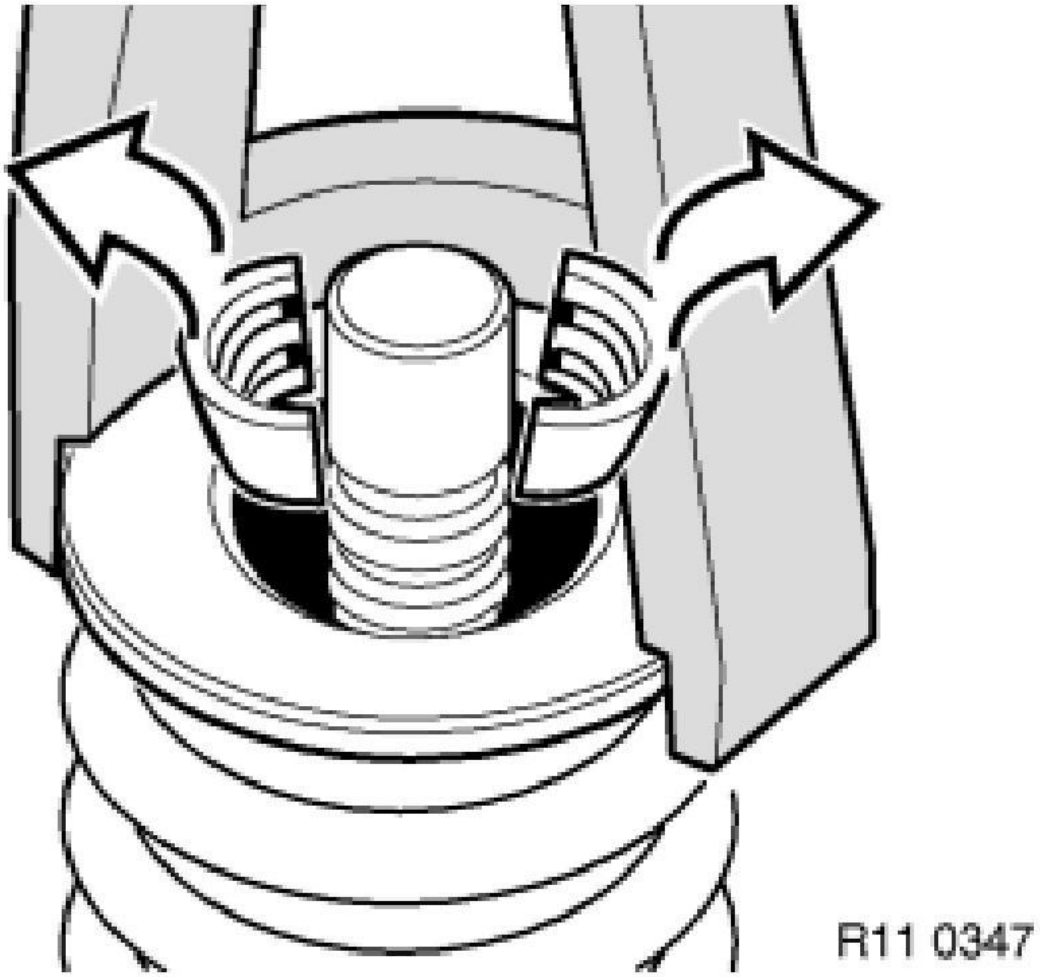

Fig. 527: Removing Valve Cotters
Courtesy of BMW OF NORTH AMERICA, INC.

IMPORTANT: Incorrect installation possible.

Incorrect installation will result in valve spring breakage.

Risk of mixing up the valve springs for the intake and exhaust valves.

Color marking (1) is normally on lower end of valve spring.

Only the diameter pointing to the spring retainer at the bottom is required for correct installation of the valve spring.

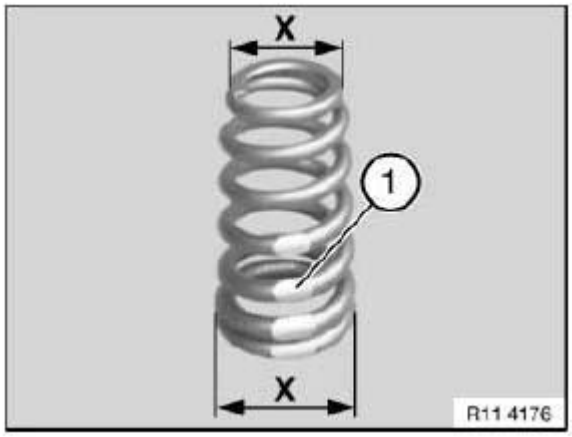

Fig. 528: Valve Spring And Dimension
Courtesy of BMW OF NORTH AMERICA, INC.

Arrangement:

1. Valve
2. Valve stem seal with spring plate, bottom
3. Valve spring
4. Top plate spring
5. Valve tapers

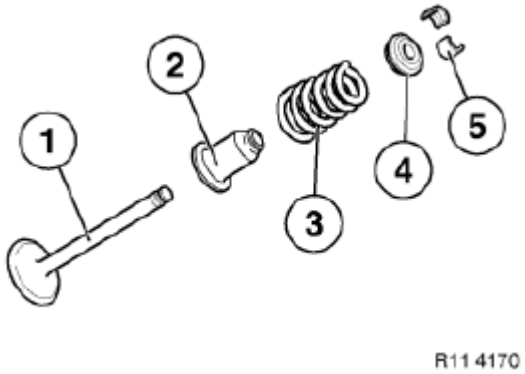

Fig. 529: Valve Spring, Upper Spring Plate, Valve Tapers And Valve
Courtesy of BMW OF NORTH AMERICA, INC.

Assemble engine.

Check function of DME; if necessary, readjust uniform mixture distribution.

11 34 715 REPLACING ALL VALVE SPRINGS (N52K)

Special tools required:

- 11 0 346
- 11 4 480
- 11 9 000
- 11 9 017

Necessary preliminary tasks:

- Remove **Cylinder Head**
- Remove **11 31 028 Removing and installing/replacing exhaust camshaft (N52K)**.
- Remove **Intermediate Lever**
- Remove **intake camshaft**
- Remove **Cam Followers**

Place cylinder head on special tool 11 9 000.

Press down **intake valves** with special tool 11 9 017.

Press down **exhaust valves** with special tool 11 0 346.

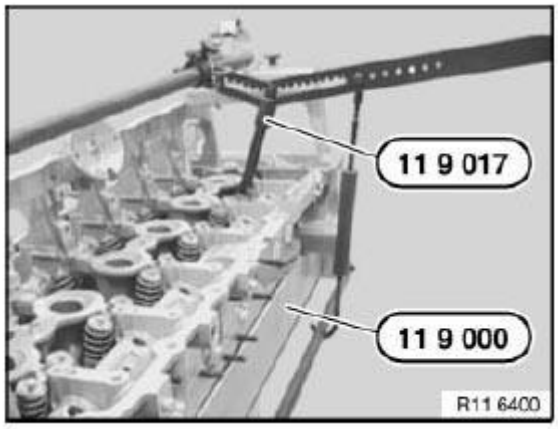

Fig. 530: Special Tools (11 9 000) And (11 9 017)
Courtesy of BMW OF NORTH AMERICA, INC.

Remove valve cotters with a magnet.

Remove valve spring with spring plates.

If the individual components are to be reused, they must be placed in neat order in special tool 11 4 480.

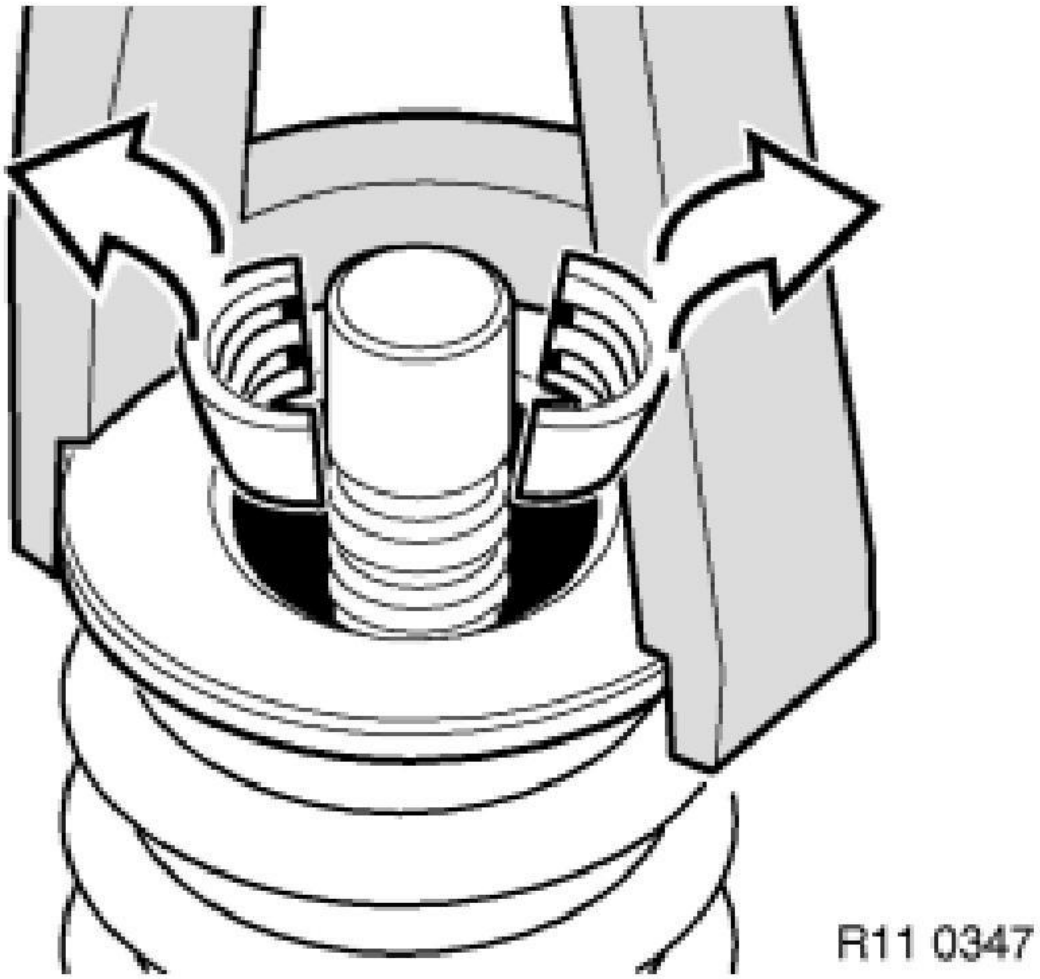

Fig. 531: Removing Valve Cotters
Courtesy of BMW OF NORTH AMERICA, INC.

IMPORTANT: Incorrect installation possible.

Incorrect installation will result in valve spring breakage.

Risk of mixing up the valve springs for the intake and exhaust valves.

The valve spring is color-coded (1) at the lower end.

Install the valve spring so that the larger diameter points to the lower spring plate.

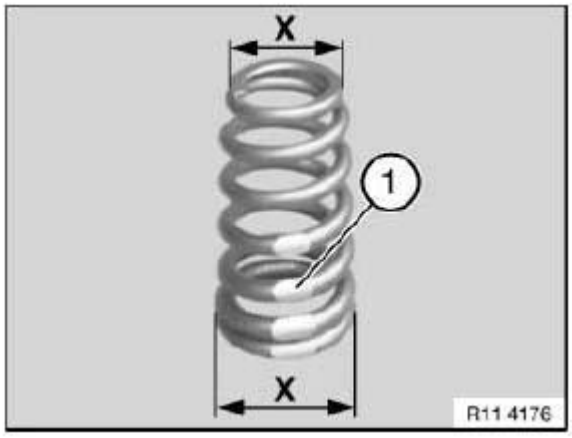

Fig. 532: Valve Spring And Dimension
Courtesy of BMW OF NORTH AMERICA, INC.

Arrangement:

1. Valve
2. Valve stem seal with lower spring plate
3. Valve spring
4. Upper spring plate
5. Valve tapers

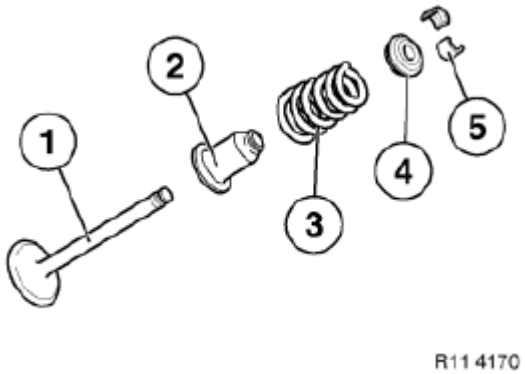

Fig. 533: Valve Spring, Upper Spring Plate, Valve Tapers And Valve
Courtesy of BMW OF NORTH AMERICA, INC.

Assemble engine.

Check function of DME; if necessary, readjust uniform mixture distribution.

VARIABLE CAMSHAFT TIMING

11 36 046 REMOVING AND INSTALLING/REPLACING INTAKE AND EXHAUST ADJUSTMENT UNITS (N51)

Special tools required:

- 11 4 280
- 11 4 281
- 11 4 282
- 11 4 283

Necessary preliminary tasks:

- Remove **Cylinder Head Cover**
- Check **Timing**

IMPORTANT: To release central bolts on adjustment units and camshafts.

Fit special tool 11 4 280.

Fit special tool 11 4 283 with screws (1).

Fit special tool 11 4 281 on special tool 11 4 283.

IMPORTANT: Fit special tool 11 4 282 underneath on side of intake camshaft.

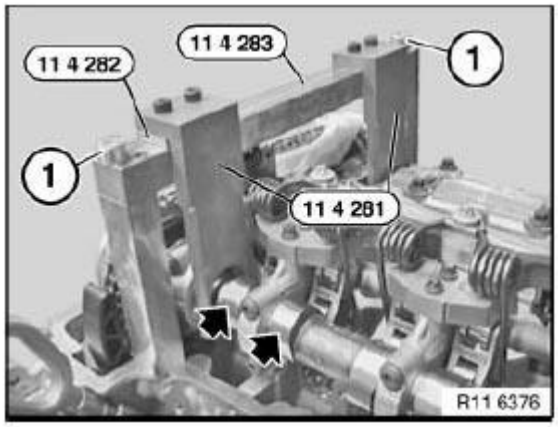

Fig. 534: Screws, Special Tool (11 4 281), (11 4 282) And (11 4 283)
Courtesy of BMW OF NORTH AMERICA, INC.

Release chain tensioner (2).

For tightening torque refer to 11 31 5AZ in **11 31 CAMSHAFT** .

Release central bolts on intake and exhaust adjustment units (1).

For tightening torque refer to 11 36 1AZ in **11 36 VARIABLE CAMSHAFT CONTROL VANOS** .

NOTE: Illustrations in CAD and does not show special tools.

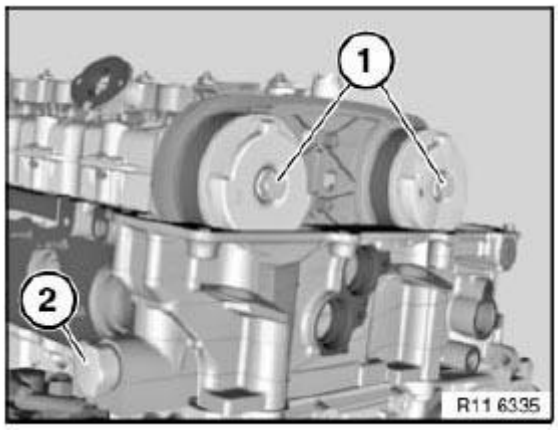

Fig. 535: Chain Tensioner And Inlet And Exhaust Adjustment Units
Courtesy of BMW OF NORTH AMERICA, INC.

Detach exhaust adjustment unit (1) from exhaust camshaft.

Detach intake adjustment unit (2) from intake camshaft.

Installation:

To facilitate removal and installation of adjustment units, turn sensor gears at cutout downwards.

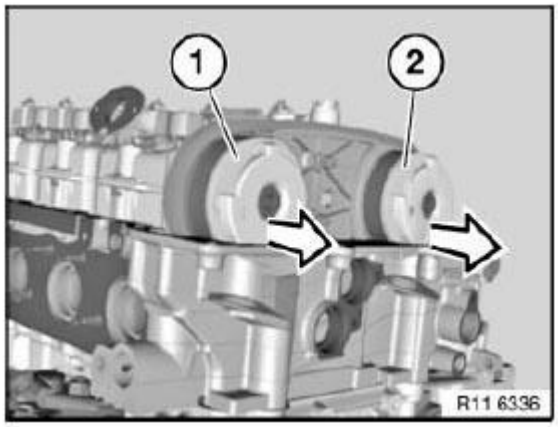

Fig. 536: Removal Directions, Inlet And Exhaust Adjustment Unit
Courtesy of BMW OF NORTH AMERICA, INC.

IMPORTANT:
- **Danger of mixing up adjustment units.**
- **Mixing up the adjustment units will result in engine damage.**

Intake and exhaust adjustment units are different.

VANOS is marked with AUS/EX for the exhaust camshaft.

VANOS is marked with EIN/IN for the intake camshaft.

Sensor gears can be fitted alternatively.

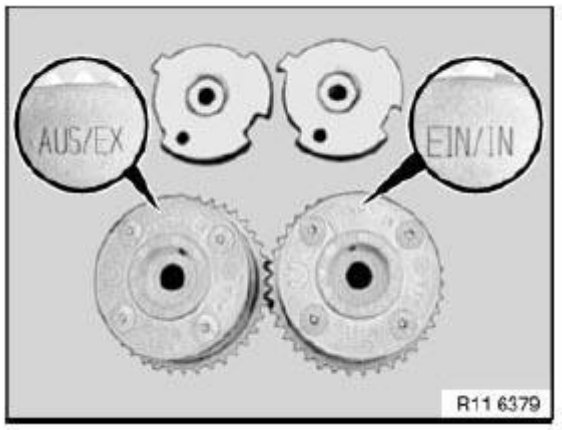

Fig. 537: VANOS Marks
Courtesy of BMW OF NORTH AMERICA, INC.

Fit both adjustment units on camshafts.

Installation position of intake and exhaust adjustment units can be freely selected.

Insert screws (1).

For tightening torque refer to 11 36 1AZ in **11 36 VARIABLE CAMSHAFT CONTROL VANOS** .

IMPORTANT: To secure central bolts on adjustment units and camshafts.

Fit special tool 11 4 280.

NOTE: Illustrations in CAD and do not show special tools.

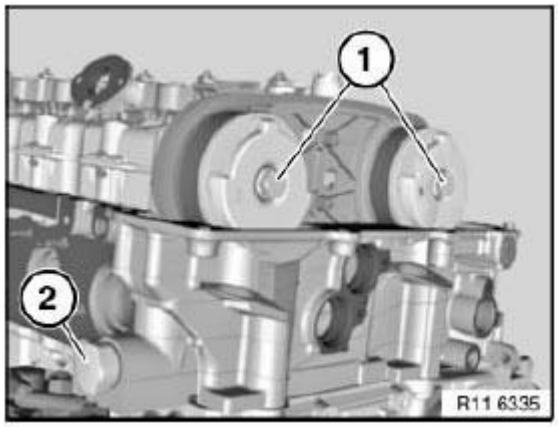

Fig. 538: Central Bolts
Courtesy of BMW OF NORTH AMERICA, INC.

IMPORTANT: Incorrect installation possible!

Press clamping rail (1) by hand against guide rail and make sure timing chain is guided in clamping rail (1).

NOTE: Schematic representation of removed timing chain module.

Adjust **Valve Timing.**

Fit **Chain Tensioner.**

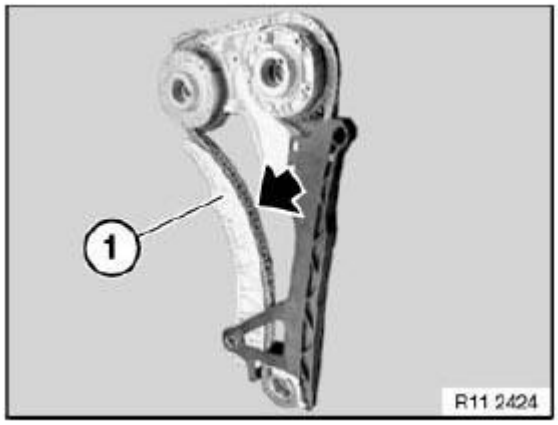

Fig. 539: Clamping Rail
Courtesy of BMW OF NORTH AMERICA, INC.

Assemble engine.

11 36 046 REMOVING AND INSTALLING/REPLACING INTAKE AND EXHAUST ADJUSTMENT UNITS (N52K)

Special tools required:

- 11 4 280
- 11 4 281
- 11 4 282
- 11 4 283

Necessary preliminary tasks:

- Remove **Cylinder Head Cover**
- Check **Timing**

IMPORTANT: Install special tool 11 4 280 to release the central bolts on the intake and exhaust adjustment units and camshafts.

Fit special tool 11 4 283 with screws (1).

Fit special tool 11 4 281 on special tool 11 4 283.

IMPORTANT: Fit special tool 11 4 282 underneath on side of intake camshaft.

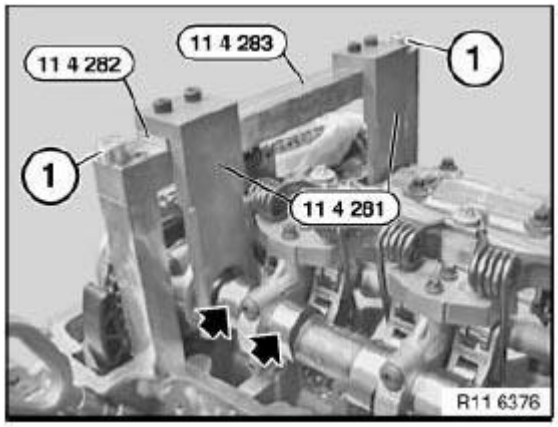

Fig. 540: Screws, Special Tool (11 4 281), (11 4 282) And (11 4 283)
Courtesy of BMW OF NORTH AMERICA, INC.

Release chain tensioner (2).

For tightening torque refer to 11 31 6AZ in **11 31 CAMSHAFT** .

Release central bolts on intake and exhaust adjustment units (1).

For tightening torque refer to 11 36 1AZ in **11 36 VARIABLE CAMSHAFT CONTROL VANOS** .

Installation:

Replace central bolts.

NOTE: Picture in CAD and does not show special tools.

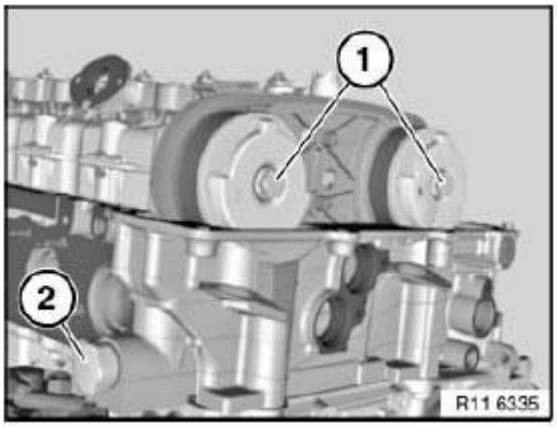

Fig. 541: Chain Tensioner And Inlet And Exhaust Adjustment Units
Courtesy of BMW OF NORTH AMERICA, INC.

Remove exhaust adjustment unit (1) from exhaust camshaft.

Remove intake adjustment unit (2) from intake camshaft.

Installation:

To facilitate removal and installation of the intake and exhaust adjustment units, turn the sensor gears at the opening downwards.

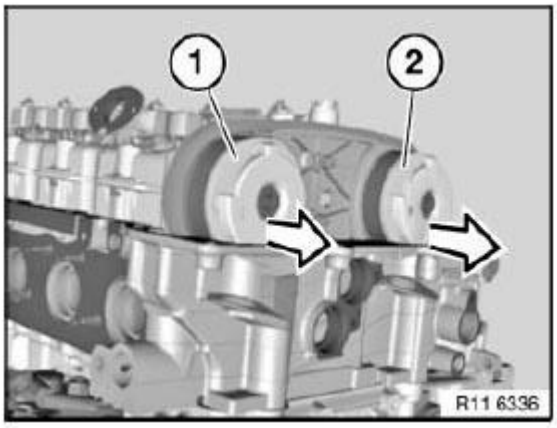

Fig. 542: Removal Directions, Inlet And Exhaust Adjustment Unit
Courtesy of BMW OF NORTH AMERICA, INC.

IMPORTANT: Risk of mixing up the intake and exhaust adjustment units.

Danger of engine damage!

Intake and exhaust adjustment units are different.

VANOS is marked with AUS/EX for the exhaust camshaft.

VANOS is marked with EIN/IN for the intake camshaft.

Sensor gears can be fitted alternatively.

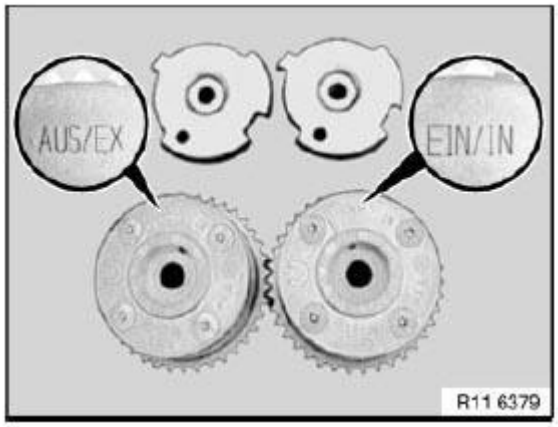

Fig. 543: VANOS Marks
Courtesy of BMW OF NORTH AMERICA, INC.

Position intake and exhaust adjustment units on camshafts.

Installation position of intake and exhaust adjustment units can be freely selected.

Insert central bolts (1).

For tightening torque refer to 11 36 1AZ in **11 36 VARIABLE CAMSHAFT CONTROL VANOS** .

Installation:

Replace central bolts.

IMPORTANT: Install special tool 11 4 280 to secure the central bolts on the intake and exhaust adjustment units and camshafts.

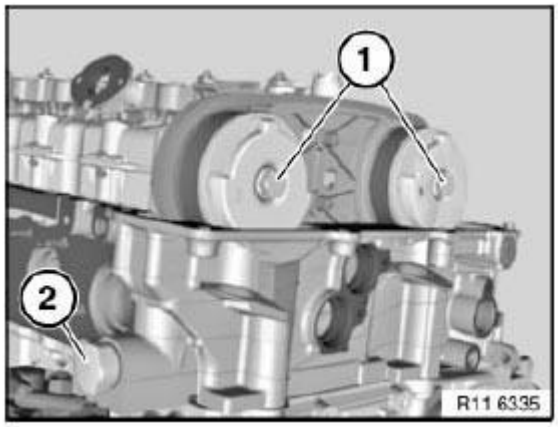

Fig. 544: Central Bolts
Courtesy of BMW OF NORTH AMERICA, INC.

NOTE: Picture in CAD and does not show special tools.

IMPORTANT: Incorrect installation possible!

Press clamping rail (1) by hand against guide rail and make sure timing chain is guided in clamping rail (1).

NOTE: Schematic representation of removed timing chain module.

Adjust **Valve Timing.**

Fit **Chain Tensioner.**

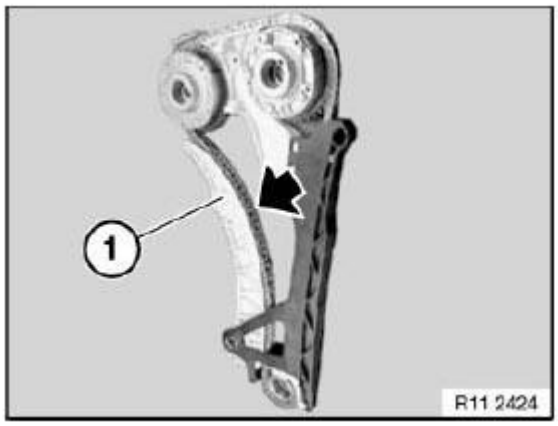

Fig. 545: Clamping Rail
Courtesy of BMW OF NORTH AMERICA, INC.

Assemble engine.

11 36 655 REMOVING AND INSTALLING/REPLACING BOTH SOLENOID VALVES (N52K)

IMPORTANT: It is essential to observe conditions of absolute cleanliness when removing and installing the intake and exhaust solenoid valves.

Possible malfunction if valves are contaminated:

- Rough running
- OBD fault entry
- Exhaust emission characteristics
- Low engine power

Necessary preliminary tasks:

- Remove **Ignition Coil Cover**

Disconnect plug connection (1) on intake solenoid valve (2).

Release screw (3).

NOTE: Secure support and sealing ring against falling down.

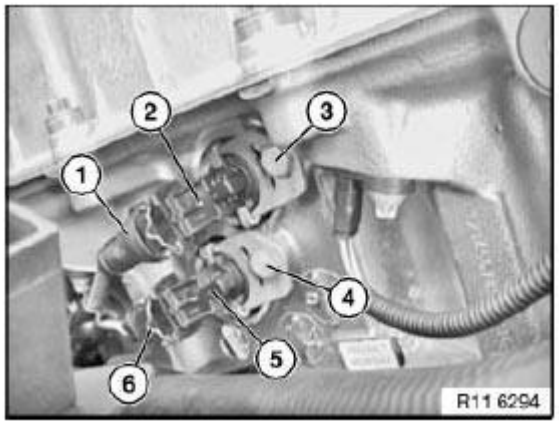

Fig. 546: Plug Connections, Solenoid Valves, And Screw
Courtesy of BMW OF NORTH AMERICA, INC.

Remove intake solenoid valve (2) with bracket towards front.

Disconnect plug connection (6) on exhaust solenoid valve (5).

Release screw (4).

NOTE: Secure support and sealing rings against falling down.

Remove exhaust solenoid valve (5) with bracket towards front.

For tightening torque refer to 11 36 3AZ in **11 36 VARIABLE CAMSHAFT CONTROL VANOS** .

IMPORTANT: Risk of mixing up plug connections (1 and 6).

Installation:

Replace support and sealing rings.

Assemble engine.

Check function of DME.

VARIABLE VALVE GEAR

11 37 005 REMOVING AND INSTALLING/REPLACING ECCENTRIC SHAFT (N51)

Special tools required:

- 11 4 481

Necessary preliminary tasks:

- Remove **Cylinder Head Cover**
- Remove **Intermediate Lever**

If necessary, move eccentric shaft (1) on twin surface to minimum lift (2).

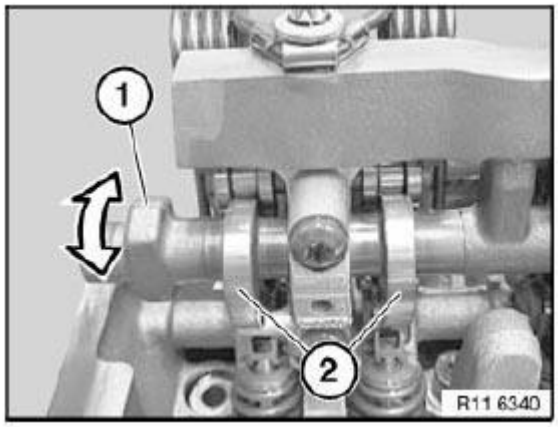

Fig. 547: Eccentric Shaft, Minimum Lift And Removal Directions
Courtesy of BMW OF NORTH AMERICA, INC.

Release screws on bearing cap number (1).

Release screws on all bearing caps (2).

All bearing caps are identified with numbers; set caps down in special tool 11 4 481 in a tidy and orderly fashion.

Remove intermediate shaft with a light tilting and rotating motion.

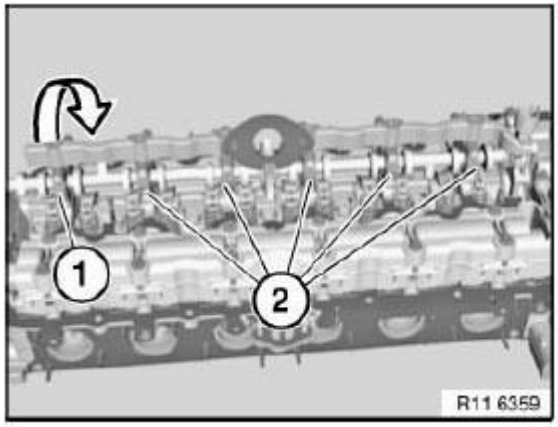

Fig. 548: Eccentric Shaft Bearing Caps
Courtesy of BMW OF NORTH AMERICA, INC.

Release screw and remove magnet wheel (1).

IMPORTANT: Screw is not magnetic and is secured against falling out.

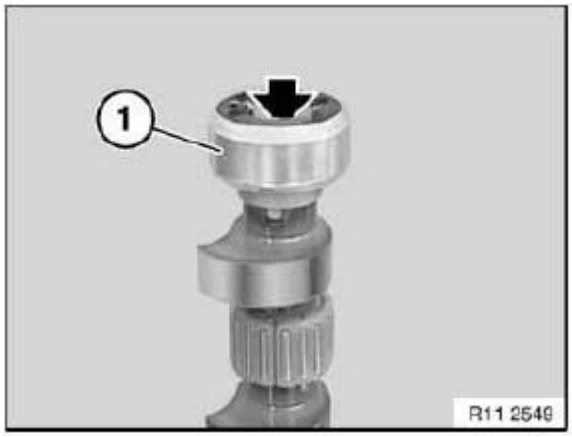

Fig. 549: Magnet Wheel And Screw
Courtesy of BMW OF NORTH AMERICA, INC.

IMPORTANT: Magnet wheel (1) is extremely magnetic.

After removing, protect magnet wheel (1) against metal chips by placing it in a plastic bag (2) with a seal.

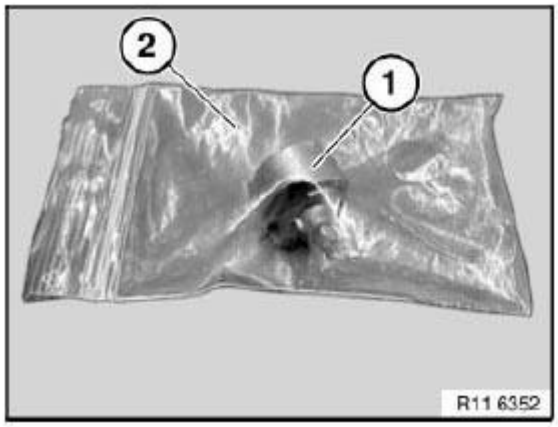

Fig. 550: Placing Magnet Wheel In Plastic Bag
Courtesy of BMW OF NORTH AMERICA, INC.

Carefully press needle bearing (1) apart at split position only to such an extent that it can be removed from eccentric shaft.

IMPORTANT: Needle bearing (1) can break very easily.

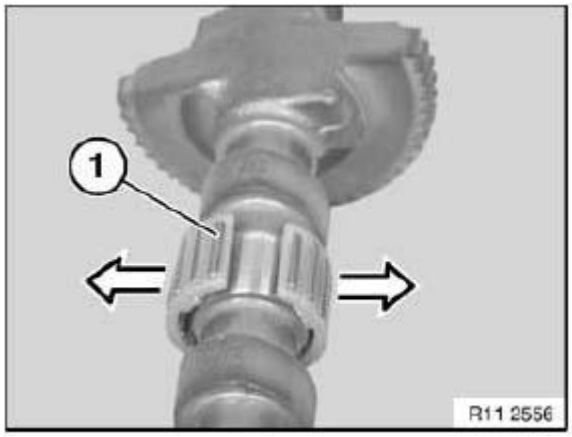

Fig. 551: Needle Bearings And Separation Points
Courtesy of BMW OF NORTH AMERICA, INC.

Install bearing shells (1) in such a way that ends of bearing shells (1) face each other as shown in illustration.

NOTE: Always replace bearing shells and needle bearings together.

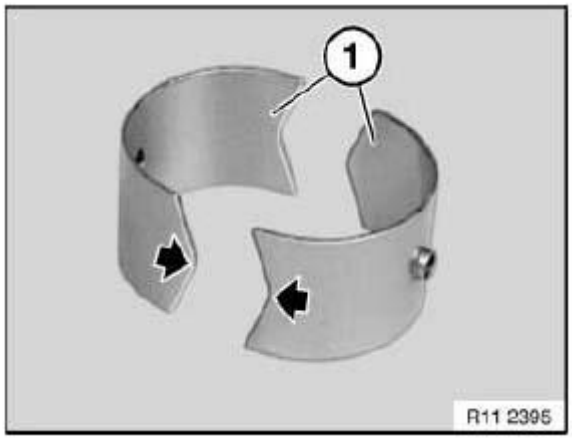

Fig. 552: Bearing Shells
Courtesy of BMW OF NORTH AMERICA, INC.

Install bearing shell (1) with tip facing down (see arrow) in cylinder head.

Install bearing shell (2) with tip facing up in bearing cap.

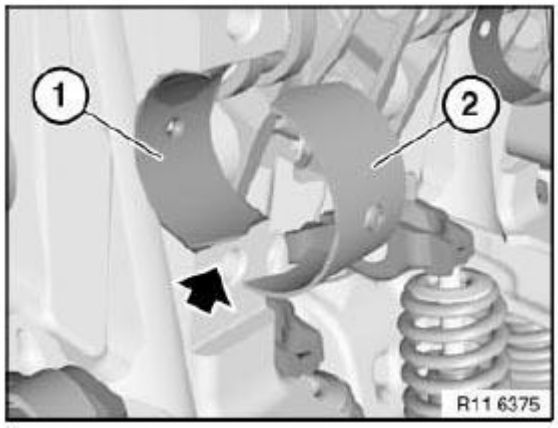

Fig. 553: Bearing Shells And Installation Orientation Direction
Courtesy of BMW OF NORTH AMERICA, INC.

Install eccentric shaft and set to minimum lift.

Bearing cap number 6 (1) is provided with a stop.

All bearing caps (2) are identified with numbers from 1 to 5. Insert all screws.

For tightening torque refer to 11 37 7AZ in **11 37 VARIABLE VALVE GEAR** .

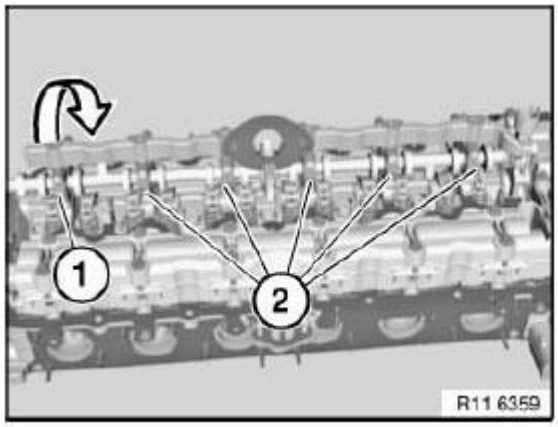

Fig. 554: Eccentric Shaft Bearing Caps
Courtesy of BMW OF NORTH AMERICA, INC.

Assemble engine.

11 37 005 REMOVING AND INSTALLING/REPLACING ECCENTRIC SHAFT (N52K)

Special tools required:

- 11 4 481

Necessary preliminary tasks:

- Remove **Cylinder Head Cover**
- Remove **Intermediate Lever**

If necessary, move eccentric shaft (1) on twin surface to minimum lift (2).

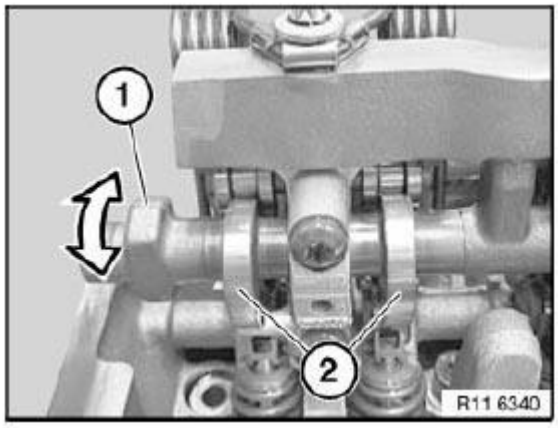

Fig. 555: Eccentric Shaft, Minimum Lift And Removal Directions
Courtesy of BMW OF NORTH AMERICA, INC.

NOTE: All bearing caps (1 and 2) of eccentric shaft are marked with numbers from 1 to 6 (1 for 1st cylinder to 6 for 6th cylinder).
Bearing cap 6 (1) is provided with a stop.

Release screws on bearing cap 6 (1).

Release screws on bearing caps 1 to 5 (2).

Set all bearing caps down in special tool 11 4 481 in a tidy and orderly fashion.

Remove eccentric shaft with gentle tilting and turning movements.

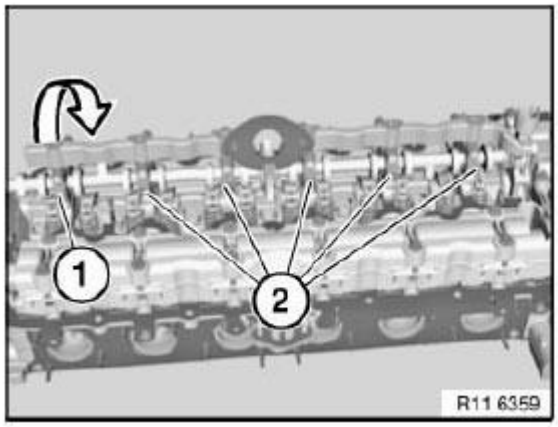

Fig. 556: Eccentric Shaft Bearing Caps
Courtesy of BMW OF NORTH AMERICA, INC.

IMPORTANT: Screw is not magnetic and must be secured against falling down.

Release screw.

Remove magnet wheel (1).

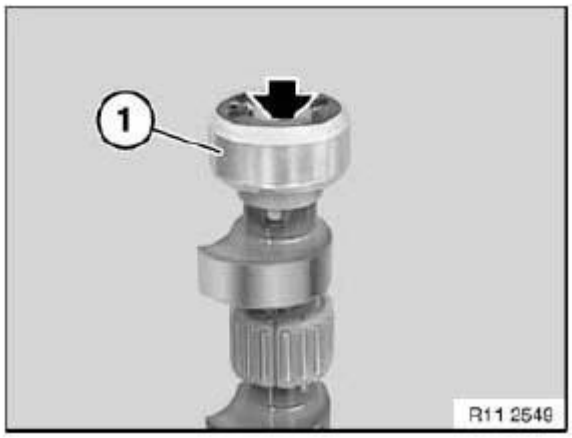

Fig. 557: Magnet Wheel And Screw
Courtesy of BMW OF NORTH AMERICA, INC.

IMPORTANT: Magnet wheel (1) is highly magnetic and must be protected against metal filings/borings.

After removing, place magnet wheel (1) in a plastic bag (2) with a seal.

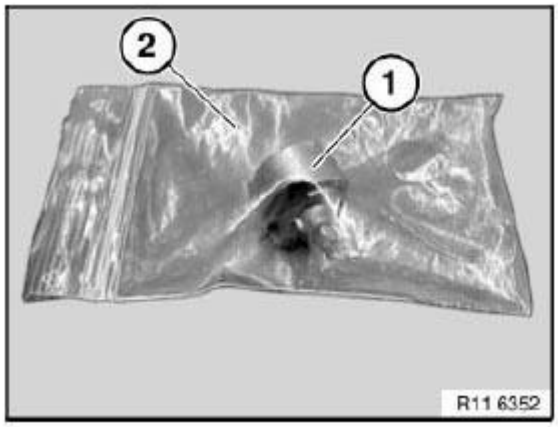

Fig. 558: Placing Magnet Wheel In Plastic Bag
Courtesy of BMW OF NORTH AMERICA, INC.

IMPORTANT: Needle bearing (1) can break very easily.

Carefully pull needle bearing (1) apart at point of separation.

Remove all needle bearings (1) from eccentric shaft.

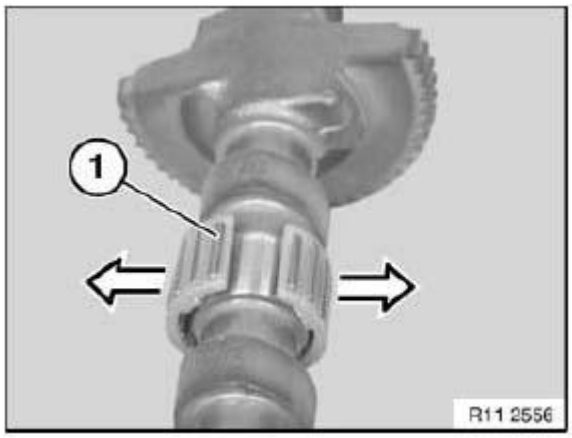

Fig. 559: Needle Bearings And Separation Points
Courtesy of BMW OF NORTH AMERICA, INC.

Install bearing shells (1) as pictured.

NOTE: Always replace bearing shells (1) and needle bearings together.

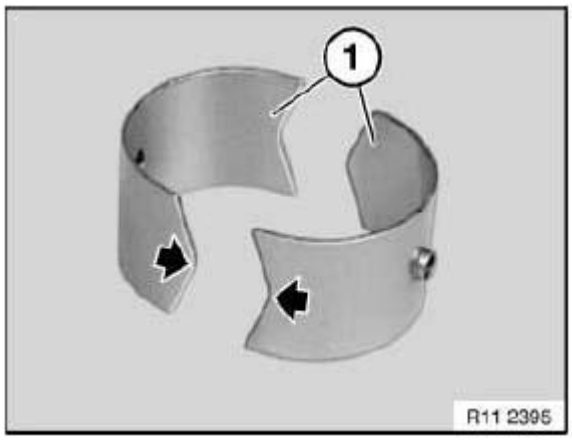

Fig. 560: Bearing Shells
Courtesy of BMW OF NORTH AMERICA, INC.

Install bearing shell (1) with tip facing down (see arrow) in cylinder head.

Install bearing shell (2) with tip facing up in bearing cap.

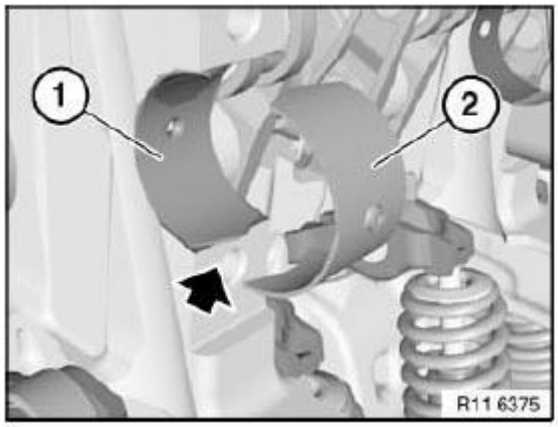

Fig. 561: Bearing Shells And Installation Orientation Direction
Courtesy of BMW OF NORTH AMERICA, INC.

NOTE: All bearing caps (1 and 2) of eccentric shaft are marked with numbers from 1 to 6 (1 for 1st cylinder to 6 for 6th cylinder).
Bearing cap 6 (1) is provided with a stop.

Insert eccentric shaft.

Adjust eccentric shaft on dihedron to minimum stroke.

Fit all bearing caps (1 and 2).

Insert all screws.

For tightening torque refer to 11 12 7AZin **11 12 CYLINDER HEAD WITH COVER (1AZ-9AZ) [N52K]** .

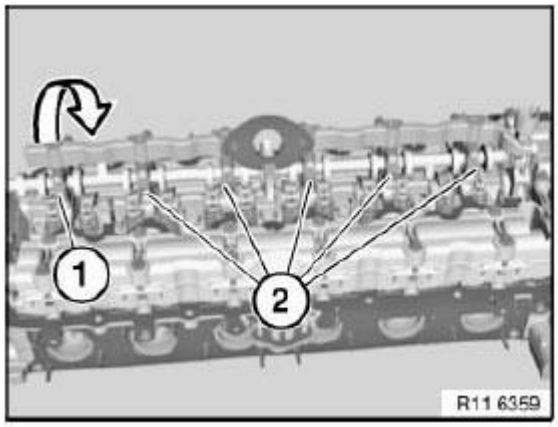

Fig. 562: Eccentric Shaft Bearing Caps
Courtesy of BMW OF NORTH AMERICA, INC.

Assemble engine.

11 37 010 REMOVING AND INSTALLING/REPLACING INTERMEDIATE LEVERS (N51)

IMPORTANT: Aluminium-magnesium materials.

No steel screws/bolts may be used due to the threat of electrochemical corrosion.

A magnesium crankcase requires aluminium screws/bolts exclusively.

Aluminium screws/bolts must be replaced each time they are released .

Aluminium screws/bolts are permitted with and without color coding (blue).

For reliable identification:

Aluminium screws/bolts are not magnetic .

Jointing torque and angle of rotation must be observed without fail (risk of damage).

NOTE: There are 2 different versions of the gate

IMPORTANT: Establish size of gates.

Version 1: Size 55.2 mm

Version 2: Size 58 mm

Version 1

Size (1) 55.2 mm

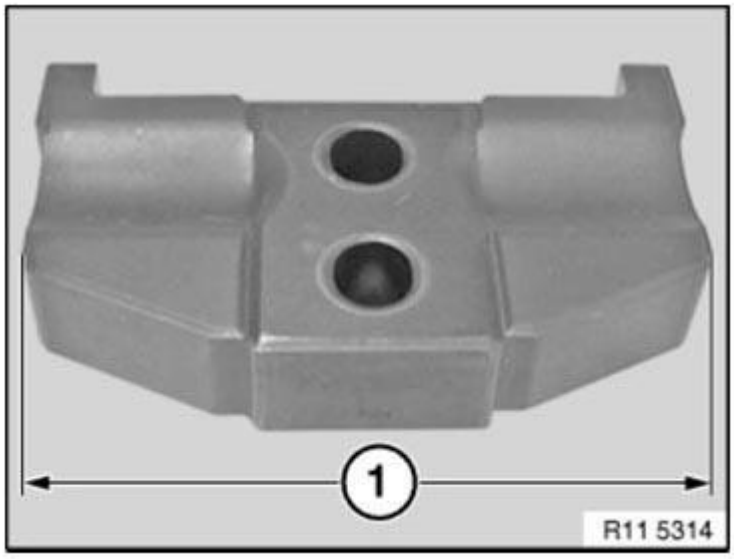

Fig. 563: Identifying Gate Dimension
Courtesy of BMW OF NORTH AMERICA, INC.

Necessary preliminary tasks:

- Remove **CYLINDER HEAD COVER**

If necessary, move eccentric shaft (1) on twin surface to minimum lift (2).

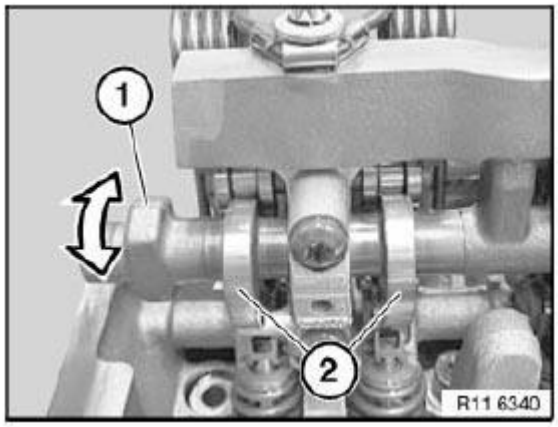

Fig. 564: Moving Eccentric Shaft

Courtesy of BMW OF NORTH AMERICA, INC.

Secure special tool 11 4 270 to gate (2) using locking pliers (3).

IMPORTANT: Special tool 11 4 270 is only secured to gate (2).
The position of the locking pliers (3) on the special tool 11 4 270 must not be altered. Risk of damage!

NOTE: The oil spray nozzle must be removed beforehand from cylinder no. 3.

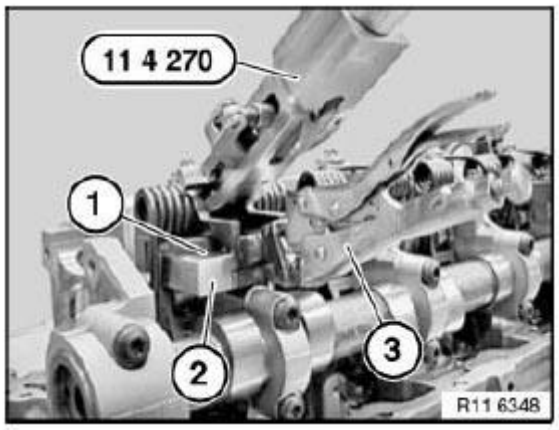

Fig. 565: Identifying Special Tool (11 4 270)
Courtesy of BMW OF NORTH AMERICA, INC.

WARNING: Risk of injury in event of incorrect use.

IMPORTANT: Improper handling. Risk of damage!

Secure both bearing pins (2) in torsion springs with knurled screw (1) of special tool 11 4 270.

Press special tool 11 4 270 to stop in direction of arrow.

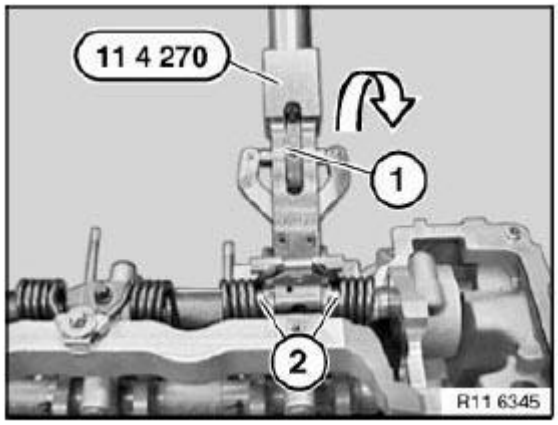

Fig. 566: Identifying Special Tool (11 4 270)
Courtesy of BMW OF NORTH AMERICA, INC.

Release steel screw (2).

IMPORTANT: Risk of damage to cylinder head thread.

To avoid jamming with screw (2) and return spring, it is necessary when releasing screw (2) to relieve the preload on special tool 11 4 270 uniformly.

Tightening torque: 10 Nm

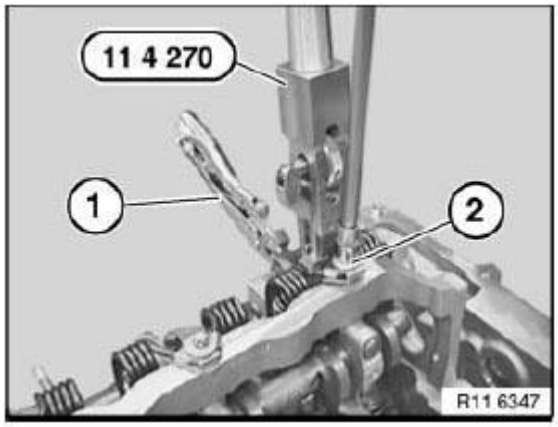

Fig. 567: Releasing Screw Of Torsion Spring
Courtesy of BMW OF NORTH AMERICA, INC.

Relieve tension on return spring (1) with special tool 11 4 270.

NOTE: Metal tab (2) cannot be disassembled and must not be removed.

Installation note:

Replace metal tab if tab washer is defective.

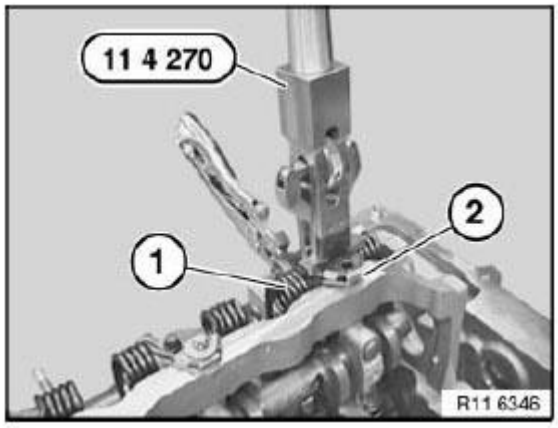

Fig. 568: Replacing Tension On Torsion Spring Using Special Tool (11 4 270)
Courtesy of BMW OF NORTH AMERICA, INC.

Press return spring apart at position (1) and remove towards top.

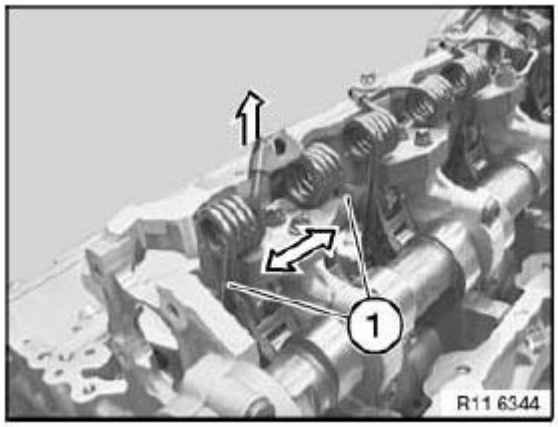

Fig. 569: Removing Torsion Spring
Courtesy of BMW OF NORTH AMERICA, INC.

IMPORTANT: Uniform distribution must not be changed.
All components must be set down in a clean and orderly fashion.

All components must be reinstalled in the same positions in an engine which has already been in use.

1. Eccentric shaft with bearing
2. Bearing caps of eccentric shaft (set out in order)
3. Intake camshaft
4. Bearing caps of intake camshaft (set out in order)
5. Intake valves with valve springs

6. Valve heads and valve keys
7. Roller cam followers with hydraulic valve clearance compensating element (set out in order)
8. Return springs.
9. Gates (set out in order)
10. Intermediate levers (set out in order)

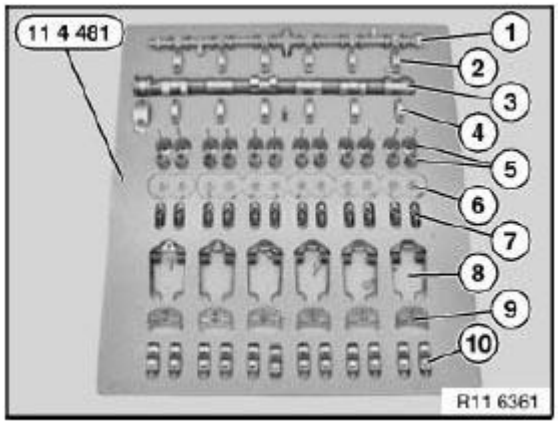

Fig. 570: Identifying Components On Special Tool (11 4 481)
Courtesy of BMW OF NORTH AMERICA, INC.

Release screws (1).

Tightening torque: 10 Nm

Set down gates (2) in special tool 11 4 481 in neat order.

Installation note:

Mixing up the gates may cause the engine to demonstrate idle fluctuations.

This will result in maladjustment of **uniform distribution** .

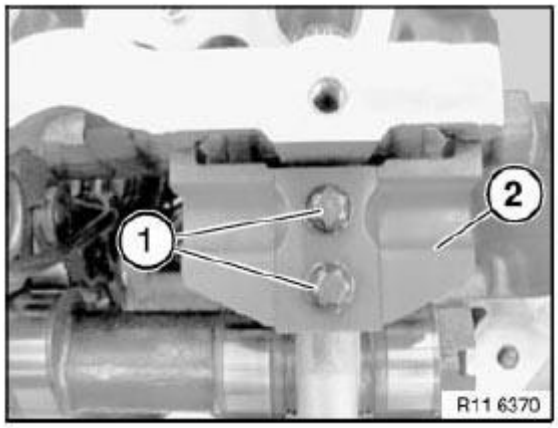

Fig. 571: Identifying Gate And Screws
Courtesy of BMW OF NORTH AMERICA, INC.

Installation note:

Contact surfaces (1) must be clean and free from oil and grease. If necessary, clean contact surfaces.

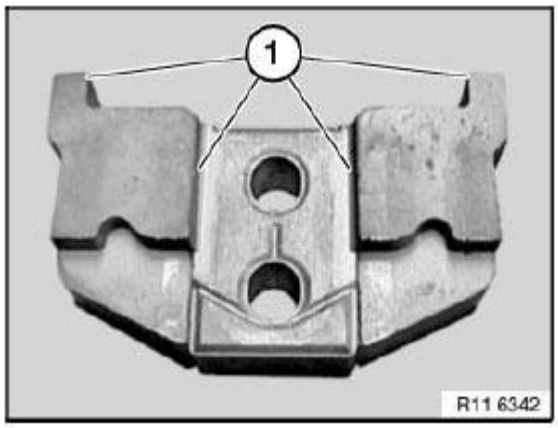

Fig. 572: Identifying Gate Contact Surfaces
Courtesy of BMW OF NORTH AMERICA, INC.

Lift out intermediate levers (2).

Place all intermediate levers (2) in neat order in special tool 11 4 481.

Installation note:

Mixing up the intermediate levers may cause the engine to demonstrate RPM fluctuations.

Installation note:

Contact surfaces (1) must be clean and free from oil and grease. If necessary, clean contact surfaces.

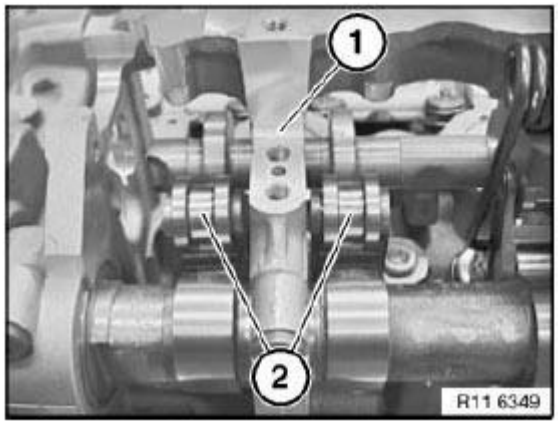

Fig. 573: Identifying Intermediate Levers
Courtesy of BMW OF NORTH AMERICA, INC.

All intermediate levers (1) are classified.

Reinstall intermediate levers which have already been used in the same positions.

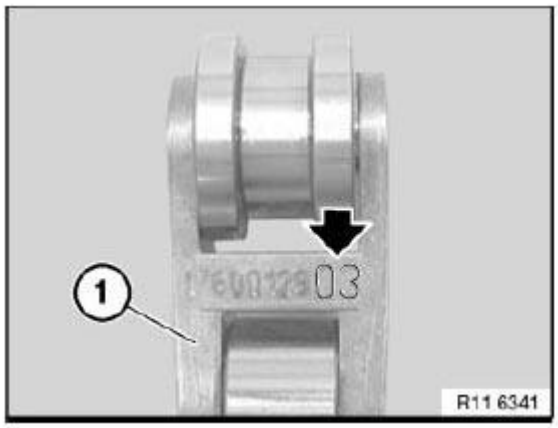

Fig. 574: Locating Marking On Intermediate Lever
Courtesy of BMW OF NORTH AMERICA, INC.

IMPORTANT: Before installing intermediate levers (2), make sure cam followers are correctly positioned (risk of damage).

Install intermediate levers (2).

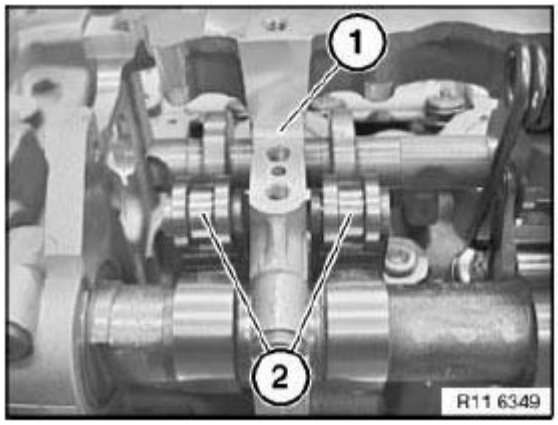

Fig. 575: Identifying Intermediate Levers
Courtesy of BMW OF NORTH AMERICA, INC.

Fit gate (2) cleanly into opening.

Tighten screws (1) hand-tight.

Check both intermediate levers again to ensure correct installation position.

Release bolts (1) again by a 1/4 turn.

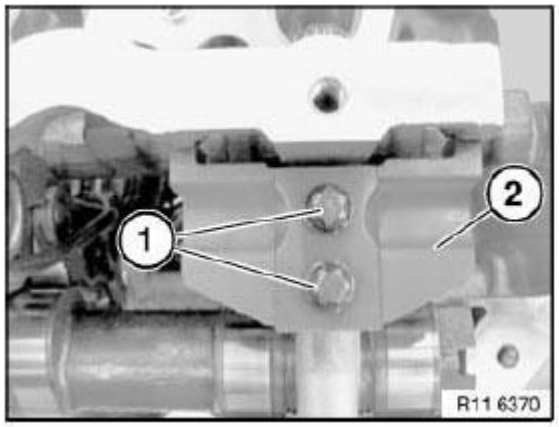

Fig. 576: Identifying Gate And Screws
Courtesy of BMW OF NORTH AMERICA, INC.

Secure special tool 11 4 450 to screw fixing (1) of eccentric shaft.

Move eccentric lever (3) on special tool 11 4 450 in direction of arrow.

Gate is now pretensioned.

Secure screws (2).

Tightening torque: 10 Nm

Installation note:

At cylinder no. 3, the gate can be pre-installed with one bolt (2) only.

Fit oil spray nozzle only after retaining spring has been fitted.

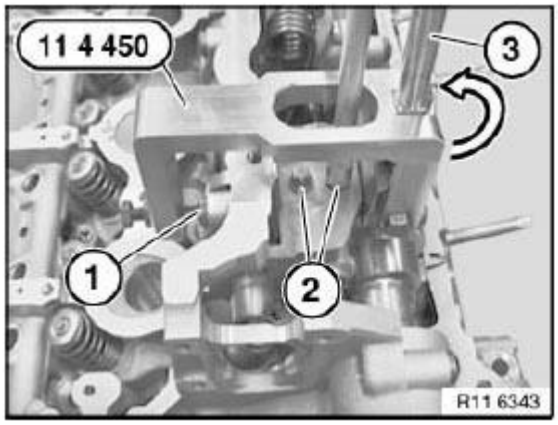

Fig. 577: Moving Eccentric Lever On Special Tool (11 4 450)
Courtesy of BMW OF NORTH AMERICA, INC.

Fit return spring on gate.

Installation note:

Insert return spring (2) in intermediate lever (1) (see arrow).

Check roller cam follower (3) again to ensure correct installation position.

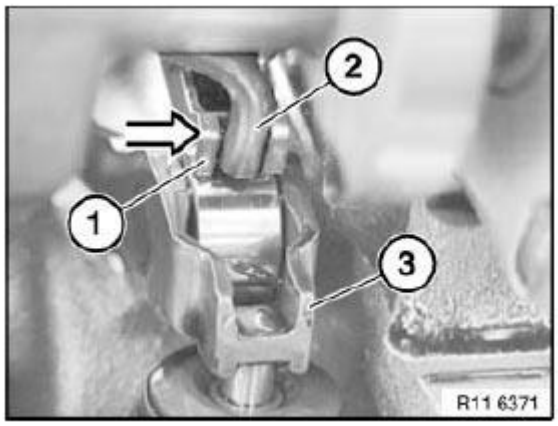

Fig. 578: Inserting Torsion Spring On Intermediate Lever
Courtesy of BMW OF NORTH AMERICA, INC.

Secure special tool 11 4 270 to gate (2) using locking pliers (3).

IMPORTANT: Special tool 11 4 270 is only secured to gate.
Adjusting the locking pliers (3) is not permitted (risk of damage) on special tool 11 4 270.

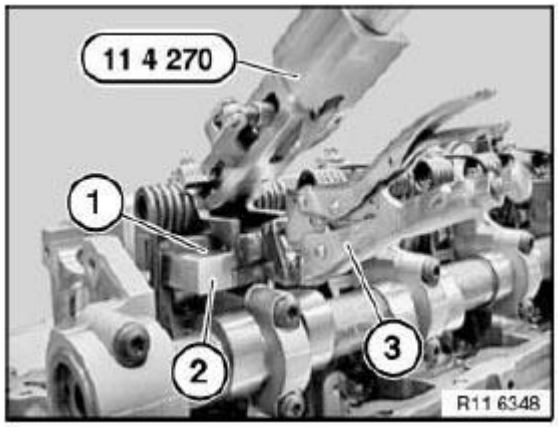

Fig. 579: Securing Special Tool (11 4 270) To Gate Using Locking Pliers
Courtesy of BMW OF NORTH AMERICA, INC.

WARNING: Risk of injury in event of incorrect use.

IMPORTANT: Risk of damage from incorrect handling.

Secure both bearing pins (2) in return spring with knurled screw (1) on special tool 11 4 270.

IMPORTANT: Check return spring again on intermediate lever to ensure correct installation position.

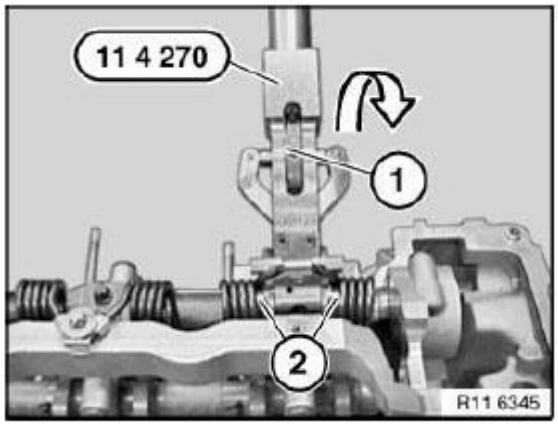

Fig. 580: Securing Bearing Pins Using Special Tool (11 4 270)
Courtesy of BMW OF NORTH AMERICA, INC.

Insert steel screw (2).

Tightening torque: 10 Nm

To avoid jamming with screw (2) and return spring, it is necessary when inserting screw (2) to increase the preload on special tool 11 4 270 uniformly.

IMPORTANT: Risk of damage to cylinder head thread.

Tightening torque: 10 Nm

Remove special tool 11 4 270.

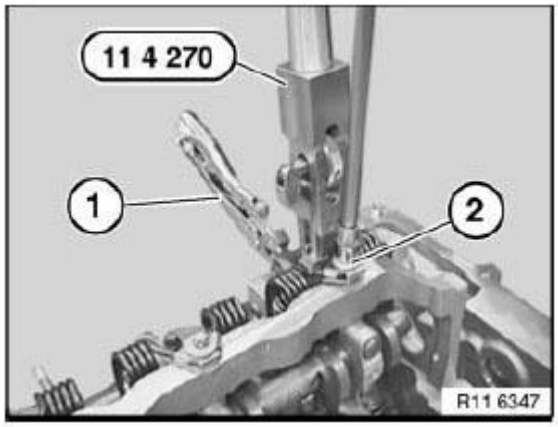

Fig. 581: Inserting Screw Of Torsion Spring
Courtesy of BMW OF NORTH AMERICA, INC.

At cylinder no. 3, adjust oil spray nozzle (2) so that oil spray (3) points precisely towards gearing.

Insert screw (1) with oil spray nozzle (2) (external).

Tightening torque: 9 Nm

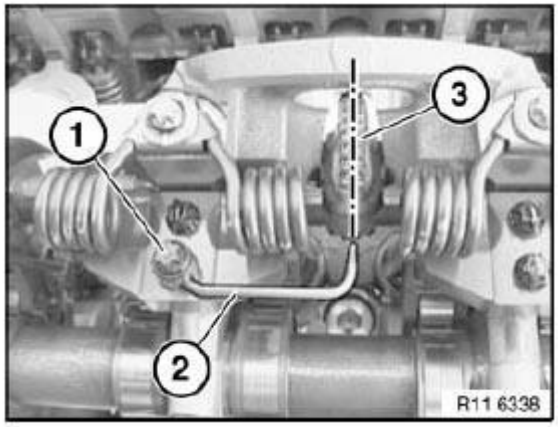

Fig. 582: Identifying Oil Spray Nozzle With Spray
Courtesy of BMW OF NORTH AMERICA, INC.

Assemble engine.

Version 2

Size (1) 58 mm

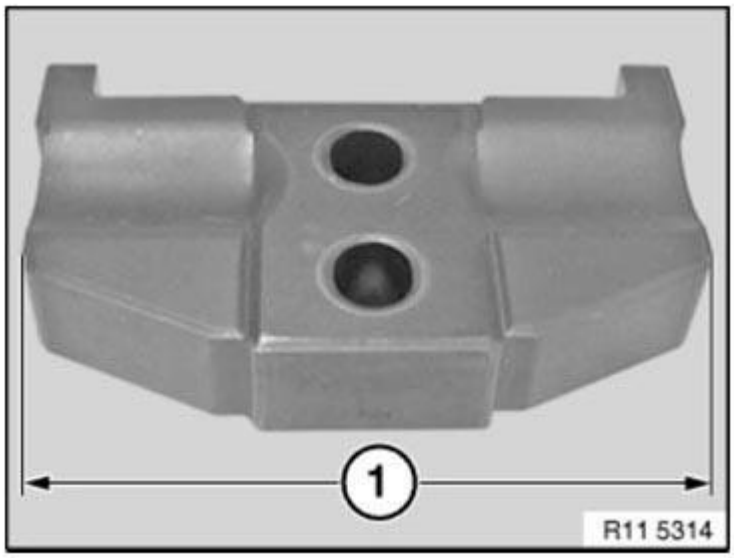

Fig. 583: Identifying Gate Dimension
Courtesy of BMW OF NORTH AMERICA, INC.

Necessary preliminary tasks:

- Remove **CYLINDER HEAD COVER**

If necessary, move eccentric shaft (1) on mounting flats to minimum lift (2).

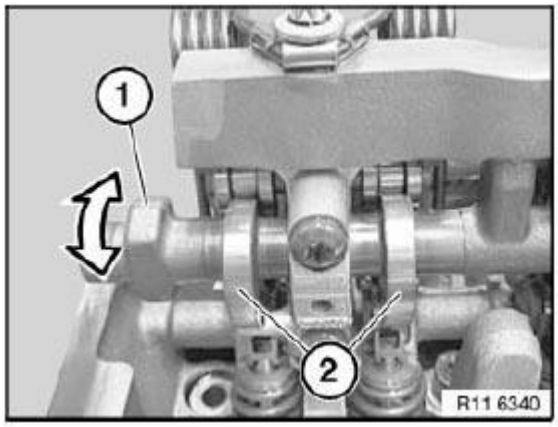

Fig. 584: Moving Eccentric Shaft
Courtesy of BMW OF NORTH AMERICA, INC.

NOTE: **Oil spray nozzle must be removed from 3rd cylinder (make a note of installation position of oil spray nozzle).**

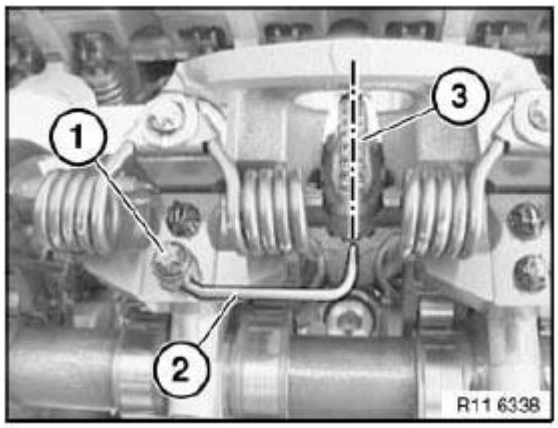

Fig. 585: Identifying Oil Spray Nozzle With Spray
Courtesy of BMW OF NORTH AMERICA, INC.

Position special tool 11 7 110 on return spring (1) (see arrows in **Fig. 586**).

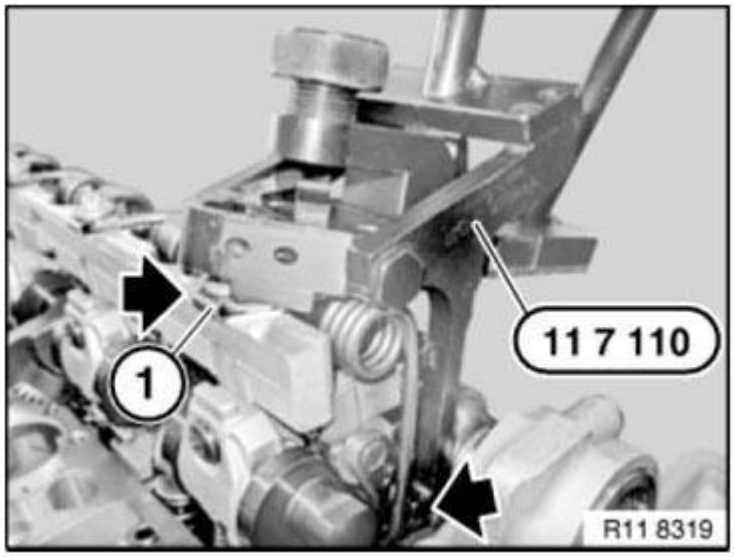

Fig. 586: Positioning Special Tool (11 7 110) On Return Spring
Courtesy of BMW OF NORTH AMERICA, INC.

WARNING: Risk of injury in event of incorrect use.

IMPORTANT: Risk of damage from improper handling.

Place special tool 11 7 110 flat on cylinder head.

Turn knurled screw (1) in direction of arrow until both clamping levers secure return spring in gate.

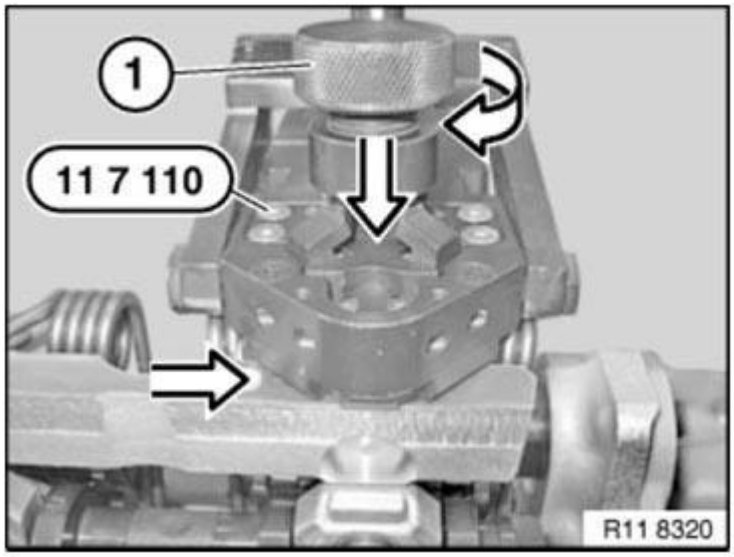

Fig. 587: Turning Knurled Screw
Courtesy of BMW OF NORTH AMERICA, INC.

Return spring is correctly preloaded when both clamping levers are parallel to gate.

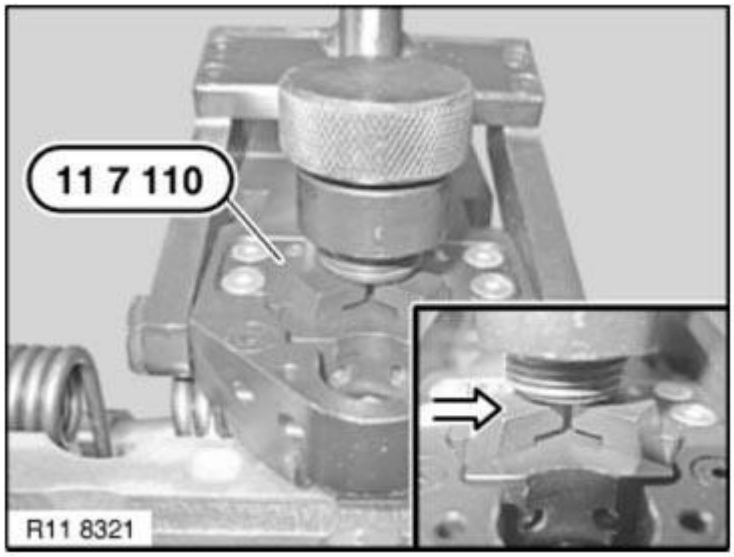

Fig. 588: Identifying Special Tool (11 7 110)
Courtesy of BMW OF NORTH AMERICA, INC.

IMPORTANT: Risk of damage!

Left and right return springs (1) must be positioned in lateral guide of special tool 11 7 110.

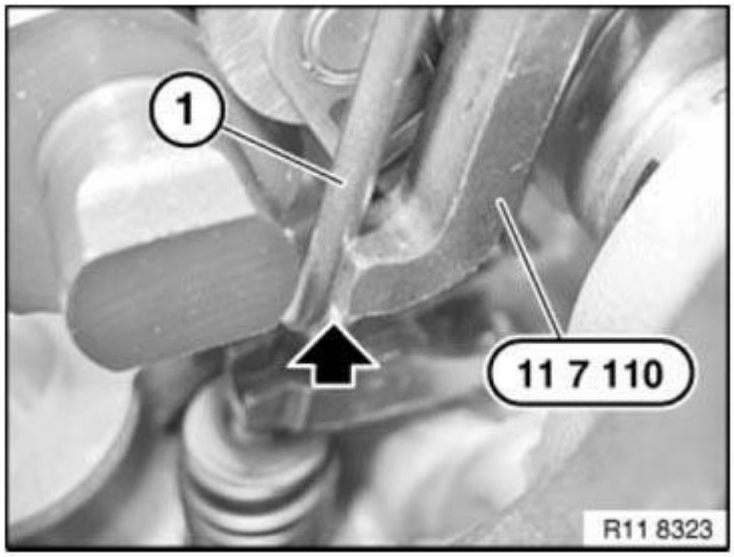

Fig. 589: Positioning Return Spring
Courtesy of BMW OF NORTH AMERICA, INC.

Preload return spring with lever (1) on special tool 11 7 110 in direction of arrow.

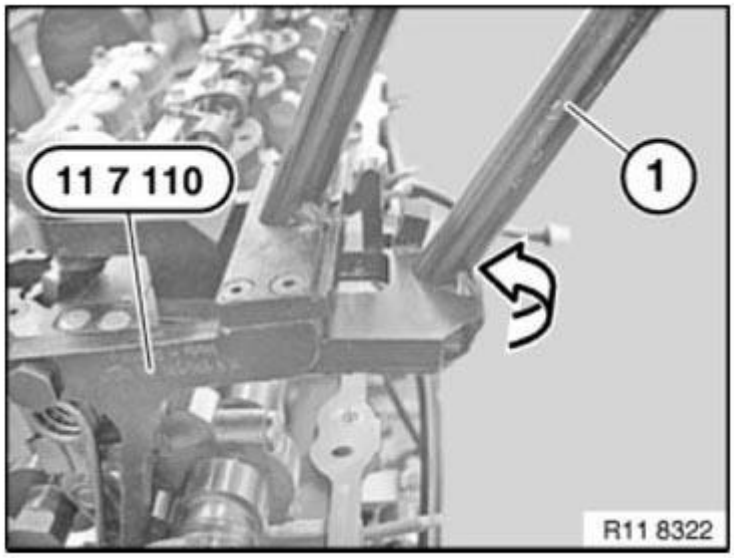

Fig. 590: Preloading Return Spring On Special Tool (11 7 110)
Courtesy of BMW OF NORTH AMERICA, INC.

Lock special tool 11 7 110 with catch on lever (1).

IMPORTANT: Screw connection on return spring can only be released with special tool 11 7 110 secured.

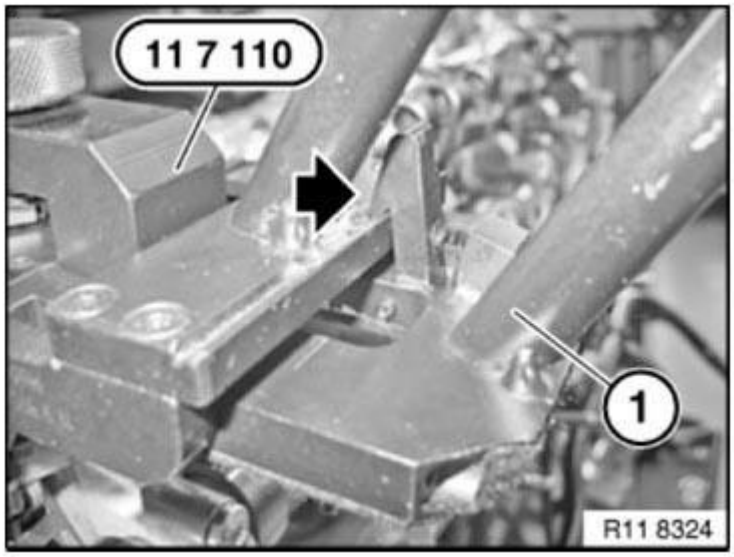

Fig. 591: Locking Special Tool (11 7 110) On Lever
Courtesy of BMW OF NORTH AMERICA, INC.

Release screw (1).

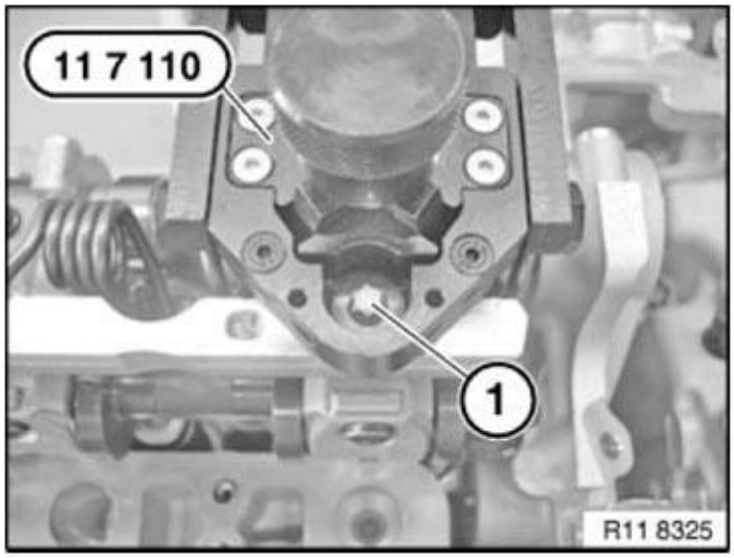

Fig. 592: Releasing Screw
Courtesy of BMW OF NORTH AMERICA, INC.

WARNING: Risk of injury in event of incorrect use.
Lever (1) is pre-loaded.

IMPORTANT: Risk of damage from improper handling.

Secure lever (1)

Press back latching hook (2).

Return spring tension can now be released.

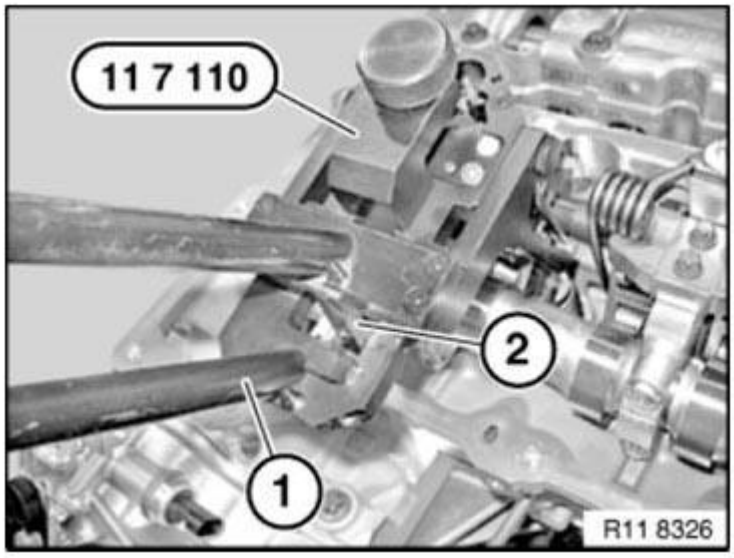

Fig. 593: Pressing Latching Hook
Courtesy of BMW OF NORTH AMERICA, INC.

Release knurled screw (1) on special tool 11 7 110 in direction of arrow.

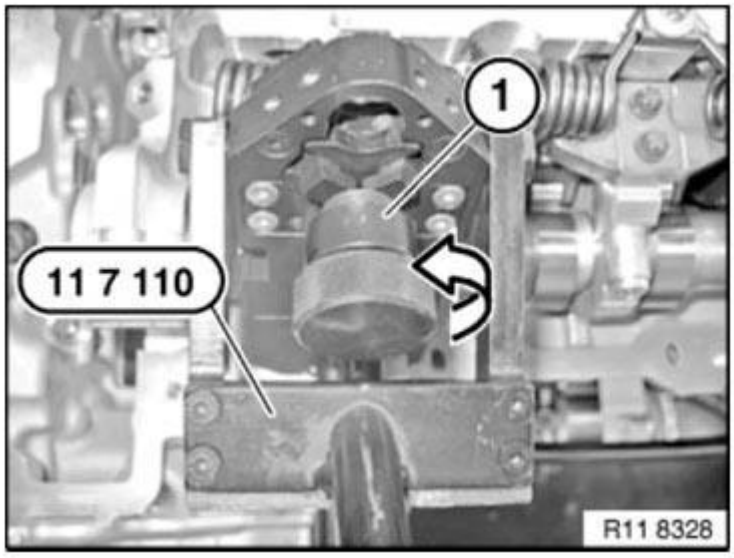

Fig. 594: Releasing Knurled Screw On Special Tool (11 7 110)
Courtesy of BMW OF NORTH AMERICA, INC.

Release special tool 11 7 110 in direction of arrow from return spring (1).

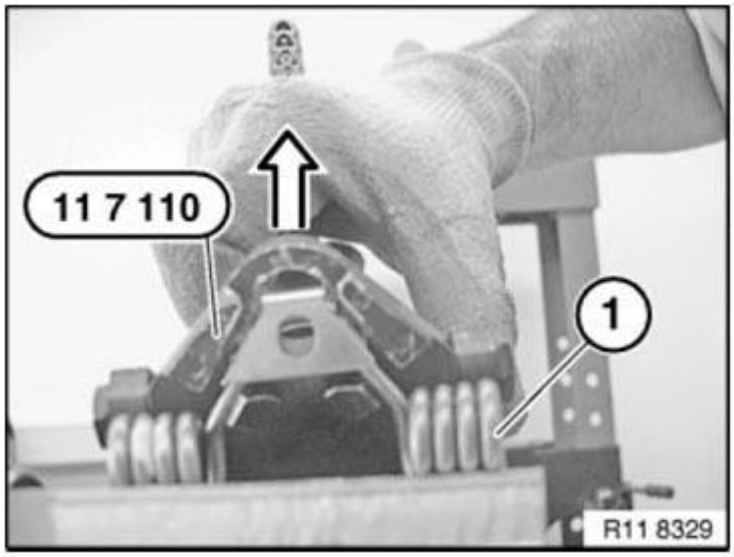

Fig. 595: Releasing Special Tool (11 7 110)
Courtesy of BMW OF NORTH AMERICA, INC.

Press torsion spring apart at positions (1).

Remove torsion spring towards top.

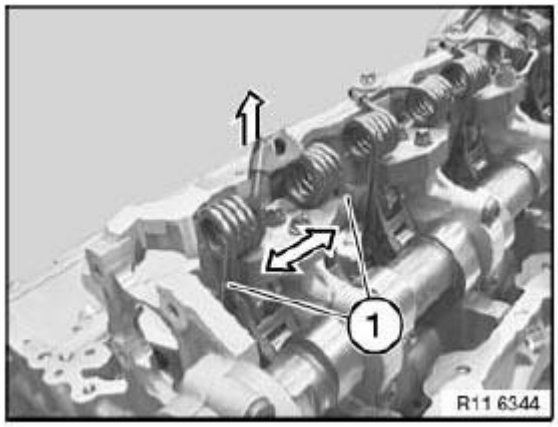

Fig. 596: Removing Torsion Spring
Courtesy of BMW OF NORTH AMERICA, INC.

IMPORTANT: Uniform distribution must not be changed.
Place all components in clean and orderly condition in special tool 11 4 481.

All components must be reinstalled in the same positions in an engine which has already been in use.

1. Eccentric shaft with bearing
2. Bearing caps of eccentric shaft (set out in order)

3. Intake camshaft
4. Bearing caps of intake camshaft (set out in order)
5. Intake valves with valve springs
6. Valve heads and valve keys
7. Rocker arm with hydraulic valve clearance compensating element (set out in order)
8. Torsion springs
9. Guide blocks (set out in order)
10. Intermediate levers (set out in order)

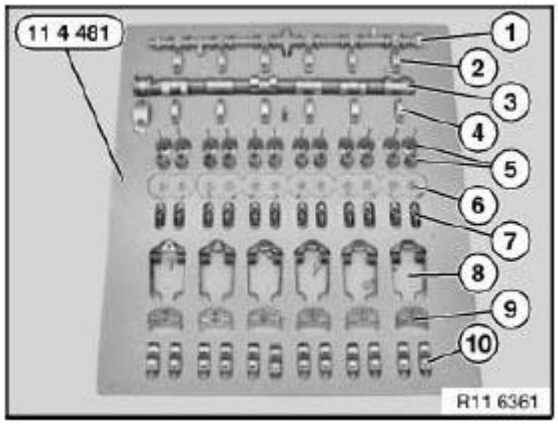

Fig. 597: Identifying Intermediate Lever Components On Special Tool
Courtesy of BMW OF NORTH AMERICA, INC.

Release screws (1) on gate (2).

Tightening torque: 10 Nm

Place all gates (2) in neat order in special tool 11 4 481.

Installation note:

Mixing up the gates (2) will cause the engine to suffer idle-speed fluctuations.

This will result in maladjustment of **uniform distribution** .

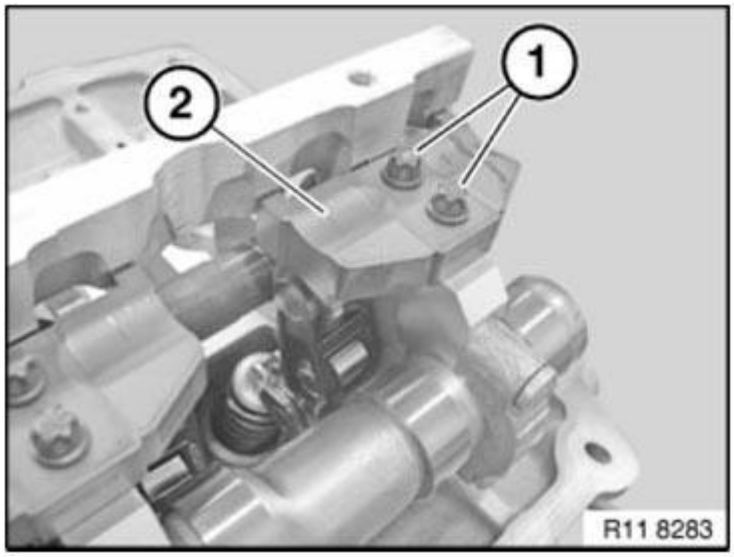

Fig. 598: Identifying Screws On Gate
Courtesy of BMW OF NORTH AMERICA, INC.

Installation note:

All contact surfaces (1) of gate must be clean and free from oil and grease. If necessary, clean contact surfaces (1).

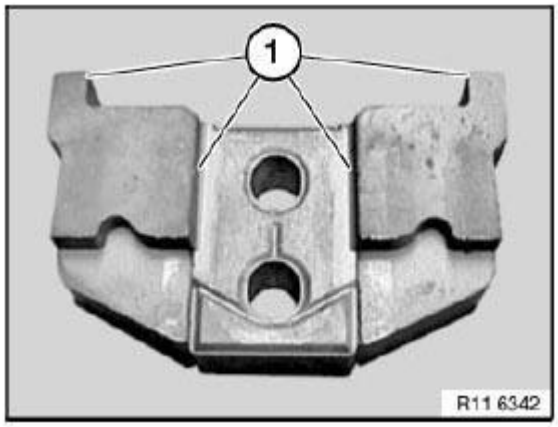

Fig. 599: Identifying Contact Surface Of Gate
Courtesy of BMW OF NORTH AMERICA, INC.

Lift out intermediate levers (2).

Place all intermediate levers (2) in neat order in special tool 11 4 481.

Installation note:

Mixing up the intermediate levers (2) will cause the engine to suffer idle-speed fluctuations.

Installation note:

All contact surfaces (1) must be clean and free from oil and grease. If necessary, clean contact surfaces (1).

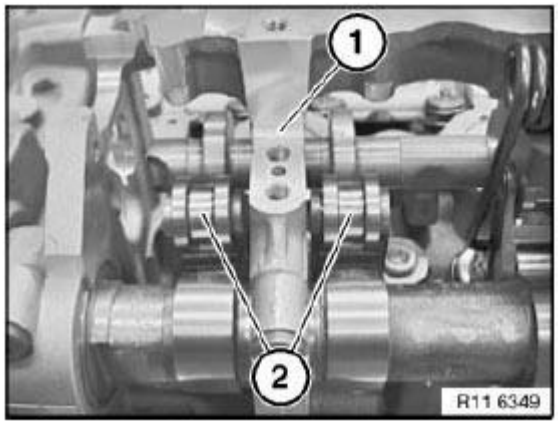

Fig. 600: Identifying Contact Surface Of Gate
Courtesy of BMW OF NORTH AMERICA, INC.

All intermediate levers (1) are classified.

All intermediate levers (1) must be reinstalled in the same positions in an engine which has already been in use.

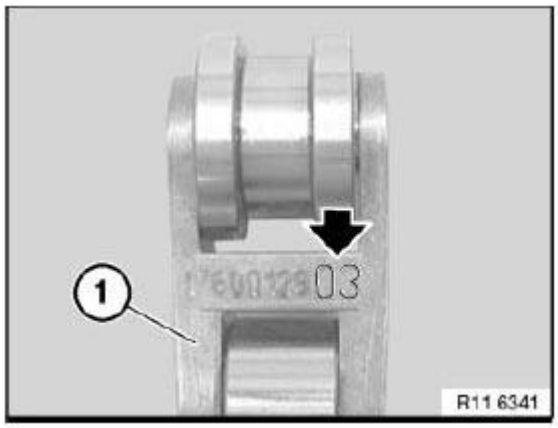

Fig. 601: Locating Marking On Intermediate Levers
Courtesy of BMW OF NORTH AMERICA, INC.

IMPORTANT: Risk of damage!
Before installing intermediate levers (2), make sure cam followers are correctly positioned.

Install intermediate levers (2).

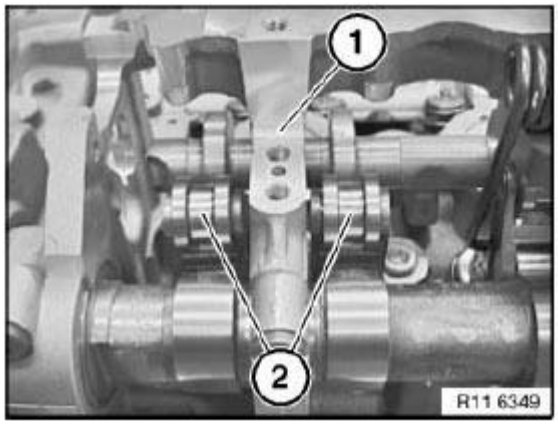

Fig. 602: Identifying Contact Surface Of Gate And Intermediate Levers
Courtesy of BMW OF NORTH AMERICA, INC.

Fit gate (2) cleanly into opening.

Tighten screws (1) hand-tight.

Check that intermediate levers are in correct installation position.

Release screws (1) by a 1/4 turn.

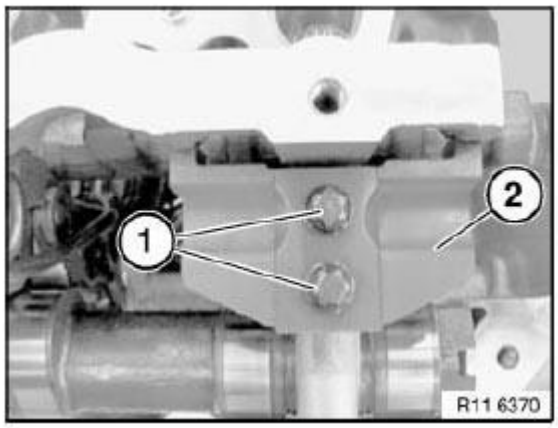

Fig. 603: Identifying Gate And Screws
Courtesy of BMW OF NORTH AMERICA, INC.

Secure special tool 11 4 450 to screw connection (1) of eccentric shaft.

Move eccentric lever (3) on special tool 11 4 450 in direction of arrow.

Gate is now pre-loaded.

Insert screws (2) of gates.

Tightening torque: 10 Nm

Installation note:

At cylinder no. 3, the gate can be pre-installed with one screw (internal) only.

Oil spray nozzle is fitted only after torsion spring has been installed.

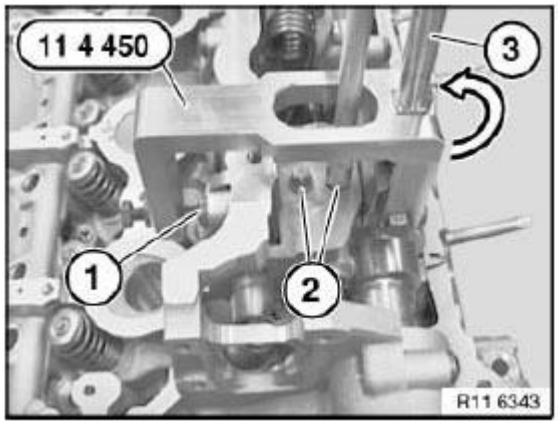

Fig. 604: Moving Eccentric Lever On Special Tool (11 4 450)
Courtesy of BMW OF NORTH AMERICA, INC.

Install torsion spring (2) on gate.

Installation note:

Insert torsion spring (2) in intermediate lever (1) (see arrow in **Fig. 605**).

Check that rocker arm (3) is in correct installation position.

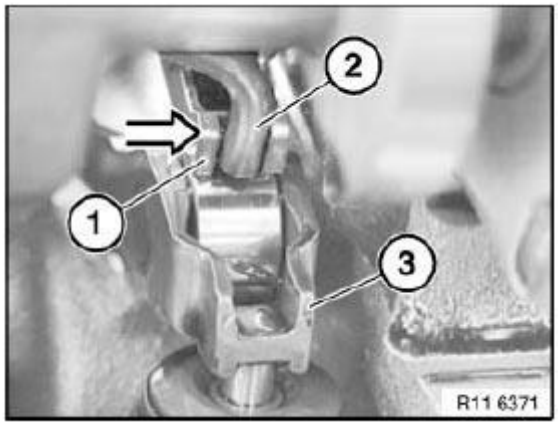

Fig. 605: Inserting Torsion Spring On Intermediate Lever
Courtesy of BMW OF NORTH AMERICA, INC.

Position special tool 11 7 110 on return spring.

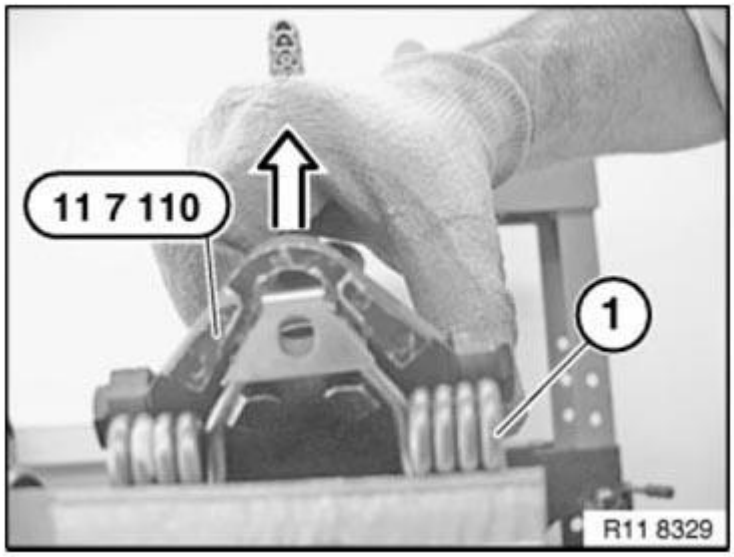

Fig. 606: Positioning Special Tool (11 7 110) On Return Spring
Courtesy of BMW OF NORTH AMERICA, INC.

Clamp return spring with knurled screw (1) in direction of arrow.

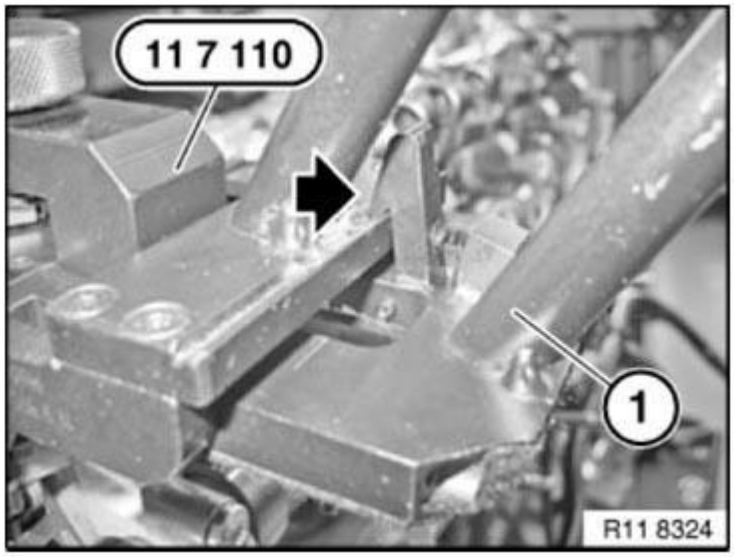

Fig. 607: Compressing Return Spring With Knurled Screw
Courtesy of BMW OF NORTH AMERICA, INC.

Return spring (1) is positioned correctly when catches (see arrows in **Fig. 608**) are surrounding return spring (1).

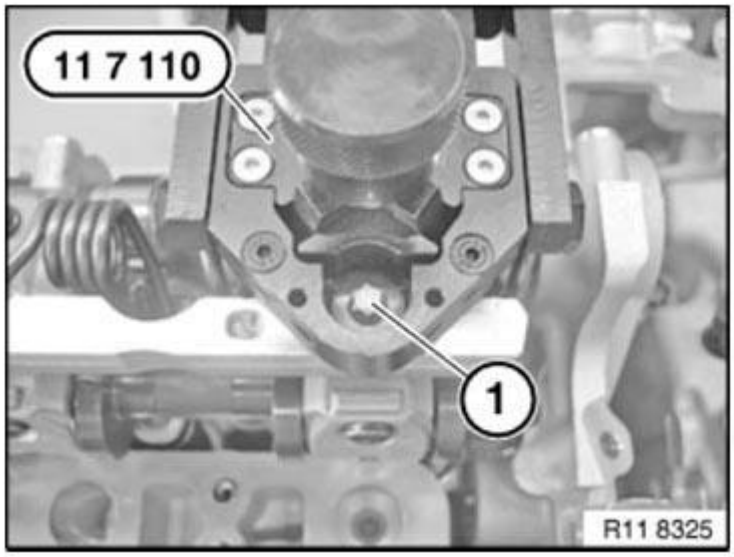

Fig. 608: Positioning Return Spring
Courtesy of BMW OF NORTH AMERICA, INC.

WARNING: Risk of injury in event of incorrect use.

IMPORTANT: Risk of damage from improper handling.
Check return spring on intermediate lever to ensure correct installation position.

Press special tool 11 7 110 to stop in direction of arrow.

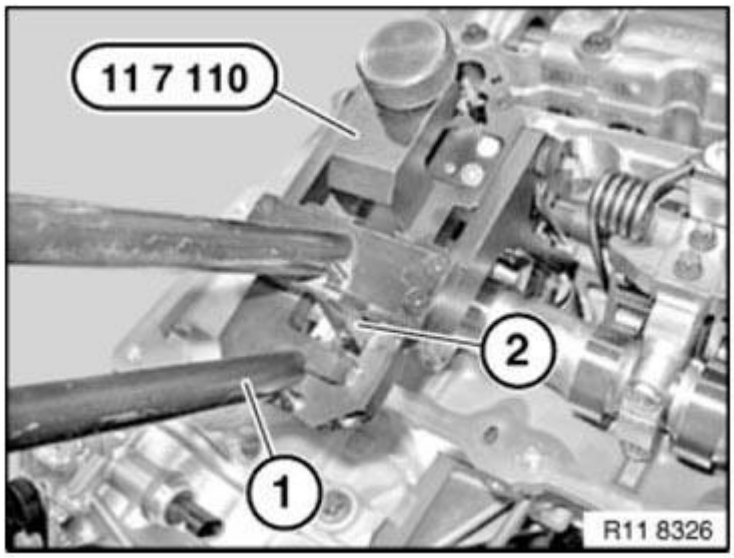

Fig. 609: Pressing Special Tool (11 7 110)
Courtesy of BMW OF NORTH AMERICA, INC.

IMPORTANT: Risk of damage!
Pay attention to thread on cylinder head.

Tighten bolt (1).

Tightening torque: 10 Nm

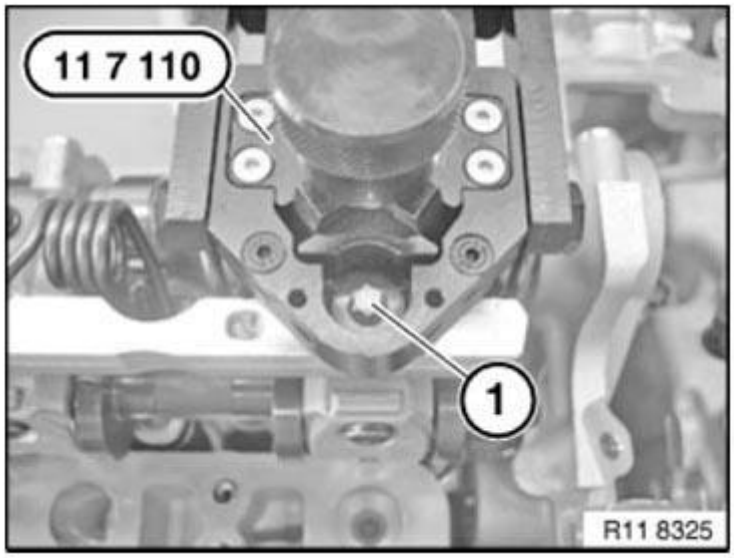

Fig. 610: Tightening Bolt
Courtesy of BMW OF NORTH AMERICA, INC.

At cylinder no. 3, adjust oil spray nozzle (2) so that oil spray points precisely towards gearing (3).

Insert screw (1) with oil spray nozzle (2) (external).

Tightening torque: 9 Nm

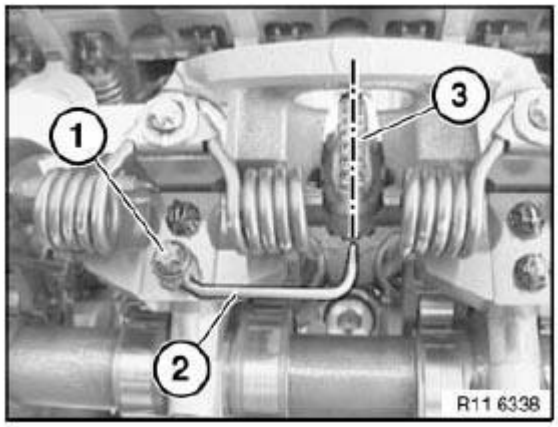

Fig. 611: Identifying Oil Spray Nozzle With Spray
Courtesy of BMW OF NORTH AMERICA, INC.

Assemble engine.

11 37 010 REMOVING AND INSTALLING/REPLACING INTERMEDIATE LEVERS (N52K)

IMPORTANT: Aluminium-magnesium materials.

No steel screws/bolts may be used due to the threat of electrochemical corrosion.

A magnesium crankcase requires aluminium screws/bolts exclusively.

Aluminium screws/bolts must be replaced each time they are released .

Aluminium screws/bolts are permitted with and without color coding (blue).

For reliable identification:

Aluminium screws/bolts are not magnetic .

Jointing torque and angle of rotation must be observed without fail (risk of damage).

NOTE: There are 2 different versions of the gate

IMPORTANT: Establish size of gates.

Version 1: Size 55.2 mm

Version 2: Size 58 mm

Version 1

Size (1) 55.2 mm

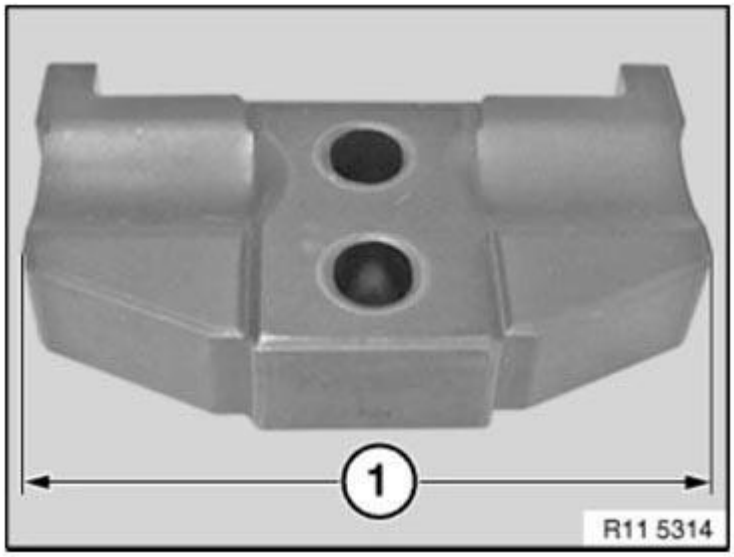

Fig. 612: Identifying Gate Dimension
Courtesy of BMW OF NORTH AMERICA, INC.

Necessary preliminary tasks:

- Remove **CYLINDER HEAD COVER**
- Remove **COWL PANEL COVER**

If necessary, move eccentric shaft (1) on twin surface to minimum lift (2).

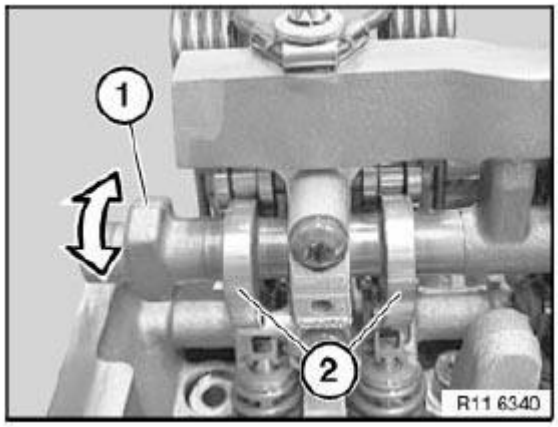

Fig. 613: Moving Eccentric Shaft
Courtesy of BMW OF NORTH AMERICA, INC.

NOTE: The oil spray nozzle must be removed beforehand from cylinder no. 3 (make a note of installation position of oil spray nozzle).

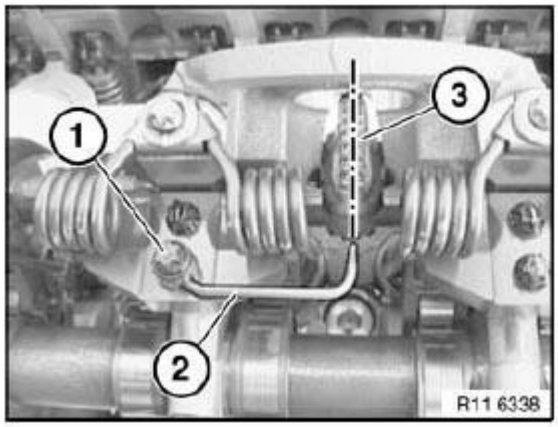

Fig. 614: Identifying Screw With Oil Spray Nozzle
Courtesy of BMW OF NORTH AMERICA, INC.

Secure special tool 11 4 270 to gate (2) using locking pliers (3).

IMPORTANT: Special tool 11 4 270 is only secured to gate (2).
The position of the locking pliers (3) on the special tool 11 4 270 must not be altered. Risk of damage!

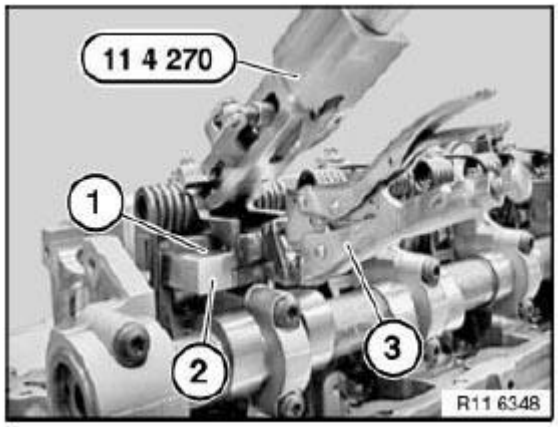

Fig. 615: Identifying Special Tool (11 4 270)
Courtesy of BMW OF NORTH AMERICA, INC.

WARNING: Risk of injury in event of incorrect use.

IMPORTANT: Improper handling. Risk of damage!

Secure both bearing pins (2) in torsion springs with knurled screw (1) of special tool 11 4 270.

Press special tool 11 4 270 to stop in direction of arrow.

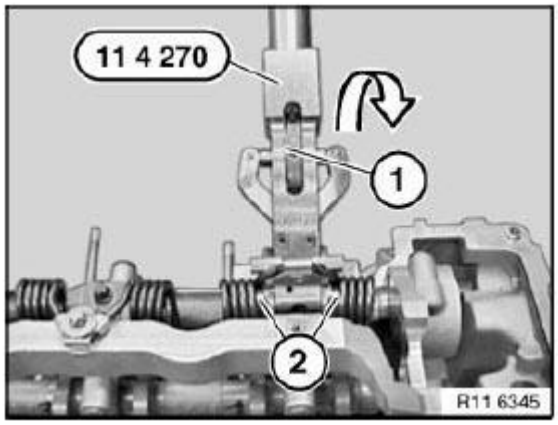

Fig. 616: Identifying Special Tool (11 4 270)
Courtesy of BMW OF NORTH AMERICA, INC.

Release screw (2) of torsion spring.

IMPORTANT: Risk of damage to cylinder head thread.

To avoid misalignment of screw (2) with torsion spring, it is necessary when releasing screw (2) to relieve the preload on the special tool 11 4 270 evenly.

Tightening torque: 10 Nm

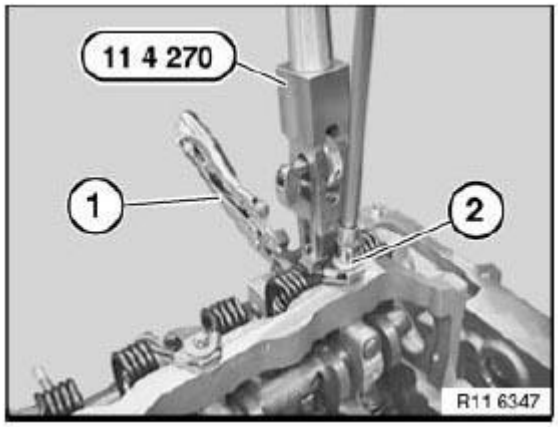

Fig. 617: Releasing Screw Of Torsion Spring
Courtesy of BMW OF NORTH AMERICA, INC.

Release tension on torsion spring (1) with special tool 11 4 270.

NOTE: Sheet metal tab (2) can not be disassembled and must not be removed.

Installation note:

Replace metal tab if tab washer is defective.

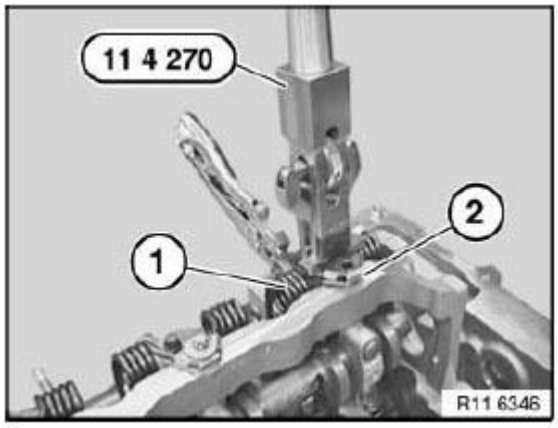

Fig. 618: Replacing Tension On Torsion Spring Using Special Tool (11 4 270)
Courtesy of BMW OF NORTH AMERICA, INC.

Press torsion spring apart at position (1) and remove towards top.

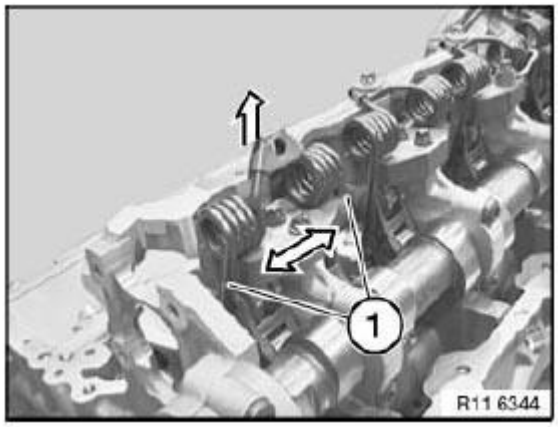

Fig. 619: Removing Torsion Spring
Courtesy of BMW OF NORTH AMERICA, INC.

IMPORTANT: Uniform distribution must not be changed.
All components must be set down in a clean and orderly fashion.

All components must be reinstalled in the same positions in an engine which has already been in use.

1. Eccentric shaft with bearing
2. Bearing caps of eccentric shaft (set out in order)
3. Intake camshaft
4. Bearing caps of intake camshaft (set out in order)
5. Intake valves with valve springs

6. Valve heads and valve keys
7. Rocker arms with followers with hydraulic valve clearance compensating element (set out in order)
8. Torsion springs.
9. Gates (set out in order)
10. Intermediate levers (set out in order)

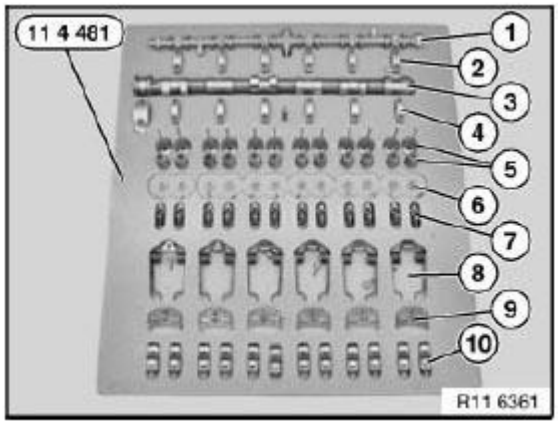

Fig. 620: Identifying Components On Special Tool (11 4 481)
Courtesy of BMW OF NORTH AMERICA, INC.

Release screws (1) on gate (2).

Tightening torque: 10 Nm

Place all gates (2) in neat order in special tool 11 4 481.

Installation note:

Mixing up the gates may cause the engine to demonstrate idle fluctuations.

This will result in maladjustment of **uniform distribution** .

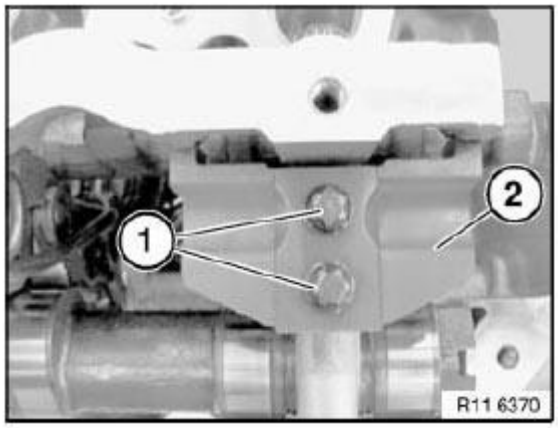

Fig. 621: Identifying Gate And Screws
Courtesy of BMW OF NORTH AMERICA, INC.

Installation note:

Contact surfaces (1) must be clean and free from oil and grease. If necessary, clean contact surfaces.

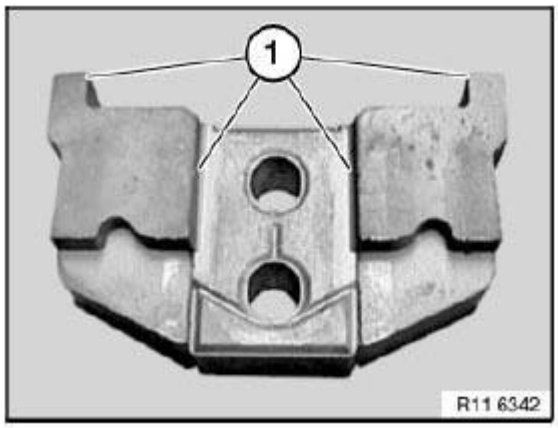

Fig. 622: Identifying Gate Contact Surfaces
Courtesy of BMW OF NORTH AMERICA, INC.

Lift out intermediate levers (2).

Place all intermediate levers (2) in neat order in special tool 11 4 481.

Installation note:

Mixing up the intermediate levers may cause the engine to demonstrate RPM fluctuations.

Installation note:

Contact surfaces (1) must be clean and free from oil and grease. If necessary, clean contact surfaces.

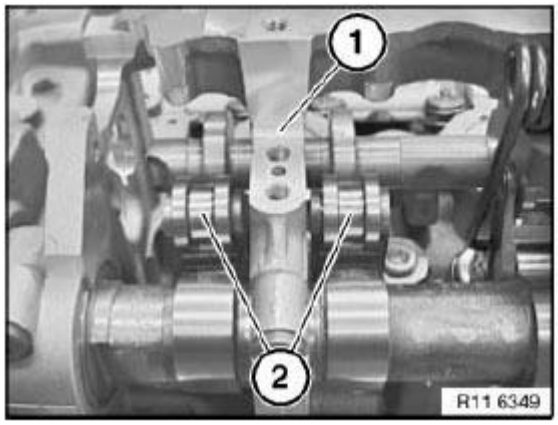

Fig. 623: Identifying Intermediate Levers
Courtesy of BMW OF NORTH AMERICA, INC.

All intermediate levers (1) are classified.

Reinstall intermediate levers which have already been used in the same positions.

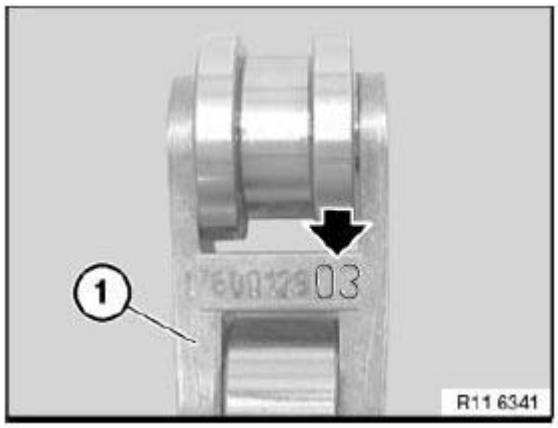

Fig. 624: Locating Marking On Intermediate Lever
Courtesy of BMW OF NORTH AMERICA, INC.

IMPORTANT: Before installing intermediate levers (2), make sure cam followers are correctly positioned (risk of damage).

Install intermediate levers (2).

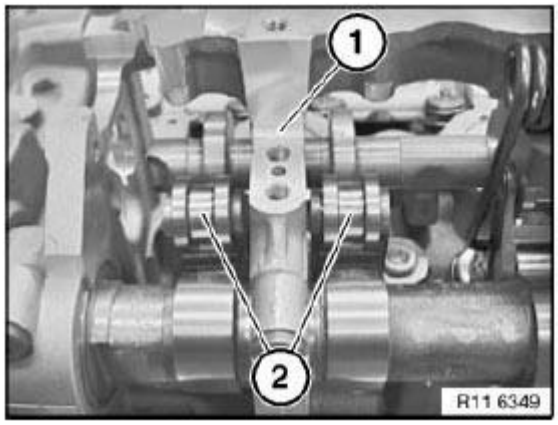

Fig. 625: Identifying Intermediate Levers
Courtesy of BMW OF NORTH AMERICA, INC.

Fit gate (2) cleanly into opening.

Tighten screws (1) hand-tight.

Check both intermediate levers again to ensure correct installation position.

Release screws (1) by a 1/4 turn.

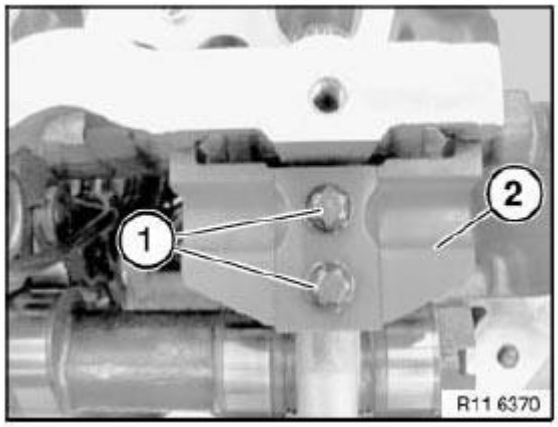

Fig. 626: Identifying Gate And Screws
Courtesy of BMW OF NORTH AMERICA, INC.

Secure special tool 11 4 450 to screw connection (1) of eccentric shaft.

Move eccentric lever (3) on special tool 11 4 450 in direction of arrow.

Gate is now pre-loaded.

Insert screws (2) of gates.

Tightening torque: 10 Nm

Installation note:

At cylinder no. 3, the gate can be pre-installed with one screw (internal) only.

Fit oil spray nozzle only after retaining spring has been fitted.

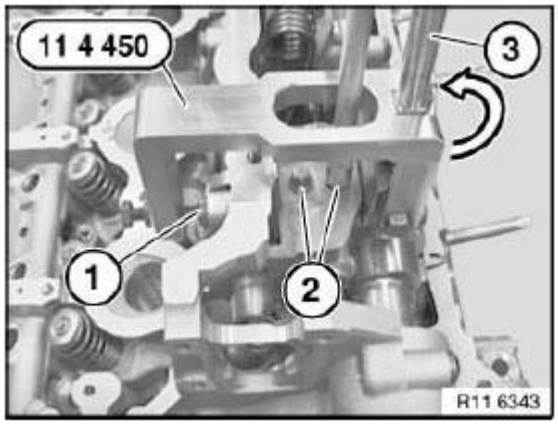

Fig. 627: Moving Eccentric Lever On Special Tool (11 4 450)
Courtesy of BMW OF NORTH AMERICA, INC.

Fit torsion spring on gate.

Installation note:

Insert torsion spring (2) in intermediate lever (1) (see arrow).

Check roller rocker arm (3) again to ensure correct installation position.

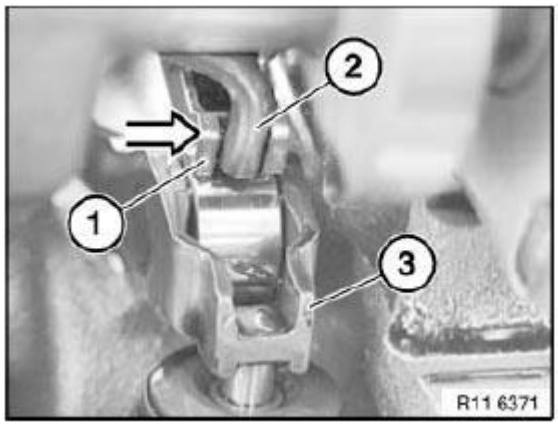

Fig. 628: Inserting Torsion Spring On Intermediate Lever
Courtesy of BMW OF NORTH AMERICA, INC.

Secure special tool 11 4 270 to gate (2) using locking pliers (3).

IMPORTANT: Special tool 11 4 270 is only secured to gate.
The position of the locking pliers (3) on the special tool 11 4 270 must not be altered (risk of damage).

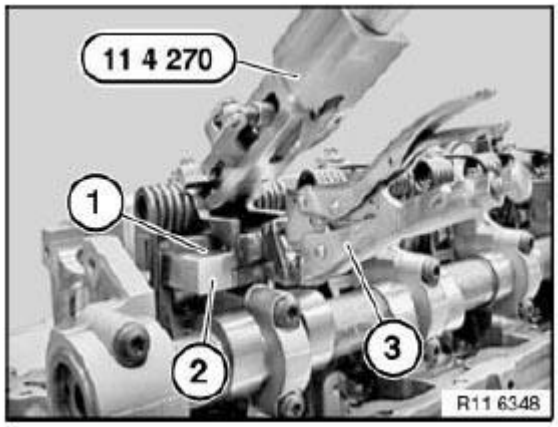

Fig. 629: Securing Special Tool (11 4 270) To Gate Using Locking Pliers
Courtesy of BMW OF NORTH AMERICA, INC.

WARNING: Risk of injury in event of incorrect use.

IMPORTANT: Risk of damage from incorrect handling.

Secure both bearing pins (2) in torsion springs with knurled screw (1) on special tool 11 4 270.

IMPORTANT: Check torsion spring again on intermediate lever to ensure correct installation position.

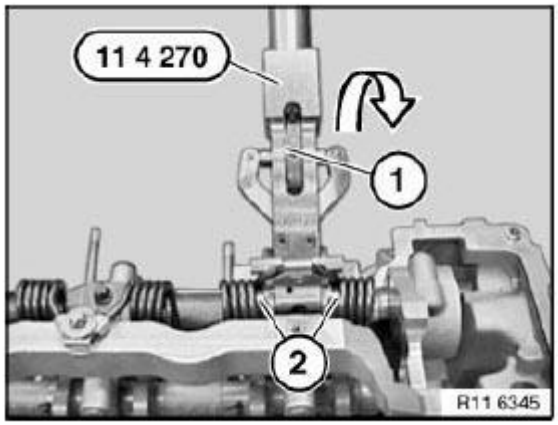

Fig. 630: Securing Bearing Pins Using Special Tool (11 4 270)
Courtesy of BMW OF NORTH AMERICA, INC.

Insert screw (2) of torsion spring.

Tightening torque: 10 Nm

To avoid jamming with screw (2) and torsion spring, it is necessary when inserting screw (2) to increase the preload on special tool 11 4 270 uniformly.

IMPORTANT: Risk of damage to cylinder head thread.

Tightening torque: 10 Nm

Remove special tool 11 4 270.

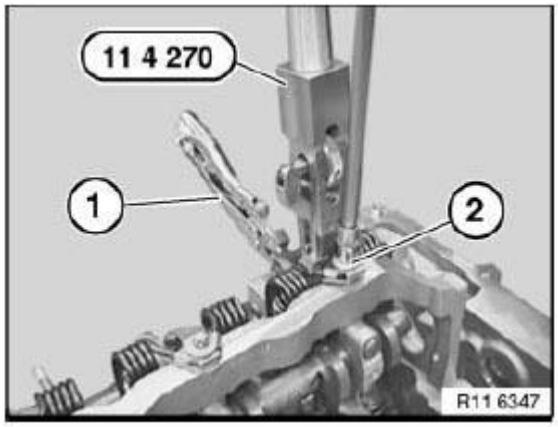

Fig. 631: Inserting Screw Of Torsion Spring
Courtesy of BMW OF NORTH AMERICA, INC.

At cylinder no. 3, adjust oil spray nozzle (2) so that oil spray (3) points precisely towards gearing.

Insert screw (1) with oil spray nozzle (2) (external).

Tightening torque: 9 Nm

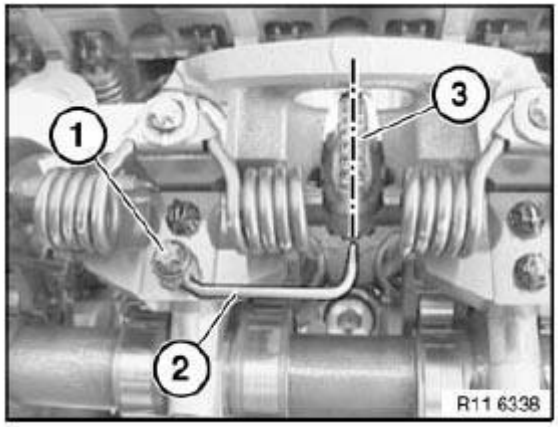

Fig. 632: Identifying Oil Spray Nozzle With Spray
Courtesy of BMW OF NORTH AMERICA, INC.

Assemble engine.

Version 2

Size (1) 58 mm

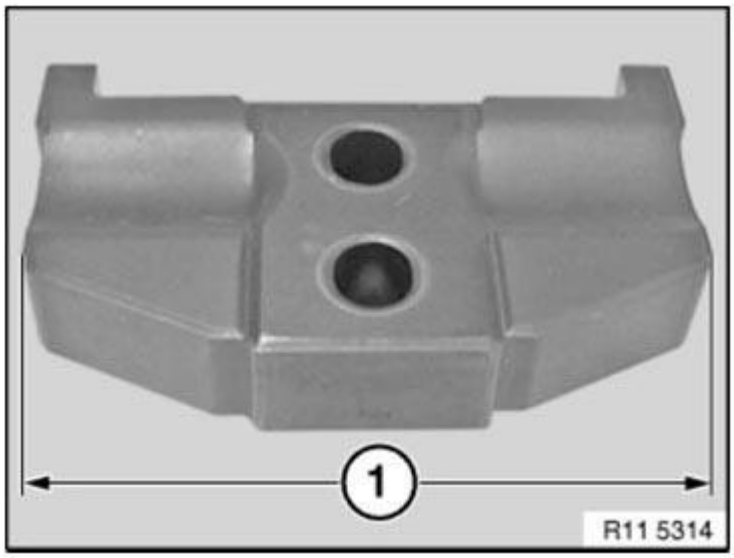

Fig. 633: Identifying Gate Dimension
Courtesy of BMW OF NORTH AMERICA, INC.

Necessary preliminary tasks:

- Remove **CYLINDER HEAD COVER**
- Remove **COWL PANEL COVER**

If necessary, move eccentric shaft (1) on mounting flats to minimum lift (2).

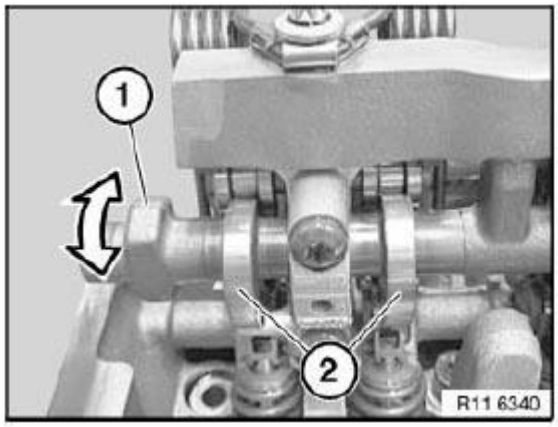

Fig. 634: Moving Eccentric Shaft
Courtesy of BMW OF NORTH AMERICA, INC.

NOTE: **Oil spray nozzle must be removed from 3rd cylinder (make a note of installation position of oil spray nozzle).**

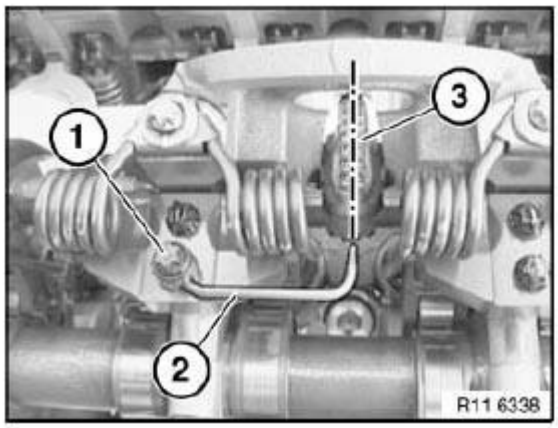

Fig. 635: Identifying Oil Spray Nozzle With Spray
Courtesy of BMW OF NORTH AMERICA, INC.

Position special tool 11 7 110 on return spring (1) (see arrows in **Fig. 636**).

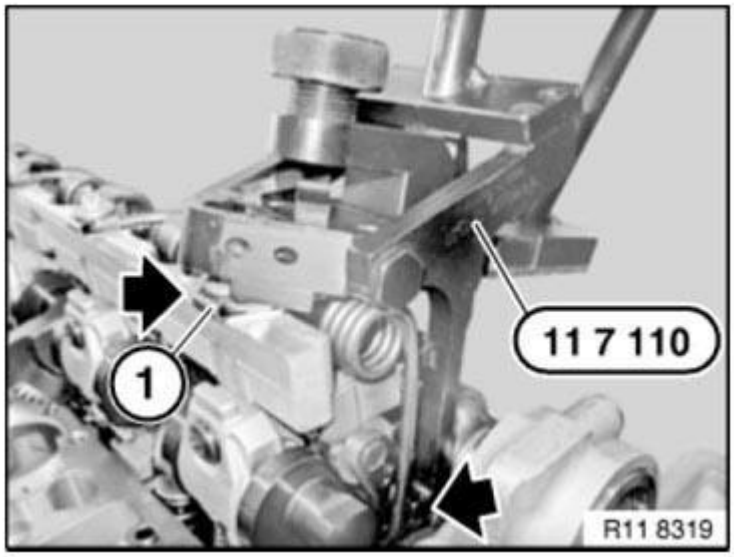

Fig. 636: Positioning Special Tool (11 7 110) On Return Spring
Courtesy of BMW OF NORTH AMERICA, INC.

WARNING: Risk of injury in event of incorrect use.

IMPORTANT: Risk of damage from improper handling.

Place special tool 11 7 110 flat on cylinder head.

Turn knurled screw (1) in direction of arrow until both clamping levers secure return spring in gate.

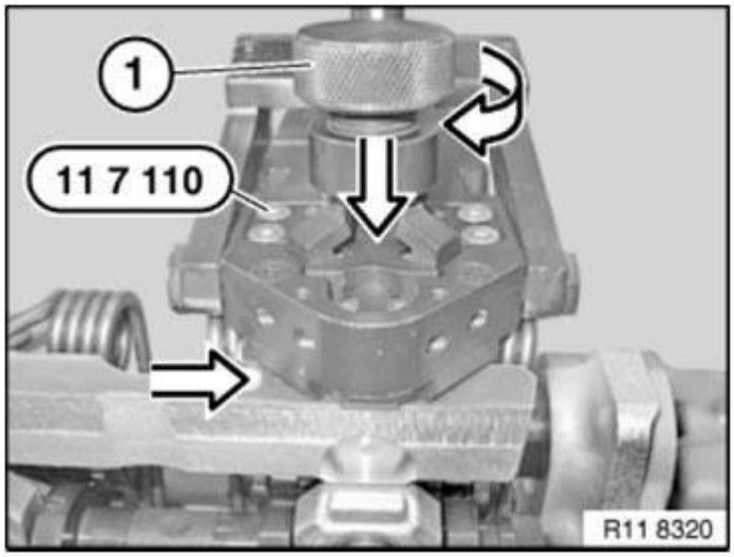

Fig. 637: Turning Knurled Screw
Courtesy of BMW OF NORTH AMERICA, INC.

Return spring is correctly preloaded when both clamping levers are parallel to gate.

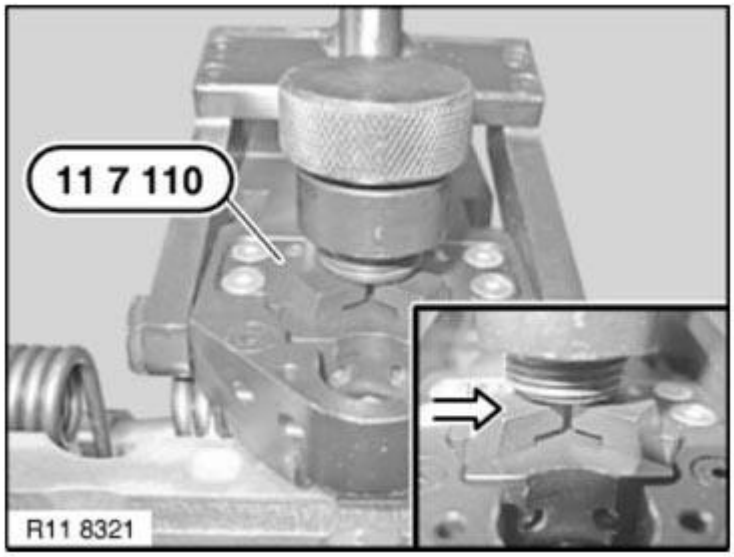

Fig. 638: Identifying Special Tool (11 7 110)
Courtesy of BMW OF NORTH AMERICA, INC.

IMPORTANT: Risk of damage!

Left and right return springs (1) must be positioned in lateral guide of special tool 11 7 110.

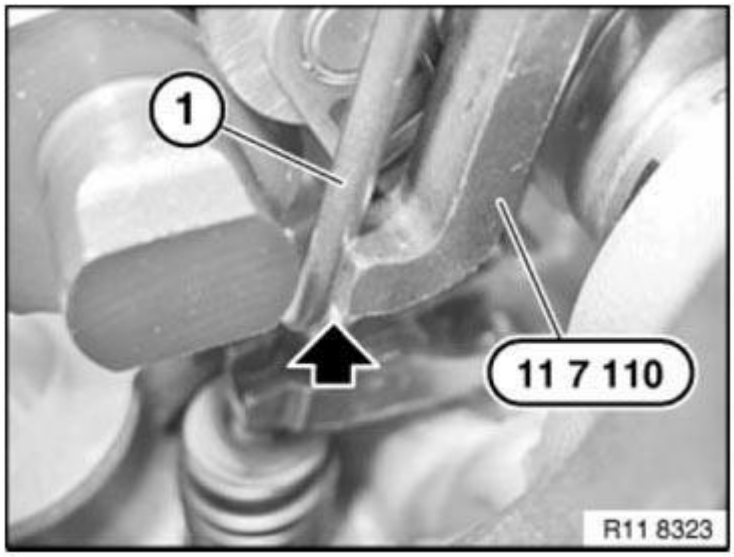

Fig. 639: Positioning Return Spring
Courtesy of BMW OF NORTH AMERICA, INC.

Preload return spring with lever (1) on special tool 11 7 110 in direction of arrow.

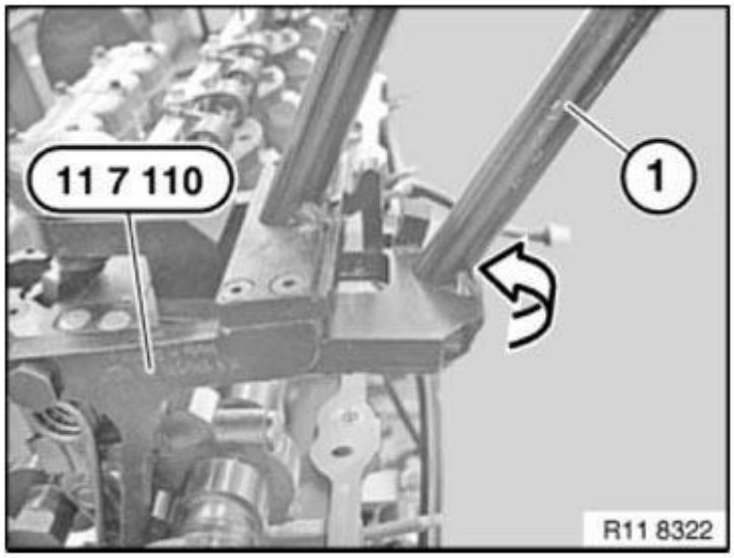

Fig. 640: Preloading Return Spring On Special Tool (11 7 110)
Courtesy of BMW OF NORTH AMERICA, INC.

Lock special tool 11 7 110 with catch on lever (1).

IMPORTANT: Screw connection on return spring can only be released with special tool 11 7 110 secured.

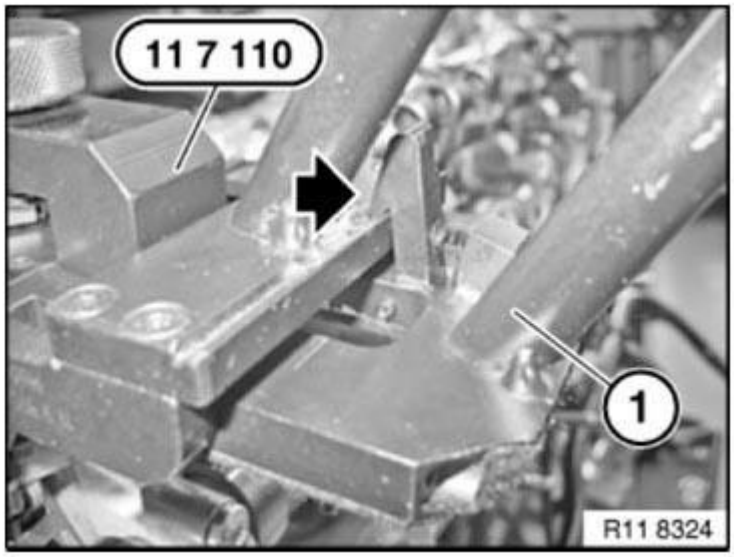

Fig. 641: Locking Special Tool (11 7 110) On Lever
Courtesy of BMW OF NORTH AMERICA, INC.

Release screw (1).

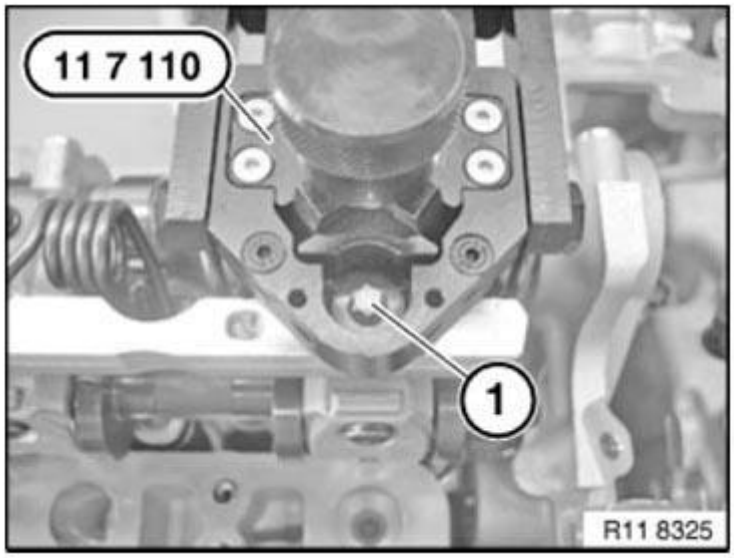

Fig. 642: Releasing Screw
Courtesy of BMW OF NORTH AMERICA, INC.

WARNING: Risk of injury in event of incorrect use.
Lever (1) is pre-loaded.

IMPORTANT: Risk of damage from improper handling.

Secure lever (1)

Press back latching hook (2).

Return spring tension can now be released.

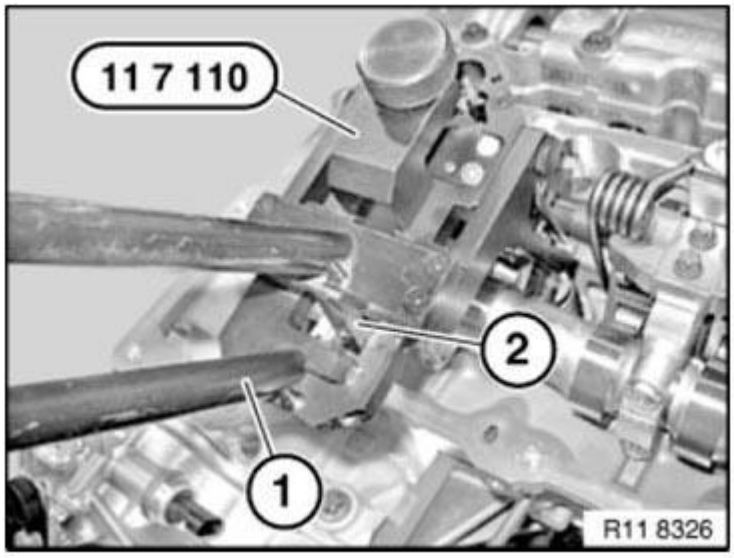

Fig. 643: Pressing Latching Hook
Courtesy of BMW OF NORTH AMERICA, INC.

Release knurled screw (1) on special tool 11 7 110 in direction of arrow.

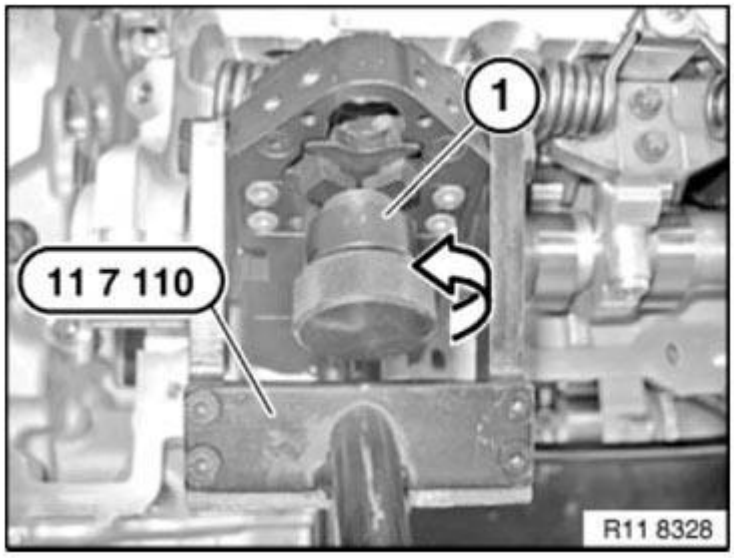

Fig. 644: Releasing Knurled Screw On Special Tool (11 7 110)
Courtesy of BMW OF NORTH AMERICA, INC.

Release special tool 11 7 110 in direction of arrow from return spring (1).

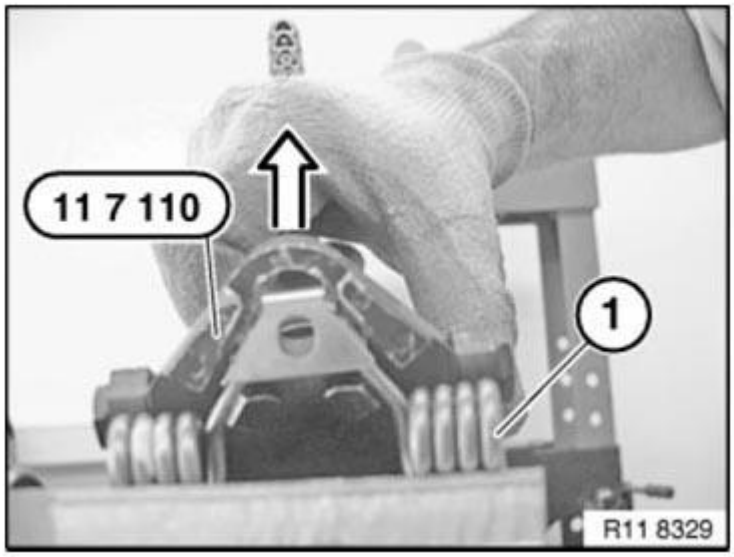

Fig. 645: Releasing Special Tool (11 7 110)
Courtesy of BMW OF NORTH AMERICA, INC.

Press torsion spring apart at positions (1).

Remove torsion spring towards top.

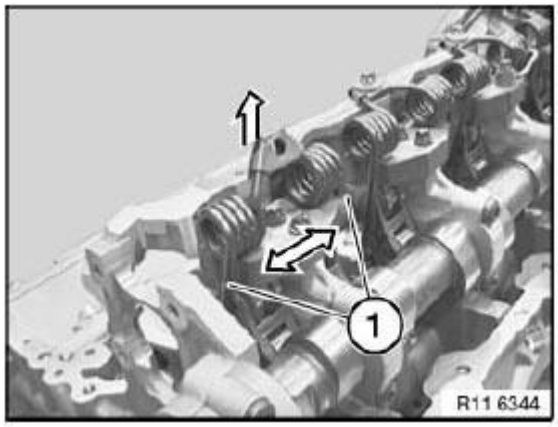

Fig. 646: Removing Torsion Spring
Courtesy of BMW OF NORTH AMERICA, INC.

IMPORTANT: Uniform distribution must not be changed.
Place all components in clean and orderly condition in special tool 11 4 481.

All components must be reinstalled in the same positions in an engine which has already been in use.

1. Eccentric shaft with bearing
2. Bearing caps of eccentric shaft (set out in order)

3. Intake camshaft
4. Bearing caps of intake camshaft (set out in order)
5. Intake valves with valve springs
6. Valve heads and valve keys
7. Rocker arm with hydraulic valve clearance compensating element (set out in order)
8. Torsion springs
9. Gates (set out in order)
10. Intermediate levers (set out in order)

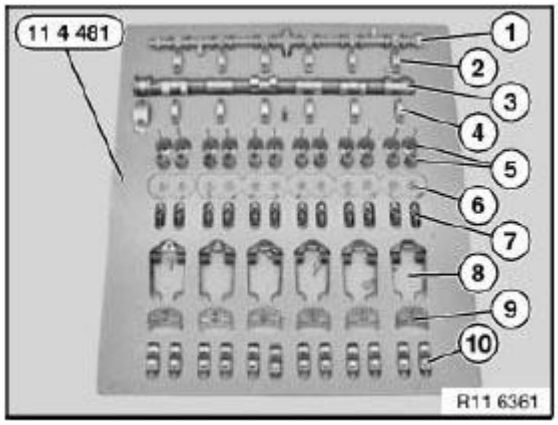

Fig. 647: Identifying Intermediate Lever Components On Special Tool
Courtesy of BMW OF NORTH AMERICA, INC.

Release screws (1) on gate (2).

Tightening torque: 10 Nm

Place all gates (2) in neat order in special tool 11 4 481.

Installation note:

Mixing up the gates (2) will cause the engine to suffer idle-speed fluctuations.

This will result in maladjustment of **uniform distribution** .

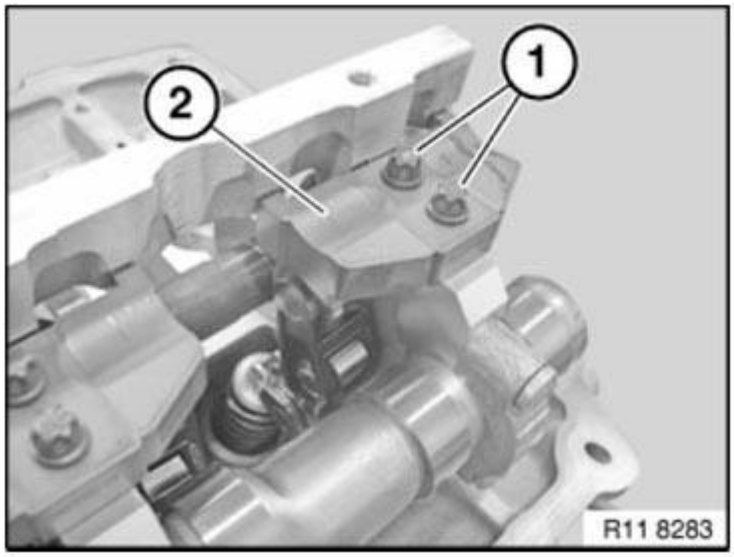

Fig. 648: Identifying Screws On Gate
Courtesy of BMW OF NORTH AMERICA, INC.

Installation note:

All contact surfaces (1) of gate must be clean and free from oil and grease. If necessary, clean contact surfaces (1).

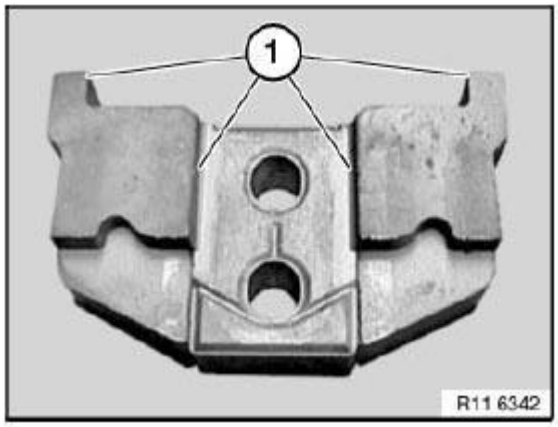

Fig. 649: Identifying Contact Surface Of Gate
Courtesy of BMW OF NORTH AMERICA, INC.

Lift out intermediate levers (2).

Place all intermediate levers (2) in neat order in special tool 11 4 481.

Installation note:

Mixing up the intermediate levers (2) will cause the engine to suffer idle-speed fluctuations.

Installation note:

All contact surfaces (1) must be clean and free from oil and grease. If necessary, clean contact surfaces (1).

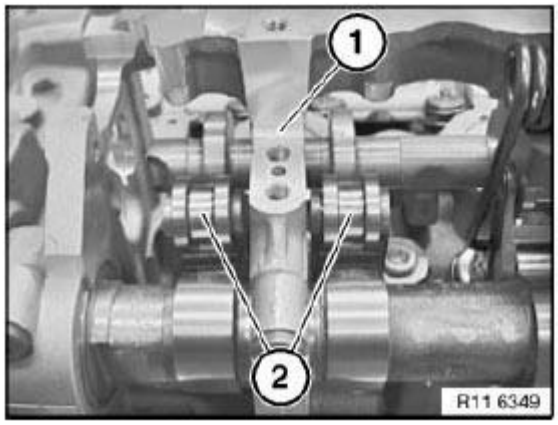

Fig. 650: Identifying Contact Surface Of Gate
Courtesy of BMW OF NORTH AMERICA, INC.

All intermediate levers (1) are classified.

All intermediate levers (1) must be reinstalled in the same positions in an engine which has already been in use.

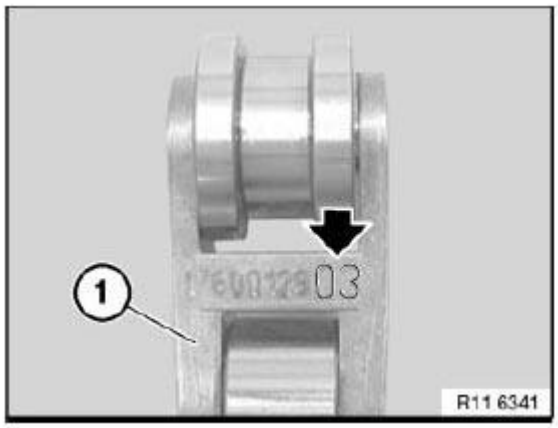

Fig. 651: Locating Marking On Intermediate Levers
Courtesy of BMW OF NORTH AMERICA, INC.

IMPORTANT: Risk of damage!
Before installing intermediate levers (2), make sure cam followers are correctly positioned.

Install intermediate levers (2).

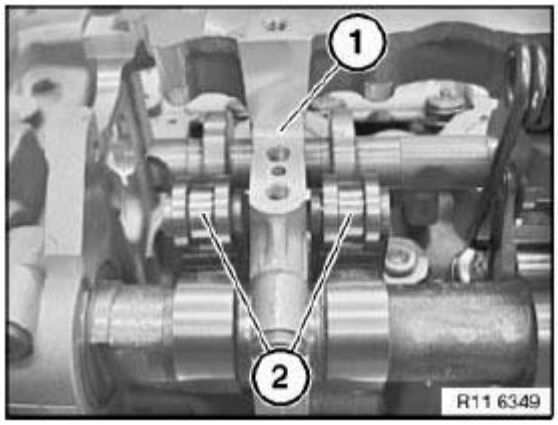

Fig. 652: Identifying Contact Surface Of Gate And Intermediate Levers
Courtesy of BMW OF NORTH AMERICA, INC.

Fit gate (2) cleanly into opening.

Tighten screws (1) hand-tight.

Check that intermediate levers are in correct installation position.

Release screws (1) by a 1/4 turn.

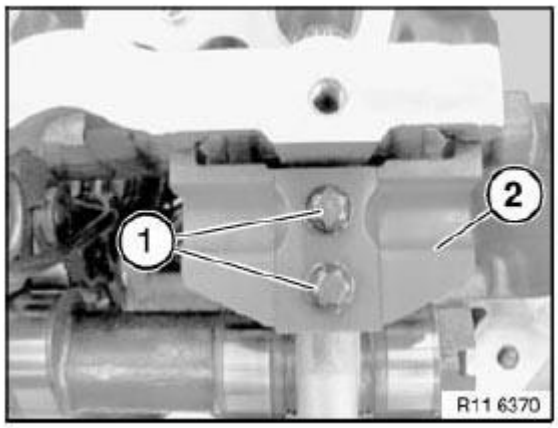

Fig. 653: Identifying Gate And Screws
Courtesy of BMW OF NORTH AMERICA, INC.

Secure special tool 11 4 450 to screw connection (1) of eccentric shaft.

Move eccentric lever (3) on special tool 11 4 450 in direction of arrow.

Gate is now pre-loaded.

Insert screws (2) of gates.

Tightening torque: 10 Nm

Installation note:

At cylinder no. 3, the gate can be pre-installed with one screw (internal) only.

Oil spray nozzle is fitted only after torsion spring has been installed.

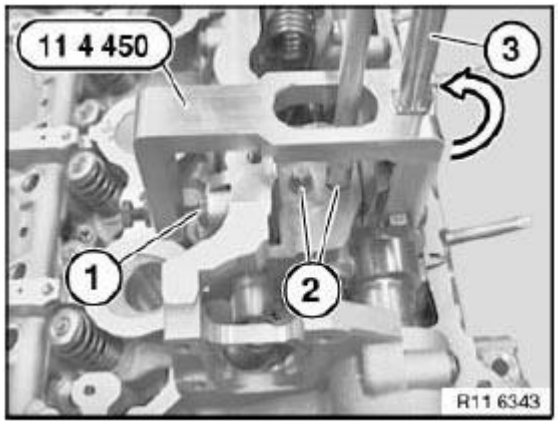

Fig. 654: Moving Eccentric Lever On Special Tool (11 4 450)
Courtesy of BMW OF NORTH AMERICA, INC.

Install torsion spring (2) on gate.

Installation note:

Insert torsion spring (2) in intermediate lever (1) (see arrow in **Fig. 655**).

Check that rocker arm (3) is in correct installation position.

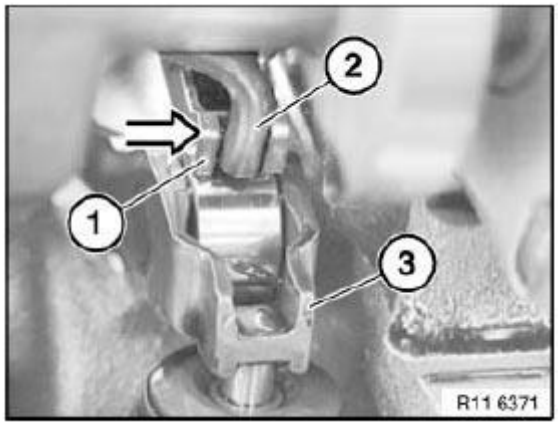

Fig. 655: Inserting Torsion Spring On Intermediate Lever
Courtesy of BMW OF NORTH AMERICA, INC.

Position special tool 11 7 110 on return spring.

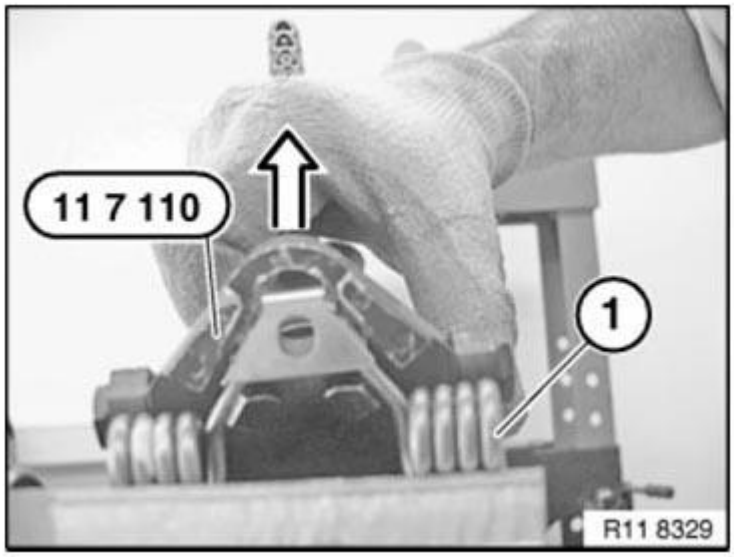

Fig. 656: Positioning Special Tool (11 7 110) On Return Spring
Courtesy of BMW OF NORTH AMERICA, INC.

Clamp return spring with knurled screw (1) in direction of arrow.

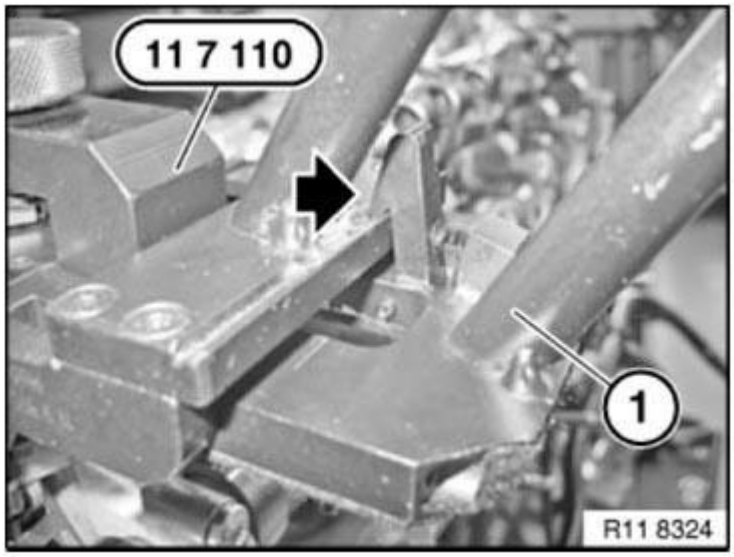

Fig. 657: Compressing Return Spring With Knurled Screw
Courtesy of BMW OF NORTH AMERICA, INC.

Return spring (1) is positioned correctly when catches (see arrows in **Fig. 658**) are surrounding return spring (1).

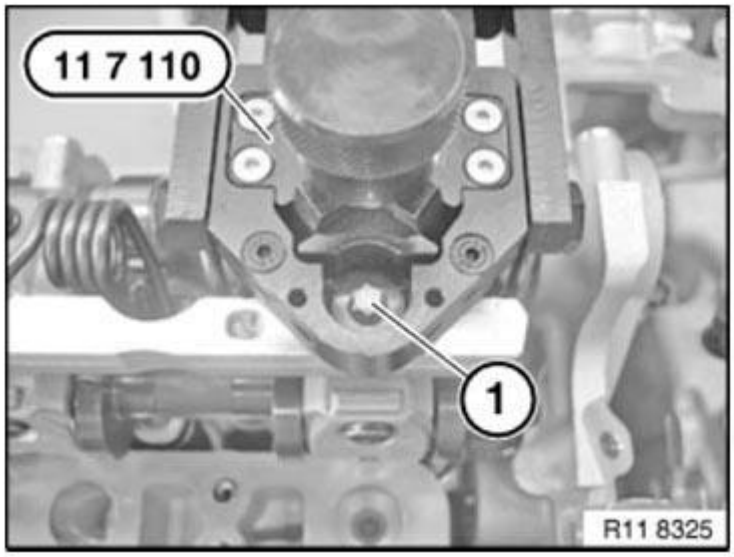

Fig. 658: Positioning Return Spring
Courtesy of BMW OF NORTH AMERICA, INC.

WARNING: Risk of injury in event of incorrect use.

IMPORTANT: Risk of damage from improper handling.
Check return spring on intermediate lever to ensure correct installation position.

Press special tool 11 7 110 to stop in direction of arrow.

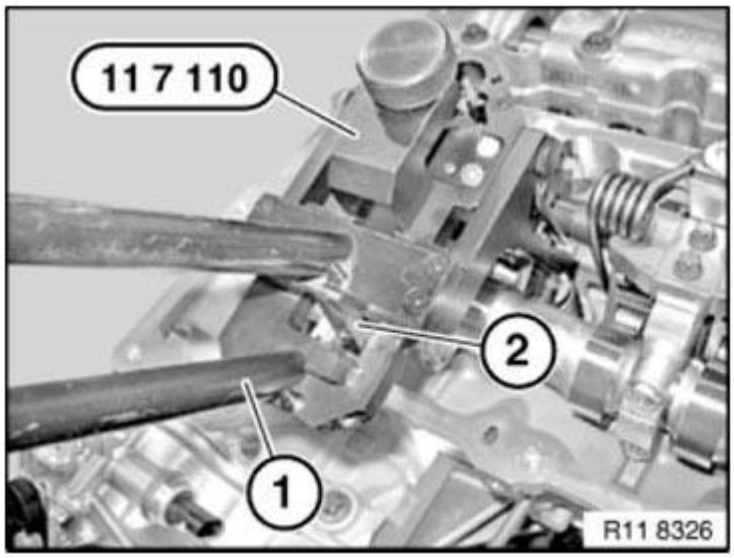

Fig. 659: Pressing Special Tool (11 7 110)
Courtesy of BMW OF NORTH AMERICA, INC.

IMPORTANT: Risk of damage!
Pay attention to thread on cylinder head.

Tighten bolt (1).

Tightening torque: 10 Nm

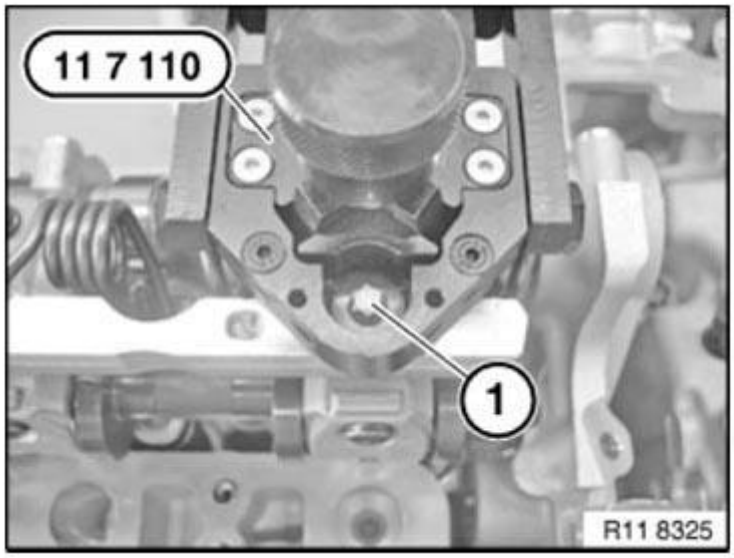

Fig. 660: Tightening Bolt
Courtesy of BMW OF NORTH AMERICA, INC.

At cylinder no. 3, adjust oil spray nozzle (2) so that oil spray points precisely towards gearing (3).

Insert screw (1) with oil spray nozzle (2) (external).

Tightening torque: 9 Nm

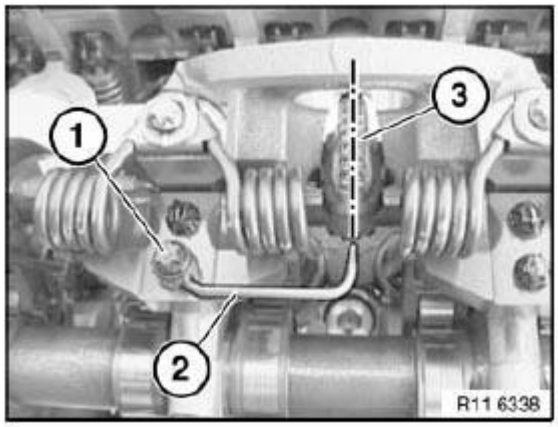

Fig. 661: Identifying Oil Spray Nozzle With Spray
Courtesy of BMW OF NORTH AMERICA, INC.

Assemble engine.

11 37 020 REMOVING AND INSTALLING/REPLACING POSITIONING MOTOR FOR ECCENTRIC SHAFT (N51)

IMPORTANT: Aluminium-magnesium materials.

No steel screws/bolts may be used due to the threat of electrochemical corrosion.

A magnesium crankcase requires aluminium screws/bolts exclusively.

Aluminium screws/bolts must be replaced each time they are released .

Aluminium screws/bolts are permitted with and without color coding (blue).

For reliable identification:

Aluminium screws/bolts are not magnetic .

Jointing torque and angle of rotation must be observed without fail (risk of damage).

Necessary preliminary tasks:

- Remove acoustic cover.
- Unfasten ignition wiring harness and lay to one side.
- Remove the two rod-type ignition coils next to electric motor.

IMPORTANT: The screw connection must not be released before the servodrive is in the service position.

Risk of damage to intermediate shaft.

Turn ratchet (1) with Allen key (2) clockwise in direction of arrow and relieve tension on intermediate shaft.

NOTE: Do not turn shaft (2) too far.

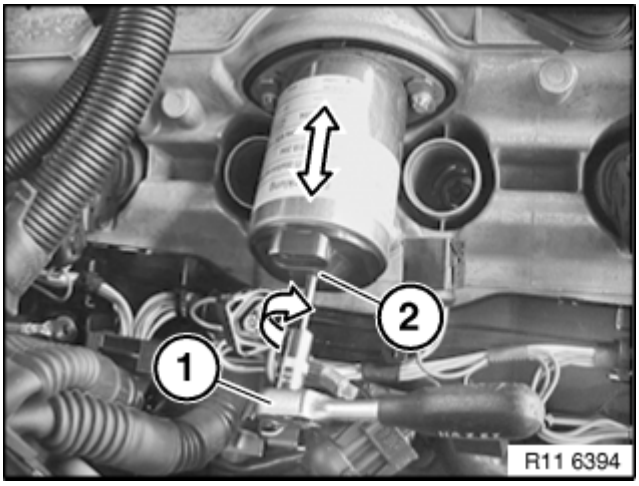

Fig. 662: Rachet, Allen Key And Removal Directions
Courtesy of BMW OF NORTH AMERICA, INC.

Release screws (3).

For tightening torque refer to 11 12 5AZ in **11 12 CYLINDER HEAD WITH COVER (1AZ-12AZ) [N51]** .

NOTE: Screw (4) is under servodrive.

Release screw (4).

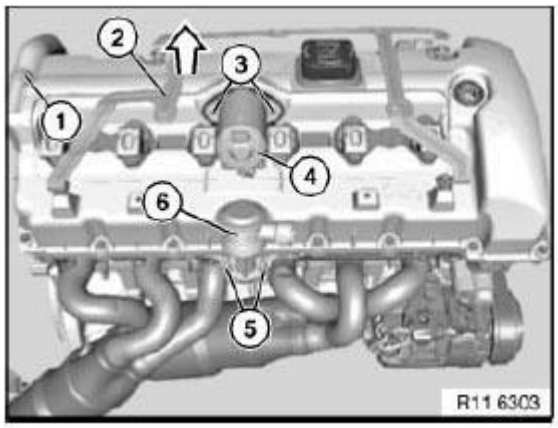

Fig. 663: Vent Hose, Bracket And Screws
Courtesy of BMW OF NORTH AMERICA, INC.

Turn servodrive with screw (2) counterclockwise in direction of arrow.

Servodrive can now be withdrawn in direction of arrow.

Installation:

All removed subassemblies are reinstalled in reverse sequence.

Screw in shaft (2) in counterclockwise direction until servodrive rests on flange of cylinder head cover.

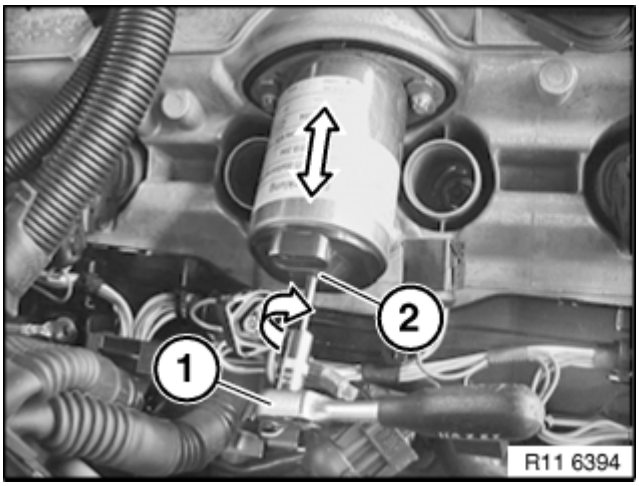

Fig. 664: Rachet, Allen Key And Removal Directions
Courtesy of BMW OF NORTH AMERICA, INC.

11 37 030 REMOVING AND INSTALLING/REPLACING ECCENTRIC SHAFT SENSOR (N51)

Necessary preliminary tasks:

- Remove **Cylinder Head Cover.**

IMPORTANT: All bolts are secured against falling out, release bolts (2) on cylinder head only but do not unscrew fully.

Bolts (2) can fall out.

Risk of damage to timing chain drive.

Unfasten screws (2).

Lift out sensor (1).

NOTE: Illustrations show timing chain removed.

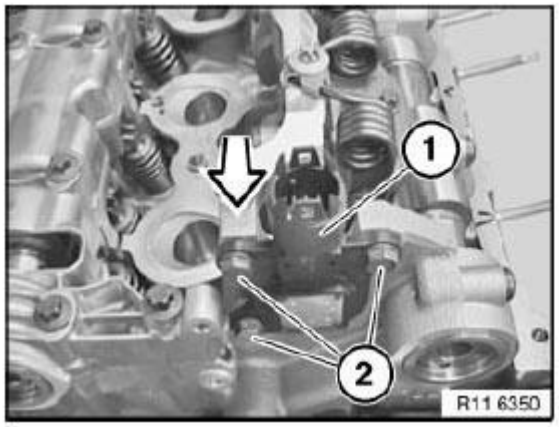

Fig. 665: Bolts And Eccentric Shaft Sensor
Courtesy of BMW OF NORTH AMERICA, INC.

Assemble engine.

Check function of DME.

OIL SUPPLY

11 40 000 CHECKING ENGINE OIL PRESSURE (N51)

Special tools required:

- 11 4 050
- 13 3 061
- 13 3 063
- 13 6 051
- 13 6 054

Necessary preliminary tasks:

- Remove acoustic cover.

Disconnect plug connection on oil pressure switch (1)

Remove oil pressure switch (2).

For tightening torque refer to 12 61 1AZ in **12 61 ENGINE OIL PRESSURE, ENGINE OIL TEMPERATURE, OIL CONDITION DISPLAY**

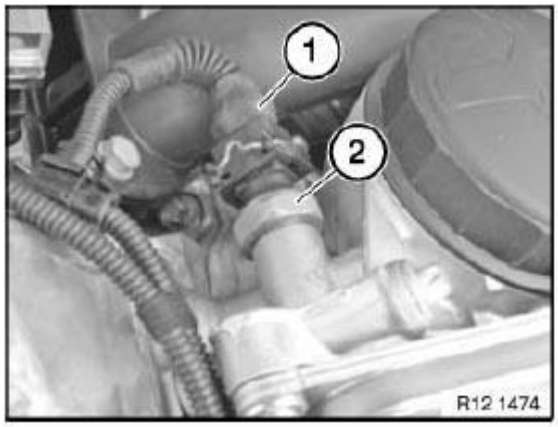

Fig. 666: Identifying Oil Pressure Sensor And Plug
Courtesy of BMW OF NORTH AMERICA, INC.

Screw in special tool 11 4 050 with sealing ring.

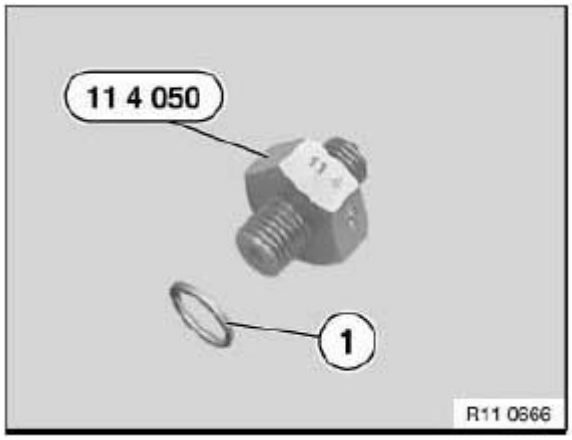

Fig. 667: Special Tool (11 4 050) And Sealing Ring
Courtesy of BMW OF NORTH AMERICA, INC.

Checking engine oil pressure with diagnosis tester:

Connect special tool 13 6 054 to special tool 13 6 051.

Checking engine oil pressure with pressure gauge:

Connect special tools 13 3 063 and 13 3 061.

Start engine and check engine oil pressure.

Specified values.

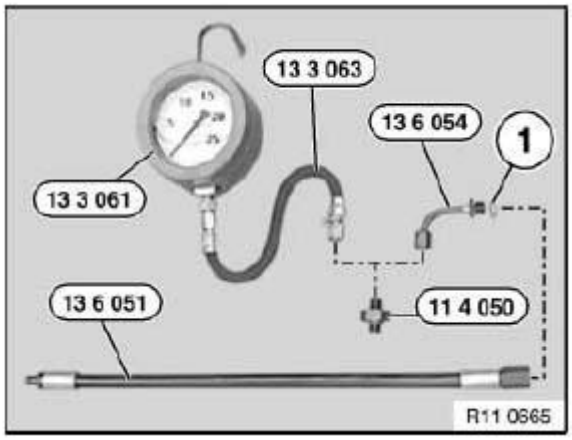

Fig. 668: Special Tools (13 3 063), (13 3 061), (13 6 054), (13 6 051) And (11 4 050)
Courtesy of BMW OF NORTH AMERICA, INC.

Assemble engine.

11 40 000 CHECKING ENGINE OIL PRESSURE (N52K)

Special tools required:

- 11 4 050
- 13 3 061
- 13 3 063
- 13 6 051
- 13 6 054

Necessary preliminary tasks:

- Remove **Ignition Coil Cover**

Disconnect plug connection on oil pressure switch (3) Remove oil pressure switch (3).

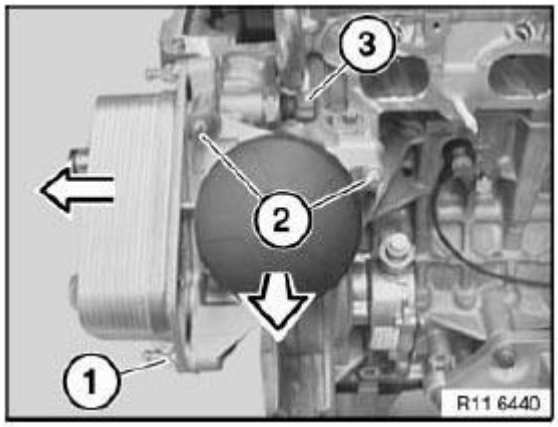

Fig. 669: Oil Pressure Switch And Removal Directions
Courtesy of BMW OF NORTH AMERICA, INC.

Install special tool 11 4 050 with sealing ring (1) in place of oil pressure switch.

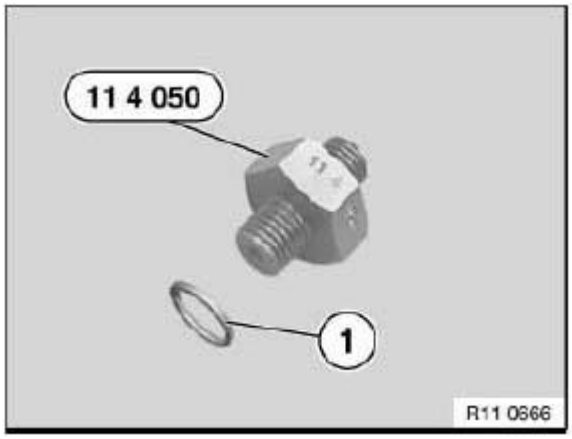

Fig. 670: Special Tool (11 4 050) And Sealing Ring
Courtesy of BMW OF NORTH AMERICA, INC.

Checking engine oil pressure with diagnosis tester:

Connect special tool 13 6 054 to special tool 11 4 050.

Connect special tool 13 6 051 with sealing ring (1) to special tool 13 6 054.

Checking engine oil pressure with pressure gauge:

Connect special tool 13 3 063 to special tool 11 4 050.

Connect special tool 13 3 061 to special tool 13 3 063.

Start engine and check engine oil pressure.

Specified values.

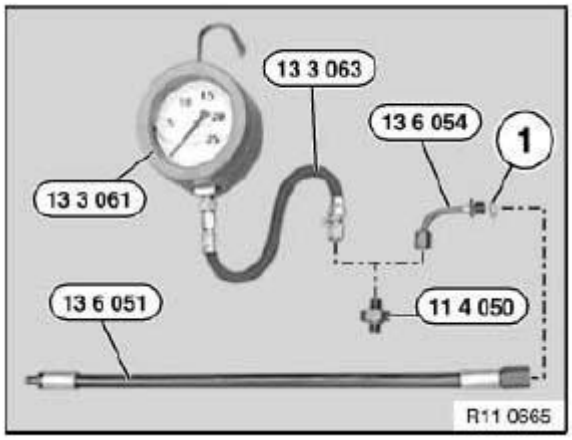

Fig. 671: Special Tools (13 3 063), (13 3 061), (13 6 054), (13 6 051) And (11 4 050)
Courtesy of BMW OF NORTH AMERICA, INC.

Assemble engine.

OIL PUMP WITH FILTER AND DRIVE

11 41 000 REMOVING AND INSTALLING OIL PUMP (N51)

Necessary preliminary tasks:

- Remove **Oil Pan.**

Release screws (1).

For tightening torque refer to 11 41 1AZ in **11 41 OIL PUMP WITH STRAINER AND DRIVE** .

Installation:

Replace aluminium screws.

Remove intake pipe (2) in direction of arrow.

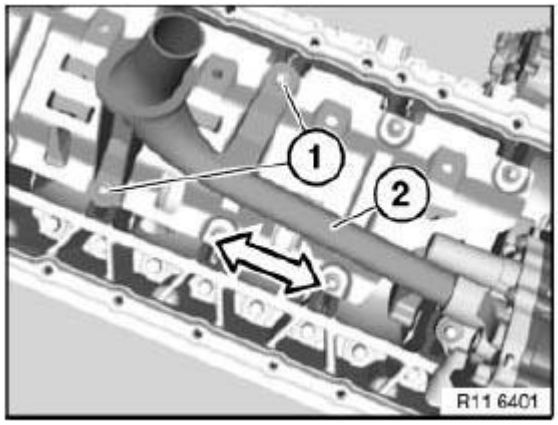

Fig. 672: Intake Pipe, Removal Direction And Screw
Courtesy of BMW OF NORTH AMERICA, INC.

NOTE: To release bolt (1), insert a 6 mm drill bit between sprocket wheel and oil pump housing.

Release screw (1).

For tightening torque refer to 11 41 4Z in **11 41 OIL PUMP WITH STRAINER AND DRIVE** .

Release screws (2).

For tightening torque refer to 11 41 3Z in **11 41 OIL PUMP WITH STRAINER AND DRIVE** .

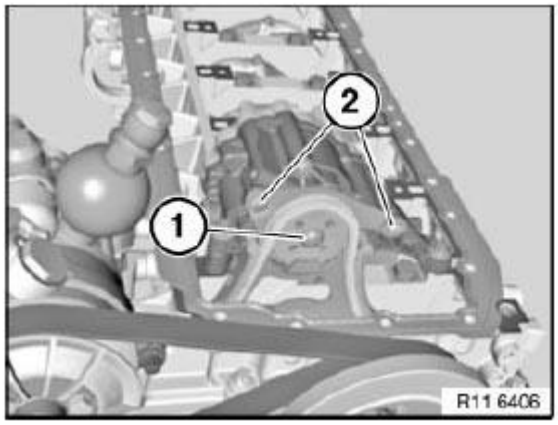

Fig. 673: Oil Pump Housing Bolt And Screw
Courtesy of BMW OF NORTH AMERICA, INC.

Release screws (1).

For tightening torque refer to 11 41 2AZ in **11 41 OIL PUMP WITH STRAINER AND DRIVE** .

Installation:

Replace aluminium screws.

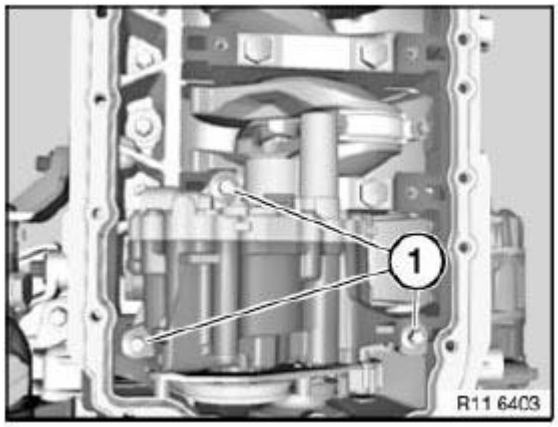

Fig. 674: Screws
Courtesy of BMW OF NORTH AMERICA, INC.

Detach sprocket wheel (1) in direction of arrow.

NOTE: Timing chain (3) of triangular drive is pressed upwards by chain tensioner.

Do not remove sprocket wheel.

Remove oil pump (2) in direction of arrow.

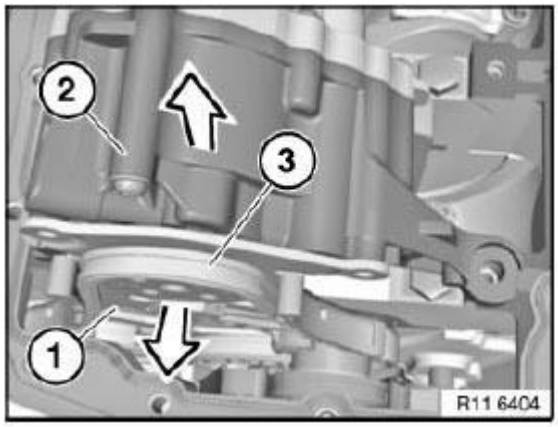

Fig. 675: Sprocket Wheel, Timing Chain And Oil Pump
Courtesy of BMW OF NORTH AMERICA, INC.

Installation:

Check spacer bushings (1) for secure seating and damage; replace if necessary.

Align twin surface (3) on oil pump (2) to sprocket wheel.

Install oil pump (2).

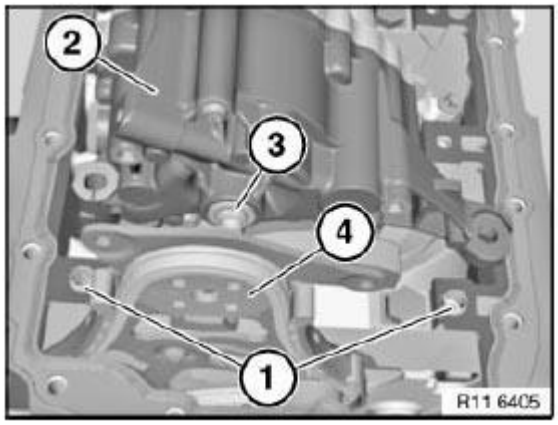

Fig. 676: Twin Surface, Oil Pump, Sprocket Wheel And Spacers
Courtesy of BMW OF NORTH AMERICA, INC.

Assemble engine.

11 41 000 REMOVING AND INSTALLING/REPLACING OIL PUMP (N52K)

Necessary preliminary tasks:

- Remove **oil sump**

Release screws (1).

For tightening torque refer to 11 41 1AZ in **11 41 OIL PUMP WITH STRAINER AND DRIVE** .

Installation:

Replace aluminium screws.

Remove intake pipe (2) in direction of arrow.

Installation:

Replace sealing ring.

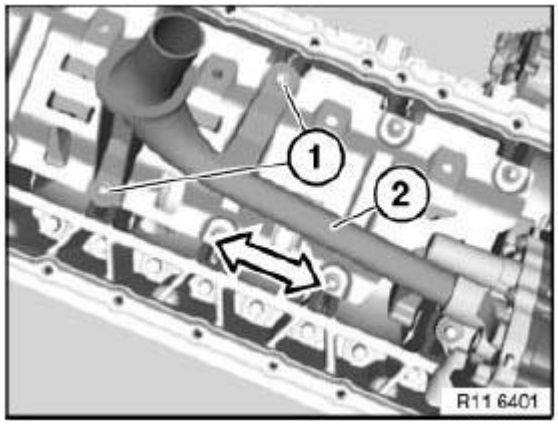

Fig. 677: Intake Pipe, Removal Direction And Screw
Courtesy of BMW OF NORTH AMERICA, INC.

NOTE: To release bolt (1), insert a 6 mm drill bit between sprocket wheel and oil pump housing.

Release bolt (1).

For tightening torque refer to 11 41 6AZ in **11 41 OIL PUMP WITH STRAINER AND DRIVE** .

Release screws (2).

For tightening torque refer to 11 41 5AZ in **11 41 OIL PUMP WITH STRAINER AND DRIVE** .

Installation:

Replace aluminium screws.

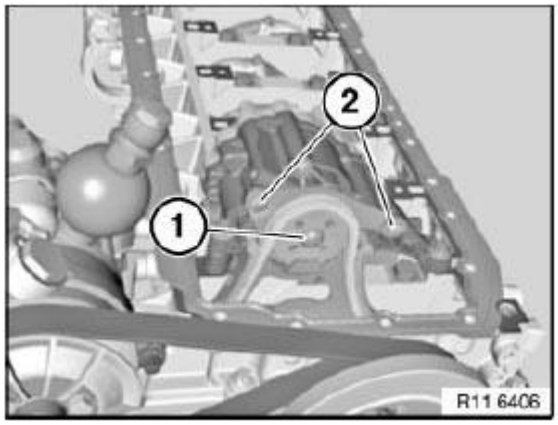

Fig. 678: Oil Pump Housing Bolt And Screw
Courtesy of BMW OF NORTH AMERICA, INC.

IMPORTANT: Observe different screw lengths.

Release screws (1).

For tightening torque refer to 11 41 2AZ in **11 41 OIL PUMP WITH STRAINER AND DRIVE** .

For tightening torque refer to 11 41 3AZ in **11 41 OIL PUMP WITH STRAINER AND DRIVE** .

Installation:

Replace aluminium screws.

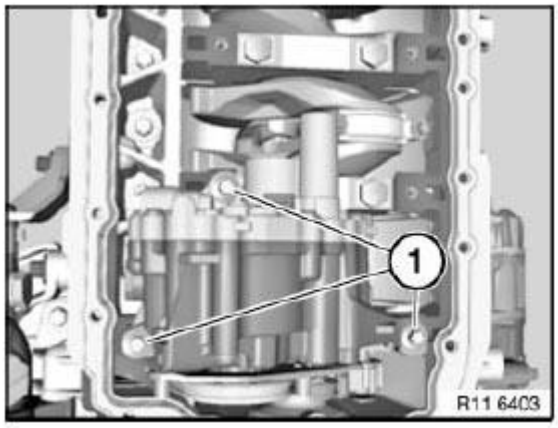

Fig. 679: Screws
Courtesy of BMW OF NORTH AMERICA, INC.

Detach sprocket wheel (1) in direction of arrow.

NOTE: Chain tensioner presses timing chain (3) upwards.

Do not remove sprocket wheel (1).

Remove oil pump (2) in direction of arrow.

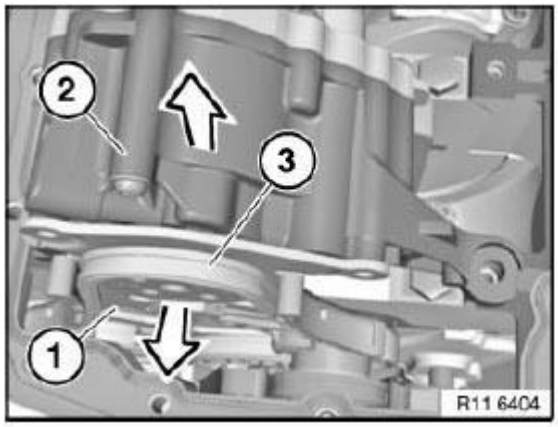

Fig. 680: Sprocket Wheel, Timing Chain And Oil Pump
Courtesy of BMW OF NORTH AMERICA, INC.

Installation:

Check spacers (1) for secure seating and damage; replace if necessary.

Align twin surface (3) on oil pump (2) to sprocket wheel (4).

Install oil pump (2).

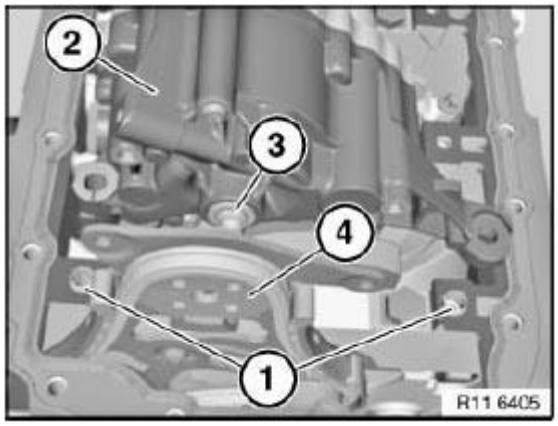

Fig. 681: Twin Surface, Oil Pump, Sprocket Wheel And Spacers
Courtesy of BMW OF NORTH AMERICA, INC.

Assemble engine.

11 41 010 REMOVING AND INSTALLING/REPLACING CHAIN MODULE FOR OIL PUMP/VACUUM PUMP (N51)

Special tools required:

- 11 0 290

- 11 0 300
- 11 4 120
- 11 4 280
- 11 4 360
- 11 4 362
- 11 4 440
- 11 5 200
- 11 9 280

IMPORTANT: Aluminium-magnesium materials.

No steel screws/bolts may be used due to the threat of electrochemical corrosion.

A magnesium crankcase requires aluminium screws/bolts exclusively.

Aluminium screws/bolts must be replaced each time they are released .

Aluminium screws/bolts are permitted with and without color coding (blue).

For reliable identification:

Aluminium screws/bolts are not magnetic .

Jointing torque and angle of rotation must be observed without fail (risk of damage).

Necessary preliminary tasks:

- Remove **Cylinder Head Cover**
- Remove **Engine Oil Sump**
- Remove **Drive Belt**
- Remove **Tensioner** for drive belt
- Remove **Vibration Damper** at front
- Remove **Sealing Cover** for vacuum pump

Turn sprocket wheel (3) at central bolt (crankshaft) into position.

Secure special tool 11 0 290 to sprocket wheel (3) and special tool 11 4 362.

Release screw (2).

For tightening torque refer to 11 66 2AZ in **11 66 VACUUM PUMP** .

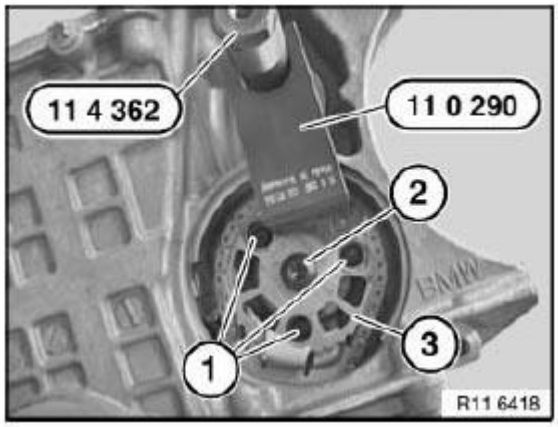

Fig. 682: Sprocket Wheel, Screw, Special Tool (11 0 290) And (11 4 362)
Courtesy of BMW OF NORTH AMERICA, INC.

Press timing chain with chain tensioner (1) in direction of arrow.

Disconnect timing chain with special tool 11 4 120.

Feed out sprocket wheel (3) at hexagon head of vacuum pump (4).

Installation:

A lock pin is pre-installed if the triangular drive is replaced.

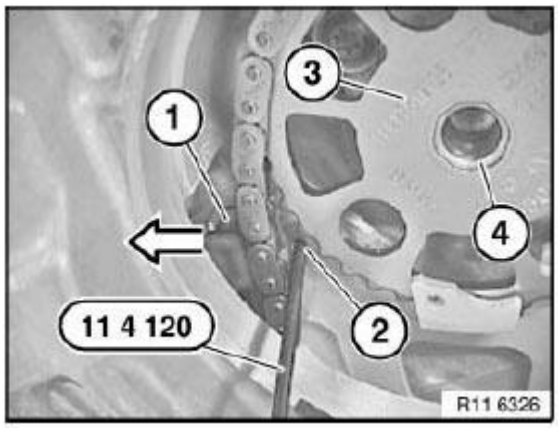

Fig. 683: Timing Chain Tensioner, Sprocket Wheel, Hexagon Head, Mounting Bar And Special Tool (11 4 120)
Courtesy of BMW OF NORTH AMERICA, INC.

Release screw (1) for sprocket wheel.

For tightening torque refer to 11 41 4AZ in **11 41 OIL PUMP WITH STRAINER AND DRIVE** .

Unfasten screws (2).

For tightening torque refer to 11 41 3AZ in **11 41 OIL PUMP WITH STRAINER AND DRIVE** .

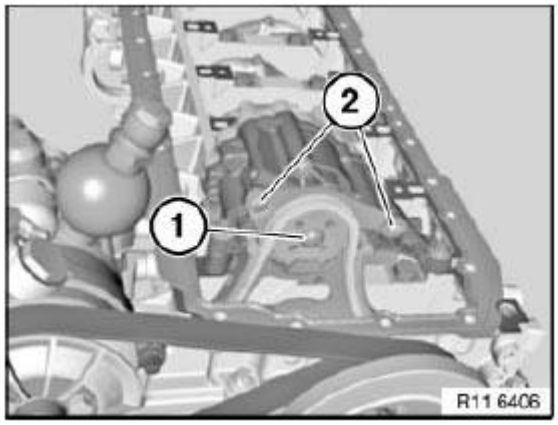

Fig. 684: Screw And Sprocket Wheel
Courtesy of BMW OF NORTH AMERICA, INC.

Secure **Crankshaft And Camshaft.**

Do **not** remove special tools 11 0 300 and 11 4 280.

Fit special tool 11 9 280.

Release central bolt (1).

NOTE: A second person is required.

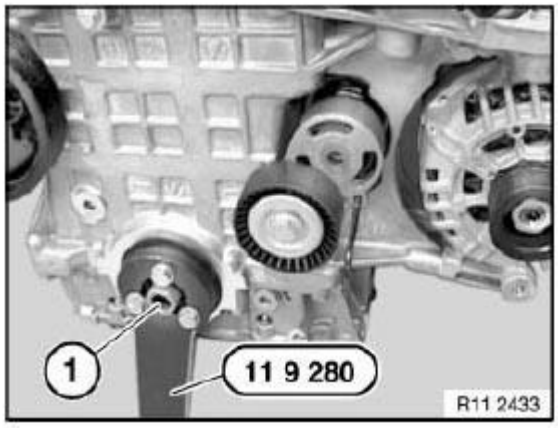

Fig. 685: Special Tool (11 9 280) And Central Bolt
Courtesy of BMW OF NORTH AMERICA, INC.

Remove hub (2) towards front.

Installation:

Replace **Radial Seal** at front.

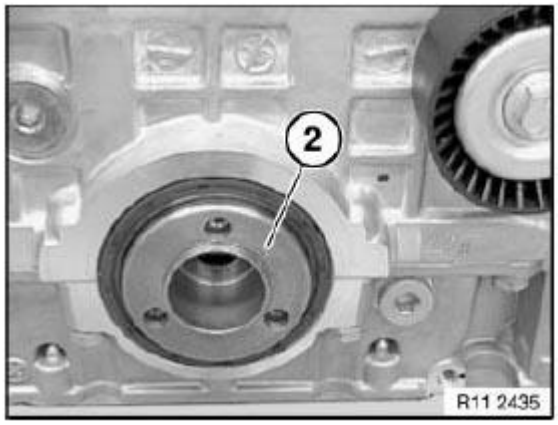

Fig. 686: Crankshaft Radial Seal
Courtesy of BMW OF NORTH AMERICA, INC.

Open screw plug on bedplate.

Installation:

Replace seal.

Release bolt on triangular drive.

For tightening torque refer to 11 41 3AZ in **11 41 OIL PUMP WITH STRAINER AND DRIVE** .

Installation:

Replace aluminium screws.

Remove triangular drive (1) in direction of arrow

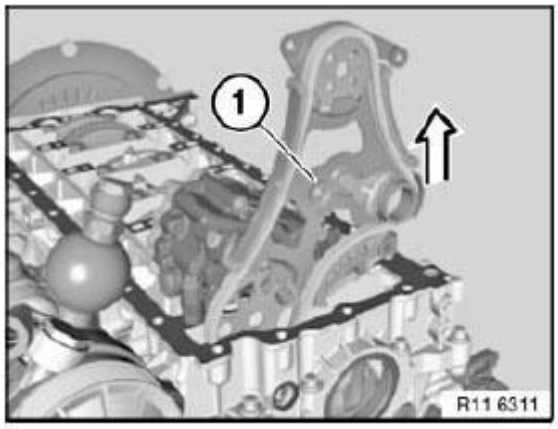

Fig. 687: Chain Module And Removal Direction

Courtesy of BMW OF NORTH AMERICA, INC.

IMPORTANT: Note installation direction of sprocket wheel (2).

Collar on sprocket wheel (2) points to timing chain drive.

Incorrect assembly will result in engine damage.

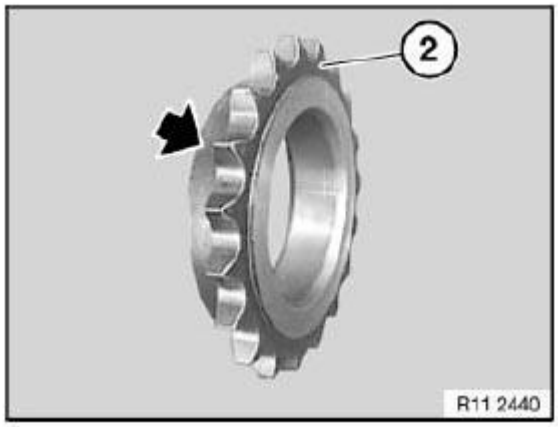

Fig. 688: Sprocket Wheel And Collar
Courtesy of BMW OF NORTH AMERICA, INC.

NOTE: Procedure if engine is mounted on special tool 11 4 440.

Release screw (1).

For tightening torque refer to 11 66 2AZ in **11 66 VACUUM PUMP** .

Release screw (2).

For tightening torque refer to 11 41 3AZ in **11 41 OIL PUMP WITH STRAINER AND DRIVE** .

Unscrew bolt (3).

For tightening torque refer to 11 21 1AZ in **21 CRANKSHAFT WITH BEARINGS** .

Installation:

Mark central bolt (3) with a colored dot.

Replace central bolt (3).

Remove hub (4) towards front.

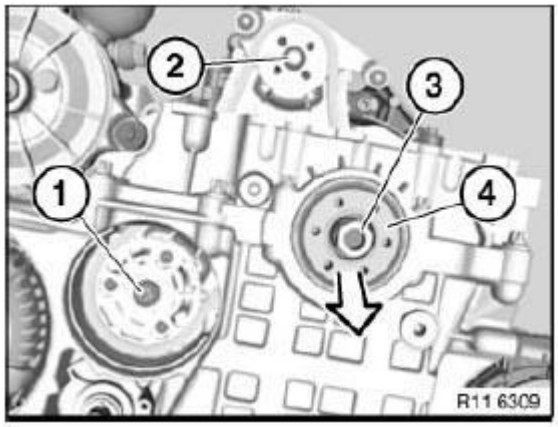

Fig. 689: Removal Direction, Hub, Screw, Central Bolt And Sprocket Wheel
Courtesy of BMW OF NORTH AMERICA, INC.

Tighten down special tool 11 5 200 with screws (1) to hub.

Do not remove special tools 11 0 300 and 11 4 280.

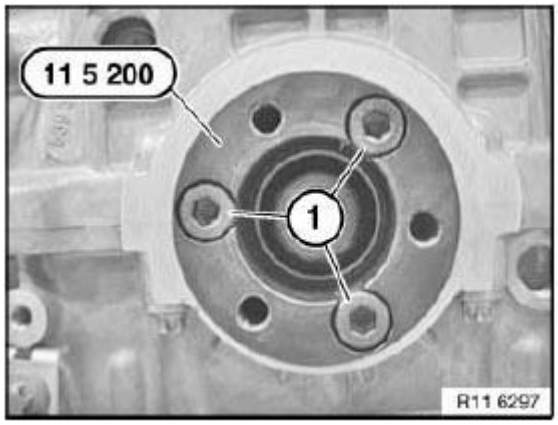

Fig. 690: Special Tool (11 5 200) And Screws
Courtesy of BMW OF NORTH AMERICA, INC.

Remove **Tensioner** for drive belt.

Screw in special tool 11 4 362 from special tool kit 11 4 360.

Mount special tool 11 9 280 on 11 5 200.

Support special tool 11 9 280 on special tool 11 4 362.

Special tool 11 0 300 secures crankshaft.

Tighten central bolt (1) to jointing torque.

For tightening torque refer to 11 21 1AZ in **21 CRANKSHAFT WITH BEARINGS** .

Mark central bolt and hub with paint.

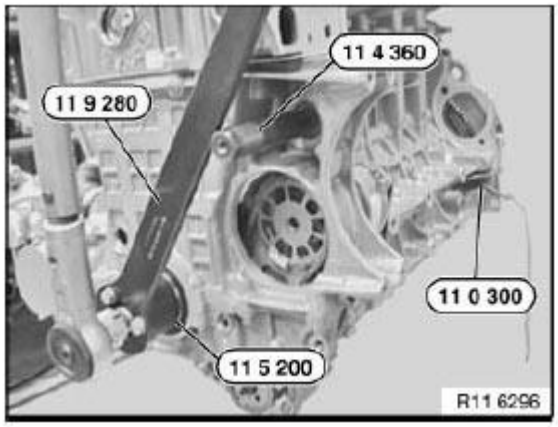

Fig. 691: Special Tools (11 0 300), (11 4 360), (11 9 280) And (11 5 200)
Courtesy of BMW OF NORTH AMERICA, INC.

Apply stroke of paint (1) for torsion angle tightening to tool.

See **Fig. 704**.

IMPORTANT: Do not remove tool from central bolt during torsion angle tightening. Risk of damage!

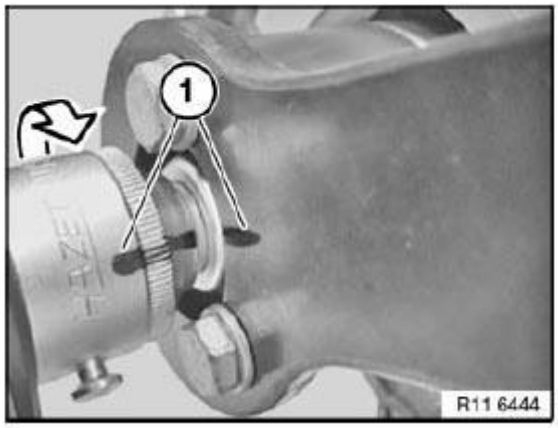

Fig. 692: Colored Line And Installation Direction
Courtesy of BMW OF NORTH AMERICA, INC.

Installation:

Replace **Radial Seal** at front.

Assemble engine.

11 41 010 REMOVING AND INSTALLING/REPLACING CHAIN MODULE FOR OIL PUMP/VACUUM PUMP (N52K)

Special tools required:

- 00 9 140
- 11 0 290
- 11 0 300
- 11 4 120
- 11 4 280
- 11 4 360
- 11 4 362
- 11 4 440
- 11 5 200
- 11 9 280

IMPORTANT: Aluminium-magnesium materials.

No steel screws/bolts may be used due to the threat of electrochemical corrosion.

A magnesium crankcase requires aluminium screws/bolts exclusively.

Aluminium screws/bolts must be replaced each time they are released .

Aluminium screws/bolts are permitted with and without color coding (blue).

For reliable identification:

Aluminium screws/bolts are not magnetic .

Jointing torque and angle of rotation must be observed without fail (risk of damage).

Necessary preliminary tasks:

- Remove **Cylinder Head Cover**
- Remove **Oil Sump**
- Remove **Drive Belt**
- Remove **Drive Belt Tensioner**
- Remove **Vibration Damper**

- Remove **Sealing Cover** for vacuum pump

Procedure on installed engine:

Turn sprocket wheel (3) with central bolt at crankshaft into position until special tool 11 0 290 can be secured.

Simultaneously secure special tool 11 0 290 to sprocket wheel (3) and special tool 11 4 362.

Release screw (2) for sprocket wheel (3).

For tightening torque refer to 11 66 2AZ in **11 66 VACUUM PUMP** .

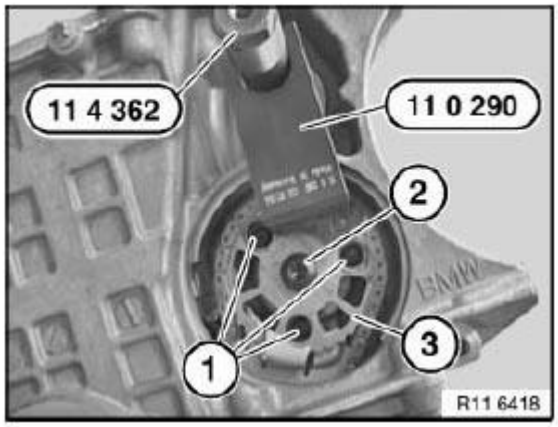

Fig. 693: Sprocket Wheel, Screw, Special Tool (11 0 290) And (11 4 362)
Courtesy of BMW OF NORTH AMERICA, INC.

Press timing chain with chain tensioner (1) in direction of arrow.

Disconnect timing chain with special tool 11 4 120.

Feed out sprocket wheel (3) at hexagon head (4) of vacuum pump.

Installation:

If the chain module is replaced, a mounting bar (2) is already pre-installed.

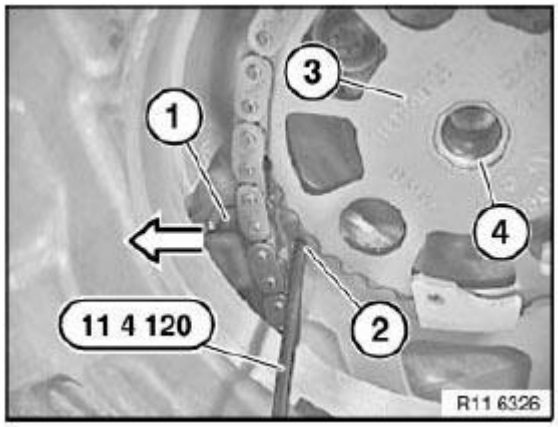

Fig. 694: Timing Chain Tensioner, Sprocket Wheel, Hexagon Head, Mounting Bar And Special Tool (11 4 120)
Courtesy of BMW OF NORTH AMERICA, INC.

NOTE: To release bolt (1), insert a 6 mm drill bit between sprocket wheel and oil pump housing.

Release screw (1) for sprocket wheel.

For tightening torque refer to 11 41 6AZ in **11 41 OIL PUMP WITH STRAINER AND DRIVE** .

Release screws (2) for chain module.

For tightening torque refer to 11 41 5AZ in **11 41 OIL PUMP WITH STRAINER AND DRIVE** .

Installation:

Replace aluminium screws.

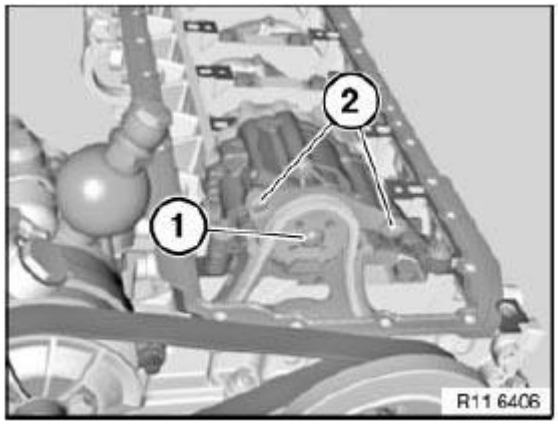

Fig. 695: Screw And Sprocket Wheel
Courtesy of BMW OF NORTH AMERICA, INC.

Secure crankshaft and camshaft with special tools 11 0 300 and 11 4 280 (refer to **Checking Timing**).

IMPORTANT: Do not remove special tools 11 0 300 and 11 4 280 to release central bolt (1).

Employ a *second* person for gripping when releasing central bolt (1).

Screw special tool 11 9 280 onto hub of vibration damper.

Release central bolt (1).

For tightening torque refer to 11 21 1AZ in **21 CRANKSHAFT WITH BEARINGS** .

Installation:

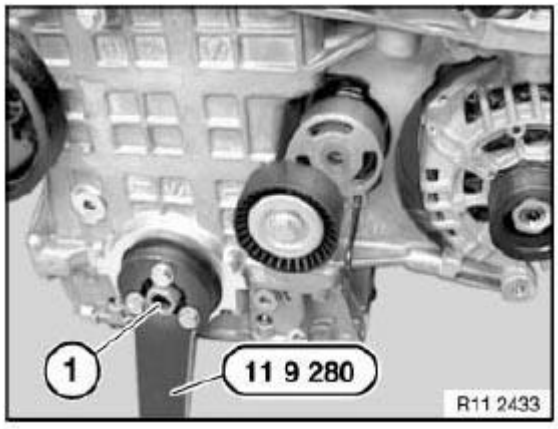

Fig. 696: Special Tool (11 9 280) And Central Bolt
Courtesy of BMW OF NORTH AMERICA, INC.

Replace central bolt (1).

Remove hub (2) towards front.

Installation:

Replace **Crankshaft Radial Seal** at front.

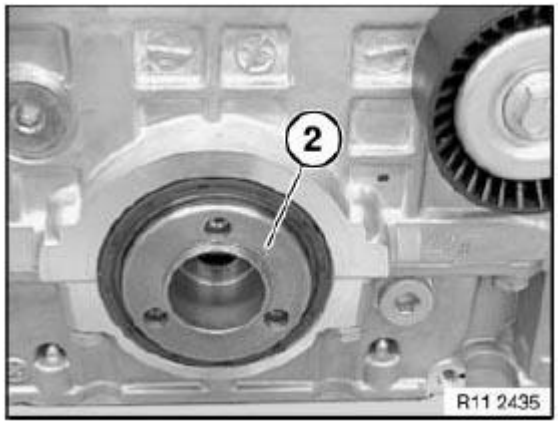

Fig. 697: Crankshaft Radial Seal
Courtesy of BMW OF NORTH AMERICA, INC.

Open screw plug on bedplate.

For tightening torque refer to 11 11 8AZ in **11 11 CRANKCASE** .

Installation:

Replace aluminium screws.

Release screw for chain module (1).

For tightening torque refer to 11 41 4AZ in **11 41 OIL PUMP WITH STRAINER AND DRIVE** .

Installation:

Replace aluminium screws.

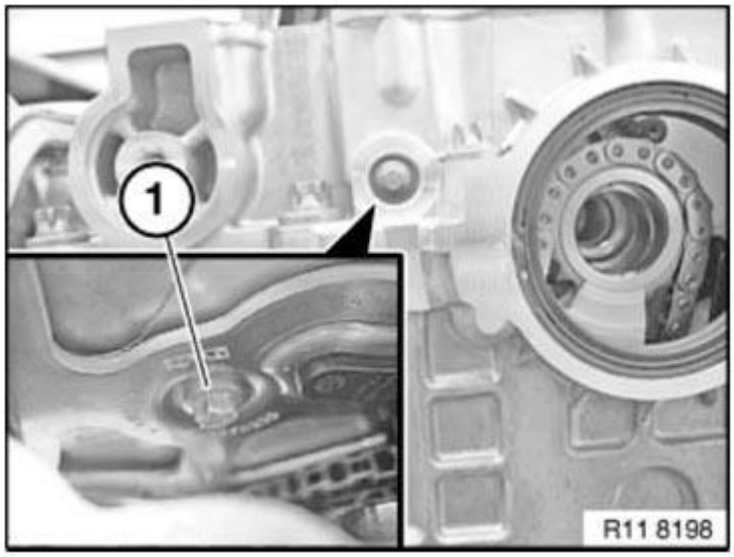

Fig. 698: Identifying Screw
Courtesy of BMW OF NORTH AMERICA, INC.

Remove chain module (1) in direction of arrow.

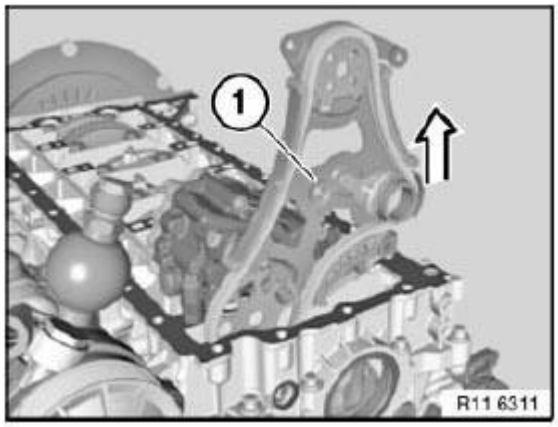

Fig. 699: Chain Module And Removal Direction
Courtesy of BMW OF NORTH AMERICA, INC.

IMPORTANT: Note installation direction of sprocket wheel (2).

Collar (see Fig. 700) on sprocket wheel (2) points to engine.

Incorrect assembly will result in engine damage.

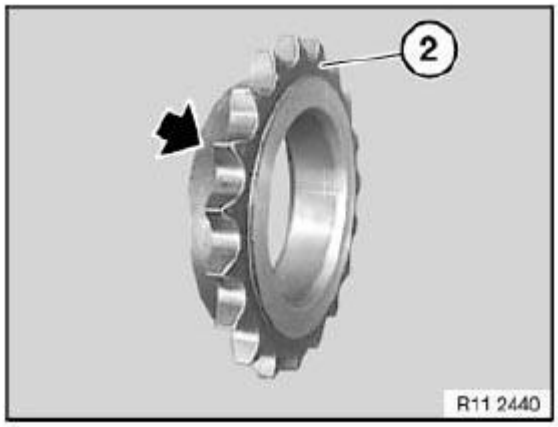

Fig. 700: Sprocket Wheel And Collar
Courtesy of BMW OF NORTH AMERICA, INC.

Procedure on removed engine:

NOTE: Engine is mounted on special tool 11 4 440.

Release screw (1) for sprocket wheel.

For tightening torque refer to 11 66 2AZ in **11 66 VACUUM PUMP** .

Release screw (2) for sprocket wheel.

For tightening torque refer to 11 41 6AZ in **11 41 OIL PUMP WITH STRAINER AND DRIVE** .

Release central bolt (3).

For tightening torque refer to 11 21 1AZ in **21 CRANKSHAFT WITH BEARINGS** .

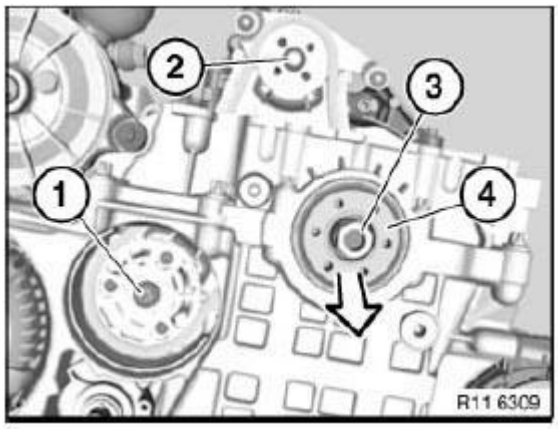

Fig. 701: Removal Direction, Hub, Screw, Central Bolt And Sprocket Wheel
Courtesy of BMW OF NORTH AMERICA, INC.

Installation:

Mark central bolt (3) with a colored dot.

Replace central bolt (3).

Remove hub (4) towards front.

All:

Install hub with new central bolt.

Tighten down special tool 11 5 200 with screws (1) to hub.

Do not remove special tools 11 0 300 and 11 4 280.

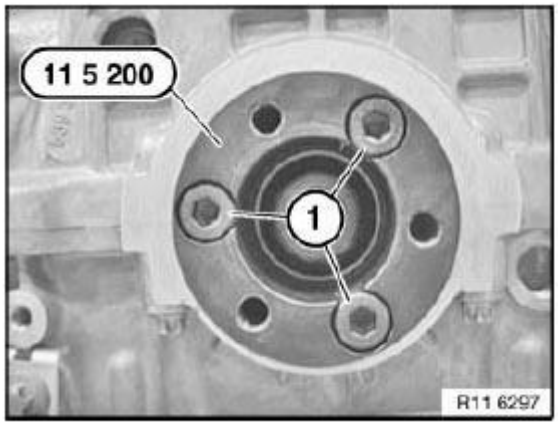

Fig. 702: Special Tool (11 5 200) And Screws
Courtesy of BMW OF NORTH AMERICA, INC.

Remove **Tensioner** for drive belt.

Screw in special tool 11 4 362 from special tool kit 11 4 360.

Mount special tool 11 9 280 on 11 5 200.

Support special tool 11 9 280 on special tool 11 4 362.

Special tool 11 0 300 secures crankshaft.

Tighten central bolt to jointing torque.

For tightening torque refer to 11 21 1AZ in **21 CRANKSHAFT WITH BEARINGS** .

Mark central bolt and hub with paint.

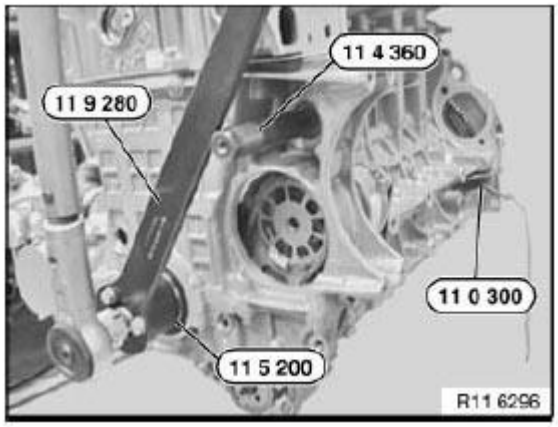

Fig. 703: Special Tools (11 0 300), (11 4 360), (11 9 280) And (11 5 200)
Courtesy of BMW OF NORTH AMERICA, INC.

Mark special tools with colored line (1).

See **Fig. 704**.

IMPORTANT: Do not remove the special tool while tightening the central bolt to torsion angle.
Risk of damage!

If necessary, tighten central bolt to torsion angle with special tool 00 9 140.

For tightening torque refer to 11 21 1AZ in **21 CRANKSHAFT WITH BEARINGS** .

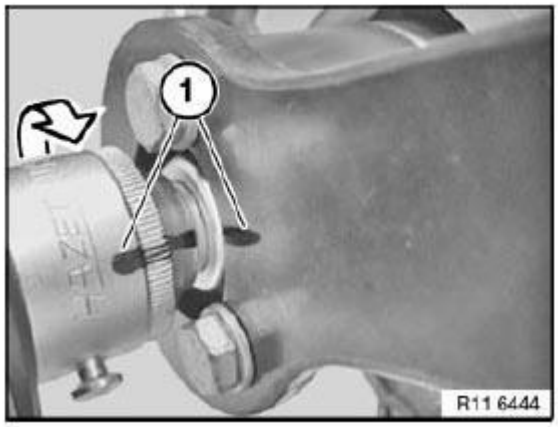

Fig. 704: Colored Line And Installation Direction
Courtesy of BMW OF NORTH AMERICA, INC.

Installation:

Replace **Crankshaft Radial Seal** at front.

Assemble engine.

11 41 115 REMOVING AND INSTALLING/REPLACING HYDRAULIC VALVE (N52K)

IMPORTANT: Aluminium-magnesium materials.

No steel screws/bolts may be used due to the threat of electrochemical corrosion.

A magnesium crankcase requires aluminium screws/bolts exclusively.

Aluminium screws/bolts must be replaced each time they are released .

Aluminium screws/bolts are permitted with and without color coding (blue).

For reliable identification:

Aluminium screws/bolts are not magnetic .

Jointing torque and angle of rotation must be observed without fail (risk of damage).

Necessary preliminary tasks

- Remove front **UNDERBODY PROTECTION**
- Have a cleaning cloth ready to catch escaping oil

Detach plug (1) from hydraulic valve (2).

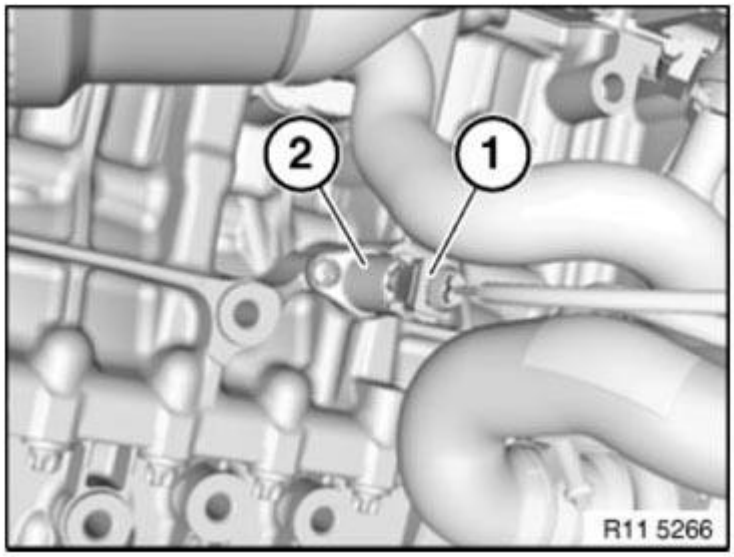

Fig. 705: Identifying Hydraulic Valve And Plug

Courtesy of BMW OF NORTH AMERICA, INC.

Release screw (1) and remove hydraulic valve (2).

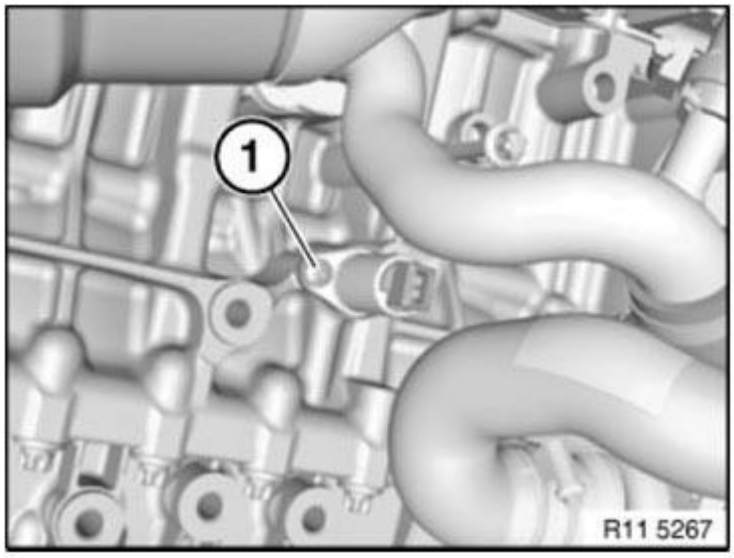

Fig. 706: Identifying Hydraulic Valve Mounting Screw
Courtesy of BMW OF NORTH AMERICA, INC.

Replace O-ring (1).

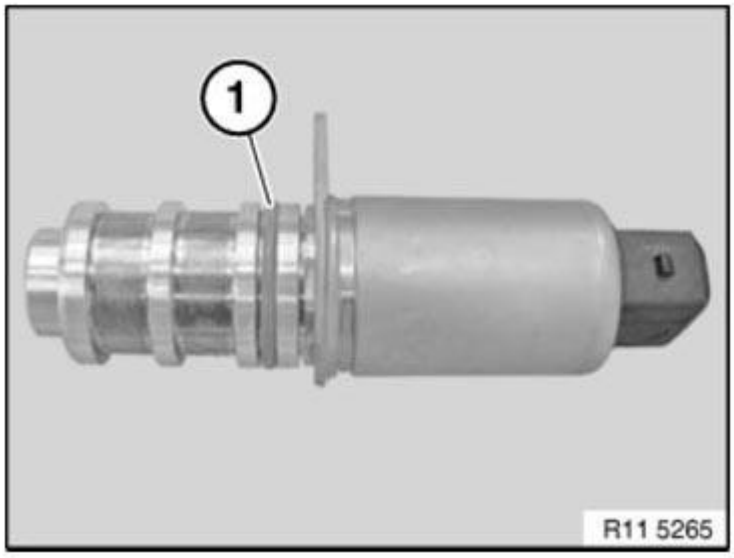

Fig. 707: Identifying O-Ring
Courtesy of BMW OF NORTH AMERICA, INC.

OIL FILTER AND LINES

11 42 020 REMOVING AND INSTALLING/REPLACING FULLFLOW OIL FILTER (N51)

WARNING: Danger of scalding!

Only perform these tasks on an engine that has cooled down.

Necessary preliminary tasks:

- **Remove intake air manifold.**
- **Release oil filter cap and allow engine oil to drip off.**
- **Protect drive belt against dirt.**

Release screws (1).

Release screw (2).

NOTE: Have cleaning cloth ready to catch residual oil.

For tightening torque refer to 11 42 2AZ in **11 42 OIL FILTER ELEMENT WITH CONNECTIONS**

Installation:

Replace all seals

If necessary, replace filter element.

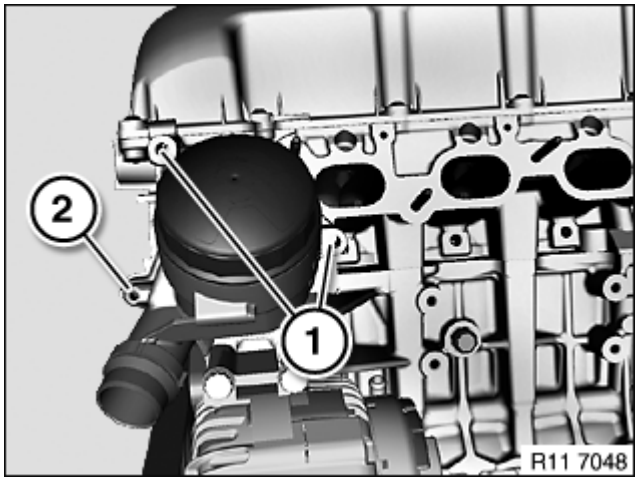

Fig. 708: Oil Filter Mounting Screws
Courtesy of BMW OF NORTH AMERICA, INC.

Assemble engine.

11 42 020 REMOVING AND INSTALLING/REPLACING FULLFLOW OIL FILTER (N52)

WARNING: Danger of scalding!
Only perform these tasks on an engine that has cooled down.

Recycling

Catch and dispose of drained coolant.

Observe country-specific waste-disposal regulations.

Necessary preliminary tasks

- Drain **COOLANT** .
- Remove intake air **MANIFOLD**.
- Unfasten oil filter cover.
- Protect drive belt against dirt.

Release screw (1).

Tightening torque: **11 42 2AZ**

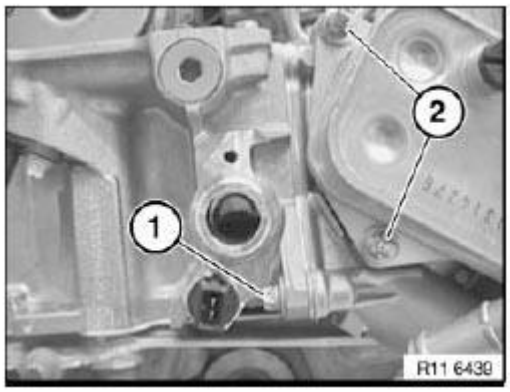

Fig. 709: Identifying Oil Filter Cover Screws
Courtesy of BMW OF NORTH AMERICA, INC.

Unfasten screws (2).

NOTE: Have cleaning cloth ready to catch residual oil.

Tightening torque: **11 42 2AZ**

Installation:

Replace all seals.

If necessary, replace filter element.

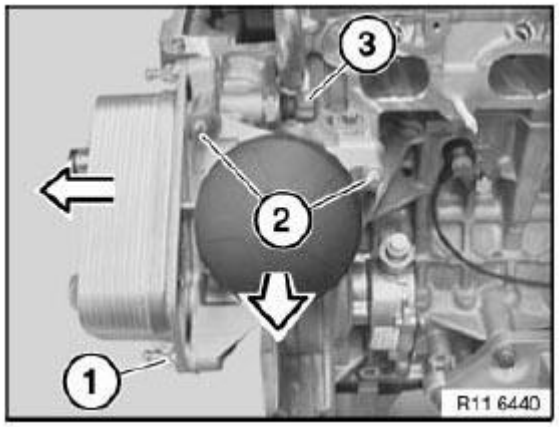

Fig. 710: Releasing Screw
Courtesy of BMW OF NORTH AMERICA, INC.

Assemble engine.

NOTE: Protect drive belt against dirt.

Installation:

VENTING INSTRUCTIONS must be observed without fail.

WATER PUMP WITH DRIVE

11 51 000 REMOVING AND INSTALLING/REPLACING WATER PUMP (N51)

WARNING: Danger of scalding!

Only perform this work after engine has cooled down.

Recycling:

Catch and dispose of drained coolant in a suitable container.

Observe country-specific waste-disposal regulations.

IMPORTANT: Aluminium-magnesium materials.

No steel screws/bolts may be used due to the threat of electrochemical corrosion.

A magnesium crankcase requires aluminium screws/bolts exclusively.

Aluminium screws/bolts must be replaced each time they are released .

Aluminium screws/bolts are permitted with and without color coding (blue).

For reliable identification:

Aluminium screws/bolts are not magnetic .

Jointing torque and angle of rotation must be observed without fail (risk of damage).

Necessary preliminary tasks:

- Remove **Coolant Thermostat**

Disconnect water hose (1).

Disconnect plug connection (4).

Release screws (5).

Installation:

Replace aluminium screws.

For tightening torque refer to 11 51 1AZ in **11 51 ELECTRIC WATER PUMP WITH DRIVE** .

Installation:

If the water pump is to be reused, it must be mechanically rotated once (breakaway torque at impellers).

One water pump rotation will be sufficient.

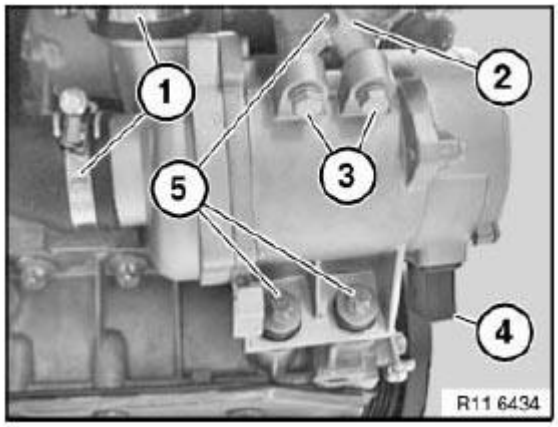

Fig. 711: Plug Connection, Screws And Hoses
Courtesy of BMW OF NORTH AMERICA, INC.

Assemble engine.

Venting Instructions must be observed without fail.

11 51 000 REMOVING AND INSTALLING/REPLACING WATER PUMP (N52K)

WARNING: **Danger of scalding!**

Only perform this work after engine has cooled down.

Recycling:

Catch and dispose of drained coolant in a suitable container.

Observe country-specific waste-disposal regulations.

IMPORTANT: **If a water pump that has already been operated is reused, it must be filled with coolant immediately after removal.**

Mixture ratio, water : coolant = 1 : 1

Protect plug connections against coolant and contamination.

Cover plug connections with suitable materials.

IMPORTANT: **Aluminium-magnesium materials.**

No steel screws/bolts may be used due to the threat of electrochemical corrosion.

A magnesium crankcase requires aluminium screws/bolts exclusively.

Aluminium screws/bolts must be replaced each time they are released .

Aluminium screws/bolts are permitted with and without color coding (blue).

For reliable identification:

Aluminium screws/bolts are not magnetic .

Jointing torque and angle of rotation must be observed without fail (risk of damage).

Necessary preliminary tasks:

- Remove **coolant thermostat**

Unfasten hose clip (1).

For tightening torque refer to 11 53 5AZ in **11 53 COOLANT THERMOSTAT WITH CONNECTIONS** .

Remove coolant hose.

Unfasten hose clip (2).

For tightening torque refer to 11 53 3AZ in **11 53 COOLANT THERMOSTAT WITH CONNECTIONS** .

Remove coolant hose.

Disconnect plug connection (3).

Release screws (4).

For tightening torque refer to 11 51 1AZ in **11 51 ELECTRIC WATER PUMP WITH DRIVE** .

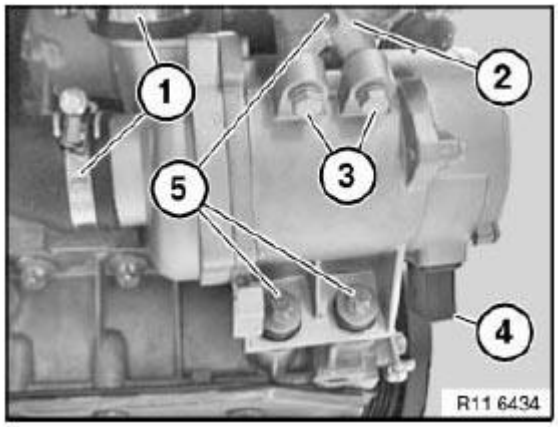

Fig. 712: Plug Connection, Screws And Hoses
Courtesy of BMW OF NORTH AMERICA, INC.

Installation:

Replace aluminium screws.

Remove electric water pump (x) via x.

Installation:

If the electric water pump is reused, it must be rotated one turn due to the breakaway torque at the blade wheels.

Assemble engine.

Venting instructions must be observed without fail.

THERMOSTAT AND CONNECTIONS

11 53 000 REMOVING AND INSTALLING/REPLACING COOLANT THERMOSTAT (N51)

WARNING: Danger of scalding!

Only perform this work after engine has cooled down.

Recycling

Catch and dispose of drained coolant in a suitable container.

Observe country-specific waste-disposal regulations.

Necessary preliminary tasks:

- Remove front splash guard
- Drain **Coolant** from radiator.

Release hose clamp (1) and detach coolant hose.

Release hose clamp (2) and detach coolant hose.

Unlock and detach coolant hose (3).

Unlock and detach coolant hose (4).

Disconnect plug connection (5).

Release screws (6).

For tightening torque refer to 11 53 1AZ in **11 53 COOLANT THERMOSTAT WITH CONNECTIONS** .

Remove coolant thermostat (7).

NOTE: Illustration shows coolant thermostat removed.

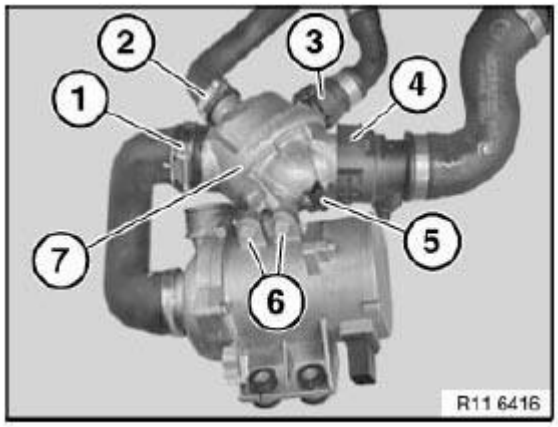

Fig. 713: Hose Clips, Hoses, Screws, Coolant Thermostat And Plug Connection
Courtesy of BMW OF NORTH AMERICA, INC.

Assemble engine.

Venting Instructions must be observed without fail.

11 53 000 REMOVING AND INSTALLING/REPLACING COOLANT THERMOSTAT (N52K)

WARNING: Danger of scalding!

Only perform this work after engine has cooled down.

Recycling

Catch and dispose of drained coolant in a suitable container.

Observe country-specific waste-disposal regulations.

IMPORTANT: Protect plug connections against coolant and contamination.

Cover plug connections with suitable materials.

Necessary preliminary tasks:

- Drain **Coolant**

NOTE: For purposes of clarity, the picture and text refer to the component when removed.

Unfasten hose clip (1).

For tightening torque refer to 11 53 5AZ in **11 53 COOLANT THERMOSTAT WITH CONNECTIONS** .

Remove coolant hose.

Unfasten hose clip (2).

For tightening torque refer to 11 53 6AZ in **11 53 COOLANT THERMOSTAT WITH CONNECTIONS** .

Remove coolant hose.

Unlock and detach coolant hose (3).

Unlock and detach coolant hose (4).

Disconnect plug connection (5).

Release screws (6).

For tightening torque refer to 11 53 1AZ in **11 53 COOLANT THERMOSTAT WITH CONNECTIONS** .

Remove coolant thermostat (7).

Assemble engine.

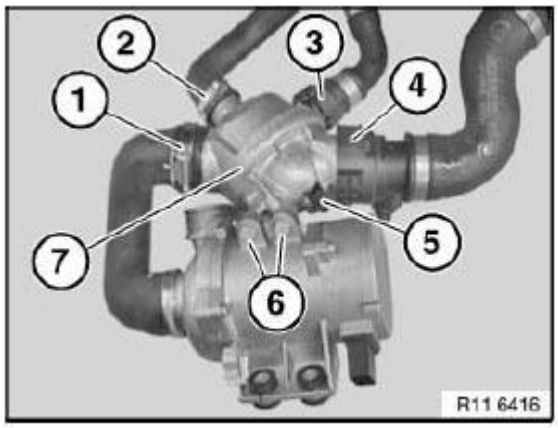

Fig. 714: Hose Clips, Hoses, Screws, Coolant Thermostat And Plug Connection
Courtesy of BMW OF NORTH AMERICA, INC.

INTAKE MANIFOLD

11 61 050 REMOVING AND INSTALLING INTAKE AIR MANIFOLD (N51)

Necessary preliminary tasks:

- Remove **Tension Strut**
- Remove suction filter housing.
- Remove engine cover.

Open holder (2).

Disconnect plug connection (1) under manifold.

Release both crankcase breathers (3).

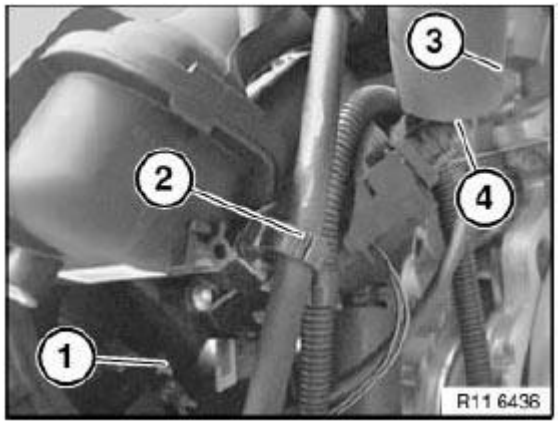

Fig. 715: Crankcase Breathers, Plug Connection And Holder
Courtesy of BMW OF NORTH AMERICA, INC.

Disconnect plug connection (1).

Disconnect plug connection (3).

Release bolts (4).

Detach engine wiring harness (2) from manifold and lay to one side.

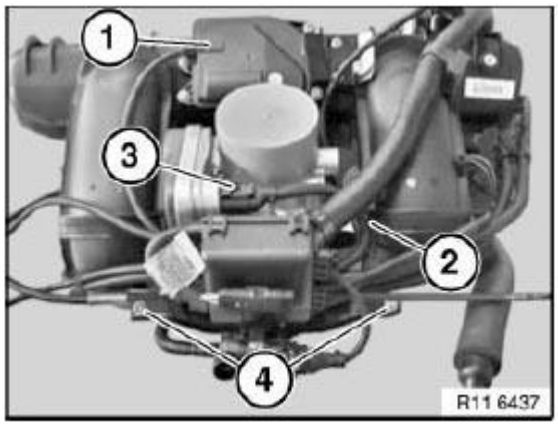

Fig. 716: Engine Wiring Harness, Screws And Plug Connections
Courtesy of BMW OF NORTH AMERICA, INC.

Disconnect plug connection (1) on oil pressure switch.

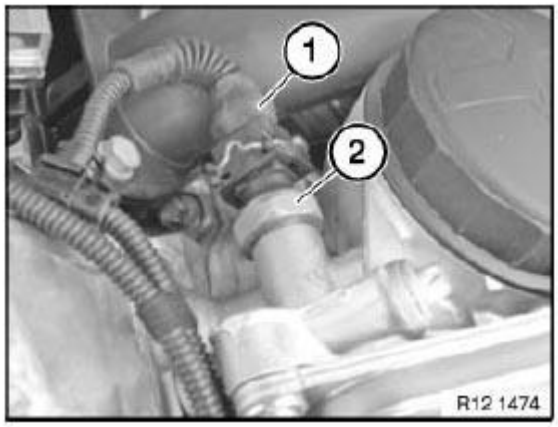

Fig. 717: Plug Connection And Oil Pressure Switch
Courtesy of BMW OF NORTH AMERICA, INC.

Release fuel rail (2) and lay to one side.

NOTE: Do not detach fuel line.

Release screws (1).

Unscrew nuts (3).

For tightening torque refer to 11 61 1AZ in **11 61 AIR INTAKE MANIFOLD** .

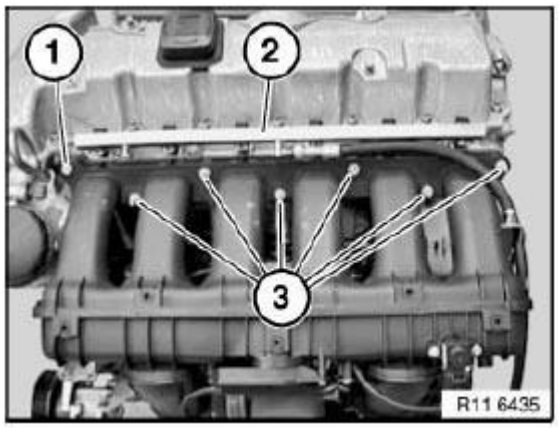

Fig. 718: Fuel Rail, Nuts And Screws
Courtesy of BMW OF NORTH AMERICA, INC.

Raise air intake manifold approx. 10 cm.

Disconnect plug connections (1) at bottom.

Release tank vent line behind throttle valve assembly.

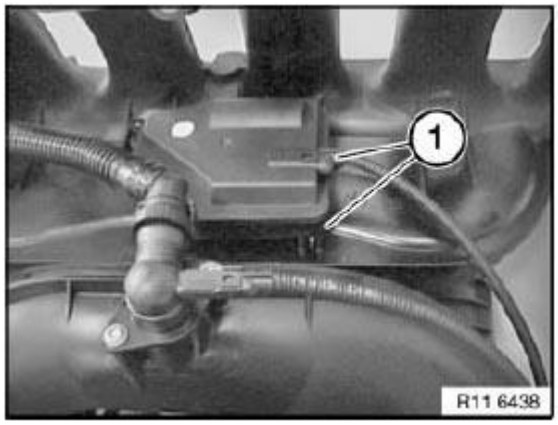

Fig. 719: Plug Connections
Courtesy of BMW OF NORTH AMERICA, INC.

Installation:

Replace all seals.

Assemble engine.

11 61 050 REMOVING AND INSTALLING AIR INTAKE MANIFOLD (N52K)

Necessary preliminary tasks:

- Remove **Tension Strut**
- Remove **Intake Filter Housing**
- Remove **Ignition Coil Cover**

Open holder (2).

Disconnect plug connection (1) under of air intake manifold.

Release both crankcase breathers (3).

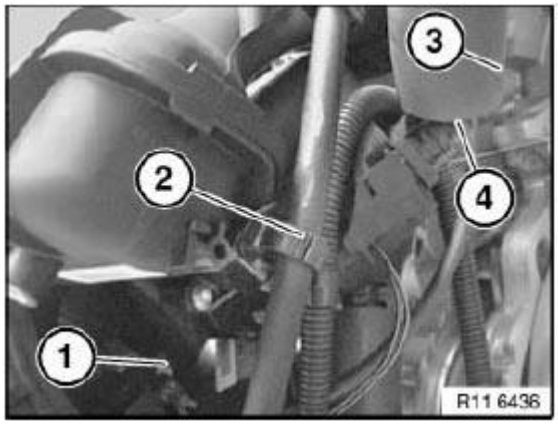

Fig. 720: Crankcase Breathers, Plug Connection And Holder
Courtesy of BMW OF NORTH AMERICA, INC.

Disconnect plug connection (1).

Disconnect plug connection (3).

Release screws (4).

Detach engine wiring harness (2) from air intake manifold and lay to one side.

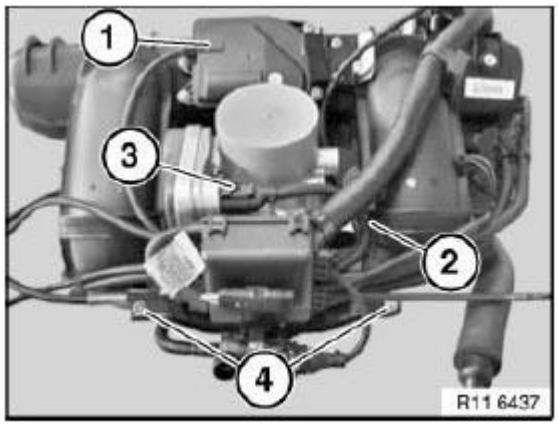

Fig. 721: Engine Wiring Harness, Screws And Plug Connections
Courtesy of BMW OF NORTH AMERICA, INC.

Disconnect plug connection (1) on oil pressure switch (2).

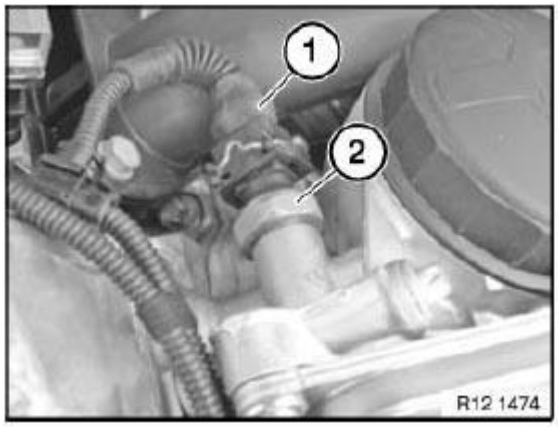

Fig. 722: Plug Connection And Oil Pressure Switch
Courtesy of BMW OF NORTH AMERICA, INC.

Release fuel rail (2) and lay to one side.

NOTE: Do not detach fuel line.

Release screws (1).

For tightening torque refer to 11 61 1AZ in **11 61 AIR INTAKE MANIFOLD** .

Unscrew nuts (3).

For tightening torque refer to 11 61 2AZ in **11 61 AIR INTAKE MANIFOLD** .

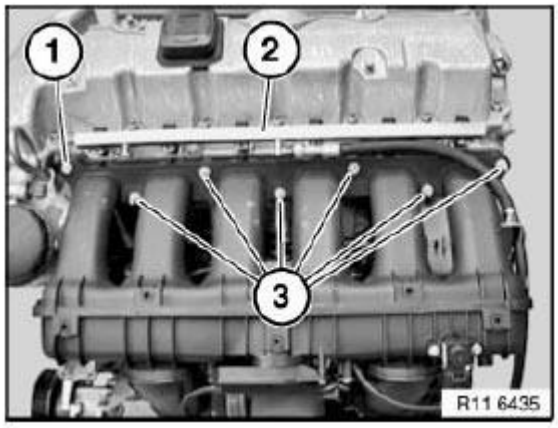

Fig. 723: Fuel Rail, Nuts And Screws
Courtesy of BMW OF NORTH AMERICA, INC.

Raise air intake manifold approx. 10 cm.

Disconnect plug connections (1) at bottom.

Release tank vent line behind throttle valve assembly.

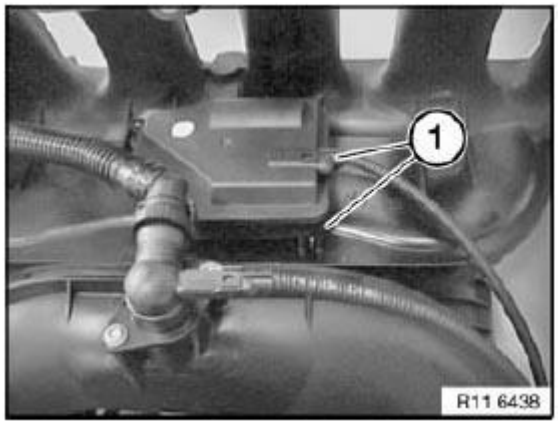

Fig. 724: Plug Connections
Courtesy of BMW OF NORTH AMERICA, INC.

Installation:

Replace all seals.

Assemble engine.

EXHAUST MANIFOLD

See appropriate engine under **EXHAUST MANIFOLD** .

VACUUM PUMP

11 66 000 REMOVING AND INSTALLING OR REPLACING VACUUM PUMP (N51)

Necessary preliminary work

- Remove **DRIVE BELT**.
- Remove **BELT TENSIONER** for drive belt.
- Remove **SEALING CAP** for vacuum pump.
- Remove intake **PLENUM**.

Rotate crankshaft at central bolt.

Rotate camshaft sprocket (3) until drilled holes and screws (1) match up.

Screw in special tool 11 4 362 (adapter).

Secure special tool **11 0 290** in sprocket (3) and on special tool 11 4 362 (adapter).

Release screw (2).

Tightening torque: **11 66 2AZ** .

Release screws (1) and secure against falling out.

Tightening torque: **11 66 1AZ** .

Remove vacuum pump towards rear.

Installation note:

Replace gasket.

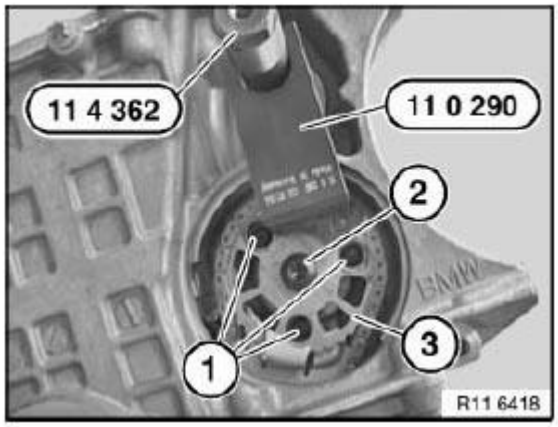

Fig. 725: Identifying Special Tool (11 0 290) And (11 4 362)
Courtesy of BMW OF NORTH AMERICA, INC.

Press chain tensioner with chain (1) in direction of arrow.

Insert special tool **11 4 120** .

Remove camshaft sprocket (2) in direction of arrow.

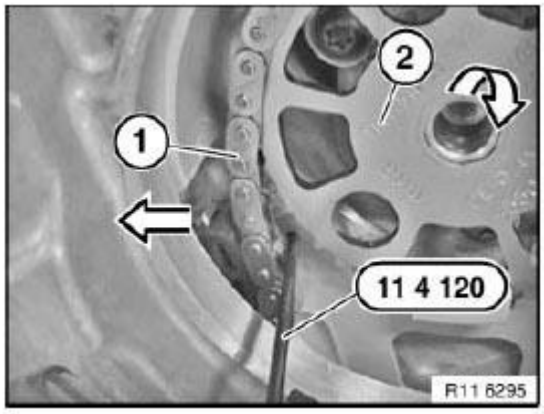

Fig. 726: Removing Camshaft Sprocket
Courtesy of BMW OF NORTH AMERICA, INC.

Assemble engine.

11 66 000 REMOVING AND INSTALLING OR REPLACING VACUUM PUMP (N52)

Necessary preliminary work

- Remove **DRIVE BELT**.
- Remove **BELT TENSIONER** for drive belt.
- Remove **SEALING CAP** for vacuum pump.
- Remove intake **PLENUM**.

Rotate crankshaft at central bolt.

Rotate camshaft sprocket (3) until drilled holes and screws (1) match up.

Screw in special tool 11 4 362 (adapter).

Secure special tool **11 0 290** in sprocket (3) and on special tool 11 4 362 (adapter).

Release screw (2).

Tightening torque: **11 66 2AZ** .

Release screws (1) and secure against falling out.

Tightening torque: **11 66 1AZ** .

Remove vacuum pump towards rear.

Installation note:

Replace gasket.

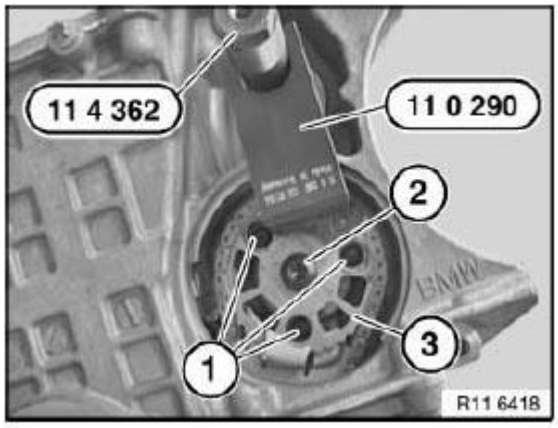

Fig. 727: Identifying Special Tool (11 0 290) And (11 4 362)
Courtesy of BMW OF NORTH AMERICA, INC.

Press chain tensioner with chain (1) in direction of arrow.

Insert special tool **11 4 120** .

Remove special tool **11 0 290** .

Remove camshaft sprocket (2) in direction of arrow.

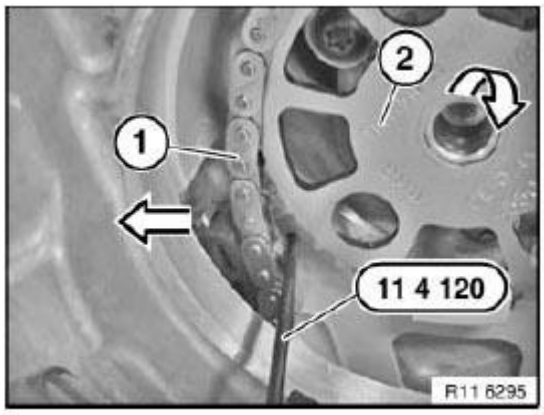

Fig. 728: Removing Camshaft Sprocket
Courtesy of BMW OF NORTH AMERICA, INC.

Assemble engine.

EMISSION CONTROL, OXYGEN SENSOR

11 78 513 REPLACING BOTH LAMBDA OXYGEN CONTROL SENSORS (N52K)

Special tools required:

- 11 4 260

WARNING: Scalding hazard!

Work should only be carried out on an exhaust system that has cooled down.

Installation:

The threads of new lambda control sensors are already coated with Never Seez Compound.

If a lambda control sensor is to be reused, apply a thin and even coating of Never Seez compound to the thread only.

The part of the lambda control sensor which projects into the exhaust system branch (sensor ceramics) must not be cleaned and not coated with lubricant.

Lambda control sensor, cylinder nos. 1 to 3:

NOTE: The lambda control sensor on the exhaust manifold of cylinder nos. 1 to 3 is accessible from above. The exhaust system does not have to be removed.

Lambda control sensor, cylinder nos. 4 to 6:

Necessary preliminary tasks:

- Remove **Exhaust System.**

Disconnect plug connection on lambda control sensor (1).

Release lambda control sensor (1) on exhaust manifold of cylinder nos. 4 to 6 with special tool 11 4 260.

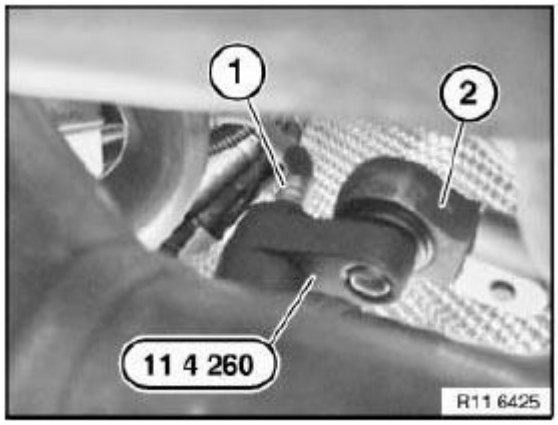

Fig. 729: Special Tool (11 4 260) An d Lambda Control Sensor
Courtesy of BMW OF NORTH AMERICA, INC.

All:

Installation:

Cable color of lambda control sensor, cylinders nos. 1 to 3 = black.

Cable color of lambda control sensor, cylinders nos. 4 to 6 = grey.

For tightening torque refer to 11 78 1AZ in **11 78 EXHAUST GAS CONTROL, LAMBDA CONTROL SENSOR / LAMBDA MONITOR SENSOR** .

Assemble engine.

Check function of DME.

11 78 545 REPLACING BOTH LAMBDA OXYGEN MONITORING SENSORS (N52K)

WARNING: Risk of burning!

Work should only be carried out on an exhaust system that has cooled down.

Necessary preliminary tasks:

- Remove **UNDERBODY PROTECTION**

Installation note:

The threads of new lambda monitoring sensors are already coated with Never Seez Compound (refer to BMW Parts Department).

If a lambda monitoring sensor is to be reused, apply a thin and even coating of Never Seez Compound to the thread only.

The part of the lambda monitoring sensor which projects into the exhaust system branch (sensor ceramics) must **not** be cleaned and **not** coated with lubricant.

Disconnect plug connection on lambda monitoring sensor (1).

Release lambda monitoring sensor (1) on exhaust manifold of cylinder nos. 1 to 3 with special tool 11 9 150 (extension).

Tightening torque: see 1AZ in **11 78 EXHAUST GAS CONTROL, LAMBDA CONTROL SENSOR /**

LAMBDA MONITOR SENSOR .

Installation note:

Cable color of lambda monitoring sensor (1), cylinders nos. 1 to 3 = black.

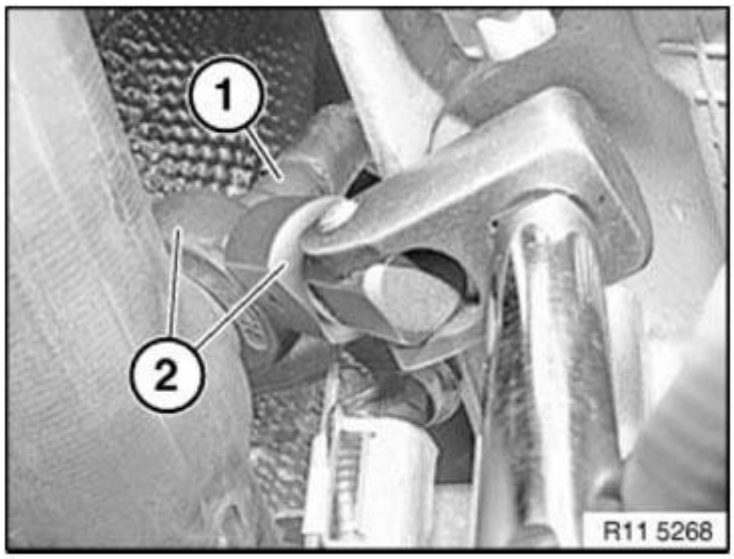

Fig. 730: Removing Lambda Monitoring Sensor Plug Connection Using Special Tool (11 9 150)
Courtesy of BMW OF NORTH AMERICA, INC.

Disconnect plug connection on lambda monitoring sensor (1).

Release lambda monitoring sensor (1) on exhaust manifold of cylinder nos. 4 to 6 with special tool 11 9 150 (extension).

Tightening torque: see 1AZ in **11 78 EXHAUST GAS CONTROL, LAMBDA CONTROL SENSOR / LAMBDA MONITOR SENSOR** .

Installation note:

Cable color of lambda monitoring sensor (1), cylinders nos. 4 to 6 = grey.

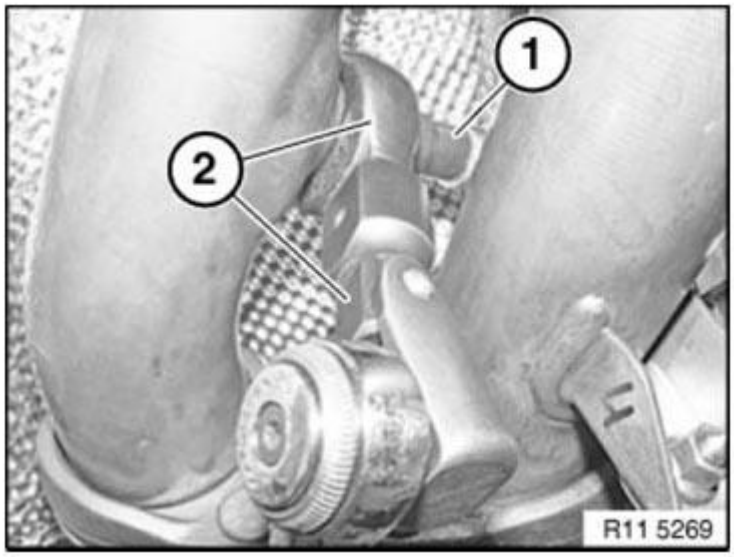

Fig. 731: Removing Lambda Monitoring Sensor Plug Connection Using Special Tool (11 9 150)
Courtesy of BMW OF NORTH AMERICA, INC.

Assemble engine.

Check function of DME.

