ENGINE

Engine - Repair Instructions - X6 (N63)

ENGINE GENERAL

00 DANGER OF POISONING IF OIL IS INGESTED/ABSORBED THROUGH THE SKIN

Danger of poisoning!

Ingesting oil or absorbing through the skin may cause poisoning!

Possible symptoms are:

- Headaches
- Dizziness
- Stomach aches
- Vomiting
- Diarrhoea
- Cramps/fits
- Unconsciousness

Protective measures/rules of conduct

- Pour oil only into appropriately marked containers
- Do **not** pour oil into drinking vessels (drinks bottles, glasses, cups or mugs)
- Observe country-specific safety regulations

First aid measures

- Do not induce vomiting.

  If the person affected is still conscious, he/she must rinse out their mouth with water, drink plenty of water and consult a doctor immediately.

  If the person affected is unconscious, do not administer anything by mouth, place the person in the recovery position and seek immediate medical attention.

00 RISK OF INJURY IF OIL COMES INTO CONTACT WITH EYES AND SKIN

Danger of injury!

Contact with eyes or skin may result in injury!

Possible symptoms are:

- Impaired sight
- Irritation of the eyes
- Reddening of the skin
- Rough and cracked skin

Protective measures/rules of conduct

- Wear protective goggles
- Wear oil-resistant protective gloves
- Observe country-specific safety regulations

First aid measures

- **Eye contact:** Rinse eyes immediately with plenty of water for at least 15 minutes; if available, use an eye-rinsing bottle. If irritation of the eyes persists, consult a doctor.
- **Skin contact:** Wash off with soap and water immediately. If irritation persists, consult a doctor.

NOTE: Do not use solvents/thinners.

00 SAFETY INSTRUCTIONS FOR HANDLING OIL

WARNING: Danger of poisoning if oil is ingested/absorbed through the skin!

Risk of injury if oil comes into contact with eyes and skin!

Recycling

Observe country-specific waste-disposal regulations.

Measures if oil is unintentionally released:

- **Personal precautionary measures:** Danger of slipping! Keep non-involved persons away from the work area. Wear personal protective clothing/equipment.
- **Environmental protection measures:** Prevent oil from draining into drain channels, sewerage systems, pits, cellars, water and the ground.
- **Limiting spread:** Use oil blocks to prevent the surface spread of oil.
- **Cleaning procedure:** Bind and dispose of escaped oil with nonflammable absorbents.

NOTE: Do not flush oil away with water or aqueous cleaning agents.

00 SAFETY INFORMATION FOR WORKING ON VEHICLES WITH AUTOMATIC ENGINE START-STOP FUNCTION (MSA)

WARNING: If the engine hood/bonnet contact is pulled upwards (workshop mode),

the information "switch closed" is output. The automatic engine start-stop function is active.
An automatic engine start is possible.

Observe safety precautions when working on MSA vehicles

Before carrying out practical work on the engine, always ensure that the MSA functionality is deactivated so as to prevent automatic engine starting while work is being carried out in the engine compartment.

MSA function is deactivated by

- Deactivate MSA by means of button (1) in passenger compartment
- Open seat belt buckle and driver's door

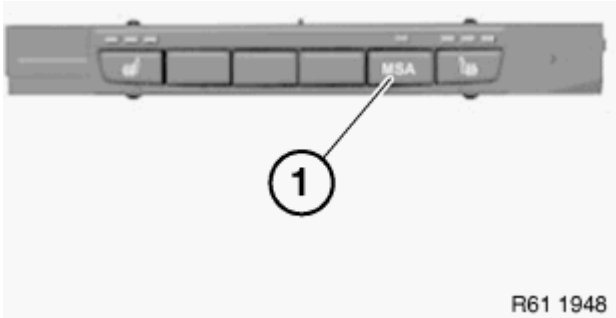

Fig. 1: Identifying MSA Button
Courtesy of BMW OF NORTH AMERICA, INC.

- Open engine bonnet/hood and ensure that engine hood/bonnet contact is not in workshop mode
- Workshop mode

  A = 10 mm

- Basic setting (engine hood/bonnet open)

B = 7 mm

To make sure that the engine hood/bonnet contact is at the basic setting, if necessary press the hood/bonnet contact up to the limit position before starting work and slowly release.

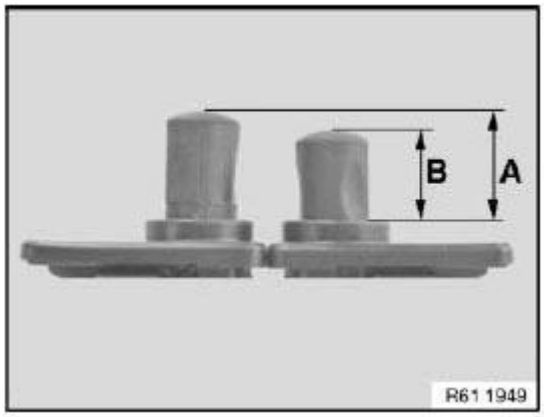

Fig. 2: Identifying Engine Hood/Bonnet Dimension
Courtesy of BMW OF NORTH AMERICA, INC.

When working with diagnosis tools

- Observe instructions in diagnosis tool

REMOVING ENGINE COVER (N63)

Raise engine cover (1) at the four points (see arrows) and in upward direction.

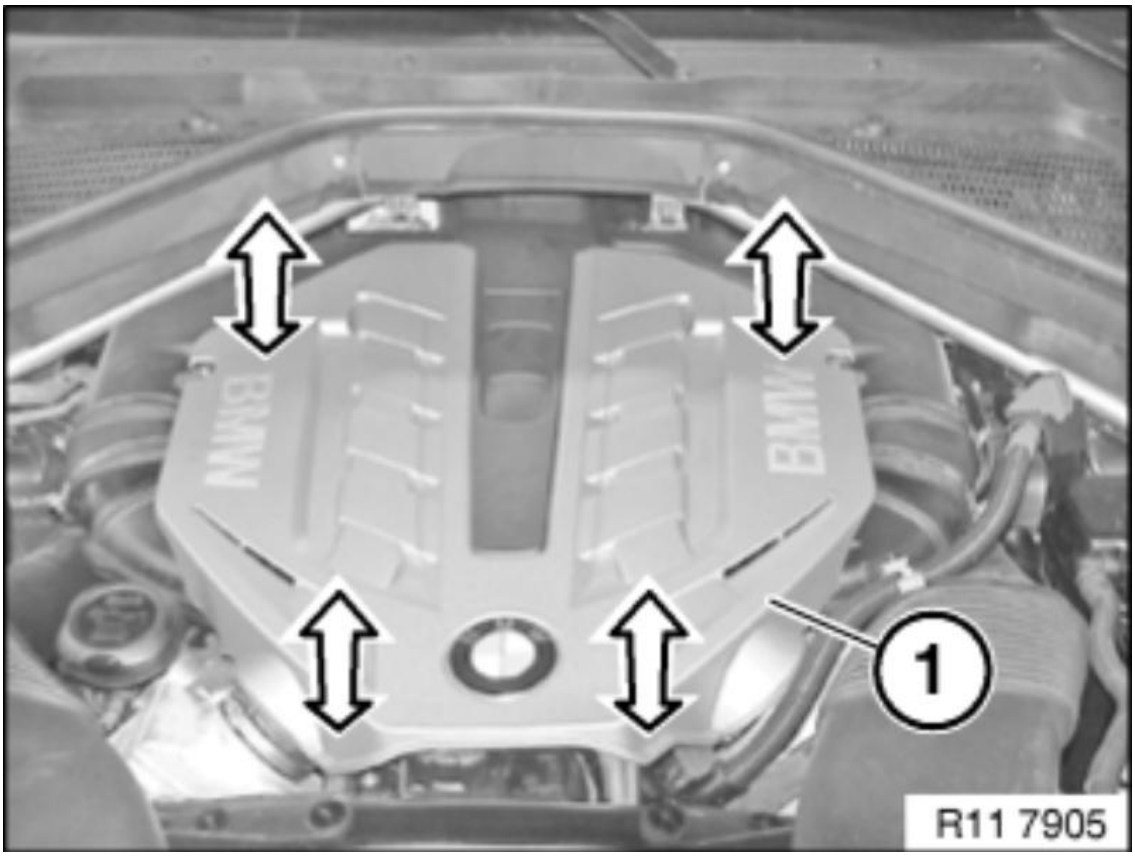

Fig. 3: Identifying Engine Cover
Courtesy of BMW OF NORTH AMERICA, INC.

Check lock (1) for damage.

Check lock (2) for damage.

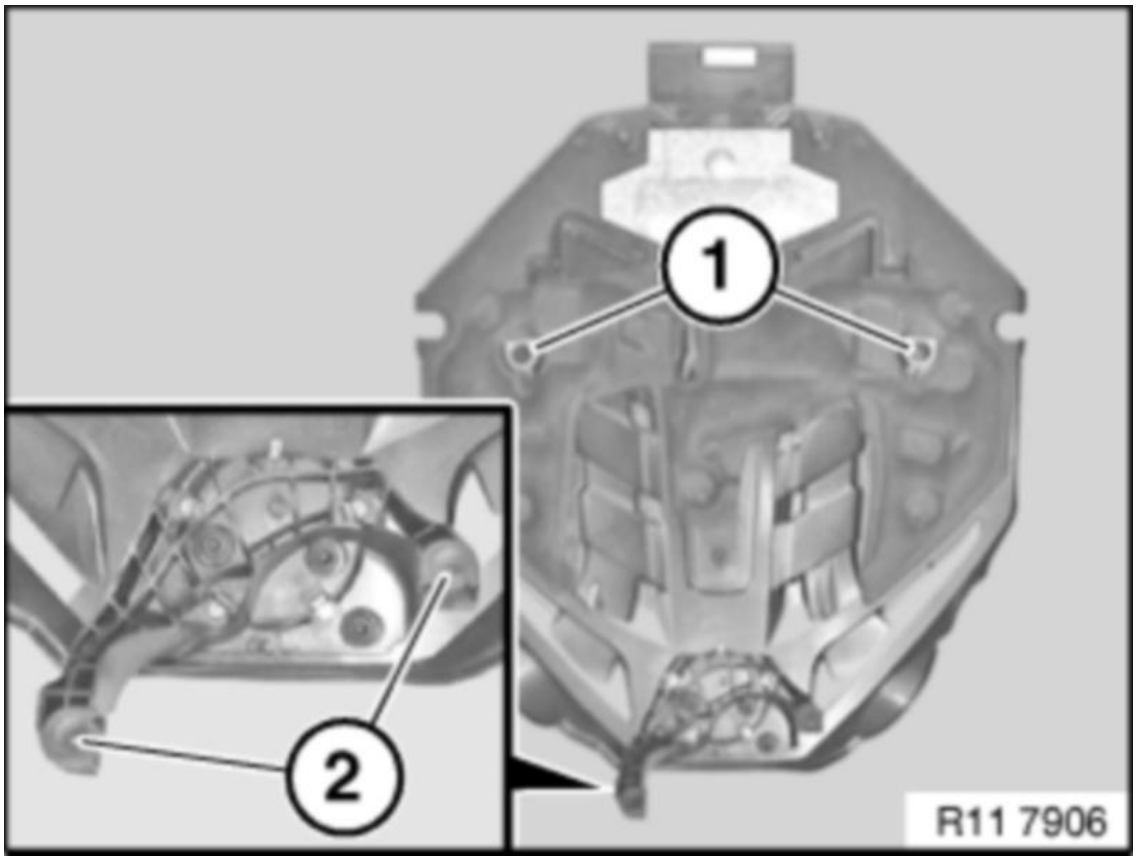

Fig. 4: Identifying Engine Cover Locks
Courtesy of BMW OF NORTH AMERICA, INC.

Apply a light coating of antiseize agent to take-ups (1).

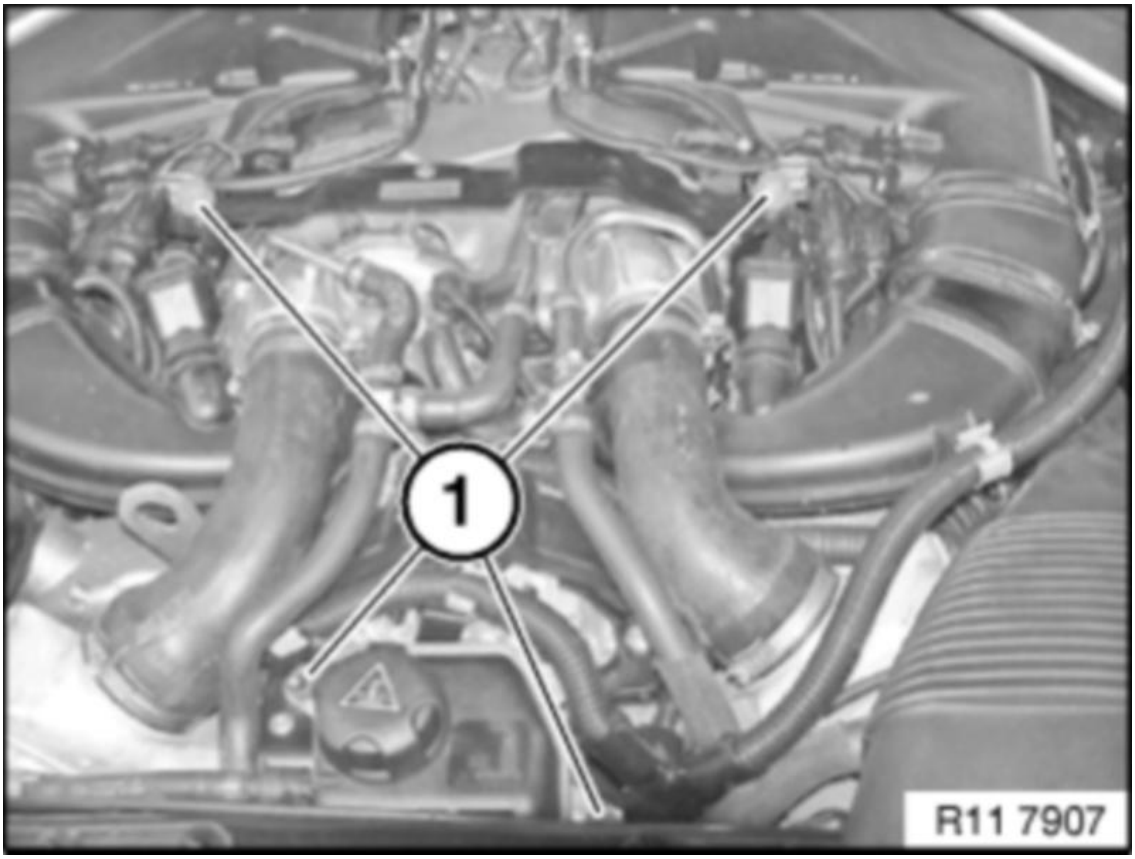

Fig. 5: Locating Engine Cover Take-Ups
Courtesy of BMW OF NORTH AMERICA, INC.

Assemble engine

11 00... OVERVIEW OF CONSUMABLES (ELECTRONIC PARTS CATALOGUE - EPC)

1.0 Sealing compound for **injection** .

INSTRUCTIONS CHART

	Repair instructions (engine)	Designation EPC	Part number EPC	Application examples
1.1	N40, N42, N45, N46, N43, N45N, N46N	Loctite 171000 primer	83 19 7 515 683	For hardening Loctite 128367 sealing compound
1.2	N40, N42, N45, N46, N43, N45N, N46N	Loctite 128357 liquid gasket	83 19 7 536 051	Sealing between crankcase upper and lower halves
1.3	N51, N52, N53, N54, N52N, N55	Loctite 171000 primer	83 19 7 515 683	For hardening Loctite 193140 sealing compound
1.4	N51, N52, N53, N54, N52N, N55	Loctite 193140 liquid gasket	83 19 0 439 030	Sealing between crankcase upper and

				lower halves
1.5	S65, S85	Loctite 171000 primer	83 19 7 515 683	For hardening Loctite 193140 sealing compound
1.6	S65, S85	Loctite 193140 liquid gasket	83 19 0 439 030	Sealing between crankcase upper and lower halves

2.0 Sealing compound for **application** .

INSTRUCTIONS CHART

	Designation in repair instruction	**Designation EPC**	**Part number EPC**	**Application examples**
2.1	M41, M47, M47TU, M47T2, M50, M51, M52, M52TU, M54, M57, M57TU, M57T2, M60, M62 N40, N42, N45, N45N, N46, N46N, N43, N47, N47S N51, N52, N52N, N53, N54, N55, N57, N57S N62, N62TU, N73, N73H S14, S38, S50, S52, S54, S62, S65, S85	Drei Bond 1209 liquid gasket	07 58 9 062 376	For sealing junction points on crankcase
2.2	N12, N14, W16	Loctite 5970 liquid gasket	83 19 0 404 517	Sealing between crankcase upper and lower halves
2.3	N12, N14, W16	Loctite 273 liquid gasket	83 19 0 443 083	Sealing between cover sleeve and crankcase

11 00... SERVICE - ENGINE OIL (N63)

Special tools required:

- **11 9 240**

See **ENGINE - SPECIAL TOOLS (N54, N63)** .

WARNING: **Danger of scalding!**

Carry out work on the vehicle only when wearing oil- and heat-resistant

protective gloves incl. forearm protection, face guard and protective apron.

IMPORTANT: Carry out the engine oil service only when the engine is at normal operating temperature.

Observe the exact engine oil filling capacity.

Overfilling the engine with engine oil will result in engine damage .

Checking and drop-off times (at least 10 minutes) must be observed.

Recycling:

Catch and dispose of drained engine oil in a suitable container.

Observe country-specific waste-disposal regulations.

Release screw plug (1) on oil filter cap.

Remove screw plug (2) from oil sump and drain engine oil.

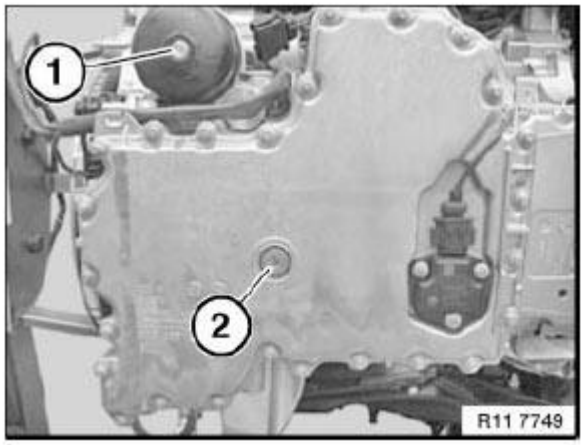

Fig. 6: Identifying Oil Sump And Filter Cap Plug
Courtesy of BMW OF NORTH AMERICA, INC.

Release oil filter cap (1) with special tool 11 9 240.

Tightening torque 11 42 1AZ, see **11 42 OIL FILTER AND PIPES**

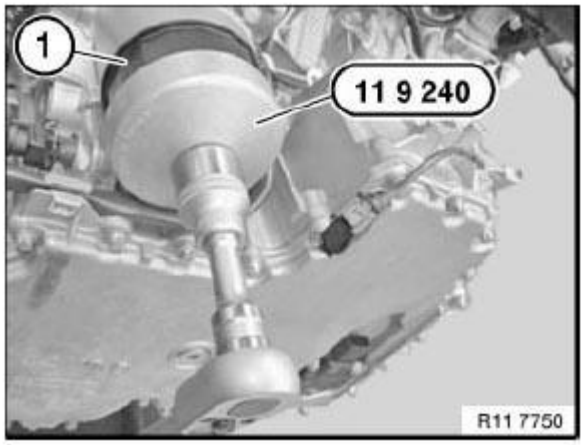

Fig. 7: Releasing Oil Filter Cap With Special Tool
Courtesy of BMW OF NORTH AMERICA, INC.

Installation:

Replace oil filter element (3) and sealing rings (1 to 2) .

Installation:

Moisten sealing ring (2) with engine oil.

Insert oil filter element (3) into oil filter cap.

Installation

Oil filter element (3) must snap audibly into place.

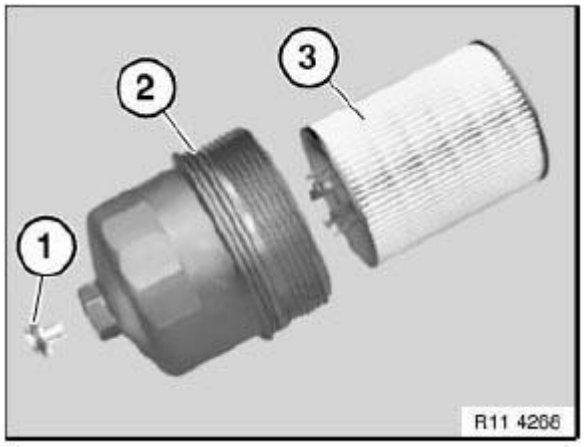

Fig. 8: Identifying Oil Filter Element And Sealing Ring
Courtesy of BMW OF NORTH AMERICA, INC.

NOTE: Presentation: without underbody protection and reinforcement plate.

Installation:

Replace sealing rings .

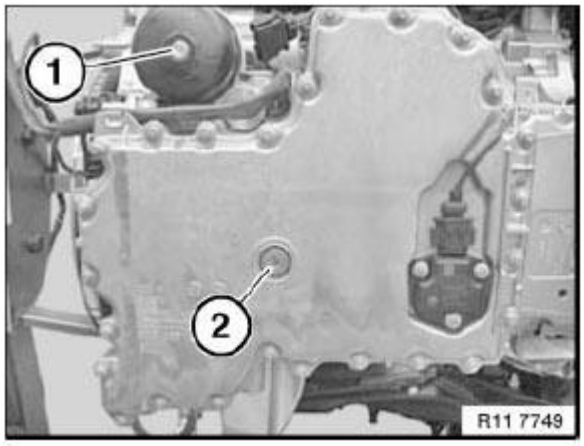

Fig. 9: Identifying Oil Sump And Filter Cap Plug
Courtesy of BMW OF NORTH AMERICA, INC.

Insert screw plug (2) for oil sump and tighten down.

Tightening torque 11 13 1AZ, see **OIL SUMP**

Insert screw plug (1) for oil filter cap and tighten down.

Tightening torque 11 42 2AZ, see **11 42 OIL FILTER AND PIPES**

NOTE: **Pour in engine oil .**

Start engine and run at idle until oil pressure warning lamp goes out.

Turn off engine.

Check oil filter cap and screw plugs (1 and 2) for oil filter cap and oil sump for leaks.

Assemble engine.

Checking engine oil level:

- Park vehicle on a horizontal surface
- Allow engine at normal operating temperature to run for three minutes with increased revs (approx. 1100 RPM)
- Read off engine oil level in instrument cluster or on Control Display
- Top up engine oil if necessary

11 00 050 REMOVING AND INSTALLING/REPLACING ENGINE (N63)

Special tools required:

- **11 0 020**
- **13 5 162**

See **ENGINE - SPECIAL TOOLS (N54, N63)** .

See **FUEL SYSTEM - SPECIAL TOOLS** .

Necessary preliminary tasks:

- Clamp off **battery** . See **BATTERY**
- Move **engine hood/bonnet** into service position
- Remove ground cable
- Remove **mounting bracket** for windscreen wiper system. See **61 61 270 REMOVING AND INSTALLING OR REPLACING BRACKET FOR WINDSCREEN WIPER SYSTEM COMPLETE WITH MOTOR**
- Remove **RADIATOR AIR GUIDE**
- Remove **MODULE CARRIER (N63)**
- Remove both **intake filter housings** . See **13 71 030 REMOVING AND INSTALLING BOTH INTAKE FILTER HOUSINGS (N63)** .
- Disconnect coolant hoses from engine
- Disconnect coolant hoses from intercooler expansion tank
- Disconnect line from tank vent valve
- Release **feed and return lines** for engine oil cooler. See **OIL COOLER LINES** .
- Release **suction line** and return line on oil reservoir. See **OIL COOLER LINES** .
- Release **power steering pump** with bracket. See **32 41 033 REMOVING AND INSTALLING POWER STEERING PUMP FOR POWER STEERING GEAR WITH ACTIVE FRONT STEERING (N63)** or **32 41 037 REMOVING AND INSTALLING/REPLACING POWER STEERING PUMP FOR POWER STEERING GEAR WITH DYNAMIC DRIVE (N63)** .
- Remove **transmission** . See **24 00 023 REMOVING AND INSTALLING AUTOMATIC TRANSMISSION (GA6HP26Z) (N63)** .
- Remove front **output shafts** . See **OUTPUT SHAFT**
- Remove **left and right holders** of front cross-strut. See **31 12 043 REMOVING AND INSTALLING/REPLACING COMPLETE FRONT LEFT OR RIGHT SPRING STRUT HOLDER** .

  Release engine wiring harness from electronics box and secure on engine against falling off.

  Unlock all plugs (1) of DME control unit and disconnect.

Unlock plug on electronics box fan and disconnect.

Unlock and detach terminal strip (2).

Unlock all plugs on plug strip (3) and detach.

Unlock plug strip (3) and remove towards top.

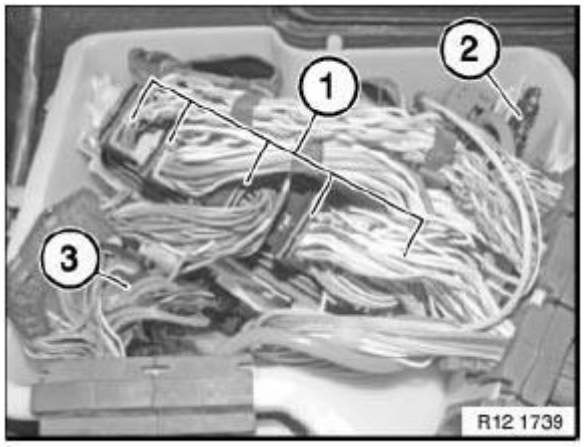

Fig. 10: Identifying Plug And Terminal Strip
Courtesy of BMW OF NORTH AMERICA, INC.

Release screws and remove retaining bar (1).

Unlock upper section (2) of partition seal in direction of arrow and remove.

Release grommets (3) for wiring harnesses from lower section of partition seal and from electronics box.

Installation:

Make sure grommets are correctly seated so as to prevent ingress of moisture.

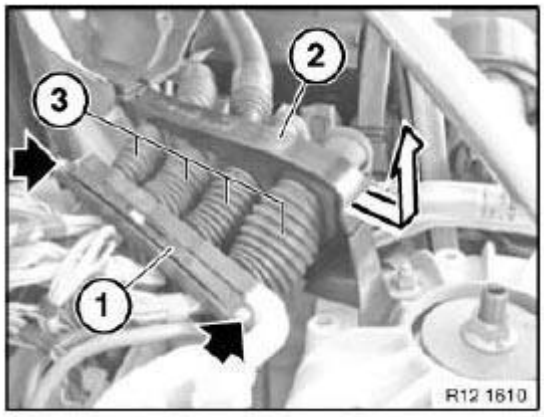

Fig. 11: Unlocking Upper Section Of Partition Seal

Courtesy of BMW OF NORTH AMERICA, INC.

Open cover.

Release screw (1).

Tightening torque 13 71 8AZ, see **13 71 AIR INTAKE DUCT**

Remove battery positive lead (2) from battery positive terminal.

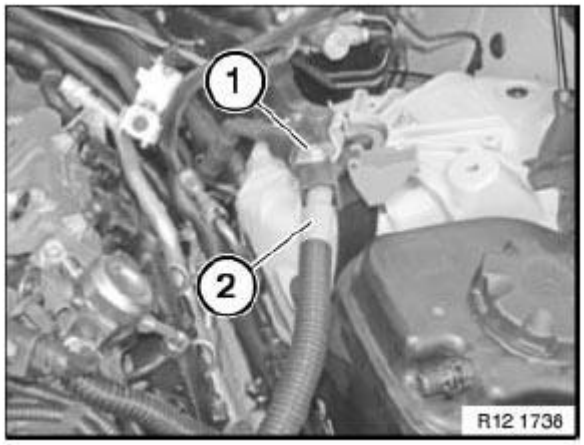

Fig. 12: Identifying Battery Positive Lead With Screw
Courtesy of BMW OF NORTH AMERICA, INC.

Unlock and detach vacuum line (1) from vacuum pump.

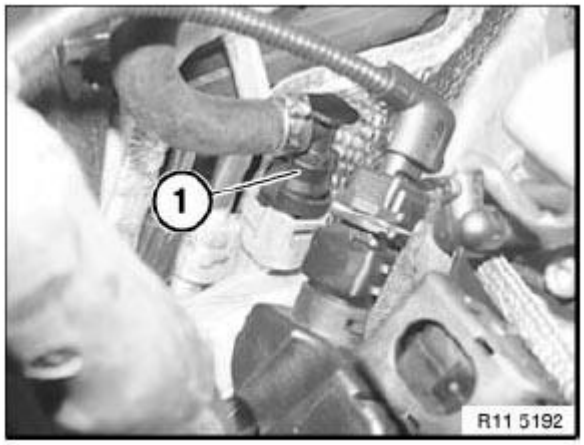

Fig. 13: Detaching Vacuum Line From Vacuum Pump
Courtesy of BMW OF NORTH AMERICA, INC.

Release screws (1).

Remove **double pipe** (2).

Installation:

Replace sealing rings and moisten with refrigerant oil.

Tightening torque 64 53 5AZ, see **CONDENSER AND DRYER**

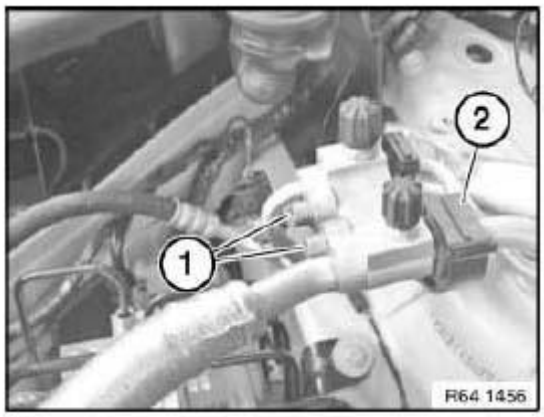

Fig. 14: Identifying Double Pipe With Screws
Courtesy of BMW OF NORTH AMERICA, INC.

Unlock water pipe (1) on heater end plate and detach.

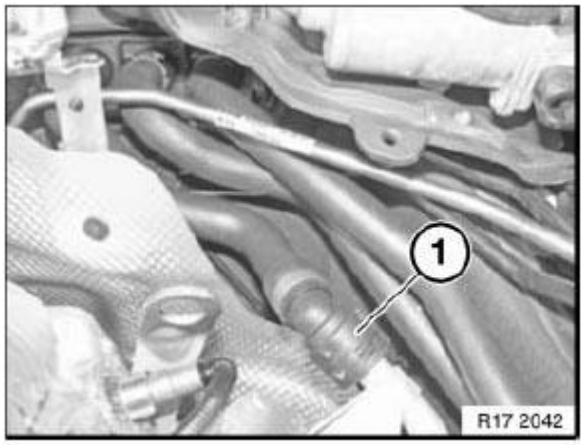

Fig. 15: Identifying Water Pipe
Courtesy of BMW OF NORTH AMERICA, INC.

Unlock and disconnect fuel feed line (1), seal off with special tool 13 5 160.

Seal off fuel feed line (2) with special tool 13 5 162.

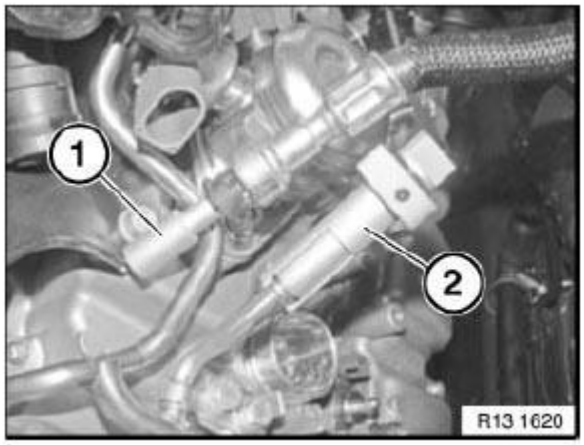

Fig. 16: Identifying Fuel Feed Line
Courtesy of BMW OF NORTH AMERICA, INC.

Release screws (1) on engine mount on left and right.

Tightening torque 22 11 2AZ, see **22 11 ENGINE SUSPENSION**

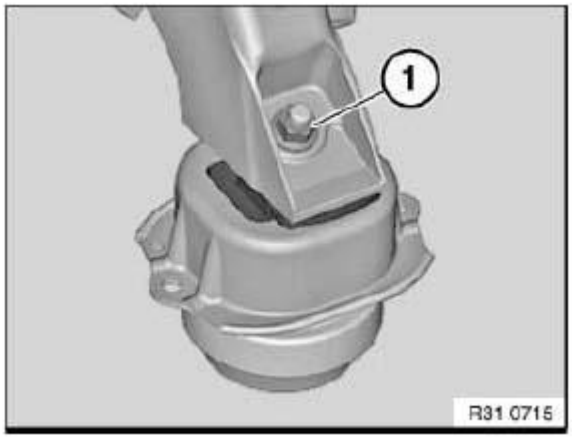

Fig. 17: Identifying Engine Mounting Screws
Courtesy of BMW OF NORTH AMERICA, INC.

Suspend special tool from lifting eyes (1) at front and rear.

Lift out engine with special tool 11 0 020.

Picture shows (F01).

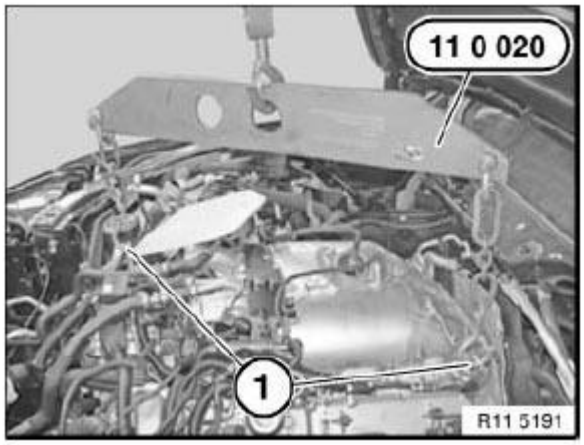

Fig. 18: Lifting Engine With Special Tool
Courtesy of BMW OF NORTH AMERICA, INC.

Mount **engine** on assembly stand.

Assemble engine.

Top up **coolant** and vent cooling system. See **17 00 039 VENTING COOLING SYSTEM AND CHECKING FOR WATER LEAKS (N63)** .

Check **cooling system** for leaks. See **17 00 039 VENTING COOLING SYSTEM AND CHECKING FOR WATER LEAKS (N63)** .

11 00 598 REMOVING AND INSTALLING ENGINE ON FRONT AXLE E70 E71 (N63/S63)

Necessary preliminary tasks:

- Remove front axle with engine and transmission.

Release screws. **Installation note:** Replace screws. Tightening torque **26 11 9AZ.**

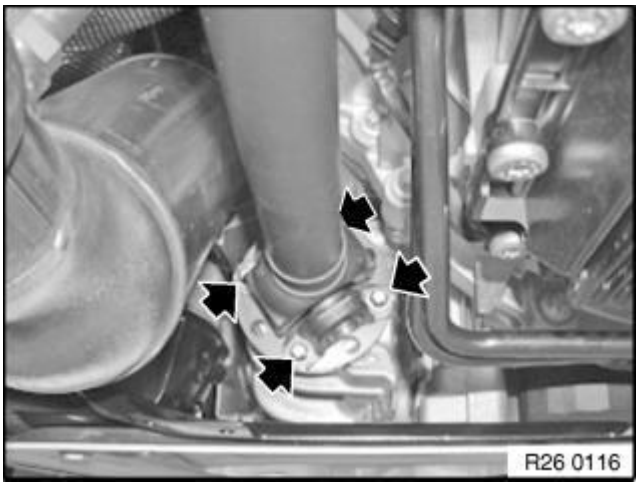

Fig. 19: Locating Screws
Courtesy of BMW OF NORTH AMERICA, INC.

Slide propeller shaft towards rear and remove.

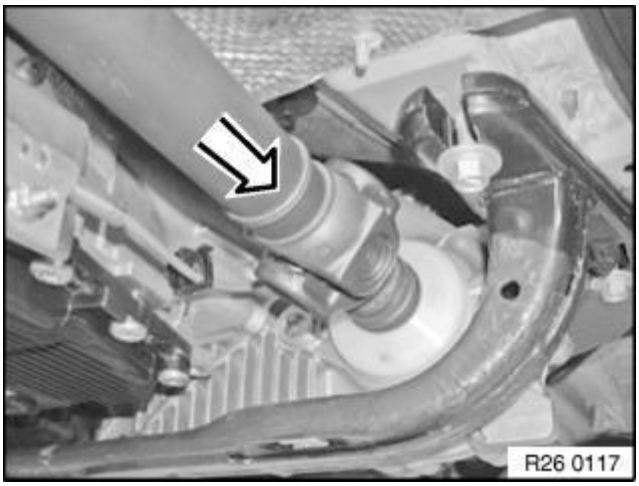

Fig. 20: Identifying Propeller Shaft
Courtesy of BMW OF NORTH AMERICA, INC.

Installation note: Slide propeller shaft fully towards rear. Sealing cup (1) must snap audibly into place and rest entirely on dust guard (2).

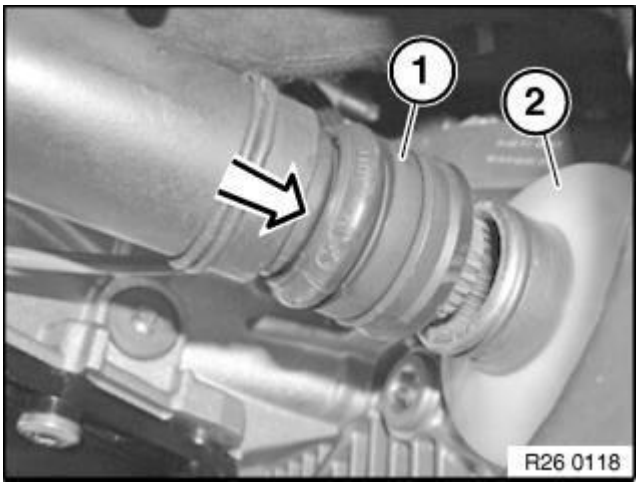

Fig. 21: Identifying Cup Seal And Dust Guard On Drive Shaft
Courtesy of BMW OF NORTH AMERICA, INC.

IMPORTANT: Do not release wishbone from swivel bearing with impact tool. Make sure special tool rests correctly on steel bush of swivel bearing. The swivel bearing must be removed if the steel bushing moves. Rubber boot of wishbone must not be damaged! Do not pull stainless steel ring off journal.

Slacken nut (1) two to three thread turns. If necessary, replace lower section 31 2 242 with lower section 31 2

247. Press control arm (2) with special tool 31 2 240) off swivel bearing. Unscrew nut (1) and remove control arm (2) from swivel bearing.

Installation note: Keep wishbone to swivel bearing connection clean and free from oil and grease. Replace self-locking nut. Tightening torque **31 12 4AZ.**

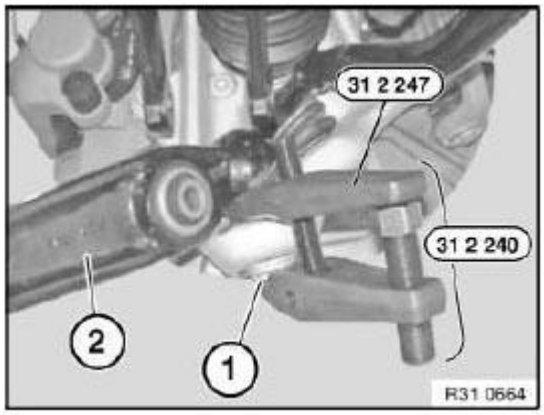

Fig. 22: Identifying Control Arm, Nut And Special Tool (31 2 247)
Courtesy of BMW OF NORTH AMERICA, INC.

Slacken nut (1) two to three thread turns. If necessary, replace lower section 31 2 242 with lower section 31 2 247. Press tension strut (2) with special tool 31 2 240 off swivel bearing. Unscrew nut (1) and remove tension strut (2) from swivel bearing.

Installation note: Keep tension strut to swivel bearing connection clean and free from oil and grease. Replace self-locking nut. Tightening torque **31 12 2AZ.** .

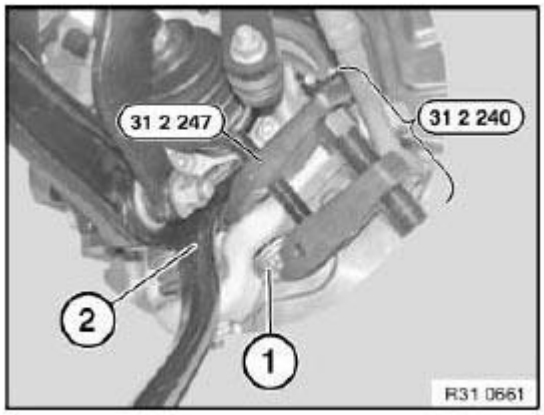

Fig. 23: Identifying Tension Strut, Nut And Special Tool (31 2 247)
Courtesy of BMW OF NORTH AMERICA, INC.

Slacken nut (1) two to three thread turns. If necessary, replace lower section 31 2 242 with lower section 31 2 246. Press track rod end (2) with special tool 31 2 240 off swivel bearing. Unscrew nut (1) and remove track rod end (2) from swivel bearing.

Installation note: Keep track rod end to swivel bearing connection clean and free from oil and grease. Replace self-locking nut. Tightening torque **32 21 3AZ.**

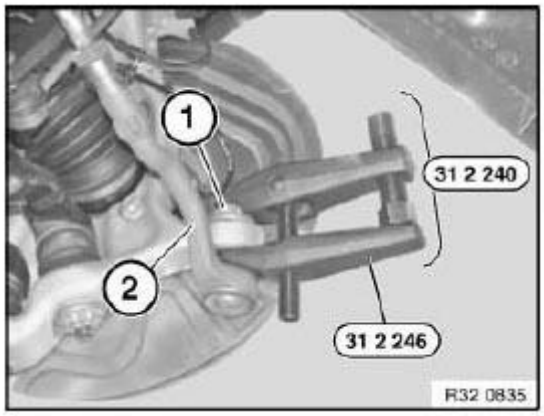

Fig. 24: Identifying Tie Rod End, Nut And Special Tool (31 2 240)
Courtesy of BMW OF NORTH AMERICA, INC.

Release screws (1). Slacken nut (2). Pull off expandable hose (3) of Adaptive Drive 1st part.

Recycling: Catch and dispose of escaping oil with auxiliary materials.

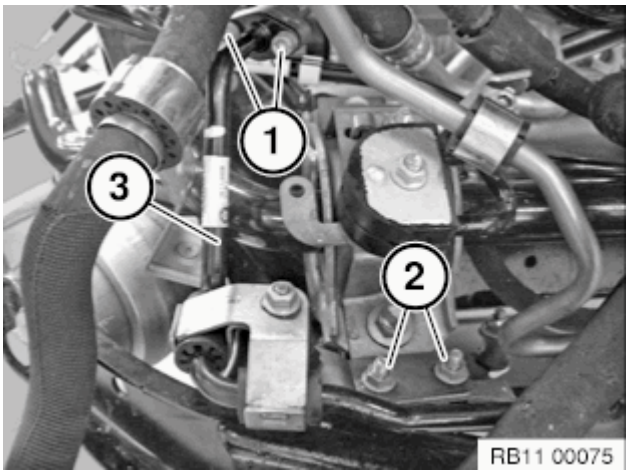

Fig. 25: Pulling Off Expandable Hose
Courtesy of BMW OF NORTH AMERICA, INC.

Release screws (1). Disconnect line (2) part 1.

Recycling: Catch and dispose of escaping oil with auxiliary materials.

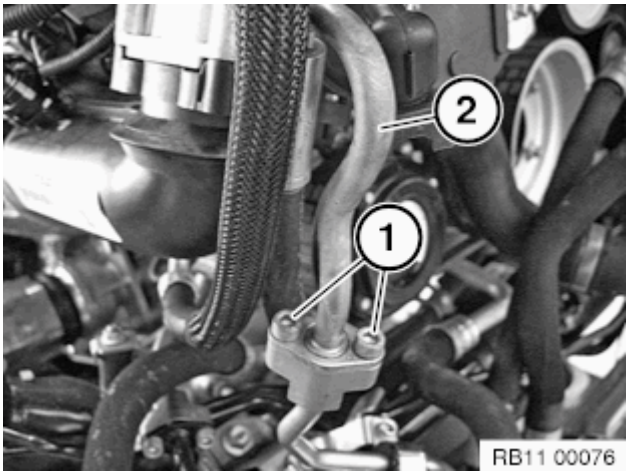

Fig. 26: Disconnecting Line
Courtesy of BMW OF NORTH AMERICA, INC.

Release screw and remove oil lines (2). Tightening torque, **17 22 4AZ.**

Installation note: Replace sealing rings.

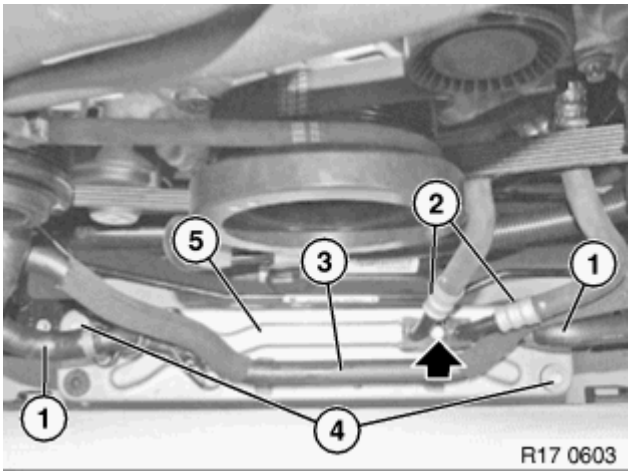

Fig. 27: Removing Oil Lines
Courtesy of BMW OF NORTH AMERICA, INC.

Recycling: Catch and dispose of escaping oil with auxiliary materials.

Remove swivel bearing (1) with brake disc and drive shaft (3) with the aid of a workshop crane (2). Do not bend output shaft (3) too far, note deflection angle. The illustration shows the procedure on the left swivel bearing; the procedure on the right swivel bearing is identical.

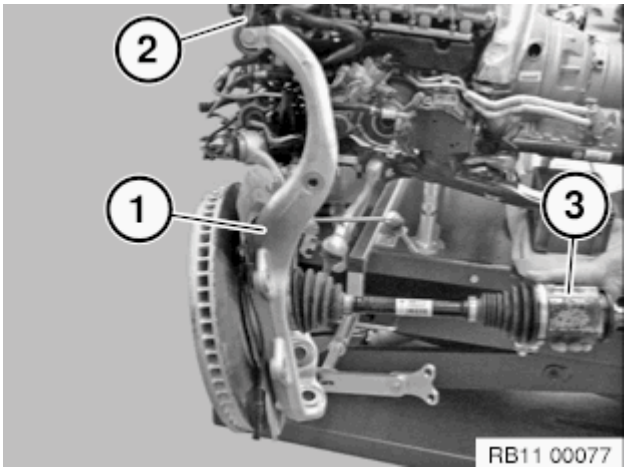

Fig. 28: Removing Swivel Bearing
Courtesy of BMW OF NORTH AMERICA, INC.

Screw fixtures (20) onto table lift at a suitable location. Move screw adapter (30) with plate (80) up against the transmission oil sump (1).

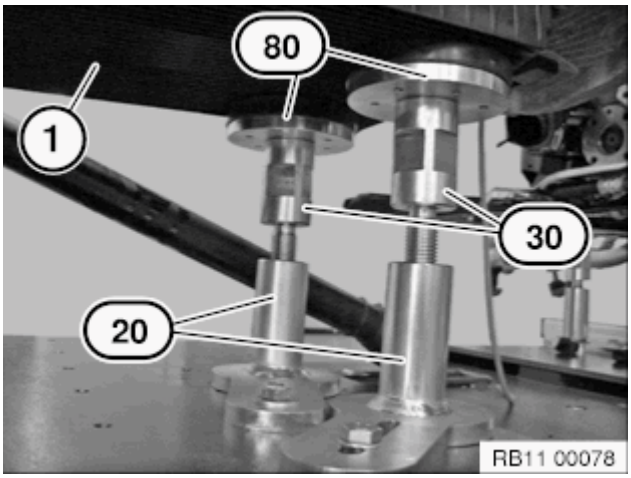

Fig. 29: Screwing Fixtures Onto Table Lift
Courtesy of BMW OF NORTH AMERICA, INC.

Remove cover on transmission.

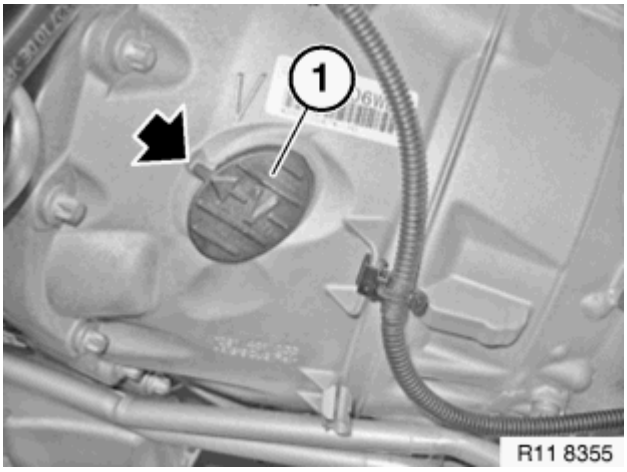

Fig. 30: Removing Cover On Transmission
Courtesy of BMW OF NORTH AMERICA, INC.

Crank engine at central bolt. Release converter bolts (1).

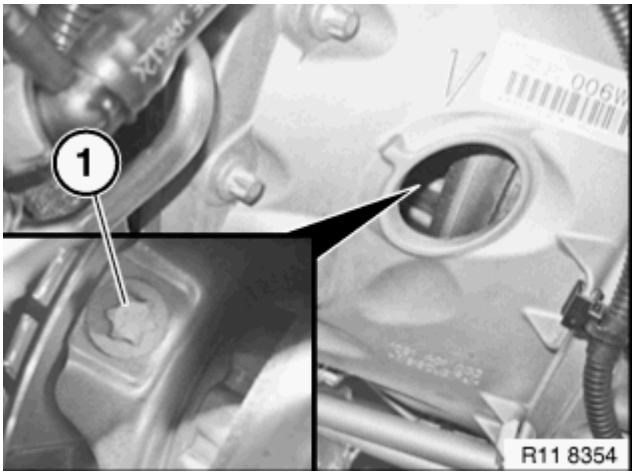

Fig. 31: Releasing Converter Bolts
Courtesy of BMW OF NORTH AMERICA, INC.

Press special tool 24 1 380 together and insert into recess in transmission housing.

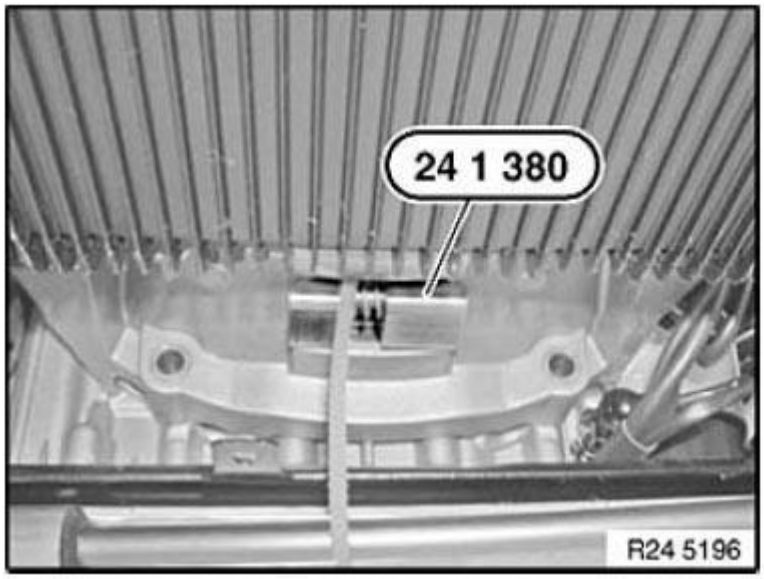

Fig. 32: Fixing Converter (6Hp26 Transmission)
Courtesy of BMW OF NORTH AMERICA, INC.

Release screw (1). Release hydraulic lines (2).

Installation note: Replace sealing rings.

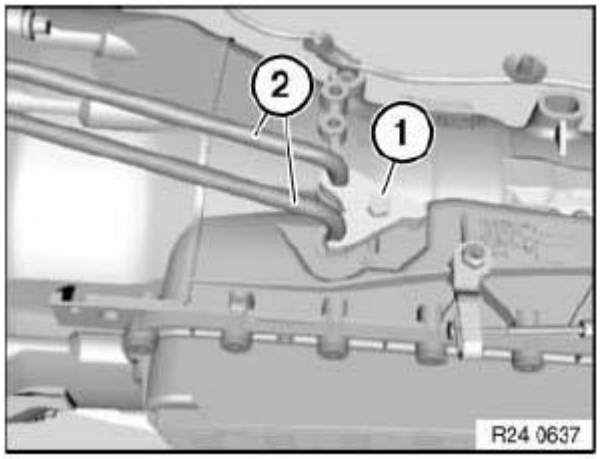

Fig. 33: Identifying Hydraulic Lines To Transmission Fluid Cooler
Courtesy of BMW OF NORTH AMERICA, INC.

Recycling: Catch and dispose of escaping oil with auxiliary materials.

Release screw (1). Lay ground strap (2) to one side.

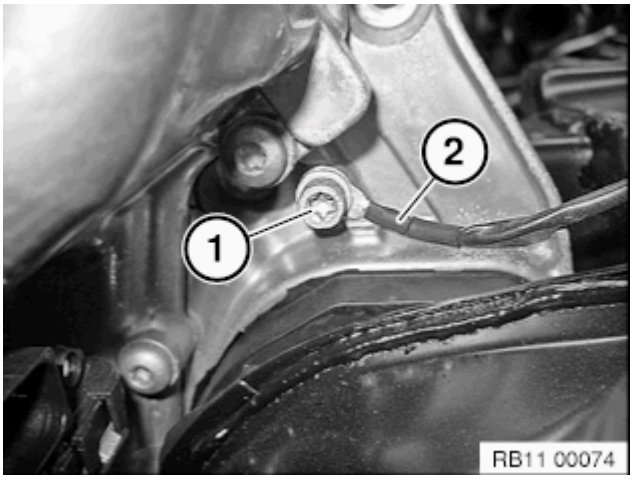

Fig. 34: Identifying Ground Strap
Courtesy of BMW OF NORTH AMERICA, INC.

Unclip the transmission wiring harness from its holders (2 3 4 and 5). Pull off the transmission wiring harness from the transmission at the holder (1).

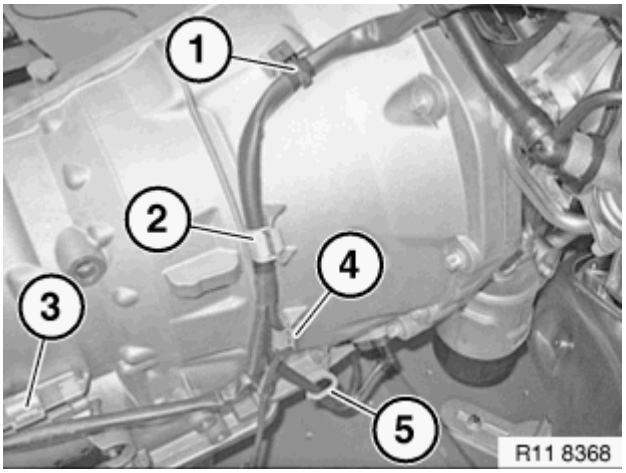

Fig. 35: Removing Transmission Wiring Harness
Courtesy of BMW OF NORTH AMERICA, INC.

Take off the transmission connector (1). Unclip the transmission wiring harness from holders (2).

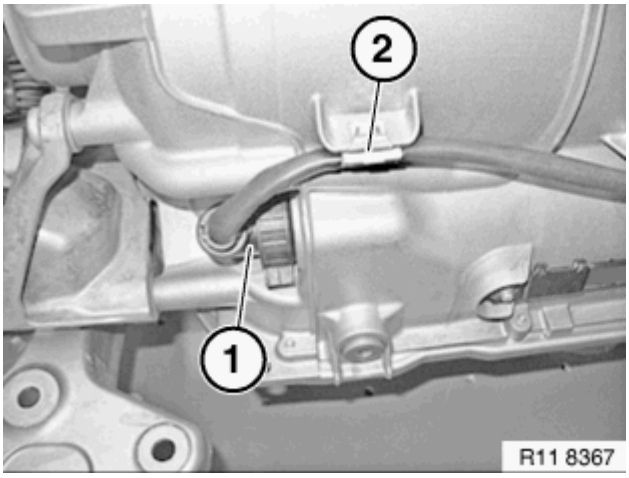

Fig. 36: Removing Wiring Harness From Holders
Courtesy of BMW OF NORTH AMERICA, INC.

Release all screws on transmission. Tightening torque **24 00 1AZ.**

Installation note: Screws have different lengths. Note installation position.

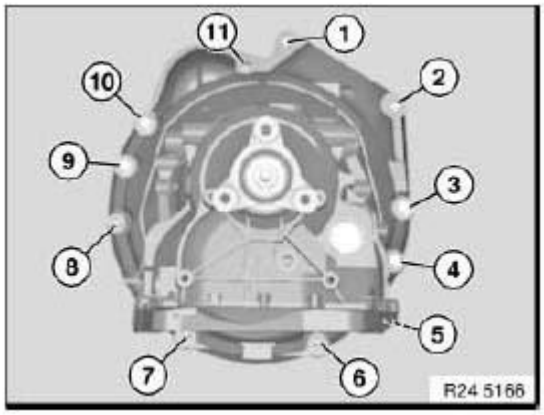

Fig. 37: Identifying Transmission Housing Screw Tightening Sequence
Courtesy of BMW OF NORTH AMERICA, INC.

Slightly raise engine with workshop crane and special tool 11 0 020. This simplifies removal and installation of transmission.

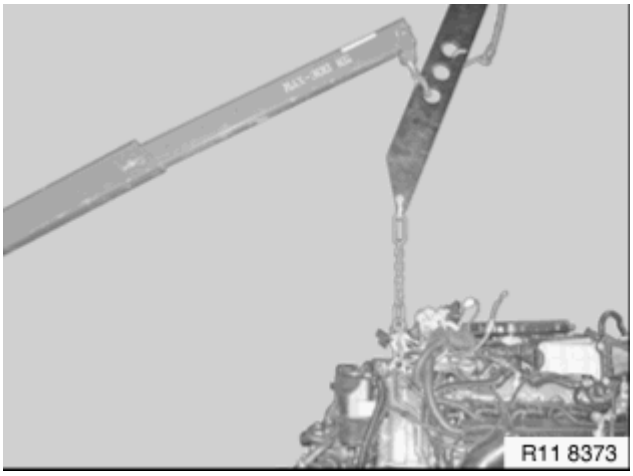

Fig. 38: Raising Engine With Workshop Crane
Courtesy of BMW OF NORTH AMERICA, INC.

Recycling: Capture emerging transmission oil with a suitable drip tray (1).

Disconnect transmission (2) from engine in the direction of the arrow. Pictures show N74.

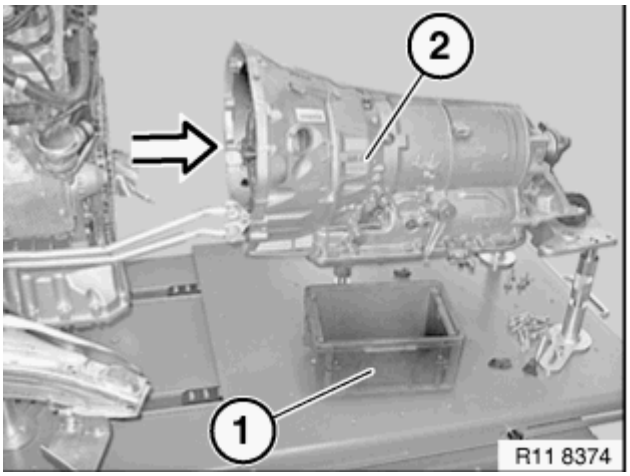

Fig. 39: Disconnecting Transmission from Engine
Courtesy of BMW OF NORTH AMERICA, INC.

Unscrew nuts (1). Raise engine approx. 10 mm with cross-member.

Installation note: Replace self-locking nuts. Tightening torque **22 11 2AZ.**

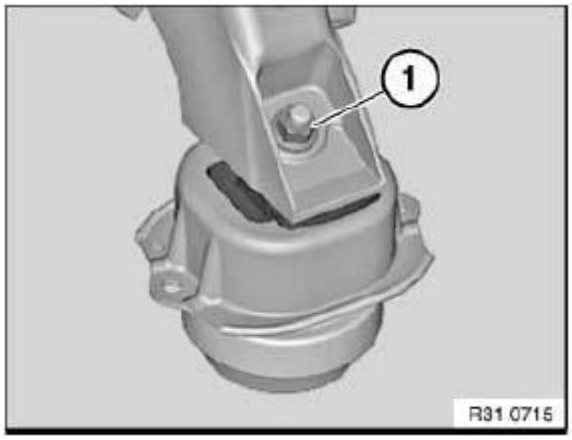

Fig. 40: Identifying Nut
Courtesy of BMW OF NORTH AMERICA, INC.

Lift engine (1) with workshop crane (2) and special tool 11 0 020 from front axle. Mount engine on assembly stand.

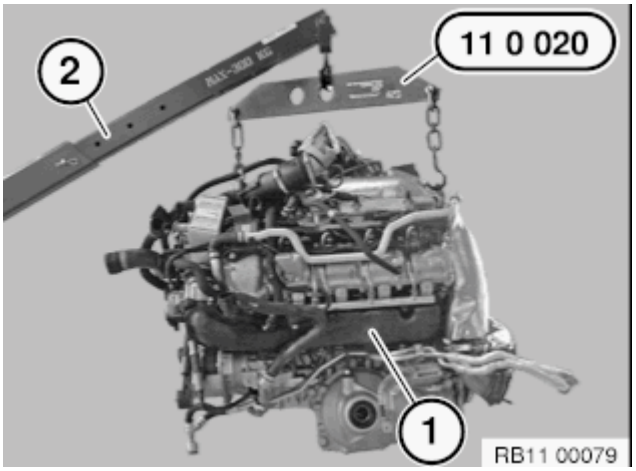

Fig. 41: Lifting Engine With Workshop Crane
Courtesy of BMW OF NORTH AMERICA, INC.

11 00 670 SECURING ENGINE IN INSTALLATION POSITION (N63)

Special tools required:

- **00 0 200**
- **00 0 202**
- **00 0 204**
- **00 0 208**
- **00 0 451**
- **00 0 452**
- **11 0 000**

See **MAINTENANCE AND GENERAL INFORMATION - SPECIAL TOOLS** .

See **ENGINE - SPECIAL TOOLS (N54, N63)** .

WARNING: Risk of injury!

Observe following instructions relating to special tool:

1. **Prior to each use, check the special tools for defects, modifications and operational reliability.**
2. **Damaged/modified special tools must not be used!**
3. **No changes or modifications may be made to the special tools!**
4. **Keep special tools dry, clean and free of grease.**

Necessary preliminary tasks:

- Secure **engine bonnet/hood in service position**
- Remove **intake filter housing** . See **13 71 030 REMOVING AND INSTALLING BOTH INTAKE FILTER HOUSINGS (N63)** .

Assemble cross member 00 0 200 with special tools 00 0 202, 00 0 204, 00 0 208.

Modification:

Replace profile strips with special tools 00 0 451.

Replace front supports with special tools 00 0 452.

NOTE: Ensure that the longer feet of special tools 00 0 452 point to the middle of the vehicle.

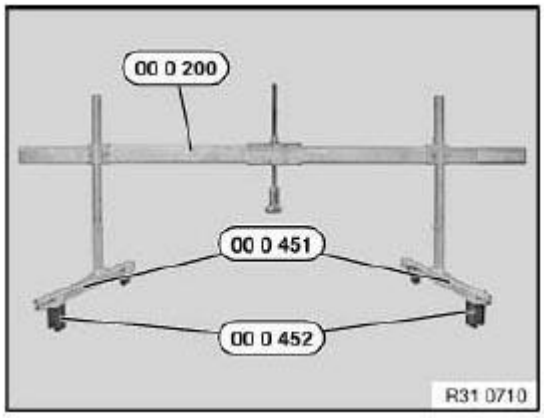

Fig. 42: Identifying Special Tools (00 0 200, 00 0 451 And 00 0 452)
Courtesy of BMW OF NORTH AMERICA, INC.

NOTE: **The support points on the left side are shown.**

Position transverse member 00 0 200 with a 2nd person helping on designated areas (1, 2).

NOTE: **Make sure that the front supports 00 0 452 are correctly positioned on the support carriers.**

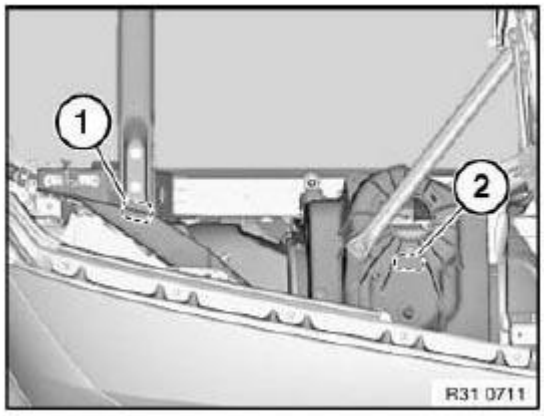

Fig. 43: Positioning Transverse Member With 2nd Person Helping On Designated Areas
Courtesy of BMW OF NORTH AMERICA, INC.

IMPORTANT: **Avoid a change of engine position in the transverse or longitudinal direction.**

Always make sure there is sufficient clearance between the engine (or its attachment parts) and the body.

IMPORTANT: **Risk of damage!**

With the aid of an assistant and the supports (1), place cross member 00 0 200 on the screw connections of the side panels.

Secure special tool 11 0 000 to spindle 00 0 202.

Attach suitable chains to special tool 11 0 000 and suspend from both engine suspension eyelets.

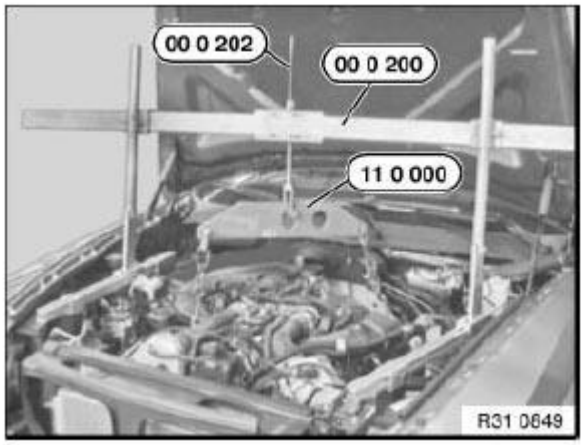

Fig. 44: Attaching Suitable Chains To Special Tool And Suspend From Both Engine Suspension Eyelets
Courtesy of BMW OF NORTH AMERICA, INC.

WARNING: **Risk of injury!**

Tighten down all adjusting screws and nuts on cross member 00 0 200.

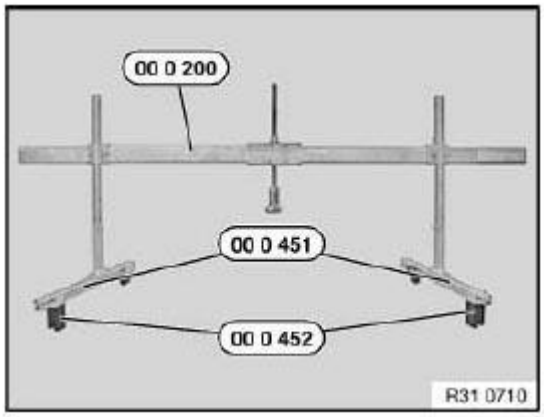

Fig. 45: Identifying Special Tools (00 0 200, 00 0 451 And 00 0 452)
Courtesy of BMW OF NORTH AMERICA, INC.

Unscrew nuts (1).

Tightening torque 22 11 2AZ, see **22 11 ENGINE SUSPENSION**

Raise engine approx. 10 mm with transverse member.

Installation:

Replace self-locking nuts.

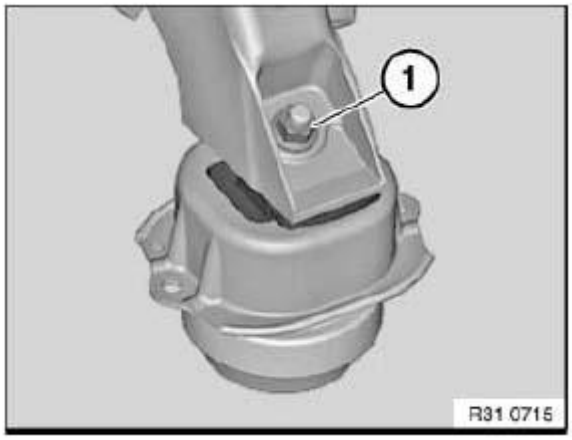

Fig. 46: Identifying Engine Mounting Screws
Courtesy of BMW OF NORTH AMERICA, INC.

ENGINE IDENTIFICATION

Drive in engine numbers at marked surface with impact tool.

M47 / M47TU / M47T2

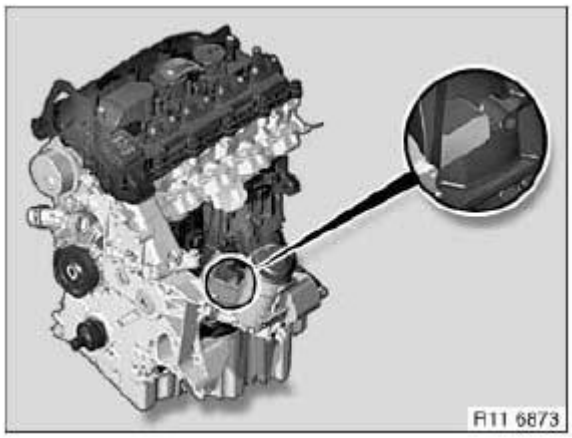

Fig. 47: Engine Identification (M47 / M47TU / M47T2)
Courtesy of BMW OF NORTH AMERICA, INC.

M57 / M57TU / M57T2

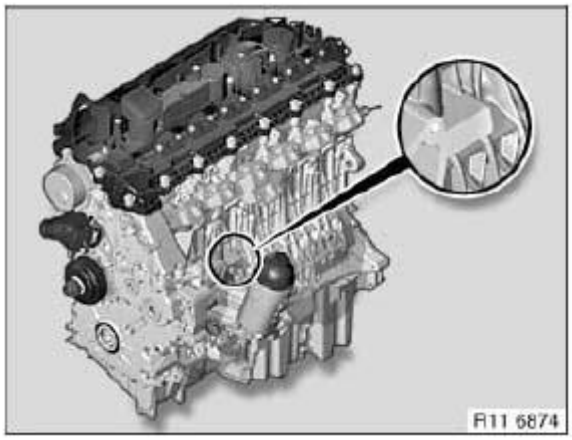

Fig. 48: Engine Identification (M57 / M57TU / M57T2)
Courtesy of BMW OF NORTH AMERICA, INC.

M67 / M67TU

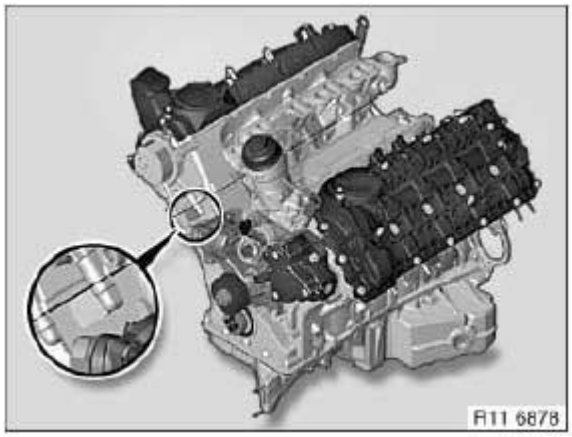

Fig. 49: Engine Identification (M67 / M67TU)
Courtesy of BMW OF NORTH AMERICA, INC.

N47 / N47S

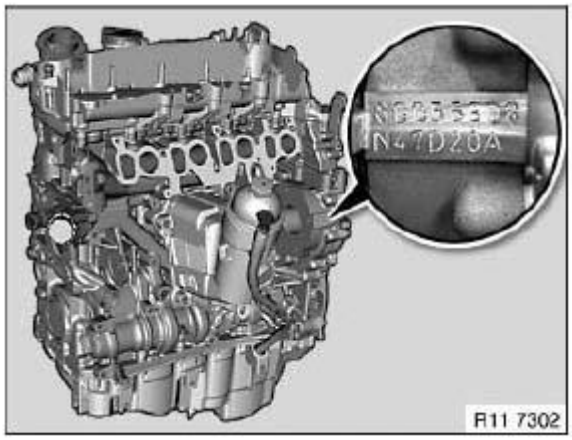

Fig. 50: Engine Identification (N47 / N47S)
Courtesy of BMW OF NORTH AMERICA, INC.

M52 / M52TU

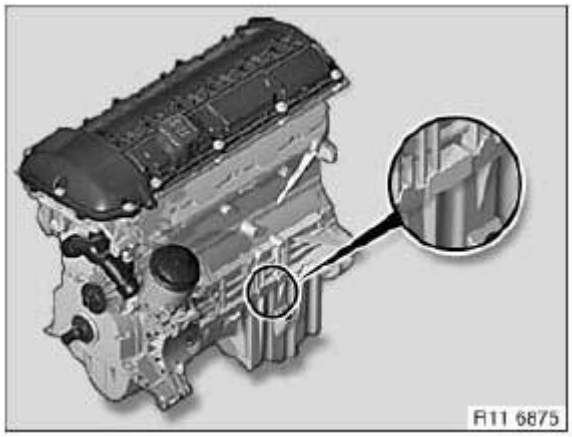

Fig. 51: Engine Identification (M52 / M52TU)
Courtesy of BMW OF NORTH AMERICA, INC.

M54

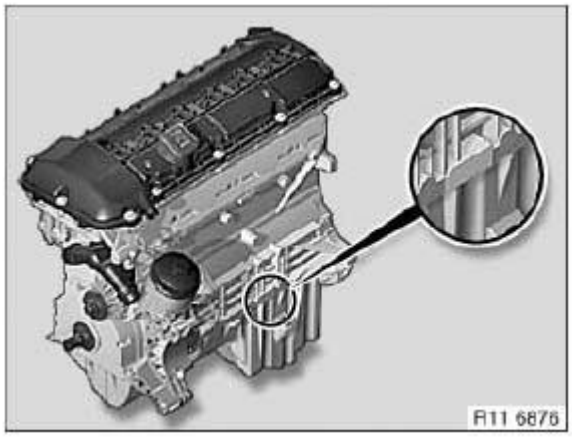

Fig. 52: Engine Identification (M54)
Courtesy of BMW OF NORTH AMERICA, INC.

M56

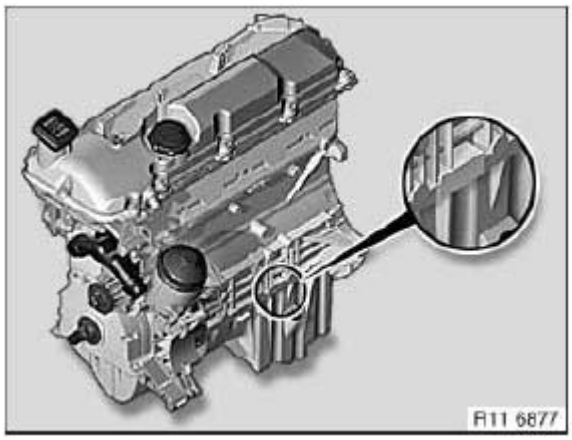

Fig. 53: Engine Identification (M56)
Courtesy of BMW OF NORTH AMERICA, INC.

N40 / N45 / N45T / N43

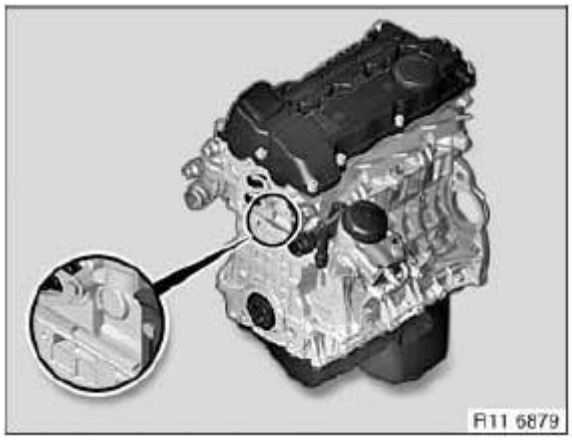

Fig. 54: Engine Identification (N40 / N45 / N45T / N43)
Courtesy of BMW OF NORTH AMERICA, INC.

N42 / N46 / N46T

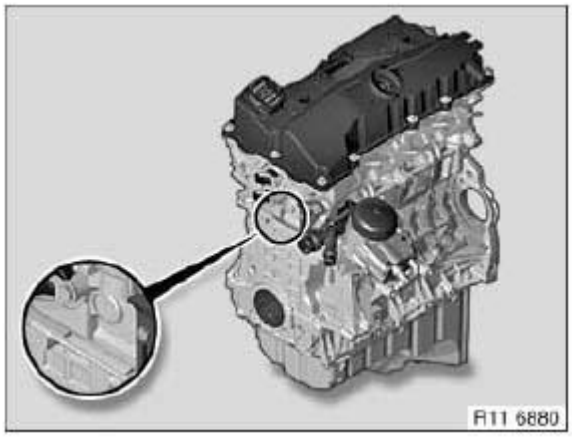

Fig. 55: Engine Identification (N42 / N46 / N46T)
Courtesy of BMW OF NORTH AMERICA, INC.

N51 / N52 / N52K / N53 / N54

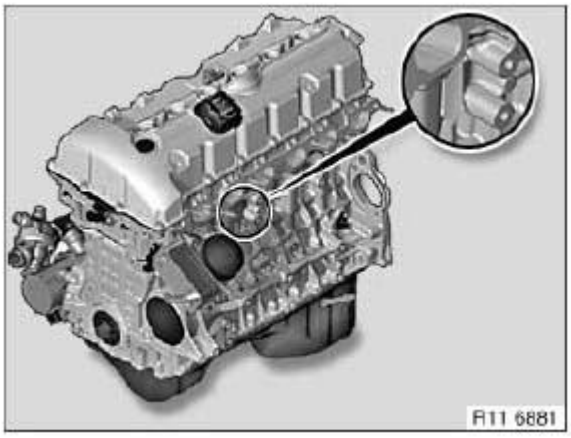

Fig. 56: Engine Identification (N51 / N52 / N52K / N53 / N54)
Courtesy of BMW OF NORTH AMERICA, INC.

N62

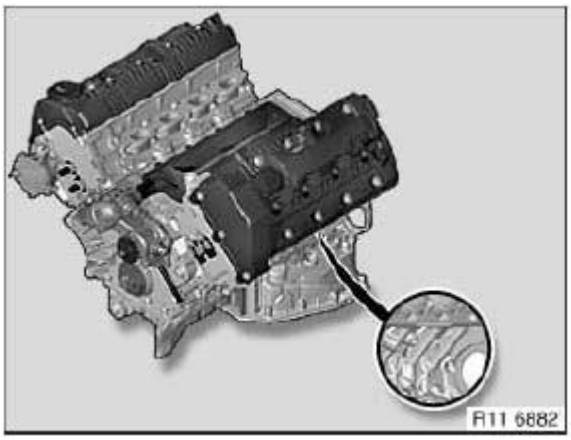

Fig. 57: Engine Identification (N62)
Courtesy of BMW OF NORTH AMERICA, INC.

N73

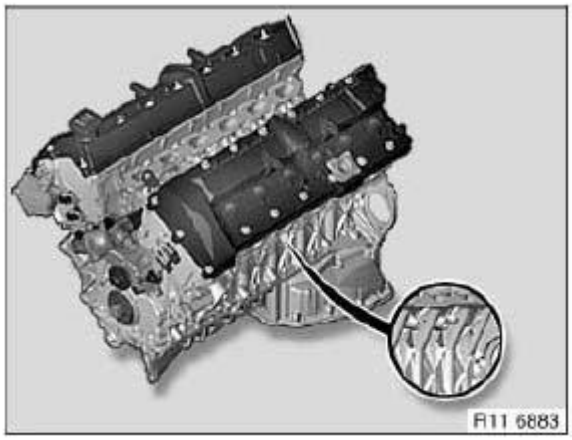

Fig. 58: Engine Identification (N73)
Courtesy of BMW OF NORTH AMERICA, INC.

S54

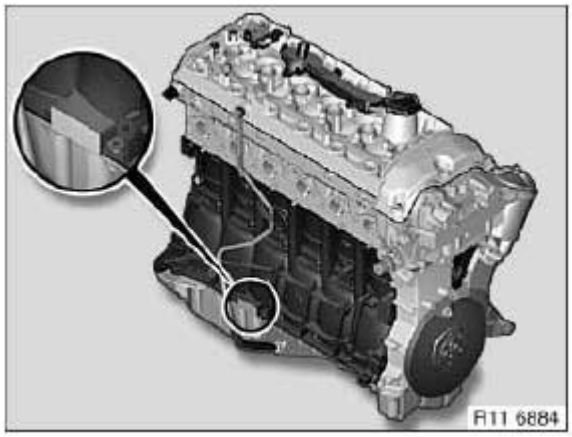

Fig. 59: Engine Identification (S54)
Courtesy of BMW OF NORTH AMERICA, INC.

S85 / S65

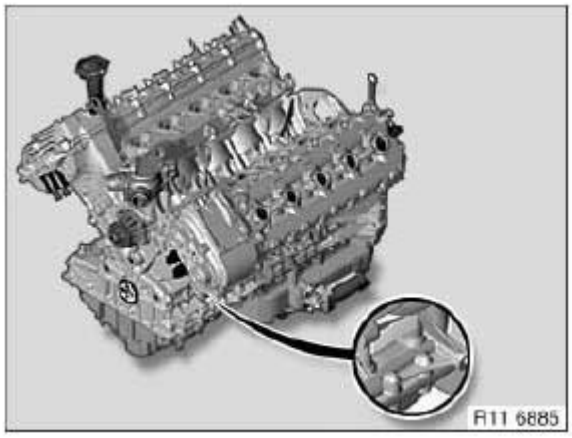

Fig. 60: Engine Identification (S85 / S65)
Courtesy of BMW OF NORTH AMERICA, INC.

W10 / W11

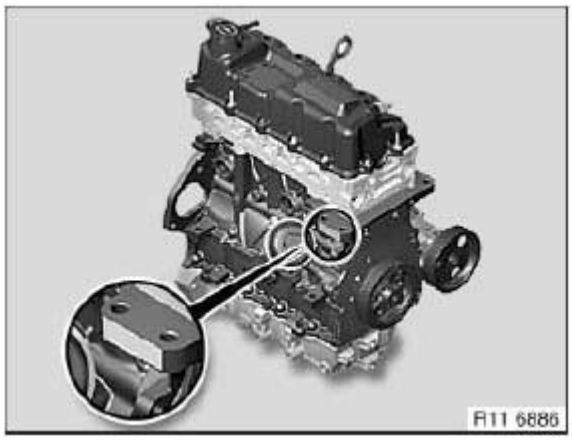

Fig. 61: Engine Identification (W10 / W11)
Courtesy of BMW OF NORTH AMERICA, INC.

W17

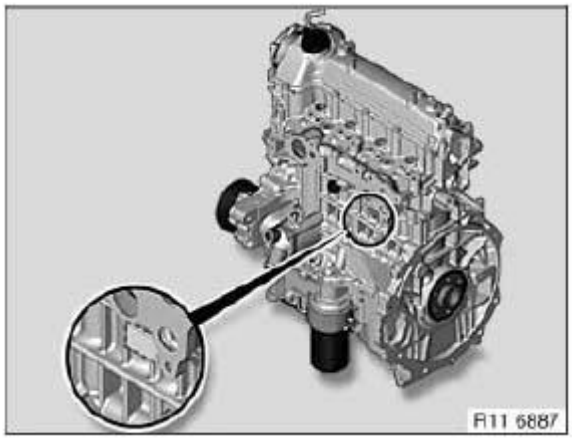

Fig. 62: Engine Identification (W17)
Courtesy of BMW OF NORTH AMERICA, INC.

Assemble engine.

CYLINDER HEAD WITH COVER

11 12 005 REMOVING AND INSTALLING/SEALING LEFT CYLINDER HEAD COVER (N63)

Special tools required:

- **11 4 470**

See **ENGINE - SPECIAL TOOLS (N54, N63)** .

Necessary preliminary tasks:

- Remove **acoustic cover**
- Clamp off battery **negative terminal** . See **BATTERY** .
- Remove left **intercooler** . See **17 51 001 REMOVING AND INSTALLING/REPLACING LEFT INTERCOOLER (N63)** or **17 51 001 REMOVING AND INSTALLING/REPLACING RIGHT INTERCOOLER (N63)** .
- Remove **intake filter housing** . See **13 71 030 REMOVING AND INSTALLING BOTH INTAKE FILTER HOUSINGS (N63)** .
- Remove **expansion tank** . See **ENGINE RADIATOR** .
- Remove coolant pipe from cylinder head cover (E71 only)
- Remove coolant valve for heater feed line
- Disconnect **fuel feed line** . See **13 53 332 REMOVING AND INSTALLING/REPLACING FEED LINE (N63)** .
- Detach wiring harness for injectors and lay to one side
- Remove **ignition coils** , cylinders 5-8. See **12 13 511 REPLACING IGNITION COILS (N63)** .

- Remove **injectors** , cylinders 5-8. See **13 53 310 REMOVING AND INSTALLING/REPLACING AN INJECTOR (N63)** .
- Remove **high-pressure pump** . See **13 51 065 REMOVING AND INSTALLING/REPLACING LEFT HIGH-PRESSURE FUEL PUMP (N63)** or **13 51 070 REMOVING AND INSTALLING/REPLACING RIGHT HIGH-PRESSURE FUEL PUMP (N63)** .

  Release bolts in sequence (17 to 1).

  Remove cylinder head cover.

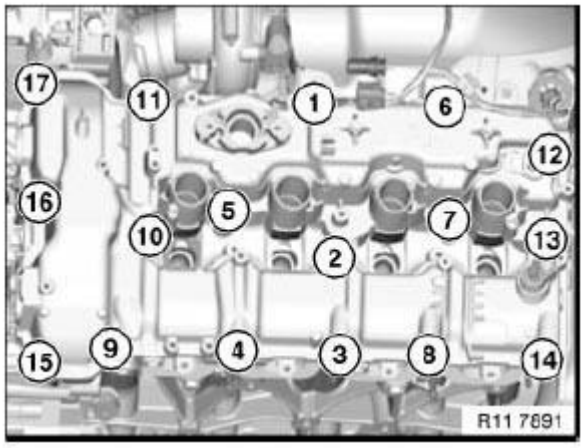

Fig. 63: Identifying Cylinder Head Cover Bolts Tightening Sequence
Courtesy of BMW OF NORTH AMERICA, INC.

Clean sealing face (1) with special tool 11 4 470.

Installation:

Replace seal (2) .

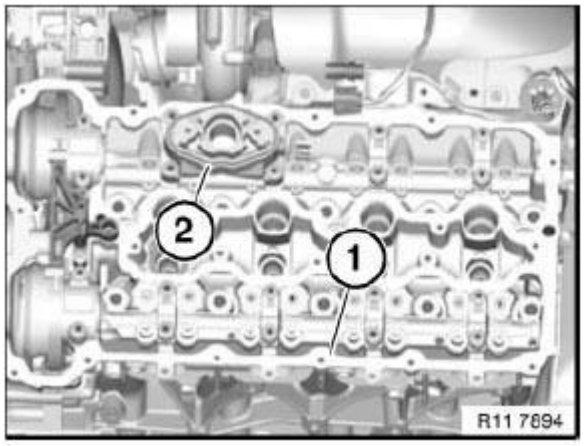

Fig. 64: Identifying Sealing Face With Seal

Courtesy of BMW OF NORTH AMERICA, INC.

Installation:

Replace profile gasket of cylinder head cover .

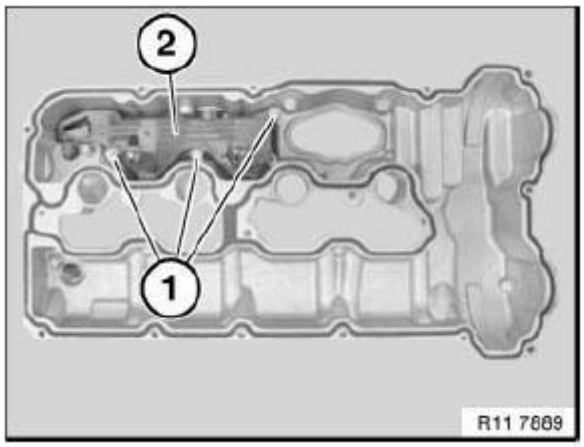

Fig. 65: Identifying Cylinder Head Cover Gasket
Courtesy of BMW OF NORTH AMERICA, INC.

Installation:

It is important to join screw (1) for exact positioning of the camshaft sensors.

Fit cylinder head cover.

Position screw (1).

Release screw (1) by 90°.

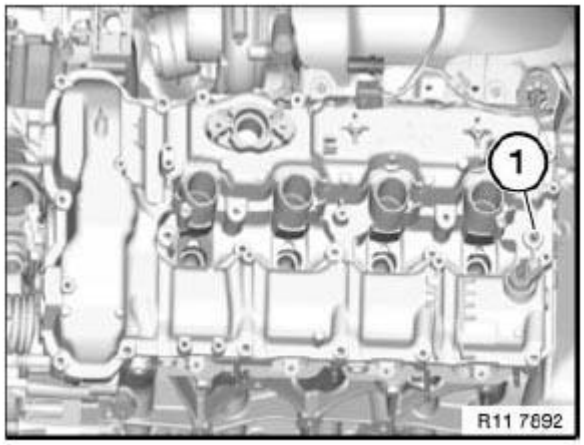

Fig. 66: Identifying Screw
Courtesy of BMW OF NORTH AMERICA, INC.

Secure cylinder head cover in sequence (1 to 17) in two work steps.

Tightening torque 11 12 3AZ, see **CYLINDER HEAD WITH COVER**

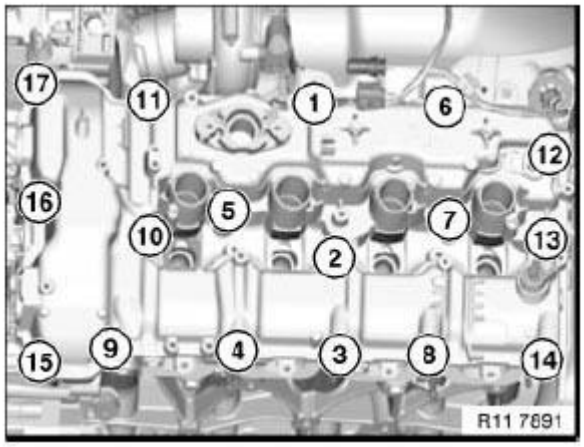

Fig. 67: Identifying Cylinder Head Cover Bolts Tightening Sequence
Courtesy of BMW OF NORTH AMERICA, INC.

Assemble engine.

11 12 006 REMOVING AND INSTALLING/SEALING RIGHT CYLINDER HEAD COVER (N63)

Special tools required:

- **11 4 470**

See **ENGINE - SPECIAL TOOLS (N54, N63)** .

Necessary preliminary tasks:

- Remove **acoustic cover**
- Disconnect battery **negative terminal** . See **BATTERY** .
- Release battery positive terminal
- Remove right **intercooler** . See **17 51 001 REMOVING AND INSTALLING/REPLACING LEFT INTERCOOLER (N63)** or **17 51 001 REMOVING AND INSTALLING/REPLACING RIGHT INTERCOOLER (N63)** .
- Remove **intake filter housing** . See **13 71 030 REMOVING AND INSTALLING BOTH INTAKE FILTER HOUSINGS (N63)** .
- Disconnect **fuel feed line** . See **13 53 332 REMOVING AND INSTALLING/REPLACING FEED LINE (N63)** .
- Detach wiring harness for injectors and lay to one side.
- Remove **ignition coils** , cylinders 1-4. See **12 13 511 REPLACING IGNITION COILS (N63)** .
- Remove **injectors** , cylinders 1-4. See **13 53 310 REMOVING AND INSTALLING/REPLACING AN**

INJECTOR (N63) .

- Remove **high-pressure pump** . See **13 51 065 REMOVING AND INSTALLING/REPLACING LEFT HIGH-PRESSURE FUEL PUMP (N63)** or **13 51 070 REMOVING AND INSTALLING/REPLACING RIGHT HIGH-PRESSURE FUEL PUMP (N63)** .

Release screws (1).

Tightening torque 11 12 9AZ, see **CYLINDER HEAD WITH COVER**

Remove oil filler neck (2).

Installation:

Replace sealing ring .

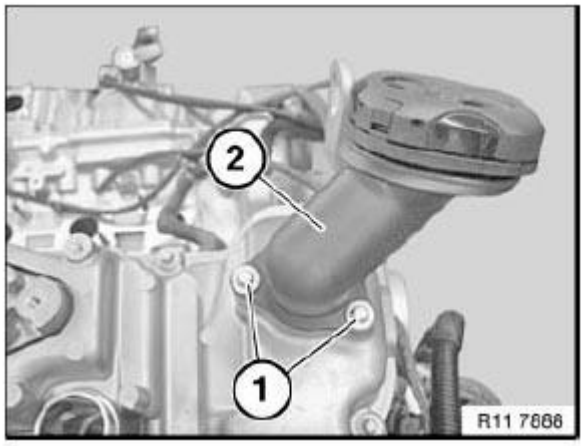

Fig. 68: Identifying Oil Filler Neck And Screws
Courtesy of BMW OF NORTH AMERICA, INC.

Release bolts in sequence (17 to 1).

Remove cylinder head cover.

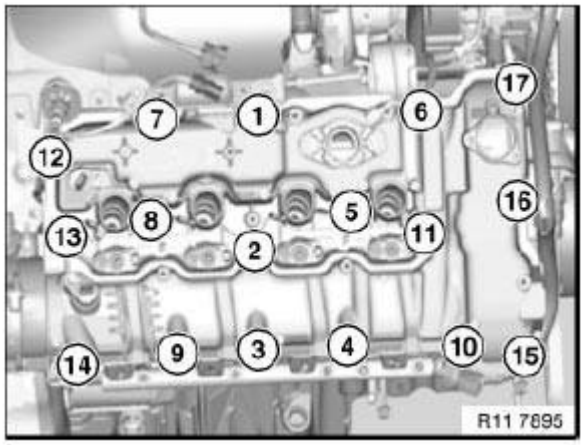

Fig. 69: Identifying Cylinder Head Cover Bolts Tightening Sequence
Courtesy of BMW OF NORTH AMERICA, INC.

Clean sealing face (1) with special tool 11 4 470.

Installation:

Replace seal (2) .

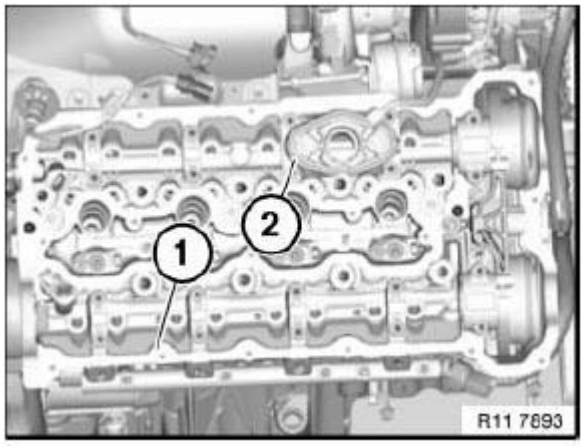

Fig. 70: Cleaning Sealing Face With Special Tool
Courtesy of BMW OF NORTH AMERICA, INC.

Installation:

Replace profile gasket of cylinder head cover .

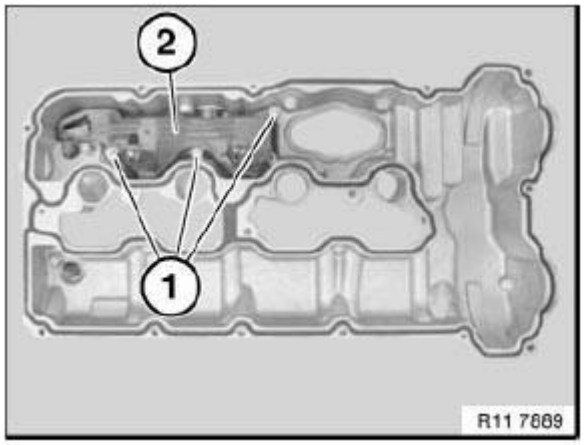

Fig. 71: Identifying Cylinder Head Cover Gasket
Courtesy of BMW OF NORTH AMERICA, INC.

Installation:

It is important to join screw (1) for exact positioning of the camshaft sensors.

Fit cylinder head cover.

Position screw (1).

Release screw (1) by 90°.

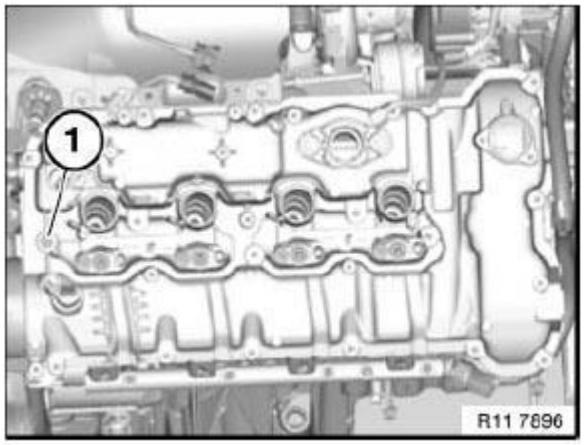

Fig. 72: Identifying Cylinder Head Cover Screw
Courtesy of BMW OF NORTH AMERICA, INC.

Secure cylinder head cover in sequence (1 to 17) in two work steps.

Tightening torque 11 12 3AZ, see **CYLINDER HEAD WITH COVER**

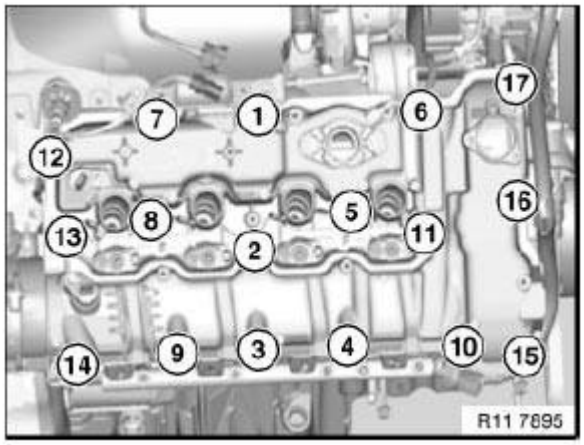

Fig. 73: Identifying Cylinder Head Cover Bolts Tightening Sequence
Courtesy of BMW OF NORTH AMERICA, INC.

Assemble engine.

11 12 105 REMOVING AND INSTALLING LEFT CYLINDER HEAD (N63)

Special tools required:

- **11 4 470**

See **ENGINE - SPECIAL TOOLS (N54, N63)** .

Necessary preliminary tasks:

- Check **timing.**
- Remove left **inlet and exhaust adjustment unit**

Release screw (1).

NOTE: Guide rail is loose from cylinder head.

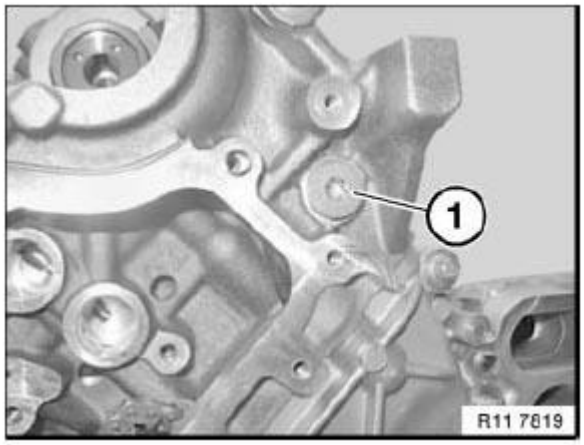

Fig. 74: Identifying Cylinder Head Screw
Courtesy of BMW OF NORTH AMERICA, INC.

Release bolts (1) at front from cylinder head.

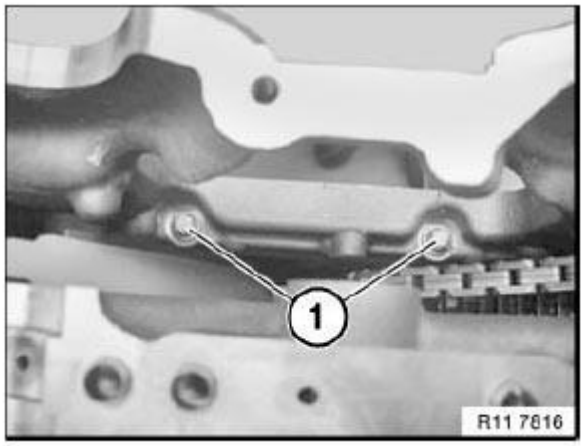

Fig. 75: Identifying Timing Case Bolts
Courtesy of BMW OF NORTH AMERICA, INC.

Release cylinder head bolts in sequence (10 to 1).

Remove all cylinder head bolts with washers.

NOTE: For purposes of clarity, the graphic shows the camshafts removed.

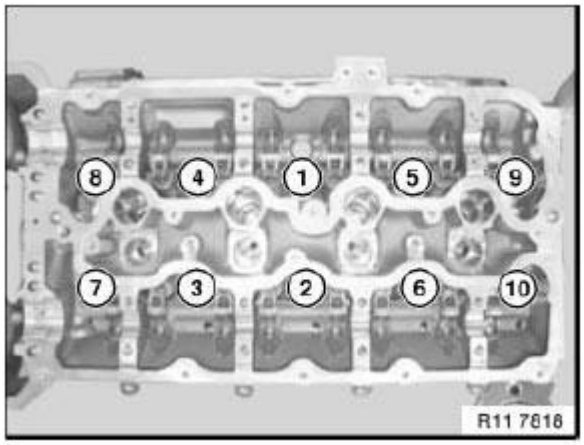

Fig. 76: Identifying Cylinder Head Bolts Tightening Sequence
Courtesy of BMW OF NORTH AMERICA, INC.

Clean sealing faces of cylinder head and crankcase; if necessary, remove gasket debris with special tool 11 4 470. Make sure no gasket remnants drop into oil and cooling channels.

IMPORTANT: Danger of cracking!

Threaded bores in engine block must be free of dirt and oil

Check **cylinder head** for leaks.

Check **cylinder head sealing face** for surface evenness.

Coat joint between engine block and timing case cover with Drei Bond 1209).

NOTE: Graphic shows an N62 engine by way of example.

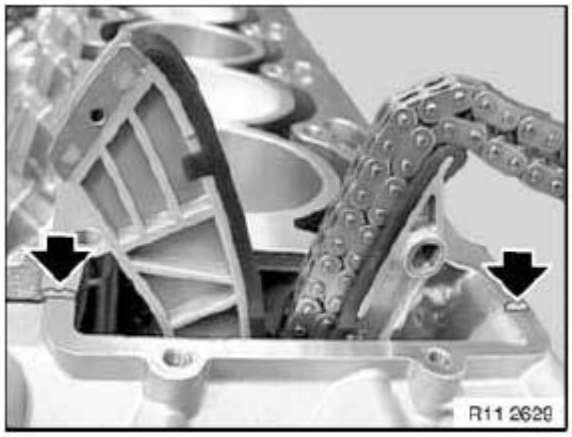

Fig. 77: Identifying Coat Joint
Courtesy of BMW OF NORTH AMERICA, INC.

Check dowel sleeves (1) for damage and correct installation position.

Installation:

Replace cylinder head gasket (2) .

Fit new cylinder head gasket (2).

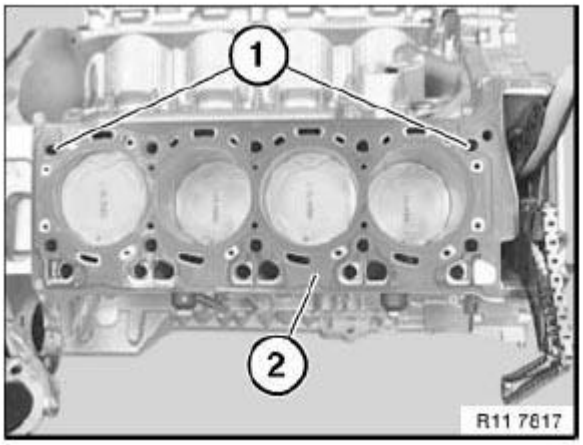

Fig. 78: Identifying Cylinder Head Gasket And Dowel Sleeves
Courtesy of BMW OF NORTH AMERICA, INC.

NOTE: Graphic corresponds to cylinders 1-4.

Put the cylinder head on.

Do not wash off bolt coating.

Installation:

Fit new cylinder head screws .

Insert new cylinder head bolts and initially tighten so that they are free of play.

Tighten down cylinder head bolts in sequence 1 - 10.

Tightening torque 11 12 1AZ, see **CYLINDER HEAD WITH COVER**

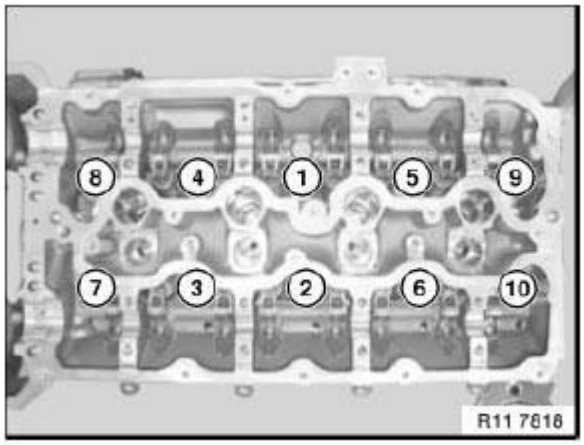

Fig. 79: Identifying Cylinder Head Bolts Tightening Sequence
Courtesy of BMW OF NORTH AMERICA, INC.

Install and tighten down bolts (1) between cylinder head and timing case cover.

Tightening torque 11 12 2AZ, see **CYLINDER HEAD WITH COVER**

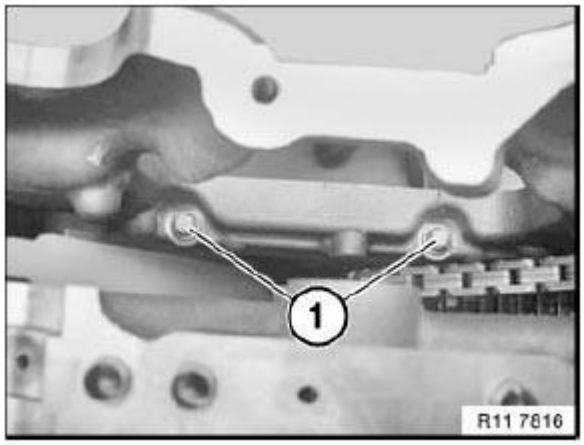

Fig. 80: Identifying Timing Case Bolts
Courtesy of BMW OF NORTH AMERICA, INC.

Insert screw (1) of guide rail and tighten down.

Tightening torque 11 31 3AZ, see **11 31 CAMSHAFT**

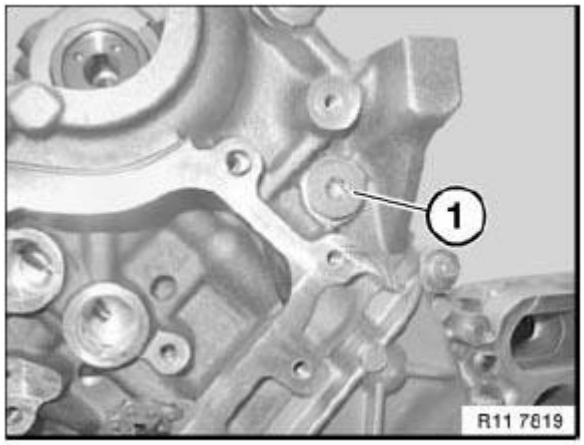

Fig. 81: Identifying Guide Rail Screw
Courtesy of BMW OF NORTH AMERICA, INC.

If necessary, install **camshafts** .

Install left **inlet and exhaust adjustment unit** .

Assemble engine.

11 12 106 REMOVING AND INSTALLING RIGHT CYLINDER HEAD (N63)

Special tools required:

- **11 4 470**

See **ENGINE - SPECIAL TOOLS (N54, N63)** .

Necessary preliminary tasks:

- Check **timing** .
- Remove **inlet and exhaust adjustment unit on right side** .

Release screw (1).

NOTE: Guide rail is loose from cylinder head.

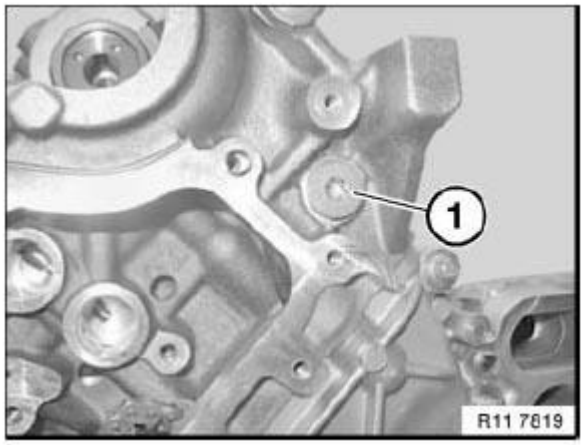

Fig. 82: Identifying Guide Rail Screw
Courtesy of BMW OF NORTH AMERICA, INC.

Release bolts (1) at front from cylinder head.

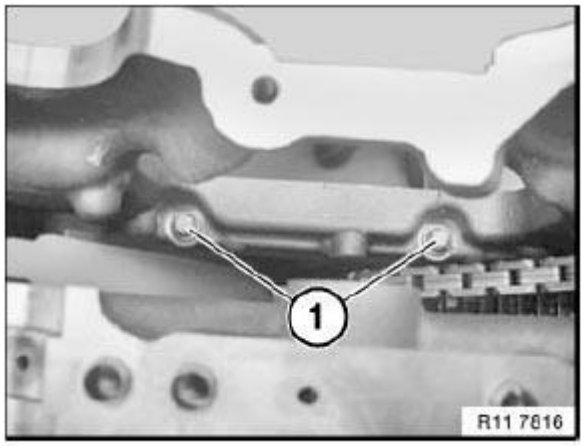

Fig. 83: Identifying Timing Case Bolts
Courtesy of BMW OF NORTH AMERICA, INC.

Release cylinder head bolts in sequence (10 to 1).

Remove all cylinder head bolts with washers.

NOTE: Shown without camshafts for purposes of clarity.

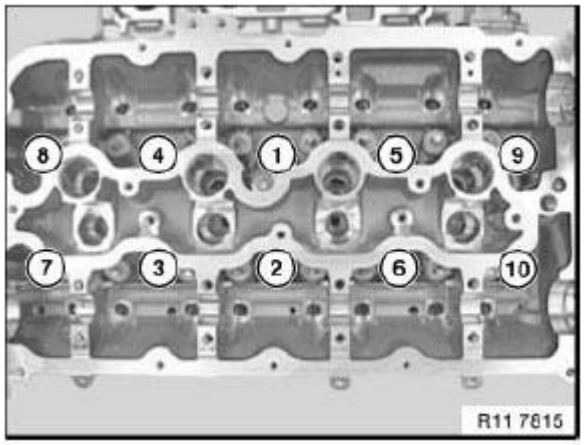

Fig. 84: Identifying Cylinder Head Bolts Tightening Sequence
Courtesy of BMW OF NORTH AMERICA, INC.

Clean sealing faces of cylinder head and crankcase; if necessary, remove gasket debris with special tool 11 4 470.

Make sure no gasket debris drops into the oil and coolant ducts.

Threaded bores in engine block must be free of dirt and oil **(risk of cracking)** .

Check **cylinder head for leaks** .

Check **cylinder head sealing face** for surface evenness.

Coat joint between engine block and timing case cover with Drei Bond 1209).

NOTE: Illustrations show N62.

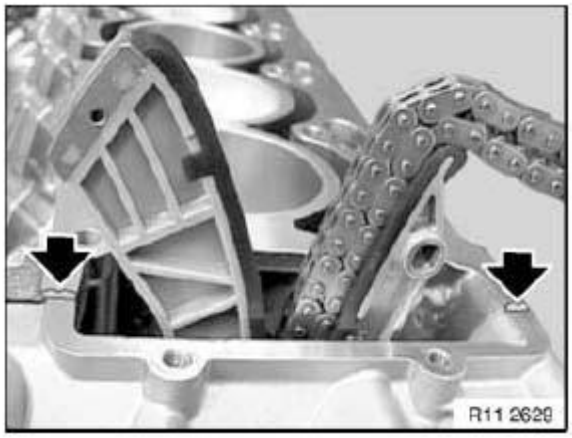

Fig. 85: Coat Joint Between Engine Block And Timing Case Cover
Courtesy of BMW OF NORTH AMERICA, INC.

Check dowel sleeves (1) for damage and correct installation position.

Fit new cylinder head gasket (2).

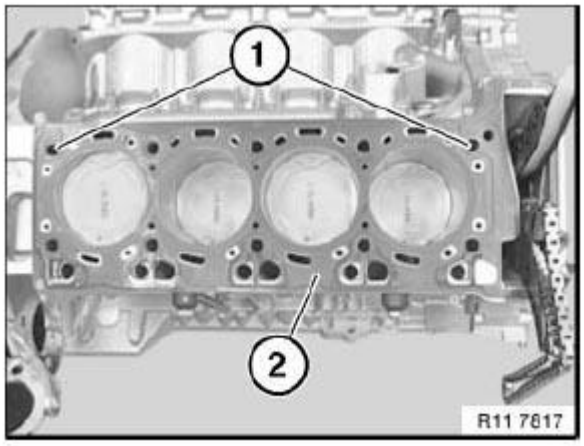

Fig. 86: Identifying Cylinder Head Gasket And Dowel Sleeves
Courtesy of BMW OF NORTH AMERICA, INC.

Put the cylinder head on.

Do not wash off bolt coating.

Insert new cylinder head bolts and initially tighten so that they are free of play.

Tighten down the cylinder-head bolts in order 1... 10.

Tightening torque: 11 12 1AZ, see **CYLINDER HEAD WITH COVER**

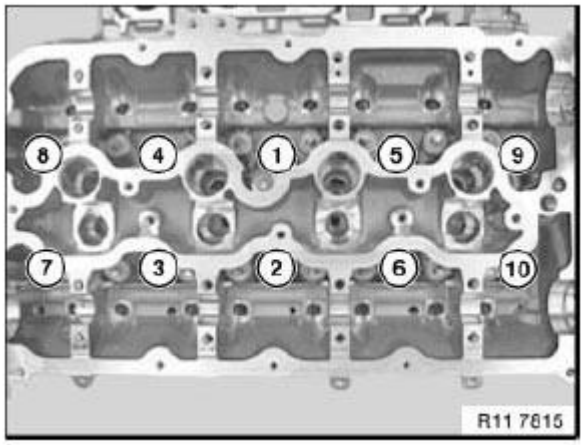

Fig. 87: Identifying Cylinder Head Bolts Tightening Sequence
Courtesy of BMW OF NORTH AMERICA, INC.

Install and tighten down bolts (1) between cylinder head and timing case cover.

Tightening torque: 11 12 2AZ, see **CYLINDER HEAD WITH COVER**

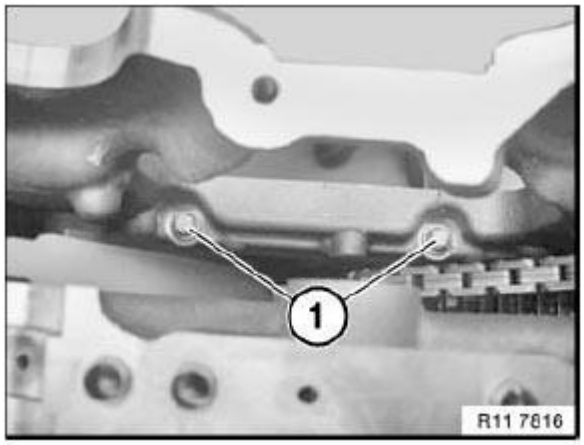

Fig. 88: Identifying Timing Case Bolts
Courtesy of BMW OF NORTH AMERICA, INC.

Insert screw (1) of guide rail and tighten down.

Tightening torque: 11 31 3AZ, see **11 31 CAMSHAFT**

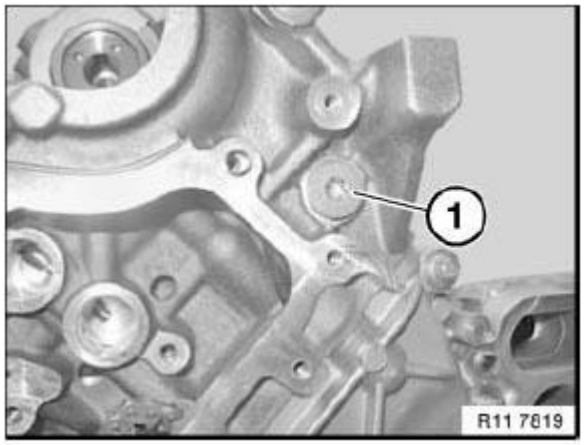

Fig. 89: Identifying Guide Rail Screw
Courtesy of BMW OF NORTH AMERICA, INC.

If necessary, install **camshafts** .

Install **inlet and exhaust adjustment unit on left side** .

Assemble engine.

11 12 112 REPLACING BOTH CYLINDER HEAD GASKETS (N63)

Necessary preliminary tasks:

- Remove left **cylinder head**
- Remove right **cylinder head**

Installation:

The cylinder head gaskets (2) for cylinders 1-4 and 5-8 are identical.

There is no marking (TOP).

Cylinder head gasket (2) must depending on its styling be correctly positioned on the timing chain case.

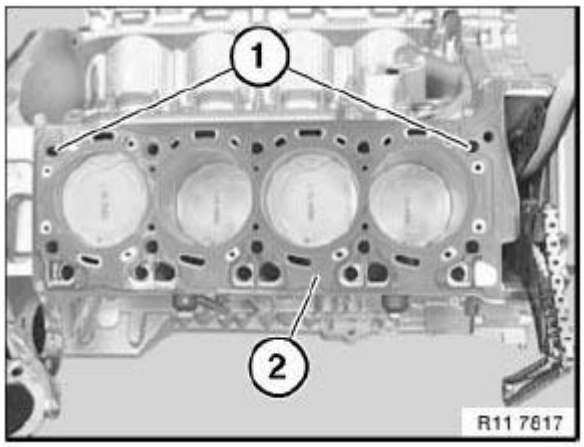

Fig. 90: Identifying Cylinder Head Gasket And Dowel Sleeves
Courtesy of BMW OF NORTH AMERICA, INC.

Repair gasket (+REP) is 0.3 mm thicker.

Check **cylinder head** for surface evenness.

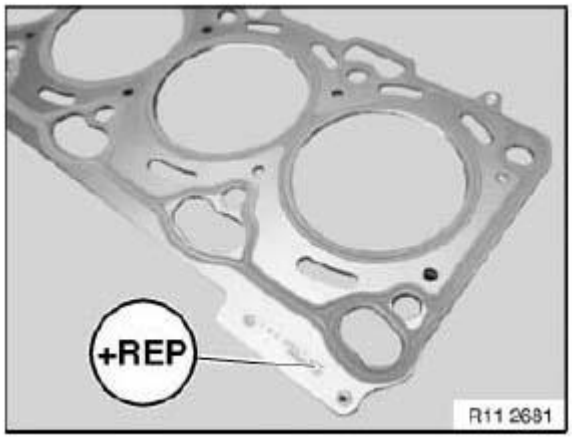

Fig. 91: Identifying Gasket (+REP)
Courtesy of BMW OF NORTH AMERICA, INC.

Assemble engine.

11 12 719 GRINDING CYLINDER HEAD SEALING SURFACE (N63)

Necessary preliminary tasks:

- Remove **cylinder head (right)** or **cylinder head (left)**.

Cylinder head disassembled

Check evenness of cylinder head sealing face with a standard straight-edge (1).

NOTE: Maximum plane deviation: longitudinal 0.10 mm.

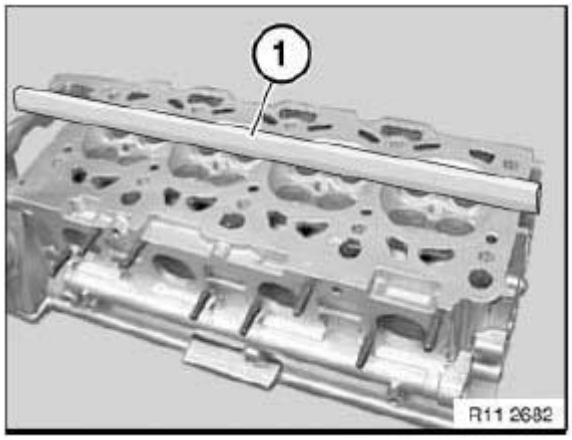

Fig. 92: Checking Evenness Of Cylinder Head Sealing Face With Standard Straight-Edge
Courtesy of BMW OF NORTH AMERICA, INC.

NOTE: Maximum plane deviation: transversal 0.05 mm.

- Machining limit

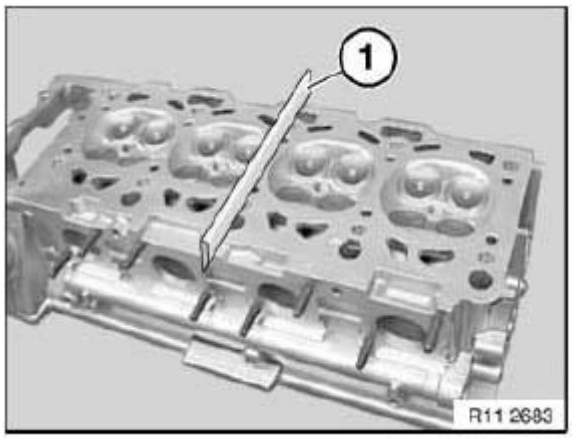

Fig. 93: Checking Evenness Of Cylinder Head Sealing Face With Standard Straight-Edge
Courtesy of BMW OF NORTH AMERICA, INC.

NOTE: A cylinder head gasket (+REP) 0.3 mm thicker than usual can be obtained for machined (resurfaced) cylinder heads.

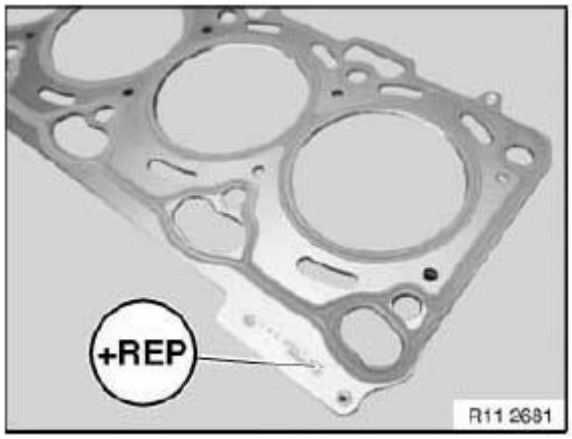

Fig. 94: Identifying Cylinder Head Gasket (+REP)
Courtesy of BMW OF NORTH AMERICA, INC.

11 12 729 CHECKING CYLINDER HEAD FOR WATERTIGHTNESS (N63)

Special tools required:

- **00 9 250**
- **11 8 080**
- **11 8 081**
- **11 8 082**
- **11 8 083**

See **MAINTENANCE AND GENERAL INFORMATION - SPECIAL TOOLS** .

See **ENGINE - SPECIAL TOOLS (N54, N63)** .

Necessary preliminary tasks:

- Remove **left cylinder head** .
- Remove **right cylinder head** .
- Remove **all valves** .

NOTE: Special tool kit 11 8 080 can be used for cylinder bank 1 to 4 and cylinder bank 5 to 8.

Position special tool 11 8 081 on cylinder head.

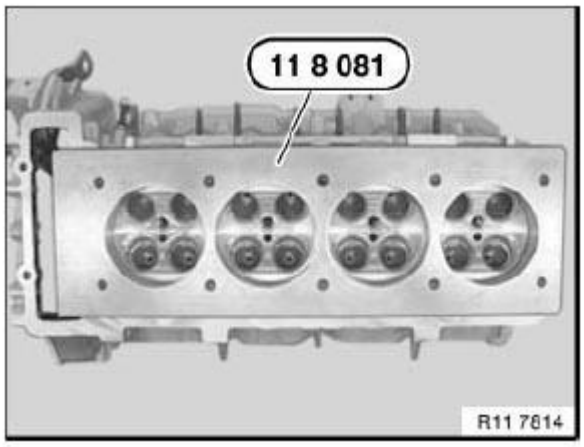

Fig. 95: Identifying Special Tool 11 8 081 On Cylinder Head
Courtesy of BMW OF NORTH AMERICA, INC.

Insert special tool 11 8 083 and tighten in sequence (1 to 10) in several stages.

Tightening torque:**25 Nm**

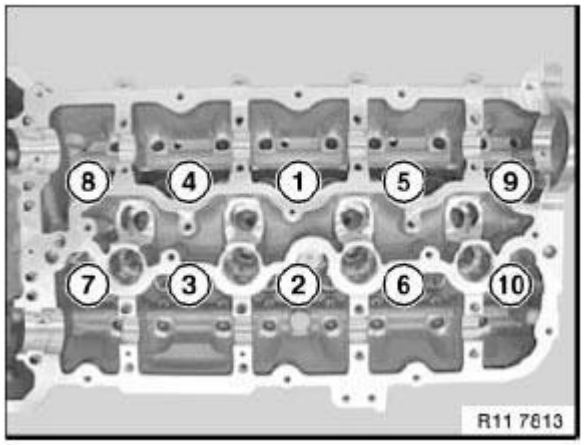

Fig. 96: Identifying Cylinder Head Bolts Tightening Sequence
Courtesy of BMW OF NORTH AMERICA, INC.

Remove vent screw (1).

Tightening torque: 11 12 8AZ, see **CYLINDER HEAD WITH COVER**

Installation:

Replace sealing ring.

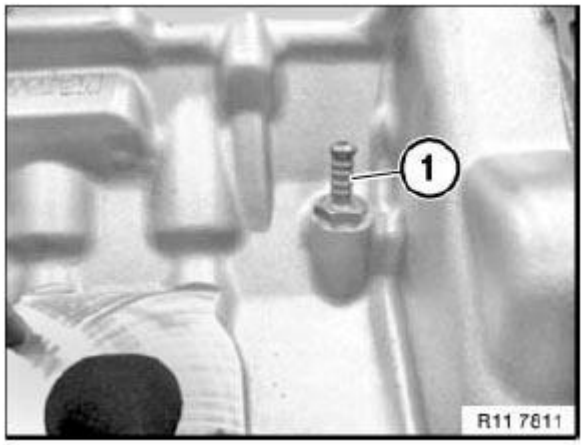

Fig. 97: Identifying Vent Screw
Courtesy of BMW OF NORTH AMERICA, INC.

IMPORTANT: Max: 0.8 Nm.

Screw in special tool 11 8 082 with suitable tool and special tool 00 9 250 to 0.8 Nm.

Connect compressed air hose with pressure gauge.

Immerse cylinder head in a water bath. Inspection pressure 4.0 bar.

Check cylinder head for escaping air (cracks).

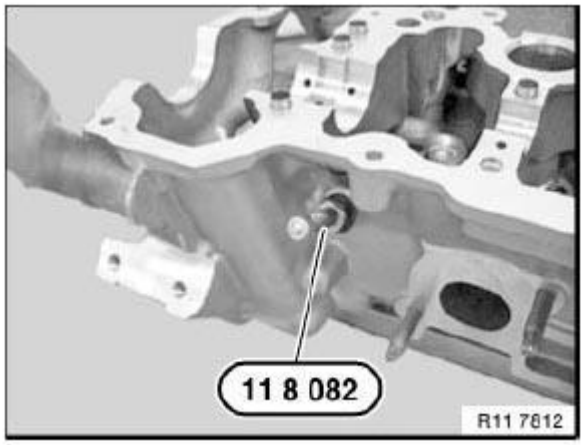

Fig. 98: Identifying Special Tool (11 8 082)
Courtesy of BMW OF NORTH AMERICA, INC.

NOTE: If necessary, add cleaning agent to water bath.

Assemble engine.

OIL SUMP

11 13 010 REMOVING AND INSTALLING/REPLACING UPPER OIL SUMP SECTION (N63)

Special tools required:

- **11 9 240**

See **ENGINE - SPECIAL TOOLS (N54, N63)** .

Necessary preliminary tasks:

- Drain off **engine oil**
- Secure engine in **installation position**
- **Lower front axle** . See **31 11 506 LOWERING/RAISING FRONT AXLE CARRIER (UNIVERSAL LIFTER)** .
- Remove **front differential** . See **31 50 001 REMOVING AND INSTALLING/REPLACING FRONT DIFFERENTIAL** .
- Remove **lower oil sump section**
- Release **FEED AND RETURN LINES** on oil filter
- Release holders of supply/return lines on oil sump
- Detach plug from oil pressure switch
- Unclip wiring harness on oil sump

  Remove oil filter cover with oil filter (1) with special tool 11 9 240.

  Tightening torque: 11 42 1AZ, see **11 42 OIL FILTER AND PIPES**

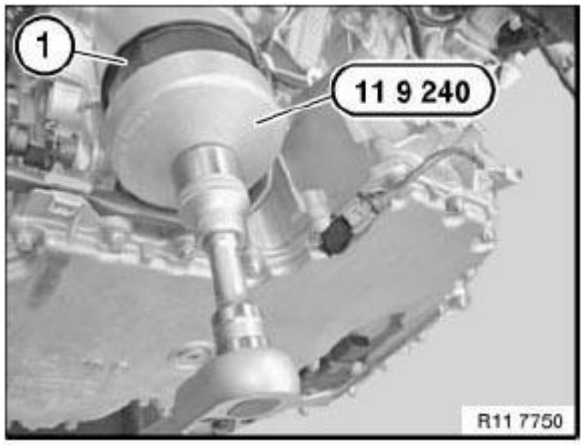

Fig. 99: Removing Oil Filter Cover
Courtesy of BMW OF NORTH AMERICA, INC.

Release screws (2).

Tightening torque: 11 41 1AZ, see **11 41 OIL PUMP WITH STRAINER AND DRIVE**

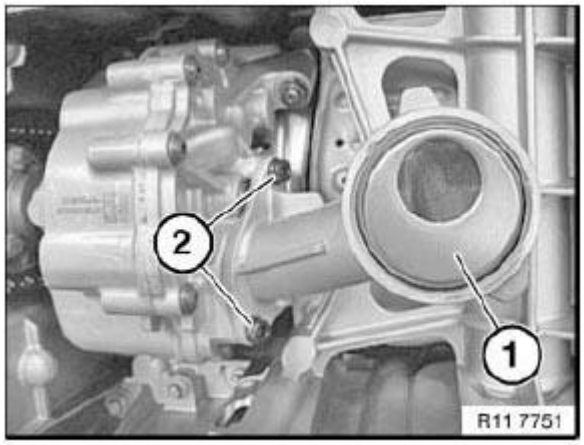

Fig. 100: Identifying Intake Pipe Nut
Courtesy of BMW OF NORTH AMERICA, INC.

Release bolts in area of line (1).

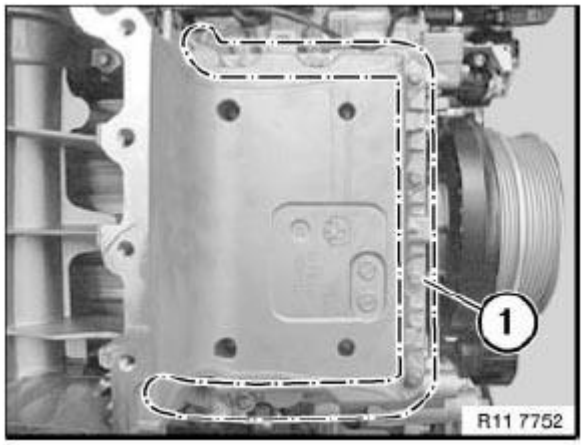

Fig. 101: Release Bolts In Area Of Line (1)
Courtesy of BMW OF NORTH AMERICA, INC.

Release bolts in area of line (1).

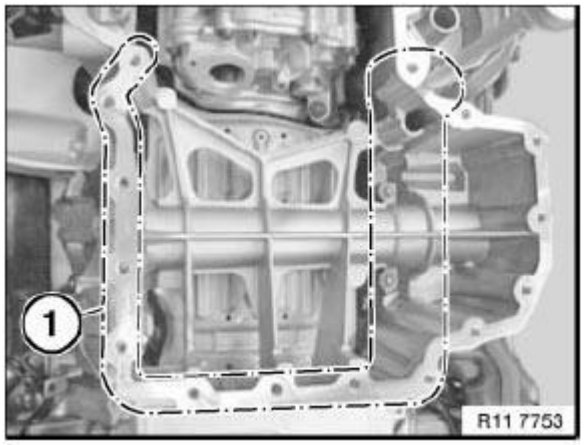

Fig. 102: Release Bolts In Area Of Line (1)
Courtesy of BMW OF NORTH AMERICA, INC.

Release bolts in area of line (2).

Tightening torque 11 13 2AZ, see **OIL SUMP**

Release 4 bolts on transmission side.

Tightening torque 24 00 1AZ, see **24 00 TRANSMISSION IN GENERAL**

Remove upper oil sump section (1).

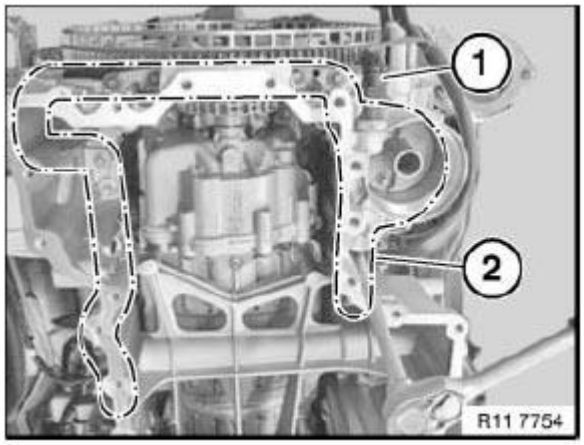

Fig. 103: Remove Upper Oil Sump Section (1)
Courtesy of BMW OF NORTH AMERICA, INC.

Installation:

Free sealing faces of seal debris and clean.

Replace seal.

Modify oil pressure switch if replacing oil sump.

Assemble engine.

11 13 020 REMOVING AND INSTALLING/REPLACING LOWER OIL SUMP SECTION (N63)

Necessary preliminary tasks:

- Remove **reinforcement plate** . See **31 10 010 REMOVING AND INSTALLING/REPLACING REINFORCEMENT PLATE** .
- **Remove oil drain plug** and drain engine oil.

Unlock plug connection (1) on oil level sensor and disconnect.

Release screws (2) along line.

Tightening torque 11 13 2AZ, see **OIL SUMP**

Remove lower oil sump section (3).

Installation:

Clean sealing surfaces.

Replace seal.

Replace bolts.

When replacing oil sump bottom section:

Convert oil level sensor.

Replace sealing ring.

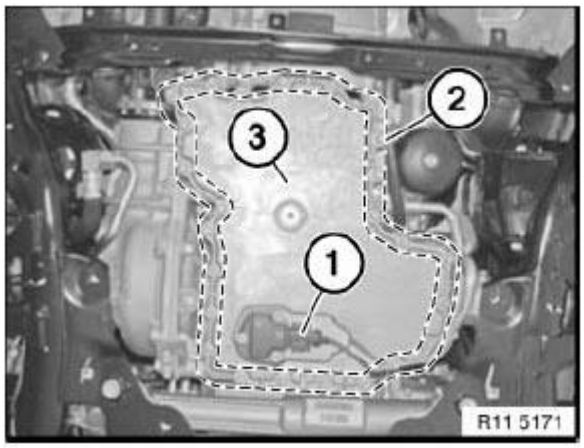

Fig. 104: Identifying Plug Connection With Screws
Courtesy of BMW OF NORTH AMERICA, INC.

HOUSING COVER

11 14 080 REMOVING AND INSTALLING TIMING CASE COVER, TOP LEFT (N63)

Timing case cover, cylinders 5-8

Necessary preliminary tasks:

- Remove both **solenoid valves** on left side

Release screws (1).

Tightening torque 11 14 3AZ, see **11 14 CASE COVERS**

Remove timing case cover (2).

Installation:

Replace seal .

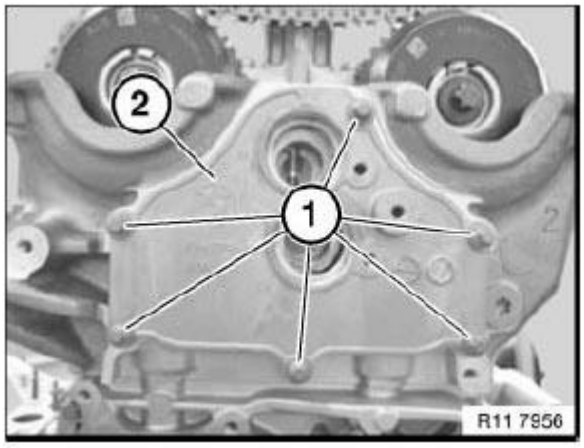

Fig. 105: Identifying Timing Case Cover Screws
Courtesy of BMW OF NORTH AMERICA, INC.

Assemble engine.

11 14 085 REMOVING AND INSTALLING TIMING CASE COVER, TOP RIGHT (N63)

Timing case cover, cylinders 1-4

Necessary preliminary tasks:

- Remove both **solenoid valves** on right side

Release screws (1).

Tightening torque 11 14 3AZ, see **11 14 CASE COVERS**

Remove timing case cover (2).

Installation:

Replace seal .

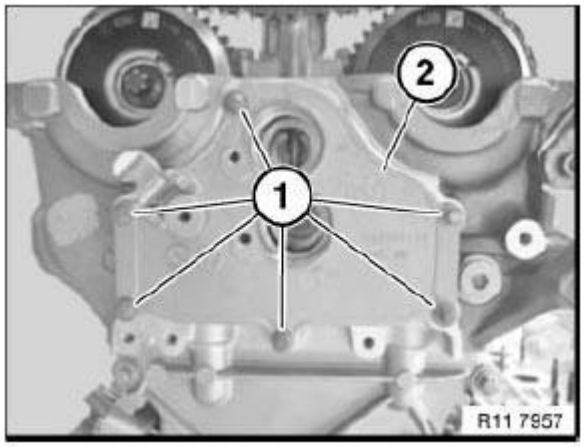

Fig. 106: Identifying Timing Case Cover Screws
Courtesy of BMW OF NORTH AMERICA, INC.

Assemble engine.

11 14 110 REMOVING AND INSTALLING LOWER TIMING CASE COVER (N63)

Special tools required:

- **11 4 470**

See **ENGINE - SPECIAL TOOLS (N54, N63)** .

Necessary preliminary tasks:

- Remove **engine.**
- Remove both **left cylinder head** and **right cylinder head.**
- Remove **lower oil sump section** .
- Remove **upper oil sump section** .
- Remove alternator **belt tensioner** .

- Remove **vibration damper** .
- Remove **coolant pump** .
- Remove **alternator** . See **12 31 020 REMOVING AND INSTALLING OR REPLACING ALTERNATOR (N63)** .
- Remove **A/C compressor** . See **64 52 521 REPLACING A/C SYSTEM COMPRESSOR (N63)** .
- Remove hub for **vibration damper**

  Release screws along lines (1).

  Remove timing case cover (2) towards front.

  Clean sealing faces with special tool 11 4 470.

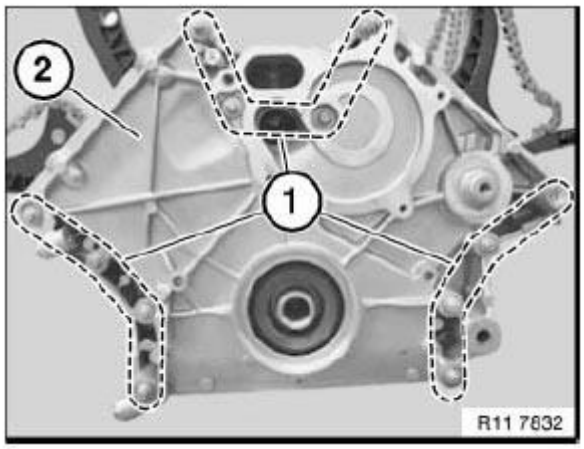

Fig. 107: Identifying Timing Case Cover Screws
Courtesy of BMW OF NORTH AMERICA, INC.

NOTE: **Check jump guard for damage.**

Release screw (1).

Tightening torque 11 14 1AZ, see 11 14 CASE COVERS

Remove jump guard (2).

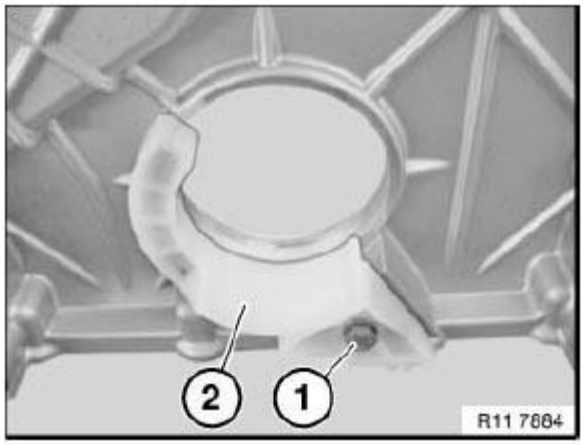

Fig. 108: Identifying Jump Guard Screw
Courtesy of BMW OF NORTH AMERICA, INC.

Clean sealing faces with special tool 11 4 470.

Installation:

Preposition all bolts in timing case cover.

Replace beaded metal gaskets (1, 2 and 3) .

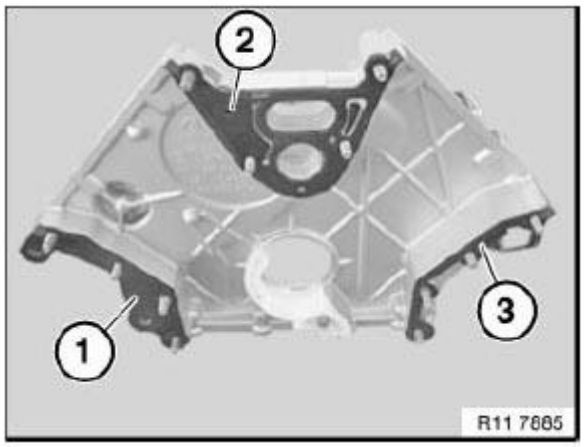

Fig. 109: Identifying Metal Gaskets Applying Area
Courtesy of BMW OF NORTH AMERICA, INC.

Fit timing case cover (2).

Initially tighten all bolts to approx. 5 Nm.

Fully tighten all bolts in alternate sequence.

Tightening torque 11 14 2AZ, see **11 14 CASE COVERS**

Installation:

Wait for PU material to emerge at sealing joints.

Carefully wipe off protruding PU material.

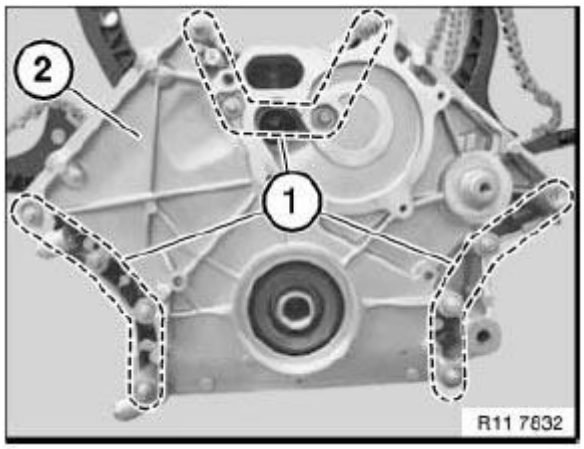

Fig. 110: Identifying Timing Case Cover Bolts
Courtesy of BMW OF NORTH AMERICA, INC.

Replace **radial shaft seal in timing case cover at bottom** .

Assemble engine.

11 14 141 REPLACING RADIAL SHAFT SEAL IN LOWER TIMING CASE COVER (N63)

Special tools required:

- **11 9 410**
- **11 9 420**

See **ENGINE - SPECIAL TOOLS (N54, N63)** .

Necessary preliminary tasks:

- Removing **vibration damper**

Position all levers (2) horizontally to pull off radial shaft seal (1).

Turn back spindle of special tool 11 9 410 until all levers (2) can be positioned on sealing lip.

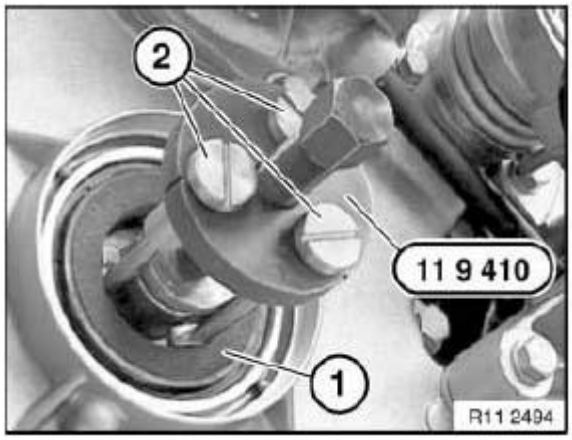

Fig. 111: Identifying Radial Shaft Seal With Special Tool (11 9 410)
Courtesy of BMW OF NORTH AMERICA, INC.

Turn all levers (2) so that they grip behind radial shaft seal (1).

Turn spindle (3) on special tool 11 9 410 to remove radial shaft seal (1).

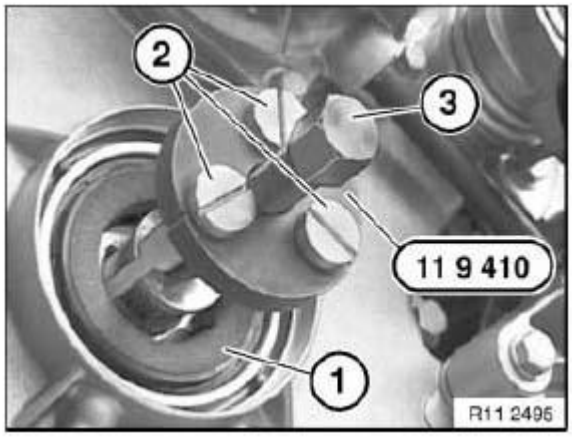

Fig. 112: Removing Radial Shaft Seal With Special Tool (11 9 410)
Courtesy of BMW OF NORTH AMERICA, INC.

NOTE: Radial shaft seal (1) may only be supported with "support sleeve" (2).

If the radial shaft seal (1) is stored for more than six months without the support sleeve (2), its operational reliability will no longer be guaranteed.

Radial shaft seal (1) must not be reused in this eventuality!

IMPORTANT: The sealing lip of the radial shaft seal (1) is highly sensitive and must not be kinked under any circumstances.

Do not touch the sealing lip with your fingers.

Fig. 113: Identifying Radial Shaft Seal With Support Sleeve
Courtesy of BMW OF NORTH AMERICA, INC.

Remove support sleeve (2) from radial shaft seal (1).

Fit radial shaft seal (1) on lower timing case cover.

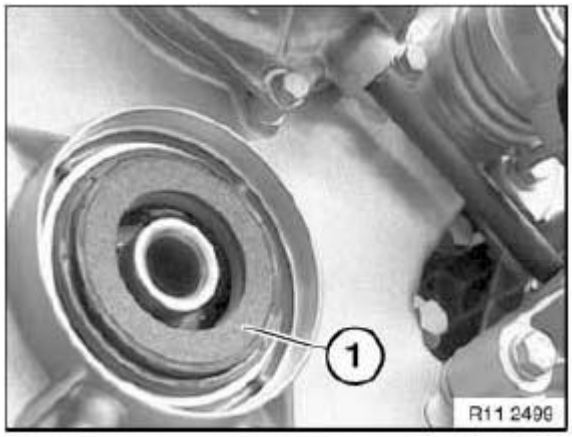

Fig. 114: Identifying Radial Shaft Seal
Courtesy of BMW OF NORTH AMERICA, INC.

Using special tool 11 9 420 and central bolt (3), screw radial shaft seal into lower timing case cover until flush.

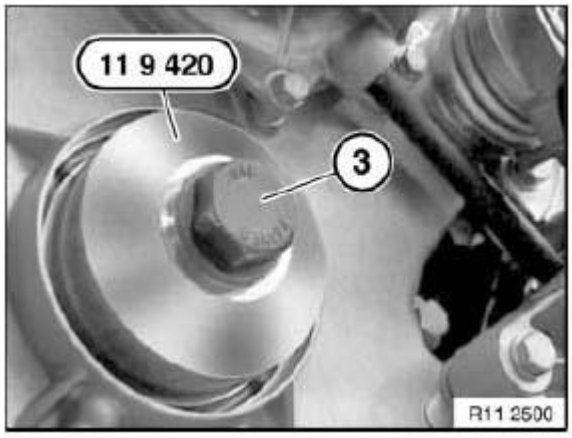

Fig. 115: Identifying Special Tool 11 9 420 And Central Bolt
Courtesy of BMW OF NORTH AMERICA, INC.

Assemble engine.

11 14 151 REPLACING CRANKSHAFT RADIAL SEAL ON TRANSMISSION SIDE (N63)

IMPORTANT: The crankshaft radial seal can only be replaced completely with the end cover.

The crankshaft radial seal is an integral part of the end cover and cannot be replaced individually.

Necessary preliminary tasks:

- Drain off **engine oil**
- Remove **flywheel**

Release screws (1).

Release screws (2).

Carefully remove end cover with crankshaft radial seal.

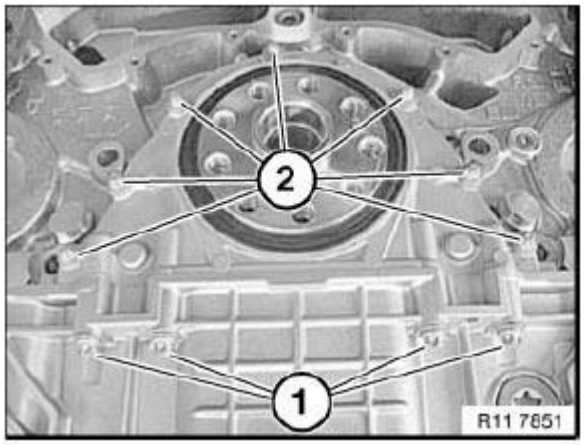

Fig. 116: Identifying Cover Screws
Courtesy of BMW OF NORTH AMERICA, INC.

NOTE: **Support sleeve (2) is included in scope of delivery.**

If the crankshaft radial seal (1) is stored for more than six months without the support sleeve (2), its operational reliability will no longer be guaranteed.

Crankshaft radial seal (1) must not be reused in this eventuality!

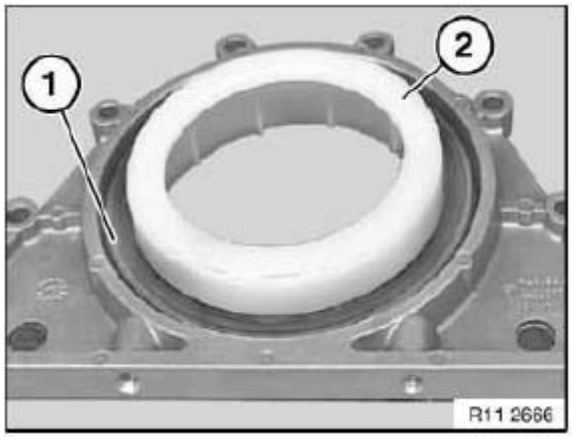

Fig. 117: Identifying Support Sleeve And Crankshaft Radial Seal
Courtesy of BMW OF NORTH AMERICA, INC.

Support sleeve (2) remains in the crankshaft radial seal (1) and is used as a slip sleeve during subsequently described installation.

IMPORTANT: **The sealing lip of the crankshaft radial seal (1) is highly sensitive and must not be kinked.**

Do not touch the sealing lip with your fingers.

IMPORTANT: Special tool 11 2 390 must not be used.

When the crankshaft radial seal is installed, only the support sleeve included in the scope of delivery may be used as a slip sleeve.

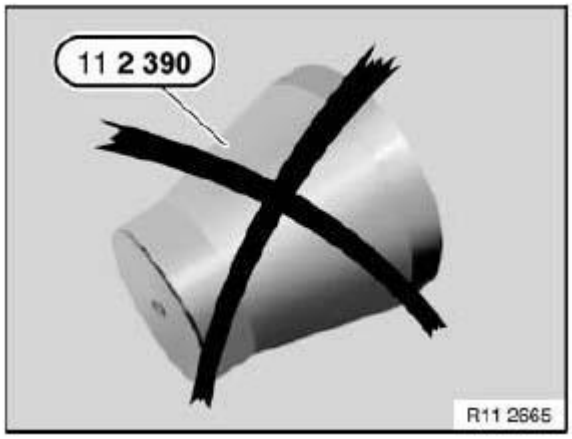

Fig. 118: Caution For Special Tool 11 2 390
Courtesy of BMW OF NORTH AMERICA, INC.

Installation:

Check dowel sleeves (1) for damage and correct installation position.

Clean sealing face (2) so that it is free from oil and grease.

Coat contact points on joint along oil sump (see arrows) with Drei Bond 1209.

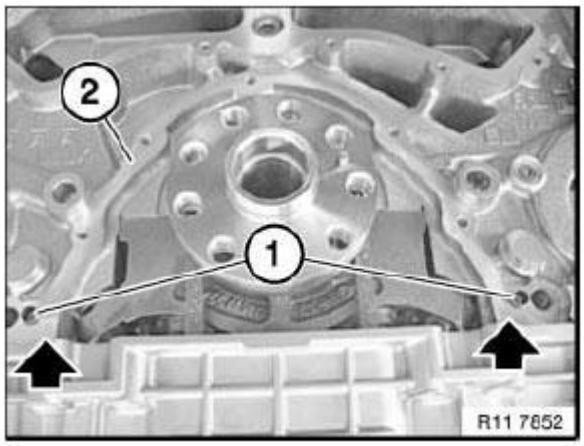

Fig. 119: Identifying dowel sleeves and sealing face
Courtesy of BMW OF NORTH AMERICA, INC.

Installation:

Lightly oil running surface of crankshaft.

Fit end cover (1) with support sleeve (2) on crankshaft and push on carefully.

NOTE: Picture shows (N62TU).

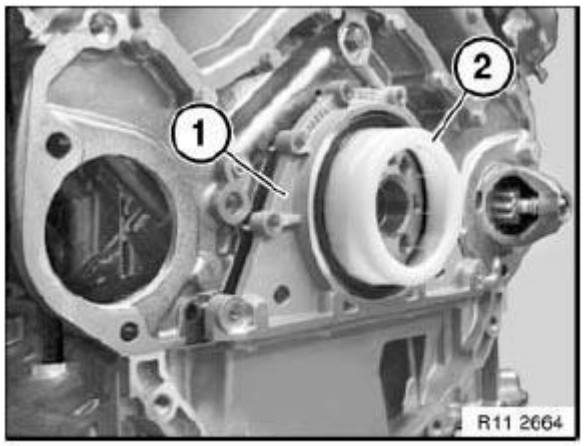

Fig. 120: Fitting Cover With Support Sleeve On Crankshaft
Courtesy of BMW OF NORTH AMERICA, INC.

Insert screws (2) and initially tighten without play.

Insert screws (1) and initially tighten without play.

Tighten down screws (2) from inside outwards.

Tighten down screws (1) from inside outwards.

Tightening torque 11 14 4AZ, see **11 14 CASE COVERS**

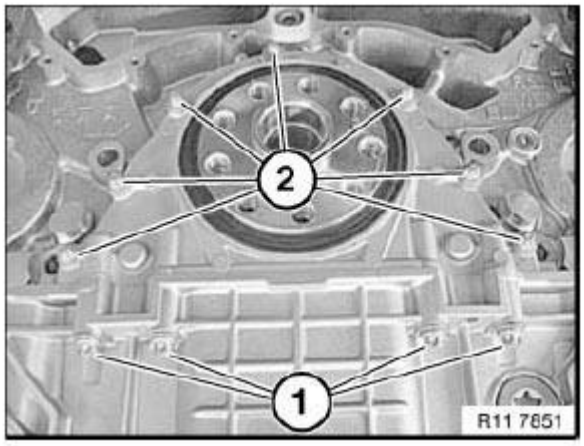

Fig. 121: Identifying Screws

Courtesy of BMW OF NORTH AMERICA, INC.

Assemble engine.

11 14 250 REMOVING AND INSTALLING/SEALING REAR COOLANT END COVER (N63)

Special tools required:

- **11 4 470**

See **ENGINE - SPECIAL TOOLS (N54, N63)** .

WARNING: **Danger of scalding!**

Only perform this work after engine has cooled down.

Recycling:

Catch and dispose of drained coolant in a suitable container.

Observe country-specific waste-disposal regulations.

Necessary preliminary tasks:

- Remove **flywheel**
- Drain **coolant** . See **17 00 008 DRAINING AND ADDING COOLANT IN RADIATOR (N62TU, N63)** .

Release all screws in area (1).

Tightening torque 11 14 5AZ, see **11 14 CASE COVERS**

Remove end cover.

NOTE: **Clean sealing faces with special tool 11 4 470.**

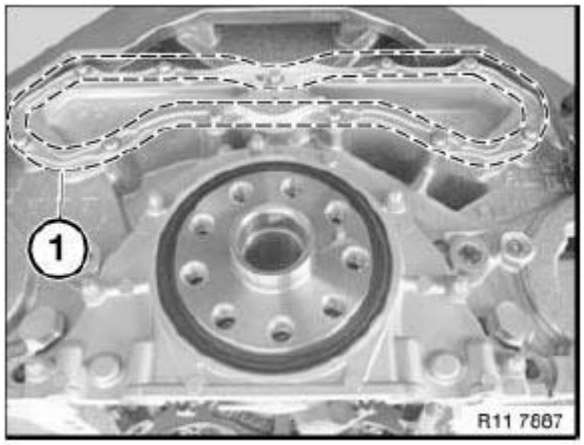

Fig. 122: Release All Screws In Area (1)
Courtesy of BMW OF NORTH AMERICA, INC.

Installation:

Replace profile seal (1) .

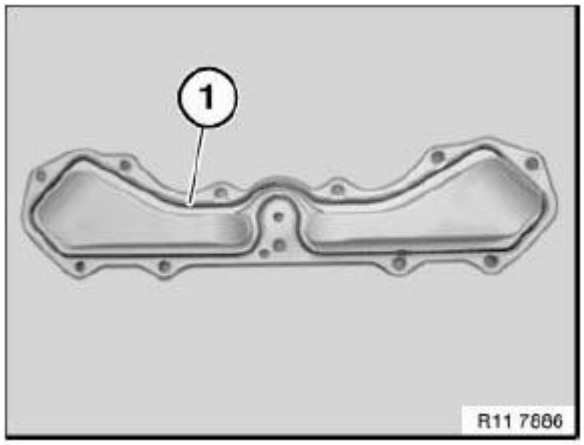

Fig. 123: Identifying Seal
Courtesy of BMW OF NORTH AMERICA, INC.

Assemble engine.

CRANKSHAFT WITH BEARING

11 21 500 REPLACING CRANKSHAFT (N63)

Special tools required:

- **00 2 010**
- **00 9 120**

- **11 4 350**
- **11 6 251**
- **11 6 252**
- **13 5 020**

See **MAINTENANCE AND GENERAL INFORMATION - SPECIAL TOOLS** .

See **ENGINE - SPECIAL TOOLS (N54, N63)** .

See **FUEL SYSTEM - SPECIAL TOOLS** .

IMPORTANT: Weight of crankshaft is approx. 20 kg.

Risk of injury from sharp crankcase edges.

Necessary preliminary tasks:

- Remove **engine** .
- Mount engine on **assembly stand** .
- Remove **cylinder head** .
- Remove **hub for vibration damper** .
- Remove lower timing case cover.
- **Remove oil sump** .
- Remove **oil pump** .
- Remove **pistons** .
- Remove **flywheel** .
- Remove **radial shaft seals** .
- Remove **timing chains** .

Installation:

Layout of main bearing caps.

All numbers must be read from the cylinder bank (5 to 8) (see arrows).

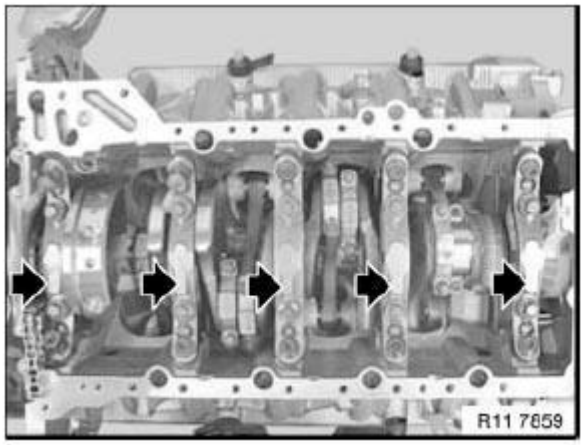

Fig. 124: Numbers Must Be Read From The Cylinder Bank (5 To 8)
Courtesy of BMW OF NORTH AMERICA, INC.

Main bearing caps (1 to 5) opposite the output end on the timing chain drive.

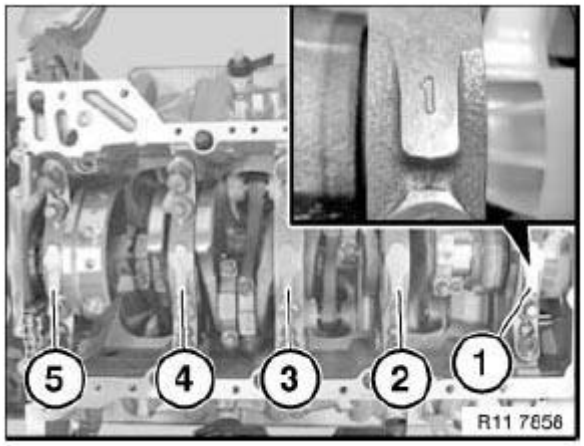

Fig. 125: Identifying Main Bearing Caps
Courtesy of BMW OF NORTH AMERICA, INC.

Release oil pump spacer pins (1) with special tool 13 5 020.

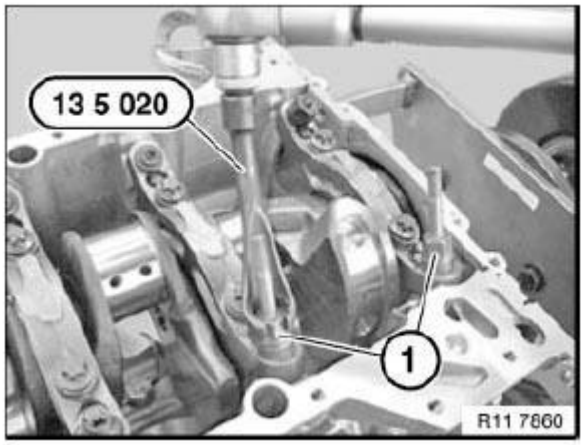

Fig. 126: Release Oil Pump Spacer Pins
Courtesy of BMW OF NORTH AMERICA, INC.

Release main bearing taper screw connection (1).

Release oil pump spacer pins (2).

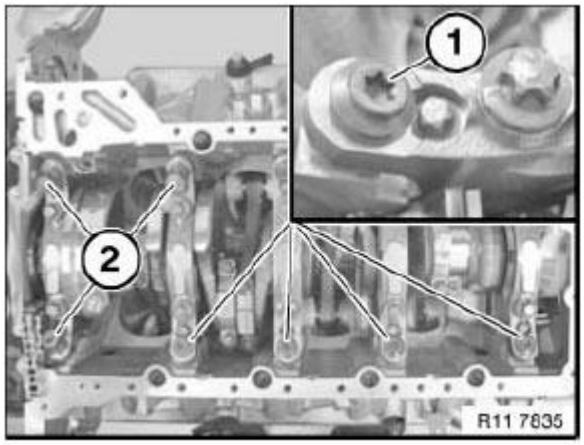

Fig. 127: Identifying Main Bearing Taper Screw Connection And Oil Pump Spacer Pins
Courtesy of BMW OF NORTH AMERICA, INC.

Release all thread support bushings (1).

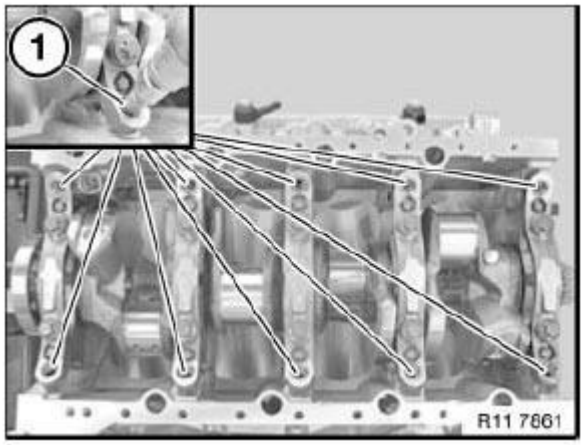

Fig. 128: Identifying Thread Support Bushings
Courtesy of BMW OF NORTH AMERICA, INC.

Release collar bolts (M8) in sequence 10 to 1.

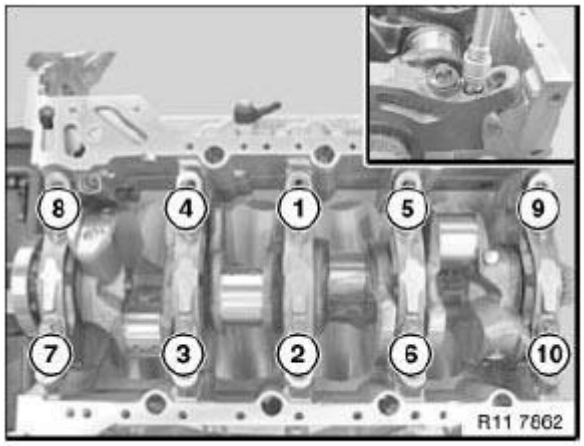

Fig. 129: Identifying Collar Bolts Tightening Sequence
Courtesy of BMW OF NORTH AMERICA, INC.

Release collar bolts (M11) in sequence 10 to 1.

Remove main bearing caps 1 to 5.

IMPORTANT: Remove crankshaft with a 2nd person, weight approx. 25 kg.

Lift out crankshaft and set down safely (secure against turning).

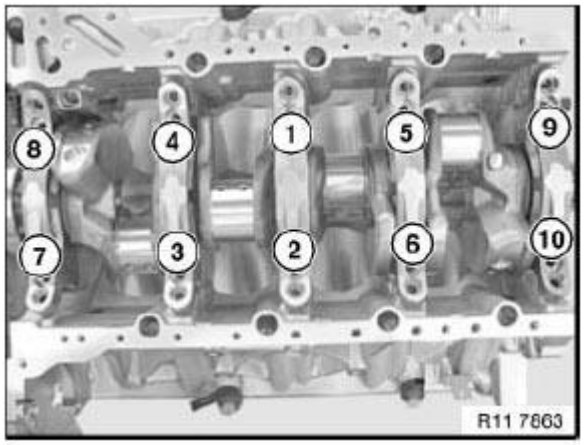

Fig. 130: Identifying Collar Bolts Removing Sequence
Courtesy of BMW OF NORTH AMERICA, INC.

Release screw for oil nozzle (1).

Tightening torque: 11 11 8AZ, see **11 11 ENGINE BLOCK**

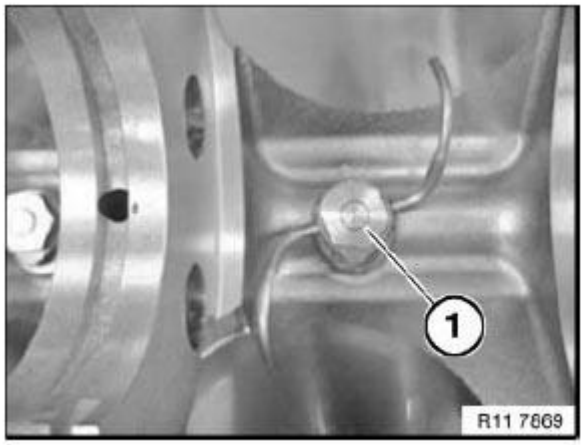

Fig. 131: Identifying Oil Nozzle Screw
Courtesy of BMW OF NORTH AMERICA, INC.

Installation:

Check oil nozzle (1) for clear passage with compressed air.

Observe fastening on oil nozzle.

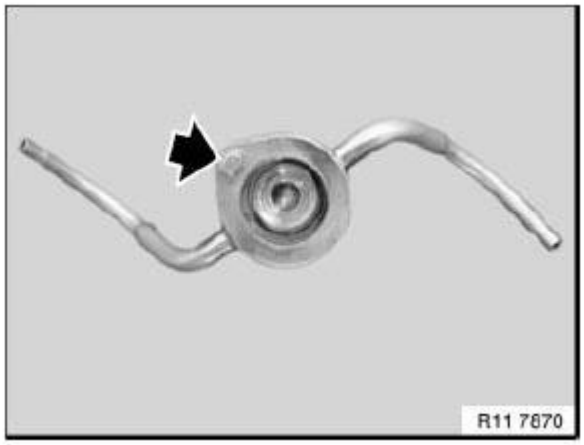

Fig. 132: Identifying Oil Nozzle
Courtesy of BMW OF NORTH AMERICA, INC.

Installation:

Observe fastening in crankcase.

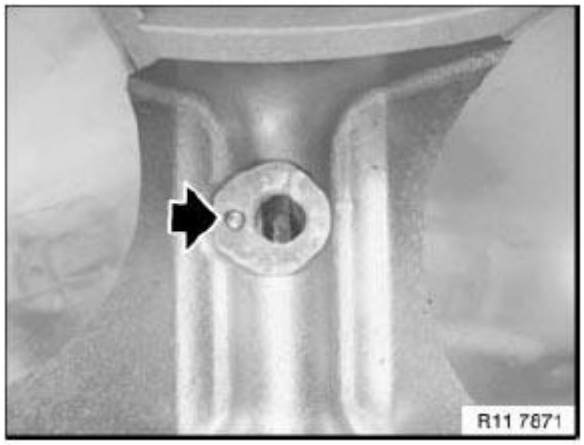

Fig. 133: Identifying Crankcase Fastening
Courtesy of BMW OF NORTH AMERICA, INC.

Replace **main crankshaft bearing shells** .

Installation:

Observe arrangement of main bearing caps.

All numbers must be read from the cylinder bank (5 to 8) (see arrows).

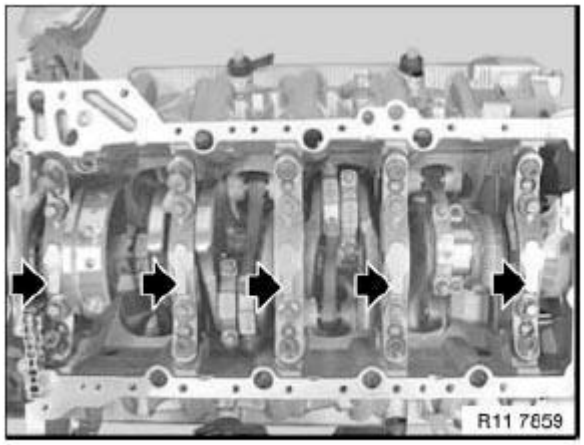

Fig. 134: Identifying Arrangement Of Main Bearing Caps
Courtesy of BMW OF NORTH AMERICA, INC.

Main bearing caps (1) is opposite the output end on the timing chain drive.

Turn back all thread support bushings hand-tight.

Installation:

Coat all bearing points with engine oil.

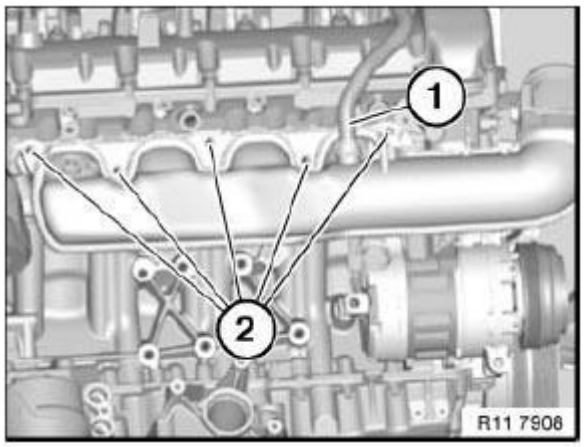

Fig. 135: Identifying Main Bearing Caps
Courtesy of BMW OF NORTH AMERICA, INC.

IMPORTANT: Install crankshaft with a 2nd person, weight approx. 25 kg.

Install crankshaft.

Fit bearing caps (1 to 5).

Set down bearing caps positioned from 1 to 5.

Insert all collar bolts (M11) hand-tight.

Secure collar bolts (M11) in sequence (1 to 10).

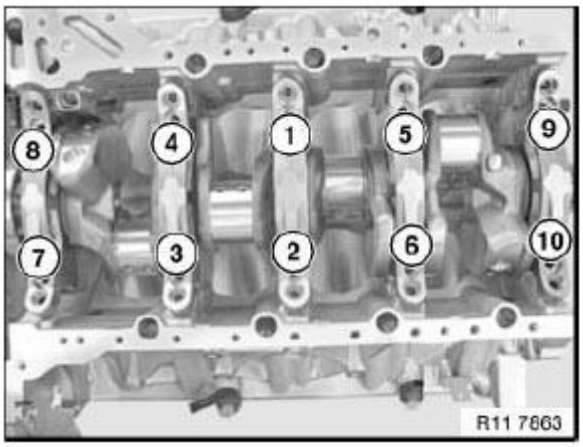

Fig. 136: Identifying Collar Bolts Tightening Sequence
Courtesy of BMW OF NORTH AMERICA, INC.

Installation:

For a better overview of the screw connection quality, mark the head of all collar bolts after joining with a line (1) using an oil-proof marker pen.

Check angle tightening.

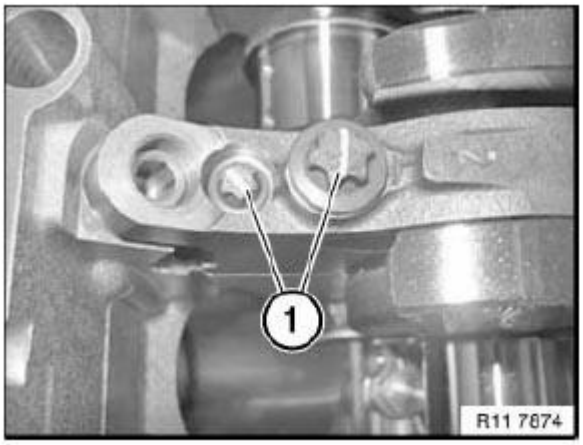

Fig. 137: Identifying Collar Bolts
Courtesy of BMW OF NORTH AMERICA, INC.

Secure collar bolt (1) with special tool 00 9 120.

Tightening torque: 11 11 1AZ, see **11 11 ENGINE BLOCK**

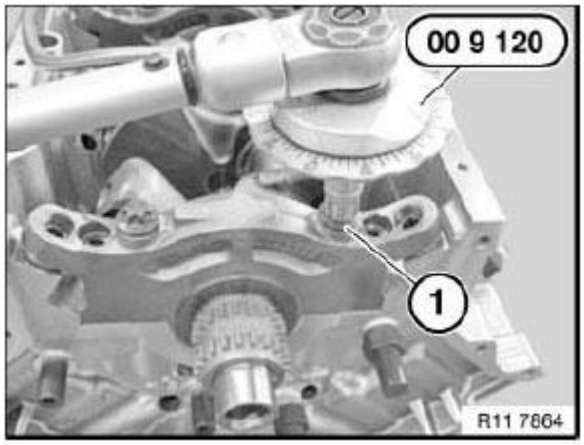

Fig. 138: Secure Collar Bolt (1) With Special Tool 00 9 120
Courtesy of BMW OF NORTH AMERICA, INC.

Insert all collar bolts (M8) hand-tight.

Secure collar bolts (M8) in sequence (1 to 10).

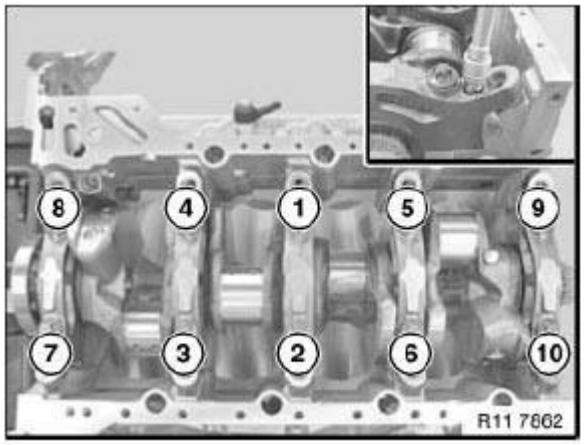

Fig. 139: Identifying Collar Bolts Tightening Sequence
Courtesy of BMW OF NORTH AMERICA, INC.

Installation:

For a better overview of the screw connection quality, mark the head of all collar bolts after joining with a line (1) using an oil-proof marker pen.

Check angle tightening.

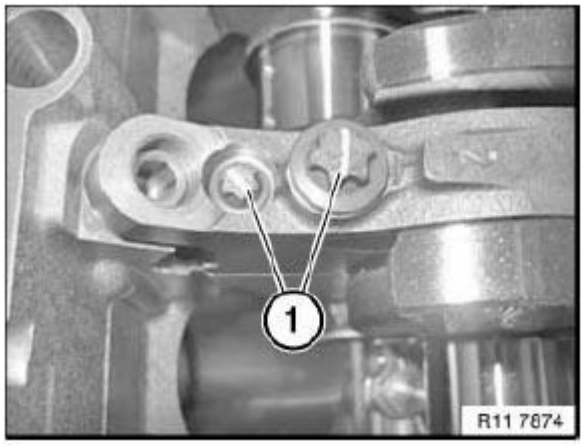

Fig. 140: Identifying Collar Bolts
Courtesy of BMW OF NORTH AMERICA, INC.

Secure collar bolt (1) with special tool 00 9 120.

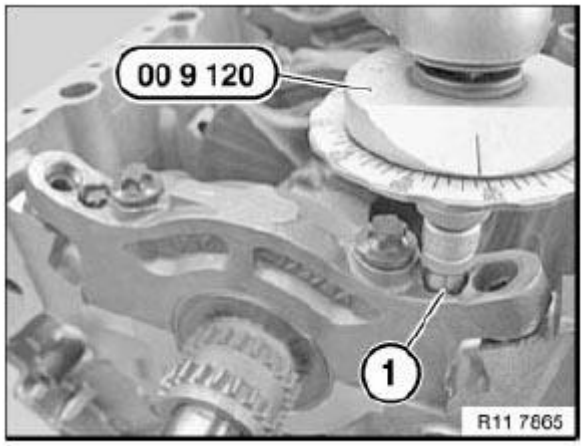

Fig. 141: Identifying Collar Bolt With Special Tool
Courtesy of BMW OF NORTH AMERICA, INC.

Secure all thread support bushings (1) with special tool 11 4 350.

Tightening torque: 11 11 3AZ, see **11 11 ENGINE BLOCK**

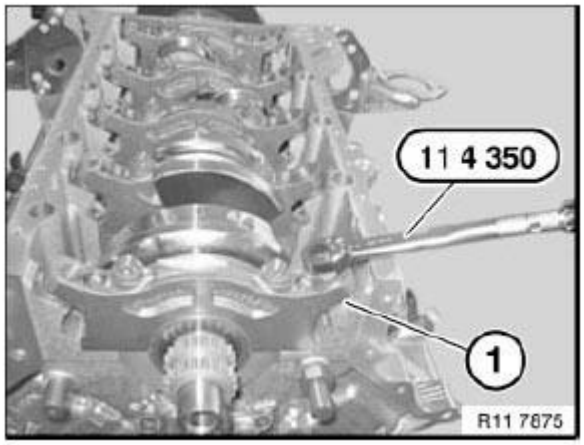

Fig. 142: Tightening Support Bushings With Special Tool
Courtesy of BMW OF NORTH AMERICA, INC.

Secure main bearing taper screw connection (1).

Tightening torque: 11 11 4AZ, see **11 11 ENGINE BLOCK**

Secure oil pump spacer pins (2).

Tightening torque: 11 11 5AZ, see **11 11 ENGINE BLOCK**

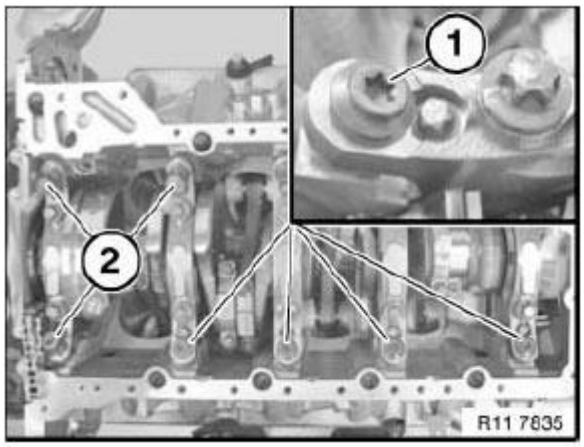

Fig. 143: Identifying Main Bearing Taper Screw Connection And Oil Pump Spacer Pins
Courtesy of BMW OF NORTH AMERICA, INC.

Check crankshaft **coefficient of friction** .

Determine crankshaft **breakaway torque** with special tool 00 2 010.

Rotate crankshaft at central bolt with special tool 00 2 010.

If the breakaway torque is too high, it will be necessary to correct the **bearing clearance** . See **CRANKSHAFT**

WITH BEARING .

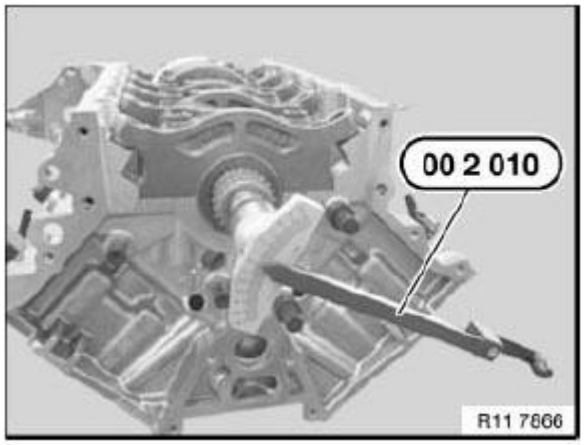

Fig. 144: Rotating Crankshaft Central Bolt With Special Tool
Courtesy of BMW OF NORTH AMERICA, INC.

Secure special tool 11 6 252 with magnetic foot on crankcase.

Slide crankshaft in direction of arrow forwards as far as it will go.

Set special tool 11 6 251 to zero.

Slide crankshaft (1) in direction of arrow towards rear and determine value.

Check **axial play** .

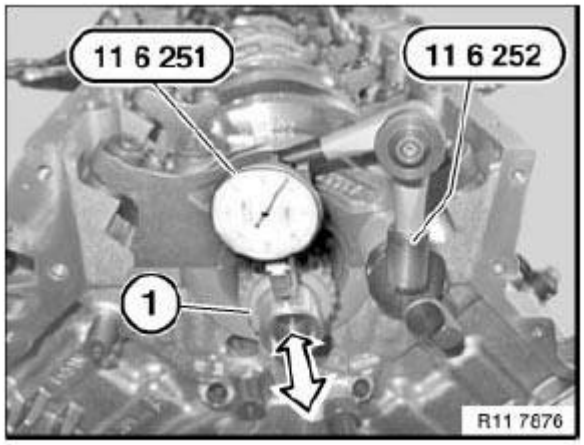

Fig. 145: Checking Crankshaft End Play
Courtesy of BMW OF NORTH AMERICA, INC.

Assemble engine.

11 21 531 REPLACING ALL MAIN CRANKSHAFT BEARING SHELLS (N63)

Special tools required:

- **00 2 590**
- **00 9 120**
- **11 6 251**
- **11 6 252**

See **MAINTENANCE AND GENERAL INFORMATION - SPECIAL TOOLS** .

See **ENGINE - SPECIAL TOOLS (N54, N63)** .

IMPORTANT: Risk of injury from sharp crankcase edges.

Necessary preliminary tasks:

- Remove **crankshaft**

NOTE: Main bearing caps 1 to 5 are marked with punched numbers.

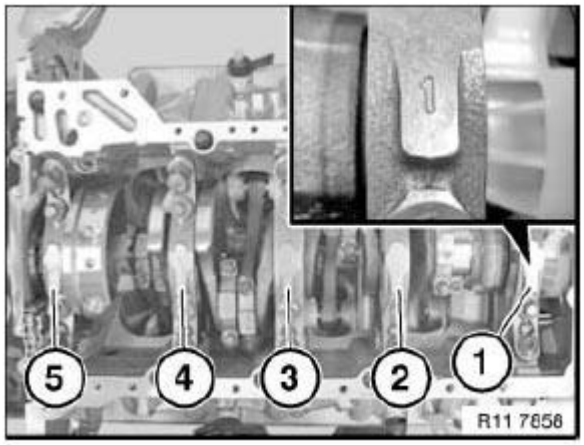

Fig. 146: Identifying Main Bearing Caps Mark
Courtesy of BMW OF NORTH AMERICA, INC.

Observe crankshaft construction stage:

S: Series

B: Repair stage 1

C: Repair stage 2

The letters denote the bearing shell classification for the relevant bearing position from 1 to 5 (main bearing cap).

The first letter on the left applies to the first bearing position at the front on the timing chain drive.

Color coding on crankshaft 1 to 5

Y= yellow

G= green

V= violet

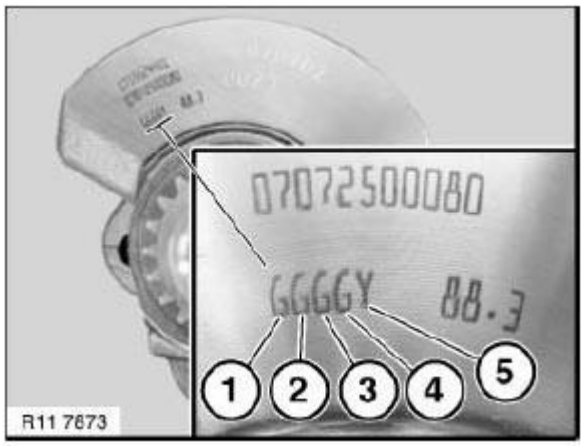

Fig. 147: Identifying Color Coding Mark On Crankshaft
Courtesy of BMW OF NORTH AMERICA, INC.

The letters denote the bearing shell classification for the relevant bearing position from 1 to 5 in the crankcase and is located on the transmission side in the Vee. The first letter on the left applies to the first bearing position at the front on the timing chain drive.

Color coding in crankcase 1 to 5.

Y= yellow

G= green

V= violet

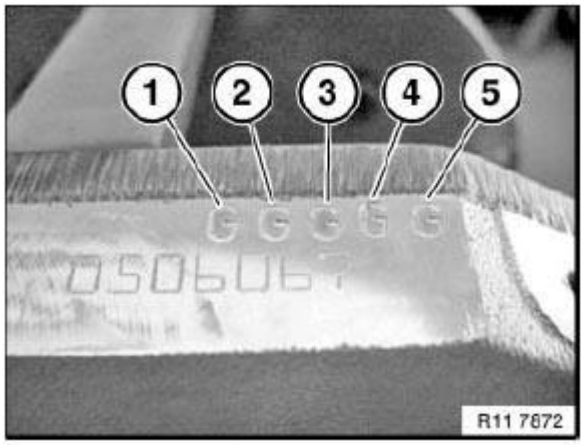

Fig. 148: Identifying Color Coding Mark On Crankcase
Courtesy of BMW OF NORTH AMERICA, INC.

Installation:

Install main bearing shells (1) with lubrication groove in crankcase.

Install main bearing shells (2) without lubrication groove in the main bearing caps.

IMPORTANT: New bearing shell classification.

The letters denote the bearing shell classification for the relevant bearing position from 1 to 5 (main bearing cap).

The first letter on the left applies to the first bearing position at the front on the timing chain drive.

Color assignment on crankshaft 1 to 5

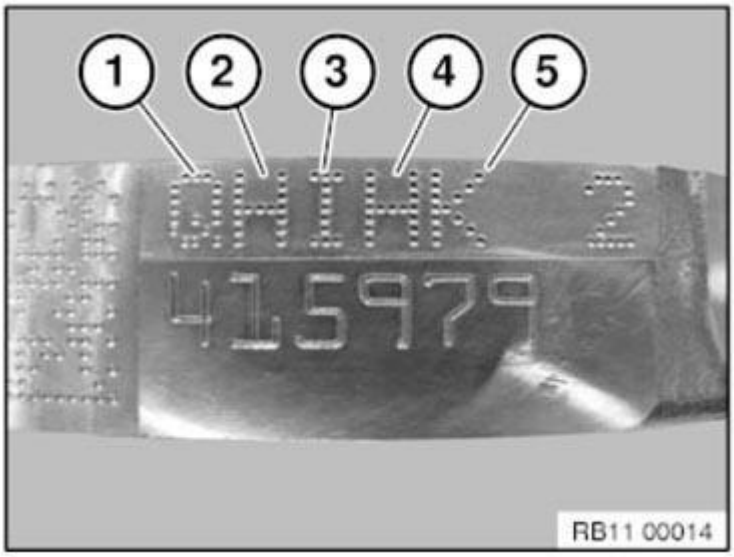

Fig. 149: Identifying Color Assignment On Crankshaft 1 To 5
Courtesy of BMW OF NORTH AMERICA, INC.

IMPORTANT: Changed bearing classification: Bearing position 1, 2, 3, 4 and 5

BEARING SHELL CLASSIFICATION LETTER WITH CODE

Code letter	Color code
New (A to H)	Yellow
Old Y	Yellow
New (I to R)	Green
Old G	Green
New (S is Z) Old V	Violet

TOLERANCE CLASSES AND BEARING SHELL COVERS COLOR CODE REFERENCE CHART

	Tolerance classes	Bearing shell covers
Crankcase	A B C D E G H	Yellow Yellow
Crankcase	I C M N P q R	Green Green
Crankcase	S T U W X Z	Violet

Installation note:

Install main bearing shells (1) with lubrication groove in crankcase.

Install main bearing shells (2) without lubrication groove in the main bearing caps.

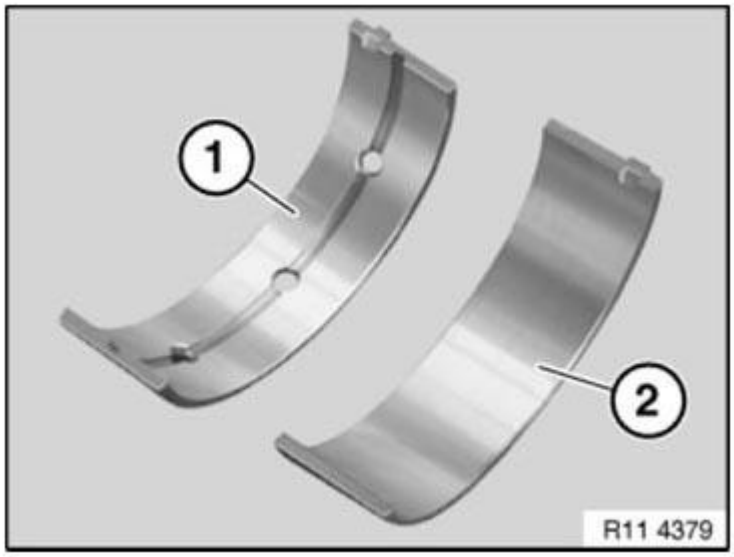

Fig. 150: Identifying Main Bearing Shells
Courtesy of BMW OF NORTH AMERICA, INC.

NOTE: Main bearing cap number 3 can be identified by the surfaces (1) for the thrust washers of the thrust bearing.

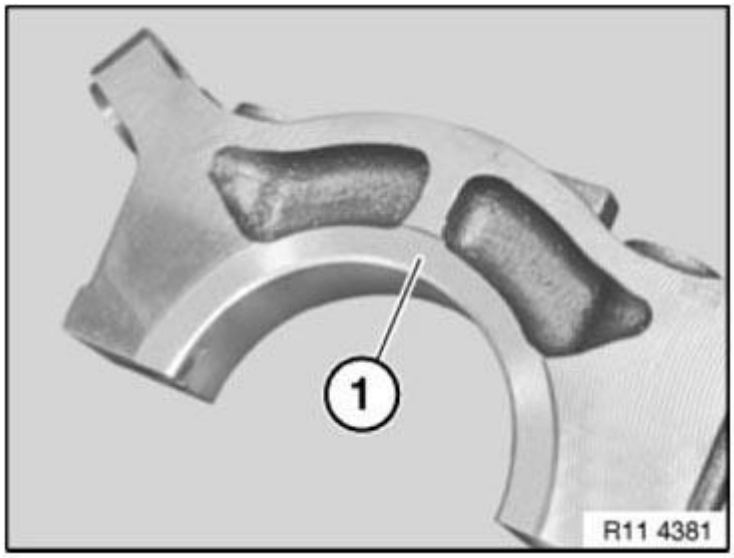

Fig. 151: Identifying Main Bearing Cap Thrust Washers Surfaces
Courtesy of BMW OF NORTH AMERICA, INC.

Turn back thread support bushing into main bearing cap.

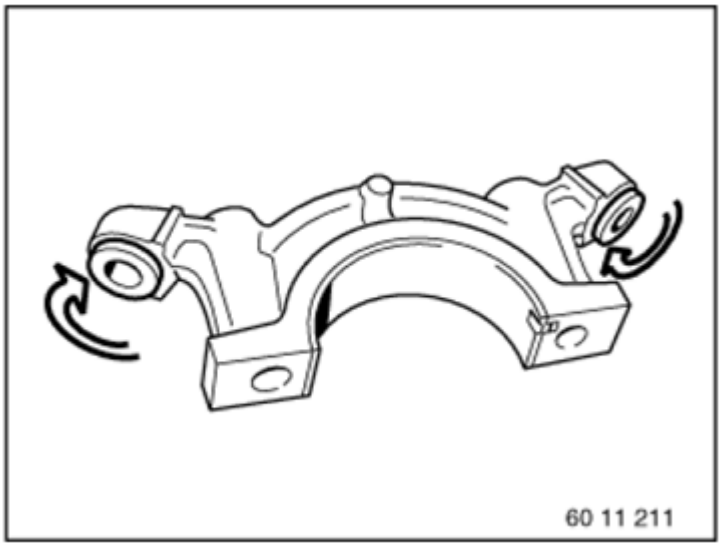

Fig. 152: Turning Back Thread Support Bushing Into Main Bearing Cap
Courtesy of BMW OF NORTH AMERICA, INC.

Checking main bearing clearance

To check crankshaft bearing clearance, use the existing main bearing screws.

IMPORTANT: Danger of cracking!

No oil is permitted in the blind bores.

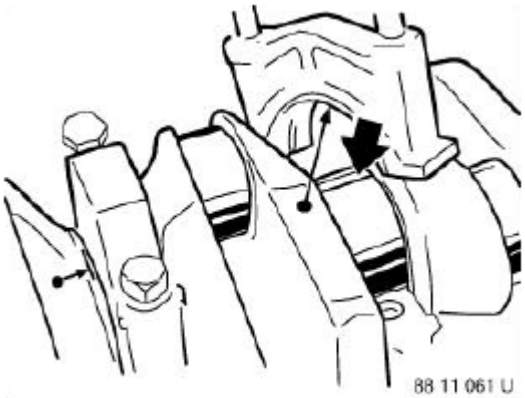

Fig. 153: Checking Main Bearing Clearance
Courtesy of BMW OF NORTH AMERICA, INC.

Do not twist crankshaft.

Place special tool 00 2 590 (Plastigage model PG 1) on oil-free crankshaft (see arrow).

Tighten down all collar bolts (M11) of main bearing caps in sequence 1 to 5 to jointing torque.

Tightening torque 11 11 1AZ, see **11 11 ENGINE BLOCK**

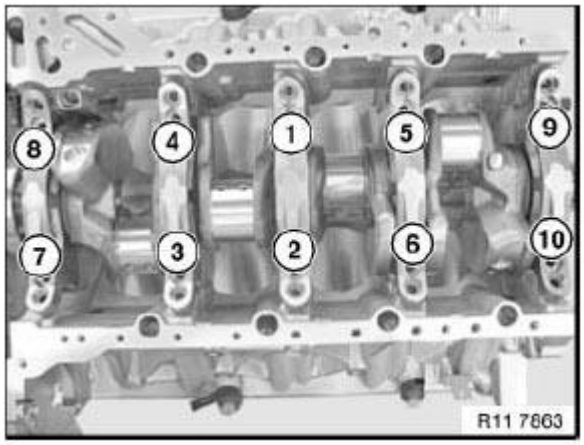

Fig. 154: Identifying Collar Bolts Tightening Sequence
Courtesy of BMW OF NORTH AMERICA, INC.

Tighten down all collar bolts (M11) of main bearing caps with special tool 00 9 120 to angle of rotation.

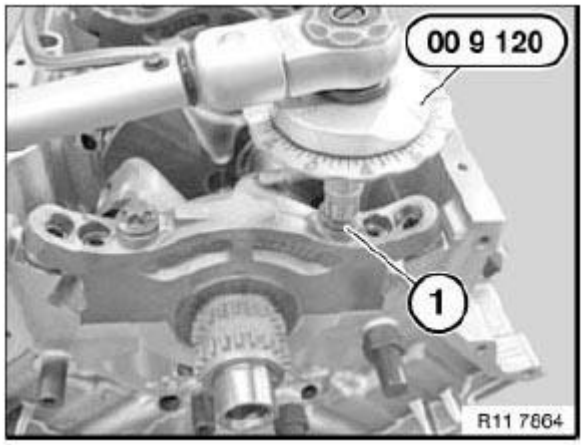

Fig. 155: Tightening Collar Bolt
Courtesy of BMW OF NORTH AMERICA, INC.

Remove main bearing cap.

Read off main bearing play at width of flattened plastic thread with assistance of measurement scale.

Main bearing play .

- Remove plastic thread
- Apply a coat of oil to new bearing shells and crankshaft

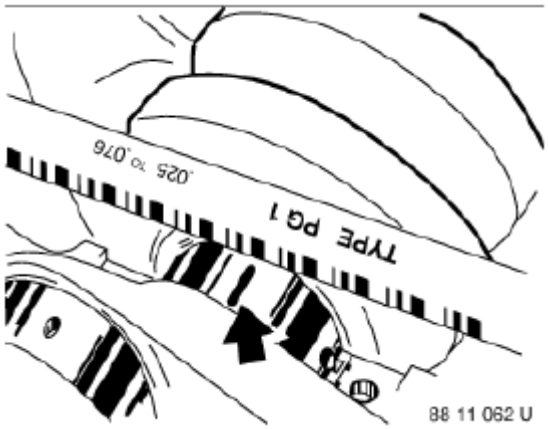

Fig. 156: Checking Main Bearing Play
Courtesy of BMW OF NORTH AMERICA, INC.

NOTE: Always replace bolts in main bearing caps with new bolts.

Do not wash off bolt coating.

IMPORTANT: Danger of cracking!

No oil is permitted in the blind bores.

Install **crankshaft** .

Carefully strike back and front of crankshaft with a plastic hammer to center thrust bearing (do not damage crankshaft).

Secure special tool 11 6 252 with magnetic foot on crankcase.

Position special tool 11 6 251.

Tightening specifications for main bearing:

Check side clearance (**axial play**).

Check guide bearing shell, crankshaft and crankcase if necessary.

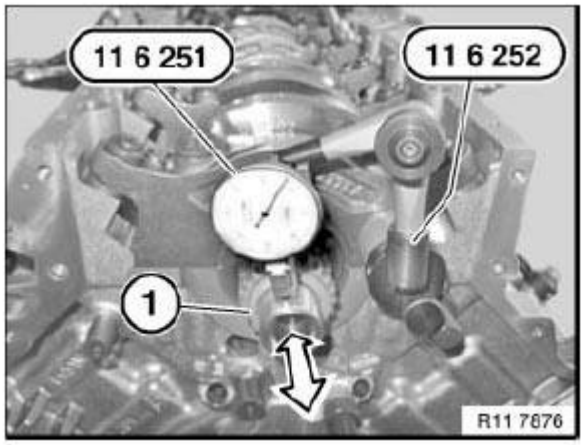

Fig. 157: Checking Crankshaft End Play
Courtesy of BMW OF NORTH AMERICA, INC.

Assemble engine.

FLYWHEEL

11 22 000 REMOVING AND INSTALLING/REPLACING FLYWHEEL (N63)

Special tools required:

- **11 9 260**

See **ENGINE - SPECIAL TOOLS (N54, N63)** .

Necessary preliminary tasks:

- Remove **automatic transmission**
- Remove manual transmission
- Remove clutch

Locate flywheel (1) with special tool 11 9 260.

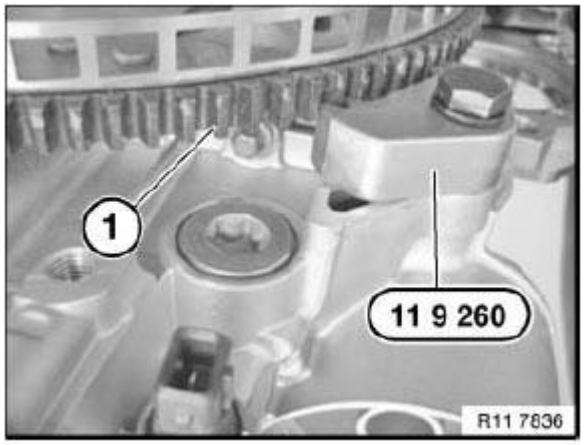

Fig. 158: Locate Flywheel With Special Tool
Courtesy of BMW OF NORTH AMERICA, INC.

Release flywheel screws in area (1).

Remove flywheel (2).

Installation:

Clean threads on flywheel screws in crankshaft.

Flywheel (2) is secured with an alignment pin.

Fit flywheel (2).

Fit new flywheel screws .

Tightening torque 11 22 1AZ, see **11 22 FLYWHEEL**

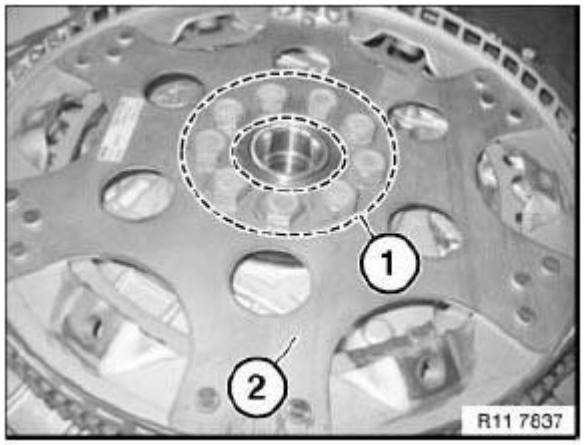

Fig. 159: Identifying Flywheel Screws
Courtesy of BMW OF NORTH AMERICA, INC.

11 22 510 REMOVING AND INSTALLING/REPLACING FLYWHEEL (TRANSMISSION REMOVED - N63)

Special tools required:

- **11 9 260**

See **ENGINE - SPECIAL TOOLS (N54, N63)** .

Locate flywheel (1) with special tool 11 9 260.

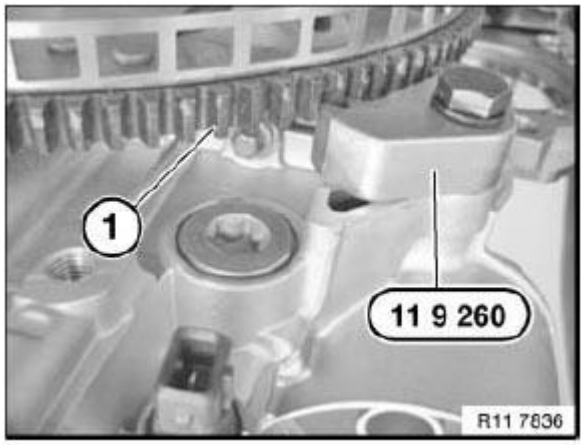

Fig. 160: Identifying Flywheel With Special Tool
Courtesy of BMW OF NORTH AMERICA, INC.

Release flywheel screws in area (1).

Remove flywheel (2).

Installation:

Clean threads on flywheel screws in crankshaft.

Flywheel (2) is secured with an alignment pin.

Fit flywheel (2).

Fit new flywheel screws .

Tightening torque 11 22 1AZ, see **11 22 FLYWHEEL**

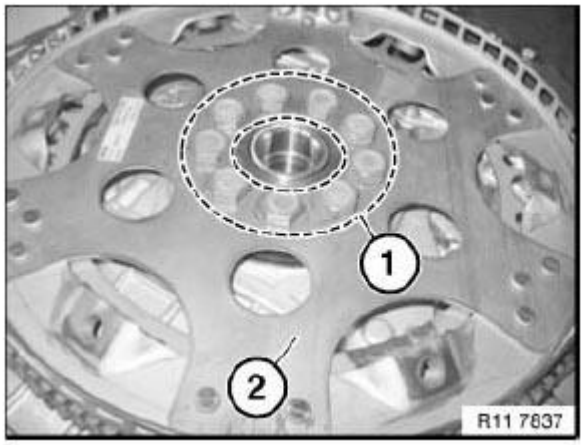

Fig. 161: Flywheel Screw Area
Courtesy of BMW OF NORTH AMERICA, INC.

11 22 513 REPLACING ROLLER BEARING FOR DUAL-MASS FLYWHEEL (N63)

NOTE: FLYWHEEL removed!

Using hydraulic press (1) and special tool 21 2 051, press roller bearing out of dual-mass flywheel downwards on engine side.

IMPORTANT: Risk of damage:
Roller bearing must not be driven out.

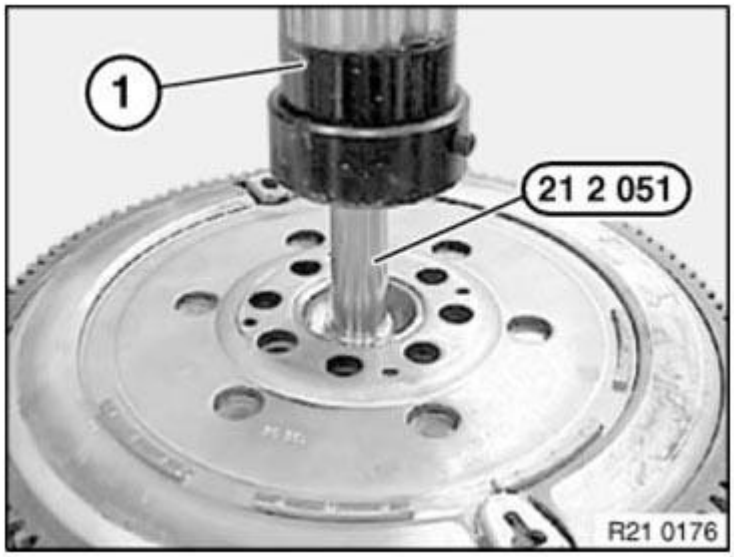

Fig. 162: Pressing Roller Bearing Out Of Dual-Mass Flywheel Downwards On Engine Side
Courtesy of BMW OF NORTH AMERICA, INC.

Push roller bearing (2) onto special tool 21 2 052.

Using hydraulic press (1), press roller bearing into dual-mass flywheel as far as it will go on clutch side.

IMPORTANT: Risk of damage:
Observe press-in instruction:

- **Roller bearing must not be driven in.**
- **Roller bearing mounting force/travel monitored:**

  Min. 2000 N 1 mm before end of pressing in.

  Max. 15, 000 N during entire press-in procedure.

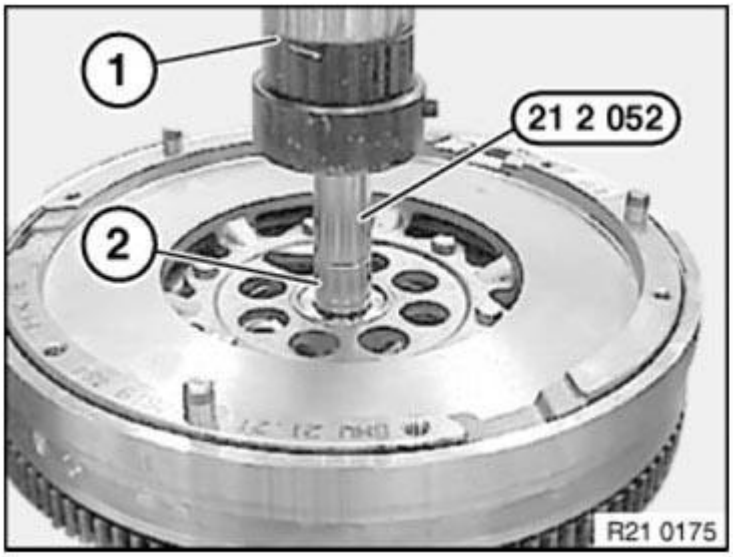

Fig. 163: Pressing Roller Bearing Into Dual-Mass Flywheel
Courtesy of BMW OF NORTH AMERICA, INC.

VIBRATION DAMPER

11 23 010 REMOVING AND INSTALLING/REPLACING VIBRATION DAMPER (N63)

Special tools required:

- **00 9 140**
- **11 3 460**
- **11 8 090**
- **11 9 453**
- **11 9 454**

See **MAINTENANCE AND GENERAL INFORMATION - SPECIAL TOOLS** .

See **ENGINE - SPECIAL TOOLS (N54, N63)** .

Necessary preliminary tasks:

- Remove **fan cowl** . See **17 11 035 REMOVING AND INSTALLING/REPLACING FAN COWL WITH ELECTRIC FAN (N63)** .
- Remove A/C compressor **drive belt**
- Remove alternator **drive belt**
- Remove belt pulley for A/C system

Release screw (1).

Tightening torque 11 28 1AZ, see **11 28 V-RIBBED BELT WITH TENSION AND DEFLECTION ELEMENT**

Remove belt tensioner with idler pulley (2).

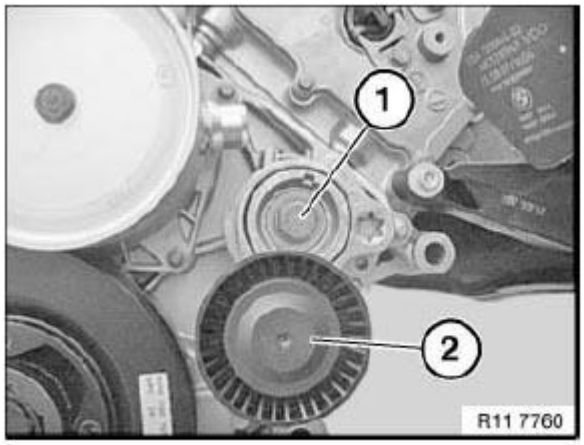

Fig. 164: Identifying Belt Tensioner With Idler Pulley
Courtesy of BMW OF NORTH AMERICA, INC.

Secure special tool 11 8 090 with three screws (1) to vibration damper.

Secure special tool 11 8 090 with belt tensioner bolt (2) to timing case cover.

Tightening torque 11 28 1AZ, see **11 28 V-RIBBED BELT WITH TENSION AND DEFLECTION ELEMENT**

NOTE: A 3/4 inch tool is needed to release the central bolt.

Release central bolt on vibration damper.

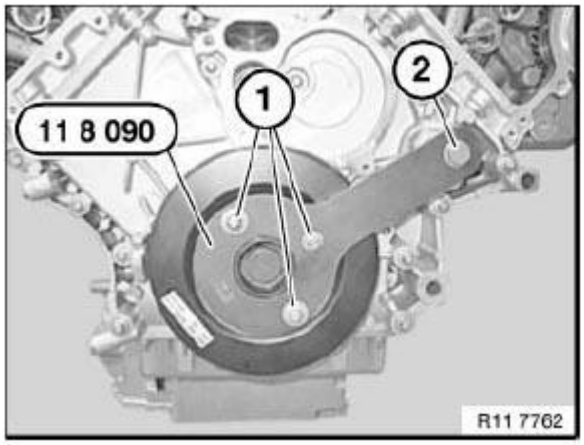

Fig. 165: Removing Central Bolt On Vibration Damper
Courtesy of BMW OF NORTH AMERICA, INC.

Secure central bolt with special tool 00 9 140 or 11 3 460.

Position special tool 11 3 460 on special tool 11 8 090.

Adjust special tool 11 9 453 on special tool 11 9 454 using clamping screw to 0° on scale.

Tightening torque 11 23 1AZ, see **VIBRATION DAMPER**

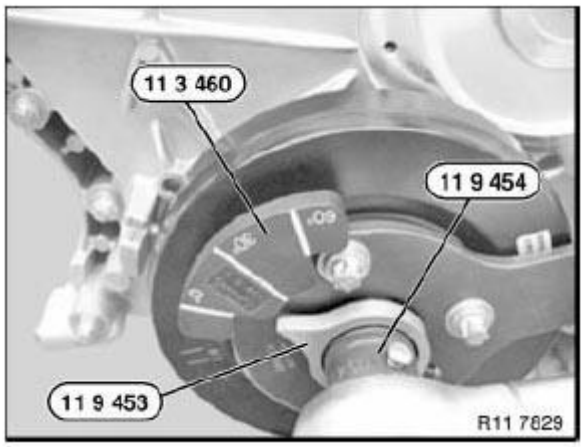

Fig. 166: Identifying Special Tool (11 3 460, 11 9 453 And 11 9 454)
Courtesy of BMW OF NORTH AMERICA, INC.

Assemble engine.

CONNECTING ROD WITH BEARING

11 24 571 REPLACING ALL CONNECTING ROD BEARINGS (N63)

Special tools required:

- **00 2 590**
- **00 9 120**

See **MAINTENANCE AND GENERAL INFORMATION - SPECIAL TOOLS** .

IMPORTANT: Note grinding stages on crankshaft . See CRANKSHAFT WITH BEARING .

Necessary preliminary tasks:

- Remove all **pistons** .

Install new connecting rod bearing shells.

Install one blue bearing shell (1) and one red bearing shell (2) in each conrod.

Install **pistons**.

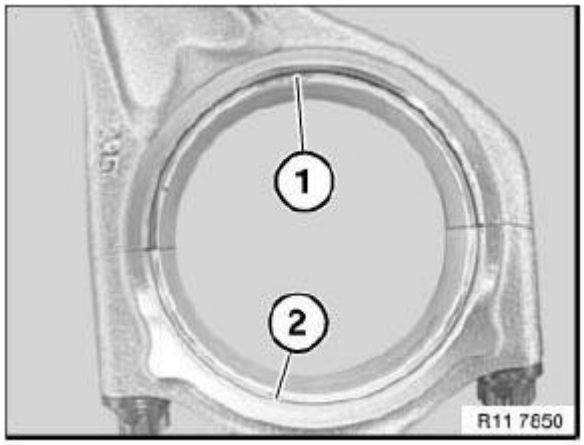

Fig. 167: Identifying Blue And Red Bearing Shell Installation Position
Courtesy of BMW OF NORTH AMERICA, INC.

Installation:

The bearing shells on the conrod are coded.

Conrod bearing cap (1): the red bearing shell is fitted and the fastening notches are on the left and right sides of the bearing shell (see arrows).

Conrod (2): the blue bearing shell is fitted and the fastening notches are one side of the bearing shell (see arrows).

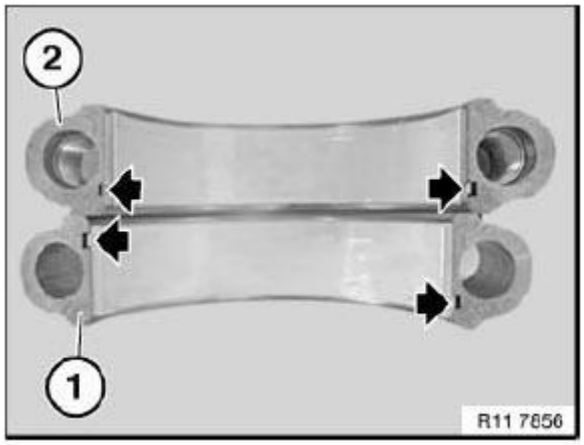

Fig. 168: Locating Fastening Notches
Courtesy of BMW OF NORTH AMERICA, INC.

Check connecting-rod bearing clearance

Piston in BDC position.

Fit special tool 00 2 590 (Plastigage Type PG 1) to the oil-free crankshaft.

Fit bearing caps so that pair numbers match up.

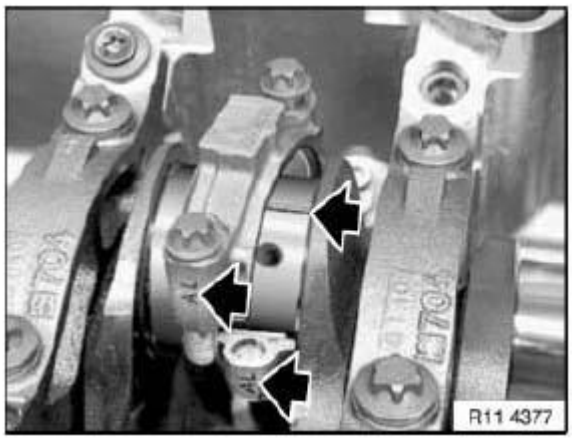

Fig. 169: Locating Connecting-Rod Bearing Cap Mark
Courtesy of BMW OF NORTH AMERICA, INC.

IMPORTANT: Do not distort connecting rods or crankshaft.

Use conrod bolts to check conrod bearing clearance.

Conrod bolts with special tool 00 9 120.

Tightening torque 11 24 1AZ, see **11 24 CONNECTING RODS AND BEARINGS**

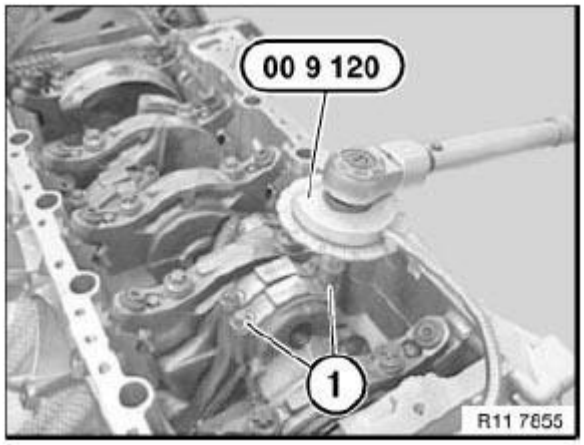

Fig. 170: Tightening Connecting-Rod Bearing Cap Bolt
Courtesy of BMW OF NORTH AMERICA, INC.

Remove bearing cap and read off bearing play at width of flattened plastic thread with assistance of measurement scale.

Conrod bearing clearance .

- Remove plastic thread.
- Lubricate crankshaft and bearing shells.
- Install new conrod bolts.

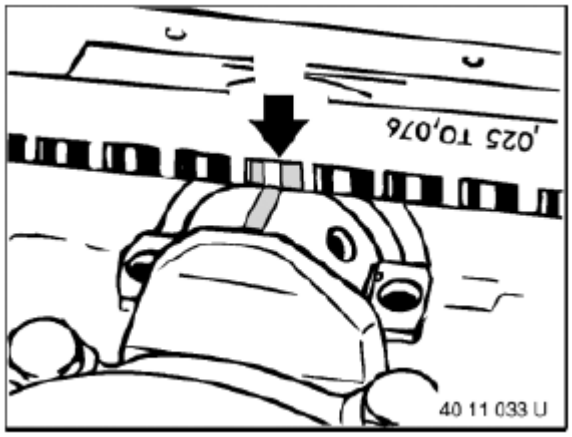

Fig. 171: Measuring Conrod Bearing Clearance
Courtesy of BMW OF NORTH AMERICA, INC.

Secure conrod bolts with special tool 00 9 120.

Tightening torque 11 24 1AZ, see **11 24 CONNECTING RODS AND BEARINGS**

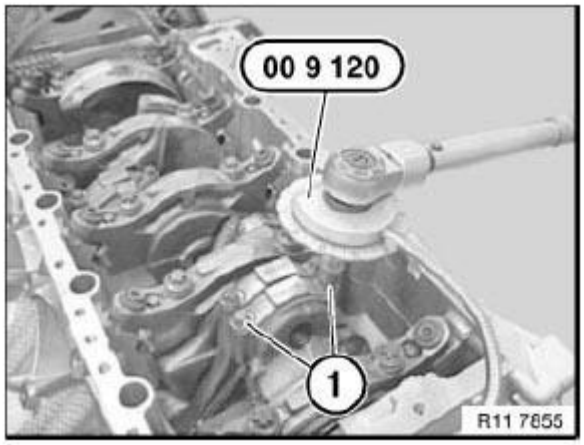

Fig. 172: Tightening Connecting-Rod Bearing Cap Bolt
Courtesy of BMW OF NORTH AMERICA, INC.

Assemble engine.

PISTON WITH RINGS AND PIN

11 25 530 REMOVING AND INSTALLING/REPLACING ALL PISTONS (N63) UP TO 3/2011

Special tools required:

- **00 9 120**
- **11 5 440**
- **11 7 280**
- **11 8 151**
- **11 8 152**

See **MAINTENANCE AND GENERAL INFORMATION - SPECIAL TOOLS** .

See **ENGINE - SPECIAL TOOLS (N54, N63)** .

WARNING: **Protective goggles must be worn when working on the gudgeon pin circlip.**

IMPORTANT: **If pistons and connecting rods are reused, they must be reinstalled in the same places.**

Piston and piston pin are matched to each other and can only be replaced as a pair.

Conrod and conrod bearing cap are cracked.

Identification is effected by means of identical pairing letters on the connecting rod big end.

Mixing up the components will result in engine damage.

Conrod bearings must always be replaced.

Necessary preliminary tasks:

- Remove **engine**
- **Mount engine on assembly stand** .
- Remove both left **cylinder head** **and right** **cylinder head** .
- Remove **oil** **sump** .
- Remove **oil pump** .

Unscrew conrod bearing cover.

NOTE: **Connecting rods and connecting rod bearing caps are denoted with the same pairing letters.**

The stamped dates are always arranged in opposite directions.

Set down conrod bearing caps in order.

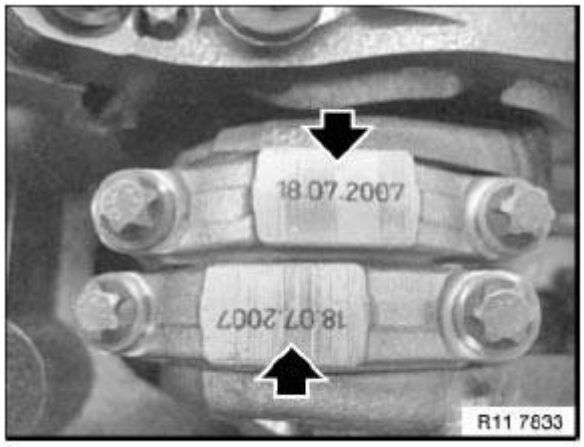

Fig. 173: Identifying Stamped Dates On Connecting Rod Bearing Caps
Courtesy of BMW OF NORTH AMERICA, INC.

NOTE: **To install and remove the conrods, it is essential for the crankshaft to be exactly in alignment with the cylinder bore (see dashed line).**

Position crankshaft at central bolt.

Insert special tool 11 8 152 in conrod.

Screw special tool 11 5 440 into conrod with bolt (1).

Remove conrod with piston from cylinder head side.

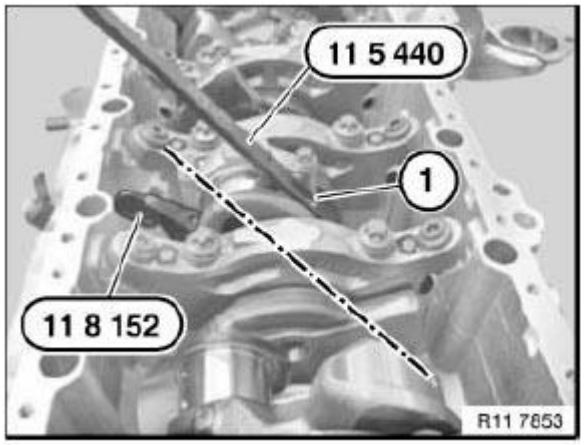

Fig. 174: Positioning Crankshaft Central Bolt
Courtesy of BMW OF NORTH AMERICA, INC.

IMPORTANT: Piston and piston bolts are paired and must not be fitted individually.

Lift out retaining ring and press out piston pin.

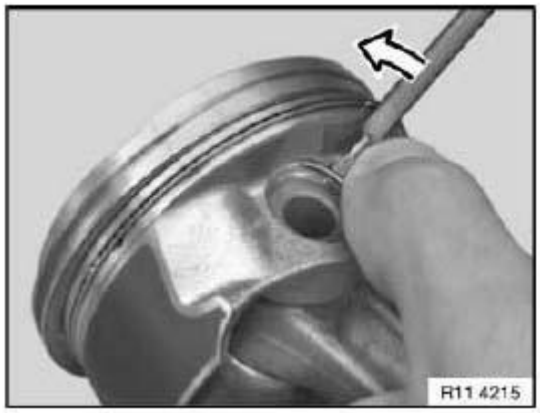

Fig. 175: Pressing Piston Snap Ring
Courtesy of BMW OF NORTH AMERICA, INC.

If necessary, replace connecting rods.

NOTE: The conrods can also be replaced individually.

The gudgeon pin must be able to be pressed through the liner by hand with

little force and must not display any significant play.

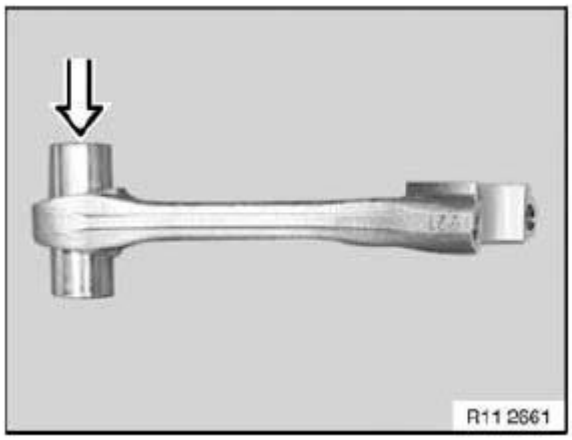

Fig. 176: Pressing Out Piston Pin
Courtesy of BMW OF NORTH AMERICA, INC.

Prior to installation, measure piston installation clearance:

Measure piston diameter with micrometer at measuring point A from lower edge of piston and offset by 90° to piston pin axis.

Measuring point A .

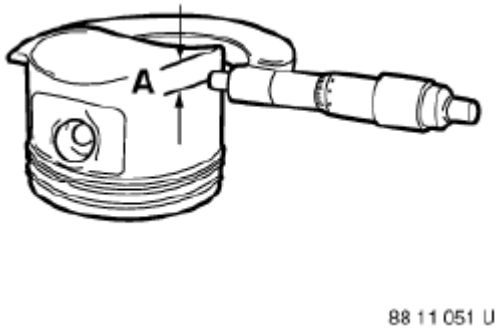

Fig. 177: Measuring Piston Diameter
Courtesy of BMW OF NORTH AMERICA, INC.

Adjust micrometer to cylinder bore of engine block. Set internal calliper on micrometer to zero. Measure bottom, center and top of cylinder bore in direction of travel and direction of engine rotation.

Diameter of cylinder bore . See **ENGINE - TECHNICAL DATA (N63)** .

Piston installation clearance . See **ENGINE - TECHNICAL DATA (N63)** .

Total permissible wear tolerance . See **ENGINE - TECHNICAL DATA (N63)** .

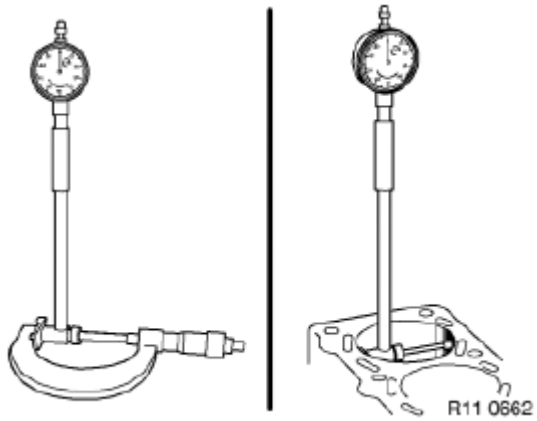

Fig. 178: Adjusting Micrometer To Cylinder Bore Of Engine Block
Courtesy of BMW OF NORTH AMERICA, INC.

IMPORTANT: The conrods of cylinder banks 1 to 4 and 5 to 8 are mounted to the pistons differently.

NOTE: The pistons and conrods of cylinders 1 to 8 are identical.

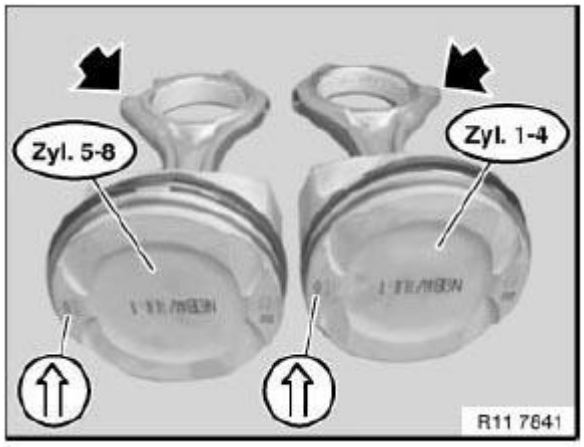

Fig. 179: Identifying Piston Mark
Courtesy of BMW OF NORTH AMERICA, INC.

Arrow on piston crown (cyl. 1 to 4) points upwards, bolt connection on conrod points at an angle to right.

Arrow on piston crown (cyl. 5 to 8) points upwards, bolt connection on conrod points at an angle to left.

NOTE: For purposes of clarity, pistons are shown removed.

The conrods are correctly mounted on the piston when the bolt connections on the conrods are parallel to each other (see arrow).

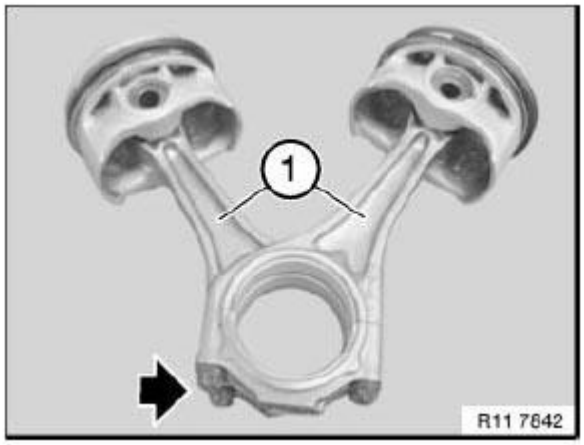

Fig. 180: Identifying Bolt Connections On Conrods
Courtesy of BMW OF NORTH AMERICA, INC.

Install retaining ring.

Fig. 181: Installing Retaining Ring
Courtesy of BMW OF NORTH AMERICA, INC.

Installation:

Piston circlip (1) is correctly installed when the opening points upwards.

See illustration.

It must still be possible for the piston pin to moved easily.

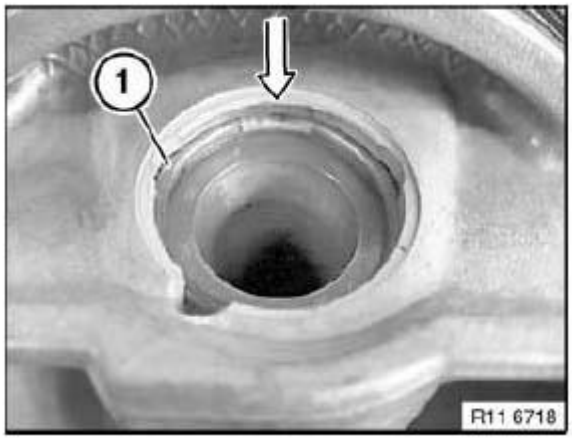

Fig. 182: Identifying Piston Circlip
Courtesy of BMW OF NORTH AMERICA, INC.

Insert special tools 11 8 151 and 11 8 152 in conrod.

Install conrod bearing .

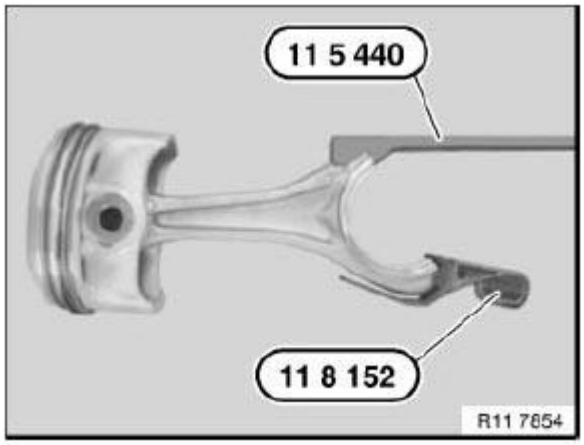

Fig. 183: Installing Conrod Bearing
Courtesy of BMW OF NORTH AMERICA, INC.

Lightly coat pistons and piston rings with oil.

Offset the contact points of the piston rings by approx. 120° to each other but do not position above the piston pin boss.

NOTE: Picture shows S85.

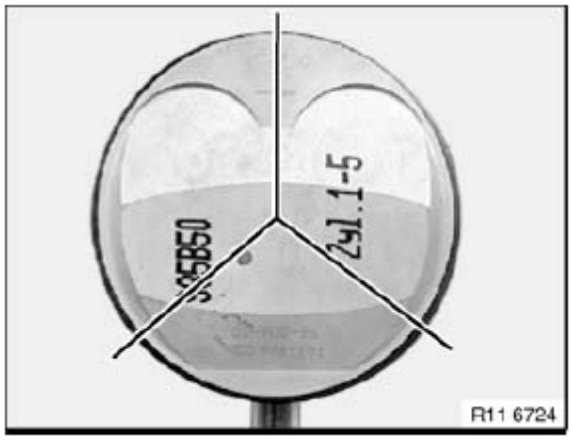

Fig. 184: Identifying Piston Rings Position
Courtesy of BMW OF NORTH AMERICA, INC.

Keep piston rings compressed with special tool 11 7 280.

Install piston so that arrow points to camshaft drive.

IMPORTANT: Danger of piston ring failure.

Press in piston only with finger force (do not knock in!).

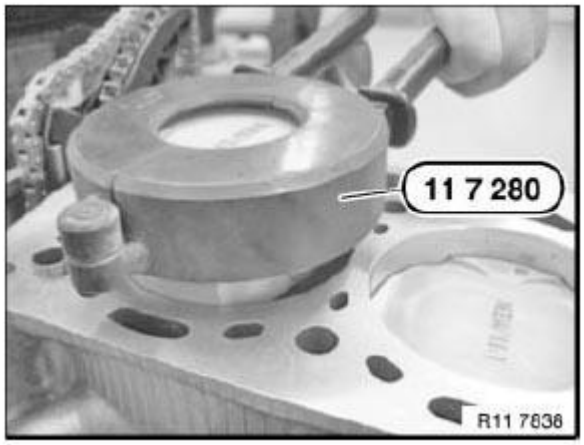

Fig. 185: Identifying Special Tool (11 7 280)
Courtesy of BMW OF NORTH AMERICA, INC.

IMPORTANT: Danger of piston ring failure.

Press in piston (1) only with finger force (do not knock in!).

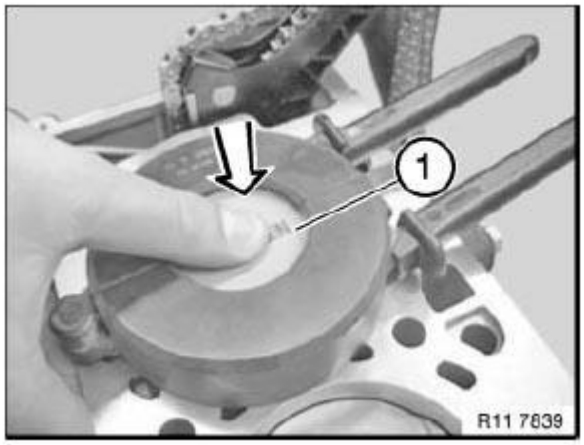

Fig. 186: Pressing Piston With Finger Force
Courtesy of BMW OF NORTH AMERICA, INC.

The direction arrow on the piston crown must point to the camshaft drive (direction of travel towards front).

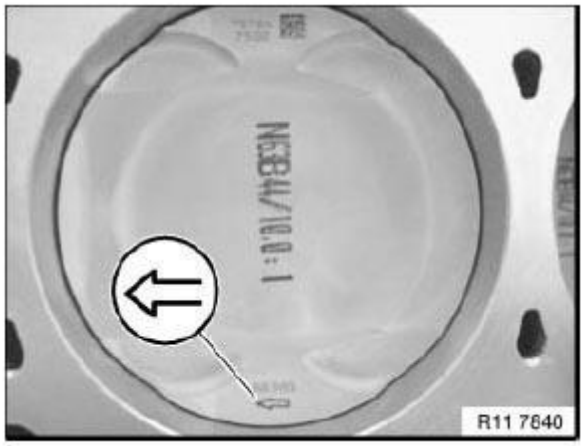

Fig. 187: Identifying Piston Mark
Courtesy of BMW OF NORTH AMERICA, INC.

Attach crankpin to connecting rod.

Remove special tools 11 5 440 and 11 8 152.

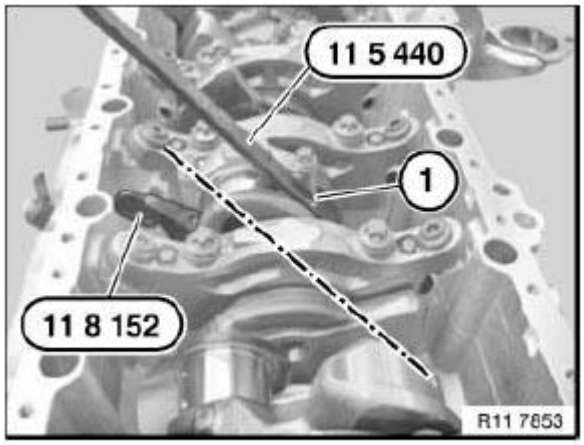

Fig. 188: Positioning Crankshaft Central Bolt
Courtesy of BMW OF NORTH AMERICA, INC.

NOTE: For purposes of clarity, the pairing letters (1) are shown on the removed conrod.

IMPORTANT: Conrods and conrod bearing caps are denoted with the same pairing letters (1), do not mix them up.

Fit bearing cap so that pairing letters match up.

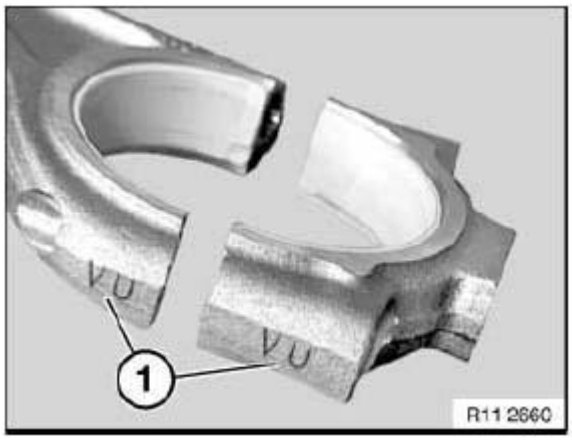

Fig. 189: Identifying Bearing Cap Mark
Courtesy of BMW OF NORTH AMERICA, INC.

Apply light coat of oil to connecting-rod bearing shells.

Fit bearing cap so that pairing letters match up.

Install new conrod bolts.

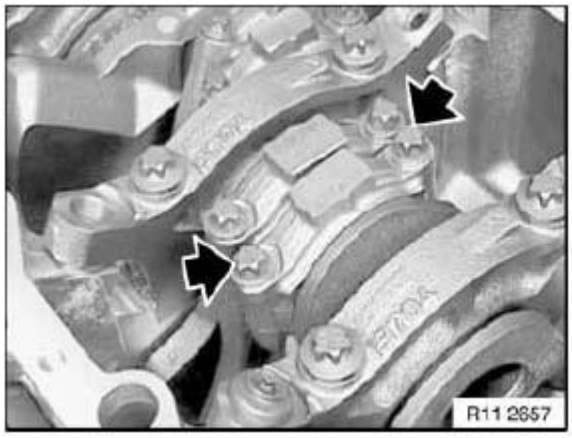

Fig. 190: Identifying Connecting-Rod Bearing Bolts
Courtesy of BMW OF NORTH AMERICA, INC.

Tighten down conrod bolts (1) with special tool 00 9 120.

Tightening torque 11 24 1AZ .11 24 CONNECTING RODS AND BEARINGS

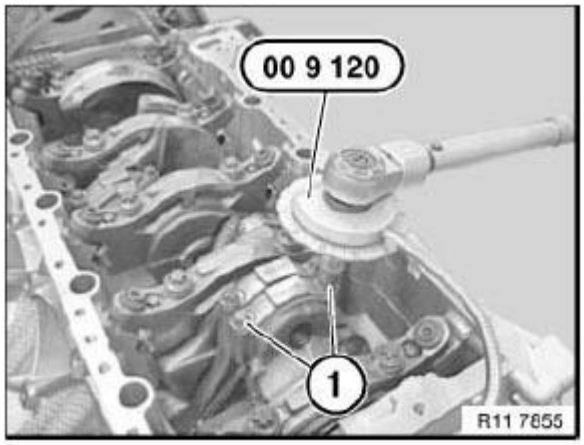

Fig. 191: Tightening Connecting-Rod Bearing Cap Bolt
Courtesy of BMW OF NORTH AMERICA, INC.

Assemble engine.

11 25 530 REMOVING AND INSTALLING/REPLACING ALL PISTONS (N63) FROM 3/2011

Special tools required:

- **00 9 120**
- **11 5 440**
- **11 7 280**
- **11 8 151**

- **11 8 152**

See **MAINTENANCE AND GENERAL INFORMATION - SPECIAL TOOLS** .

See **ENGINE - SPECIAL TOOLS (N54, N63)** .

WARNING: Protective goggles must be worn when working on the gudgeon pin circlip.

IMPORTANT: If pistons and connecting rods are reused, they must be reinstalled in the same places.

Piston and piston pin are matched to each other and can only be replaced as a pair.

Conrod and conrod bearing cap are cracked.

Identification is effected by means of identical pairing letters on the connecting rod big end.

Mixing up the components will result in engine damage.

Conrod bearings must always be replaced.

Necessary preliminary tasks:

- Remove **engine**
- **Mount engine on assembly stand** .
- Remove both left **cylinder head** **and right** **cylinder head** .
- Remove **oil** **sump** .
- Remove **oil pump** .

To release the connecting rod bolts (1), the crankshaft (2) must be moved to a suitable position. Release connecting rod bolts (1).

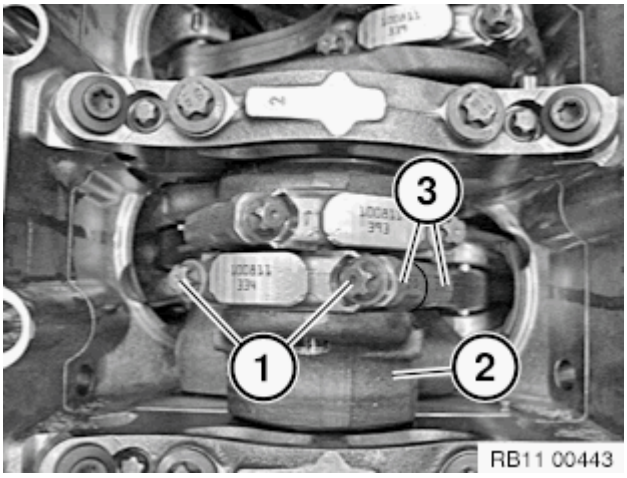

Fig. 192: Releasing Connecting Rod Bolts
Courtesy of BMW OF NORTH AMERICA, INC.

Screw the special tool 2 249 164 into the connecting rod.

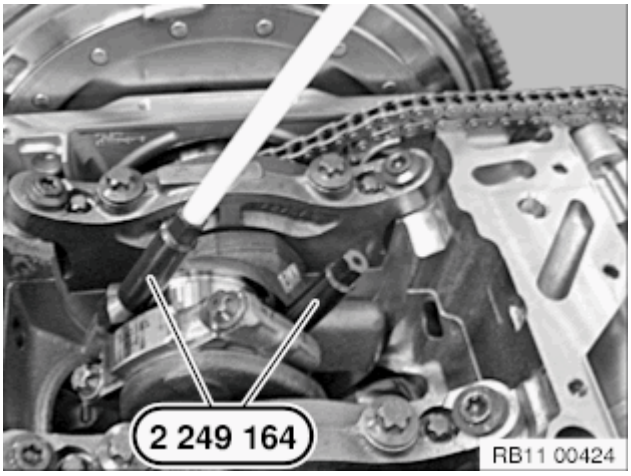

Fig. 193: Screwing Special Tool Into Connecting Rod
Courtesy of BMW OF NORTH AMERICA, INC.

NOTE: For installation and dismantling of the connecting rods, it is essential for the crankshaft to be exactly in alignment with the cylinder bore.

Position crankshaft at central bolt. Press out the connecting rod and piston with special tool 2 249 164 towards the cylinder head side.

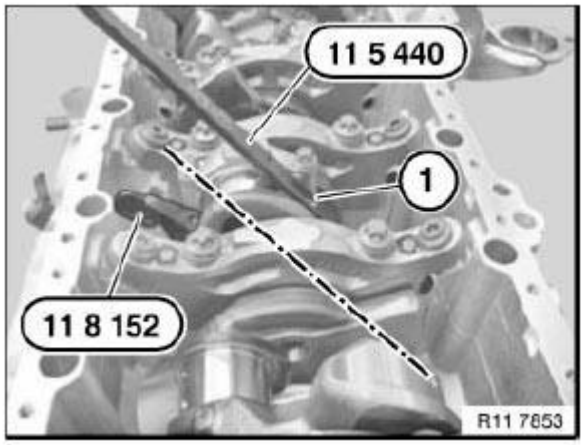

Fig. 194: Positioning Crankshaft Central Bolt
Courtesy of BMW OF NORTH AMERICA, INC.

IMPORTANT: Pistons and gudgeon pins are paired and must not be fitted individually.

Lift out circlip and press out piston pin.

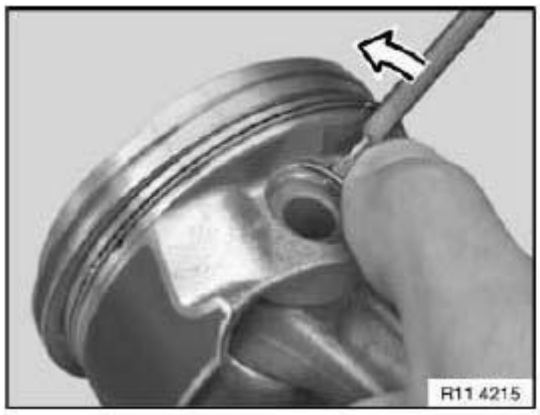

Fig. 195: Pressing Retaining Ring
Courtesy of BMW OF NORTH AMERICA, INC.

If necessary, replace connecting rods.

NOTE: The connecting rod can also be replaced individually. The gudgeon pin must be able to be pressed through the bush by hand with little force and must not display any significant play.

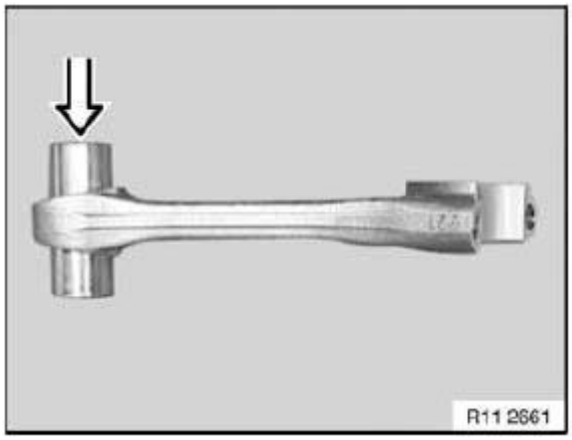

Fig. 196: Pressing Piston Pin
Courtesy of BMW OF NORTH AMERICA, INC.

Prior to installation, measure piston installation clearance: Measure piston diameter with micrometre at measuring point A from lower edge of piston and offset at 90° to the axis of the gudgeon pin. See **PISTON WITH RINGS AND PIN** .

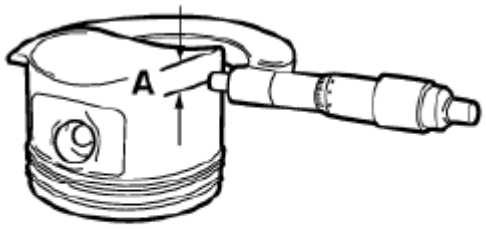

88 11 051 U

Fig. 197: Checking Piston Diameter With Micrometer
Courtesy of BMW OF NORTH AMERICA, INC.

Adjust micrometre to cylinder bore of engine block. Set internal measuring device on micrometre to zero. Measure bottom, center and top of cylinder bore in direction of travel and direction of rotation. See **ENGINE BLOCK** and **PISTON WITH RINGS AND PIN** .

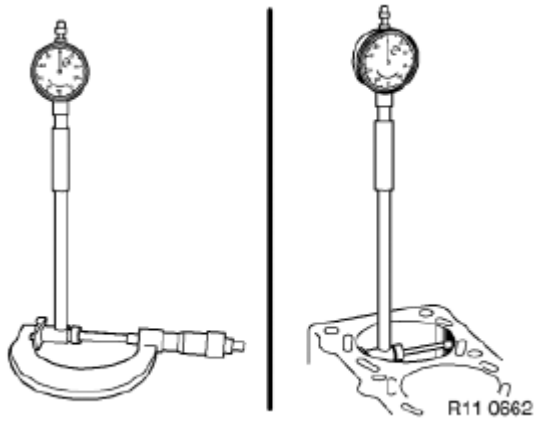

Fig. 198: Checking Cylinder Bore Diameter
Courtesy of BMW OF NORTH AMERICA, INC.

Installation note: Piston circlip (1) is correctly installed when the opening points upwards.

It must still be possible for the gudgeon pin to be moved easily.

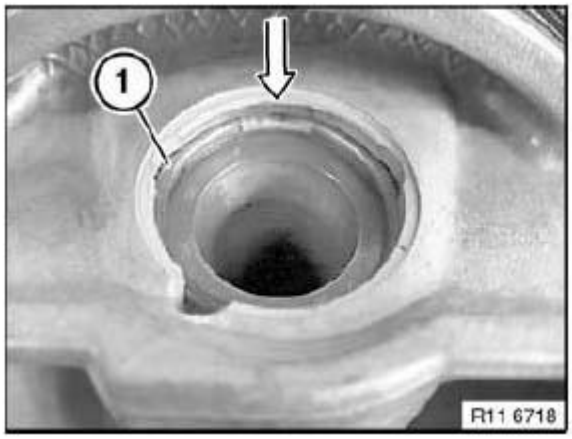

Fig. 199: Installing Piston Circlip
Courtesy of BMW OF NORTH AMERICA, INC.

Insert the special tools 2 249 164 into the connecting rod. Install connecting rod bearing.

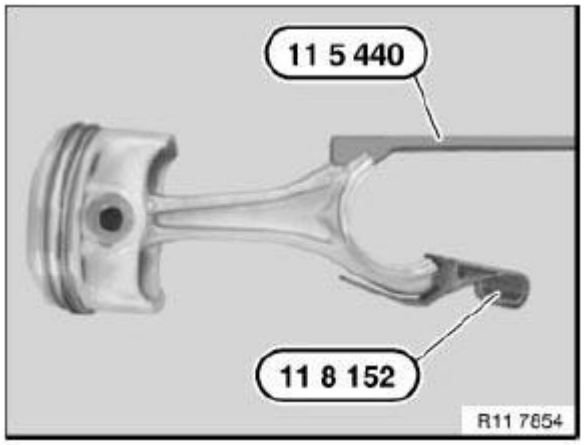

Fig. 200: Installing Conrod Bearing
Courtesy of BMW OF NORTH AMERICA, INC.

Lightly coat pistons and piston rings with oil. Offset the contact points of the piston rings by approx. 120° to each other but do not position above the gudgeon pin boss.

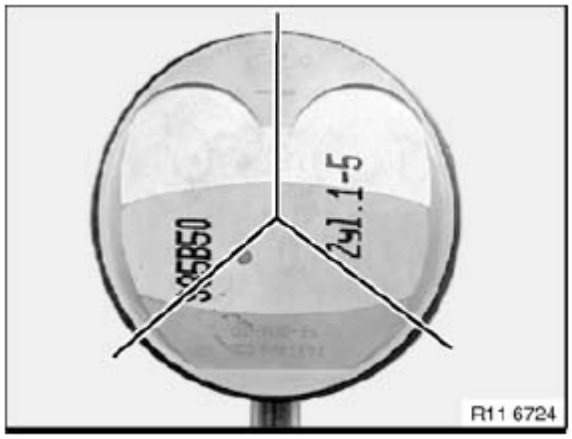

Fig. 201: Identifying Piston Ring Contact Point Offset Position
Courtesy of BMW OF NORTH AMERICA, INC.

Keep piston rings compressed with special tool 11 7 280. Install piston so that arrow points to camshaft drive.

IMPORTANT: Risk of breakage of piston rings.

Press in piston only with finger force (do not knock in!).

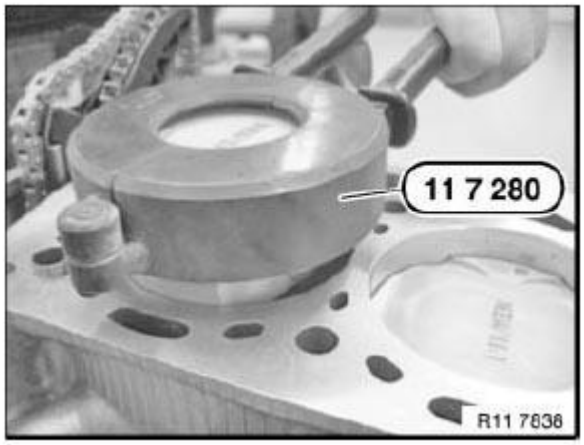

Fig. 202: Identifying Special Tool (11 7 280)
Courtesy of BMW OF NORTH AMERICA, INC.

The direction arrow on the piston crown must point to the camshaft drive (direction of travel towards front).

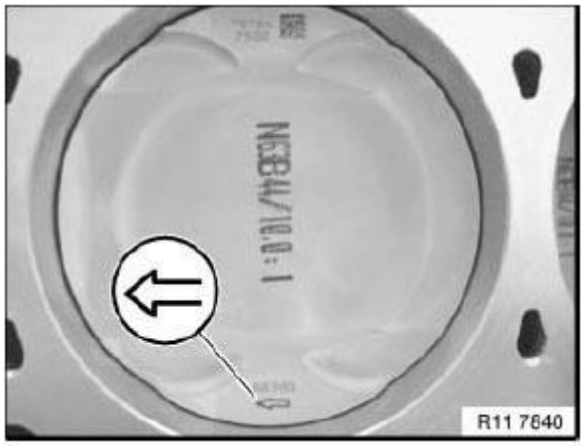

Fig. 203: Identifying Piston Mark
Courtesy of BMW OF NORTH AMERICA, INC.

Connect the crankshaft journal and connecting rod. Remove the special tools 2 249 164.

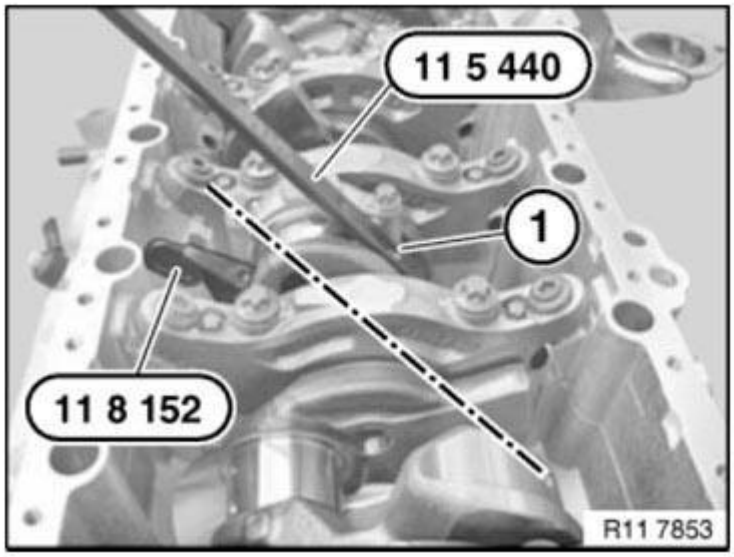

Fig. 204: Attaching Crankshaft Journal To Connecting Rod
Courtesy of BMW OF NORTH AMERICA, INC.

NOTE: **For purposes of clarity, the pairing letters (1) are shown on the removed connecting rod.**

IMPORTANT: **Connecting rods and connecting rod bearing caps are denoted with the same pairing letters (1), do not mix them up. Fit bearing cap so that pairing letters match up.**

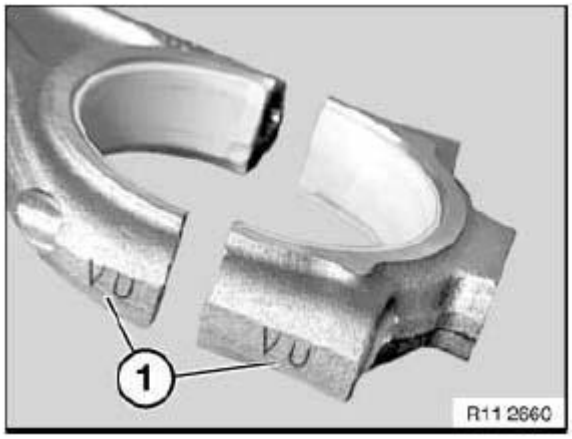

Fig. 205: Identifying Pairing Letters
Courtesy of BMW OF NORTH AMERICA, INC.

Apply light coat of oil to connecting rod bearing shells. Fit the bearing cap so that the pairing letters (3) match up. Install the connecting rod bolts (1).

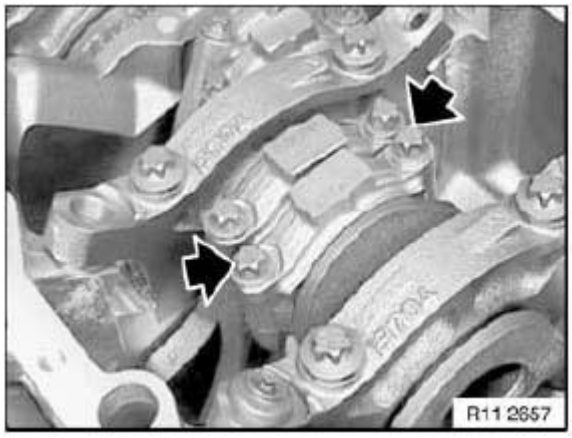

Fig. 206: Identifying Conrod Bearing Caps
Courtesy of BMW OF NORTH AMERICA, INC.

Secure connecting rod bolts (1) with special tool 00 9 120. Tightening torque **11 24 1 AZ.**

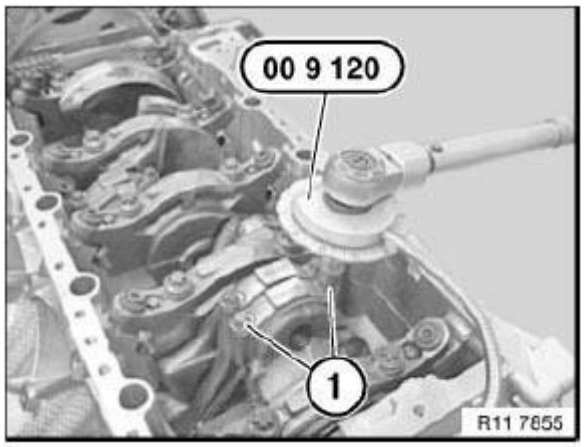

Fig. 207: Tightening Connecting-Rod Bearing Cap Bolt
Courtesy of BMW OF NORTH AMERICA, INC.

V-RIBBED BELT WITH TENSIONER

11 28 010 REPLACING ALTERNATOR DRIVE BELT (N63)

Special tools required:

- **11 3 340**

See **ENGINE - SPECIAL TOOLS (N54, N63)** .

IMPORTANT: If contaminated with hydraulic fluid: Replace drive belt.

Installation:

If the drive belt is to be reused, mark direction of travel and reinstall drive belt in same direction of rotation.

Necessary preliminary tasks:

- Remove **fan cowl** . See **17 11 035 REMOVING AND INSTALLING/REPLACING FAN COWL WITH ELECTRIC FAN (N63)** .
- Release **expansion tank** for intercooler from mounting and press forwards. See **ENGINE RADIATOR** .

Coolant hoses do not need to be released!

IMPORTANT: Belt tensioner is under high initial spring tension.

Slowly and carefully pretension belt tensioner (1) in direction of arrow up to stop.

Secure special tool 11 3 340 in special tool bore (2).

Belt tensioner in assembly position.

Remove drive belt.

NOTE: On vehicles which do not have a power steering pump, an idler pulley (3) is fitted in place of the power steering pump.

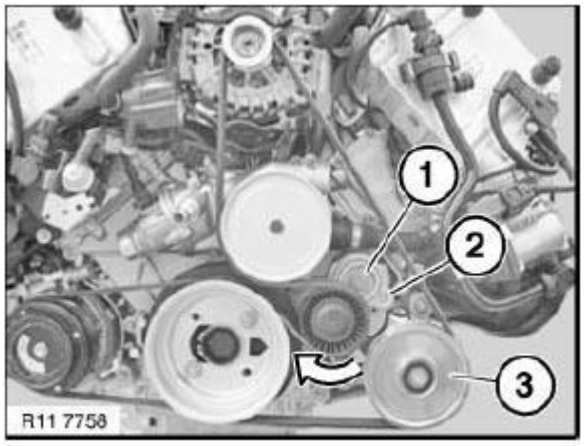

Fig. 208: Drive Belt Installation Position
Courtesy of BMW OF NORTH AMERICA, INC.

IMPORTANT: Belt tensioner is under high initial spring tension.

Put on the drive belt.

Remove special tool 11 3 340 in special tool bore (2).

Slowly relieve tension on belt tensioner (1).

Installation:

Make sure drive belt is in correct installation position.

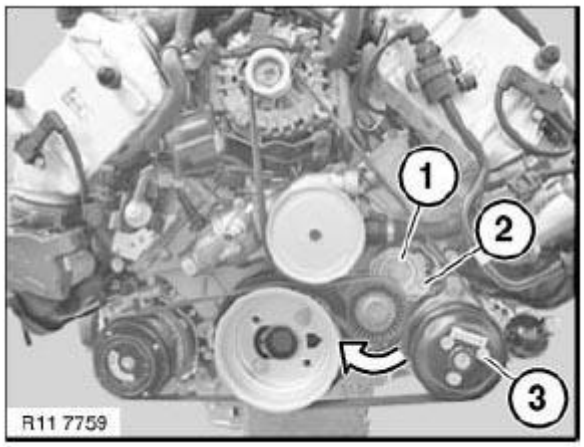

Fig. 209: Drive Belt Installation Position
Courtesy of BMW OF NORTH AMERICA, INC.

Assemble engine.

11 28 020 REPLACING TENSIONING DEVICE FOR ALTERNATOR DRIVE BELT (N63)

Special tools required:

- **11 0 390**

See **ENGINE - SPECIAL TOOLS (N54, N63)** .

Necessary preliminary tasks:

- Remove alternator **drive belt**

If necessary, remove special tool 11 0 390.

Release screw (1).

Tightening torque 11 28 1AZ.**11 28 V-RIBBED BELT WITH TENSION AND DEFLECTION ELEMENT**

Remove belt tensioner with idler pulley (2).

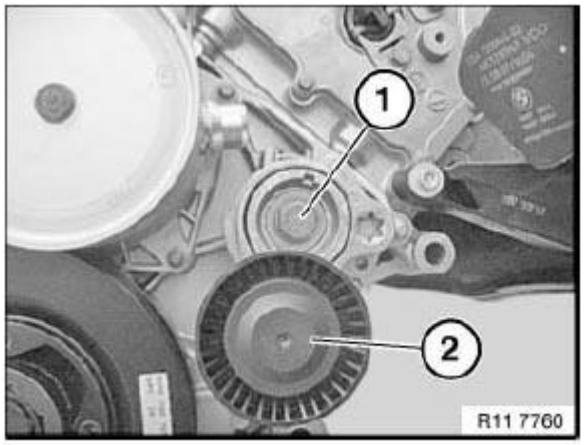

Fig. 210: Identifying Belt Tensioner With Idler Pulley
Courtesy of BMW OF NORTH AMERICA, INC.

11 28 050 REPLACING A/C COMPRESSOR DRIVE BELT WITH BELT TENSIONER (N63)

IMPORTANT: Risk of damage!

Release screws (1) on vibration damper only if removal position is adjusted.

If contaminated with hydraulic fluid: Replace drive belt.

Crank engine at central bolt in direction of engine rotation.

Installation:

If the drive belt is to be reused, mark direction of travel and reinstall drive belt in same direction of rotation.

Necessary preliminary tasks:

- Remove alternator **drive belt**

NOTE: Observe direction of engine rotation.

Crank engine at central bolt until marking (see arrow) is reached on vibration damper.

Release screws (1).

Tightening torque 11 28 2AZ, see **11 28 V-RIBBED BELT WITH TENSION AND DEFLECTION ELEMENT**

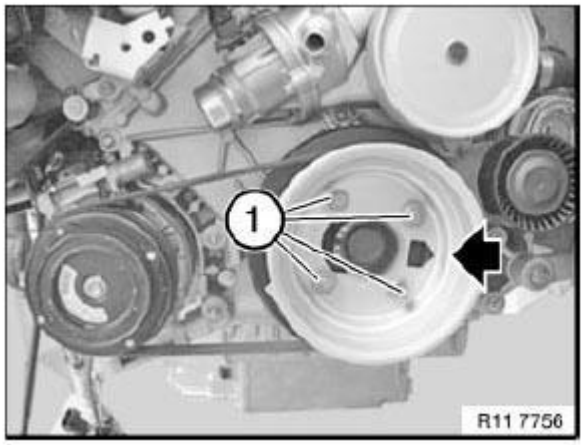

Fig. 211: Identifying Vibration Damper Screws
Courtesy of BMW OF NORTH AMERICA, INC.

IMPORTANT: Belt pulley is pretensioned.

Belt pulley tension is relieved abruptly during the cranking process!

NOTE: Observe direction of engine rotation.

Crank engine at central bolt until marking (see arrow) is reached on vibration damper.

Remove elasto-belt.

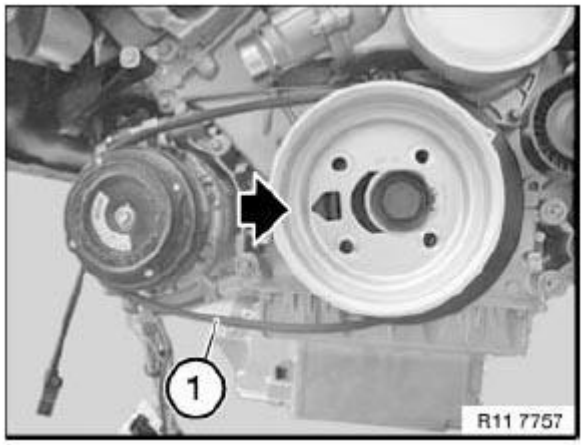

Fig. 212: Identifying Drive Belt
Courtesy of BMW OF NORTH AMERICA, INC.

Assemble engine.

CAMSHAFT

11 31 032 REMOVING AND INSTALLING/REPLACING LEFT INLET CAMSHAFT (N63)

Special tools required:

- **11 4 480**

See **ENGINE - SPECIAL TOOLS (N54, N63)** .

(cylinder bank 5 to 8)

IMPORTANT: The inlet camshaft must first be rotated in such a way that the camshaft is free from tension when the bearing caps are released (risk of damage) .

Necessary preliminary tasks:

- Remove left **cylinder head cover** .
- Check **timing** .
- Remove **left inlet adjustment unit** .

IMPORTANT: No cam on the inlet camshaft is permitted to press directly onto a roller cam follower.

With cylinder no. 1 at 150° before firing TDC there is no piston in the TDC position.

Rotate left inlet camshaft with a fork wrench (1) into a suitable position.

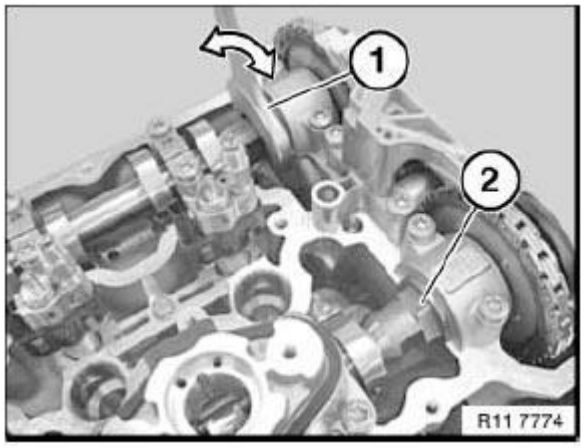

Fig. 213: Rotating Left Inlet Camshaft
Courtesy of BMW OF NORTH AMERICA, INC.

Release bolts of camshaft bearings in sequence (10 to 1) in 1/2 turns.

Set down all bearing caps in a tidy and orderly fashion on special tool 11 4 480.

Inlet camshaft

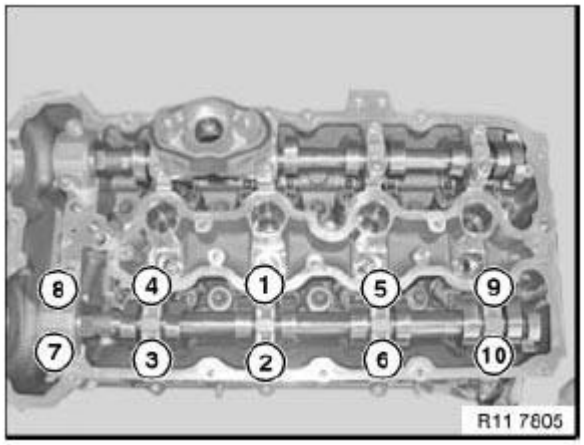

Fig. 214: Identifying Camshaft Bearings Bolts Tightening Sequence
Courtesy of BMW OF NORTH AMERICA, INC.

IMPORTANT: Used rocker arms (1) may only be reused in the same position.

NOTE: Rocker arms (1) are freely accessible after inlet camshaft has been removed.

Do "not" remove rocker arm (1) on inlet side.

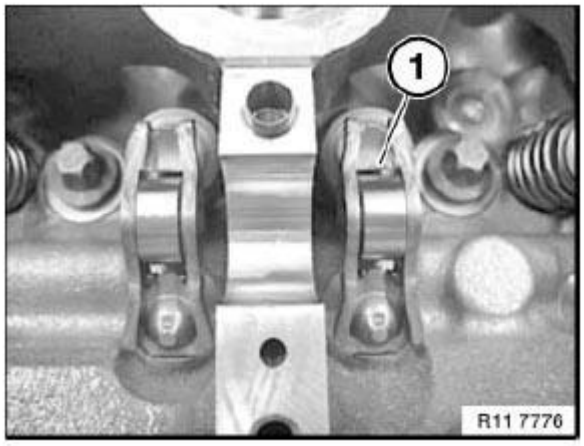

Fig. 215: Identifying Rocker Arms
Courtesy of BMW OF NORTH AMERICA, INC.

IMPORTANT: Plain compression rings (1) can easily break.

If necessary, replace plain compression rings (1).

Press compression ring (1) on one side into groove, pull up on other side and remove catch.

Carefully pull compression ring (1) apart and remove towards front.

Ends of compression rings (1) point upwards.

Make sure compression rings (1) are engaged at ends.

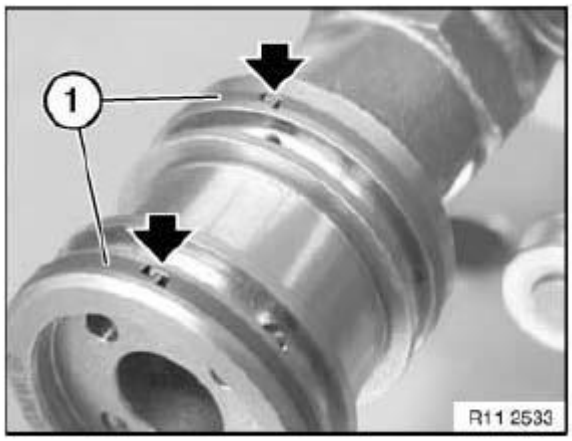

Fig. 216: Pressing Compression Ring On Side Into Groove
Courtesy of BMW OF NORTH AMERICA, INC.

NOTE: Inlet camshaft of cylinder bank 5 to 8 is marked with "E 5-8".

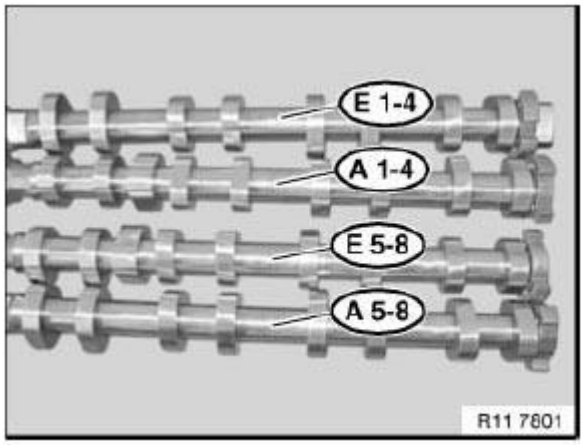

Fig. 217: Identifying Camshaft Mark
Courtesy of BMW OF NORTH AMERICA, INC.

IMPORTANT: Rocker arms (1) slip slightly when inlet camshaft is fitted.

Make sure rocker arms (1) are secured as illustrated on hydraulic valve clearance compensating elements and on valves.

Align all rocker arms (1) straight.

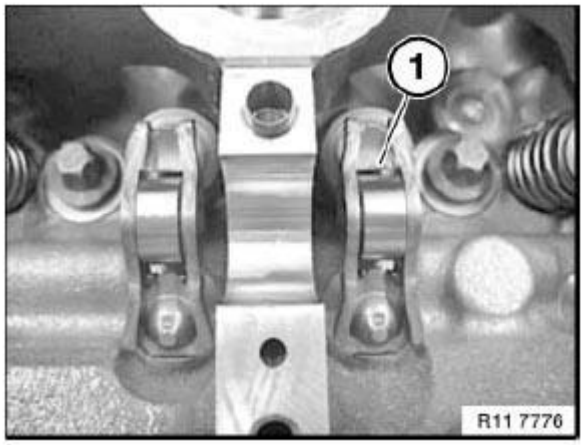

Fig. 218: Identifying Rocker Arms
Courtesy of BMW OF NORTH AMERICA, INC.

Coat all bearing points with engine oil.

Insert inlet camshaft.

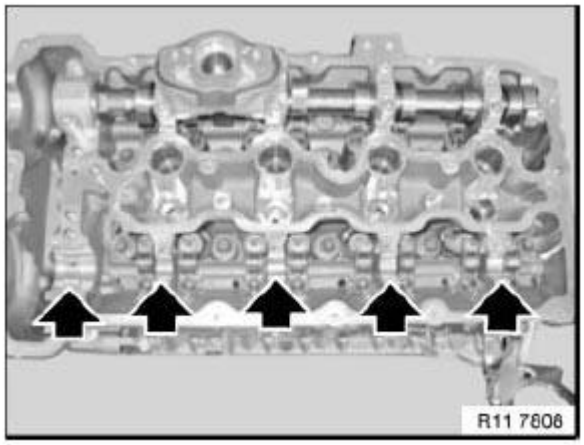

Fig. 219: Identifying Inlet Camshaft Bearing Points
Courtesy of BMW OF NORTH AMERICA, INC.

Insert inlet camshaft (1) so that cams point to side at cylinder 5 as shown in picture.

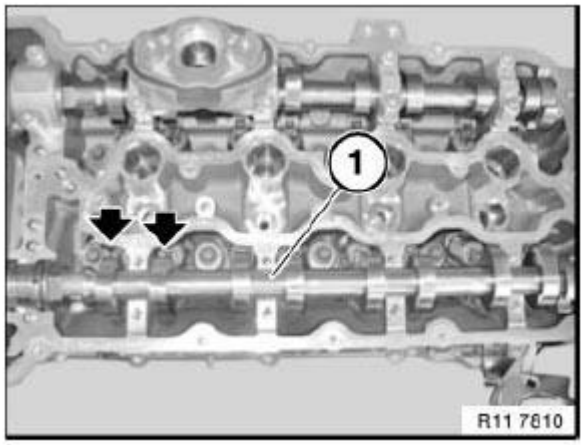

Fig. 220: Identifying Inlet Camshaft
Courtesy of BMW OF NORTH AMERICA, INC.

IMPORTANT: Do not mix up the bearing caps of cylinders 1 to 4 and 5 to 8.

All bearing caps are coded and can only be installed in one position.

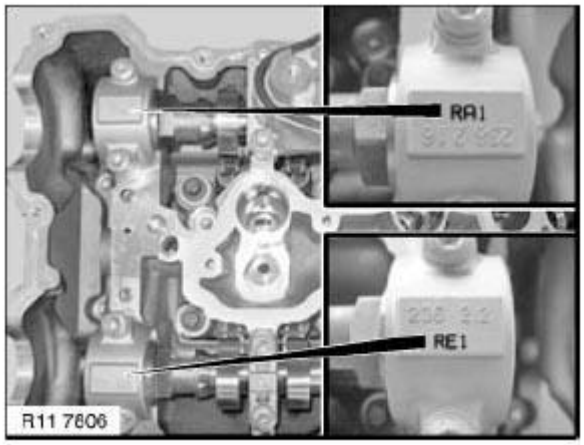

Fig. 221: Identifying Bearing Caps Mark
Courtesy of BMW OF NORTH AMERICA, INC.

All bearing caps are marked:

L = cylinders 1-4

R= cylinders 5-8

E = inlet side

A = exhaust side

1 = designation from 1 to 5

Insert all bolts.

Tighten down bolts in sequence (1 to 10) in 1/2 turns.

Tightening torque: 11 31 6AZ.**11 31 CAMSHAFT**

Tightening torque: 11 31 7AZ, see **11 31 CAMSHAFT**

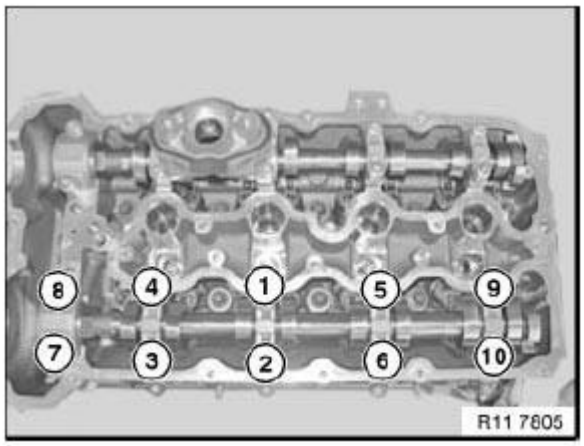

Fig. 222: Identifying Camshaft Bearings Bolts Tightening Sequence
Courtesy of BMW OF NORTH AMERICA, INC.

Install **inlet adjustment unit** .

Adjust **valve timing. See left side and camshaft timing on right side** .

Assemble engine.

11 31 034 REMOVING AND INSTALLING/REPLACING RIGHT INLET CAMSHAFT (N63)

Special tools required:

- **11 4 480**

See **ENGINE - SPECIAL TOOLS (N54, N63)** .

(cylinder bank 1 to 4)

IMPORTANT: The inlet camshaft must first be rotated in such a way that the camshaft is free from tension when the bearing caps are released (risk of damage) .

Necessary preliminary tasks:

- Remove right **cylinder head cover** .
- Check **timing** .
- Remove **right inlet adjustment unit** .

IMPORTANT: No cam on the inlet camshaft is permitted to press directly onto a roller cam follower.

With cylinder no. 1 at 150° before firing TDC there is no piston in the TDC position.

Rotate right inlet camshaft (2) at dihedron with a fork wrench (1) into a suitable position.

NOTE: Illustration shows cyl. 5 to 8.

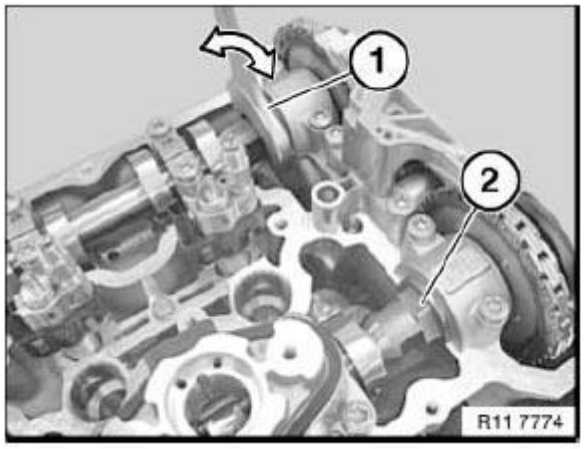

Fig. 223: Rotating Right Inlet Camshaft
Courtesy of BMW OF NORTH AMERICA, INC.

Release bolts of camshaft bearings in sequence (10 to 1) in 1/2 turns.

Set down all bearing caps in a tidy and orderly fashion on special tool 11 4 480.

Inlet camshaft

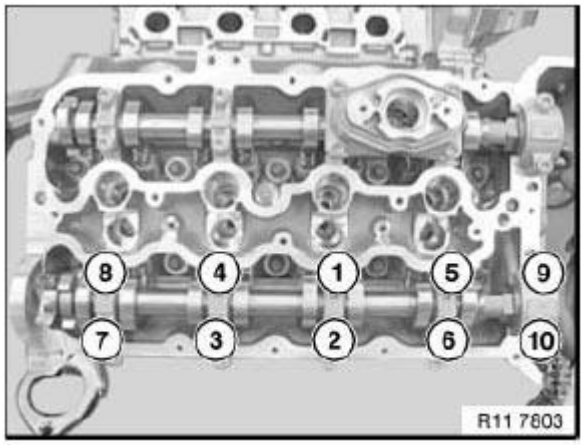

Fig. 224: Identifying Camshaft Bearings Bolts Tightening Sequence
Courtesy of BMW OF NORTH AMERICA, INC.

IMPORTANT: Used rocker arms (1) may only be reused in the same position.

NOTE: Rocker arms (1) are freely accessible after inlet camshaft has been removed.

Do "not" remove rocker arm (1) on inlet side.

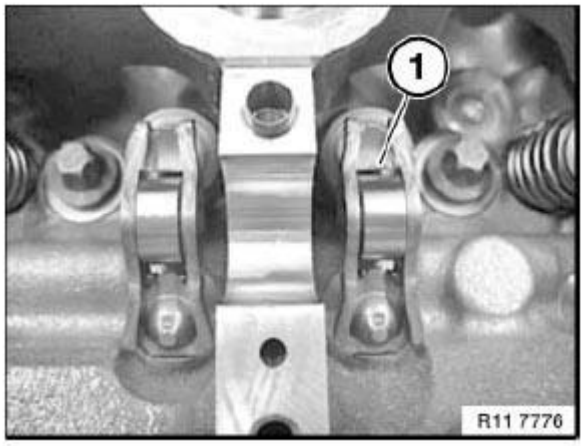

Fig. 225: Identifying Rocker Arms
Courtesy of BMW OF NORTH AMERICA, INC.

IMPORTANT: Plain compression rings (1) can easily break.

If necessary, replace plain compression rings (1).

Press compression ring (1) on one side into groove, pull up on other side and remove catch.

Carefully pull compression ring (1) apart and remove towards front.

Ends of compression rings (1) point upwards.

Make sure compression rings (1) are engaged at ends.

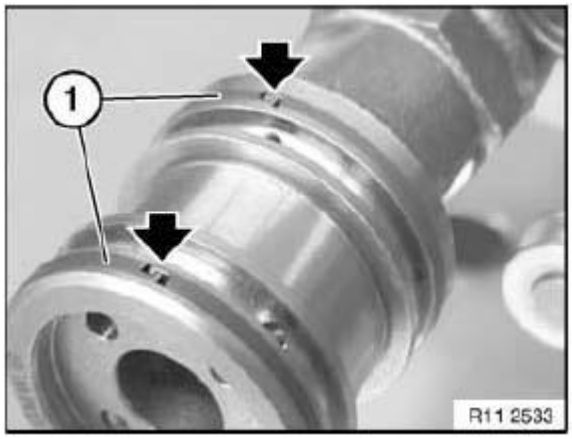

Fig. 226: Pressing Compression Ring On Side Into Groove
Courtesy of BMW OF NORTH AMERICA, INC.

NOTE: Inlet camshaft of cylinder bank 5 to 8 is marked with "E 5-8".

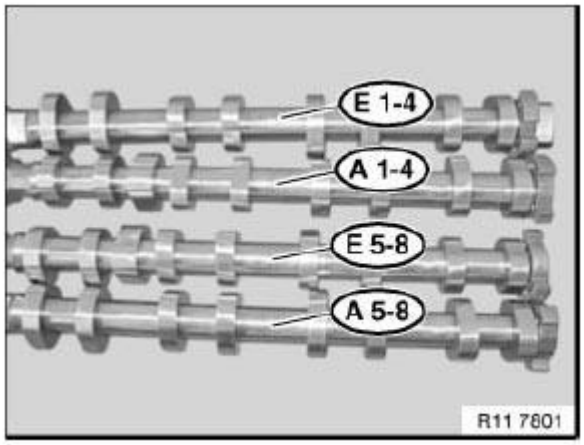

Fig. 227: Identifying Camshaft Mark
Courtesy of BMW OF NORTH AMERICA, INC.

IMPORTANT: Rocker arms (1) slip slightly when inlet camshaft is fitted.

Make sure rocker arms (1) are secured as illustrated on hydraulic valve clearance compensating elements and on valves.

Align all rocker arms (1) straight.

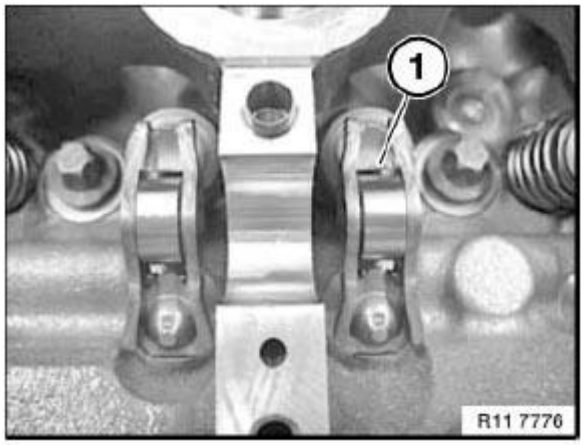

Fig. 228: Identifying Rocker Arms
Courtesy of BMW OF NORTH AMERICA, INC.

Coat all bearing points with engine oil.

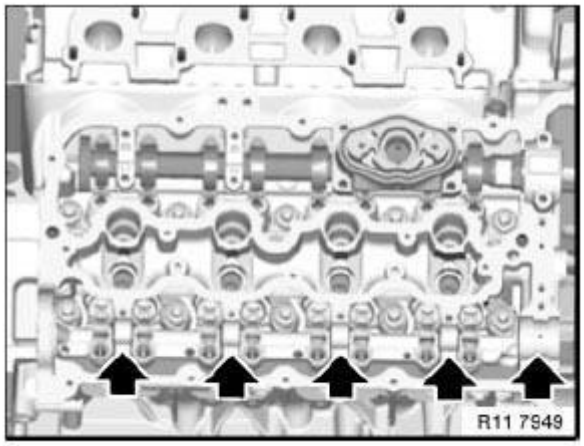

Fig. 229: Identifying Bearing Points
Courtesy of BMW OF NORTH AMERICA, INC.

Insert inlet camshaft.

Insert inlet camshaft (1) so that cams point to side at cylinder 1 as shown in picture.

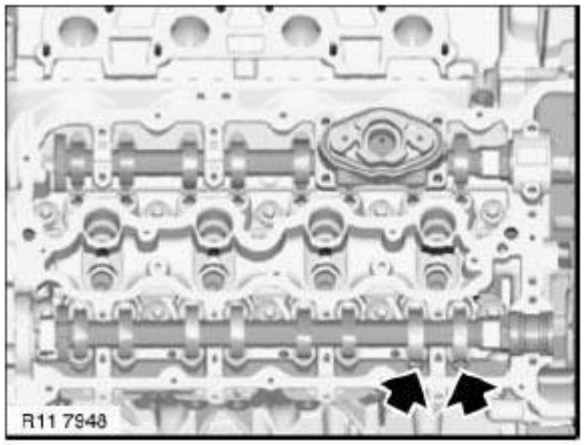

Fig. 230: Identifying Inlet Camshaft
Courtesy of BMW OF NORTH AMERICA, INC.

IMPORTANT: Do not mix up the bearing caps of cylinders 1 to 4 and 5 to 8.

All bearing caps are coded and can only be installed in one position.

All bearing caps are marked with letters and numbers:

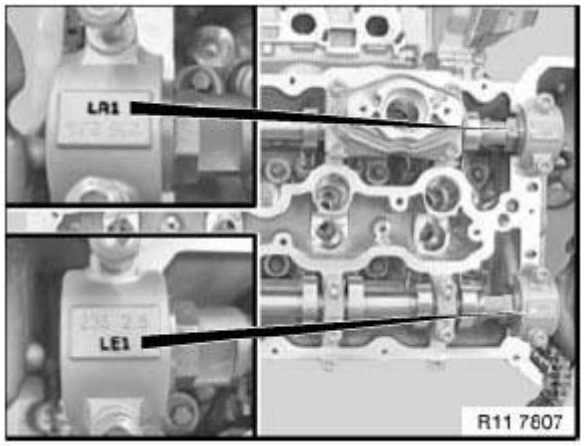

Fig. 231: Identifying Bearing Caps Mark
Courtesy of BMW OF NORTH AMERICA, INC.

L = cylinder bank 1-4

R= cylinder bank 5-8

E = inlet side

A = exhaust side

1 = designation, bearing point, from 1 to 5

Insert all bolts.

Tighten down bolts in sequence (1 to 10) in 1/2 turns.

Tightening torque: 11 31 6AZ, see **11 31 CAMSHAFT**

Tightening torque: 11 31 7AZ, see **11 31 CAMSHAFT**

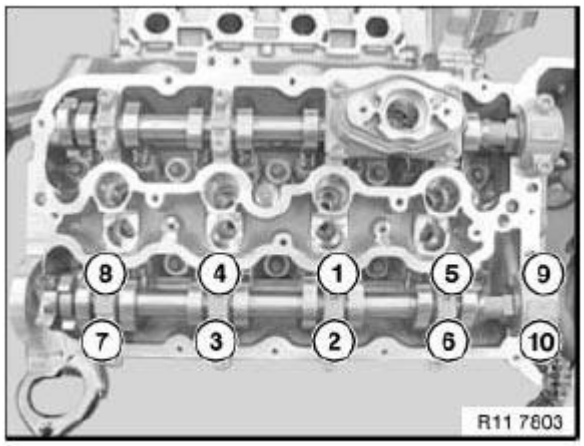

Fig. 232: Identifying Camshaft Bearings Bolts Tightening Sequence
Courtesy of BMW OF NORTH AMERICA, INC.

Install **inlet adjustment unit** .

Adjust **valve timing** . See **left side** and **right side**

Assemble engine.

11 31 036 REMOVING AND INSTALLING/REPLACING LEFT EXHAUST CAMSHAFT (N63)

Special tools required:

- **11 4 480**

See **ENGINE - SPECIAL TOOLS (N54, N63)** .

(cylinder bank 5 to 8)

IMPORTANT: The exhaust camshaft must first be rotated in such a way that the camshaft is free from tension when the bearing caps are released (risk of damage) .

Necessary preliminary tasks:

- Remove left **cylinder head cover** .
- Check **timing** .
- Remove **left inlet adjustment unit** .

IMPORTANT: No cam on the exhaust camshaft is permitted to press directly onto a roller cam follower.

With cylinder no. 1 at 150° before firing TDC there is no piston in the TDC position.

Rotate exhaust camshaft (2) at dihedron with a fork wrench into a suitable position.

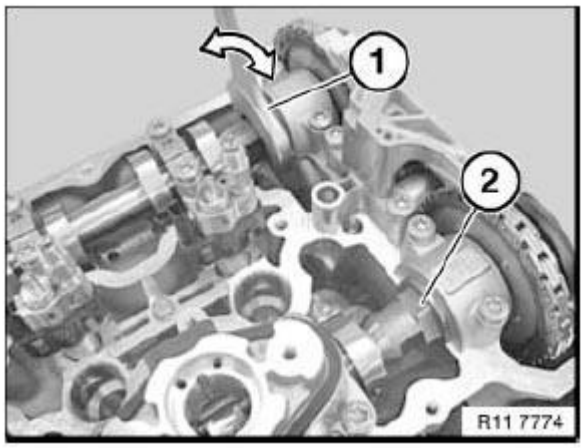

Fig. 233: Rotating Exhaust Camshaft
Courtesy of BMW OF NORTH AMERICA, INC.

Release bolts of camshaft bearings in sequence (10 to 1) in 1/2 turns.

Set down all bearing caps in a tidy and orderly fashion on special tool 11 4 480.

Remove roller tappet from bearing cap (2 and 3) of high-pressure pump and set down on special tool 11 4 480.

Remove left exhaust camshaft and set down on special tool 11 4 480.

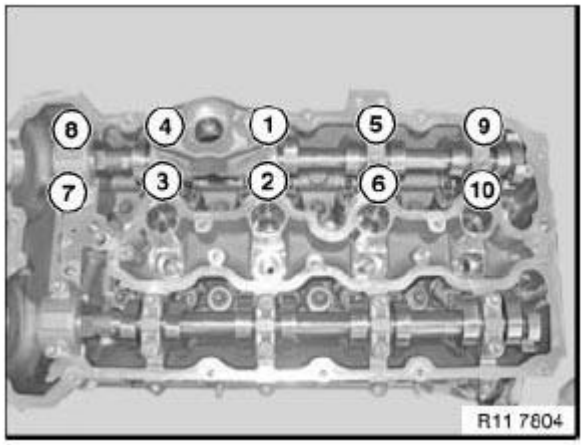

Fig. 234: Identifying Camshaft Bearings Bolts Tightening Sequence
Courtesy of BMW OF NORTH AMERICA, INC.

IMPORTANT: Used rocker arms (1) may only be reused in the same position.

NOTE: Rocker arms (1) are freely accessible after exhaust camshaft has been removed.

Do "not" remove rocker arms (1) on exhaust side.

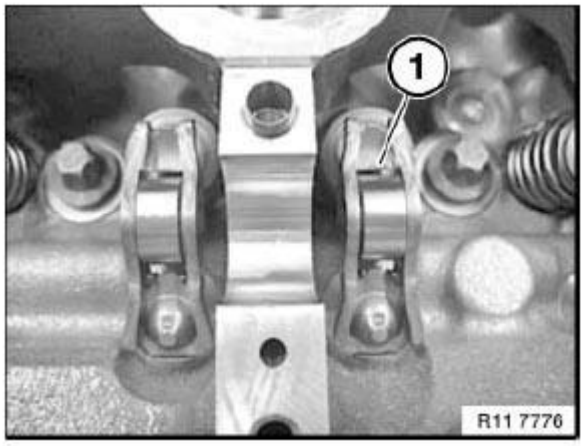

Fig. 235: Identifying Rocker Arms
Courtesy of BMW OF NORTH AMERICA, INC.

IMPORTANT: Plain compression rings (1) can easily break.

If necessary, replace plain compression rings (1).

Press compression ring (1) on one side into groove, pull up on other side and remove catch.

Carefully pull compression ring (1) apart and remove towards front.

Ends of compression rings (1) point upwards.

Make sure compression rings (1) are engaged at ends.

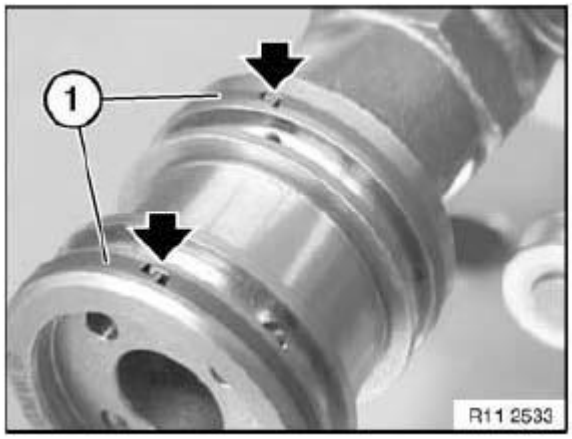

Fig. 236: Pressing Compression Ring On Side Into Groove
Courtesy of BMW OF NORTH AMERICA, INC.

NOTE: Exhaust camshaft of cylinder bank 5 to 8 is marked with "A 5-8".

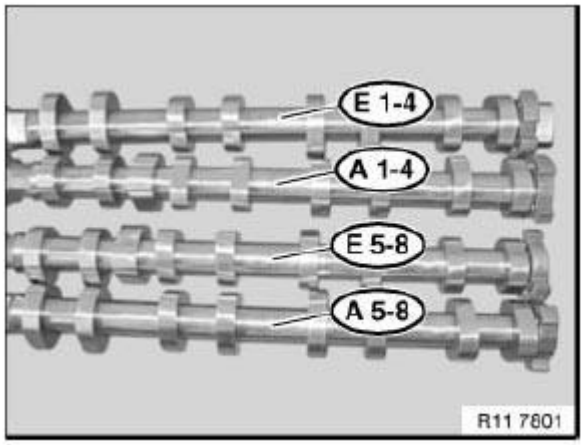

Fig. 237: Identifying Camshaft Mark
Courtesy of BMW OF NORTH AMERICA, INC.

IMPORTANT: Rocker arms (1) slip slightly when exhaust camshaft is fitted.

Make sure rocker arms (1) are secured as illustrated on hydraulic valve clearance compensating elements and on valves.

Align all rocker arms (1) straight.

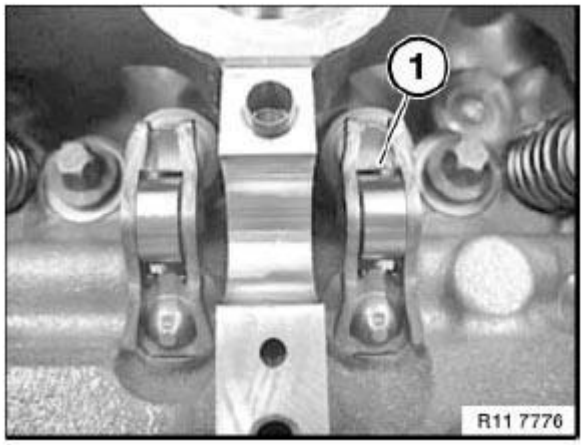

Fig. 238: Identifying Rocker Arms
Courtesy of BMW OF NORTH AMERICA, INC.

Coat all bearing points with engine oil.

Install exhaust camshaft (1).

Insert exhaust camshaft (1) so that cams point to side at cylinder 5 as shown in picture.

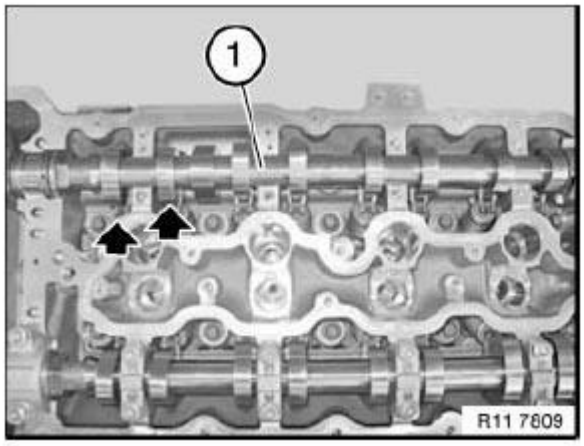

Fig. 239: Identifying Exhaust Camshaft
Courtesy of BMW OF NORTH AMERICA, INC.

IMPORTANT: Do not mix up the bearing caps of cylinders 1 to 4 and 5 to 8.

All bearing caps are coded and can only be installed in one position.

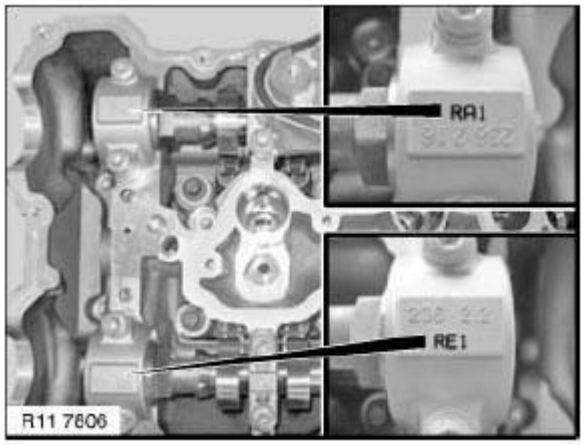

Fig. 240: Identifying Bearing Caps Mark
Courtesy of BMW OF NORTH AMERICA, INC.

All bearing caps are marked:

L = cylinders 1-4

R= cylinders 5-8

E = intake side.

A = exhaust side.

1 = designation from 1 to 5

Insert all bolts.

Tighten down bolts in sequence (1 to 10) in 1/2 turns.

Tightening torque: 11 31 6AZ, see **11 31 CAMSHAFT**

Tightening torque: 11 31 7AZ.**11 31 CAMSHAFT**

Insert tappets for high-pressure pump.

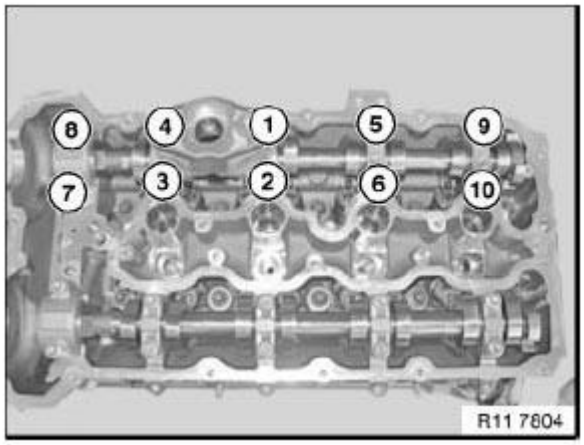

Fig. 241: Identifying Camshaft Bearings Bolts Tightening Sequence
Courtesy of BMW OF NORTH AMERICA, INC.

Install **inlet adjustment unit** .

Adjust **valve timing** . See **left side** and **camshaft timing on right side**

Assemble engine.

11 31 038 REMOVING AND INSTALLING/REPLACING RIGHT EXHAUST CAMSHAFT (N63)

Special tools required:

- **11 4 480**

See **ENGINE - SPECIAL TOOLS (N54, N63)** .

Cylinders 1-4

IMPORTANT: Risk of damage!

The exhaust camshaft must first be rotated in such a way that the camshaft is free from tension when the bearing caps are released.

Necessary preliminary tasks:

- Remove right **high-pressure pump** . See **13 51 065 REMOVING AND INSTALLING/REPLACING LEFT HIGH-PRESSURE FUEL PUMP (N63)** or **13 51 070 REMOVING AND INSTALLING/REPLACING RIGHT HIGH-PRESSURE FUEL PUMP (N63)** .
- Remove right **cylinder head cover**
- Remove right **exhaust adjustment unit**

IMPORTANT: No cam on the exhaust camshaft is permitted to press directly onto a roller

cam follower.

With cylinder no. 1 at 150° before firing TDC there is no piston in the TDC position.

Rotate exhaust camshaft (2) at dihedron with a fork wrench into a suitable position.

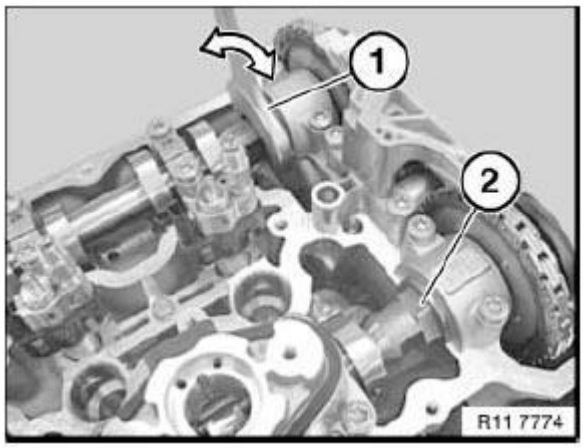

Fig. 242: Rotating Exhaust Camshaft
Courtesy of BMW OF NORTH AMERICA, INC.

NOTE: Inlet camshaft of cylinder bank 5-8 is marked with "E 5-8".

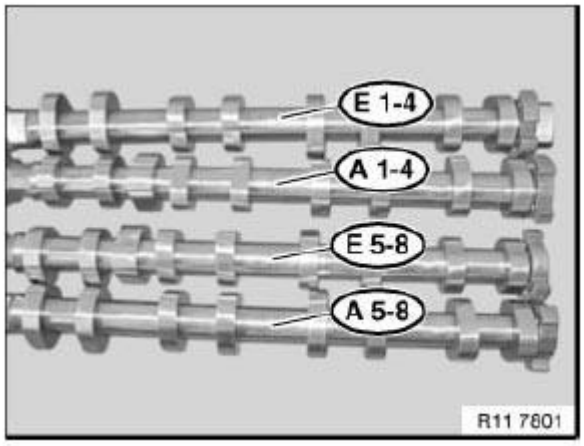

Fig. 243: Identifying Camshaft Mark
Courtesy of BMW OF NORTH AMERICA, INC.

Release bolts of camshaft bearings in sequence (10 to 1) in 1/2 turns.

Set all bearing caps down in special tool 11 4 480 in a tidy and orderly fashion.

Remove roller tappet from bearing cap (2 and 3) of high-pressure pump and set down in special tool 11 4 480.

Remove left exhaust camshaft and set down in special tool 11 4 480.

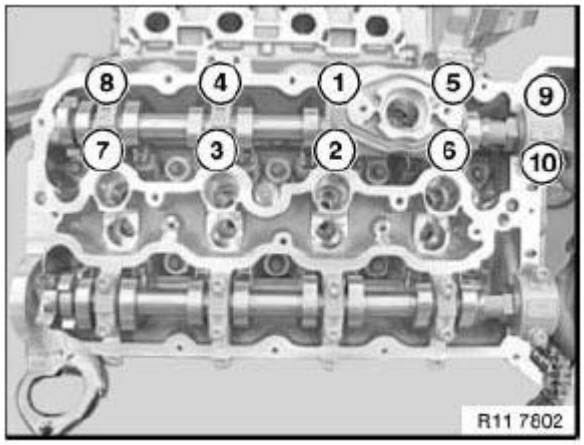

Fig. 244: Identifying Camshaft Bearings Bolts Tightening Sequence
Courtesy of BMW OF NORTH AMERICA, INC.

IMPORTANT: Rocker arms (1) of can slip slightly when inlet camshaft is fitted.

Make sure rocker arms (1) are secured as illustrated on hydraulic valve clearance compensating elements and on valves.

Align all rocker arms (1) straight.

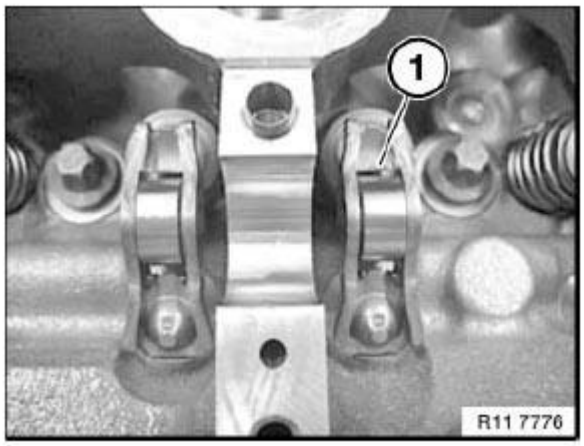

Fig. 245: Identifying Rocker Arms
Courtesy of BMW OF NORTH AMERICA, INC.

IMPORTANT: Plain compression rings (1) can easily break.

If necessary, replace plain compression rings (1).

Press compression ring (1) on one side into groove, pull up on other side and remove catch.

Carefully pull compression ring (1) apart and remove towards front.

Ends of compression rings (1) point upwards.

Make sure compression rings (1) are engaged at ends.

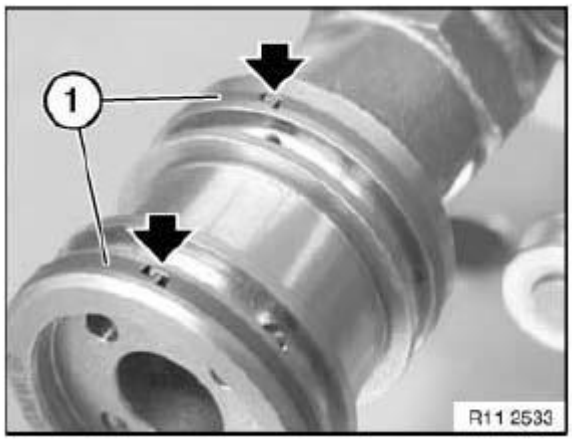

Fig. 246: Pressing Compression Ring On Side Into Groove
Courtesy of BMW OF NORTH AMERICA, INC.

Coat all bearing points with engine oil.

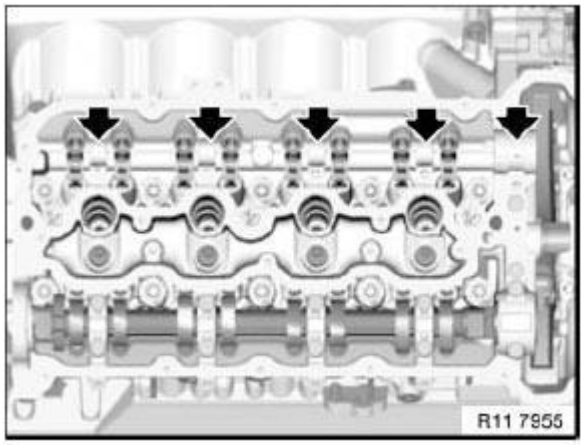

Fig. 247: Locating Bearing Points
Courtesy of BMW OF NORTH AMERICA, INC.

Install exhaust camshaft (1).

Turn exhaust camshaft (1) until cams point to side at cylinder no. 1 as shown in graphic.

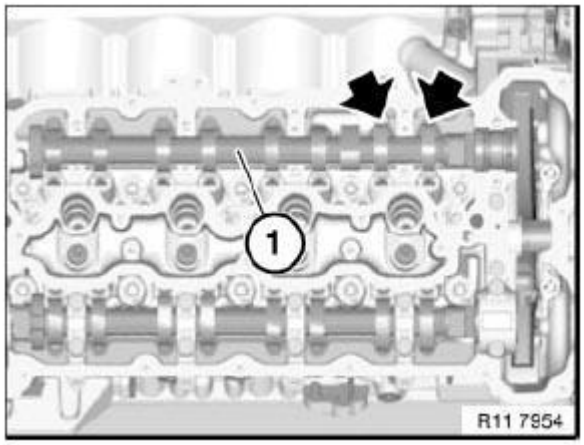

Fig. 248: Identifying Exhaust Camshaft
Courtesy of BMW OF NORTH AMERICA, INC.

IMPORTANT: Do not mix up the bearing caps of cylinders 1-4 and 5-8.

All bearing caps are coded and can only be installed in one position.

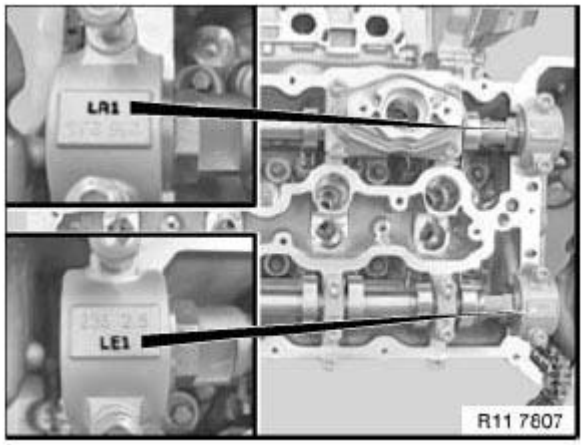

Fig. 249: Identifying Bearing Caps Mark
Courtesy of BMW OF NORTH AMERICA, INC.

All bearing caps are marked with letters and numbers:

L = cylinder bank 1-4

R= cylinder bank 5-8

E = inlet side

A = exhaust side

1 = Marking, bearing point, from 1 to 5

Insert all bolts.

Tighten down bolts in sequence (1 to 10) in 1/2 turns.

Tightening torque 11 31 6AZ, see **11 31 CAMSHAFT**

Tightening torque 11 31 7AZ, see **11 31 CAMSHAFT**

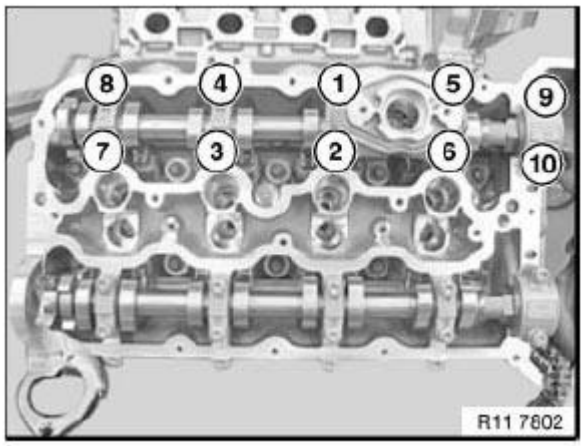

Fig. 250: Identifying Camshaft Bearings Bolts Tightening Sequence
Courtesy of BMW OF NORTH AMERICA, INC.

Install right **inlet and exhaust adjustment units** .

Adjust **valve timing** . See **left side** and **right side**.

Assemble engine.

11 31 052 REPLACING BOTH TIMING CHAINS (N63)

Special tools required:

- **00 2 300**
- **11 2 001**
- **11 2 002**
- **11 2 003**
- **11 2 007**

See **MAINTENANCE AND GENERAL INFORMATION - SPECIAL TOOLS** .

See **ENGINE - SPECIAL TOOLS (N54, N63)** .

WARNING: Burning hazard! Wear gloves.

Necessary preliminary tasks:

- Remove lower **timing case cover**
- To facilitate removal and installation of timing chains, turn engine over with special tool 00 2 300.

Timing drive, cylinders 1 to 4 .

Remove guide rail (5) from bearing bolt.

Remove timing chain (3) with tensioning rail (4) from bearing bolt.

Timing drive, cylinders 5 to 8 .

Remove guide rail (1) from bearing bolt.

Remove timing chain (2) with tensioning rail (6) from bearing bolt.

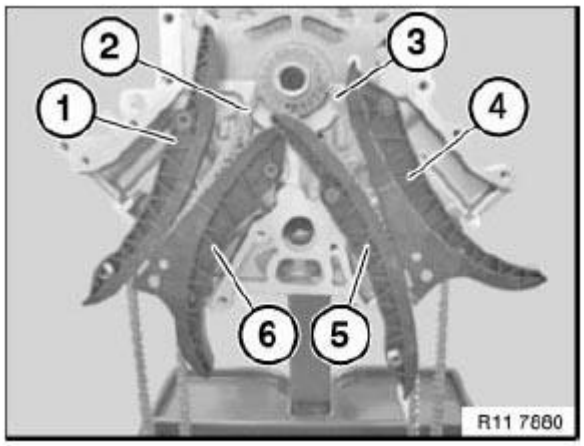

Fig. 251: Identifying Guide Rail, Timing Chain And Tensioning Rail
Courtesy of BMW OF NORTH AMERICA, INC.

Timing drive, cylinders 1 to 4 .

Release bearing bolts (2) with a suitable tool.

Tightening torque: 11 31 1AZ.**11 31 CAMSHAFT**

Timing drive, cylinders 5 to 8 .

Release bearing bolts (1).

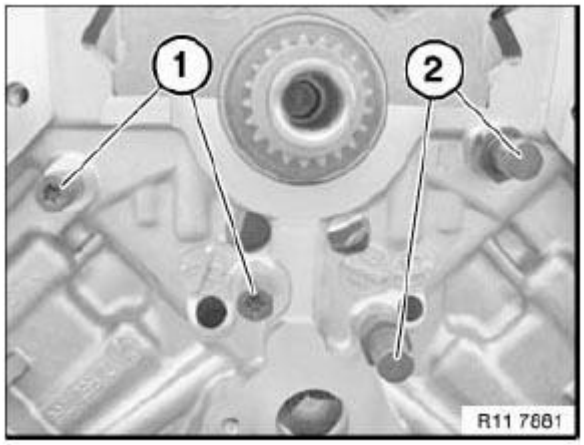

Fig. 252: Identifying Bearing Bolts
Courtesy of BMW OF NORTH AMERICA, INC.

Attach special tools 11 2 001 and 11 2 002 to crankshaft.

Insert special tool 11 2 007 and remove sprocket wheel with special tool 11 2 003.

Installation:

Check sprocket wheels for wear, replace if necessary.

Heat sprocket wheel to **60°C** .

WARNING: **Burning hazard! Wear gloves.**

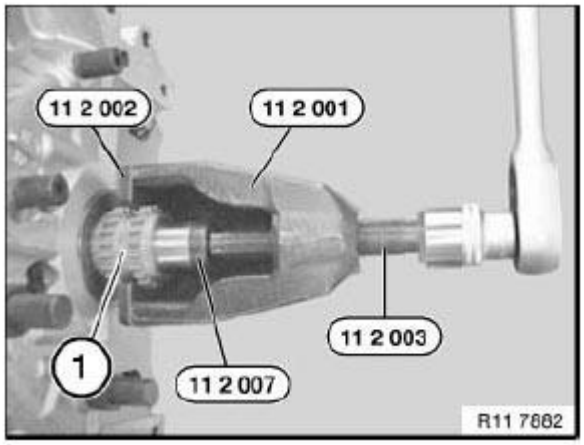

Fig. 253: Removing Sprocket Wheel With Special Tool
Courtesy of BMW OF NORTH AMERICA, INC.

Installation:

Make sure Woodruff key (1) is installed in correct position in crankshaft (2).

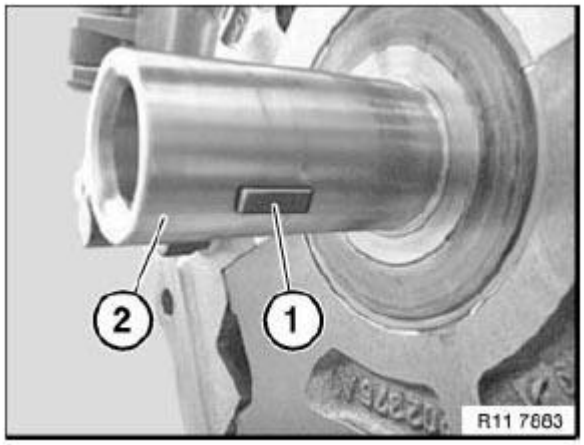

Fig. 254: Identifying Woodruff Key And Crankshaft
Courtesy of BMW OF NORTH AMERICA, INC.

Installation:

Maintain tension of timing chains when installing timing case cover.

Observe sparking protection on timing case cover.

Make sure timing chain (1) is correctly installed when placing it in guide rail (3).

Assemble engine.

11 31 070 CHECKING CAMSHAFT TIMING ON LEFT SIDE (N63)

Special tools required:

- **00 9 250**
- **11 8 570**
- **11 9 190**
- **11 9 893**
- **11 9 900**

See **MAINTENANCE AND GENERAL INFORMATION - SPECIAL TOOLS** .

See **ENGINE - SPECIAL TOOLS (N54, N63)** .

IMPORTANT: The timing can only be checked with special tool 11 9 900.

The timing may be misinterpreted if it is checked without special tool 11 9 900.

Cylinders 5 - 8

Necessary preliminary tasks:

- Remove left **cylinder head cover**
- Remove **fan cowl** with electric fan. See **17 11 035 REMOVING AND INSTALLING/REPLACING FAN COWL WITH ELECTRIC FAN (N63)** .
- Remove **belt pulley** for A/C system. See.
- Remove left **chain tensioner**

Mount special tool 11 9 900 at position of chain tensioner.

Preload hexagon socket screw with special tool 00 9 25 to **0.6 Nm** .

NOTE: Graphic corresponds to cylinders 1-4.

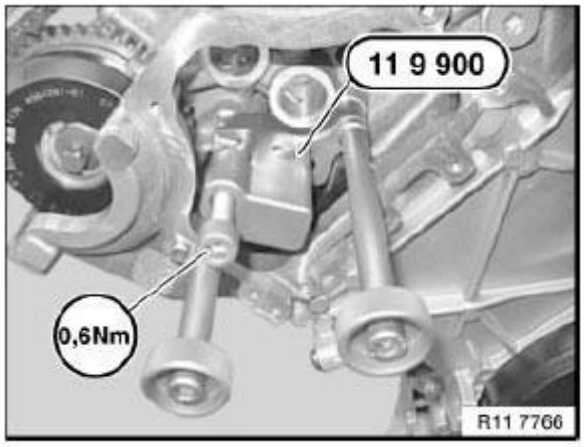

Fig. 255: Identifying Hexagon Socket Screw With Special Tool
Courtesy of BMW OF NORTH AMERICA, INC.

NOTE: Marking (MP = Mounting Position) is important for installing special tool 11 8 570.

MP = 150° before cylinder no. 1 firing TDC position .

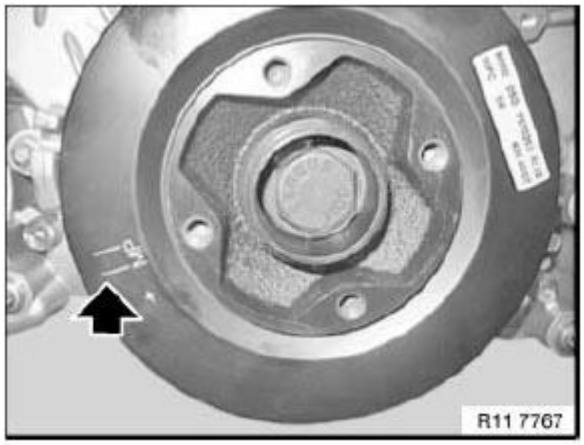

Fig. 256: Identifying MP Mark On Vibration Damper
Courtesy of BMW OF NORTH AMERICA, INC.

Position special tool 11 8 570 with dihedron on vibration damper in such a way that it can be secured with bolt (1) at the MP marking.

NOTE: Setting groove on crankcase, see arrow.

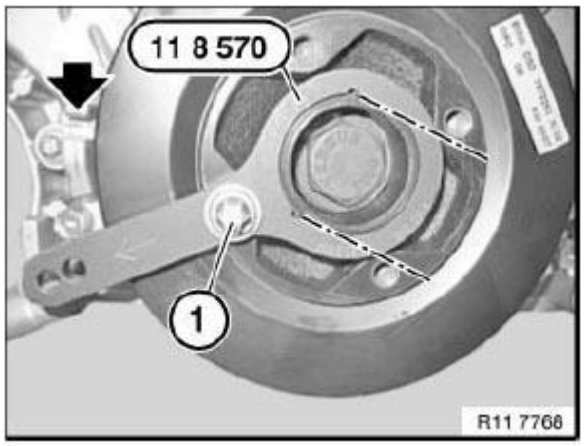

Fig. 257: Positioning Special Tool On Vibration Damper
Courtesy of BMW OF NORTH AMERICA, INC.

Crank engine at central bolt.

Secure vibration damper with special tools 11 8 570 and 11 9 190 at **150° before cylinder no. 1 firing TDC position** .

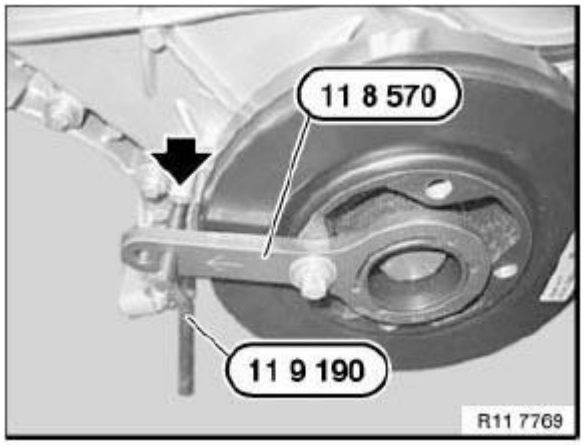

Fig. 258: Identifying Special Tools Position (11 8 570 And 11 9 190)
Courtesy of BMW OF NORTH AMERICA, INC.

With cylinder no. 1 at 150° before firing TDC position, cams on exhaust camshaft (A) at cylinder no. 5 point at an angle to the left.

Cams on inlet camshaft (E) point at an angle downwards.

NOTE: For purposes of clarity, the graphic shows the inlet and exhaust adjustment units removed.

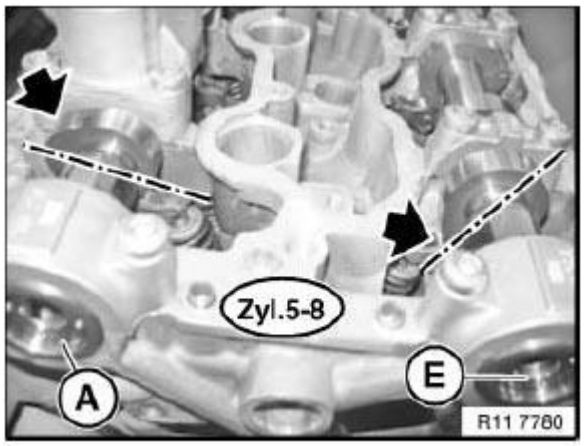

Fig. 259: Identifying Inlet And Exhaust Camshaft
Courtesy of BMW OF NORTH AMERICA, INC.

IMPORTANT: When the engine is shut down, the inlet and exhaust adjustment units are normally locked in their initial position.

The situation may arise in some individual cases where this initial position is not reached and the camshaft can continue to be rotated in the adjustment range of the adjustment unit.

In order to avoid incorrect timing adjustment, it is essential to check the locking of the adjustment unit and if necessary perform locking by rotating the camshafts.

Checking locking of inlet and exhaust adjustment units in initial position:

Gripping hexagon head (2) of camshafts with a fork wrench (1), carefully try to rotate camshafts against direction of rotation.

The inlet and exhaust adjustment units are locked in the initial position when the camshafts are non-positively connected to the adjustment units.

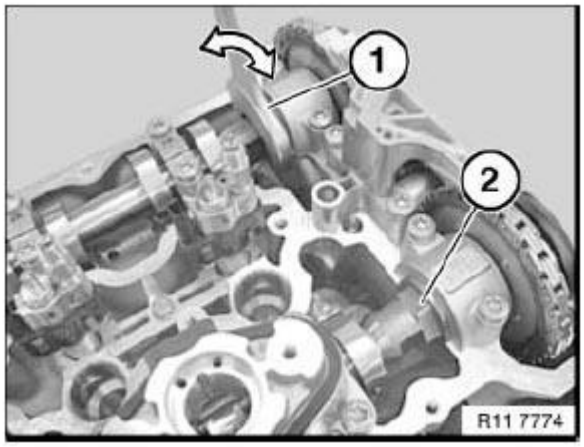

Fig. 260: Grip Hexagon Head With Fork Wrench
Courtesy of BMW OF NORTH AMERICA, INC.

IMPORTANT: If the inlet or exhaust adjustment unit of the camshafts "cannot" be locked as described, the adjustment unit is faulty and must be replaced.

Fit special tool 11 9 893 on exhaust camshaft and check timing adjustment.

NOTE: Timing is correctly adjusted when special tool 11 9 893 rests without a gap on cylinder head.

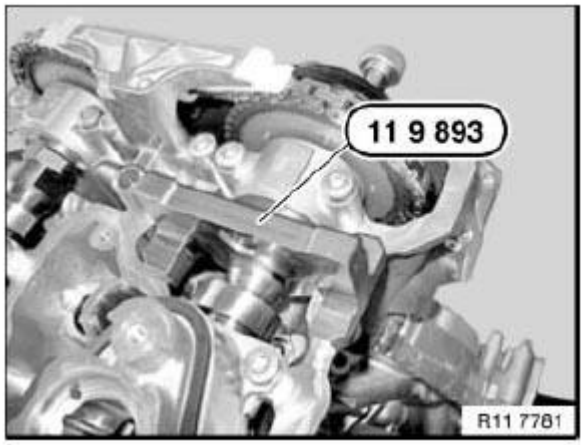

Fig. 261: Identifying Special Tool 11 9 893 On Exhaust Camshaft
Courtesy of BMW OF NORTH AMERICA, INC.

Fit special tool 11 9 893 on inlet camshaft and check timing adjustment.

NOTE: **Timing is correctly adjusted when special tool 11 9 893 rests without a gap on cylinder head.**

If necessary, adjust camshaft timing on left side.

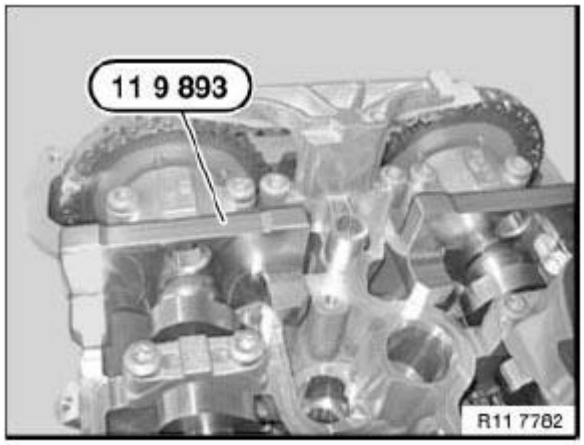

Fig. 262: Identifying Special Tool On Cylinder Head
Courtesy of BMW OF NORTH AMERICA, INC.

Remove all special tools.

Assemble engine.

11 31 071 CHECKING CAMSHAFT TIMING ON RIGHT SIDE (N63)

Special tools required:

- **00 9 250**
- **11 8 570**
- **11 9 190**
- **11 9 893**
- **11 9 900**

See **MAINTENANCE AND GENERAL INFORMATION - SPECIAL TOOLS** .

See **ENGINE - SPECIAL TOOLS (N54, N63)** .

IMPORTANT: The timing can only be checked with special tool 11 9 900.

The timing may be misinterpreted if it is checked without special tool 11 9 900.

Cylinders 1 - 4

Necessary preliminary tasks:

- Remove right **cylinder head cover.**
- Remove **fan cowl** with electric fan. See **17 11 035 REMOVING AND INSTALLING/REPLACING FAN COWL WITH ELECTRIC FAN (N63)** .
- Remove **belt pulley** for A/C system.
- Remove right **chain tensioner.**

Mount special tool 11 9 900 at position of chain tensioner.

Preload hexagon socket screw with special tool 00 9 250 to **0.6 Nm** .

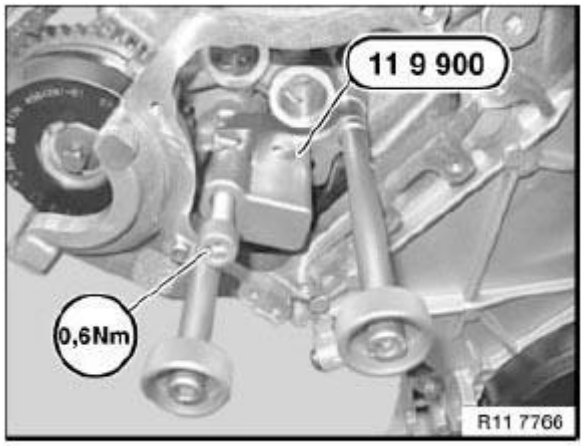

Fig. 263: Identifying Hexagon Socket Screw With Special Tool
Courtesy of BMW OF NORTH AMERICA, INC.

NOTE: Marking (MP = Mounting Position) is important for installing special tool 11 8 570.

MP = 150° before cylinder no. 1 firing TDC position .

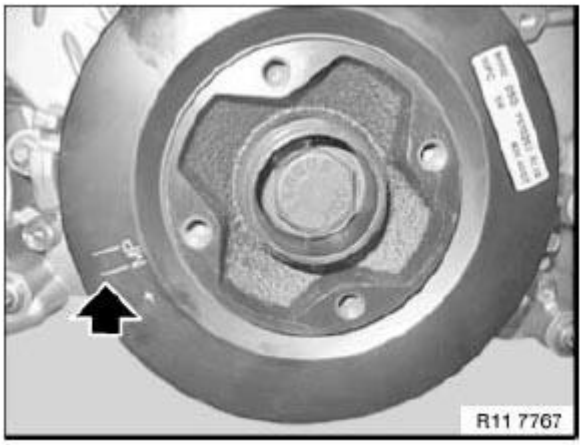

Fig. 264: Identifying MP Mark On Vibration Damper
Courtesy of BMW OF NORTH AMERICA, INC.

Position special tool 11 8 570 with dihedron on vibration damper in such a way that it can be secured with bolt (1) at the MP marking.

NOTE: Setting groove on crankcase, see arrow.

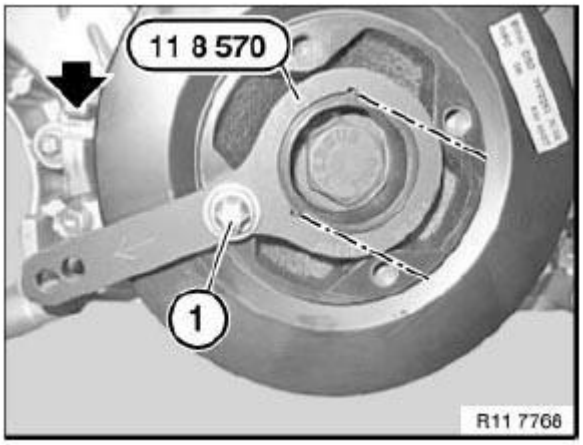

Fig. 265: Positioning Special Tool On Vibration Damper
Courtesy of BMW OF NORTH AMERICA, INC.

Crank engine at central bolt.

Secure vibration damper with special tools 11 8 570 and 11 9 190x at **150° before cylinder no. 1 firing TDC position** .

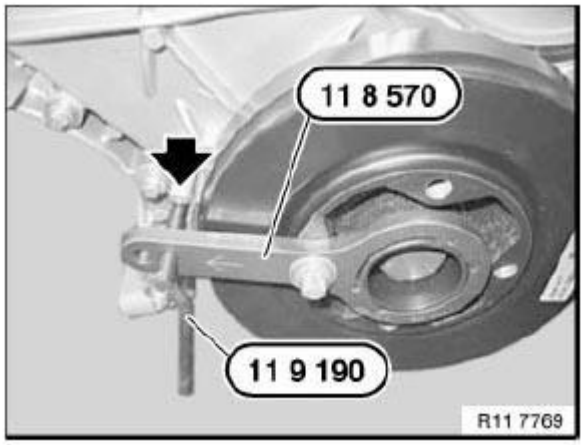

Fig. 266: Identifying Special Tools Position (11 8 570 And 11 9 190)
Courtesy of BMW OF NORTH AMERICA, INC.

With cylinder no. 1 at 150° before firing TDC position, cams on exhaust camshaft (A) at cylinder no. 1 point at an angle upwards.

Cams on inlet camshaft (E) point at an angle downwards.

NOTE: For purposes of clarity, the graphic shows the inlet and exhaust adjustment units removed.

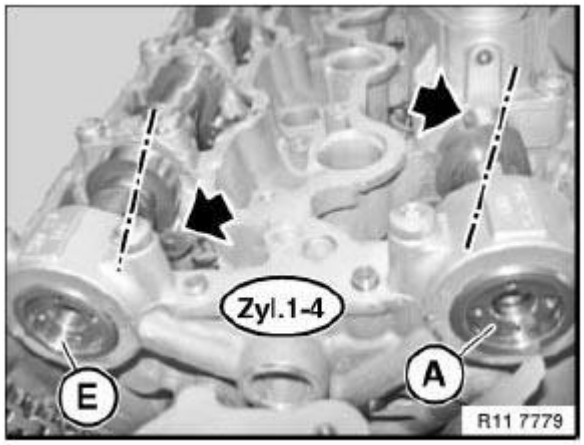

Fig. 267: Identifying Inlet And Exhaust Camshaft
Courtesy of BMW OF NORTH AMERICA, INC.

IMPORTANT: When the engine is shut down, the inlet and exhaust adjustment unit is normally locked in its initial position.

The situation may arise in some individual cases where this initial position is not reached and the camshaft can continue to be rotated in the adjustment range of the adjustment unit.

In order to avoid incorrect timing adjustment, it is essential to check the locking of the adjustment unit and if necessary perform locking by rotating the camshafts.

Checking locking of inlet and exhaust adjustment units in initial position:

Gripping hexagon head (2) of camshafts with a fork wrench (1), carefully try to rotate camshafts against direction of rotation.

The inlet and exhaust adjustment units are locked in the initial position when the camshafts are non-positively connected to the adjustment units.

NOTE: Graphic corresponds to cylinders 5-8.

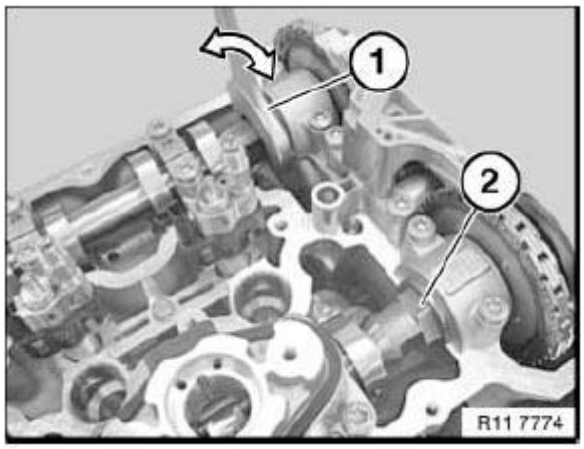

Fig. 268: Identifying Hexagon Head With Fork Wrench
Courtesy of BMW OF NORTH AMERICA, INC.

IMPORTANT: If the inlet or exhaust adjustment unit of the camshafts "cannot" be locked as described, the adjustment unit is faulty and must be replaced.

Fit special tool 11 9 893 on exhaust camshaft and check timing adjustment.

NOTE: Timing is correctly adjusted when special tool 11 9 893 rests without a gap on cylinder head.

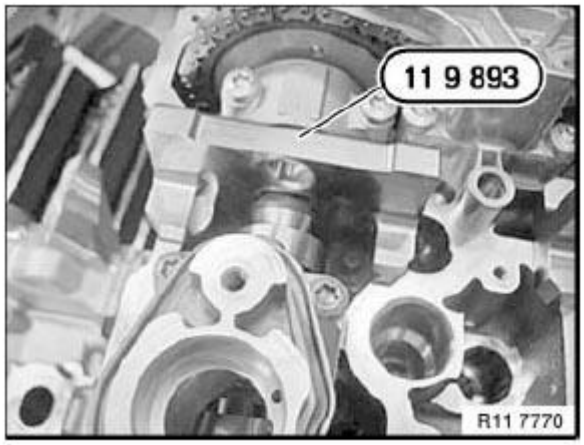

Fig. 269: Identifying Special Tool 11 9 893 On Exhaust Camshaft
Courtesy of BMW OF NORTH AMERICA, INC.

Fit special tool 11 9 893 on inlet camshaft and check timing adjustment.

NOTE: Timing is correctly adjusted when special tool 11 9 893 rests without a gap on cylinder head.

If necessary, adjust camshaft timing on right side.

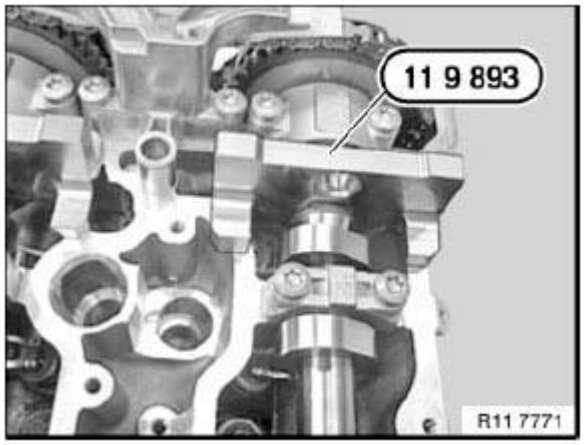

Fig. 270: Identifying Special Tool 11 9 893 On Inlet Camshaft
Courtesy of BMW OF NORTH AMERICA, INC.

Remove all special tools.

Assemble engine.

11 31 094 REMOVING HYDRAULIC CHAIN TENSIONER FOR TIMING CHAINS ON LEFT SIDE (N63)

Special tools required:

- **11 9 900**

See **ENGINE - SPECIAL TOOLS (N54, N63)** .

WARNING: Chain tensioner is pre-tensioned.

Release lock pin only in installed state.

Danger of injury!

IMPORTANT: Risk of damage!

The engine must not be cranked when the chain tensioner is removed.

The timing chain may jump.

Necessary preliminary tasks:

- Remove **timing case cover** at top left

Crank engine back at central bolt (1) against direction of engine rotation by approx. 90°.

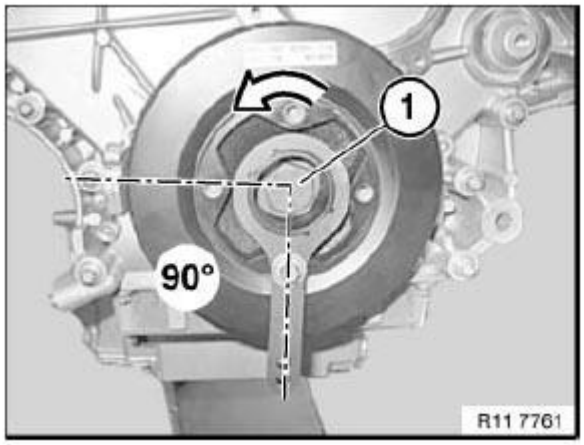

Fig. 271: Cranking Engine Back Central Bolt
Courtesy of BMW OF NORTH AMERICA, INC.

IMPORTANT: The timing chain on the chain tensioner becomes the tight end on cranking back.

Do not crank engine without chain tensioner or special tool 11 9 900.

Piston (1) of chain tensioner must be pressed in against oil pressure in housing (see arrow).

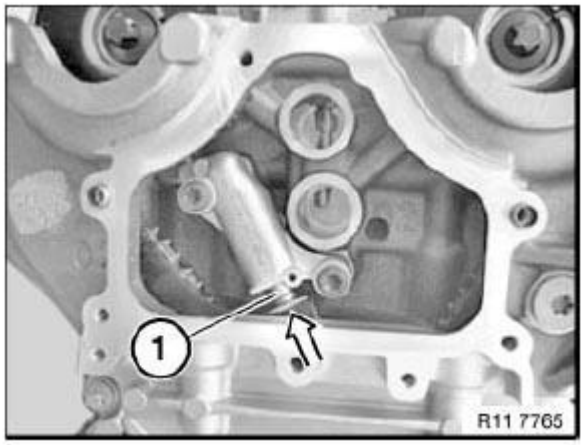

Fig. 272: Pressing Chain Tensioner
Courtesy of BMW OF NORTH AMERICA, INC.

If the chain tensioner piston is retracted over its full length, a 3.5 mm drill bit or a suitable lock pin must be positioned.

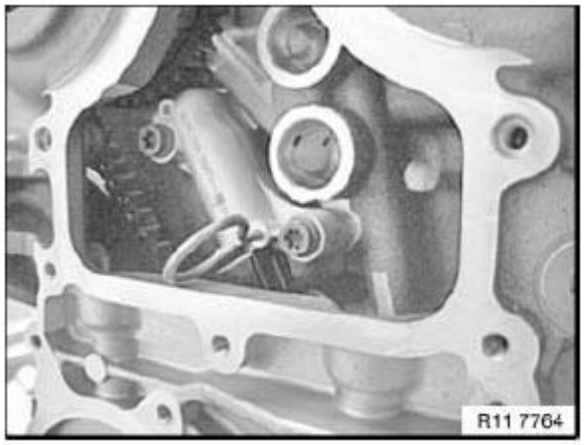

Fig. 273: Positioning Chain Tensioner Lock Pin
Courtesy of BMW OF NORTH AMERICA, INC.

Release bolts (1).

Tightening torque 11 31 5AZ, see **11 31 CAMSHAFT**

Remove chain tensioner (2).

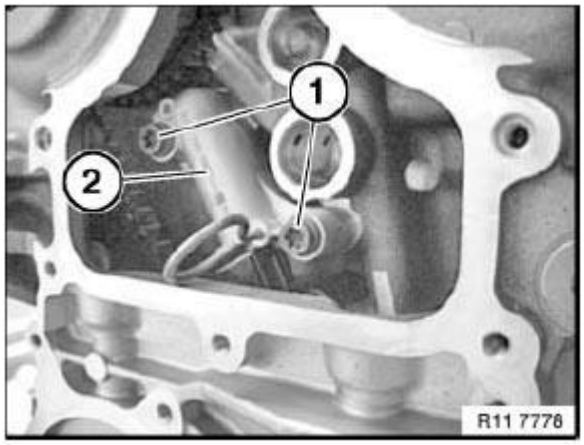

Fig. 274: Identifying Chain Tensioner Bolts
Courtesy of BMW OF NORTH AMERICA, INC.

IMPORTANT: Danger of injury!

Chain tensioner is under high preload force.

Chain tensioner arrangement:

- Piston
- Expansion element
- Spring
- Housing

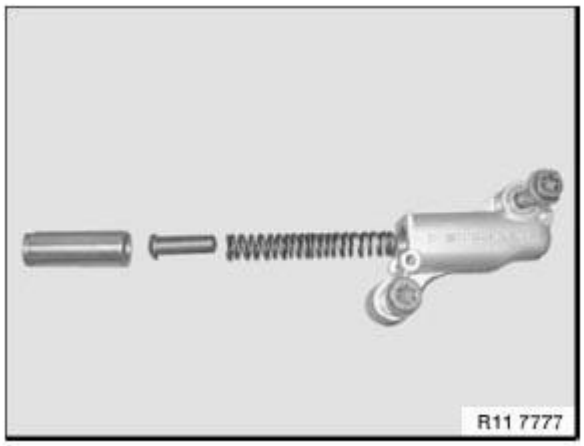

Fig. 275: Identifying Chain Tensioner Piston, Spring And Housing
Courtesy of BMW OF NORTH AMERICA, INC.

Installation:

Replace all gaskets and sealing rings .

Assemble engine.

11 31 095 REMOVING HYDRAULIC CHAIN TENSIONER FOR TIMING CHAINS ON RIGHT SIDE (N63)

Special tools required:

- **11 9 900**

See **ENGINE - SPECIAL TOOLS (N54, N63)** .

WARNING: Chain tensioner is pre-tensioned.

Release lock pin only in installed state.

Danger of injury!

IMPORTANT: Risk of damage!

The engine must not be cranked when the chain tensioner is removed.

The timing chain may jump.

Necessary preliminary tasks:

- Remove **timing case cover** at top right

Crank engine back at central bolt (1) against direction of engine rotation by approx. 180°.

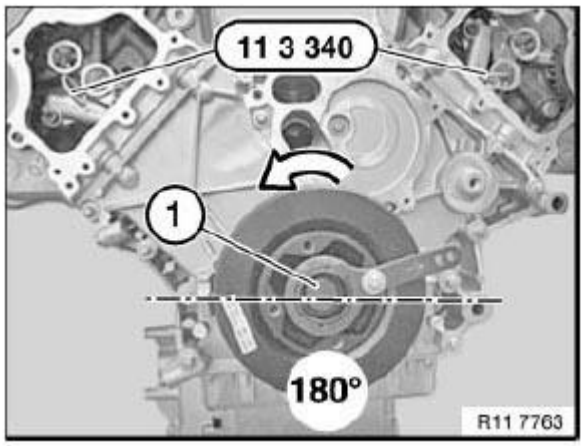

Fig. 276: Cranking Engine Back Central Bolt
Courtesy of BMW OF NORTH AMERICA, INC.

IMPORTANT: The timing chain on the chain tensioner becomes the tight end on cranking

back.

Do not crank engine without chain tensioner or special tool 11 9 900.

Piston (1) of chain tensioner must be pressed in against oil pressure in housing (see arrow).

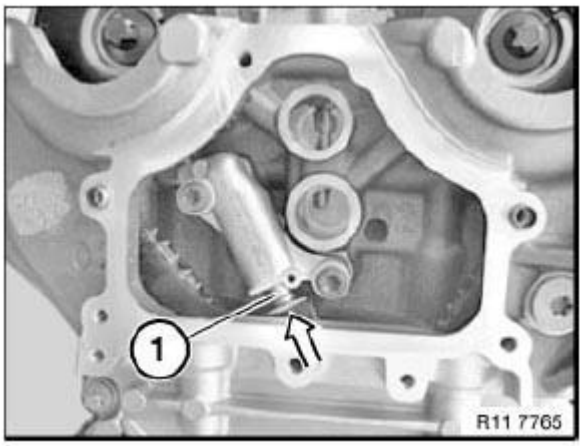

Fig. 277: Pressing Chain Tensioner
Courtesy of BMW OF NORTH AMERICA, INC.

If the chain tensioner piston is retracted over its full length, a 3.5 mm drill bit or a suitable lock pin must be positioned.

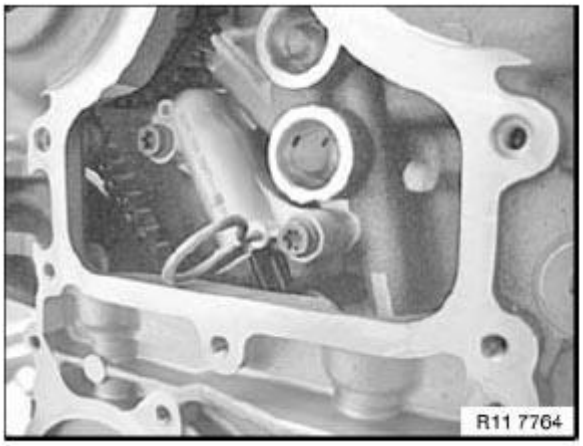

Fig. 278: Positioning Chain Tensioner Lock Pin
Courtesy of BMW OF NORTH AMERICA, INC.

Release bolts (1).

Tightening torque 11 31 5AZ, see **11 31 CAMSHAFT**

Remove chain tensioner (2).

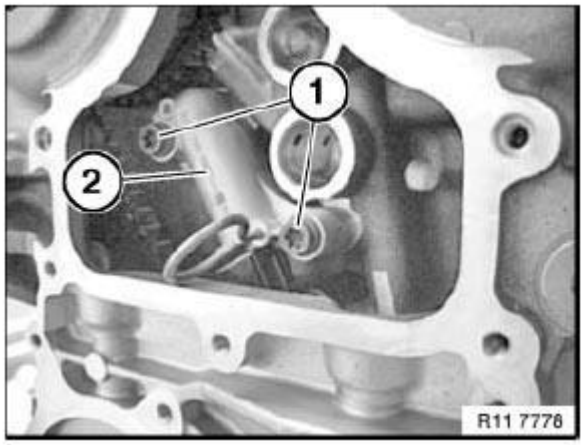

Fig. 279: Identifying Chain Tensioner Bolts
Courtesy of BMW OF NORTH AMERICA, INC.

IMPORTANT: Danger of injury!

Chain tensioner is under high preload force.

Chain tensioner arrangement:

- Piston
- Expansion element
- Spring
- Housing

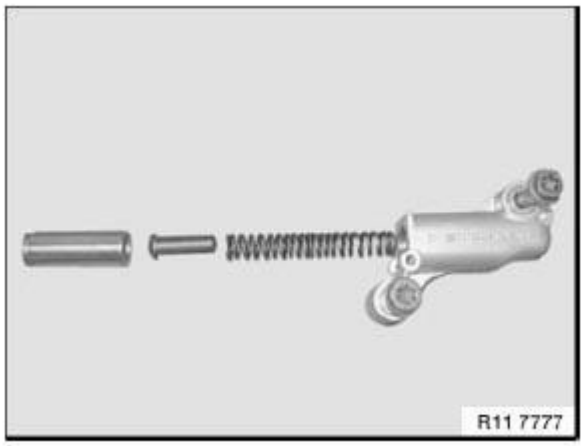

Fig. 280: Identifying Chain Tensioner Piston, Spring And Housing
Courtesy of BMW OF NORTH AMERICA, INC.

Installation:

Replace all gaskets and sealing rings .

Assemble engine.

11 31 573 ADJUSTING CAMSHAFT TIMING ON LEFT SIDE (N63)

Special tools required:

- **00 9 120**
- **11 8 570**
- **11 9 190**
- **11 9 890**
- **11 9 891**
- **11 9 892**
- **11 9 893**
- **11 9 894**

See **MAINTENANCE AND GENERAL INFORMATION - SPECIAL TOOLS** .

See **ENGINE - SPECIAL TOOLS (N54, N63)** .

IMPORTANT: If the bolt head contact faces of the central bolts are not greased, the VANOS gear must be replaced for safety reasons.

Release central bolts on adjustment unit with special tool 11 9 890 only.

Risk of damage to timing drive.

If special tool 11 9 890 cannot be fitted, it is necessary when releasing the central bolt to grip the hexagon head of the respective camshaft.

(cylinder bank 5 to 8)

Necessary preliminary tasks:

- Remove **left timing case cover**
- **Check camshaft timing on left side**

Get special tool kit 11 9 890 ready for securing camshafts.

NOTE: Special tool 11 9 891 Knurled screw.

Special tool 11 9 892 Press-down bar.

Special tool 11 9 893 Gap gauge for inlet and exhaust camshafts.

Special tool 11 9 894 Spacer.

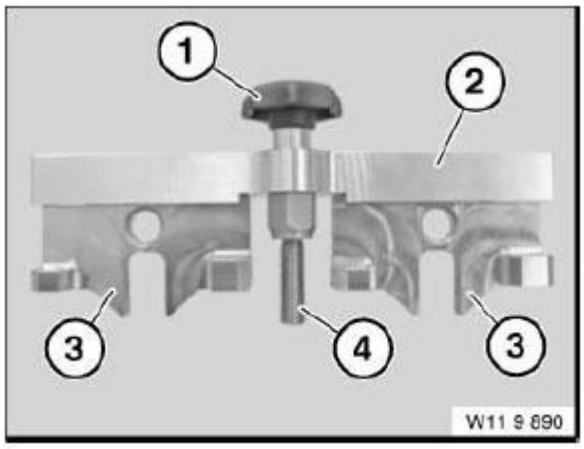

Fig. 281: Identifying Special Tool Kit
Courtesy of BMW OF NORTH AMERICA, INC.

IMPORTANT: If special tool 11 9 890 cannot be fitted, it is necessary when releasing the central bolt to grip the hexagon head of the respective camshaft.

Release central bolts (1 and 2) of inlet and exhaust adjustment units.

Installation:

Replace central bolts after releasing.

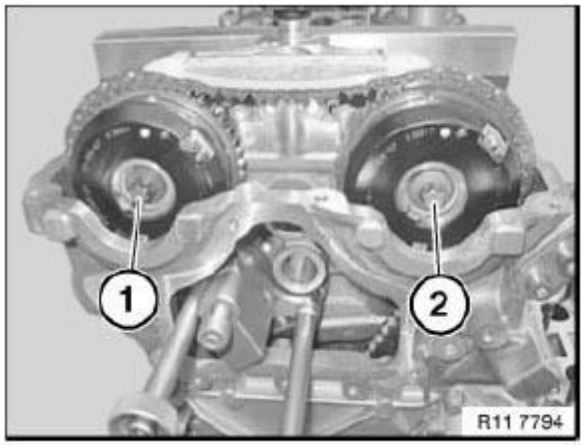

Fig. 282: Identifying Inlet And Exhaust Camshaft Central Bolts
Courtesy of BMW OF NORTH AMERICA, INC.

IMPORTANT: Check whether head of central bolt (1) is greased (see arrow).

If no grease can be seen on the bolt head of central bolt (1), replace the VANOS

gear for safety reasons.

Installation:

Coat contact face of new central bolt (1) with copper paste.

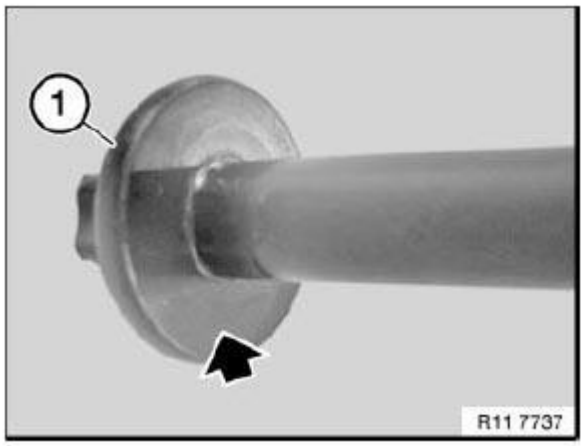

Fig. 283: Identifying Central Bolt
Courtesy of BMW OF NORTH AMERICA, INC.

Position special tool 11 9 893 on inlet and exhaust camshafts.

Special tool 11 9 893 must rest **without a gap** on cylinder head; if necessary, adjust camshaft at hexagon heads.

Screw special tool 11 9 894 into cylinder head.

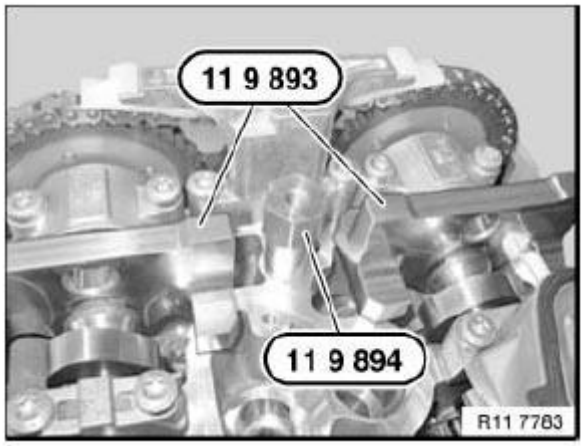

Fig. 284: Positioning Special Tool 11 9 893 On Inlet And Exhaust Camshafts
Courtesy of BMW OF NORTH AMERICA, INC.

Position special tool 11 9 892 on special tool 11 9 893.

Both special tools 11 9 893 are secured with special tool 11 9 891.

NOTE: Tighten down special tool 11 9 891 by hand.

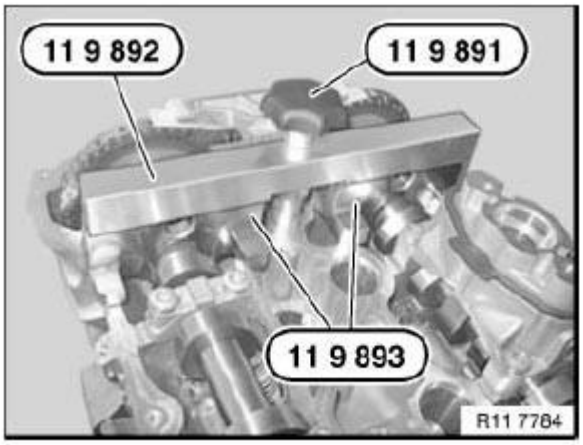

Fig. 285: Identifying Special Tool (11 9 892, 11 9 893 And 11 9 891)
Courtesy of BMW OF NORTH AMERICA, INC.

Secure central bolt (1) of right inlet adjustment unit with special tool 00 9 120.

Secure central bolt (2) of right exhaust adjustment unit with special tool 00 9 120.

Tightening torque: 11 36 1AZ, see **11 36 VARIABLE CAMSHAFT CONTROL**

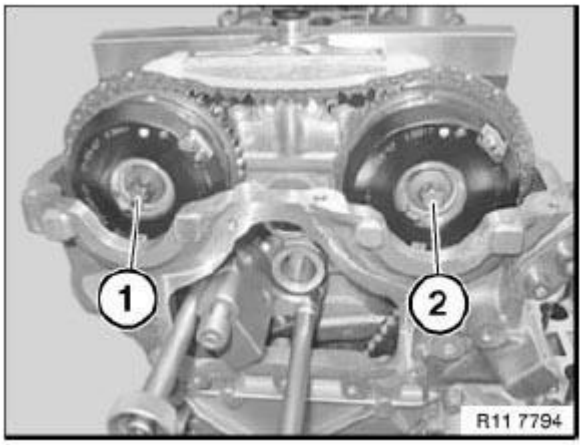

Fig. 286: Identifying Inlet And Exhaust Camshaft Central Bolts
Courtesy of BMW OF NORTH AMERICA, INC.

Remove special tools 11 9 190 and 11 8 570.

Crank engine at central bolt twice in direction of engine rotation until engine returns to **150° before cylinder no. 1 firing TDC position** .

Secure vibration damper with special tool 11 9 190 at **150° before cylinder no. 1 firing TDC position** .

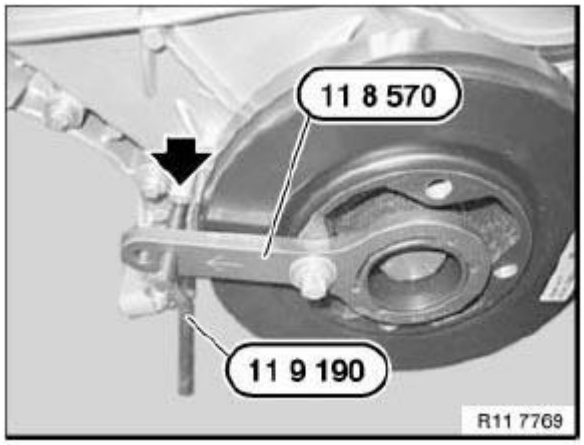

Fig. 287: Identifying Special Tools Position (11 8 570 And 11 9 190)
Courtesy of BMW OF NORTH AMERICA, INC.

Fit special tool 11 9 893 on exhaust camshaft and check timing adjustment.

NOTE: Timing is correctly adjusted when special tool 11 9 893 rests without a gap on cylinder head.

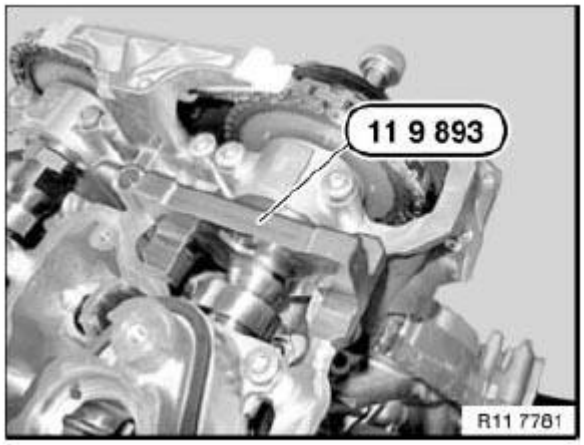

Fig. 288: Identifying Special Tool 11 9 893 On Exhaust Camshaft
Courtesy of BMW OF NORTH AMERICA, INC.

Fit special tool 11 9 893 on inlet camshaft and check timing adjustment.

NOTE: Timing is correctly adjusted when special tool 11 9 893 rests without a gap on cylinder head.

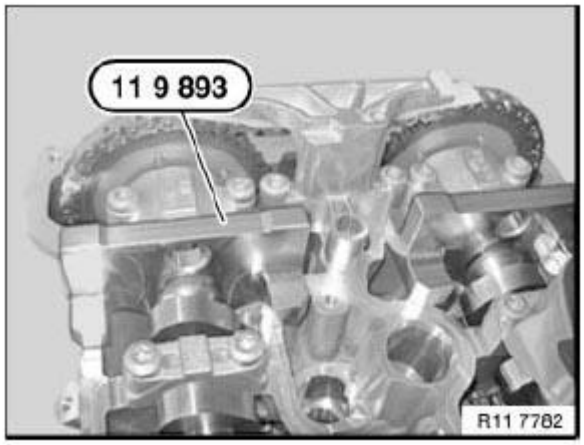

Fig. 289: Identifying Special Tool On Cylinder Head
Courtesy of BMW OF NORTH AMERICA, INC.

Remove all special tools.

Assemble engine.

11 31 574 ADJUSTING CAMSHAFT TIMING ON RIGHT SIDE (N63)

Special tools required:

- **00 9 120**
- **11 8 570**
- **11 9 190**
- **11 9 890**
- **11 9 891**
- **11 9 892**
- **11 9 893**
- **11 9 894**

See **MAINTENANCE AND GENERAL INFORMATION - SPECIAL TOOLS** .

See **ENGINE - SPECIAL TOOLS (N54, N63)** .

IMPORTANT: If the bolt head contact faces of the central bolts are not greased, the VANOS gear must be replaced for safety reasons.

Release central bolts on adjustment unit with special tool 11 9 890 only.

Risk of damage to timing drive.

If special tool 11 9 890 cannot be fitted, it is necessary when releasing the

central bolt to grip the hexagon head of the respective camshaft.

(cylinder bank 1 to 4)

Necessary preliminary tasks:

- Remove **right timing case cover**
- **Check camshaft timing on right side** .

Get special tool kit 11 9 890 ready for securing camshafts.

NOTE: Special tool 11 9 891 Knurled screw.

Special tool 11 9 892 Press-down bar.

Special tool 11 9 893 Gap gauge for inlet and exhaust camshafts.

Special tool 11 9 894 Spacer.

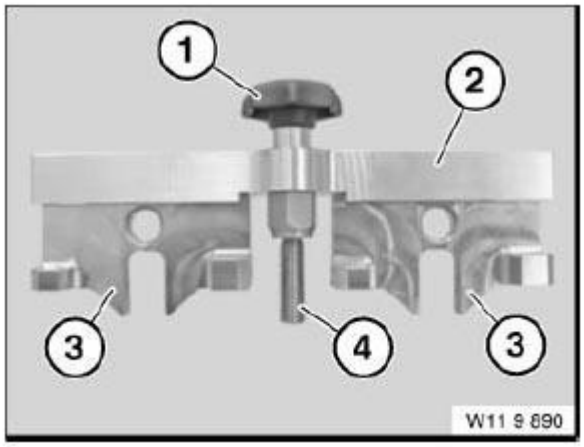

Fig. 290: Identifying Special Tool Kit
Courtesy of BMW OF NORTH AMERICA, INC.

IMPORTANT: If special tool 11 9 890 cannot be fitted, it is necessary when releasing the central bolt to grip the hexagon head of the respective camshaft.

Release central bolts (1 and 2) of inlet and exhaust adjustment units.

Installation:

Replace central bolts after releasing.

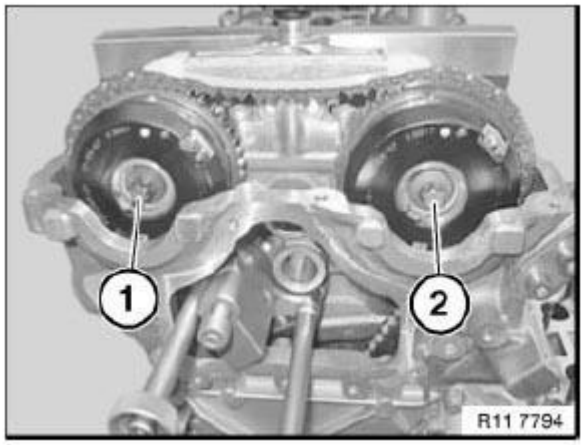

Fig. 291: Identifying Inlet And Exhaust Camshaft Central Bolts
Courtesy of BMW OF NORTH AMERICA, INC.

IMPORTANT: Check whether head of central bolt (1) is greased (see arrow).

If no grease can be seen on the bolt head of central bolt (1), replace the VANOS gear for safety reasons.

Installation:

Coat contact face of new central bolt (1) with copper paste.

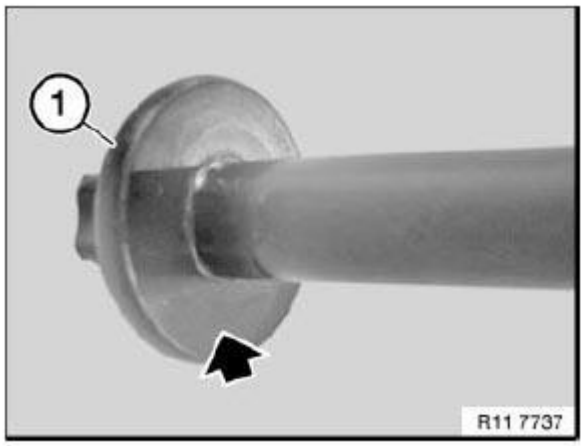

Fig. 292: Identifying Central Bolt
Courtesy of BMW OF NORTH AMERICA, INC.

Position special tool 11 9 893 on inlet and exhaust camshafts.

Special tool 11 9 893 must rest **without a gap** on cylinder head; if necessary, adjust camshaft at hexagon heads.

Screw special tool 11 9 894 into cylinder head.

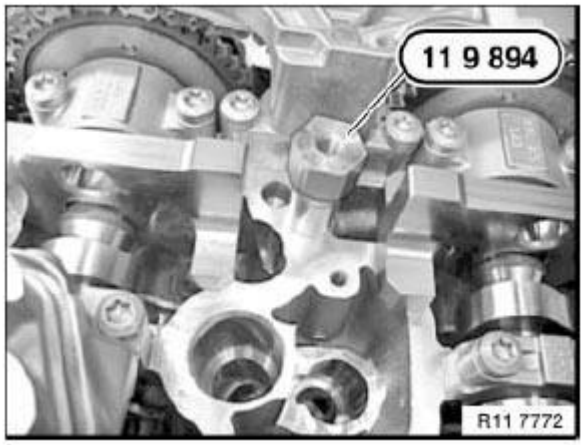

Fig. 293: Identifying Special Tool 11 9 894 On Cylinder Head
Courtesy of BMW OF NORTH AMERICA, INC.

Position special tool 11 9 892 on special tool 11 9 893.

Both special tools 11 9 893 are secured with special tool 11 9 891.

NOTE: Tighten down special tool 11 9 891 by hand.

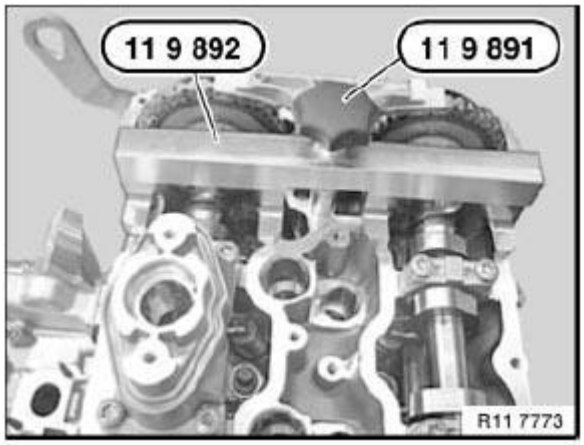

Fig. 294: Identifying Special Tools (11 9 892 And 11 9 891)
Courtesy of BMW OF NORTH AMERICA, INC.

Secure central bolt (1) of right inlet adjustment unit with special tool 00 9 120.

Secure central bolt (2) of right exhaust adjustment unit with special tool 00 9 120.

Tightening torque: 11 36 1AZ, see **11 36 VARIABLE CAMSHAFT CONTROL**

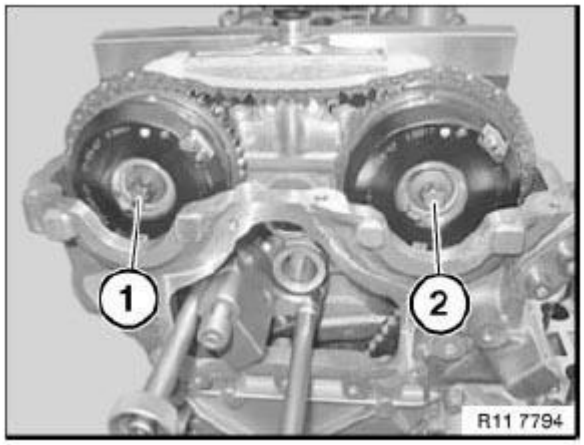

Fig. 295: Identifying Inlet And Exhaust Camshaft Central Bolts
Courtesy of BMW OF NORTH AMERICA, INC.

Remove special tools 11 9 190 and 11 8 570.

Crank engine at central bolt twice in direction of engine rotation until engine returns to **150° before cylinder no. 1 firing TDC position** .

Secure vibration damper with special tool 11 9 190 at **150° before cylinder no. 1 firing TDC position** .

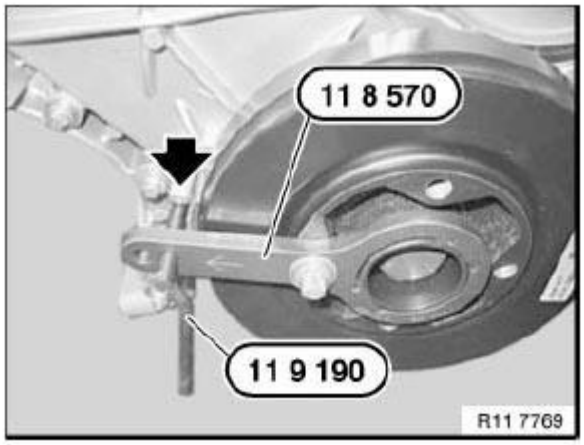

Fig. 296: Identifying Special Tools Position (11 8 570 And 11 9 190)
Courtesy of BMW OF NORTH AMERICA, INC.

Fit special tool 11 9 893 on exhaust camshaft and check timing adjustment.

NOTE: Timing is correctly adjusted when special tool 11 9 893 rests without a gap on cylinder head.

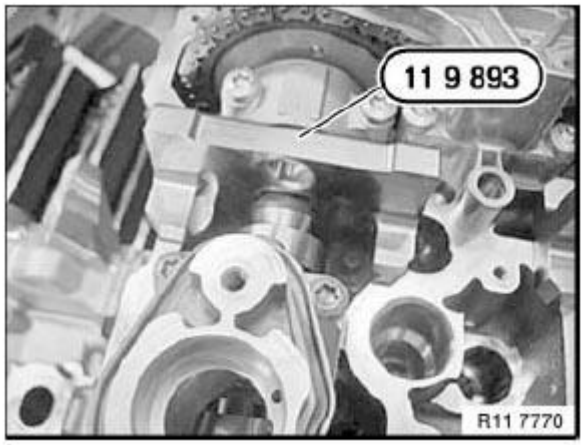

Fig. 297: Identifying Special Tool 11 9 893 On Exhaust Camshaft
Courtesy of BMW OF NORTH AMERICA, INC.

Fit special tool 11 9 893 on inlet camshaft and check timing adjustment.

NOTE: Timing is correctly adjusted when special tool 11 9 893 rests without a gap on cylinder head.

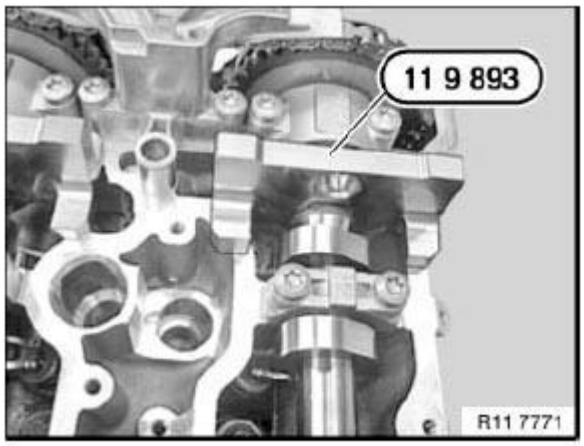

Fig. 298: Identifying Special Tool 11 9 893 On Inlet Camshaft
Courtesy of BMW OF NORTH AMERICA, INC.

Remove all special tools.

Assemble engine.

ROCKER ARM WITH BEARING MOUNT

11 33 052 REMOVING AND INSTALLING/REPLACING ALL ROCKER ARMS ON LEFT SIDE (N63)

Special tools required:

- **11 4 480**

See **ENGINE - SPECIAL TOOLS (N54, N63)** .

(cylinder bank 5 to 8)

Necessary preliminary tasks:

- Remove **left inlet camshaft** .
- Remove left **exhaust camshaft** .

IMPORTANT: Used rocker arms (1) may only be reused in the same position.

Tolerance classes are not required.

Remove rocker arm (1) and set down in neat order in special tool 11 4 480.

Install rocker arm (1).

Align all rocker arms (1) straight.

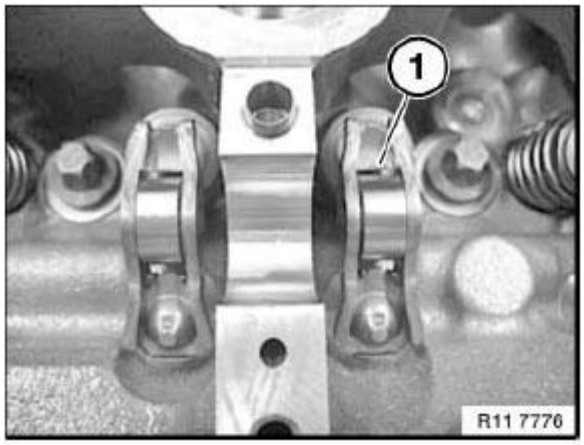

Fig. 299: Identifying Rocker Arms
Courtesy of BMW OF NORTH AMERICA, INC.

Assemble engine.

11 33 054 REMOVING AND INSTALLING/REPLACING ROCKER ARMS ON RIGHT SIDE (N63)

Special tools required:

- **11 4 480**

See **ENGINE - SPECIAL TOOLS (N54, N63)** .

(cylinder bank 1 to 4)

Necessary preliminary tasks:

- Remove **inlet and exhaust adjustment unit** on right side.
- Remove right **inlet camshaft** .
- Remove right **exhaust camshaft** .

IMPORTANT: Used rocker arms (1) may only be reused in the same position.

Tolerance classes are not required.

Remove rocker arm (1) and set down in neat order in special tool 11 4 480.

Install rocker arm (1).

Align all rocker arms (1) straight.

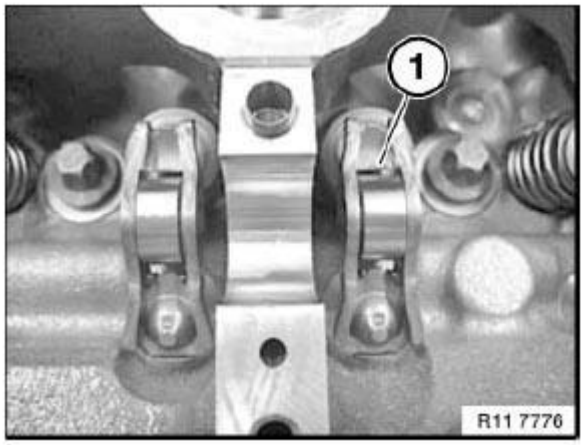

Fig. 300: Identifying Rocker Arms
Courtesy of BMW OF NORTH AMERICA, INC.

Assemble engine.

VALVES WITH SPRINGS

11 34 552 REMOVING AND INSTALLING/REPLACING ALL VALVES (N63)

Special tools required:

- **11 4 480**
- **11 8 840**

- **11 9 006**
- **11 9 008**

See **ENGINE - SPECIAL TOOLS (N54, N63)** .

Necessary preliminary tasks:

- Remove **left cylinder head** .
- Remove **right cylinder head** .
- Remove **camshafts** .

Mount cylinder head (1) on special tool 11 9 000.

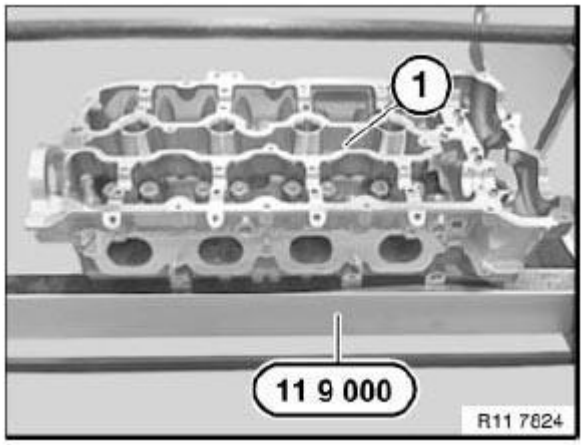

Fig. 301: Identifying Cylinder Head On Special Tool
Courtesy of BMW OF NORTH AMERICA, INC.

Prepare special tool 11 9 008 on special tool 11 9 006.

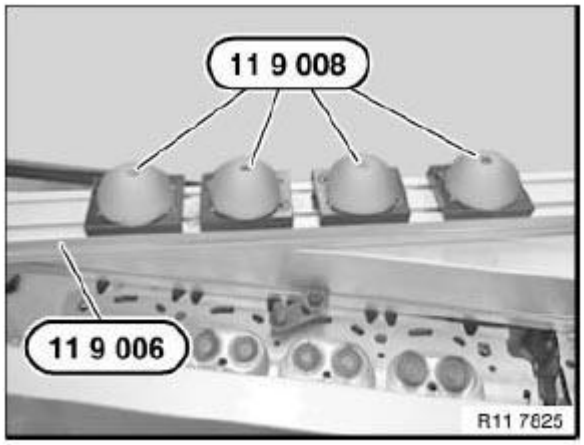

Fig. 302: Identifying Special Tool (11 9 008 And 11 9 006)
Courtesy of BMW OF NORTH AMERICA, INC.

Position special tool 11 9 006 with silicone cushion on cylinder head.

Slide locks (1) in direction of arrow and pretension with eccentric shaft.

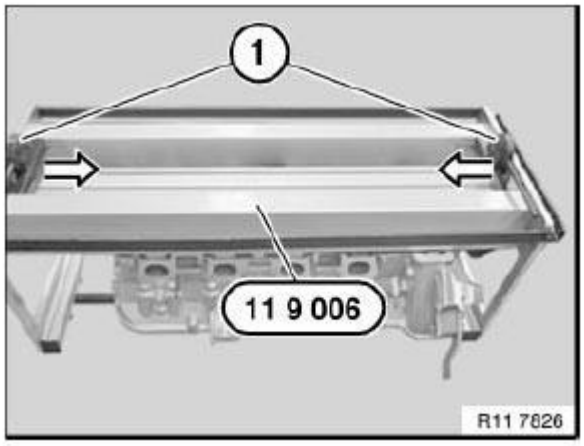

Fig. 303: Identifying Special Tool With Silicone Cushion
Courtesy of BMW OF NORTH AMERICA, INC.

Press down valve spring with special tool 11 8 840.

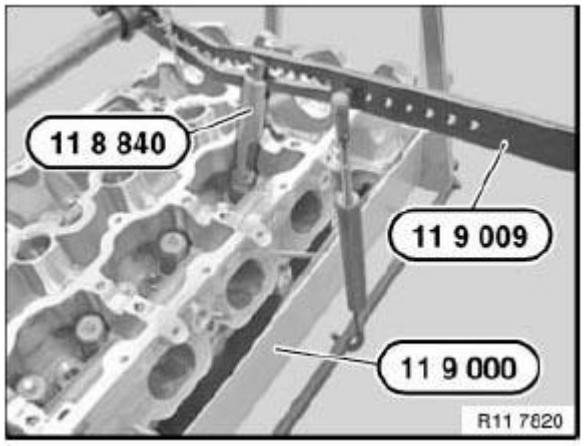

Fig. 304: Pressing Down Valve Spring With Special Tool
Courtesy of BMW OF NORTH AMERICA, INC.

Remove valve cotters (1) with a magnet.

Place valve springs and valve cotters on special tool 11 4 480 in a tidy and orderly fashion.

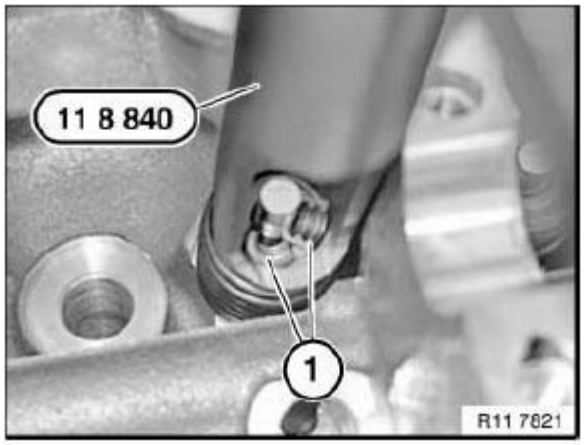

Fig. 305: Identifying Valve Cotters And Special Tool
Courtesy of BMW OF NORTH AMERICA, INC.

IMPORTANT: Incorrect installation possible.

Incorrect installation will result in valve spring breakage.

Color marking (1) is normally on lower end of valve spring.

Only the diameter is decisive for the correct installation of the valve springs.

Install valve spring so that larger diameter points to spring plate at bottom.

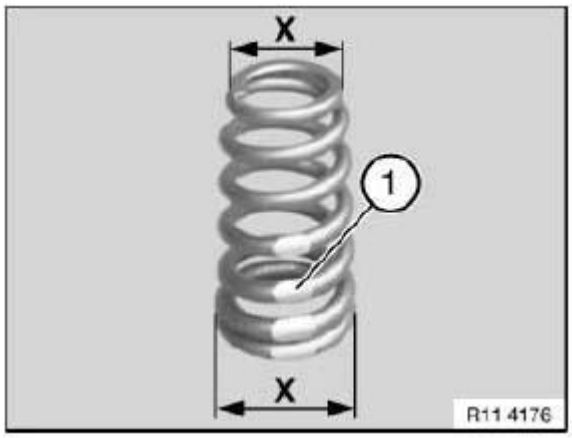

Fig. 306: Identifying Valve Spring Diameter
Courtesy of BMW OF NORTH AMERICA, INC.

Arrangement:

1. Valve
2. Valve stem seal with spring plate, bottom

3. Valve spring
4. Top plate spring
5. Valve cotters

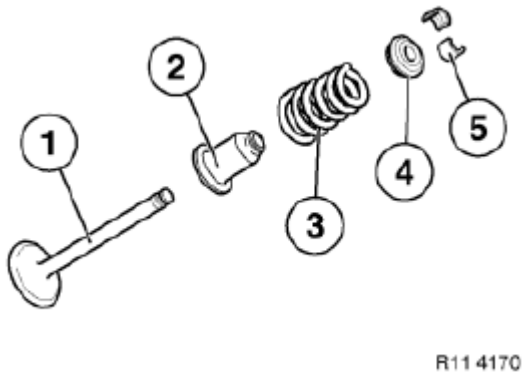

Fig. 307: Identifying Valve, Valve Spring And Top Plate Spring
Courtesy of BMW OF NORTH AMERICA, INC.

Release special tool 11 9 006 from cylinder head.

Remove all valves and place on special tool 11 4 480 in a tidy and orderly fashion.

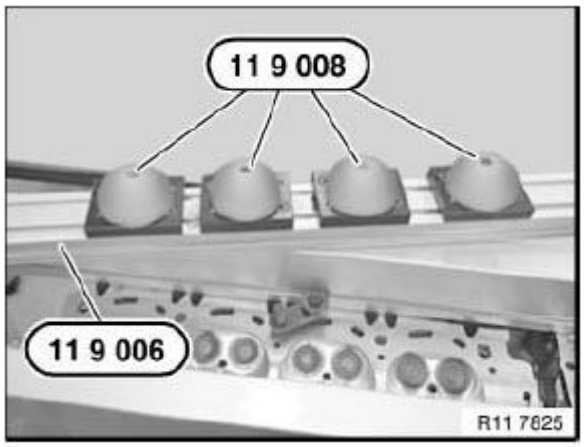

Fig. 308: Identifying Special Tool (11 9 008 And 11 9 006)
Courtesy of BMW OF NORTH AMERICA, INC.

Assemble engine.

11 34 560 REPLACING ALL VALVE STEM SEALS (N63)

Special tools required:

- **11 1 380**
- **11 6 370**

- **11 6 380**

See **ENGINE - SPECIAL TOOLS (N54, N63)** .

IMPORTANT: Risk of damage to sealing lip on valve stem seal.

Fit new valve stem seals only when all valves have been installed.

Necessary preliminary tasks:

- Remove all **valve springs** .

Press special tool 11 6 370 onto valve stem seal.

Withdraw valve stem seal by turning and simultaneously unscrewing special tool 11 6 370.

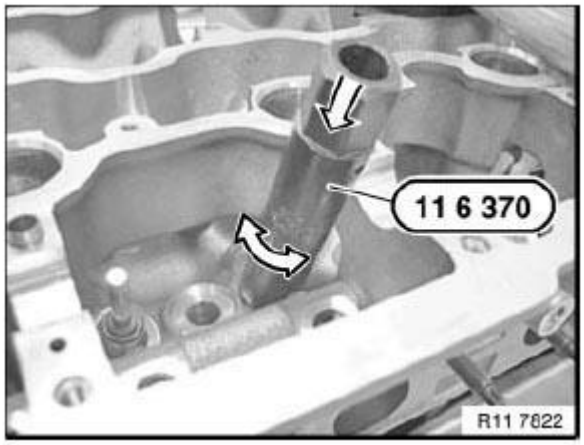

Fig. 309: Pressing Special Tool Onto Valve Stem Seal
Courtesy of BMW OF NORTH AMERICA, INC.

Installation:

Lubricate valve stem with oil and insert valve.

Installation sleeve 11 1 380 is included in the delivery specification for the valve stem seals.

Fit special tool 11 1 380.

Coat new valve stem seal (1) with oil and install.

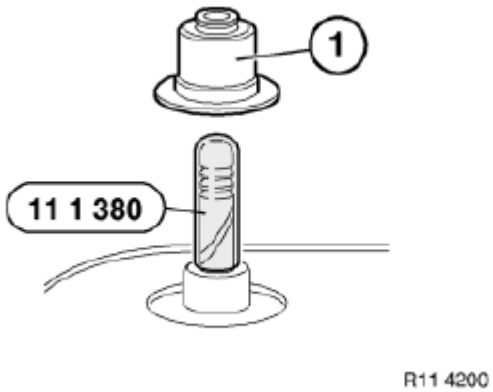

Fig. 310: Identifying Special Tool And Valve Stem Seal
Courtesy of BMW OF NORTH AMERICA, INC.

NOTE: **For use on the N63 engine, the special tool 11 6 380 must be remachined according to the sketch with a 6.2 mm drill bit dia. to a depth of A = approx. 45 mm.**

This modification has already been taken into account for reordering.

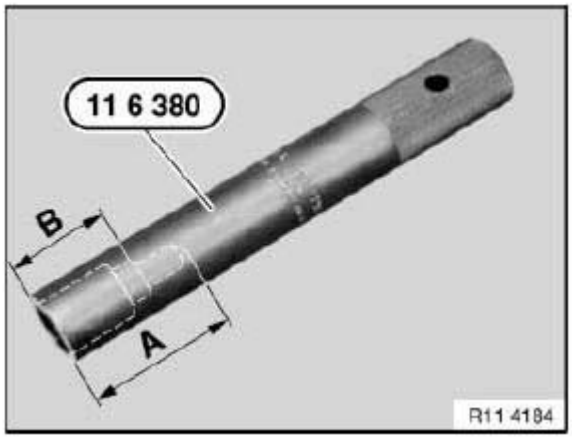

Fig. 311: Identifying Special Tool Diameter
Courtesy of BMW OF NORTH AMERICA, INC.

Press valve stem seal firmly home by hand with special tool 11 6 380.

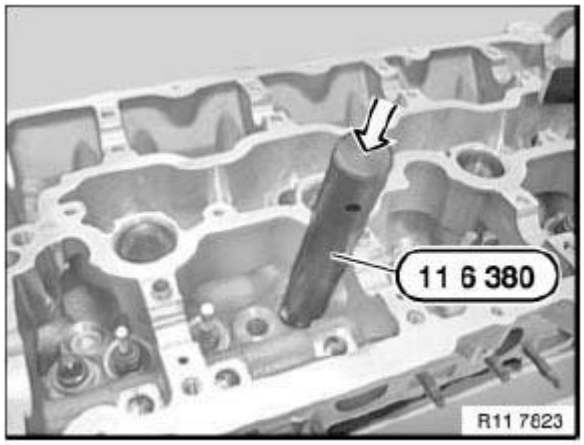

Fig. 312: Pressing Valve Stem Seal
Courtesy of BMW OF NORTH AMERICA, INC.

Assemble engine.

11 34 715 REPLACING ALL VALVE SPRINGS (N63)

Special tools required:

- **11 4 480**
- **11 8 840**
- **11 9 000**
- **11 9 006**
- **11 9 008**

See **ENGINE - SPECIAL TOOLS (N54, N63)** .

Necessary preliminary tasks:

- Remove **left cylinder head** .
- Remove **right cylinder head** .
- Remove **camshafts** .

Mount cylinder head (1) on special tool 11 9 000.

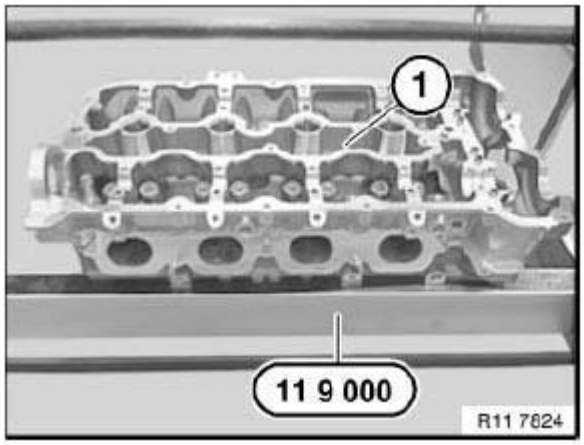

Fig. 313: Identifying Cylinder Head On Special Tool
Courtesy of BMW OF NORTH AMERICA, INC.

Prepare special tool 11 9 008 on special tool 11 9 006.

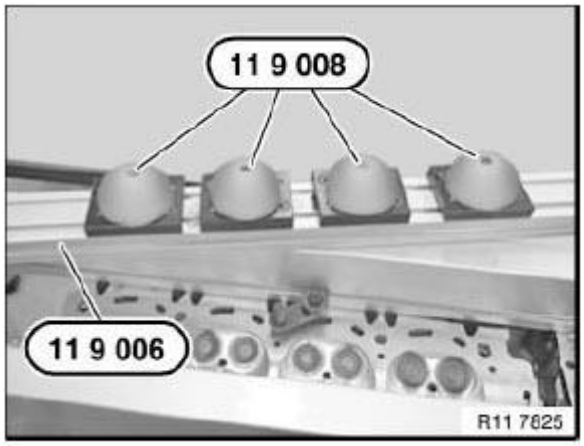

Fig. 314: Identifying Special Tool (11 9 008 And 11 9 006)
Courtesy of BMW OF NORTH AMERICA, INC.

Position special tool 11 9 006 with silicone cushion on cylinder head.

Slide locks (1) in direction of arrow and pretension with eccentric shaft.

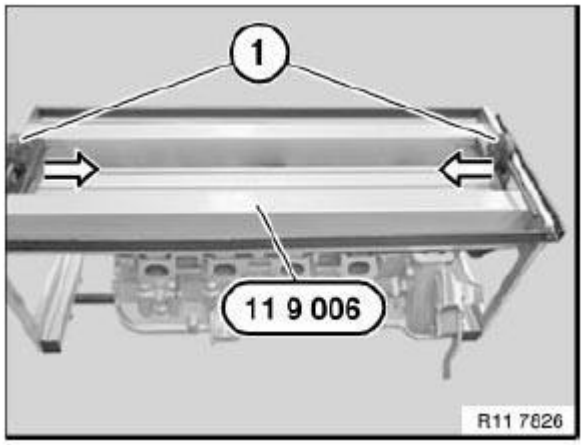

Fig. 315: Identifying Special Tool With Silicone Cushion
Courtesy of BMW OF NORTH AMERICA, INC.

Press down valve spring with special tool 11 8 840.

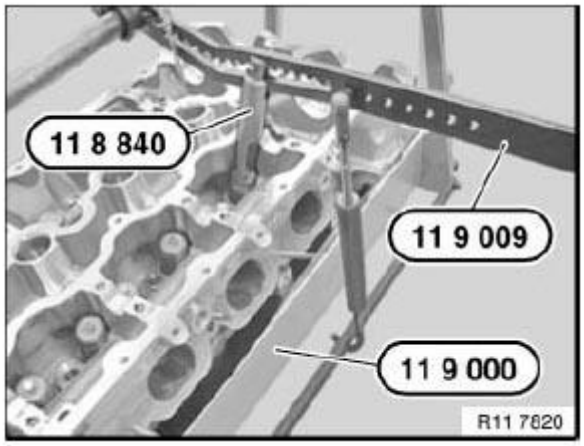

Fig. 316: Pressing Down Valve Spring With Special Tool
Courtesy of BMW OF NORTH AMERICA, INC.

Remove valve cotters (1) with a magnet.

Place valve springs and valve cotters on special tool 11 4 480 in a tidy and orderly fashion.

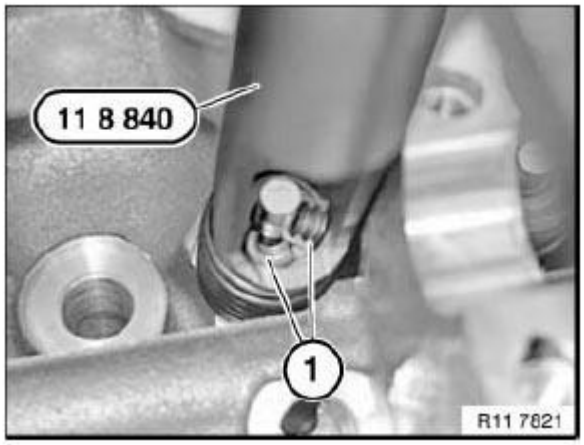

Fig. 317: Identifying Valve Cotters And Special Tool
Courtesy of BMW OF NORTH AMERICA, INC.

IMPORTANT: Incorrect installation possible.

Incorrect installation will result in valve spring breakage.

Color marking (1) is normally on lower end of valve spring.

Only the diameter is decisive for the correct installation of the valve springs.

Install valve spring so that larger diameter points to spring plate at bottom.

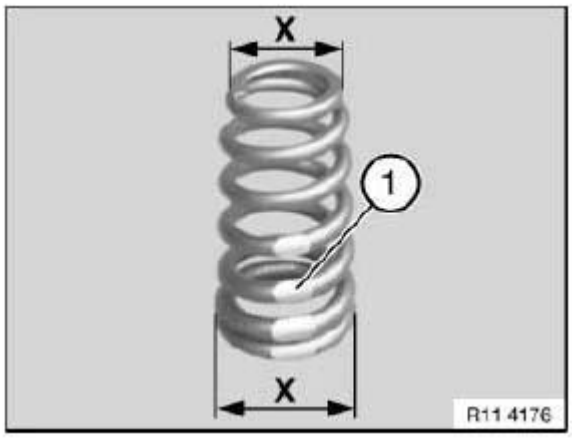

Fig. 318: Identifying Valve Spring Diameter
Courtesy of BMW OF NORTH AMERICA, INC.

Arrangement:

1. Valve
2. Valve stem seal with spring plate, bottom

3. Valve spring
4. Top plate spring
5. Valve cotters

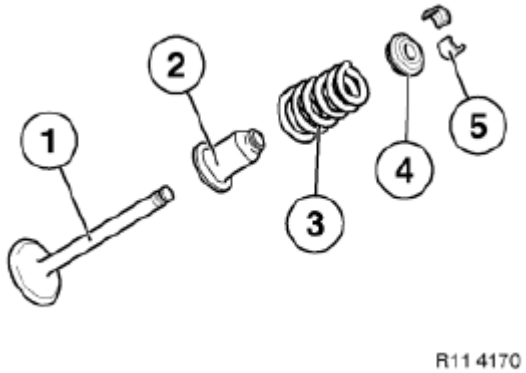

Fig. 319: Identifying Valve, Valve Spring And Top Plate Spring
Courtesy of BMW OF NORTH AMERICA, INC.

Assemble engine.

VARIABLE CAMSHAFT TIMING

11 36 047 REMOVING AND INSTALLING/REPLACING INLET AND EXHAUST ADJUSTMENT UNITS ON LEFT SIDE (N63)

Special tools required:

- **00 9 120**
- **00 9 250**
- **11 8 570**
- **11 9 190**
- **11 9 890**
- **11 9 891**
- **11 9 892**
- **11 9 893**
- **11 9 894**
- **11 9 900**

See **MAINTENANCE AND GENERAL INFORMATION - SPECIAL TOOLS** .

See **ENGINE - SPECIAL TOOLS (N54, N63)** .

IMPORTANT: When the engine is shut down, the inlet and exhaust adjustment unit is

normally locked in its initial position.

The situation may arise in some individual cases where this initial position is not reached and the camshaft can continue to be rotated in the adjustment range of the adjustment unit.

Where central bolts are not greased at the bolt contact points up to engine number 20024295 , the VANOS gear must be replaced for safety reasons.

The central bolts is greased from engine number 20024296 .

(cylinder bank 1 to 4)

Necessary preliminary tasks:

- **Read fault memory and make a documentary record**
- Remove **left cylinder head cover**
- Remove **left timing case cover**
- Check **timing** .

To release central bolts, use special tool 11 9 890 or grip at hexagon head of camshaft.

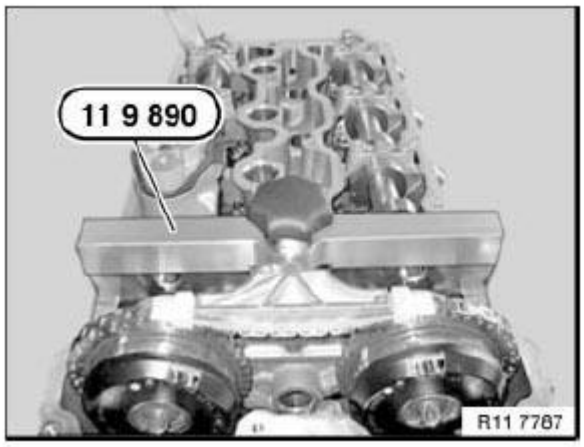

Fig. 320: Identifying Special Tool (11 9 890)
Courtesy of BMW OF NORTH AMERICA, INC.

IMPORTANT: If special tool 11 9 890 cannot be fitted, it is necessary when releasing the central bolt to grip the hexagon head of the respective camshafts.

Release central bolts (1 and 2) of inlet and exhaust adjustment units.

Installation:

Replace central bolts after releasing.

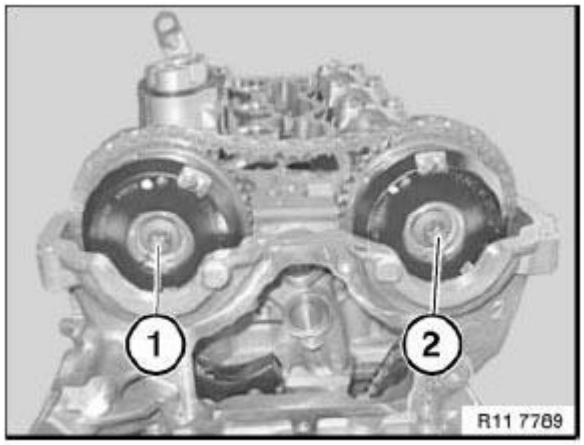

Fig. 321: Identifying Inlet And Exhaust Camshafts Central Bolts
Courtesy of BMW OF NORTH AMERICA, INC.

IMPORTANT: Check whether head of central bolt (1) is greased (see arrow).

If no grease can be seen on the bolt head of central bolt (1), the VANOS gear must be replaced for safety reasons.

Installation:

Coat contact face of central bolt (1) with copper paste.

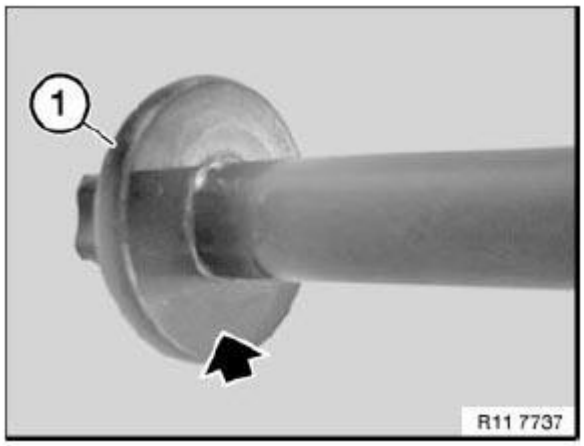

Fig. 322: Identifying Central Bolt
Courtesy of BMW OF NORTH AMERICA, INC.

Release hexagon socket screw.

Release special tool 11 9 900 at knurled screws and remove.

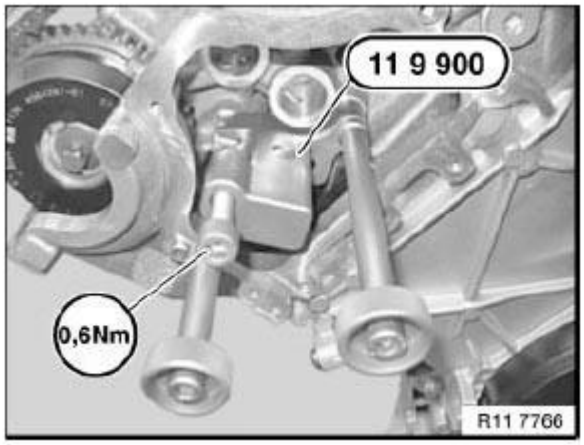

Fig. 323: Identifying Hexagon Socket Screw With Special Tool
Courtesy of BMW OF NORTH AMERICA, INC.

Release screws (1).

Remove upper tensioning rail (2).

NOTE: Shown without special tools for purposes of clarity.

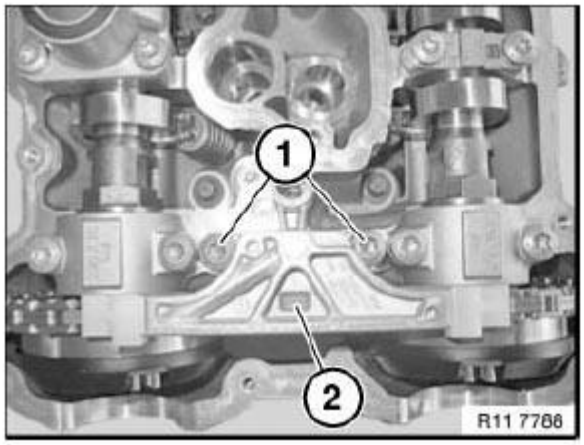

Fig. 324: Identifying Upper Tensioning Rail With Screws
Courtesy of BMW OF NORTH AMERICA, INC.

Remove central bolt (2) of inlet adjustment unit.

Installation:

Replace central bolts after releasing.

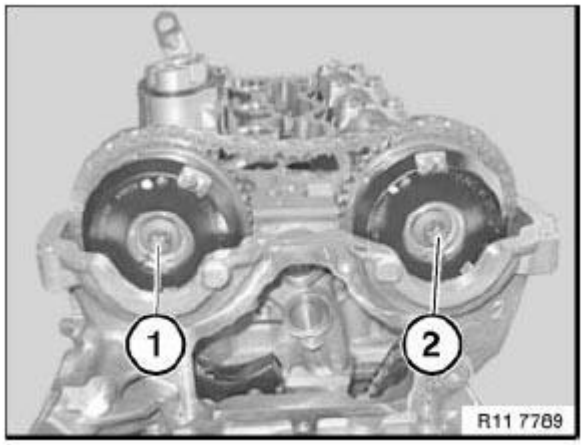

Fig. 325: Identifying Inlet And Exhaust Camshafts Central Bolts
Courtesy of BMW OF NORTH AMERICA, INC.

Detach inlet adjustment unit (1) in direction of arrow from inlet camshaft.

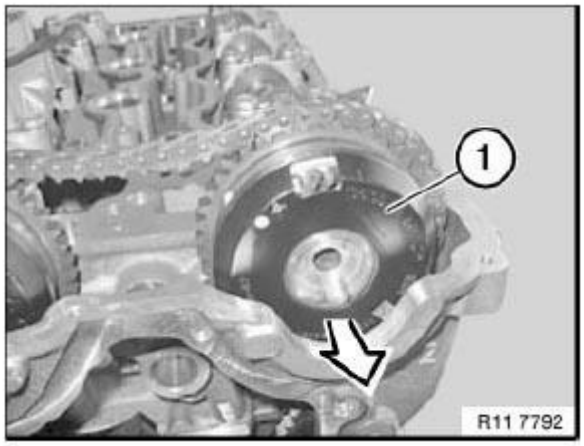

Fig. 326: Detaching Inlet Adjustment Unit
Courtesy of BMW OF NORTH AMERICA, INC.

Feed out inlet adjustment unit (2) from timing chain (1).

Lift out inlet adjustment unit (2).

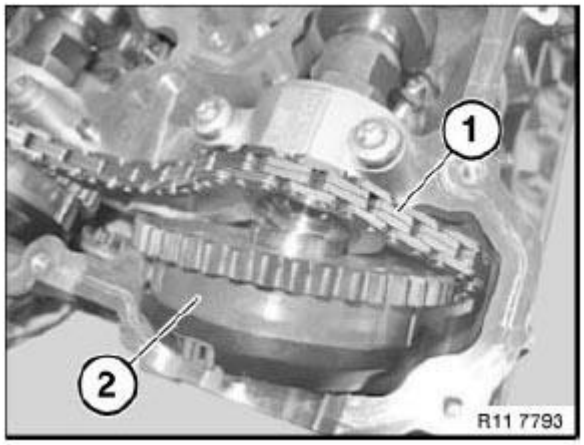

Fig. 327: Identifying Inlet Adjustment Unit And Timing Chain
Courtesy of BMW OF NORTH AMERICA, INC.

Remove central bolt (1) of exhaust adjustment unit.

Installation:

Replace central bolts after releasing.

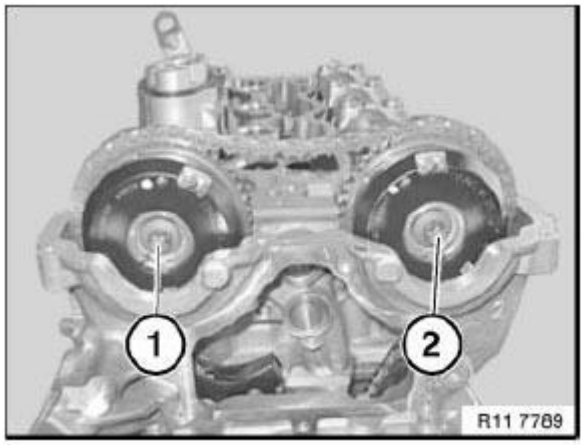

Fig. 328: Identifying Inlet And Exhaust Camshafts Central Bolts
Courtesy of BMW OF NORTH AMERICA, INC.

Detach exhaust adjustment unit (1) in direction of arrow from exhaust camshaft.

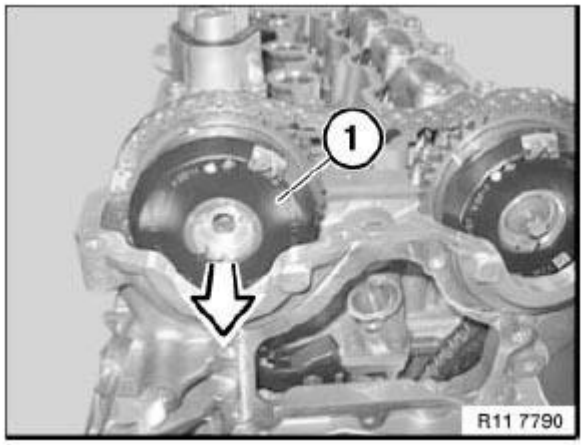

Fig. 329: Detaching Exhaust Adjustment Unit
Courtesy of BMW OF NORTH AMERICA, INC.

Feed out exhaust adjustment unit (2) from timing chain (1).

Lift out exhaust adjustment unit (2).

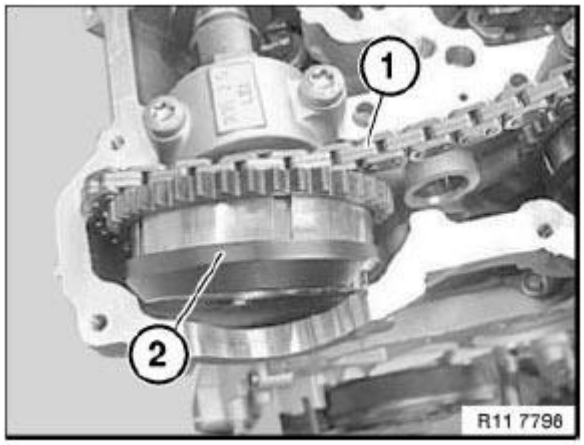

Fig. 330: Identifying Exhaust Adjustment Unit And Timing Chain
Courtesy of BMW OF NORTH AMERICA, INC.

IMPORTANT: Danger of mix-up:

Inlet and exhaust adjustment units are different.

Mixing up the inlet and exhaust adjustment units will cause damage to the engine.

1. **Inlet adjustment unit (1) is marked with EIN**
2. **Exhaust adjustment unit (2) is marked with AUS**

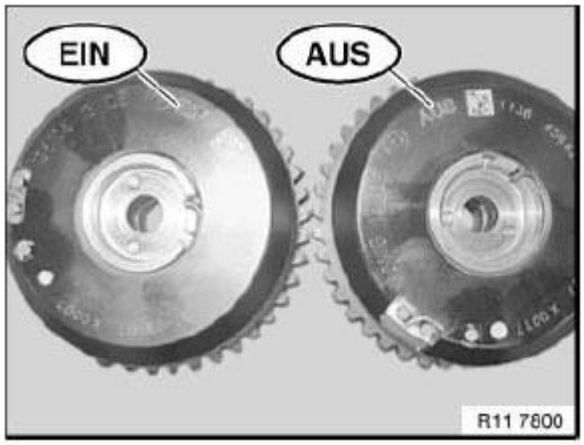

Fig. 331: Identifying Mark On Inlet And Exhaust Adjustment Units
Courtesy of BMW OF NORTH AMERICA, INC.

Installation:

Coat contact face of central bolt (1) with copper paste.

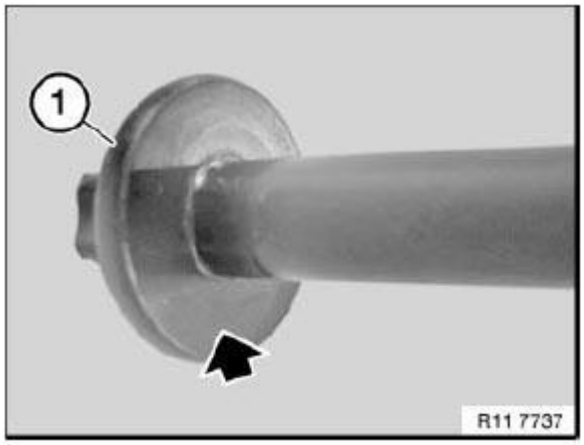

Fig. 332: Identifying Central Bolt
Courtesy of BMW OF NORTH AMERICA, INC.

NOTE: Position of adjustment units in relation to timing chain can be freely selected.

Feed adjustment unit into timing chain and position on camshafts.

Insert central bolts (1 and 2) on adjustment units without gaps.

Release central bolts (1 and 2) by **90°** .

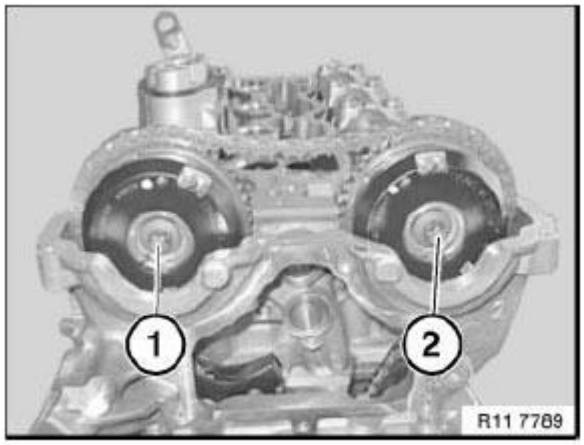

Fig. 333: Identifying Inlet And Exhaust Camshafts Central Bolts
Courtesy of BMW OF NORTH AMERICA, INC.

Fit sliding rail (2) and secure with bolts (1).

Tightening torque: 11 31 4AZ, see **11 31 CAMSHAFT**

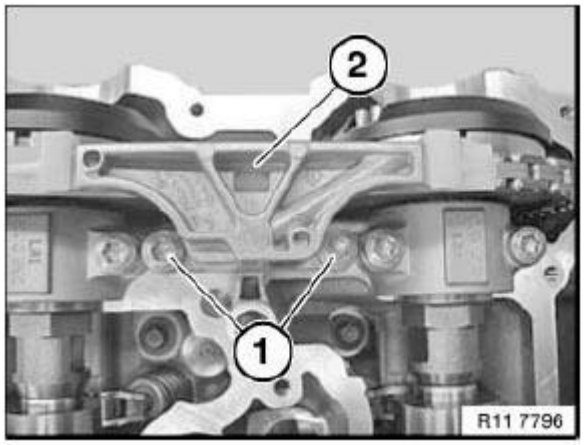

Fig. 334: Identifying Sliding Rail With Bolts
Courtesy of BMW OF NORTH AMERICA, INC.

Get special tool kit 11 9 890 ready for securing camshafts.

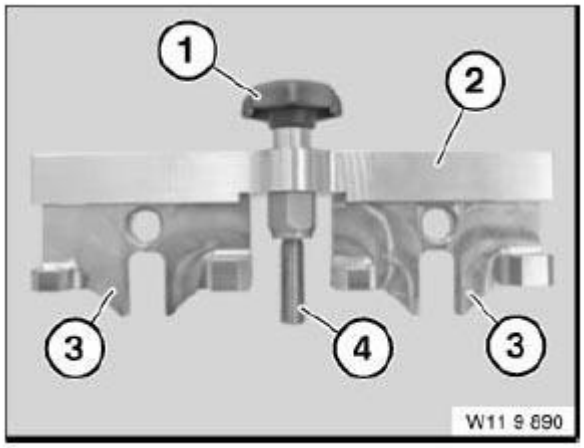

Fig. 335: Identifying Special Tool Kit
Courtesy of BMW OF NORTH AMERICA, INC.

Fit special tool 11 9 893 on exhaust camshaft.

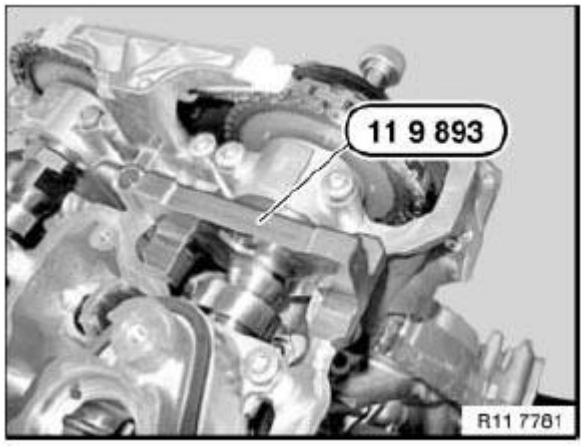

Fig. 336: Identifying Special Tool 11 9 893 On Exhaust Camshaft
Courtesy of BMW OF NORTH AMERICA, INC.

Place special tool 11 9 893 on inlet camshaft.

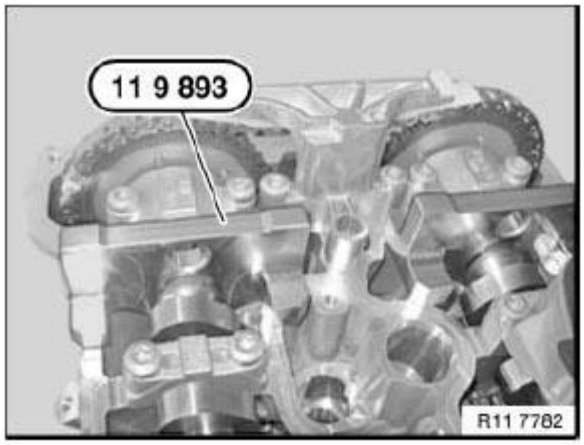

Fig. 337: Identifying Special Tool On Cylinder Head
Courtesy of BMW OF NORTH AMERICA, INC.

Installation:

Align exhaust and inlet camshafts in such a way that special tools 11 9 893 rest without a gap on the cylinder head.

Screw special tool 11 9 894 into cylinder head.

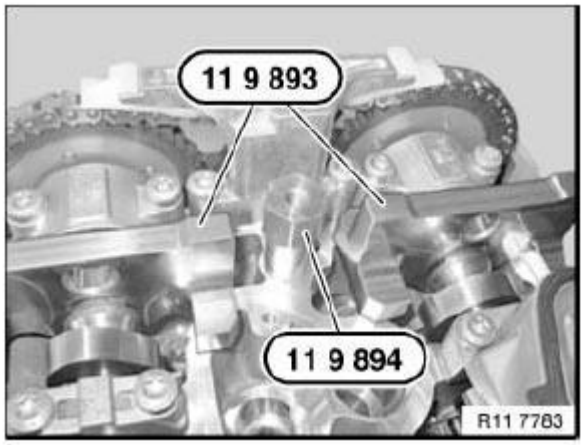

Fig. 338: Positioning Special Tool 11 9 893 On Inlet And Exhaust Camshafts
Courtesy of BMW OF NORTH AMERICA, INC.

Press down special tool 11 9 892 with special tool 11 9 891.

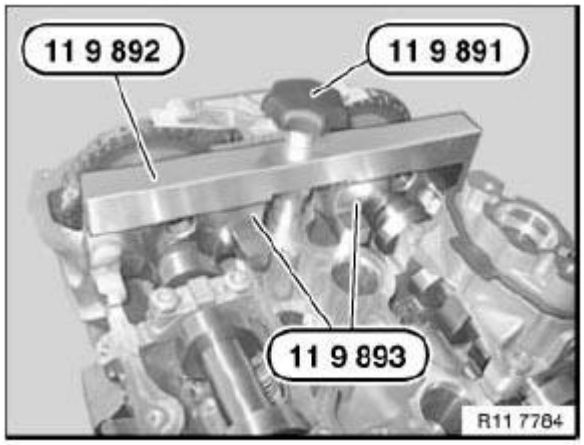

Fig. 339: Identifying Special Tool (11 9 892, 11 9 893 And 11 9 891)
Courtesy of BMW OF NORTH AMERICA, INC.

Screw in special tool 11 9 900.

Pretension timing chain with special tool 11 9 900.

Preload hexagon socket screw with special tool 00 9 250 to **0.6 Nm** .

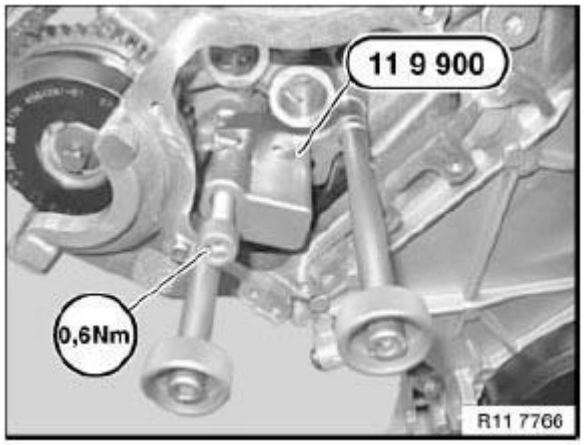

Fig. 340: Identifying Hexagon Socket Screw With Special Tool
Courtesy of BMW OF NORTH AMERICA, INC.

Check special tools 11 9 190 for correct seating.

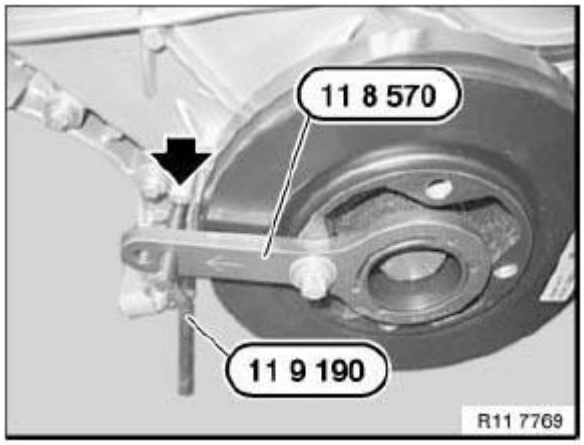

Fig. 341: Identifying Special Tools Position (11 8 570 And 11 9 190)
Courtesy of BMW OF NORTH AMERICA, INC.

Tighten down central bolts (1 and 2) of adjustment units with special tool 00 9 120.

Tightening torque 11 36 1AZ, see **11 36 VARIABLE CAMSHAFT CONTROL**

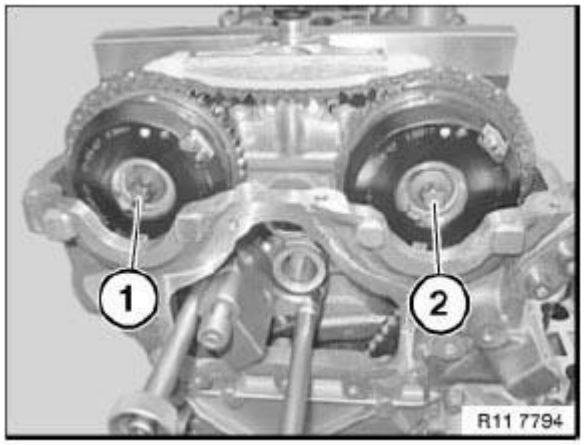

Fig. 342: Identifying Inlet And Exhaust Camshaft Central Bolts
Courtesy of BMW OF NORTH AMERICA, INC.

Remove special tools 11 9 190 and 11 8 570.

Crank engine at central bolt twice in direction of rotation until engine returns to **150° before cylinder no. 1 firing TDC position** .

Mount special tool 11 8 570 on vibration damper with a bolt.

Secure special tool 11 9 190 at **150° before cylinder no. 1 firing TDC position** .

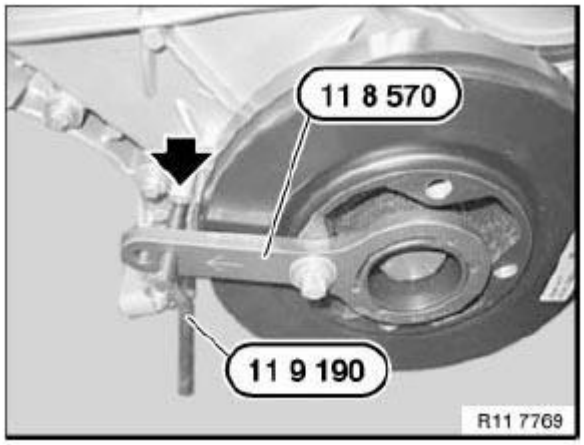

Fig. 343: Identifying Special Tools Position (11 8 570 And 11 9 190)
Courtesy of BMW OF NORTH AMERICA, INC.

Check **timing** again.

Remove all special tools.

11 36 048 REMOVING AND INSTALLING/REPLACING INLET AND EXHAUST ADJUSTMENT UNITS ON RIGHT SIDE (N63)

Special tools required:

- **00 9 120**
- **00 9 250**
- **11 8 570**
- **11 9 190**
- **11 9 890**
- **11 9 891**
- **11 9 892**
- **11 9 893**
- **11 9 894**
- **11 9 900**

See **MAINTENANCE AND GENERAL INFORMATION - SPECIAL TOOLS** .

See **ENGINE - SPECIAL TOOLS (N54, N63)** .

IMPORTANT: When the engine is shut down, the inlet and exhaust adjustment unit is normally locked in its initial position.

The situation may arise in some individual cases where this initial position is

not reached and the camshaft can continue to be rotated in the adjustment range of the adjustment unit.

Where central bolts are not greased at the bolt contact points up to engine number 20024295 , the VANOS gear must be replaced for safety reasons.

The central bolts is greased from engine number 20024296 .

(cylinder bank 1 to 4)

Necessary preliminary tasks:

- **Read fault memory and make a documentary record**
- Remove **right cylinder head cover**
- Remove **right timing case cover**
- Check **timing** .

To release central bolts, use special tool 11 9 890 or grip at hexagon head of camshaft.

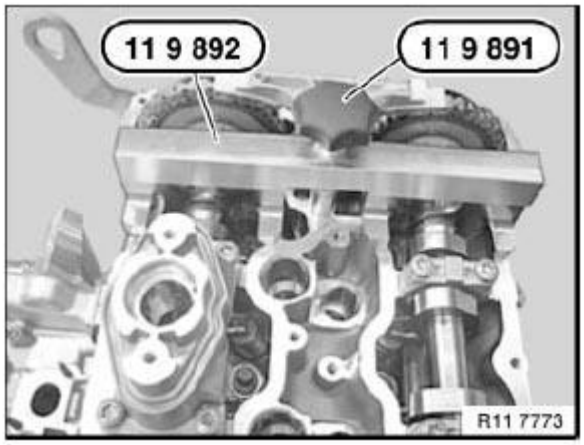

Fig. 344: Identifying Special Tools (11 9 892 And 11 9 891)
Courtesy of BMW OF NORTH AMERICA, INC.

IMPORTANT: If special tool 11 9 890 cannot be fitted, it is necessary when releasing the central bolt to grip the hexagon head of the respective camshafts.

Release central bolts (1 and 2) of inlet and exhaust adjustment units.

Installation:

Replace central bolts after releasing.

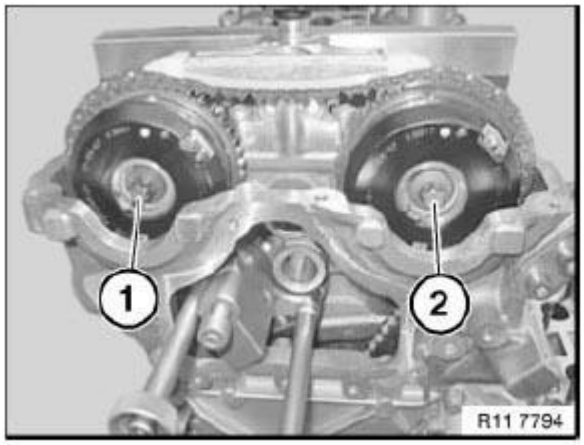

Fig. 345: Identifying Inlet And Exhaust Camshaft Central Bolts
Courtesy of BMW OF NORTH AMERICA, INC.

IMPORTANT: Check whether head of central bolt (1) is greased (see arrow).

If no grease can be seen on the bolt head of central bolt (1), the VANOS gear must be replaced for safety reasons.

Installation:

Coat contact face of central bolt (1) with copper paste.

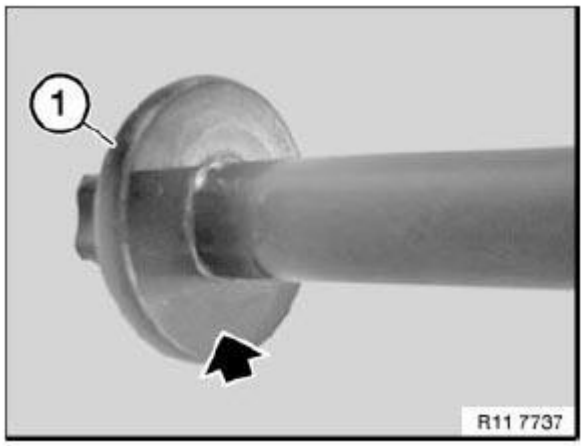

Fig. 346: Identifying Central Bolt
Courtesy of BMW OF NORTH AMERICA, INC.

Release hexagon socket screw.

Release special tool 11 9 900 at knurled screws and remove.

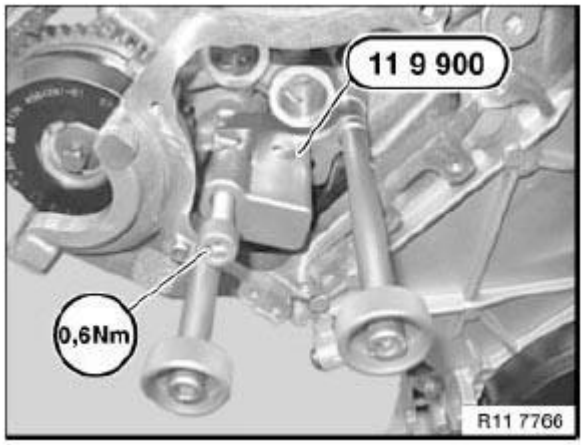

Fig. 347: Identifying Hexagon Socket Screw With Special Tool
Courtesy of BMW OF NORTH AMERICA, INC.

Release screws (1).

Remove upper tensioning rail (2).

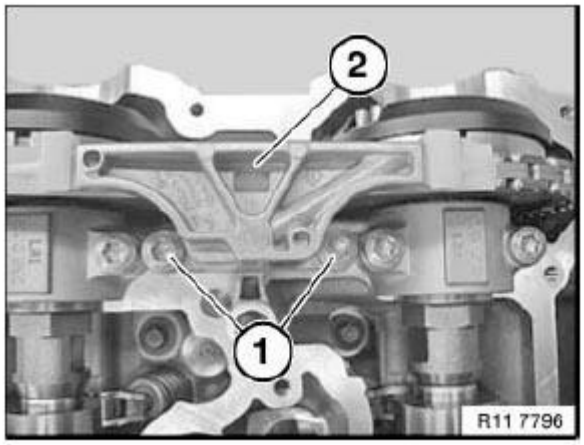

Fig. 348: Identifying Upper Tensioning Rail And Screws
Courtesy of BMW OF NORTH AMERICA, INC.

Remove central bolt (1) of exhaust adjustment unit.

Installation:

Replace central bolts after releasing.

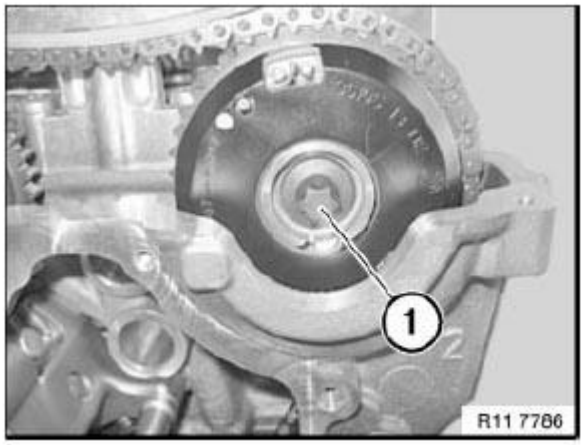

Fig. 349: Identifying Central Bolt Of Exhaust Adjustment Unit
Courtesy of BMW OF NORTH AMERICA, INC.

Detach exhaust adjustment unit (1) in direction of arrow from exhaust camshaft.

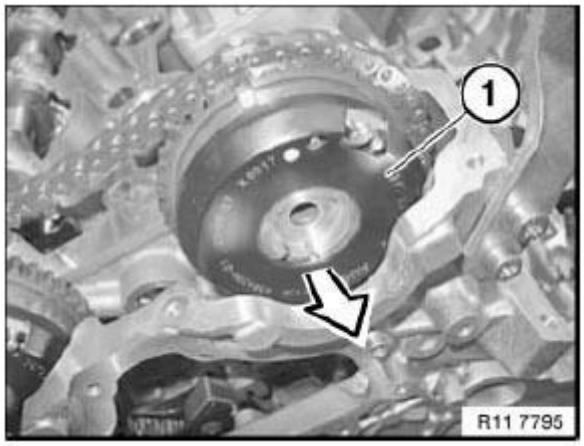

Fig. 350: Detaching Exhaust Adjustment Unit
Courtesy of BMW OF NORTH AMERICA, INC.

Feed out exhaust adjustment unit (2) from timing chain (1).

Lift out exhaust adjustment unit (2).

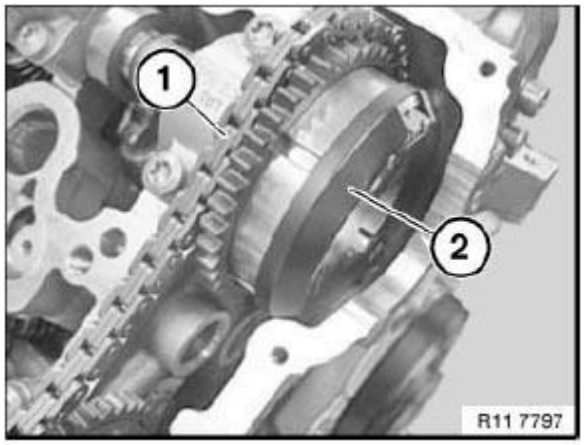

Fig. 351: Identifying Exhaust Adjustment Unit And Timing Chain
Courtesy of BMW OF NORTH AMERICA, INC.

Remove central bolt (1) of inlet adjustment unit.

Installation:

Replace central bolts after releasing.

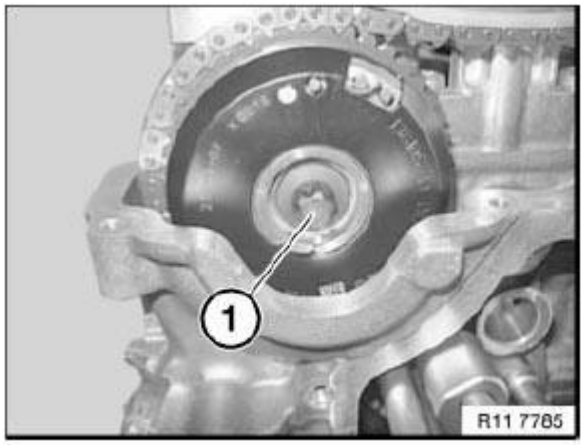

Fig. 352: Identifying Central Bolt Of Inlet Adjustment Unit
Courtesy of BMW OF NORTH AMERICA, INC.

Detach inlet adjustment unit (1) in direction of arrow from inlet camshaft.

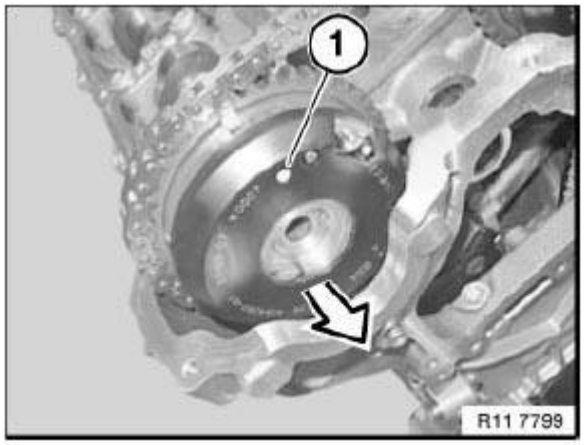

Fig. 353: Detaching Inlet Adjustment Unit
Courtesy of BMW OF NORTH AMERICA, INC.

Feed out inlet adjustment unit (2) from timing chain (1).

Lift out inlet adjustment unit (2).

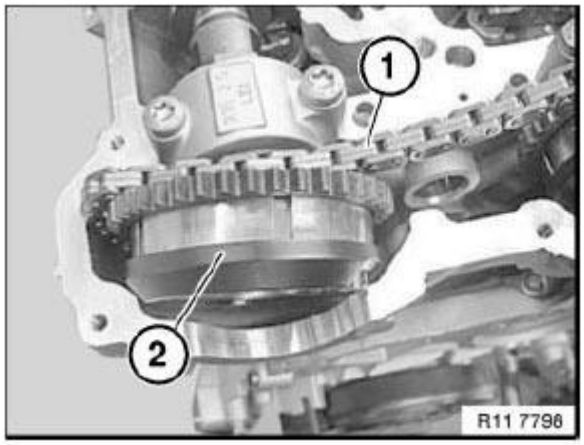

Fig. 354: Identifying Inlet Adjustment Unit And Timing Chain
Courtesy of BMW OF NORTH AMERICA, INC.

IMPORTANT: Danger of mix-up:

Inlet and exhaust adjustment units are different.

Mixing up the inlet and exhaust adjustment units will cause damage to the engine.

1. **Inlet adjustment unit (1) is marked with EIN**
2. **Exhaust adjustment unit (2) is marked with AUS**

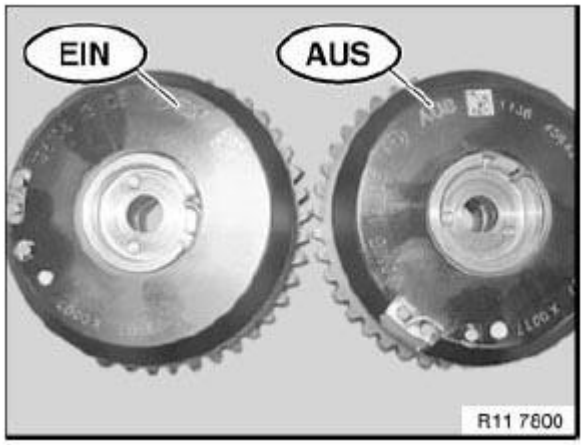

Fig. 355: Identifying Mark On Inlet And Exhaust Adjustment Units
Courtesy of BMW OF NORTH AMERICA, INC.

Installation:

Coat contact face of central bolt (1) with copper paste.

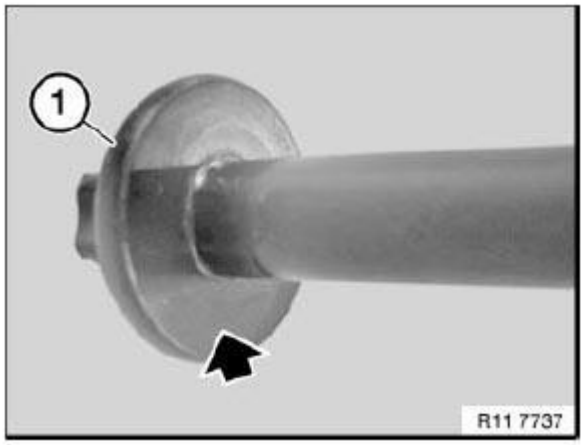

Fig. 356: Identifying Central Bolt
Courtesy of BMW OF NORTH AMERICA, INC.

NOTE: Position of adjustment units in relation to timing chain can be freely selected.

Feed adjustment unit into timing chain and position on camshafts.

Insert central bolts (1 and 2) on adjustment units without gaps.

Release central bolts (1 and 2) by **90°** .

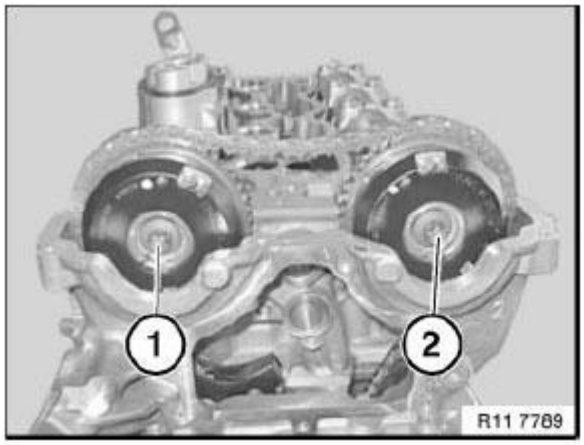

Fig. 357: Identifying Inlet And Exhaust Camshafts Central Bolts
Courtesy of BMW OF NORTH AMERICA, INC.

Fit sliding rail (2) and secure with bolts (1).

Tightening torque: 11 31 4AZ, see **11 31 CAMSHAFT**

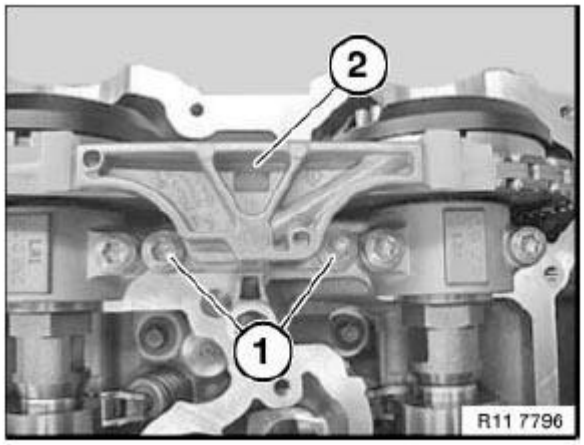

Fig. 358: Identifying Upper Tensioning Rail And Screws
Courtesy of BMW OF NORTH AMERICA, INC.

Get special tool kit 11 9 890 ready for securing camshafts.

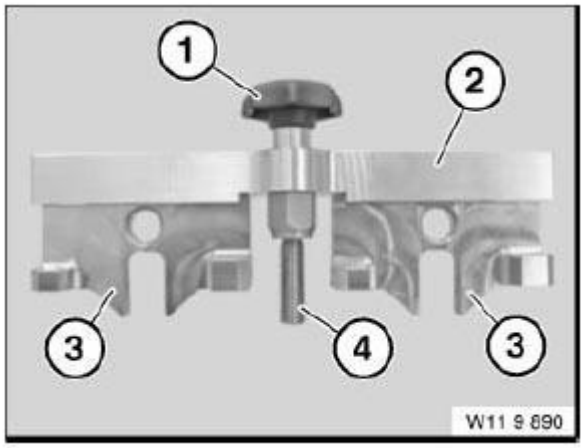

Fig. 359: Identifying Special Tool Kit
Courtesy of BMW OF NORTH AMERICA, INC.

Fit special tool 11 9 893 on exhaust camshaft.

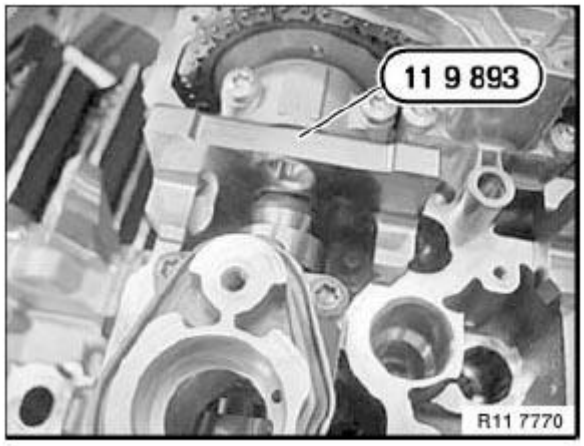

Fig. 360: Identifying Special Tool 11 9 893 On Exhaust Camshaft
Courtesy of BMW OF NORTH AMERICA, INC.

Place special tool 11 9 893 on inlet camshaft.

Installation:

Align exhaust and inlet camshafts in such a way that special tools 11 9 893 rest without a gap on the cylinder head.

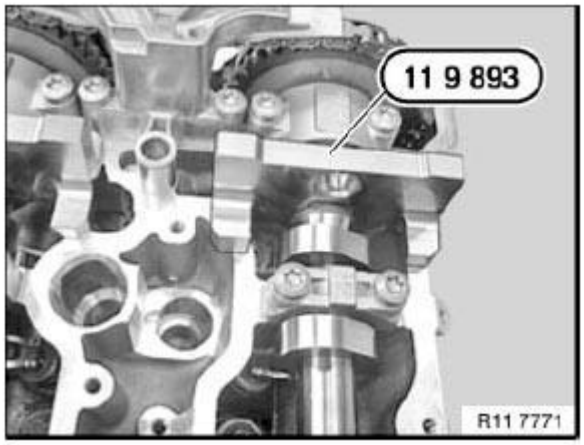

Fig. 361: Identifying Special Tool 11 9 893 On Inlet Camshaft
Courtesy of BMW OF NORTH AMERICA, INC.

Screw special tool 11 9 894 into cylinder head.

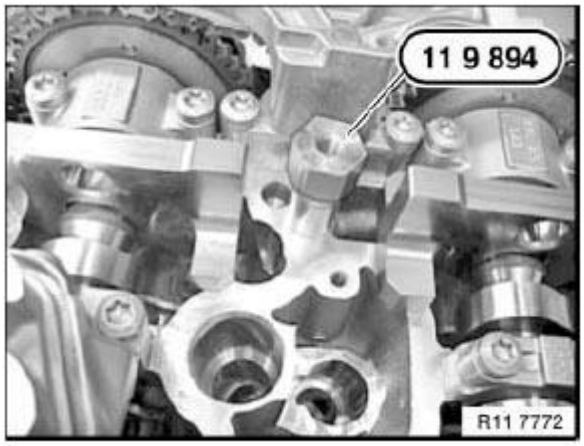

Fig. 362: Identifying Special Tool 11 9 894 On Cylinder Head
Courtesy of BMW OF NORTH AMERICA, INC.

Press down special tool 11 9 892 with special tool 11 9 891.

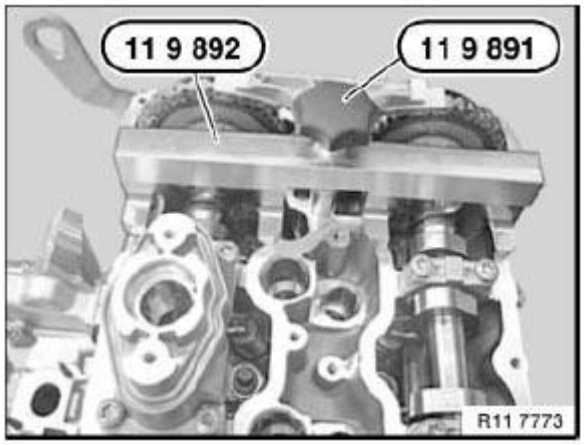

Fig. 363: Identifying Special Tools (11 9 892 And 11 9 891)
Courtesy of BMW OF NORTH AMERICA, INC.

Screw in special tool 11 9 900.

Pretension timing chain with special tool 11 9 900.

Preload hexagon socket screw with special tool 00 9 250 to **0.6 Nm** .

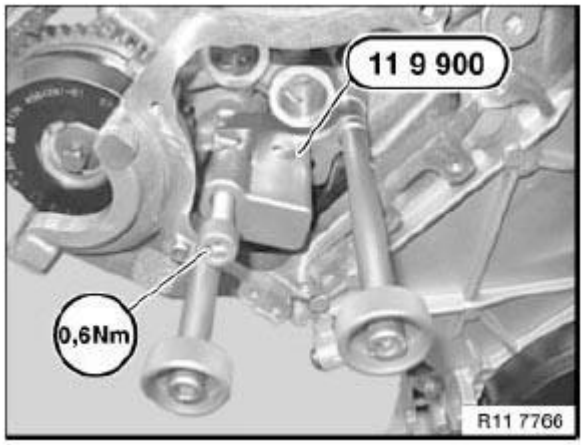

Fig. 364: Identifying Hexagon Socket Screw With Special Tool
Courtesy of BMW OF NORTH AMERICA, INC.

Check special tools 11 9 190 for correct seating.

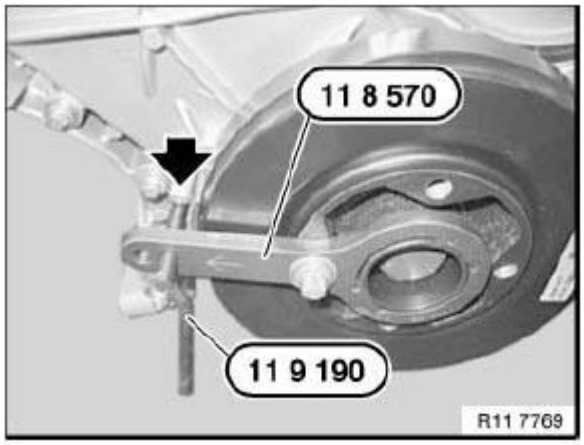

Fig. 365: Identifying Special Tools Position (11 8 570 And 11 9 190)
Courtesy of BMW OF NORTH AMERICA, INC.

Tighten down central bolts (1 and 2) of adjustment units with special tool 00 9 120.

Tightening torque 11 36 1AZ, see **11 36 VARIABLE CAMSHAFT CONTROL**

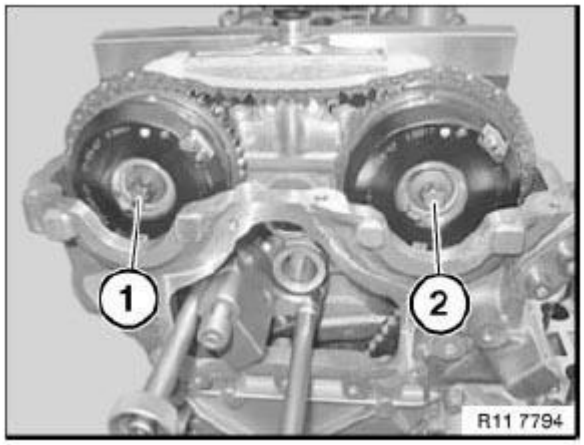

Fig. 366: Identifying Inlet And Exhaust Camshaft Central Bolts
Courtesy of BMW OF NORTH AMERICA, INC.

Remove special tools 11 9 190 and 11 8 570.

Crank engine at central bolt twice in direction of rotation until engine returns to **150° before cylinder no. 1 firing TDC position** .

Mount special tool 11 8 570 on vibration damper with a bolt.

Secure special tool 11 9 190 at **150° before cylinder no. 1 firing TDC position** .

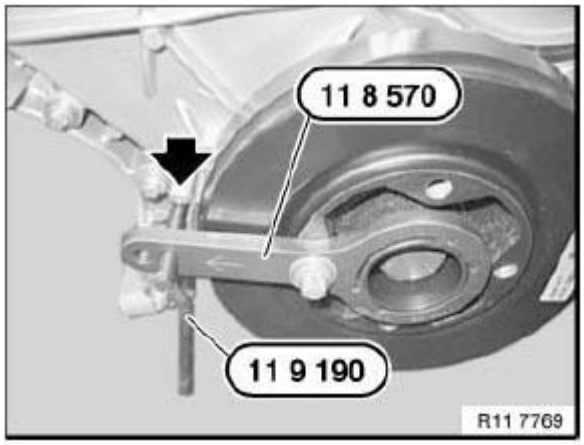

Fig. 367: Identifying Special Tools Position (11 8 570 And 11 9 190)
Courtesy of BMW OF NORTH AMERICA, INC.

Check **timing** again.

Remove all special tools.

11 36 715 REMOVING AND INSTALLING/REPLACING BOTH SOLENOID VALVES ON LEFT SIDE (N63)

IMPORTANT: Always check that the solenoid valves are clean during removal and installation.

Possible malfunctions if valves are contaminated:

- **Rough running**
- **OBD incorrect entry**
- **Poor exhaust gas values**
- **Low engine power**

IMPORTANT: Risk of damage!

Do not clean solenoid valves with compressed air.

Solenoid valves, cylinders 5-8

Necessary preliminary tasks:

- Read out fault memory in DME control unit
- Switch off ignition
- Unlock hose on tank venting valve and disconnect
- Remove left **intercooler** . See **17 51 001 REMOVING AND INSTALLING/REPLACING LEFT**

INTERCOOLER (N63) or **17 51 001 REMOVING AND INSTALLING/REPLACING RIGHT INTERCOOLER (N63)** .

- Carefully press pipe to one side

NOTE: Solenoid valve (2) controls the inlet adjustment unit.

Solenoid valve (4) controls the exhaust adjustment unit.

Unlock plug connections of solenoid valves (2 and 4) and disconnect.

Installation:

Plug connections must snap audibly into place!

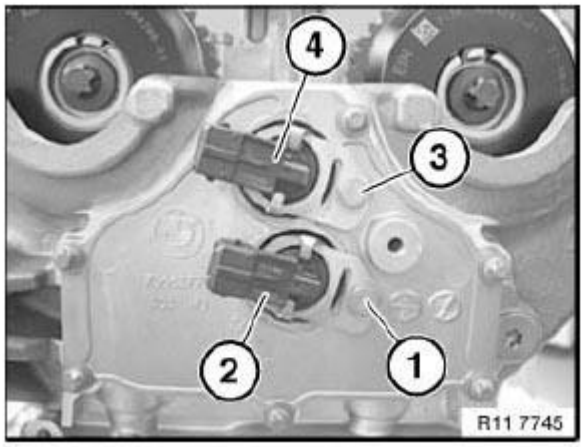

Fig. 368: Identifying Solenoid Valves And Screws
Courtesy of BMW OF NORTH AMERICA, INC.

Unfasten screws (1 and 3).

Tightening torque 11 36 3AZ, see **11 36 VARIABLE CAMSHAFT CONTROL**

Pull out solenoid valves (2 and 4).

Installation:

Replace O-rings (1 and 2) on solenoid valve .

Installation:

To install solenoid valves, coat both O-rings with engine oil.

If the solenoid valve is to be reused, the filter strainer (see arrow) must be cleaned.

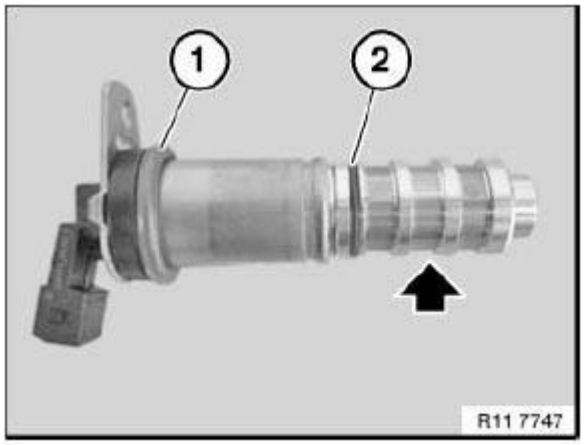

Fig. 369: Identifying O-Rings
Courtesy of BMW OF NORTH AMERICA, INC.

If a filter element is clogged with dirt, the filter element (filter strainer) may be removed.

Release filter elements (1) at contact edges.

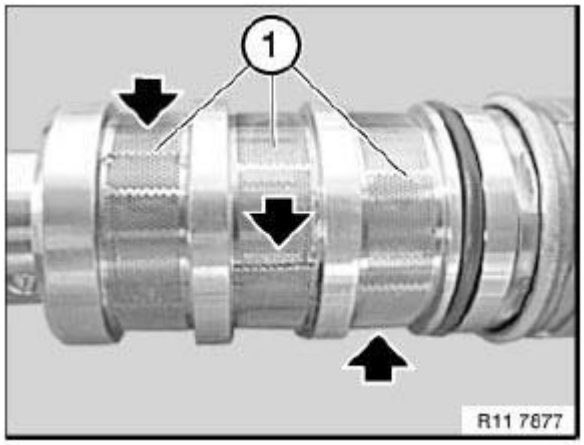

Fig. 370: Identifying Filter Elements
Courtesy of BMW OF NORTH AMERICA, INC.

Bend open welding spots on filter element (1) with a screwdriver (2) in direction of arrow until welding spots are opened.

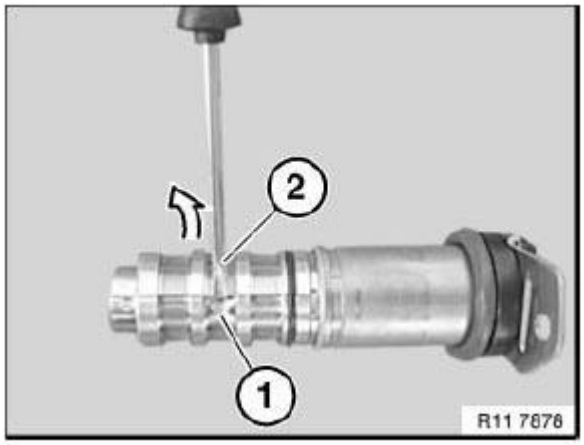

Fig. 371: Bending Open Welding Spots On Filter Element
Courtesy of BMW OF NORTH AMERICA, INC.

Avoid damaging, e.g. notches or scratches, the solenoid valve housing (see arrows).

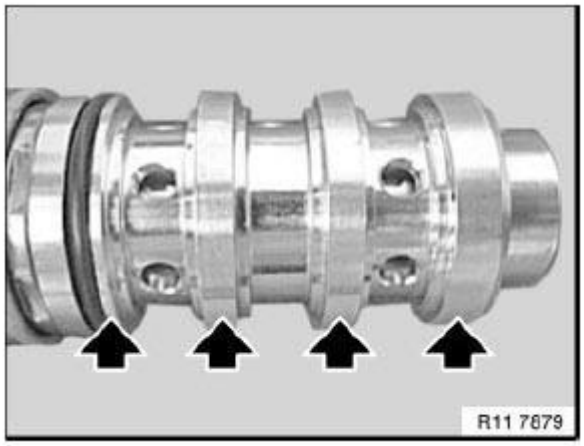

Fig. 372: Identifying Solenoid Valve Damage Area
Courtesy of BMW OF NORTH AMERICA, INC.

Carefully insert solenoid valves (2 and 4) up to stop.

Ensure correct installation position.

Insert screws (1 and 3) and tighten down.

Tightening torque 11 36 3AZ, see **11 36 VARIABLE CAMSHAFT CONTROL**

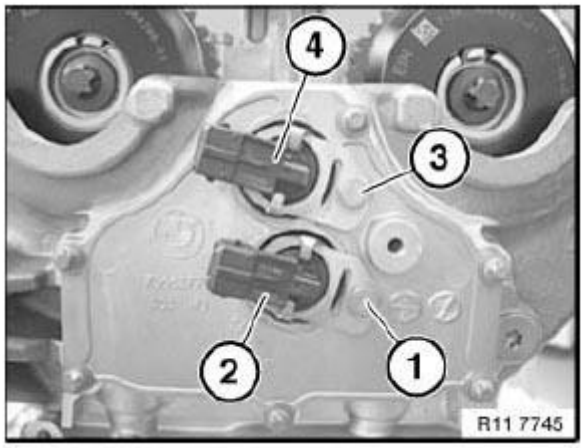

Fig. 373: Identifying Solenoid Valves And Screws
Courtesy of BMW OF NORTH AMERICA, INC.

Assemble engine.

Now clear the fault memory.

Check function of DME control unit.

11 36 720 REMOVING AND INSTALLING/REPLACING BOTH SOLENOID VALVES ON RIGHT SIDE (N63)

IMPORTANT: Always check that the solenoid valves are clean during removal and installation.

Possible malfunctions if valves are contaminated:

- **Rough running**
- **OBD incorrect entry**
- **Poor exhaust gas values**
- **Low engine power**

IMPORTANT: Risk of damage!

Do not clean solenoid valves with compressed air.

Solenoid valves, cylinders 1-4

Necessary preliminary tasks:

- Read out fault memory in DME control unit
- Switch off ignition

- Remove right **intercooler** . See **17 51 001 REMOVING AND INSTALLING/REPLACING LEFT INTERCOOLER (N63)** or **17 51 001 REMOVING AND INSTALLING/REPLACING RIGHT INTERCOOLER (N63)** .
- Release holder for electropneumatic pressure converter (EPPC) and carefully press to one side

NOTE: Solenoid valve (4) controls the inlet adjustment unit.

Solenoid valve (2) controls the exhaust adjustment unit.

Unlock plug connections of solenoid valves (2 and 4) and disconnect.

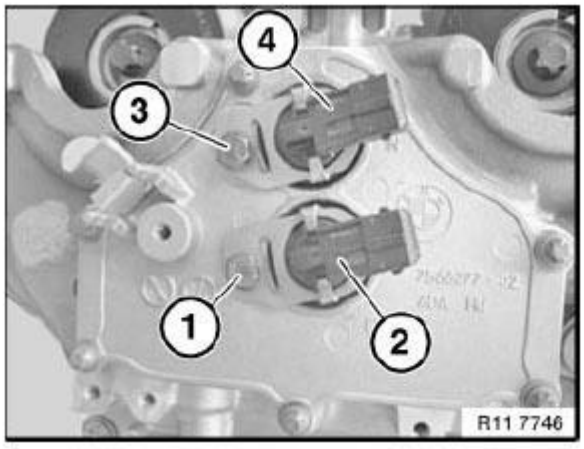

Fig. 374: Identifying Solenoid Valves And Screws
Courtesy of BMW OF NORTH AMERICA, INC.

Installation:

Plug connections must snap audibly into place!

Unfasten screws (1 and 3).

Tightening torque 11 36 3AZ, see **11 36 VARIABLE CAMSHAFT CONTROL**

Pull out solenoid valves (2 and 4).

Installation:

Replace O-rings (1 and 2) on solenoid valve .

Installation:

To install solenoid valves, coat both O-rings with engine oil.

If the solenoid valve is to be reused, the filter strainer (see arrow) must be cleaned.

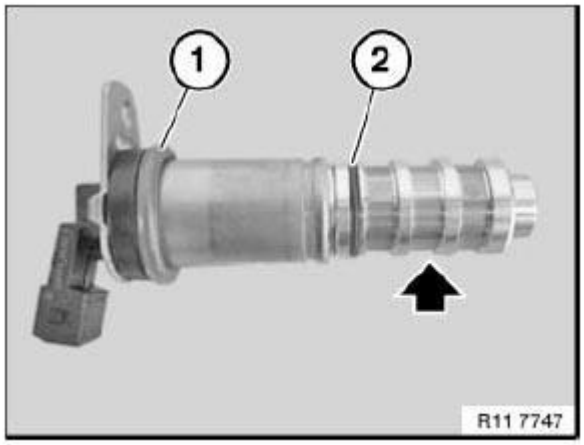

Fig. 375: Identifying O-Rings
Courtesy of BMW OF NORTH AMERICA, INC.

NOTE: **If a filter element is clogged with dirt, the filter element (filter strainer) may be removed.**
Release filter elements (1) at contact edges.

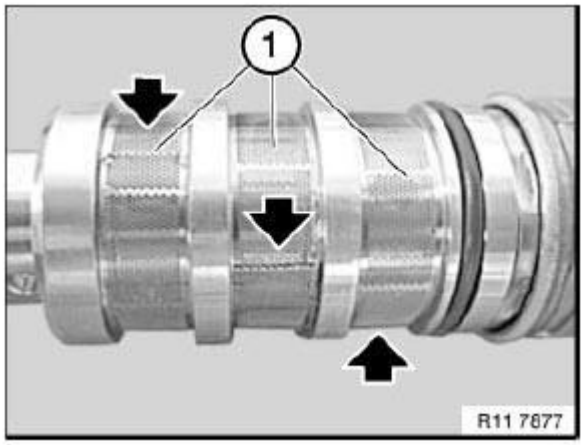

Fig. 376: Identifying Filter Elements
Courtesy of BMW OF NORTH AMERICA, INC.

Bend open welding spots on filter element (1) with a screwdriver (2) in direction of arrow until welding spots are opened.

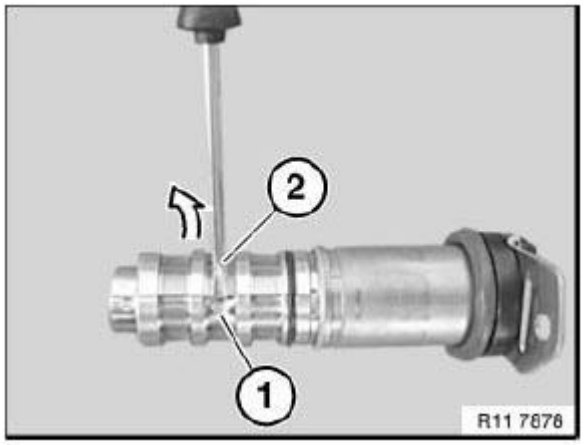

Fig. 377: Bending Open Welding Spots On Filter Element
Courtesy of BMW OF NORTH AMERICA, INC.

Avoid damaging, e.g. notches or scratches, the solenoid valve housing (see arrows).

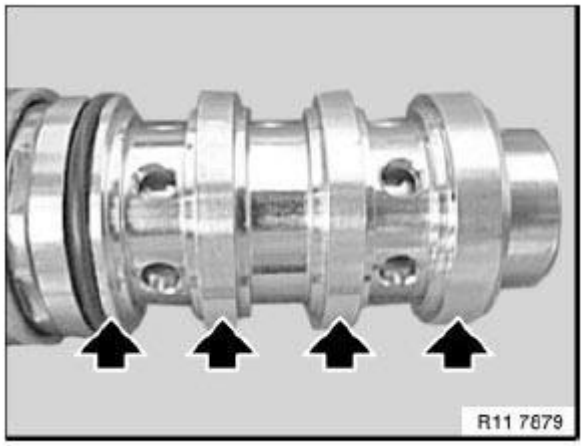

Fig. 378: Identifying Solenoid Valve Damage Area
Courtesy of BMW OF NORTH AMERICA, INC.

Carefully insert solenoid valves (2 and 4) up to stop.

Ensure correct installation position.

Insert screws (1 and 3) and tighten down.

Tightening torque 11 36 3AZ, see **11 36 VARIABLE CAMSHAFT CONTROL**

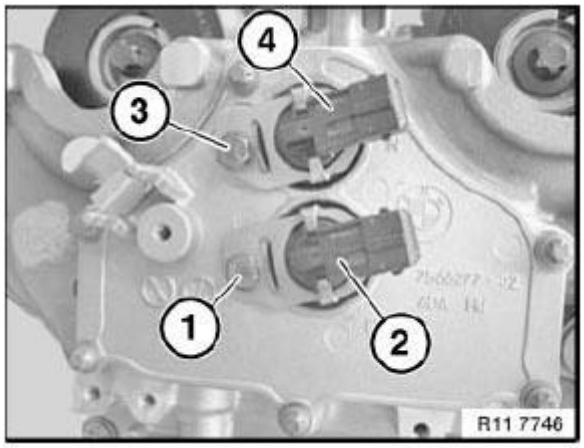

Fig. 379: Identifying Solenoid Valves And Screws
Courtesy of BMW OF NORTH AMERICA, INC.

Assemble engine.

Now clear the fault memory.

Check function of DME control unit.

OIL SUPPLY

11 40 000 CHECKING ENGINE OIL PRESSURE

Special tools required:

- **11 4 050**
- **13 3 061**
- **13 3 063**
- **13 6 051**
- **13 6 054**

See **ENGINE - SPECIAL TOOLS (N54, N63)** .

See **FUEL SYSTEM - SPECIAL TOOLS** .

WARNING: Danger of scalding!

NOTE: To check the engine oil pressure, remove the oil pressure switch and install and connect the special tool.

NOTE: A small amount of engine oil emerges when the oil pressure switch is removed.

Have a cleaning cloth ready .

Necessary preliminary tasks:

- Follow BMW diagnosis instruction
- Remove **oil pressure switch** . See **12 61 280 REMOVING AND INSTALLING/REPLACING OIL PRESSURE SENSOR (N63)** .

Special tool 11 4 050 is fitted with a sealing ring (1).

IMPORTANT: Tightening torque of special tool 11 4 050 max. 20 Nm.

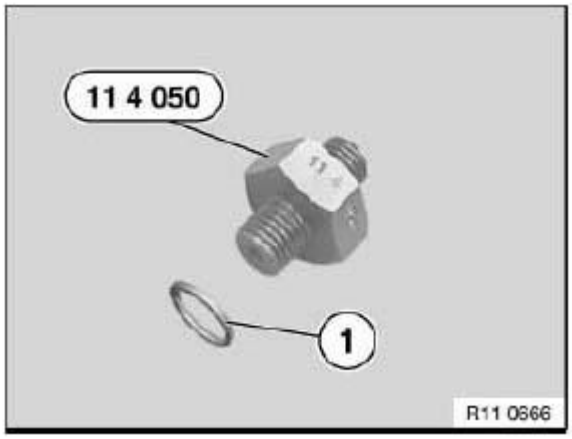

Fig. 380: Identifying Special Tool (11 4 050) With Sealing Ring
Courtesy of BMW OF NORTH AMERICA, INC.

Screw special tool 11 4 050 into crankcase to max. 20 Nm.

Secure union nut (1) of special tool 13 3 063 to max. 15 Nm.

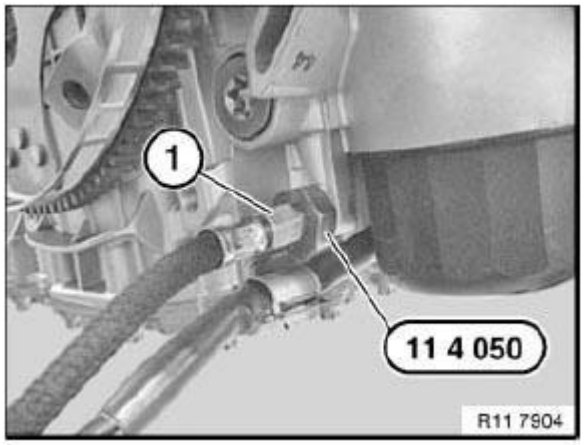

Fig. 381: Identifying Special Tool (11 4 050) With Union Nut
Courtesy of BMW OF NORTH AMERICA, INC.

Checking engine oil pressure with DIS Tester

Screw special tool 13 6 054 with sealing ring (1) into special tool 13 6 051 and connect to DIS Tester.

Checking engine oil pressure with pressure gauge

Connect special tool 13 3 063 to special tool 13 3 061 (pressure gauge).

Start engine and check engine oil pressure.

Specified value .

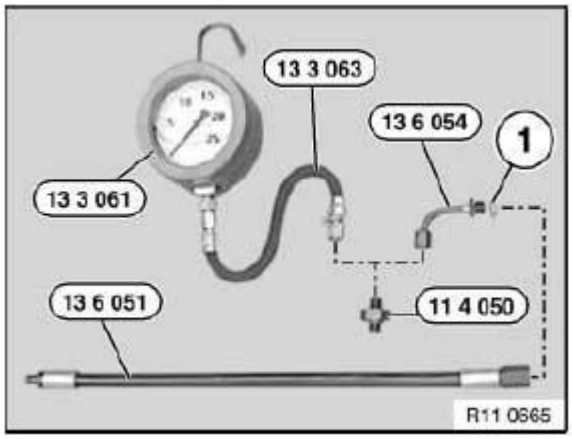

Fig. 382: Identifying Special Tool Kit
Courtesy of BMW OF NORTH AMERICA, INC.

OIL PUMP WITH FILTER AND DRIVE

11 41 000 REMOVING AND INSTALLING/REPLACING OIL PUMP (N63)

Special tools required:

- **00 9 120**
- **11 7 201**
- **11 8 920**
- **11 9 280**
- **51 0 342**

See **MAINTENANCE AND GENERAL INFORMATION - SPECIAL TOOLS** .

See **ENGINE - SPECIAL TOOLS (N54, N63)** .

See **BODY EQUIPMENT - SPECIAL TOOLS** .

IMPORTANT: All the adjustment operations on the chain drive must be observed.

A timing chain which is tensioned too tautly can cause noises in the chain drive.

A timing chain that is too slack can cause the timing chain to jump.

Risk of damage in oil pump drive.

Necessary preliminary tasks:

- Drain **engine oil**.
- Remove **upper oil sump section**.

Unscrew nuts (2).

Tightening torque: 11 41 1AZ, see **11 41 OIL PUMP WITH STRAINER AND DRIVE**

Remove intake pipe (1).

Installation:

Replace O-ring.

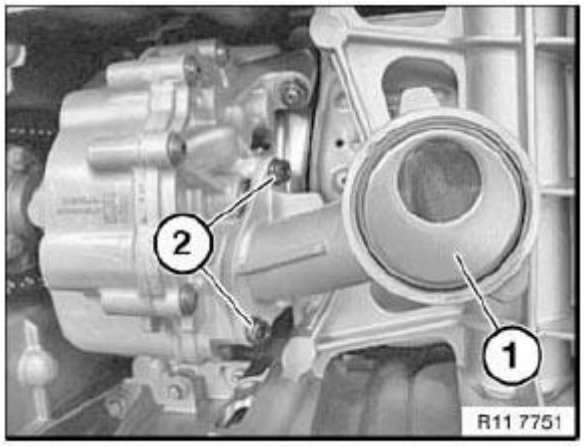

Fig. 383: Identifying Intake Pipe Nut
Courtesy of BMW OF NORTH AMERICA, INC.

Release all nuts (1) with special tool 11 7 201.

Tightening torque 11 41 5AZ . See **11 41 OIL PUMP WITH STRAINER AND DRIVE**

Remove oil pump sprocket wheel.

NOTE: Picture shows engine removed.

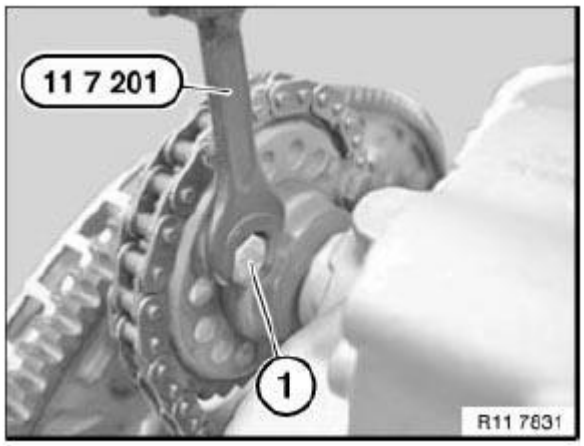

Fig. 384: Removing Oil Pump Sprocket Wheel Nuts
Courtesy of BMW OF NORTH AMERICA, INC.

Unscrew nuts (1).

Release screws, remove oil pump (1) with aid of a second person.

Installation:

Replace screws.

Tightening torque 11 41 2AZ, see **11 41 OIL PUMP WITH STRAINER AND DRIVE**

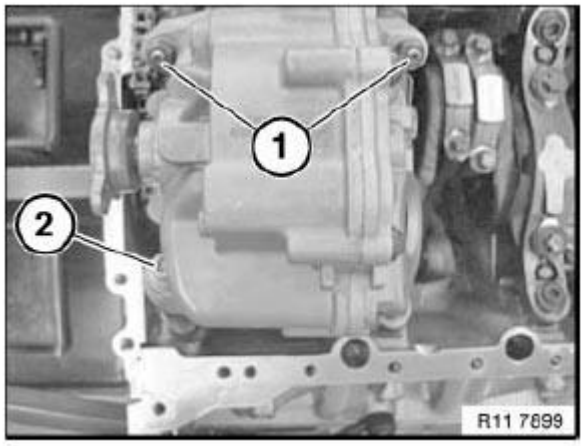

Fig. 385: Identifying Oil Pump With Nuts
Courtesy of BMW OF NORTH AMERICA, INC.

Detach oil lines (1) upwards in direction of arrow.

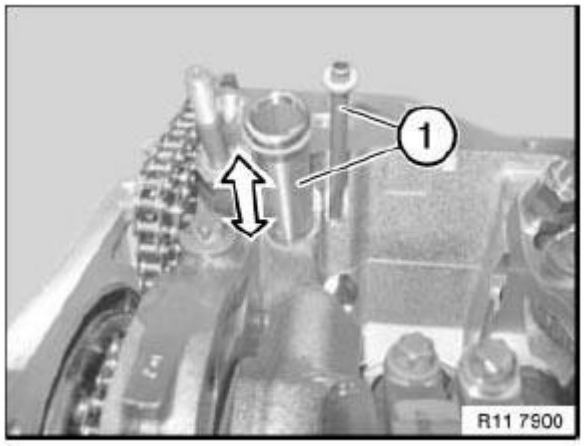

Fig. 386: Detaching Oil Lines
Courtesy of BMW OF NORTH AMERICA, INC.

Installation:

Replace sealing rings (1).

Apply light coat of oil to sealing ring (1).

Coat sealing ring (2) with suitable antiseize agent.

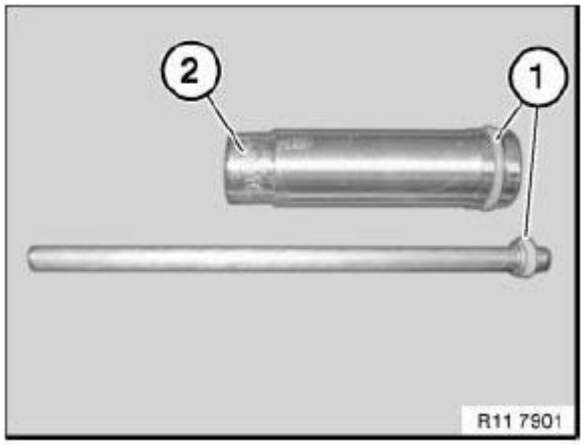

Fig. 387: Identifying Sealing Ring
Courtesy of BMW OF NORTH AMERICA, INC.

Installation:

Replace O-ring (1) for oil feed line.

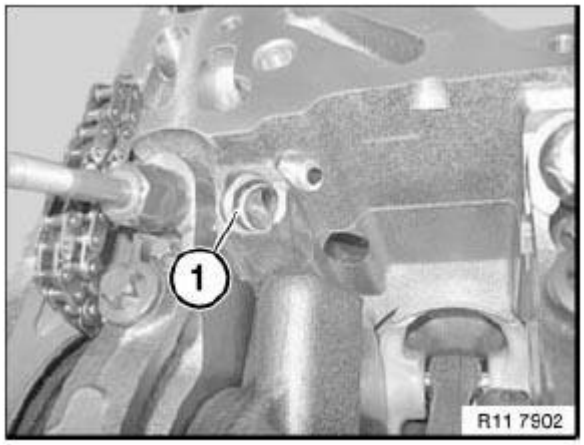

Fig. 388: Identifying O-Ring
Courtesy of BMW OF NORTH AMERICA, INC.

Fit oil lines (1) in direction of arrow.

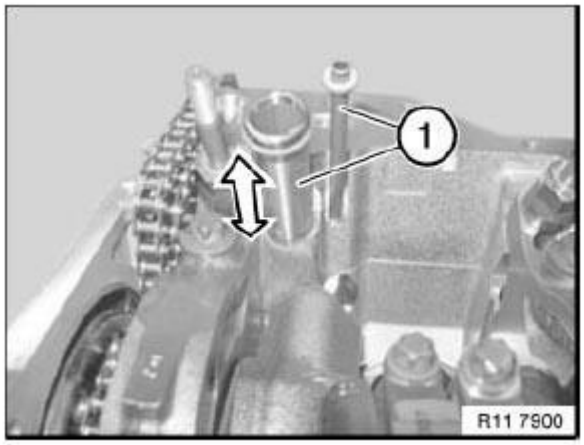

Fig. 389: Detaching Oil Lines
Courtesy of BMW OF NORTH AMERICA, INC.

Installation:

If the oil pump is replaced, it will be necessary to modify the oil deflector.

Release screws (1).

Tightening torque: 11 41 6AZ, see **11 41 OIL PUMP WITH STRAINER AND DRIVE**

Modify oil deflector (2).

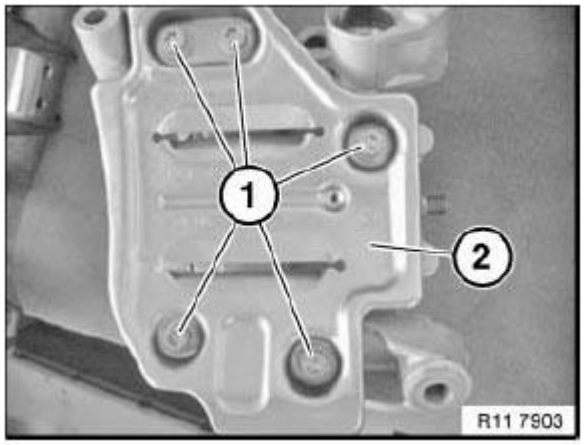

Fig. 390: Identifying Oil Deflector And Screws
Courtesy of BMW OF NORTH AMERICA, INC.

Mount special tool 11 8 920 on special tool 11 9 280.

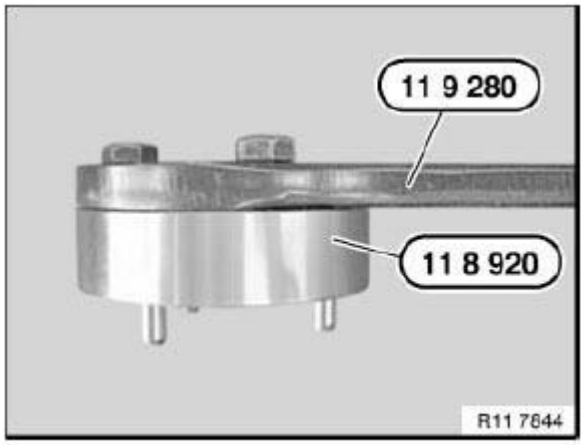

Fig. 391: Identifying Special Tool 11 8 920 On Special Tool 11 9 280
Courtesy of BMW OF NORTH AMERICA, INC.

IMPORTANT: Left-hand thread on oil pump screw connection.
Do not grip pump drive with a pair of pliers risk of damage .

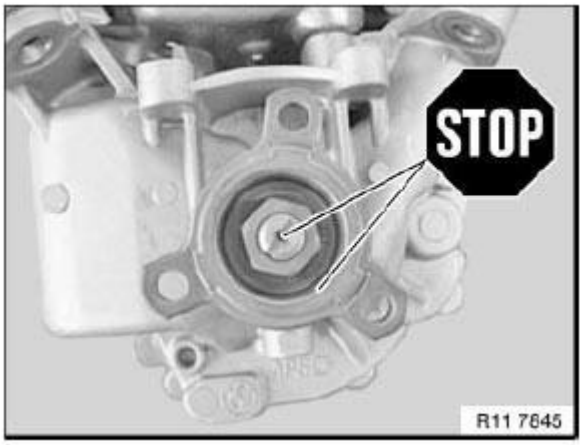

Fig. 392: Identifying Oil Pump Screw
Courtesy of BMW OF NORTH AMERICA, INC.

IMPORTANT: Nut (1) has left-hand thread.

Position special tool 11 8 920 on sprocket wheel.

Slacken nut (1).

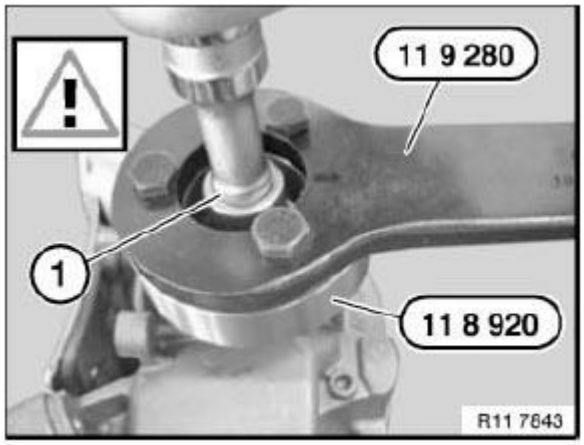

Fig. 393: Positioning Special Tool (11 8 920) On Sprocket Wheel
Courtesy of BMW OF NORTH AMERICA, INC.

Installation:

Check dihedron on pump shaft (1) for damage.

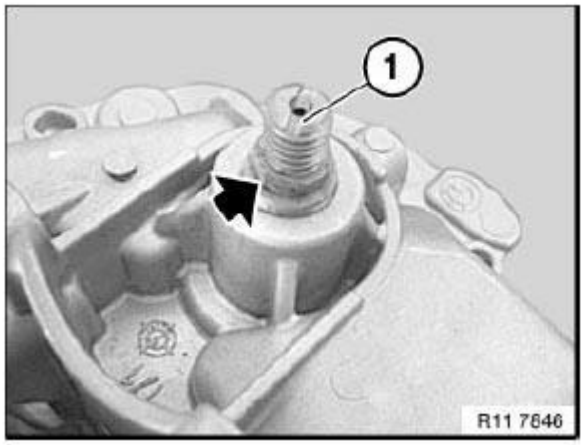

Fig. 394: Identifying Pump Shaft Damage Area
Courtesy of BMW OF NORTH AMERICA, INC.

IMPORTANT: Nut (1) has left-hand thread.

Grip pump with assistance of a second person.

Secure nut (1) with special tool 00 9 120.

Tightening torque: 11 41 4AZ, see 11 41 OIL PUMP WITH STRAINER AND DRIVE

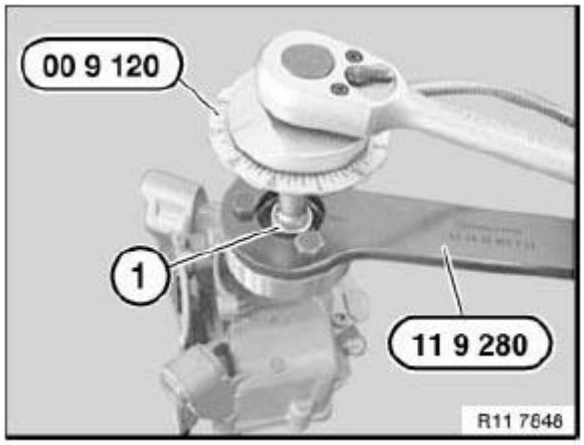

Fig. 395: Identifying Special Tool (00 9 120 And 11 9 280)
Courtesy of BMW OF NORTH AMERICA, INC.

Join and secure nuts (1).

Tightening torque 11 41 2AZ, see **11 41 OIL PUMP WITH STRAINER AND DRIVE**

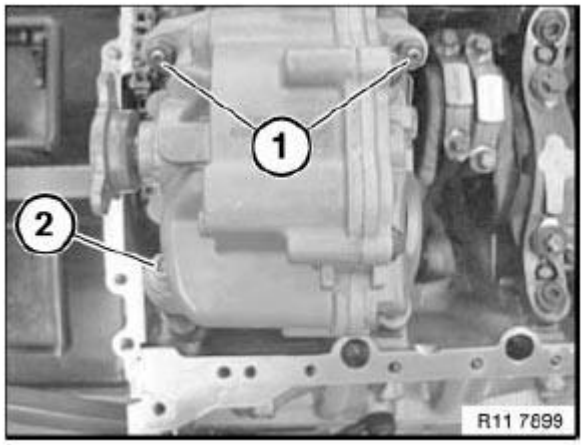

Fig. 396: Identifying Oil Pump With Nuts
Courtesy of BMW OF NORTH AMERICA, INC.

Install oil pump sprocket wheel.

Secure all nuts (1) with special tool 11 7 201.

Tightening torque 11 41 5AZ, see **11 41 OIL PUMP WITH STRAINER AND DRIVE**

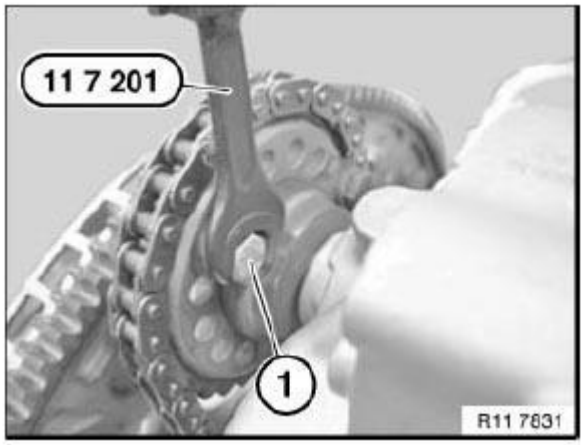

Fig. 397: Removing Oil Pump Sprocket Wheel Nuts
Courtesy of BMW OF NORTH AMERICA, INC.

Adjust oil pump timing chain .

Pretension oil pump adjusting sleeve (1) with a hexagon socket screw key.

Adjustment value **10 mm ±2** .

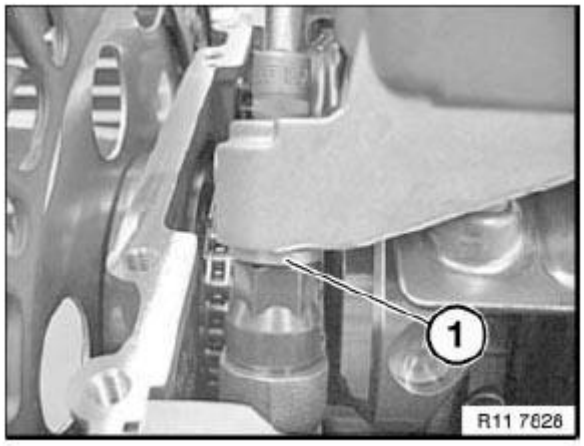

Fig. 398: Identifying Oil Pump Adjusting Sleeve
Courtesy of BMW OF NORTH AMERICA, INC.

Minimally pretension timing chain (1) with special tool 51 0 342.

Read off and make a note of measured value A on special tool 51 0 342.

IMPORTANT: Do not use force to pretension timing chain (1).

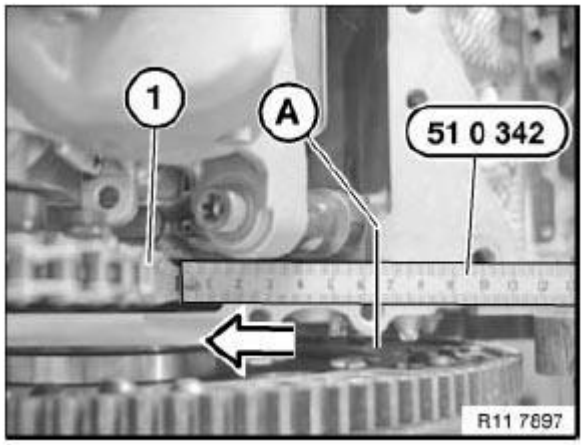

Fig. 399: Identifying Pretension Timing Chain With Special Tool (51 0 342)
Courtesy of BMW OF NORTH AMERICA, INC.

Using a screwdriver (1), pretension timing chain to minimal extent in direction of arrow.

Read off and make a note of measured value B on special tool 51 0 342.

IMPORTANT: Do not use force to pretension timing chain.

Measured value **A** minus measured value **B** produces the adjustment value.

Adjustment value **10 mm ±2** .

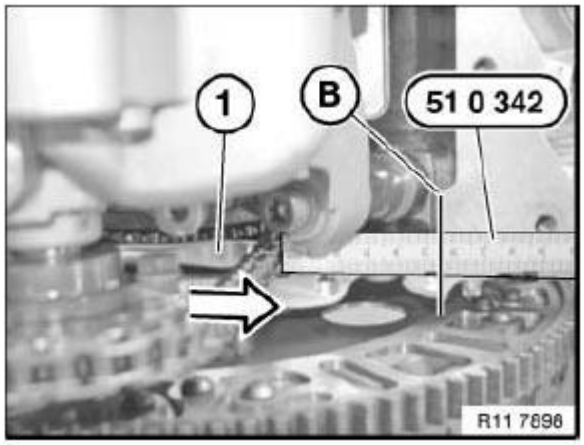

Fig. 400: Identifying Pretension Timing Chain With Special Tool (51 0 342)
Courtesy of BMW OF NORTH AMERICA, INC.

Procedure on installed engine:

Upper oil sump has been installed.

Position drag pointer (1) of special tool 2 213 485 on oil pump chain.

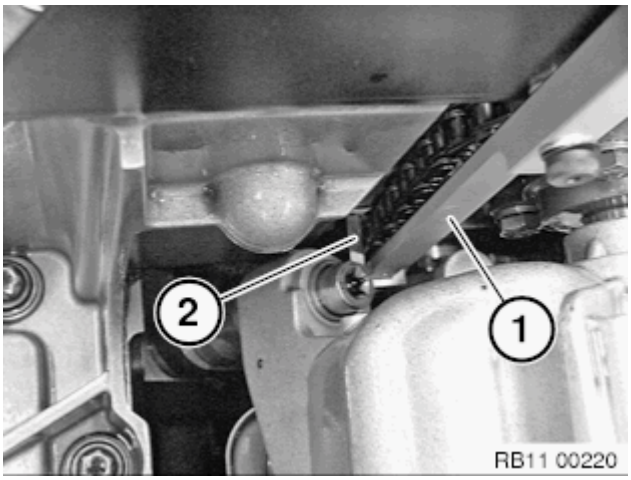

Fig. 401: Positioning Drag Pointer Of Special Tools
Courtesy of BMW OF NORTH AMERICA, INC.

Installation note: Attachment point (1) N63 / S63. Attachment point (2) N74.

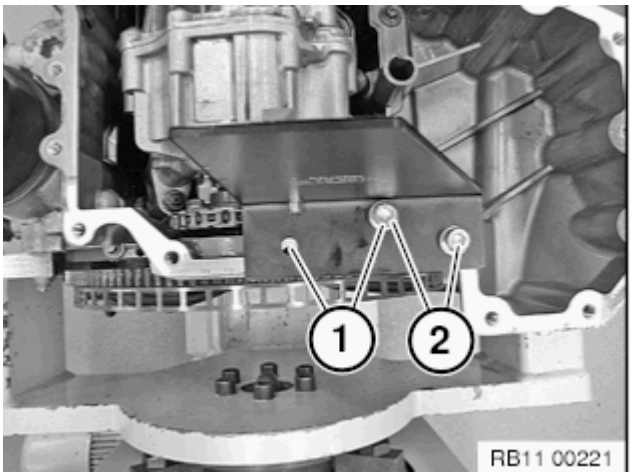

Fig. 402: Identifying Attachment Point
Courtesy of BMW OF NORTH AMERICA, INC.

IMPORTANT: Do not use force preload timing chain.

Push drag pointer (1) to the left and right until value has been determined. Adjustment value 10 mm +2.

Adjust oil pump timing chain.

Pretension oil pump adjusting sleeve (1) with a hexagon socket wrench. Adjustment value **10 mm +2** .

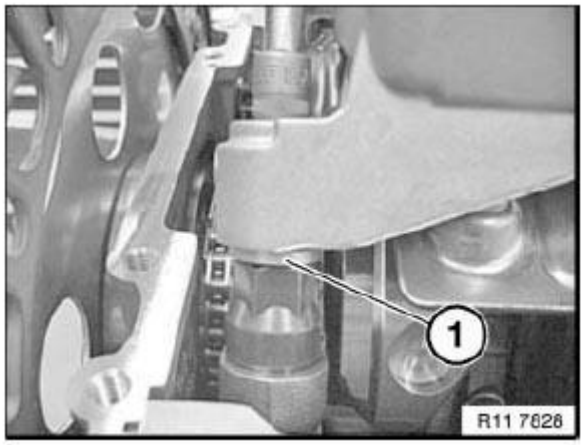

Fig. 403: Identifying Oil Pump Adjusting Sleeve
Courtesy of BMW OF NORTH AMERICA, INC.

NOTE: Graphic without top oil sump

Join and secure screw (2).

Tightening torque 11 41 2AZ, see **11 41 OIL PUMP WITH STRAINER AND DRIVE**

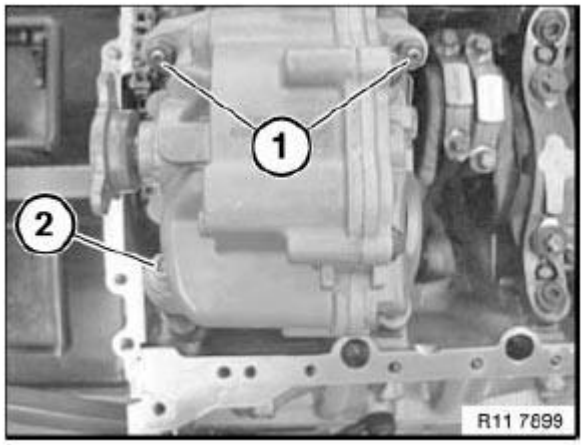

Fig. 404: Identifying Oil Pump With Nuts
Courtesy of BMW OF NORTH AMERICA, INC.

Assemble engine.

11 41 150 REMOVING AND INSTALLING/REPLACING ROLLER CHAIN FOR OIL PUMP DRIVE (N63)

Special tools required:

- **11 7 201**

- **22 13 485**

See **MAINTENANCE AND GENERAL INFORMATION - SPECIAL TOOLS** .

See **ENGINE AND GEARBOX SUSPENSION - SPECIAL TOOLS (N54, N63)** .

Necessary preliminary tasks:

- Drain **engine oil**.
- Remove **flywheel**.
- Remove **bottom of oil sump**.

NOTE: Support bush (2) is included in delivery specification.

If the crankshaft seal (1) is stored for more than six months without the support sleeve (2), its operational reliability will no longer be guaranteed. **Crankshaft seal (1) must not be reused in this case!** Support bush (2) remains in the crankshaft seal (1) and is used as a slip bush during described installation described below.

IMPORTANT: The sealing lip of the crankshaft seal (1) is very sensitive and must not be kinked.

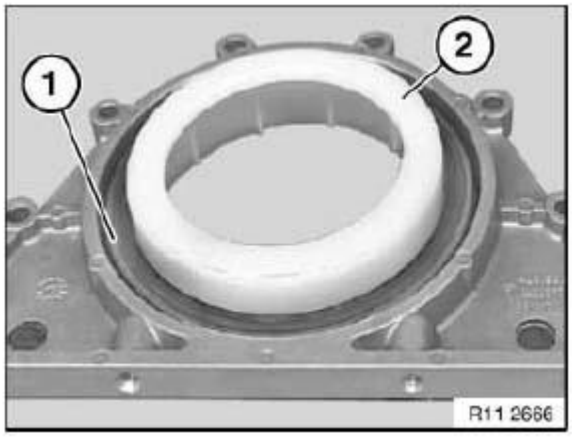

Fig. 405: Identifying Radial Shaft Seal
Courtesy of BMW OF NORTH AMERICA, INC.

Unscrew nuts (2). Tightening torque: **11 41 1 AZ** . Remove intake pipe (1).

Installation note: Replace O-ring.

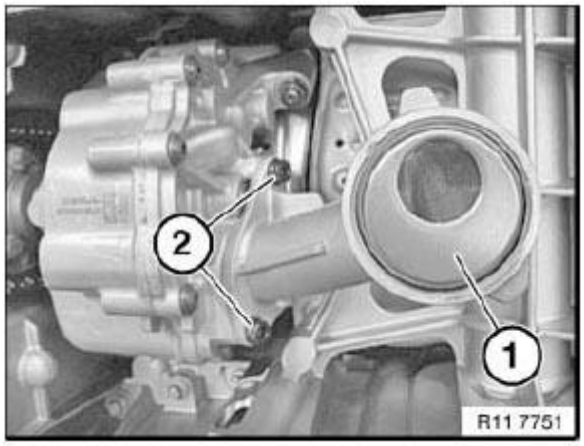

Fig. 406: Identifying Intake Pipe Nut
Courtesy of BMW OF NORTH AMERICA, INC.

Release all nuts (1) using special tool 11 7 201. Tightening torque: **11 41 5AZ.** . Remove oil pump drive gear.

NOTE: Graphic shows engine removed

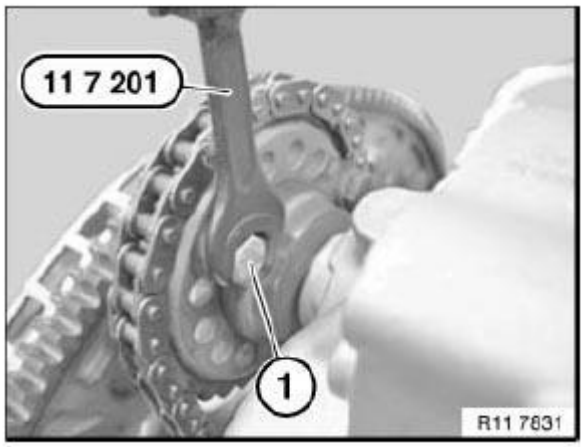

Fig. 407: Removing Oil Pump Sprocket Wheel Nuts
Courtesy of BMW OF NORTH AMERICA, INC.

Unscrew nuts (1). Release screws, remove oil pump (1) with aid of a second person.

Installation note: Replace screws. Tightening torque: **11 41 2AZ.**

NOTE: Graphic without top oil sump

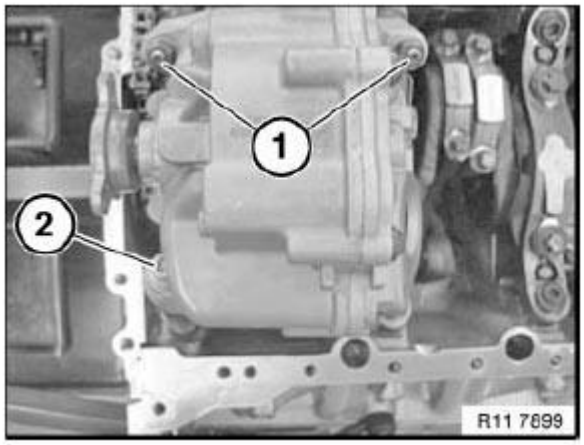

Fig. 408: Identifying Oil Pump With Nuts
Courtesy of BMW OF NORTH AMERICA, INC.

Pull off engine oil line (1) upwards in direction of arrow.

NOTE: Graphic without top oil sump

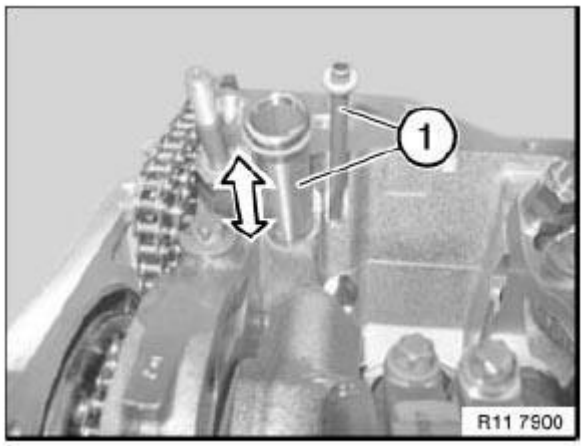

Fig. 409: Detaching Oil Lines
Courtesy of BMW OF NORTH AMERICA, INC.

Installation note: Replace sealing rings (1). Lightly oil sealing ring 1 (1). Coat engine oil pipe (2) with suitable lubricant.

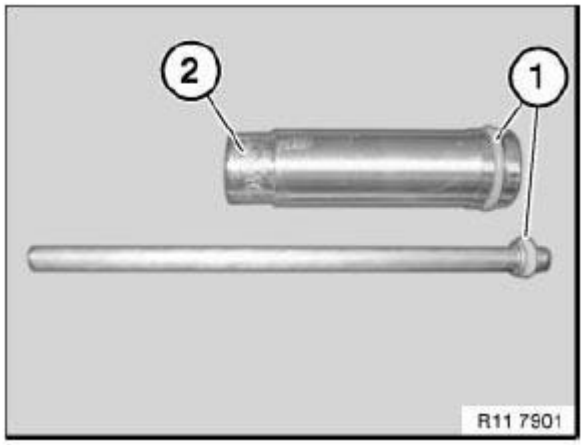

Fig. 410: Identifying Sealing Ring
Courtesy of BMW OF NORTH AMERICA, INC.

Installation note: Replace O-ring (1) for oil feed line.

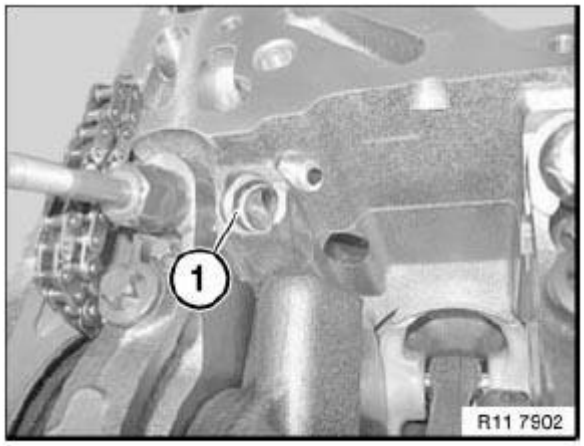

Fig. 411: Identifying O-Ring
Courtesy of BMW OF NORTH AMERICA, INC.

Fit engine oil pipe (1) in direction of arrow.

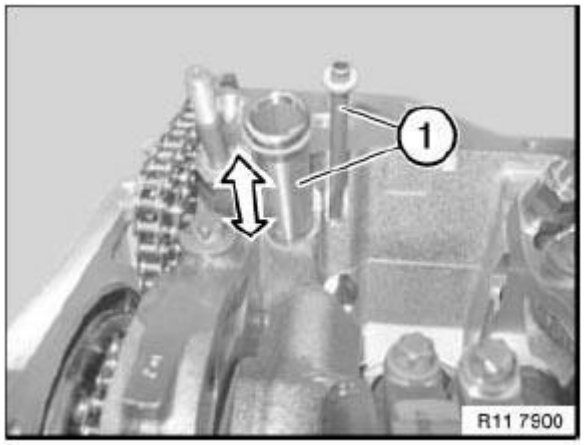

Fig. 412: Detaching Oil Lines
Courtesy of BMW OF NORTH AMERICA, INC.

Feed out roller chain (1) via the crankshaft (2).

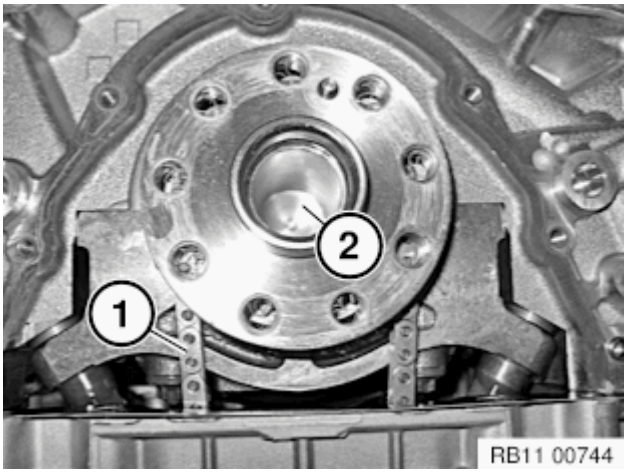

Fig. 413: Feeding Out Roller Chain
Courtesy of BMW OF NORTH AMERICA, INC.

Installation note: Mount new roller chain (1). Install oil pump and adjust.

Procedure on installed engine:

Upper oil sump has been installed.

Position drag pointer (1) of special tool 2 213 485 on oil pump chain.

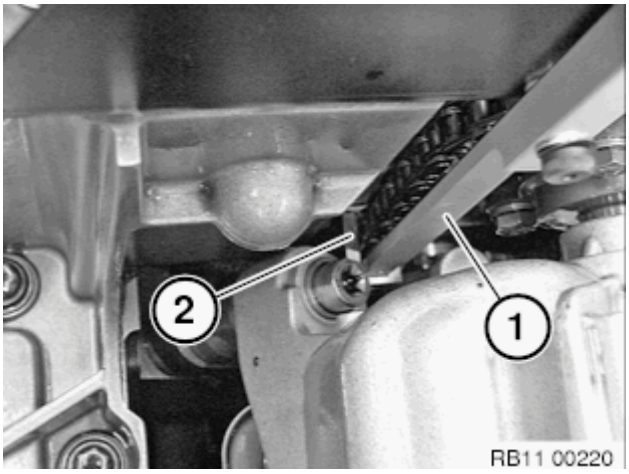

Fig. 414: Positioning Drag Pointer Of Special Tool (2 213 485)
Courtesy of BMW OF NORTH AMERICA, INC.

Installation note: Attachment point (1) N63O0 / N63O1/S63O0. Attachment point (2) N74.

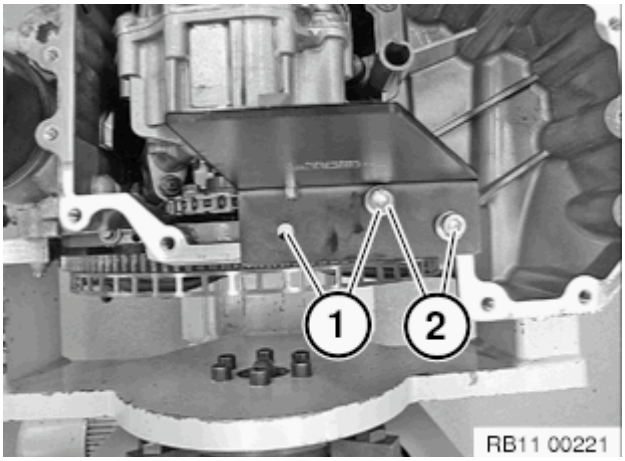

Fig. 415: Identifying Attachment Points
Courtesy of BMW OF NORTH AMERICA, INC.

IMPORTANT: Do not use force preload timing chain.

Push drag pointer (1) to the left and right until value has been determined. Adjustment value **10 mm +2** .

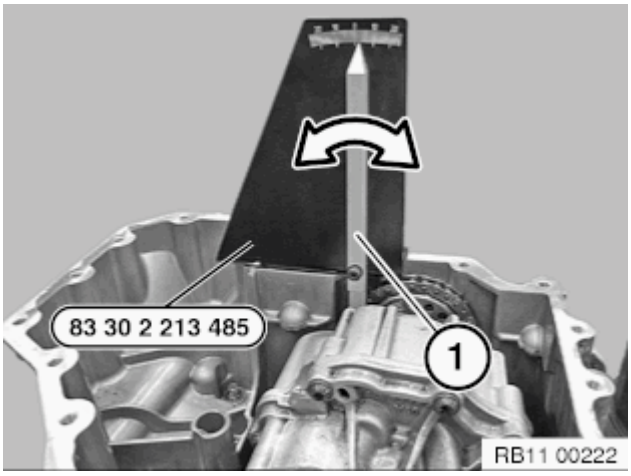

Fig. 416: Pushing Drag Pointer To Left
Courtesy of BMW OF NORTH AMERICA, INC.

Adjust oil pump timing chain.

Pretension oil pump adjusting sleeve (1) with a hexagon socket wrench. Adjustment value **10 mm +2** .

NOTE: Graphic without top oil sump

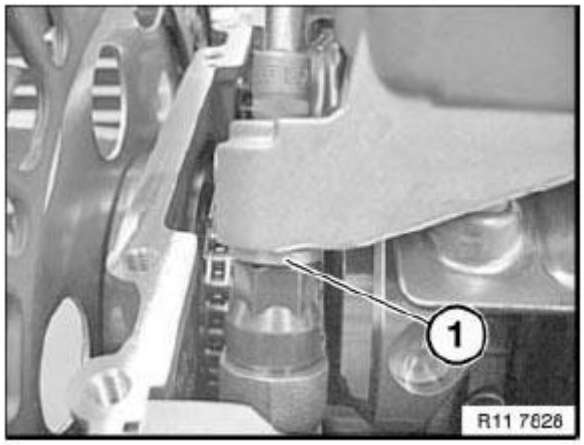

Fig. 417: Identifying Oil Pump Adjusting Sleeve
Courtesy of BMW OF NORTH AMERICA, INC.

Join and secure screw (2). Tightening torque **11 41 2 AZ**

NOTE: Graphic without top oil sump

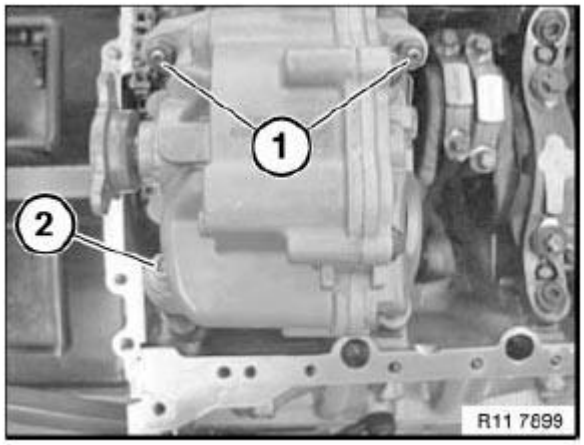

Fig. 418: Identifying Oil Pump With Nuts
Courtesy of BMW OF NORTH AMERICA, INC.

Installation note: Check fitting sleeves (1) for damage and correct installation position. Clean sealing surface (2) so that it is free from oil and grease. Coat contact edges on separating face along oil sump (see arrows) with Drei Bond 1209 2.1.

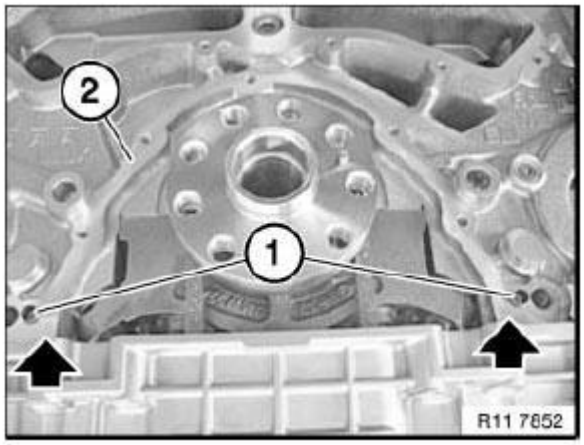

Fig. 419: Identifying dowel sleeves and sealing facex
Courtesy of BMW OF NORTH AMERICA, INC.

Installation note: Lightly oil running surface of crankshaft.

Fit end cover (1) with support bush (2) on crankshaft and push on carefully.

NOTE: Graphic shows (N62TU).

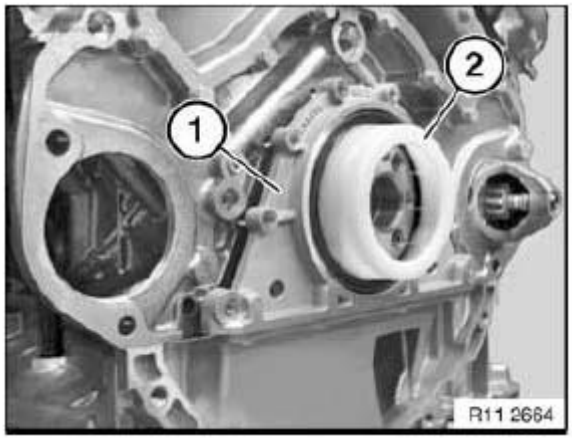

Fig. 420: Identifying Support Sleeve And Cover
Courtesy of BMW OF NORTH AMERICA, INC.

Insert screws (2) and initially tighten without play. Insert screws (1) and initially tighten without play. Tighten down bolts (2) from inside outwards.

Tightening torque **11 14 4AZ.**

Tighten down screws (1) from inside outwards.

Tightening torque **11 13 2AZ** .

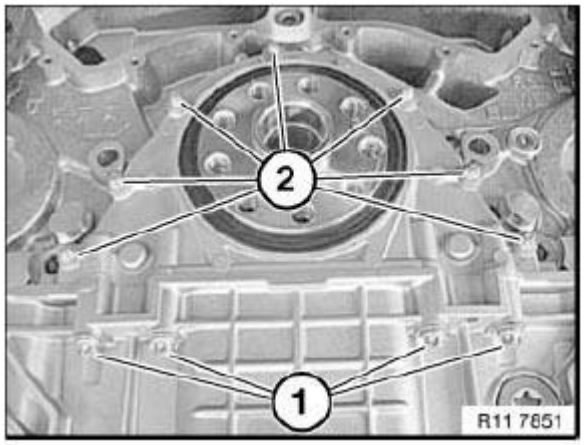

Fig. 421: Identifying Cover Screws
Courtesy of BMW OF NORTH AMERICA, INC.

Assemble engine.

OIL FILTER AND LINES

11 42 260 OIL RETURN COVER

IMPORTANT: Risk of fire .

In the event of oil leakage in the Vee, the leakage oil may be ignited on hot components.

Necessary preliminary tasks:

- Remove both **exhaust turbochargers** . See **11 65 025 Removing and installing/replacing exhaust turbocharger, right, cylinders 1-4 (N63)** and **11 65 030 Removing and installing/replacing exhaust turbocharger, left, cylinders 5-8 (N63)**.
- Remove **heat shield** at bottom.

Release banjo bolt (1).

Tightening torque: 11 42 10AZ, see **11 42 OIL FILTER AND PIPES**

Release screws (3).

Tightening torque: 11 65 6AZ, see **SUPERCHARGER**

Place vacuum reservoir (4) to one side.

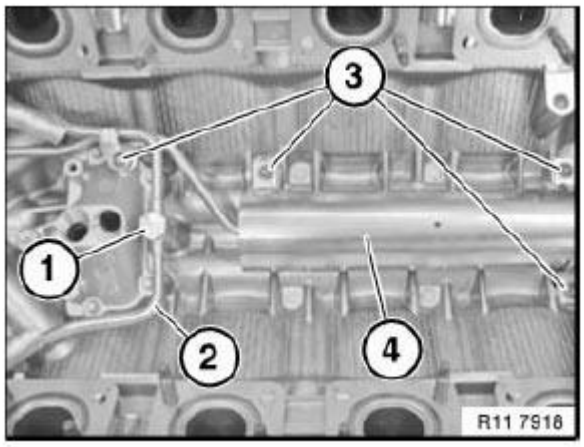

Fig. 422: Identifying Vacuum Reservoir, Banjo Bolt And Screws
Courtesy of BMW OF NORTH AMERICA, INC.

Release screws (1).

Tightening torque: 11 42 8AZ, see **11 42 OIL FILTER AND PIPES**

Remove oil return cover (2).

Installation:

Replace oil return cover.

Replace both O-rings.

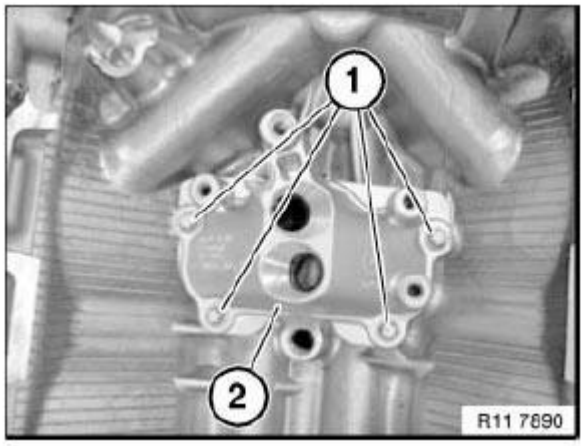

Fig. 423: Identifying Oil Return Cover With Screws
Courtesy of BMW OF NORTH AMERICA, INC.

Assemble engine.

WATER PUMP WITH DRIVE

11 51 000 REMOVING AND INSTALLING/REPLACING COOLANT PUMP (N63)

WARNING: Danger of scalding!

Only perform this work after engine has cooled down.

Recycling:

Catch and dispose of drained coolant in a suitable container.

Observe country-specific waste-disposal regulations.

IMPORTANT: If a coolant pump which has already been operated is reused, it must be filled immediately after being removed with coolant (mixture ratio 1:1 / water: coolant).

Necessary preliminary tasks:

- Drain **coolant** . See **17 00 008 DRAINING AND ADDING COOLANT IN RADIATOR (N62TU, N63)** .
- Remove **drive belt.**

Unlock and detach plug connections (1).

Unlock and detach all coolant hoses on coolant pump.

Release screws (2).

Tightening torque 11 51 1AZ, see **51 71 SEALS AND LOOSE BODY PARTS**

Lift out coolant pump with a swivelling movement.

Installation:

Replace seal .

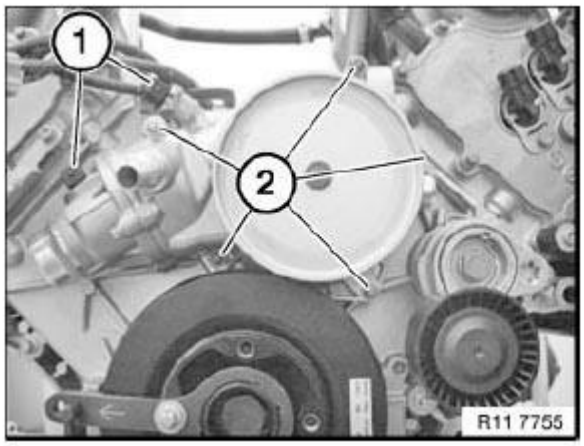

Fig. 424: Identifying Coolant Pump Screws
Courtesy of BMW OF NORTH AMERICA, INC.

NOTE: **Remove coolant thermostat from faulty coolant pump.**

Convert coolant thermostat to new coolant pump.

Tightening torque 11 53 1AZ, see THERMOSTAT AND CONNECTIONS

Installation:

Replace sealing ring .

Assemble engine.

Vent **cooling system** and check for water leaks. See **17 00 039 VENTING COOLING SYSTEM AND CHECKING FOR WATER LEAKS (N63)** .

THERMOSTAT AND CONNECTOR

11 53 000 REMOVING AND INSTALLING/REPLACING COOLANT THERMOSTAT (N63)

WARNING: Danger of scalding!

Only perform this work after engine has cooled down.

Recycling:

Catch and dispose of drained coolant in a suitable container.

Observe country-specific waste-disposal regulations.

Necessary preliminary tasks:

- Drain **coolant** . See **17 00 008 DRAINING AND ADDING COOLANT IN RADIATOR (N62TU, N63)** .
- Remove **FAN COWL** with electric fan.
- Remove **INTERCOOLER EXPANSION TANK** .
- Remove **coolant pump**.

Follow **instructions** for working on cooling system. See **17 00... INSTRUCTIONS FOR WORKING ON COOLING SYSTEM** .

Release plug connector (1) and pull off.

Unlock and detach coolant hose (2).

Unfasten nut.

Release screws.

Tightening torque 11 53 1AZ, see **THERMOSTAT AND CONNECTIONS**

Remove coolant thermostat (3).

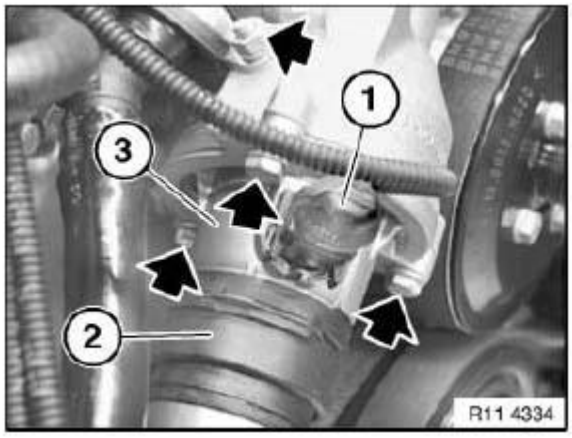

Fig. 425: Identifying Coolant Thermostat And Hose With Plug Connector
Courtesy of BMW OF NORTH AMERICA, INC.

NOTE: The coolant thermostat is integrated in the housing cap and can only be replaced as a complete unit.

Clean sealing surfaces.

Installation:

Replace sealing ring (1) .

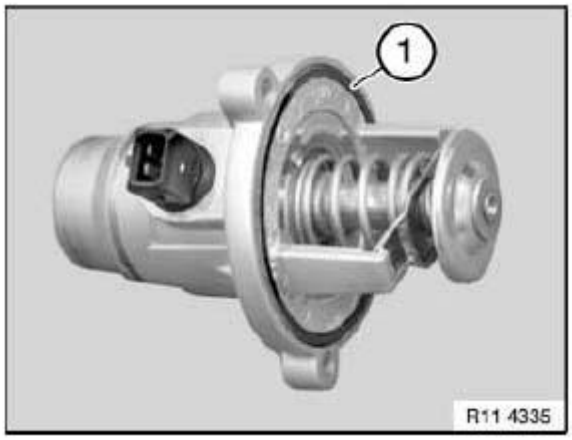

Fig. 426: Identifying Coolant Thermostat Sealing Ring
Courtesy of BMW OF NORTH AMERICA, INC.

Assemble engine.

Top up **coolant** .

Vent **cooling system** and check for water leaks.

11 53 090 REMOVING AND INSTALLING/REPLACING AUXILIARY WATER PUMP FOR EXHAUST TURBOCHARGER (N63)

WARNING: Danger of scalding!

Only perform this work after engine has cooled down.

Recycling:

Catch and dispose of drained coolant in a suitable container.

Observe country-specific waste-disposal regulations.

Necessary preliminary tasks:

- Remove intercooler **expansion tank** . See **ENGINE RADIATOR** .

Unclip coolant hose (1) from holder in direction of arrow.

Release screws (2).

Tightening torque 11 51 4AZ, see **51 71 SEALS AND LOOSE BODY PARTS**

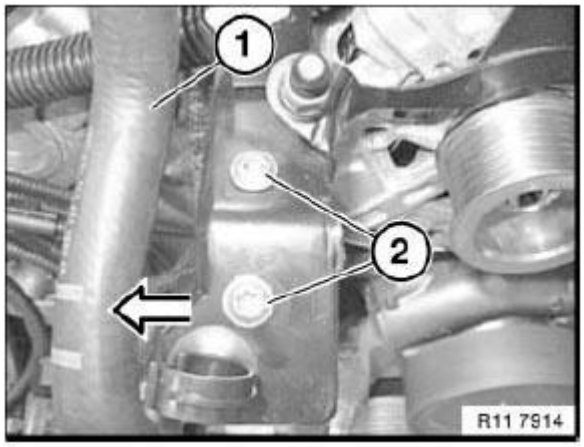

Fig. 427: Identifying Coolant Hose With Screws
Courtesy of BMW OF NORTH AMERICA, INC.

IMPORTANT: Risk of damage!

Coolant emerges when the coolant hoses are detached from the supplementary coolant pump.

Cover surrounding components and plug connections with suitable apparatus

Release hose clamps (1 and 2) with a suitable tool.

Disconnect plug connection (not shown).

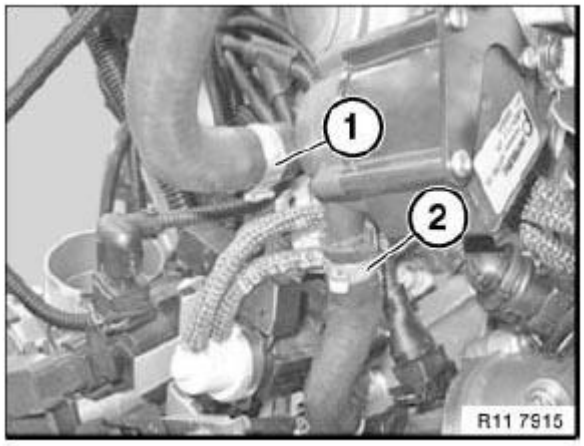

Fig. 428: Identifying Hose Clamps
Courtesy of BMW OF NORTH AMERICA, INC.

Installation:

Plug connection must snap audibly into place!

Lift out auxiliary coolant pump.

Assemble engine.

Top up **coolant** . See **17 00 008 DRAINING AND ADDING COOLANT IN RADIATOR (N62TU, N63)** .

Venting instructions must be observed **without fail** . See **17 00 039 VENTING COOLING SYSTEM AND CHECKING FOR WATER LEAKS (N63)** .

17..... REMOVING AND INSTALLING/REPLACING COOLANT PIPE ON CYLINDER HEAD COVER ON LEFT (N63)

WARNING: **Danger of scalding!**

Only perform these tasks on an engine that has cooled down.

Recycling:

Catch and dispose of drained coolant.

Observe country-specific waste-disposal regulations.

Necessary preliminary tasks:

- Remove **air filter housing on left** . See **13 71 030 REMOVING AND INSTALLING/REPLACING BOTH INTAKE FILTER HOUSINGS (N63)** .
- Remove **left intercooler** . See **17 51 001 REMOVING AND INSTALLING/REPLACING LEFT INTERCOOLER (N63)** or **17 51 001 REMOVING AND INSTALLING/REPLACING RIGHT INTERCOOLER (N63)** .
- Drain **coolant** . See **17 00 008 DRAINING AND ADDING COOLANT IN RADIATOR (N62TU, N63)** .

Unlock coolant hose (1) and detach from coolant pipe.

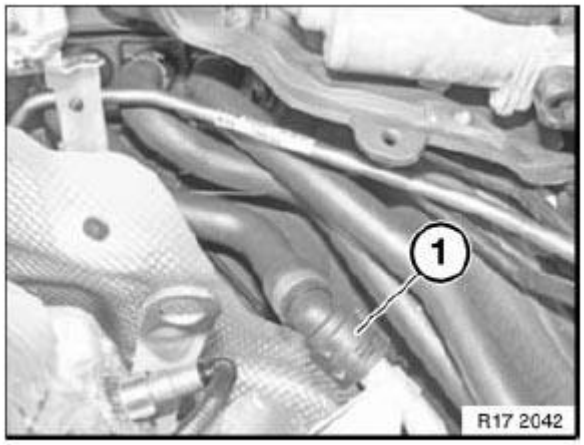

Fig. 429: Identifying Coolant Hose
Courtesy of BMW OF NORTH AMERICA, INC.

Release screws (1).

Tightening torque 17 10 3AZ, see **17 10 COOLANT**

Unclip coolant pipe (2) from holder (3).

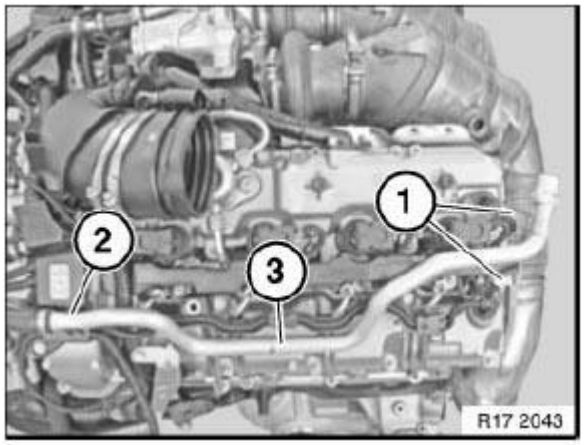

Fig. 430: Unclipping Coolant Pipe From Holder

Courtesy of BMW OF NORTH AMERICA, INC.

Unlock coolant hose (1) on coolant pump and detach.

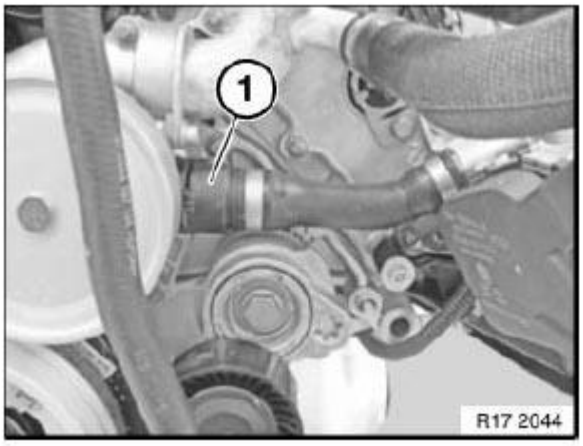

Fig. 431: Identifying Coolant Hose
Courtesy of BMW OF NORTH AMERICA, INC.

Pull off lug (1) on coolant pipe from crankcase.

Feed out coolant pipe (2) and remove.

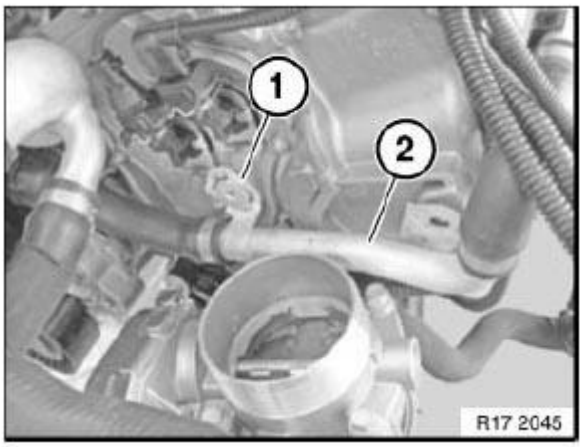

Fig. 432: Identifying Coolant Pipe And Lug
Courtesy of BMW OF NORTH AMERICA, INC.

Assemble engine.

Check cooling system for leaks.

INTAKE MANIFOLD

11 61 065 REMOVING AND INSTALLING/REPLACING LEFT INTAKE MANIFOLD (N63)

Special tools required:

- **00 0 200**

See **MAINTENANCE AND GENERAL INFORMATION - SPECIAL TOOLS** .

Necessary preliminary tasks:

- Remove complete front panel.
- Remove complete **cooling core with condenser** . See **17 11 000 REMOVING AND INSTALLING RADIATOR (N63)** .
- Remove **power steering pump** with bracket. See **32 41 037 REMOVING AND INSTALLING/REPLACING POWER STEERING PUMP FOR POWER STEERING GEAR WITH DYNAMIC DRIVE (N63)** or **32 41 033 REMOVING AND INSTALLING POWER STEERING PUMP FOR POWER STEERING GEAR WITH ACTIVE FRONT STEERING (N63)**
- Remove left **injection pipe** . See **13 53 205 REMOVING AND INSTALLING/REPLACING LEFT RAIL (N63)** .

Detach engine ventilation hose (1).

Unscrew nuts (2).

Tightening torque: 11 61 1AZ, see **INTAKE MANIFOLD**

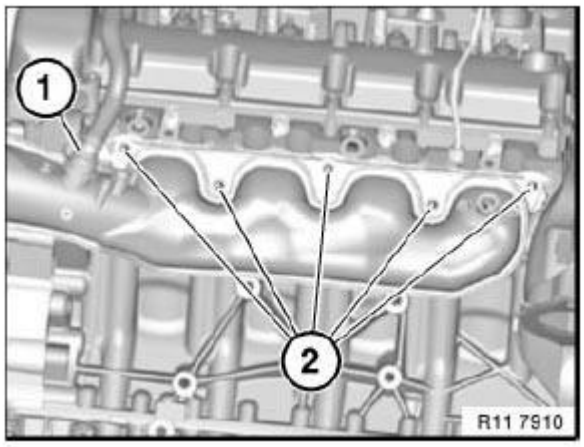

Fig. 433: Identifying Engine Ventilation Hose With Nuts
Courtesy of BMW OF NORTH AMERICA, INC.

Fit special tool 00 0 200.

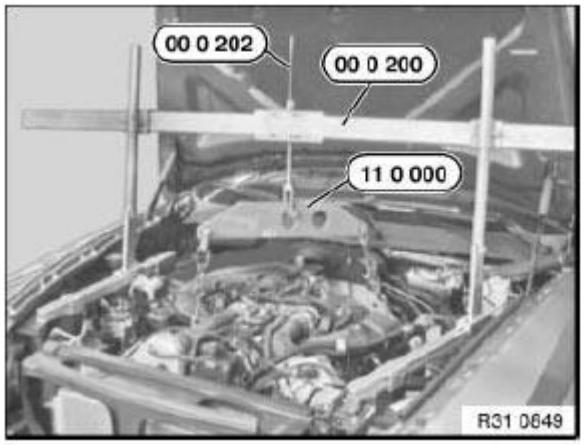

Fig. 434: Attaching Suitable Chains To Special Tool And Suspend From Both Engine Suspension Eyelets
Courtesy of BMW OF NORTH AMERICA, INC.

Release nuts on left and right engine support arms.

Raise engine.

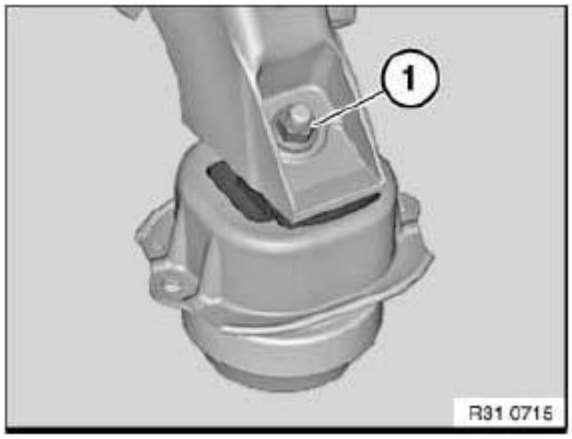

Fig. 435: Identifying Engine Mounting Screws
Courtesy of BMW OF NORTH AMERICA, INC.

Release **throttle valve** (1).

Release screw (2).

Tightening torque: 11 61 2AZ, see **INTAKE MANIFOLD**

Installation:

Replace all profile seals.

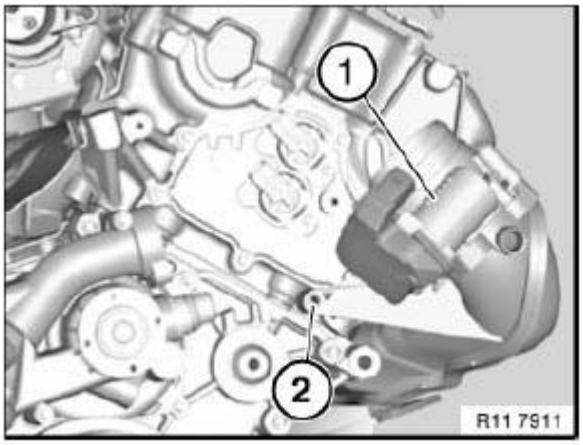

Fig. 436: Identifying Throttle Valve And Screw
Courtesy of BMW OF NORTH AMERICA, INC.

Assemble engine and vehicle.

Check intake system for leaks.

11 61 068 REMOVING AND INSTALLING/REPLACING RIGHT INTAKE MANIFOLD (N63)

Special tools required:

- **00 0 200**

See **MAINTENANCE AND GENERAL INFORMATION - SPECIAL TOOLS** .

Necessary preliminary tasks:

- Remove complete front panel.
- Remove complete **cooling core with condenser** . See **17 11 000 REMOVING AND INSTALLING RADIATOR (N63)** .
- Remove **power steering pump** with bracket. See **32 41 033 REMOVING AND INSTALLING POWER STEERING PUMP FOR POWER STEERING GEAR WITH ACTIVE FRONT STEERING (N63)** or **32 41 037 REMOVING AND INSTALLING/REPLACING POWER STEERING PUMP FOR POWER STEERING GEAR WITH DYNAMIC DRIVE (N63)** .
- Remove right **injection pipe** . See **13 53 205 REMOVING AND INSTALLING/REPLACING LEFT RAIL (N63)** .

Detach engine ventilation hose (1).

Unscrew nuts (2).

Tightening torque: 11 61 1AZ, see **INTAKE MANIFOLD**

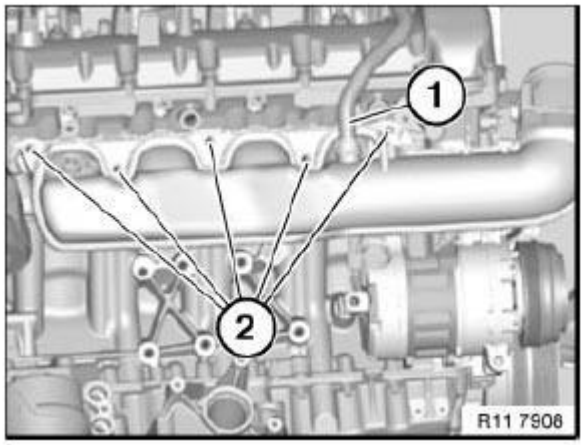

Fig. 437: Identifying Engine Ventilation Hose With Nuts
Courtesy of BMW OF NORTH AMERICA, INC.

Fit **special tool** 00 0 200.

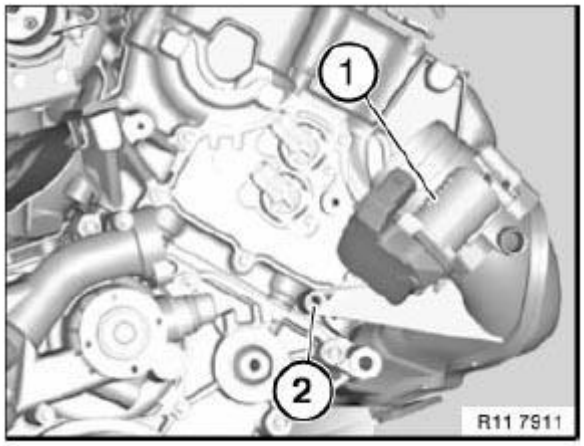

Fig. 438: Attaching Suitable Chains To Special Tool And Suspend From Both Engine Suspension Eyelets
Courtesy of BMW OF NORTH AMERICA, INC.

Release nuts on left and right engine support arms.

Raise engine.

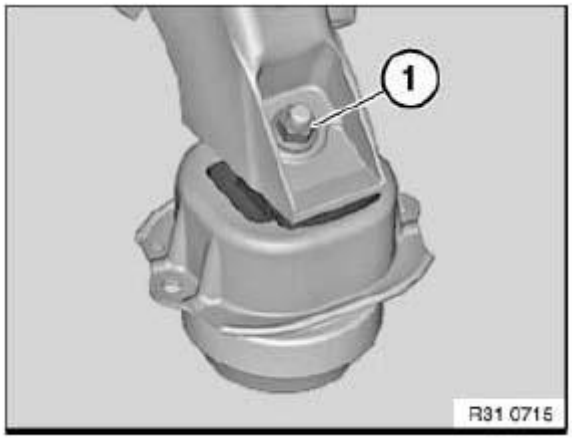

Fig. 439: Identifying Engine Mounting Screws
Courtesy of BMW OF NORTH AMERICA, INC.

Remove **throttle valve** (2).

Release screw (1).

Tightening torque: 11 61 2AZ, see **INTAKE MANIFOLD**

Installation:

Replace all profile seals.

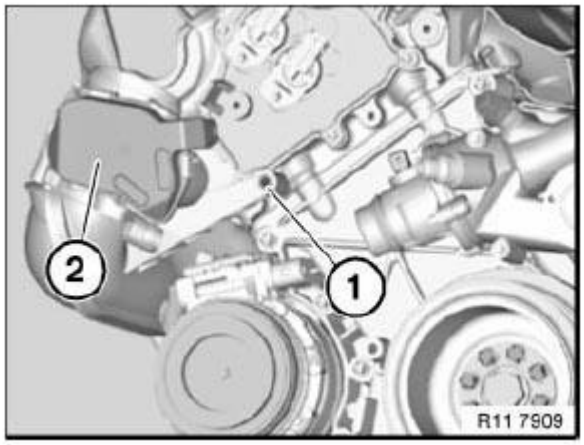

Fig. 440: Identifying Throttle Valve With Screw
Courtesy of BMW OF NORTH AMERICA, INC.

Assemble engine and vehicle.

Check intake system for leaks.

11 61 730 CHECK BMW DIAGNOSIS SYSTEM FOR EXCESS PRESSURE AND VACUUM (N63)

IMPORTANT: Excess pressure and vacuum lines are identified by the size of the connection fittings and color-coded red and blue and must not be mixed up with each other.
Build up pressure with Blue color.
Generate vacuum pressure with Red color.
Mixing up the functions will result in damage to the engine.

Necessary preliminary work

- Release upper section of intake air filter.
- Prepare BMW diagnosis system.
- Start diagnostic program.
    1. Power train
    2. Engine electronics
    3. Air supply
    4. Charging pressure control Oder Perception

Lack of power

Note on ordering:

- Workshop equipment.
- Workshop planning.
- Workshop equipment catalogue.
- Measuring and test equipment.
- No. 81 29 0 426 464

Pressure measurement

Prepare BMW diagnosis system on excess pressure diagnosis unit.

1. Screw in pressure sensor.
2. Overpressure connection (Blue).
3. Connect stimuli cables (3) to positive and negative.
4. Connect 12V battery cables (4) to vehicle battery positive and negative.

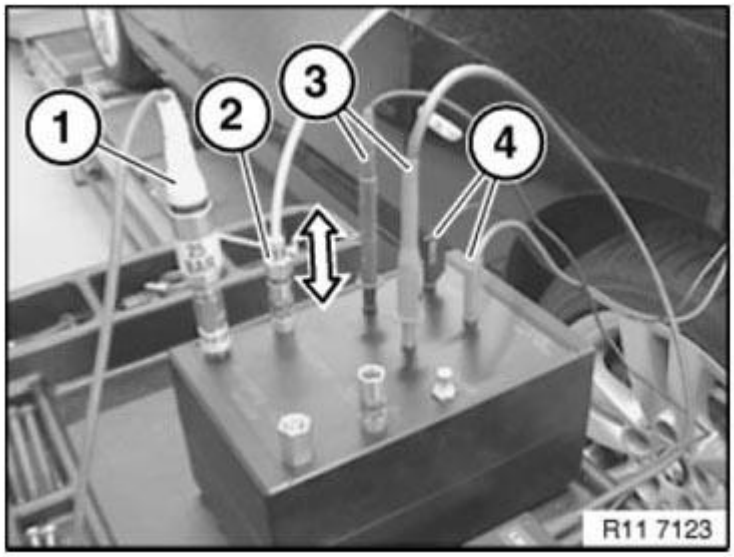

Fig. 441: Measuring Pressure
Courtesy of BMW OF NORTH AMERICA, INC.

Secure seal plug (1) with union nut (2) in intake port and seal.

NOTE: Twin-Turbo: both intake ports must be sealed.

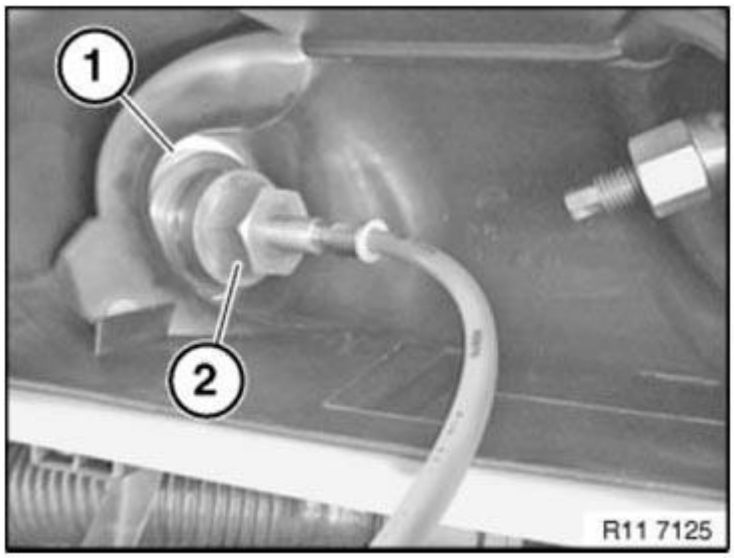

Fig. 442: Identifying Seal Plug And Union Nut
Courtesy of BMW OF NORTH AMERICA, INC.

Insert Blue pneumatic hose (4) in pneumatic coupling (2) of sealing plug (1).

Seal plug (3) has no pneumatic coupling.

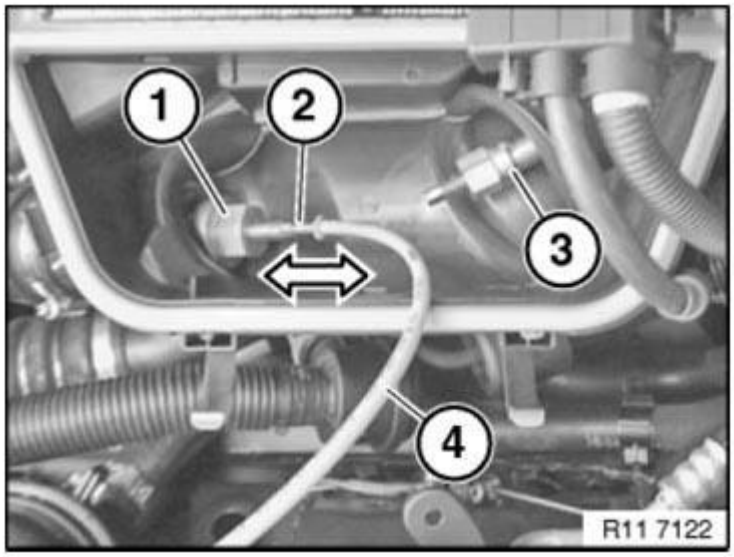

Fig. 443: Inserting Blue Pneumatic Hose In Pneumatic Coupling Of Sealing Plug
Courtesy of BMW OF NORTH AMERICA, INC.

Vacuum pressure measurement

Prepare diagnosis tester on vacuum diagnosis unit.

1. Screw in pressure sensor.
2. Connect stimuli cables (2) to positive and negative.
3. Connect 12V battery cables (3) to vehicle battery positive and negative.
4. Controller for vacuum connection.
5. Vacuum connection (Red).

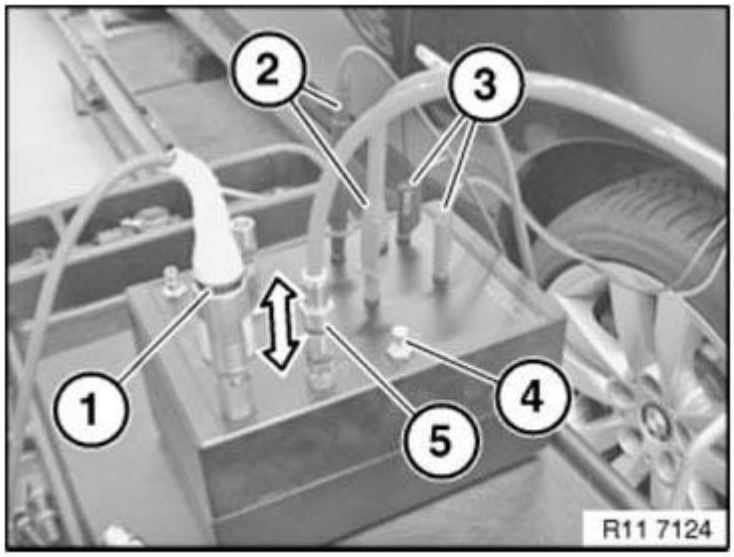

Fig. 444: Measuring Vacuum Pressure

Courtesy of BMW OF NORTH AMERICA, INC.

Calibration for vacuum pressure measurement

Seal shutoff tap (2) in direction of arrow.

Release lock nut on controller (1).

Carry out pressure adjustment in accordance with BMW diagnosis instruction.

Secure controller (1) hand-tight against turning.

Open shutoff tap (2) again.

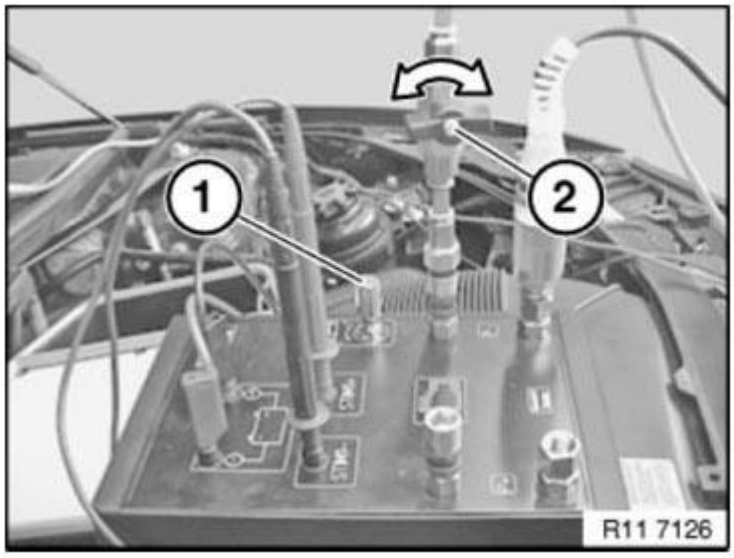

Fig. 445: Releasing Lock Nut On Controller
Courtesy of BMW OF NORTH AMERICA, INC.

Connections on EPPC

1. Connection (VAC) to vacuum reservoir.
2. Connection (OUT) with ring to exhaust turbocharger.

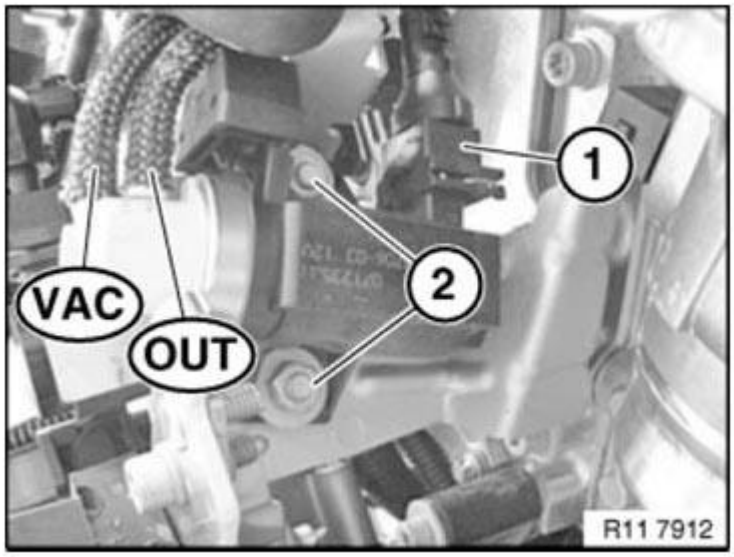

Fig. 446: Identifying Vacuum Reservoir Connection (VAC)
Courtesy of BMW OF NORTH AMERICA, INC.

Vacuum activation, cylinders 1-4

Detach red vacuum line from vacuum unit.

Prepare T-piece (5) with vacuum lines for measurement.

Connect red vacuum line (1) with vacuum unit (2) and quick-release coupling (3).

Open shutoff tap (4).

NOTE: Observe diagnosis instructions.

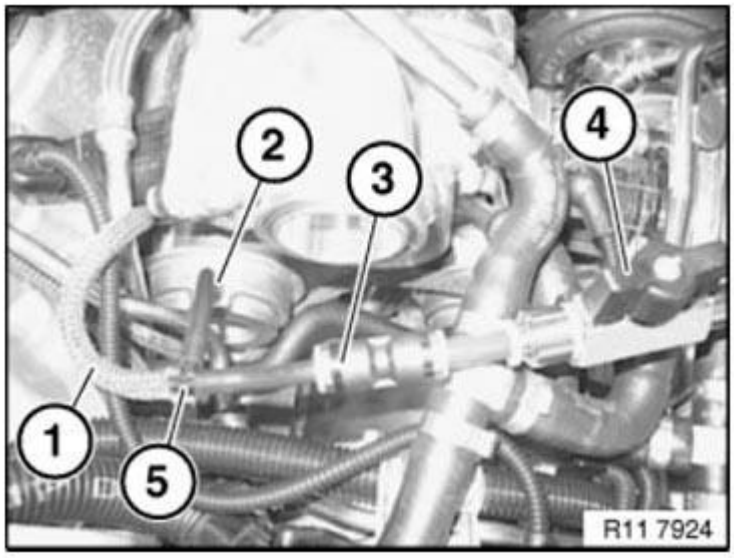

Fig. 447: Identifying Red Vacuum Line, Vacuum Unit And Quick-Release Coupling
Courtesy of BMW OF NORTH AMERICA, INC.

Vacuum activation, cylinders 5-8

Detach blue vacuum line from vacuum unit.

Prepare T-piece (5) with vacuum lines for measurement.

Connect blue vacuum line (1) with vacuum unit (2) and quick-release coupling (3).

Open shutoff tap (4).

NOTE: Observe diagnosis instructions.

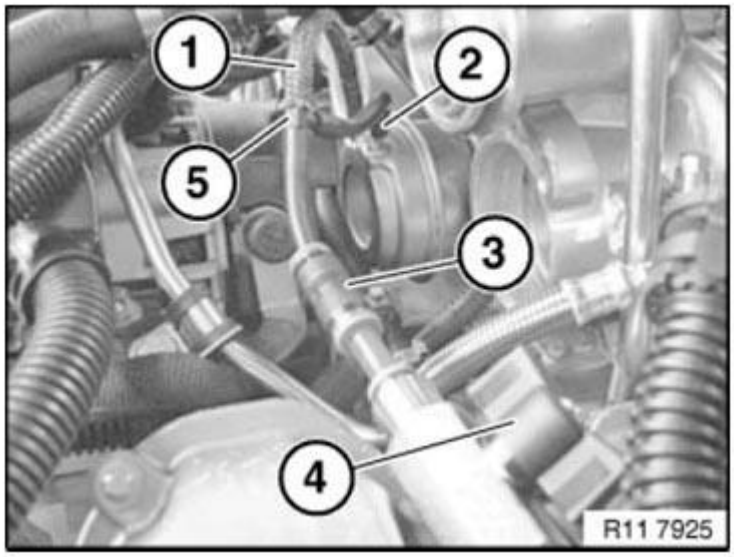

Fig. 448: Identifying Blue Vacuum Line, Vacuum Unit And Quick-Release Coupling
Courtesy of BMW OF NORTH AMERICA, INC.

Exhaust turbocharger, cylinders 1-4

Initial position (1) of wastegate linkage depressurized.

Wastegate valve opened.

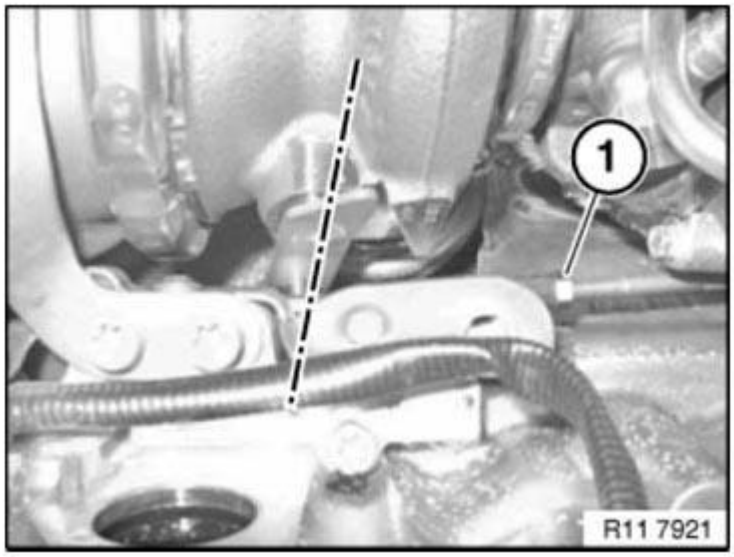

Fig. 449: Identifying Initial Position Of Wastegate Linkage Depressurized
Courtesy of BMW OF NORTH AMERICA, INC.

Initial position (1) of wastegate linkage with vacuum pressure.

Wastegate valve closed.

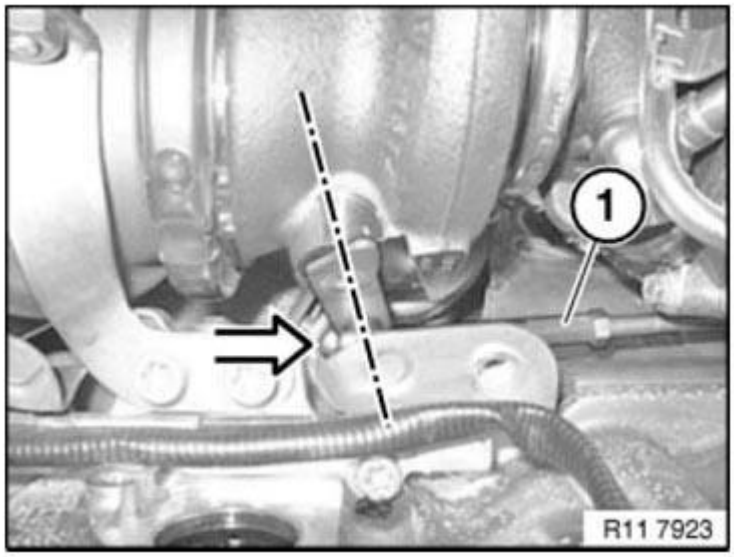

Fig. 450: Identifying Initial Position Of Wastegate Linkage With Vacuum Pressure
Courtesy of BMW OF NORTH AMERICA, INC.

Exhaust turbocharger, cylinders 5-8

Initial position (1) of wastegate linkage depressurized.

Wastegate valve opened.

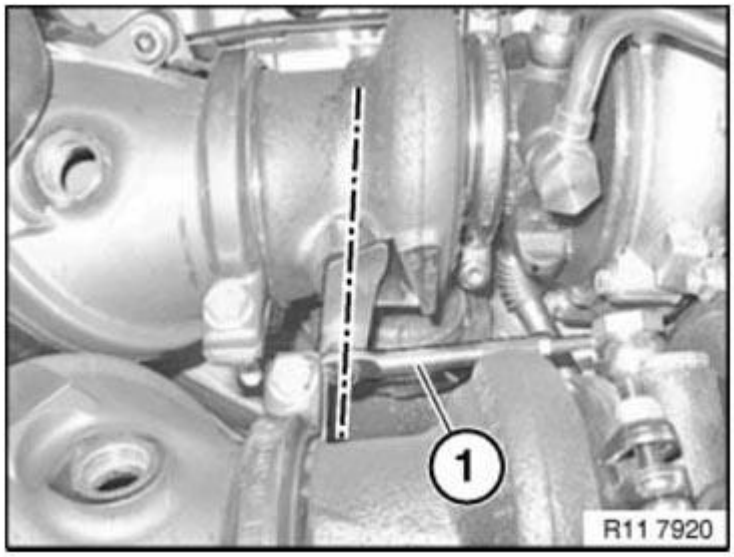

Fig. 451: Identifying Initial Position Of Wastegate Linkage Depressurized
Courtesy of BMW OF NORTH AMERICA, INC.

Initial position (1) of wastegate linkage with vacuum pressure.

Wastegate valve closed.

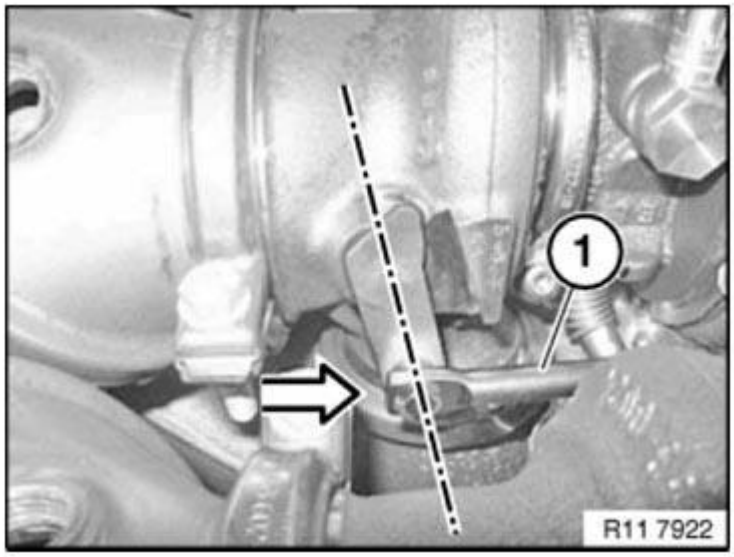

Fig. 452: Identifying Initial Position Of Wastegate Linkage With Vacuum Pressure
Courtesy of BMW OF NORTH AMERICA, INC.

Check wastegate valve with vacuum

Wastegate valves must be opened without vacuum.

The wastegate valves must close if a vacuum pressure is applied at the wastegate sockets (see BMW diagnosis

system).

Check shaft on turbine wheel for rotatability.

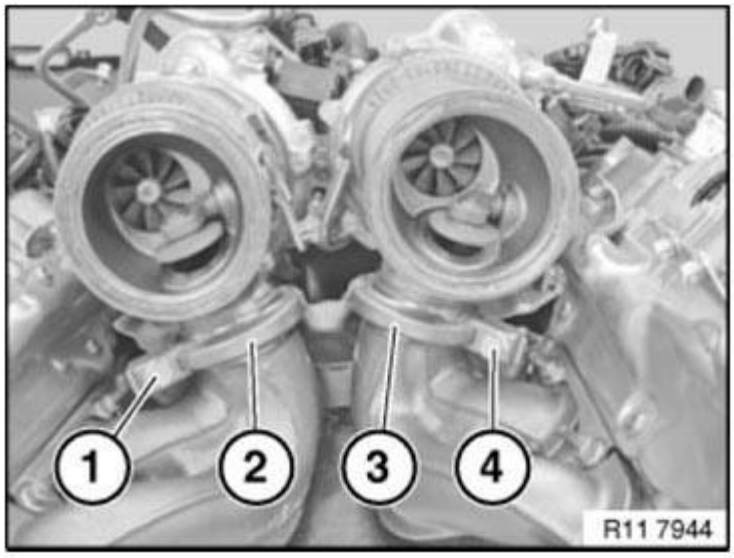

Fig. 453: Checking Wastegate Valve With Vacuum
Courtesy of BMW OF NORTH AMERICA, INC.

Follow diagnosis instructions.

SUPERCHARGER

11 65 CONNECTION DIAGRAM, VACUUM ACTIVATION (N63)

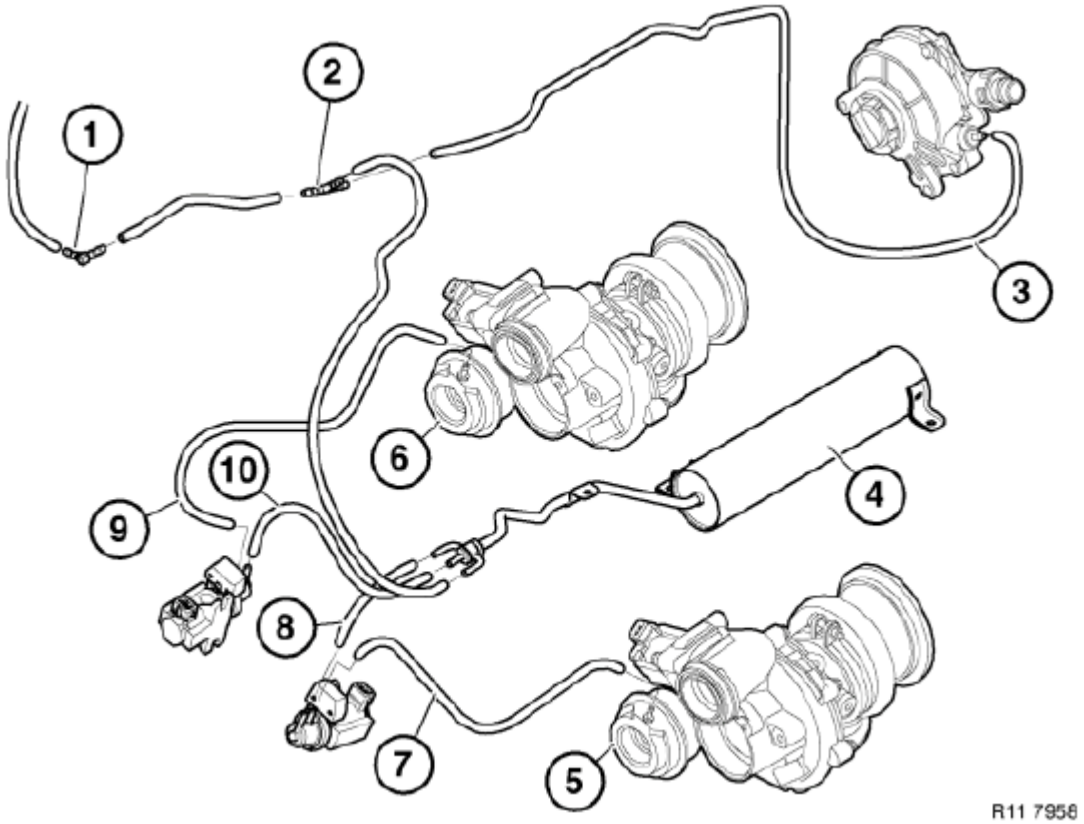

Fig. 454: Vacuum Lines Diagram
Courtesy of BMW OF NORTH AMERICA, INC.

1. Connection (1) **black** to exhaust flaps.
2. Distributor element (2), vacuum pump / vacuum reservoir (4).
3. Vacuum line (3) **black** to vacuum pump.
4. Vacuum reservoir (4) with three connections.
5. Connection, vacuum unit (wastegate), bank 2, cylinders 5 to 8.
6. Connection, vacuum unit (wastegate), bank 1, cylinders 1 to 4.
7. Vacuum hose (7) **black / blue** to connection, vacuum unit, (5) to pressure transducer (OUT), bank 2, cylinders 5 to 8.
8. Vacuum hose **black** to connection, vacuum reservoir, to pressure transducer (VAC), bank 2, cylinders 5 to 8.
9. Vacuum hose (9) **black / red** to connection, vacuum unit, (6) to pressure transducer (OUT), bank 1, cylinders 1 to 4.
10. Vacuum hose **black** to connection, vacuum reservoir, to pressure transducer (VAC), bank 1, cylinders 1 to 4.

11 65 010 REMOVING AND INSTALLING/REPLACING PRESSURE ACCUMULATOR (N63)

Necessary preliminary tasks:

- Remove both **exhaust turbochargers** . See **11 65 025 Removing and installing/replacing exhaust turbocharger, right, cylinders 1-4 (N63)** and **11 65 030 Removing and installing/replacing exhaust turbocharger, left, cylinders 5-8 (N63)**.
- Remove both **exhaust manifolds** . See **18 40 020 REMOVING AND INSTALLING/REPLACING RIGHT EXHAUST MANIFOLD (N63)** .
- Remove **heat shield** at bottom.

Release banjo bolt (1).

Tightening torque 11 42 3AZ, see **11 42 OIL FILTER AND PIPES**

Installation:

Replace sealing ring .

Release screw (3) on engine oil line.

Remove engine oil line (2).

Release screws (3) on vacuum reservoir (4).

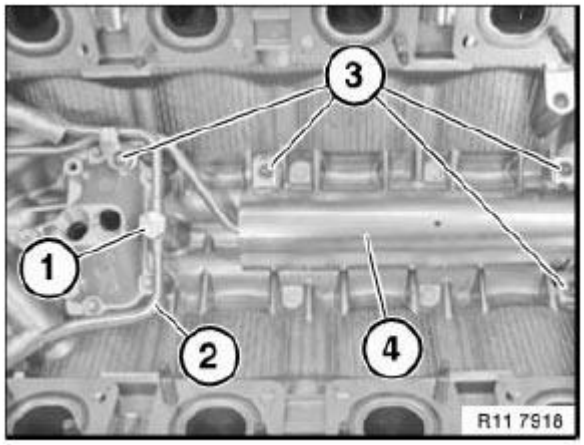

Fig. 455: Identifying Vacuum Reservoir, Banjo Bolt And Screws
Courtesy of BMW OF NORTH AMERICA, INC.

Tightening torque 11 65 6AZ, see **SUPERCHARGER**

Remove vacuum reservoir (4).

Check **vacuum connections** for correct routing.

Check vacuum system for leaks.

Assemble engine.

11 65 025 REMOVING AND INSTALLING/REPLACING EXHAUST TURBOCHARGER, RIGHT, CYLINDERS 1-4 (N63)

IMPORTANT: Risk of fire if oil lines are leaking.

Risk of mixing up vacuum hoses.

Necessary preliminary tasks:

- Remove **catalytic converter** , cylinders 1-4. See **18 32 050 REMOVING AND INSTALLING/REPLACING CATALYTIC EXHAUST GAS CONVERTER, CYLINDERS 1-4 (N63)** .

Disconnect plug connection (1) on electric changeover valve (2).

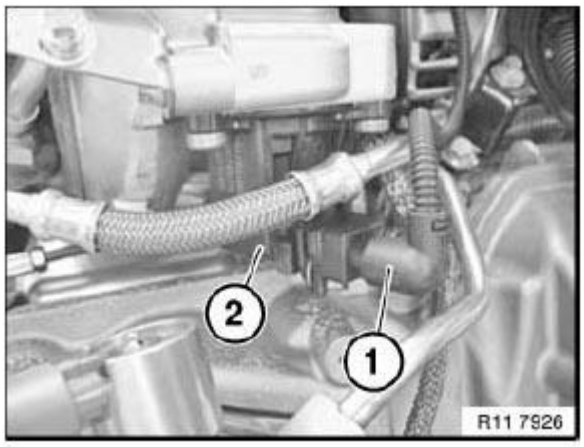

Fig. 456: Identifying Plug Connection On Electric Changeover Valve
Courtesy of BMW OF NORTH AMERICA, INC.

Release screw (1).

Tightening torque 11 42 7AZ, see **11 42 OIL FILTER AND PIPES**

Unfasten banjo bolt (2).

Tightening torque 11 42 4AZ, see **11 42 OIL FILTER AND PIPES**

Lay oil line (3) from turbocharger to side.

Installation:

Replace all sealing rings .

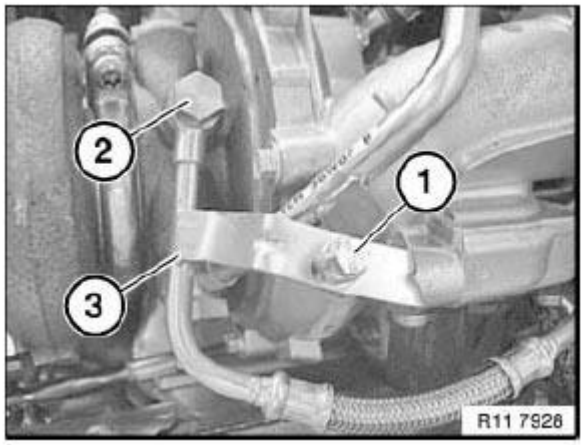

Fig. 457: Identifying Oil Line And Banjo Bolt
Courtesy of BMW OF NORTH AMERICA, INC.

Release screw (1).

Tightening torque 11 53 3AZ, see **THERMOSTAT AND CONNECTIONS**

Release banjo bolt (2).

Tightening torque 11 53 2AZ, see **THERMOSTAT AND CONNECTIONS**

Lay coolant return line (3) to one side.

Installation:

Replace all sealing rings .

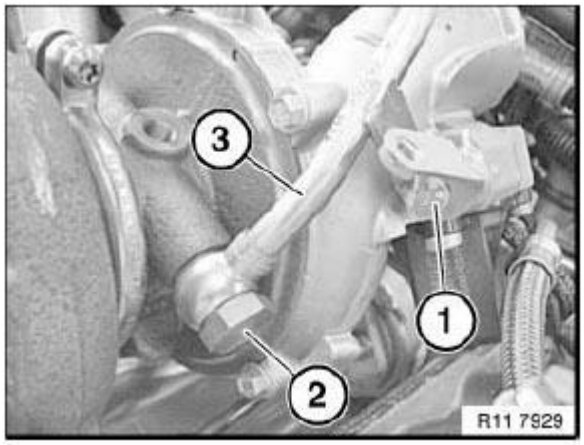

Fig. 458: Identifying Coolant Return Line And Banjo Bolt
Courtesy of BMW OF NORTH AMERICA, INC.

Open hose clip (1).

Detach coolant feed line (2).

Installation:

Replace hose clamp (1) .

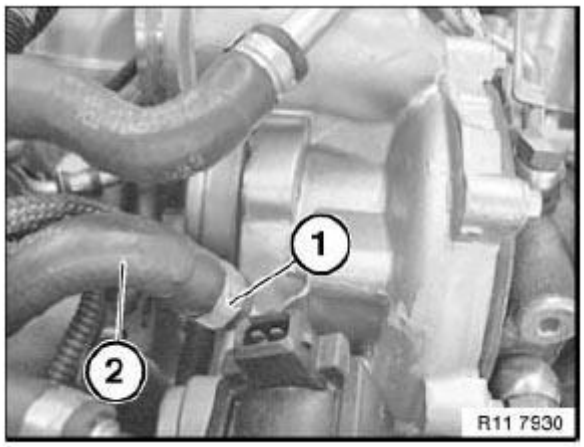

Fig. 459: Identifying Coolant Feed Line And Hose Clip
Courtesy of BMW OF NORTH AMERICA, INC.

Release screw (1) with a suitable tool.

NOTE: Oil return pipe (2) can only be removed with turbocharger.

Tightening torque 11 42 10AZ, see **11 42 OIL FILTER AND PIPES**

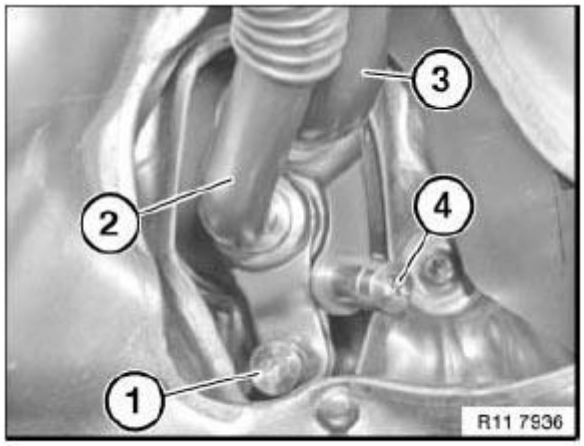

Fig. 460: Identifying Oil Return Pipe With Screw
Courtesy of BMW OF NORTH AMERICA, INC.

Release screw (4).

Open V-band clamp (3).

IMPORTANT: Do not mechanically deform oil return line.

Remove turbocharger with oil return line in upward direction.

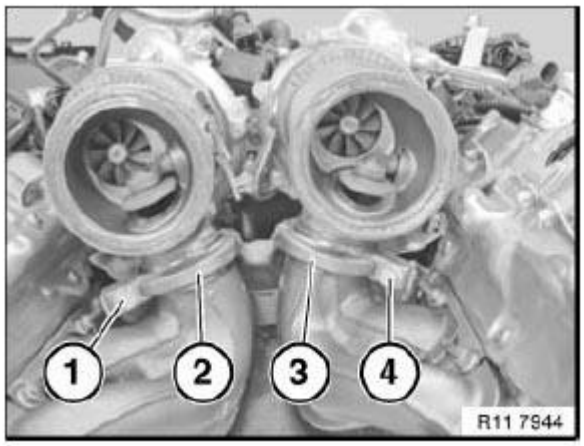

Fig. 461: Identifying V-Band Clamp
Courtesy of BMW OF NORTH AMERICA, INC.

If necessary, convert coolant feed line to new turbocharger.

Release banjo bolt (1).

Tightening torque 11 53 2AZ, see **THERMOSTAT AND CONNECTIONS**

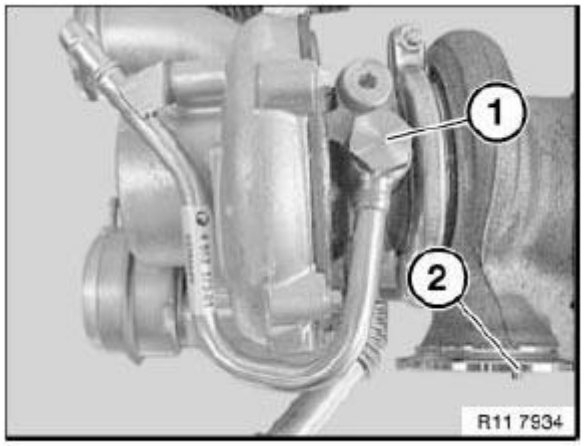

Fig. 462: Identifying Banjo Bolt
Courtesy of BMW OF NORTH AMERICA, INC.

Release screw (1).

Tightening torque 11 53 3AZ, see **THERMOSTAT AND CONNECTIONS**

Modify coolant feed line (2).

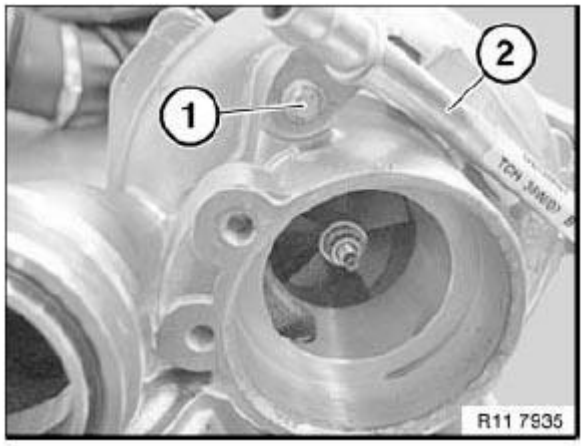

Fig. 463: Identifying Coolant Feed Line And Screw
Courtesy of BMW OF NORTH AMERICA, INC.

Release screws (1).

Tightening torque 11 42 9AZ, see **11 42 OIL FILTER AND PIPES**

Remove oil return pipe (2).

Installation:

Replace seal .

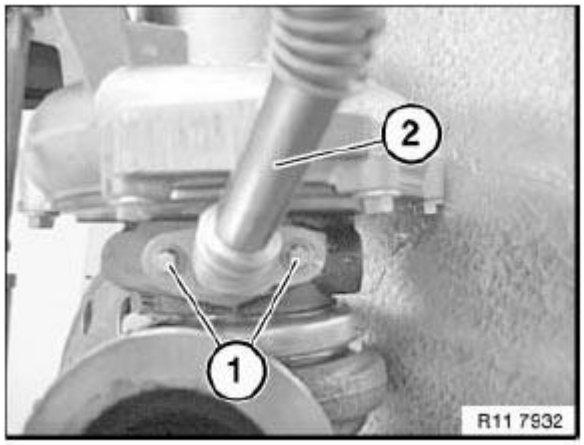

Fig. 464: Identifying Oil Return Pipe With Screws
Courtesy of BMW OF NORTH AMERICA, INC.

IMPORTANT: A deformed oil return pipe can result in leaks.

Risk of fire if oil line is leaking.

The thermal linear compensators (see arrows) on the oil return pipe (1) must not be mechanically deformed.

Installation:

Moisten oil return pipe at end with engine oil.

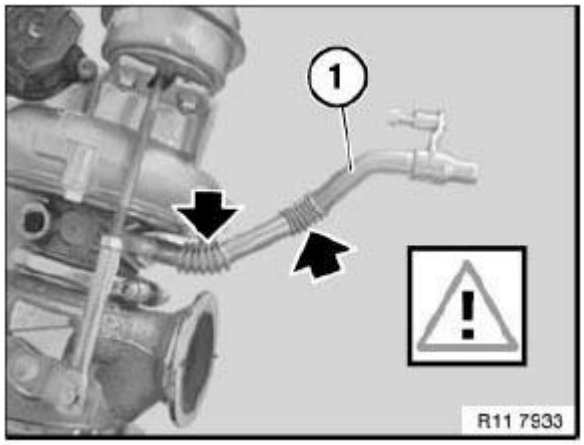

Fig. 465: Identifying Oil Return Pipe
Courtesy of BMW OF NORTH AMERICA, INC.

IMPORTANT: The O-rings can easily fall into the oil duct.

Installation:

Replace O-rings on oil return cover (2).

NOTE: Picture shows turbocharger removed.

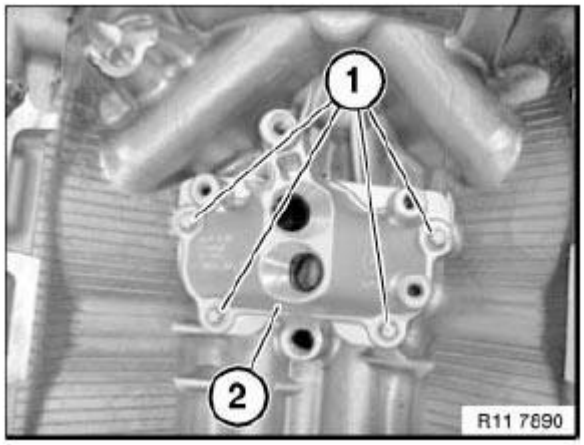

Fig. 466: Identifying Oil Return Cover With Screws
Courtesy of BMW OF NORTH AMERICA, INC.

Installation:

Replace gasket on exhaust manifold .

Installation:

Check locating apparatus on exhaust manifold.

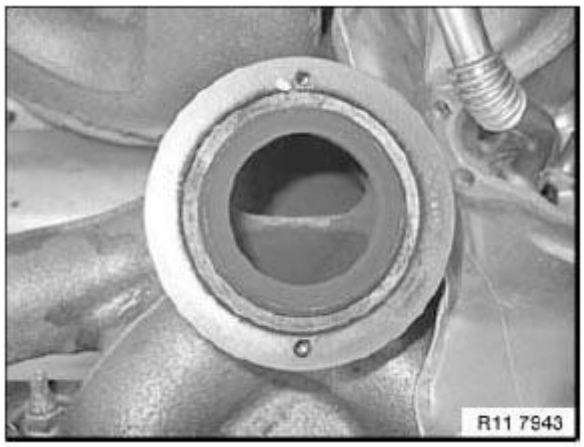

Fig. 467: Identifying Exhaust Manifold
Courtesy of BMW OF NORTH AMERICA, INC.

Position turbocharger with oil return line on exhaust manifold.

Position V-band clamp (3).

Insert bolt (4).

Tightening torque 11 65 1AZ, see **SUPERCHARGER**

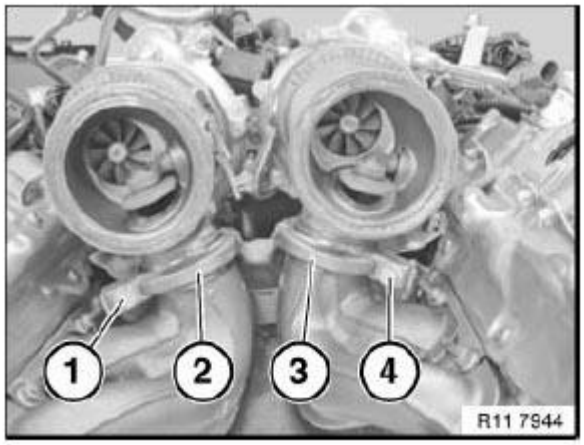

Fig. 468: Identifying V-Band Clamp
Courtesy of BMW OF NORTH AMERICA, INC.

Installation:

The ends of the V-band clamp must rest parallel to each other.

Tightening torque 11 65 1AZ, see **SUPERCHARGER**

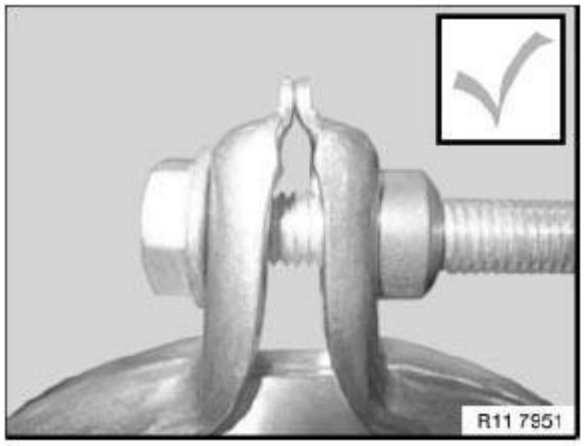

Fig. 469: Identifying V-Band Clamp End Position
Courtesy of BMW OF NORTH AMERICA, INC.

Screw connection of V-band clamp is too loose:

If you can see a gap between the ends of the V-band clamps, release and then repeat the screw connection.

Tightening torque 11 65 1AZ, see **SUPERCHARGER**

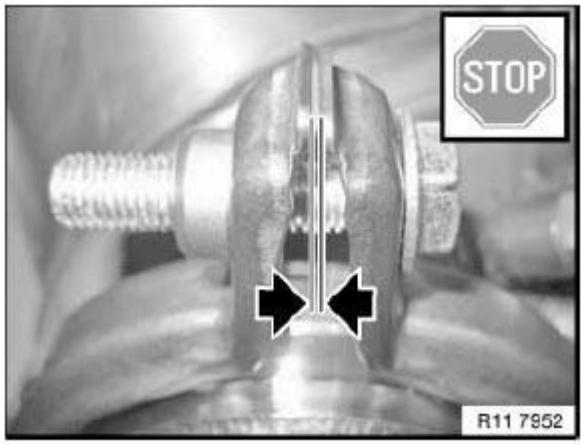

Fig. 470: Identifying Gap Between Ends Of V-Band Clamps
Courtesy of BMW OF NORTH AMERICA, INC.

Screw connection of V-band clamp is too tight:

If the ends of the V-band clamp are positioned under each other, release and then repeat the screw connection.

Tightening torque 11 65 1AZ, see **SUPERCHARGER**

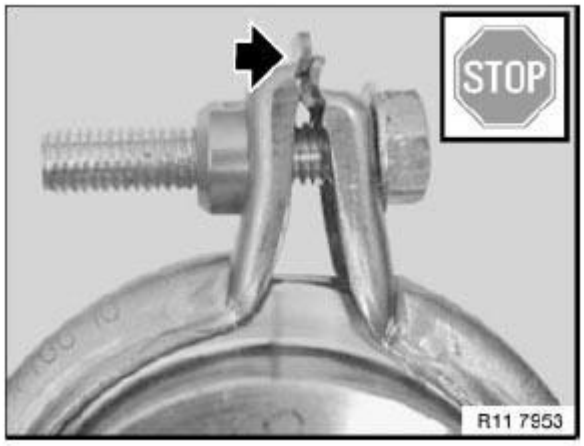

Fig. 471: Identifying Ends Of V-Band Clamp Position
Courtesy of BMW OF NORTH AMERICA, INC.

IMPORTANT: Risk of mixing up vacuum hoses.

Vacuum hose (1) black/red for cylinders 1-4.

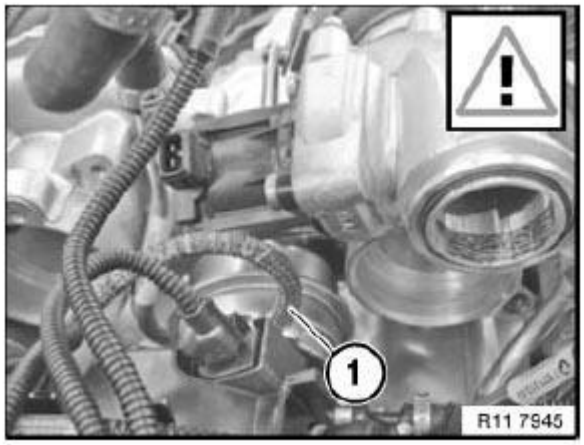

Fig. 472: Identifying Vacuum Hose
Courtesy of BMW OF NORTH AMERICA, INC.

Assemble engine.

Check **vacuum connections** .

Observe BMW diagnosis instructions.

1. Complete vehicle
2. Drive
3. Engine electrics
4. Air supply
5. Boost pressure control

11 65 030 REMOVING AND INSTALLING/REPLACING EXHAUST TURBOCHARGER, LEFT, CYLINDERS 5-8 (N63)

IMPORTANT: Risk of fire if oil lines are leaking.

Risk of mixing up vacuum hoses.

Necessary preliminary tasks:

- Remove **catalytic converter** , cylinders 5-8. See **18 32 050 REMOVING AND INSTALLING/REPLACING CATALYTIC EXHAUST GAS CONVERTER, CYLINDERS 5-8 (N63)** .

Disconnect plug connection (1) on electric changeover valve (2).

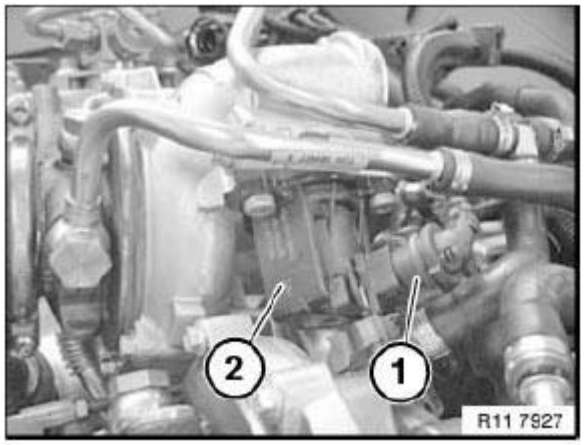

Fig. 473: Identifying Plug Connection On Electric Changeover Valve
Courtesy of BMW OF NORTH AMERICA, INC.

Release screw (1).

Tightening torque 11 42 7AZ, see **11 42 OIL FILTER AND PIPES**

Unfasten banjo bolt (2).

Tightening torque 11 42 4AZ, see **11 42 OIL FILTER AND PIPES**

Lay oil line from turbocharger to side.

Installation:

Replace all sealing rings .

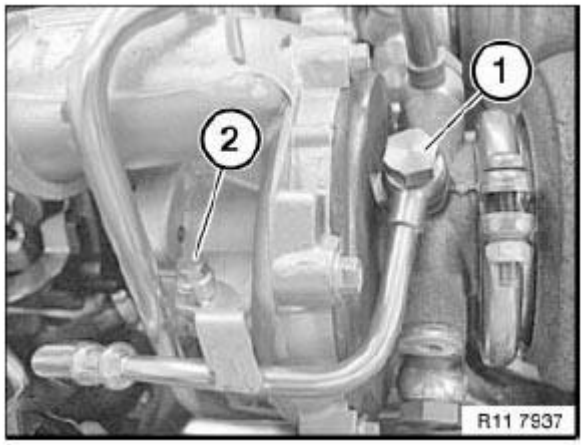

Fig. 474: Identifying Banjo Bolt And Screw
Courtesy of BMW OF NORTH AMERICA, INC.

Release screw (1).

Tightening torque 11 53 3AZ, see **THERMOSTAT AND CONNECTIONS**

Release banjo bolt (2).

Tightening torque 11 53 2AZ, see **THERMOSTAT AND CONNECTIONS**

Lay coolant return line to one side.

Installation:

Replace all sealing rings .

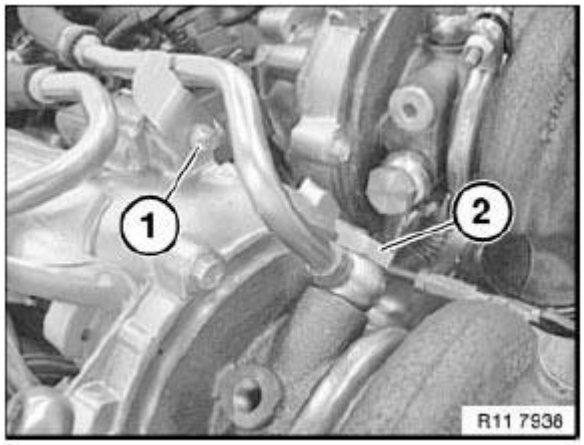

Fig. 475: Identifying Coolant Return Line With Banjo Bolt
Courtesy of BMW OF NORTH AMERICA, INC.

Open hose clip (1).

Detach coolant feed line (2).

Installation:

Replace hose clamp (1) .

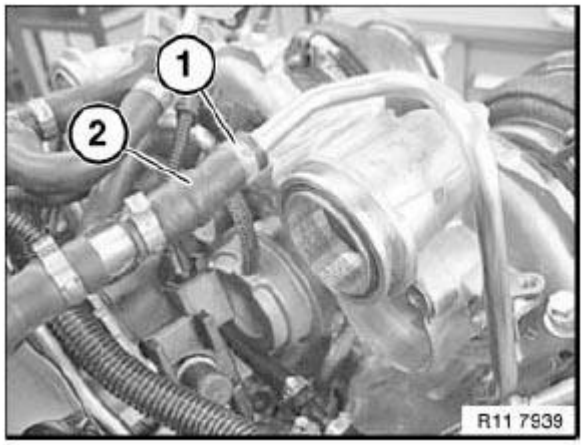

Fig. 476: Identifying Coolant Feed Line And Hose Clip
Courtesy of BMW OF NORTH AMERICA, INC.

Release screw (4) with a suitable tool.

NOTE: Oil return pipe (3) can only be removed with turbocharger.

Tightening torque 11 42 10AZ, see **11 42 OIL FILTER AND PIPES**

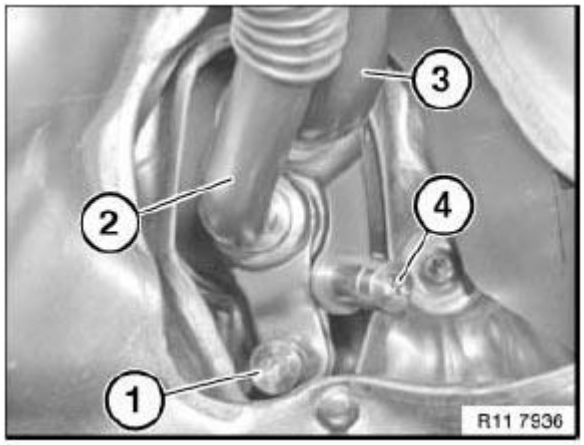

Fig. 477: Identifying Oil Return Pipe With Screw
Courtesy of BMW OF NORTH AMERICA, INC.

Release screw (1).

Open V-band clamp (2).

IMPORTANT: Do not mechanically deform oil return line.

Remove turbocharger with oil return line in upward direction.

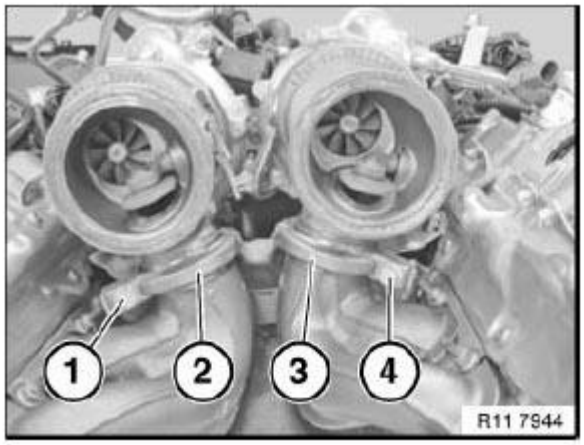

Fig. 478: Identifying V-Band Clamp
Courtesy of BMW OF NORTH AMERICA, INC.

If necessary, convert coolant feed line to new turbocharger.

Release banjo bolt (1).

Tightening torque 11 53 2AZ, see **THERMOSTAT AND CONNECTIONS**

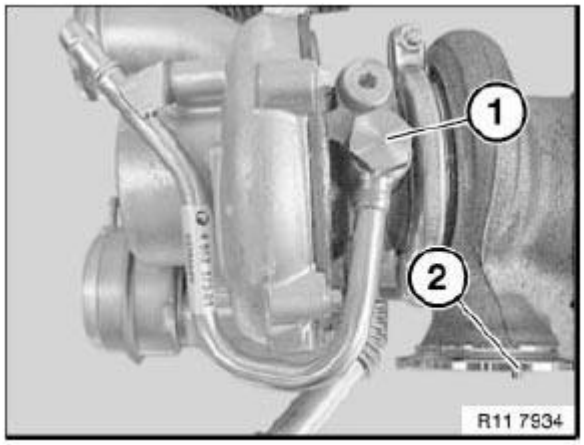

Fig. 479: Identifying Banjo Bolt
Courtesy of BMW OF NORTH AMERICA, INC.

Release screw (1).

Tightening torque 11 53 3AZ, see **THERMOSTAT AND CONNECTIONS**

Modify coolant feed line (2).

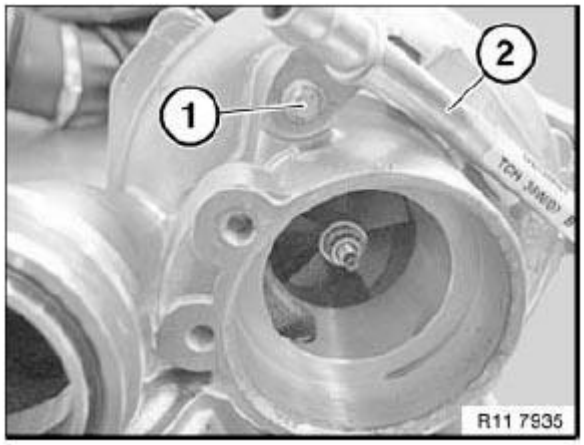

Fig. 480: Identifying Coolant Feed Line And Screw
Courtesy of BMW OF NORTH AMERICA, INC.

Release screws (1).

Tightening torque 11 42 9AZ, see **11 42 OIL FILTER AND PIPES**

Remove oil return pipe (2).

Installation:

Replace seal .

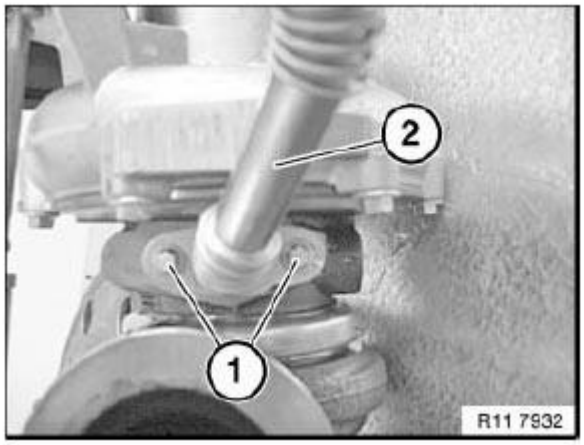

Fig. 481: Identifying Oil Return Pipe With Screws
Courtesy of BMW OF NORTH AMERICA, INC.

IMPORTANT: A deformed oil return pipe can result in leaks.

Risk of fire if oil line is leaking.

The thermal linear compensators (see arrows) on the oil return pipe (1) must not be mechanically deformed.

Installation:

Moisten oil return pipe at end with engine oil.

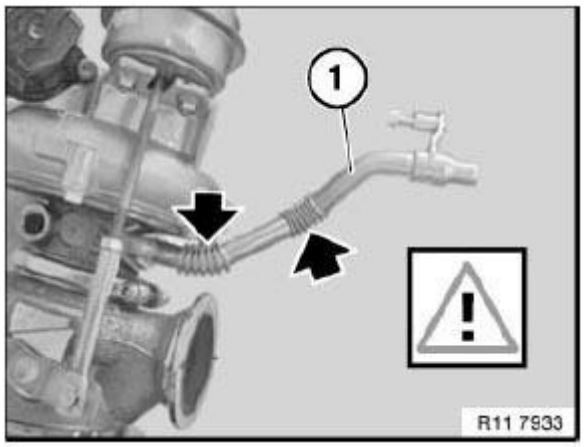

Fig. 482: Identifying Oil Return Pipe
Courtesy of BMW OF NORTH AMERICA, INC.

IMPORTANT: The O-rings can easily fall into the oil duct.

Installation:

Replace O-rings on oil return cover (2) .

NOTE: Picture shows turbocharger removed.

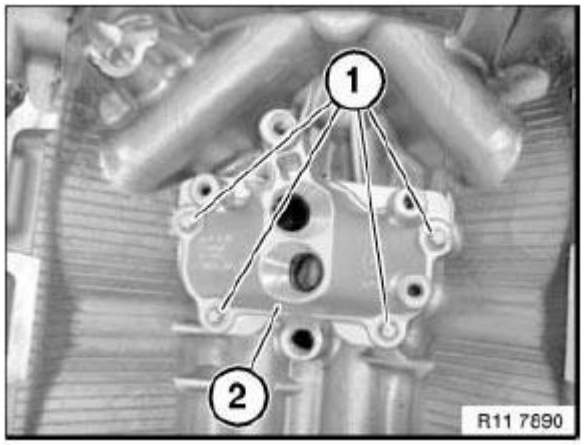

Fig. 483: Identifying Oil Return Cover With Screws
Courtesy of BMW OF NORTH AMERICA, INC.

Replace gasket (1) on exhaust manifold.

Installation:

Check locating apparatus on exhaust manifold.

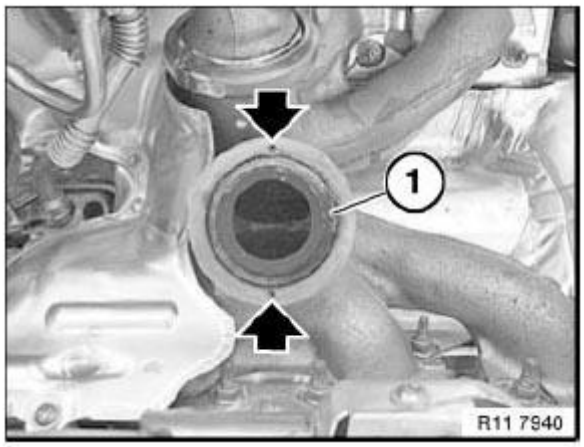

Fig. 484: Identifying Exhaust Manifold Gasket
Courtesy of BMW OF NORTH AMERICA, INC.

Position turbocharger with oil return line on exhaust manifold.

Position V-band clamp (2).

Insert screw (1).

Tightening torque 11 65 1AZ, see **SUPERCHARGER**

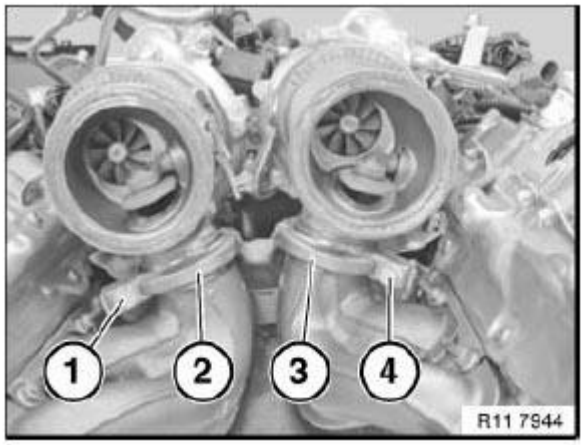

Fig. 485: Identifying V-Band Clamp
Courtesy of BMW OF NORTH AMERICA, INC.

Installation:

The ends of the V-band clamp must rest parallel to each other.

Tightening torque 11 65 1AZ, see **SUPERCHARGER**

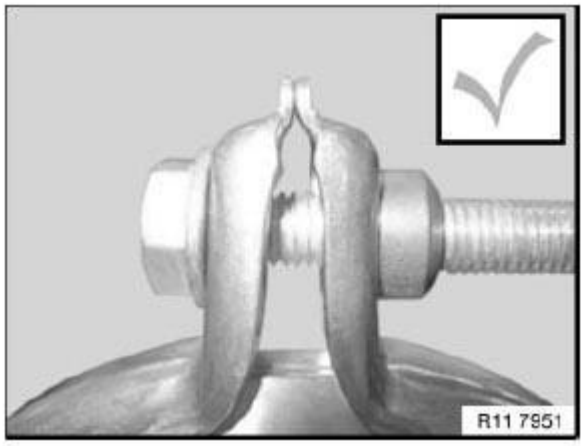

Fig. 486: Identifying V-Band Clamp End Position
Courtesy of BMW OF NORTH AMERICA, INC.

Screw connection of V-band clamp is too loose:

If you can see a gap between the ends of the V-band clamps, release and then repeat the screw connection.

Tightening torque 11 65 1AZ, see **SUPERCHARGER**

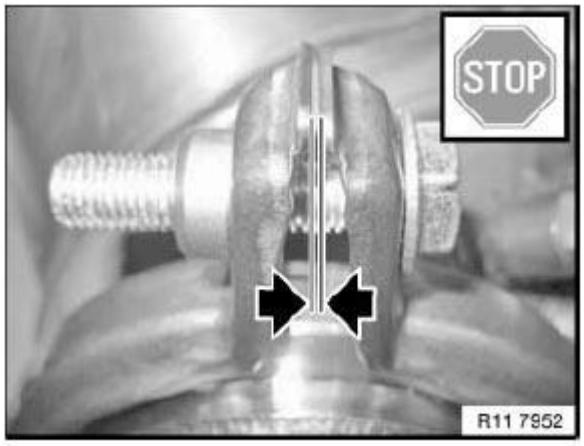

Fig. 487: Identifying Gap Between Ends Of V-Band Clamps
Courtesy of BMW OF NORTH AMERICA, INC.

Screw connection of V-band clamp is too tight:

If the ends of the V-band clamp are positioned under each other, release and then repeat the screw connection.

Tightening torque 11 65 1AZ, see **SUPERCHARGER**

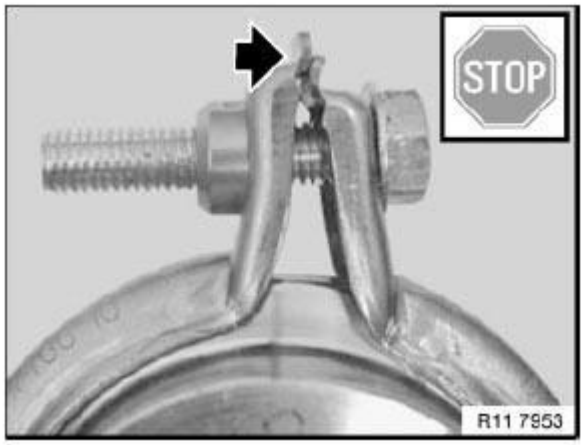

Fig. 488: Identifying Ends Of V-Band Clamp Position
Courtesy of BMW OF NORTH AMERICA, INC.

IMPORTANT: Risk of mixing up vacuum hoses.

Vacuum hose (1) Black/Blue for cylinders 5-8

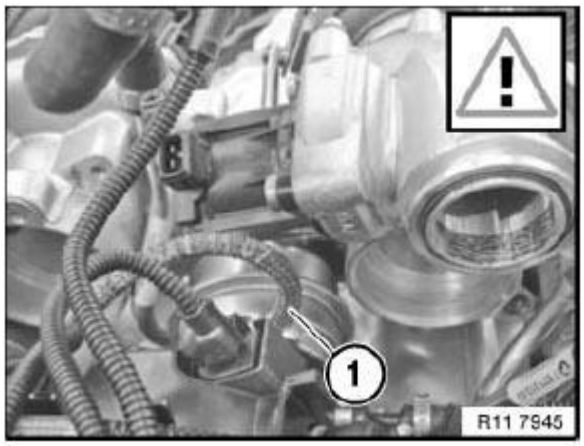

Fig. 489: Identifying Vacuum Hose
Courtesy of BMW OF NORTH AMERICA, INC.

Assemble engine.

Check **vacuum connections** .

Observe BMW diagnosis instructions.

1. Complete vehicle
2. Drive
3. Engine electrics
4. Air supply

5. Boost pressure control

11 65 165 REMOVING AND INSTALLING/REPLACING BLOW-OFF VALVE (N63)

Necessary preliminary tasks:

- Remove **exhaust turbocharger, right, cylinders 1-4 (N63)** and **exhaust turbocharger, left, cylinders 5-8 (N63)**.

Release screws (1). Tightening torque **11 65 9 AZ** . Remove blow-off valve (2).

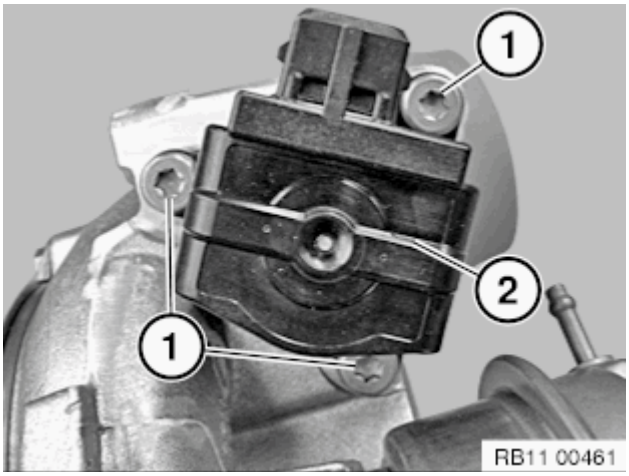

Fig. 490: Removing Blow Off Valve
Courtesy of BMW OF NORTH AMERICA, INC.

Check **vacuum connections** for correct routing.

Check **vacuum system** for leaks.

11 65 180 REMOVING AND INSTALLING/REPLACING HEAT SHIELD AT TOP (N63)

Necessary preliminary tasks:

- Remove both **intake filter housings** . See **13 71 030 REMOVING AND INSTALLING BOTH INTAKE FILTER HOUSINGS (N63)** .
- Remove **left control sensor** and **right control sensor**.

Release screws (1).

Lift out holder.

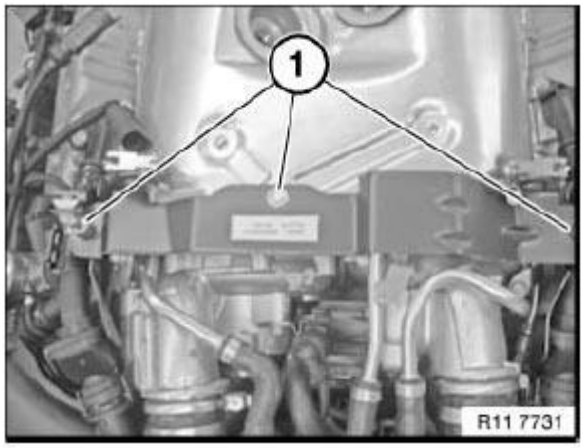

Fig. 491: Identifying Holder Screws
Courtesy of BMW OF NORTH AMERICA, INC.

Release screw (2).

Tightening torque 11 65 3AZ, see **SUPERCHARGER**

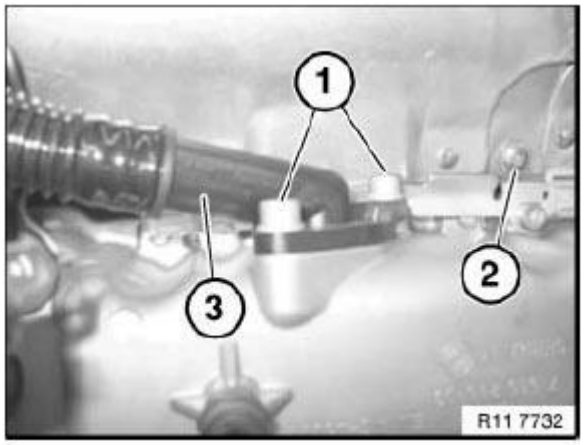

Fig. 492: Identifying Heat Shield Screws
Courtesy of BMW OF NORTH AMERICA, INC.

Release screw (2).

Tightening torque 11 65 3AZ, see **SUPERCHARGER**

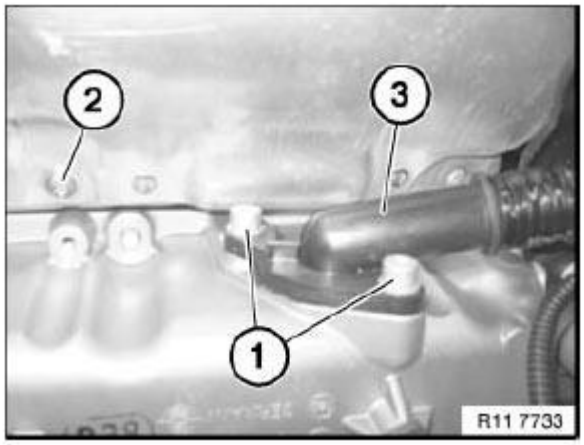

Fig. 493: Identifying Heat Shield Screws
Courtesy of BMW OF NORTH AMERICA, INC.

Release retaining clip (1).

Detach wire ring (2) and set down behind oxygen sensor.

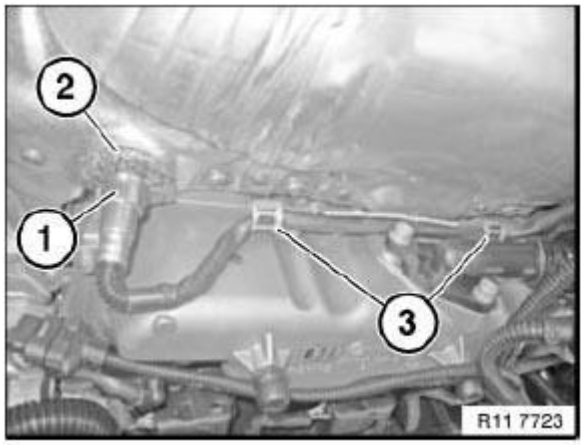

Fig. 494: Identifying Wire Ring And Retaining Clip
Courtesy of BMW OF NORTH AMERICA, INC.

Release retaining clip (1).

Detach wire ring (2) and set down behind oxygen sensor.

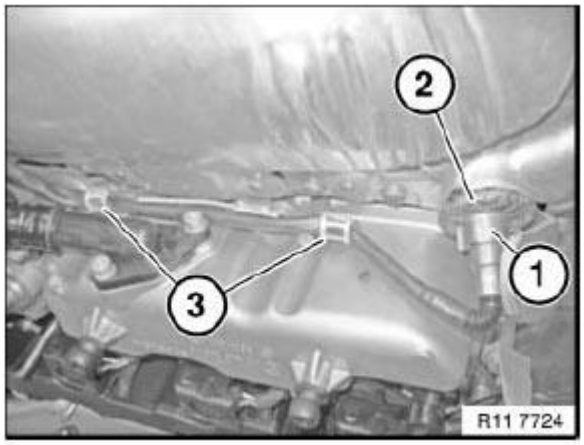

Fig. 495: Identifying Wire Ring And Behind Oxygen Sensor
Courtesy of BMW OF NORTH AMERICA, INC.

Release screws (1).

Tightening torque 11 65 3AZ, see **SUPERCHARGER**

NOTE: For purposes of clarity, the graphic shows the oxygen sensor removed.

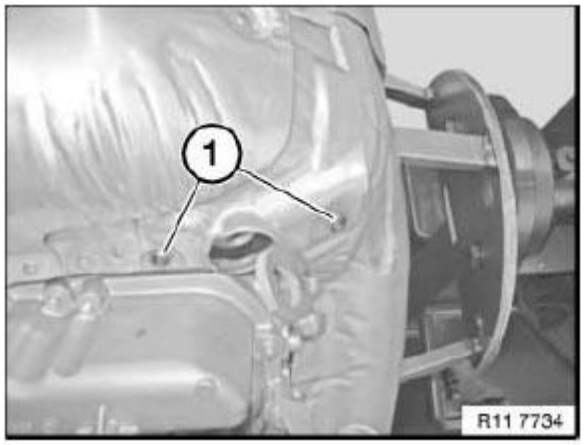

Fig. 496: Identifying Top Heat Shield Screws (1 Of 2)
Courtesy of BMW OF NORTH AMERICA, INC.

Release screws (1).

Tightening torque 11 65 3AZ, see **SUPERCHARGER**

Lift out heat shield.

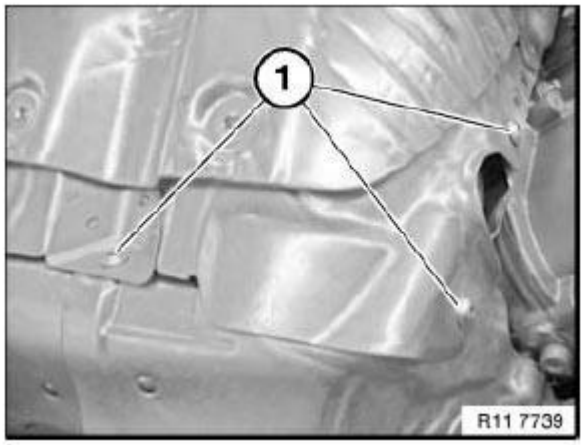

Fig. 497: Identifying Top Heat Shield Screws (2 Of 2)
Courtesy of BMW OF NORTH AMERICA, INC.

Assemble engine.

11 65 185 REMOVING AND INSTALLING/REPLACING HEAT SHIELD AT BOTTOM (N63)

- Disconnect **battery lead from negative terminal** . See **BATTERY** .
- Remove **fan cowl** with electric fan. See **17 11 035 REMOVING AND INSTALLING/REPLACING FAN COWL WITH ELECTRIC FAN (N63)** .
- Remove **alternator** . See **12 31 020 REMOVING AND INSTALLING OR REPLACING ALTERNATOR (N63)** .
- Remove both **exhaust turbochargers** . See **11 65 025 Removing and installing/replacing exhaust turbocharger, right, cylinders 1-4 (N63)** and **11 65 030 Removing and installing/replacing exhaust turbocharger, left, cylinders 5-8 (N63)**.
- Remove both **exhaust manifolds** . See **18 40 020 REMOVING AND INSTALLING/REPLACING RIGHT EXHAUST MANIFOLD (N63)** .

Release screws (1).

Tightening torque 11 65 3AZ, see **SUPERCHARGER**

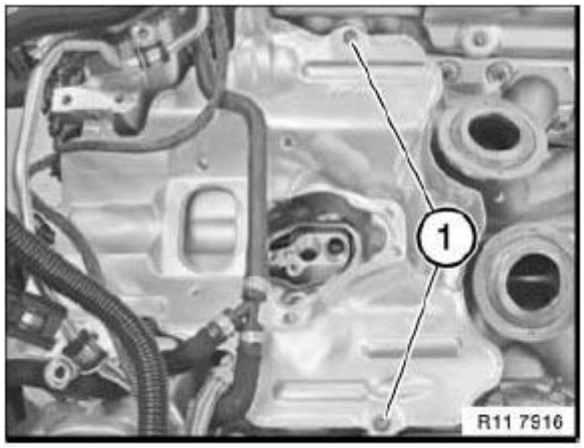

Fig. 498: Identifying Bottom Heat Shield Screws (1 Of 3)
Courtesy of BMW OF NORTH AMERICA, INC.

Release screws (1).

Tightening torque 11 65 3AZ, see **SUPERCHARGER**

Remove heat shield (2) towards top.

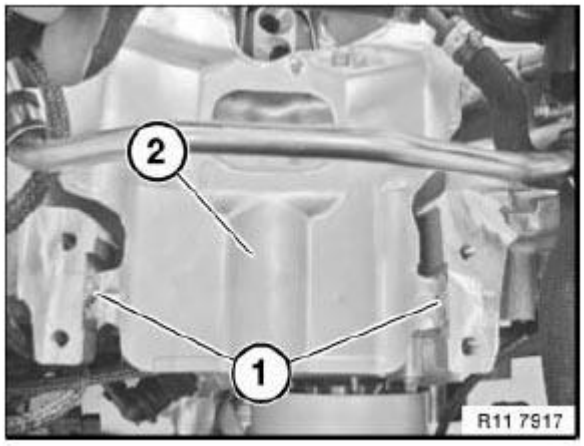

Fig. 499: Identifying Bottom Heat Shield Screws (2 Of 3)
Courtesy of BMW OF NORTH AMERICA, INC.

Release screws (1).

Tightening torque 11 65 3AZ, see **SUPERCHARGER**

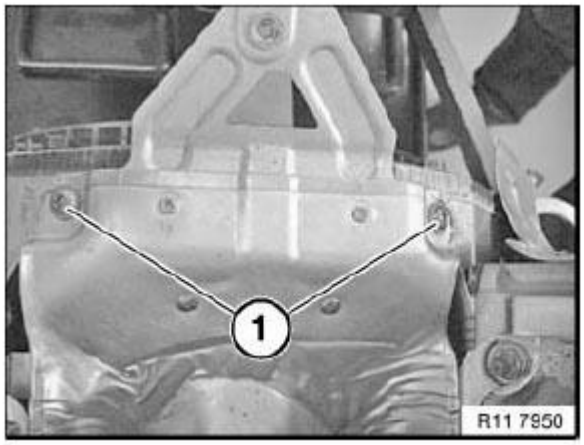

Fig. 500: Identifying Bottom Heat Shield Screws (3 Of 3)
Courtesy of BMW OF NORTH AMERICA, INC.

Release front screws on heat shield (1).

Tightening torque 11 65 3AZ, see **SUPERCHARGER**

Remove heat shield (1) towards top.

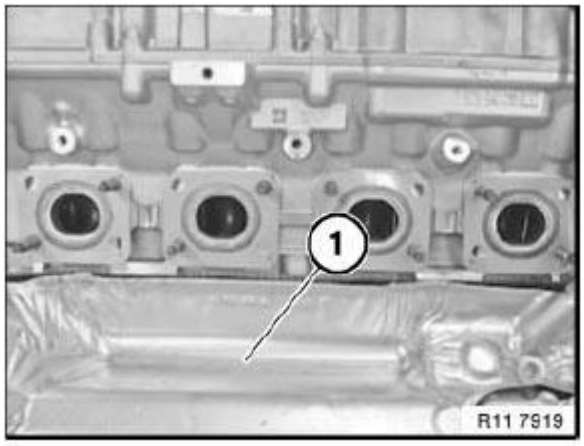

Fig. 501: Identifying Heat Shield
Courtesy of BMW OF NORTH AMERICA, INC.

Assemble engine.

11 65 712 REMOVING AND INSTALLING/REPLACING ELECTRIC CHANGEOVER VALVE ON EXHAUST TURBOCHARGER, LEFT (N63)

Necessary preliminary tasks:

- Remove left **turbocharger** .

Release screws (1).

Remove electric changeover valve.

Installation:

Replace O-ring.

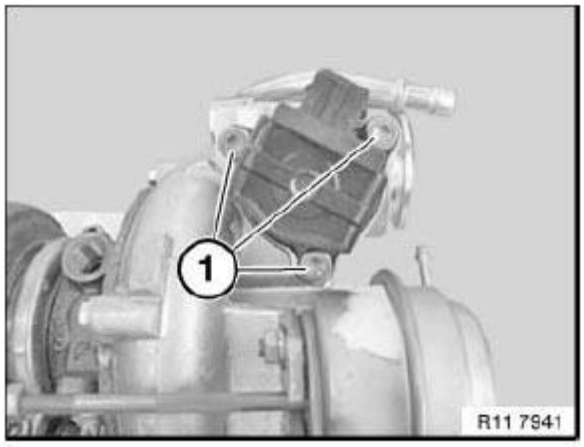

Fig. 502: Identifying Electric Changeover Valve Screws
Courtesy of BMW OF NORTH AMERICA, INC.

Assemble engine.

Follow diagnosis instruction.

1. Complete vehicle
2. Drive
3. Engine electrics
4. Air supply
5. Boost pressure control

11 65 714 REMOVING AND INSTALLING/REPLACING ELECTRIC CHANGEOVER VALVE ON EXHAUST TURBOCHARGER, RIGHT (N63)

Necessary preliminary tasks:

- Remove right **turbocharger** .

Release screws (1).

Remove electric changeover valve (2).

Installation:

Replace O-ring.

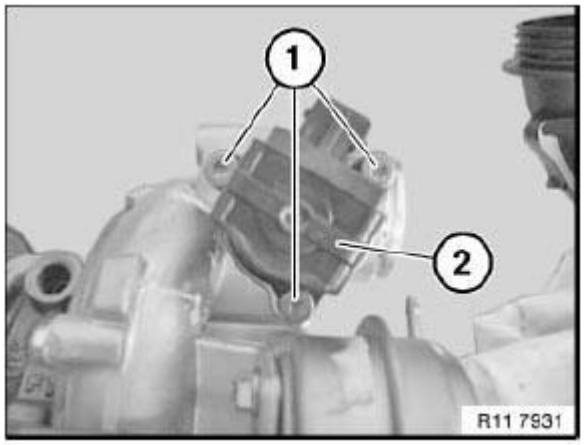

Fig. 503: Identifying Electric Changeover Valve With Screws
Courtesy of BMW OF NORTH AMERICA, INC.

Assemble engine.

Follow diagnosis instruction.

1. Complete vehicle
2. Drive
3. Engine electrics
4. Air supply
5. Boost pressure control

VACUUM PUMP

11 66 000 REMOVING AND INSTALLING/REPLACING VACUUM PUMP (N63)

IMPORTANT: Installation:

Due to the risk of damage to the engine gaskets/seals and the lack of brake boosting, make sure before starting the engine that all the vacuum lines are connected.

Vacuum pump is fitted on cylinder head 1 to 4 at rear on inlet camshaft.

Necessary preliminary tasks:

- Press brake pedal several times in order to reduce vacuum pressure in brake booster.
- Remove right catalytic converter.
- Remove right heat shield.

- Detach vacuum line from vacuum pump.

  Release screws (1).

  Remove heat shield (2).

  Remove vacuum hose.

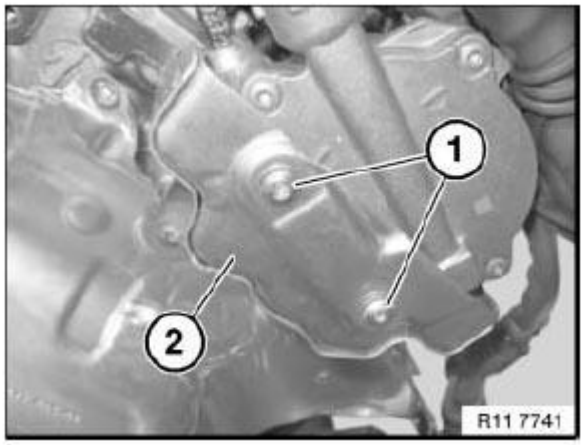

Fig. 504: Identifying Heat Shield Screws
Courtesy of BMW OF NORTH AMERICA, INC.

Release screws (1).

NOTE: Bolts (1) are secured against falling out.

Release screw (2).

Remove vacuum pump (3).

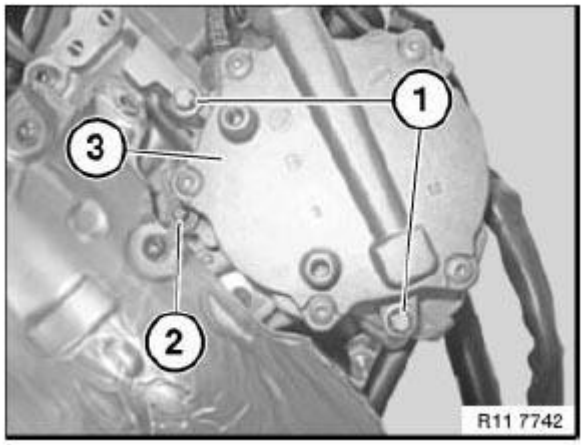

Fig. 505: Identifying Vacuum Pump Screws

Courtesy of BMW OF NORTH AMERICA, INC.

Drive (1) must be rotated into correct position prior to installation.

Installation:

Replace sealing ring (2) and coat with grease to facilitate fitting.

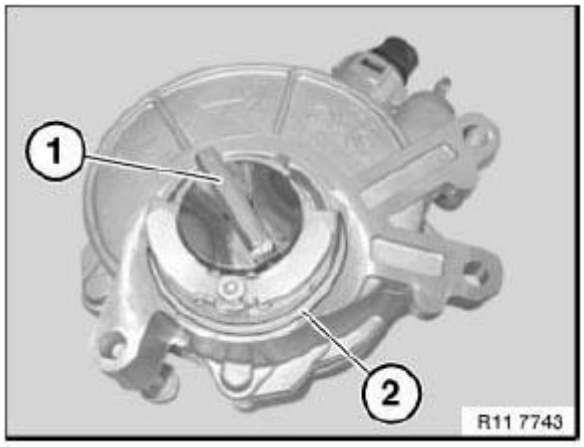

Fig. 506: Identifying Sealing Ring
Courtesy of BMW OF NORTH AMERICA, INC.

Installation:

Align vacuum pump drive to groove (1) of intake camshaft.

Vacuum pump can best be installed when groove (1) is vertically aligned.

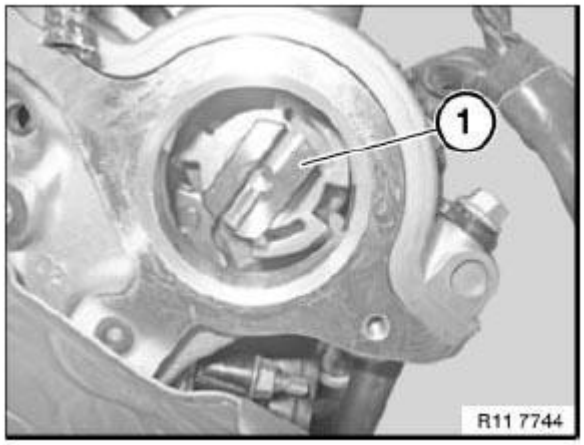

Fig. 507: Aligning Vacuum Pump Drive To Groove Of Intake Camshaft
Courtesy of BMW OF NORTH AMERICA, INC.

Check function of DME.

Check vacuum pump for leaks and correct operation.

TURBOCHARGER VALVE FOR EXHAUST GAS

11 74 509 REPLACING BOTH PRESSURE CONVERTERS FOR TURBOCHARGER (N63)

Necessary preliminary tasks:

- Partially release intercooler **expansion tank** . See **ENGINE RADIATOR** .
- Partially release **auxiliary coolant pump** for turbocharger.
- Disconnect plug connection on **coolant thermostat** .

Pressure converter, cylinders 1-4

Disconnect plug connection (1) on pressure converter.

Installation:

Plug connection (1) must snap audibly into place!

Disconnect black vacuum hose at connection (VAC = vacuum reservoir).

Disconnect black/red vacuum hose at connection (OUT = turbocharger vacuum unit).

Unscrew nuts (2).

Tightening torque 11 65 8AZ, see **SUPERCHARGER**

Remove pressure converter.

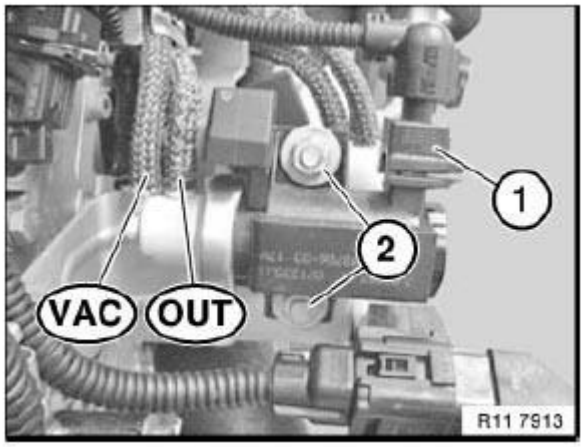

Fig. 508: Identifying Plug Connection With Nuts
Courtesy of BMW OF NORTH AMERICA, INC.

Pressure converter, cylinders 5-8

Disconnect plug connection (1) on pressure converter.

Installation:

Plug connection (1) must snap audibly into place!

Disconnect black vacuum hose at connection (VAC = vacuum reservoir).

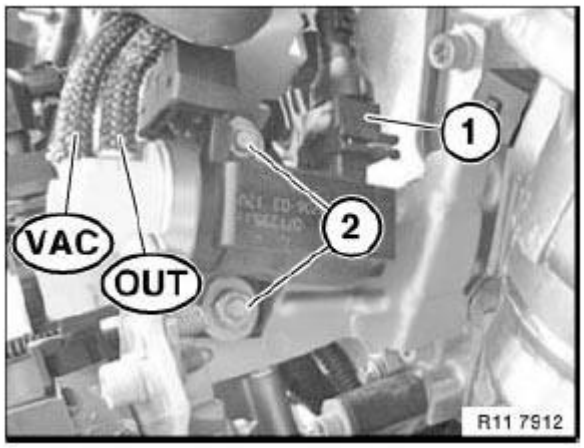

Fig. 509: Identifying Plug Connection With Nuts
Courtesy of BMW OF NORTH AMERICA, INC.

Disconnect black/blue vacuum hose at connection (OUT=turbocharger vacuum unit).

Unscrew nuts (2).

Tightening torque 11 65 8AZ, see **SUPERCHARGER**

Remove pressure converter.

Check activation via BMW diagnosis system.

EMISSION CONTROL OXYGEN SENSOR

11 78 530 REPLACING LEFT CONTROL SENSOR (N63)

Special tools required:

- **11 7 020**

See **ENGINE - SPECIAL TOOLS (N54, N63)** .

WARNING: Scalding hazard!

Only perform this work after engine has cooled down.

Necessary preliminary tasks:

- Check function of DME control unit
- Switch off ignition
- Remove **air filter housing** . See **13 71 030 REMOVING AND INSTALLING BOTH INTAKE FILTER HOUSINGS (N63)** .

Unlock plug connection and detach.

Unclip control sensor cable at retaining clips.

Release control sensor with special tool 11 7 020.

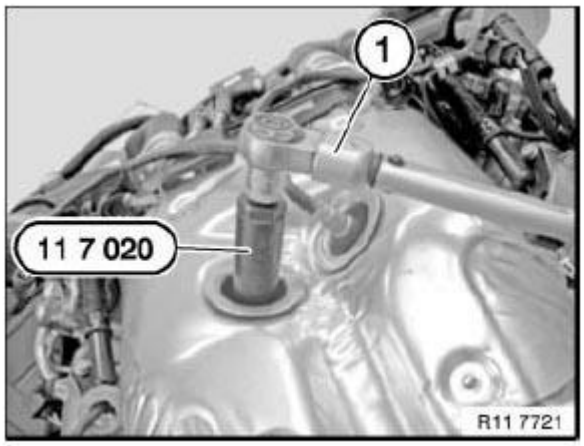

Fig. 510: Removing/Installing Control Sensor
Courtesy of BMW OF NORTH AMERICA, INC.

Installation:

The threads of new lambda control/monitor sensors are already coated with Never Seez Compound

If a lambda control/monitor sensor is to be reused, apply a thin and even coating of Never Seez Compound to the thread only.

The part of the lambda control/monitor sensor which projects into the exhaust system branch (sensor ceramics) must **not** be cleaned and **not** coated with lubricant.

Secure control sensor with special tool 11 7 020 and a torque wrench (1).

Tightening torque 11 78 1AZ, see **EMISSION CONTROL**

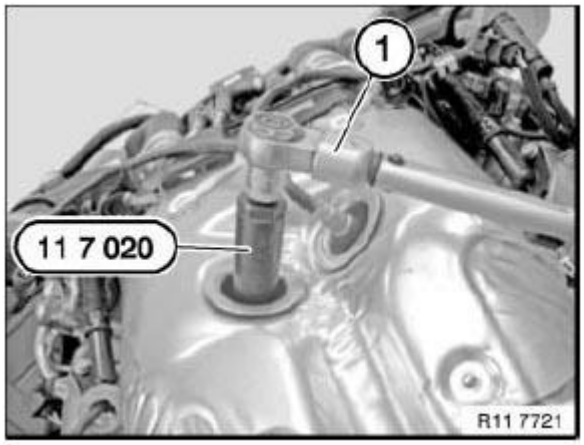

Fig. 511: Removing/Installing Control Sensor
Courtesy of BMW OF NORTH AMERICA, INC.

Installation:

Check function of DME control unit.

Pay attention to cable routing of control sensor.

11 78 533 REPLACING RIGHT CONTROL SENSOR (N63)

Special tools required:

- **11 7 020**

See **ENGINE - SPECIAL TOOLS (N54, N63)** .

WARNING: **Scalding hazard!**

Only perform this work after engine has cooled down.

Necessary preliminary tasks:

- Check function of DME control unit
- Switch off ignition
- Remove **air filter housing** . See **13 71 030 REMOVING AND INSTALLING BOTH INTAKE FILTER HOUSINGS (N63)** .

Unlock plug connection and detach.

Unclip control sensor cable from holder.

Release control sensor with special tool 11 7 020.

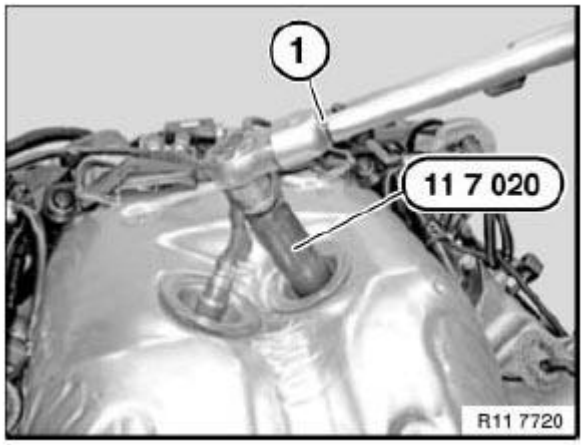

Fig. 512: Removing/Installing Control Sensor
Courtesy of BMW OF NORTH AMERICA, INC.

Installation:

The threads of new lambda control/monitor sensors are already coated with Never Seez Compound

If a lambda control/monitor sensor is to be reused, apply a thin and even coating of Never Seez Compound to the thread only.

The part of the lambda control/monitor sensor which projects into the exhaust system branch (sensor ceramics) must **not** be cleaned and **not** coated with lubricant.

Secure control sensor with special tool 11 7 020 and a torque wrench (1).

Tightening torque 11 78 1AZ, see **EMISSION CONTROL**

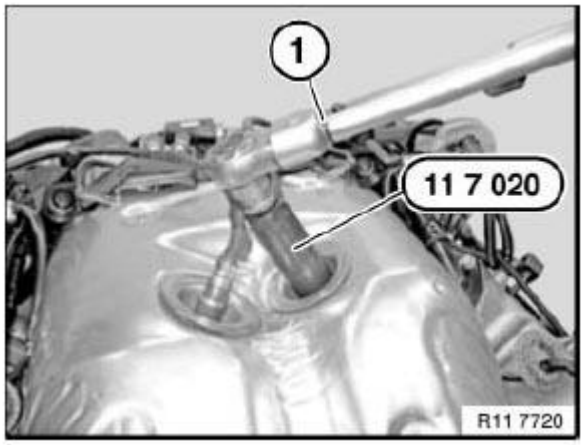

Fig. 513: Removing/Installing Control Sensor
Courtesy of BMW OF NORTH AMERICA, INC.

Installation:

Check function of DME control unit.

Pay attention to cable routing of control sensor.

11 78 540 REPLACING LEFT MONITOR SENSOR (N63)

Special tools required:

- **11 7 020**

See **ENGINE - SPECIAL TOOLS (N54, N63)** .

WARNING: **Scalding hazard!**

Only perform this work after engine has cooled down.

Necessary preliminary tasks:

- Check function of DME control unit
- Switch off ignition
- Remove **air filter housing** . See **13 71 030 REMOVING AND INSTALLING BOTH INTAKE FILTER HOUSINGS (N63)** .

  Release retaining clip (1).

  Remove heat shield wire ring (2) over oxygen sensor.

  Detach oxygen sensor cable from retaining clips (3).

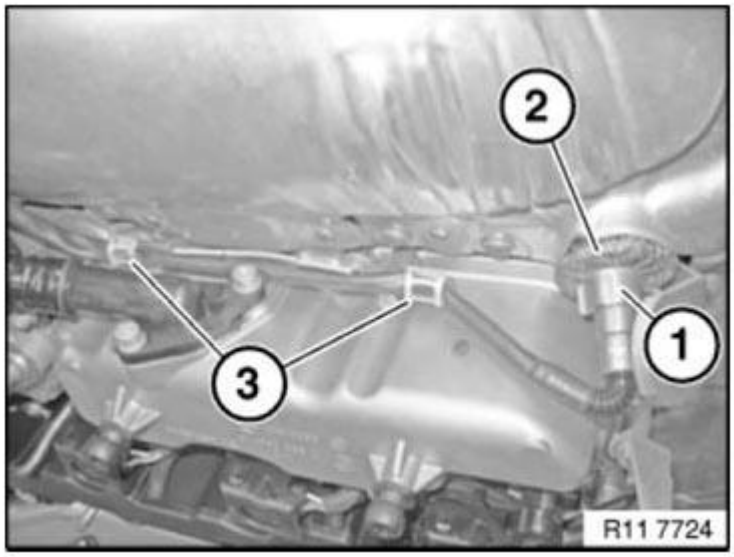

Fig. 514: Identifying Heat Shield Wire Ring And Retaining Clips

Courtesy of BMW OF NORTH AMERICA, INC.

Release monitor sensor (1) with special tool 11 7 020.

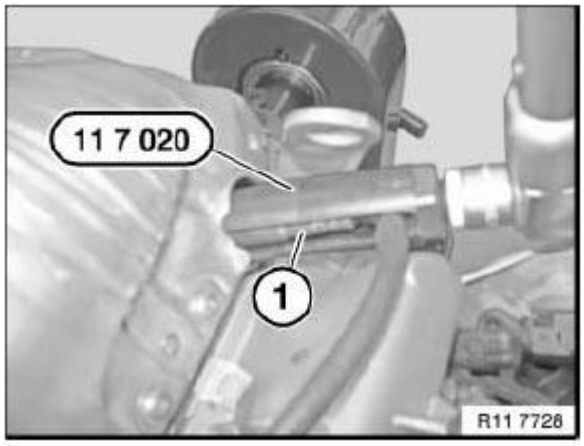

Fig. 515: Removing Monitor Sensor With Special Tool (11 7 020)
Courtesy of BMW OF NORTH AMERICA, INC.

Installation:

The threads of new lambda control/monitor sensors are already coated with Never Seez Compound.

If a lambda control/monitor sensor is to be reused, apply a thin and even coating of Never Seez Compound to the thread only.

The part of the lambda control/monitor sensor which projects into the exhaust system branch (sensor ceramics) must **not** be cleaned and **not** coated with lubricant.

Secure monitor sensor (1) with special tool 11 7 020.

Tightening torque 11 78 1AZ, see **EMISSION CONTROL**

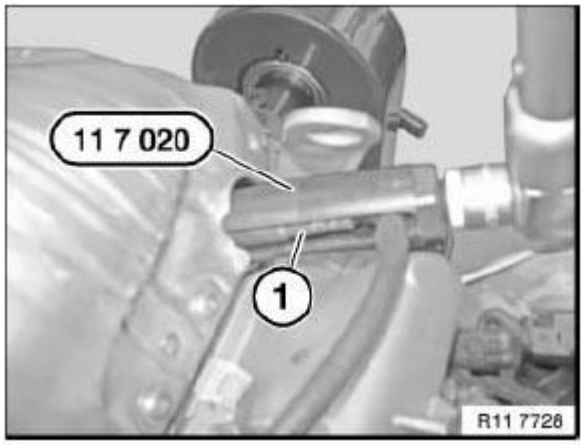

Fig. 516: Removing Monitor Sensor With Special Tool (11 7 020)
Courtesy of BMW OF NORTH AMERICA, INC.

Installation:

Check function of DME control unit.

Pay attention to cable routing of monitor sensor.

11 78 543 REPLACING RIGHT MONITOR SENSOR (N63)

Special tools required:

- **11 7 020**

See **ENGINE - SPECIAL TOOLS (N54, N63)** .

WARNING: **Scalding hazard!**

Only perform this work after engine has cooled down.

Necessary preliminary tasks:

- Check function of DME control unit
- Switch off ignition
- Remove **air filter housing** . See **13 71 030 REMOVING AND INSTALLING BOTH INTAKE FILTER HOUSINGS (N63)** .

Release retaining clip (1).

Remove heat shield (2) over oxygen sensor.

Detach oxygen sensor cable from retaining clips (3).

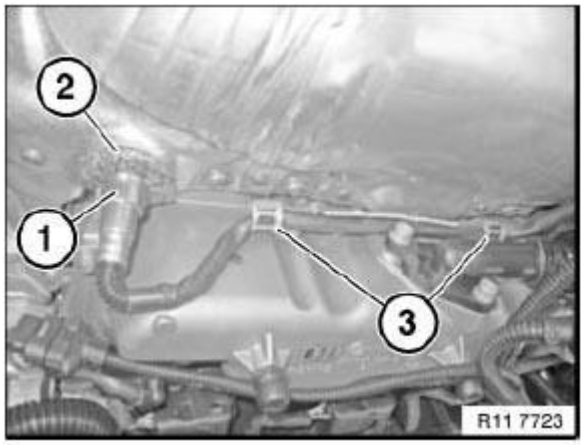

Fig. 517: Identifying Wire Ring And Retaining Clip
Courtesy of BMW OF NORTH AMERICA, INC.

Release monitor sensor (1) with special tool 11 7 020.

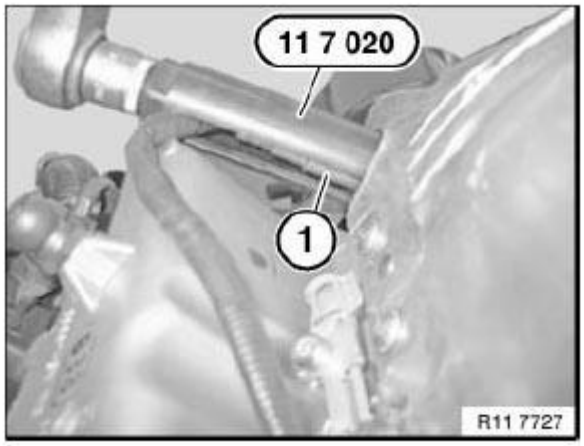

Fig. 518: Removing/Installing Control Sensor
Courtesy of BMW OF NORTH AMERICA, INC.

Installation:

The threads of new lambda control/monitor sensors are already coated with Never Seez Compound.

If a lambda control/monitor sensor is to be reused, apply a thin and even coating of Never Seez Compound to the thread only.

The part of the lambda control/monitor sensor which projects into the exhaust system branch (sensor ceramics) must **not** be cleaned and **not** coated with lubricant.

Secure monitor sensor (1) with special tool 11 7 020.

Tightening torque 11 78 1AZ, see **EMISSION CONTROL**

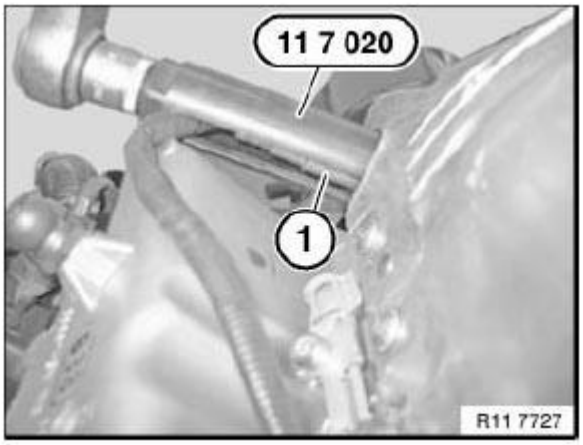

Fig. 519: Removing/Installing Control Sensor
Courtesy of BMW OF NORTH AMERICA, INC.

Installation:

Check function of DME control unit.

Pay attention to cable routing of monitor sensor.

