PREVIOUS MENU

FORD 4R44E / 4R55E

INDEX

	GO TO PAGE
General Description	3
Vehicle Application	6
Bearings Bushings and Gaskets	7
Computer Sensors	11
Diagnosis and Testing	19
Transmission Disassembly	31
Valve Body	53
Pump Assembly	61
Clutch Drums	65
Overdrive Planetary	81
Torque Converter	86
Transmission Assembly	87

AUTOMATIC TRANSMISSION SERVICE GROUP
9200 S. Dadeland Blvd.
Suite 720
MIAMI FLORIDA 33156
(305) 670-4161

INTRODUCTION
FORD 4R44E 4R55E

The 4R44E/4R55E is a 4 speed fully computerized transmission. At a first glance it resembles the familiar A4LD. The shift cycles and the transmission oil pressure are computer controlled. These transmissions feature a four element torque converter including the converter clutch. There are three compund planetary gearsets, three bands, three multi-disc clutch packs and two one-way clutch assemblies.

This manual covers the inspection, teardown and assembly of this transmission along with the basic Diagnostic trouble codes. The ATSG PASS books cover computer diagnosing of these transmissions.

We thank the Ford Motor Company for the illustrations and information that have made this booklet possible

ROBERT D. CHERRNAY
TECHNICAL DIRECTOR

DALE ENGLAND
FIELD SERVICE CONSULTANT

WAYNE COLONNA
TECHNICAL SUPERVISOR

ED KRUSE
TECHNICAL CONSULTANT

PETE LUBAN
TECHNICAL CONSULTANT

JIM DIAL
TECHNICAL CONSULTANT

GREGORY LIPNICK
TECHNICAL CONSULTANT

JERRY GOTT
TECHNICAL CONSULTANT

DAVID CHALKER
TECHNICAL CONSULTANT

AUTOMATIC TRANSMISSION SERVICE GROUP
9200 S. DADELAND BLVD.
SUITE 720
MIAMI, FL 33156
(305) 670-4161

FORD 4R44E/4R55E
FULLY COMPUTERIZED A4LD
GENERAL DESCRIPTION

The 4R44E/4R55EE automatic (rear wheel drive) transmissions are four-speed units with electronic shift controls.

The 4R44E is used with 2.3L and 3.0L engine applications. The 4R55E transmission is used with 4.0L engine applications.

These transmissions feature a four element torque converter including TCC (Torque Conveter Clutch).
The gear train includes:

- Three compound planetary gear sets
- Three bands
- Three multi-plate clutches
- Two one-way clutches

The hydraulic functions are directed by electronic solenoids to control:

- Engagement feel
- Shift feel
- Shift scheduling
- Modulated TCC applications
- Timing of the 3-2 T>D> and K>D> shifts
- Engine braking (with O/D cancelled) utilizing the Coast Clutch
- Manual first timing
- Thermostat bypass and cooler unit.

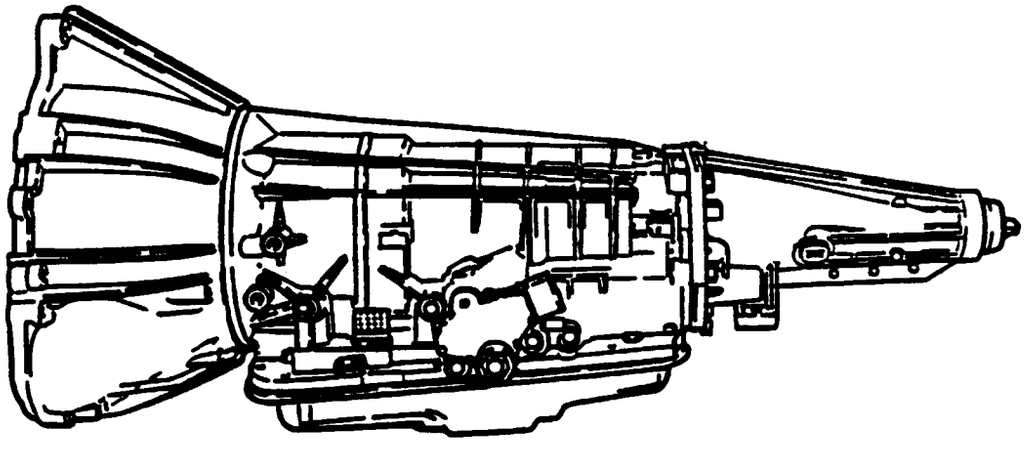

TRANSMISSION RANGE SELECTOR AND SHIFT PATTERNS

The 4R44E/4R55E transmission range selector lever has six positions: P<R<N(D)< 2, 1. The driver selects the required gear position by moving the selector lever to the various positions, interlocking cables and linkages connect the selector lever to the transmission. This allows the selector lever to move internal linkages and the manual control valve, which signals the driver demand.

PARK
No power flow is transmitted through the transmission in PARK. The manual lever shaft, which is connected to a park rod, presses the parking pawl into the park gear on the output shaft. This locks the output shaft and prevents the vehicle from rolling. However, for safety reasons, the parking brake should be applied whenever the vehicle is parked.

While the engine can be started in either P or N position, the ignition key can only be removed with the selector in park.

REVERSE
Reverse gear allows the vehicle to be operated in a rearward direction, at a reduced gear ratio. When overdrive has been cancelled, engine braking is provided in R with the coast clutch applied.

NEUTRAL
As in PARK, there is no power transferred through the transmission, However, the final drive is not locked by the parking pawlso the wheels are free to rotate. The vehicle may be started in the N position, but the ignition key cannot be removed.

OVERDRIVE
In the (D) position, the transmission will upshift or downshift 1-2-3-4 automatically. When overdrive has been cancelled by depressing the transmission control switch (TCS) and activating (TCIL), the transmissing will not upshift to 4th gear. Engine braking is provided in 1st, 2nd, 3rd and reverse gears with the coast clutch applied.

MANUAL 2nd
Selection of the 2 position provides a 2nd gear hold position from a manual upshift or downshift. When the 2 position is selected from a stop, the transmission will start in 2nd gear. This allows for maximum traction on slippery surfaces. Engine braking is provided in the 2 position when the transmission control switch (TCS) is on or off.

MANUAL 1st
The 1 position provides a 1sr gear hold after a automatic or manual downshift. The transmission is prevented from downshifting above a specific speed (approximately 48km(30 mph) to protect the powertrain from overspeeding. Engine braking is provided in the manual 1 position when the Transmission Control Switch (TCS) or (TCIL) is on or off.

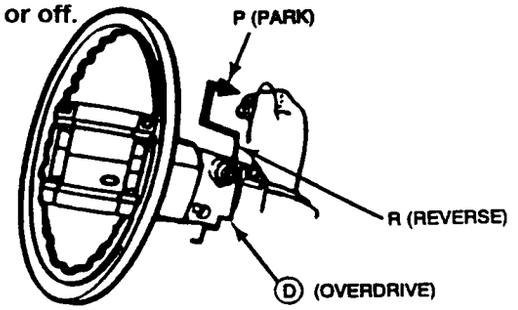

FORD 4R44E/4R55E

GEARTRAIN

Power is transmitted from the torque converter to the (simple) planetary gearsets through the input shaft.

By holding and driving certain members of the gearsets, four forward ratios and one reverse ratio are obtained and transmitted to the output shaft and differential.

The ratios from the (simple) planetary gearsets are:

- 2.474:1 in 1st (Low)
- 1.474:1 in 2nd (Intermediate)
- 1.000:1 in 3rd (Drive)
- 0.75:1 in 4th (Overdrive)
- 2.1:1 in Reverse

APPLY COMPONENTS

These are the following apply components in the 4R44E/4R55E:

- Overdrive band
- Intermediate band
- Reverse band
- Direct clutch
- Forward clutch
- Overdrive one-way clutch
- Low one-way clutch
- Coast clutch

BAND/CLUTCH APPLICATION CHART

	OVERDRIVE BAND	INTERMEDIATE BAND	LOW/REVERSE BAND	FORWARD CLUTCH	DIRECT CLUTCH	COAST CLUTCH	OD ONE-WAY CLUTCH		REAR ONE-WAY CLUTCH		SHIFT SOLENOID 1 (SS1)	SHIFT SOLENOID 2 (SS2)	SHIFT SOLENOID 3 (SS3)	COAST CLUTCH SOLENOID CCS	ENGINE BRAKING	TCIL
							DRIVE	COAST	DRIVE	COAST						
PARK											ON	OFF	OFF	OFF	NE	NE
REVERSE			A		A		H	OR			ON	OFF	OFF	OFF	NO	OFF
REVERSE*			A		A	A	H	H			ON	OFF	OFF	ON	YES	ON
NEUTRAL											ON	OFF	OFF	OFF	NE	NE
1ST				A			H	OR	H	OR	ON	OFF	OFF	OFF	NO	OFF
1ST*				A		A	H	H	H	OR	ON	OFF	OFF	ON	YES	ON
2ND		A		A			H	OR	OR	OR	ON	ON	OFF	OFF	NO	OFF
2ND*		A		A		A	H	H	OR	OR	ON	ON	OFF	ON	YES	ON
3RD				A	A		H	OR	OR	OR	OFF	OFF	OFF	OFF	NO	OFF
3RD*				A	A	A	H	H	OR	OR	OFF	OFF	OFF	ON	YES	ON
4TH	A			A	A		OR	OR	OR	OR	OFF	OFF	ON	OFF	NO	OFF
MAN. 1ST			A	A		A	H	H	H	H	ON	OFF	OFF	ON	YES	NE
MAN. 2ND		A		A		A	H	H	OR	OR	ON	ON	OFF	ON	YES	NE

A = APPLIED H = HOLD OR = OVERRUNNING * = OVERDRIVE CANCELLED NE = NO EFFECT

VEHICLE APPLICATION

Ranger, Explorer

DESCRIPTION AND OPERATION

4R44E / 4R55E Automatic Transmission

The 4R44E / 4R55E automatic transmissions are electronically controlled four-speed units.

The 4R44E transmission is used with the 2.3L and 3.0L engine applications. The 4R55E transmission is used with the 4.0L engine applications.

These transmissions feature a four element torque converter with a torque converter clutch (TCC). The geartrain includes:

- Three compound planetary gearsets
- Three bands
- Three multi-plate clutches
- Two one-way clutches

The hydraulic functions are directed by electronic solenoids to control:

- Engagement feel
- Shift feel
- Shift scheduling
- Modulated TCC applications
- Timing of the 3-2 T.D. and K.D. shifts
- Engine braking (with O / D canceled) utilizing the coast clutch
- Manual 1st timing
- Thermostat bypass and cooler limit

Identification Tags

Models are identified by a service identification tag affixed to the assembly. Typical service identification tags are shown below.

Located Under Extension Housing Bolt

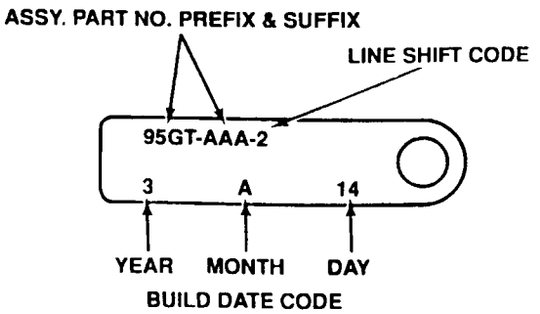

Assembly Plant Bar Code I.D. Label Located on Fluid Pan

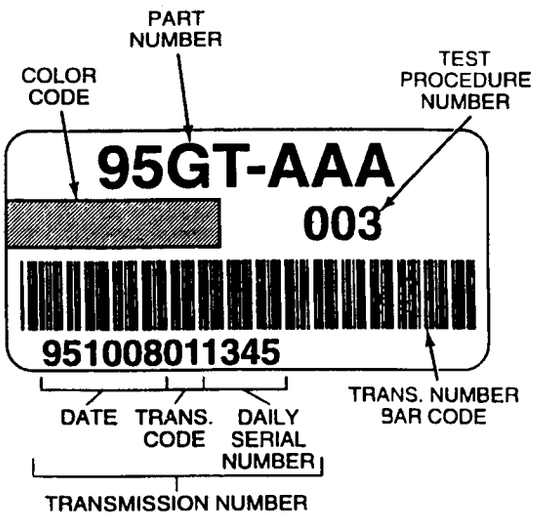

DESCRIPTION AND OPERATION (Continued)

Bushings, Bearings and Thrust Washers

Bushings, Bearings, Thrust Washers — 4R44E

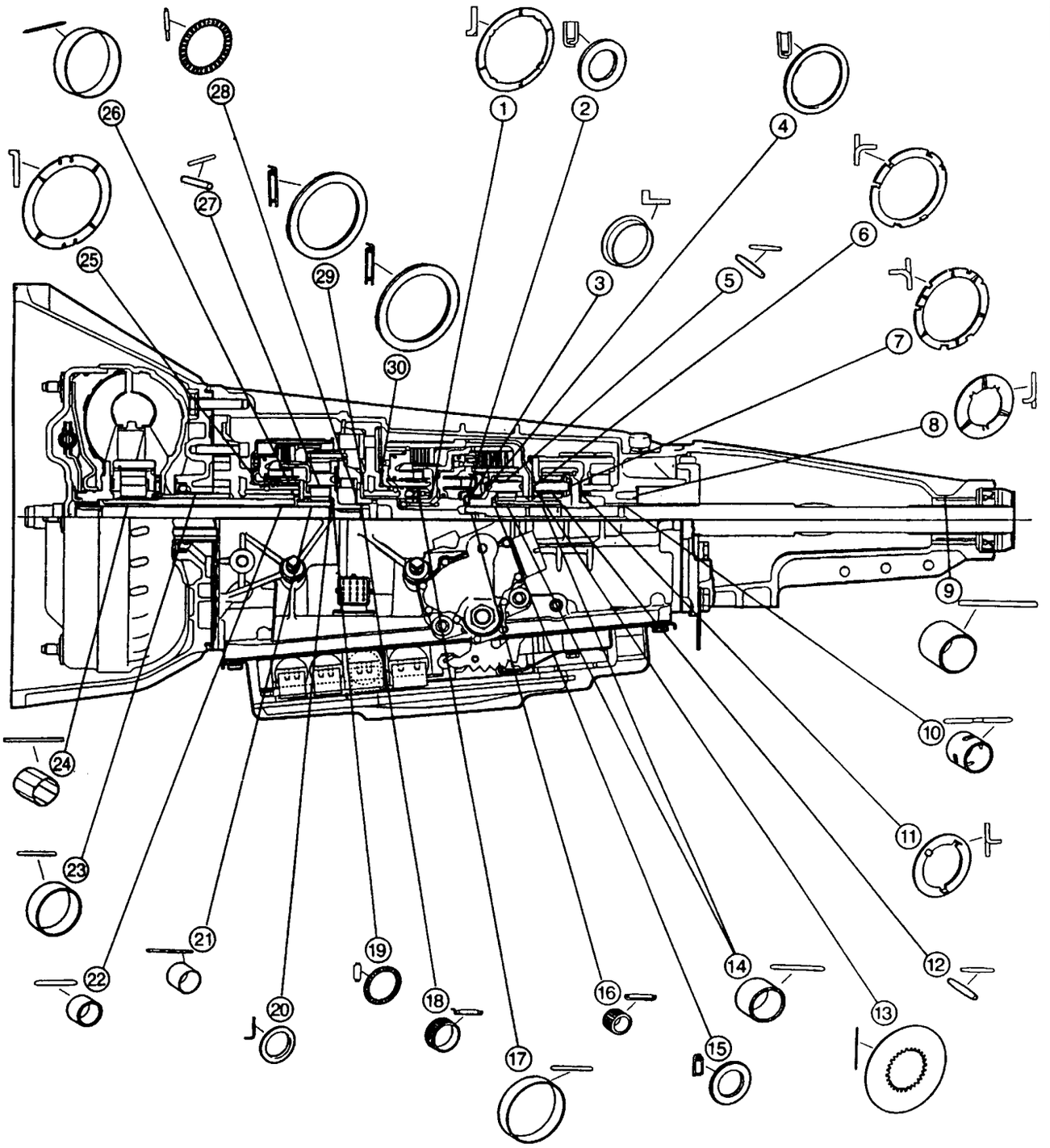

DESCRIPTION AND OPERATION (Continued)

Bushings, Bearings and Thrust Washers — 4R55E

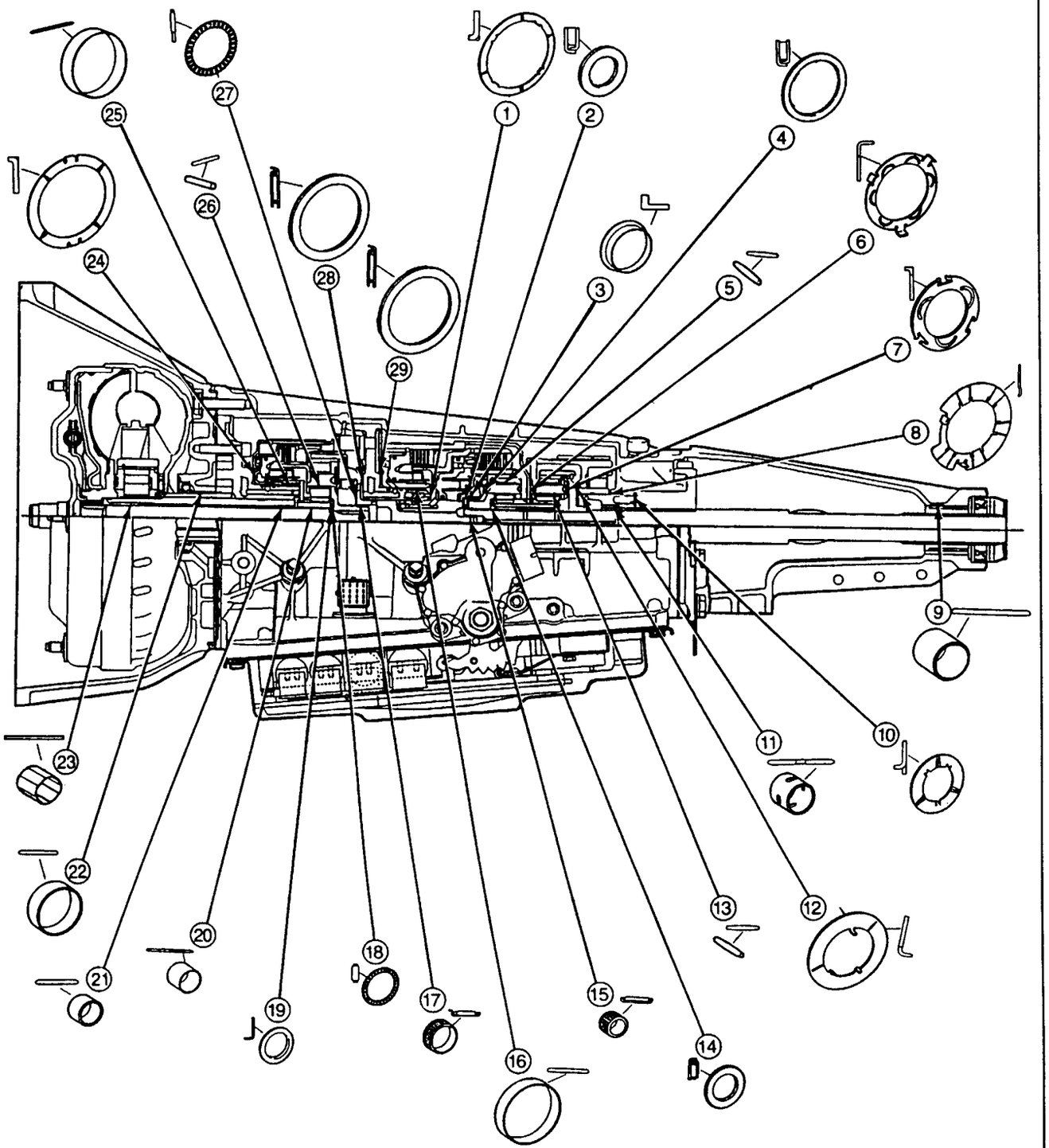

DESCRIPTION AND OPERATION (Continued)

4R44E

Item	Part Number	Description
1	7C096	No. 5 Forward Clutch Cylinder Thrust Washer
2	7D234	No. 6A Forward Ring Gear Hub Thrust Bearing
3	7D090	No. 6B Forward Clutch Thrust Washer
4	7F374	No. 7 Forward Planet Thrust Bearing
5	—	Needle Bearing (Part of 7A398)
6	7A166	No. 8 Reverse Planet Carrier Thrust Washer
7	7A166	No. 9 Reverse Planet Carrier Thrust Washer
8	7B368	No. 11 Output Shaft Thrust Washer
9	7A034	Extension Housing Bushing
10	—	Bushing (Part of 7005)
11	7D422	No. 10 Output Shaft Hub Thrust Washer
12	—	Needle Bearing (Part of 7D006)
13	7D066	No. 14 Input Shell Thrust Washer
14	—	Bushings (Part of 7D063)

(Continued)

Item	Part Number	Description
15	—	Needle Bearing (Part of 7A398)
16	—	Needle Bearing (Part of 7060)
17	—	Bushing (Part of 7D044)
18	—	Needle Bearing (Part of 7B446)
19	—	Needle Bearing (Part of 7B446)
20	7D235	No. 12 Sun Gear Thrust Bearing Race
21	—	Bushing (Part of 7D063)
22	—	Bushing (Part of 7A103)
23	—	Bushing (Part of 7976)
24	—	Bushing (Part of 7A103)
25	7D014	No. 1 Front Pump Thrust Washer
26	—	Bushing (Part of 7L669)
27	—	Needle Bearing (Part of 7B446)
28	7L495	No. 2 Overdrive Planet Thrust Bearing
29	7L326	No. 3 Center Shaft Thrust Bearing
30	7L326	No. 4 Intermediate Brake Drum Thrust Bearing

4R55E

Item	Part Number	Description
1	7C096	No. 5 Forward Clutch Cylinder Thrust Washer
2	7D234	No. 6A Forward Ring Gear Hub Thrust Bearing
3	7D090	No. 6B Forward Clutch Thrust Washer
4	7F374	No. 7 Forward Planet Thrust Bearing
5	—	Needle Bearing (Part of 7A398)
6	7A166	No. 8 Reverse Planet Carrier Thrust Washer
7	7A166	No. 9 Reverse Planet Carrier Thrust Washer
8	—	Washer (Part of 7005)
9	7A034	Extension Housing Bushing
10	7B368	No. 11 Output Shaft Thrust Washer
11	—	Bushing (Part of 7005)
12	7D422	No. 10 Output Shaft Hub Thrust Washer
13	—	Needle Bearing (Part of 7D006)
14	—	Needle Bearing (Part of 7A398)

Item	Part Number	Description
15	—	Needle Bearing (Part of 7060)
16	—	Bushing (Part of 7D044)
17	—	Needle Bearing (Part of 7B446)
18	—	Needle Bearing (Part of 7B446)
19	7D235	No. 12 Sun Gear Thrust Bearing Race
20	—	Bushing (Part of 7D063)
21	—	Bushing (Part of 7A103)
22	—	Bushing (Part of 7976)
23	—	Bushing (Part of 7A103)
24	7D014	No. 1 Front Pump Thrust Washer
25	—	Bushing (Part of 7L669)
26	—	Needle Bearing (Part of 7B446)
27	7L495	No. 2 Overdrive Planet Thrust Bearing
28	7L326	No. 3 Center Shaft Thrust Bearing
29	7L326	No. 4 Intermediate Brake Drum Thrust Bearing

4R44E/4R55E Seals, Rings and Gaskets

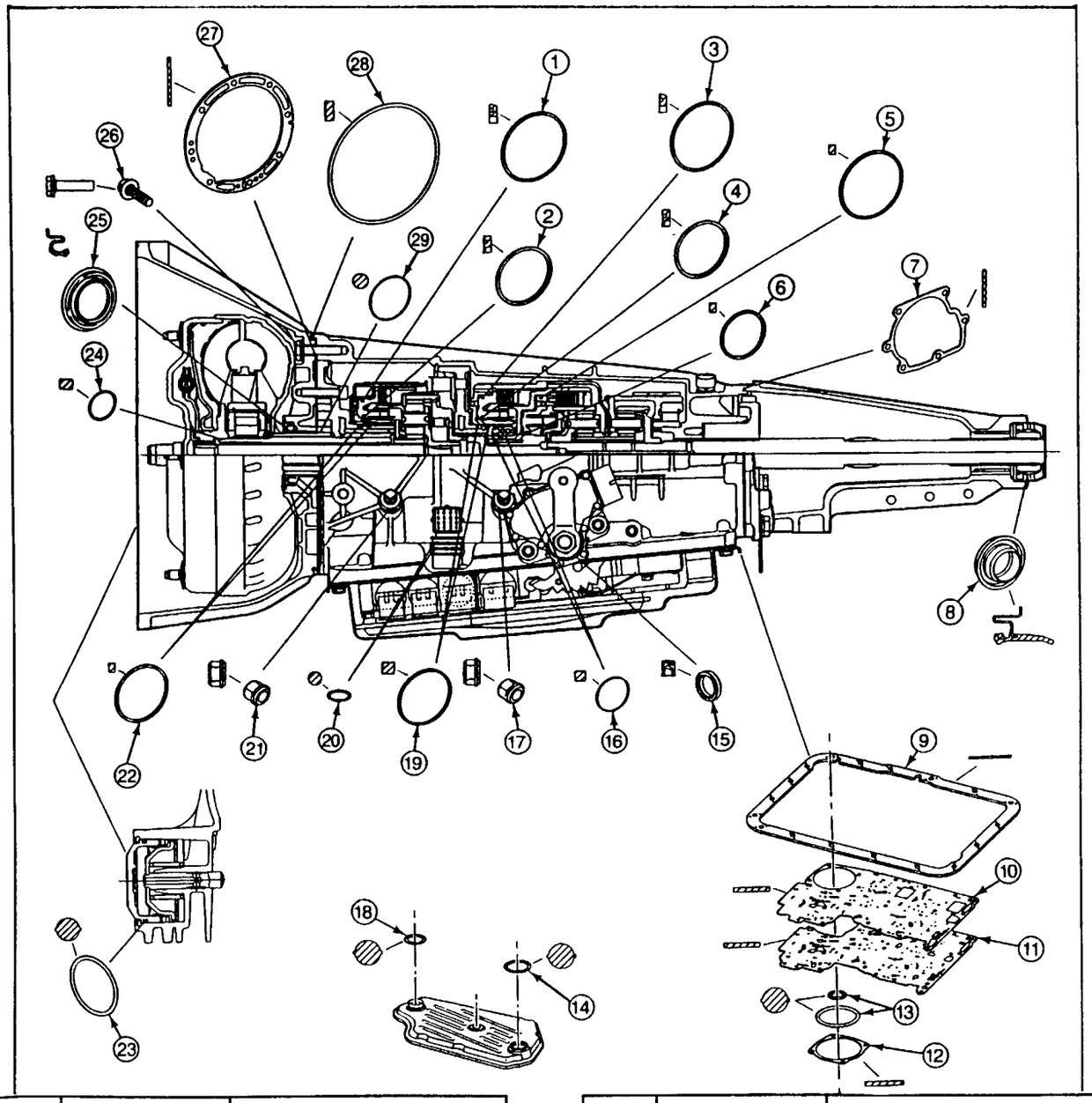

Item	Part Number	Description
1	7A548	Seal Ring
2	7D404	Seal Ring
3	7A548	Seal Ring
4	7D404	Seal Ring
5	7A548	Seal Ring
6	7A548	Seal Ring
7	7086	Gasket (Extension Housing)
8	7052	Seal Assembly (Extension Housing)
9	7A191	Gasket (Fluid Pan)
10	7D100	Gasket (Valve Body Upper)
11	7D100	Gasket (Valve Body Lower)
12	7L173	Gasket (Reverse Servo Plate Cover)
13	7423	O-Ring (Reverse Servo Piston)
14	7A469	O-Ring (Fluid Filter Assembly Large)

Item	Part Number	Description
15	7B498	Seal Assembly (Main Control Lever)
16	7D019	Seal Ring
17	E825100	Nut and Seal
18	7A469	O-Ring (Fluid Filter Assembly Small)
19	7D025	Seal Ring
20	84400120	O-Ring
21	E825100	Nut and Seal
22	7A248	Seal Ring
23	7D040	O-Ring (Intermediate and Overdrive Servos)
24	7L323	O-Ring
25	7A248	Seal Assembly (Converter Hub)
26	E804595-S200	Screw and Seal Assembly
27	7A136	Gasket (Fluid Pump)
28	7A248	O-Ring
29	W701431	O-Ring

FORD 4R44E/4R55E

CONTROL SYSTEM COMPONENT LOCATOR

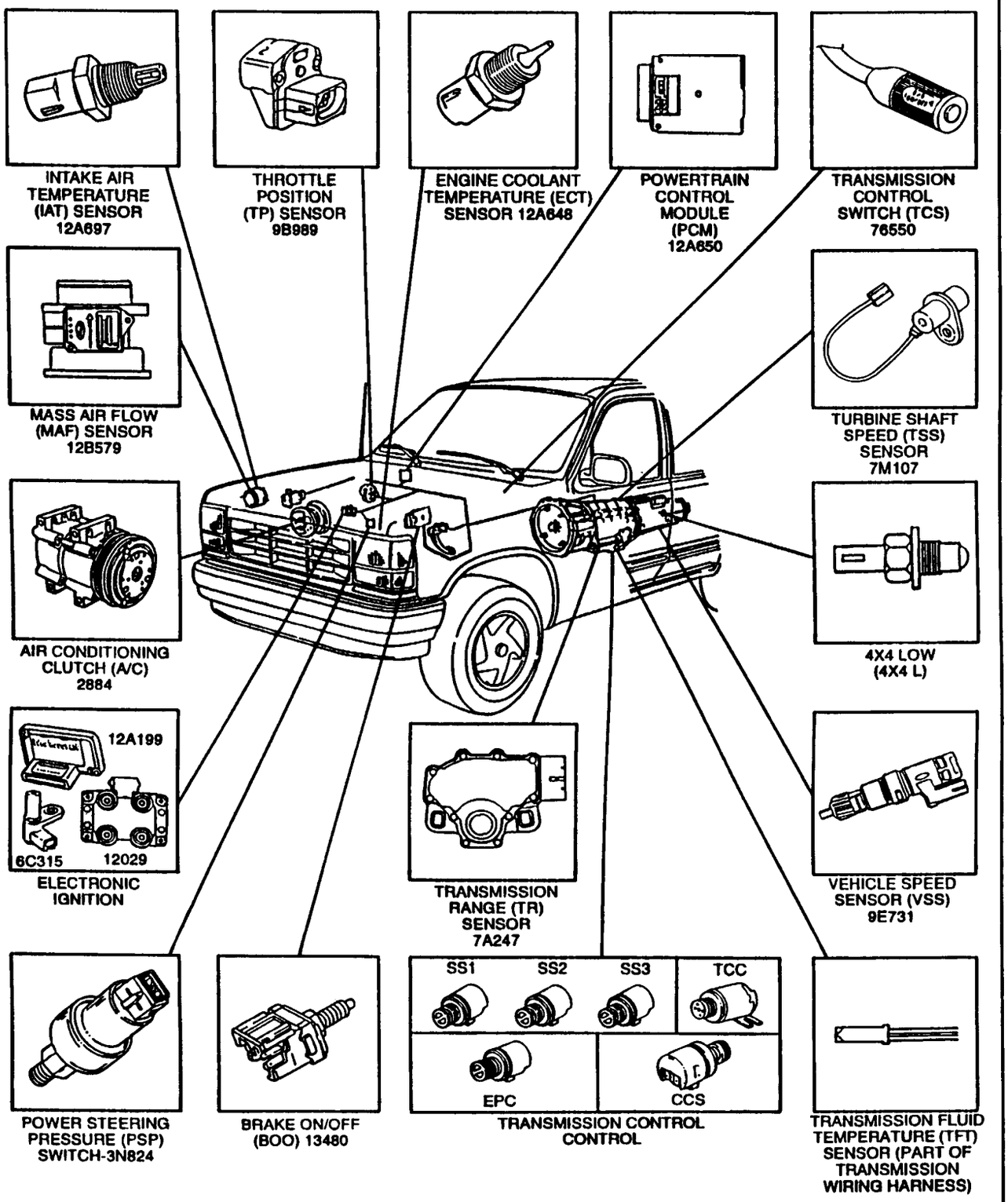

Transmission Range Selector and Shift Patterns

The 4R44E / 4R55E transmission range selector lever has six positions: P, R, N, D, 2, 1. The driver selects the required gear position by moving the selector lever to the various positions. Interlocking cables and linkages connect the selector lever to the transmission. This allows the selector lever to move internal linkages and the manual control valve, which signals the driver demand.

Park

No powerflow is transferred through the transmission in PARK. The manual lever shaft, which is connected to a park rod, presses the parking pawl into the park gear on the output shaft. This locks the output shaft and prevents the vehicle from rolling. However, for safety reasons, the parking brake should be applied whenever the vehicle is parked.

While the engine can be started in either P or N position, the ignition key can only be removed in PARK.

Reverse

Reverse gear allows the vehicle to be operated in a rearward direction, at a reduced gear ratio.

Neutral

As in PARK, there is no power transferred through the transmission. However, the final drive is not locked by the parking pawl, so the wheels are free to rotate. The vehicle may be started in the N position, but the ignition key cannot be removed.

Overdrive

In the D position, the transmission will upshift or downshift 1-2-3-4 automatically.

When overdrive has been canceled by turning the transmission control switch on, the transmission will not upshift to 4th gear. Engine braking is provided in 1st, 2nd, and 3rd gears with the coast clutch applied.

Manual 2nd

Selection of the 2 position provides a 2nd gear hold position from a manual upshift or downshift. When the 2 position is selected from a stop, the transmission will start in second gear. This allows for maximum traction on slippery surfaces. Engine braking is provided in the 2 position when the transmission control switch (TCS) is on or off.

Manual 1st

The 1 position provides a 1st gear hold after an automatic or manual downshift. The transmission is prevented from downshifting above a specific speed (approximately 48 km / h [30 mph]) to protect the powertrain from overspeeding. Engine braking is provided in the 1 position when the transmission control switch (TCS) is on or off.

Transmission Control Switch (TCS) Operation

The transmission control switch (TCS) is a driver-controlled momentary contact switch mounted on the end of the transmission range selector lever. When the TCS is activated, 4th gear operation (overdrive) is canceled, coast clutch applied, and engine braking is provided in 1st, 2nd and 3rd gears.

Transmission Electronic Control System

Powertrain Control Module (PCM) 12A650:

Description: The Powertrain Control Module (PCM) controls various engine functions and provides control of the 4R44E / 4R55E transmissions.

The PCM responds to inputs and operates solenoids for electro-hydraulic control of line pressure, shift scheduling, Torque Converter Clutch (TCC) scheduling and coast clutch control for coast braking.

The PCM has the ability to:

- Monitor its input and output devices for the presence of faults.
- Store Diagnostic Trouble Codes (DTCs) related to detected faults.
- Alert the driver for some detected faults by turning ON the Malfunctioning Indicator Lamp (MIL) in the instrument cluster.
- Display information when a service technician connects diagnostic equipment.

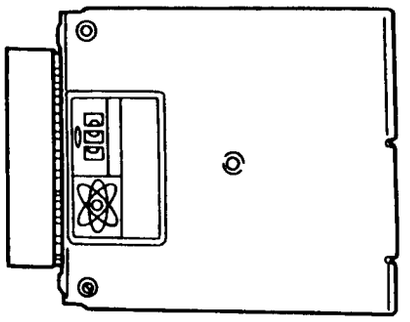

Diagnostic Trouble Codes: 511, 512, 513, P0603, P0605.

Engine Coolant Temperature (ECT) Sensor 12A648:

Description: The Engine Coolant Temperature (ECT) sensor detects the temperature of engine coolant and supplies the information to the PCM.

The ECT sensor is threaded into the heater outlet fitting or cooling passage on the engine. For automatic transmission applications, the ECT is used to control TCC solenoid operation. For engine control applications, the ECT signal is used to modify ignition timing, EGR flow, and air-to-fuel ratio as a function of engine coolant temperature. On electronic instrument cluster applications, the ECT output is used to control a coolant temperature indicator.

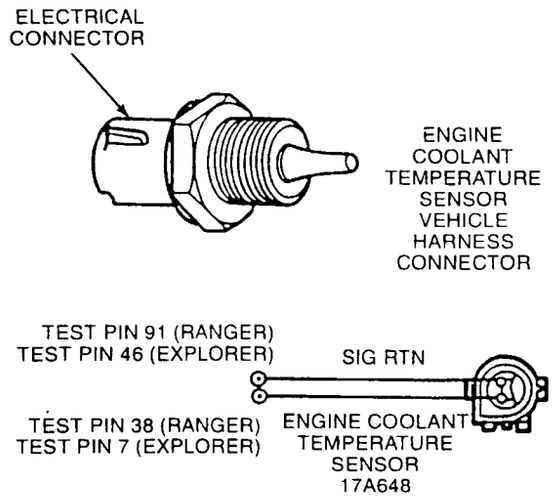

Symptoms: Torque Converter Clutch Solenoid will always be "OFF," resulting in reduced fuel economy.

Diagnostic Trouble Codes: 116, 117, 118, P0117, P0118, P1116, P1117.

Intake Air Temperature (IAT) Sensor 12A697:

Description: The Intake Air Temperature (IAT) sensor is used to determine the EPC pressure. It also provides the Electronic Fuel Injection System with mixture (fuel and air) temperature information. The IAT is used both as a density corrector for airflow calculation and to proportion the cold enrichment fuel flow. This sensor is similar in construction to the Engine Coolant Temperature (ECT) sensor, except it is packaged to improve sensor response time.

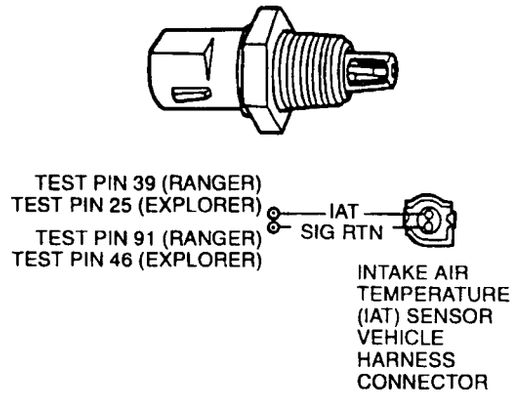

Symptoms: Incorrect EPC pressure either high or low resulting in either harsh or soft shifts.

Diagnostic Trouble Codes: 112, 113, 114, P0112, P0113, P1112.

Throttle Position (TP) Sensor 9B989:

Description: The Throttle Position (TP) Sensor is a potentiometer mounted on the throttle body. The TP sensor detects the position of the throttle plate and sends this information to the processor assembly as varying voltage signal.

The PCM uses the monitored voltage level of the TP sensor for control of EPC pressure, torque converter clutch operation and shift scheduling.

If a malfunction occurs in the TP sensor circuit, the processor will recognize that the TP sensor signal is out of specification. The processor will then operate the transmission in a high capacity mode to prevent transmission damage.

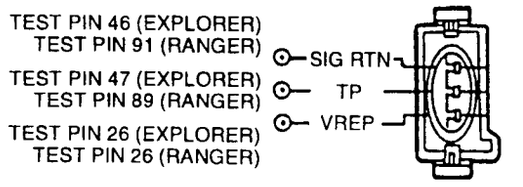

THROTTLE POSITION SENSOR VEHICLE HARNESS CONNECTOR

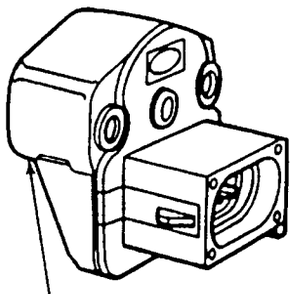

THROTTLE POSITION SENSOR 9B989

Symptoms: Harsh engagements, firm shift feel, abnormal shift schedule, torque converter clutch does not engage, or torque converter clutch cycling.

Diagnostic Trouble Codes: 121, 122, 123, 124, 125, 167, P0121-P0123, P1120, P1121, P1124, P1125.

Mass Air Flow (MAF) Sensor 12B579:

Description: The Mass Air Flow (MAF) sensor directly measures the mass of the air flowing into the engine. The sensor output is a DC (analog) signal ranging from about 0.5 volts to 5.0 volts used by the processor to calculate the injector pulse width for stoichiometry. For transmission strategies, this sensor is used for EPC pressure control, shift, and torque converter clutch scheduling.

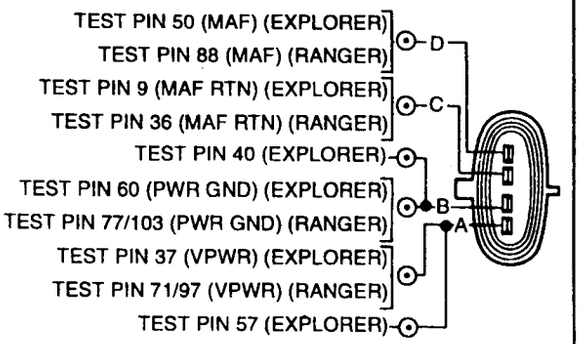

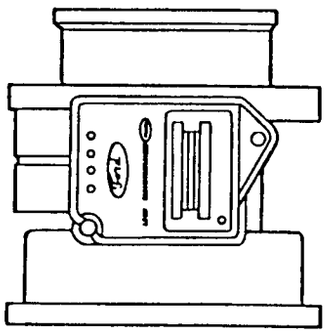

MASS AIRFLOW (MAF) SENSOR VEHICLE HARNESS CONNECTOR

Symptoms: Incorrect shift schedule, high / low EPC pressure. Incorrect torque converter engagement scheduling and symptoms similar to a TP sensor malfunction. Soft or firm shift based on EPC / line pressure. Soft shifts may be caused by a restricted air inlet.

Diagnostic Trouble Codes: 157, 158, 159, 184, 185, P0102, P0103, P1100, P1101.

Transmission Range (TR) Sensor 7A247:

Description: The processor sends a voltage signal to the Transmission Range (TR) sensor. The TR sensor incorporates a series of step-down resistors which act as a voltage divider. The processor monitors this voltage which corresponds to the position of the manual lever (P, R, N, D, 2, 1). The TR sensor is located on the outside of the transmission at the manual lever. The function of the TR sensor is to determine the desired gear and EPC.

The TR sensor also contains the Neutral / Start, backup lamp and neutral sense circuits.

TEST PIN 30 (TR) (EXPLORER)
TEST PIN 64 (TR) (RANGER)
TEST PIN 46 (RTN) (EXPLORER)
TEST PIN 91 (RTN) (RANGER)

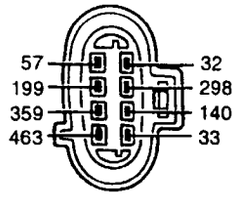

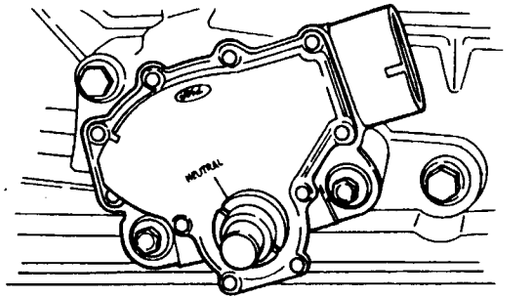

Symptoms: Harsh engagements and firm shift feel. No 3 / 4 shift. May downshift to a lower gear. No rpm rev. limiter in park or neutral.

Diagnostic Trouble Codes: 634, 654, P0707, P0708, P1705.

Transmission Fluid Temperature (TFT) Sensor

Description: The Transmission Fluid Temperature (TFT) sensor is located on the transmission main control body wiring harness assembly. It is a temperature-sensitive device called a thermistor. The resistance value of the TFT will vary with temperature change. The processor monitors the voltage across the TFT to determine the temperature of the transmission fluid.

The processor assembly uses this initial signal to determine whether a cold start shift schedule is necessary. The cold start shift schedule allows quicker shifts when the transmission fluid temperature is cold. The processor also inhibits torque converter clutch operation at low transmission fluid temperatures and corrects EPC pressures for temperature.

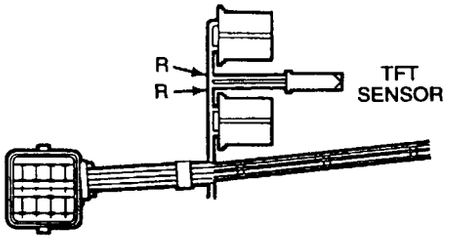

Symptoms: Torque converter clutch engagement and stabilized shift schedules happen too soon after a cold start. Harsh or soft shifts.

Diagnostic Trouble Codes: 636, 637, 638, 657, P0712, P0713, P1711, P1783.

Air Conditioning (A/C) Clutch 2884:

Description: An electro-magnetic Air Conditioning (A/C) clutch is energized when the clutch cycling pressure switch closes. The switch is located on the suction accumulator-drier. The closing of the switch completes the circuit to the clutch and draws it into engagement with the compressor driveshaft.

When engaged, the A/C clutch is an input to the PCM to adjust EPC pressure for the additional load on the engine. It is also used to adjust TCC modulation when the A/C clutch is engaged.

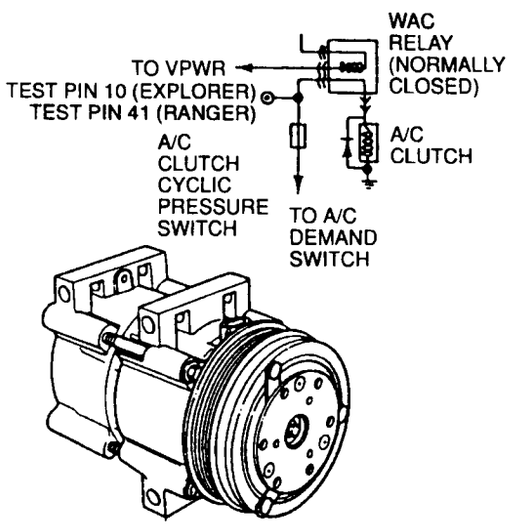

Symptoms: Failed ON — EPC pressure slightly low with A/C off.

Failed OFF — EPC pressure slightly high with A/C on. If erratic A/C operation occurs, the customer may feel improper TCC apply and release.

Diagnostic Trouble Codes: 539, P1460.

Electronic Ignition (EI)

Description: The Electronic Ignition (EI) system has a Crankshaft Position (CKP) sensor, Ignition Control Module (ICM), and coil packs. The CKP sensor sends crankshaft position information to the ICM, which sends an engine speed signal to the PCM. The RPM signal in the transmission strategy is then used for torque converter clutch control, EPC and shift scheduling.

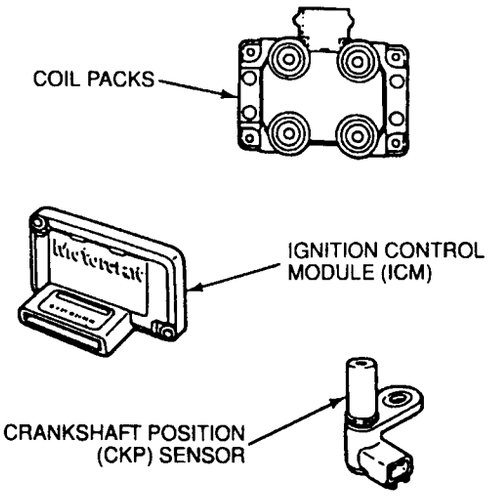

Symptoms: Engine malfunction, no torque converter clutch engagement.

Diagnostic Trouble Codes: 211, 212, 213, P0300-P0308, P0320, P0340, P1351-P1364.

Turbine Shaft Speed (TSS) Sensor 7M101

Description: A Turbine Shaft Speed (TSS) sensor is a magnetic pickup that sends a signal to the processor assembly that indicates transmission turbine shaft input speed.

The TSS sensor provides torque converter turbine speed information for torque converter clutch control strategy. Also used in determining static EPC pressure settings.

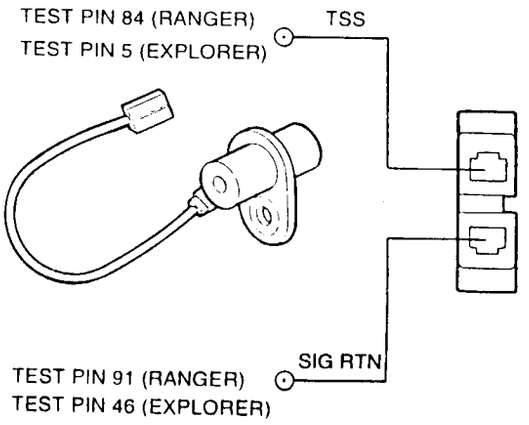

Symptoms: Increased engine rpm on engagements, harsh shifts (converter engaged), delayed shifts with hard apply (slip/bump feel).

Diagnostic Trouble Codes: 639, P0715.

Transmission Control Switch (TCS) 7G550:

Description: The Transmission Control Switch (TCS) is a momentary contact switch. When the driver presses the button of the TCS, a signal is sent to the PCM. At the same time, the PCM also causes the Transmission Control Indicator Lamp (TCIL) in the instrument panel to turn ON or OFF.

When the TCS is initially pressed, the PCM disables transmission operation in D position/4th gear. At the same time, coast braking in 2nd gear and 3rd gear occurs because the coast clutch is applied.

Vehicle Speed Sensor (VSS) 9E731:

Description: The Vehicle Speed Sensor (VSS) is a magnetic pickup that sends a signal to the processor assembly. This VSS signal tells the processor assembly the vehicle speed.

The PCM uses this information to control shift scheduling and EPC pressure.

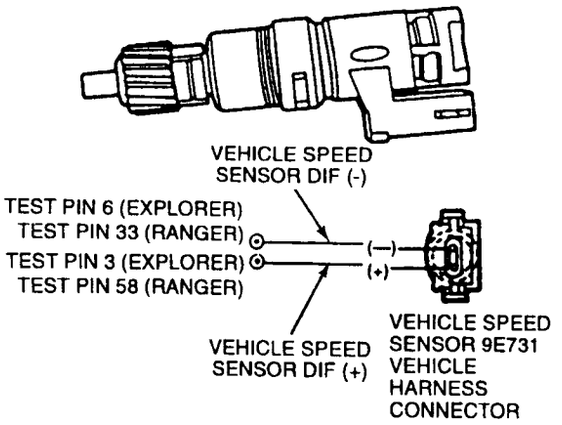

Symptoms: Harsh engagements, firm shift feel, abnormal shift schedule, unexpected downshifts may occur at closed throttle. Torque converter clutch will not engage, elevated EPC pressures.

NOTE: EPC shorted to ground or failed low may result in a false VSS code. Diagnose EPC concerns first. Then recheck VSS.

Diagnostic Trouble Codes: 452, P0500, P1500.

Coast Clutch Solenoid 7M107:

Description: The coast clutch solenoid (CCS) is an ON/OFF solenoid. The CCS is an electro-hydraulic actuator combining a solenoid and a regulating valve.

The PCM uses the coast clutch solenoid to control the apply and release of the coast clutch.

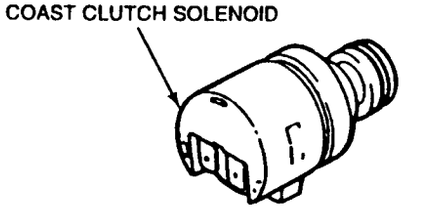

Symptoms: If the coast clutch solenoid fails ON, no coast braking occurs (except in 4th gear). Also, delayed 3-2 shifts occur.

If the coast clutch solenoid fails OFF, coast braking occurs in 2nd and 3rd gear. Also, firm or flared 3-2 shifts and harsh 4-3 shifts may occur.

Diagnostic Trouble Codes: 643*, P1754*.

Electronic Pressure Control (EPC) Solenoid 7G383:

Description: The Electronic Pressure Control (EPC) solenoid is a Variable Force Style (VFS) solenoid. The VFS type solenoid is an electro-hydraulic actuator combining a solenoid and a regulating valve. It supplies EPC which regulates transmission line pressure and line modulator pressure. This is done by producing resisting forces to the main regulator and line modulator circuits. These two pressures control clutch application pressures.

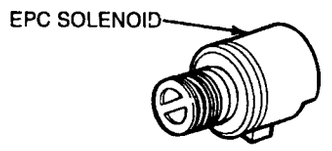

Symptoms: Maximum EPC pressure, harsh shifts and engagements, **may set a false VSS code.** Zero EPC pressure — no 2nd and 4th gear, slips in 1st and 3rd with high input torque.

Diagnostic Trouble Codes: 624*, 625* (PCM driver circuit), P1746*, P1747*

*Output circuit check, generated ONLY by electrical conditions.

Brake On/Off (BOO) Switch 13480:

Description: The Brake On/Off (BOO) switch is connected to the brake pedal. When the brake pedal is pressed, the BOO switch has closed contacts allowing a voltage signal to the PCM.

The PCM releases TCC when the brakes are applied.

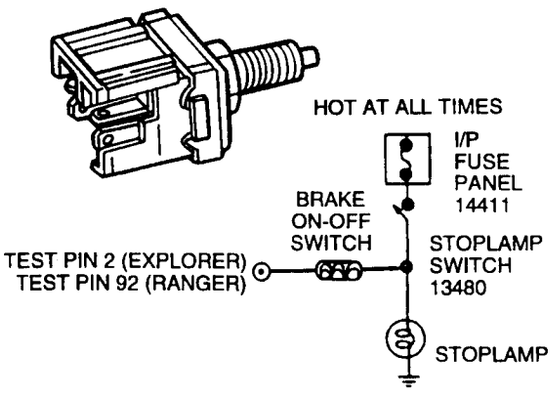

Symptoms: Failed ON — converter clutch will not engage at less than 1/3 throttle.

Failed OFF or Not Connected — converter clutch will not disengage when brake is applied.

Diagnostic Trouble Codes: 536, P1703.

Solenoid Operation Chart

The following solenoid operation chart shows normal solenoid operation for given operating modes.

SOLENOID OPERATION CHART — 4R44E/4R55E

Gear Selector Position	Powertrain Control Module (PCM) Gear Commanded	Solenoids				
		Eng. Brake	SS1	SS2	SS3	CCS
P/N	P/N	No	On	Off	Off	Off
R	R	Yes[a]	On	Off	Off	O/W*
D (Overdrive)	1	No	On	Off	Off	Off
	2	No	On	On	Off	Off
	3	No	Off	Off	Off	Off
	4	Yes	Off	Off	On	Off
D*	1	No	On	Off	Off	On
	2	Yes	On	On	Off	On
	3	Yes	Off	Off	Off	On
Manual 2	2	Yes	On	On	Off	Off
Manual 1	1	Yes	On	Off	Off	Off

a TCS "On."

DIAGNOSIS AND TESTING

NOTE: Certain sensor failures may cause high EDC, FMEM (Failure Mode Effect Management) actions. Be sure that self test and electrical repairs have been performed, or test results may be incorrect.

CAUTION: The transmission tester MUST BE REMOVED and the vehicle harness installed when verifying these pressures.

CAUTION: Perform Line Pressure Test prior to performing Stall Speed Test. If line pressure is low at stall, do not perform Stall Speed Test or further transmission damage will occur. DO NOT MAINTAIN WIDE-OPEN THROTTLE in any gear range FOR MORE THAN FIVE (5) SECONDS.

1. Connect 0-2758 kPa (0-400 psi) pressure gauge to the line pressure tap.

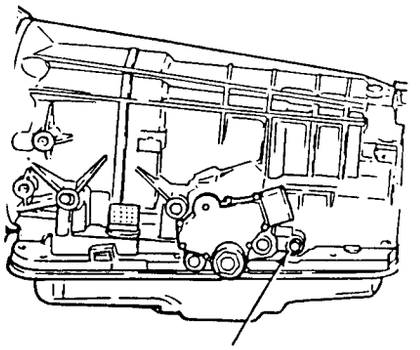

LINE PRESSURE TAP

2. Start engine and check line pressures. Refer to the following Line Pressure Diagnostic Chart No. 401 to determine if line pressure is within specifications.

NOTE: Vehicle harness must be installed at transmission connector to verify these pressures.

CAUTION: Do not install Transmission Tester when verifying these pressures.

REFERENCE: LINE PRESSURE SPECIFICATIONS No. 401

Trans.	Transmission Model/Application	Range	Idle		WOT Stall	
			PSI	kPa	PSI	kPa
4R44E	2.3L Ranger	(D), 2, 1	69-79	476-545	193-227	1331-1565
	4x2	R	79-136	545-938	291-331	2006-2282
		P, N	79-93	545-641		
	3.0L Ranger	(D), 2, 1	98-111	676-765	164-190	1131-1310
	4x2, 4x4	R	107-162	738-1117	237-283	1634-1951
		P, N	85-103	586-710		
4R55E	4.0L Ranger, Explorer	(D), 2, 1	87-98	600-676	207-241	1427-1662
	4x2, 4x4	R	95-162	655-1117	299-346	2062-2386
		P, N	90-103	621-710		

3. If line pressure is not within specifications, perform On-Board Diagnostics, Pinpoint Test * Perform Air Pressure Test and service main control or pump assembly as required.

* CHECK EPC SOLENOID AND HARNESS CONNECTOR

4. If line pressure is not within specifications after mechanical checks and there are no DTCs, Electronic Pressure Control (EPC) solenoid may be mechanically malfunctioning. Refer to the Line Pressure Diagnosis Chart for symptom diagnosis.

DIAGNOSIS AND TESTING (Continued)

LINE PRESSURE DIAGNOSIS CHART

Test Results	Possible Source
High at Idle — All Ranges	• Wiring Harnesses • EPC Boost Valve • EPC Solenoid • Main Regulator Valve
Low at Idle — All Ranges	• Low Fluid Level • Fluid Inlet Filter / Seal • Main Control Body • Cross Leaks • Gaskets • Pump • Separator Plate
Low — All Forward Ranges	• Forward Clutch • Main Control • O/D Servo
Low in Park Only	• Valve Body
Low in Reverse Only	• Separator Plate • Rear Servo Piston, Cover Seal • Reverse Clutch • O/D Servo • Valve Body • Forward Clutch
Low in Neutral Only	• Valve Body • O/D Servo
Low in Overdrive Only	• Forward Clutch • O/D Servo • Valve Body
Low in Drive Only (O/D Cancelled)	• Forward Clutch • O/D Servo • Valve Body
Low in Manual 1st Only	• Forward Clutch • Valve Body
Low in Manual 2nd Only	• Intermediate Servo • O/D Servo • Forward Clutch

Stall Speed Test

This test checks operation of the following items:

- Torque Converter Clutch
- Forward Clutch
- Low OWC Assembly
- Engine Performance

NOTE: The stall speed test should be performed with the engine and transmission at normal operating temperatures.

CAUTION: Always perform Line Pressure Test procedures prior to performing the Stall Speed Test. If line pressure is LOW at stall, DO NOT perform Stall Speed Test or further transmission damage will occur.

WARNING: APPLY THE PARKING BRAKE FIRMLY WHILE PERFORMING EACH STALL TEST.

1. Connect tachometer to the engine.

2. **CAUTION: After testing each of the following ranges (D), 2, 1, R move the transmission range selector lever to N (NEUTRAL) and run engine at 1000 rpm for about 15 SECONDS to allow the torque converter to cool before testing the next range.**

   CAUTION: DO NOT MAINTAIN WIDE-OPEN THROTTLE in any range for more than FIVE (5) seconds.

   NOTE: Prolonged use of this procedure may set Diagnostic Trouble Code 638, 657, P0712, P1783. After performing Stall Test procedures run OBD Test and clear DTCs from memory.

   Press accelerator pedal to floor (WOT) in each range. Record rpm reached in each range. Stall speeds should be as follows:

Engine	Stall Speed (RPM)
2.3, 3.0L	2720-3165 rpm
4.0L	2550-2950 rpm

DIAGNOSIS AND TESTING (Continued)

CAUTION: If the engine rpm recorded by the tachometer exceeds maximum specified rpm, RELEASE the accelerator pedal IMMEDIATELY. Clutch or band slippage is indicated.

If stall speeds were too HIGH, refer to the following Stall Speed Diagnosis Chart. If stall speeds were too LOW, first check the engine idle speed. If engine idle is OK, remove torque converter and check the torque converter clutch for slippage.

STALL SPEED DIAGNOSIS CHART

Selector Position	Stall Speeds High	Stall Speeds Low
(D) Overdrive, D, and 1	Overdrive One-Way Clutch, Rear One-Way Clutch	—
D, 2 and 1	Forward Clutch, O/D One-Way Clutch	—
(D) Overdrive	Forward Clutch, O/D One-Way Clutch	—
(D) Overdrive, D, 2, 1 and R	General Pressure Concerns, Forward Clutch, O/D One-Way Clutch	Converter One-Way Clutch or Engine Performance
R Only	High/Reverse and High Clutch and Low and Reverse Band/Servo	—
2 Only	Intermediate Band/Servo	—
1 Only	Low/Reverse Band/Servo	—

Air Pressure Tests

A NO DRIVE condition can exist, even with correct transmission fluid pressure, because of inoperative clutches or bands. An erratic shift can be located through a series of checks by substituting air pressure for fluid pressure to determine the location of the malfunction.

When the transmission range selector lever is in a forward gear range ((D), 2, 1), a NO DRIVE condition may be caused by an inoperative forward clutch, overrunning one-way clutch.

Failure to drive in R (REVERSE) could be caused by a malfunctioning reverse clutch, reverse servo, band.

Follow the procedure to determine the location of the inoperative clutch or band by introducing air pressure into the various test plate passages.

NOTE: Cover vent in test plate with a clean, lint-free shop towel to prevent spray when air is applied. Plugging vent hole during testing will result in inaccurate results.

NOTE: Use only dry regulated air pressure 276kPa (40 psi) max. A dull thud should be heard when the clutch or band applies. There should be no hissing sound when band or clutch applies.

1. Drain transmission fluid and remove transmission oil pan.
2. Remove filter and seal assembly and main control valve body.
3. Install 4R44E/4R55E Transmission Test Plate T95L-77000-AH and Transmission Test Plate Gasket (T95L-7006-A).
4. **CAUTION: Do not apply air to test the vent.**
   Apply air pressure to appropriate clutch port (refer to diagram). A dull thud may be heard or movement felt when clutch is applied or released. If clutch seals or check balls are leaking a hissing sound may be heard.

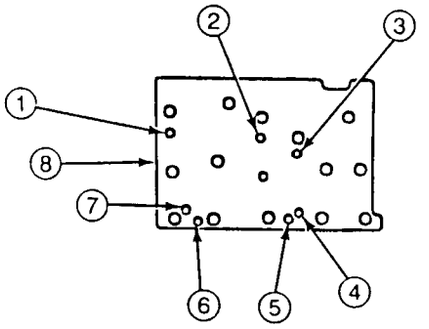

Item	Part Number	Description
1	—	Coast Clutch Apply
2	—	Direct Clutch Apply
3	—	Forward Clutch Apply
4	—	Intermediate Servo Apply
5	—	Intermediate Servo Apply
6	—	Overdrive Servo Apply
7	—	Overdrive Servo Apply
8	—	4R44E/4R55E Transmission Air Test Plate

Air Pressure Test Results

If test results find that the servos do not operate, disassemble, clean and inspect them to locate the source of the concern.

If air pressure applied to the clutch passages fails to operate a clutch, or operates clutch simultaneously, remove and with air pressure, check the fluid passages in the center support, and clutches to detect obstructions.

Leakage Inspection

Check the Vehicle Speed Sensor (VSS) and the speedometer cable connection at the transmission. Replace rubber seal if necessary.

Leakage at the transmission fluid pan to case gasket often can be stopped by tightening the attaching bolts to 14-16 N·m (10-12 lb-ft). If necessary, replace the oil pan case gasket.

Check the fluid filler tube connection at the transmission case. If leakage is found here, install a new grommet.

Check fluid lines and fittings between the transmission and the cooler in the radiator tank for looseness, wear, or damage. If leakage cannot be stopped by tightening a fluid tube nut, replace the damaged parts. When fluid is found leaking between the case and cooler line fitting, check for missing or damaged O-ring, then tighten the fitting to maximum specification.

CAUTION: Do not try to stop the fluid leak by increasing the torque beyond specifications. This may cause damage to the case threads.

If the leak continues, replace cooler line fitting and tighten to specification. The same procedure should be followed for fluid leaks between the radiator cooler and the cooler line fittings, refer to Transmission Cooler Line Replacement for procedures.

Check the engine coolant in the radiator. If transmission fluid is present in the coolant, the cooler in the radiator is probably leaking.

The cooler can be further checked for leaks by disconnecting the lines for the cooler fittings and applying no more than 345 kPa (50 psi) air pressure to the fittings. Remove the radiator cap to relieve the pressure buildup at the exterior of the oil cooler tank. If the cooler is leaking and / or will not hold pressure, replace the cooler.

If leakage is found at the manual lever, replace the seal.

If leakage is found at the transmission internal harness connector, replace O-ring.

External Sealing

The 4R44E / 4R55E transmission has the following parts to prevent external fluid leakage:

- Gaskets
- Lip-type seals
- O-ring seals
- Seal rings
- Seal grommets
- Thread sealant

DIAGNOSIS AND TESTING (Continued)

External Sealing

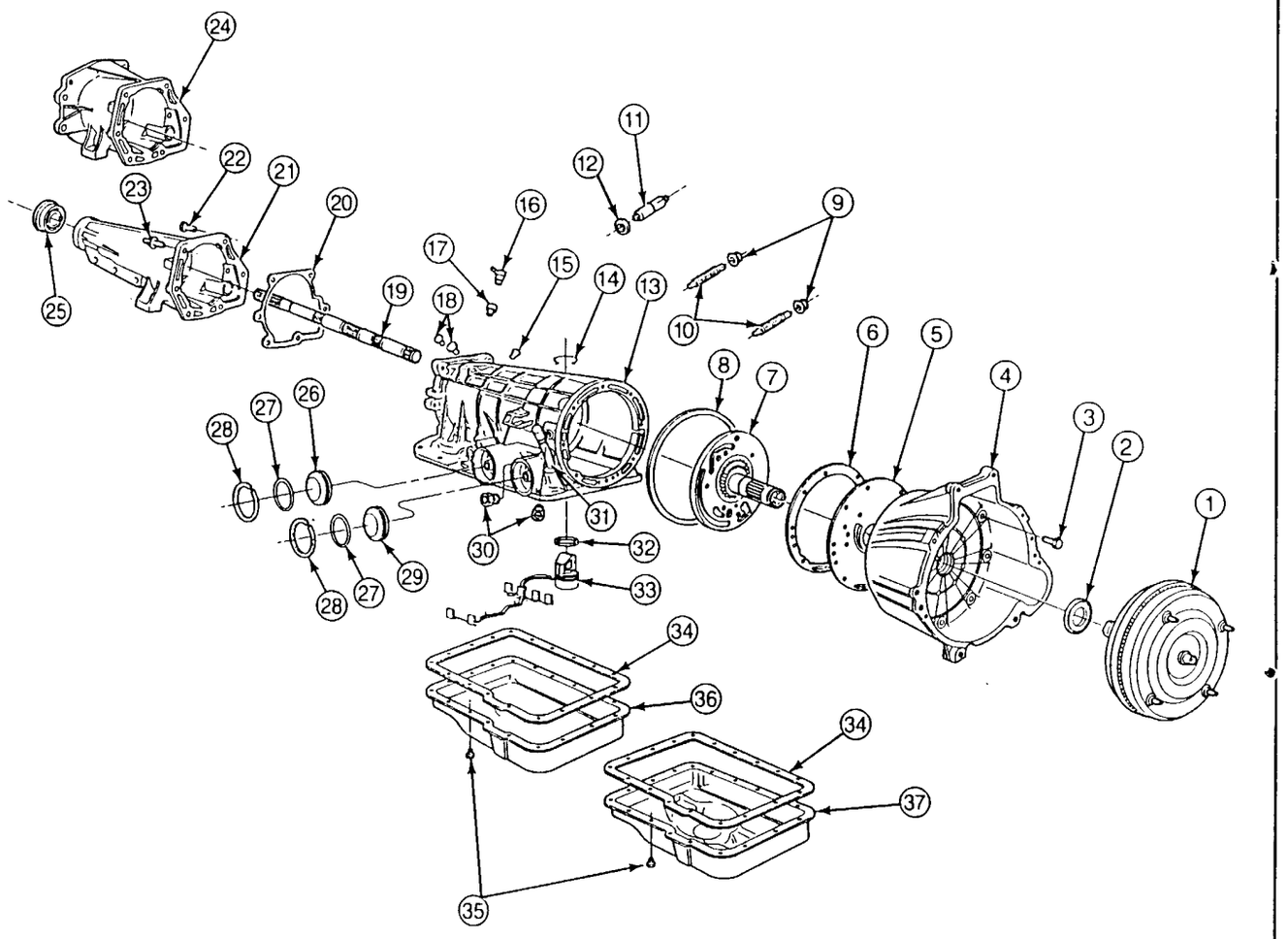

Item	Part Number	Description
1	7902	Converter Assembly (Contains Piston Type Clutch)
2	7A248	Seal Assembly (Converter Hub to Converter Housing) (Also in Converter Housing Assembly)
3	E804595-S200	Screw and Seal Assembly, M10x33 (Attach Converter Housing to Case) (8 Req'd)
4	7976	Housing Assembly (Converter)
5	7B472	Plate (Oil Pump Adaptor)
6	7A136	Gasket (Front Oil Pump)
7	7A103	Support and Gear Assembly (Front Pump)
8	7A248	Seal Ring (Front Oil Pump)

(Continued)

Item	Part Number	Description
9	E825100-S100	Nut and Seal — Hex (Intermediate and O.D. Bands) Adjuster / Lock (2 Req'd)
10	7C492	Screw (Intermediate and O.D. Band) Adjuster / Lock (2 Req'd)
11	7A308	Shaft (Manual Valve Outer to Inner Levers)
12	7B498	Seal Assembly (Main Control Lever) (Also in Case Assembly)
13	7005	Case Assembly
14	84400120	Spring (16-Pin Connector in Case)
15	E450102-S80	Plug — Pipe (Line Pressure) (Part of Case Assembly)
16	7034	Vent Assembly (4x4 Case) (Also Contained in Case Assembly)

(Continued)

DIAGNOSIS AND TESTING (Continued)

Item	Part Number	Description
17	7034	Vent Assembly (4x2) (Also Contained in Case Assembly)
18	E840171-S2	Pin (Reverse Band — Anchor) (2 Req'd) (Part of Case Assembly)
19	7060	Shaft Assembly (4x2 Output)
20	7086	Gasket (Extension Housing)
21	7A039	Housing Assembly (4x2 Extension)
22	E800152-S72	Screw, M10x30 (Att. Extension to Case) (6 Req'd Explorer) (5 Req'd Ranger)
23	E804137-S72	Stud (Att. Extension Housing to Case) (1 Req'd Ranger Only)
24	7A039	Housing Assembly (4x4 Extension)
25	7052	Seal Assembly (Extension Housing to Slip Yoke) (Also in Extension Housing Assembly)
26	7L493	Cover and Seal Assembly (Intermediate Servo)
27	E853170-S	O-Ring (Servo Cover to Case) (Intermediate and O.D. Servos) (2 Req'd)
28	E860343-S	Ring, Retaining, 67x1.5mm (Intermediate and O.D. Servos in Case) (2 Req'd)
29	7L493	Cover and Seal Assembly (O.D. Servo)
30	7D273	Connector Assembly — Oil Tube (2 Req'd) (Also in Case)
31	7A160	Tube (Lube Oil Inlet) Short (Also in Case Assembly)
32	E860343-S	Ring, Retaining, 67x1.5mm (Intermediate and O.D. Servos in Case) (2 Req'd)
33	14A624	Connector Assembly (16-Pin) (with Harness to 6 Solenoids)
34	7A191	Gasket Assembly (Oil Pan)
35	W701203-S309M	Screw, M8x14 (Att. Oil Pan to Case) (18 Req'd)
36	7A264	Pan (4x2 Oil)
37	7A264	Pan (4x4 Oil)

(Continued)

Fluid Leakage in Torque Converter Area

In diagnosing and correcting fluid leaks in the torque converter (7902) area, use the following procedures to locate the exact cause of the leakage. Leakage at the front of the transmission as evidenced by fluid around the converter housing, may have several sources. By careful observation it is possible, in many instances, to pinpoint the source of the leak before removing the transmission from the vehicle. The paths which the fluid can take to reach the bottom of the converter housing are as follows:

Torque Converter Area Leak Points

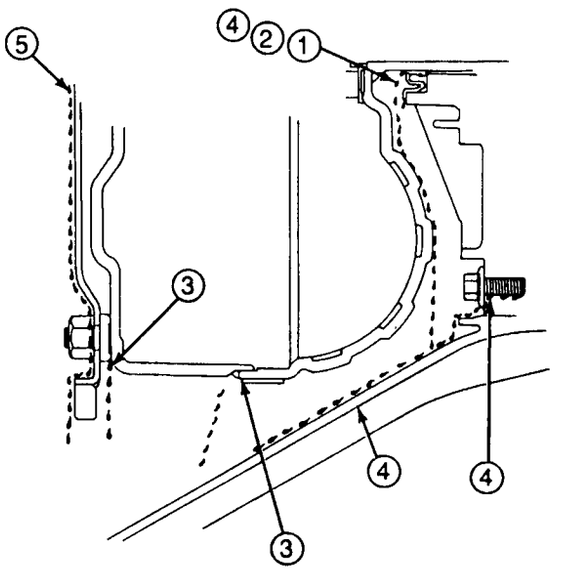

1. Fluid leaking by the torque converter impeller hub seal lip will tend to move along the converter impeller hub and onto the back of the impeller housing. Except in the case of a total seal failure, fluid leakage by the lip of the seal will be deposited on the inside of the converter housing only, near the outside diameter of the converter housing.

DIAGNOSIS AND TESTING (Continued)

2. Fluid leakage by the outside diameter of the converter hub seal and the case will follow the same path which the leaks by the inside diameter of the seal follow.
3. Fluid leakage from the torque converter to the flywheel stud weld will appear at the outer diameter of the torque converter on the back face of the flywheel (6375), and in the converter housing only near the flywheel. If a converter-to-flywheel stud leak is suspected, remove torque converter and pressure check as outlined.
4. Fluid leakage from the pump will flow down the back of the converter housing. Leakage may be from loose or missing pump bolts, torn or damaged pump-to-case gasket and / or a worn pump bushing.
5. Engine oil leaks are sometimes improperly diagnosed as transmission pump seal leaks. The following areas of possible leakage should also be checked to determine if engine oil leakage is causing the problem.
   a. Leakage at the valve cover may allow engine oil to flow over the converter housing or seep down between the converter housing and block causing oil to be present in or at the bottom of the converter housing.
   b. Oil plug leaks will allow oil to flow down the rear face of the block to the converter housing.
   c. Leakage at the crankshaft seal will work back to the flywheel, and then into the converter housing.

Leak Check Test

The following procedures should be used to determine the cause of the leakage before service is made.

1. Remove the fluid level indicator (7A020) and note the color of the fluid. Original factory fill fluid is dyed red to aid in determining if leakage is from the engine or transmission. Unless a considerable amount of makeup fluid has been added or the fluid has been changed, the red color should assist in pinpointing the leak.
2. Remove the converter housing access cover. Clean off any fluid from the top and bottom of the converter housing, front of the transmission case, and rear face of the engine and pan. Clean the converter area by washing with suitable nonflammable solvent, and blow dry with compressed air.
3. Wash out converter housing and the front of the flywheel. The converter housing may be washed out using clean solvent and a squirt-type oil can. Blow all washed areas dry with compressed air.
4. Start and run the engine until the transmission reaches its normal operating temperature. Observe the back of the block and top of the converter housing for evidence of fluid leakage. Raise the vehicle on a hoist and position suitable safety stands under vehicle. Run the engine at fast idle, then at engine idle, occasionally shifting to the drive and reverse ranges to increase pressure within the transmission. Observe the front of the flywheel, back of the block (in as far as possible), and inside the converter housing and front of the transmission case. Run the engine until fluid leakage is evident and the probable source of leakage can be determined.

Leak Check Test with Black Light

Oil soluble aniline or fluorescent dyes premixed at the rate of 2.5ml (1 / 2 teaspoon) of dye powder to 0.24L (1 / 2 pint) of automatic transmission fluid have proven helpful in locating the source of fluid leakage. Such dyes may be used to determine whether an engine fluid or transmission fluid leak is present, or if the fluid in the transmission fluid cooler hose leaks into the engine coolant system. An ultraviolet light must be used to detect the fluorescent dye solution.

Transmission Fluid Cooler

Transmission Fluid Cooler Flow Check

NOTE: The transmission linkage / cable adjustment, fluid level, and line pressure must be within specification before performing this test. Refer to service procedures as outlined.

1. Remove fluid level indicator from fluid filler tube.
2. Place funnel in fluid filler tube.
3. Raise vehicle on hoist and position suitable safety stands under vehicle.
4. Remove cooler return line (rear fitting) from fitting on transmission case.
5. Connect one end of a hose to the cooler return line and route the other end of the hose up to a point where it can be inserted into the funnel at the fluid filler tube.
6. Remove safety stands and lower vehicle. Insert end of hose into funnel.
7. Start engine and run at idle with transmission in neutral range.
8. When fluid flowing from hose is all liquid, an adequate amount of fluid should be observed, approximately .47 liter (1 / 2 quart) delivered in 30 seconds. If adequate flow is observed, test is completed.
9. If the flow is not adequate, stop engine. Disconnect hose from cooler return line and connect it to converter-out line fitting (front fitting) on transmission case.

DIAGNOSIS AND TESTING (Continued)

10. Repeat Steps 7 and 8. If flow is now adequate, service pump and / or converter assembly, and main control.

Transmission Fluid Cooler and Lines, Backflush / Cleaning

CAUTION: Whenever a transmission has been disassembled to replace worn or damaged parts or because the valve body sticks from foreign material, the transmission fluid cooler MUST be cleaned by using the Rotunda Torque Converter / Oil Cooler Cleaner 014-00028 or equivalent. Under NO circumstances should torque converters be cleaned by hand aggitation with solvent.

When internal wear or damage has occurred in the transmission, metal particles, clutch plate material, or band material may have been carried into the transmission cooler. These contaminants are a major cause of reoccurring transmission concerns and MUST be removed from the system before the transmission is put back into service.

1. Conduct back flushing with a Rotunda Torque Converter / Transmission Fluid Cooler Cleaner 014-00028 or equivalent. Test your equipment to make sure that a vigorous fluid flow is present before proceeding. Replace the system filter if flow is weak or contaminated.
2. To aid in attaching the cleaner to the transmission steel cooler lines, connect two additional rubber hoses to the transmission end of the steel transmission cooler lines as described below.
   - Connect the cleaner tank pressure line to the steel transmission cooler return line (longest line).
   - Connect a tank return hose to the steel transmission cooler pressure line (shorter line). Place the outlet end of this hose in the solvent tank reservoir.
3. Turn on solvent pump and allow the solvent to circulate a minimum of 5 minutes (cycling switch on and off will help dislodge contaminants in cooler system).
4. Switch off the solvent pump and disconnect the solvent pressure hose from the transmission cooler return line.
5. Use compressed air to blow out the cooler(s) and lines (blow air into the transmission cooler return line) until all solvent is removed.
6. Remove the rubber return hose from the remaining steel cooler line.

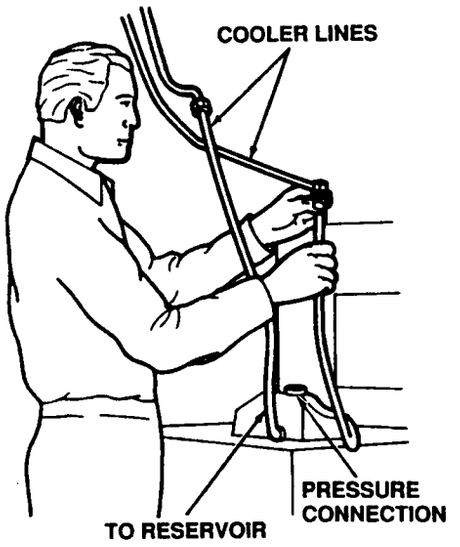

Transmission Fluid Cooler Tube Replacement

When fluid leakage is found at the transmission fluid cooler, the transmission fluid cooler must be replaced.

When transmission fluid cooler steel lines must be replaced, each replacement line must be fabricated from the same size inside diameter and length steel line as the original line.

Using the old line as a guide, bend the new line as required. Add the necessary fittings, and install the line.

After the fittings have been tightened, check and add fluid as necessary. Check for fluid leaks.

Diagnosis by Symptom Routines

The Diagnosis by Symptom Index gives the service technician diagnostic information, direction and possible components, using a symptom as a starting point.

The Diagnosis by Symptom Index is divided into two categories: Electrical Routines, indicated by 200 series numbers, and Hydraulic / Mechanical Routines, indicated by 300 series numbers. The Electrical Routines list the possible electrical components that could have caused or contribute to the symptom described. The Hydraulic / Mechanical Routines list the possible hydraulic or mechanical components that could cause or contribute to the symptom described.

Diagnosis by Symptom Index — Directions

1. Using the Diagnosis by Symptom Index, select the Symptom / Concern that best describes the condition.
2. Turn to the Routine indicated in the Diagnosis by Symptom Index.

DIAGNOSIS AND TESTING (Continued)

3. Always begin diagnosis of a symptom by using the following:
   a. Preliminary Inspections
   b. Verification of Condition
   c. Check the Fluid Level
   d. Perform Other Test Procedures as directed
4. THEN BEGIN with the Electrical Routine if indicated. Follow the reference or action required statements. Always perform the On-Board Diagnostic Tests as required. NEVER SKIP STEPS. Service as required. If the concern is still present after electrical diagnosis then proceed to the Hydraulic / Mechanical Routine listed.

CAUTION: Not all concerns and conditions with electrical components will set a Diagnostic Trouble Code (DTC). Be aware that the components listed may still be the cause. Verify proper function of those components prior to proceeding to the Hydraulic / Mechanical Routine listed.

5. The Hydraulic / Mechanical Routines list possible hydraulic or mechanical components that could cause the concern. These components are listed in the removal sequence and by most likely concern. You must inspect all components listed to ensure proper repair.

Band / Clutch Application Chart No. 601

BAND/CLUTCH APPLICATION CHART NO. 601

	OVERDRIVE BAND	INTERMEDIATE BAND	LOW/REVERSE BAND	FORWARD CLUTCH	DIRECT REVERSE CLUTCH	COAST CLUTCH	O/D ONE-WAY CLUTCH		REAR ONE-WAY CLUTCH		SHIFT SOLENOID 1 (SS1)	SHIFT SOLENOID 2 (SS2)	SHIFT SOLENOID 3 (SS3)	COAST CLUTCH SOLENOID CCS	ENGINE BRAKING
							DRIVE	COAST	DRIVE	COAST					
PARK											ON	OFF	OFF	OFF	NO
REVERSE			A		A	A/W	H	OR			ON	OFF	OFF	OFF	O/W
NEUTRAL											ON	OFF	OFF	OFF	NO
1ST				A		A/W	H	OR	H	OR	ON	OFF	OFF	OFF	NO
2ND		A		A		A/W	H	OR	OR	OR	ON	ON	OFF	OFF	YES
3RD				A	A	A/W	H	OR	OR	OR	OFF	OFF	OFF	O/W	YES
4TH	A			A	A			OR	OR	OR	OFF	OFF	ON	—	NO
MAN. 1ST			A	A		A	H	OR	H	H	ON	OFF	OFF	ON	YES
MAN. 2ND		A		A		A	H	OR			ON	ON	OFF	ON	YES

A = APPLIED H = HOLD A = APPLIED INEFFECTIVE OR = OVERRUNNING
AW = APPLIEDWITH "TCS" ON-OVERDRIVE CANCELLED OW = ON WITH TCS "ON" - CCS APPLIED

ON-BOARD DIAGNOSTIC TROUBLE CODE DESCRIPTION CHART

Three-Digit DTC	Four-Digit DTC	Component	Description	Condition	Symptom
111	P1111	SYSTEM	Pass	No malfunction detected.	Malfunction not detected by PCM.
112	P0112	IAT	IAT indicates 125°C (254°F) (grounded)	Voltage drop across IAT exceeds scale set for temperature 125°C (254°F).	Incorrect EPC pressure. Either high or low which will result in harsh or soft shifts.
113	P0113	IAT	IAT indicates -40°C (-40°F) (open circuit)	Voltage drop across IAT exceeds scale set for temperature -40°C (-40°F).	Incorrect EPC pressure. Either high or low which will result in harsh or soft shifts.
114	P0114	IAT	IAT out of on-board diagnostic range	IAT temperature higher or lower than expected during KOEO and KOER.	Rerun on-board diagnostic at normal operating temperature.
116	P1116	ECT	ECT out of on-board diagnostic range	ECT temperature higher or lower than expected during KOEO and KOER.	Rerun on-board diagnostic at normal operating temperature.
117	P0117	ECT	ECT indicates 125°C (254°F)	Voltage drop across ECT exceeds scale set for temperature 125°C (254°F) (grounded).	Torque converter clutch will always be off, resulting in reduced fuel economy.
118	P0118	ECT	ECT indicates -40°C (-40°F)	Voltage drop across ECT exceeds scale set for temperature -40°C (-40°F) (open circuit).	Torque converter clutch will always be off, resulting in reduced fuel economy.
121	P1124	TP	TP voltage high / low for on-board diagnostic.	TP was not in the correct position for on-board diagnostic.	Rerun at appropriate throttle position per application.
122, 123, 124, 125, 167	P0121, P0122, P0123, P1120, P1121, P1125, P1124	TP	TP concern	PCM has detected an error. This error may cause a transmission concern.	Harsh engagements, firm shift feel, abnormal shift schedule, torque converter clutch does not engage. Torque converter clutch cycling.
157, 158, 159, 184, 185	P0102, P0103, P1100, P1101	MAF	MAF concerns	MAF system has a malfunction which may cause a transmission concern.	High / low EPC pressure, incorrect shift schedule. Incorrect torque converter clutch engagement scheduling. Symptoms similar to a TP failure.
212 211-219 221-224 232-239 241-243	P0300-P0308 P0320, P0340 P1351-P1364	EI	EI concerns	EI system has a malfunction which may cause a transmission concern.	Harsh engagements and shifts, late WOT shifts, no torque converter clutch engagement.
452	P0500	VSS	Insufficient input from VSS.	PCM detected a loss of vehicle speed signal during operation.	Torque converter clutch engages, shift engagement / disengagement (hunting) on grades.
—	P1500	VSS	Intermittent VSS	PCM detected on erratic vehicle speed signal during operation.	Torque converter clutch engages, shift engagement / disengagement (hunting) on grades.
522	P1705	TR	TR not in PARK.	On-board diagnostic not run in PARK.	Rerun on-board diagnostic in PARK.
536	P1703	BOO	Brake not actuated during on-board diagnostic.	Brake not cycled during KOER.	Failed ON or not connected — torque converter clutch will not engage at less than 1 / 3 throttle. Failed OFF or note connected — torque converter clutch will not disengage when brake is applied.

Three-Digit DTC	Four-Digit DTC	Component	Description	Condition	Symptom
—	P1703	BOO	BOO switch circuit failed.	Brake ON/OFF circuit failure during KOEO.	Failed ON or note connected — torque converter clutch will not engage at less than 1/3 throttle. Failed OFF or not connected — torque converter clutch will not disengage when brake is applied.
539	P1460	A/C	A/C clutch cycling pressure switch error	A/C or Defrost ON condition may result from A/C clutch being ON during on-board diagnostic.	DTC set during on-board diagnostic — rerun with A/C OFF. Failed ON — EPC pressure slightly low with A/C OFF.
645**	P0731**	SS1, SS2, SS3 or internal parts	1st gear error	No 1st gear.	Improper gear selection depending on failure or mode and manual lever position. Shift errors may also be due to other internal transmission concerns (stuck valves, damaged friction material).
646**	P0732**	SS1, SS2, SS3 or internal parts	2nd gear error	No 2nd gear.	Improper gear selection depending on failure or mode and manual lever position. Shift errors may also be due to other internal transmission concerns (stuck valves, damaged friction material).
647**	P0733**	SS1, SS2, SS3 or internal parts	3rd gear error	No 3rd gear.	Improper gear selection depending on failure or mode and manual lever position. Shift errors may also be due to other internal transmission concerns (stuck valves, damaged friction material).
648**	P0734**	SS1, SS2, SS3 or internal parts	4th gear error	No 4th gear.	Improper gear selection depending on failure or mode and manual lever position. Shift errors may also be due to other internal transmission concerns (stuck valves, damaged friction material).
621*	P0750*	SS1	SS1 solenoid circuit failure	SS1 circuit failed to provide voltage drop across solenoid. Circuit open or shorted or PCM driver failure during on-board diagnostic.	Improper gear selection depending on condition mode and manual lever position. See Solenoid On/Off charts.
622*	P0755*	SS2	SS2 solenoid circuit failure	SS2 circuit fails to provide voltage drop across solenoid. Circuit open or shorted or PCM driver failure during on-board diagnostic.	Improper gear selection depending on condition mode and manual lever position. See Solenoid On/Off charts.
631	—	TCIL	TCIL circuit failure	TCIL circuit open or shorted.	Failed ON — Overdrive cancel mode always ON. NO flashing TCIL for EPC failure or sensor. Failed OFF — Overdrive cancel mode never indicated. NO flashing TCIL for EPC sensor failure.

Three-Digit DTC	Four-Digit DTC	Component	Description	Condition	Symptom
624*	P1747**	EPC	EPC solenoid circuit failure, shorted circuit.	Voltage through EPC solenoid is checked. An error will be noted if tolerance is exceeded.	Short Circuit — Causes minimum EPC pressure (minimum capacity) and limits engine torque (alternate firm). Zero EPC — no 2nd and 4th gear. Slips in 1st and 3rd with high torque input.
625*	—	EPC	Shorted PCM output driver.	Voltage through EPC solenoid is checked. An error will be noted if tolerance is exceeded.	Shorted PCM — Causes maximum EPC pressure, harsh engagements and shifts.
628**	P0741**	TCC	TCC slippage detected.	The PCM picked up an excessive amount of TCC slippage during normal vehicle operation.	TCC slippage / erratic or no torque converter clutch operation. Flash TCIL.
632	P1780	TCS	TCS not changing states.	TCS not cycled during self test. TCS circuit open or shorted.	Rerun on-board diagnostic and cycle switch. No ⓞ cancel when switch is cycled.
636	P1711	TFT	TFT out of on-board diagnostic range.	Transmission not at operating temperature during on-board diagnostic.	Warm vehicle to normal operating temperature.
637	P0713	TFT	-40°C (-40°F) indicated TFT sensor circuit open.	Voltage drop across TFT sensor exceeds scale set for temperature -40°C (-40°F)	Firm shift feel.
638	P0712	TFT	157°C (315°F) indicated TFT sensor circuit grounded.	Voltage drop across TFT sensor exceeds scale set for temperature of 157°C (315°F)	Firm shift feel.
639	P0715	TSS	Insufficient input from Turbine Shaft Speed Sensor.	PCM detected a loss of TSS signal during operation.	Harsh shifts, abnormal shift schedule, no torque converter clutch activation.
652*	P0743*	TCC	TCC solenoid circuit failure during on-board diagnostic.	TCC solenoid circuit fails to provide voltage drop across solenoid. Circuit open or shorted or PCM drive failure during on-board diagnostic.	Short circuit — Engine stalls in second (OD, 2 range) at low idle speeds with brake applied. Open circuit — Torque converter clutch never engages.
657	P1783	TFT	Transmission overtemp condition indicated.	Transmission fluid temperature exceeded 127°C (270°F).	Increase in EPC pressure.
667	P0707	TR	TR circuit below minimum voltage.	TR sensor, circuit or PCM shorted or grounded.	Increase in EPC pressure.
668	P0708	TR	TR circuit above maximum voltage.	TR sensor, circuit or PCM indicates open.	Increase in EPC pressure.
N/A	P0751	SS1	Shift solenoid No. 1 functional failure (California only).	Mechanical or hydraulic failure of the shift solenoid.	Improper gear selection depending on failure mode and manual lever position.
N/A	P0756	SS2	Shift solenoid No. 2 functional failure (California only).	Mechanical or hydraulic failure of the shift solenoid.	Improper gear selection depending on failure mode and manual lever position.
N/A	P1743	TCC	TCC solenoid failed ON.	TCC solenoid has failed ON by electric, mechanical or hydraulic concern.	Harsh shifts.

Three-Digit DTC	Four-Digit DTC	Component	Description	Condition	Symptom
633	P1781	4x4L	4x4 low switch failure.	Switch closed or shorted during KOEO.	Early or delayed shifts.
691	P1729	4x4L	4x4 low switch failure.	Circuit open / shorted.	Early or delayed shifts.
N/A	P1751**	SS1	Shift solenoid No. 1 functional failure (49-State).	Mechanical or hydraulic failure of the shift solenoid.	Improper gear selection depending on failure mode and manual lever position.
N/A	P1756**	SS2	Shift solenoid No. 2 functional failure (49-State).	Mechanical or hydraulic failure of the shift solenoid.	Improper gear selection depending on failure mode and manual lever position.
N/A	P0761**	SS3	Shift solenoid No. 3 functional failure (California).	Mechanical or hydraulic failure of the shift solenoid.	Improper gear selection depending on failure mode and manual lever position.
N/A	P1761**	SS3	Shift solenoid No. 3 functional failure (49-State).	Mechanical or hydraulic failure of the shift solenoid.	Improper gear selection depending on failure mode and manual lever position.
519	P1650	PSP	PSP circuit open during KOEO.	PSP circuit open.	Failed ON — EPC slightly high, firm engagements, firm shifts, harsh coastdown shifts. Failed OFF — EPC pressure slightly low during increased loading of vehicle power steering.
521	P1651	PSP	PSP not changing state KOER.	Operator did not rotate steering wheel during KOER.	Fault detected. Rerun Self Test and rotate steering wheel.
641*	P0760*	SS3	SS3 solenoid circuit failure.	SS3 circuit failed to provide voltage drop across solenoid. Circuit open or shorted or PCM driver failure during on-board diagnostic.	Improper gear selection depending on condition mode and manual lever position. See Solenoid On / Off chart.
643*	P1754*	CCS	CCS solenoid circuit failure.	CCS circuit failed to provide voltage drop across solenoid. Circuit open or shorted or PCM driver failure during on-board diagnostic.	Failed on — no coast braking except in 4th gear. Delayed 3-2 shifts. Failed off — coast braking 2nd, 3rd. Firm 3-2 and 4-3 shifts.
624*	P1746**	EPC	EPC solenoid circuit open.	Voltage through EPC solenoid is checked. Error is noted if tolerance is exceeded.	Open Circuit — Causes maximum EPC pressure, harsh engagements and shifts.
—	P1701	Transmission	Reverse engagement error	EPC pressure is low, no drop in TSS rpm, TR indicates reverse	EPC pressure low, SS1 is off, engine lacks power.

TRANSMISSION DISASSEMBLY

Transmission

SPECIAL SERVICE TOOL(S) REQUIRED

Description	Tool Number
Torque Converter Handles	T81P-7902-C
Seal Remover	T74P-77248-A
Impact Slide Hammer	T50T-100-A
Extension Housing Bushing Remover	T77L-7697-E
A4LD Holding Fixture Adapter	T93T-77002-AH
Bench-Mounted Holding Fixture	T57L-500-B
A4LD Transmission Test Plate	T86L-7006-A

Disassembly

1. **WARNING: DO NOT REMOVE THE TORQUE CONVERTER OR TRANSFER CASE FROM THE TRANSMISSION WHILE STILL ON THE JACK. DOING SO COULD CAUSE THE TRANSMISSION TO FALL OFF THE JACK.**

   Relocate the transmission to the top of a flat workbench.

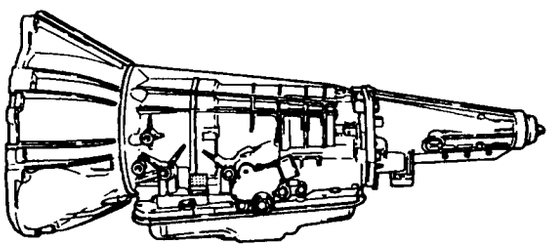

2.

   If the vehicle has a transfer case, use a 13mm socket to remove the five transfer case to extension housing bolts. Remove the transfer case and set aside for assembly.

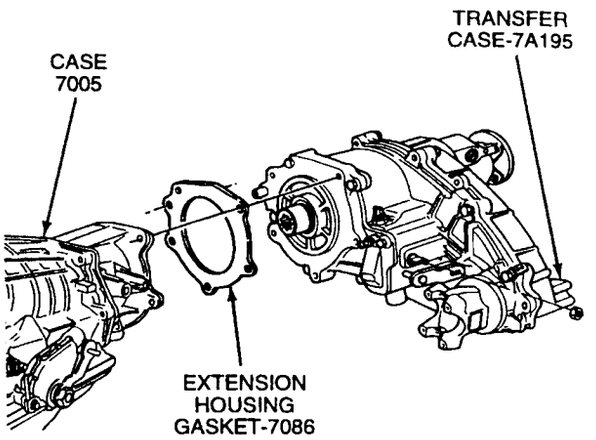

3. **WARNING: THE TORQUE CONVERTER IS HEAVY, ESPECIALLY WHEN FULL OF FLUID.**

   Remove the torque converter using Torque Converter Handles T81P-7902-C.

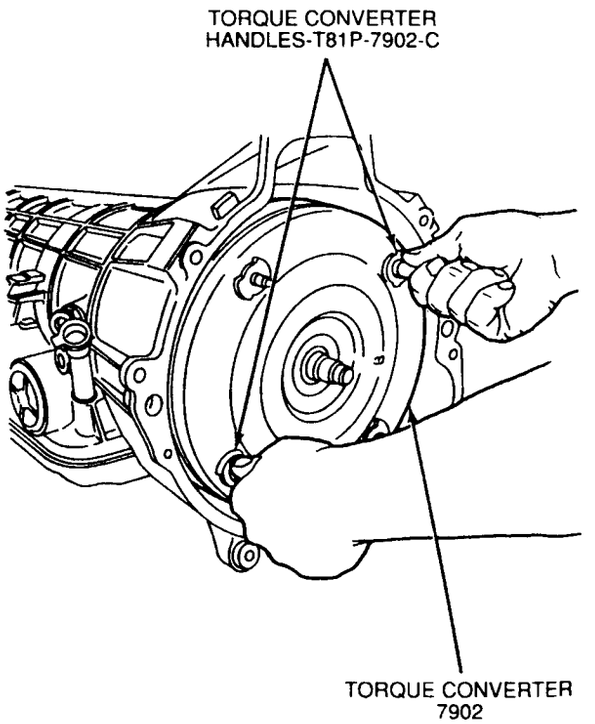

4. NOTE: The splines on the input shaft are not the same on both ends. The end with the shorter spline goes into the assembly.

   Remove the input shaft.

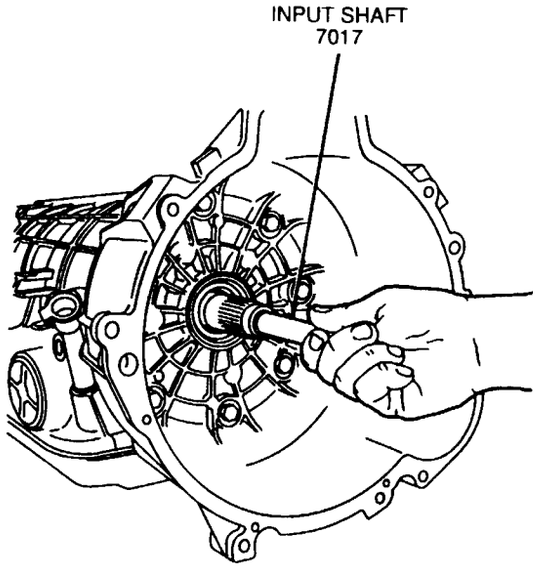

5. Remove the extension housing seal using Seal Remover T74P-77248-A and Impact Slide Hammer T50T-100-A.

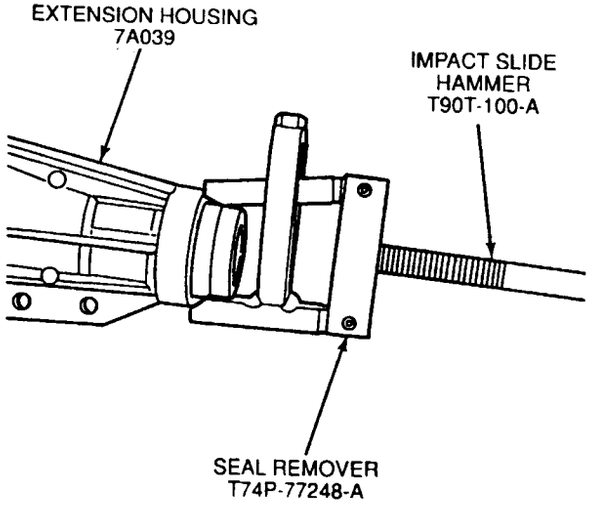

6. NOTE: Remove the extension housing bushing only if service is required.

   Inspect the extension housing bushing and driveshaft slip yoke for nicks, gouges, scoring and wear.

   Remove the extension housing bushing using Extension Housing Bushing Remover T77L-7697-E.

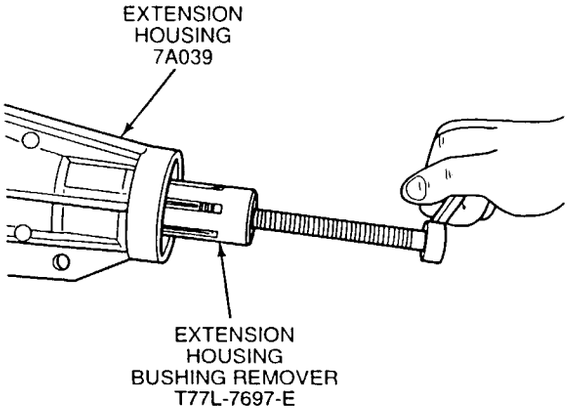

7. **CAUTION: The parking pawl, parking pawl return spring and parking pawl shaft could fall out during removal of the extension housing.**

   Use a 17mm socket to remove the four M10 x 30mm extension housing to transmission case screws and two studs.

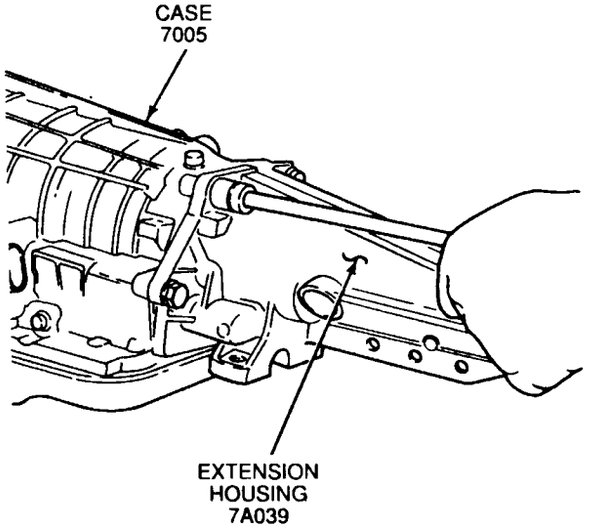

8. Remove the parking pawl, parking pawl return spring and parking pawl shaft.

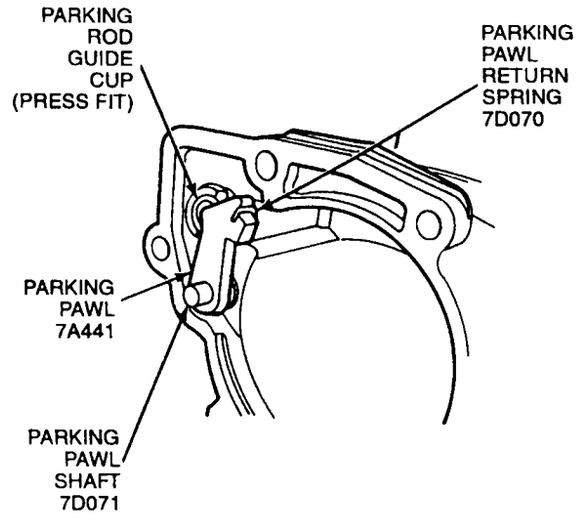

9. **CAUTION: The parking pawl actuating rod must slip freely into the clearance hole in the adapter plate.**

   NOTE: See the special service tool section for a drawing of this optional adapter plate.

   Use the four M10 x 30mm extension housing to transmission case screws to attach the adapter plate to the transmission.

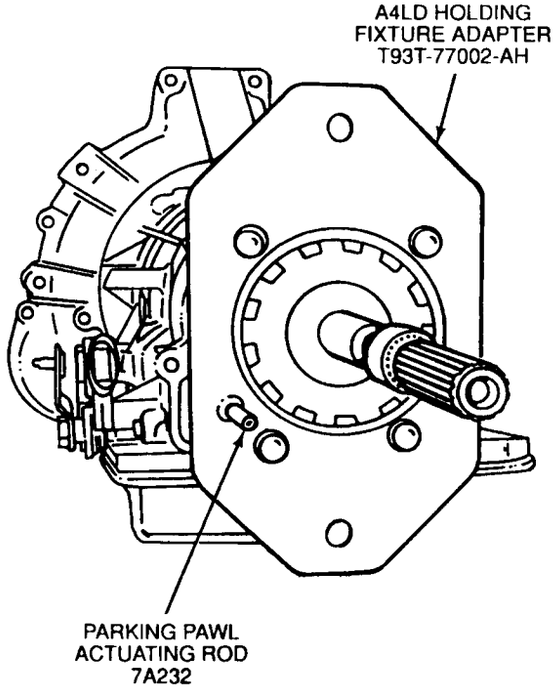

10. Attach the fixture arm assembly (part of T57L-500-B) with two 7 / 16 x 2-inch bolts and nuts.

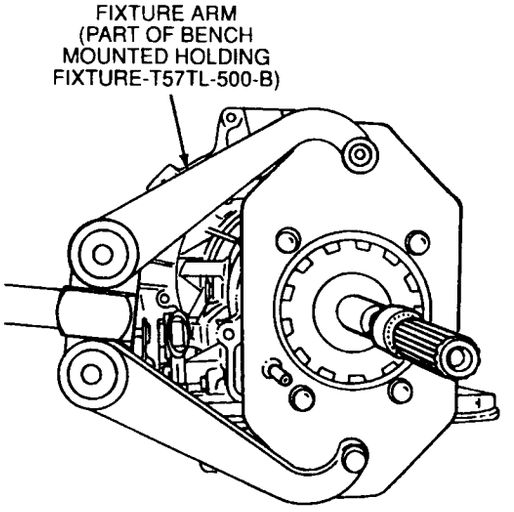

11. **WARNING: MAKE SURE THE LOCK PIN ON BENCH-MOUNTED HOLDING FIXTURE T57L-500-B IS SECURE.**

    Install the transmission assembly to Bench-Mounted Holding Fixture T57-500-B. Rotate to the position shown. Place a drain pan under the assembly.

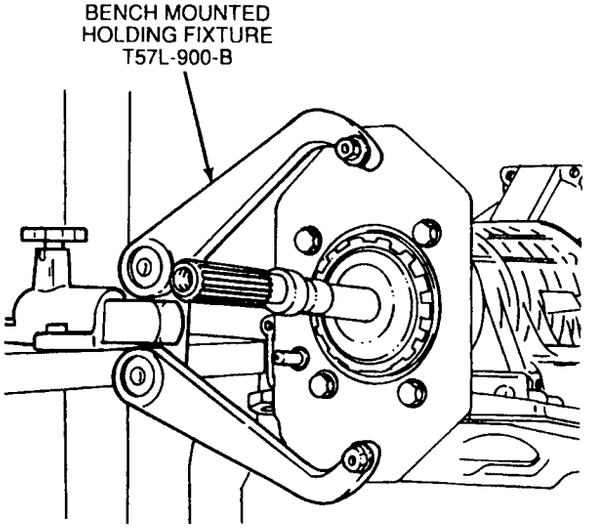

12. NOTE: A transmission heat shield is on all 4.0L applications.

    Remove the M6 x 1.0 transmission heat shield nut from the studded bolt.

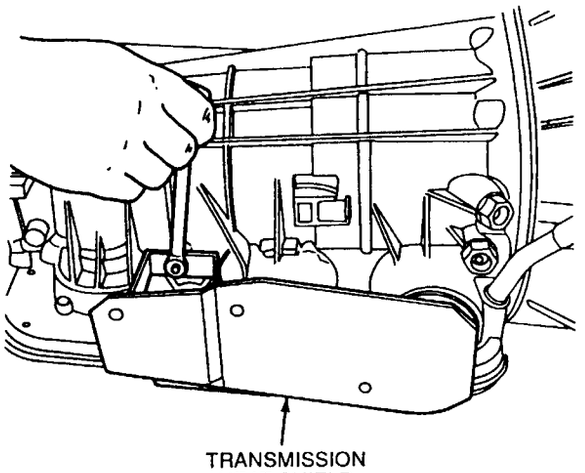

TRANSMISSION
HEAT SHIELD
7F013

13. Carefully pry the transmission heat shield off of the fluid pan rail near the retaining clips.

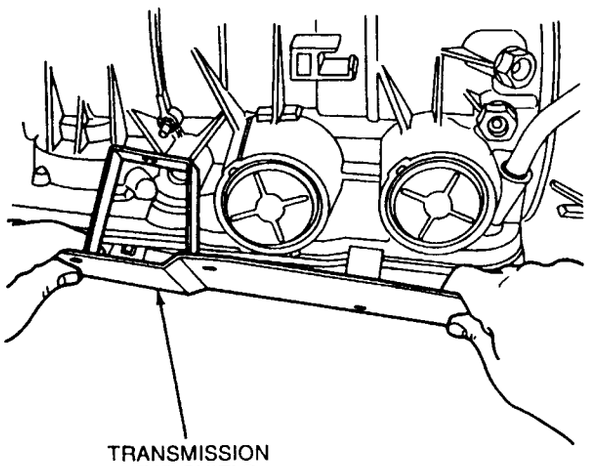

TRANSMISSION
HEAT SHIELD
7F013

14. **WARNING: MAKE SURE THE LOCK PIN ON BENCH-MOUNTED HOLDING FIXTURE T57L-500-B IS SECURE.**

    Rotate the transmission assembly so the converter housing is facing up.

15. Remove the manual control outer lever nut and manual control outer lever.

MANUAL CONTROL
OUTER LEVER
7A256

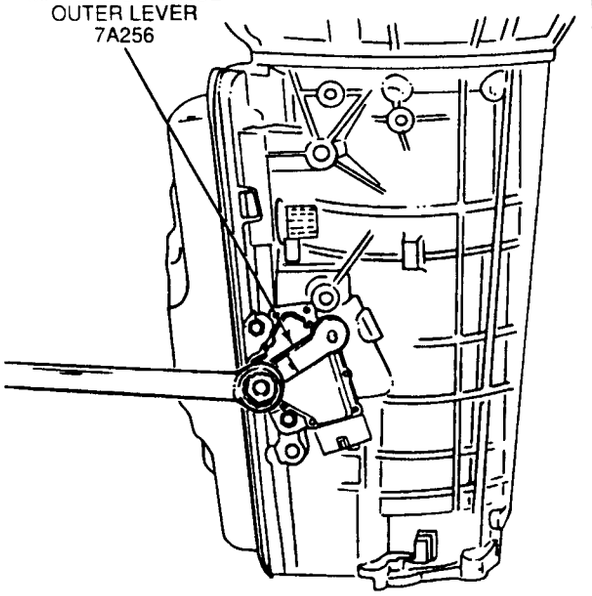

16. Remove the two M6 x 25 transmission range (TR) sensor bolts and remove the TR sensor.

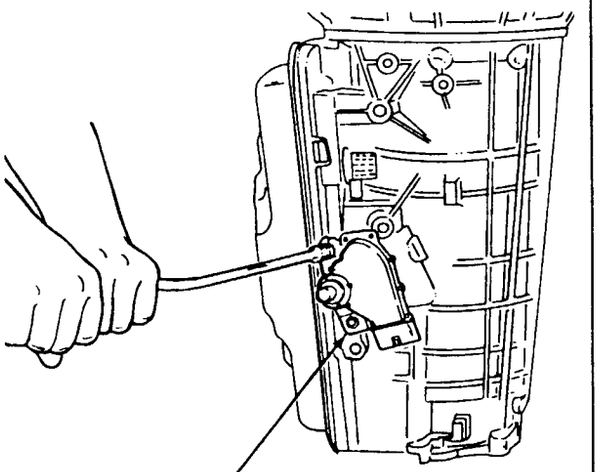

TRANSMISSION RANGE
(TR) SENSOR
7A247

17. **WARNING: MAKE SURE THE LOCK PIN ON BENCH-MOUNTED HOLDING FIXTURE T57L-500-B IS SECURE.**

    Rotate transmission assembly so that the fluid pan is facing up.

18. **CAUTION: Do not reuse the fluid pan gasket.**

    Use a 13mm socket to remove the eighteen M8 x 1.4mm fluid pan screws. Remove the fluid pan and fluid pan gasket. Discard the fluid pan gasket.

Fluid Pan Removal

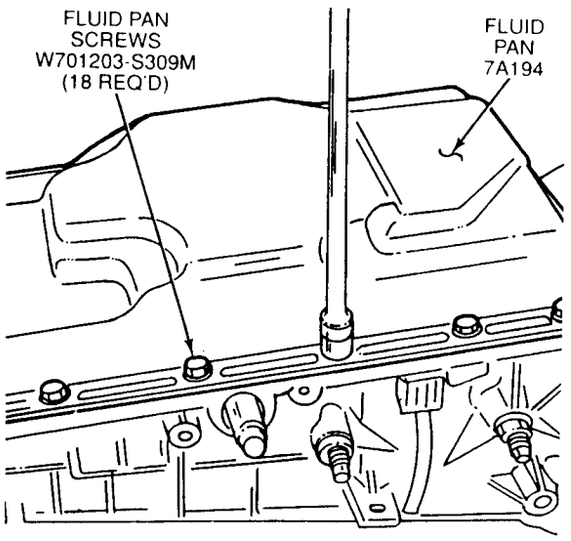

19. Use a 10mm socket to remove the M6 x 55mm fluid pan filter assembly screw. Remove the fluid pan filter assembly.

Fluid Pan Filter Removal

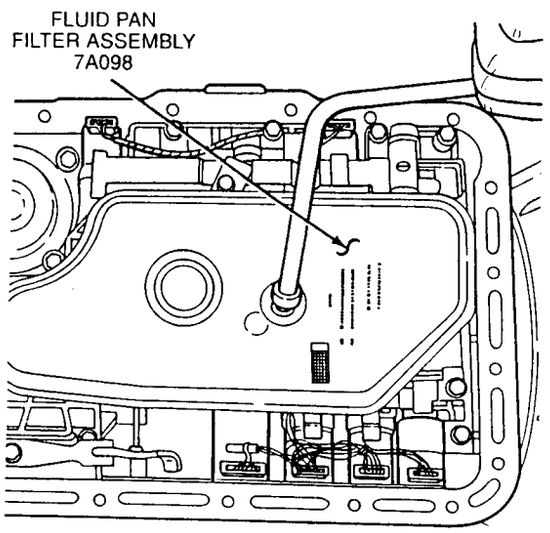

20. Carefully lift up on the wire loom guide and protector. Disengage the retaining pins from the solenoid brackets.

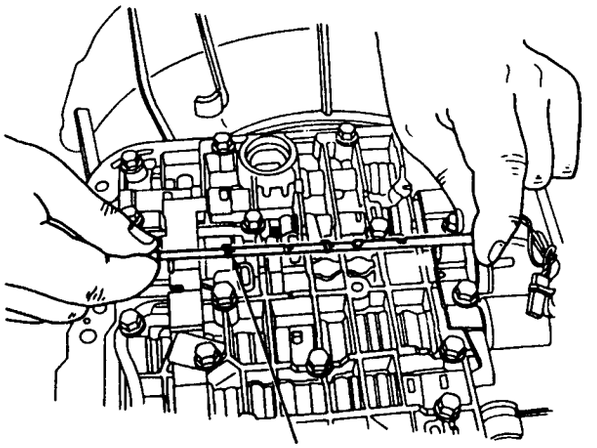

21. Disconnect the six solenoid connectors from the solenoids by carefully pulling upward and moving side to side.

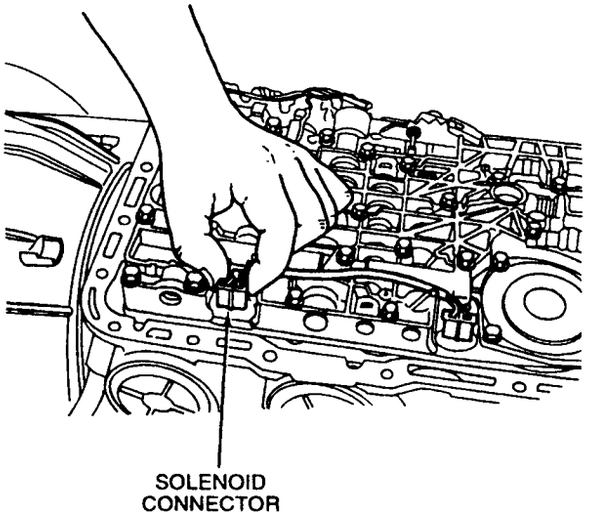

22. Use a 10mm socket to remove the M6 x 30mm manual valve detent spring screw. Remove the manual valve detent spring.

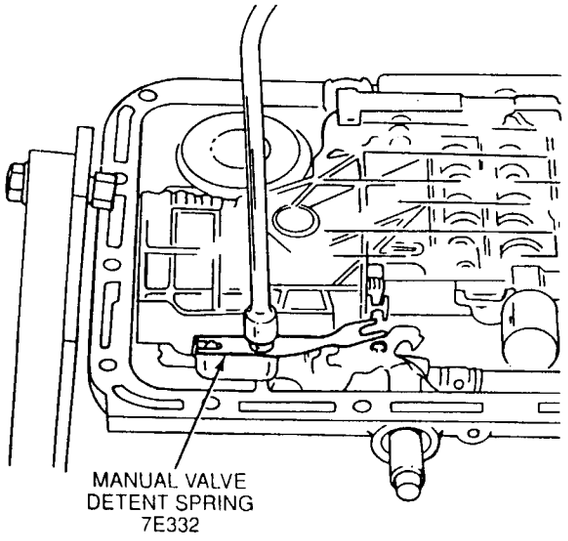

23. Use a 10mm socket to remove the four M6 x 20mm reverse servo cover screws. Remove the reverse servo cover, reverse servo piston and rod and reverse servo.

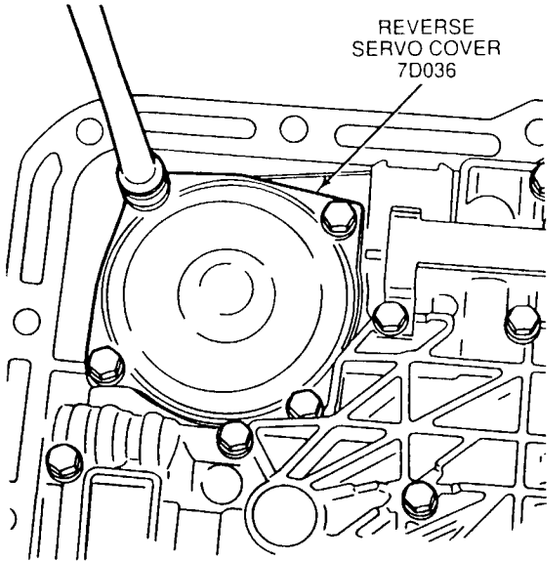

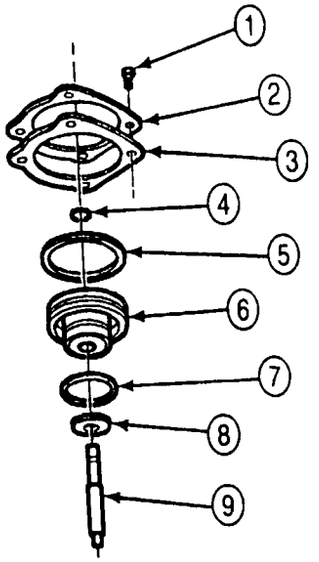

Item	Part Number	Description
1	E800156-S	Screw, M6 x 20mm
2	7D306	Reverse Servo Cover
3	7L173	Reverse Servo to Case Gasket
4	E860167-S	Retaining Ring
5	7423	Reverse Servo Piston Seal Ring — Large
6	7E266	Reverse Servo Piston
7	7423	Reverse Piston Seal Ring — Small
8	7D300	Rear Servo Cushion Spring Retainer
9	7D190	Reverse Servo Rod

24. NOTE: Refer to the main control disassembly and assembly in this section.

Use a 10mm socket to remove the seventeen M6 x 40mm, four M6 x 45mm and three M6 x 35mm main control valve body screws.

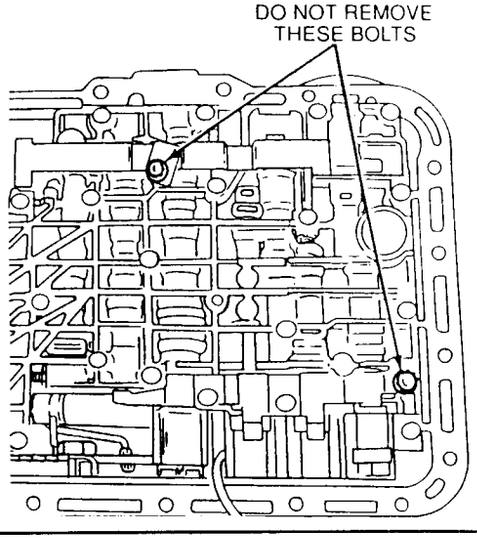

25. Remove the main control assembly.

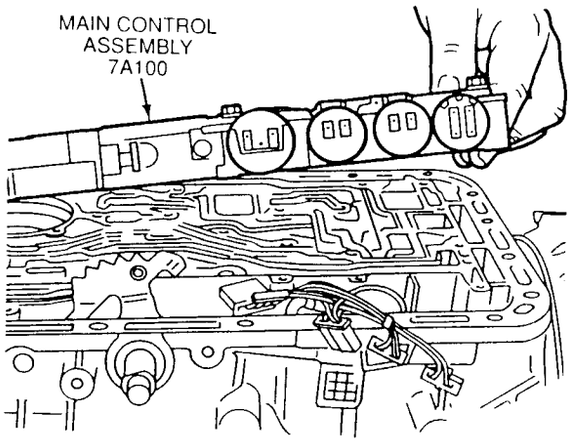

26. NOTE: The J-hook must be in the appropriate hole for the servo being removed.

    Install Servo Cover Compressor T95L-77028-A over the intermediate servo cover at the fluid pan rail. Tighten the bolts.

27. Using a 1/2-inch wrench, tighten the nut on the J-hook until there is a gap between the servo cover and the snap ring.

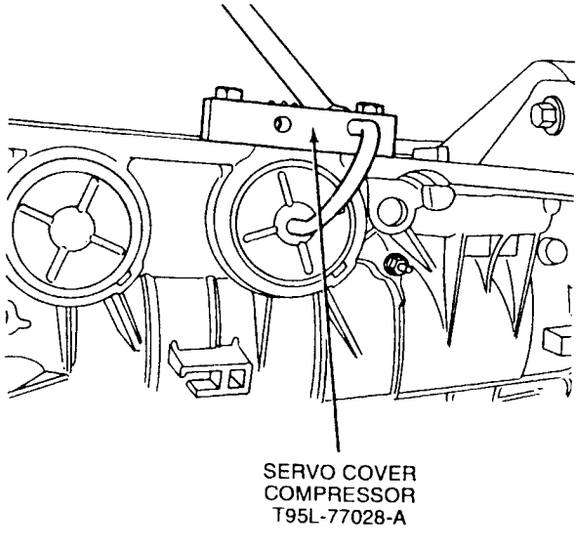

28. Carefully remove the servo cover snap ring.

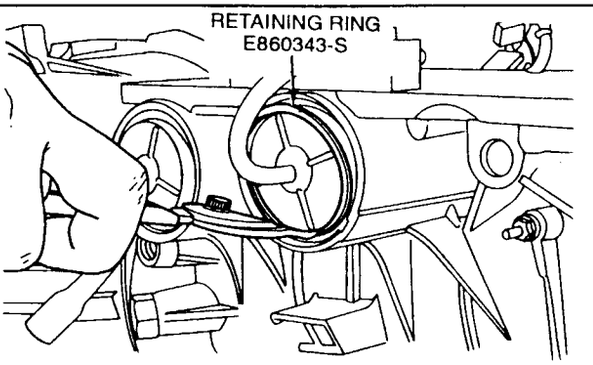

29. **CAUTION: The servo cover is under spring tension.**

    Carefully back off the nut on the J-hook until the servo spring is unloaded.

30. **WARNING: AIR PRESSURE SHOULD NOT BE GREATER THAN 138 KPA (20 PSI). WEAR SAFETY GLASSES WHEN USING COMPRESSED AIR. THE PISTON ASSEMBLY CAN POP OUT UNEXPECTEDLY DUE TO SPRING PRESSURE BEHIND THE PISTON. DO NOT STAND DIRECTLY IN FRONT OF THE PISTON.**

    NOTE: Light tapping on the cover and case, or air pressure applied on the release side may be needed. Use 4R44E / 4R55E Transmission Test Plate T95L-77000-AH and Transmission Test Plate Gasket T95L-7006A.

    NOTE: Tag the spring, piston and cover assembly. Label accordingly for assembly. The covers have letters cast on the outer surface for identification.

    Remove the intermediate servo cover, piston and spring.

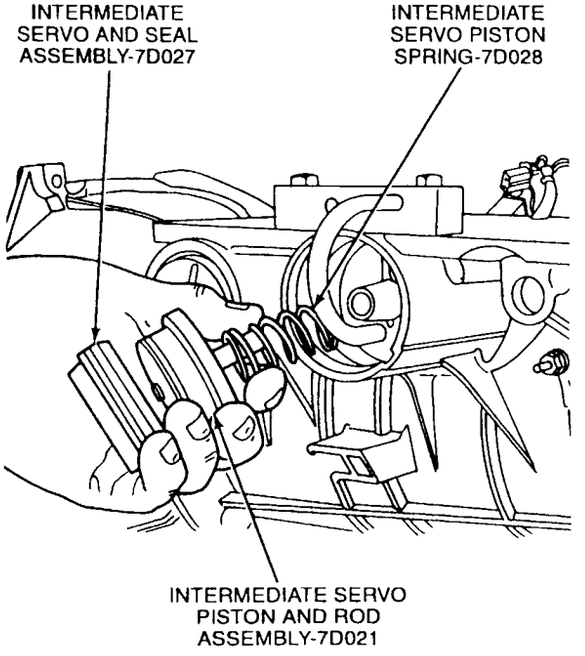

31. Remove Servo Cover Compressor T95L-77028-A.
32. NOTE: The J-hook must be in the appropriate hole for the servo being removed.

    Install Servo Compressor T95L-77028-A over the overdrive servo cover at the fluid pan rail. Tighten the bolts.

33. Using a 1/2-inch wrench, tighten the nut on the J-hook until there is a gap between the servo cover and the retaining ring.

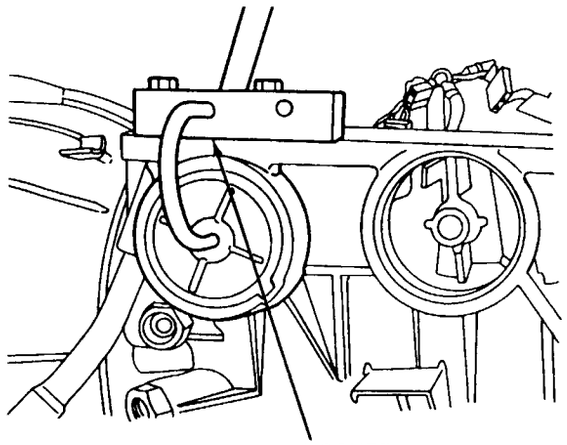

34. Carefully remove the servo cover retaining ring.

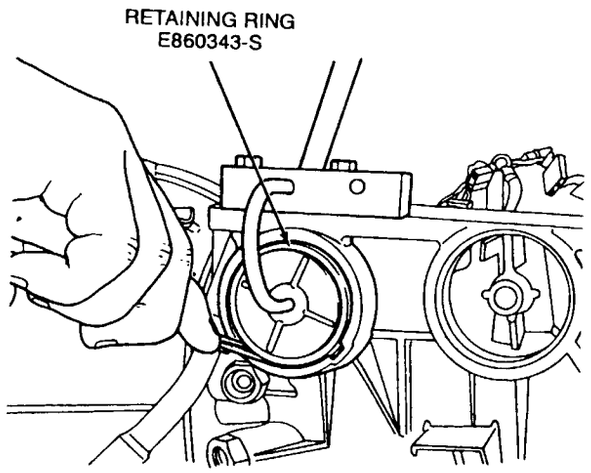

35. **CAUTION: The servo cover is under spring tension.**

    Carefully back off the nut on the J-hook until the servo spring is unloaded.

36. **WARNING: AIR PRESSURE SHOULD NOT BE GREATER THAN 138 KPA (20 PSI). WEAR SAFETY GLASSES WHEN USING COMPRESSED AIR. THE PISTON ASSEMBLY CAN POP OUT UNEXPECTEDLY DUE TO SPRING PRESSURE BEHIND THE PISTON. DO NOT STAND DIRECTLY IN FRONT OF THE PISTON.**

    NOTE: Light tapping on the cover and case, or air pressure applied on the release side may be needed. Use 4R44E/4R55E Transmission Test Plate T95L-77000-AH.

    NOTE: Tag the spring, piston and cover assembly. Label accordingly for assembly. The covers have letters cast on the outer surface for identification.

    Remcve the overdrive servo cover, piston and spring.

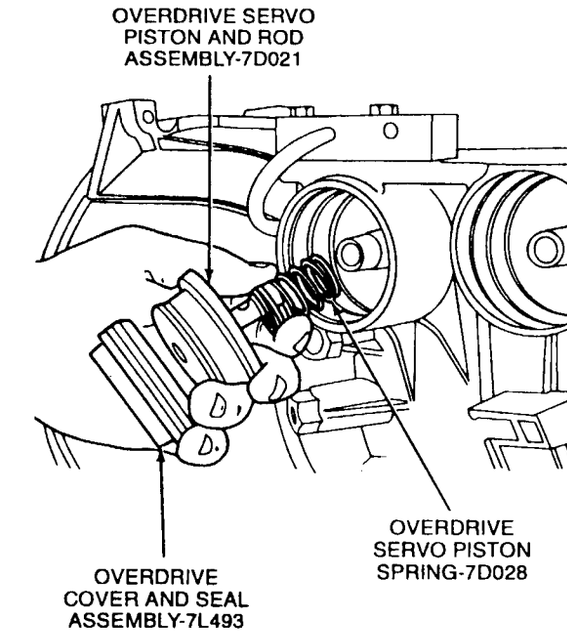

37. Remove Servo Cover Compressor T95L-77028-A.

38. **WARNING: MAKE SURE THE LOCK PIN ON BENCH-MOUNTED HOLDING FIXTURE T57L-500-B IS SECURE.**

    Rotate the transmission assembly with the converter housing facing up.

39. **CAUTION: Throw the locknuts away. The locknuts are not reusable for assembly.**

Remove the overdrive and intermediate band locknuts and back off the band adjusting screws.

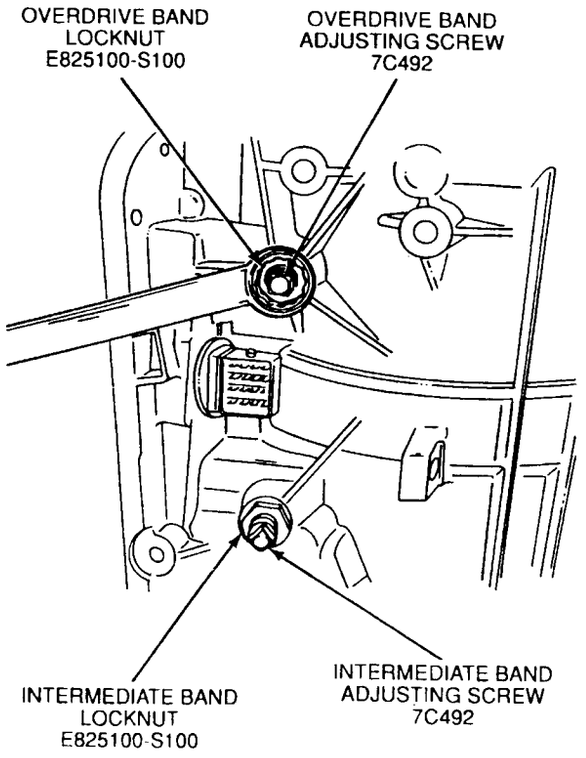

40. **CAUTION: Throw the screws away. The screws are not reusable for assembly.**

Use a 17mm socket to remove the eight M10 x 33mm converter housing-to-case screws. Discard the screws.

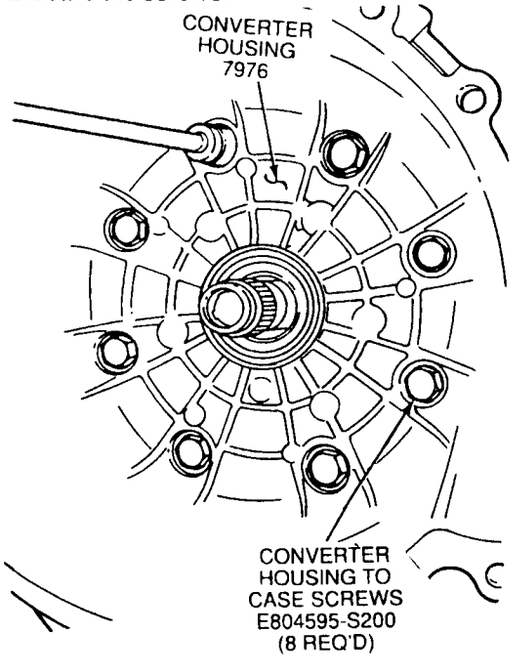

41. NOTE: Rotate and lift the converter housing so that the clutch assemblies will stay in place.

Remove the converter housing and front pump support and gear assembly.

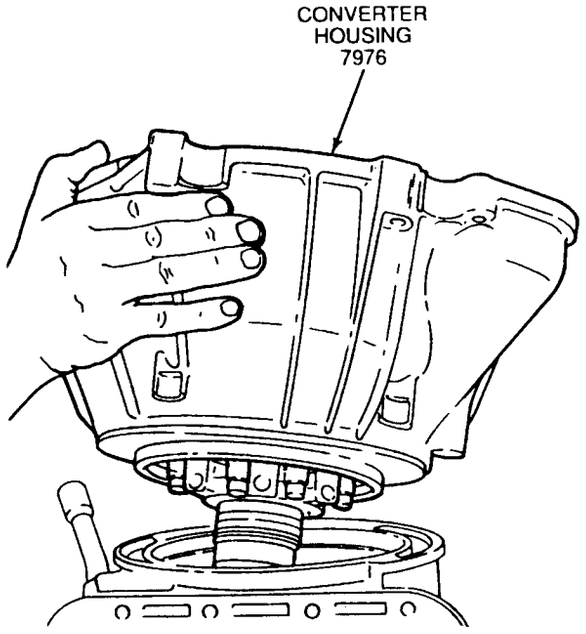

42. NOTE: Refer to converter housing and pump assembly under subassemblies for service information.

Remove the fluid pump gasket and No. 1 front pump thrust washer and discard gasket. Tag the No. 1 front pump thrust washer for identification.

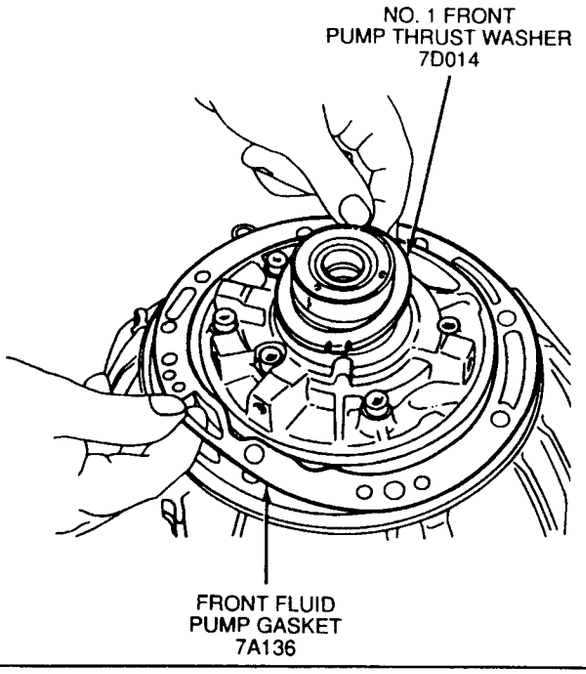

43. Compress the overdrive band around the overdrive brake and coast clutch drum. Remove the overdrive band anchor strut and adjusting screw.

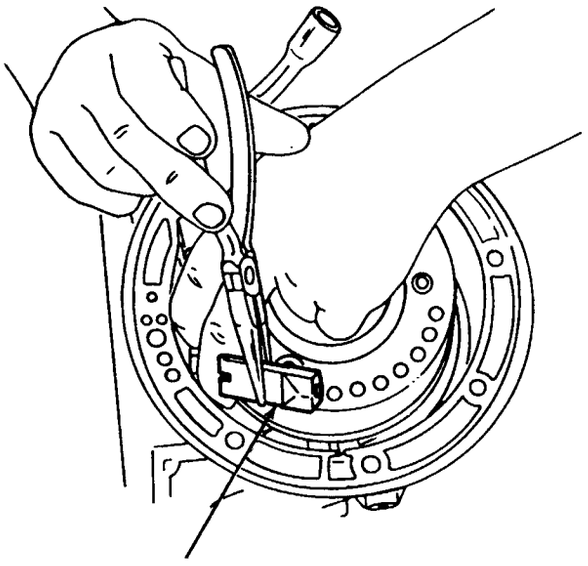

OVERDRIVE BAND
ANCHOR STRUT
7D430

44. **CAUTION: Identify which end of the overdrive band is the anchor side or the apply side.**

Remove the overdrive band.

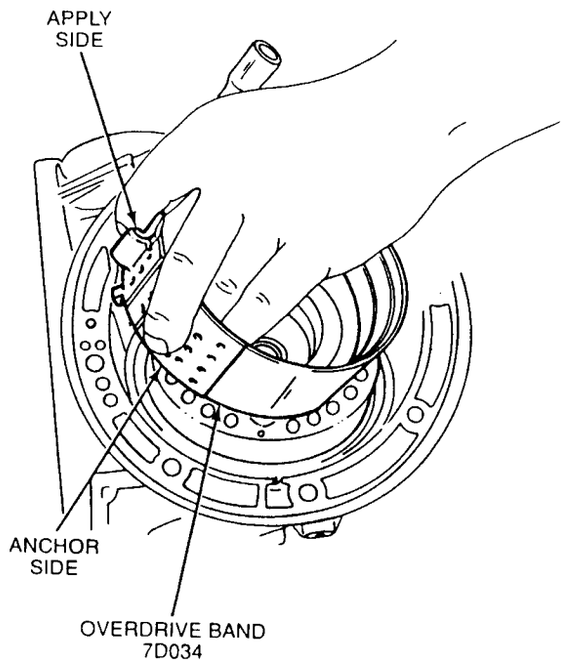

OVERDRIVE BAND
7D034

45. Remove the overdrive brake and coast clutch drum.

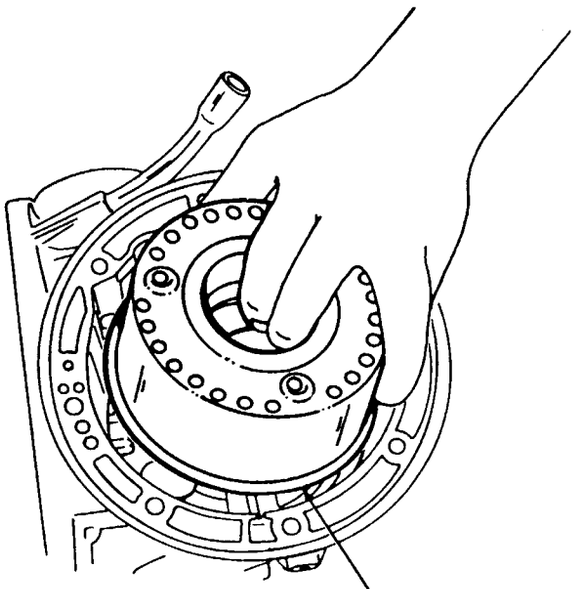

OVERDRIVE BRAKE AND
COAST CLUTCH DRUM
7L669

46. Remove the overdrive band apply strut.

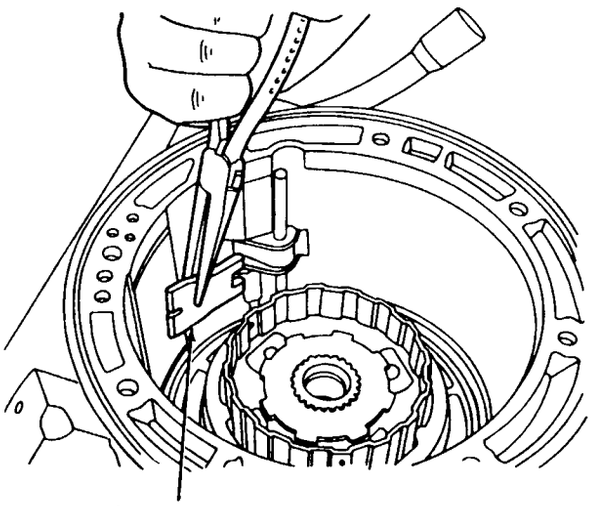

OVERDRIVE
BAND
APPLY STRUT
7D029

47. NOTE: Tag and identify the overdrive lever for assembly. The overdrive lever has a letter stamped into its side.

    NOTE: The overdrive band actuating lever shaft is longer than the intermediate shaft.

    Remove the overdrive band actuating lever shaft.

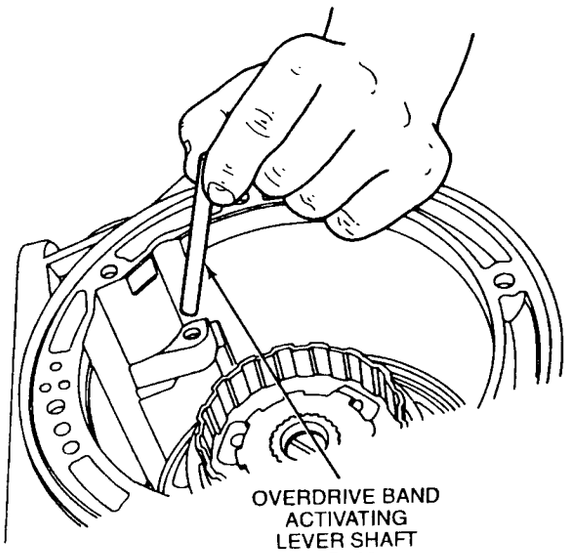

48. **CAUTION: Do not bend the exciter wheel.**

    NOTE: No. 12 and No. 2 thrust bearings are in this assembly.

    Remove the planet gear overdrive carrier.

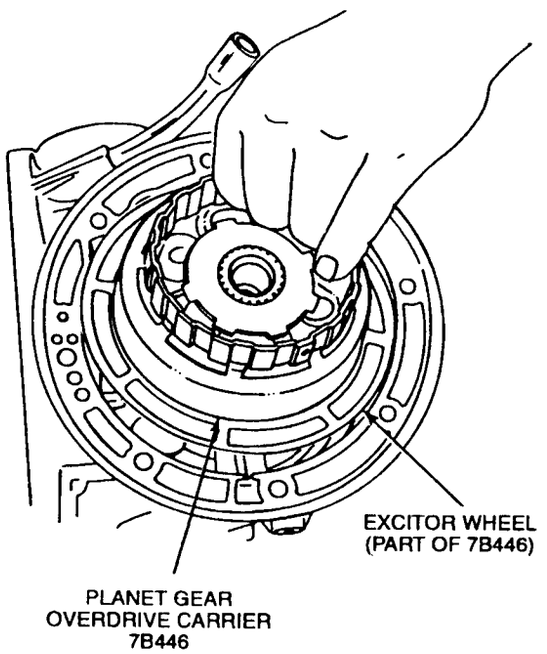

49. Remove the servo band lever and overdrive control bracket.

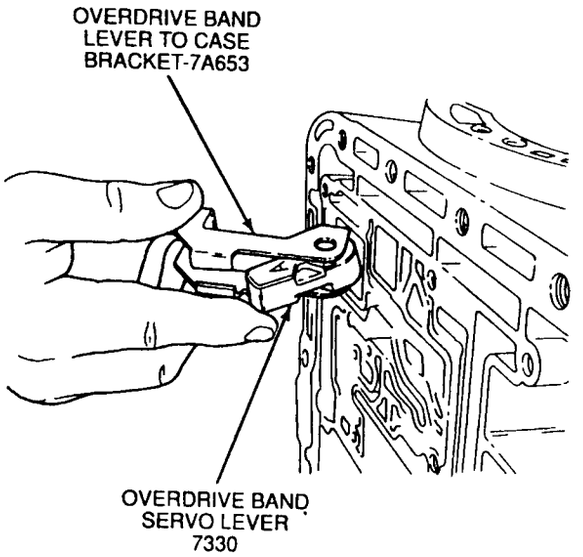

50. Remove the overdrive ring gear, overdrive one-way clutch and overdrive center shaft assembly.

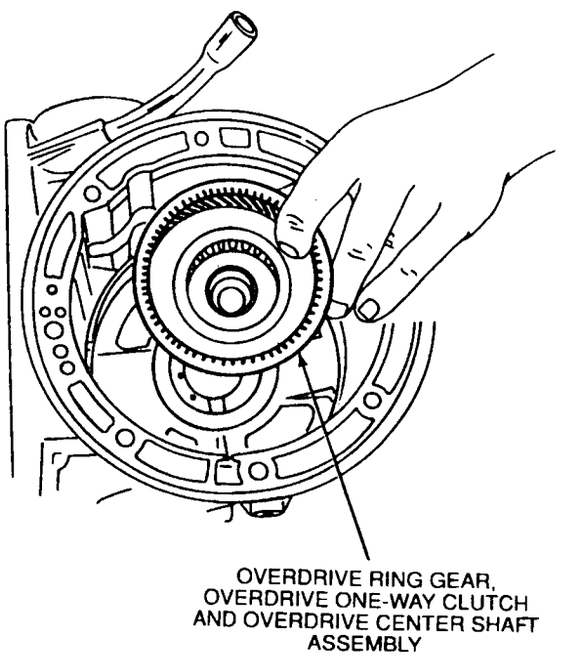

51. NOTE: Tag and identify the No. 3 center shaft thrust bearing assembly for assembly.

Remove the No. 3 center shaft thrust bearing assembly.

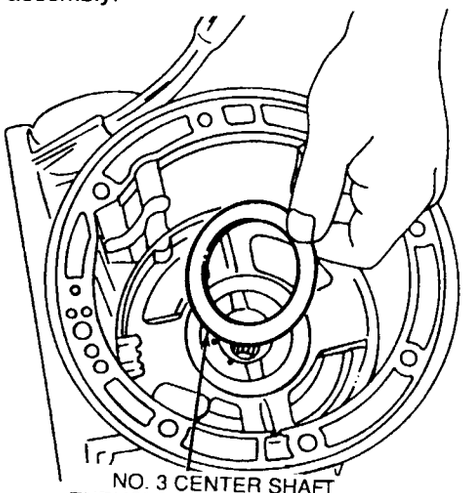

52. **CAUTION: The center support locking nut could fall into the remaining assembly if not removed.**

Use a 5mm Allen wrench to remove the M6 x 20mm center support capscrew. Remove the locking nut from the center support.

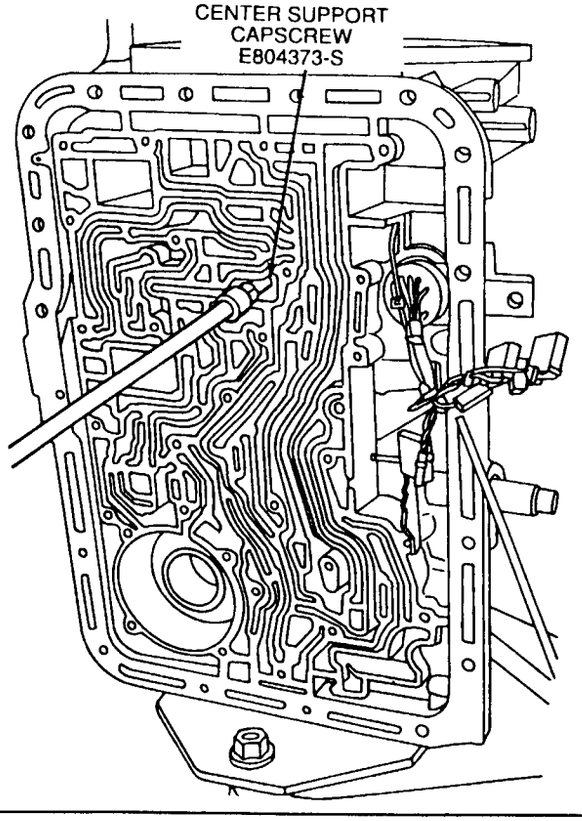

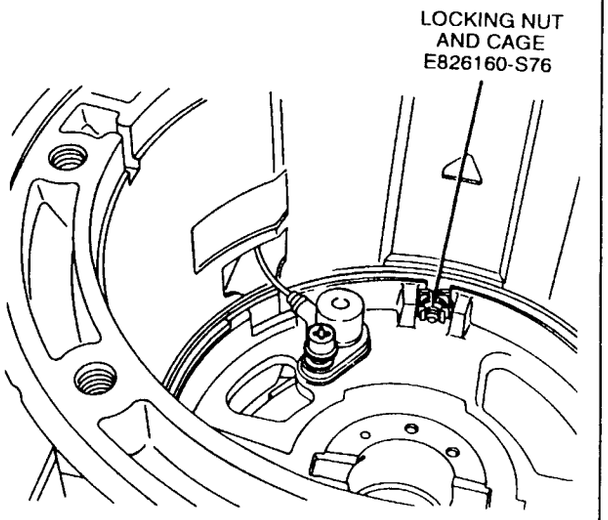

53. **CAUTION: Do not pry on other wires or damage the connector or case surface.**

Carefully disconnect the turbine shaft speed sensor (TSS) connector from the 16-pin case connector.

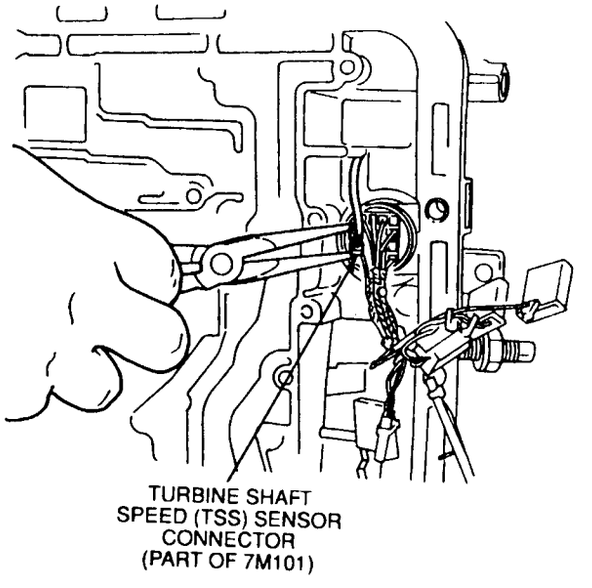

54. Use a T30 Torx® bit to remove the TSS screw. Remove the TSS.

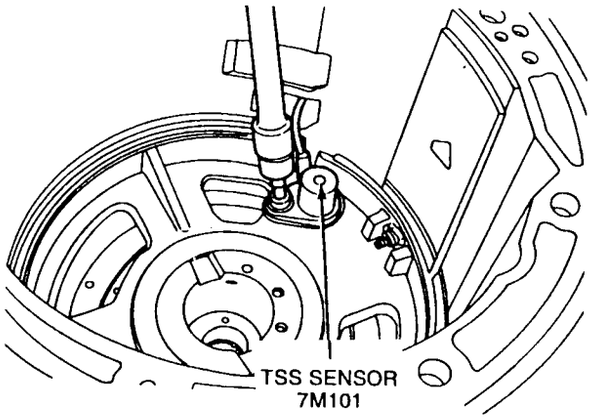

55. Carefully route the TSS connector and wiring into the transmission through the opening in the case.

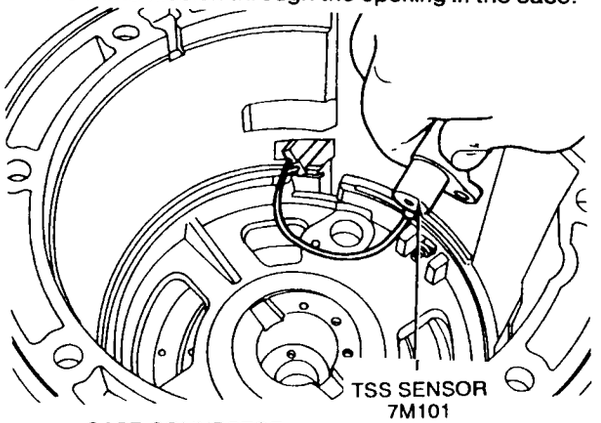

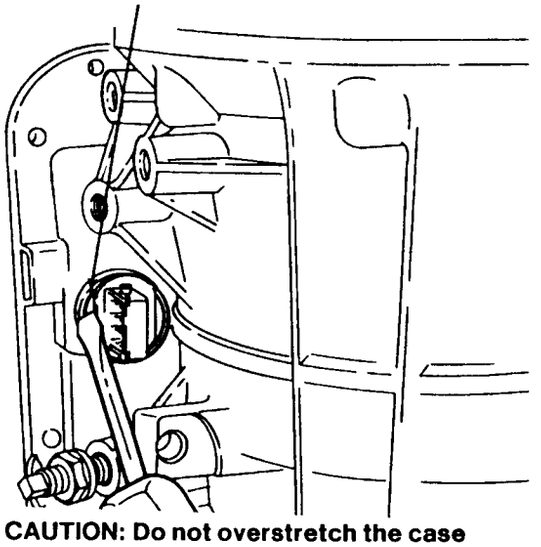

56. **CAUTION: Do not overstretch the case connector retaining ring.**

Use a screwdriver to carefully remove the case connector retaining ring.

57. **CAUTION: Do not damage the connector or harness.**

Carefully push down on the top of the connector until it stops. Depress the tab on the back side of the connector and push down on the connector. Remove the connector and harness through the bottom of the case.

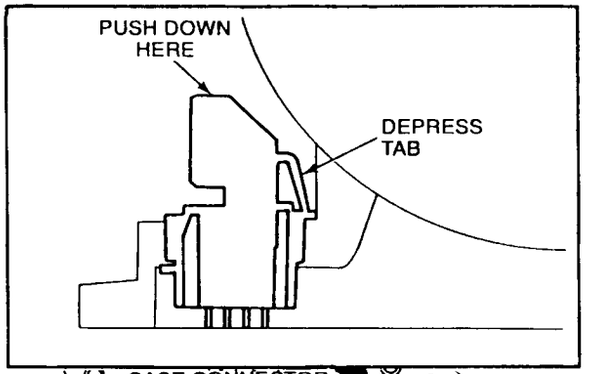

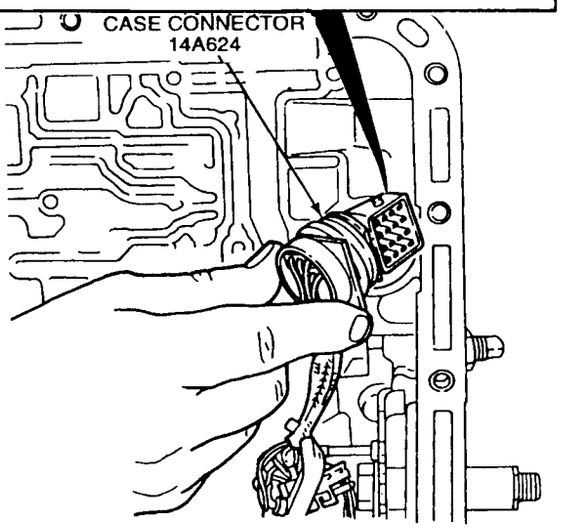

58. Remove the center support retaining ring.

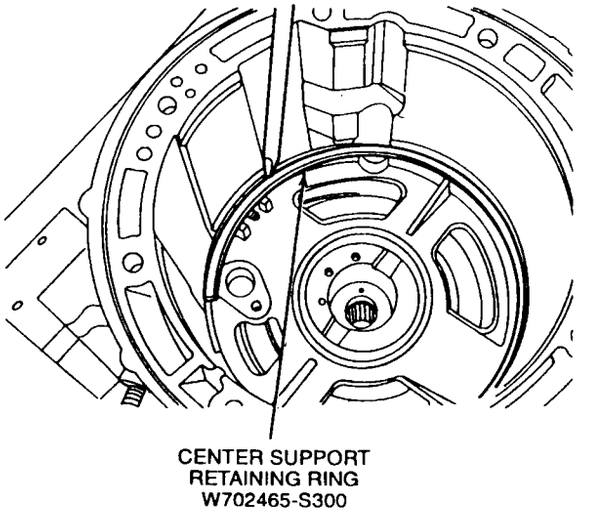

59. Remove the center support by pulling evenly around the center support web.

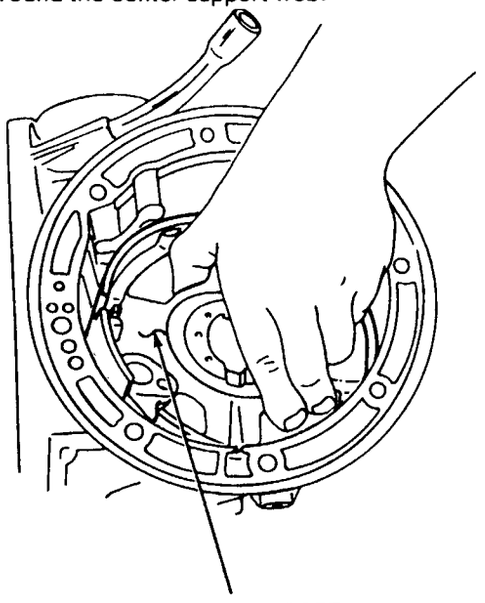

60. NOTE: Tag and identify the No. 4 intermediate brake drum thrust bearing for assembly.

Remove the No. 4 intermediate brake drum thrust bearing.

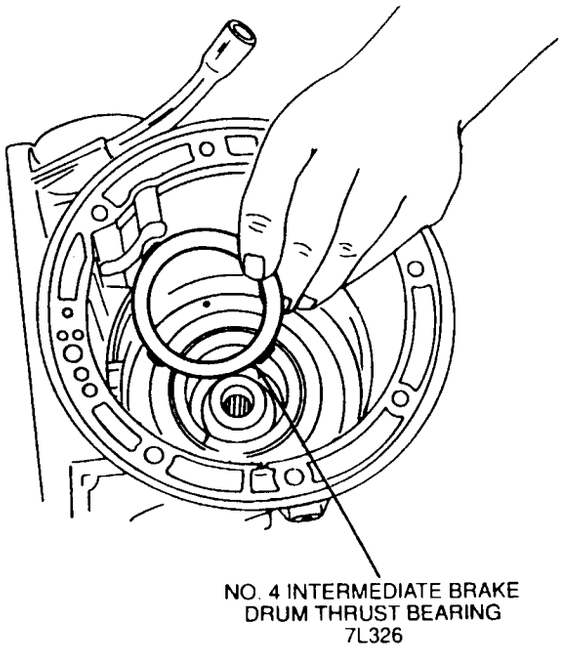

61. Remove the intermediate band anchor strut through the bottom of the case. Remove intermediate band adjusting screw.

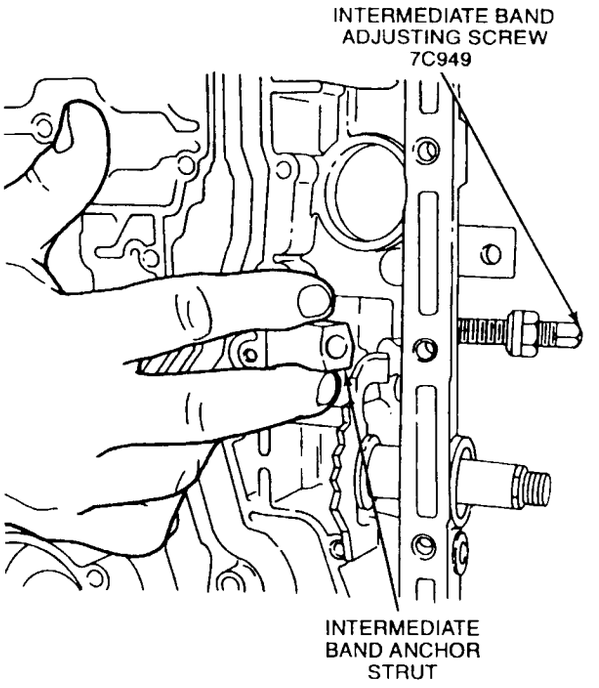

62. **CAUTION: Identify which end of the intermediate band is the anchor side or the apply side.**

Remove the intermediate band.

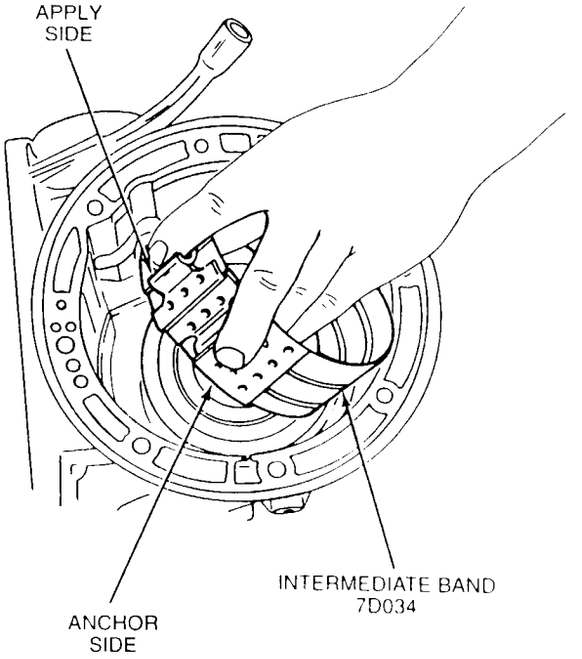

63. Remove the intermediate band apply strut.

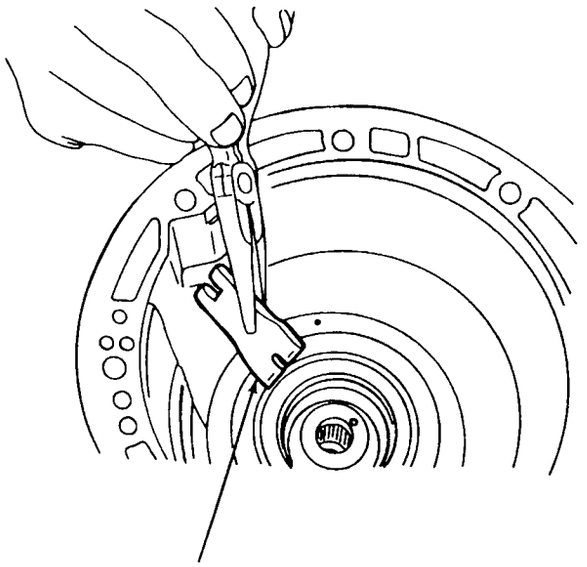

64. NOTE: The intermediate band actuating lever shaft is shorter than the overdrive band actuating lever shaft.

Remove the intermediate band actuating lever shaft.

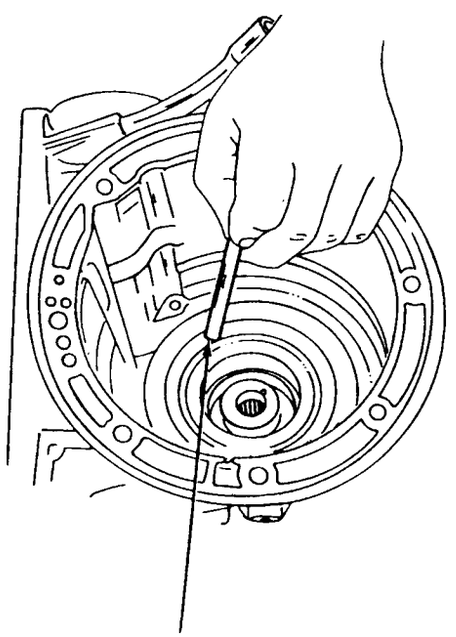

65. NOTE: Tag and identify the intermediate band servo lever for assembly. The intermediate band servo lever has a letter stamped on its side for identification.

Remove the intermediate band servo lever.

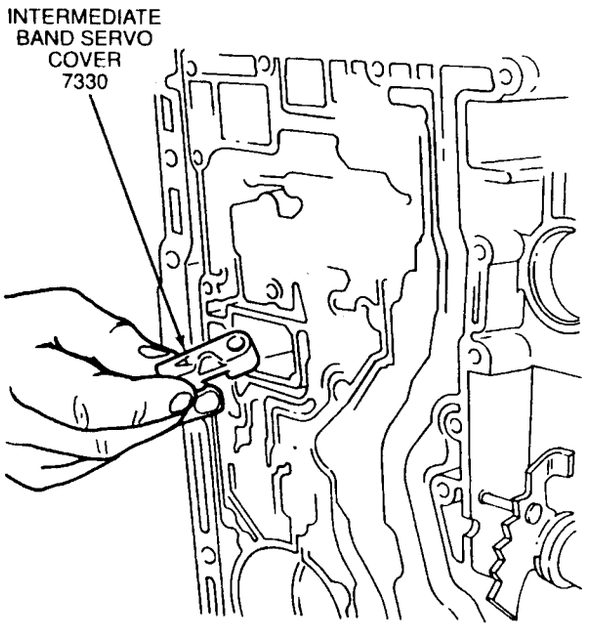

66. **CAUTION: Make sure the lock pin on Bench-Mounted Holding Fixture T57L-500-B is secure.**

Rotate the transmission so the fluid pan surface is facing up.

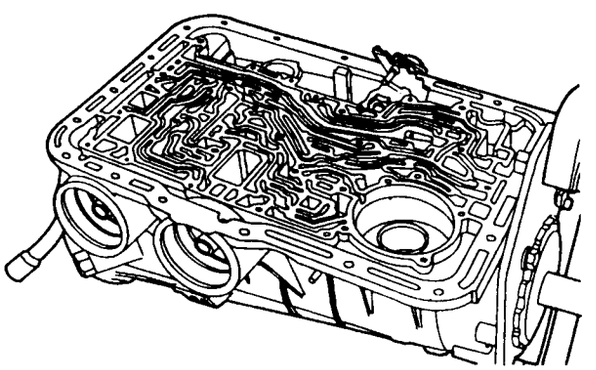

67. NOTE: The No. 5 forward clutch cylinder thrust washer may come out with the intermediate brake and direct clutch drum.

    Remove the intermediate brake and direct clutch drum.

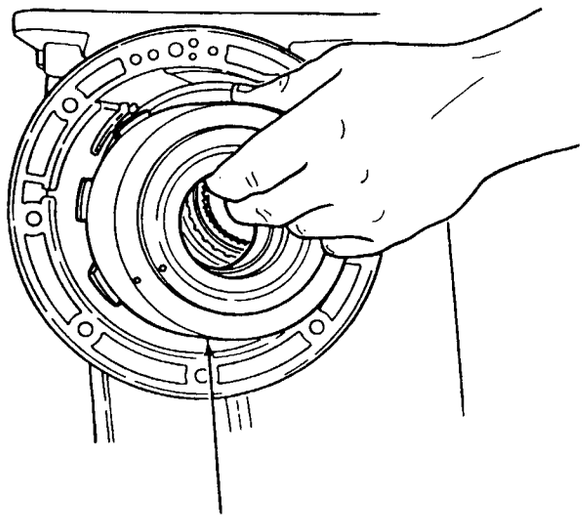

INTERMEDIATE
BRAKE AND DIRECT
CLUTCH DRUM
7D044

68. Remove the No. 5 forward clutch cylinder thrust washer.

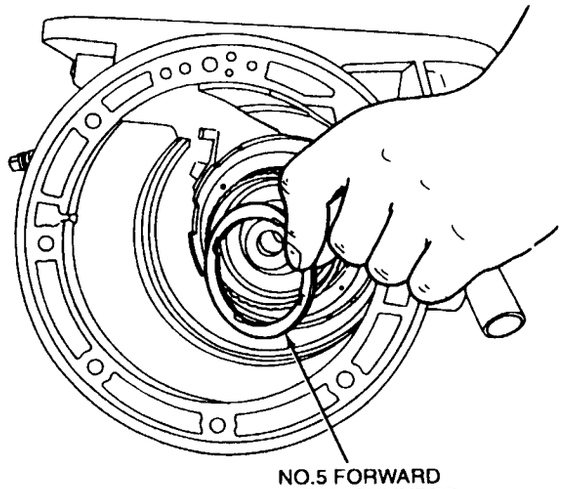

NO.5 FORWARD
CLUTCH CYLINDER
THRUST WASHER
7C096

69. NOTE: The No. 5 forward clutch cylinder thrust washer may come out with the forward clutch cylinder.

    Remove the forward clutch cylinder.

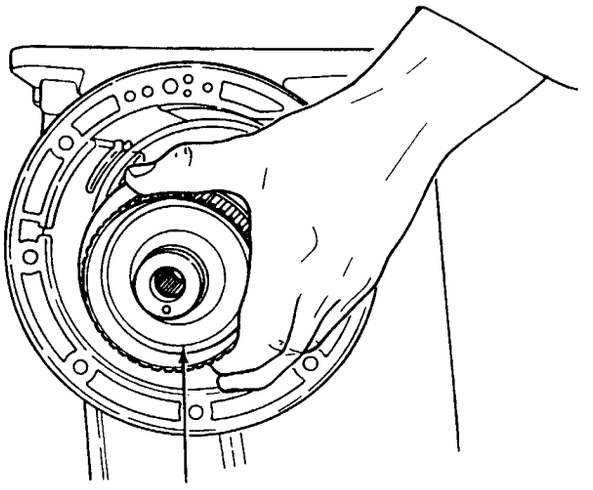

FORWARD
CLUTCH CYLINDER
7A360

70. Remove the forward ring gear and forward ring gear hub.

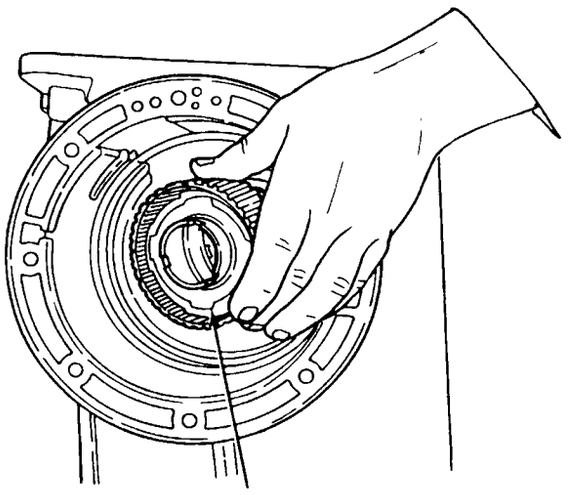

FORWARD RING
GEAR AND FORWARD
RING GEAR HUB

71. Remove the No. 7 forward planet thrust bearing.

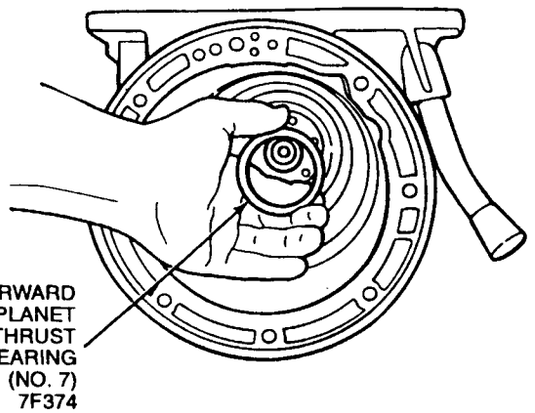

72. NOTE: The forward planet assembly is model dependent.

Remove the forward planet assembly.

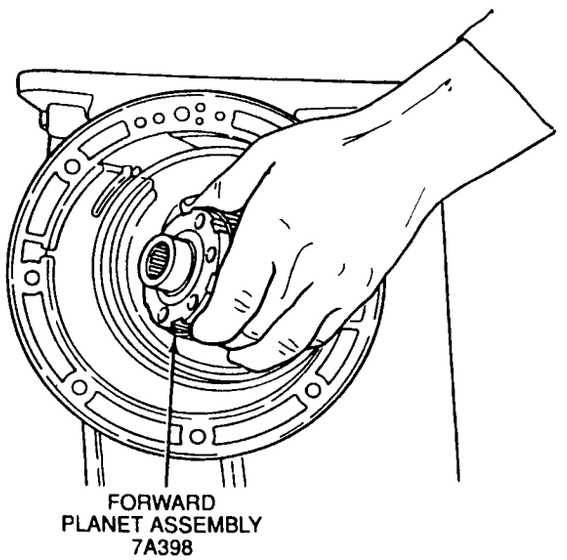

73. Remove the input shell with forward sun gear.

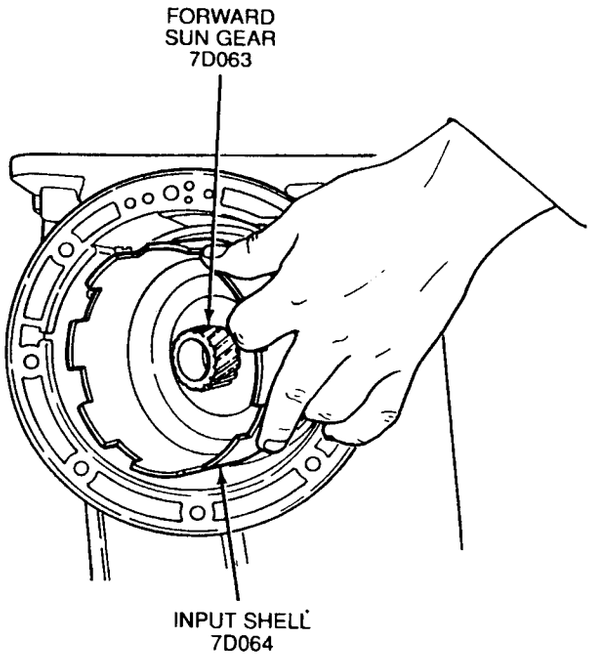

74. NOTE: 4.0L engines do not have this retaining ring.

Remove the reverse planet retaining ring.

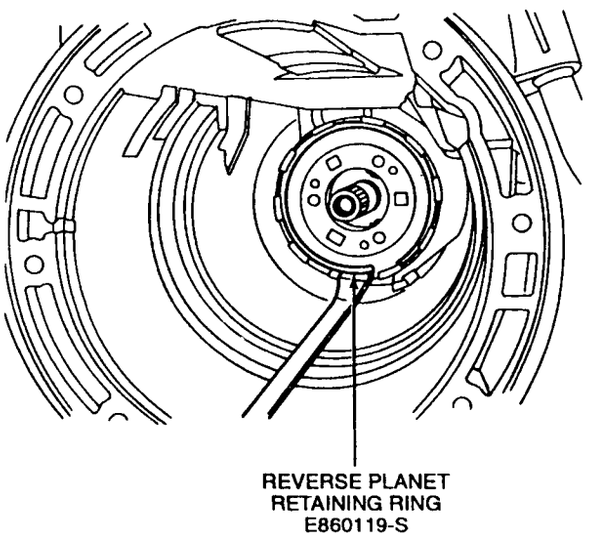

75. NOTE: The No. 8 reverse planet carrier thrust washer is model dependent.

NOTE: Tag and identify the No. 8 reverse planet carrier thrust washer for assembly.

Remove the reverse planet assembly and No. 8 reverse planet carrier thrust washer.

2.3L, 3.0L

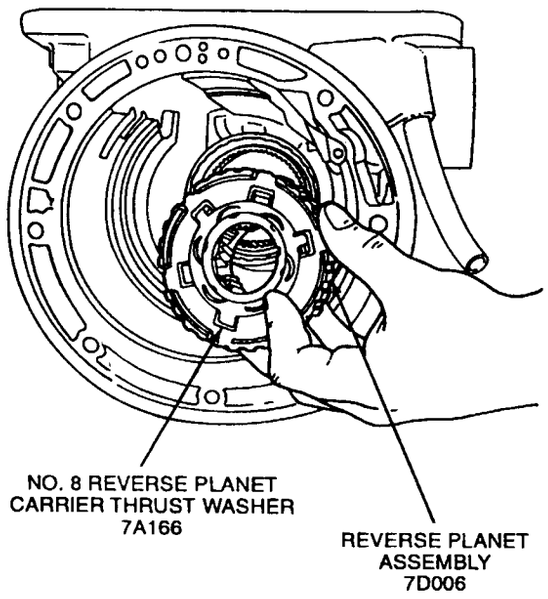

4.0L

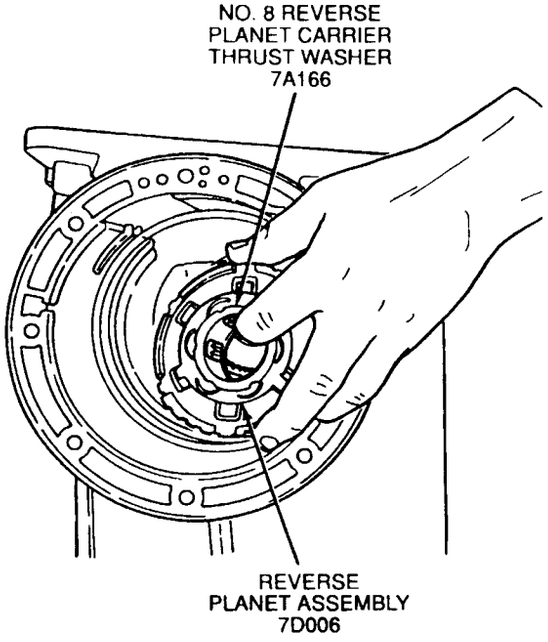

76. NOTE: The No. 9 reverse planet carrier thrust washer is model dependent.

    Remove the No. 9 reverse planet carrier thrust washer.

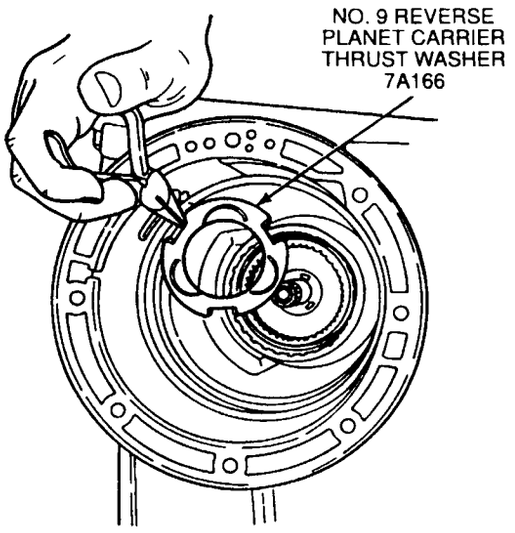

77. NOTE: The output shaft sleeve is on 4.0L applications only.

    Remove the output shaft sleeve.

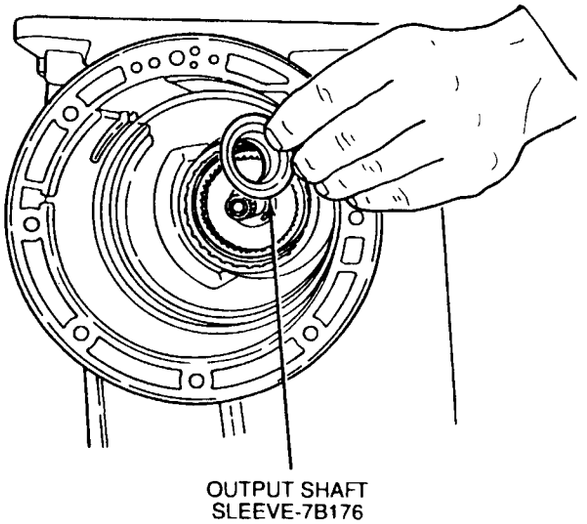

78. **CAUTION: Discard the output shaft retaining ring. A new retaining ring must be used for assembly.**

Remove the output shaft retaining ring from inside the case on the output shaft.

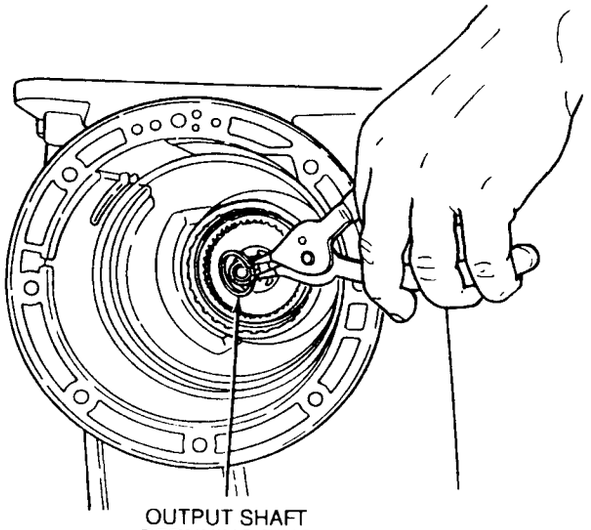

OUTPUT SHAFT
RETAINING RING
E860927-S

79. Remove the output shaft ring gear and output shaft hub.

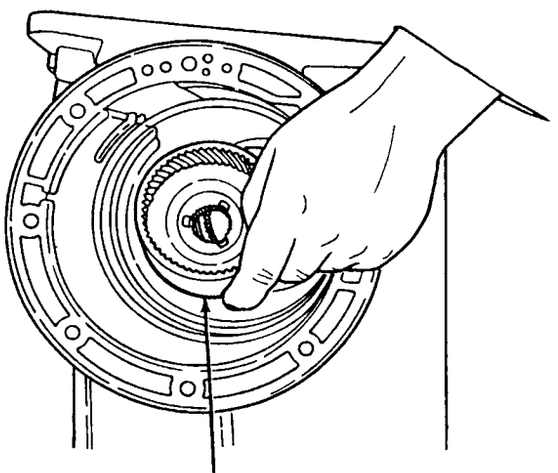

OUTPUT SHAFT RING GEAR
AND OUTPUT SHAFT HUB

80. NOTE: The No. 10 output shaft hub thrust washer is model dependent.

NOTE: Tag and identify the No. 10 output shaft hub thrust washer for assembly.

Remove the No. 10 output shaft hub thrust washer.

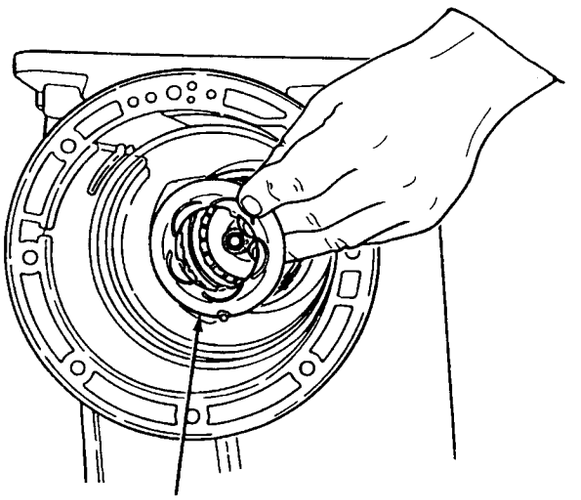

NO. 10 OUTPUT SHAFT
HUB THRUST WASHER
7D422

81. NOTE: The inner race of the rear one-way clutch is not removable. It is serviced in the case.

Remove the reverse brake drum and the one-way clutch assembly.

Reverse Brake Drum and One Way Clutch Assembly Removal, 2.3L, 3.0L

REPLACING
GUIDE TOOL
T74P-77193-A

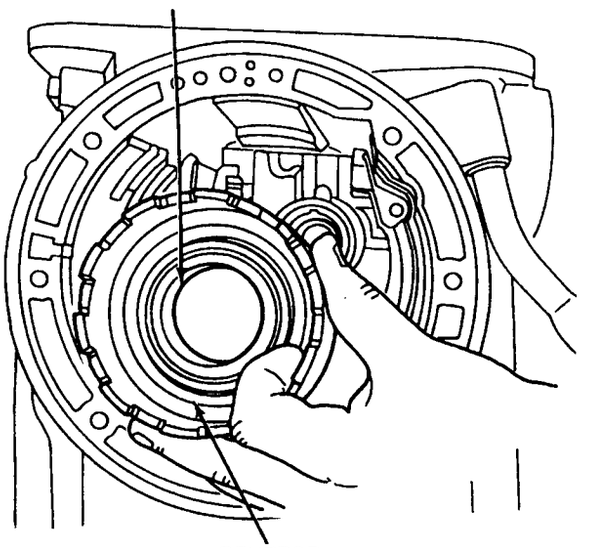

REVERSE
BRAKE DRUM
7C498

Reverse Brake Drum and One Way Clutch Assembly Removal, 4.0L

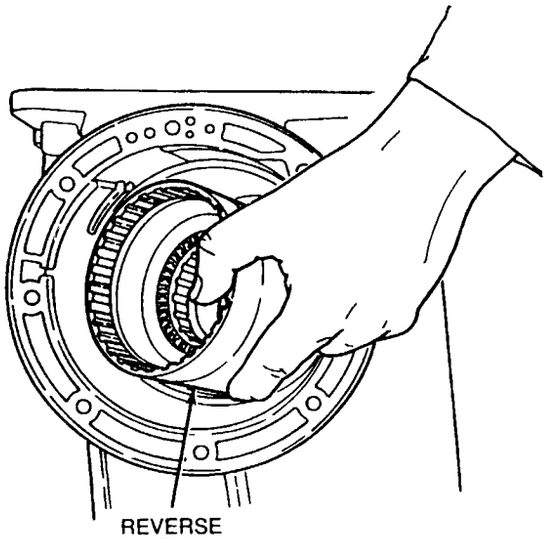

82. Remove the reverse band.

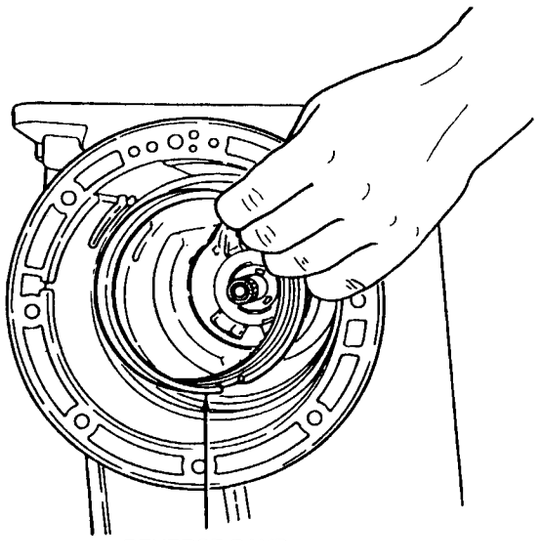

83. **CAUTION: The output shaft is model dependent. The 4.0L output shaft does not use lube holes.**

    Remove the output shaft.

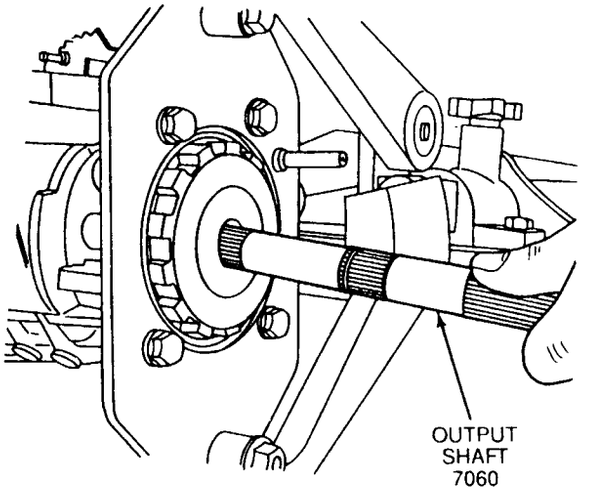

84. Remove the park gear.

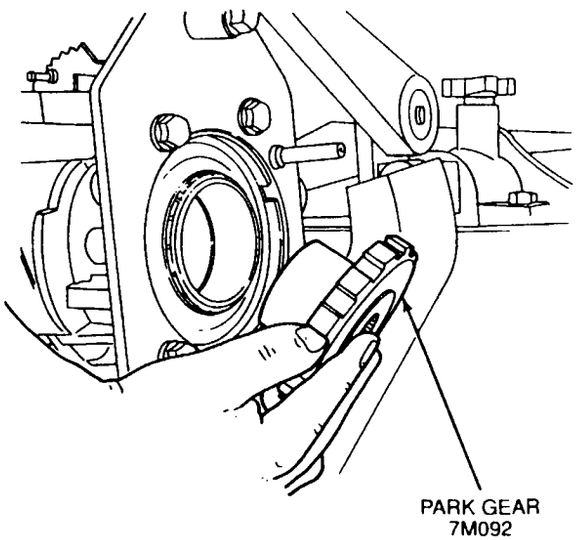

85. NOTE: Tag and identify the No. 11 output shaft thrust washer for assembly.

Remove the No. 11 output shaft thrust washer.

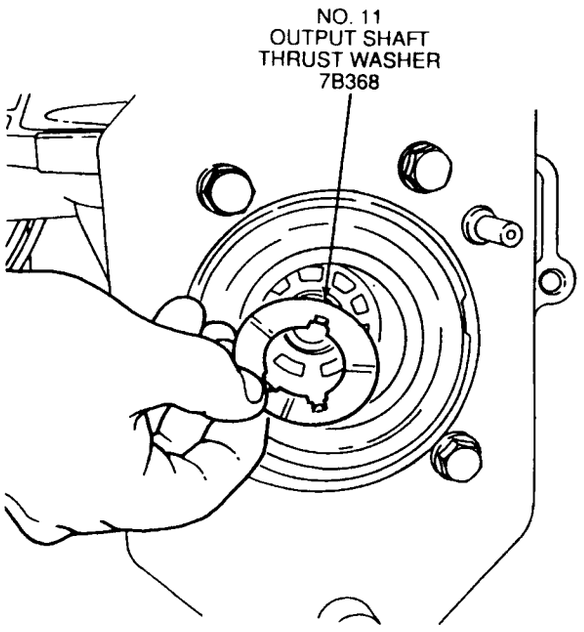

86. **CAUTION: To avoid damage, make sure wrench does not strike the manual valve inner lever pin.**

Remove the manual valve inner lever nut.

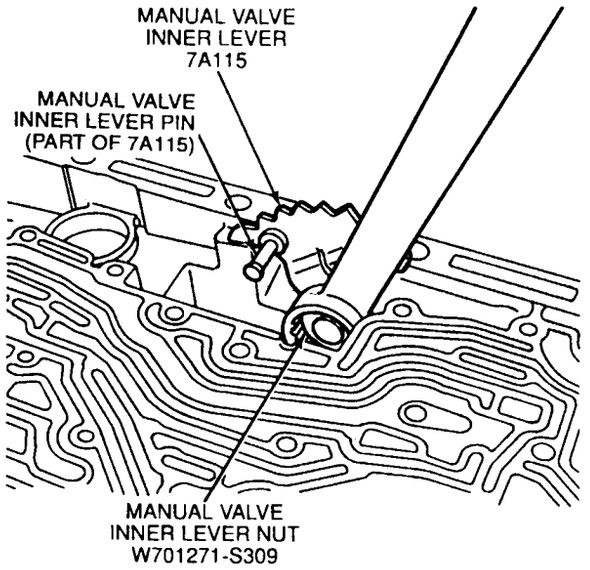

87. Remove the manual valve inner lever and parking pawl actuating rod assembly.

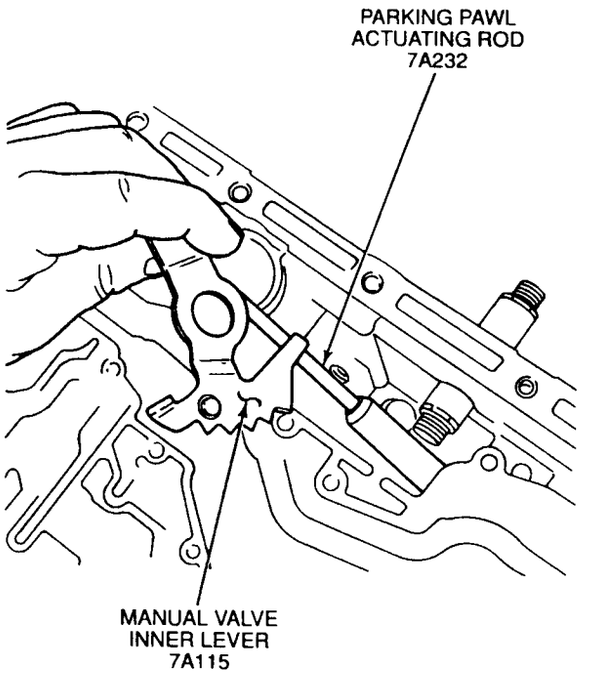

88. **CAUTION: Do not damage the case fluid pan rail.**

Using a small hammer and drift, tap lightly on each side of the manual control lever shaft retaining pin (two or three times). This will loosen the pin prior to removal.

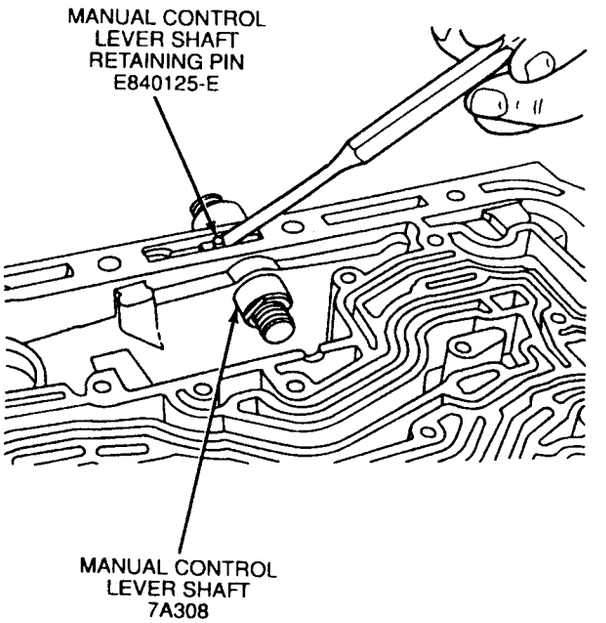

89. **CAUTION: Do not damage the case fluid pan rail.**
Remove the manual control lever shaft retaining pin with a narrow, sharp edged screwdriver from the side as shown.

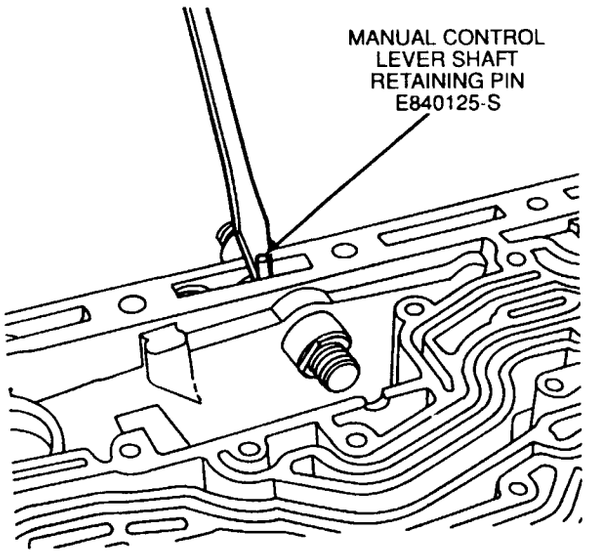

90. Remove the manual control lever shaft.

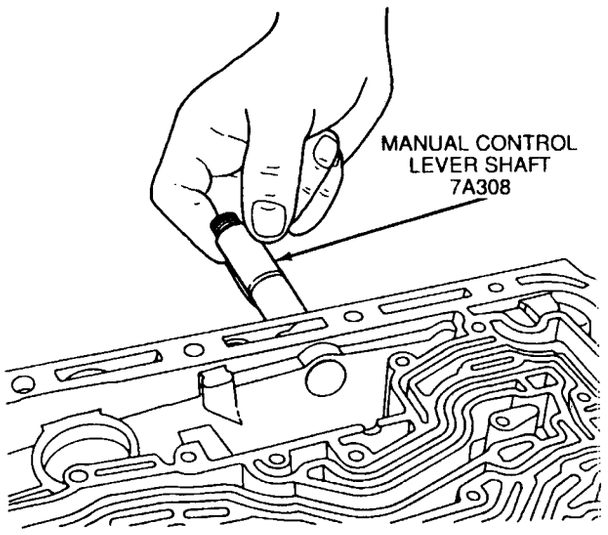

91. **CAUTION: Do not damage the bore.**
Remove the manual control lever seal.

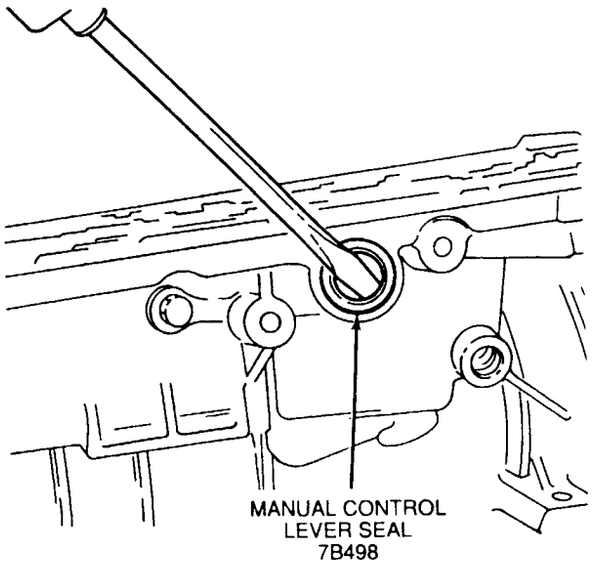

DISASSEMBLY AND ASSEMBLY OF SUBASSEMBLIES

Main Control Valve Body

Main Control Valve Body

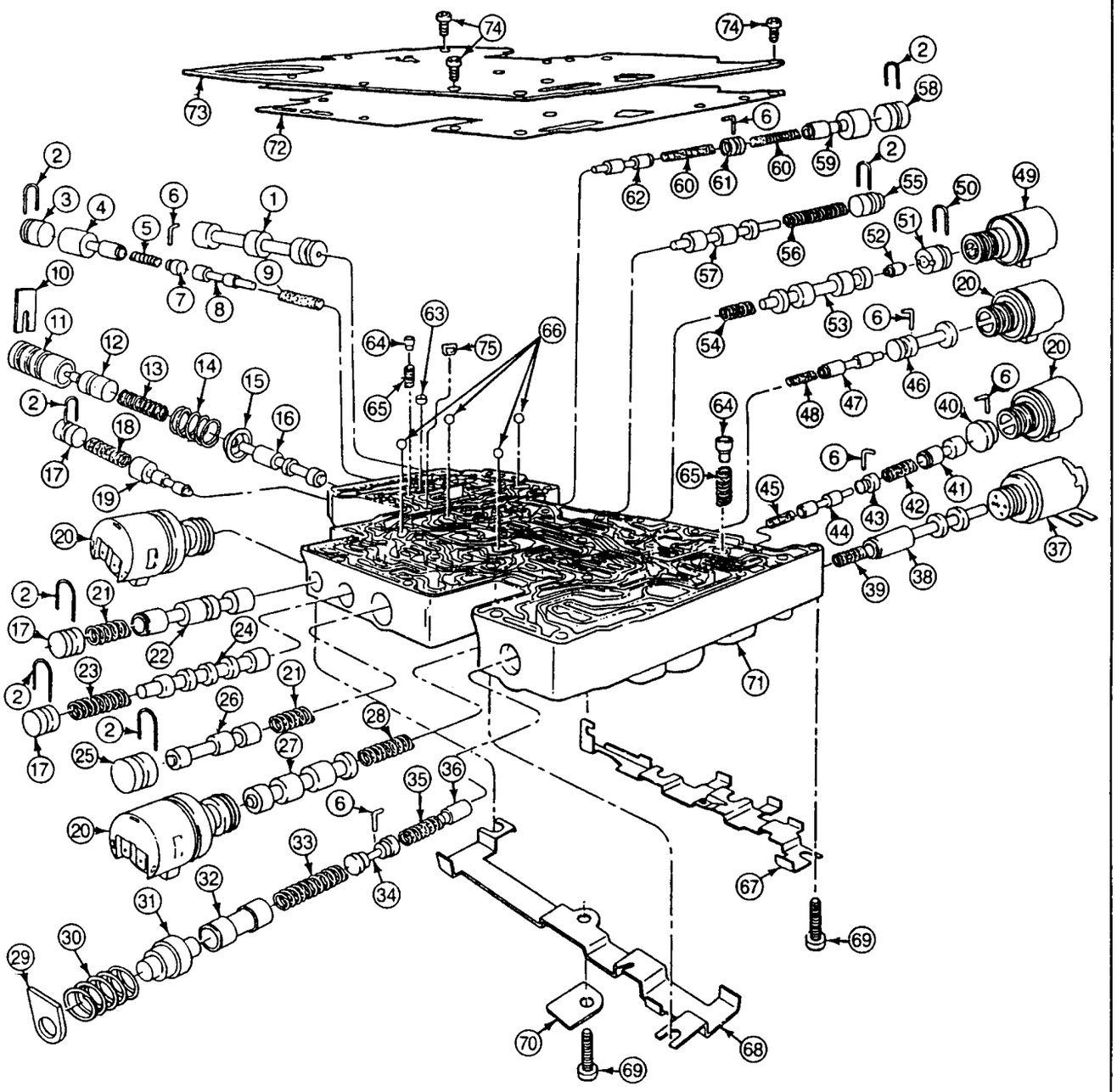

DISASSEMBLY AND ASSEMBLY OF SUBASSEMBLIES

Item	Part Number	Description
1	—	Manual Valve (Part of 7A100)
2	—	Valve Plug Retainer (Part of 7A100)
3	—	Valve Retainer Plug (Part of 7A100)
4	—	Forward Modulator Valve (Part of 7A100)
5	—	Forward Modulator Spring (Part of 7A100)
6	—	Valve Plug Retainer (Part of 7A100)
7	—	Valve Retainer Plug (Part of 7A100)
8	—	EPC Boost Valve (Part of 7A100)
9	—	EPC Boost Spring (Part of 7A100)
10	—	Valve Plug Retainer (Part of 7A100)
11	—	Pressure Boost Valve Sleeve (Part of 7A100)
12	—	Pressure Boost Valve (Part of 7A100)
13	—	Pressure Boost Spring (Part of 7A100)
14	—	Oil Pressure Regulator Spring (Part of 7A100)
15	—	Main Regulator Spring Retainer (Part of 7A100)
16	—	Pressure Regulator Valve (Part of 7A100)
17	—	Valve Retainer Plug (Part of 7A100)
18	—	Forward Engagement Control Spring (Part of 7A100)
19	—	Forward Engagement Control Valve (Part of 7A100)
20	7M107	Shift Solenoids and Coast Clutch Solenoid (4 Req'd)
21	—	3-2 Spring (Part of 7A100)
22	—	3-2 Valve (Part of 7A100)
23	—	Manual Low Spring (Part of 7A100)
24	—	Manual Low Valve (Part of 7A100)
25	—	Valve Retainer Plug (Part of 7A100)
26	—	3-2 Valve (Part of 7A100)
27	—	3-4 Shift Valve (Part of 7A100)
28	—	3-4 Shift Spring (Part of 7A100)

(Continued)

Item	Part Number	Description
29	—	Valve Plug Retainer (Part of 7A100)
30	—	Thermostat Bypass Spring (Part of 7A100)
31	—	Thermostat Bypass Valve (Part of 7A100)
32	—	Thermostat Bypass Valve (Part of 7A100)
33	—	Thermostat Bypass Spring (Part of 7A100)
34	—	Valve Retainer Plug (Part of 7A100)
35	—	Cooler Limit Spring (Part of 7A100)
36	—	Cooler Limit Valve (Part of 7A100)
37	7F037	Torque Converter Clutch (TCC) Solenoid
38	—	Converter Clutch Valve (Part of 7A100)
39	—	Converter Clutch Spring (Part of 7A100)
40	—	Valve Retainer Plug (Part of 7A100)
41	—	Solenoid Regulator Valve (Part of 7A100)
42	—	Solenoid Regulator Spring (2.3L, 1 Req'd) Solenoid Regulator Outer Spring (3.0L, 4.0L) Solenoid Regulator Inner Spring (3.0L, 4.0L) (Part of 7A100)
43	—	Valve Retainer Plug (Part of 7A100)
44	—	Coast Clutch Valve (Part of 7A100)
45	—	Coast Clutch Spring (Part of 7A100)
46	—	Valve Retainer Plug (Part of 7A100)
47	—	Solenoid Regulator Valve (Part of 7A100)
48	—	Solenoid Regulator Spring (Part of 7A100)
49	6916	EPC Solenoid
50	—	Valve Plug Retainer (Part of 7A100)
51	—	Valve Retainer Plug (Part of 7A100)
52	—	1-2 Shift Valve (Part of 7A100)
53	—	1-2 Shift Valve (Part of 7A100)
54	—	1-2 Shift Spring (Part of 7A100)
55	—	Valve Retainer Plug (Part of 7A100)
56	—	2-3 Shift Spring (Part of 7A100)
57	—	2-3 Shift Valve (Part of 7A100)

(Continued)

DISASSEMBLY AND ASSEMBLY OF SUBASSEMBLIES

Item	Part Number	Description
58	—	Valve Retainer Plug (Part of 7A100)
59	—	Reverse Modulation Valve (Part of 7A100)
60	—	Reverse Modulation Spring (Part of 7A100)
61	—	Valve Retainer Plug (Part of 7A100)
62	—	Reverse Modulation Valve (Part of 7A100)
63	—	Extension Housing Lube Orifice (Part of 7A100)
64	—	Relief Valve — EPC Limit / Converter (Part of 7A100)
65	—	Relief Spring (Part of 7A100)
66	—	Check Balls (4 Req'd) (Part of 7A100)

(Continued)

Item	Part Number	Description
67	7L491	Solenoid Bracket — EPC, SS2, SS4, TCC
68	7L491	Solenoid Bracket — SS1, SS3
69	E800341-S	Solenoid Bracket Screws (2 Req'd)
70	—	Identification Plate (Part of 7A100)
71	7A100	Main Control Valve Body
72	7D100	Control Valve Body Separating Gasket
73	—	Valve Body Separating Plate (Part of 7A100)
74	E804357-S76	Separating Plate-to-Main Control Screws (3 Req'd)
75	—	EPC LImit Circuit Screen (Part of 7A100)

Disassembly

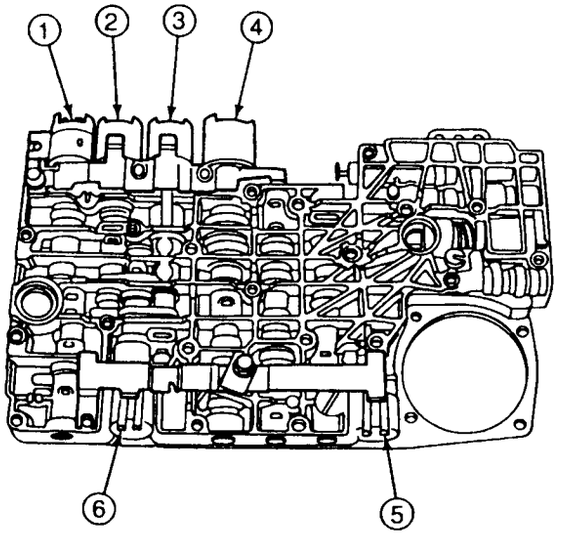

Item	Part Number	Description
1	7F037	Torque Converter Clutch Solenoid
2	7M107	Coast Clutch Solenoid
3	7M107	Shift Solenoid 2
4	6916	EPC Solenoid
5	7M107	Shift Solenoid 1

(Continued)

Item	Part Number	Description
6	7M107	Shift Solenoid 3

1. NOTE: SS3 may pop out of its bore.
   Use a 10mm socket to remove the SS1 and SS3 solenoid bracket bolts. Remove the solenoid bracket and the solenoids.

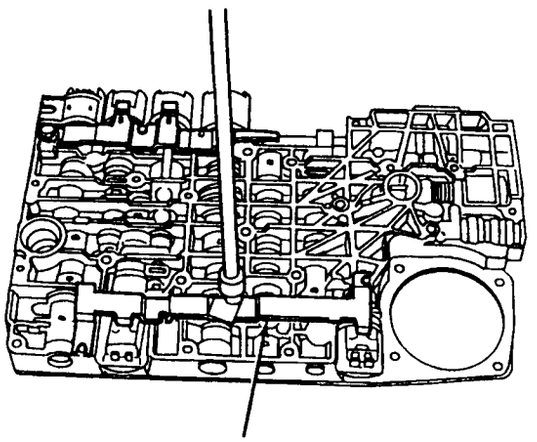

SS1 AND SS3
SOLENOID BRACKET
7L491

2. NOTE: The TCC solenoid may pop out of its bore. The converter modulator valve may come out after the TCC solenoid has been removed.

   Remove the TCC, CCS, SS2 and EPC solenoid bracket bolt.

TCC, CCS, SS2 AND EPC
SOLENOID BRACKET
7L491

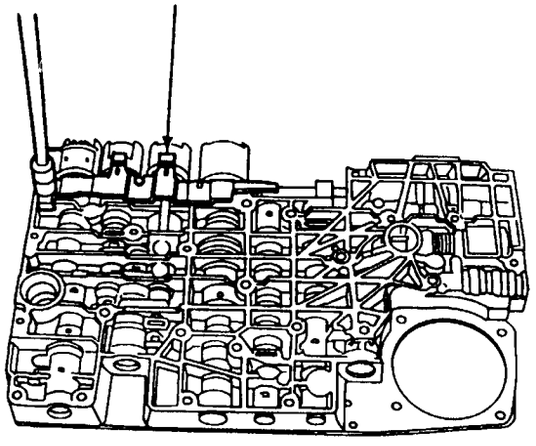

3. Remove the solenoid bracket and the solenoids.

TCC, SS4, SS2 AND EPC
SOLENOID BRACKET
7L491

4. **CAUTION: Valves may come out when rotating the main control.**

   Carefully rotate the main control assembly so that the control valve body-to-case gasket is facing up. Remove and discard the control valve body-to-case gasket.

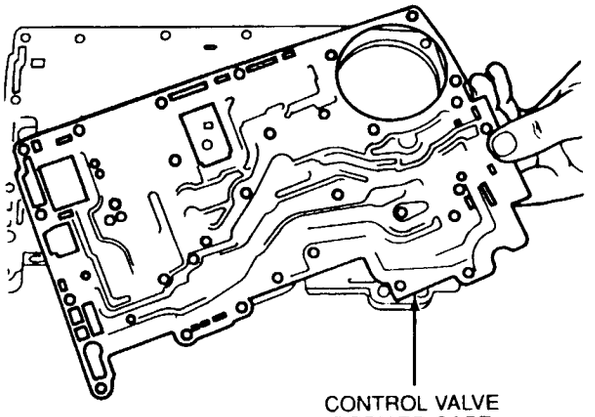

CONTROL VALVE
BODY-TO-CASE
GASKET-7C155

5. Use a T30 Torx® bit to remove the three separating plate-to-main control screws.

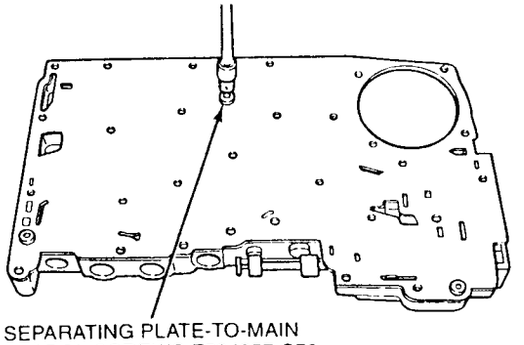

SEPARATING PLATE-TO-MAIN
CONTROL SCREWS-E804357-S76
(3 REQ'D)

6. **CAUTION: The extension housing lube orifice and relief valves may stick to the separating plate.**
   Remove the valve body separating plate.

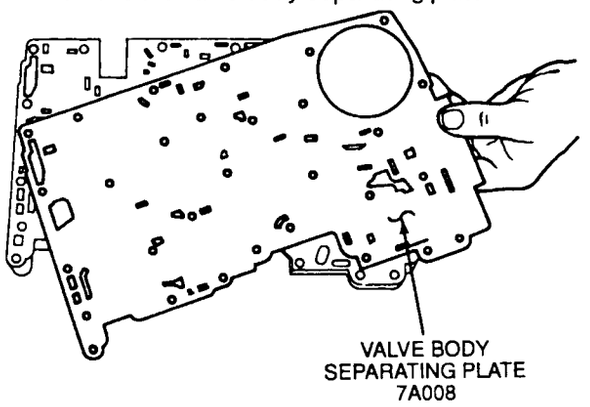

7. Remove and discard the control valve body separating gasket.

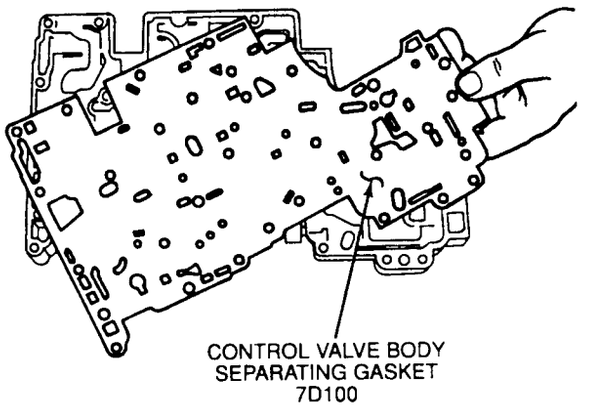

8. Carefully remove the extension housing lube orifice.

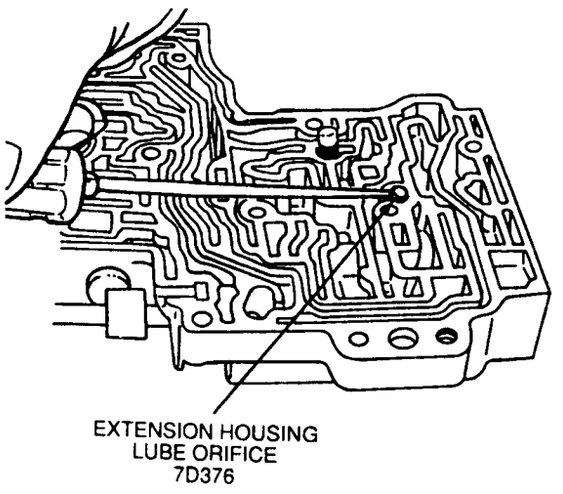

9. Remove the EPC limit relief valve and spring.

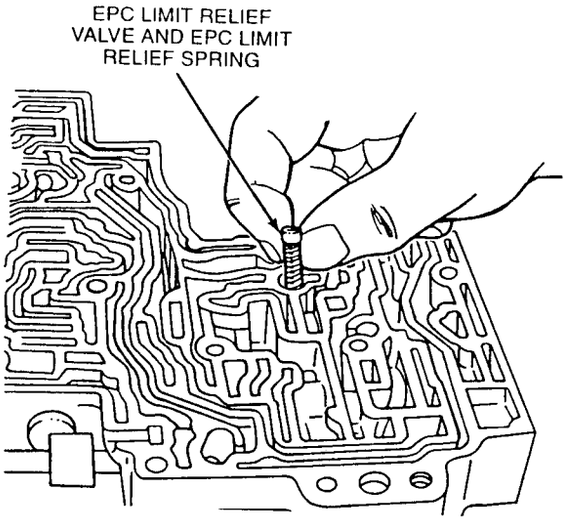

10. Remove the converter relief valve and spring.

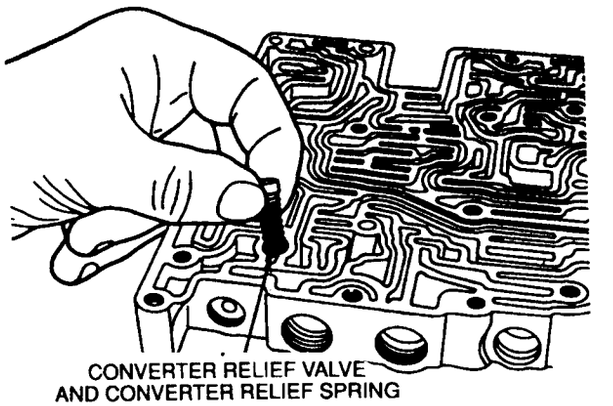

11. Remove the EPC limit circuit screen.

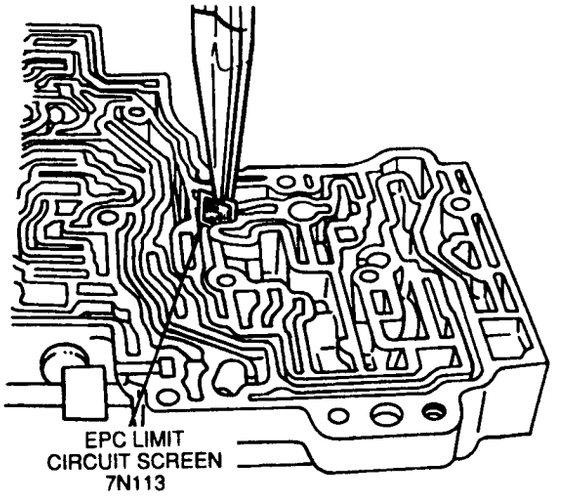

12. Remove the four check balls.

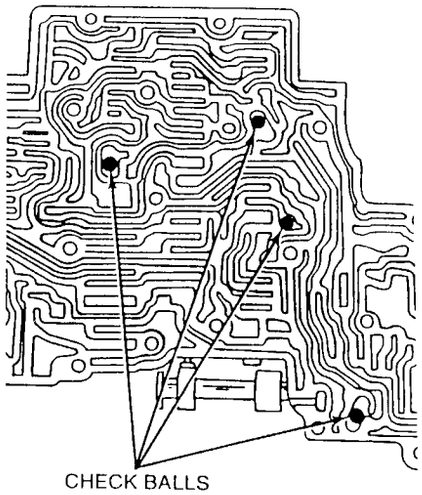

CHECK BALLS
7E195
(4 REQ'D)

13. **CAUTION: Do not lose parts when cleaning or servicing.**

    Thoroughly clean all parts in solvent and blow dry with moisture-free compressed air.

14. Inspect all valve and plug bores for scores. Check all fluid passages for obstructions. Inspect the check valve for free movement. Inspect all mating surfaces for burrs or distortion. Inspect all plugs and valves for burrs or scores. Replace the control valve body if the bores are scored or if the valves are scored beyond the point of being able to be cleaned.
15. Inspect all springs for distortion. Check all valves and plugs for free movement in their respective bores. Valves and plugs, when dry, must fall from their own weight in their respective bores.
16. Roll the manual valve on a flat surface to check for a bent condition.
17. Clean and inspect the EPC limit circuit screen.

EPC LIMIT
CIRCUIT SCREEN
7N113

18. Clean and inspect the EPC solenoid screens.

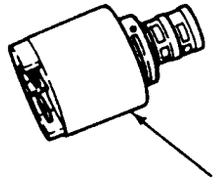

EPC SOLENOID
6916

19. Remove and replace all shift and coast clutch solenoid O-rings.

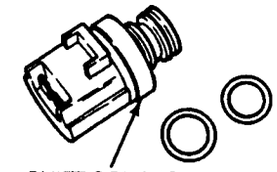

SHIFT SOLENOID
7M107
(4 REQ'D)

20. Clean and inspect the torque converter clutch (TCC) solenoid.

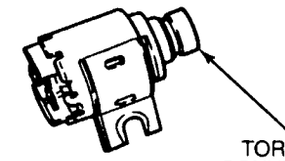

TORQUE
CONVERTER
CLUTCH (TCC)
SOLENOID-7F037

Assembly

1. **CAUTION: Make sure that the screen is properly located.**

   Install the EPC limit circuit screen. Push down on the EPC limit circuit screen to make sure it is fully seated.

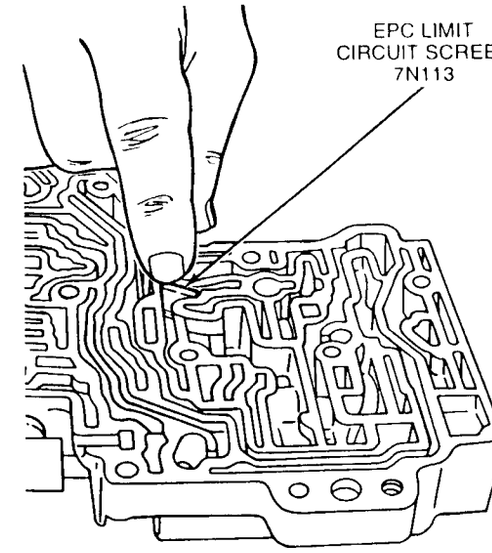

2. Install the four check balls in proper locations as shown.

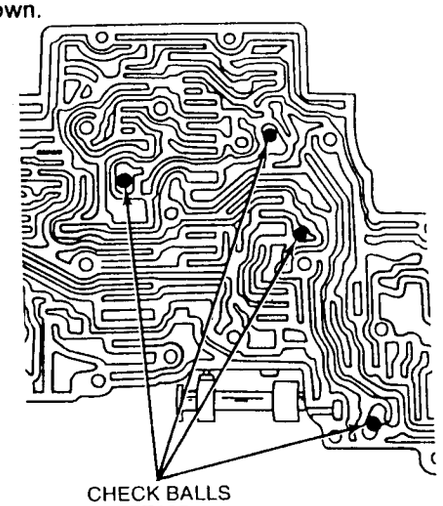

CHECK BALLS
7E195
(4 REQ'D)

3. NOTE: The springs and valves are interchangeable.

Install the converter relief valve and spring.

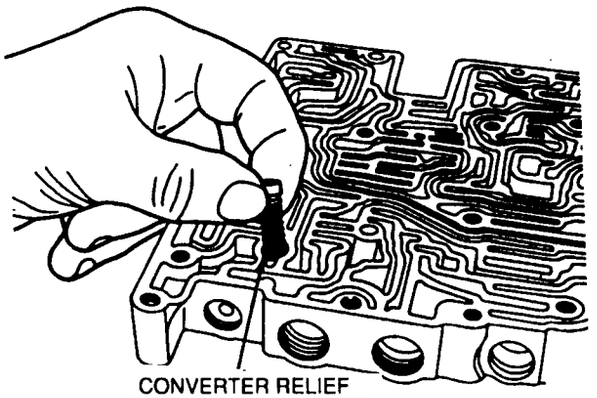

CONVERTER RELIEF
VALVE AND CONVERTER
RELIEF SPRING

4. NOTE: The springs and valves are interchangeable.

Install the EPC limit relief valve and spring.

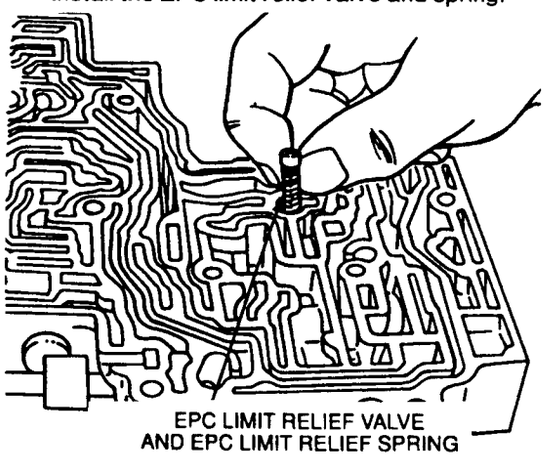

EPC LIMIT RELIEF VALVE
AND EPC LIMIT RELIEF SPRING

5. Install the extension housing lube orifice.

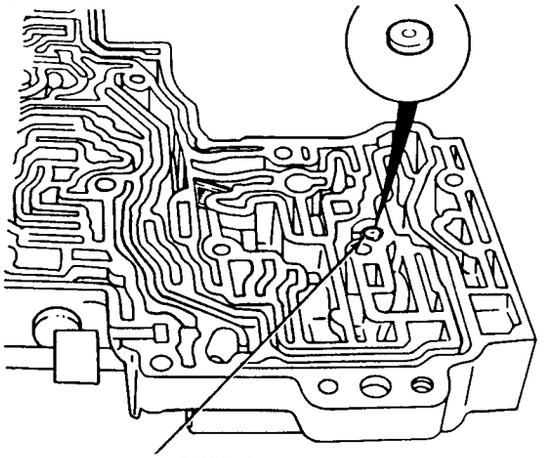

EXTENSION HOUSING
LUBE ORIFICE
7D376

6. Install and align the control valve body separating gasket.

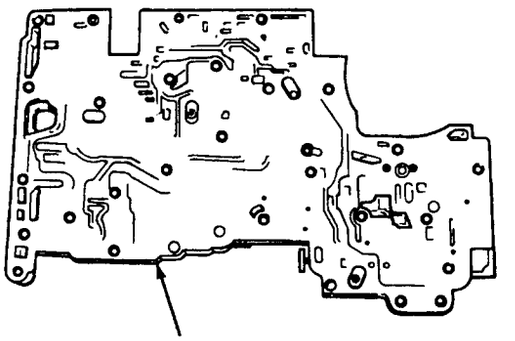

CONTROL VALVE BODY
SEPARATING GASKET
7D100

7. Install the valve body separating plate. Install the separating plate-to-main control screws finger-tight.

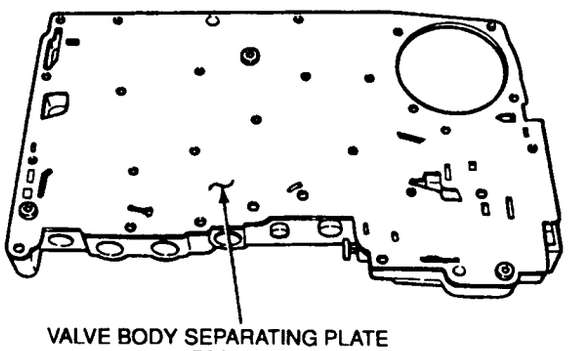

VALVE BODY SEPARATING PLATE
7A008

8. Install the alignment pins in the locations shown.

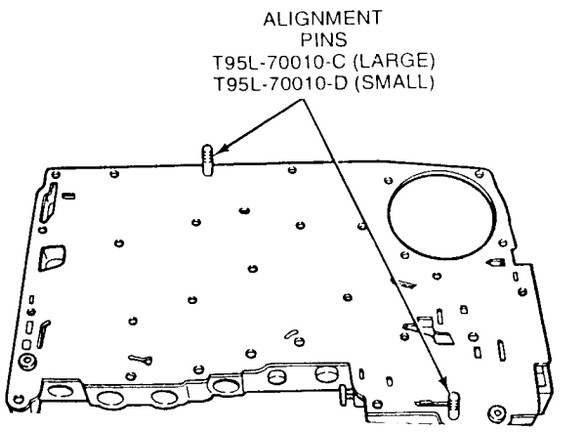

9. Tighten the separating plate-to-main control screws to 8-11 N·m (71-97 lb-in).

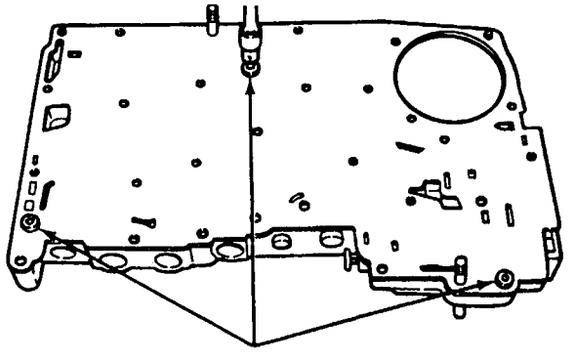

10. NOTE: Apply petroleum jelly on the separator surface to hold the gasket in place.

Install the control valve body-to-case gasket.

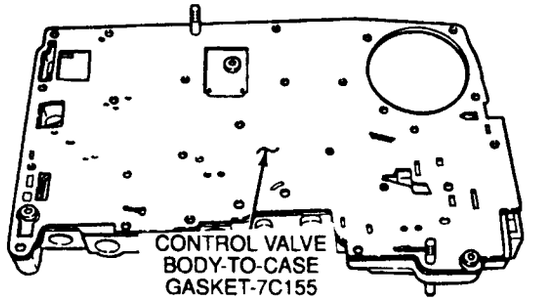

11. Remove the alignment pins.
12. Rotate the main control so that the separator plate is facing down.
13. **CAUTION: The shift and coast clutch solenoid terminals must face upward.**

NOTE: The shift and CCS solenoids are interchangeable.

NOTE: If the torque converter clutch valve came out, use caution when installing the TCC solenoid.

Install the solenoids.

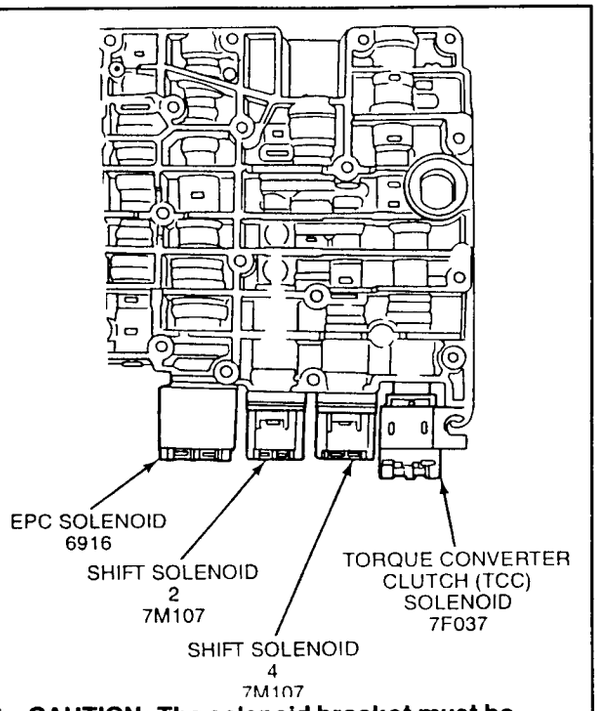

14. **CAUTION: The solenoid bracket must be installed in the TCC and EPC solenoid grooves, shift solenoid pockets and the No. 204 plug.**

Install the solenoid bracket. Tighten the solenoid bracket screw to 8-11 N·m (71-97 lb-in).

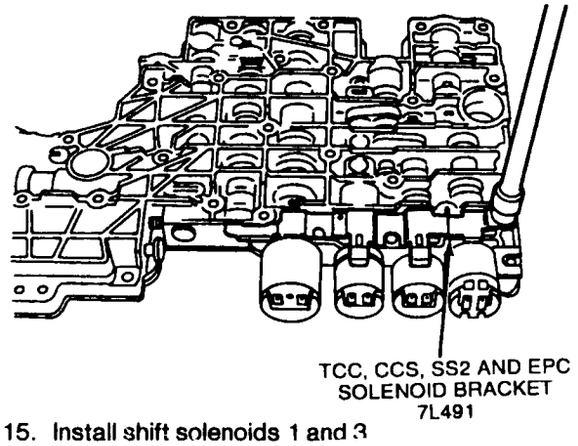

15. Install shift solenoids 1 and 3

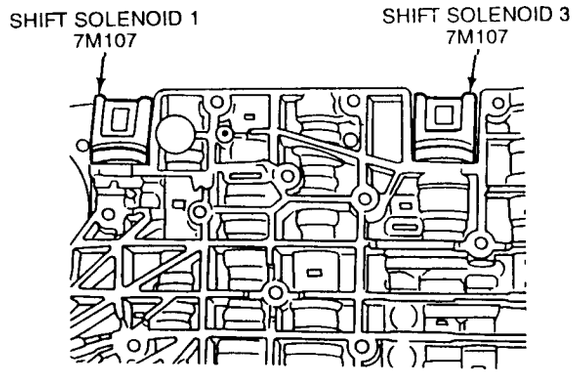

16. Install the solenoid bracket. Tighten the bracket screw to 8-11 N·m (71-97 lb-in).

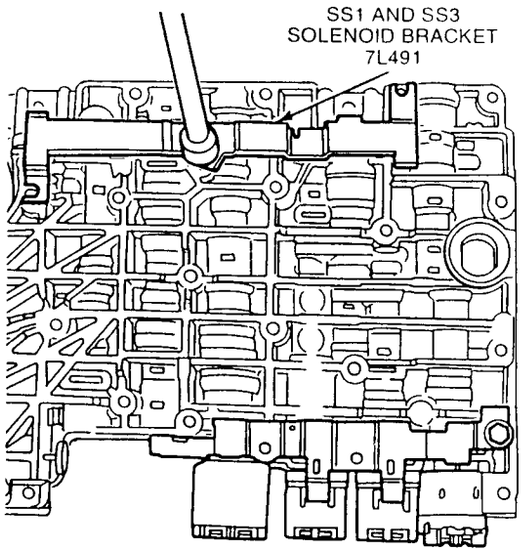

Converter Housing and Pump

SPECIAL SERVICE TOOL(S) REQUIRED

Description	Tool Number
Seal Replacer	T87L-77248-AH
Front Pump Seal Staking Tool	T87L-77248-BH
Front Pump Seal Staking Tool Adapter	T95L-77248-A

Converter Housing and Pump

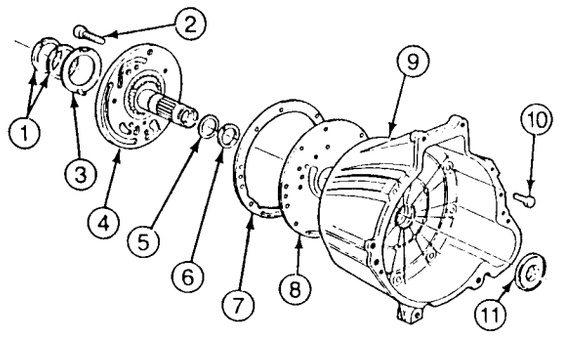

Item	Part Number	Description
1	7D025	Overdrive Brake Drum Seal Rings (2 Req'd)
2	E804375-S72	Front Pump-to-Converter Housing Screws (6 Req'd)
3	7D014	No. 1 Front Pump Thrust Washer
4	7A103	Front Pump Support and Gear
5	W701431-S300	Front Fluid Pump Shaft-to-Inner Gear O-Ring
6	7L323	Front Pump Support Seal Ring
7	7A136	Front Fluid Pump Gasket
8	7B472	Fluid Pump Adapter Plate
9	7976	Converter Housing
10	E804595-S200	Converter Housing-to-Case Screws (8 Req'd)
11	7A248	Converter Hub-to-Converter Housing Seal

Disassembly

1. Remove the front fluid pump gasket.

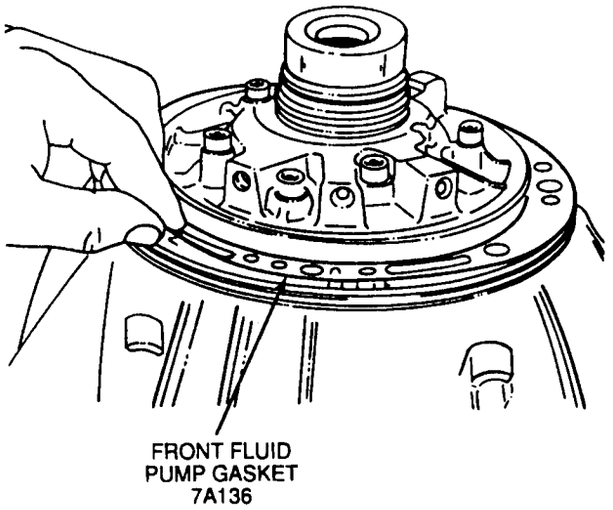

2. Remove the front fluid pump square cut seal ring.

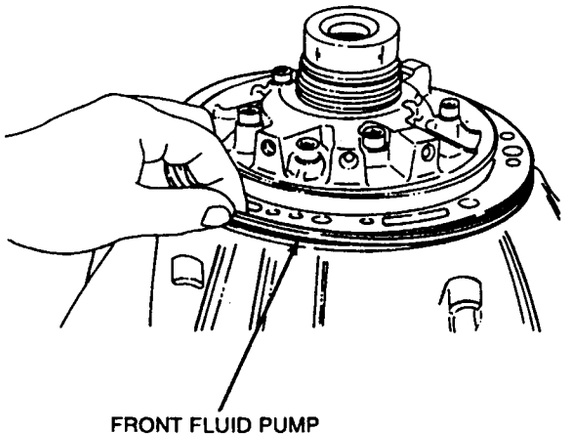

FRONT FLUID PUMP
SQUARE CUT
SEAL RING
7A248

3. Remove the two overdrive brake drum seal rings. Remove the front pump support seal ring.

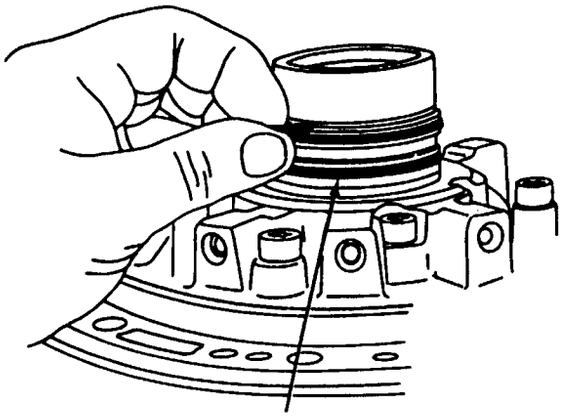

OVERDRIVE BRAKE DRUM
SEAL RINGS
(2 REQ'D)
7D025

4. Use a Torx® 40 wrench to remove the six M8 x 35mm front pump-to-converter housing screws. Remove the front pump support and gear and the front pump adapter plate.

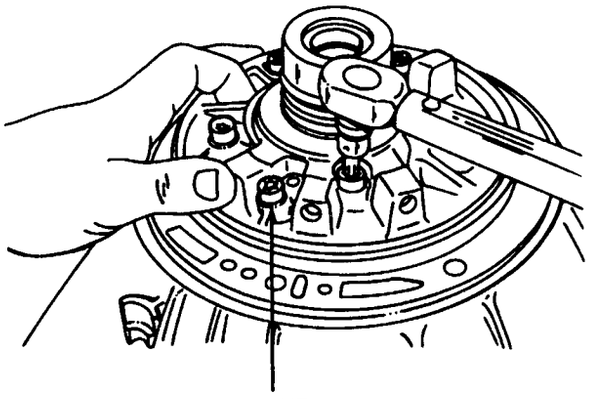

FRONT
PUMP-TO-CONVERTER
HOUSING SCREWS
E804375-S72
(6 REQ'D)

5. NOTE: The pump gears are part of the pump assembly and are not serviced separately. A rough casting on the pump surface crescent is not a flaw. Refer to TSB-91-19A Article 87-2-16 Figure 25.

   Remove the pump gears.

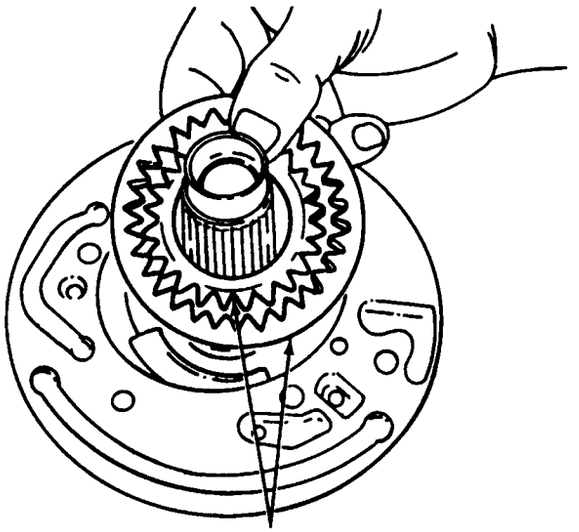

PUMP GEARS
(PART OF 7A103)

6. Remove the drive gear O-ring.

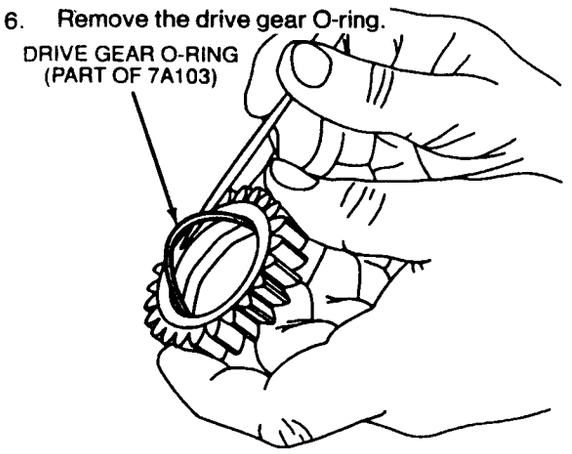

7. Inspect the pump gears for scoring and cracks. Replace pump assembly if damaged.
8. NOTE: Front fluid pump to converter housing bushing is not serviced separately. If service is required, the converter housing assembly must be replaced.

   Inspect the front fluid pump to converter housing bushing and converter hub to converter housing seal. Replace converter housing assembly if necessary.

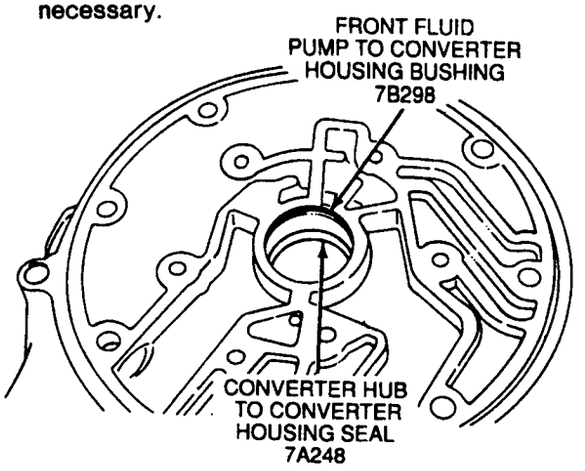

9. Using a small chisel, carefully remove the metal displaced by prior staking. This will allow for the removal of the converter hub-to-converter housing seal from the converter housing.

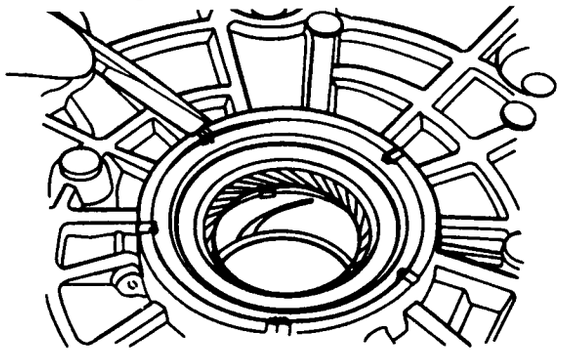

10. Remove the converter hub-to-converter housing seal using Seal Remover TOOL-1175-AC or equivalent from the converter housing as shown.

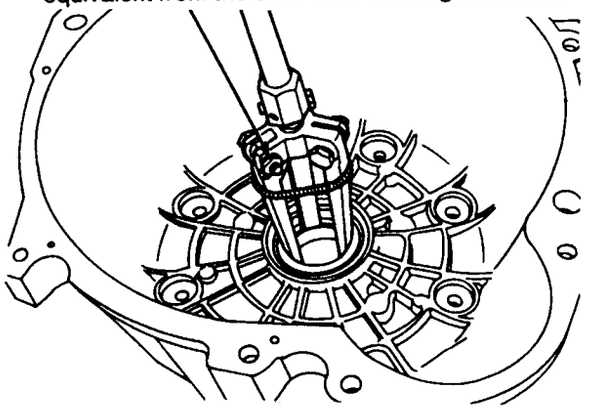

11. Clean and inspect the front and rear input shaft support bushings. If bushings are worn, scored or damaged, replace the front pump support and gear assembly. Inspect the pump gear pockets for scoring and wear. Replace if necessary.

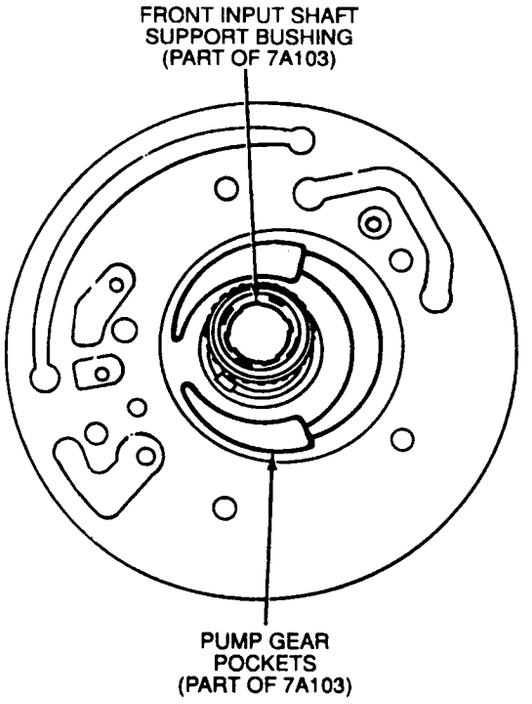

12. Inspect the mating surfaces of the pump body and case for burrs.

    Inspect the drive and driven gear bearing surface for scores and check the gear teeth for burrs.

    Inspect the front pump seal for cuts or nicks. Inspect the pump bushing for scoring.

    Check the fluid passages for obstruction.

    If any parts are found to be damaged or worn, replace the pump as an assembly. Minor burrs and scores may be removed with a crocus cloth.

Assembly

1. **CAUTION: Place the converter housing on a block of wood or equivalent to protect the converter hydraulic passages on the back side.**

   NOTE: Check and make sure that the garter spring has not popped off of the converter hub-to-converter housing seal.

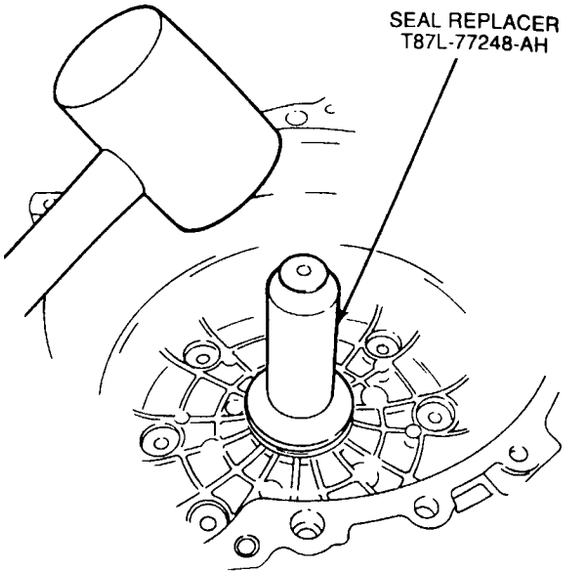

2. **CAUTION: Place the converter housing on a block of wood or equivalent to protect the converter hydraulic passages on the back side.**

   NOTE: Check and make sure that the garter spring has not popped off of the converter hub-to-converter housing seal.

   Install Front Pump Seal Staking Tool Adapter T95L-77248-A into the converter hub-to-converter housing seal as shown.

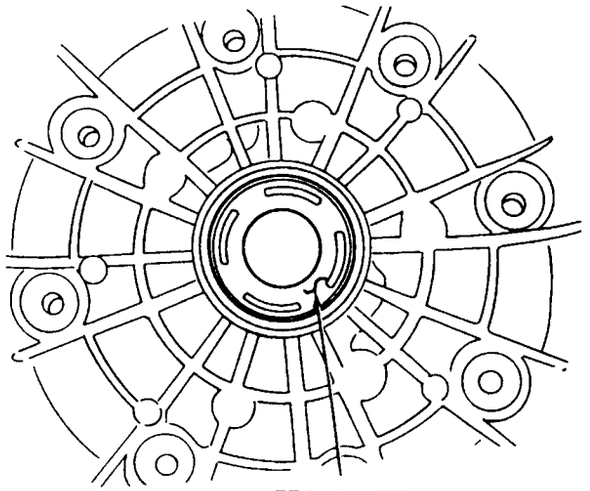

FRONT PUMP
SEAL STAKING
TOOL
T95L-77248-A

3. NOTE: Stake between the old stake marks.

   Stake a new converter hub-to-converter housing seal in place with Front Pump Seal Staking Tool T87L-77248-A.

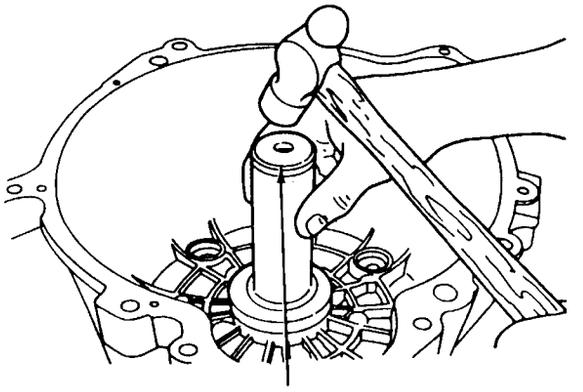

FRONT PUMP
SEAL STAKING
TOOL
T87L-77248-BN

4. Carefully remove Front Pump Seal Staking Tool Adapter T95L-77248-A.

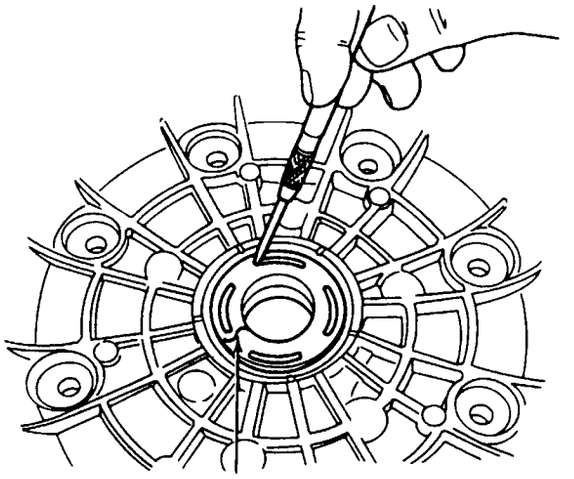

FRONT PUMP
SEAL STAKING
TOOL ADAPTER
T95L-77248-A

Coast Clutch

SPECIAL SERVICE TOOL(S) REQUIRED

Description	Tool Number
Clutch Spring Compressor	T65L-77515-A
Coast Clutch Outer Seal Sizing Tool	T95L-70010-D

Overdrive Brake and Coast Clutch Drum Assembly

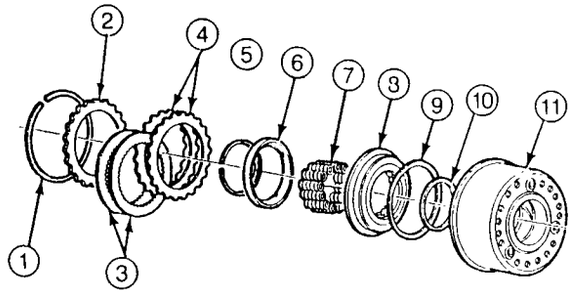

Item	Part Number	Description
1	E860126-S	Retaining Ring
2	7B066	Coast Clutch Pressure Plate
3	7B164	Coast Clutch Internal Plate — Friction
4	7B442	Coast Clutch External Plate — Steel
5	E86125-S	Retaining Ring
6	7D041	Coast Clutch Piston Spring Retainer
7	7C151	Coast Clutch Piston Springs
8	7A258	Coast Clutch Piston
9	7A548	Coast Clutch Piston Outer Seal Ring
10	7D404	Coast Clutch Piston Inner Seal Ring
11	7L669	Overdrive Brake and Coast Clutch Drum

Disassembly

1. **CAUTION: This is a select fit ring. See assembly procedure if the ring or clutch plate pack is replaced.**

   Remove the retaining ring and coast clutch pressure plate from the overdrive brake and coast clutch drum.

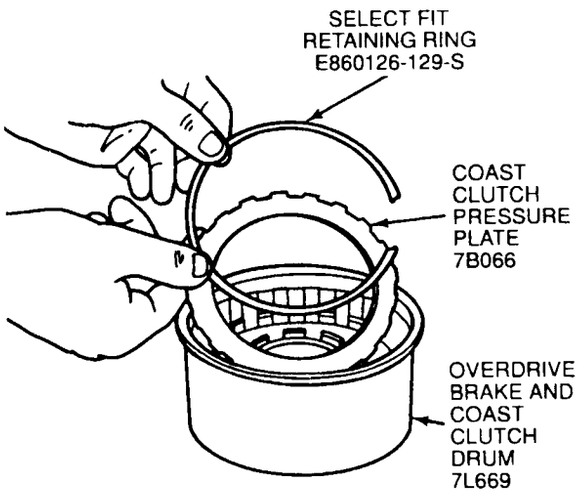

2. **CAUTION: If new clutch plates are being used, they should be soaked in clean transmission fluid for at least 30 minutes before assembly.**

   Remove the coast clutch pack. Inspect for wear, damage or overheating. Replace as necessary.

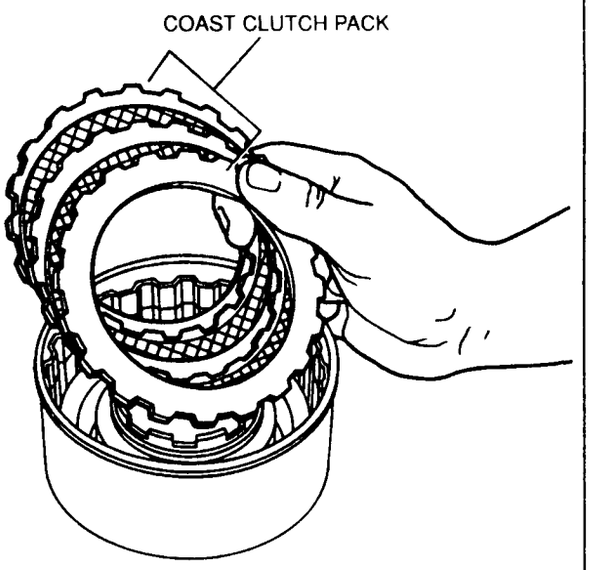

3. **WARNING: USE CAUTION WHEN RELEASING TOOL PRESSURE ON THE REAR CLUTCH PISTON SPRINGS.**

   CAUTION: Do not fully compress the clutch spring compressor or damage to the spring retainer may occur.

   Compress the clutch piston springs with Clutch Spring Compressor T65L-77515-A. Remove the retaining ring.

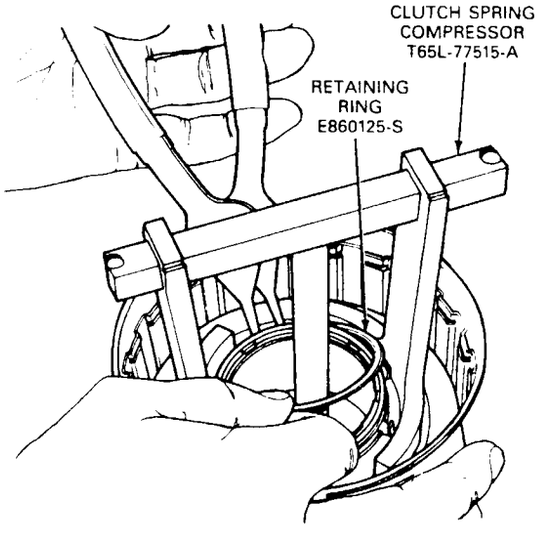

4. Remove the clutch piston spring retainer and 20 clutch piston springs.

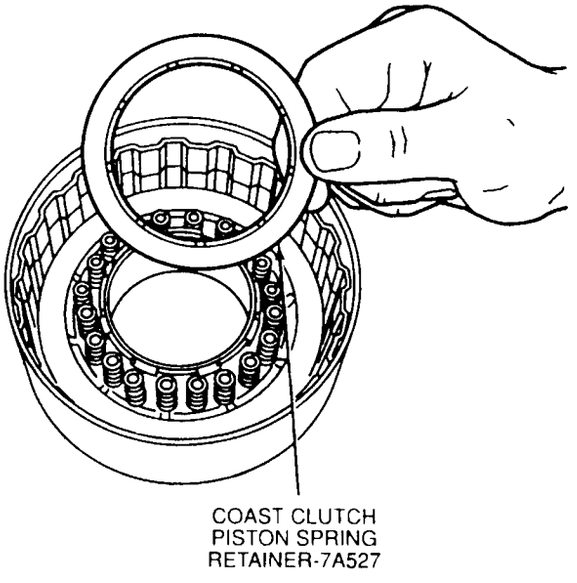

5. **WARNING: AIR PRESSURE MUST NOT EXCEED 138 KPA (20 PSI). WEAR SAFETY GLASSES WHEN USING COMPRESSED AIR, AND MAKE SURE DRUM IS FACING DOWN AS SHOWN.**

   Remove the coast clutch piston by using air pressure. Apply air pressure to the one hole on the inside diameter of the overdrive brake and coast clutch drum while blocking the other hole with a finger.

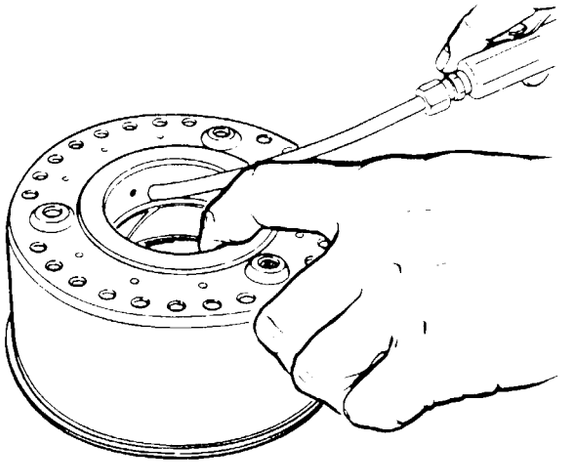

6. Remove the inner and outer coast clutch piston seals. Clean and replace as necessary.

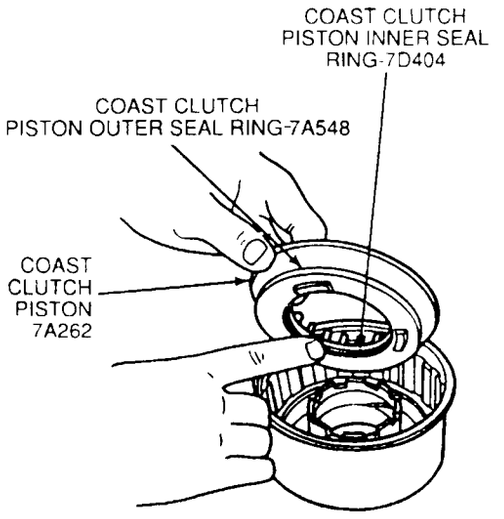

Assembly

1. **CAUTION: The lip seals must be positioned as shown. Care must be taken to prevent roll over of the lip seal.**

   Install new inner and outer coast clutch piston seals on the coast clutch piston.

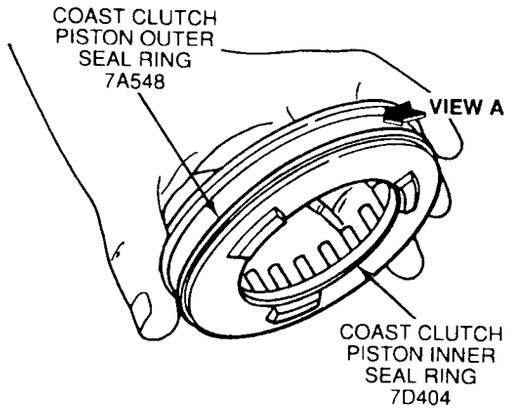

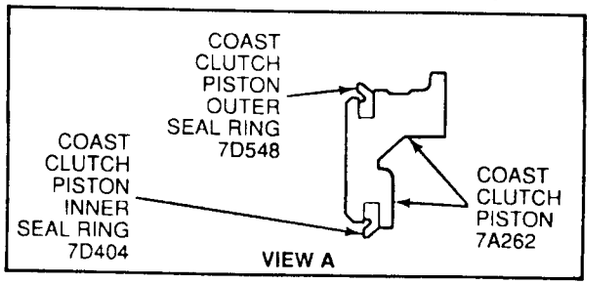

2. **CAUTION: Lubricate the inner and outer coast clutch piston seals.**

   Carefully press the coast clutch piston into coast Clutch Outer Seal Sizing Tool T95L-70010-D.

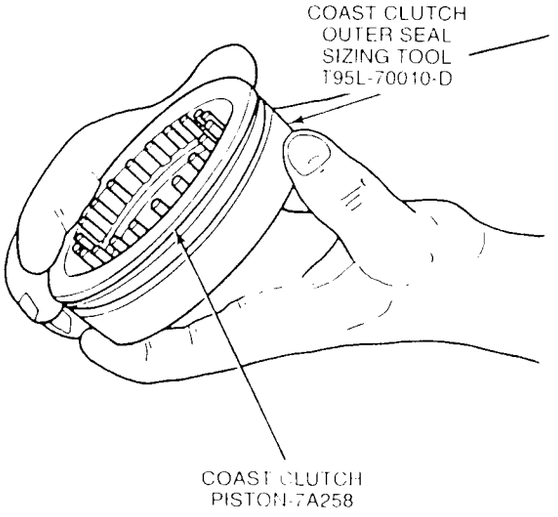

3. Inspect the drum band surface, bushing and thrust surfaces for scores. Minor scores may be removed with a crocus cloth. Badly scored parts must be replaced.
4. Inspect the clutch piston bore and the piston and the piston inner and outer bearing surfaces for scores.
5. Check the fluid passages for obstructions. All fluid passages must be clean and free of obstructions.
6. Inspect the clutch plates for wear, scoring and fit on the clutch hub serrations. Replace all plates that are badly scored, worn or do not fit freely in the hub serrations.
7. Inspect the clutch pressure plate for scores on the clutch plate surface. Check the clutch release spring(s) for distortion.
8. Make sure the check ball is free and clear of debris prior to installing piston. The check ball is located in the overdrive brake and coast clutch drum.

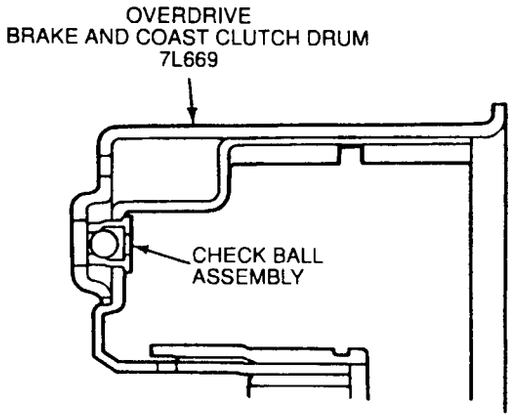

9. Carefully remove the coast clutch piston from Coast Clutch Outer Seal Sizing Tool T95L-70010-D.

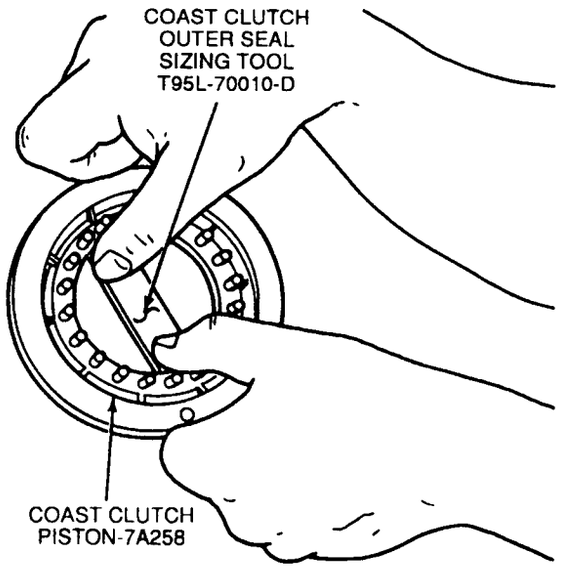

10. **CAUTION: Care must be taken to prevent damage to the seals during installation.**

    Carefully install the coast clutch piston into the overdrive brake and coast clutch drum.

11. Install the 20 coast clutch piston springs and coast clutch piston spring retainer onto the coast clutch piston.

12. **CAUTION: Do not fully compress the clutch spring compressor or damage to the coast clutch piston spring retainer may occur.**

    Compress the coast clutch piston springs with Clutch Spring Compressor T65L-77515-A. Install the retaining ring. Release the load on the springs applied by the tool. Remove the tool.

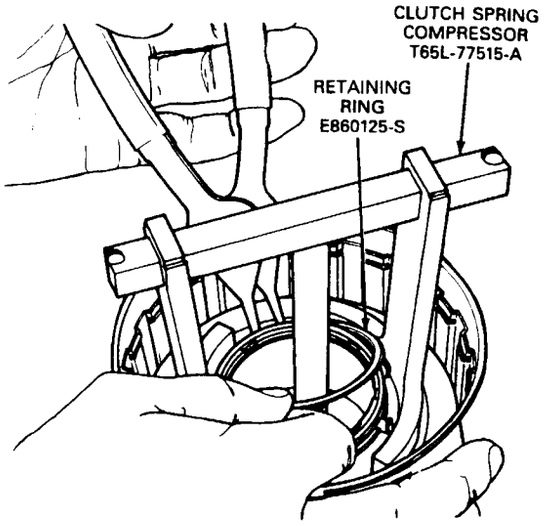

D5543-C

13. **CAUTION: If new clutch plates are being used, they should be soaked in clean transmission fluid for at least 30 minutes before assembly.**

    Install the two steel clutch plates and two friction clutch plates in alternating order, starting with the steel plates first.

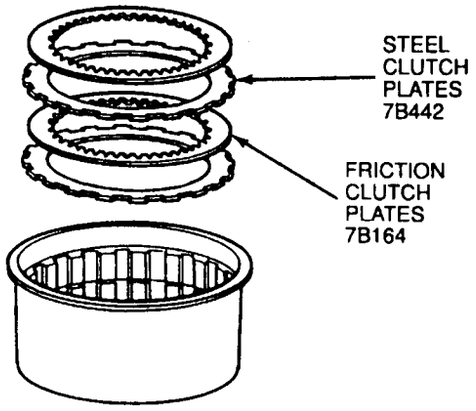

14. **CAUTION: The retaining ring is select fit.**

    Install the coast clutch pressure plate. Install the retaining ring on top of the clutch pressure plate.

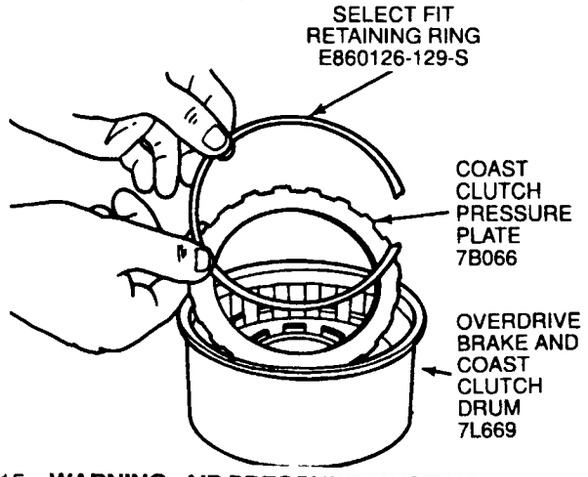

15. **WARNING: AIR PRESSURE MUST NOT EXCEED 138 KPA (20 PSI). WEAR SAFETY GLASSES WHEN USING COMPRESSED AIR. MAKE SURE DRUM IS FACING DOWN AS SHOWN.**

    NOTE: The coast clutch piston must apply with air pressure and release when the air is removed.

    Air check the assembly. Apply air to the one hole on the inside diameter of the overdrive brake and coast clutch drum while blocking the other hole with a finger.

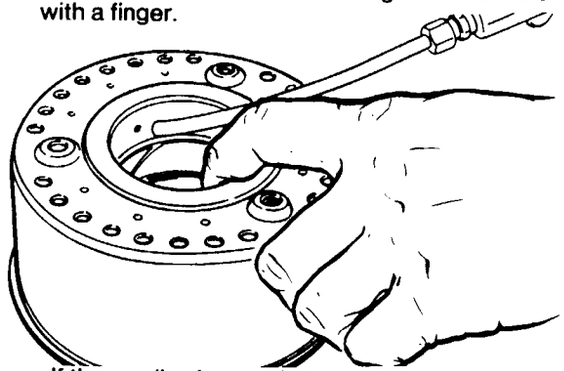

    If the reading is not within specification, remove the retaining ring and check the thickness. Replace it with a ring that will correct free play. Verify with a feeler gauge.

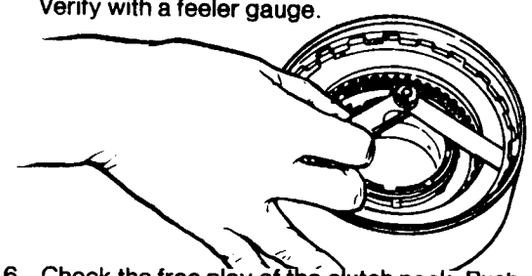

16. Check the free play of the clutch pack. Push down on the clutch pack. Use a feeler gauge to check the gap between the retaining ring and the pressure plate. Specification: 1.3 to 2.0mm (.051 to .079 inch).

COAST CLUTCH

Part Number	Thickness		Diameter	
	mm	Inches	mm	Inches
E860126-S	1.37	.0539	130.1	5.122
E860127-S	1.73	.0681	130.1	5.122
E860128-S	2.08	.0819	130.1	5.122
E860129-S	2.44	.0961	130.1	5.122

Intermediate Brake and Direct Clutch Drum Assembly

SPECIAL SERVICE TOOL(S) REQUIRED

Description	Tool Number
Clutch Spring Compressor	T85L-77515-A
Direct Clutch Outer Seal Sizing Tool	T95L-70010-E

Intermediate Brake and Direct Clutch Drum Assembly

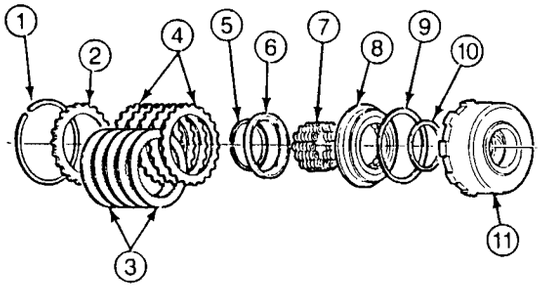

Item	Part Number	Description
1	E860126-S	Retaining Ring
2	7B066	Direct Clutch Pressure Plate
3	7B164	Direct Clutch Internal Plate — Friction
4	7B442	Direct Clutch External Plate — Steel
5	E860125-S	Retaining Ring
6	7D041	Direct Clutch Piston Spring Retainer
7	7C151	Direct Clutch Piston Springs (20 Req'd)
8	7A258	Direct Clutch Piston
9	7A548	Direct Clutch Piston Outer Seal Ring
10	7D404	Direct Clutch Piston Inner Seal Ring
11	7D044	Intermediate Brake and Direct Clutch Drum

Disassembly

1. **CAUTION: The retaining ring is a select fit ring. See assembly procedure if the ring or clutch pack is replaced.**

   Remove the retaining ring and direct clutch pressure plate.

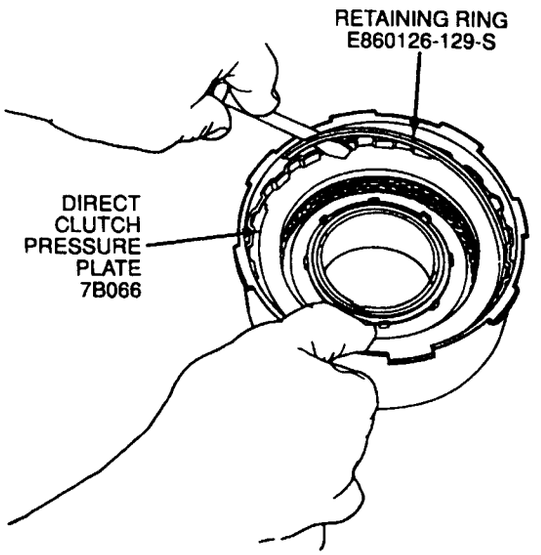

2. **CAUTION: If new clutch plates are being used, they should be soaked in clean transmission fluid for at least 30 minutes before assembly.**

   Remove the direct clutch pack. Inspect for wear, damage or overheating. Replace the steel or friction plates as necessary.

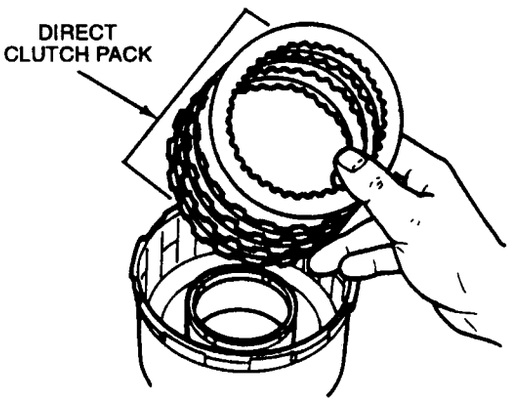

3. **WARNING: AFTER REMOVING THE RETAINING RING, USE CARE WHEN RELEASING THE PRESSURE ON THE SPRINGS.**

   CAUTION: Do not fully compress the clutch spring compressor or damage to the spring retainer may occur.

   Compress the direct clutch piston springs with Clutch Spring Compressor T65L-77515-A. Remove the retaining ring. Remove the tool.

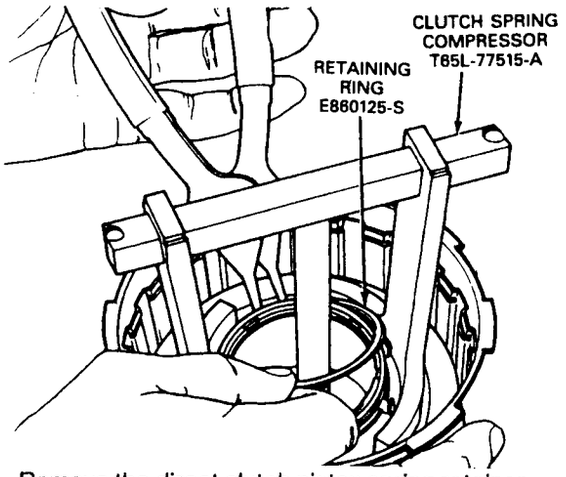

4. Remove the direct clutch piston spring retainer and 20 direct clutch piston springs.

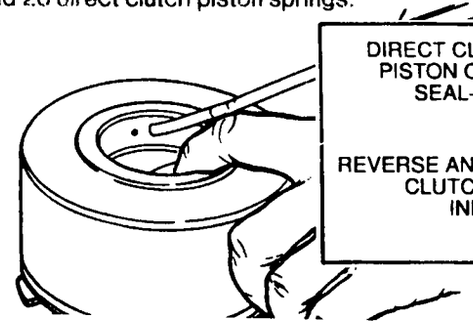

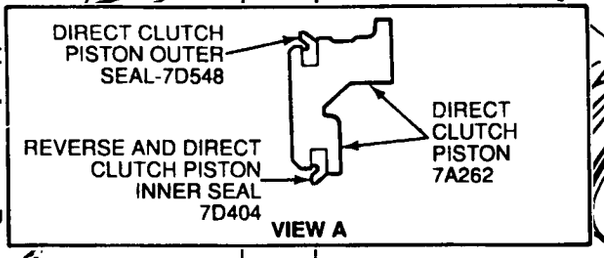

5. **WARNING: DO NOT EXCEED 138 KPA (20 PSI). WEAR SAFETY GLASSES WHEN USING COMPRESSED AIR. MAKE SURE DRUM IS FACING DOWN AS SHOWN.**

   Remove the direct clutch piston using compressed air. Apply air pressure to the one hole on the inside diameter of the intermediate brake and direct clutch drum while blocking the other hole with a finger.

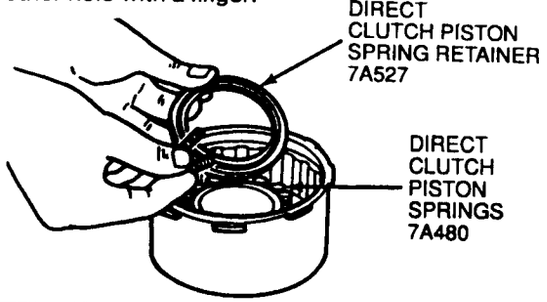

6. Remove the inner and outer direct clutch piston seals. Clean and replace as necessary.

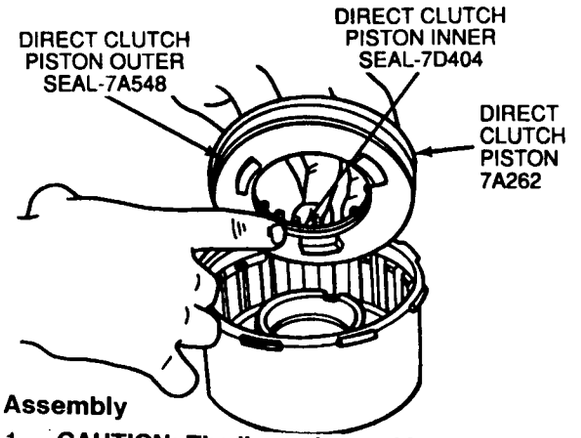

Assembly

1. **CAUTION: The lip seals must be positioned as shown. Care must be taken to prevent rollover of the lip seal.**

   Install new inner and outer direct clutch piston seals on the direct clutch piston.

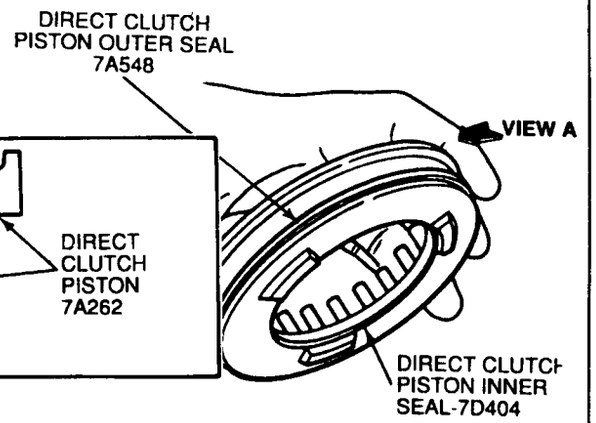

2. **CAUTION: Lubricate the inner and outer direct clutch piston seals.**

   Carefully press the direct clutch piston into direct Clutch Outer Seal Sizing Tool T95L-70010-E.

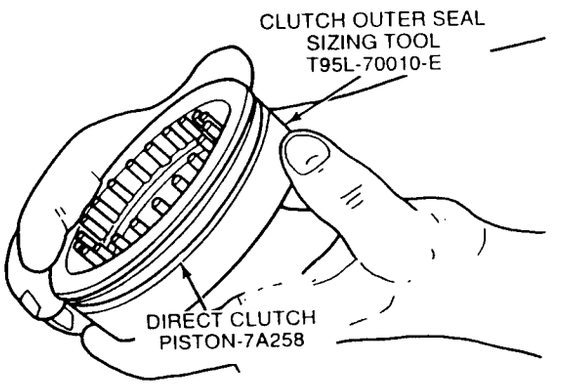

3. Inspect the drum band surface, bushing and thrust surfaces for scores. Minor scores may be removed with a crocus cloth. Badly scored parts must be replaced.
4. Inspect the clutch piston bore and the piston and the piston inner and outer bearing surfaces for scores.
5. Check the fluid passages for obstructions. All fluid passages must be clean and free of obstructions.
6. Inspect the clutch plates for wear, scoring and fit on the clutch hub serrations. Replace all plates that are badly scored, worn or do not fit freely in the hub serrations.
7. Inspect the direct clutch pressure plate for scores on the clutch plate bearing surface. Check the clutch release spring for distortion.
8. Make sure the check ball is free and clear of debris prior to installing piston. The check ball is located in the intermediate brake and direct clutch drum.

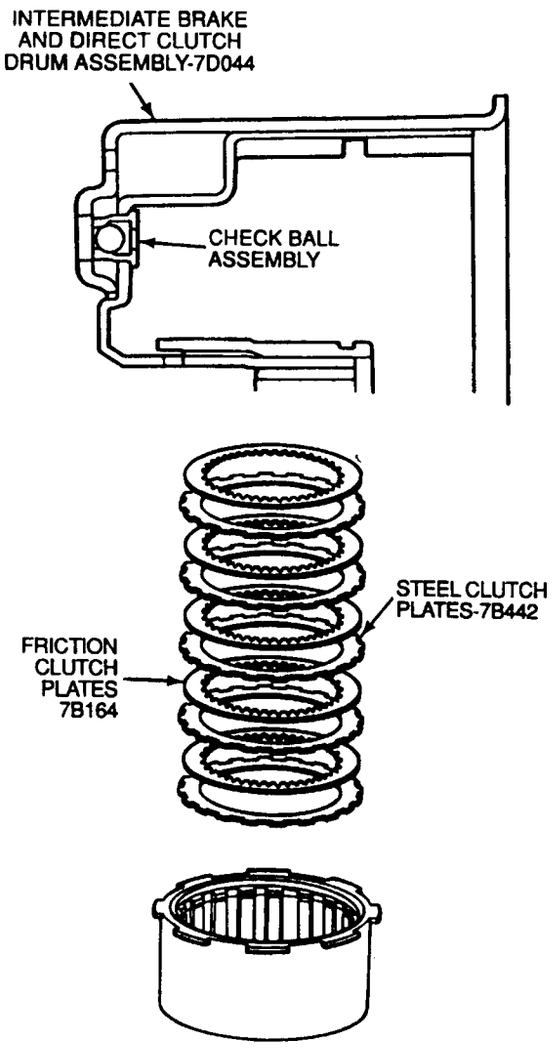

9. Carefully remove the direct clutch piston from direct Clutch Outer Seal Sizing Tool T95L-70010-E.

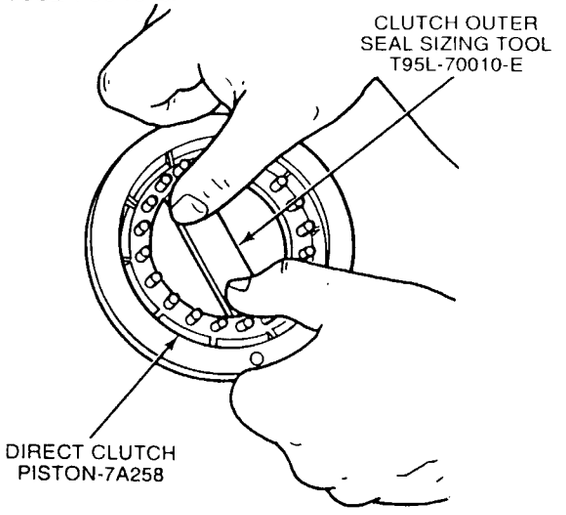

10. **CAUTION: Care must be taken to prevent damage to the seals during installation.**
Carefully install the clutch piston into the intermediate brake and direct clutch drum.

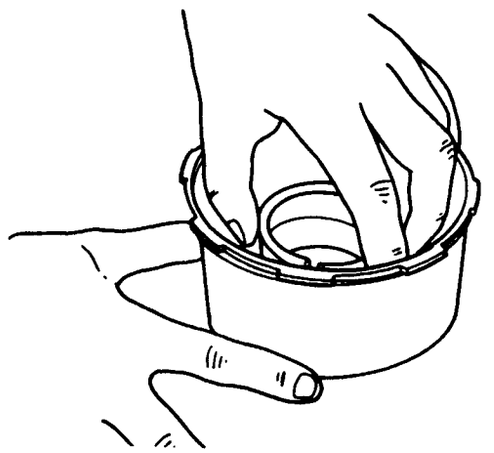

11. **CAUTION: The number of plates is model dependent. See specifications at the end of this section. If new plates are being used, they should be soaked in clean transmission fluid for at least 30 minutes before assembly.**
Install the steel clutch plates and friction clutch plates in alternating order, starting with a steel plate and finishing with a friction plate.

Engine	Steel	Friction
2.3L	4	4
3.0L	4	4
4.0L	5	5

12. **CAUTION: The retaining ring is a select fit.**
Install the direct clutch pressure plate on the clutch stack.

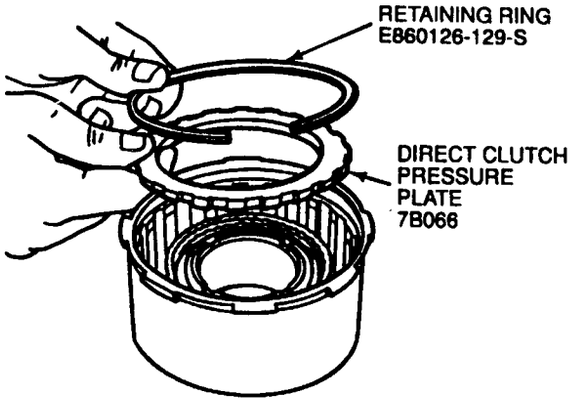

13. **WARNING: AIR PRESSURE MUST NOT EXCEED 138 KPA (20 PSI). WEAR SAFETY GLASSES WHEN USING COMPRESSED AIR. MAKE SURE THE DRUM IS FACING DOWN AS SHOWN.**
NOTE: The direct clutch piston must apply with air pressure and release when the air is removed.
Air check the assembly. Apply air to the hole on the inside diameter of the intermediate brake and direct clutch drum while blocking the other hole with a finger.

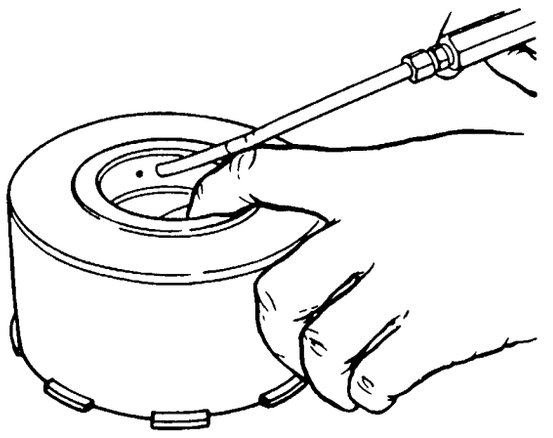

14. Install the retaining ring on top of the direct clutch pressure plate. Push down on the clutch pack. Use a feeler gauge to check the gap between the retaining ring and the clutch pressure plate. Specification: 1.3 to 2.0mm (.051 to .070 inch).
If the reading is not within specification, remove the retaining ring and check thickness. Replace with a ring that will correct free play, and verify with a feeler gauge.

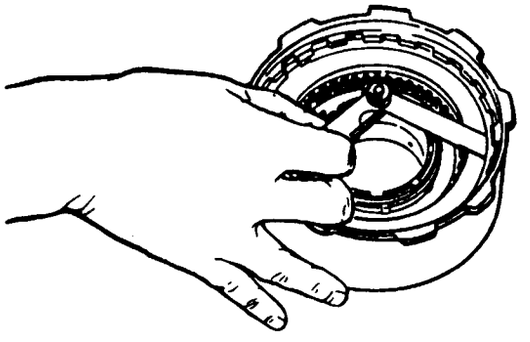

DIRECT CLUTCH

Part Number	Thickness		Diameter	
	mm	Inches	mm	Inches
E860126-S	1.37	.0539	130.1	5.122
E860127-S	1.73	.0681	130.1	5.122
E860128-S	2.08	.0819	130.1	5.122
E860129-S	2.44	.0961	130.1	5.122

Forward Clutch

SPECIAL SERVICE TOOL(S) REQUIRED

Description	Tool Number
Clutch Spring Compressor	T65L-77515-A
Lip Seal Protector	T74P-77548-B

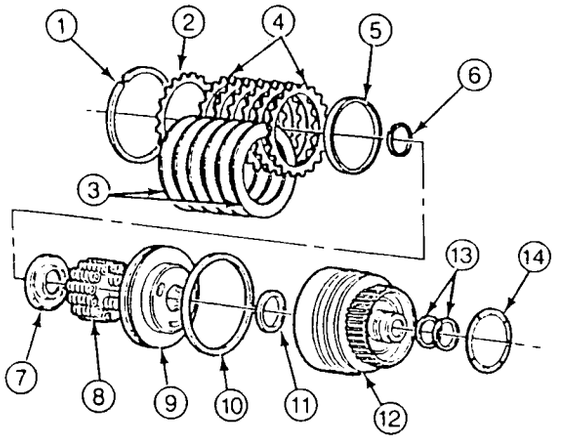

Item	Part Number	Description
1	E860115-S	Retaining Ring
2	7B066	Forward Clutch Pressure Plate
3	7B164	Forward Clutch Internal Plate — Friction
4	7B442	Forward Clutch External Plate — Steel
5	7E457	Forward Clutch Cushion Spring
6	E860109-S	Retaining Ring
7	7D047	Forward Clutch Piston Spring Retainer
8	7C151	Forward Clutch Piston Springs (15 Req'd)
9	7A262	Forward Clutch Piston
10	7A548	Forward Clutch Piston Outer Seal Ring
11	7A548	Forward Clutch Piston Inner Seal Ring
12	7D424	Forward Clutch Cylinder Assembly
13	7D019	Forward Clutch Cylinder Seal Rings
14	7C096	No. 5 Forward Clutch Cylinder Thrust Washer

Disassembly

1. **CAUTION: The retaining ring is a select fit ring. See assembly procedure if the retaining ring or clutch pack is replaced.**

   CAUTION: If new plates are being used, they should be soaked in clean transmission fluid for at least 30 minutes before assembly.

   Remove the retaining ring and forward clutch pressure plate.

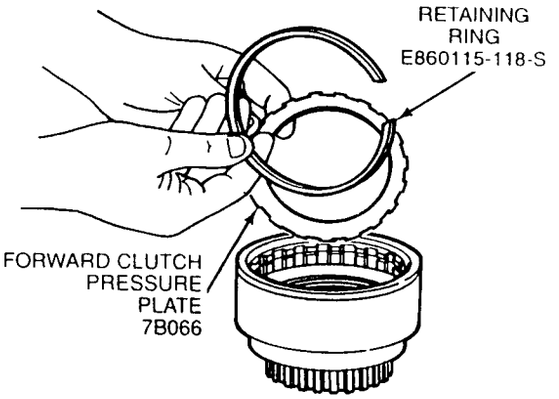

2. NOTE: The number of clutch plates is model dependent.

Engine	Steel	Friction
2.3L	5	5
3.0L	5	5
4.0L	6	6

Remove the forward clutch pack. Inspect for wear, damage or overheating. Replace as necessary.

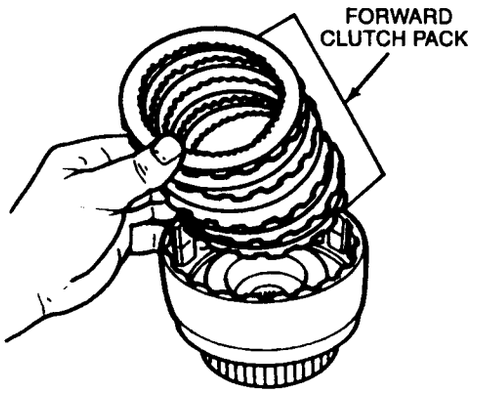

3. **CAUTION: Do not fully compress the clutch spring compressor or damage to the spring retainer may occur.**

   Compress the forward clutch piston springs with Clutch Spring Compressor T65L-77515-A. Remove the retaining ring.

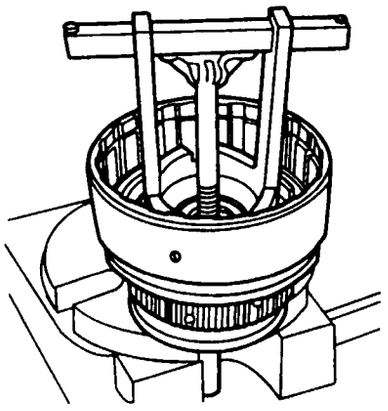

4. **WARNING: CAREFULLY RELEASE THE TOOL PRESSURE ON THE FORWARD CLUTCH PISTON SPRINGS AND REMOVE THE TOOL.**

   Remove the clutch spring compressor from the forward clutch cylinder.

5. **CAUTION: The forward clutch cushion spring is model dependent.**

   Remove the forward clutch piston spring retainer and 15 forward clutch piston springs. Remove the forward clutch cushion spring. Replace as necessary.

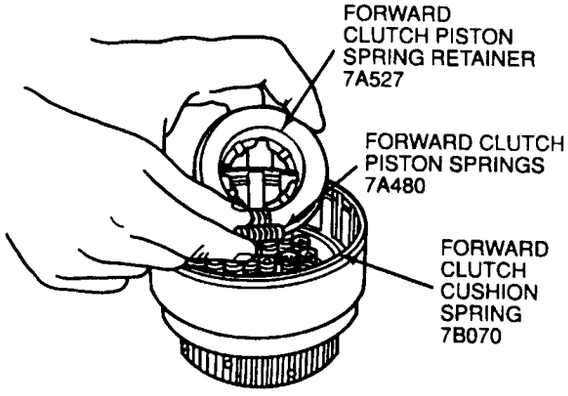

6. **WARNING: AIR PRESSURE MUST NOT EXCEED 138 KPA (20 PSI). WEAR SAFETY GLASSES WHEN USING COMPRESSED AIR. MAKE SURE THE CYLINDER IS FACING DOWN AS SHOWN.**

   NOTE: This is the middle-sized port.

   Use the center support to remove the forward clutch piston. Install the center support on the forward clutch cylinder. Apply air pressure to the far left port in the center support as shown.

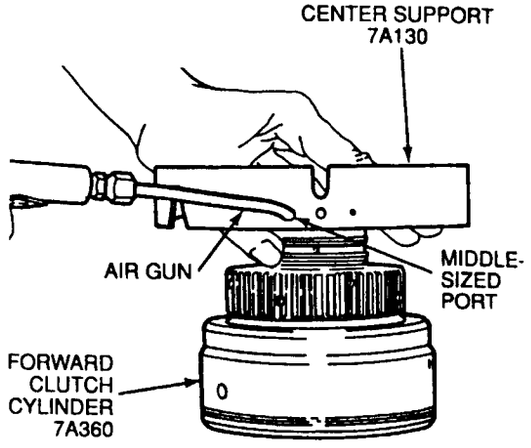

7. Remove the inner and outer forward clutch piston seals. Clean and replace as necessary.

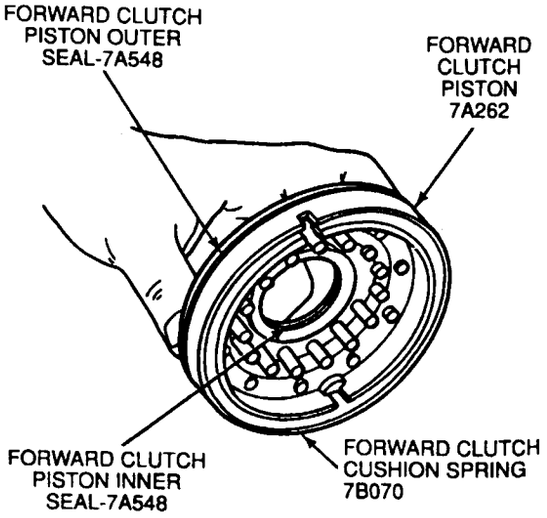

8. Remove the forward clutch cylinder seal rings.

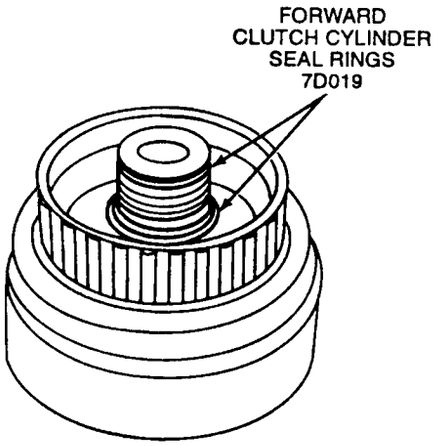

9. Inspect the forward clutch cylinder thrust surfaces, piston bore and clutch plate serration for scores or burrs. Minor scores or burrs may be removed with a crocus cloth. Replace the forward clutch cylinder if it is badly scored or damaged.
10. Check the fluid passages in the forward clutch cylinder for obstructions. Clean out all passages. Inspect the forward clutch piston for scores and replace if necessary. Inspect the piston check ball for freedom of movement and proper seating.
11. Check the clutch release springs for distortion and cracks. Replace the springs if they are distorted or cracked.
12. Inspect the friction clutch plates, steel clutch plates and clutch pressure plate for worn or scored bearing surface. Replace all parts that are deeply scored.
13. Check clutch plates for flatness and fit on the clutch hub serrations. Discard any plate that does not slide freely on the serrations or that is not flat.
14. Check clutch hub thrust surfaces for scores and clutch hub splines for wear.
15. NOTE: The check ball is located in the piston.

    Make sure the check ball is free and clear of debris prior to installing the forward clutch piston.

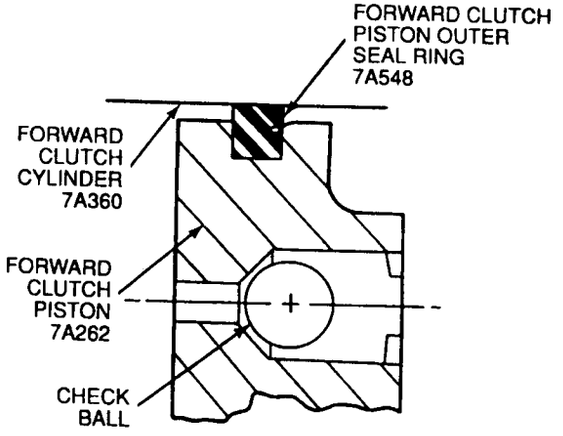

Assembly

1. **CAUTION: If there is evidence of clutch plate burning, replace the forward clutch cushion spring.**

   CAUTION: The forward clutch cushion spring is model dependent.

   Install new inner and outer forward clutch piston seals on the forward clutch piston. Install the forward clutch cushion spring.

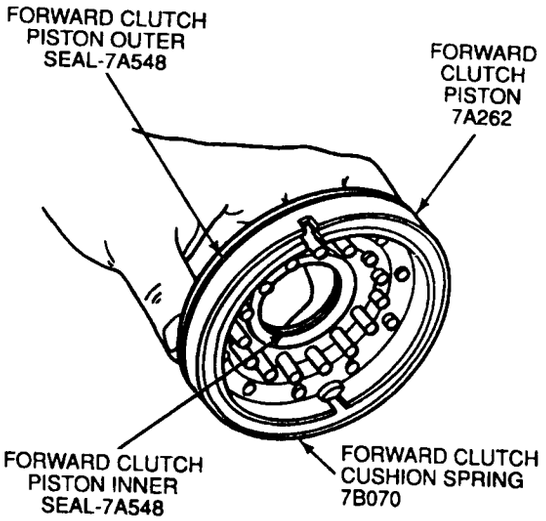

2. To prevent damage to the forward clutch piston outer seal, install Lip Seal Protector T74P-77548-A. To prevent damage to the forward clutch piston inner seal install Lip Seal Protector T74P-77548-A into forward clutch cylinder.

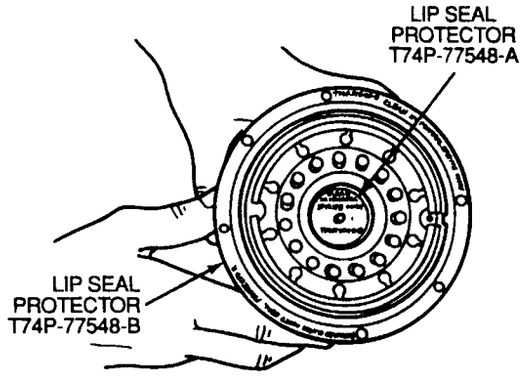

3. **CAUTION: Care must be taken to prevent damage to the seals.**

   NOTE: Apply petroleum jelly to the inner and outer seals.

   Carefully install the forward clutch piston into the forward clutch cylinder.

4. Carefully remove Lip Seal Protector T74P-77548-A and Lip Seal Protector T74P-7754-B from the forward clutch cylinder.

5. Install the 15 forward clutch piston springs and forward clutch piston spring retainer.

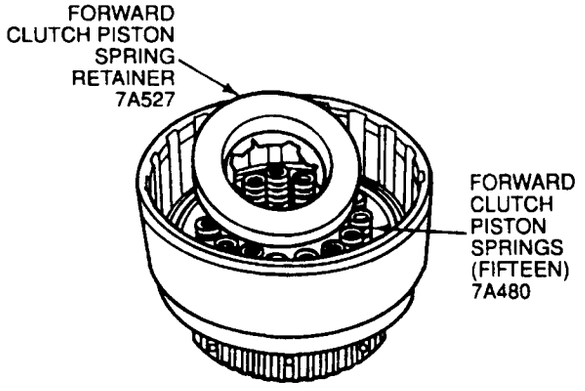

6. **CAUTION: Do not fully compress the clutch spring compressor or damage to the forward clutch piston spring retainer may occur.**

   Compress the clutch piston springs with Clutch Spring Compressor T65L-77515-A and install the retaining ring. Release the load on the forward clutch piston springs and remove the tool.

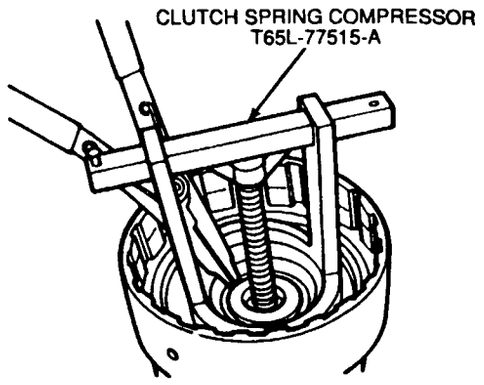

7. **CAUTION: If new plates are being used, they should be soaked in clean transmission fluid for at least 30 minutes before assembly.**

   CAUTION: The number of clutch plates is model dependent.

   Install the steel clutch plates and friction clutch plates in alternating order, starting with a steel plate and finishing with a friction plate.

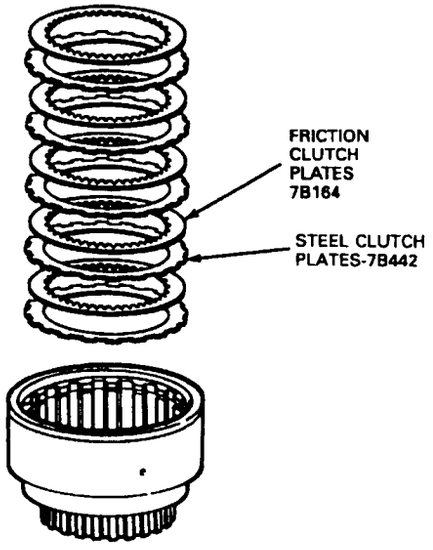

Engine	Steel	Friction
2.3L	5	5
3.0L	5	5
4.0L	6	6

8. **CAUTION: The retaining ring is a select fit.**
   Install the forward clutch pressure plate on the clutch pack. Install the retaining ring.

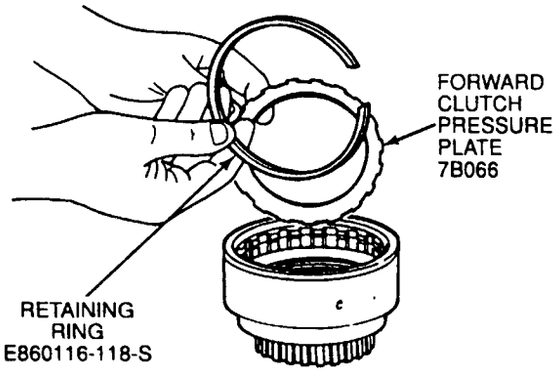

9. **CAUTION: Front clutch cylinder seal rings must be interlocked as shown. Interlock the forward clutch cylinder seal rings.**

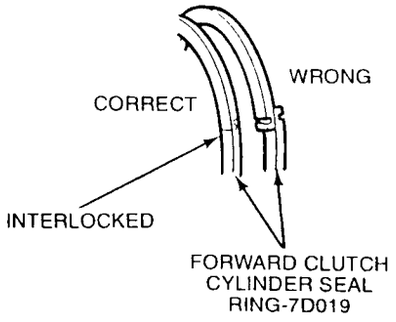

10. NOTE: Make sure that the forward clutch cylinder seal ring gaps are placed 180 degrees apart. Install the forward clutch cylinder seal rings on the forward clutch cylinder.

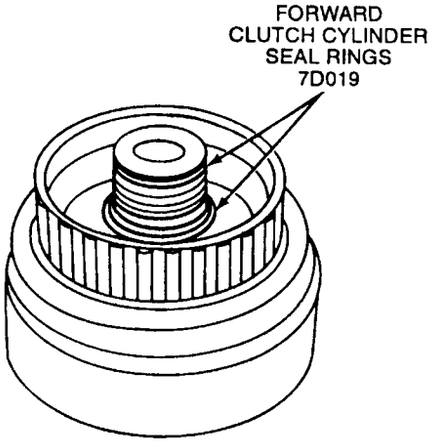

11. **WARNING: DO NOT EXCEED 138 KPA (20 PSI). WEAR SAFETY GLASSES WHEN USING COMPRESSED AIR. MAKE SURE THE DRUM IS FACING DOWN AS SHOWN.**
    NOTE: The forward clutch piston must apply with air pressure and release when the air is removed.
    Install the center support on the forward clutch cylinder. Apply air pressure to the far left port in the center support as shown.

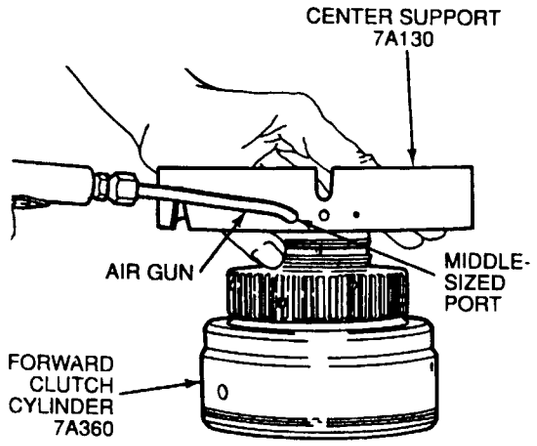

12. Push down on the clutch pack. Use a feeler gauge to check the gap between the retaining ring and the clutch pressure plate. Specification: 1.4 to 2.1mm (.055 to .083 inch). If the reading is not within specifications, remove the retaining ring and check the thickness. Replace the retaining ring with one that will provide correct free play. Verify free play with a feeler gauge.

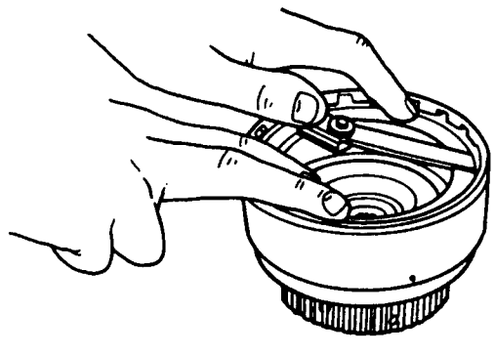

FRONT CLUTCH CYLINDER

Part Number	Thickness		Diameter	
	mm	Inches	mm	Inches
E860115-S	1.37	.0539	125.1	4.925
E860116-S	1.73	.0681	125.1	4.925
E860117-S	2.08	.0819	125.1	4.925
E860118-S	2.44	.0961	125.1	4.925

Forward Geartrain Assembly

Assembly

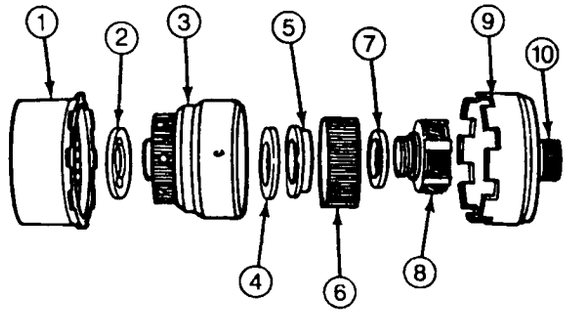

Item	Part Number	Description
1	—	Intermediate Brake and Direct Clutch Drum Assembly
2	7C096	No. 5 Forward Clutch Cylinder Thrust Washer
3	—	Forward Clutch Cylinder Assembly
4	7D234	No. 6A Forward Ring Gear Hub Thrust Bearing
5	7D090	No. 6B Forward Clutch Thrust Washer
6	7D392	Forward Ring Gear
7	7F374	No. 7 Forward Planet Thrust Bearing
8	7A398	Forward Planet Assembly
9	7D064	Input Shell
10	7D063	Forward Sun Gear

1. Install the No. 5 forward clutch cylinder thrust washer on the intermediate brake and direct clutch drum. Align the tabs as shown. Use petroleum jelly to hold the washer in place.

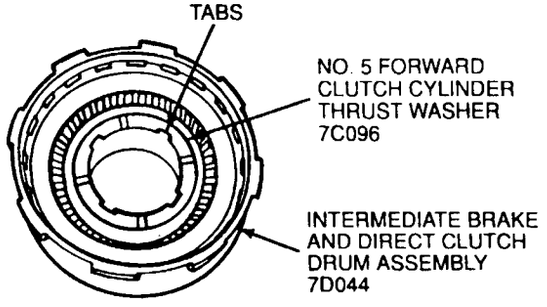

2. Install the forward clutch cylinder assembly into the intermediate brake and direct clutch drum as shown.

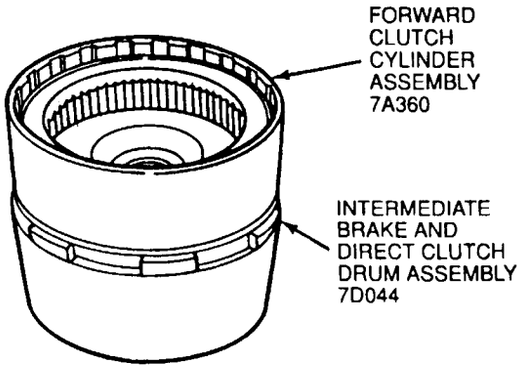

3. Install the No. 6A forward ring gear hub thrust bearing into the forward clutch cylinder as shown.

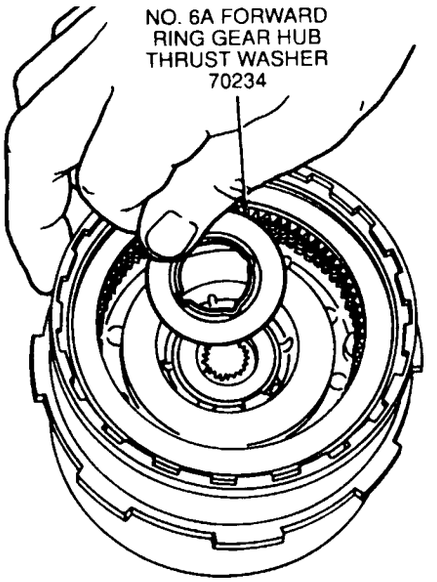

4. NOTE: Use petroleum jelly to hold the washer in place.

   Install the No. 6B forward clutch thrust washer into the forward ring gear hub.

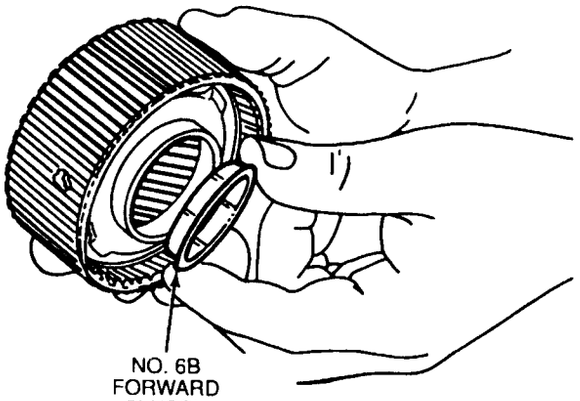

5. NOTE: Make sure the No. 6A bearing and No. 6B thrust washer assembly are inside the forward ring gear.

   Install the forward ring gear and forward ring gear hub into the forward clutch cylinder as shown.

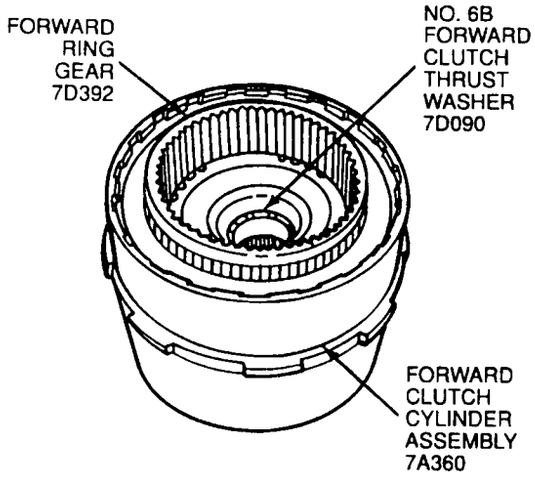

6. Install the No. 7 forward planet thrust bearing into the forward ring gear as shown.

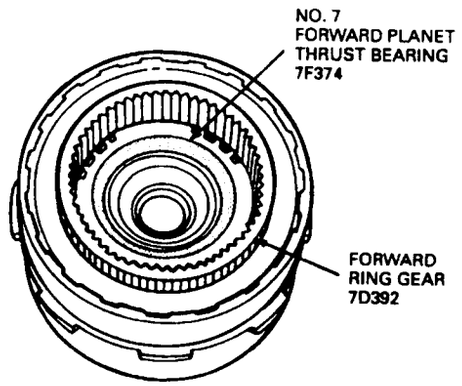

7. NOTE: The forward planet assembly is model dependent.

   Install the forward planet assembly into the forward ring gear as shown.

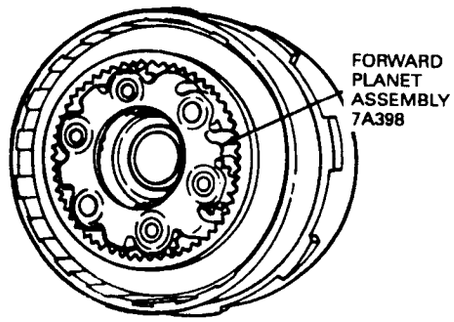

8. NOTE: 4.0L does not require a bushing inside the forward sun gear or washer on back of input shell.

   Inspect the drum gear, bushing and washer for scoring, wear or damage. Replace as required.

9. NOTE: Make sure the forward sun gear aligns with the forward planet assembly. Make sure the input shell aligns with the intermediate brake and direct clutch drum assembly as shown.

   Install the input shell with forward sun gear assembly as shown.

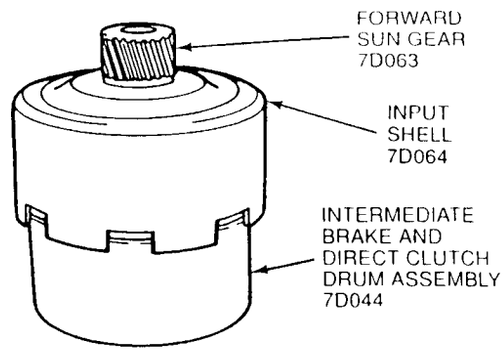

Overdrive Planet and One-Way Clutch Assembly

Overdrive Planet and One-Way Clutch Assembly

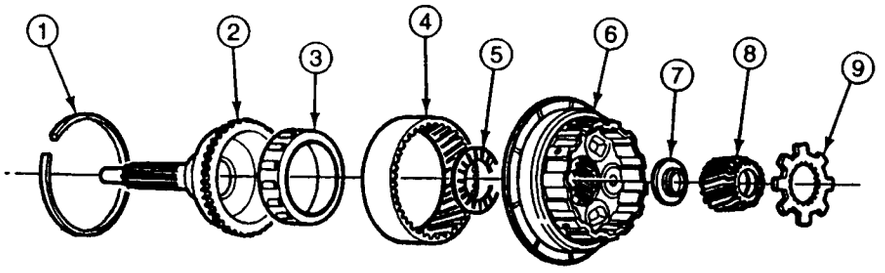

Item	Part Number	Description
1	E860119-S	Retaining Ring
2	7A658	Overdrive Center Shaft
3	—	Overdrive One-Way Clutch (Part of 7A658)
4	7653	Overdrive Ring Gear
5	7L495	No. 2 Overdrive Planet Thrust Bearing
6	7B446	Planetary Gear Overdrive Carrier
7	7D235	No. 12 Sun Gear Thrust Bearing Race
8	7D063	Overdrive Sun Gear
9	7660	Coast Clutch Adapter

(Continued)

Disassembly

1. Remove the overdrive center shaft retaining ring from the overdrive ring gear.

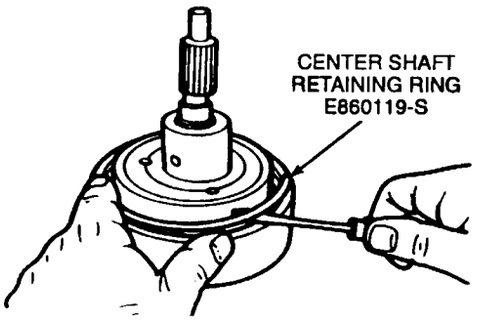

2. Remove the overdrive center shaft from the overdrive ring gear.

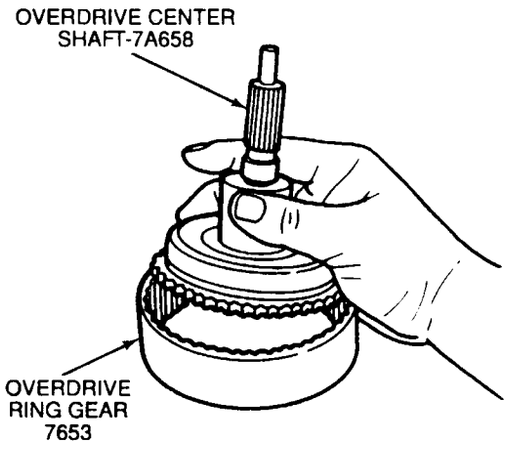

3. **CAUTION: Do not remove the overdrive one-way clutch. Damage to the clutch may occur if it is removed.**

   NOTE: The overdrive one-way clutch is serviced with the overdrive center shaft.

   Clean and inspect the overdrive one-way clutch and overdrive center shaft assembly. Check for cracks in the roller cage and wear on the roller clutch. Inspect the press fit of the one-way roller clutch to the overdrive center shaft.

   Inspect the rollers and springs for excessive wear or damage.

   Inspect the spring and roller cage for bent or damaged spring retainers.

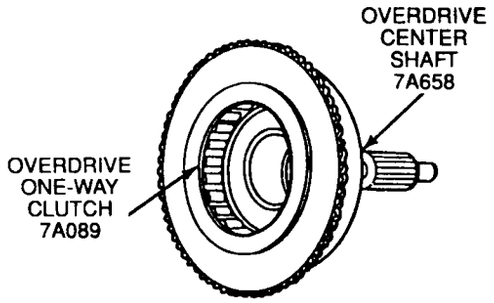

4. Temporarily insert the planetary gear overdrive carrier assembly into the one-way clutch rollers for verification of the one-way clutch. The planet must rotate counterclockwise as shown. Remove the planetary gear overdrive carrier assembly.

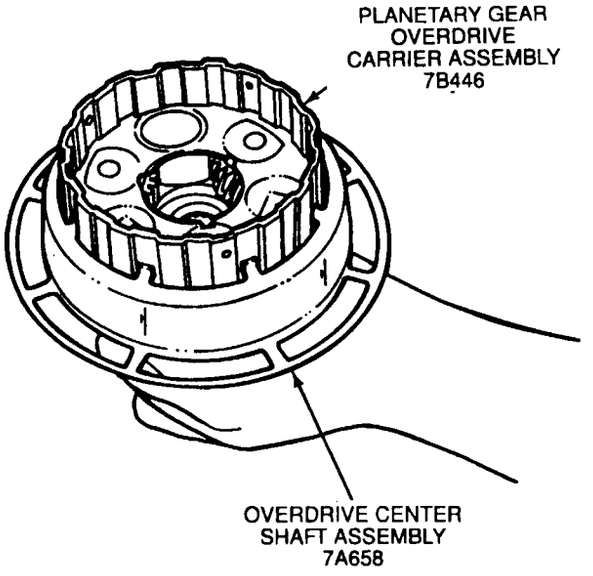

Assembly

1. Install the overdrive center shaft and overdrive one-way clutch into the overdrive ring gear.

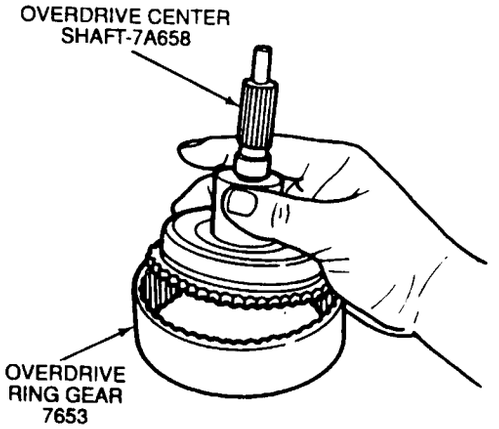

2. Install the center shaft retaining ring.

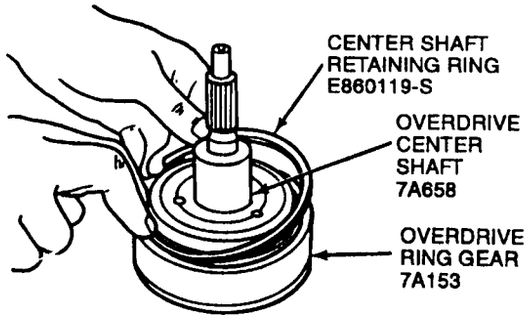

3. **CAUTION: Planets must be replaced. Do not restake.**

NOTE: Individual parts of the planet carriers are not serviceable.

Check the pins and shafts in the planet assemblies for loose fit and / or complete disengagement. Use a new planet assembly if either condition exists. Before installing a planet assembly, the shaft retaining pins should be checked for adequate staking.

Inspect the pinion gears for damaged or excessively worn teeth.

Check for free rotation of the pinion gears.

Inspect the overdrive one-way clutch inner race for scoring.

Check pinion bearing and gears.

Inspect the inner and outer races for scored or damaged surface areas where the rollers contact the races.

Inspect the needle bearing on the nose of the planetary gear overdrive carrier.

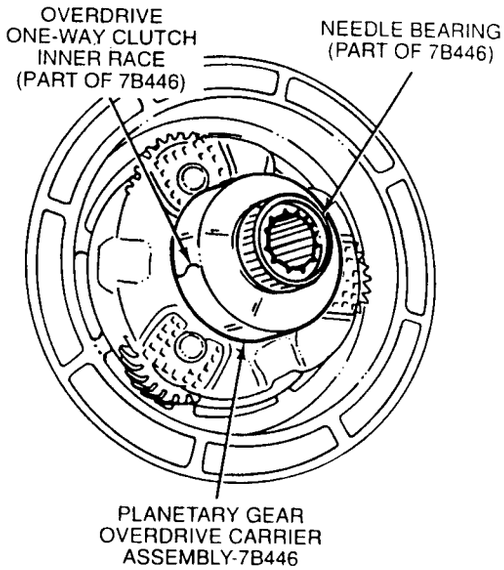

Inspect the No. 12 needle bearing inside the planetary gear overdrive carrier.

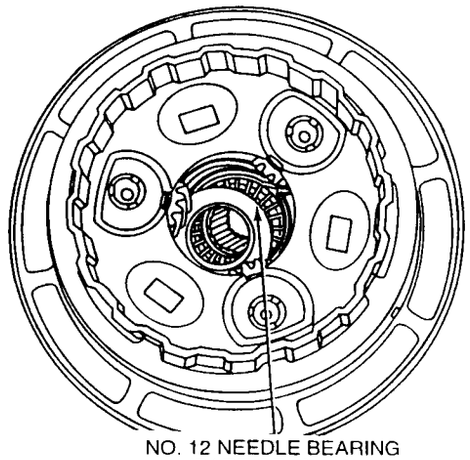

4. NOTE: Use petroleum jelly to hold the No. 2 overdrive planet thrust bearing in place.

Install the No. 2 overdrive planet thrust bearing between the overdrive center shaft face and the planetary gear overdrive carrier assembly.

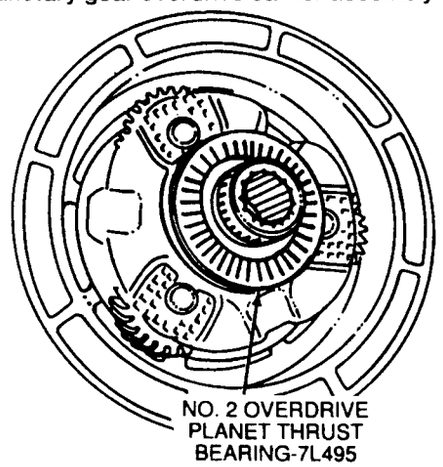

5. Install the planet gear overdrive carrier into the overdrive center shaft and overdrive ring gear.

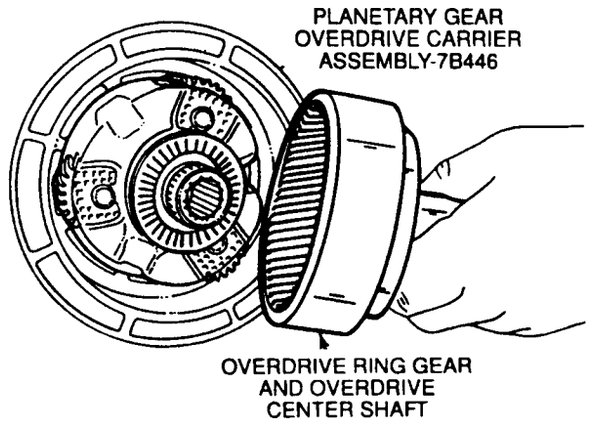

6. **CAUTION: Use care not to bend or damage the exciter wheel.**

   CAUTION: Before installing the overdrive sun gear into the planetary gear overdrive carrier, make sure the No. 12 sun gear thrust bearing race is aligned with the needle bearing inside the planetary gear overdrive carrier. The overdrive sun gear will not seat properly if the No. 12 sun gear thrust bearing race is not aligned in the center of the overdrive sun gear.

   Install the overdrive sun gear into the planetary gear overdrive carrier.

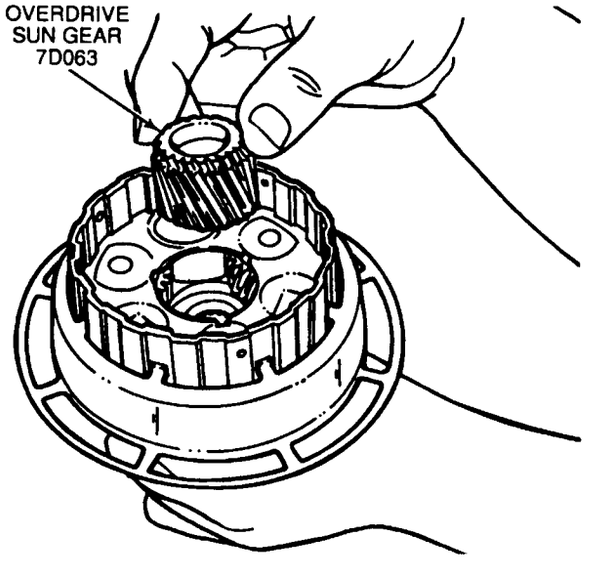

7. Install the coast clutch adapter on the overdrive sun gear.

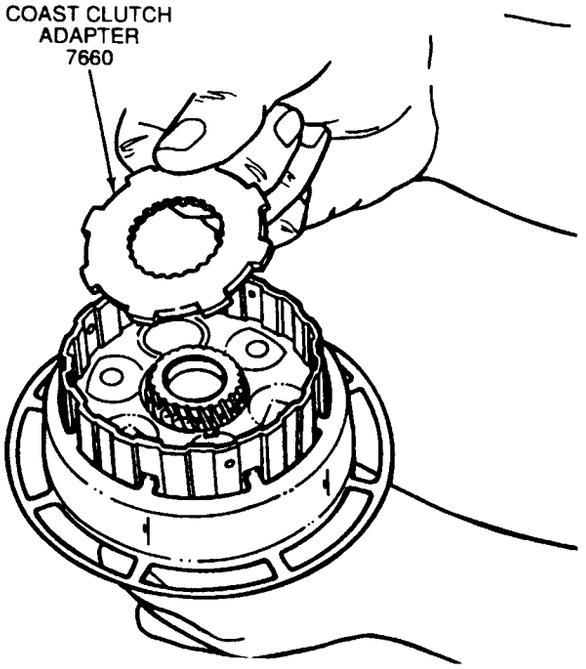

Center Support Disassembly

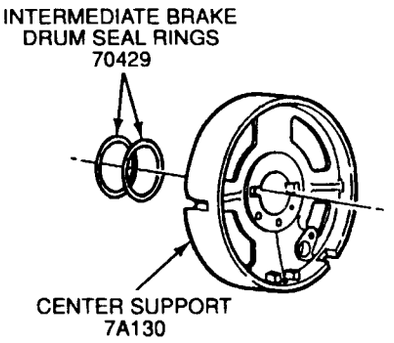

1. Remove the two intermediate brake drum seal rings from the center support.

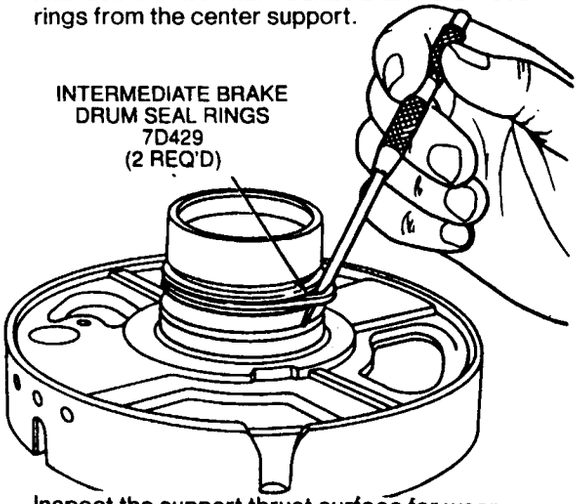

2. Inspect the support thrust surface for wear, scoring or damage. Inspect the forward clutch sealing surface for scoring or damage.

   Inspect the forward clutch cylinder and intermediate brake drum seal ring grooves in the center support for nicks, burrs or damaged edges.

   Check the seal rings for damage.

   Inspect the hydraulic passages for damage or restrictions.

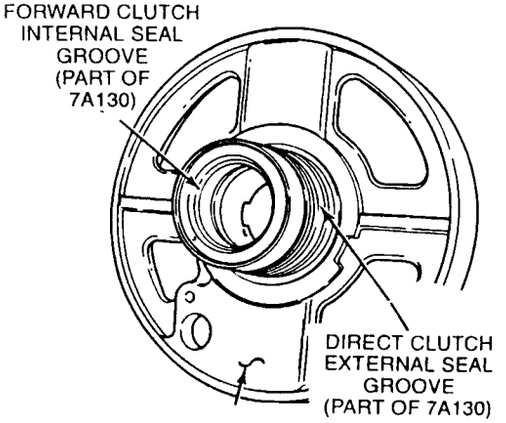

Reverse Brake Drum

SPECIAL SERVICE TOOL(S) REQUIRED

Description	Tool Number
Overrunning Clutch Replacing Guide	T74P-77193-A

Disassembly

Reverse Brake Drum

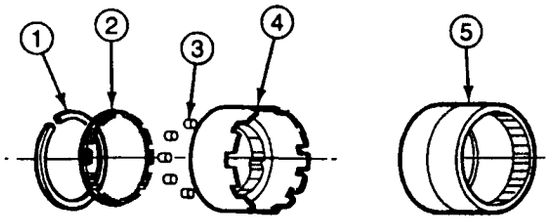

2.3L/3.0L 4.0L

Item	Part Number	Description
1	E860120-S	Retaining Ring
2	7D191	Low One-Way Clutch Spring Retainer
3	7190	Low One-Way Clutch Rollers (10 Req'd)
4	7C498	Reverse Brake Drum — 2.3L, 3.0L
5	7E193	Reverse Brake Drum Assembly (Rear One-Way Clutch) — 4.0L

1. NOTE: For 4.0L applications, there is no retaining ring. The one-way clutch is serviced as part of the reverse brake drum.

   When the one-way clutch is removed, the rollers will become loose and fall out. Remove the one-way clutch carefully.

   Remove the retaining ring using a screwdriver.

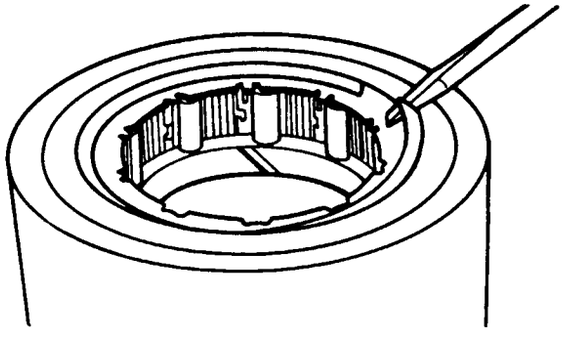

2. Lift out the cage with the springs and bearing rollers as a unit.

Assembly

1. Install the two intermediate brake drum seal rings on the center support and apply a liberal amount of petroleum jelly to the hub and seals.

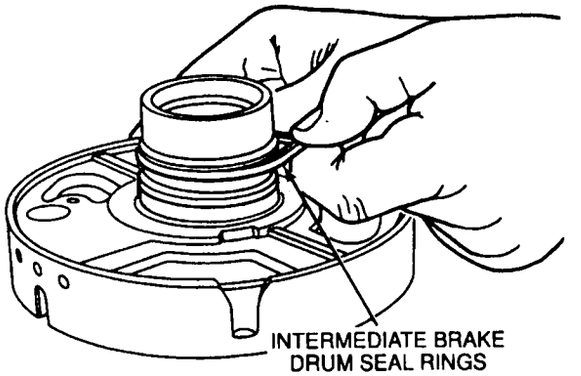

INTERMEDIATE BRAKE DRUM SEAL RINGS 7D429 (2 REQ'D)

2. **CAUTION: Do not roll or cut the seals. Allow to stand for several minutes before attempting to remove hub and install into the intermediate brake and direct clutch drum during final assembly.**

   NOTE: This step is for sizing the intermediate brake drum seal rings.

   Carefully insert the center support, hub and seals into the overdrive brake and coast clutch drum. Rotate the hub to make sure it is fully seated into the overdrive brake and coast clutch drum.

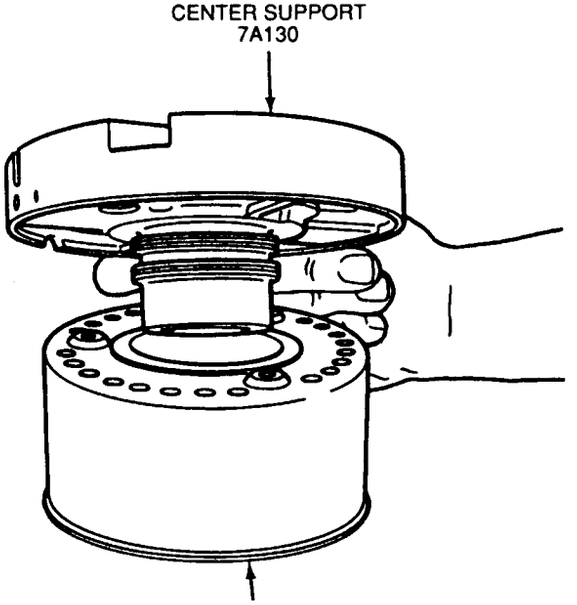

CENTER SUPPORT 7A130

OVERDRIVE BRAKE AND COAST CLUTCH DRUM 7L669

3. NOTE: For 4.0L applications, there is no retaining ring. The sprag-type one-way clutch is serviced with the reverse brake drum. Make sure the thrust rails are installed as shown.

   For 4.0L applications, inspect the thrust rails for scoring and wear.

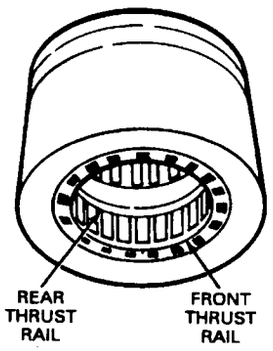

4. **CAUTION: If the rollers or sprags are damaged, inspect the inner race that is in the case and the reverse brake drum. Replace as necessary.**

   Inspect the rollers, springs, sprags and reverse brake drum for damage. Replace as necessary.

5. Install the one-way clutch with springs into the reverse brake drum. Install the retaining ring.

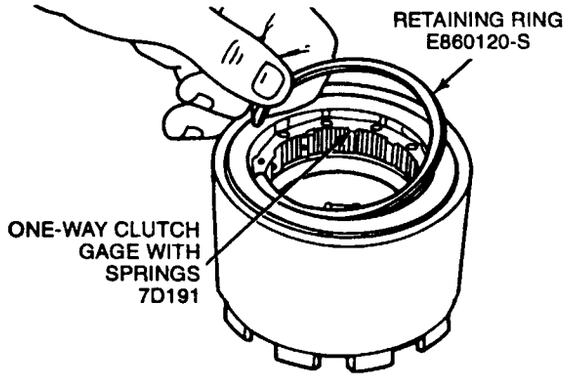

6. Compress the springs using a screwdriver and install the 10 bearing rollers as shown.

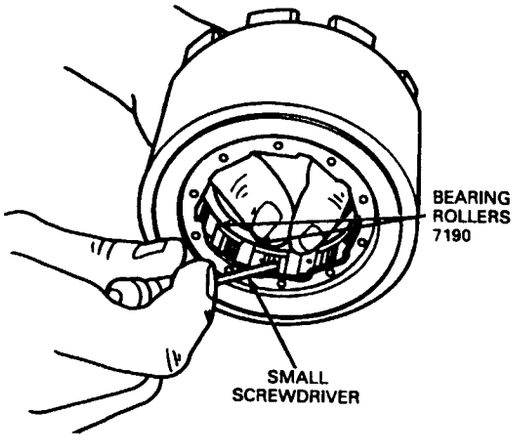

7. NOTE: Overrunning Clutch Replacing Guide T74P-77193-A can be used to keep the rollers in place prior to assembly in the case.

   Install Overrunning Clutch Replacing Guide T74P-77193-A after installing the last roller.

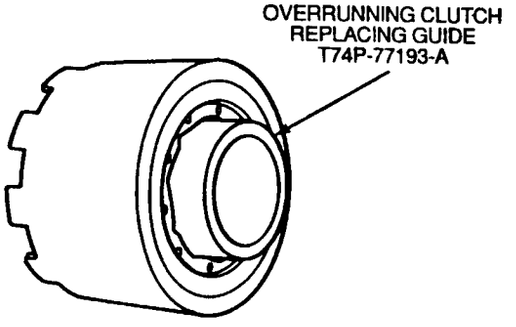

Torque Converter Checks

Cleaning / Inspection

When internal wear or damage has occurred in the transmission, metal particle, clutch plate material, or band material may have been carried into the torque converter. These contaminates are a major cause of recurring transmission troubles and MUST be removed from the system before the transmission is put back into the vehicle.

Whenever a transmission has been disassembled to replace worn or damaged parts or because the valve body sticks repeatedly from foreign material, the torque converter MUST be cleaned using a mechanical agitated cleaner, such as Rotunda Torque Converter / Oil Cooler Cleaner 014-00028 or equivalent.

Stator to Impeller Interference Check

SPECIAL SERVICE TOOL(S) REQUIRED

Description	Tool Number
End Play Checking Tool	T80L-7902-A

1. Install the front pump support into torque converter. Engage the splines of the one-way clutch inner race with the mating splines of the stator support.

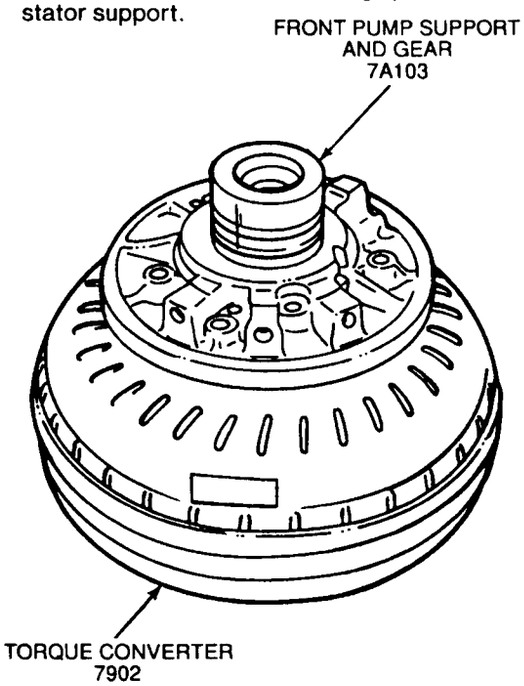

2. Rotate the torque converter both clockwise and counterclockwise. The front pump support should rotate freely without any signs of interference or scraping within the torque converter.

   If there is an indication of scraping, the trailing edges of the stator blades may be interfering with the leading edges of the impeller blades. In such cases, replace the torque converter.

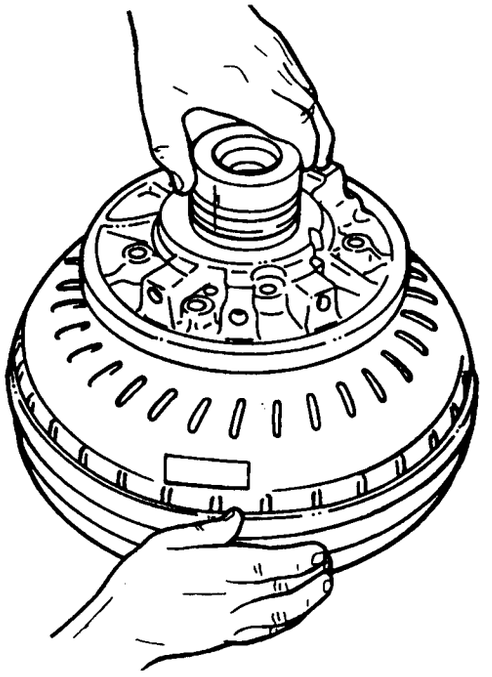

Torque Converter End Play Check

1. Install End Play Checking Tool T80L-7902-A into the converter turbine hub until it bottoms.

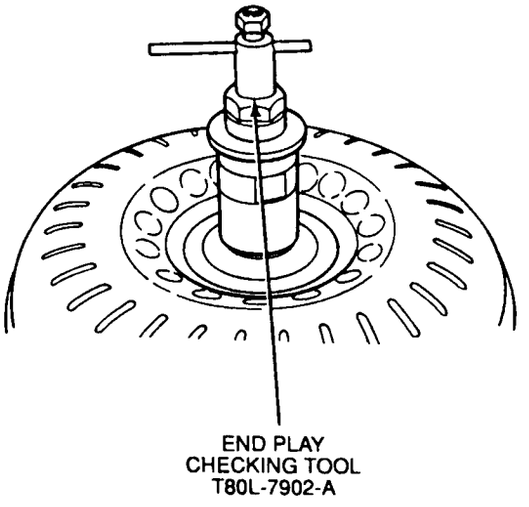

2. Expand the sleeve in the turbine spline by tightening the threaded inner post until the tool is securely locked in the spline.

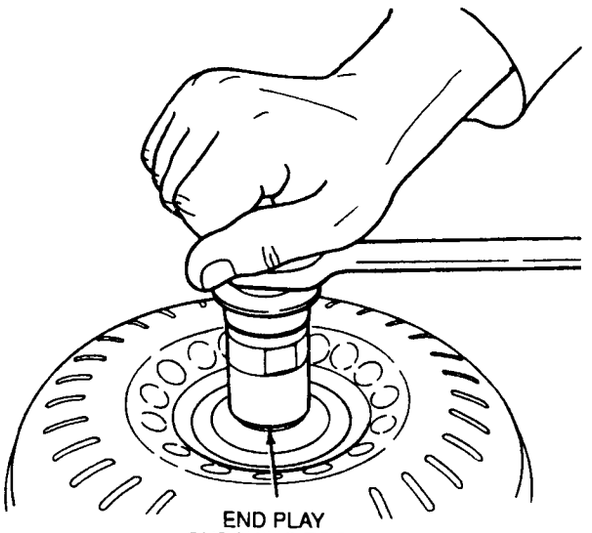

END PLAY
CHECKING TOOL
T80L-7902-A

3. Attach Dial Indicator with Bracketry TOOL-4201-C or equivalent to End Play Checking Tool T80L-7902-A. Position the indicator button on the converter impeller housing and set the dial face to zero (0).

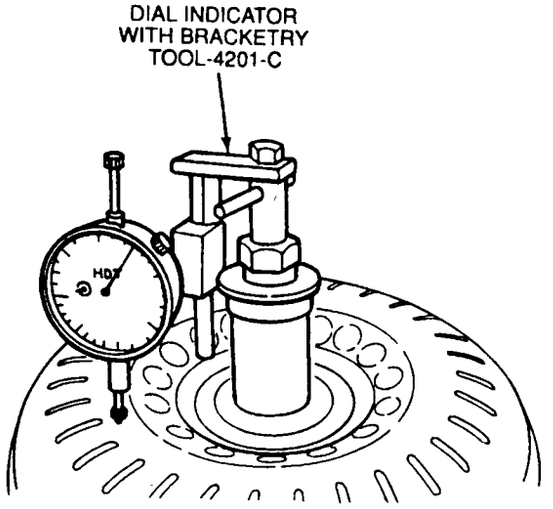

4. Lift the tool upwards as far as it will go and note the indicator reading. The indicator reading is the total end play which the turbine and stator share. Replace the torque converter if the total end play exceeds the specifications.

CONVERTER END PLAY

New or Rebuilt Converter		Used Converter	
mm	Inch	mm	Inch
0.58 Max.	0.023 Max.	1.27 Max.	0.050 Max.

5. Loosen the threaded inner post to remove the tool from the torque converter.

ASSEMBLY

Transmission

SPECIAL SERVICE TOOL(S) REQUIRED

Description	Tool Number
Bench-Mounted Holding Fixture	T57L-500-B
Shift Lever Seal Replacer	T74P-77498-A
Replacing Guide Tool	T74P-77193-A
Gauge Bar	T93T-77003-AH
Front Pump Alignment Set	T74P-77103-X
Pump Alignment Handle	T74P-77103-H
Band Adjustment Torque Wrench Set	T71P-77370-A
Servo Rod Selecting Gauge	T74P-77190-A
Extension Housing Bushing Replacer	T77L-7697-F
Extension Housing Seal Replacer	T74P-77052-A
TR Sensor Alignment Tool (MLPS Alignment Tool)	T93P-70010-A

1. Inspect the case for cracks and stripped threads. Inspect the gasket surfaces and mating surfaces for burrs. Check the vent for obstructions and check all fluid passages for obstructions and leakage.
2. Inspect the case bushing for scores. Check all parking linkage for wear or damage.
3. Inspect all case threads for damage.

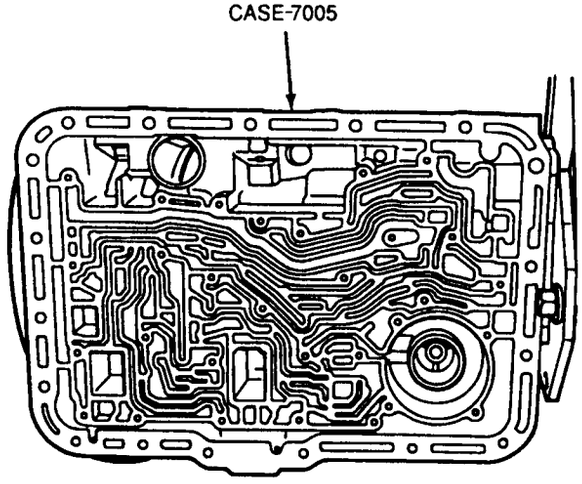

4. Inspect the extension housing for cracks. Inspect the gasket surfaces for burrs or warpage.

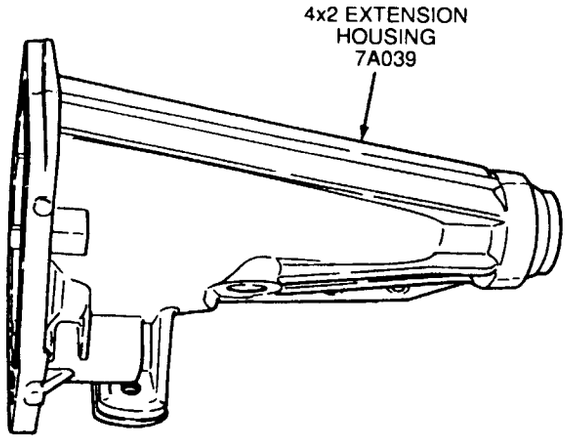

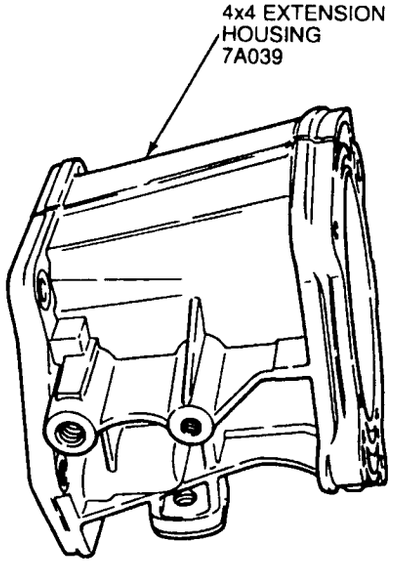

5. Inspect the bushing for scores or wear. Replace if required.
6. Inspect the rear seal for hardness, cracks or wear. If the seal shows wear or deterioration, replace the seal.
7. Inspect the seal counterbore and remove all burrs and scores with a crocus cloth.
8. NOTE: Bench-Mounted Holding Fixture T57L-500-B should still be attached to the adapter plate. If it is not, reattach the fixture arm at this time.

   Reattach the adapter plate to the extension housing face using four M10 x 30mm screws.

9. **WARNING: MAKE SURE THE LOCK PIN ON BENCH-MOUNTED HOLDING FIXTURE T57L-500-B IS SECURE.**

   Install the transmission case in the bench pivot and rotate so the transmission fluid pan rail is facing up.

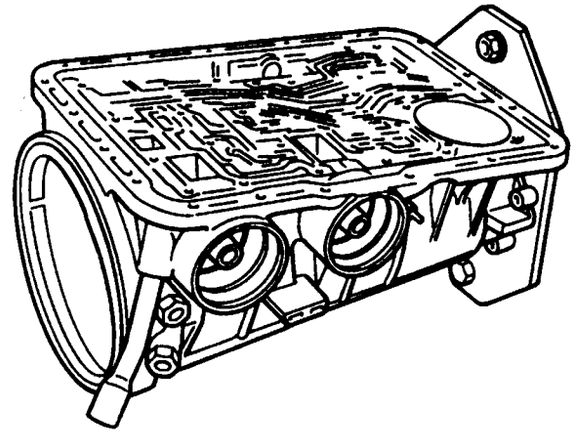

10. Lubricate and install the main control lever seal using Shift Lever Seal Replacer T74P-77498-A.

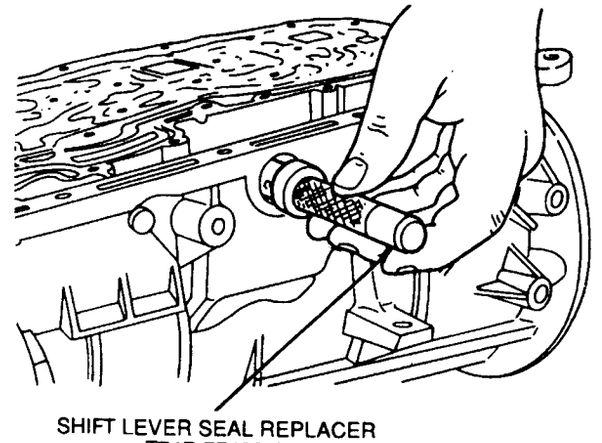

SHIFT LEVER SEAL REPLACER
T74P-77498-A

11. Assemble the manual valve inner lever and parking pawl actuating rod as shown.

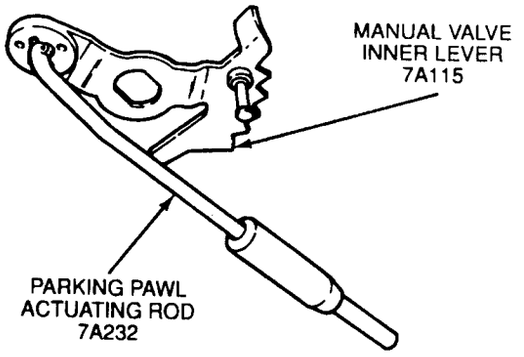

12. Install the manual control lever shaft into the case.

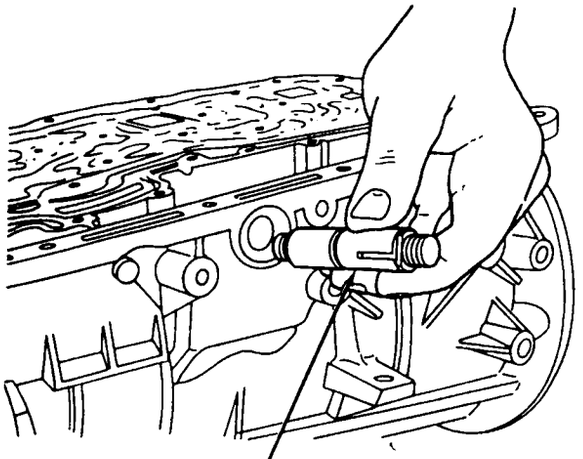

13. **CAUTION: Use care not to damage the fluid pan rail surface when installing the retaining pin.**

    Align the manual control lever shaft with the manual control lever shaft retaining pin. Install the retaining pin.

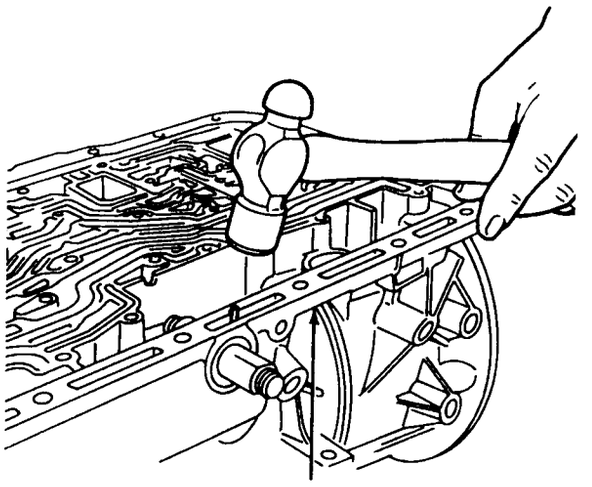

14. Install the manual valve inner lever and parking pawl actuating rod into the case. Align the flats of the manual valve inner lever with the flats on the manual control lever shaft.

15. **CAUTION: To avoid damage, do not allow wrench to strike the manual valve inner lever pin.**

    Install manual valve inner lever nut and tighten to 41-54 N·m (30-44 lb-ft).

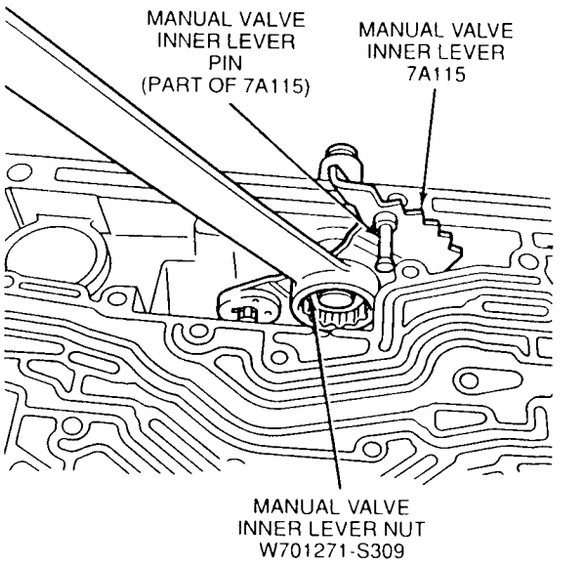

16. **CAUTION: The tabs on the No. 11 output shaft thrust washer point into the case.**

    Apply petroleum jelly to the No. 11 output shaft thrust washer and install into the rear of the case bore.

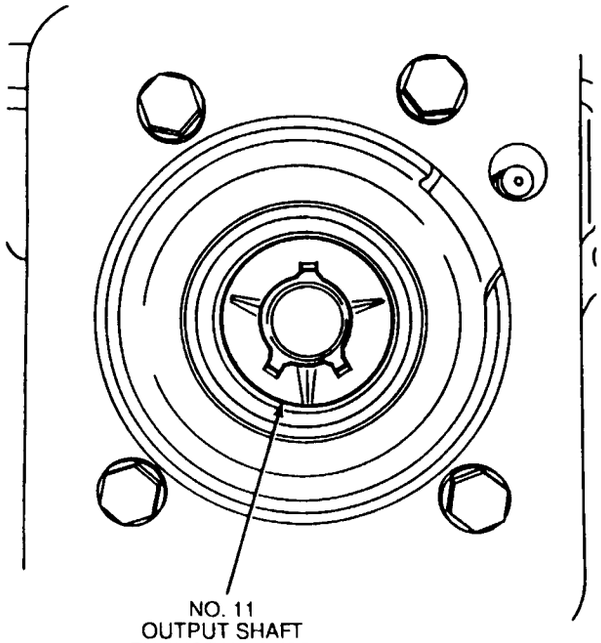

NO. 11
OUTPUT SHAFT
THRUST WASHER
7B368

17. NOTE: The inside diameter of the No. 11 output shaft thrust washer is smaller than the inside diameter of the 2.3L, 3.0L No. 10 output shaft thrust hub washer.

    Install the park gear into the rear case bore.

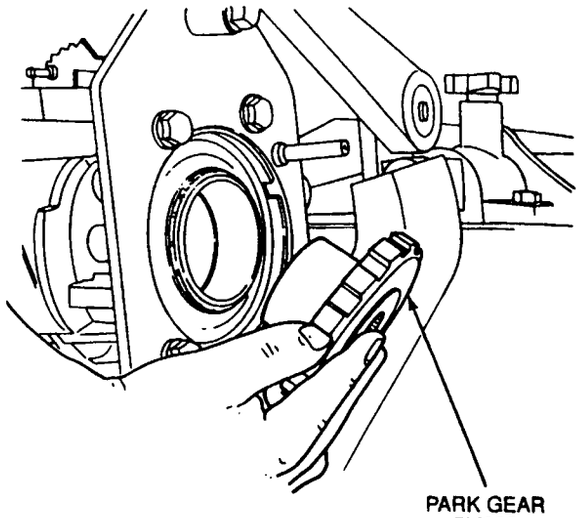

PARK GEAR
7M092

18. Rotate the reverse brake drum assembly clockwise to install. If used, remove the one-way clutch Replacing Guide Tool T74P-77193-A.

Reverse Brake Drum Assembly Installation, 2.3L, 3.0L

REPLACING
GUIDE TOOL
T74P-77193-A

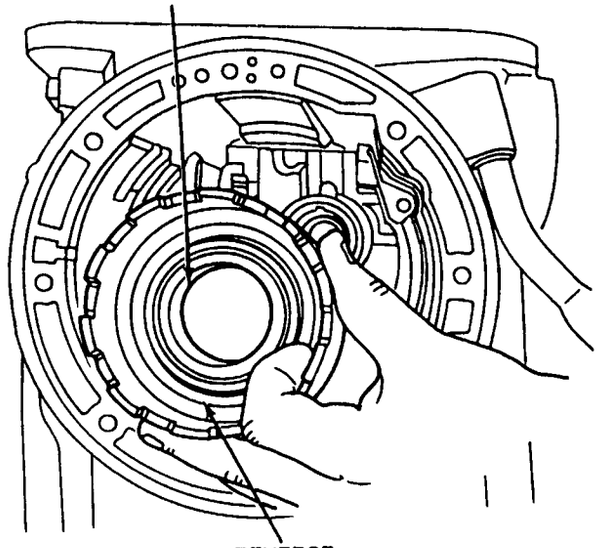

REVERSE
BRAKE DRUM
7C498

Reverse Brake Drum Assembly Installation, 4.0L

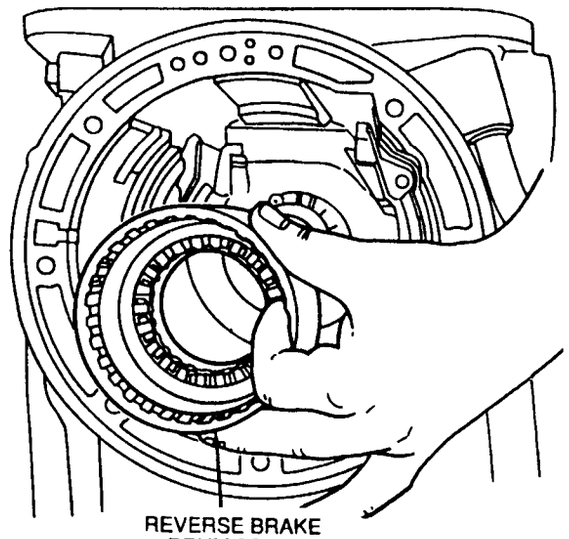

REVERSE BRAKE
DRUM-7C498

19. **CAUTION: The tabs on the No. 10 output shaft hub thrust washer point into the one-way clutch.**

    NOTE: The size of the No. 10 output shaft hub thrust washer is model dependent.

    NOTE: Petroleum jelly can be used to hold the No. 10 output shaft hub thrust washer in place.

    Install the No. 10 output shaft hub thrust washer against the one-way clutch.

No. 10 Output Shaft Hub Thrust Washer Installation, 2.3L, 3.0L

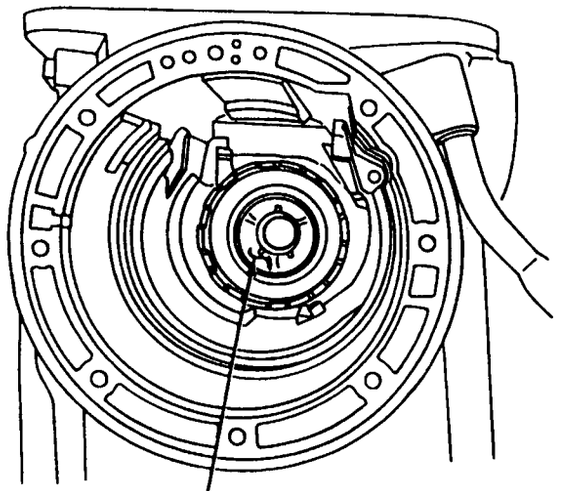

No. 10 Output Shaft Hub Thrust Washer Installation, 4.0L

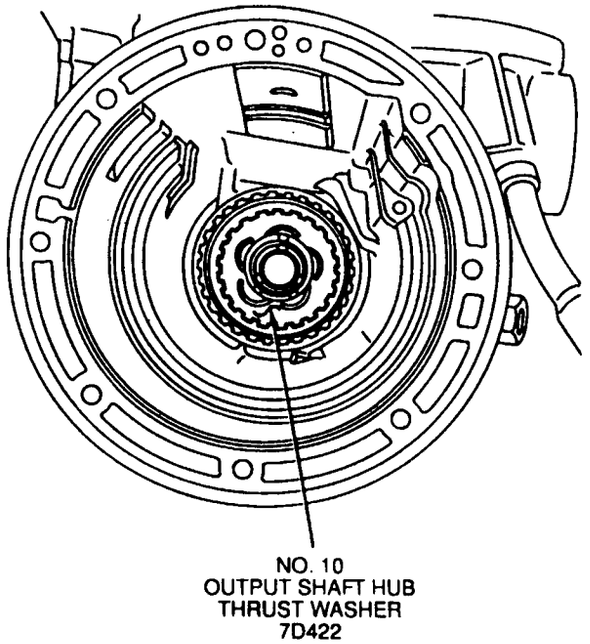

20. **CAUTION: The output shaft is model dependent. The 4.0L output shaft does not have lube holes.**

    Install the output shaft through the output shaft park gear.

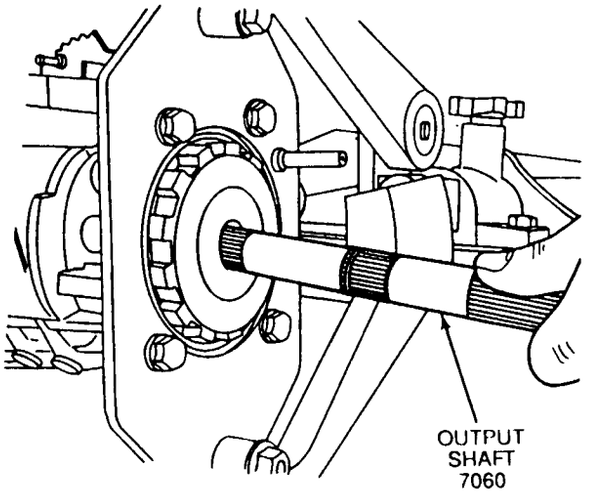

21. Install the output shaft ring gear and output shaft hub assembly.

Output Shaft Ring Gear and Hub Assembly Installation, 2.3L, 3.0L

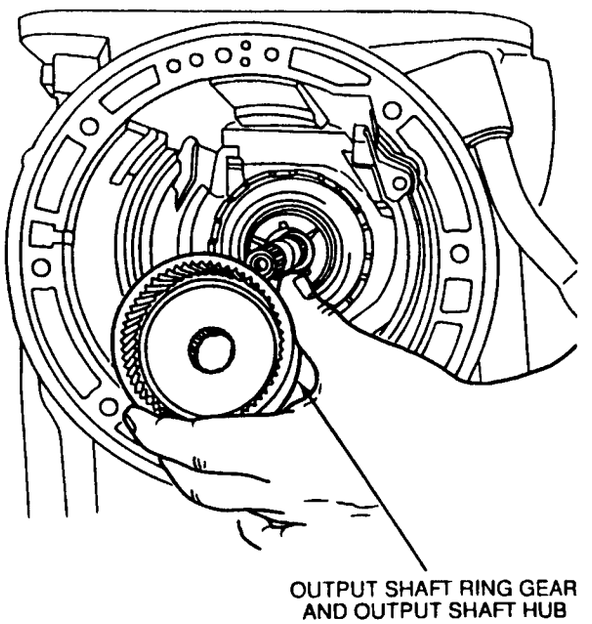

Output Shaft Ring Gear and Hub Assembly Installation, 4.0L

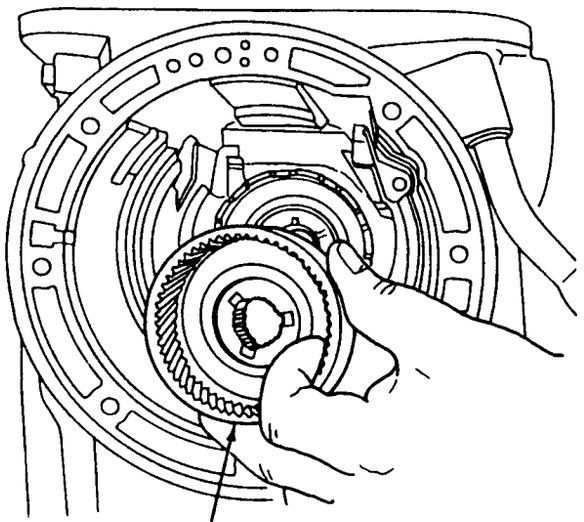

OUTPUT SHAFT RING GEAR
AND OUTPUT SHAFT HUB

22. **CAUTION: Always use a new retaining ring.**
Install a new output shaft retaining ring in the output shaft retaining ring groove.

Output Shaft Retaining Ring Installation, 2.3L, 3.0L

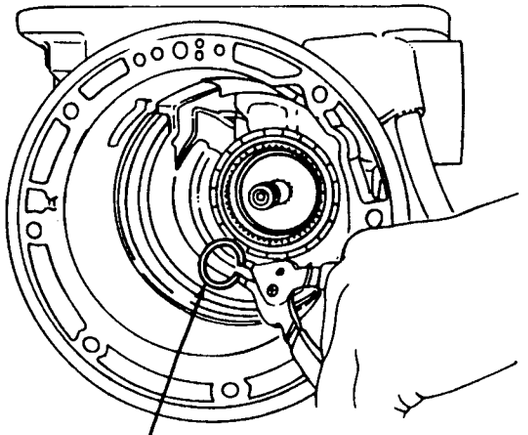

OUTPUT SHAFT
RETAINING RING
E860527-S

Output Shaft Retaining Ring Installation, 4.0L.

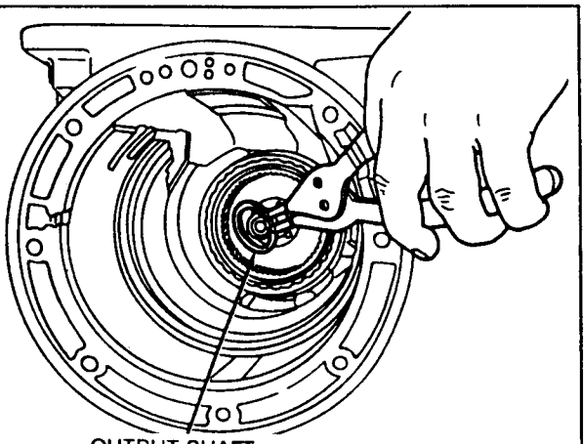

OUTPUT SHAFT
RETAINING RING
E860527-S

23. NOTE: The output shaft sleeve is only used in 4.0L applications. Use petroleum jelly to hold the sleeve in place.
Install the output shaft sleeve with cone facing up.

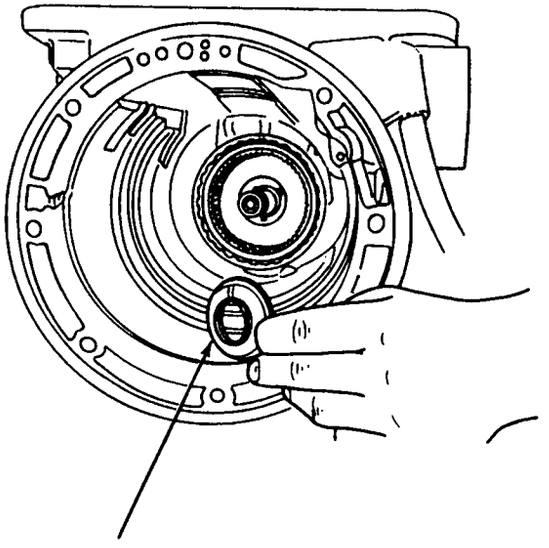

OUTPUT SHAFT
SLEEVE
7B176

24. **CAUTION: The tabs on the thrust washers point into the reverse planet.**
NOTE: Use petroleum jelly to hold the thrust washers in place.
NOTE: The No. 8 and No. 9 reverse planet carrier thrust washers are model dependent.
Position the No. 8 reverse planet carrier thrust washer on the front face of the reverse planet. Position the No. 9 reverse planet carrier thrust washer on the rear face of the reverse planet.

No. 8 and 9 Reverse Planet Carrier Thrust Washer Position, 4.0L

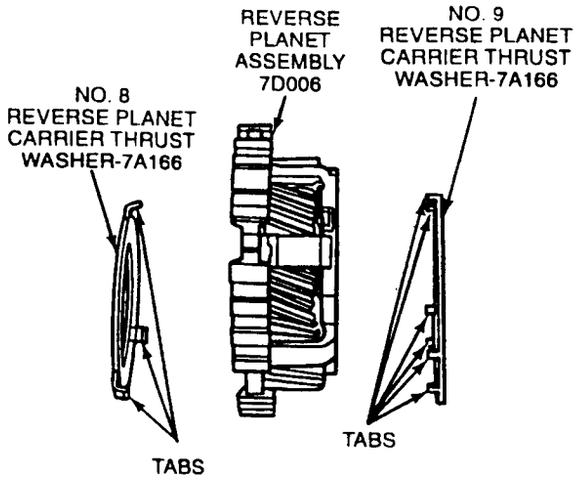

No. 8 and 9 Reverse Planet Carrier Thrust Washer Position, 2.3L, 3.0L

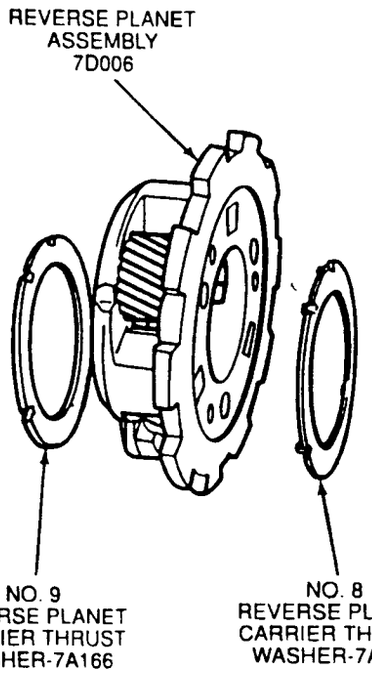

25. **CAUTION: Make sure the thrust washers stay in place.**

    Install the reverse planet assembly, with No. 8 and No. 9 reverse planet carrier thrust washers, into the output shaft ring gear.

Reverse Planet Assembly Installation, 2.3L, 3.0L

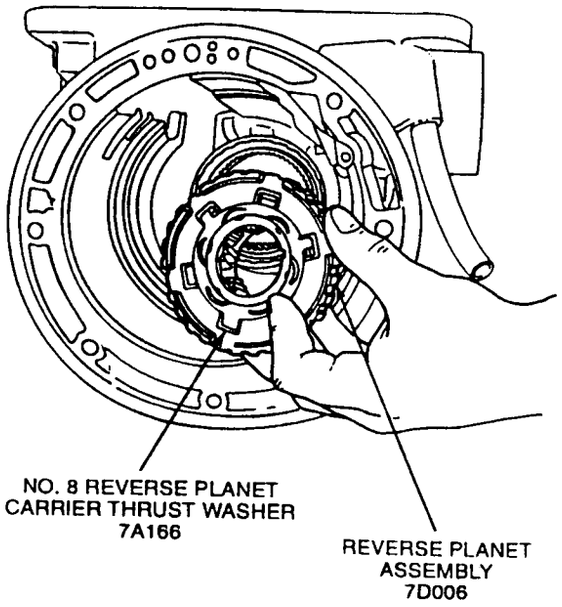

Reverse Planet Assembly Installation, 4.0L

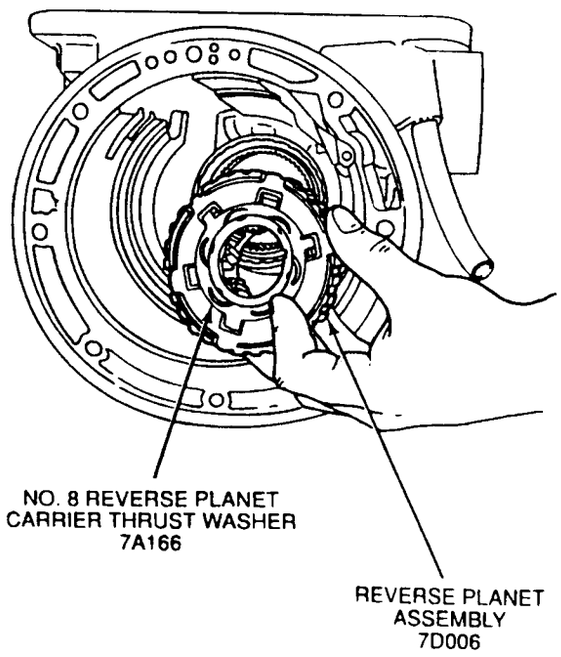

26. **CAUTION: The retaining ring is not used in 4.0L applications.**

Pull the reverse brake drum forward and install the retaining ring into reverse brake drum groove. This will hold the reverse planet assembly in place.

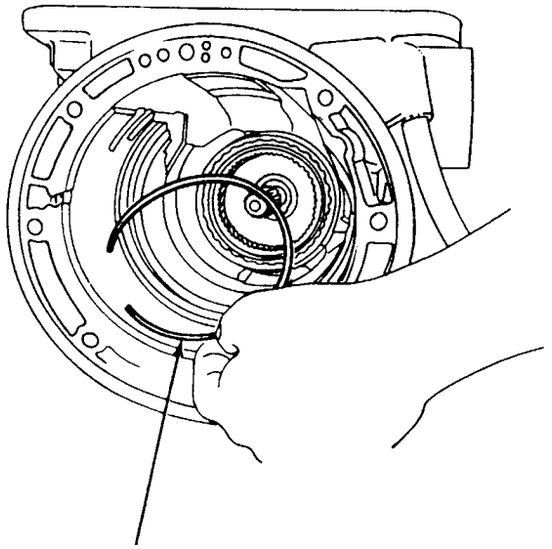

REVERSE PLANET
RETAINING RING
E860527-S

27. **CAUTION: Make sure band is resting on the two anchor pins in the case.**

Install the reverse band over the reverse brake drum.

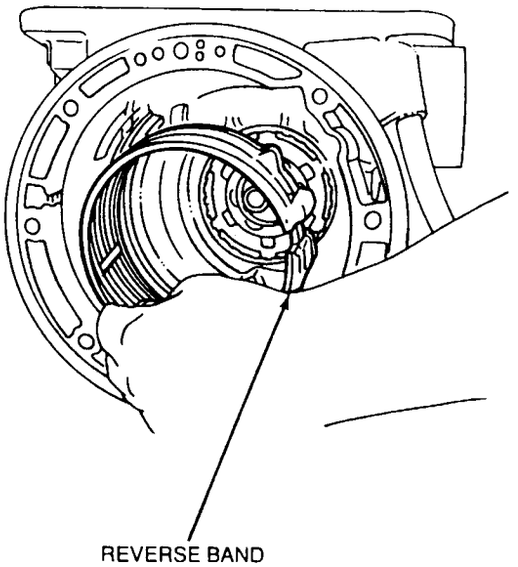

REVERSE BAND
7D095

28. Install the reverse band servo piston and rod temporarily to hold the reverse clutch band in position.

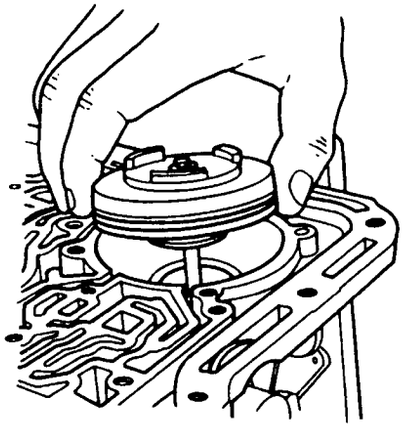

29. Install the previously assembled forward geartrain assembly.

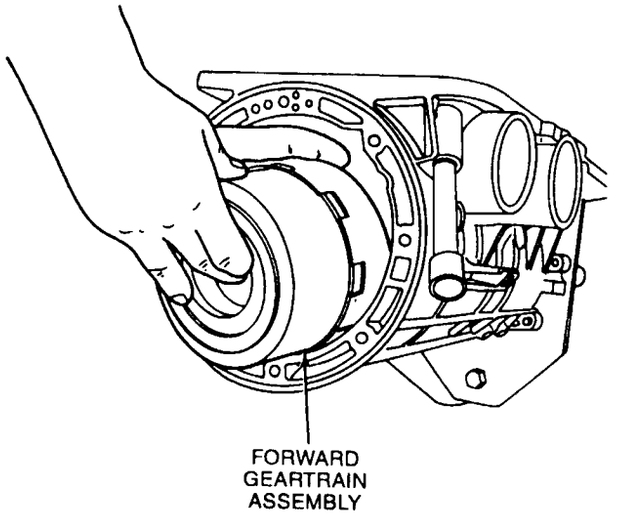

30. **WARNING: MAKE SURE THE LOCK PIN ON BENCH-MOUNTED HOLDING FIXTURE T57L-500-B IS SECURE.**

    Rotate the transmission assembly so that the converter housing gasket surface is facing up.

31. Select the No. 4 intermediate brake drum thrust bearing as follows:

    a. Place Gauge Bar T93T-77003-AH on the case shoulder. Set the micrometer on top of the gauge bar as shown.

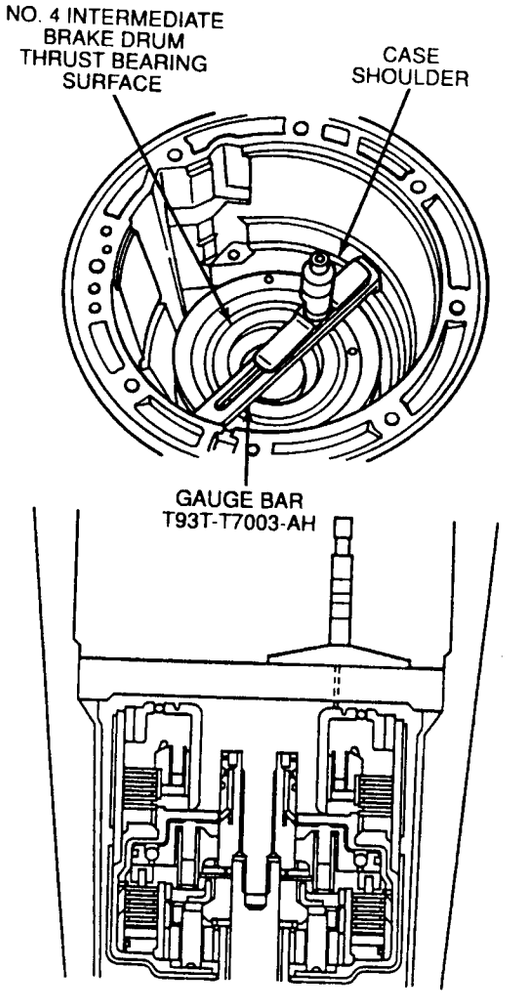

    b. Extend the micrometer probe until it contacts the No. 4 thrust bearing surface at the intermediate brake drum. This is dimension "A."

    c. Remove the micrometer and record dimension "A."

    d. Place the micrometer on the opposite side of gauge bar. Extend the micrometer probe until it contacts the No. 4 thrust bearing surface at the intermediate brake drum. This is dimension "B."

    e. Add dimensions "A" and "B" together, divide by 2, then subtract the thickness of Gauge Bar T93T-77003-AH (17.78mm [0.700 inch]). This is dimension "C."

    f. See the chart below and use dimension "C" to select the proper thrust bearing.

TRANSMISSION LOWER END CLEARANCE

Dimension "C"	Identification: Number of Notches	Service Part Number	Bearing Thickness
1.79-1.90mm (0.070-0.074 In.)	0	-7D014-	2.65-2.8mm (0.104-0.110 In.)
1.91-2.10mm (0.075-0.082 In.)	1	-7D014-	2.80-2.95mm (0.110-0.116 In.)
2.11-2.30mm (0.083-0.090 In.)	2	-7D014-	3.00-3.15mm (0.118-0.124 In.)
2.31-2.43mm (0.091-0.096 In.)	3	-7D014-	3.20-3.35mm (0.126-0.132 In.)
Rear: No.4 Reference End Play 0.10-0.55mm (0.004-0.022 In.)			

32. Install the previously identified intermediate servo actuating lever as shown.

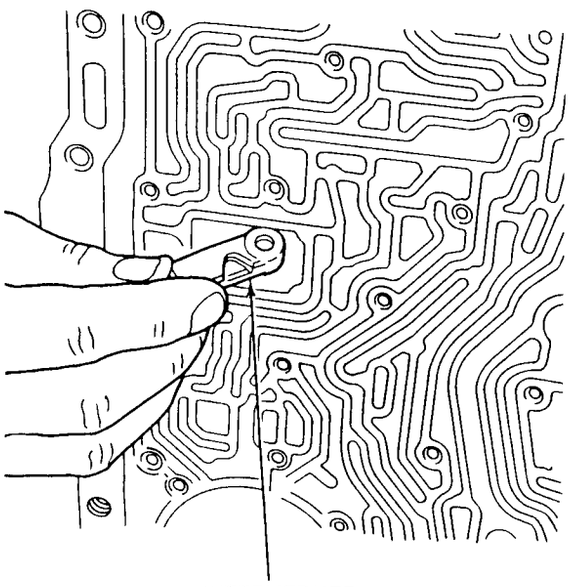

33. NOTE: The intermediate band actuating lever shaft is shorter than the overdrive shaft.

    Install the intermediate band actuating lever shaft through the intermediate servo lever.

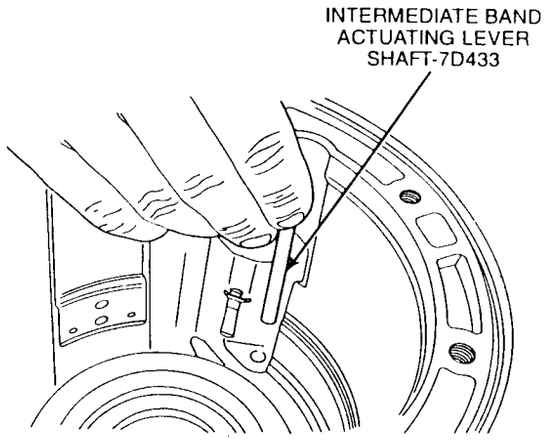

34. Install the intermediate band apply strut on the intermediate servo lever.

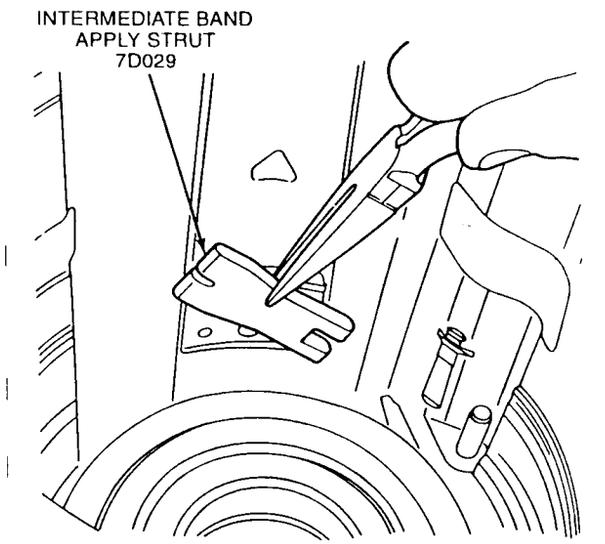

35. NOTE: Make sure the apply strut is aligned with the band notch.

Install the intermediate band.

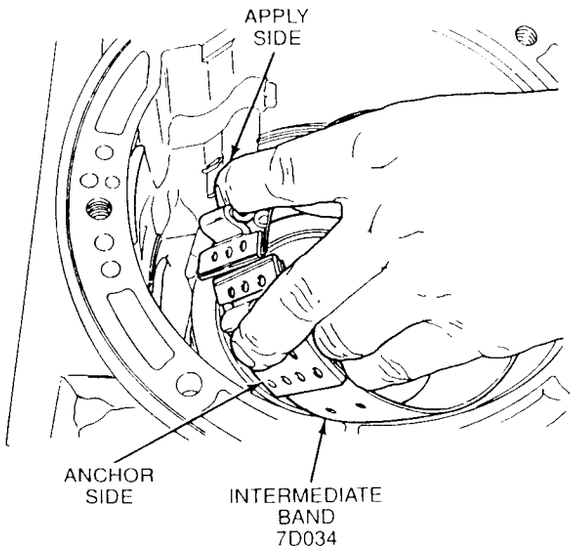

36. NOTE: Use the intermediate band adjusting screw as a temporary alignment guide.

NOTE: The overdrive and intermediate band anchor struts are the same.

Install the intermediate band anchor strut and intermediate band adjusting screw.

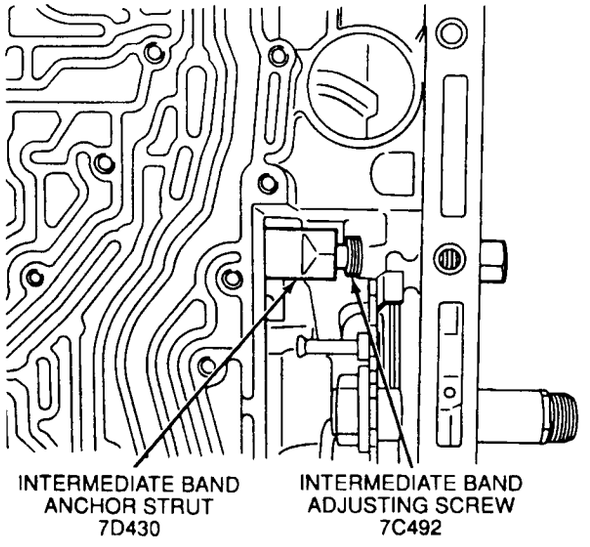

37. NOTE: Use petroleum jelly to hold the No. 4 intermediate brake drum thrust bearing in place.

Install the correctly selected No. 4 intermediate brake drum thrust bearing over the center support as shown.

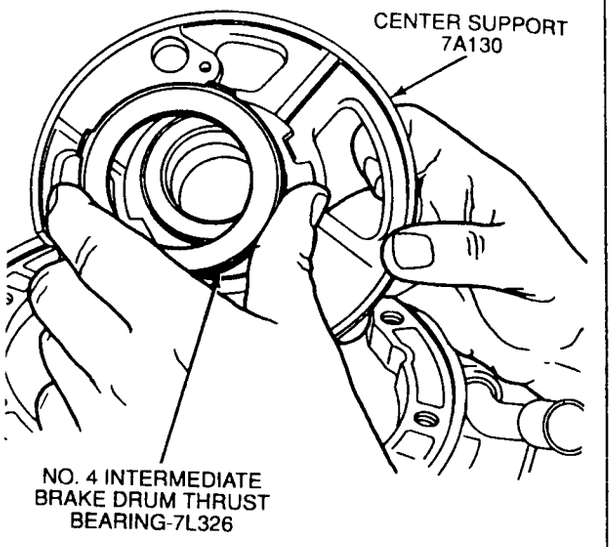

38. **CAUTION: Do not apply pressure to the rear planet support while installing. Damage to the sealing rings may result. Make sure it is seated.**

Position the center support into the reverse clutch drum. Use the input shaft as an aid to seat the center support. Gently wiggle the input shaft from side to side until the center support is seated against the case shoulder. Remove the input shaft.

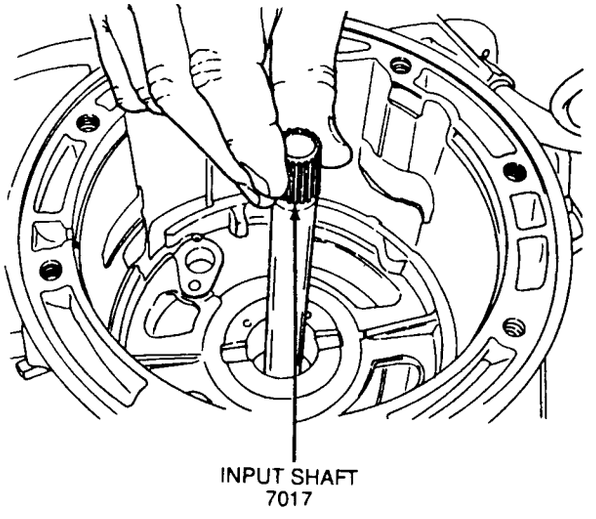

39. **CAUTION: Install the retaining ring in the transmission case groove with the tapered side facing up.**

    CAUTION: The retaining ring must be installed with the notch opening as shown. This will prevent damage to the Turbine Shaft Speed (TSS) Sensor wires.

    Install the center support retaining ring in the transmission case groove.

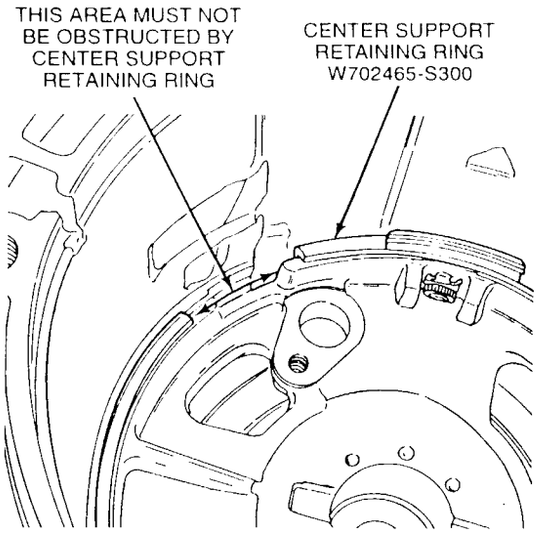

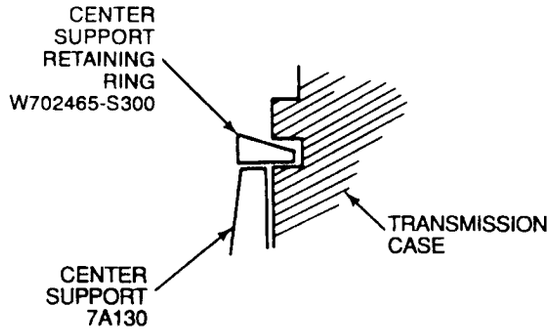

40. Ensure that the nut and cage assembly is in place.

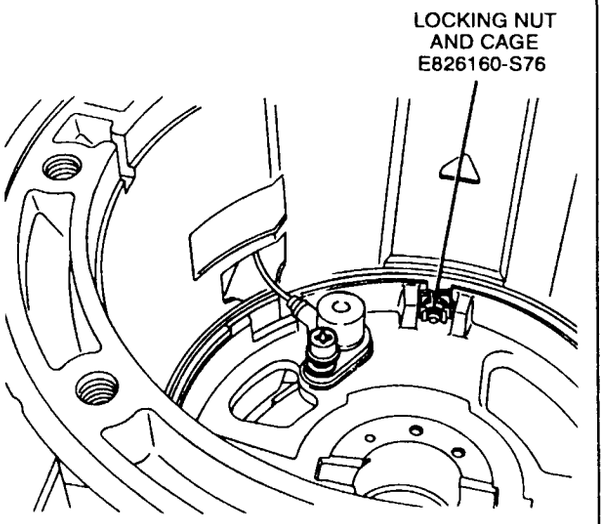

41. Use a 5mm Allen wrench to install the M6 x 20mm center support capscrew into the nut and cage assembly as shown. Tighten the center support capscrew to 9-13 N·m (80-115 lb-in).

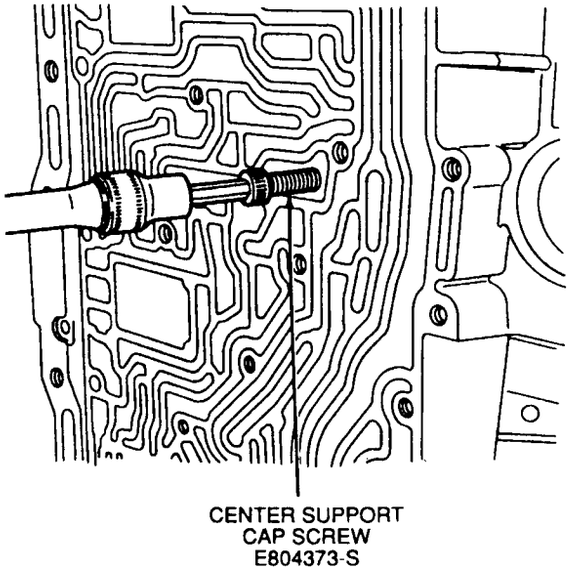

42. **CAUTION: Carefully route the Turbine Shaft Speed (TSS) Sensor connector and wiring harness through the opening in the case. Do not damage the wiring.**

Route the TSS sensor connector and wiring harness through the opening in the case.

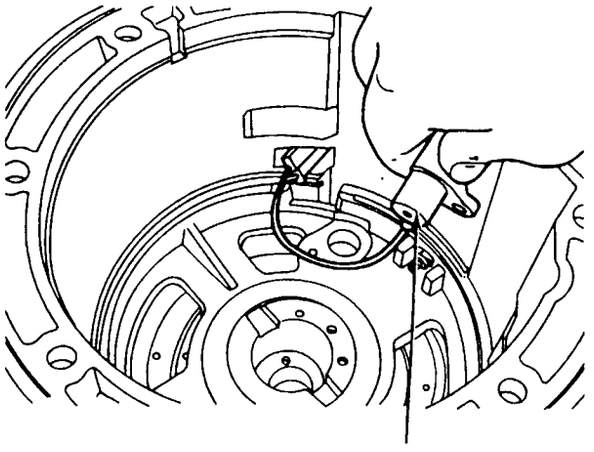

TSS SENSOR
7M101

43. Install the Turbine Shaft Speed (TSS) Sensor on the center support. Install the TSS screw. Tighten the TSS screw to 8-11 N·m (71-97 lb-in).

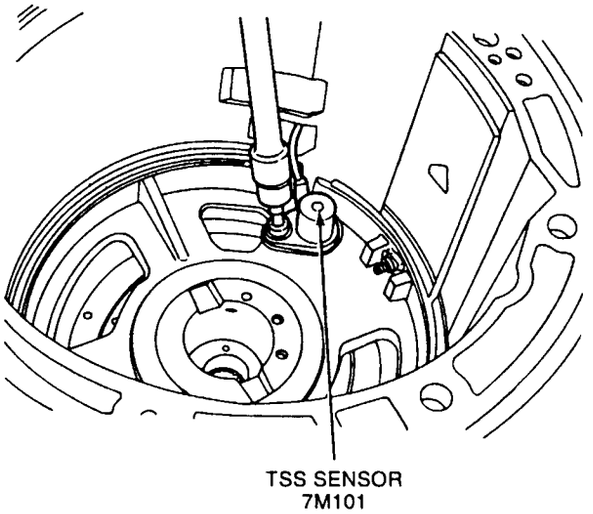

TSS SENSOR
7M101

44. **CAUTION: Use only the No. 3 center shaft thrust bearing assembly.**

NOTE: No. 3 bearing has no notches on the outer race.

Install the No. 3 center shaft thrust bearing assembly.

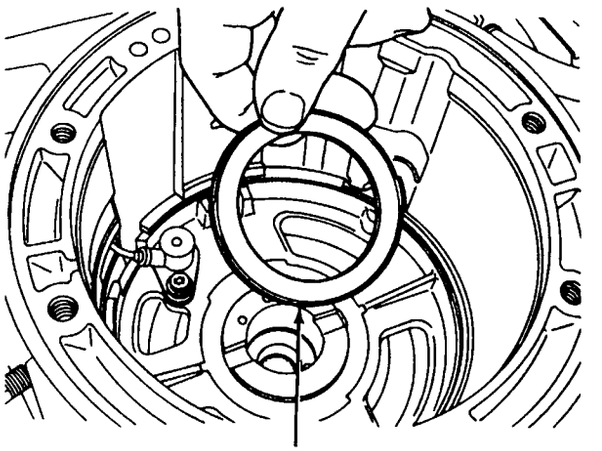

NO. 3 CENTER SHAFT
THRUST BEARING
ASSEMBLY-7D014

45. **CAUTION: Do not bend the exciter wheel.**

Install the planet gear overdrive carrier, overdrive ring gear, overdrive one-way clutch and overdrive center shaft assembly.

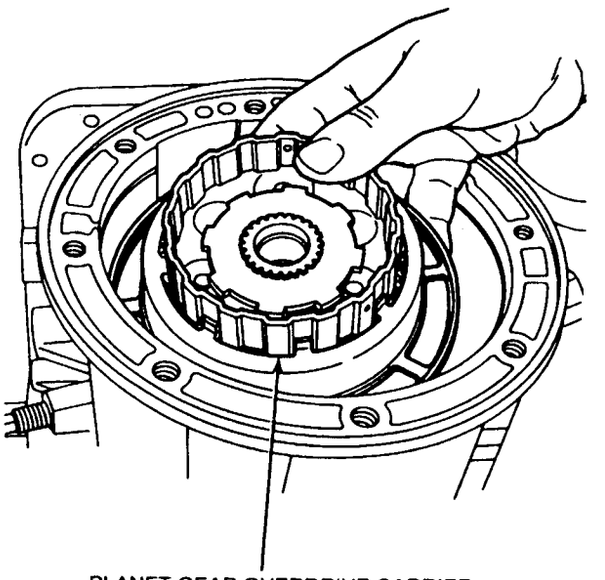

PLANET GEAR OVERDRIVE CARRIER,
OVERDRIVE RING GEAR,
OVERDRIVE ONE-WAY CLUTCH
AND OVERDRIVE CENTER SHAFT ASSEMBLY

46. **NOTE: Perform TSS Air Gap Clearance Check.** This step and the next two steps describe the procedures for checking the turbine shaft speed (TSS) sensor air gap clearance.

    Place the thin blade of turbine shaft speed sensor gauge over the turbine shaft speed (TSS) sensor as shown. Rotate the exciter wheel. The exciter wheel triggering window SHOULD pass over the thin blade of the TSS gauge. If it doesn't, the planet gear overdrive carrier and exciter wheel MUST be replaced.

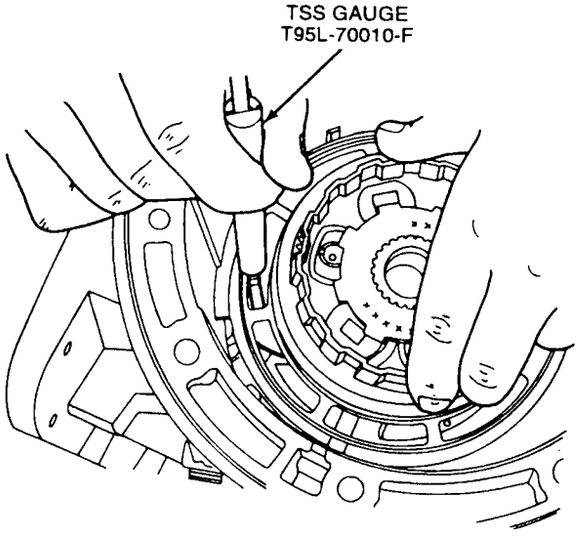

47. Place the thick blade of turbine shaft speed sensor gauge over the turbine shaft speed (TSS) sensor as shown. Rotate the exciter wheel. The exciter wheel triggering window SHOULD NOT pass over the thick blade of the TSS gauge. If it does, the planet gear overdrive carrier and exciter wheel MUST be replaced.

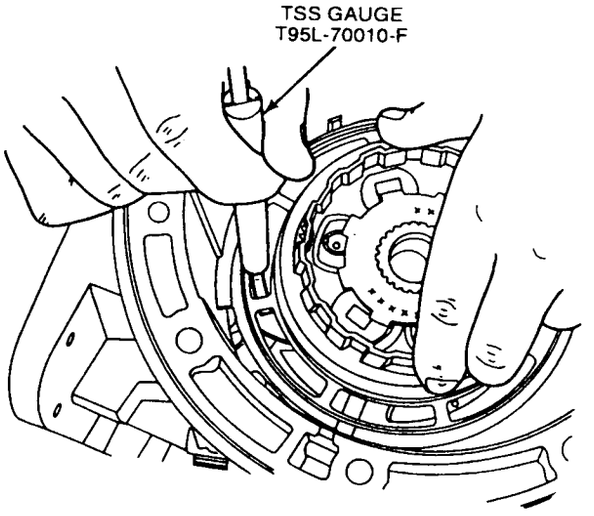

48. Repeat the previous two steps for the remaining exciter wheel triggering windows.
49. Align the clutch plates and overdrive adapter gear and install the overdrive brake and coast clutch drum assembly.

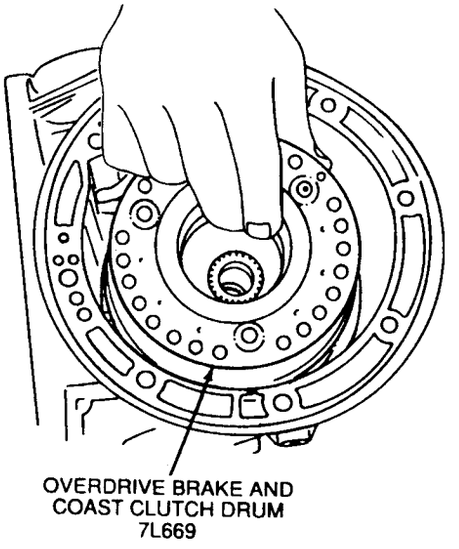

50. Install the overdrive band lever-to-case bracket and overdrive band servo lever as shown.

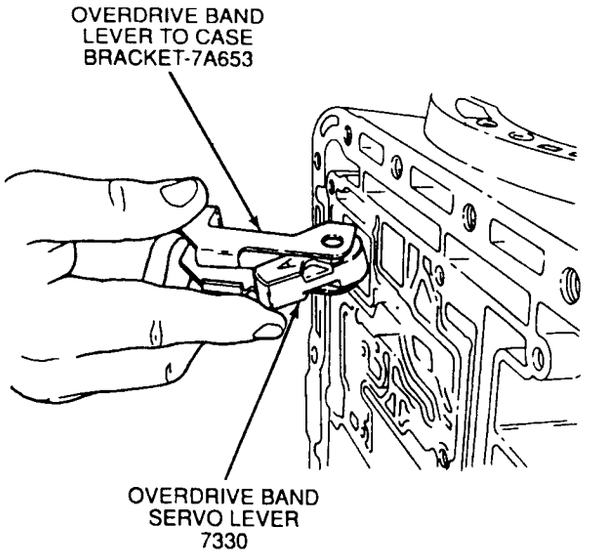

51. NOTE: The overdrive band actuating lever shaft is longer than the intermediate band actuating lever shaft.

Install the overdrive band actuating lever shaft through the overdrive band lever to case bracket and overdrive band servo actuating lever.

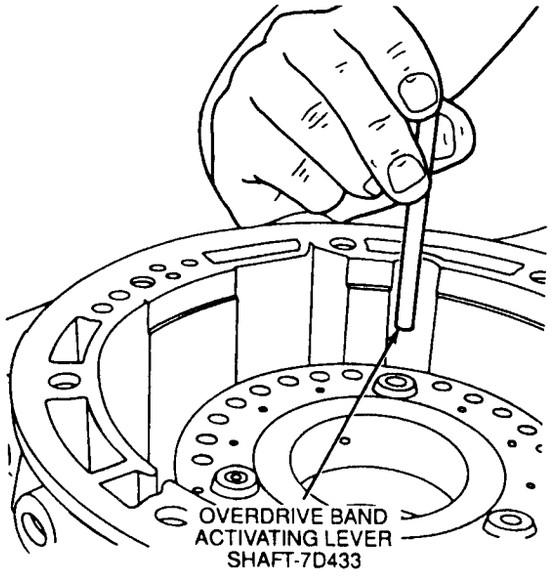

52. Install the overdrive band apply strut.

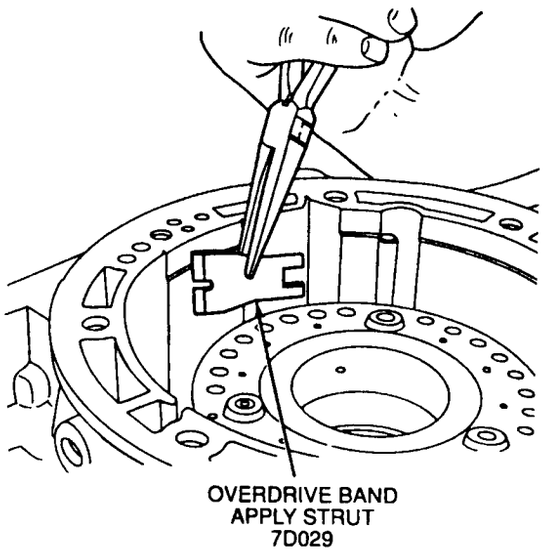

53. NOTE: If the overdrive band is reused, it must be installed in the same position as when removed.

Install the overdrive band assembly over the overdrive brake and coast clutch drum.

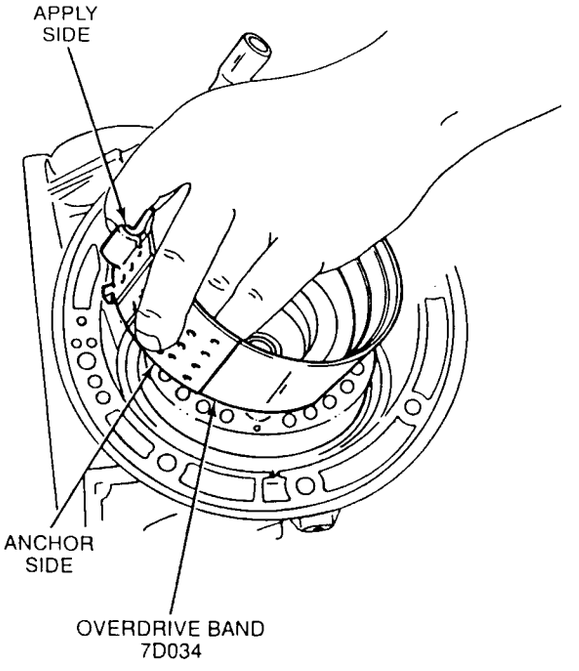

54. NOTE: Use the band adjusting screw as a temporary alignment guide.

    Install the overdrive band anchor strut.

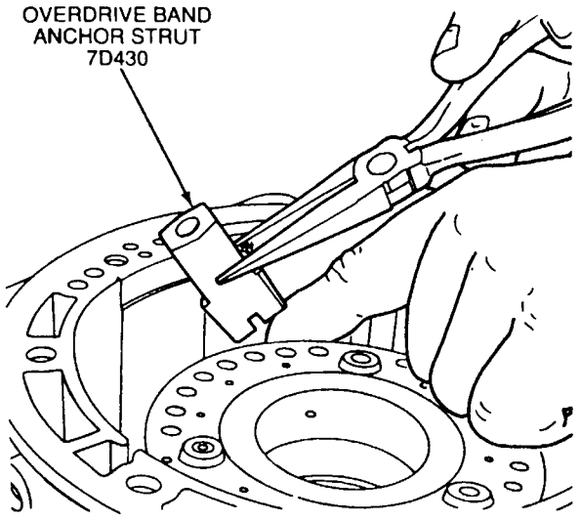

55. Install the overdrive band adjusting screw.

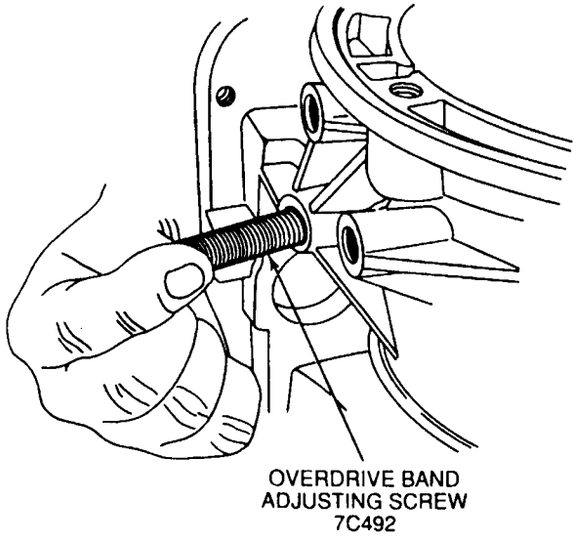

56. Perform the **FRONT END PLAY CHECK** procedure as follows:

    a. **CAUTION: Be sure the pump body is seated against the washer and overdrive brake and coast clutch drum. The pump body must be below the level of the case gasket surface.**

    Use petroleum jelly to hold any No. 1 front pump thrust washer on the rear of the pump. The washer tabs go into the pump face. Place the pump into position in the case.

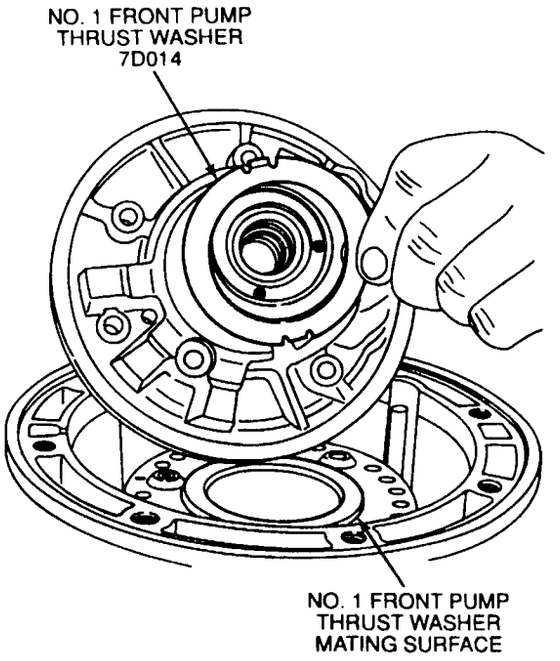

    b. **CAUTION: The gauge bar must rest on the gasket surface.**

    Place Gauge Bar T93T-77003-AH across the case as shown.

    c. Place a micrometer on the gauge bar and extend the probe until it contacts the pump surface.

    d. Read the micrometer and subtract the thickness of the gauge bar (17.78mm [0.700 inch]). Record this as dimension "A."

    e. Move the gauge bar to the opposite side of the case.

    f. Repeat Steps c and d and record this measurement as dimension "B."

g. Add dimensions "A" and "B" together and divide by 2. This is the front end clearance, dimension "C."

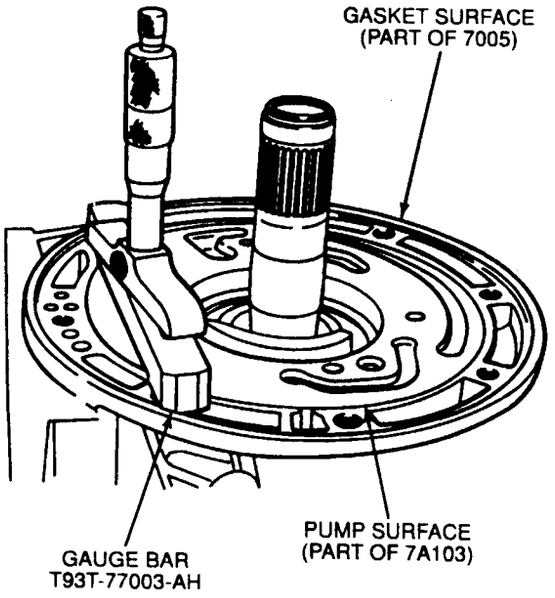

h. **CAUTION: If the average is below the specification, choose a thinner washer. If the average is above the specification, choose a thicker washer.**

NOTE: The front end play specification is .018-.64mm (.007-.025 inch).

NOTE: The tabs on the washer go into the pump face.

Remove the pump and install the correct No. 1 thrust washer. Use petroleum jelly to hold the washer in place.

TRANSMISSION END CLEARANCE

Dimension "C"	Identification: Number Stamped on Washer	Service Part Number	Washer Thickness
Front No. 1 (All Engines) 0.18-0.64mm (0.007-0.025 In.) Without Gasket	1	F0TZ-7D014-A	1.35-1.40mm (0.053-0.055 In.)
	2	F0TZ-7D014-B	1.55-1.60mm (0.061-0.063 In.)
	3	F0TZ-7D014-C	1.65-1.70mm (0.065-0.067 In.)
	4	F0TZ-7D014-D	1.75-1.80mm (0.069-0.071 In.)
	5	F0TZ-7D014-E	1.85-1.90mm (0.073-0.075 In.)
	6	F0TZ-7D014-F	1.95-2.00mm (0.077-0.079 In.)
	7	F0TZ-7D014-G	2.05-2.10mm (0.081-0.083 In.)

57. Install a new drive gear O-ring.

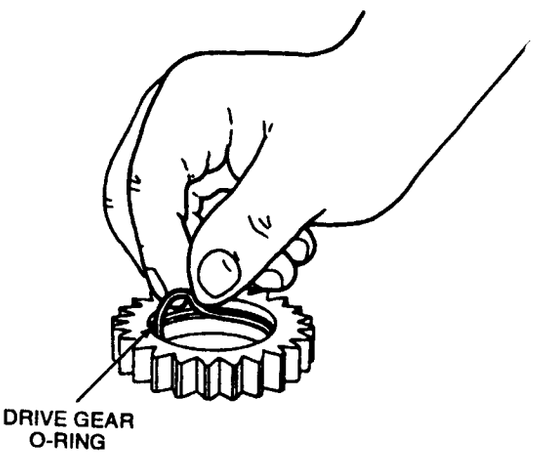

58. Lubricate front pump seal sizing tool T95L-70010-G seat O-ring.
59. Install Front Pump Drive Gear O-Ring Seating Tool T95L-70010-G into pump drive gear to seat O-ring into groove.

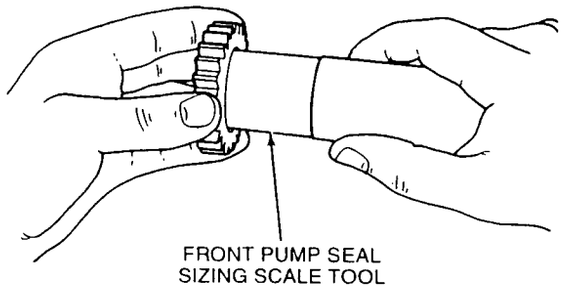

FRONT PUMP SEAL
SIZING SCALE TOOL
T95L-70010-G

60. Remove Front Pump Drive Gear O-Ring Seating Tool T95L-70010-G.
61. **CAUTION: The chamber on the inside edge of the small gear must be up when in the pump housing gear pocket. The dimple on the larger gear must be down when in the pump housing gear pocket.**

    Position the two pump gears into the pump housing. Apply a lubricant to the pump gears to prevent scoring at initial start-up.

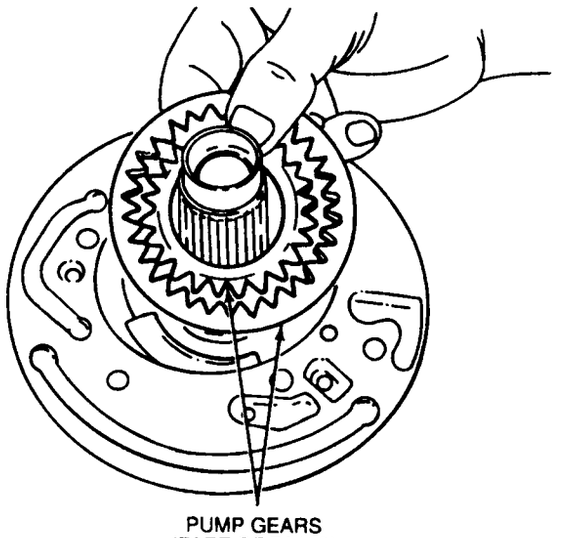

PUMP GEARS
(PART OF 7A103)

62. **CAUTION: Make sure the holes in the plate line up with the holes in the pump.**

    Install the fluid pump adapter plate.

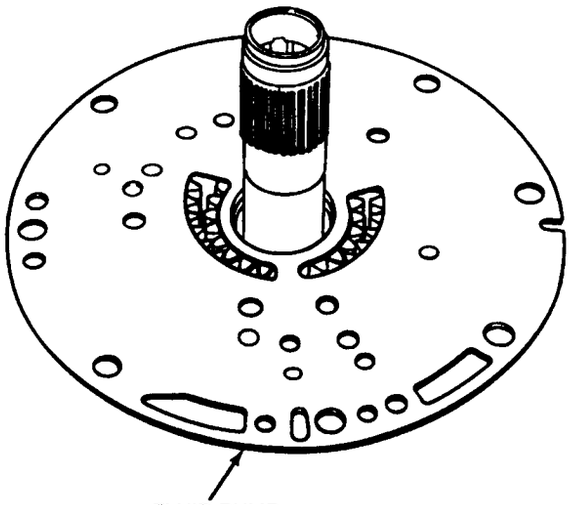

FLUID PUMP
ADAPTER PLATE
7B472

63. **CAUTION: Do not allow the pump gears to come out of the pump housing pocket.**

    NOTE: The notch on the outside of the fluid pump adapter plate will be at the nine o'clock position, relative to the converter housing.

    Turn the converter housing face down on the bench. Hold the fluid pump adapter plate against the front pump support and gear to keep the pump gears in place. Turn the pump and adapter plate over and place on the converter housing.

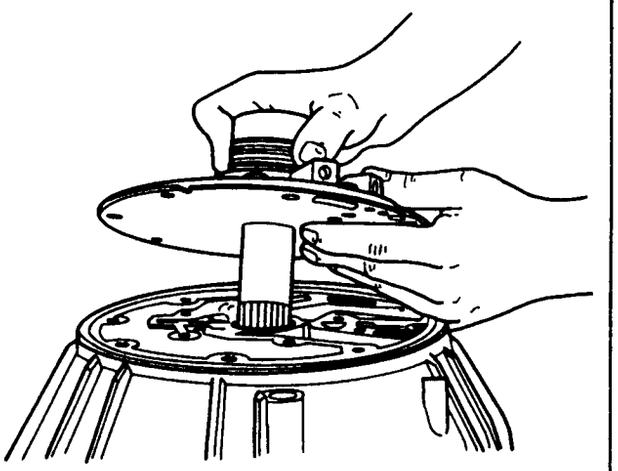

64. Install the six M8 x 35mm Torx® head front pump support and gear bolts finger-tight only.

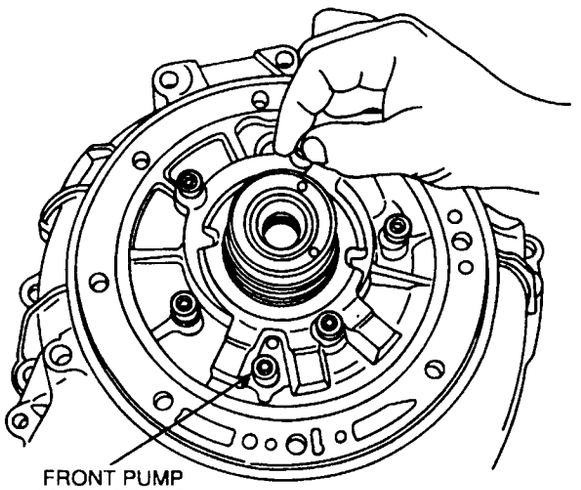

FRONT PUMP SUPPORT AND GEAR BOLTS (6 REQ'D) E804375-S72

65. **CAUTION: Front Pump Alignment Set T74P-77103-X must be used to properly align the front pump support and gear to the fluid pump adapter plate. This will prevent seal leakage, gear noise, broken gears and bushing failure.**

Select the gauge that will be the snuggest fit when placed over the front pump support and gear.

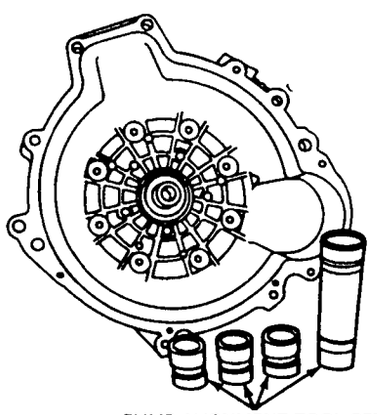

PUMP ALIGNMENT TOOL SET T74P-77103-X

66. Thread the gauge into Pump Alignment Handle T74P-77103-H. Slide the tool over the front pump support and gear until it bottoms out in the pump gear pocket. This centers the pump to the converter housing.

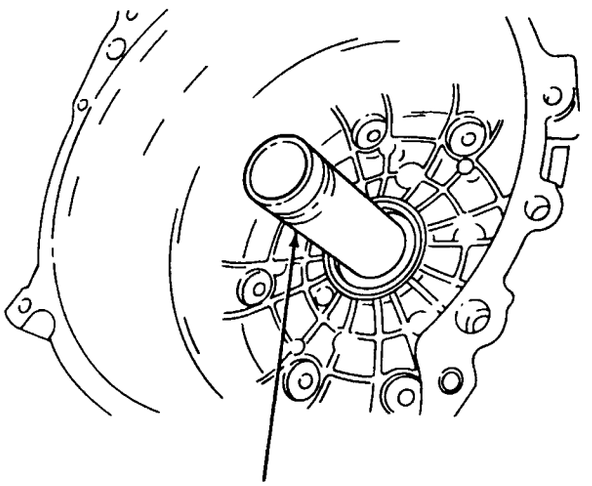

PUMP ALIGNMENT HANDLE T74P-77103-H

67. Use a Torx® 40 socket to tighten the six M8 x 35mm front pump support and gear bolts. Tighten the front pump support and gear bolts in a star pattern to 22-28 N·m (16-21 lb-ft). Remove the alignment tool.

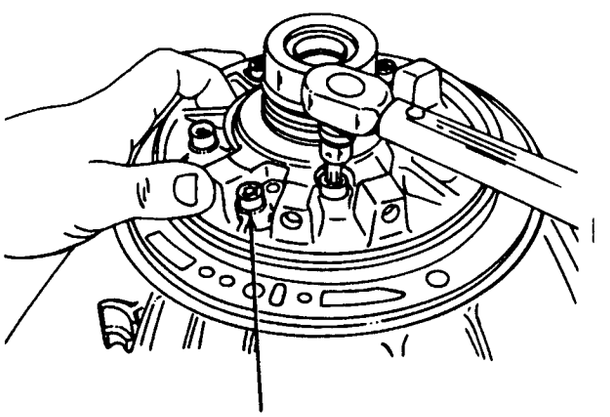

FRONT PUMP SUPPORT AND GEAR BOLTS E804375-S72 (6 REQ'D)

68. NOTE: The overdrive brake drum seal ring gaps must be placed 180 degrees apart. Verify correct seal installation. Be sure seal grooves are clean and free of burrs.

    Install the overdrive brake drum seal rings.

RIGHT

WRONG

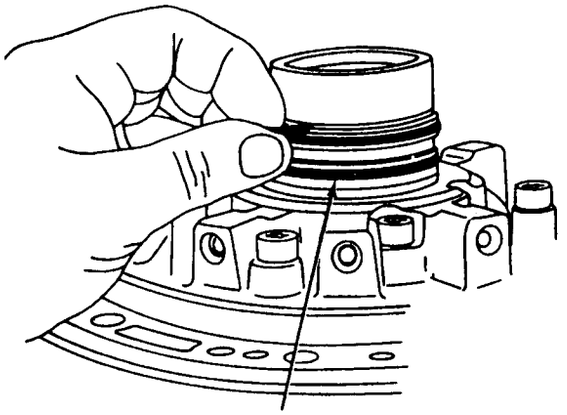

OVERDRIVE BRAKE DRUM
SEAL RINGS
(2 REQ'D)
7D025

69. Install a new converter housing square cut seal ring.

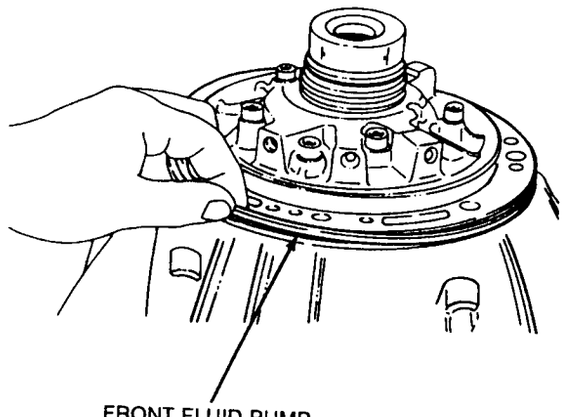

FRONT FLUID PUMP
SQUARE CUT
SEAL RING
7A248

70. NOTE: Make sure the front fluid pump seal square cut ring is installed on the converter housing and pump assembly.

    Place a new front fluid pump gasket on the fluid pump adapter plate as shown. Use petroleum jelly to hold the front fluid pump gasket in place.

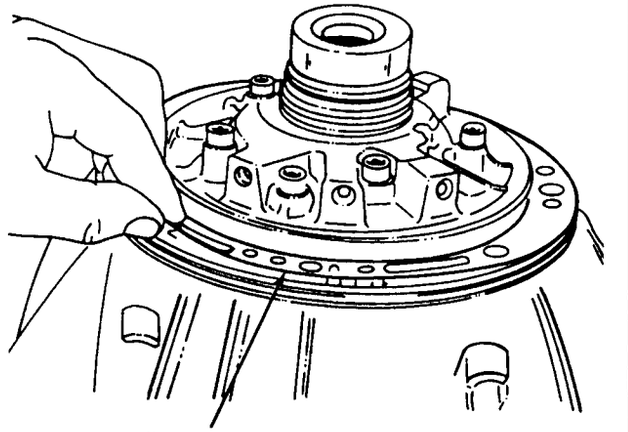

FRONT FLUID
PUMP GASKET
7A136

71. Install the correct No. 1 front pump thrust washer on the front pump support and gear. Use petroleum jelly to hold the washer in place.

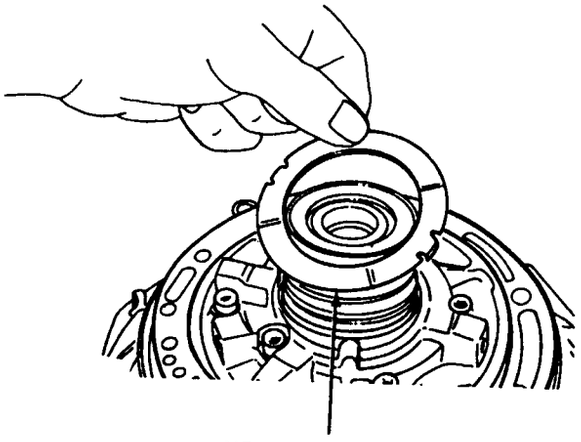

NO. 1 FRONT PUMP
THRUST WASHER
7D014

72. NOTE: Verify correct seal installation. Be sure seal grooves are clean and free of burrs.

Turn the converter housing over and install the front pump support seal ring.

RIGHT

WRONG

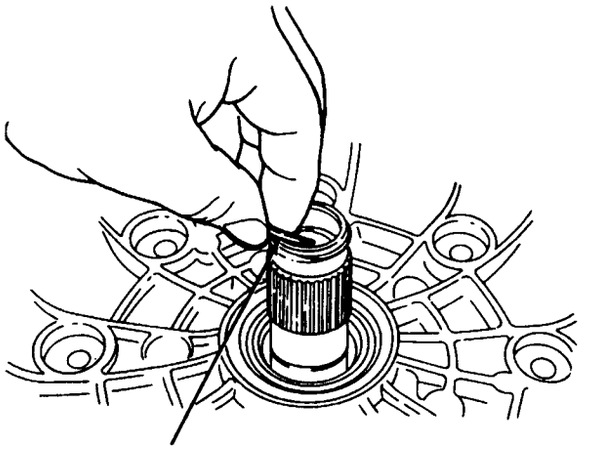

FRONT PUMP
SUPPORT
SEAL RING
7L323

73. Install the input shaft as a guide for the converter housing and front pump support and gear assembly. Install the alignment pins as shown.

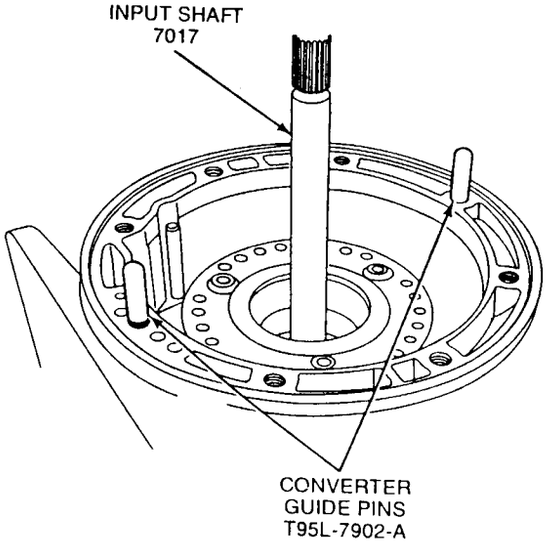

CONVERTER
GUIDE PINS
T95L-7902-A

74. Install the converter housing and front pump support and gear assembly (with the oil pump gasket) and the No. 1 front pump thrust washer to the case.

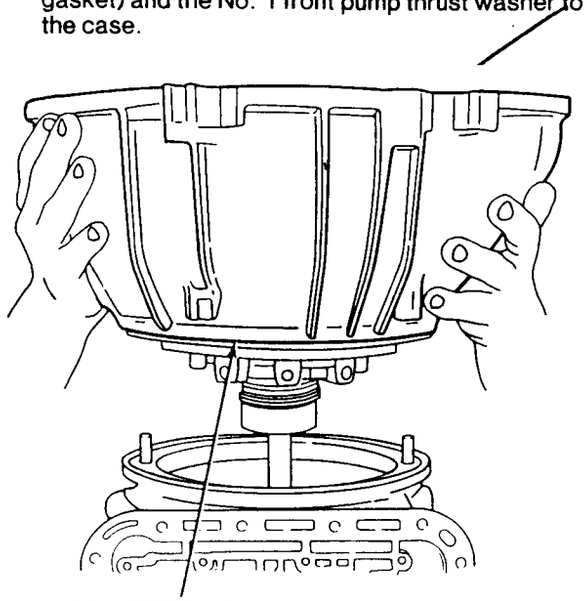

CONVERTER HOUSING ASSEMBLY-7976

75. NOTE: Lubricate O-rings on converter housing screws.

    Remove alignment pins and use a 17mm socket to install the eight **NEW** M10 x 33mm converter housing screws. Tighten the converter housing screws in a star pattern to 36-52 N·m (27-38 lb-ft).

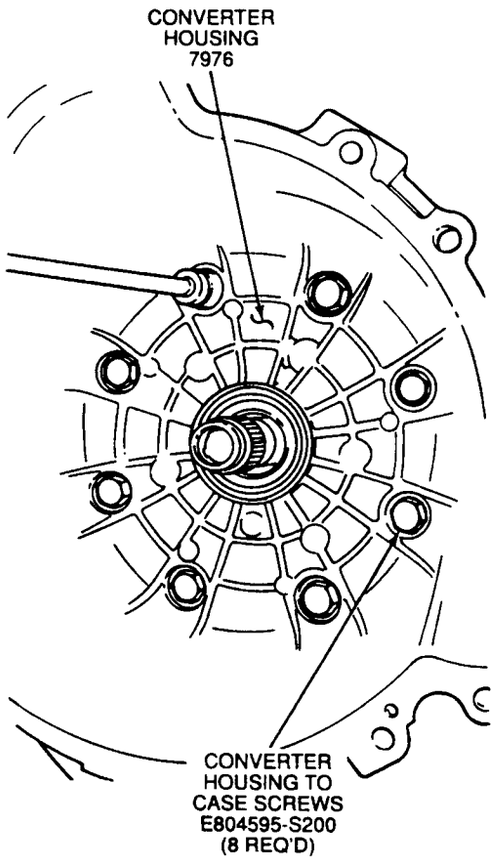

76. **WARNING: MAKE SURE THE LOCK PIN ON BENCH-MOUNTED HOLDING FIXTURE T57L-500-B IS SECURE.**

    Rotate the transmission assembly so the fluid pan rail is facing up.

77. **CAUTION: Do not damage the oil ring during installation. Do not press the servo cover and O-ring past the relief hole in the case. O-ring damage may occur.**

Install the intermediate servo spring, piston and cover assembly with O-ring.

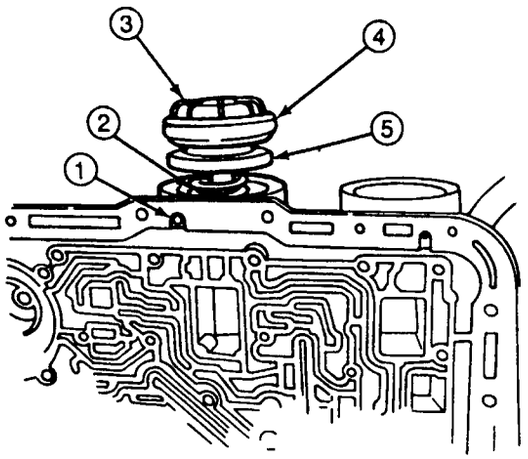

Item	Part Number	Description
1	—	Relief Hole (Part of 7005)
2	7D028	Spring
3	7D027	Servo Cover
4	7D040	O-Ring
5	7D021	Piston and Rod Assembly

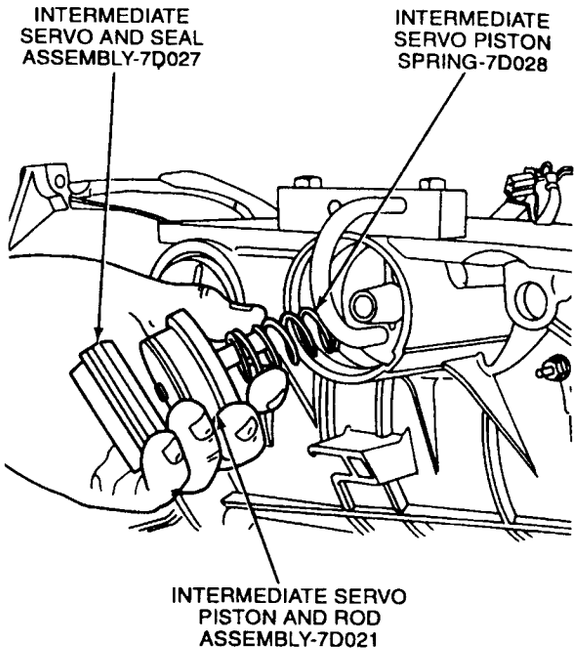

78. NOTE: The J-hook must be in the appropriate hole for the servo being removed, and tool number should be facing up.

Install Servo Cover Compressor T95L-77028-A over the intermediate servo cover at the fluid pan rail. Tighten the bolts.

79. Using a 1/2-inch wrench, tighten the nut on the J-hook until there is a gap between the servo cover and the snap ring.

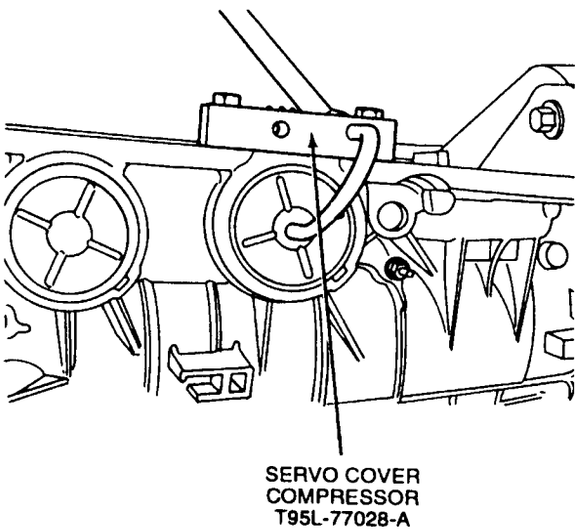

80. Carefully install the servo cover snap ring.

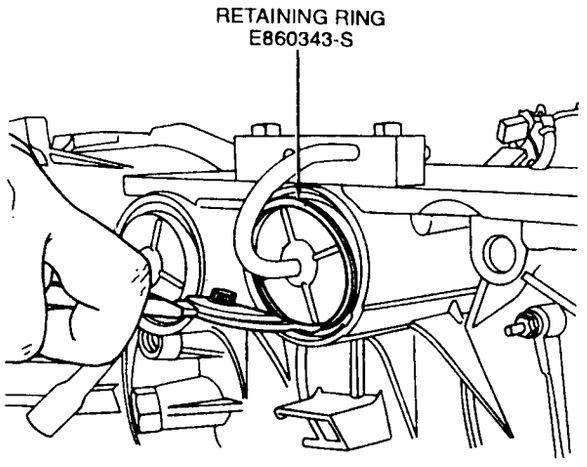

81. **CAUTION: The servo cover is under spring tension.**

    Carefully back off the nut on the J-hook until the servo spring is unloaded.

82. Remove Servo Cover Compressor T95L-77028-A.

83. **CAUTION: Do not damage the oil ring during installation. Do not press the servo cover and O-ring past the relief hole in the case. O-ring damage may occur.**

    Install the overdrive servo spring, piston and cover assembly with O-ring.

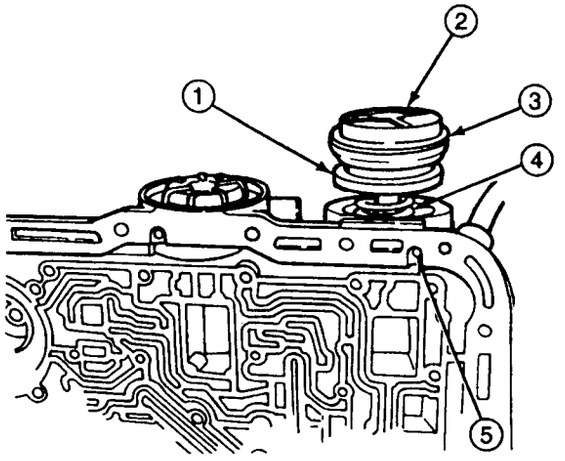

Item	Part Number	Description
1	7D021	Piston and Rod Assembly
2	7D027	Servo Cover
3	7D040	O-Ring
4	7D028	Spring
5	—	Relief Hole (Part of 7005)

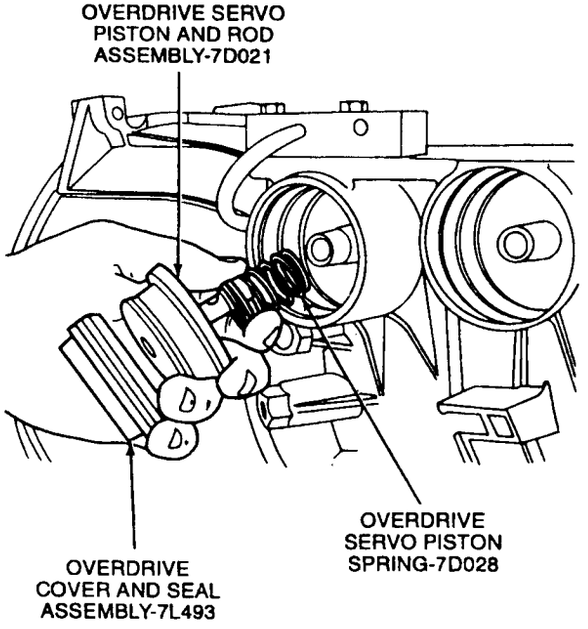

84. NOTE: The J-hook must be in the appropriate hole for the servo being removed, and tool number should be facing up.

    Install Servo Cover Compressor T95L-77028-A over the overdrive servo cover at the fluid pan rail. Tighten the bolts.

85. Using a 1/2-inch wrench, tighten the nut on the J-hook until there is a gap between the servo cover and the snap ring.

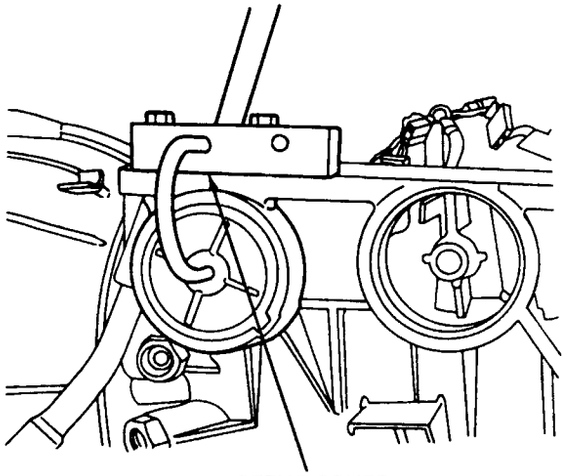

SERVO COVER COMPRESSOR T95L-77028-A

86. Carefully install the servo cover snap ring.

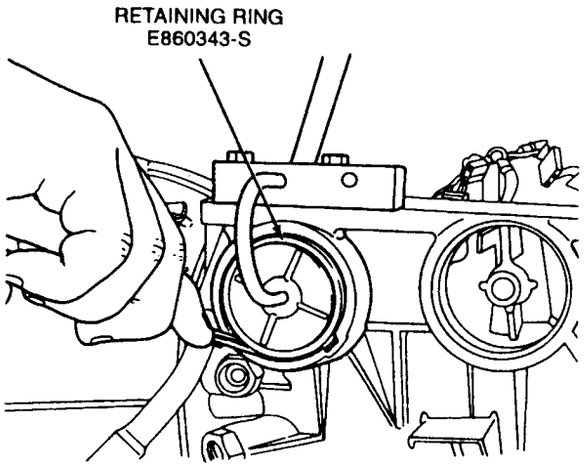

87. **CAUTION: The servo cover is under spring tension.**

    Carefully back off the nut on the J-hook until the servo spring is unloaded.

88. Remove Servo Cover Compressor T95L-77028-A.

Perform Overdrive Band Adjustment

89. **CAUTION: Install, but do not tighten, a new locknut on the band adjusting stop. Apply petroleum jelly to the locknut seal.**

    CAUTION: The overdrive servo must be installed prior to band adjustment. Tighten the band adjusting stop using Band Adjustment Torque Wrench Set T71P-77370-A. The wrench will click at 14 N·m (10 lb-ft). Back off the band adjusting stop exactly two turns and hold that position. Tighten the locknut to 47-61 N·m (35-45 lb-ft) using a 19mm wrench.

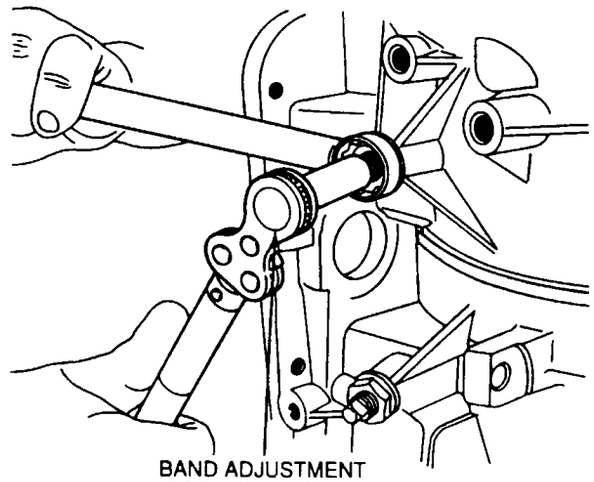

BAND ADJUSTMENT TORQUE WRENCH SET-T71P-77370-A

Perform Intermediate Band Adjustment

90. **CAUTION: Install, but do not tighten, a new locknut on the band adjusting stop. Apply petroleum jelly to the locknut seal.**

CAUTION: Intermediate servo must be installed prior to band adjustment.

Tighten the band adjusting stop using Band Adjustment Torque Wrench Set T71P-77370-A. The wrench will click at 14 N·m (10 lb-ft). Back off the band adjusting stop exactly two turns and hold that position. Tighten the locknut to 47-61 N·m (35-45 lb-ft) using a 19mm wrench.

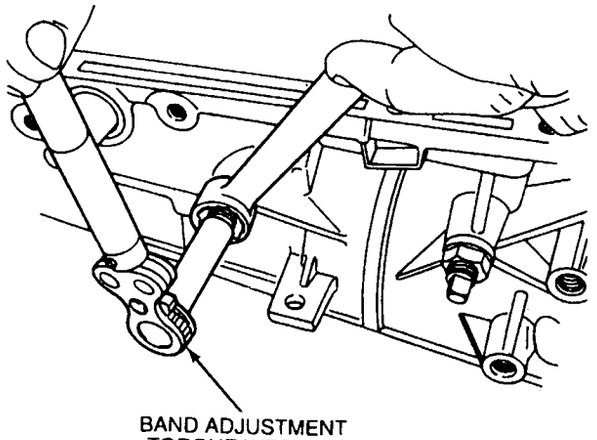

BAND ADJUSTMENT TORQUE WRENCH SET-T71P-77370-A

91. NOTE: Make sure the tab is in the lock position.

Lubricate and install the case 16-pin connector through the case until a click is heard.

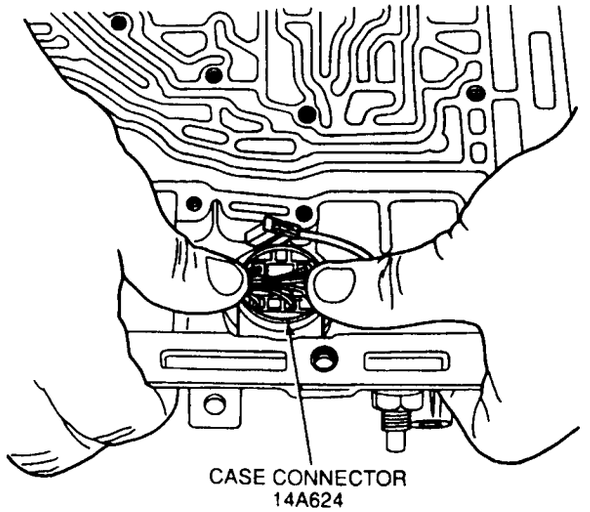

CASE CONNECTOR 14A624

92. **CAUTION: Do not overstretch the retaining ring.**

Lubricate and install the case connector retaining ring.

CASE CONNECTOR RETAINING RING 84280020

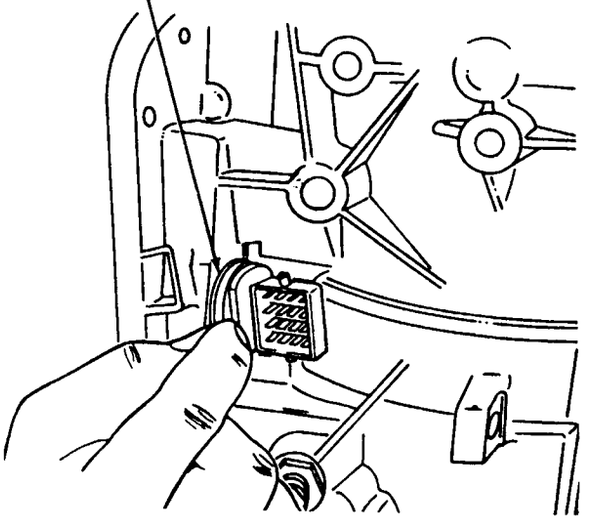

93. NOTE: Align the slot on the TSS connector with the slot on the 16-pin case connector.

Carefully install the TSS connector into the 16-pin case connector.

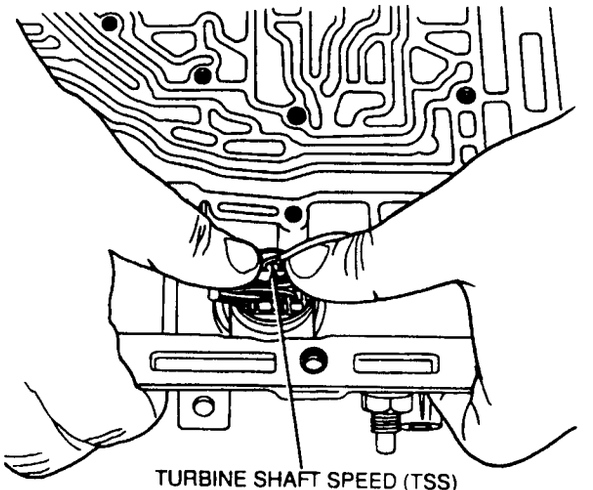

TURBINE SHAFT SPEED (TSS) SENSOR CONNECTOR (PARTY OF 7M101)

94. Install the alignment pins into the case in the positions shown.

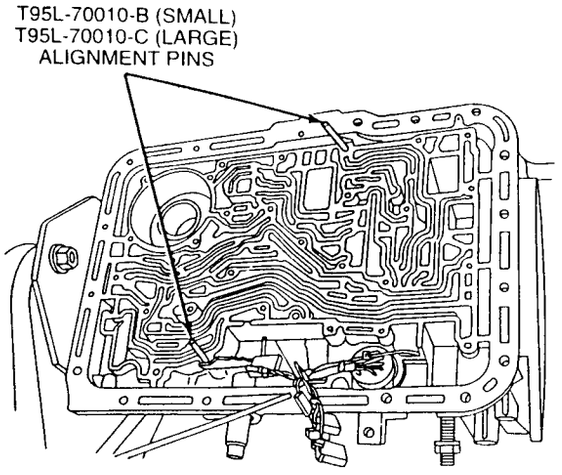

95. NOTE: Ensure main control assembly gasket is properly aligned.

Install the main control assembly on the case. Align the manual valve with the manual valve inner lever pin as shown.

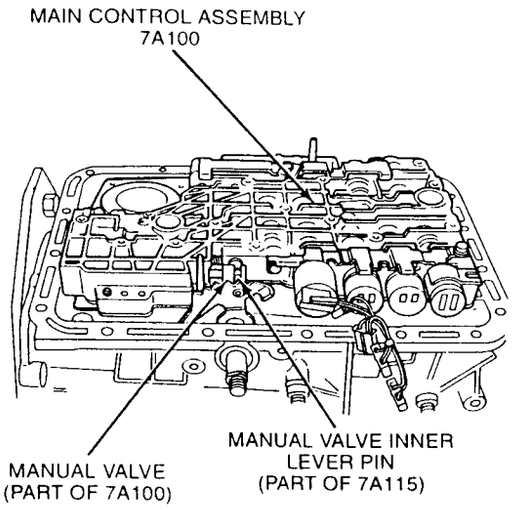

96. Install four M6 x 45mm screws in location A. Finger-tighten.

Valve Control Body Screws and Locations

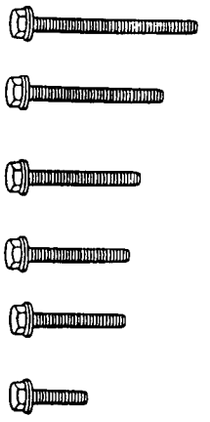

M6 X 55MM (E) - (1 REQUIRED) (FLUID FILTER)

M6 X 45MM (A) - E800154-S72 (4 REQUIRED)

M6 X 40MM (D) - E800153-S72 (16 REQUIRED)

M6 X 35MM (B) - E800163-S72 (2 REQUIRED)

M6 X 30MM (C) - E800185-S72 (2 REQUIRED)

20MM (F) - E800156-S72 (4 REQUIRED SERVO COVER)

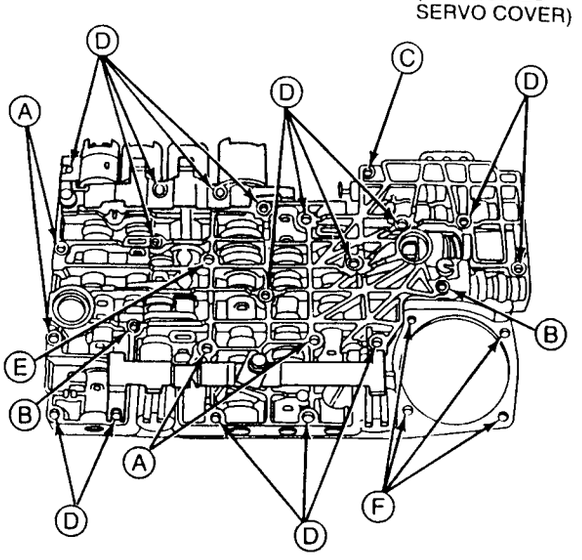

97. Install two M6 x 35mm screws in location B. Finger-tighten.

98. Install one M6 x 30mm screw in location C. Finger-tighten.

99. Remove both valve body alignment pins T95L-70010-B and T95L-70010-C.

100. Install sixteen M6 x 40mm screws in location D. Finger-tighten.

101. Tighten all screws to 8-11 N·m (71-97 lb-in) in sequence shown, using a 10mm socket.

Tightening Sequence

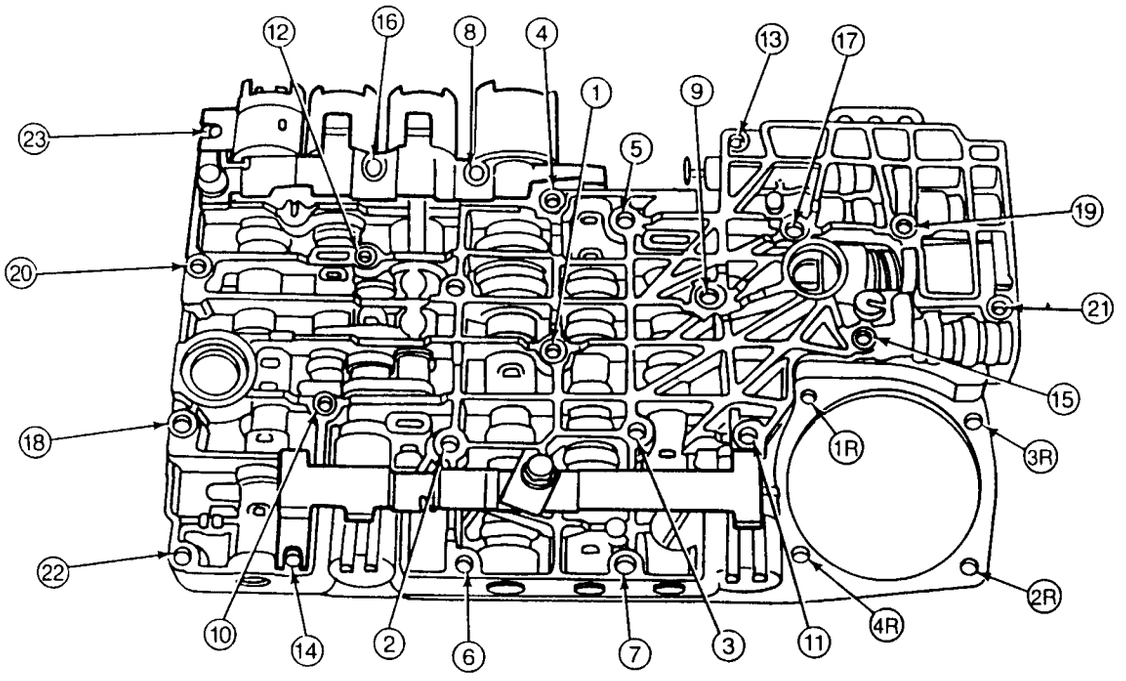

102. Install the manual valve detent spring. Install the manual valve detent spring screw in location A. Tighten the manual valve detent spring screw to 8-11 N·m (71-97 lb-in).

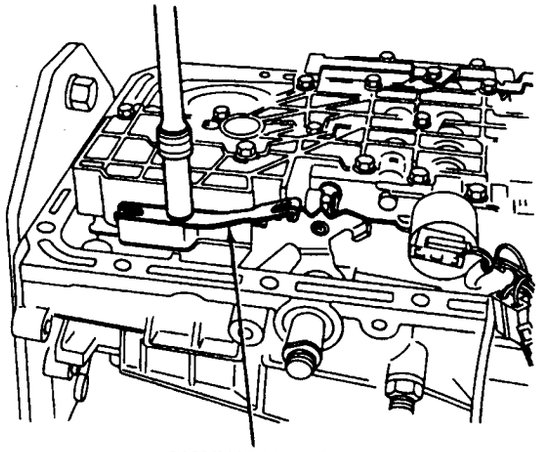

MANUAL VALVE
DETENT SPRING
7E332

103. NOTE: Perform Steps 104 through 111 only if rear servo piston rod is to be checked.

Remove the reverse band servo piston and rod from the case.

104. NOTE: An A4LD reverse servo return spring D4ZZ-7D031-A is to be used for the test spring.

Install the reverse band servo piston and rod into the servo bore along with a reverse band servo **test** spring.

105. Install a new reverse servo separator plate cover gasket. Install Servo Rod Selecting Gauge T74P-77190-A and tighten with the three bolts.

106. Tighten the servo gauge adjusting screw to 4 N·m (35 lb-in).

107. Install Dial Indicator with Bracketry TOOL-4201-C or equivalent on the transmission case. Position the indicator on the piston pad. Set the dial indicator to zero.

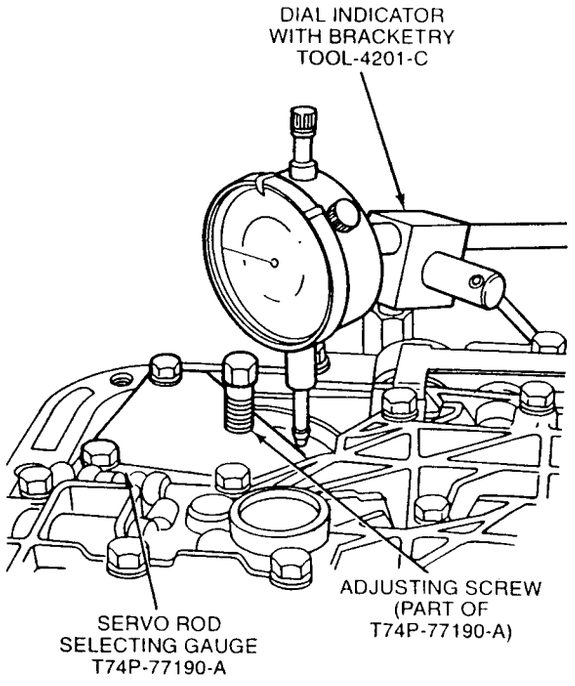

108. NOTE: If the piston travel in this step is 3-5.6mm (.120-.220 inch), it is within specification. If the piston travel is greater than 5.6mm (.220 inch), use the next longer piston and rod. If the piston travel is less than 3mm (.120 inch), use the next shorter piston and rod.

Back out the servo tool adjusting screw until it bottoms out on the tool. Record the distance the servo piston traveled.

109. **CAUTION: Make sure test spring is removed after this step.**

Using the above procedure, check the piston travel with the newly selected reverse band servo piston and rod (if required) to make sure that the piston travel is 3-5.6mm (.120-.220 inch).

Remove the servo adjusting tool and the reverse band servo **test** spring.

NOTE: Grooves are located on reverse band servo rod.

Length — mm	Length — Inches	I.D.
54/53	2.112/2.085	1 Groove
51/50	2.014/1.986	No Groove
49/48	1.915/1.888	2 Grooves

110. **CAUTION: The reverse servo test spring must be removed.**

Install the reverse servo cover and the four reverse servo cover bolts. Tighten the reverse servo cover bolts as shown to 9-13 N·m (80-115 lb-in).

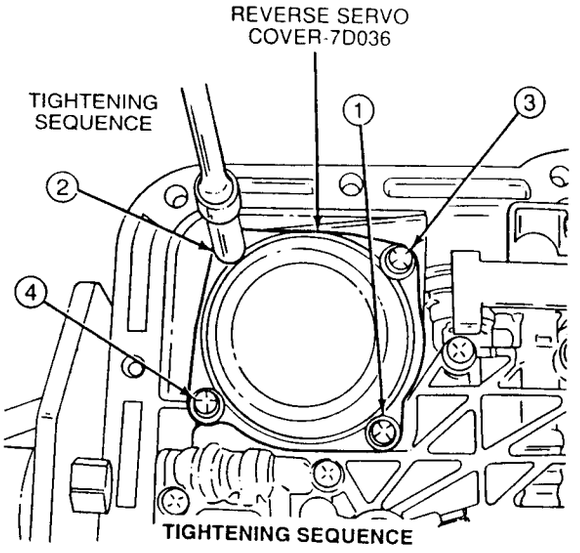

111. Carefully press down to install the solenoid connectors on the solenoids as shown.

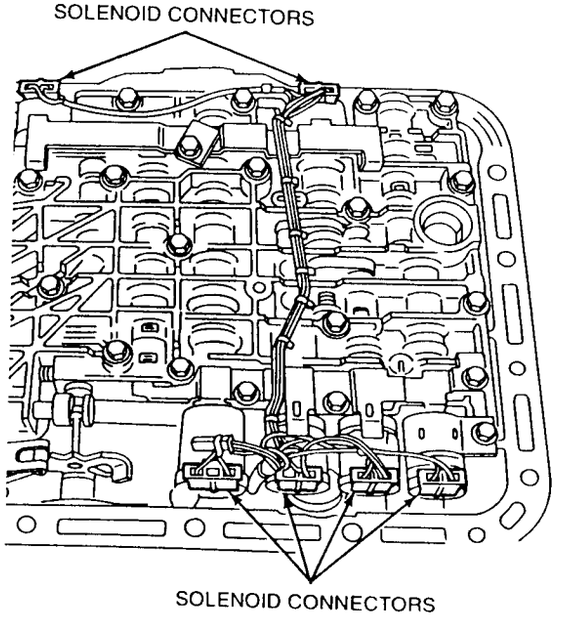

112. **CAUTION: Excessive pressure may break the locating pins.**

Install the wiring loom protector and guide. Align the pins in the holes of the solenoid brackets and gently push down.

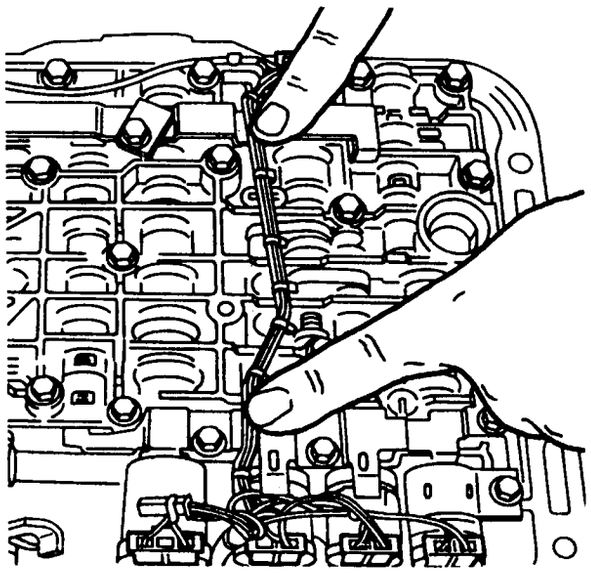

113. **CAUTION: Lubricate the fluid filter O-rings or they may be damaged.**

Install a new fluid filter assembly into the main control assembly. Install one E length M6 x 55 bolt as shown and tighten to 8-11 N·m (71-97 lb-in).

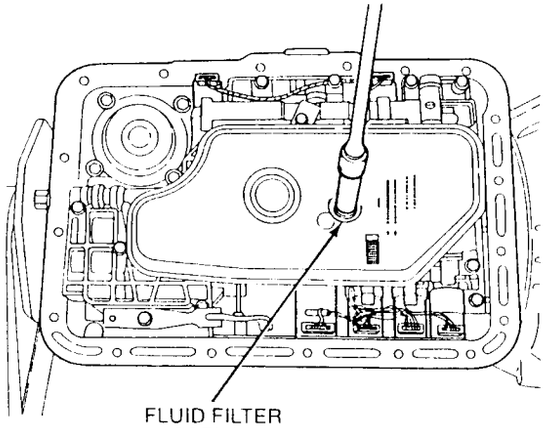

FLUID FILTER ASSEMBLY 7A098

114. Position a new fluid pan gasket on the case fluid pan rail.

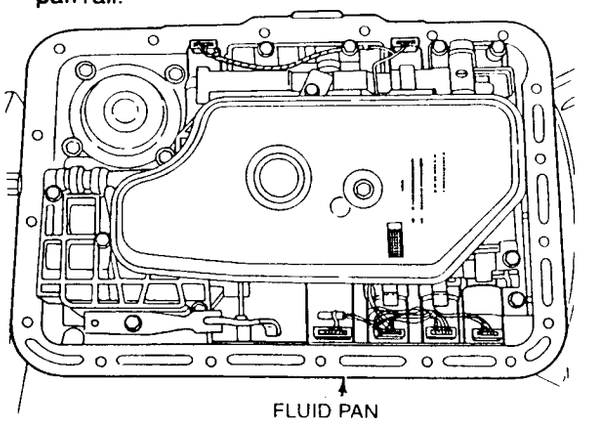

FLUID PAN GASKET-7A191

115. Install the fluid pan on top of the gasket. Use a 13mm socket to install the eighteen M8 x 16mm fluid pan screws. Tighten the fluid pan screws to 11-13 N·m (97-115 lb-in).

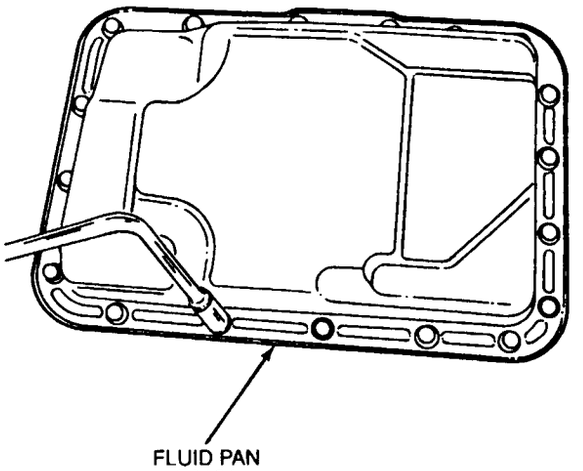

FLUID PAN 7A194

NOTE: A heat shield is on all 4.0L applications.

116. Align heat shield retaining clips over fluid pan rail and install the heat shield on the fluid pan rail.

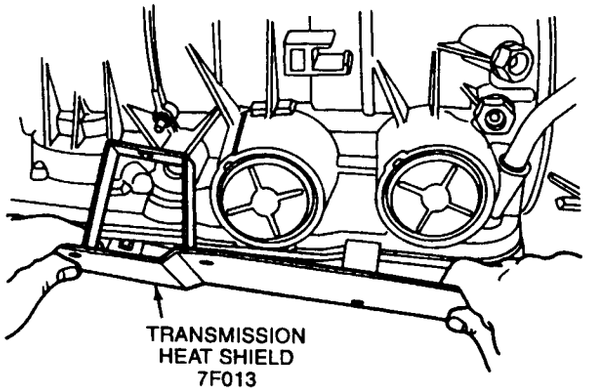

TRANSMISSION HEAT SHIELD 7F013

117. Install the heat shield nut. Tighten the heat shield nut to 8-11 N·m (71-97 lb-in).

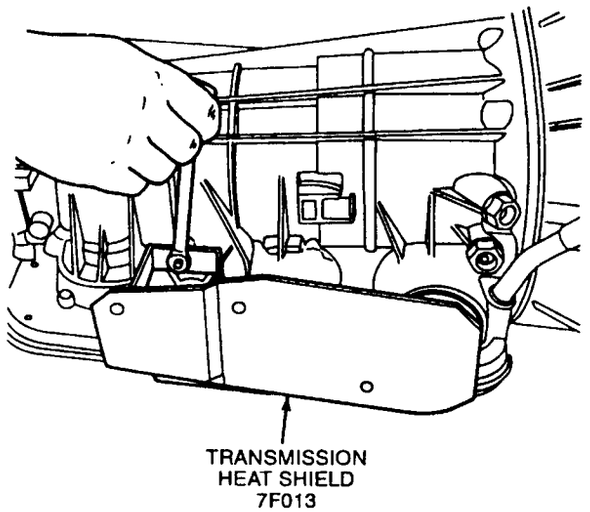

118. Remove the transmission from the bench fixture pivot. Place the transmission on a flat surface. Remove the fixture and adapter plate.

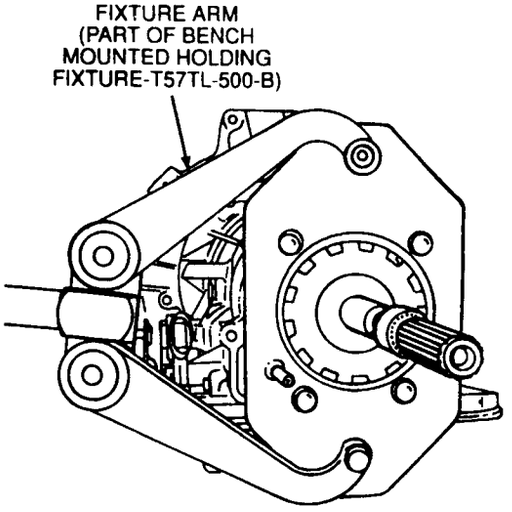

CAUTION: Make sure the parking lever actuating rod is correctly seated into the case parking rod guide cup.

NOTE: Use petroleum jelly to hold the gasket in place.

NOTE: The guide cup is press-fit into the extension housing and is not serviced separately.

119. Install a new extension housing gasket on the case.

120. Install the parking pawl, pawl return spring and pawl shaft into the extension housing.

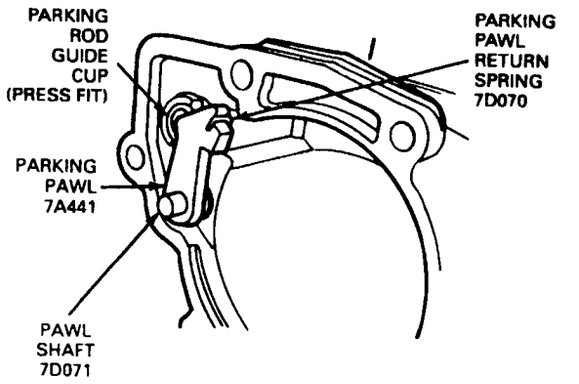

121. Install the extension housing. Install the five M10 x 30mm extension housing screws and two studs. Tighten the extension housing screws and studs to 36-52 N·m (27-38 lb-ft).

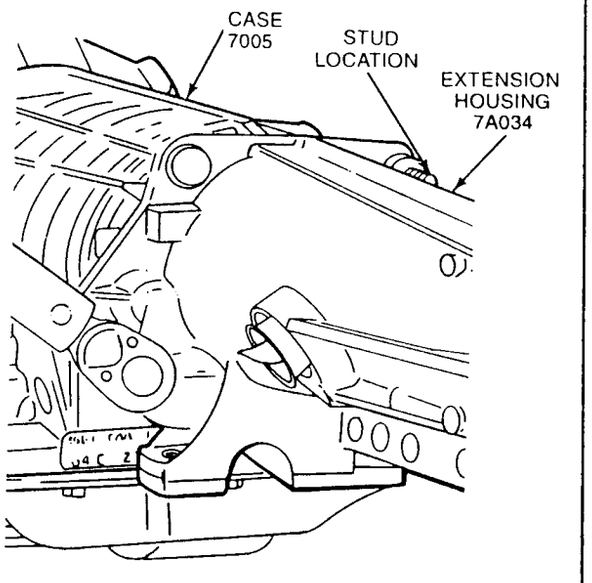

CAUTION: The lube hole in the bushing must be aligned with the lube groove in the extension housing.

CAUTION: Tool will bottom when bushing is in the proper position.

NOTE: The lube hole should be located at the 3 o'clock position with view extension from the rear.

NOTE: Install the extension housing bushing only if it was removed in disassembly.

122. Install the extension housing bushing using Extension Housing Bushing Replacer T77L-7697-F.

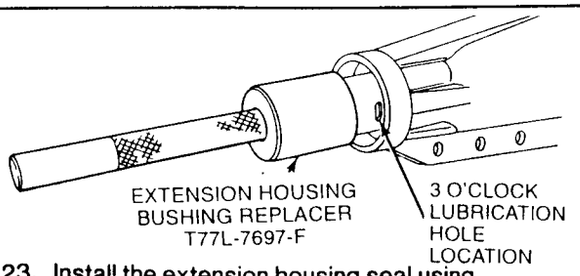

123. Install the extension housing seal using Extension Housing Seal Replacer T74P-77052-A.

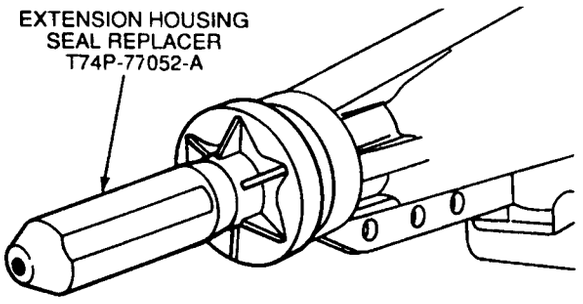

124. Install the transmission range (TR) sensor on the manual lever. Install the two TR sensor bolts and finger tighten. Rotate the manual lever to the neutral position (two detents rearward).

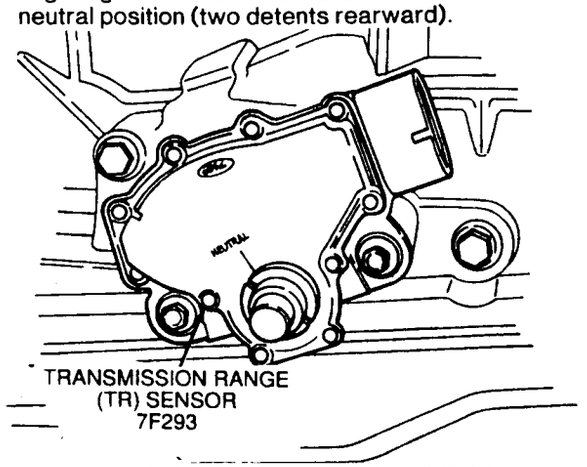

125. Install TR Sensor Alignment Tool (MLPS Alignment Tool) T93P-70010-A into the three slots on the TR sensor. Tighten the TR sensor bolts to 8-11 N·m (71-97 lb-in). Remove the alignment tool.

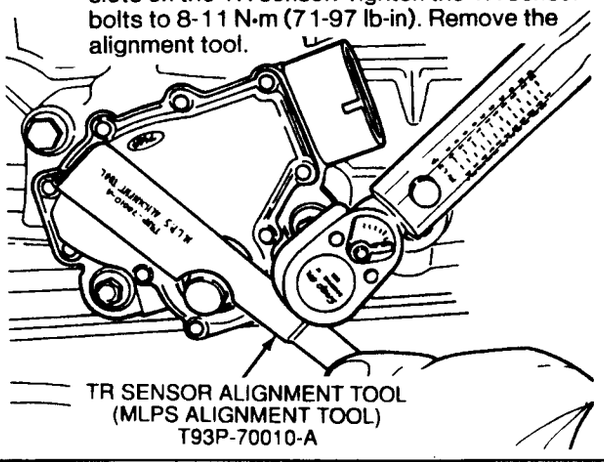

126. Install the manual control outer lever and manual control outer lever nut. Tighten the manual control outer lever nut to 41-54 N·m (30-40 lb-ft).

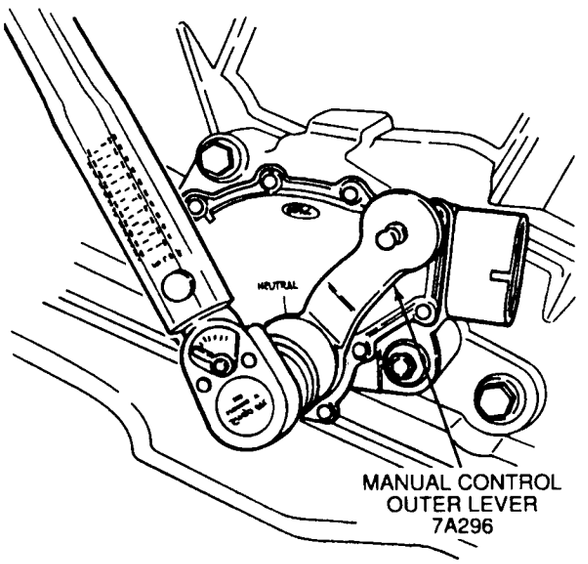

CAUTION: The splines are not the same on both ends. The shaft end with the shorter splines goes into the front pump support and gear.

127. Install the input shaft into the front pump support and gear.

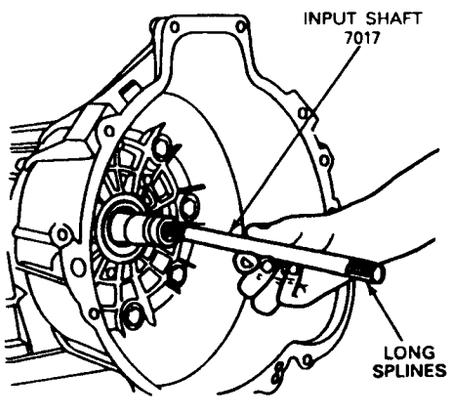

128. Insert Front Pump Seal Sizing Tool T95L-70010-G into pump drive gear to make sure the drive gear O-ring is properly seated prior to installing the torque converter. Remove tool.

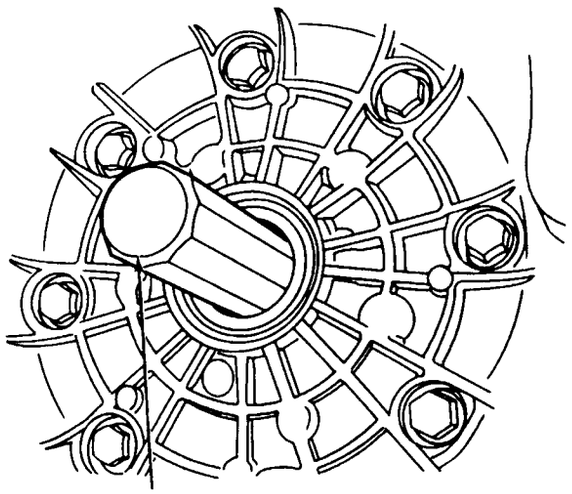

FRONT PUMP
SEAL SIZING TOOL
T95L-70010-G

129. **WARNING: THE TORQUE CONVERTER CAN FALL OUT IF THE TRANSMISSION IS TIPPED.**

CAUTION: Do not damage the pump drive gear O-ring when installing the torque converter.

CAUTION: Make sure the converter hub is fully engaged in the front pump support and gear and rotates freely. Do not damage the hub seal.

CAUTION: If the torque converter slides out, the hub seal may be damaged.

NOTE: Lightly lubricate the converter hub.

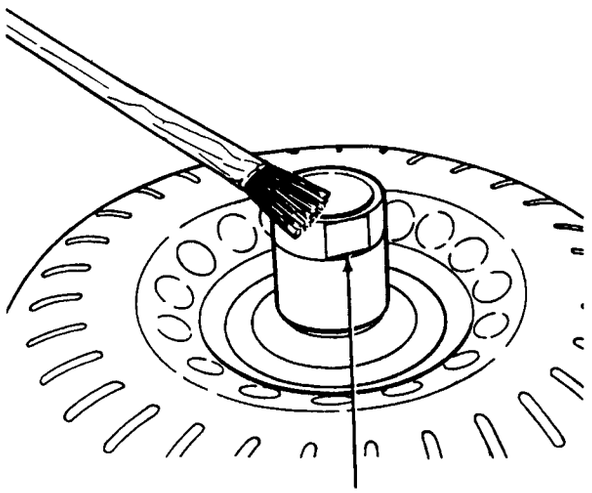

CONVERTER HUB
(PART OF 7902)

130. **WARNING: THE TORQUE CONVERTER IS HEAVY, ESPECIALLY WHEN FULL OF FLUID.**

Using Torque Converter Handles T81P-7902-C, install the torque converter by pushing and rotating.

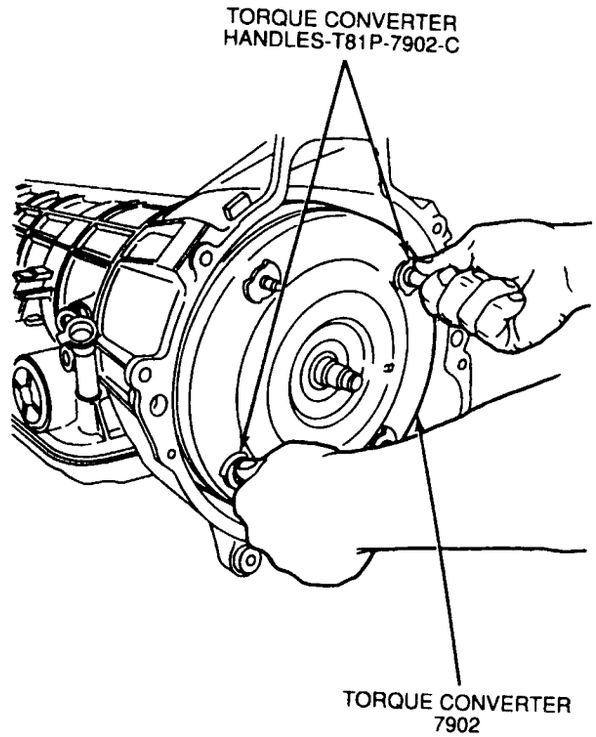

131. NOTE: dimension "A" should be 10.23-14.43mm (0.43-0.56 inch).
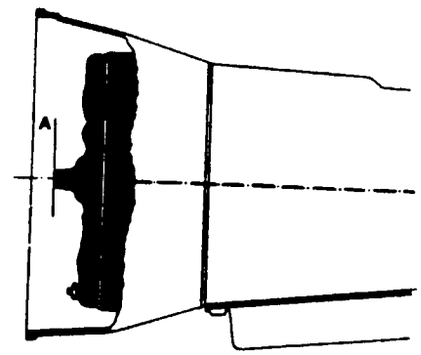
Check dimension "A."