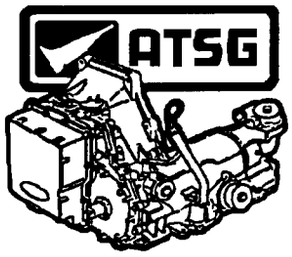

PREVIOUS MENU

INDEX

AXOD - E AX4S

GO TO PAGE

AUTOMATIC TRANSMISSION SERVICE GROUP
9200 S. DADELAND BLVD.
SUITE 720
MIAMI FL. 33156
(305) 670 - 4161

Technical Service Information

INTRODUCTION
FORD AXOD-E

The AXOD-e has two planetary gearsets and a combination planetary / differential gearset. Four multiple plate clutches act together for proper operation of the planetary gearsets. The shift cycles and transmission oil pressure are computer controlled.

A lock-up torque converter is coupled to the engine crankshaft and transmits engine power to the geartrain by means of drive link assemblys (chain) that connects the drive and driven sprockets. The application of the converter clutch solenoid, shift solenoids and the EPC solenoid are controlled through an electronic control integrated in the on-board EEC-IV system, These controls, along with the hydraulic controls in the valvebody, operate a piston plate clutch in the converter to provide improved fuel economy by eliminating converter slip when applied

We thank the Ford Motor Company for the illustrations and information that have made this booklet possible.

ROBERT D. CHERRNAY
TECHNICAL DIRECTOR

DALE ENGLAND
FIELD SERVICE CONSULTANT

WAYNE COLONNA
TECHNICAL SUPERVISOR

ED KRUSE
TECHNICAL CONSULTANT

PETE LUBAN
TECHNICAL CONSULTANT

JIM DIAL
TECHNICAL CONSULTANT

GREGORY LIPNICK
TECHNICAL CONSULTANT

JERRY GOTT
TECHNICAL CONSULTANT

DAVID CHALKER
TECHNICAL CONSULTANT

AUTOMATIC TRANSMISSION SERVICE GROUP
9200 S. DADELAND BLVD.
SUITE 720
MIAMI, FL 33156
(305) 670-4161

DESCRIPTION AND OPERATION

Electrical Component Function

- **Bulkhead Connectors and Wiring Assemblies:** Provides electrical current flow path from vehicle harness to internal transaxle electrical components and provides oil sealing.

The Turbine Speed (TSS) is a variable reluctance sensor used with the vehicle electronic control system. The sensor, along with a rotating exciter wheel on the driven sprocket, sends a signal to the EEC-IV. The EEC-IV reads this signal and reacts to the speed information it transmits by controlling the clutch application.

The Shift Control Solenoids provide proper operating gear selection and are controlled by the EEC-IV. There are three shift control solenoids in the AXOD-E. They use a three port, normally open feed to control the flow of oil to a hydraulic spool valve.

The Converter By-pass Clutch Solenoid is part of the torque converter. When energized by the EEC-IV, it seals transmission fluid under pressure and causes the converter clutch to engage.

The Transmission Oil Temperature Sensor (TOT) informs the EEC-IV of transmission oil temperature. It is a thermister whose resistance varies according to temperature.

The Variable Force Solenoid (VFS) is an analog pressure regulator that varies transmission line pressure as directed by the EEC-IV processor.

The Modulated Lock-up Solenoid (MLUS) is part of the system that control converter clutch slip. The solenoid receives an electronic signal from the EEC-IV processor and uses this information to vary pressure which sets the slip in the converter clutch.

Downshifts

Under certain conditions the transaxle will downshift automatically to a lower gear range without moving the shift selector lever. There are three such categories of automatic downshifts: coastdown, torque demand and forced or kickdown shifts.

Coastdown

The coastdown downshift occurs as the name indicates, when the vehicle is coasting down to a stop.

Torque Demand

The second type of downshift is torque demand. The torque demand downshift occurs (automatically) during part throttle acceleration when the demand for torque is greater than the engine can provide at that gear ratio. The transaxle will disengage the converter clutch to provide added acceleration, if applied.

Kickdown

The third type of downshift is the kickdown. For maximum acceleration, the driver can force a downshift by depressing the accelerator pedal to the floor. A forced downshift into second gear is possible below 88 km/h (55 mph). Below approximately 40 km/h (25 mph) a forced kickdown to first gear will occur. All shift speeds specifications are subject to variation due to tire size and engine calibration requirements.

Identification Tag

When servicing the automatic transaxle, refer to the identification tag located on top of the converter housing.

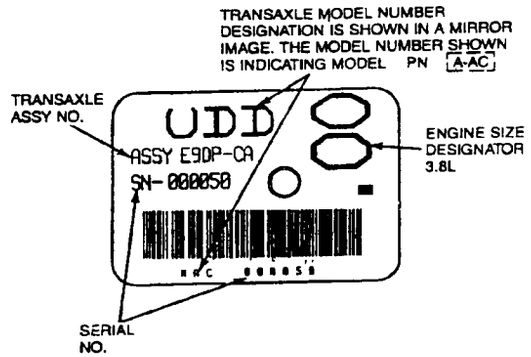

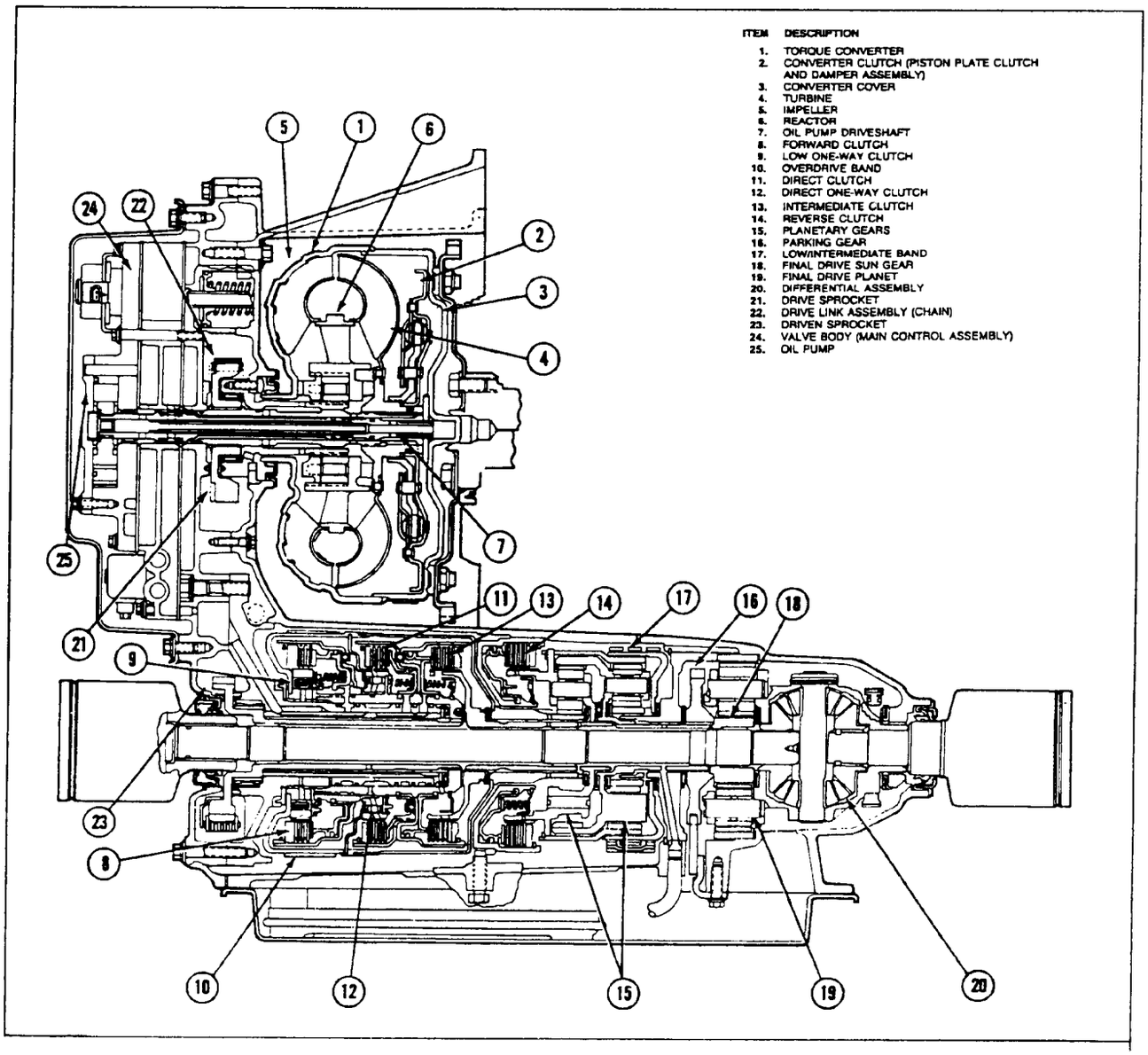

DIAGNOSIS AND TESTING

The following diagnosis sequence is a proven method for troubleshooting the AXOD-E transaxle. DO NOT attempt short cuts or assume someone else has done the critical checks and adjustments.

Required Equipment:

- Engine / Emissions Diagnosis* manual.
- Rotunda SUPER STAR II Tester 007-00041-A or equivalent.
- Service jumper wire.
- Rotunda Digital Volt-Ohmmeter 014-00407 or equivalent.
- Gear Position Sensor Adjuster T91P-70010-A or equivalent.

AXOD-E Diagnostic Sequence

1. Determine customer concern relative to vehicle usage.
   - Hot or cold vehicle operating temperature
   - Hot or cold ambient temperatures

- Type of terrain
- Vehicle loaded / unloaded
- City or highway driving

2. Fluid level check. Check for contamination or burnt smell.
3. Road test vehicle to confirm customer concern.
4. Inspect vehicle for non-Ford approved add-on devices such as engine turbo's, car telephones, cruise controls, CB radio, linear boosters, back up alarm signals, computers etc., that if not installed properly will affect EEC-IV system or transaxle function. Pay particular attention to add-on wiring splices.
5. After road test with vehicle at normal operating temperature perform a EEC-IV Quick Test using SUPER STAR II Tester 007-00041-A or equivalent as outlined in Section 14 of the Engine / Emissions Diagnosis* manual.

Transaxle Fluid Level Check

CAUTION: Vehicles should not be driven if fluid level is below DO NOT DRIVE hole.

Transaxle—Operating Temperature

The automatic transaxle fluid level can only be established at an operating temperature of 66°C-77°C (150°F-170°F) (dipstick is hot to the touch). The operating temperature may be obtained by driving 24-32km (15-20 miles) of city-type driving with the outside temperature above 10°C (50°F).

Transaxle—Room Temperature

NOTE: The AXOD-E transaxle cannot have fluid level established at room temperature.

Fluid level can only be checked at room temperature 21°C-35°C (70°F-95°F) (dipstick cool to the touch) to verify that the level is above the DO NOT DRIVE mark. If fluid level is below, then add only enough MERCON® E4AZ-19582-B or equivalent to bring the level above the DO NOT DRIVE mark. Operating temperature must be obtained as outlined to establish correct fluid level if any fluid is added during room temperature check.

Dipstick Reading

The fluid level on the dipstick should be within the cross-hatched area at operating temperature. The fluid level on the dipstick should read above the DO NOT DRIVE mark (bottom hole on dipstick) at room temperature.

Check the fluid as follows:

1. With the transaxle in PARK, engine at idle rpm, foot brakes applied and vehicle on level surface, move the transaxle selector lever through each range, allowing time in each range to engage transaxle. Return to PARK, applying parking brake fully and block the wheels. Do not turn off the engine during the fluid level check.
2. Clean all dirt from the transaxle fluid dipstick cap before removing the dipstick from the filler tube.
3. Pull the dipstick out of the tube, wipe it clean and push it all the way back into the tube. Ensure it is fully seated.
4. Pull the dipstick out of the filler tube again and check the fluid level.

   NOTE: The fluid level indication on the dipstick will be different at operating temperature and room temperature. For the correct fluid level reading on the dipstick, follow the appropriate instructions stated previously.

   CAUTION: If vehicle has been operated for an extended period at high speed, or in city traffic in hot weather, or vehicle is being used to pull a trailer, the fluid must cool approximately 30 minutes after engine has been turned off for an accurate reading to be obtained.

   CAUTION: Use of a fluid other than specified could result in transaxle malfunction and / or failure.

   If necessary, add enough fluid through the filler tube to raise the level to the correct height.

   CAUTION: Do not overfill the transaxle. This will result in foaming, loss of fluid through the vent and possible transaxle malfunction. If overfill occurs, excess fluid must be removed.
5. Install the dipstick, making sure it is fully seated in the tube.

   Overfill can cause the fluid to foam and spill out through the vent, resulting in a transaxle malfunction.

   Underfill can result in transaxle loss of engagement or slipping. This condition is most evident in cold weather or when the vehicle is parked or being driven on a hill.

If the transaxle fluid level is checked when the fluid is at room temperature, the dipstick could be misread to indicate that fluid should be added. If fluid is added at this time, an overfill condition could result when the fluid reaches operating temperatures of 66°C-77°C (150°F-170°F) (dipstick hot to touch).

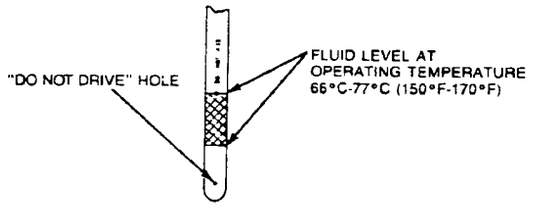

Transaxle Fluid Condition Check

1. Make normal fluid check as outlined.
2. Observe color and odor of fluid. It should be red, not brown or black. Odor can sometimes indicate an overheating condition or clutch disc or band failure.
3. Use an absorbent white facial tissue to wipe dipstick. Examine stain for evidence of solids (specks of any kind) and for antifreeze signs (gum or varnish on dipstick).

   If specks are present in the oil or there is evidence of antifreeze, the transaxle oil pan must be removed for further inspection. If fluid contamination or transaxle failure is confirmed by further evidence of coolant or excessive solids in the oil pan, the transaxle must be disassembled and completely cleaned and serviced. This includes cleaning the torque converter and transaxle cooling system. It would be a waste of time to perform any further checks before cleaning and servicing the transaxle. During disassembly and assembly, all overhaul checks and adjustments of clearances and end play must be made. After the transaxle has been serviced, all diagnosis tests and adjustments listed in the Diagnosis charts must be completed to ensure that the condition has been corrected.

High or Low Fluid Level

A fluid level that is too high will cause the fluid to become aerated. Aerated fluid will cause low control pressure and the aerated fluid may be forced out the vent.

A fluid level that is too low can affect the operation of the transaxle. Low level may indicate fluid leaks that could cause transaxle damage.

Shift Point Test

This test verifies that shift control valves are operating properly.

Road Test

1. Bring engine and transaxle up to normal operating temperature.
2. Operate vehicle with transmission selector in D range.
3. Apply minimum throttle pressure and observe upshift speeds and speed at which converter clutch applies. Refer to Technical Service Bulletin Special Specifications issue.
4. Stop vehicle and move transaxle selector to D range. Repeat Step 3. Transaxle will make all upshifts except 3-4 and converter clutch apply should occur above 46 km/h (27 mph).
5. Depress accelerator pedal to floor (WOT). Transaxle should shift from third to second, or third to first depending on vehicle speed, and converter clutch should release.
6. With vehicle speed above 48 km/h (30 mph), move transaxle selector from D range to 1 range (LOW) and remove foot from accelerator pedal. Transaxle should immediately downshift to second gear. When vehicle speed drops below 32 km/h (20 mph), transaxle should downshift into first gear.
7. If transaxle fails to upshift and/or downshift as outlined, refer to Quick Test.

In-Shop Test

The following items can be checked during an in-shop shift test:

- Shift solenoids
- Valves
- Converter clutch

1. Raise front of vehicle so that front wheels are clear of floor.

   CAUTION: Do not exceed 97 km/h (60 mph) indicated speedometer speed. Indicated speed is one-half of actual tire speed. Do not exceed recommended tire speed rating.

   CAUTION: The suspension should not be allowed to hang free. When the constant velocity joint is run at a very high angle, extra vibrations and damage to the seals and joints can occur.
2. To check shift valves and shift solenoids, place selector lever in D range. Apply minimum throttle pressure and observe upshift speeds and speeds at which converter locks up.

   The transaxle should shift in the following order:

- 1-2
- 2-3
- Converter lockup
- 3-4

NOTE: Converter may remain locked up when transaxle shifts into fourth.

At the shift points, the speedometer needle will make a momentary surge, a slight driveline bump may be felt and engine speed will drop without releasing accelerator pedal. If shift speeds are not within specification, refer to Diagnosis for Electrical system in this section.

Quick Test

The Quick Tests are in the Engine / Emissions Diagnosis* manual and must be used to diagnose AXOD-E transaxle conditions.

The following is a guide to using the Quick Tests with some special considerations to remember.

Quick Test 1

Perform the visual check and vehicle preparation outlined in the Engine / Emissions Diagnosis* manual.

NOTE: It is possible to unknowingly correct some symptoms when performing the necessary visual check. By moving or wiggling a wiring harness to insure proper connections some symptoms may be corrected. It is important to the diagnostics to know what actions have corrected the symptom. Therefore, it may be a good idea to connect your tester prior to performing the visual check.

Correct results of the Quick Test are dependent on the proper operation of related non-EEC-IV components.

It may be necessary to disconnect or disassemble harness connector assemblies to do some of the inspections. Pin locations should be noted before disassembly.

Visual Check

1. Inspect the air cleaner and inlet ducting.
2. Check all engine vacuum hoses for damage leaks, cracks, blockage, proper routing, etc.
3. Check EEC-IV system wiring harness for proper connections, bent or broken pins, corrosion, loose wires, proper routing, etc.
4. Check the processor, sensors and actuators for physical damage.
5. Check the engine coolant for proper level.
6. Check the transmission fluid level quality and for external leakage.
7. Make all necessary repairs before continuing with Quick Test.

Quick Test 2

Observe the Equipment Hookup procedures outlined Engine / Emissions Diagnosis* manual.

Use the Self-Test Automatic Readout STAR Tester, Model 007-00001 7, or the SUPER STAR II Tester, Model 007-00041-A or an equivalent to access self-test service codes.

NOTE: Refer to the illustration for Self-Test connector pin orientation and STAR hookup. After the equipment is properly hooked up, proceed to Quick Test Step 3.0.

Vehicle Preparation

1. Perform ALL safety steps required to start and run vehicle tests - apply parking brake place shift lever firmly into PARK position, block drive wheels, etc.
2. Turn off ALL electrical loads—radios, lights, A / C-heater blower fans, etc.

Using The Star Tester (007-00017)

1. Turn the ignition key off.
2. Connect the color coded adapter cable to the STAR tester.
3. Connect the adapter cable leads to the proper Self-Test connectors.
4. Connect the timing light.

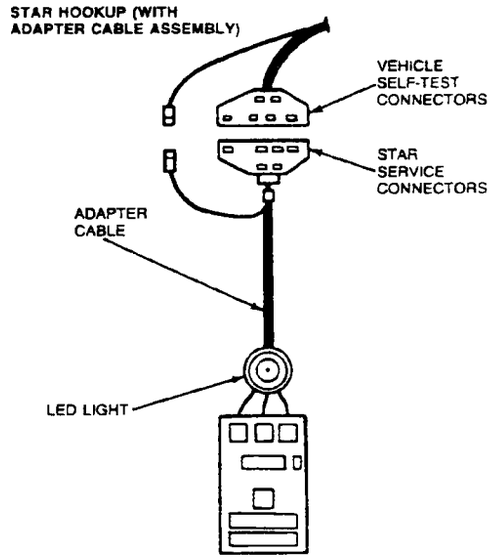

Quick Test 3 (Key On Engine Off)

Follow the procedures as outlined in Engine / Emissions Diagnosis* manual for the Key On Engine Off Self-Test.

NOTE: As indicated in the test procedure, treat engine idle as a separate fault and service it first.

The Key On Engine Off test provides both "hard" failures (present at the time of testing) and continuous memory codes. Always service the hard failures first. These are displayed first on the tester. For AXOD-E faults most codes are stored in memory. The pinpoint tests for these codes are covered in this Section.

How to Run the Key On Engine Off Self-Test

DO

- Verify that the vehicle has been properly prepared according to **QUICK TEST STEPS 1.0 and 2.0**
- Start engine and run until at operating temperature.
- Turn engine off and wait 10 seconds.
- Activate Self-Test.
  —STAR Tester: Latch the center button in the down position.
  —Analog VOM: Jumper STI to SIG RTN at the Self-Test connectors.
  —CHECK ENGINE or SERVICE ENGINE SOON Light (MIL): Jumper STI to SIG RTN at the Self-Test connectors. Service Codes will be flashed on the CHECK ENGINE or SERVICE ENGINE SOON Light.
  —Message Center (Continental Applications Only): Refer to Appendix: Self-Test.
- Place ignition key in the ON position.
- Record all service codes displayed.

DON'T

- Depress throttle during Key on Engine Off Self-Test on gasoline engine applications.

The SUPER STAR II Tester can read fast codes as well as slow codes, and can be used on Ford EEC-IV as well as MCU and MECS systems. A built-in Self-Test memory will retain the codes as they are received. The SUPER STAR II Tester also contains a beeper for running the wiggle tests.

After hooking up the SUPER STAR II tester and turning it on, the SUPER STAR II will briefly display 888. It will also light all the prompts on the left side of the display and the speaker will beep. When the tester is ready, both the STI-LO and STO-LO will be on, but the readout will be blank if the vehicle key is off.

Key On Engine Off (KOEO) Self-Test

1. Plug in both connectors of the tester to the mating connectors of the vehicle.
2. Determine the type of system you have (EEC-IV or MECS) and set the switch to the proper type.
3. Select fast code mode or slow code mode with the mode selector switch.
4. Turn ON the power to tester.
5. Depress the test button on the tester to the test position.
6. Turn ON the vehicle ignition key.

The tester will now read any Self-Test codes in this mode.

TEST STEP	RESULT ▶	ACTION TO TAKE
3.0 PERFORM KOEO SELF-TEST		
• Start engine and idle until vehicle is at operating temperature. NOTE: If engine does not start or stalls after starting, continue to perform KOEO Self-Test. • Key off, wait 10 seconds. • Activate Self-Test. • Key on, engine off. NOTE: If additional information is required for KOEO Self-Test, refer to Quick Test Appendix. • Record all KOEO and Continuous Memory Codes received. • Is a PASS code "11" present in KOEO? (11, 11-10-any code). NOTE: The first two "11's" are PASS codes from KOEO. The "10" is considered the separator code between KOEO and Continuous Memory.	Yes ▶	If "CHECK ENGINE" or "SERVICE ENGINE SOON" light is on: GO to Continuous Memory code charts, Quick Test Step **8.0**, before addressing any other symptoms. If engine runs rough or idles rough: GO to Pinpoint Test Step **S2**, except DIS/EDIS vehicles, GO to Quick Test Step **3.1**. If engine is a no start: GO to Pinpoint Test Step **A1**, except EDIS vehicles, GO to Pinpoint Test Step **AA1**. If these symptoms are not present: GO to Quick Test Step **4.0**.
	No ▶	If KOEO service codes are received: GO to KOEO code charts, Quick Test Step **6.0**. If no service codes are received: GO to Pinpoint Test Step **QA1**.

Quick Test 4.0 (Computed Timing Check, Gas Engine Only)

This Quick Test is used to diagnose engine idle concerns only. Keep in mind however, that any engine concerns or codes should be serviced BEFORE the transaxle concerns are serviced.

TEST STEP	RESULT	ACTION TO TAKE
4.0 COMPUTED TIMING CHECK		
• Key off, wait 10 seconds. • Activate Engine Running Self-Test. • Start engine. NOTE: If additional information is required for Engine Running Self-Test, refer to Quick Test Appendix If engine starts but stalls or stalls during Self-Test, GO to Pinpoint Test Step **S1.** Engine Running Service Code 98 indicates vehicle is in Failure Mode Effects Managment (FMEM) and DID NOT PASS KOEO On-Demand/Continuous Memory Self-Test. Engine Running Self-Test cannot be performed while in FMEM. Go to Continuous Memory code charts, Quick Test Step **8.0.** • Check computed timing after the last service code has been displayed. The timing will remain fixed for two minutes, unless Self-Test is deactivated. NOTE: Computed timing is equal to base timing plug 20 degrees BTDC with 3 degress tolerance. See vehicle decal for correct base timing. • Is computed timing within specs?	Yes ▶ No ▶	GO to Quick Test **5.0.** GO to Pinpoint Test Step **P2.**

Quick Test 5 (Engine Running)

The Engine Running Self-Test provides "hard" failures only. If the Key On Engine Off test indicates no hard failures, the Engine Running test should always be performed next it should be noted that transaxle fault codes will appear in continuous memory since the system remains on during drive cycles. Special considerations for the Engine Running Self-Test include the following:

- If a code other than 11 appears on the "Engine Running" display, a fault is present; look up the fault on the Service Code Chart to find the corresponding Pinpoint Test.
- If the engine starts but stalls, or stalls during Self-Test, Go to Pinpoint Test Step S1.
- On vehicles equipped with the Brake On/Off Switch (BOO), the brake pedal MUST be depressed and released AFTER the ID code.
- On vehicles equipped with the Power Steering Pressure Switch (PSPS), within 1 to 2 seconds after the ID code, the steering wheel must be turned at least one-half turn and released.
- The Dynamic Response code is a single pulse (or a 10 code on the STAR Tester) that occurs 6-20 seconds after the engine running identification code. (See APPENDIX: Code Output Format.)
- When the Dynamic Response code occurs, perform a brief wide-open throttle.

How to Run the Engine Running Self-Test

DO

- Deactivate Self-Test.
- Start and run engine at 2,000 rpm for two minutes. This action warms up the EGO sensor.
- Turn engine off, wait 10 seconds.
- Activate Self-Test.
- Start engine.
- After the ID code, depress and release the brake pedal if appropriate. See Special Note above.
- After the ID code, within 1 to 2 seconds, turn the steering wheel at least one-half turn and then release it, if appropriate. See Special Note above.

- If a Dynamic Response Code occurs, perform a brief wide-open throttle (WOT).
- Record all service codes displayed.

DON'T

- Depress the throttle unless a Dynamic Response Code is displayed.

TEST STEP	RESULT ▶	ACTION TO TAKE
5.0 PERFORM ENGINE RUNNING SELF-TEST		
• Deactivate Self-Test. • Activate Engine Running Self-Test. • Start engine and idle until vehicle is at operating temperature. NOTE: If additional information is required for Engine Running Self-Test, refer to Quick Test Appendix. • Record all service codes displayed. NOTE: Engine Running Service Code 98 indicates vehicle is in Failure Mode Effects Managment (FMEM) and DID NOT PASS KOEO On-Demand/Continuous Memory Self-Test. Engine Running Self-Test cannot be performed while in FMEM. Go to Continuous Memory code charts, Quick Test Step **8.0.**. • Is a PASS Code (11) received during Engine Running Self-Test?	Yes ▶	If any Continuous Memory service codes were received in Quick Test Step **3.0.** GO to Continuous Memory Code charts Quick Test Step **8.0.** If a Continuous Memory PASS Code (11) was received in Quick Test Step **3.0** and no symptoms are present: EEC-IV diagnostic testing is complete. If a Continuous Memory PASS Code (11) was received in Quick Test Step **3.0** and symptoms are present: GO to Diagnosis By Symptom chart Quick Test Step **9.0.**
	No ▶	If Engine Running service codes are received: GO to Engine Running code charts, Quick Test Step **7.0.** If no service codes are received: GO to Pinpoint Test Step **QA1.**

Quick Test 8 (Continuous)

After servicing any Key On Engine Off or Engine Running hard failures and a pass code (11) is received on both, you can then service the Continuous Memory (intermittent) codes only if they are intermittent codes which is true for most engine problems, but not for AXOD-E transmissions.

Some special considerations for Continuous testing:

- The cause of some Continuous Memory Codes may have been eliminated if Key On Engine Off and/or Engine Running codes were serviced. Always retest and service only the codes that still remain.

- If one or more of the following codes are present, go to the Pinpoint Test indicated in the Quick Test service code chart first: The corresponding Pinpoint Tests for the above codes check the processor and wiring harnesses to the solenoids. If these tests fail to locate a fault, go to the "Drive Cycle Test" for codes or the Electrical Diagnosis Chart Index in this Section. REPEAT the Quick Test after completing service on these codes.
- If the Continuous test passes (code 11) and a fault is still present, refer to the "Diagnostic By Symptom" Charts (Quick Test 7.0).
- It should be noted that fault codes in continuous memory will be erased while disconnecting the battery, exit Self-Test while the codes are being displayed, or by disconnecting the processor. It is advisable to record all codes displayed on paper so one will not lose sight of effectively diagnosing the customer's concern.

Continuous Monitor Mode (Wiggle Test)

- It may be necessary to service non-EEC-IV faults before running Quick Test. Refer to Engine / Emissions Diagnosis* manual Section 2.
- Continuous Memory Codes recorded in this step will be used for diagnosis in Step 5.0 after PASS code 11 is received in both the Key On Engine Off and the Engine Running Self-Tests.
- Deviation from this procedure may cause the output of false codes.
- Refer to Quick Test Appendix for further information on how to read code output.
- The Continuous Monitor Modes allow the technician to **ATTEMPT** to re-create an intermittent fault.

Key On Engine Off Wiggle Test Procedure

1. Hook up a STAR Tester as shown in Quick Test Step 2.0.
2. Turn the ignition key to the ON position.
3. Activate, wait 10 seconds, deactivate and reactivate Self-Test.
4. You are now in the Continuous Monitor Mode.
5. Tap, move, and wiggle the suspect sensor and / or harness. When a fault is detected, a Continuous Memory Code will be stored in memory. This will be indicated as follows depending on the type of equipment being used:
   - STAR Tester: Red LED lights and / or continuous tone.
   - CHECK ENGINE or SERVICE ENGINE SOON Indicator Lights

Engine Running Wiggle Test Procedure

1. Hook up a STAR Tester as shown in Quick Test Step 2.0.
2. Key off, wait 10 seconds.
3. Start the engine.
4. Activate Self-Test, wait 10 seconds, deactivate and reactivate Self-Test. **DO NOT** shut the engine off.
5. You are now in the Engine Running Continuous Monitor Mode.
6. Tap, move, and wiggle the suspect sensor and / or harness. When a fault is detected, a Continuous Memory Code will be stored in memory. This will be indicated as follows depending on the type of equipment being used:
   - STAR Tester: Red LED lights and / or continuous tone.
   - CHECK ENGINE or SERVICE ENGINE SOON Light (MIL): Lights

Electrical System

The following Pinpoint tests are to be performed if a concern is found with the transaxle. Before these tests are performed, the Electronic Engine Control (EEC-IV) Quick-Test in the Engine / Emissions Diagnosis* manual should be performed to determine if any service codes for the transaxle appear. If any of the following service codes appear during the Quick-Test the AXOD-E drive cycle test for continuous codes should be performed.

Service Codes

- **645, 646, 647, and 648:** Refer to Diagnosis Chart and Pinpoint Test Summary for definition of code.
- **629:** Transaxle converter bypass clutch solenoid circuit failed always open or always closed.

The following service codes are not transaxle-related but can affect converter bypass clutch operation. Service these components before servicing the transaxle codes:

- **112:** -54°F indicated air charge temperature (ATC) circuit grounded.
- **113:** -40°F indicated ACT circuit open.
- **114:** Air charge temperature (ACT) sensor out of range.
- **116:** Engine coolant temperature (ECT) senor out of range.
- **117:** ECT short circuit.
- **118:** ECT open circuit.
- **121:** Throttle position (TP) sensor out of range.
- **122:** TP sensor below minimum voltage.
- **123:** TP sensor above minimum voltage.
- **452:** Vehicle speed sensor (VSS) not functioning.
- **519:** Power steering pressure switch circuit.
- **521:** Power steering pressure switch did not change states.

- **536:** Brake On / Off (BOO) switch always open or brake not applied during Engine Running On-Demand Self Test.

AXOD-E Drive Cycle Test

After performing the EEC-IV Quick Test, the following Drive Cycle for checking AXOD-E continuous codes should be performed.

1. Record and erase EEC-IV Quick Test codes.
2. Verify transaxle fluid level is correct.
3. Warm engine to operating temperature.
4. With transaxle in D range, lightly accelerate from a stop to 64 km / h (40 mph) to allow transaxle to shift into third gear. Hold speed and throttle opening steady for a minimum of 15 seconds.
5. Accelerate from 65 km / h (40 mph) to 80 km / h (50 mph) to allow transaxle to shift to fourth gear. Hold speed and throttle position steady for a minimum of 15 seconds.
6. With transaxle in fourth gear and maintaining steady speed and throttle opening, lightly apply and release brakes (to operate brakelamps). You may feel the converter locking and unlocking. Then, hold speed and throttle opening steady for an additional five seconds minimum.
7. Brake to a stop and remain stopped for a minimum of 20 seconds with transaxle in D range.
8. Repeat steps 4 through 6 at least five times.
9. Perform EEC-IV Quick-Test and record continuous codes.
   - Service any non-transmission error codes first as they can directly affect the operation of the transmission. Repeat the quick test and road test to verify correction.

- If one of the following codes appears during the EEC-IV quick test, service it first before continuing with the transmission diagnosis.

Service Code	EEC-IV Quick Test Section	Pinpoint Test
452	Continuous	M
621	Key on Engine Off	B
622	KOEO	C
624	Continuous, KOEO	E
625	KOEO	E
628	Continuous	J
629	KOEO	J
634	Continuous	A
636	KOEO, Key On Engine running	N
637	KOEO, Continuous	N
638	KOEO, Continuous	N
639	KOER, Continuous	L
641	KOEO	D
645	Continuous	F
646	Continuous	G
647	Continuous	H
648	Continuous	I
649	Continuous	E
651	Continuous	E
652	KOEO	J

SERVICE CODE: 634—PINPOINT TEST A

TEST STEP		RESULT	ACTION TO TAKE
A1	ADJUST MANUAL LEVER POSITION SENSOR		
	• Apply the parking brake. • Place transmission in NEUTRAL position. • Verify that Manual Lever Position Sensor Tool T89T-70010-J fits in appropriate slots.	Tool fits ▶ Tool does not fit ▶	GO to **A2.** ADJUST sensor according to adjustment procedures in this manual and REPEAT Quick Test in the Engine / Emissions Diagnosis* manual.

SERVICE CODE: 634—PINPOINT
TEST A (Continued)

TEST STEP		RESULT ▶	ACTION TO TAKE
A2	CHECK OPERATION OF MANUAL LEVER POSITION SENSOR		
	• Disconnect vehicle harness from MLPS. • Insert Manual Lever Position Sensor Tester harness (D89T-10010-A) or equivalent into the Manual Lever Position Sensor Connector. • Plug VOM into Manual Lever Position Sensor Tester. • Verify continuity ONLY occurs in the 3 continuity positions. For example: with the tester in the N/P position, continuity should occur ONLY when the Manual Lever is in N or P positions, and not R ⓓ 2 or 1 positions, with the tester in "R" position, continuity should occur only when the manual lever is in "R" position, and not P N ⓓ 2 1 positions. (Start and backup circuit.) • Position Tester on the ohms position. Verify that the resistance readings for each position of the manual lever, P, R, N, ⓓ, D, 1, are within specifications as shown on the front of MLPS tester.	Resistance within specification ▶ Resistance not in specification ▶	REPEAT QUICK TEST in the Engine/Emissions Diagnosis* manual REPLACE Manual Lever Position Sensor and REPEAT QUICK TEST in the Engine/Emissions Diagnosis* manual.

SERVICE CODE: 621 — PINPOINT
TEST B

TEST STEP		RESULT ▶	ACTION TO TAKE
B1	CHECK HARNESS CONNECTIONS		
	• Check that the vehicle harness connector is fully engaged on the transaxle side bulkhead connector. • Check that the vehicle harness connector terminals are fully engaged in the connector.	Yes ▶ No ▶	GO to **B2.** SERVICE as required. REPEAT Quick Test.
B2	CHECK SOLENOID AND HARNESS FOR RESISTANCE GROUND		
	• Disconnect vehicle harness at transaxle side bulkhead connector. • Install test harness to the side bulkhead connector. • Connect ohmmeter negative lead to test harness Blue wire and positive to Green wire. • Resistance should be 12-30 ohms for solenoid. • Leave ohmmeter positive wire connected to green lead and touch ohmmeter negative lead to engine ground. • No ground (infinite resistance) is allowed.	Yes ▶ No ▶	GO to **B3.** GO to **B5.**

SERVICE CODE: 621 — PINPOINT
TEST B (Continued)

	TEST STEP	RESULT ▶	ACTION TO TAKE
B3	CHECK SOLENOID MECHANICS POWER APPLIED FOR CLICK		
	• Connect Green wire of test harness to +12 volts using a fused jumper wire. • Momentarily touch Blue negative test harness wire to engine ground. • Listen for solenoid click when ground is touched. A stethoscope may be required to hear click through pan. • Click denotes solenoid is electrically OK. **CAUTION: Do not connect a power supply with reverse polarity to these wires or solenoid diode will fail.**	Yes ▶ No ▶	GO to **B4.** GO to **B5.**
B4	CHECK VEHICLE HARNESS FOR CONTINUITY AND GROUND **NOTE: Refer to the AXOD-E transaxle wiring harness terminal locations and color codes preceding these pinpoint tests.**		
	• Disconnect vehicle harness from processor and side bulkhead connector. • Check for continuity between Pin 51 on the 60 pin connector and the 51 shift solenoid pin. See diagram below. Must have continuity. Check from Pin 51 to ground. No ground is allowed. • Reconnect EEC-IV processor connector, turn the ignition key to run position. Check all three solenoid bulkhead connector pins marked in diagram below. Must have battery voltage to actuate solenoids.	Yes ▶ No ▶	GO to **B5.** SERVICE as required. REPEAT quick test.

VEHICLE HARNESS TO TRANSAXLE SIDE BULKHEAD CONNECTOR

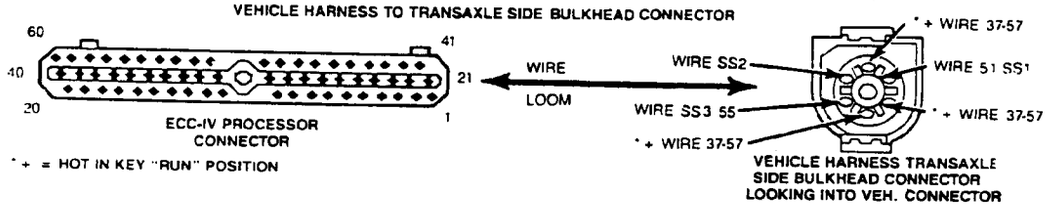

* + = HOT IN KEY "RUN" POSITION

SERVICE CODE: 621 — PINPOINT
TEST B (Continued)

TEST STEP		RESULT ▶	ACTION TO TAKE
B5	CHECK INTERNAL CONNECTIONS CHECK INTERNAL WIRING		
	• Remove transaxle side oil pan. • Check that internal solenoid connector with the white (+) and green (-) wires is firmly connected to the solenoid connector and does not pull off easily or fit loosely. • Remove connector from solenoid by lifting on the end of retaining tab while pulling on wire end of the connector. • Check both wires in the solenoid connector to the bulkhead connector terminals by measuring the resistance of each wire. • Resistance should be less than 2.0 ohms. • Check resistance of the solenoid. Resistance should be 12-30 ohms.	Yes ▶ No ▶	REPLACE EEC-IV processor and repeat quick test. REPAIR or REPLACE bulkhead connector harness or solenoid as required. REPEAT quick test.

SERVICE CODE: 622 — PINPOINT
TEST C

TEST STEP		RESULT ▶	ACTION TO TAKE
C1	CHECK HARNESS CONNECTIONS		
	• Check that the vehicle harness connector is fully engaged on the transaxle side bulkhead connector. • Check that the vehicle harness connector terminals are fully engaged in the connector.	Yes ▶ No ▶	GO to **C2.** SERVICE as required. REPEAT Quick Test.
C2	CHECK SOLENOID AND HARNESS FOR RESISTANCE AND GROUND		
	• Disconnect vehicle harness at transaxle side bulkhead connector. • Install test harness to the side bulkhead connector. • Connect ohmmeter negative lead to test harness red wire and positive to yellow wire. • Resistance should be 12-30 ohms for solenoid. • Leave ohmmeter positive wire connected to yellow lead and touch ohmmeter negative lead to engine ground. No ground (infinite resistance) is allowed.	Yes ▶ No ▶	GO to **C3.** GO to **C5.**
C3	CHECK SOLENOID MECHANICS POWER APPLIED FOR CLICK		
	• Connect yellow wire of test harness to +12 volts using a fused jumper wire. • Momentarily touch red negative test harness wire to engine ground • Listen for solenoid click when ground is touched. A stethoscope may be required to hear click through pan. • Click denotes solenoid is electrically OK. **CAUTION: Do not connect a power supply with reverse polarity to these wires or solenoid diode will fail.**	Yes ▶ No ▶	GO to **C4.** GO to **C5.**

SERVICE CODE: 622 — PINPOINT
TEST C (Continued)

	TEST STEP	RESULT ▶	ACTION TO TAKE
C4	CHECK VEHICLE HARNESS FOR CONTINUITY AND GROUND **NOTE: Refer to the AXOD-E transaxle wiring harness terminal location and color codes preceding these pinpoint tests.**		
	• Disconnect vehicle harness from processor and side bulkhead connector. • Check for continuity between Pin 52 on the go pin connector and the 52 shift solenoid pin. See diagram below. Must have continuity. Check from Pin 52 to ground. No ground is allowed. Reconnect EEC-IV processor connector. • Turn the ignition key to run position. Check all three solenoid bulkhead connector pins marked "+ in diagram below. Must have battery voltage to activate solenoids.	Yes ▶ No ▶	GO to **C5.** SERVICE as required. REPEAT Quick Test.

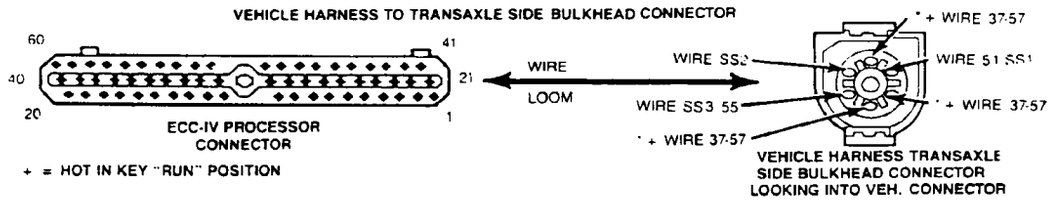

C5	CHECK INTERNAL CONNECTIONS CHECK INTERNAL WIRING		
	• Remove transaxle side oil pan. • Check that internal solenoid connector with the red (+) and blue wires is firmly connected to the solenoid connector and does not pull of easily or fit loosely. • Remove connector from solenoid by lifting on the end of retaining tab while pulling on wire end of the connector. • Check both wires in the connector to the bulkhead connector terminals by measuring the resistance of each wire. • Resistance should be less than 2.0 ohms. • Check resistance of the solenoid. The resistance should be 12-30 ohms.	Yes ▶ No ▶	REPLACE EEC-IV processor and repeat Quick Test. SERVICE or REPLACE bulkhead connector harness or solenoid as required. REPEAT Quick Test.

SERVICE CODE: 641 — PINPOINT
TEST D

	TEST STEP	RESULT ▶	ACTION TO TAKE
D1	CHECK HARNESS CONNECTIONS		
	• Check that the vehicle harness connector is fully engaged on the transaxle side bulkhead connector. • Check that the vehicle harness connector terminals are fully engaged in the connector.	Yes ▶ No ▶	GO to **D2.** SERVICE as required. REPEAT Quick Test.

SERVICE CODE: 641 — PINPOINT
TEST D (Continued)

	TEST STEP	RESULT	ACTION TO TAKE
D2	CHECK SOLENOID AND HARNESS FOR RESISTANCE AND GROUND		
	• Disconnect vehicle harness at transaxle side bulkhead connector. • Install test harness to the bulkhead connector. • Connect ohmmeter negative lead to test harness white wire and positive to black wire. • Resistance should be 12-30 ohms for solenoid. • Leave ohmmeter positive wire connected to black lead and touch ohmmeter negative lead to engine ground. No ground (infinite resistance) is allowed.	Yes ▶ No ▶	GO to **D3.** GO to **D5.**
D3	CHECK SOLENOID MECHANICS POWER APPLIED FOR CLICK		
	• Connect black wire of test harness to +12 volts using a fused jumper wire. • Momentarily touch white negative test harness wire to engine ground. • Listen for solenoid click when ground is touched. A stethoscope may be required to hear click through pan. • Click denotes solenoid in electrically OK: **CAUTION: Do not connect a power supply with reverse polarity to these wires or solenoid diode will fail.**	Yes ▶ No ▶	GO to **D4.** GO to **D5.**
D4	CHECK VEHICLE HARNESS FOR CONTINUITY AND GROUND **NOTE: Refer to the AXOD-E transaxle wiring harness terminal locations and color codes preceding these pinpoint tests.**		
	• Disconnect vehicle harness from processor and side bulkhead connector. • Check for continuity between pin 55 on the 60 pin connector and 55 shift solenoid pin. See diagram below. Must have continuity. Check from pin 55 to ground. No ground is allowed. Reconnect EEC-IV processor connector. • Turn the ignition key to run position. Check all three solenoid bulkhead connector pins marked *+ in diagram below. Must have battery voltage to actuate solenoids.	Yes ▶ No ▶	GO to **D5.** SERVICE as required. REPEAT Quick Test.

VEHICLE HARNESS TO TRANSAXLE SIDE BULKHEAD CONNECTOR

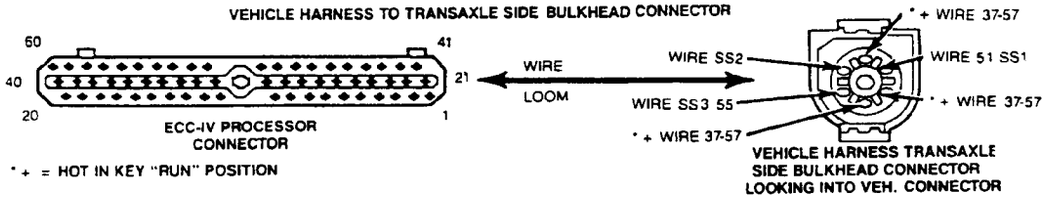

* + = HOT IN KEY "RUN" POSITION

SERVICE CODE: 641 — PINPOINT TEST D (Continued)

	TEST STEP	RESULT ▶	ACTION TO TAKE
D5	CHECK INTERNAL CONNECTIONS CHECK INTERNAL WIRING		
	• Remove transaxle side oil pan. • Check that internal solenoid connector with the yellow (+) and black wires is firmly connected to the solenoid connector and does not pull off easily or fit loosely. • Remove connector from solenoid by lifting on the end of retaining tab while pulling on wire end of the connector. • Check both wires in the connector to the bulkhead connector terminals by measuring the resistance of each wire. • Resistance should be less than 2.0 ohms. • Check resistance of the solenoid. Resistance should be 12-30 ohms.	Yes ▶ No ▶	REPLACE EEC-IV processor and REPEAT Quick Test. SERVICE or REPLACE bulkhead connector harness or solenoid as required. REPEAT Quick Test.

SERVICE CODES: 624, 625, 649, 651 — PINPOINT TEST E

	TEST STEP	RESULT ▶	ACTION TO TAKE
E1	CHECK HARNESS CONNECTIONS		
	• Check that the vehicle harness connector is fully engaged on the transaxle bulkhead connector. • Check that the vehicle harness connector terminals are fully engaged in the connector.	Yes ▶ No ▶	GO to **E2.** SERVICE as required. REPEAT Quick Test.
E2	CHECK SOLENOID AND HARNESS FOR RESISTANCE AND GROUND		
	• Disconnect vehicle harness at transaxle upper bulkhead connector. • Install test harness to the upper bulkhead connector. • Connect ohmmeter negative lead to test harness blue wire and positive to yellow wire. • Resistance should be 2.5-6.5 ohms for solenoid. • Leave ohmmeter positive wire connected to yellow lead and touch ohmmeter negative lead to engine ground. No ground (infinite resistance) is allowed.	Yes ▶ No ▶	GO to **E3.** GO to **E5.**

SERVICE CODES: 624, 625, 649, 651
— PINPOINT TEST E (Continued)

	TEST STEP	RESULT ▶	ACTION TO TAKE
E3	CHECK SOLENOID MECHANICS POWER APPLIED FOR CLICK		
	• Connect yellow wire of test harness to +12 volts using a fused jumper wire. • Momentarily touch blue negative test harness wire to engine ground. • Listen for solenoid click when ground is touched. A stethoscope may be required to hear click through pan. • Click denotes solenoid is electrically OK. **CAUTION: Do not connect a power supply with reverse polarity to these wires or solenoid diode will fail. (EPC solenoid does not have a diode.)** ALTERNATE FUNCTIONAL ECP TEST • Connect 0-100 psi gauge to transaxle TV port. Test as above by momentarily touching the blue negative test harness wire to ground. This energizes EPC solenoid. EPC energized = 10-20 psi. EPC deenergized = 75-85 psi.	Yes ▶ No ▶	GO to **E4.** GO to **E5.**
E4	CHECK VEHICLE HARNESS FOR CONTINUITY AND GROUND **NOTE: Refer to the AXOD-E transaxle wiring harness terminal locations and color codes preceding these pinpoint tests.**		
	• Disconnect vehicle harness from processor and upper bulkhead connector. • Check for continuity between pin 38 on the 60 pin connector and the EPC 38 solenoid pin. See diagram below. Must have continuity. Check from pin 38 to ground. No ground (infinite resistance) is allowed. Reconnect EEC-IV processor connector. • Turn the ignition key to run position. Check the bulkhead pin marked *+ for EPC, must have battery voltage to actuate solenoid.	Yes ▶ No ▶	GO to **E5.** SERVICE as required. REPEAT Quick Test.

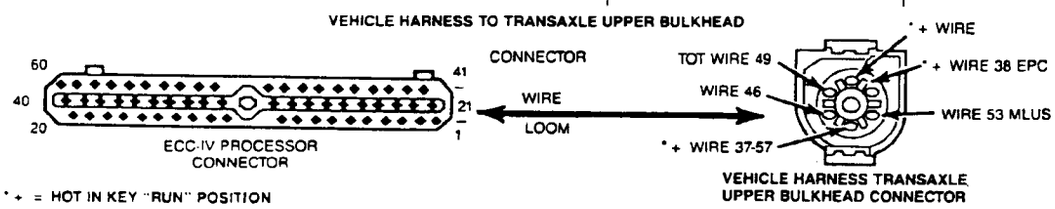

*+ = HOT IN KEY "RUN" POSITION

SERVICE CODES: 624, 625, 649, 651 — PINPOINT TEST E (Continued)

	TEST STEP	RESULT ▶	ACTION TO TAKE
E5	CHECK INTERNAL CONNECTIONS CHECK INTERNAL WIRING		
	• Remove transaxle side oil pan. • Check that internal solenoid connector with the white (+) and green wires is firmly connected to the solenoid connector and does not pull off easily or fit loosely. • Remove connector from solenoid by lifting on the end of retaining tab while pulling on wire end of the connector. • Check both wires in the connector to the bulkhead connector terminals by measuring the resistance of each wire. • Resistance should be less than 2.0 ohms. • Check resistance of the solenoid. Resistance should be 2.5-6.5 ohms.	Yes ▶ No ▶	REPLACE EEC-IV processor and REPEAT Quick Test. SERVICE or REPLACE bulkhead connector harness or solenoid as required. REPEAT Quick Test.

SERVICE CODE: 645 — PINPOINT TEST F

	TEST STEP	RESULT ▶	ACTION TO TAKE
F1	CHECK FOR SOLENOID CODE(S)		
	• If code(s) 645 is present, go to pinpoint test C1.	Code present ▶ No code present ▶	GO to appropriate pinpoint test. GO to **F2.**
F2	CHECK WIRING		
	• Check that vehicle harness connector is fully engaged on the transaxle bulkhead side connector and that the vehicle harness terminals are fully engaged in connector.	Connector fully engaged ▶ Connector loose or terminals not fully engaged ▶	REPLACE EEC-IV processor. REPEAT Quick Test. SERVICE as required. REPEAT Quick Test.

SERVICE CODE: 646 — PINPOINT TEST G

	TEST STEP	RESULT ▶	ACTION TO TAKE
G1	CHECK FOR SOLENOID CODES		
	• If code present, go to pinpoint test B1 and C1.	Code present ▶ No code present ▶	GO to appropriate pinpoint test. GO to **G2.**
G2	CHECK WIRING		
	• Check that vehicle harness connector is fully engaged on the transaxle bulkhead side connector and that the vehicle harness terminals are fully engaged in connector.	Connector fully engaged ▶ Connector loose or terminals not fully engaged ▶	REPLACE EEC-IV processor. REPEAT Quick Test. SERVICE as required. REPEAT Quick Test.

SERVICE CODE: 647 — PINPOINT TEST H

TEST STEP		RESULT	ACTION TO TAKE
H1	CHECK FOR SOLENOID CODES		
	• If code 647 is present, go to pinpoint test D1.	Code present	Go to the appropriate pinpoint test.
		No code present	GO to **H2**.
H2	CHECK WIRING		
	• Check that vehicle harness connector is fully engaged on the tranxaxle bulkhead side connector and that the vehicle harness terminals are fully engaged in connector.	Connector fully engaged	REPLACE EEC-IV processor. REPEAT Quick Test.
		Connector loose or terminals not fully engaged	SERVICE as required. REPEAT Quick Test.

SERVICE CODE: 648 — PINPOINT TEST J

TEST STEP		RESULT	ACTION TO TAKE
J1	CHECK FOR SOLENOID CODES		
	• If code(s) 621, 622, or 641 is present, go to pinpoint test B1, C1, or D1.	Code(s) present	GO to appropriate pinpoint test.
		No code(s) present	GO to **J2**.
J2	CHECK WIRING		
	• Check that vehicle harness connector is fully engaged on the transaxle bulkhead side connector and that the vehicle harness terminals are fully engaged in connector.	Connector fully engaged	REPLACE EEC-IV processor. REPEAT Quick Test.
		Connector loose or terminals not fully engaged	SERVICE as required. REPEAT quick test.

SERVICE CODE: 629, 652, 628 — PINPOINT TEST K

TEST STEP		RESULT	ACTION TO TAKE
K1	CHECK HARNESS CONNECTIONS		
	• Check that the vehicle harness connector is fully engaged on the transaxle upper bulkhead connector. • Check that the vehicle harness connector terminals are fully engaged in the connector.	Yes	GO to **K2**.
		No	SERVICE as required. REPEAT Quick Test.

SERVICE CODE: 629, 652, 628 —
PINPOINT TEST K (Continued)

TEST STEP		RESULT ▶	ACTION TO TAKE
K2	CHECK SOLENOID AND HARNESS FOR RESISTANCE AND GROUND		
	• Disconnect vehicle harness at transaxle upper bulkhead connector. • Install test harness to the upper bulkhead connector. • Connect ohmmeter negative lead to test harness green wire and positive to black wire. • Resistance should be: MLUS = 0.75 - 2.0 ohms LUS = 16 - 40 ohms. • Leave ohmmeter positive wire connected to black lead and touch ohmmeter negative lead to engine ground. No ground (infinite resistance) is allowed. **NOTE: MLUS is modulated lock-up clutch solenoid. LUS is lock-up clutch solenoid. Either one may be used, depending upon model.**	Yes ▶ No ▶	GO to K3. GO to K5.
K3	CHECK SOLENOID MECHANICS POWER APPLIED FOR CLICK		
	• Connect black wire of test harness to +12 volts using a fused jumper wire. • Momentarily touch green negative test harness wire to engine ground. • Listen for solenoid click when ground is touched. A stethoscope may be required to hear click through pan. • Click denotes solenoid is electrically OK. **CAUTION: Do not connect a power supply with reverse polarity to these wires or solenoid diode will fail. MLUS solenoid does not contain a diode.**	Yes ▶ No ▶	GO to K4. GO to K5.

SERVICE CODE: 629, 652, 628 —
PINPOINT TEST K (Continued)

	TEST STEP	RESULT	ACTION TO TAKE
K4	CHECK VEHICLE HARNESS FOR CONTINUITY AND GROUND **NOTE: Refer to the AXOD-E transaxle wiring harness terminal locations and color codes preceding these pinpoint tests.**		
	• Disconnect vehicle harness from processor and upper bulkhead connector. • Check for continuity between pin 53 on the 60 pin connector and the converter clutch solenoid 53 pin. See diagram below. • Must have continuity. Check from pin 53 to ground. No ground (infinite resistance) is allowed. • Reconnect EEC-IV processor connector. Turn the ignition key to run position. Check the bulkhead connector pin marked *+ for MLUS, must have battery voltage to activate solenoid.	Yes No	▶ GO to K5. ▶ SERVICE as required. REPEAT Quick Test.

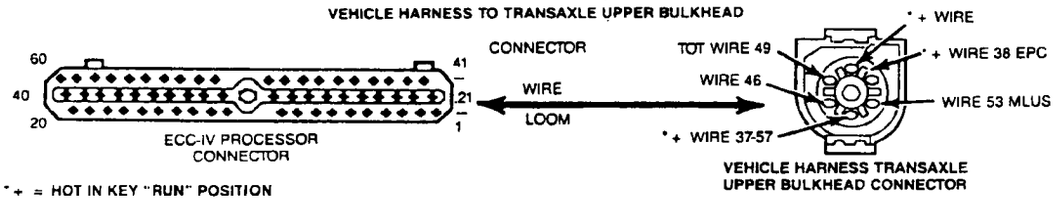

K5	CHECK INTERNAL CONNECTIONS CHECK INTERNAL WIRING		
	• Remove transaxle side oil pan. • Check that internal solenoid connector with the red (+) and black wires is firmly connected to the solenoid connector and does not pull of easily or fit loosely. • Remove connector from solenoid by lifting on the end of retaining tab while pulling on wire end of the connector. • Check both wires in the connector to the bulkhead connector terminals by measuring the resistance of each wire. • Resistance should be less than 2.0 ohms. • Check resistance of the solenoid. MLUS = 0.75 - 2.0 ohms LUS = 16 - 40 ohms.	Yes No	▶ REPLACE EEC-IV processor and REPEAT Quick Test. ▶ SERVICE or REPLACE bulkhead connector harness or solenoid as required. REPEAT Quick Test.

SERVICE CODE: 639 — PINPOINT TEST L

	TEST STEP	RESULT	ACTION TO TAKE
L1	CHECK HARNESS CONNECTIONS		
	• Check that vehicle harness connector is fully engaged on the turbine speed sensor and that the vehicle harness terminals are fully engaged in connector.	Connector fully engaged ▶ Connector loose or terminals not fully engaged ▶	GO to L2. SERVICE as required. REPEAT Quick Test.
L2	CHECK RESISTANCE		
	• Remove vehicle harness connector from EEC-IV processor. • Connect an ohmmeter negative lead to pin 46 of the processor connector and the positive lead to pin 5. • Record resistance: Resistance should be approximately 80-220 ohms.	Resistance in specification ▶ Resistance out of specification ▶	GO to L6. GO to L3.
L3	CHECK HARNESS FOR CONTINUITY		
	• Remove vehicle harness connector from turbine speed sensor. • Remove vehicle harness for EEC-IV processor. • Check for continuity between the positive terminal of the TSS connector and pin 5 of processor connector. • Check for continuity between the negative terminal of the TSS connector and pin 46 of the processor connector. 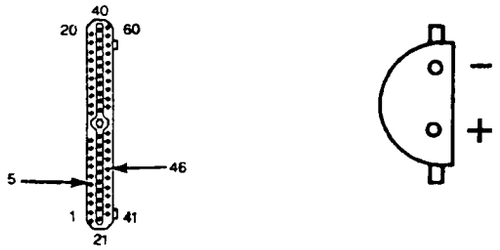	Continuity ▶ No continuity ▶	GO to L4. SERVICE or REPLACE harness. REPEAT Quick Test.
L4	CHECK TSS RESISTANCE		
	• Connect an ohmmeter negative lead to the negative terminal of the TSS an the positive lead to the positive terminal of the TSS. The polarity is denoted on the back side of the TSS terminals. • Record resistance: Resistance should be approximately 80-220 ohms.	Resistance in specification ▶ Resistance out of specification ▶	GO to L5. REPLACE TSS. REPEAT Quick Test.
L5	CHECK TSS MAGNETISM		
	• Remove TSS. • Place TSS against a metal surface to which a magnet would stick. The TSS should be magnetized.	TSS magnetized ▶ TSS is not magnetized ▶	GO to L6. REPLACE TSS. REPEAT Quick Test.

SERVICE CODE: 639 — PINPOINT
TEST L (Continued)

TEST STEP		RESULT ▶	ACTION TO TAKE
L6	CHECK EXCITER WHEEL		
	• Remove turbine speed sensor. • With remote starter, start and stop vehicle until a tooth of the exciter wheel is visible through the TSS hole. **NOTE: Ensure a tooth is visible. The exciter wheel will always be visible through the TSS hole.** 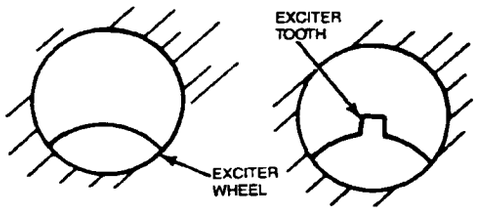 • Measure the depth of the exciter wheel tooth from the outer edge of the chain cover. Distance should not exceed 20.62mm (.81 inch).	Depth within specification ▶ Depth not in specification ▶	MARK tooth with a marker and REPEAT until all four teeth are measured. If all teeth are within specification, REPLACE EEC-IV processor. REPEAT Quick Test. SERVICE or REPLACE as required.

SERVICE CODE: 452 — PINPOINT
TEST M

TEST STEP		RESULT ▶	ACTION TO TAKE
M1	DRIVE CYCLE FOR CHECKING VEHICLE SPEED SENSOR (VSS)		
	• Record and clear EEC-IV continuous memory codes. • Warm engine to operating temperature. • Perform the drive cycle below as appropriate for the vehicle being tested. • Place the gear selector in LOW and moderately accelerate to 25 mph, then coast down to an idle and stop the vehicle. Shut engine off.	Yes ▶ No ▶	GO to **M2.** Unable to duplicate fault at this time. If any other codes are present, RETURN to Quick Test for direction. If codes are not present, test is completed.
M2	CHECK VEHICLE SPEED SENSOR		
	• Key off, wait 10 seconds • Locate and disconnect vehicle speed sensor. • DVOM on 200,000 ohm scale. • Measure resistance across vehicle speed sensor. • Is resistance between 190 and 240 ohms?	Yes ▶ No ▶	GO to **M3.** REPLACE sensor. REPEAT test step M1.

SERVICE CODE: 452 — PINPOINT
TEST M (Continued)

TEST STEP		RESULT ▶	ACTION TO TAKE
M3	CHECK CONTINUITY OF VEHICLE SPEED SENSOR (VSS) HARNESS		
	• Key off, wait 10 seconds. • Disconnect processor 60 pin connector. Inspect for damaged pins, corrosion, loose wires, etc. Service as necessary. • Install breakout box. • Processor and VSS disconnected. • DVOM on 200 ohm scale. • Measure resistance between Test Pin 3 at the breakout box and the VSS vehicle harness connector as shown below. 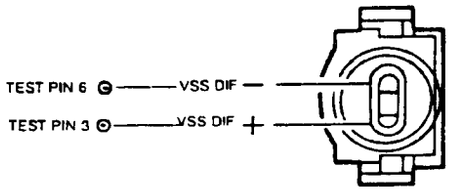 • Are both resistances less than 5 ohms?	Yes ▶ No ▶	GO to **M4.** SERVICE open circuit. REPEAT Test Step M1. REMOVE breakout box. RECONNECT processor and VSS.
M4	CHECK VSS HARNESS FOR SHORTS TO POWER OR GROUND		
	• Key off. • Processor disconnected. • VSS disconnected. • DVOM on 200,000 ohm scale. • Measure resistance between Test Pin 3 and Test Pins 37, 40 and 6 at the breakout box. • Measure resistance between Test Pin 6 and Test Pin 37 at the breakout box. • Are all resistances greater than 10,000 ohms?	Yes ▶ No ▶	REMOVE breakout box. RECONNECT processor. GO to **M5.** REMOVE breakout box. RECONNECT processor and VSS. SERVICE as required. REPEAT Test Step M1.
M5	REPEAT DRIVE CYCLE WITH A KNOWN GOOD VSS INSTALLED		
	• Substitute VSS with known good sensor. • Processor and VSS connected. • Perform drive cycle outlined in test step M1, then return to this step. • Is code 452 present in continuous memory?	Yes ▶ No ▶	REMOVE breakout box. REINSTALL original VSS. REPLACE processor. REPEAT step M1. The original continuous memory code 452 was the result of the original VSS. REPEAT quick test.

SERVICE CODE: 636, 637, 638 —
PINPOINT TEST N

TEST STEP	RESULT ▶	ACTION TO TAKE
N1 CHECK HARNESS CONNECTIONS TOT SENSOR		
• Check that the vehicle harness connector is fully engaged on the transaxle upper bulkhead connector. • Check that the vehicle harness connector terminals are fully engaged in the connector.	Yes ▶ No ▶	GO to **N2.** SERVICE or REPLACE as required.
N2 CHECK TOT SENSOR RESISTANCE **NOTE: Refer to the AXOD-E Transaxle Wiring Harness Terminal locations and Color Codes preceding these Pinpoint Tests.**		
• Install test harness to the upper transaxle bulkhead connector. • Carefully touch the transaxle oil pan on the driver's side, away from the exhaust system, to approximate the temperature. After running the Quick Test, the transaxle oil pan should be warm to the touch. (As a guide, warm to the touch is about 41-70°C (105-158°F)). • Connect ohmmeter negative lead to the white wire and the positive lead to the red wire on the service harness. • Record the resistance. • Resistance should be approximately in the following ranges.	Resistance in range ▶ Resistance greater than 107K ohms ▶ Resistance out of range ▶	GO to **N3.** REPLACE TOT sensor and REPEAT Quick Test in the Engine/Emissions Diagnosis* manual. PERFORM second test listed in this step. REPEAT Quick Test in the Engine/Emissions Diagnosis* manual.

TRANSAXLE FLUID TEMPERATURE

Degrees °C	Degrees °F	Resistance Ohms
0-20	32-58	107K-33.5K
21-40	59-104	33.5K-14.5K
41-70	105-158	14.5K-5.0K
71-90	159-194	5.0K-2.5K
91-110	195-230	2.5K-1.5K
111-130	231-266	1.5K-0.8K

• If the resistance was not the appropriate temperature range but was between 0.8K and 107K ohms, perform the following test. If the transaxle is cold, run the transaxle to heat it up. If the transaxle is warm, allow the transaxle to cool. Check TOT sensor resistance again. Compare the resistance with the initial resistance. Resistance should decrease if transaxle was heated and should increase if transaxle was allowed to cool. If the correct change in resistance occurs, REPEAT Quick Test.

SERVICE CODE: 636, 637, 638 —
PINPOINT TEST N (Continued)

TEST STEP		RESULT ▶	ACTION TO TAKE
N3	CHECK TOT SENSOR FOR SHORT TO GROUND		
	• Install test jumper harness to transaxle upper bulkhead connector. • Check for continuity between engine ground and white wire with an ohmmeter or other low current tester (less than 200 milliamps). • Repeat the continuity check with the red wire. • Connection should show no continuity (infinite resistance).	Continuity ▶ No continuity ▶	REPLACE TOT sensor and REPEAT Quick Test. If code was a continuous code, INSPECT transaxle fluid to determine if fluid is burned. If burnt, TEAR DOWN transaxle and INSPECT for damage. SERVICE as required and REPEAT Quick Test in the Engine/Emissions Diagnosis* manual.

Use the following diagnosis charts to diagnose problems in the transaxle.

AUTOMATIC TRANSAXLE DIAGNOSIS — AXOD-E

CONDITION	POSSIBLE SOURCE	ACTION
• Oil Leak	1. Side pan or bottom pan. • Low bolt torque. • Damaged gasket or pan rail. • Distorted pan. • Engine or power steering fluid leaks may appear on transaxle.	1. Service as required.
	2. Fill lube or electrical bulkhead connectors. • Loose fit / damaged case. • External seal damage / missing.	2. Service as required.
	3. Manual shaft. • Damaged seal.	3. Replace seal.
	4. Speedometer cover and servo covers. • Damaged O-ring seal.	4. Replace O-ring seal.
	5. Cooler fittings or pressure taps. • Low torque, damaged threads. • Cooler line not fully snapped into fitting.	5. Service as required.
	6. Converter or converter seal. • Damaged seal assembly, or garter spring missing. • Converter hub scored. • Weld seam leaking.	6. Service as required.
	7. Halfshaft seals. • Damaged seal assembly, or garter spring missing.	7. Replace seal. • Inspect CV joint journal for damage.
	8. Speedometer cable or speed sensor. • Damaged O-ring seal.	8. Replace O-ring seal.
	9. Turbine speed sensor. • Damaged O-ring seal.	9. Replace O-ring seal.
Oil Venting or Foaming	1. Oil level (venting). • Transaxle overfilled.	1. Drain and fill transaxle to proper level.
	2. Transmission fluid. • Contaminated with antifreeze or engine overheating.	2. Determine source of leak. Service as required.
	3. Bi-metallic element stuck open.	3. Replace element.
	4. Oil filter plugged / damaged. • Damaged / missing seal.	4. Replace filter seal and filter.
High or Low Oil Pressure (Verify With Gauge)	1. Oil level. • Oil level too low	1. Fill transaxle as necessary.
	2. EPC solenoid. • Inoperative / damaged.	2. Refer to Electrical System Diagnosis in this section.
	3. Pressure regulator valve or spring. • Nicked scored bore or valve. • Damaged spring.	3. Determine source of damage. Service as required.
	4. Throttle Position Sensor misadjusted.	4. Service as required.

AUTOMATIC TRANSAXLE DIAGNOSIS — AXOD-E (Continued)

CONDITION	POSSIBLE SOURCE	ACTION
High or Low Oil Pressure (Verify With Gauge) — Continued	5. Oil pump assembly. • Ring stuck, seals damaged, vanes damaged. • Pump driveshaft broken or damaged.	5. Determine source of damage. Service as required.
No 1-2 Shift (First Gear Only)	1. EEC-IV processor. • Damaged. 2. Shift solenoid 1. • Wiring short/open. 3. Main regulator valve. • Stuck, nicked or damaged. 4. 1-2 shift valve. • Stuck, nicked or damaged. 5. Intermediate clutch shuttle valve. • Stuck, nicked or damaged. 6. 1-2 capacity modulator valve. • Stuck, nicked or damaged. 7. No. 10 check ball. • Missing or damaged. 8. Control assembly. • Bolts too loose or too tight. 9. Intermediate clutch tap plug loose/missing. 10. Driven sprocket support. • Seals damaged/missing or holes blocked. 11. Intermediate clutch assembly. • Clutch plates damaged/missing. • Wave spring damaged/missing. • Piston or seals damaged. • Ball check assembly stuck/damaged or missing. • Clutch cylinder damaged. 12. Direct/intermediate clutch hub. • Seals damaged/missing or holes blocked. 13. Front carrier damaged.	1. Refer to Electrical System Diagnosis in this section. 2. Refer to Electrical System Diagnosis in this section. 3. Determine source of contamination or damage. Service as required. 4. Determine source of contamination or damage. Service as required. 5. Determine source of contamination or damage. Service as required. 6. Determine source of contamination or damage. Service as required. 7. Replace check ball. 8. Tighten bolts to specification. 9. Service as required. 10. Determine source of contamination or damage. Service as required. 11. Determine source of contamination or damage. Service as required. 12. Determine source of contamination or damage. Service as required. 13. Inspect welds. Service as required.

AUTOMATIC TRANSAXLE DIAGNOSIS —
AXOD-E (Continued)

CONDITION	POSSIBLE SOURCE	ACTION
1-2 Shift Feels Harsh or Soft	1. EPC solenoid. • Inoperative/damaged. 2. EEC-IV processor. • Inoperative. 3. Oil pressure. • High or low oil pressure. 4. Accumulator regulator valve and plunger. • Stuck, nicked or damaged. 5. No. 12 check ball. • Missing ball. 6. 1-2 capacity modulator valve. • Valve stuck, nicked or damaged. • Spring missing or damaged. 7. 1-2 Accumulator assembly. • Piston stuck or damaged. • Seal damaged or missing. • Springs damaged or missing.	1. Refer to Electrical System Diagnosis in this section. 2. Refer to Electrical System Diagnosis in this section. 3. Perform control pressure test. Service as required. 4. Determine source of contamination or damage. Service as required. 5. Replace check ball. 6. Determine source of contamination or damage. Service as required. 7. Determine source of contamination or damage. Service as required.
1-2 Shift Speed High or Low	1. Vehicle speed sensor. • Inoperative. 2. Speedometer gear. • Wrong or missing gear. 3. Control assembly: 1-2 shift valve and intermediate clutch shuttle valve. • Valve(s) stuck, nicked or damaged. • Spring(s) missing or damaged.	1. Refer to Electrical System Diagnosis in this section. 2. Install correct speedometer driven gear. 3. Determine source of contamination or damage. Service as required.

AUTOMATIC TRANSAXLE DIAGNOSIS — AXOD-E (Continued)

CONDITION	POSSIBLE SOURCE	ACTION
No 2-3 Shift (1-2 Shift OK)	1. Shift solenoid No. 2 • Inoperative. 2. EEC-IV processor. • Inoperative. 3. Low/intermediate servo. • Wrong apply rod (too long). • Servo bore or piston damaged. • Piston seals damaged/missing. • Missing/broken return spring or retaining clip. 4. Direct/intermediate clutch hub. • Seals damaged or missing or holes blocked. 5. Driven sprocket support. • Seals damaged or missing or holes blocked. 6. Direct one-way clutch assembly. • Damaged cage/rollers springs. • Missing rollers. • Misassembled on inner race. 7. Control assembly. • Bolts too loose or too tight. 8. 2-3 shift valve. • Valve stuck, nicked or damaged. 9. No. 3 or No. 8 check ball(s) missing. 10. Case servo release passage. • Blocked. 11. Servo release tube. • Leaking. • Improperly installed. 12. Direct clutch assembly. • Clutch plates damaged/missing. • Piston or seals damaged. • Ball check assembly stuck or missing. • Cylinder damage. 13. 1-2 shift valve • Stuck, nicked or damaged.	1. Refer to Electrical System Diagnosis in this section. 2. Refer to Electrical System Diagnosis in this section. 3. Install correct apply rod, if required. Determine source of contamination. Service as required. 4. Determine source of contamination. Service as required. 5. Determine source of contamination. Service as required. 6. Disassemble and inspect. Service as required. 7. Tighten to specification. 8. Determine source of contamination. Service as required. 9. Replace check ball. 10. Determine source of blockage. Service as required. 11. Service as required. 12. Determine source of contamination or damage. Service as required. 13. Determine source of contamination. Service as required.

AUTOMATIC TRANSAXLE DIAGNOSIS — AXOD-E (Continued)

CONDITION	POSSIBLE SOURCE	ACTION
2-3 Shift Feels Harsh of Soft	1. EPC solenoid. • Inoperative / damaged. 2. EEC-IV processor. • Inoperative. 3. Low or high oil pressure. 4. Low / intermediate servo. • Wrong apply rod length. • Piston, seal, springs rod or spring. 5. 2-3 servo regulator valve. • Stuck, nicked or damaged. • Spring damaged. 6. Missing No. 9, No. 10 or No. 12 • Check Ball.	1. Refer to Electrical System Diagnosis in this section. 2. Refer to Electrical System Diagnosis in this section. 3. Perform control pressure test. Service as required. 4. Install correct apply rod, if required. Determine source of damage. Service as required. 5. Determine source of contamination or damage. Service as required. 6. Replace ball.
2-3 Shift Speed High or Low.	1. Vehicle speed sensor. • Inoperative. 2. Speedometer gear. • Wrong or missing. 3. Control assembly: 1-2 shift valve 2-3 shift valve VFS erratic pressure • Valves stuck, nicked or damaged. • Shift solenoid damaged.	1. Refer to Electrical System Diagnosis in this section. 2. Install correct speedometer gear. 3. Determine source of contamination or damage. Service as required.
No 3-4 Shift (1-2 and 2-3 OK)	1. Shift solenoid No. 3 • Wiring short / open. 2. EEC-IV processor • Inoperative. 3. Overdrive band assembly not holding. 4. Overdrive servo assembly. • Wrong apply rod (too long). • Servo bore or piston damaged. • Piston seals damaged or missing. • Missing or broken return spring or retaining clip. 5. Forward clutch assembly. • Damaged return springs / piston. 6. Control assembly bolts too loose or too tight. 7. 3-4 shift valve. • Valve stuck, nicked or damaged. • Spring damaged. 8. 1-2 shift valve. • Valve stuck, nicked or damaged. • Spring missing. 9. Forward clutch control valve. • Valve stuck, nicked or damaged. • Spring missing.	1. Refer to Electrical System Diagnosis in this section. 2. Refer to Electrical System Diagnosis in this section. 3. Perform air pressure test. Service as required. 4. Install correct apply rod, if required. Determine source of contamination or damage. Service as required. 5. Determine source of damage. Service as required. 6. Tighten bolts to specification. 7. Determine source of contamination or damage. Service as required. 8. Determine source of contamination or damage. Service as required. 9. Determine source of contamination. Service as required.

AUTOMATIC TRANSAXLE DIAGNOSIS — AXOD-E (Continued)

CONDITION	POSSIBLE SOURCE	ACTION
3-4 Shift Feels Harsh or Soft	1. EPC solenoid. • Inoperative/damaged. 2. EEC-IV processor. • Inoperative. 3. Oil pressure too high or too low. 4. 3-4 Accumulator assembly. • Accumulator piston stuck or damaged. • Piston seal missing or damaged. • Springs missing or damaged. 5. No. 4 and/or No. 12 check ball. • Ball missing/damaged. 6. Accumulator regulator valve. • Stuck, nicked or damaged.	1. Refer to Electrical System Diagnosis in this section. 2. Refer to Electrical System Diagnosis in this section. 3. Perform control pressure test. 4. Determine source of damage or contamination. Service as required. 5. Replace ball. 6. Determine source of contamination. Service as required.
3-4 Shift Speed High or Low	1. Vehicle speed sensor. • Damaged. 2. Speedometer gear. • Wrong/missing gear. 3. Control assembly: 1-2 shift valve and/or 3-4 shift valve. • Valves stuck, nicked or damaged.	1. Refer to Electrical System Diagnosis in this section. 2. Install correct speedometer gear. 3. Determine source of contamination or damage. Service as required.
No Converter Clutch Apply	1. Transaxle electrical system or electronic engine control. • No lock-up signal. • By-pass solenoid damaged or inoperative. • Bulkhead connector damaged. • Pinched wires. 2. Turbine shaft. • Damaged or missing seals. 3. Bypass clutch control valve. • Bypass clutch control valve stuck. • Bypass plunger stuck. 4. Pump shaft. • Missing or damaged seals. • Missing or damaged cup plug. 5. Valve body pilot sleeve. • Damaged/misaligned.	1. Refer to Electrical System Diagnosis in this section. 2. Service as required. 3. Determine source of contamination. Service as required. 4. Determine source of contamination or damage. Service as required. 5. Determine source of damage. Service as required.
Converter Clutch Does Not Release	1. Electronic engine control or transmission electrical system. • No unlock signal. • Bypass solenoid damaged or inoperative. • Bulkhead connector wires damaged. 2. Bypass clutch control valve or plunger valve. • Valve stuck, nicked or damaged. 3. Solenoid filter plug (in main control).	1. Refer to Electrical System Diagnosis in this section. 2. Determine source of contamination. Service as required. 3. Solenoid filter plug (in main control).

AUTOMATIC TRANSAXLE DIAGNOSIS —
AXOD-E (Continued)

CONDITION	POSSIBLE SOURCE	ACTION
4-3 Downshifts Harsh	1. Overdrive servo assembly. • Incorrect servo apply rod length. • Damaged servo piston or seal. • Damaged or missing springs. 2. No converter clutch release.	1. Install correct apply rod, if required, Determine source of contamination or damage. Service as required. 2. Refer to Electrical System Diagnosis in this section.
3-2 Downshift Harsh	1. Transaxle electrical system. 2. High or low pressure. 3. Low/intermediate servo assembly. • Damaged or missing springs. • Incorrect servo apply rod length. 4. 3-2 Shift timing. • Valve stuck, nicked or damaged. 5. No. 5 check ball. • Ball missing. 6. Intermediate clutch return spring retaining ring out of position. 7. Backout valve • Valve stuck, nicked or damaged.	1. Refer to Electrical System Diagnosis in this section. 2. Refer to control pressure test. 3. Install correct apply rod, if required. Determine source of contamination or damage. Service as required. 4. Determine source of contamination. Service as required. 5. Replace check ball. 6. Service as required. 7. Service as required.
3-1, 2-1 Downshift Harsh	1. Low/intermediate servo assembly. • Damaged servo piston or seal. • Damaged or missing springs. • Incorrect servo apply rod length. 2. High or low pressure. 3. No. 9 check ball. • Ball missing (3-1 only).	1. Install correct apply rod, if required. Determine source of damage. Service as required. 2. Refer to control pressure test. 3. Replace check ball.
No Drive in Drive Range and No Reverse In Reverse Range	1. Oil level low. 2. Oil pressure. • Pressure too low. 3. Manual linkage. • Misadjusted, disconnected, damaged, broken, bent.	1. Service as required. 2. Perform control pressure test. Service as required. 3. Service as required. Refer to Section 17-02.

AUTOMATIC TRANSAXLE DIAGNOSIS — AXOD-E (Continued)

CONDITION	POSSIBLE SOURCE	ACTION
No Drive in Drive Range and No Reverse in Reverse Range — (Continued)	4. Halfshaft. • Damaged splines. • Disengaged from transaxle.	4. Refer to Section 15-22.
	5. Oil filter. • Damaged/missing O-rings. • Plugged.	5. Service or replace as required.
	6. Oil pump assembly. • Oil pump worn or damaged. • Oil pump drive shaft damaged.	6. Determine source of damage. Service as required.
	7. Drive chain assembly. • Damaged/broken.	7. Determine source of damage. Service as required.
	8. Drive sprocket. • Sprocket shaft to converter turbine spline damaged.	8. Determine source of damage. Service as required.
	9. Driven sprocket. • Sprocket shaft to direct/intermediate clutch hub damaged.	9. Determine source of damage. Service as required.
	10. Forward clutch assembly. • Burned or missing clutch plates. • Damaged piston seals or pistons. • Forward clutch ball check assembly missing or damaged. • Driven sprocket support seals damaged/missing or holes blocked. • Direct intermediate clutch hub seals damaged/missing or holes blocked.	10. Determine source of contamination or damage. Service as required.
	11. Gearset. • Front sun. • Front/rear carriers • Ring gear. • Final drive assembly.	11. Service as required.
	12. Low one-way clutch. • Clutch as two way rotation.	12. Service as required.
	13. Output shaft. • Damaged splines/misassembled with axles.	13. Determine source of damage. Service as required.
No Drive — Reverse OK	1. 2-3 Servo regulator valve stuck.	1. Service as required.
	2. Low/intermediate band assembly. • Burned. • Broken ends.	2. Determine source of damage. Service as required.
	3. Low/intermediate servo assembly. • Wrong apply rod (too short). • Piston/seal/rod damaged.	3. Install correct apply rod, if required. Determine source of contamination. Service as required.
	4. Low/intermediate servo oil tubes. • Damaged (leaking oil). • Damaged case bores.	4. Service as required.

AUTOMATIC TRANSAXLE DIAGNOSIS — AXOD-E (Continued)

CONDITION	POSSIBLE SOURCE	ACTION
No Reverse — Drive OK	1. Reverse clutch. • Burned or missing plates. 2. Reverse apply tube. • Leaking. • Improperly installed.	1. Determine source of damage. Service as required. 2. Service as required.
No Park Range	1. Damaged park mechanism. • Chipped or broken parking pawl or park gear. • Broken park pawl return spring. • Bent or broken actuating rod. • Manual linkage misadjusted.	1. Determine source of damage. Service as required.
Harsh Neutral to Reverse or Harsh Neutral to Drive	1. Oil pressure too high or too low. 2. Engagement control valve. • Valve stuck, nicked or damaged. 3. No. 3 check ball. • Ball missing. 4. No. 1 check ball. • Ball missing / damaged (harsh reverse). 5. Neutral-drive accumulator assembly. • Accumulator piston stuck. • Accumulator seal damaged or missing. • Accumulator springs damaged or missing. 6. Low / intermediate servo assembly. • Damaged or missing spring. • Incorrect servo apply rod length.	1. Perform control pressure test. 2. Determine source on contamination. Service as required. 3. Replace check ball. 4. Replace check ball. 5. Determine source of contamination. Service as required. Install correct apply rod, if required. Determine source of contamination or damage. Service as required.
Transaxle Overheats	1. Excessive tow loads 2. Improper fluid level. 3. Incorrect engine idle or performance. 4. Restriction in cooler or lines. 5. Dirty or sticking valve body. 6. Seized converter one-way clutch. 7. Improper clutch or band application, or oil pressure control system.	1. Check Owner's Manual for tow restriction. 2. Perform fluid level check. 3. Refer to Engine Diagnosis. 4. Service restriction. 5. Clean, service or replace valve body. 6. Replace converter. 7. Perform control pressure test.
Transaxle Fluid Leaks	1. Improper fluid level. 2. Leakage at gaskets, seals, etc.	1. Perform fluid level check. 2. Remove all traces of lubrication on exposed surfaces of transaxle. Check the vent for free-breathing. Operate transaxle at normal temperatures and inspect for leakage. Service as required.

Transaxle Fluid Leakage Checks

Check the vehicle speed sensor and speedometer cable connection at the transaxle. Replace the rubber seal if necessary.

Leakage at the oil pan gasket often can be stopped by tightening the attaching bolts to specification. If necessary, replace the gasket.

Check the speedo gear cover seal.

Check the chain cover-to-case gasket.

Check the bulkhead connectors to chain cover. Replace bulkhead assembly, if necessary.

Check the fluid filler tube connection at the transaxle case. If leakage is found here, install a new grommet.

Check the fluid lines and fittings between the transaxle and the cooler in the radiator tank for looseness, wear, or damage. If leakage cannot be stopped by tightening a fluid line tube nut, replace the damaged parts. Refer to Oil Cooler and Steel Lines. When oil is found to be leaking between the case and the cooler line fitting, tighten the fitting to maximum specification. **Do not try to stop the oil leak by increasing the torque beyond specification. This may cause damage to the case threads.** If the leak continues, replace the cooler line fitting and tighten to specification. The same procedure should be followed for oil leaks between the radiator cooler and cooler line fittings.

Check the engine coolant in the radiator. If transaxle fluid is present in the coolant, the cooler in the radiator is probably leaking.

The cooler can be further checked for leaks by disconnecting the lines from the cooler fittings and applying 345-517 kPa (50-75 psi) air pressure to the fittings. Remove the radiator cap to relieve the pressure buildup at the exterior of the oil cooler tank. If the cooler is leaking and/or will not hold pressure, the cooler must be replaced.

If leakage is found at either the throttle control cable grommet or the manual lever shaft, replace either or both seals.

Oil-soluble aniline or fluorescent dyes premixed at the rate of 2.5ml (1/2 teaspoon) of dye powder to 0.23L (1/2 pint) of transaxle fluid have proven helpful in locating the source of fluid leakage. Such dyes may be used to determine whether an engine oil or transaxle fluid leak is present, or if the fluid in the oil cooler leaks into the engine coolant system. A black light must be used with the fluorescent dye solution.

Check the power steering gear system. The power steering gear system is positioned over the rear of the transaxle and is filled with transmission fluid. Leaks from the power steering gear may pool on the transaxle before dripping onto the ground, thus giving the appearance of a transaxle fluid leak.

Inspect both components carefully before disassembling either. If the power steering gear (system) is found to be leaking, refer to Section 13-46. After an engine oil filter change, some residual oil may blow back on the transaxle giving the appearance of transaxle fluid leakage. The area should be cleaned and checked after running the engine.

Oil Cooler and Steel Lines

When fluid leakage is found at the oil cooler (in radiator), the cooler must be replaced. Refer to Section 27-03 for oil cooler replacement procedures.

When oil cooler steel lines need replacing, each replacement line must be fabricated from the same size steel line as the original. Using the oil line as a guide, bend the new line as required. Add the necessary fittings and install the line. After the fittings have been tightened to specification, add fluid as necessary and check for leaks.

NOTE: The cooler lines that are attached to the transaxle are a push connect design and must be removed with a special tool. The cooler lines attached to the radiator use the conventional nut and flare fittings.

Service Procedures

Oil Cooler Steel Lines Using Push Connect Fittings

1. If leakage is noted at the cooler line fitting on the transaxle, remove the cooler line fitting retaining clip. Using Cooler Line Disconnect Tool T86P-77265-AH or equivalent, remove the cooler line.

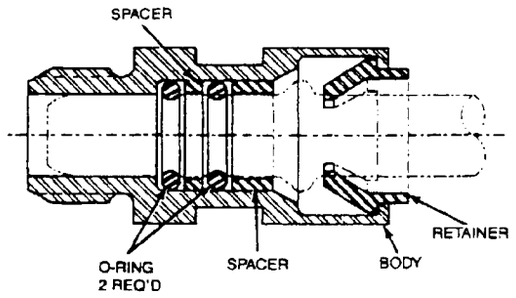

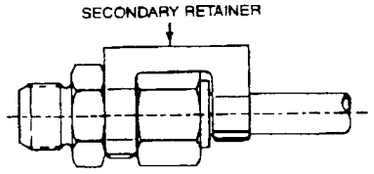

NOTE: For description on how to use Cooler Line Disconnect Tool T86P-77265-AH or equivalent refer to Cooler Line Disconnect Tool Usage.

2. Install angled flare fitting E2SZ-7D273-A or equivalent in the transaxle. Tighten fitting to 24-31 N·m (18-23 lb-ft).
3. Cut approximately 76-102mm (3-4 inches) from the existing cooler line.

Connect pressure gauge to line pressure tap.

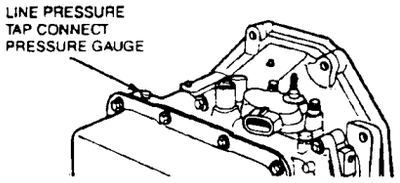

Start engine and check line pressure. Refer to the following chart to determine if line pressure is within specification.

If line pressure is not within specification, perform air pressure checks and service main control system.

Range	Idle		WOT Stall	
	kPa	psi	kPa	psi
P N	331-531	48-77	—	—
R	421-683	61-99	1827-2089	265-303
Ⓓ D	331-531	48-77	1226-1393	177-202
L	331-531	48-77	1443-1641	208-238

If the line pressure is not within specification after mechanical checks and there are no electrical codes, the EPC solenoid may be mechanically malfunctioning. Connect a pressure gauge to EPC pressure tap. Start engine and check EPC pressure. For idle condition, pressure should be 69-137 kPa (10-20 psi). For WOT stall condition, pressure should be 518-586 kPa (73-87 psi). If pressures are not correct, replace EPC solenoid.

Stall Test

The stall test checks the operation of the following items:

- Converter one-way clutch
- Forward clutch
- Low one-way clutch
- Reverse clutch
- Low-intermediate band
- Engine performance

NOTE: The stall test should only be performed with the engine and transaxle at normal operating temperatures.

WARNING: APPLY THE SERVICE AND PARKING BRAKES FIRMLY WHILE PERFORMING EACH STALL TEST.

1. Connect tachometer to engine.
2. After testing each of the following ranges (Ⓓ, D, 1, R), move selector lever to N (NEUTRAL) and run engine for about 15 seconds to allow converter to cool before testing next range.

CAUTION: Do not maintain WOT in any gear range for more than five seconds.

Press accelerator to floor (WOT) in each range. Record rpm reached in each range. Stall speeds should be 1796-2096 rpm (3.8L), 1873-2183 rpm (3.0L), 2258-2603 rpm (2.5L).

CAUTION: If engine rpm recorded by tachometer exceeds maximum specified rpm, release accelerator immediately. Clutch or band slippage is indicated.

If the stall speeds were too high, refer to the following Stall Speed Diagnosis chart. If the stall speeds were too low, first check engine tune-up. If engine is OK, remove torque converter and check torque converter reactor one-way clutch for slippage.

STALL SPEED HIGH (SLIP)

Range	Possible Source
Ⓓ, D, 1	• Forward Clutch • Low/Intermediate One-Way Clutch • Low/Intermediate Band or Servo
R	• Forward Clutch • Low/Intermediate One-Way Clutch • Reverse Clutch

Transaxle Fluid Cooler Flow Test

NOTE: The transaxle linkage adjustment, fluid level and control pressure must be within specification before performing this test. Refer to Section 17-02 for transaxle linkage adjustment.

Transaxle

Disassembly

1. Install Torque Converter Handles T81P-7902-C or equivalent. Remove converter from transaxle.

   CAUTION: The torque converter is heavy. Be careful not to drop it.

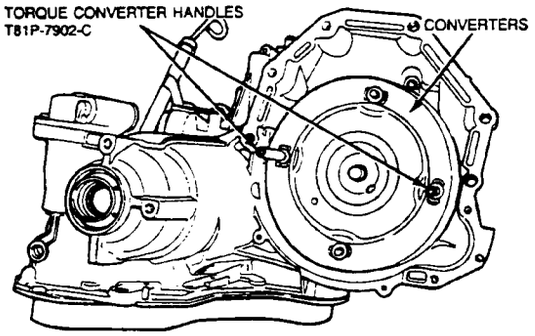

2. Mount transaxle in Bench Mounted Holding Fixture T57L-500-B or equivalent.

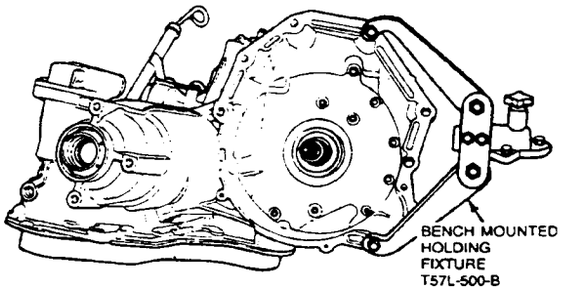

3. Turn transaxle in vertical position. Remove shipping plugs and drain fluid.

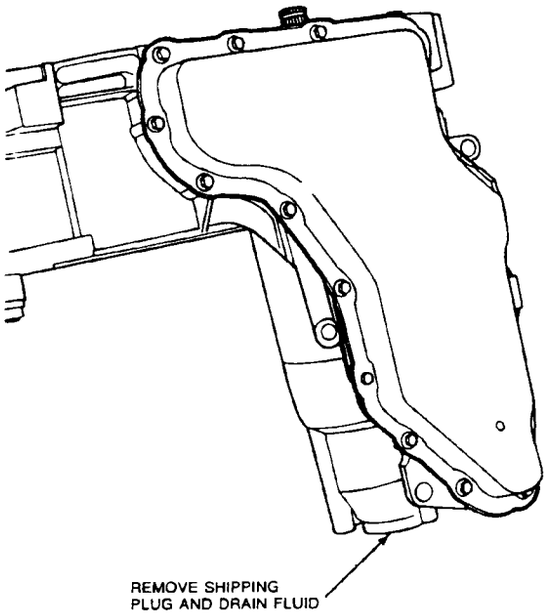

4. Return transaxle to horizontal position.
5. Remove two 8mm governor cover bolts, cover and seal. Discard seal. A new one must be installed during assembly.

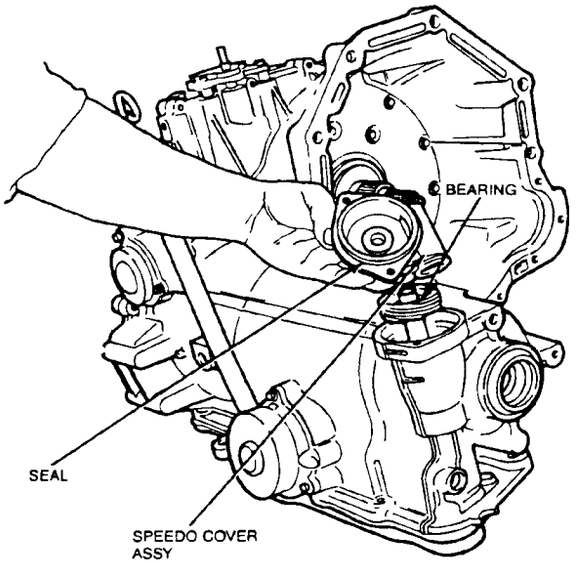

6. Lift speedo cover, speedometer drive gear assembly, and bearing out of case.

NOTE: Bearing sits on top of speedometer gear.

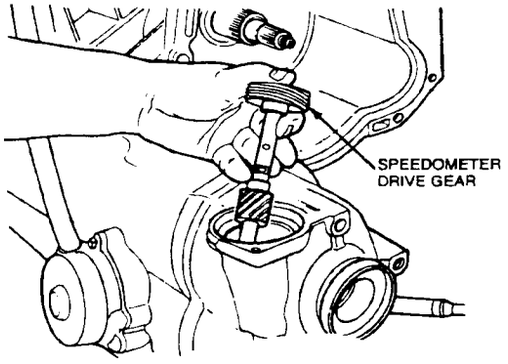

7. Remove three 8mm overdrive servo cover bolts, cover, piston assembly and spring.

   NOTE: Discard O-ring seal on cover.

   NOTE: Piston assembly and spring may remain in cover.

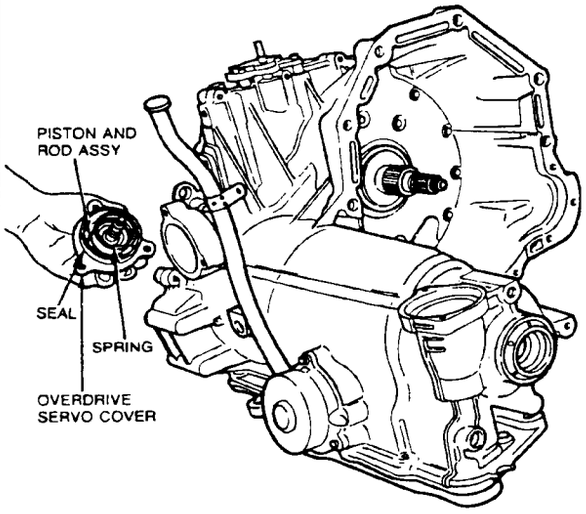

8. Remove three 8mm low-intermediate servo cover bolts, cover, piston assembly and spring.

9. Remove and discard gasket.

   NOTE: Piston assembly and spring may remain in cover.

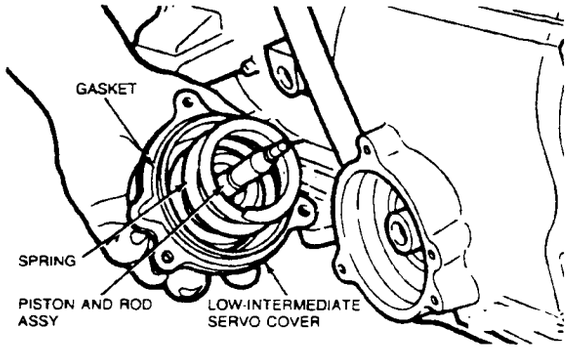

10. Remove servo spring position retainer from case.

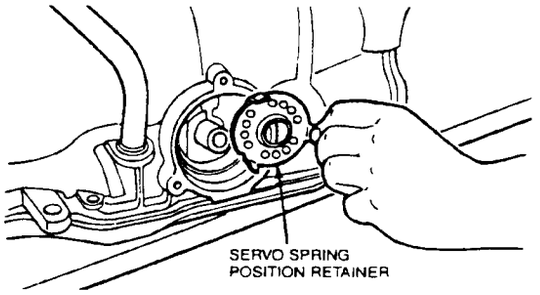

11. Inspect and replace if damaged. Remove RH output shaft seal as follows:

    NOTE: Output shaft seal is a two-piece construction, outer metal protector and inner rubber seal.

a. Install Shaft Protector D80L-625-A or equivalent into output shaft opening.

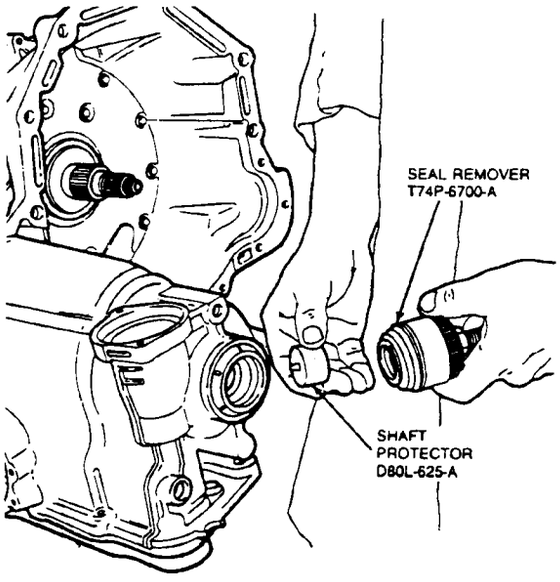

b. Screw Output Shaft Seal Remover T74P-6700-A or equivalent, into metal seal protector.

c. Tighten screw on end of tool until metal seal protector is removed.

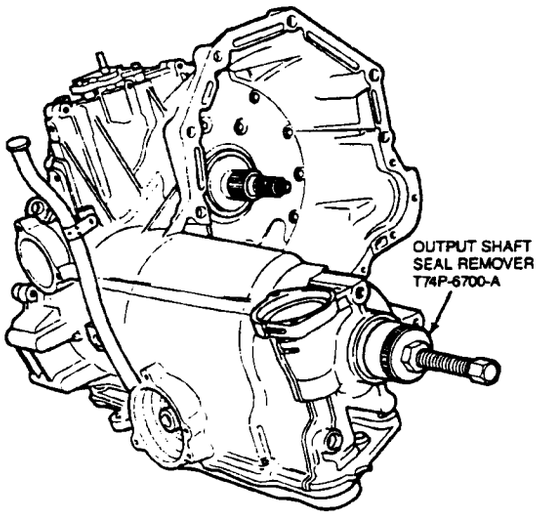

d. Remove metal seal protector from tool, and install tool into seal.

e. Tighten screw on the end of tool until seal is removed.

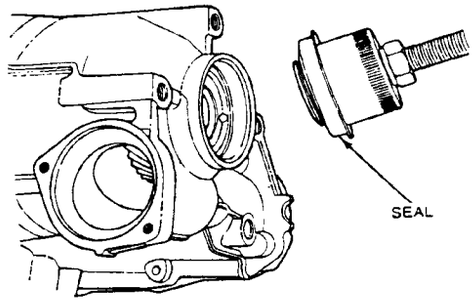

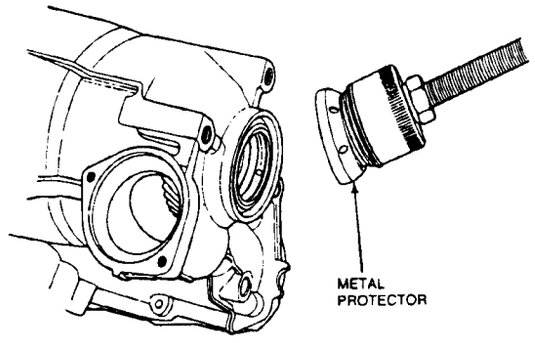

12. Remove two 8mm neutral safety switch retaining bolts and remove switch.

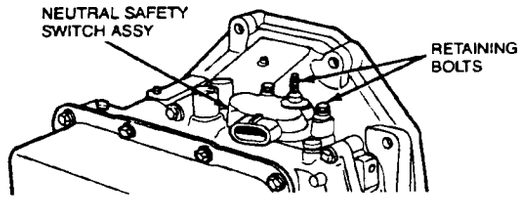

13. Remove one 8mm fluid level dipstick tube retaining bolt and pull tube from case.

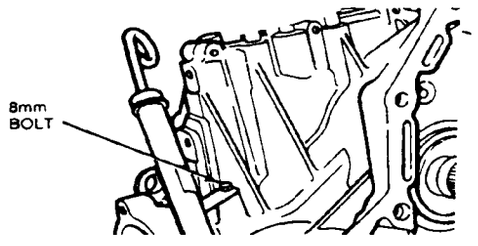

14. Remove five 8mm and four 6mm chain cover bolts from inside torque converter housing.

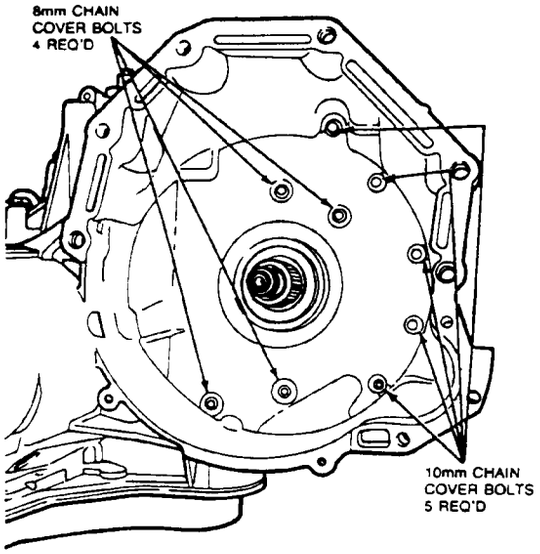

15. Remove converter oil seal using Seal Remover TOOL-1175-AC and Impact Slide Hammer T58L-101-B or equivalent.

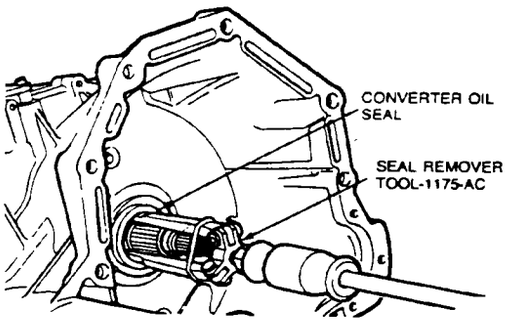

16. Remove 12 10mm pump and valve body cover (upper reservoir) bolts. Remove cover and discard gasket.

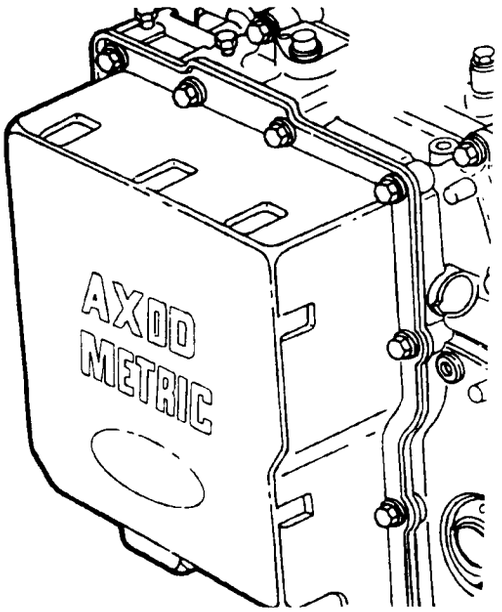

17. Disconnect electrical connectors from pressure switches and solenoid.

CAUTION: Use both hands. Do not pull on wire.

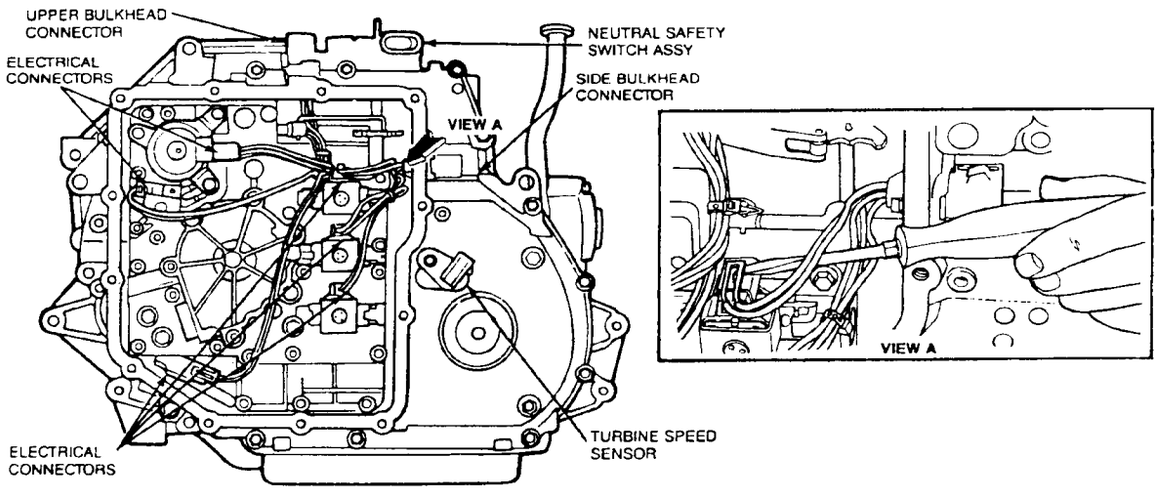

18. Compressing tabs on both sides of bulkhead connectors from inside of chain cover, remove connectors and wiring from chain cover.

    CAUTION: Do not pull on wiring. Pull on connector.

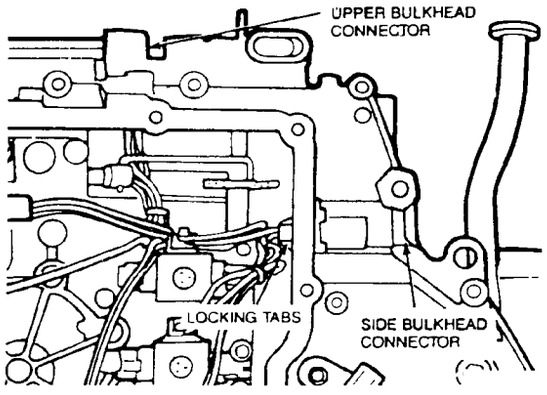

19. Using a 9mm wrench on flats on end of manual shaft, rotate shaft clockwise to position manual linkage in LOW detent (valve positioned all the way in).

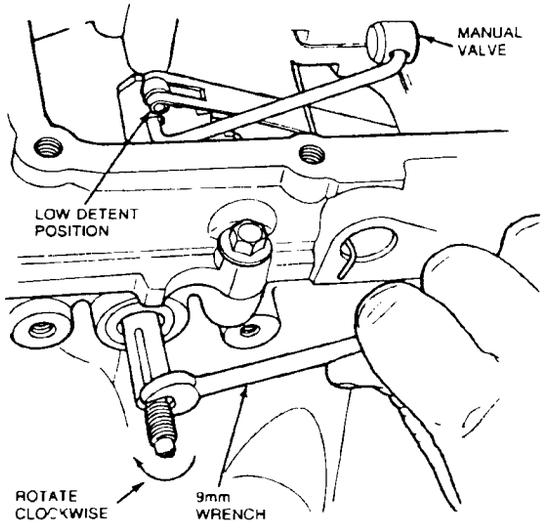

20. Remove 22 8mm oil pump and valve body assembly retaining bolts. Note length and location of bolts.

    CAUTION: Do not remove the two bolts that retain the oil pump and valve body assembly together.

    CAUTION: Do not remove oil pump cover bolts.

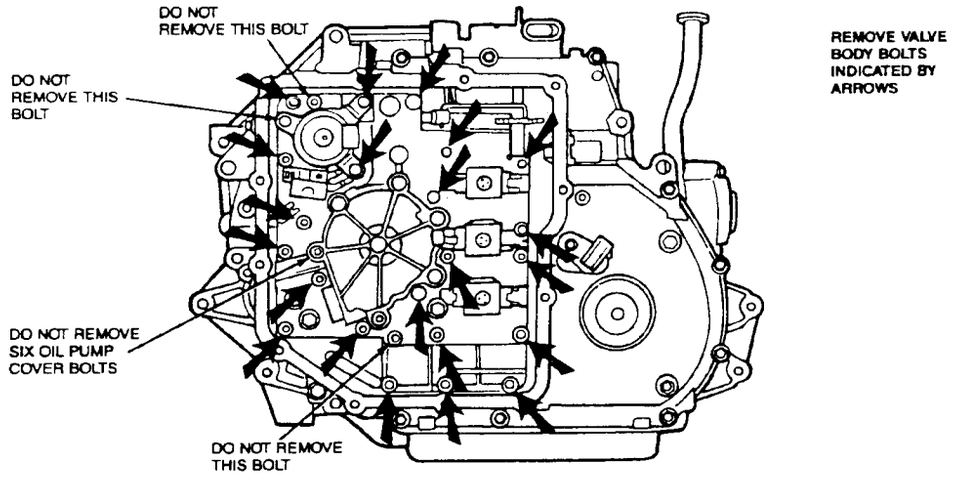

21. Rotate valve body clockwise and remove manual valve link from manual valve.
22. Disconnect manual valve link from detent lever and remove pump and valve body assembly.

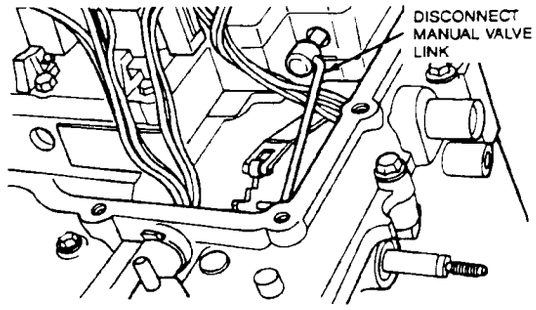

23. Pull oil pump driveshaft out of case. Remove and discard four Teflon® seals from pump shaft.

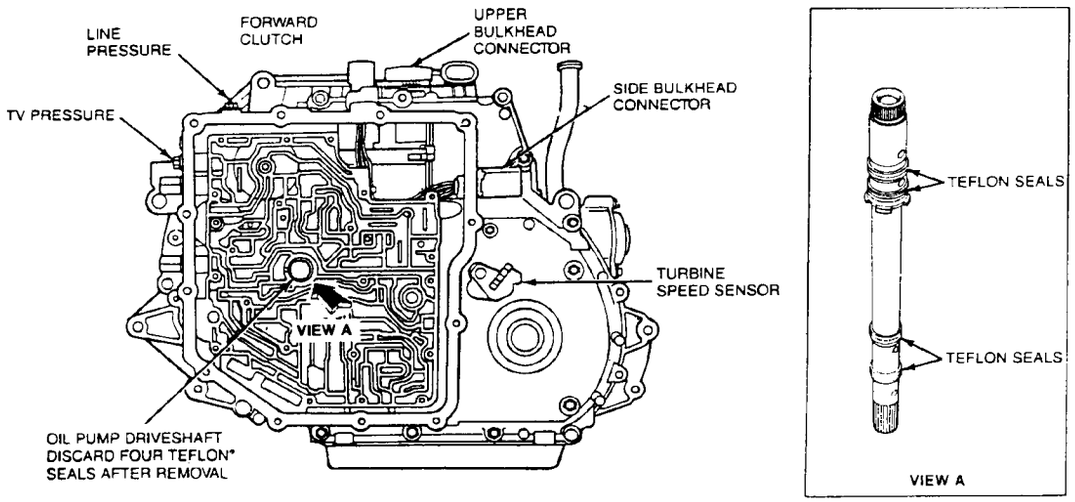

24. Rotate transaxle into vertical position.
25. Remove and discard output shaft circlip.

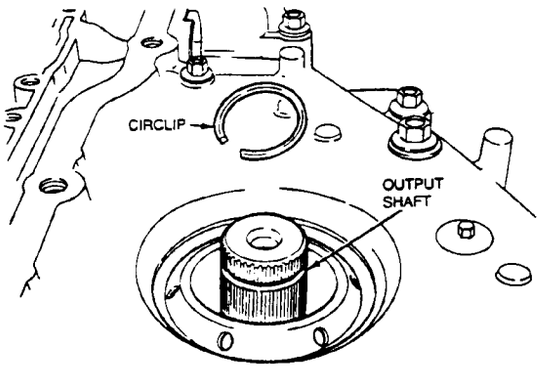

26. Remove LH output shaft seal as follows:
    a. Screw Output Shaft Seal Remover T74P-6700-A or equivalent into metal seal protector.
    b. Tighten screw on the end of tool until metal seal protector is removed.
    c. Remove metal seal protector from tool and install tool into seal.
    d. Tighten screw on end of tool until seal is removed.

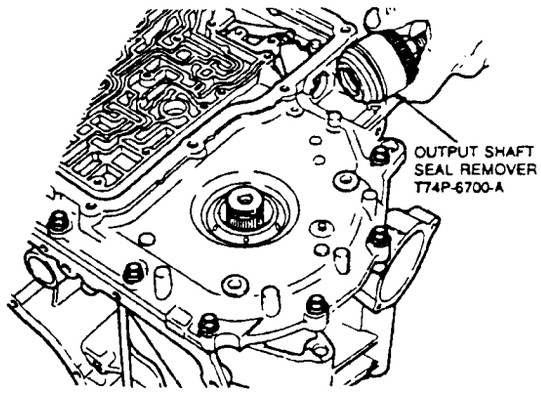

27. Remove 13 10mm, one 13mm and one 8mm chain cover bolts. Note length and location of bolts.

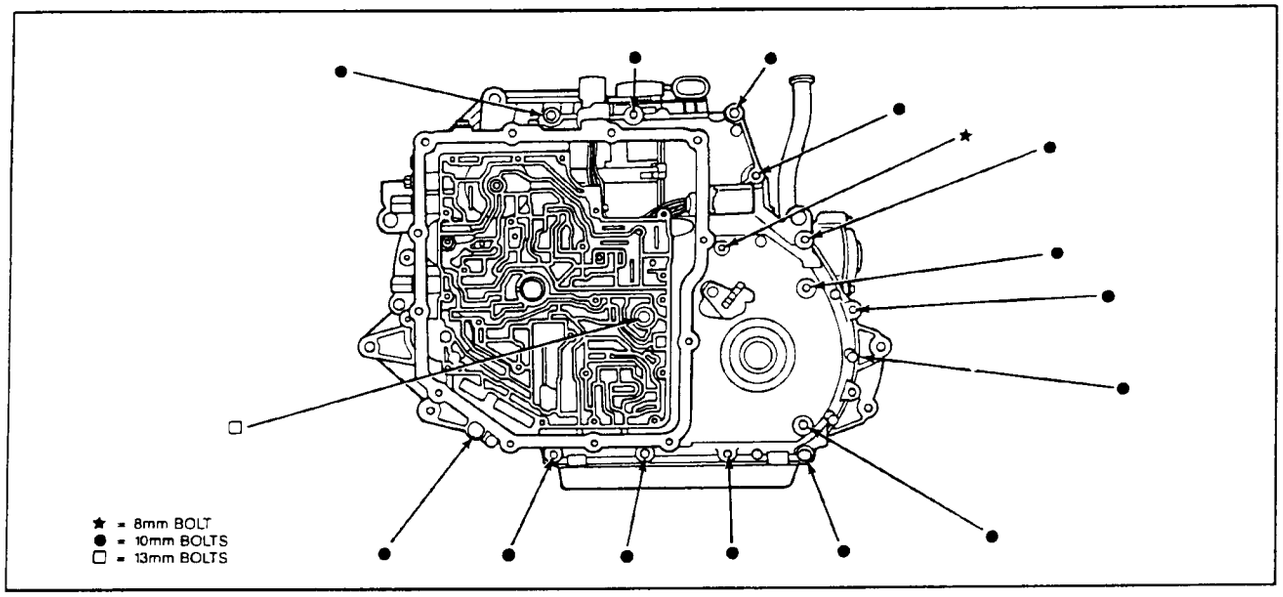

28. Remove chain cover and tag accumulator springs to be sure they are installed in their correct positions during assembly.
29. Remove and discard chain cover gasket.

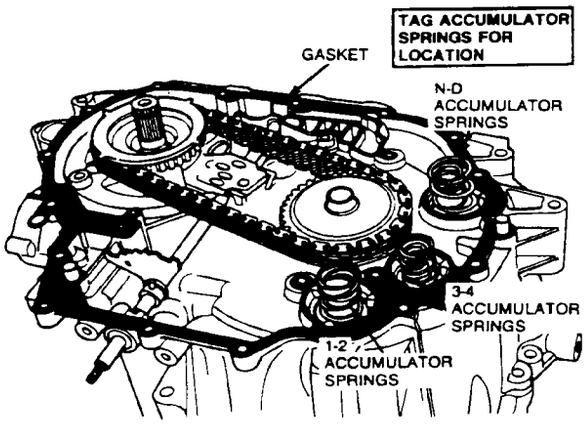

30. Remove No. 1 and No. 3 thrust washers from chain cover.

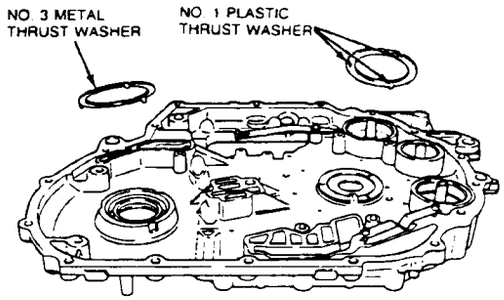

31. Simultaneously, lift out both sprockets with chain assembly.

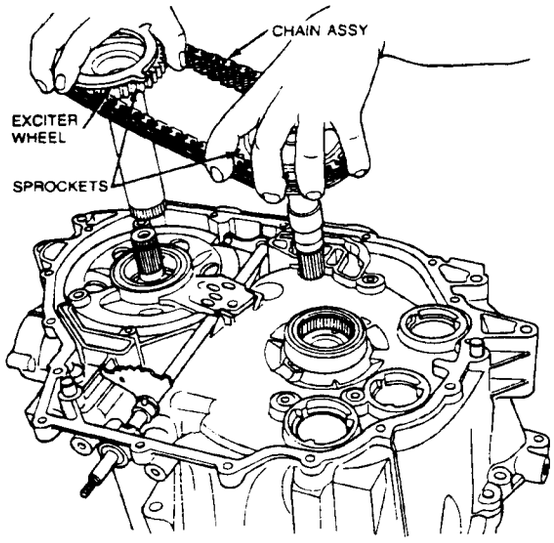

32. Remove No. 2 thrust washer from drive sprocket support and No. 4 thrust washer from driven sprocket support.

NOTE: No. 4 thrust washer may remain on driven sprocket.

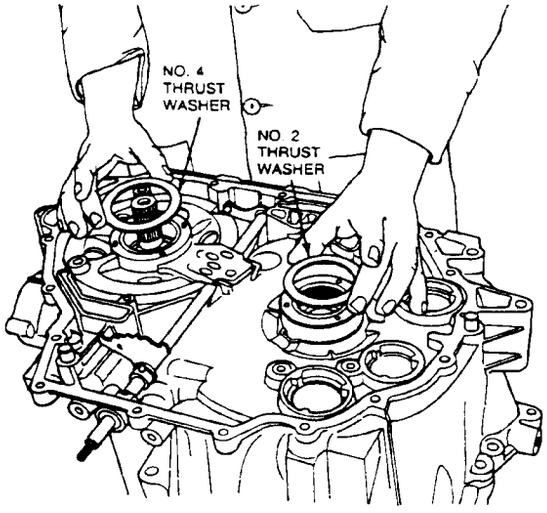

33. Inspect drive sprocket support bearing to determine if it needs to be replaced.

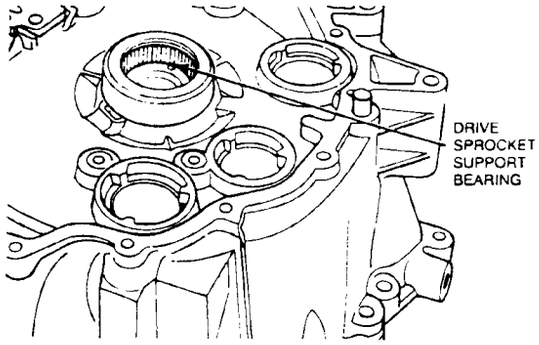

If bearing is OK, remove six T-30 Torx® bolts attaching support to case.

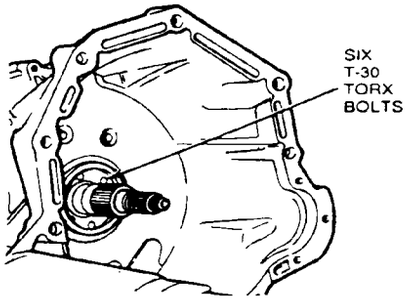

34. Remove and discard lockpin and two roll-pins from manual shaft using Locknut Pin Remover D81P-3504-N or equivalent.

CAUTION: Use care not to damage any machined surfaces.

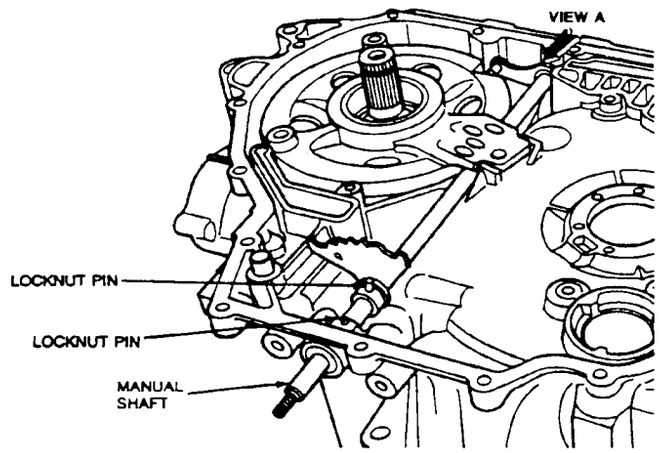

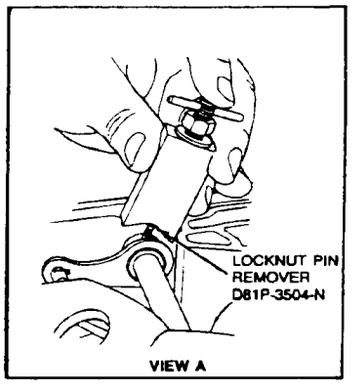

35. Slide manual linkage shaft out of case. Then, pry seal out of case.

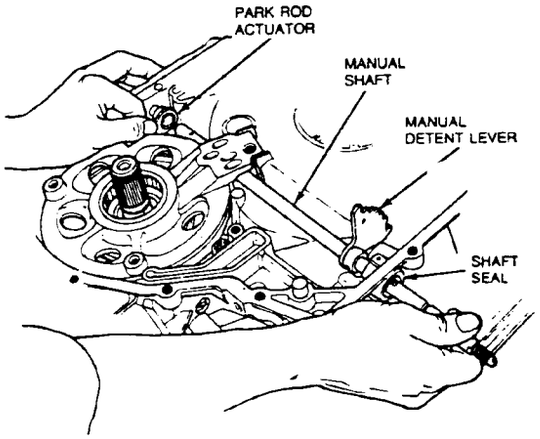

36. Determine with a straight edge or a flat block whether the machined bolt hole surfaces on the support are above or below the case machined surface for reassembly.

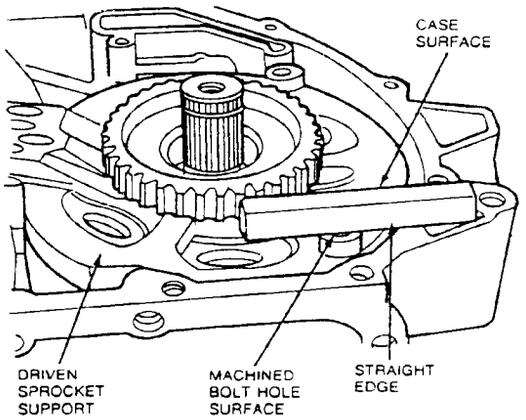

37. Remove driven sprocket support assembly and remove five Teflon® seals from support.

38. Remove No. 5 selective thrust washer.

NOTE: Thrust washer may remain on sprocket support assembly.

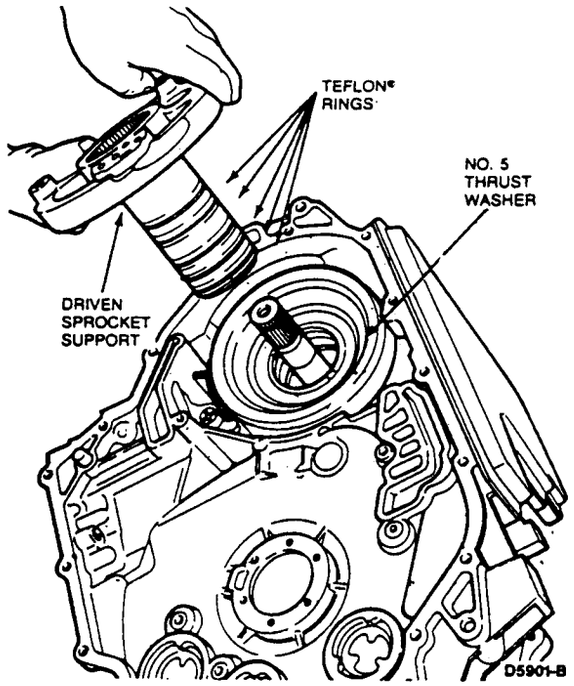

39. Remove 17 8mm oil pan cover bolts. Remove cover and discard gasket.

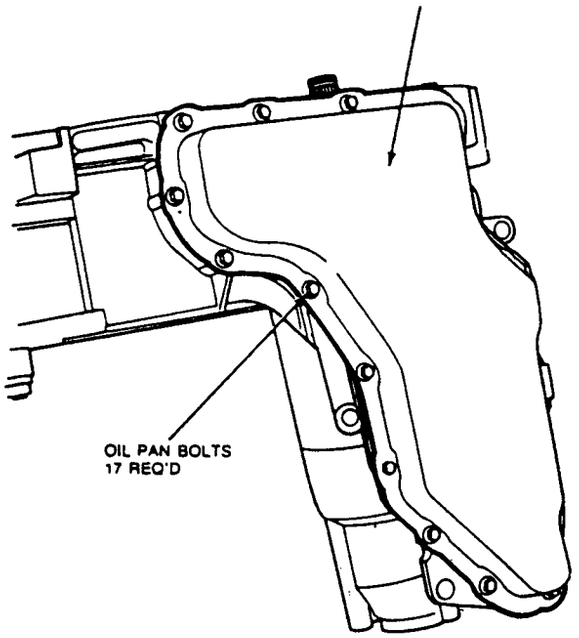

40. Remove magnet from oil pan.

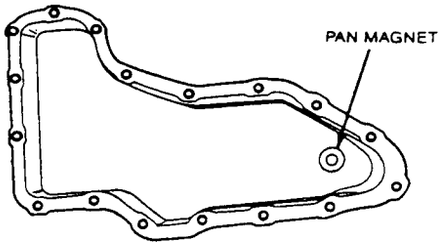

NOTE: If support is binding it may be necessary to back out reverse clutch anchor bolt.

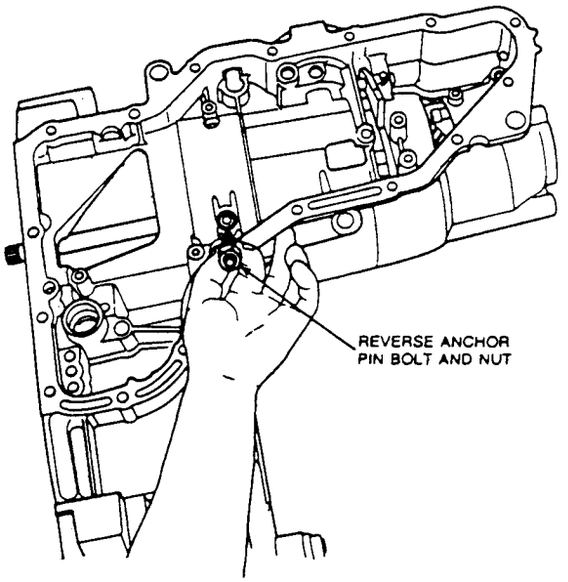

41. Using a wire hook, remove No. 8 selective thrust washer and No. 9 needle bearing from bottom of cylinder.

NOTE: Thrust washer and needle bearing may remain on driven sprocket support assembly when it is removed.

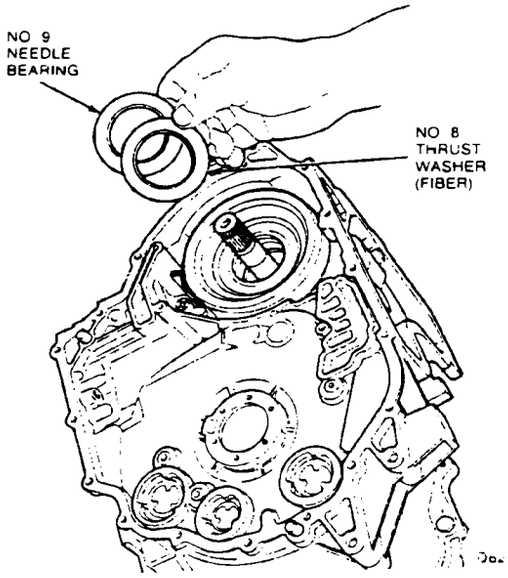

42. Remove plastic overdrive band retainer.

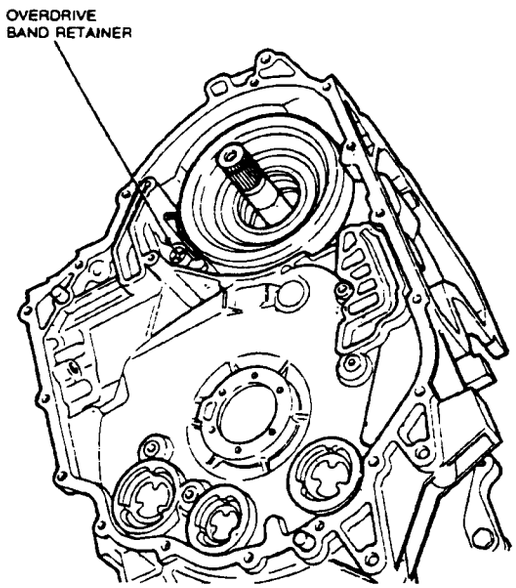

43. Remove overdrive band.

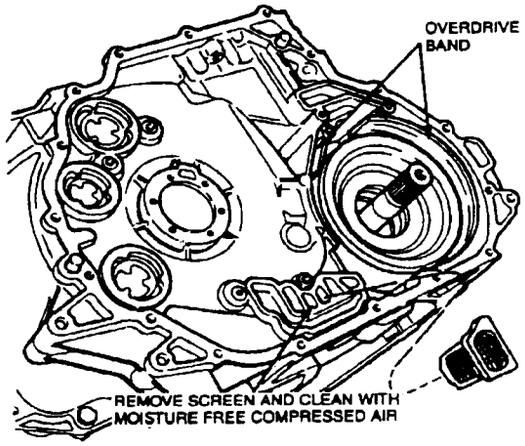

44. Using Front Clutch Loading Tool T86P-70389-A or equivalent, install hook end of tool into one of the six lube holes in front sun and shell assembly. Position notched block over edge of assembly and tighten handle. **Do not** over-tighten handle. Lift assembly out of case.

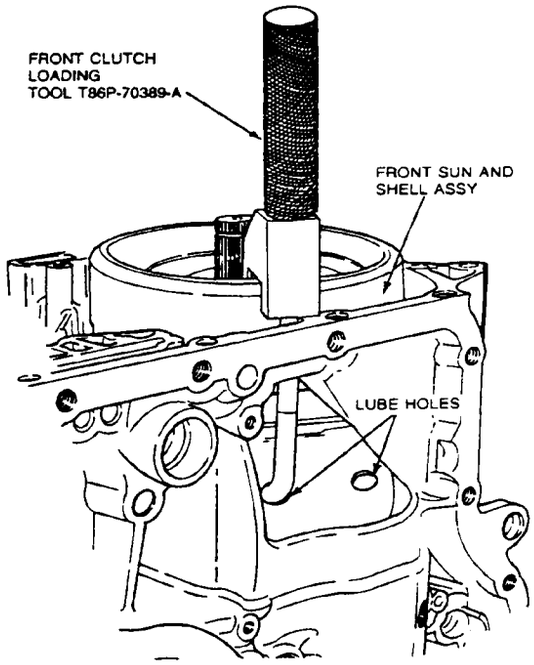

45. Remove 8mm reverse apply tube / oil filter bracket bolt and bracket.

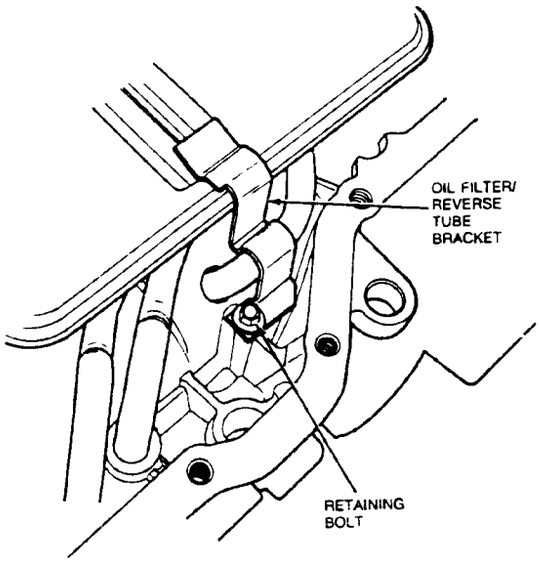

46. Remove oil filter screen and discard lip seal.
NOTE: Lip seal may stick inside case.

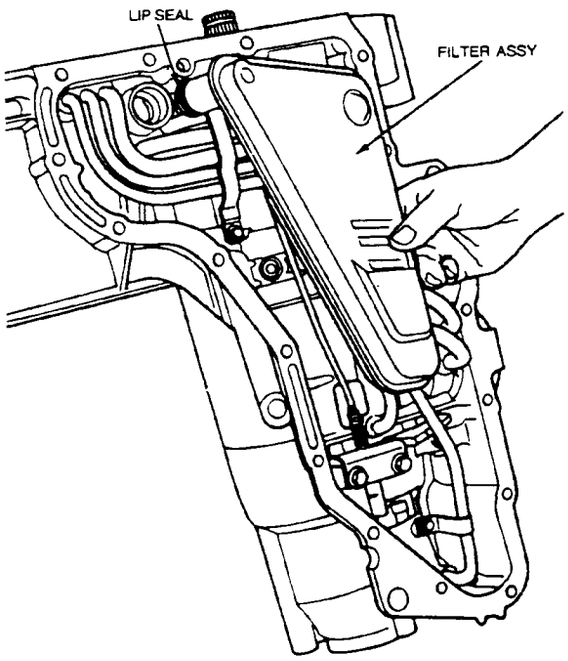

47. Remove 8mm tube bracket bolts and brackets.
NOTE: For complete transaxle disassembly, the reverse apply tube **must** be removed prior to removing the reverse clutch, or the differential.

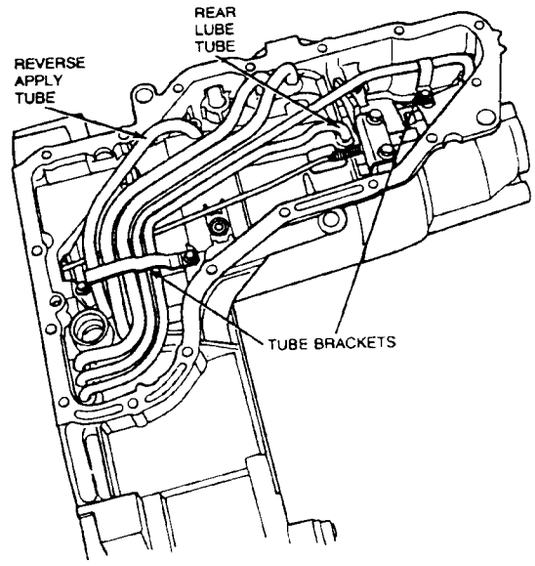

48. If necessary, remove lube tubes using Lube Tube Remover T86P-70001-A and Impact Slide Hammer T59L-100-B or equivalent.

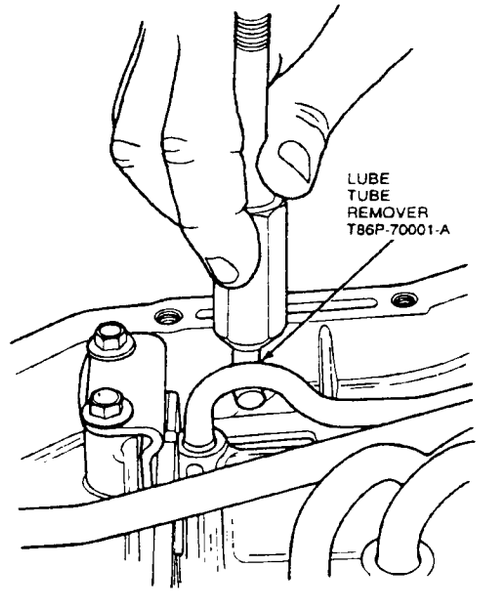

49. Remove two 8mm park rod abutment bolts. Remove park rod by lifting rod to clear abutment and lower from case.

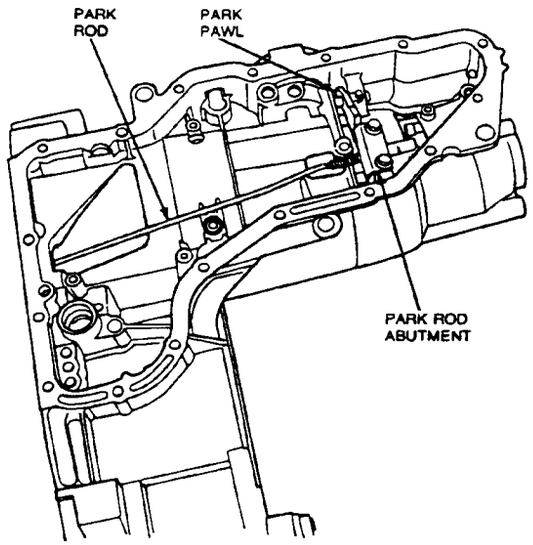

50. Remove park pawl shaft roll pin.

51. Use magnet to remove park pawl shaft, and remove park pawl and return spring.

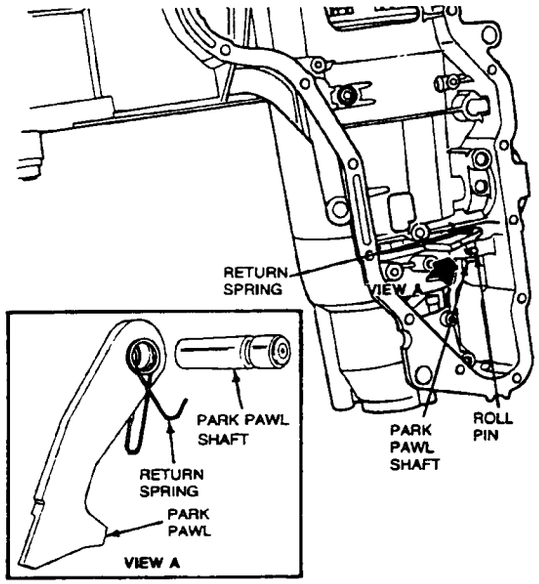

52. Loosen 19mm reverse clutch anchor pin nut and remove 6mm Allen head bolt.

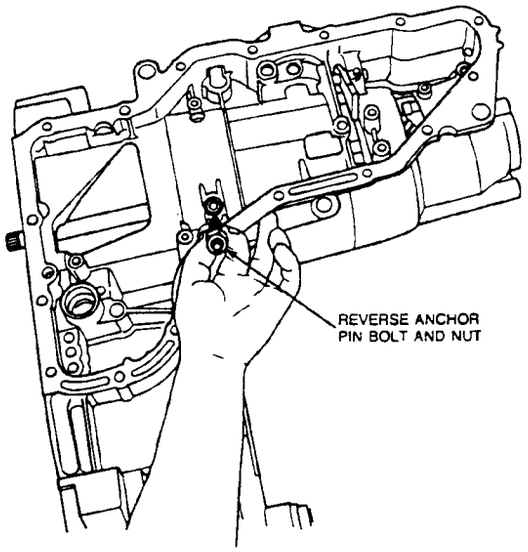

53. Rotate transaxle to the horizontal position.

54. Locate hook portion of Front Clutch Loading Tool T86P-70389-A or equivalent on inner diameter of reverse clutch cylinder. Grasp outer diameter of cylinder with fingertips and slide clutch assembly out of case.

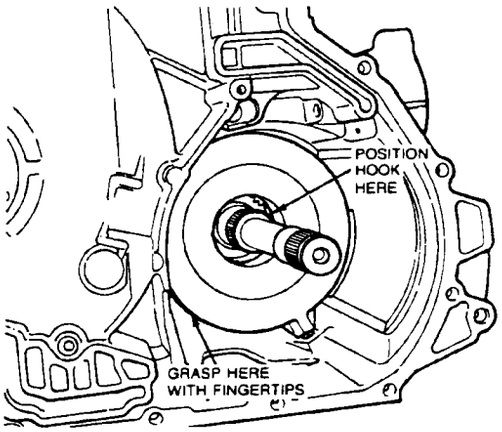

55. Rotate transaxle to vertical position. Holding the front planetary shaft, lift out both front and rear planetary assembly.

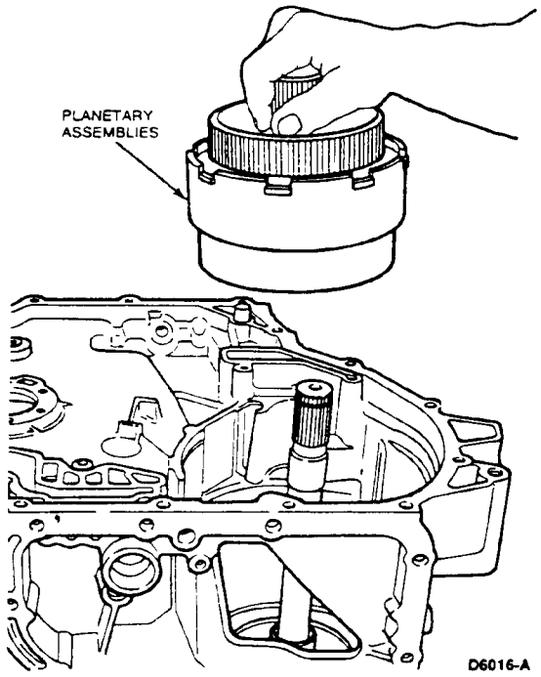

56. Lift out low-intermediate drum and sun gear assembly.

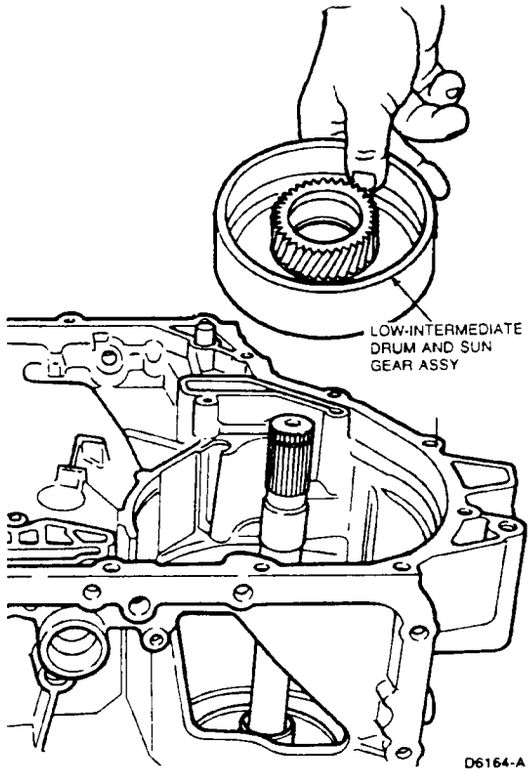

57. Remove low-intermediate band.

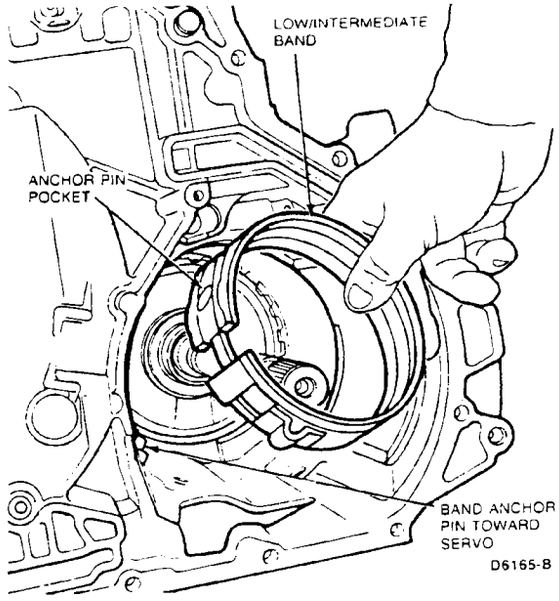

58. Remove final drive gear assembly snap ring from case using a screwdriver inserted through side of case.

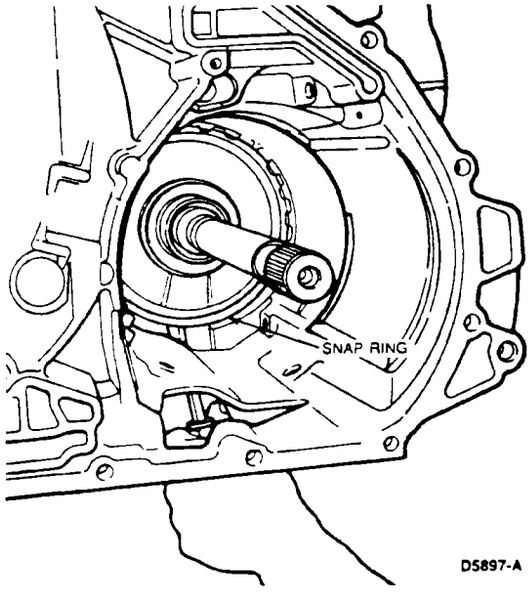

59. Lift out final drive assembly using output shaft.

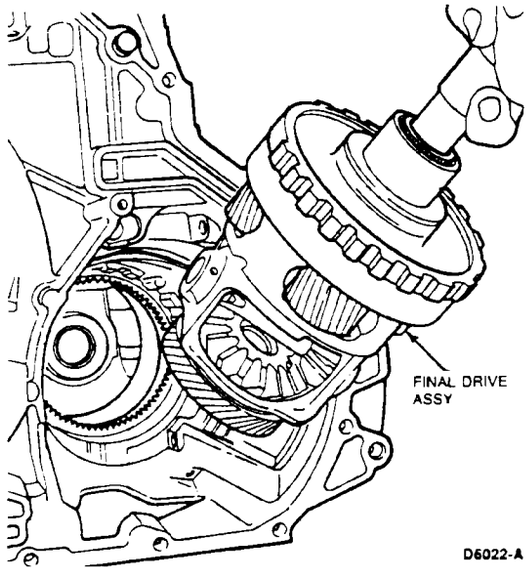

60. Drive out rear lube tube seal using Rear Lube Tube Seal Installer T91P-76085-A.

61. Remove final drive ring gear from case.

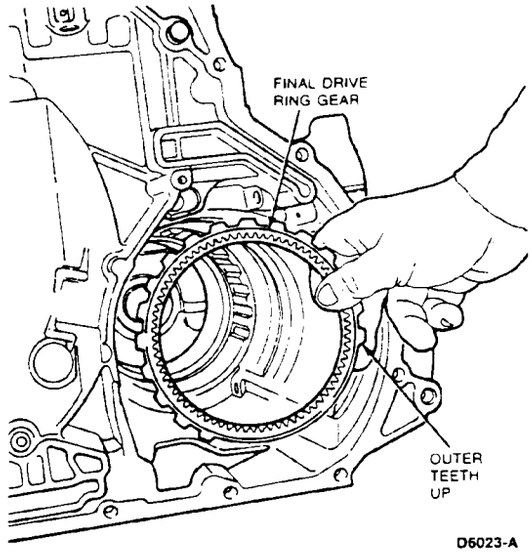

62. Remove No. 18 thrust washer and No. 19 needle bearing.

NOTE: No. 18 thrust washer may remain on the final drive assembly next to speedometer drive gear.

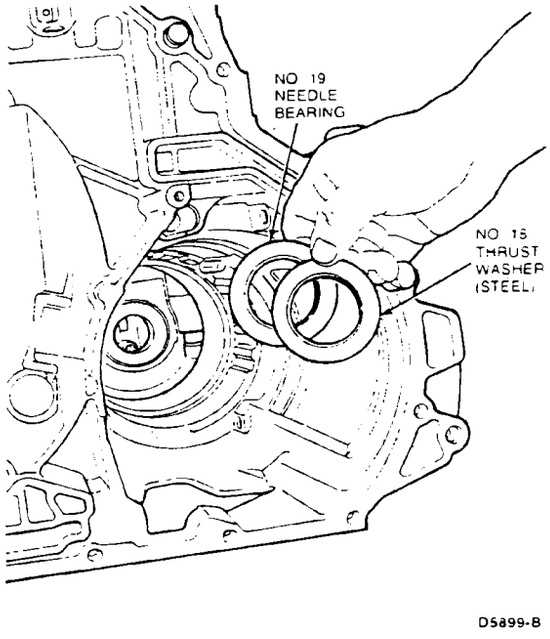

Assembly

1. Position case in horizontal position.
2. If removed, install drive sprocket support. Install six (T-30) Torx® bolts and tighten to 9-12 N·m (7-9 lb-ft).

NOTE: Bolt holes are offset. Sprocket support can only be aligned one way.

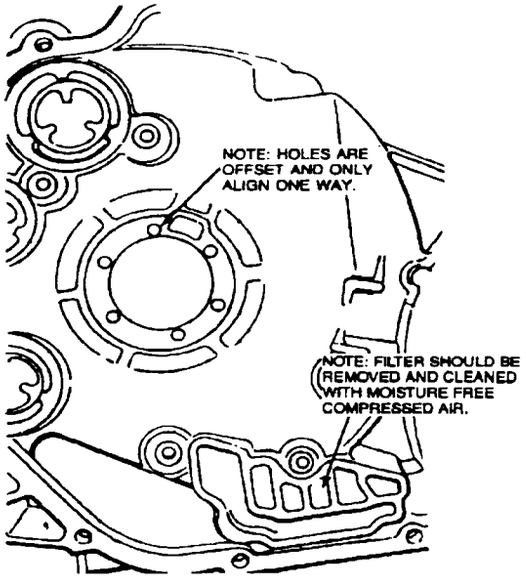

3. Install converter oil seal using Front Pump Seal Installer T87L-70401-A or equivalent.

   NOTE: After installation, verify presence of garter spring on seal.

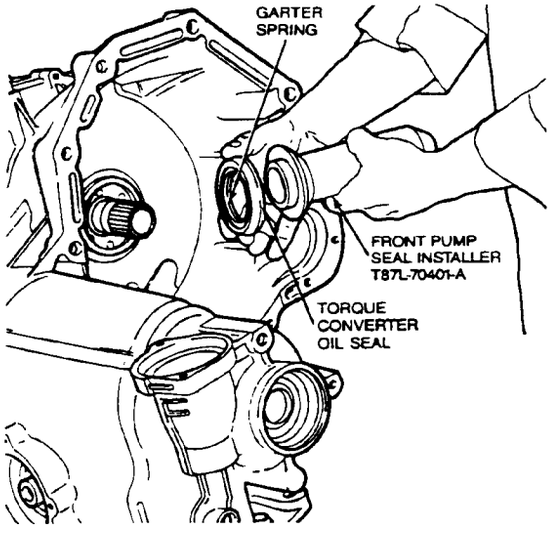

4. Install RH output shaft seal using Output Shaft Seal Replacer T86P-1177-B or equivalent.

   NOTE: After installation, verify presence of garter spring on seal.

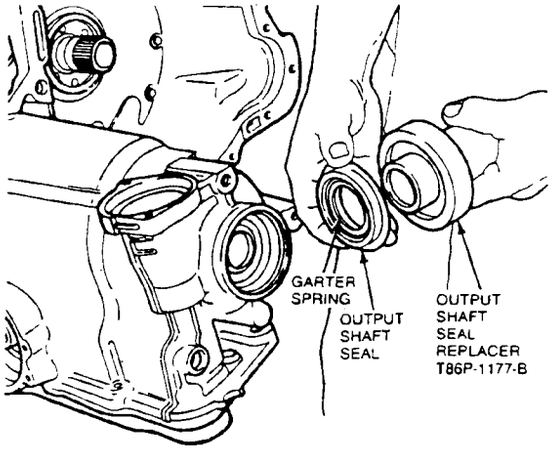

5. Install AXOD-E End Play Tool T87P-70014-AH and Step Plate Adapter D80L-630-3 or equivalent and two bolts over RH output shaft opening. Tool will be used later to perform selective thrust washer checks.

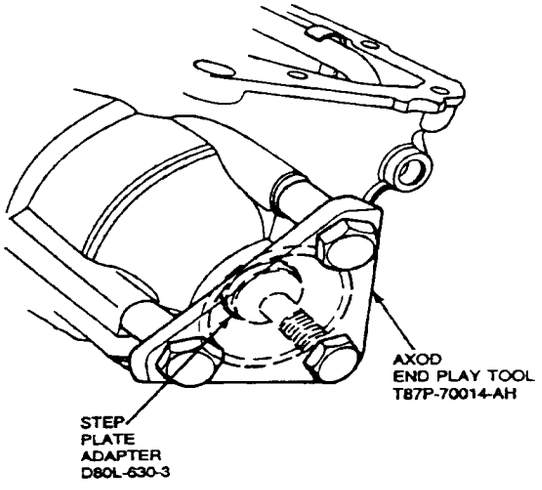

6. Place case in vertical position. Install No. 19 needle bearing over case boss with flat side facing up, outer lip facing down.

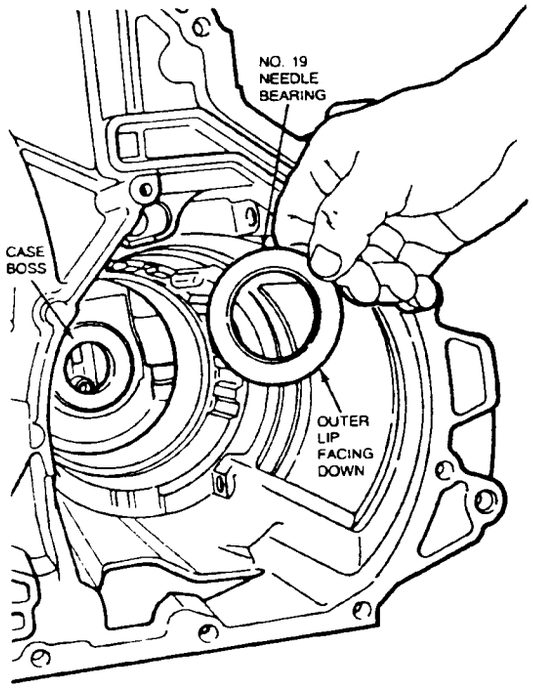

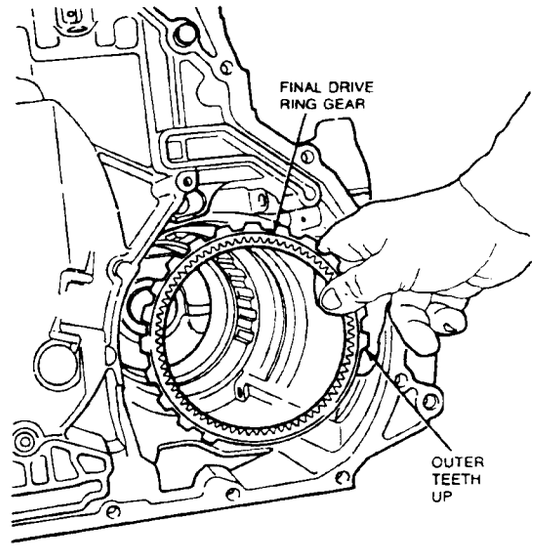

7. Install final drive ring gear with external splines up. Using a hammer handle if necessary, tap gently to fully seat into case splines.

8. Assemble the following components:
   - Speedo drive gear
   - Differential assembly
   - Final drive sun gear
   - Parking gear
   - No. 16 needle bearing
   - Rear planetary support
   - No. 15 needle bearing
   - No. 18 thrust washer

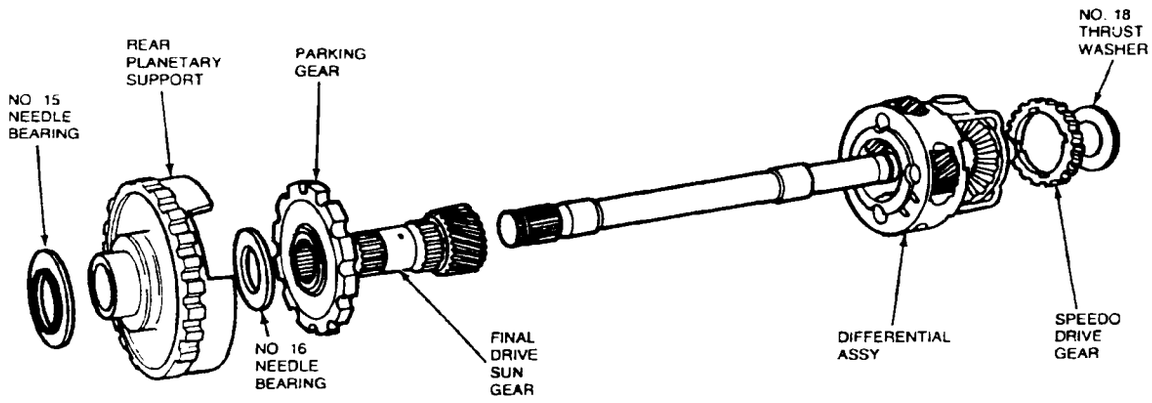

9. Lower final drive assembly into case.

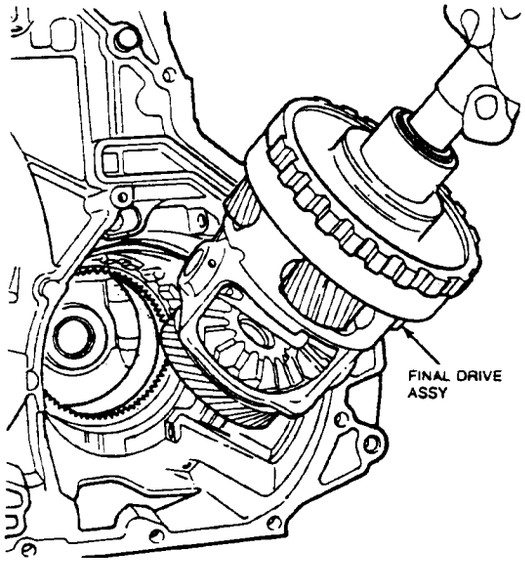

10. Install snap ring and align end of snap ring with low-intermediate band anchor pin.

11. Install a new rear lube tube using Rear Lube Tube Installer T91P-76085-A.

12. Drive seal into position until seal makes solid contact with rear support.

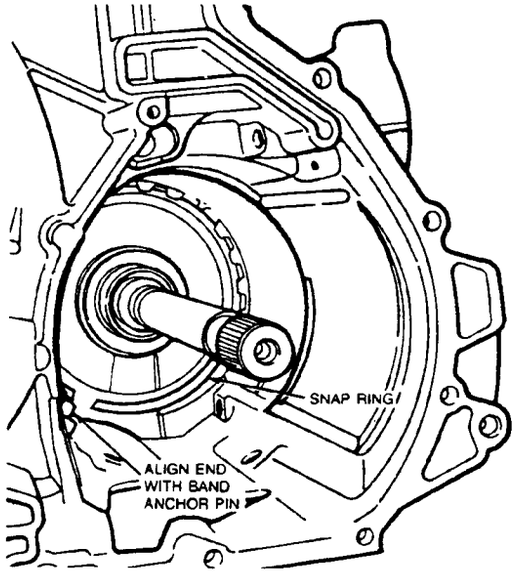

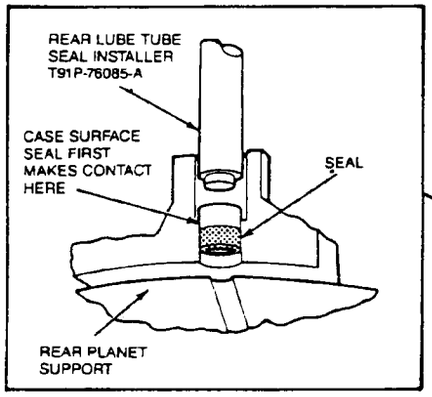

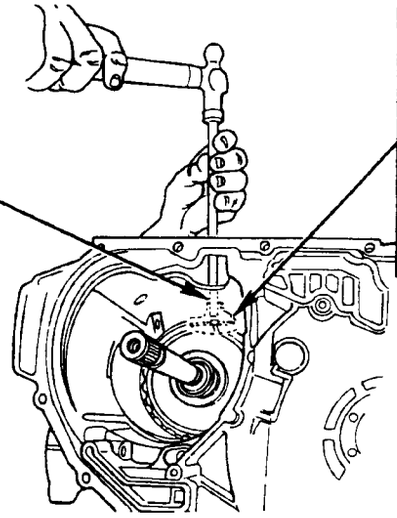

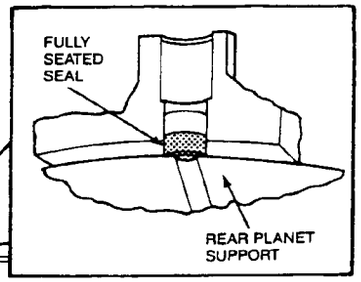

NOTE: THIS CASE SURFACE WHERE THE STEEL SHOULDER OF THE SEAL FIRST MAKES CONTACT WILL GIVE SOME RESISTANCE DURING INITIAL INSTALLATION. CONTINUE DRIVING UNTIL THE SEAL IS FULLY SEATED.

13. Using a feeler gauge (.005) check between case and rear support through opening in snap ring. If gauge passes between seal and rear support the seal is not fully seated. Repeat step 12.

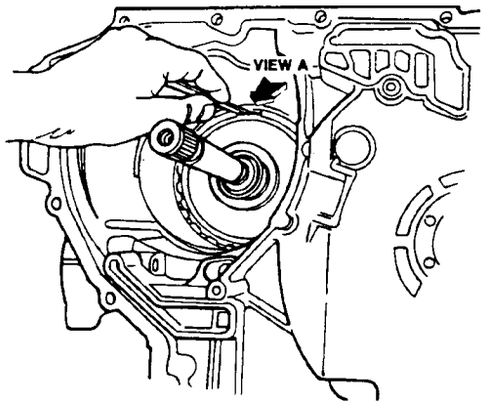

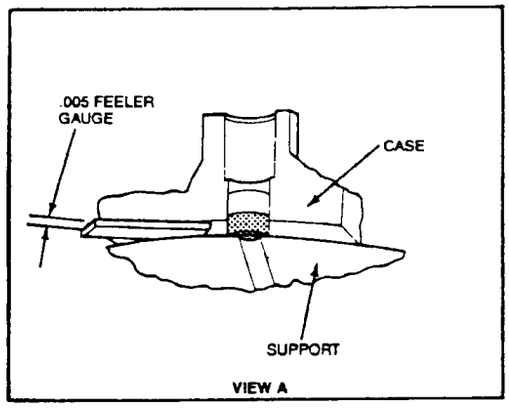

14. Perform end clearance check for No. 18 selective thrust washer as follows:
    - Place screwdriver under differential case and pry up.
    - Mount Dial Indicator TOOL-4201-C or equivalent with stylus on end of output shaft.
    - Back out screw on tool installed in Step 5 until it no longer touches shaft.
    - Zero dial indicator.
    - Tighten screw to 4-5 N·m (35-44 lb-in).
    - Observe reading on dial indicator.

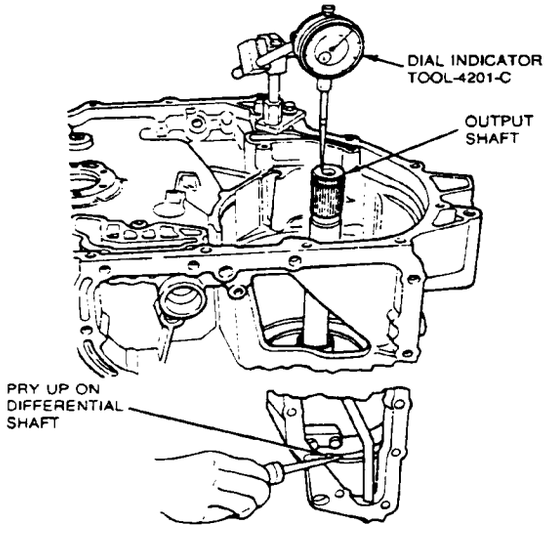

The clearance should be 0.1-0.65mm (0.004-0.025 inch). If the clearance is not within specification, selective thrust washers are available in the following thicknesses:

- 1.25-1.15mm (0.049-0.045 inch) Orange
- 1.50-1.40mm (0.059-0.055 inch) Purple
- 1.75-1.65mm (0.069-0.065 inch) Yellow

15. After installing the correct thrust washer, check the clearance.

    NOTE: After completing end clearance check, back off screw on tool and leave tool in position for No. 5 and No. 8 selective thrust washer clearance check to be performed later.

16. Install park pawl, return spring, park pawl shaft and locator pin.

NOTE: Ensure that the park pawl engages the park gear and returns freely.

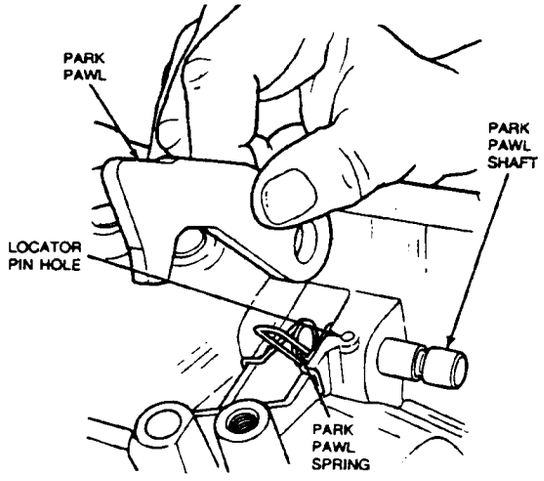

17. Install park rod actuating lever and park rod in case. Install park rod abutment and start abutment bolts. Push in park pawl and locate rod between pawl and abutment.

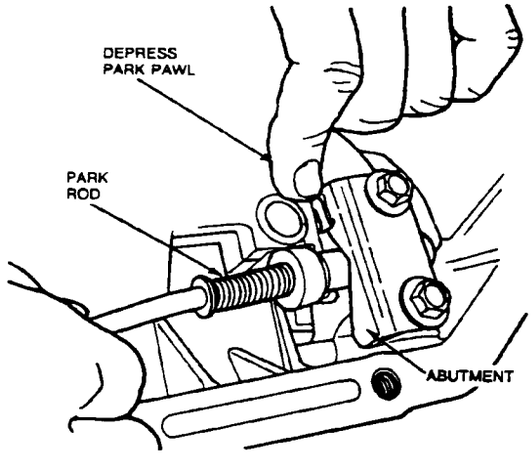

18. Install low-intermediate band into case and align anchor pin pocket with anchor pin.

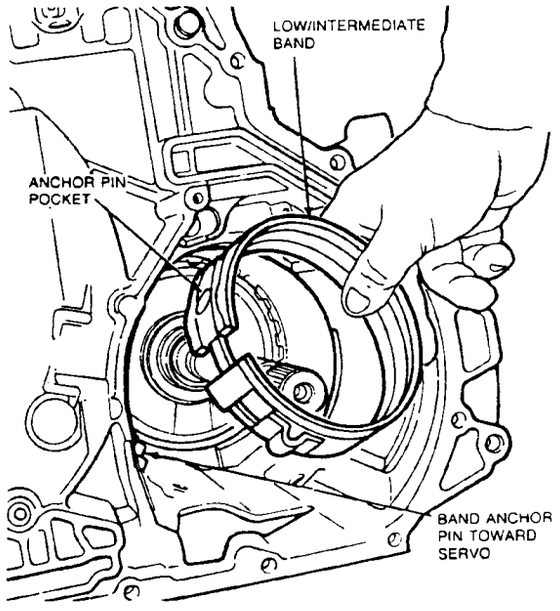

19. Install low-intermediate drum and sun gear.

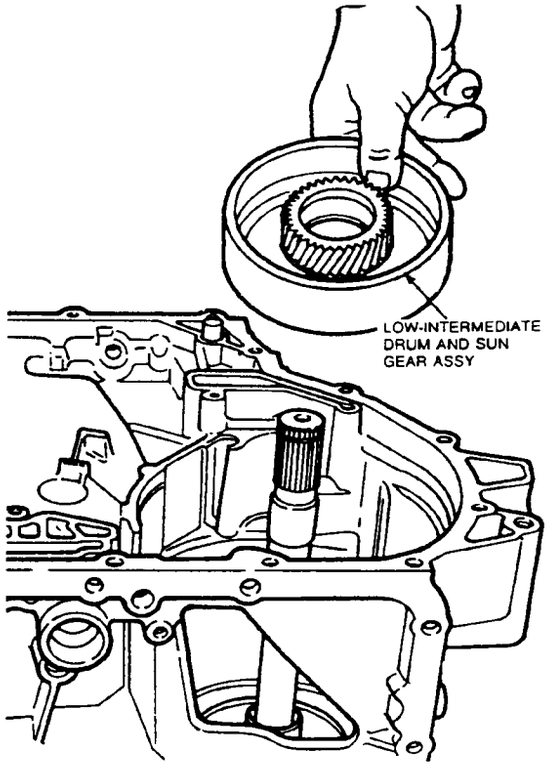

20. Assemble the following components:
    - Ring gear and shell assembly
    - Rear planetary

- No. 13 needle bearing
- Front planetary
- Snap ring

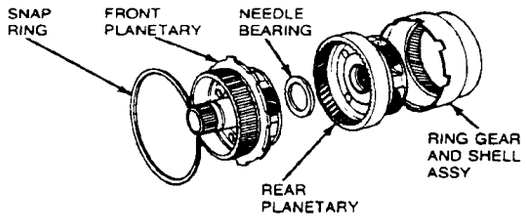

21. After assembling components, carefully slide assembly over output shaft.

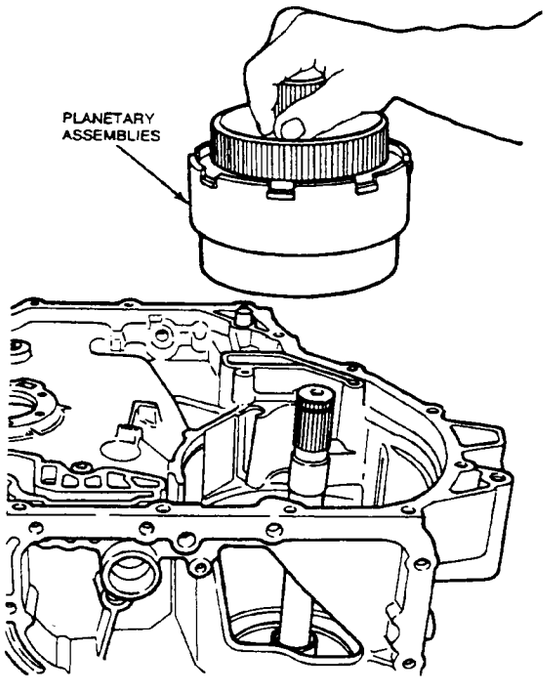

22. Lower reverse clutch into case and start clutch plate engagement.

23. Align clutch cylinder anchor pin pocket with anchor pin case hole.

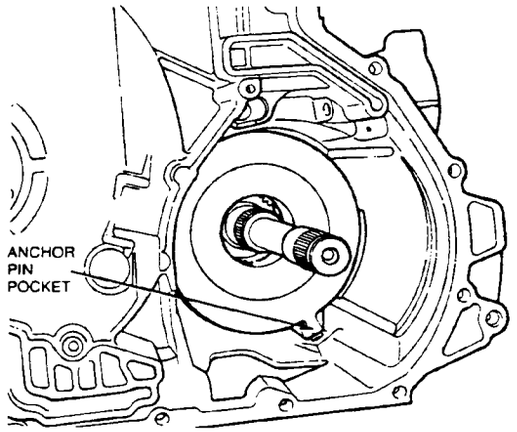

NOTE: To seat reverse clutch, the intermediate clutch hub can be used as a tool to complete clutch plate engagement. Rotating planet with hub will allow clutch splines to engage.

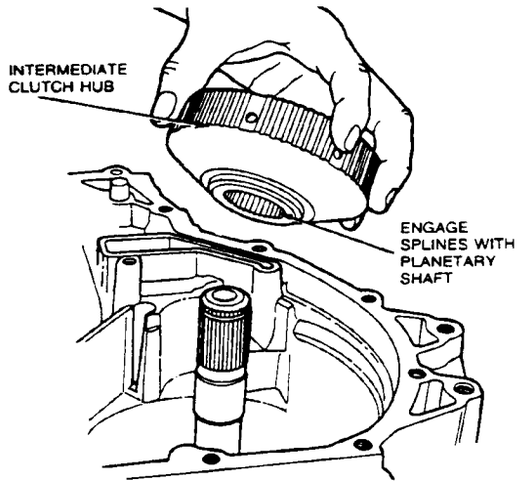

24. Start reverse anchor pin bolt but do not tighten.

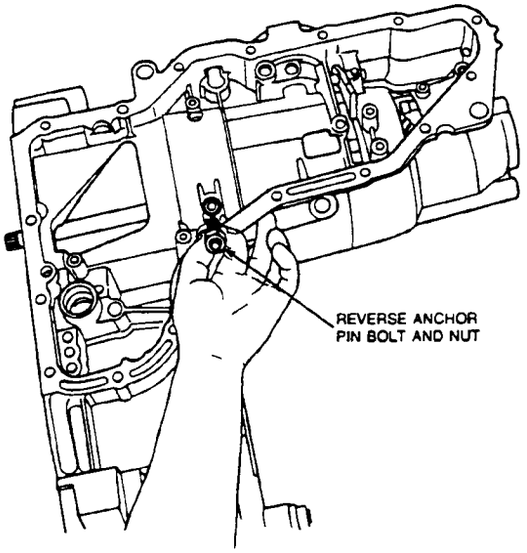

25. Assemble forward, direct and intermediate clutch assembly. Attach Front Clutch Loading Tool T86P-70389-A or equivalent to assembly.

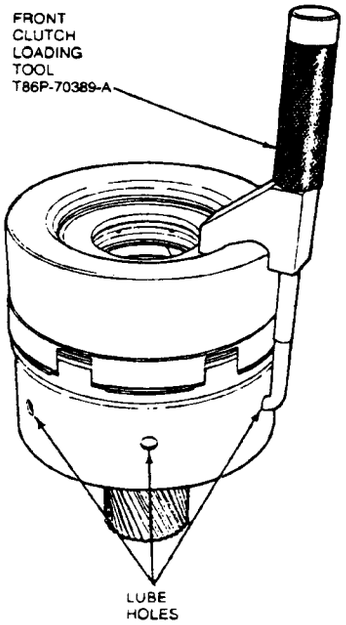

26. Lower assembly into case, aligning shell and sun gear splines into forward planetary.

CAUTION: Ensure the assembly is fully seated before removing the tool.

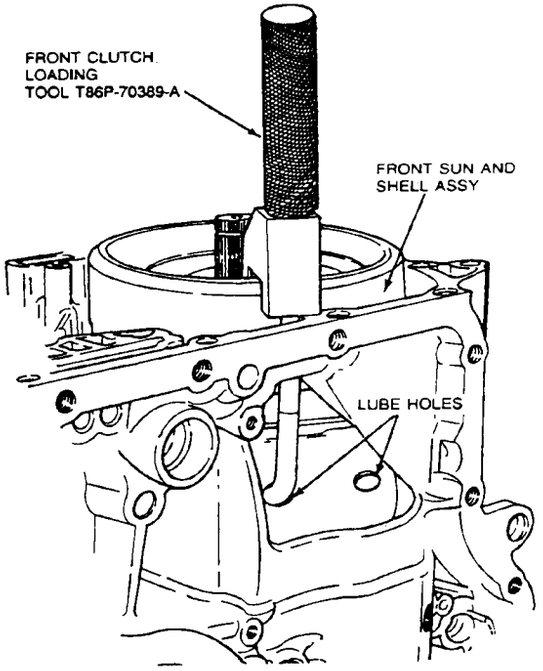

27. Install overdrive band into case.

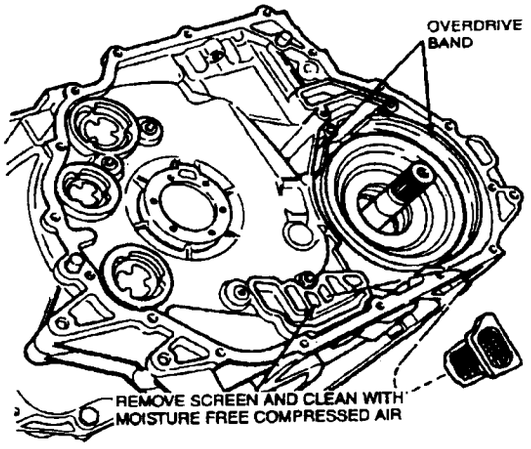

28. Install plastic retainer with cross hairs facing up.

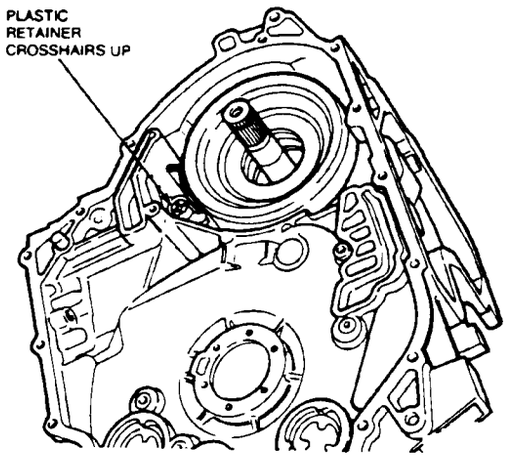

NOTE: Perform Steps 26 through 32 to check the drive sprocket end clearance for No. 5 and No. 8 selective thrust washers.

29. Tighten screw on end play tool previously installed.
30. If not already removed, remove all five Teflon® seals from driven sprocket support assembly.
31. Install No. 9 needle bearing over output shaft, with outer lip facing up. Then, install No. 8 selective thrust washer.
32. Remove No. 5 thrust washer, if still attached to sprocket support.
33. Install driven sprocket support and driven sprocket.
34. To measure No. 8 thrust washer clearance, it first must be determined if machined bolt hole surfaces on driven sprocket support are above or below case machined surface.

    If machined bolt hole surfaces are **above** case machined surface, place depth micrometer on machined bolt hole surface on driven sprocket support. Measure distance to case machined surface. Measure at both support bolt hole machined surfaces and determine average from both readings. If reading exceeds 0.21mm (0.008 inch), refer to No. 8 Thrust Washer.

    Use selection chart to determine correct thrust washer to install. Install correct thrust washer, repeat measurement and record reading. Go to Step 32.

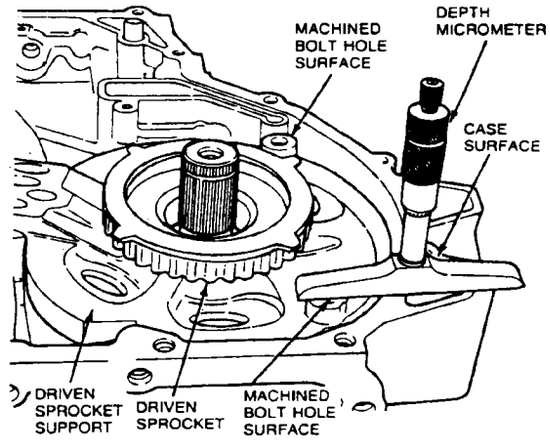

If machined bolt hole surfaces are **below** case machined surface, place depth micrometer on case machined surface and measure distance to driven sprocket support machined bolt hole surfaces. Measure at both support bolt hole machined surfaces and determine average from both readings. If reading exceeds 0.46mm (0.018 inch), refer to No. 8 Thrust Washer Selection chart to determine correct thrust washer to install. Install correct thrust washer, repeat measurement and record reading. Go to Step 32.

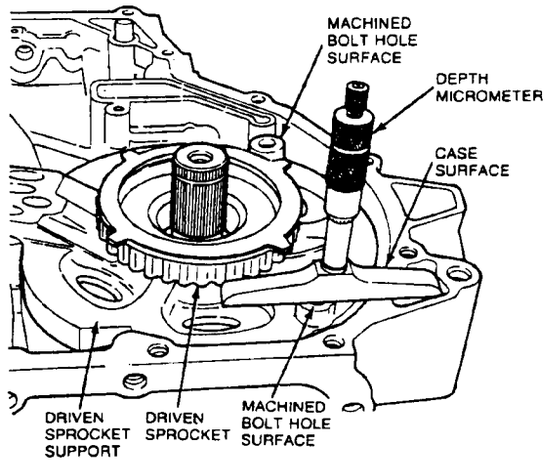

NO. 8 THRUST WASHER SELECTION

Thrust Washer Thickness		Color
mm	Inches	
1.53-1.43	0.060-0.056	Natural
1.78-1.68	0.070-0.066	Dark Green
2.02-1.92	0.079-0.075	Light Blue
2.27-2.17	0.089-0.085	Red

35. Remove driven sprocket, driven sprocket support, No. 8 selective thrust washer and No. 9 needle bearing.
36. Install No. 5 thrust washer on driven sprocket support, aligning tab on washer with slot in driven sprocket support. Apply grease to thrust washer to help hold it in position.

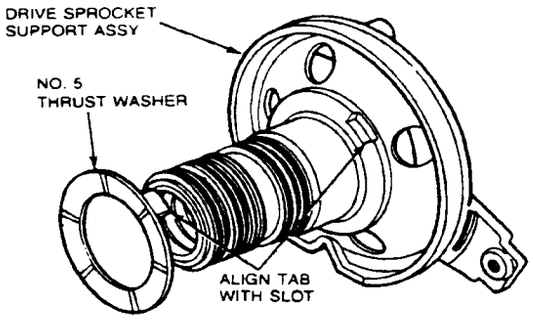

37. Install driven sprocket support without No. 8 thrust washer and No. 9 needle bearing.
38. Position depth micrometer on machined case surface and measure distance between driven sprocket support machined bolt hole surface and case surface. Measure at both bolt hole machined surfaces and determine average from both readings. The difference between this reading and the reading for No. 8 thrust washer recorded in Step 31 must be greater than zero but less than 0.85mm (0.033 inch). If measurement exceeds specification, refer to No. 5 thrust Washer Selection chart to determine the correct thrust washer to install.

    Example:

    When driven sprocket support surface is above case surface.

    Average reading for No. 8 thrust washer measurement 0.006-inch

    Average reading for No. 5 thrust washer measurement 0.018-inch

    Difference 0.024-inch

    NOTE: Reading from No. 8 thrust washer would be **added** to determine total.

    When driven sprocket support surface is below case surface.

    Average reading for No. 8 thrust washer measurement 0.015-inch

    Average reading for No. 5 thrust washer measurement. 0.045-inch **Difference** 0.030-inch

    NOTE: Reading from No. 8 thrust washer would be **subtracted** to determine total.

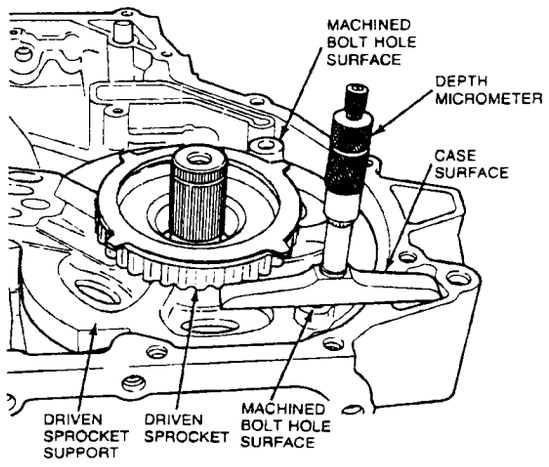

NO. 5 THRUST WASHER SELECTION

Thrust Washer Thickness		Color
mm	Inches	
2.28-2.18	0.090-0.086	Green
2.53-2.43	0.099-0.095	Black
2.77-2.67	0.109-0.105	Natural
3.02-2.92	0.118-0.115	Red

39. Remove driven sprocket support and install No. 9 needle bearing and correct No. 8 thrust washer.
40. Install Teflon® seals on driven sprocket support.

41. Install correct No. 5 thrust washer on driven sprocket support and install driven sprocket support. Apply grease to thrust washer to help hold it in position.

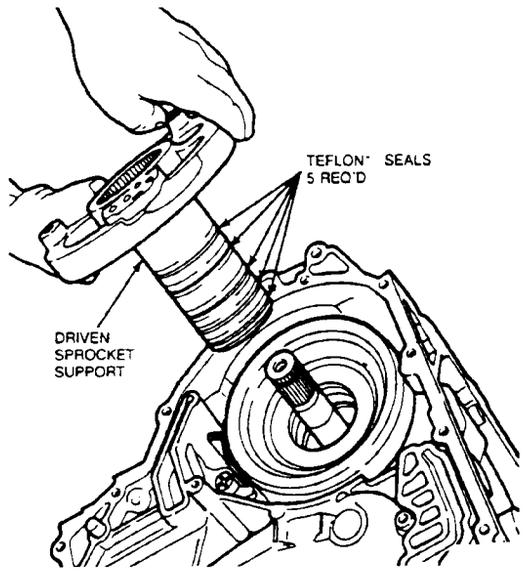

42. Install manual shaft seal by tapping into case.
43. Start manual shaft through seal and slide manual detent lever onto shaft.
44. Slide manual shaft through park rod actuating lever and tap into case hole.

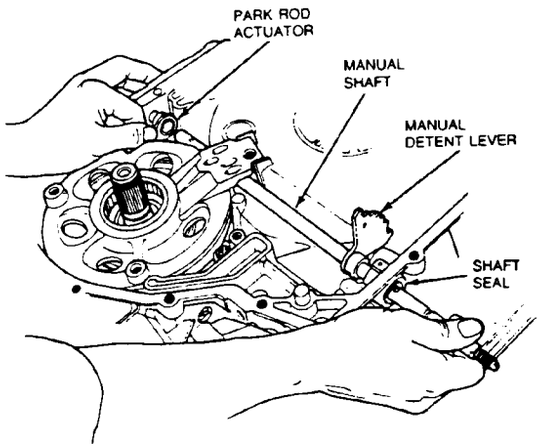

45. Install new manual shaft lock pin through case hole, aligning with groove in shaft.
46. Install new roll pins in detent lever and park rod actuating lever.

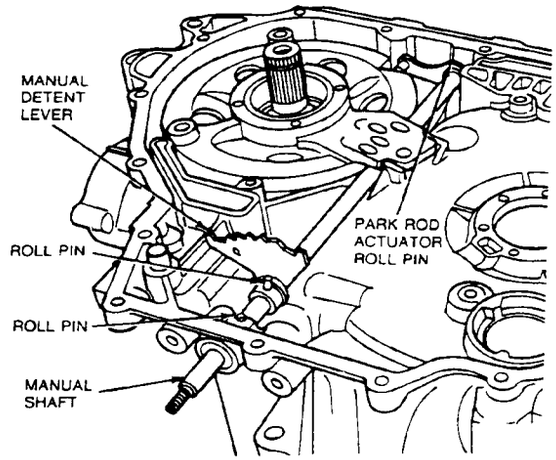

47. Install No. 2 and No. 4 tabbed thrust washers onto drive and driven sprocket supports. Align tabs on thrust washers with holes in sprocket supports. Apply grease to washers to help hold in position.

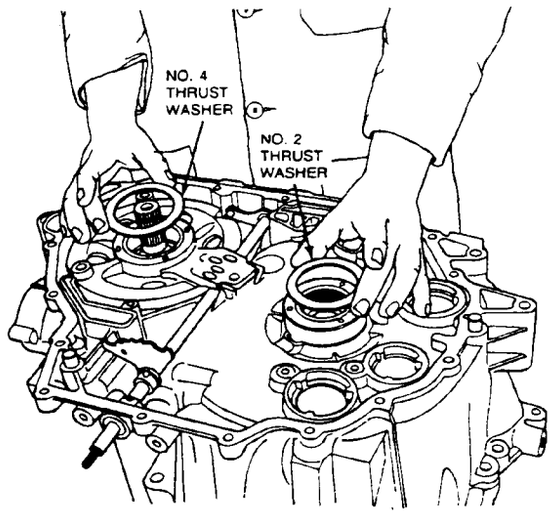

48. Lubricate and install input shaft cast iron sealing ring onto input shaft.

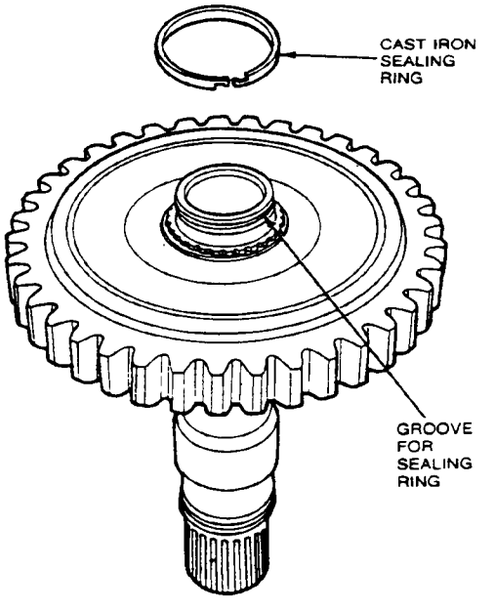

49. Install chain on drive and driven sprockets. Lower assembly into sprocket supports, rotating sprockets to ensure that they are fully seated.

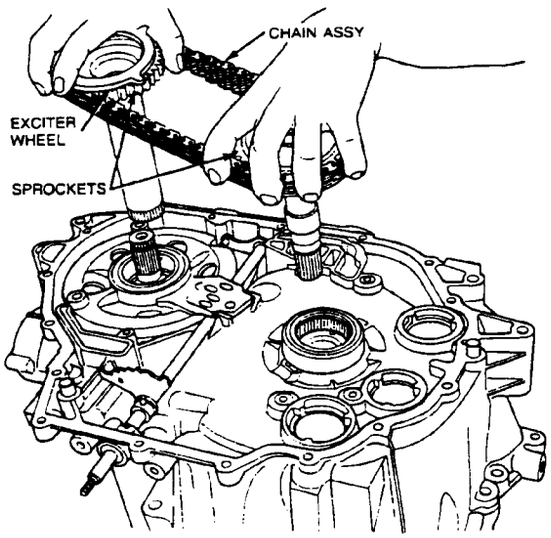

50. Install No. 1 and No. 3 thrust washers on chain cover. Use petroleum jelly to hold in place. Make sure tabs align with slots in chain cover.

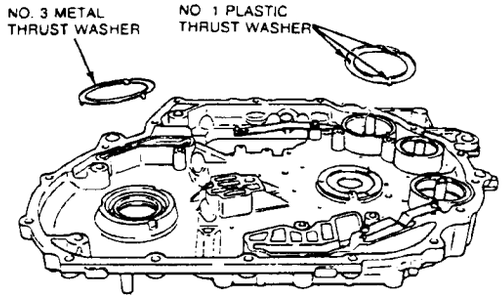

51. Install new chain cover gasket.
52. Install accumulator springs in correct position.

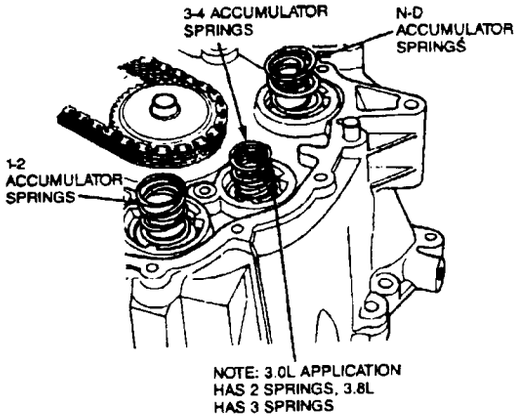

53. Inspect chain cover alignment pins on case.
54. Carefully align chain cover input shaft bore with input shaft. Apply gentle downward pressure on chain cover to overcome accumulator spring pressure and start two chain cover bolts.

CAUTION: Be extremely careful to prevent damage to the input shaft cast iron sealing ring.

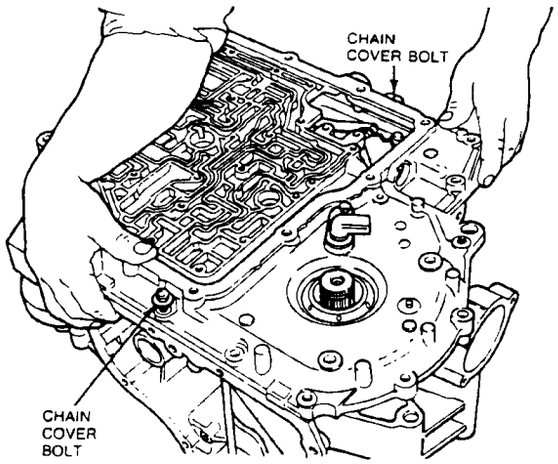

55. Start remaining chain cover bolts and tighten 10mm bolts to 27-33 N·m (20-26 lb-ft). Tighten 8mm bolt to 9-12 N·m (7-9 lb-ft). Tighten 13mm bolt to 34-48 N·m (25-35 lb-ft). Tighten bolts in sequence shown.

NOTE: After installing chain cover, input shaft should have some end play and should rotate freely. If it will not rotate freely, remove chain cover and inspect cast iron seal for damage.

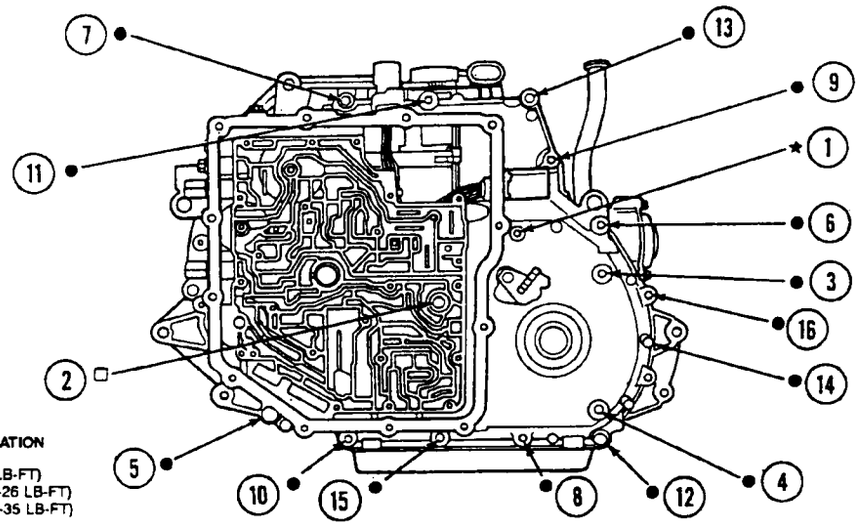

TORQUE SPECIFICATION

★ = 9-12 N·m (7-9 LB-FT)
● = 27-33 N·m (20-26 LB-FT)
□ = 34-48 N·m (25-35 LB-FT)

56. Tighten park rod abutment bolts to 27-30 N·m (20-22 lb-ft).

57. Tighten reverse drum 6mm Allen head anchor bolt to 10-12 N·m (7.5-9 lb-ft) and 19mm locknut to 34-47 N·m (25-35 lb-ft).

58. Install tubes in position and tap lightly until fully seated. Apply Threadlock 262, E2FZ-19554-B or equivalent around tube-to-case surface.

59. Install tube retaining brackets.

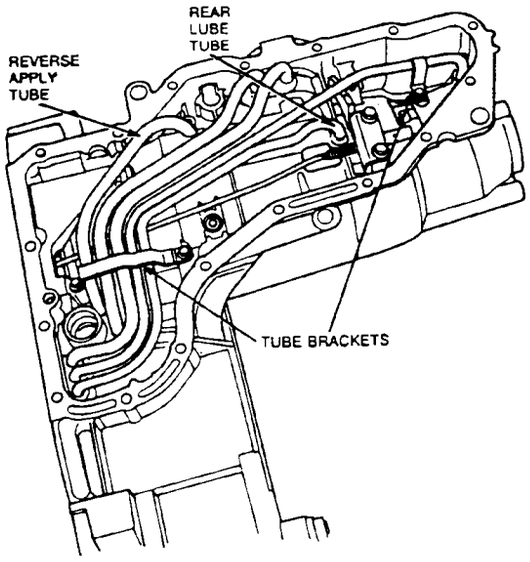

60. Install lip seal onto oil filter and press oil filter into case.

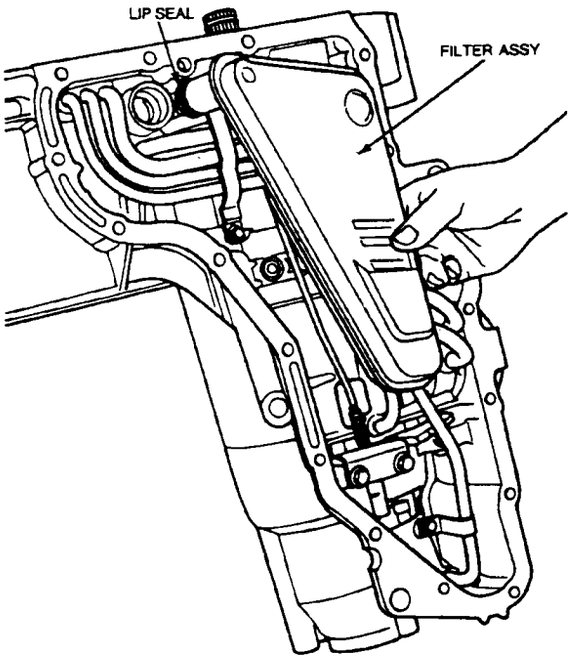

61. Install reverse apply tube / oil filter bracket.

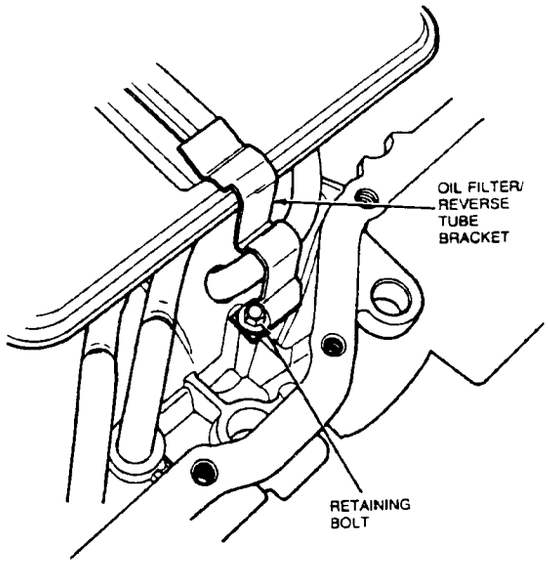

62. Install magnet in oil pan.

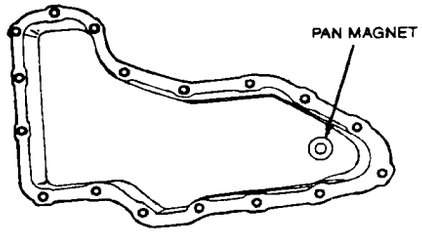

63. Install new oil pan gasket on case and install oil pan. Tighten bolts to 14-16 N·m (10-12 lb-ft).

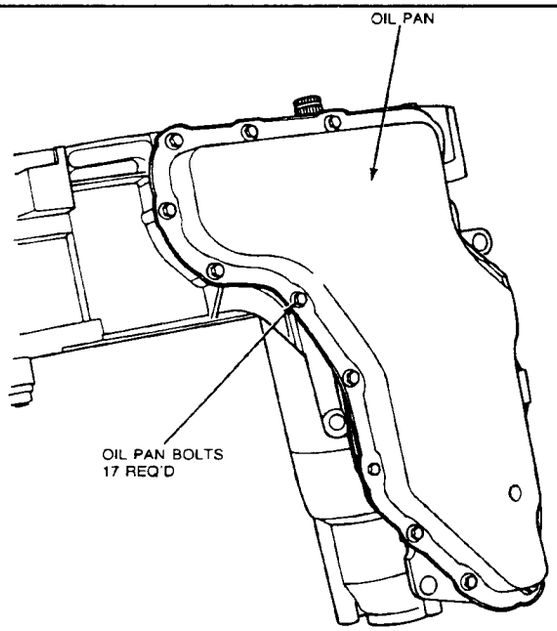

64. Install four new Teflon® seals on pump driveshaft and install shaft.

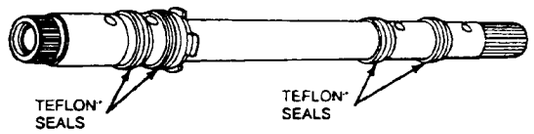

65. Install TV bracket with TV link through hole in case. Tighten bolts to 9-12 N·m (7-9 lb-ft). Connect manual valve link to detent lever.

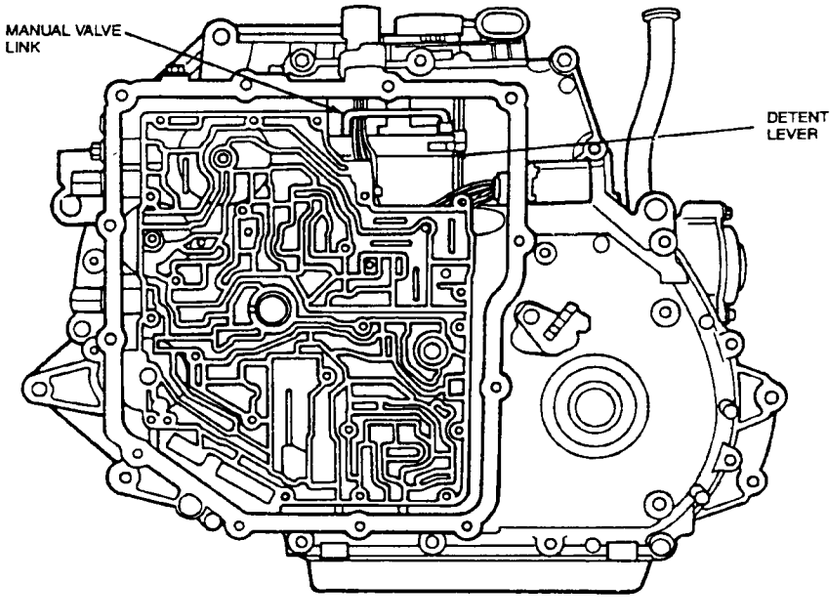

66. Start oil pump and valve body over pump shaft and connect manual valve link to manual valve.

67. Install 22 valve body bolts and tighten in sequence to 9-12 N·m (7-9 lb-ft).

NOTE: Install three short bolts where indicated.

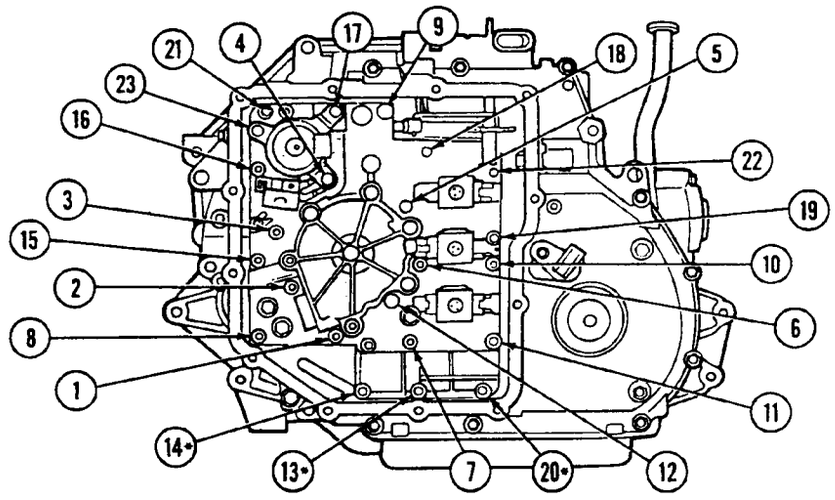

68. Install bulkhead connector into case, making sure locking tabs on bulkhead assembly are secure. Install four electrical connectors on proper switches and solenoids until a slight click is felt.

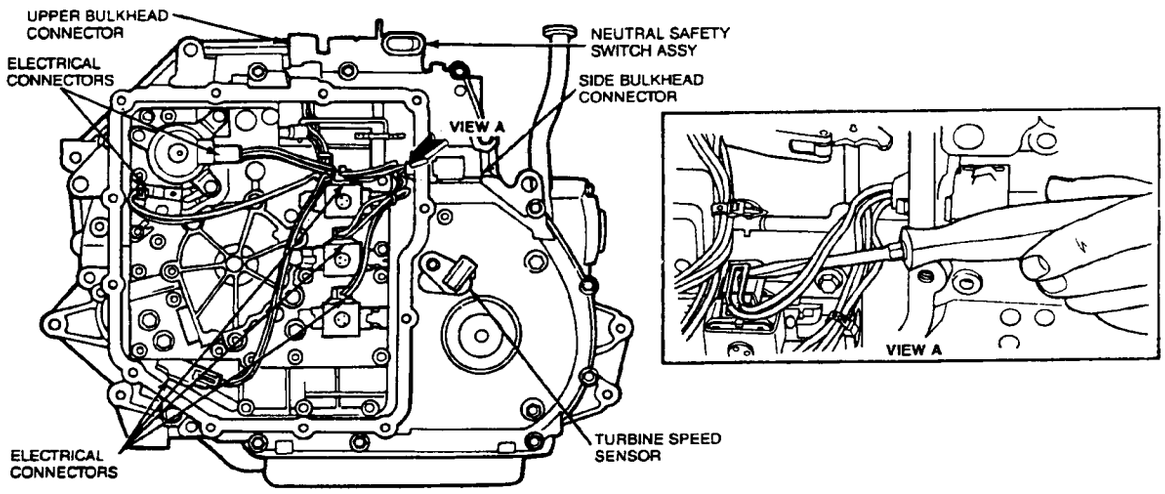

69. Place gear shift selector in the neutral position.
70. Install Manual Lever Position Sensor (MLPS) and loosely install two retaining bolts.
71. Align MLPS slots using Gear Position Sensor Adjuster T91P-70010-A or equivalent.
72. Tighten retaining bolts to 9-12 N·m (7-9 lb-ft).

73. Place gear shift selector in the neutral position.

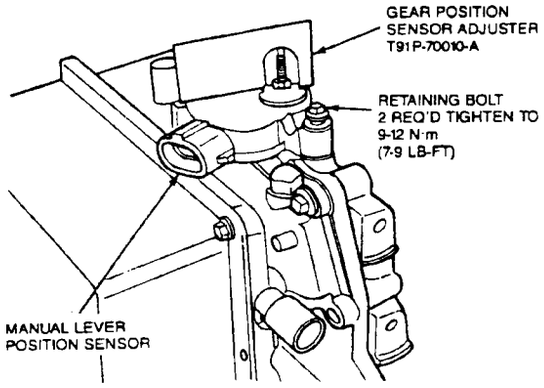

74. Install new self-adhesive oil pump and valve body cover gasket onto cover.

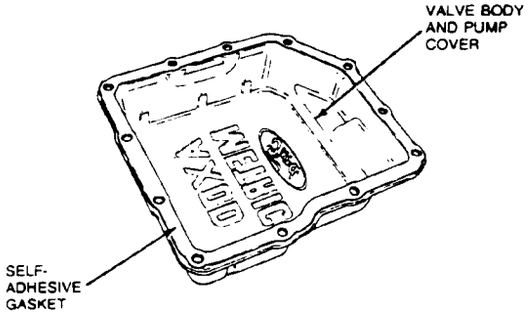

75. Install cover and tighten to 9-12 N·m (7-9 lb-ft).
76. Rotate transaxle to horizontal position.
77. Perform servo travel check as follows:

    NOTE: This procedure applies to both the overdrive servo and the low-intermediate servo.

    NOTE: The following procedure should be performed only if one of the components listed below is being replaced during assembly of the transaxle:

    - Transaxle case
    - Band assembly
    - Drum and sun gear assembly
    - Servo piston rod
    - Servo piston

78. Install spring in case from Overdrive Servo Rod Tool T86P-70023-B or Low / Intermediate Servo Rod Tool T86P-70023-A or equivalent.

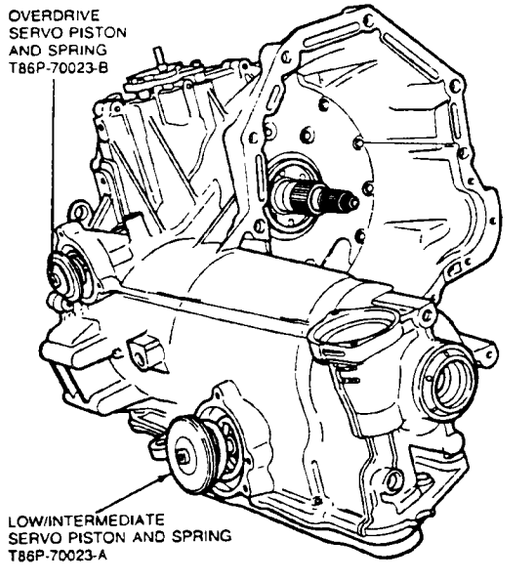

79. Install low / intermediate servo spring retainer.

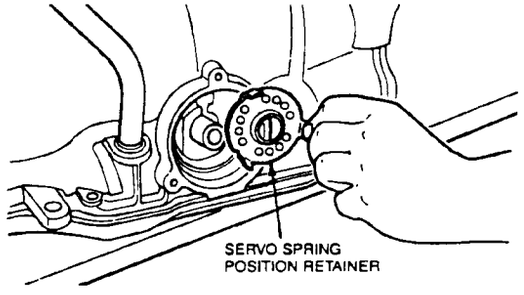

80. Install servo piston and rod in case.

    NOTE: On low / intermediate servo, install without piston seal.

81. Install Overdrive Servo Rod Tool T86P-70023-Bor Low / Intermediate Servo Rod Tool T86P-70023-A or equivalent, and secure in case using servo cover bolts. Tighten bolts to 9-12 N·m (7-9 lb-ft).
82. Tighten gauge disc screw to 1.13 N·m (10 lb-in) for overdrive servo. Tighten to 3.4 N·m (30 lb-in) for low / intermediate servo.
83. Mount Dial Indicator TOOL-4201-C or equivalent and position stylus through hole in gauge disc. Make certain indicator stylus has contacted servo piston on a flat surface. **Do not** contact step on piston. Zero dial indicator.

84. Back off gauge disc screw until piston movement stops and read dial indicator. The amount of piston travel as indicated on dial indicator will determine the rod length to be installed. For overdrive servo, reading should be 1.8-3.8mm (0.070-0.149 inch). For low/intermediate servo, reading should be 5.5-6.5mm (0.216-0.255 inch).

    NOTE: If a new low/intermediate band is installed, reading should be 5-6mm (0.196-0.236 inch).

Overdrive Servo Travel Check

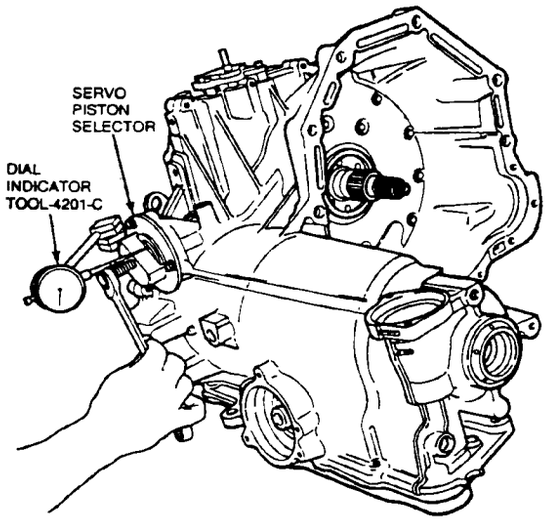

Low-Intermediate Servo Travel Check

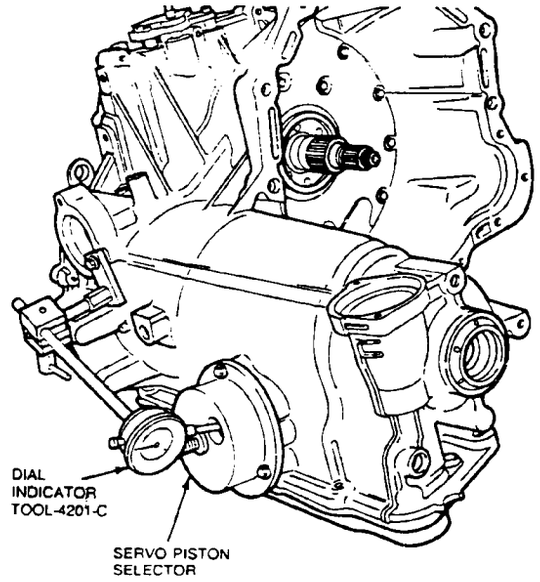

85. Select a new piston rod using the measurement obtained in Step 75. Install new piston rod and repeat Steps 71 through 75 to verify amount of piston travel.

86. Install seals on low/intermediate servo piston.

87. Install servo pistons and springs. Make sure they are fully seated.

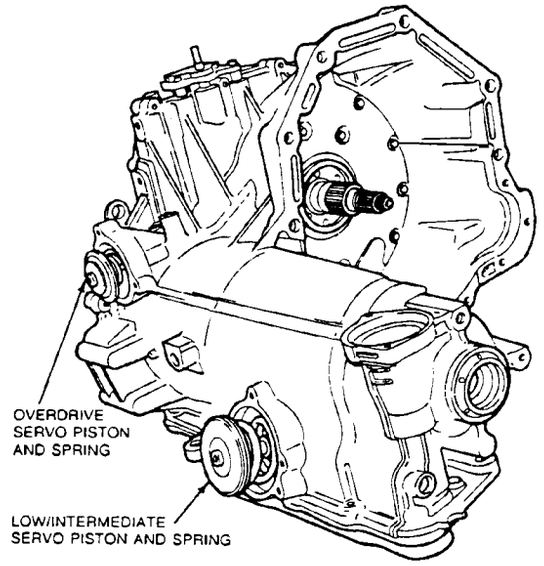

88. Install servo covers for overdrive and low/intermediate servo using new seals for overdrive servo or gasket for low/intermediate servo. Tighten cover bolts to 9-12 N-m (7-9 lb-ft).

    CAUTION: Be sure to align tab on low/intermediate servo cover with port on case. Tighten bolts two to three turns at a time to prevent cocking servo cover.

Overdrive Servo Cover

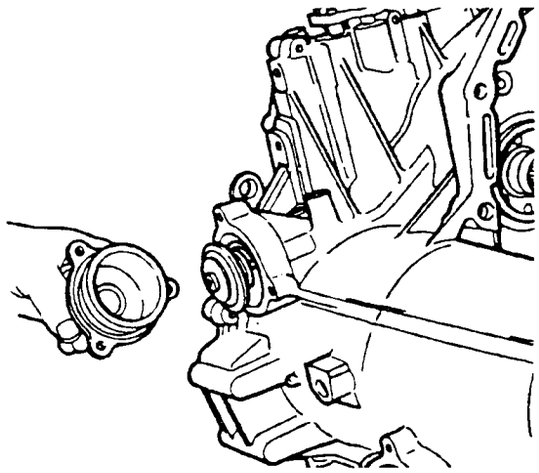

Low-Intermediate Servo Cover

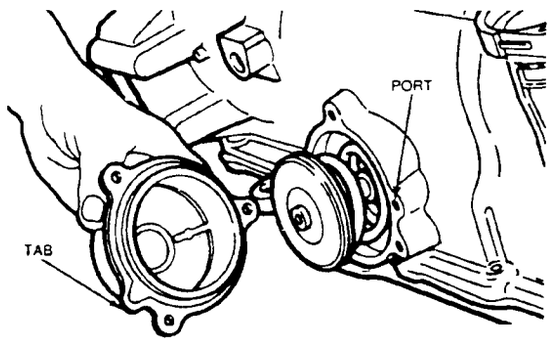

89. Install dipstick tube grommet and dipstick tube in case. Tighten retaining bolt to 9-12 N·m (7-9 lb-ft).

Subassemblies

Chain Cover

Disassembly

1. Remove three accumulator piston shafts.

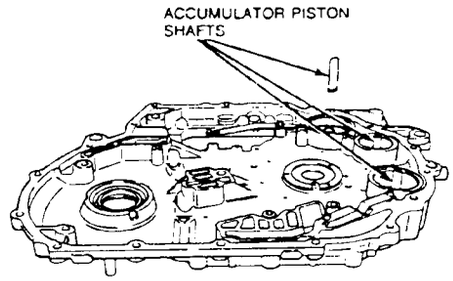

2. Using flat nose pliers, remove three accumulator pistons.

   CAUTION: Do not use any objects in piston shaft bore for removal.

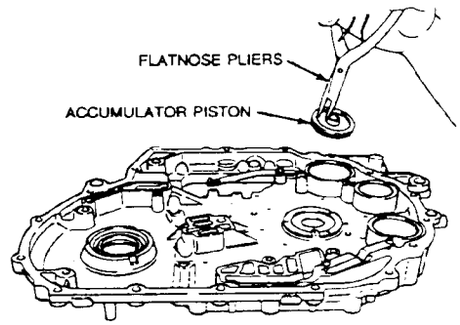

3. Using side cutters, carefully remove bimetal retaining pin collars and remove bimetal and plate.

   CAUTION: Use care not to damage machined case surfaces or bimetallic strips.

4. Pull retaining pins from cover.

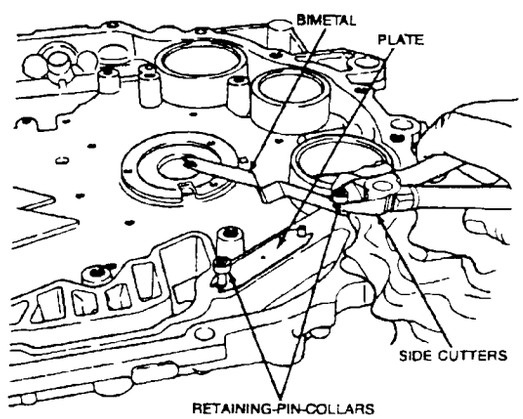

5. Remove 8mm manual valve detent spring bolt and spring.

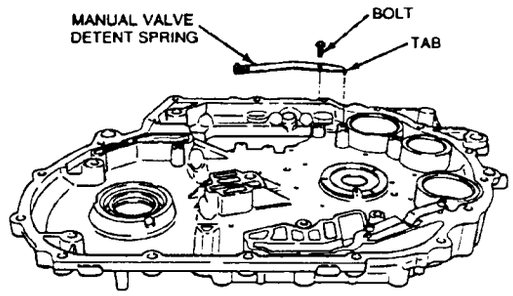

6. Remove quick-connect oil cooler fittings.

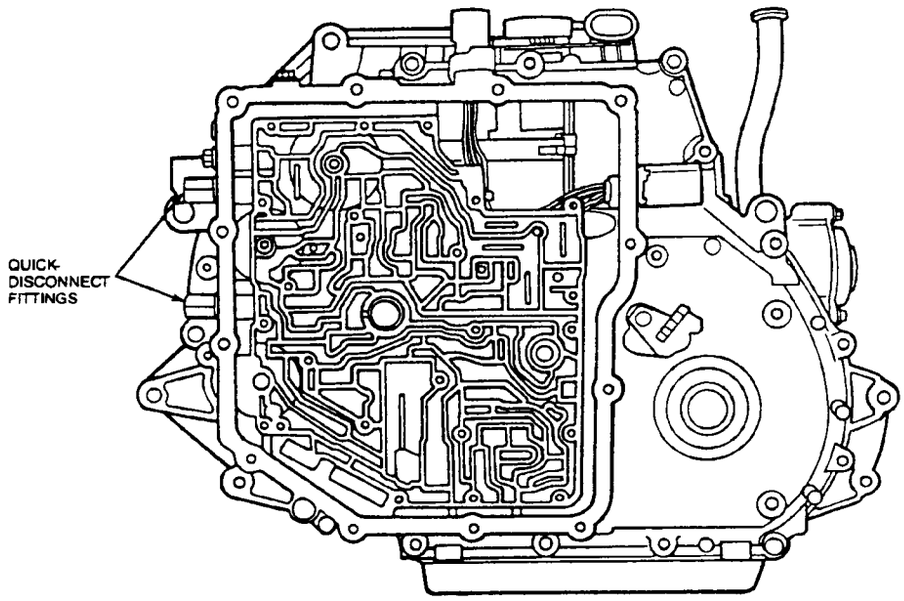

7. Remove drive sprocket support needle bearing using Stator and Driven Sprocket Bearing Remover T86P-70043-A and Impact Slide Hammer T58L-101-B or equivalent.

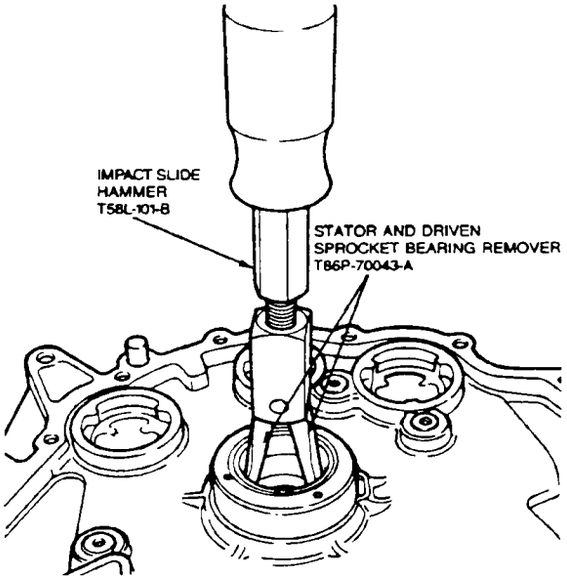

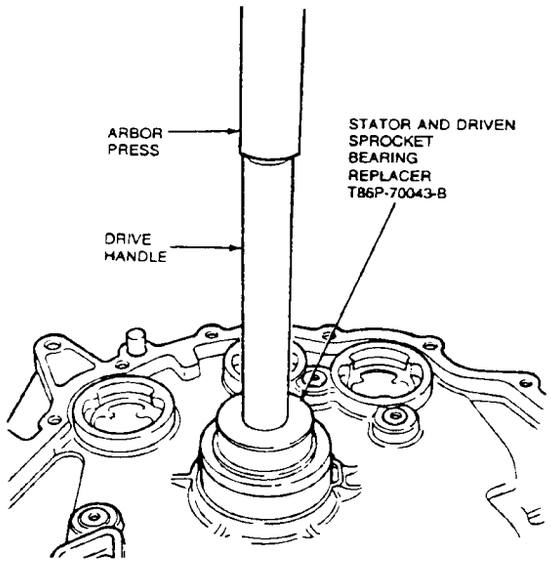

Assembly

1. Using an arbor press, install drive sprocket support needle bearing using Stator and Driven Sprocket Bearing Replacer T86P-70043-B or equivalent.
2. Install quick-connect oil cooler fittings.

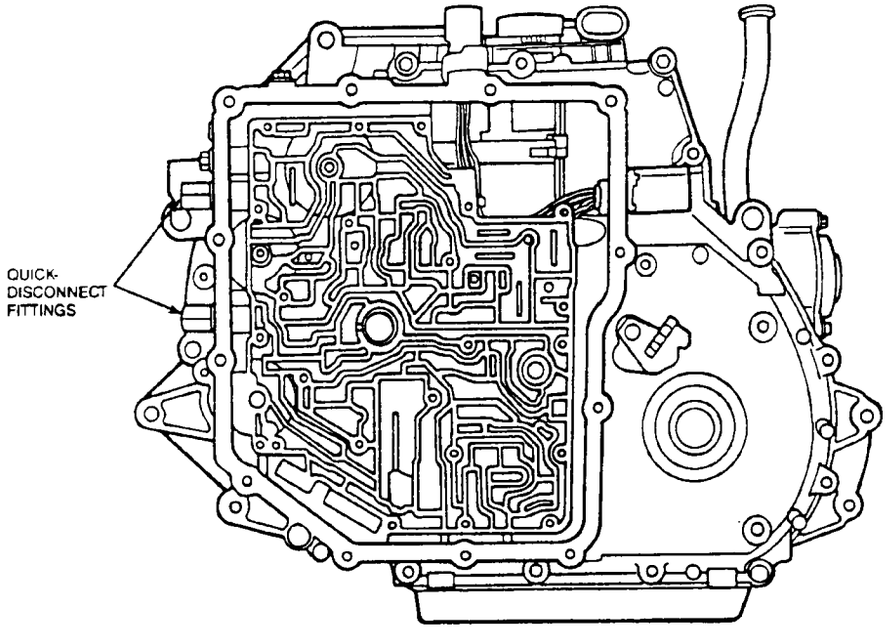

3. Install manual valve detent spring and position tab in locator hole. Tighten bolt to 9-12 N·m (7-9 lb-ft).

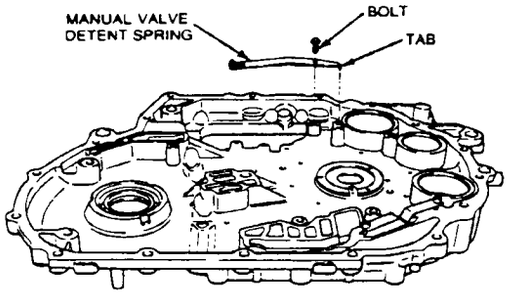

4. Start bimetal retaining pins in cover. Gently tap center pin to bottom of hole.

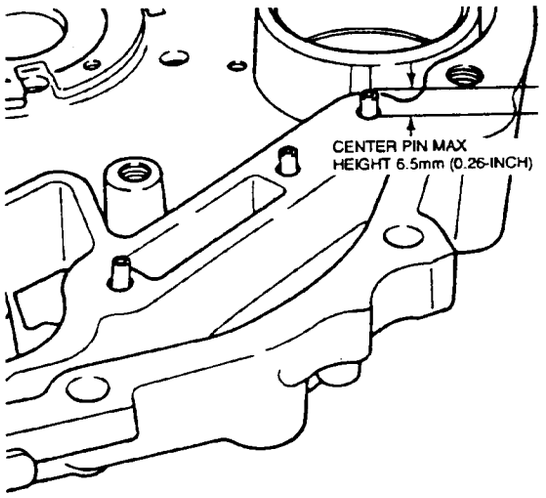

5. Place end of bimetal with hole over front retaining pin. Install bimetal retaining collars.

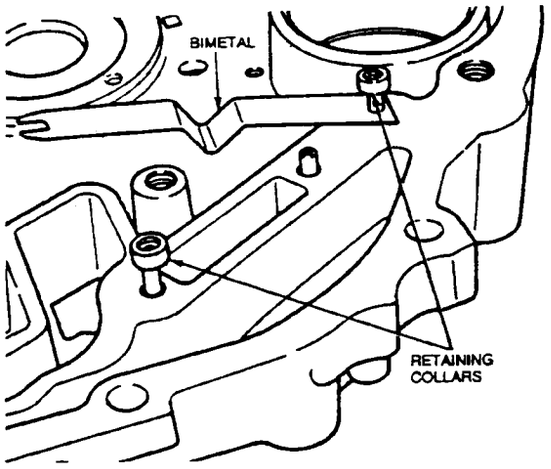

6. Place Bimetal Height Gauge T86P-70422-A or equivalent against retaining pin and under bimetal.

7. Gently tap retaining collar onto pin until it seats against tool edge.

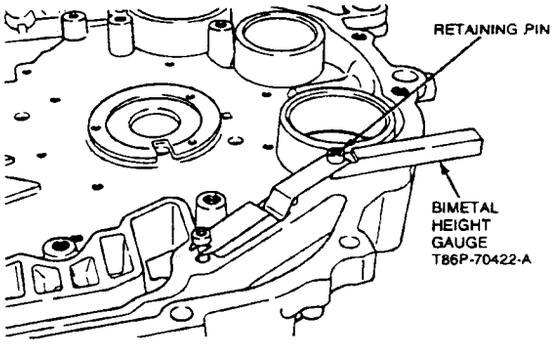

8. Engage slotted end of bimetal under rear retaining pin and retaining collar and then repeat Steps 6 and 7 for slotted end of bimetal.

9. Remove slotted end of bimetal from its pin. Position plate slotted ends onto rear and middle retaining pins. Install slotted end of bimetal under retaining collar.

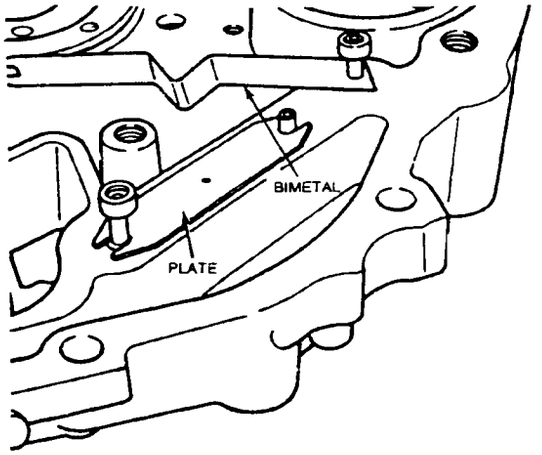

10. Install new seals and O-rings on accumulator pistons.

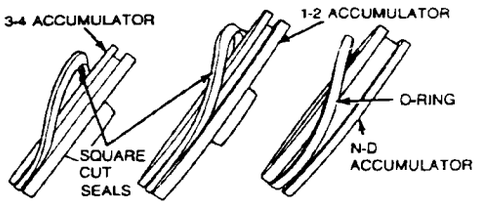

11. Install accumulator pistons into their proper cylinder.

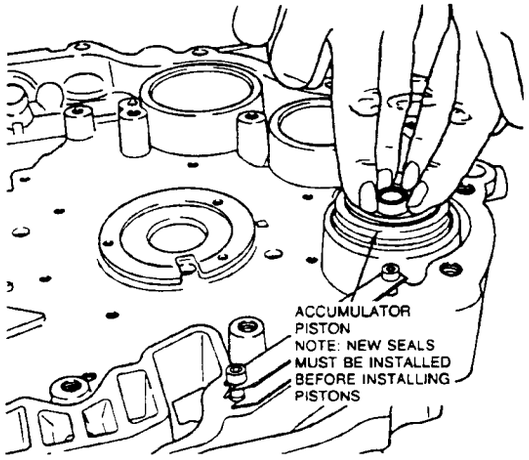

12. Install three accumulator piston shafts.

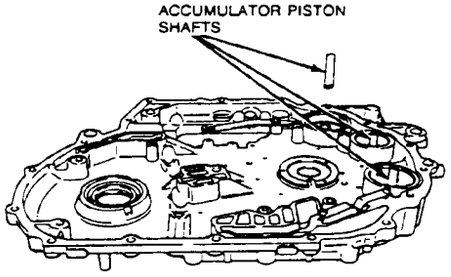

Assembly

1. Position valve body on oil pump using a new gasket.
2. Insert Pump Body Guide Pins T86P-70370-A and Valve Body Guide Pin T86P-70100-C or equivalent, as shown. Install two valve body-to-oil pump retaining bolts and tighten to 9-12 N·m (7-9 lb-ft).

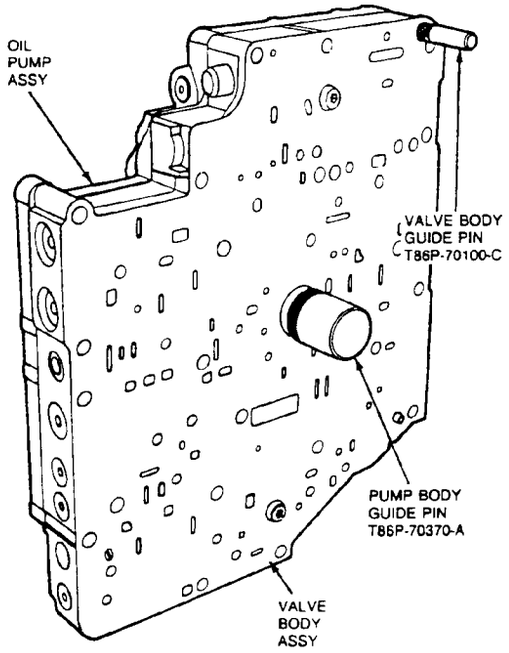

Oil Pump and Valve Body Assembly

Disassembly

Remove two 8mm bolts retaining oil pump to valve body and separate valve body from oil pump. Remove gasket and discard.

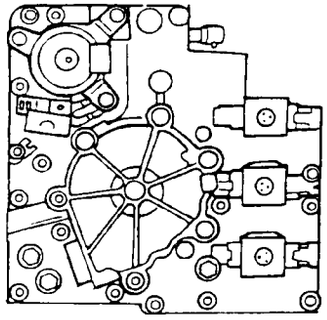

Oil Pump Shaft, Bearing and Seal

Removal

1. From rotor side of pump, using a press and a correct size socket, press bearing and seal assembly out.

   NOTE: Inspect bearing bore in pump body for damage. If bore is damaged the pump assembly must be replaced.

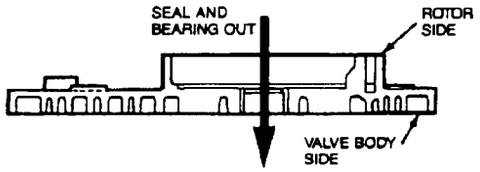

Installation

1. From main control side of pump body, using a press and Oil Shaft Seal Installation Tool T89P-1177-AH or equivalent, in an inverted position, press in new bearing into pump body. The bearing must be flush with pump body surface.

   NOTE: Do not use any method of installation that would cause bearing to be below surface of pump body.

2. Place new seal on Oil Shaft Seal Installation Tool T89P-1177-AH or equivalent, with step in seal matching step on tool (metal side up). Install by placing tool and seal into pump body from the rotor side.

3. Using a press, install seal into pump body until tool is flush against pump body.

   NOTE: The tool is designed with a step where it contacts seal to ensure correct installation position.

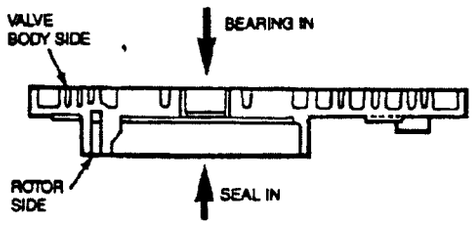

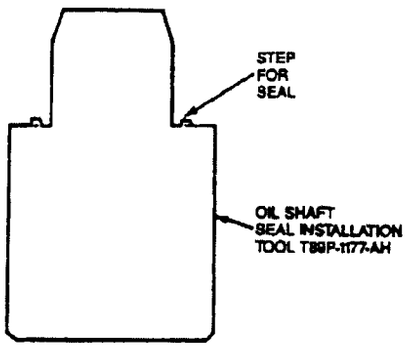

Valve Body

Disassembly

1. Place valve body on bench with separator plate up, and remove two Torx® bolts retaining separator plate to valve body.

2. Remove separator plate and gasket.

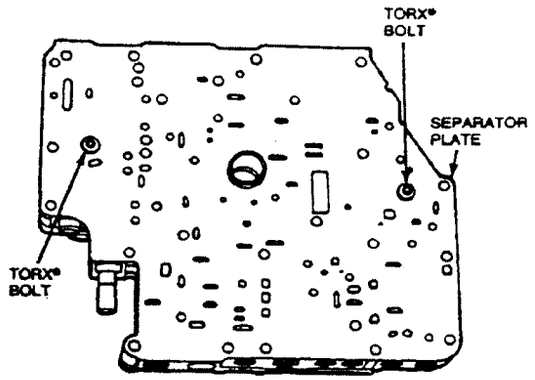

3. Remove seven ball checks, two relief valves and bypass solenoid filter. Clean filter.

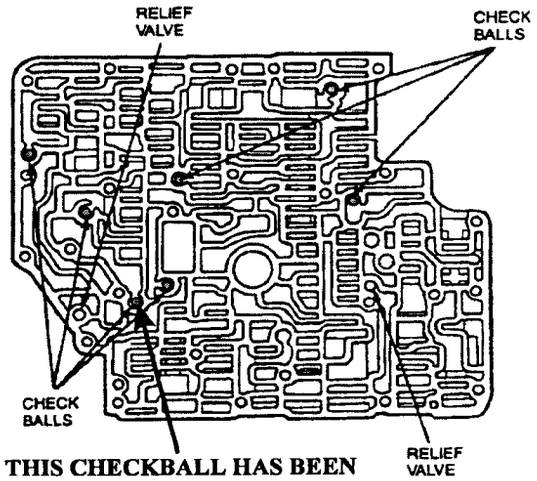

THIS CHECKBALL HAS BEEN DELETED BEGINNING IN THE 1993 MODEL YEAR.

4. The individual valves and springs are removed by removing retaining clips and bore plugs. Refer to the following illustrations for valve and spring locations. Clean valves, springs and valve body as necessary.

   CAUTION: Most valves are aluminum and cannot be removed using a magnet. Remove valves by tapping valve body on palm of hand to slide valves out of bores. It may be necessary to remove valves and springs using a pick. If it is necessary to use a pick, use extreme caution to prevent damaging valves or valve bores.

   CAUTION: Do not turn the throttle valve adjusting screw.

AXOD - E
1991 PUMP PLATE IDENTIFICATION AND PUMP CHECKBALL LOCATION

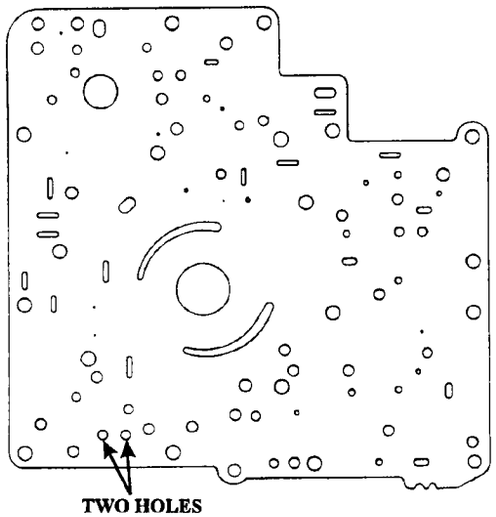

EARLY 1991 ONLY

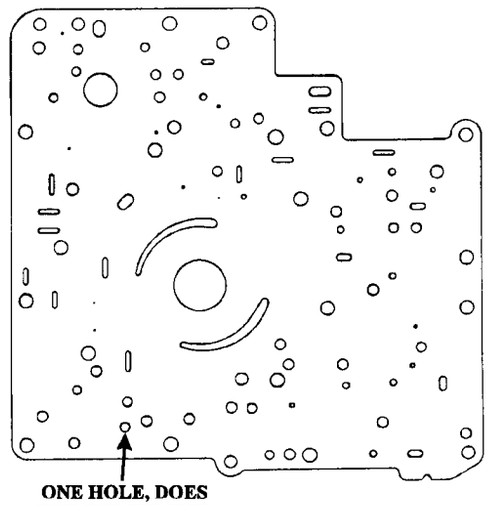

LATE 1991 ONLY

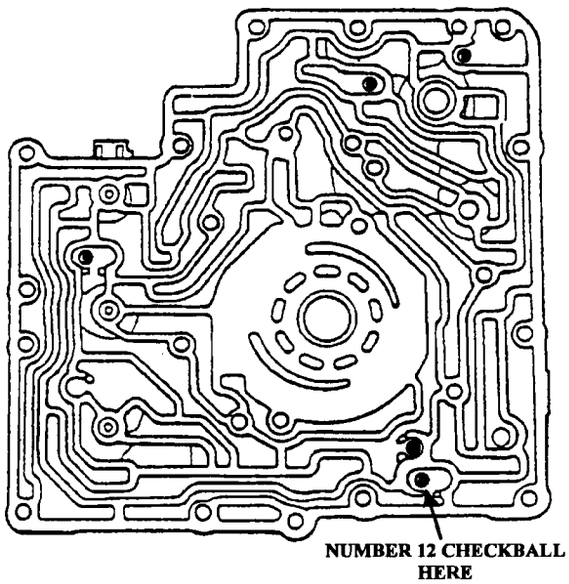

EARLY 1991 ONLY

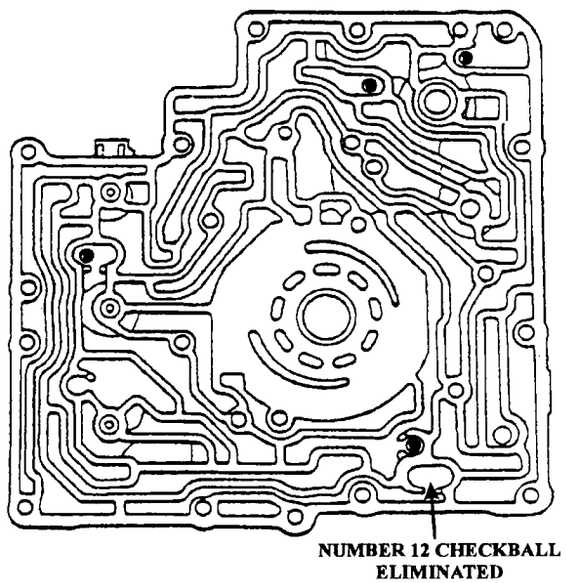

LATE 1991 ONLY

B13 CHECKBALL ELIMINATED ALLOWING FORWARD CLUTCH OIL TO EXHAUST UNORIFICED ON THE 3 - 4 UPSHIFT

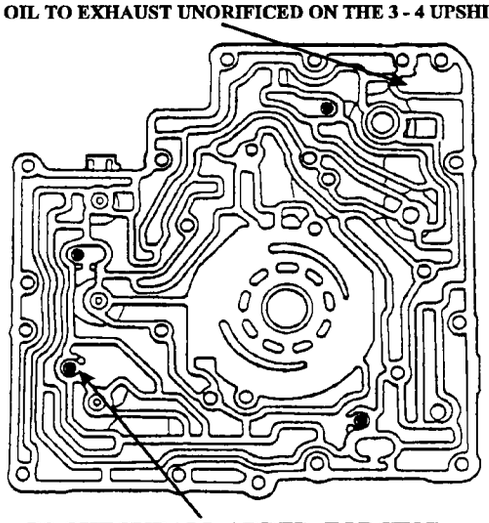

B2 CHECKBALL ADDED, FORCING FORWARD CLUTCH OIL THROUGH THE "K" ORIFICE

1992 - UP

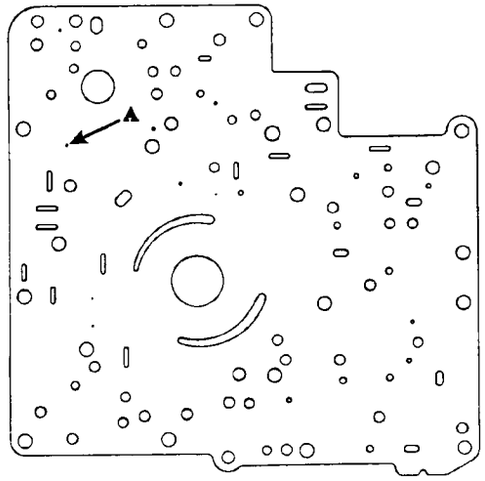

HOLE "A"

IF HOLE AT "A" IS .030" IT TAKES THE ON - OFF (LUS) SOLENOID
IF HOLE AT "A" IS .215" IT TAKES THE MODULATED (MLUS) SOLENOID

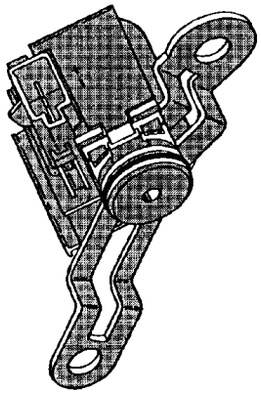

ON - OFF (LUS) LOCK UP SOLENOID
1991 SABLE AND TAURUS ONLY!

THIS SOLENOID IS TO BE USED WITH A PUMP SPACER PLATE WITH A .030" HOLE AT THE "A" POSITION, AS SHOWN ABOVE.

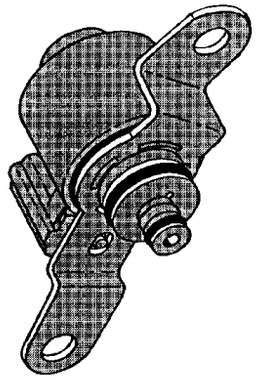

MODULATED (MLUS) LOCK UP SOLENOID
1991 CONTINENTAL / ALL 1992 - UP

THIS SOLENOID IS TO BE USED WITH A PUMP SPACER PLATE WITH A .215 HOLE AT THE "A" POSITION, AS SHOWN ABOVE.

3. Remove six bolts retaining pump cover to pump housing and remove cover.

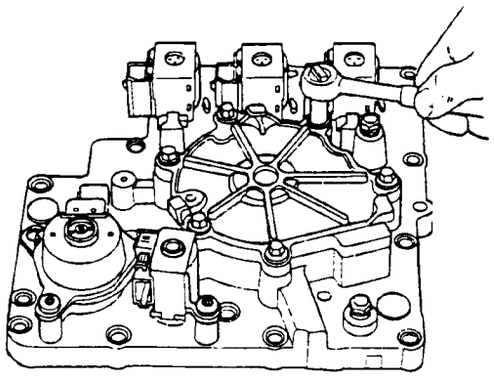

4. Remove bore spring by prying spring out of housing.

CAUTION: Place a piece of cardboard or suitable material under screwdriver to prevent damage to housing gasket surface.

WARNING: USE EXTREME CAUTION WHEN REMOVING SPRING TO PREVENT PERSONAL INJURY.

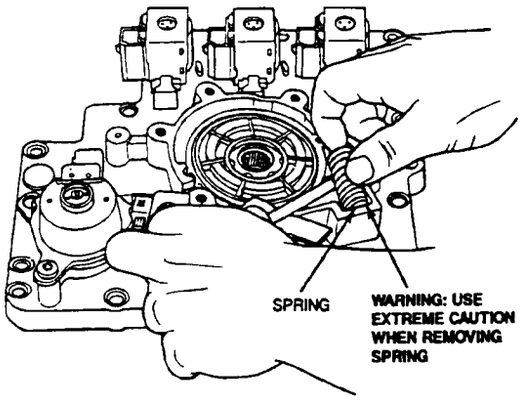

5. Remove outside vane support retaining pin.

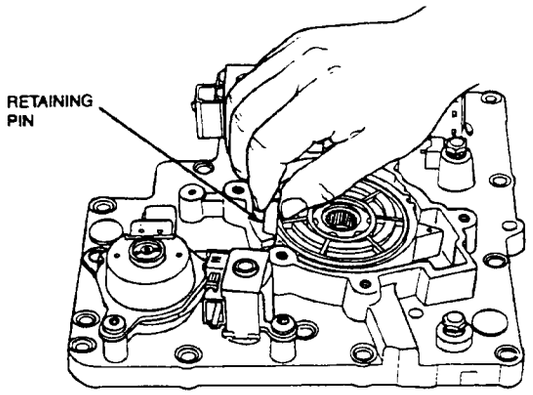

6. Remove metal O-ring retainer and O-ring from outer vane support. Discard O-ring.

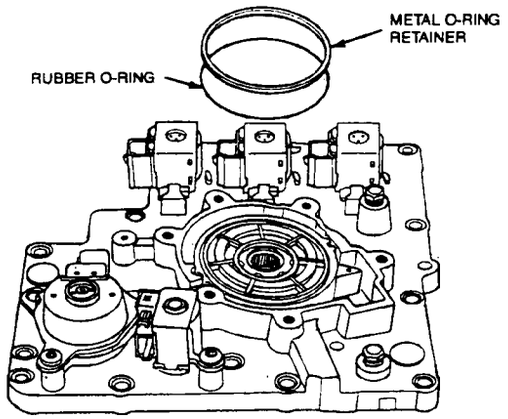

7. Remove and discard side seal.

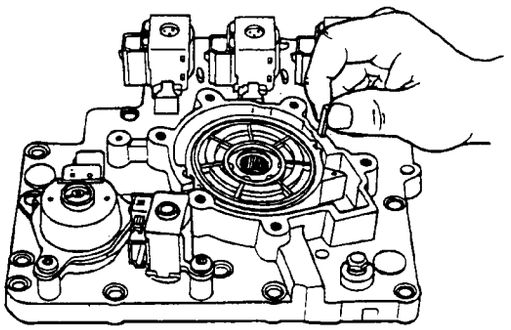

8. Remove side seal support.

9. Remove top vane positioning ring.

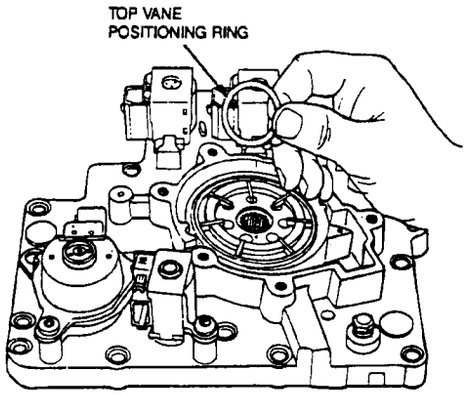

10. Remove outer vane support.

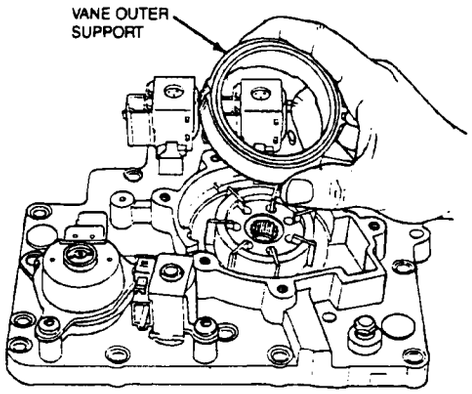

11. Remove seven vanes from rotor.

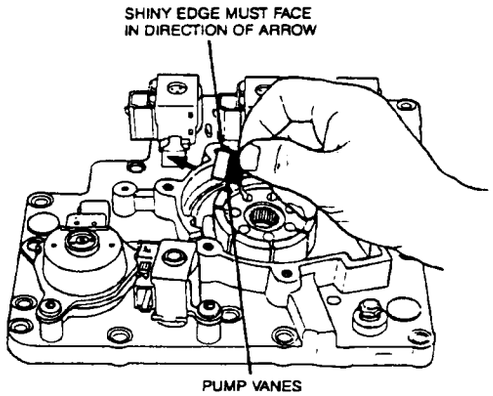

12. Remove inner vane support.

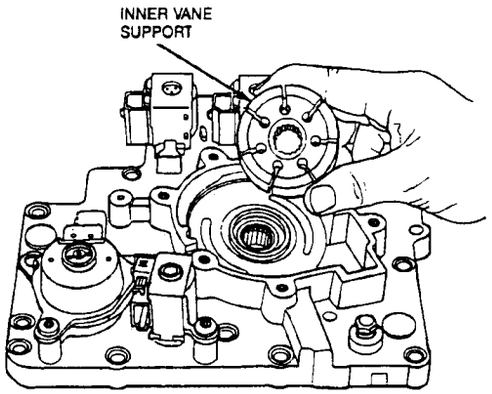

13. Remove bottom vane positioning ring.

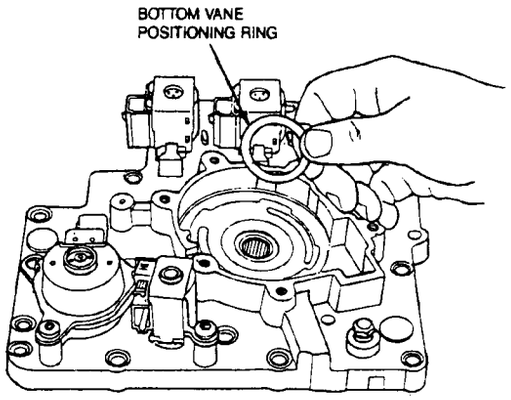

Assembly

NOTE: The only serviceable parts in the oil pump are the seals. If any other parts of the oil pump are damaged or worn, the entire pump assembly must be replaced.

1. Install bottom vane positioning ring.

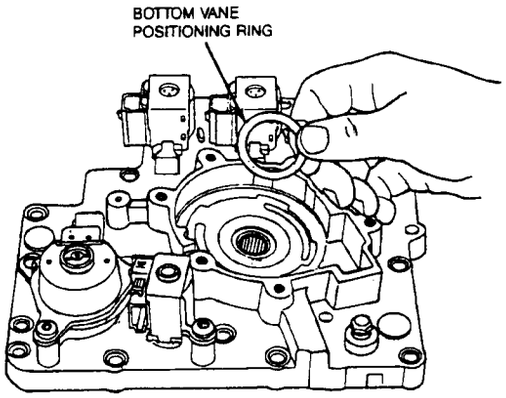

2. Install inner vane support with small inside diameter counter bore facing up.

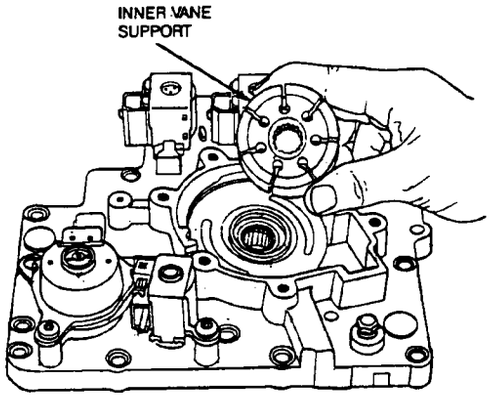

3. Install seven vanes in inner vane support.
   NOTE: Shiny portion of vane blade is installed toward outer vane support.

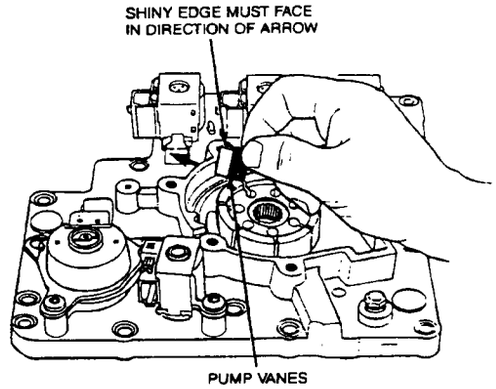

4. Install outer vane support.

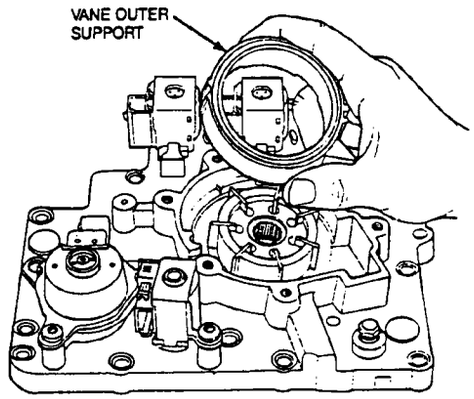

5. Install top vane positioning ring.

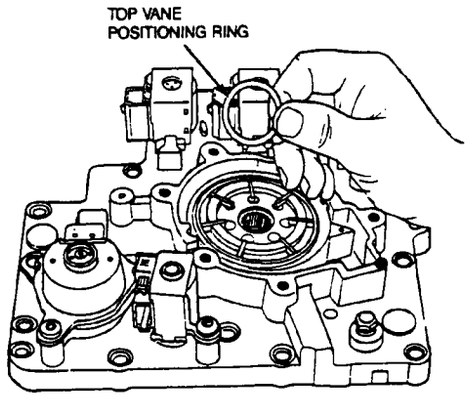

6. Install new side seal support.

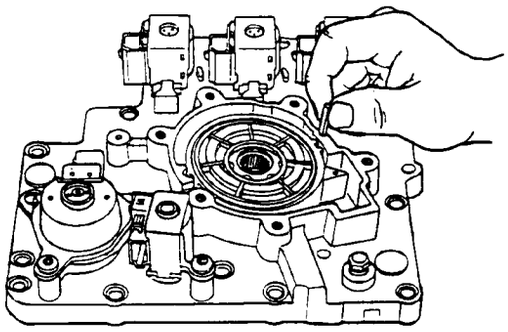

7. Install new side seal.
8. Install outer vane support retaining pin.

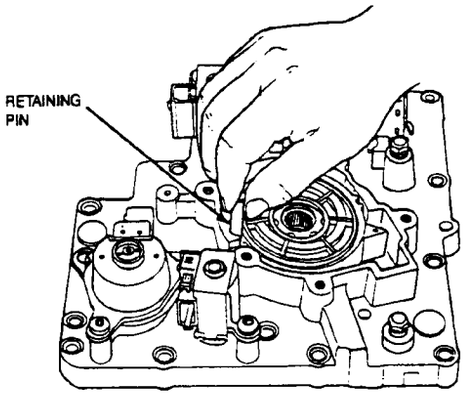

9. Install bore spring between case and tab on outer vane support.

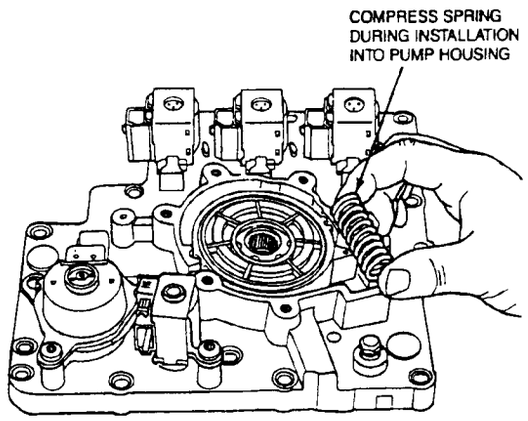

10. Install new O-ring in groove in outer vane support. Then, install metal O-ring retainer.

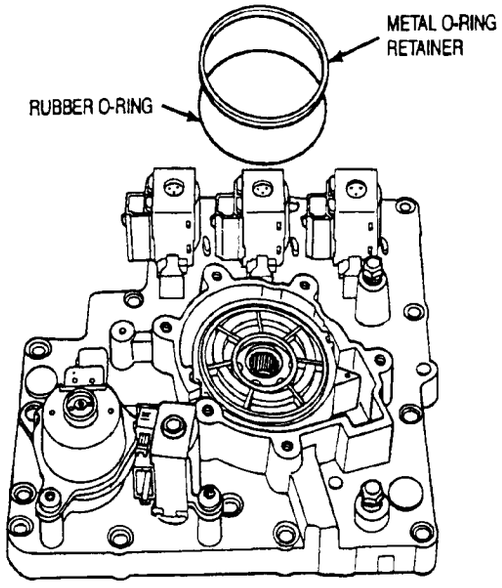

11. Install oil pump cover on oil pump housing and install six retaining bolts. Tighten bolts to 9-12 N·m (7-9 lb-ft).

12. Install ball checks and relief valve.

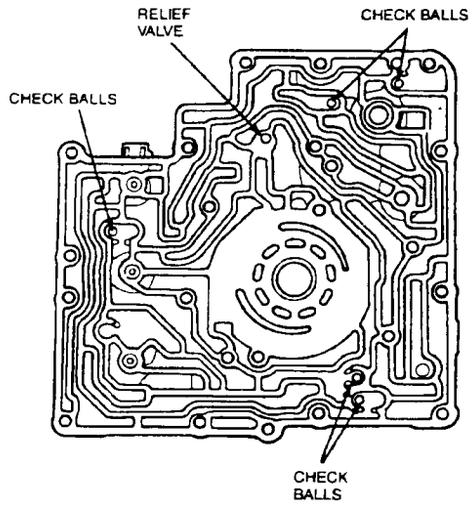

13. Position separator plate on pump housing using a new gasket. Insert Valve Body Guide Pin Set T86P-70100-A and Valve Body Guide Pin T86P-70100-B or equivalent. Then, install two Torx® bolts. Tighten bolts to 9-12 N·m (7-9 lb-ft). Remove guide pins.

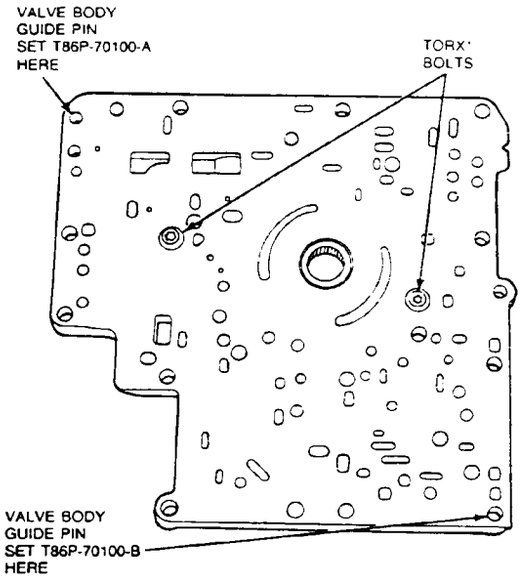

Shell Assembly, Forward, Direct and Intermediate Clutches

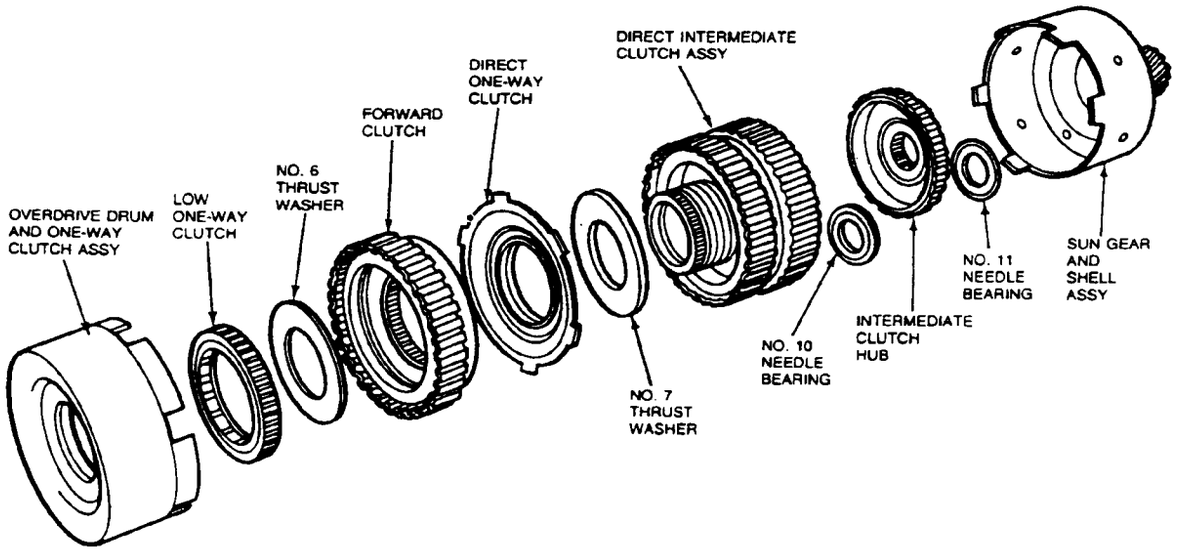

Disassembly

1. Set assembly on overdrive drum.
2. Remove sun gear and shell assembly.

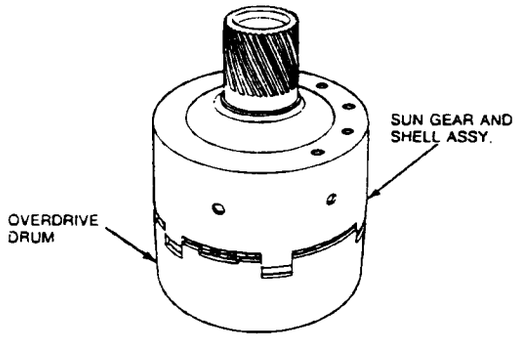

3. Remove No. 11 needle bearing.

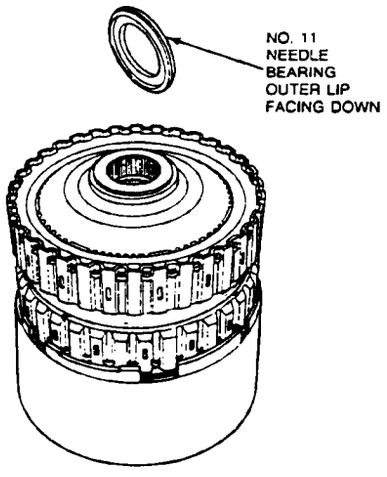

4. Remove intermediate clutch hub.

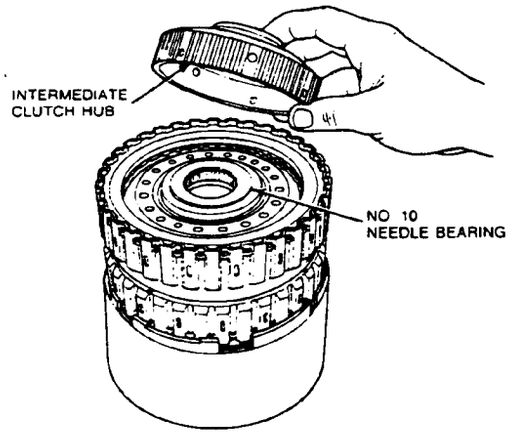

5. Remove No. 10 needle bearing.

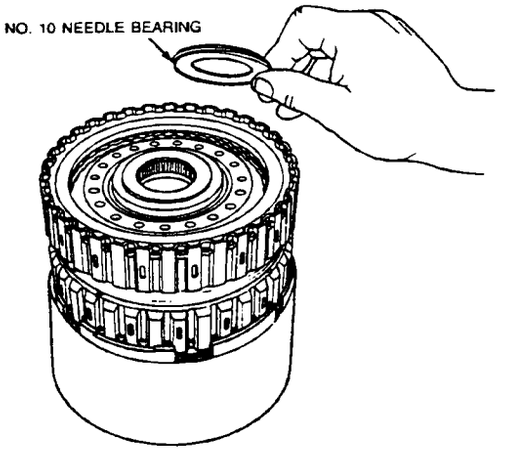

6. Turn assembly onto intermediate cylinder hub.
7. Remove overdrive drum and one-way clutch assembly.

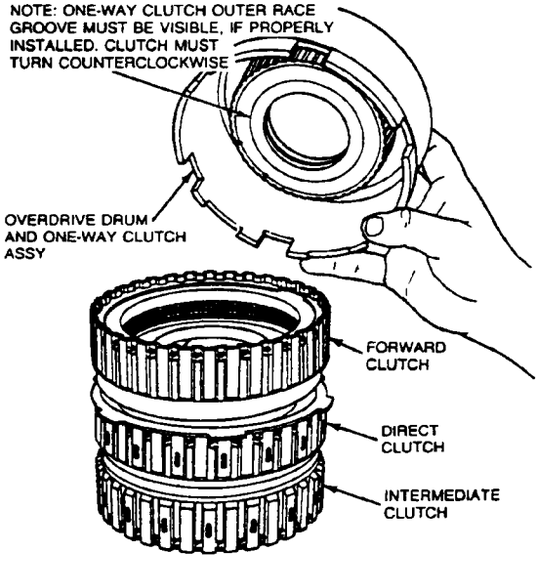

8. Remove No. 6 thrust washer.

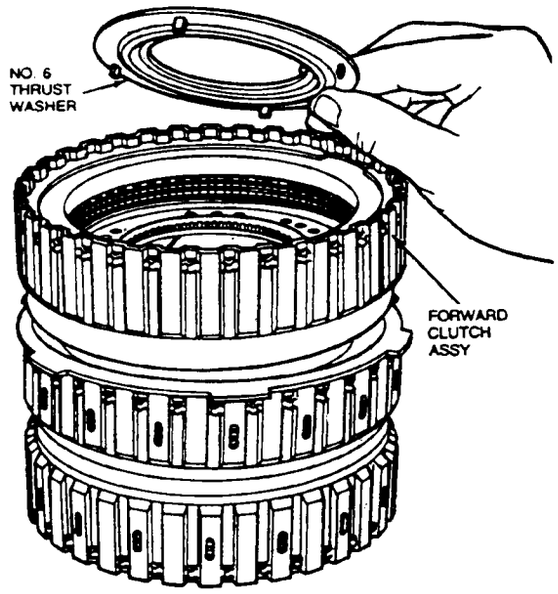

9. Remove forward clutch assembly by prying up on each side with two screwdrivers.

   NOTE: Direct clutch hub O-ring seals retain forward clutch on hub. Pry evenly and do not locate screwdriver ends on or near forward clutch check ball.

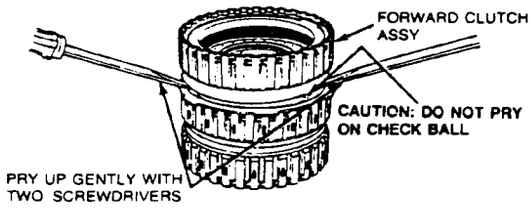

10. Remove direct one-way clutch and No. 7 thrust washer.

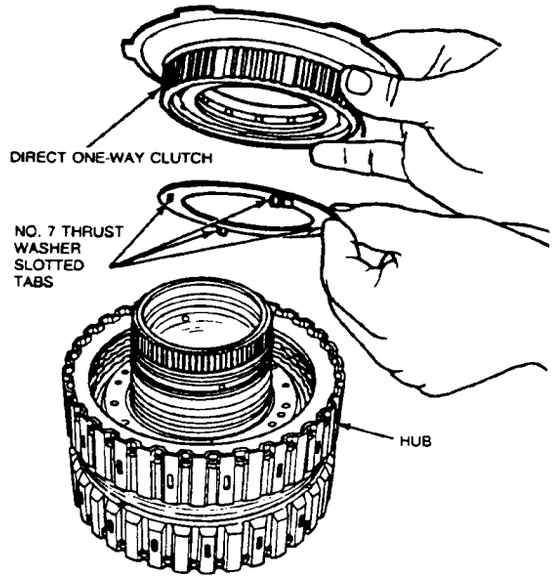

Assembly

1. Set on intermediate clutch cylinder.
2. Install No. 7 thrust washer into direct clutch being sure tabs are aligned with slots in direct clutch.
3. Install direct one-way clutch and align onto clutch pack splines.

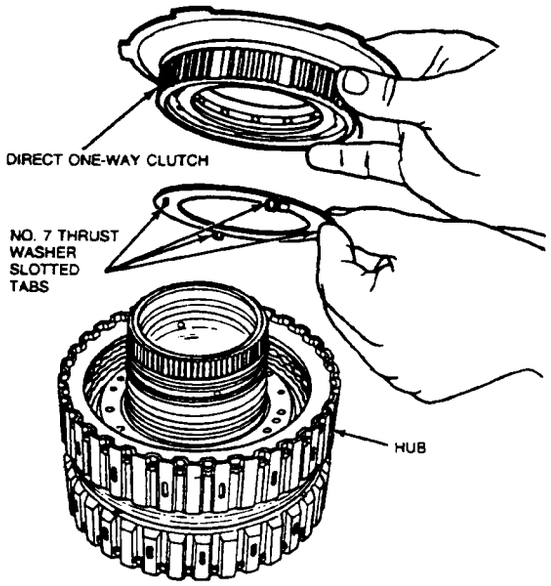

4. Install two O-ring seals.

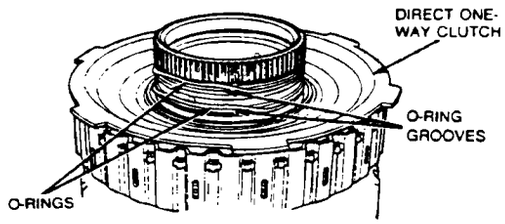

5. Install forward clutch assembly. **Use caution not to damage the O-ring seals on direct clutch hub.**
6. Install No. 6 thrust washer.

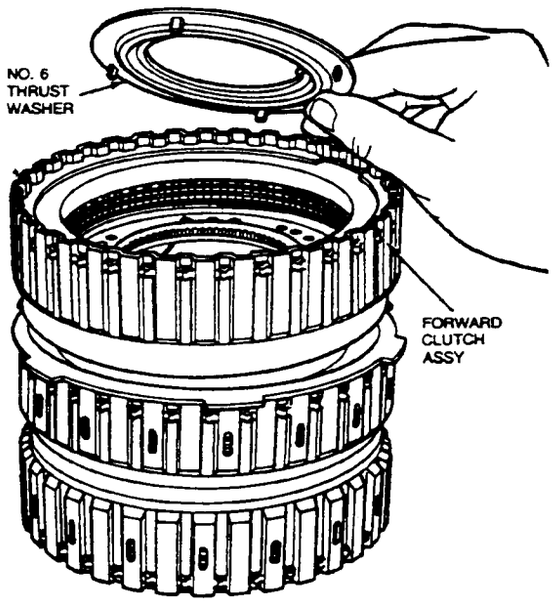

7. Install overdrive drum and one-way clutch assembly.

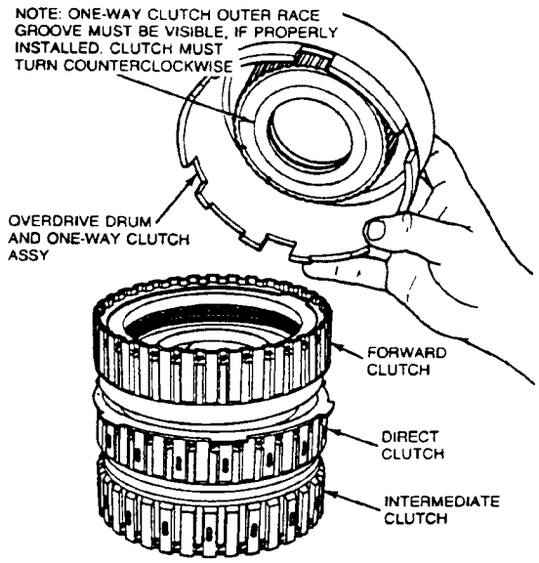

8. Turn assembly over and set on overdrive drum.
9. Install No. 10 needle bearing using grease to hold in place.
10. Install intermediate clutch hub with No. 10 needle bearing.

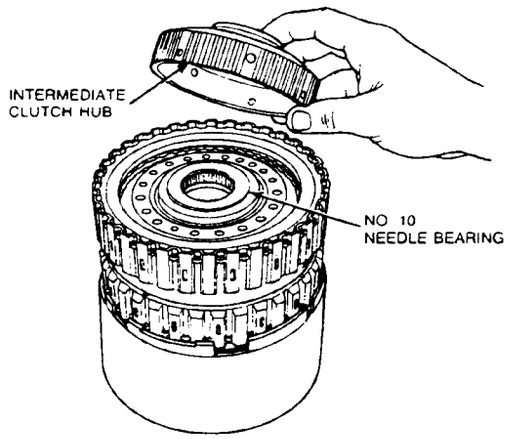

11. Install No. 11 needle bearing with outer lip facing down.

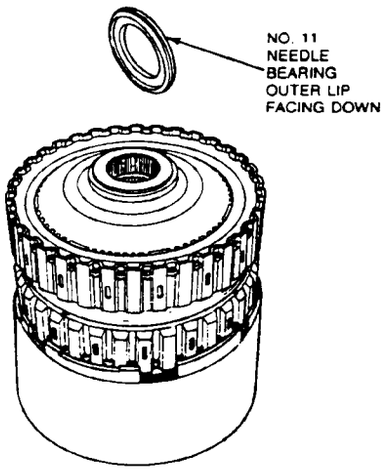

12. Install sun gear and shell assembly.

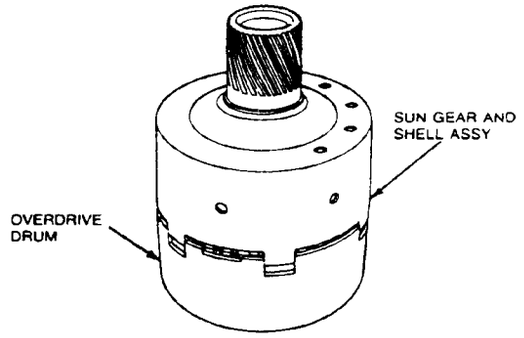

Forward Clutch

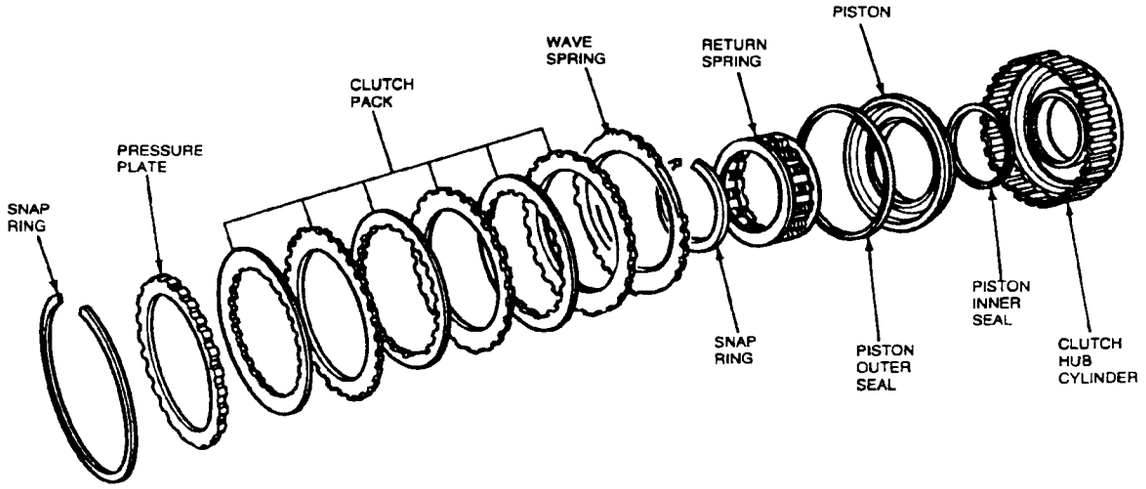

Disassembly

1. Remove snap ring, pressure plate, clutch pack and wave spring.

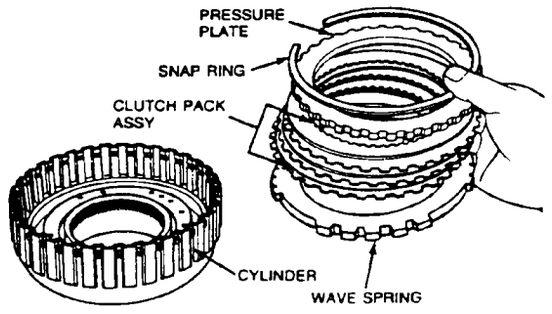

2. Remove snap ring and return spring using Clutch Spring Compressor T65L-77515-A or equivalent.

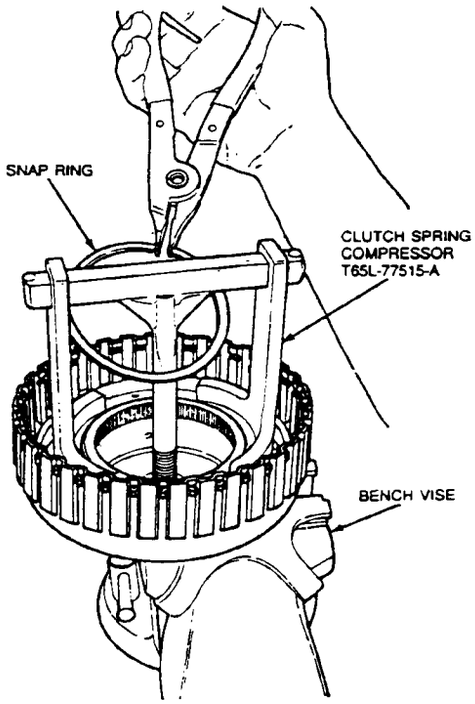

3. Remove piston assembly from hub.

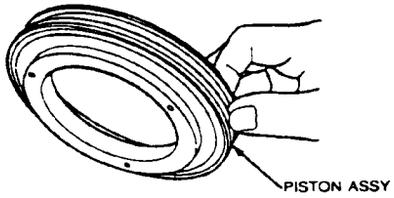

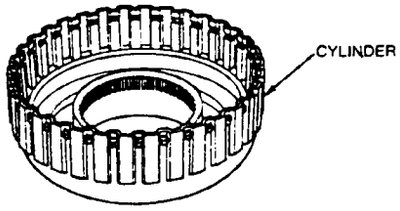

4. Remove piston inner and outer seals.

Inner Piston Seal

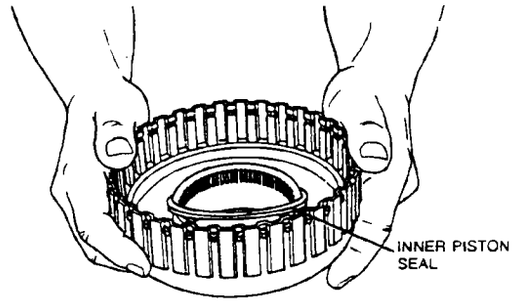

Outer Piston Seal

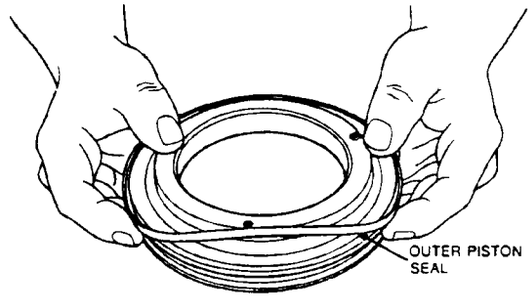

Assembly

1. Install inner and outer piston seals (lip seal facing toward bottom of cylinder) and install piston assembly using Forward Clutch Seal Lip Protector T86P-70548-A or equivalent.

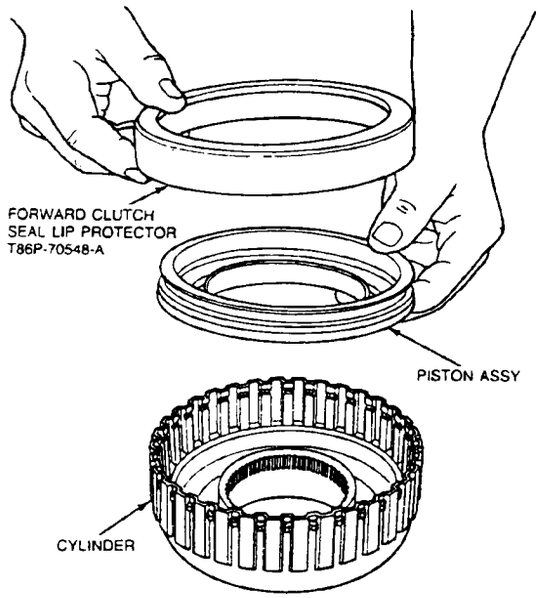

2. Install return spring and snap ring using Clutch Spring Compressor T65L-77515-A or equivalent.

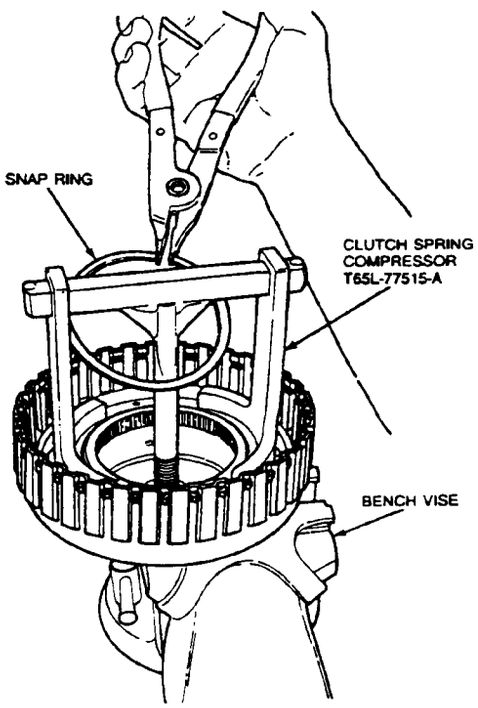

3. Install wave spring, clutch pack, pressure plate and snap ring.

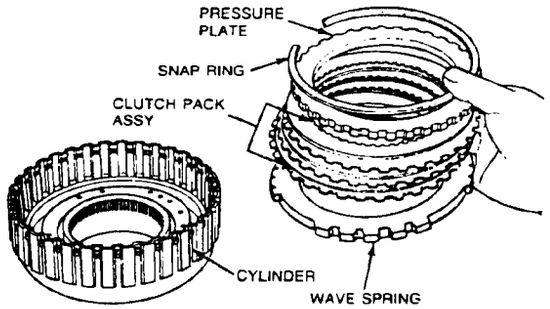

4. Check clutch pack clearance using Dial Indicator TOOL-4201-C or equivalent. Push downward on the clutch pack with at least 135N (30 lbs) of force. Release pressure and zero dial indicator. Lift pressure plate to the bottom of the snap ring. Note dial indicator reading. Take two readings, 180 degrees apart, and determine the average of the two readings. The clearance should be 1.89-1.40mm (0.075-0.055 inch). If the clearance is not within specification, selective snap rings are available in the following thicknesses:

   1.24-1.34mm (0.049-0.053 inch)

   1.60-1.70mm (0.063-0.067 inch)

   1.95-2.05mm (0.077-0.081 inch)

   2.30-2.40mm (0.091-0.094 inch)

   2.65-2.75mm (0.104-0.108 inch)

   After installing the correct snap ring, check the clearance.

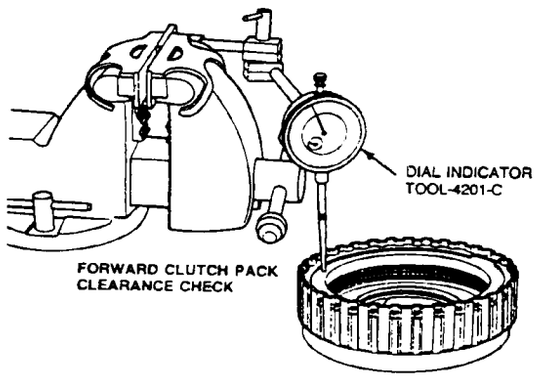

Direct Clutch

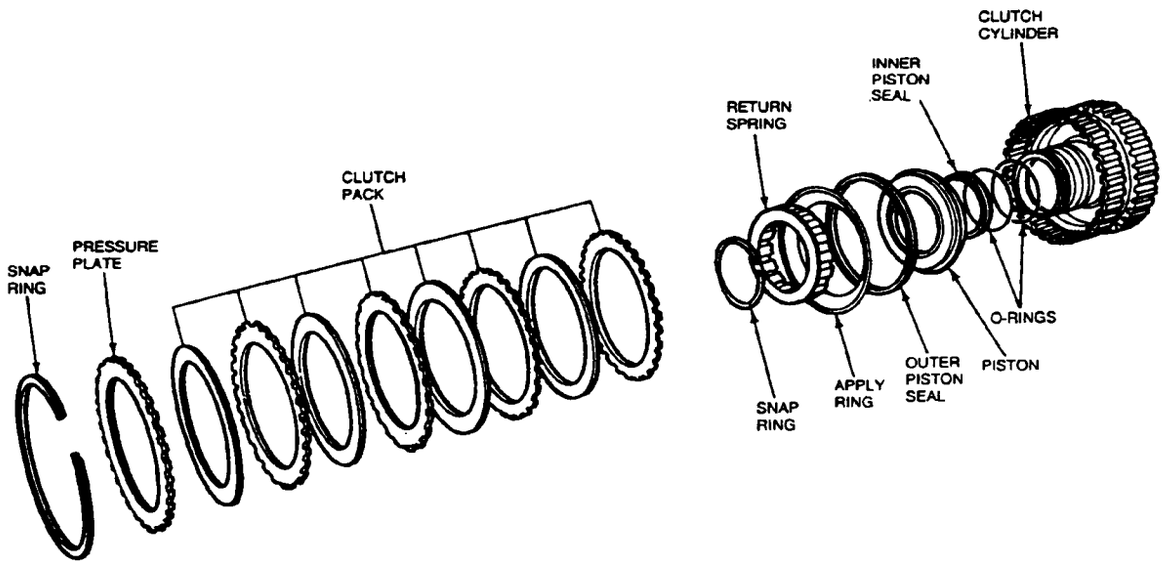

Disassembly

1. Remove snap ring, pressure plate and clutch pack.

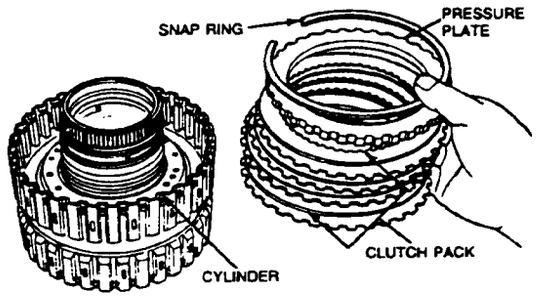

2. Remove snap ring and return spring using Clutch Spring Compressor T65L-77515-A or equivalent.

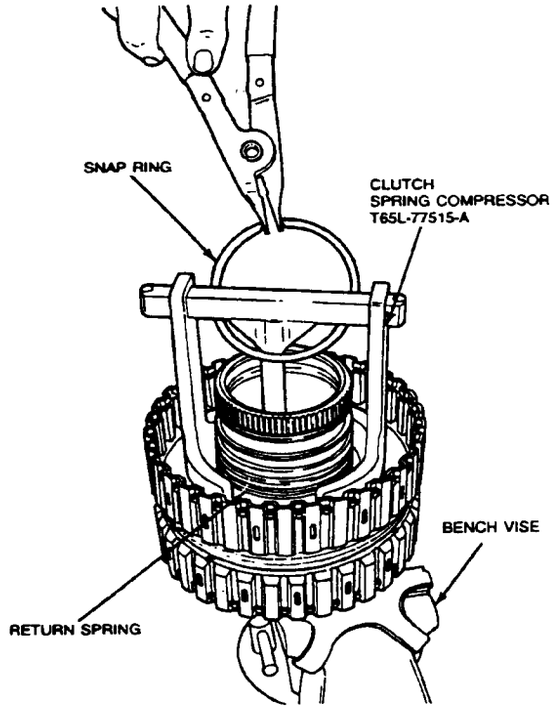

3. Remove two-piece piston assembly.

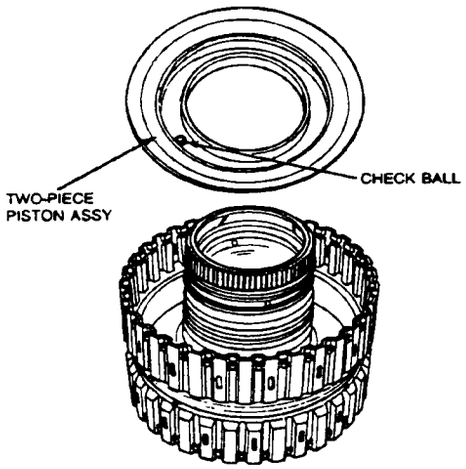

4. Disassemble two-piece piston.

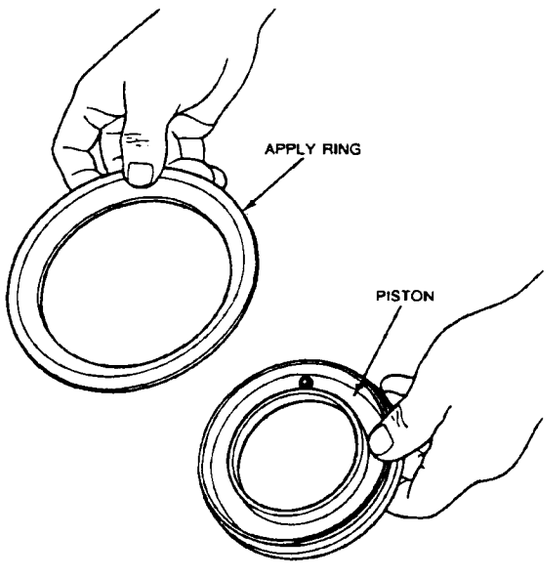

5. Remove piston inner and outer lip seals.

Inner Piston Seal

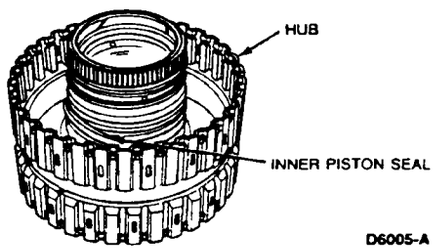

Outer Piston Seal

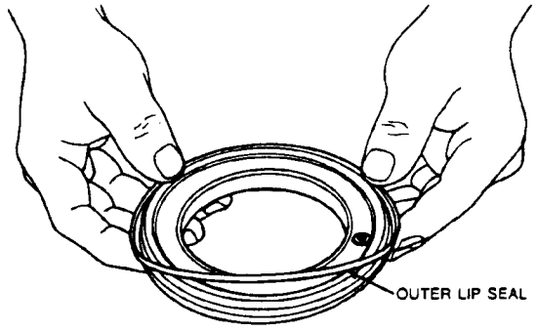

Assembly

1. Install inner and outer piston lip seals (lip seals facing toward bottom of cylinder) and install into hub using Direct Clutch Lip Seal Protector T86P-70234-A or equivalent.

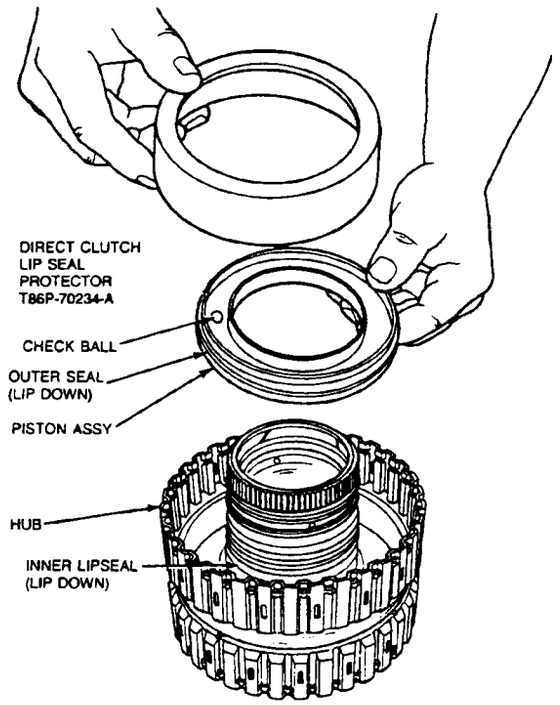

2. Install piston outer ring.
3. Verify free movement of check ball.

4. Install return spring in cylinder aligning return spring notch with check ball in piston.

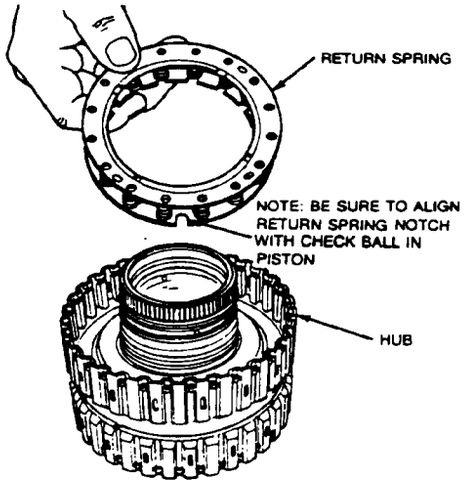

5. Install snap ring using Clutch Spring Compressor T65L-77515-A or equivalent.

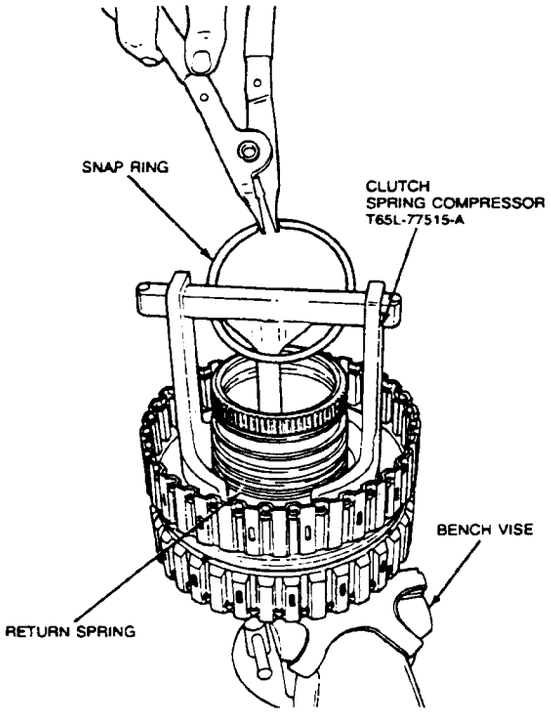

6. Install clutch pack, pressure plate and snap ring into cylinder.

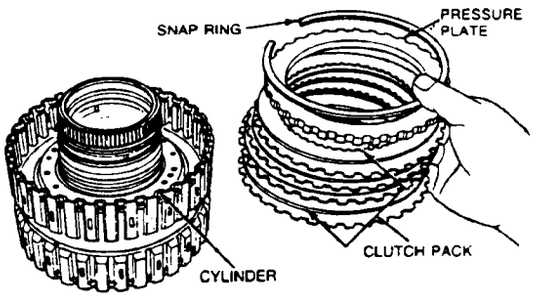

7. Check clutch pack clearance using Dial Indicator TOOL-4201-C or equivalent. Push downward on the clutch pack with 135N (30 lbs) of force.Release pressure and zero dial indicator. Lift pressure plate to the bottom of the snap ring. Note dial indicator reading. Take two readings, 180 degrees apart, and determine the average of the two readings. The clearance should be: (3-plate) (4-Plate) 0.78-1.29mm (0.031-0.051 inch). If the clearance is not within specification, selective snap rings are available in the following thicknesses:

   1.24-1.34mm (0.049-0.053 inch)

   1.67-1.76mm (0.065-0.069 inch)

   2.14-2.24mm (0.084-0.088 inch)

   2.61-2.71mm (0.102-0.106 inch)

   3.04-3.14mm (0.119-0.123 inch)

   After installing the correct snap ring, check the clearance.

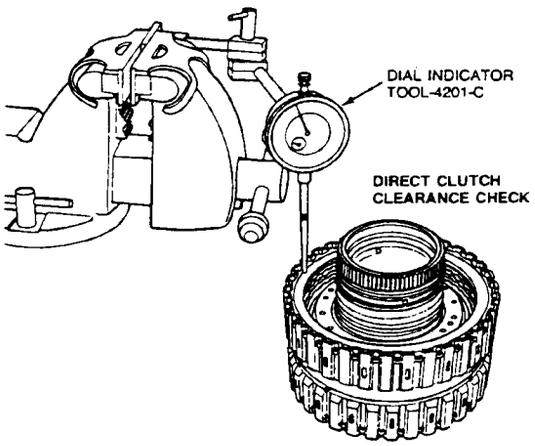

Intermediate Clutch

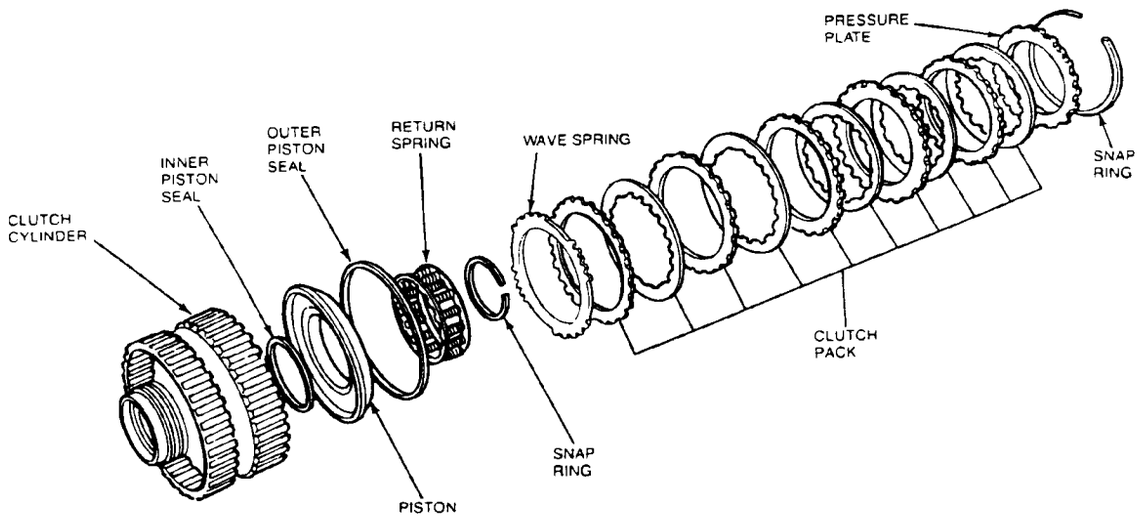

Disassembly

1. Remove snap ring, pressure plate and clutch pack assembly.

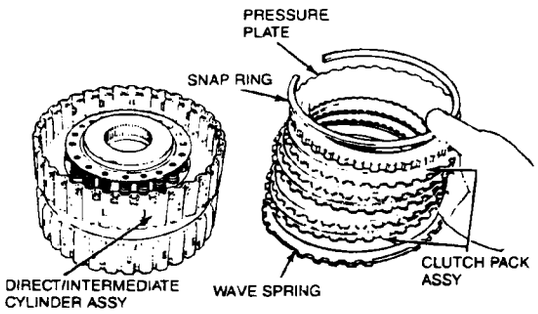

2. Remove snap ring and return spring, using Clutch Spring Compressor T65L-77515-A or equivalent.

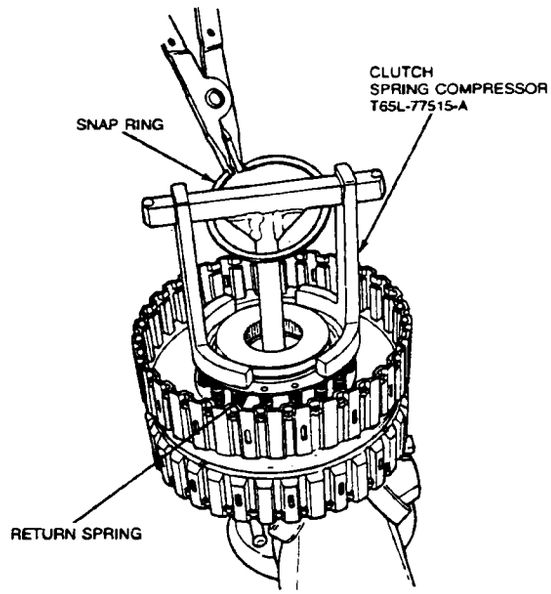

3. Remove piston assembly.

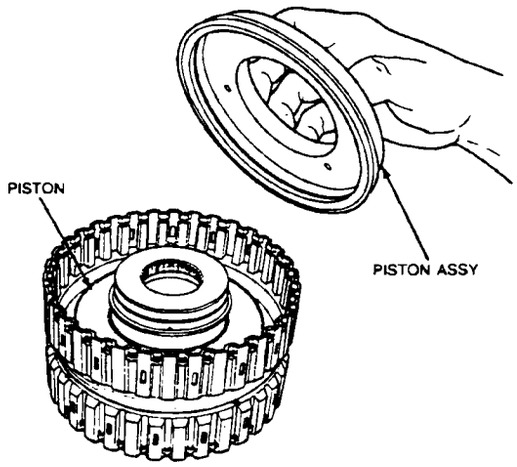

4. Remove piston inner and outer seals.

Outer Piston Seal

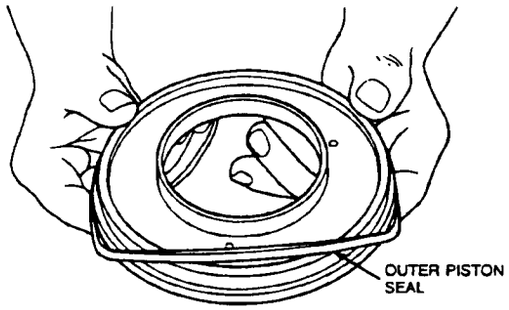

Inner Piston Seal

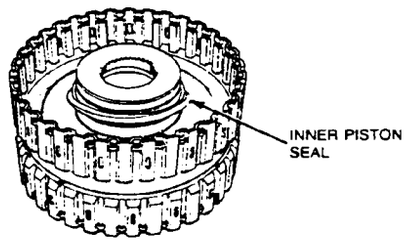

Assembly

1. Check for free movement of check ball in cylinder. Install inner lip seal on cylinder hub and outer piston lip seal (lips facing toward bottom of cylinder) on piston and install piston using Forward Clutch Seal Lip Protector T86P-70548-A or equivalent.

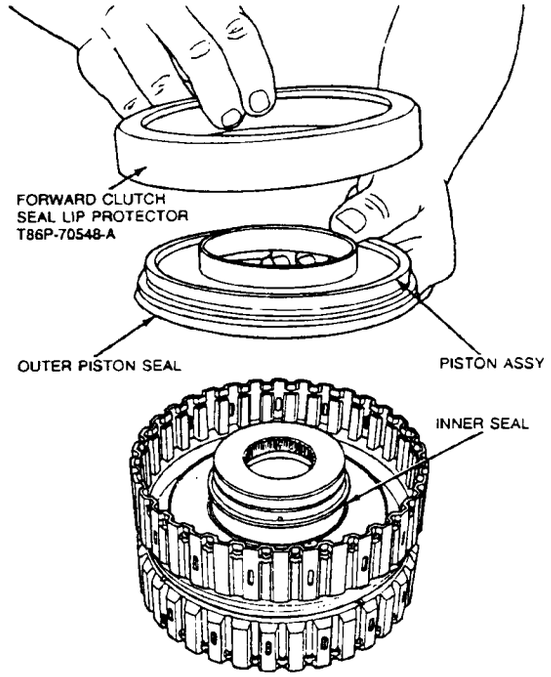

2. Install snap ring and return spring using Clutch Spring Compressor T65L-77515-A or equivalent.

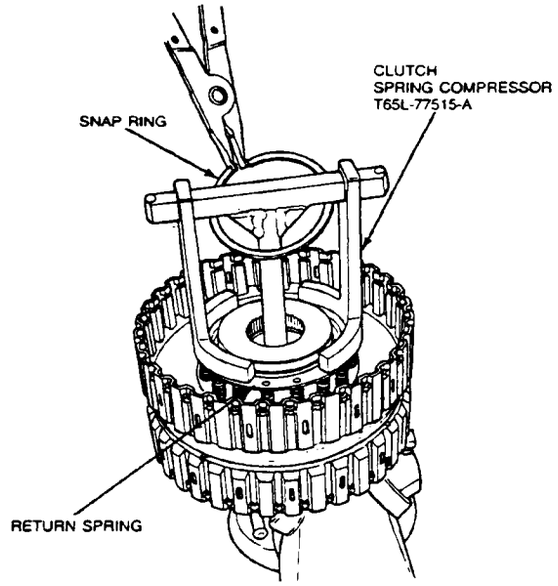

3. Install clutch pack, pressure plate and snap ring.

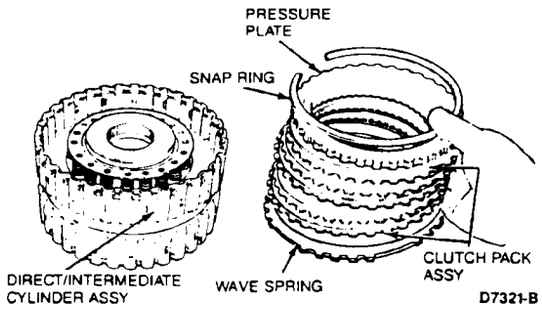

4. Check clutch pack clearance using Dial Indicator TOOL-4201-C or equivalent. Push downward on the clutch pack with 135N (30 lbs) of force. Release pressure and zero the dial indicator. Lift pressure plate to the bottom of the snap ring. Note dial indicator reading. Take two readings, 180 degrees apart, and determine the average of the two readings. The clearance should be: (4-Plate) 1.02-1.51mm (0.040-0.059 inch). If the clearance is not within specification, selective snap rings are available in the following thicknesses:

1.20-1.30mm (0.047-0.051 inch)
1.67-1.77mm (0.066-0.070 inch)
2.14-2.24mm (0.084-0.088 inch)
2.61-2.71mm (0.103-0.107 inch)
3.04-3.14mm (0.120-0.124 inch)

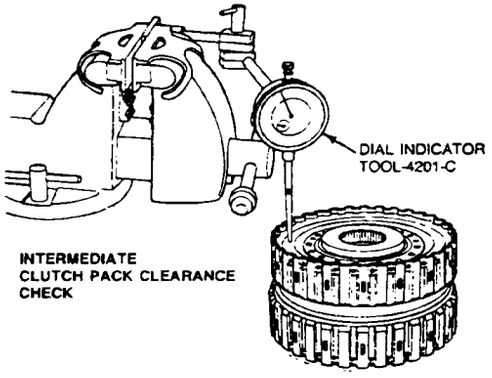

INTERMEDIATE CLUTCH PACK CLEARANCE CHECK

Reverse Clutch

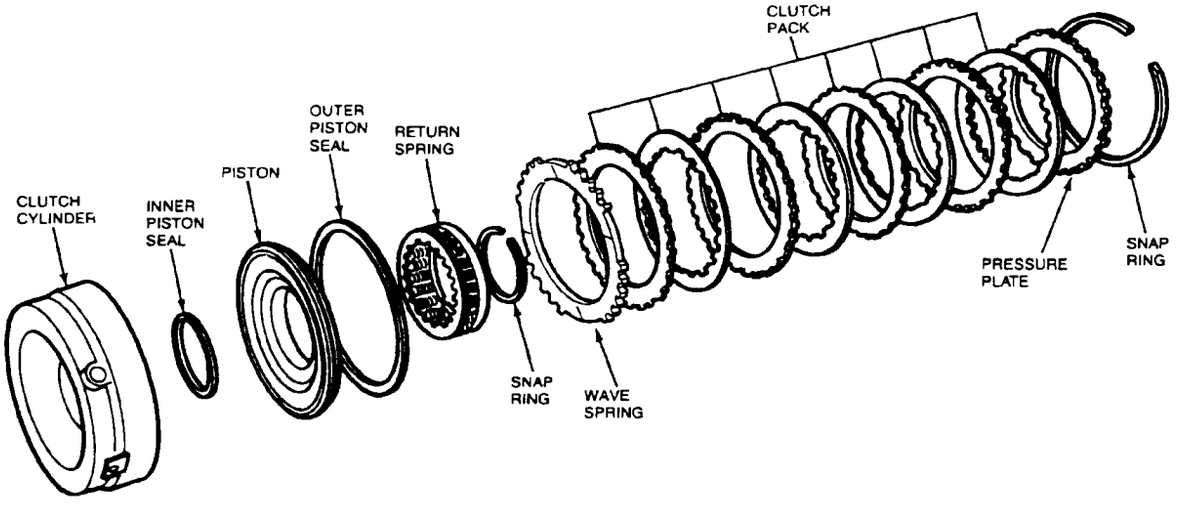

Disassembly

1. Remove snap ring, pressure plate, clutch pack and wave spring.

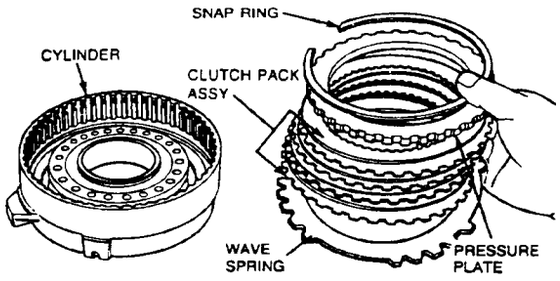

2. Using Clutch Spring Compressor T65L-77515-A or equivalent, remove snap ring and return spring.

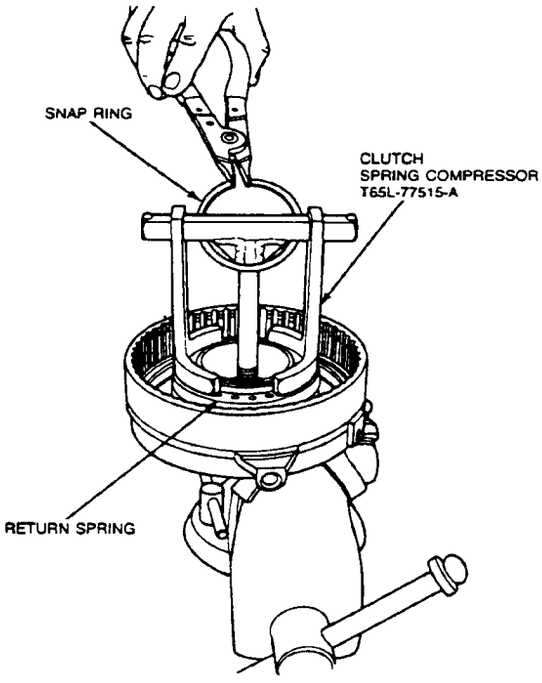

3. Lift out piston and remove piston inner and outer seals.

Piston Inner Seal

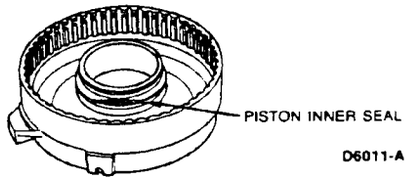

Piston Outer Seal

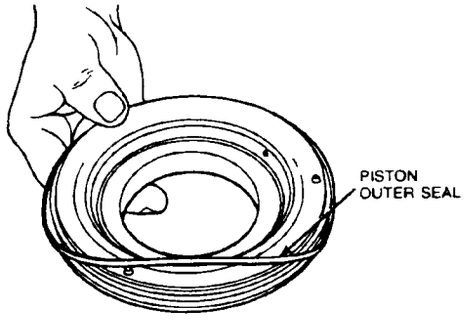

Assembly

1. Install inner and outer piston lip seals (lips facing toward bottom of cylinder) and install piston using Reverse Clutch Outer Lip Seal Protector T86P-70403-A or equivalent.

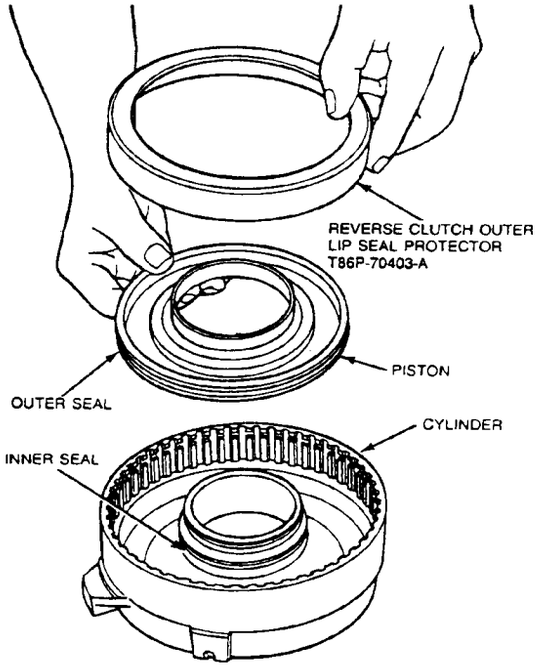

2. Install snap ring and return spring using Clutch Spring Compressor T65L-77515-A or equivalent.

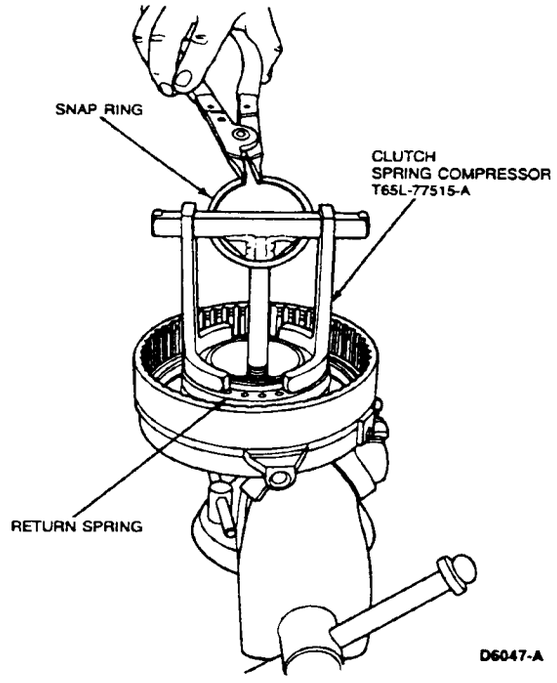

3. Install wave spring, clutch pack, pressure plate and snap ring.

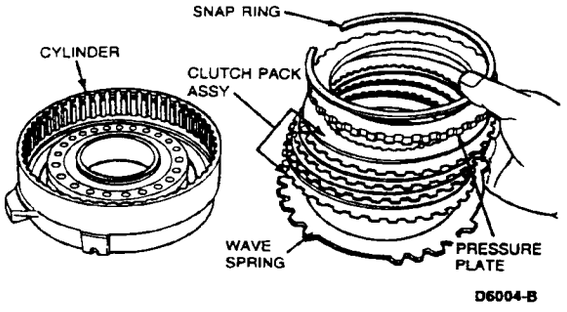

4. Check clutch pack clearance using Dial Indicator TOOL-4201-C or equivalent.Push downward on the clutch pack with 135N (30 lbs) of force. Release pressure and zero dial indicator. Lift pressure plate to the bottom of the snap ring. Note dial indicator reading. Take two readings, 180 degrees apart, and determine the average of the two readings. The clearance should be: 0.97-1.63mm (0.038-0.064 inch). If the clearance is not within specification, selective snap rings are available in the following thicknesses:

1.52-1.62mm (0.059-0.064 inch)
1.98-2.08mm (0.078-0.081 inch)
2.45-2.55mm (0.096-0.100 inch)
2.92-3.02mm (0.115-0.118 inch)

After installing the correct snap ring, check the clearance.

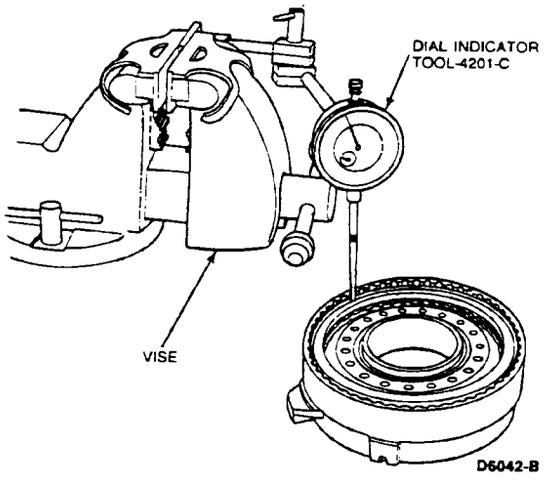

Planetary Assembly

Disassembly and Assembly

1. Remove snap ring.
2. Remove front planetary.
3. Remove No. 13 needle bearing.
4. Remove rear planetary from shell and ring gear assembly.
5. To assemble, reverse Steps 1 through 4.

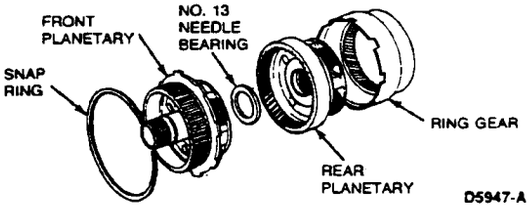

Differential and Gearset

Disassembly

1. Remove planetary pinion shaft retaining snap ring.

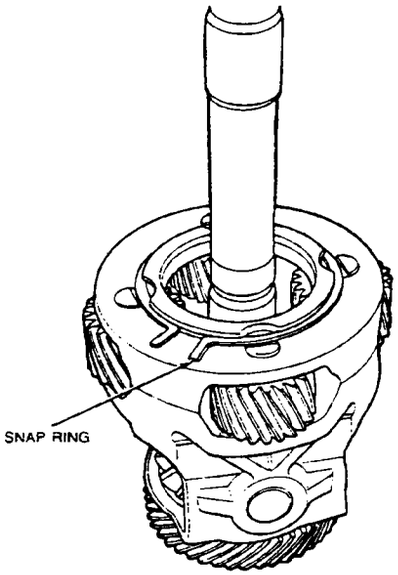

2. Using a magnet, work planetary pinion shafts out of differential case housing.

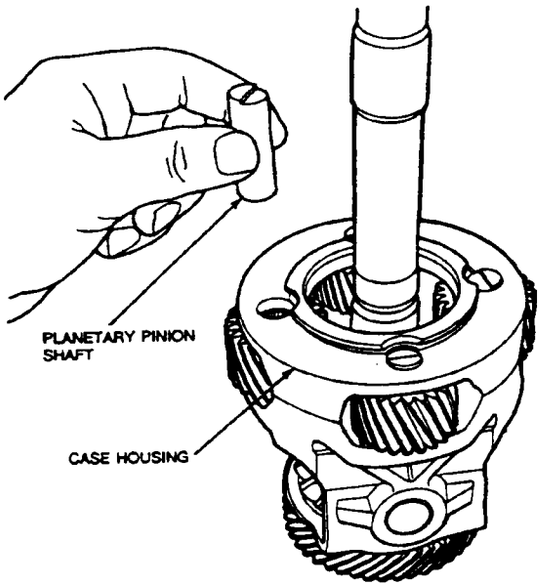

3. Slide out pinion gears and thrust washers.
4. Inspect needle bearings and pinion shafts. Replace, if necessary.

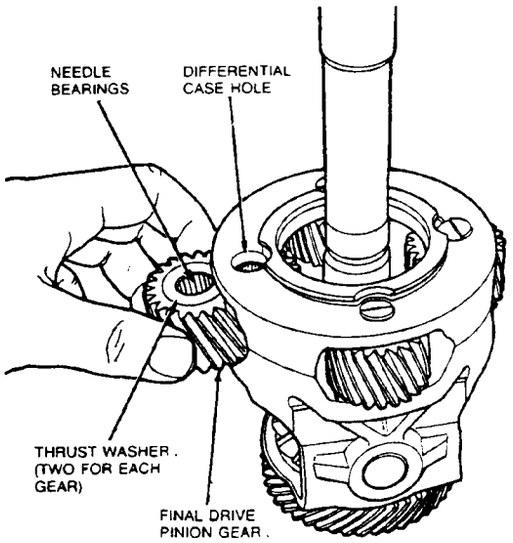

5. Remove No. 17 needle bearing from top of differential planetary assembly.

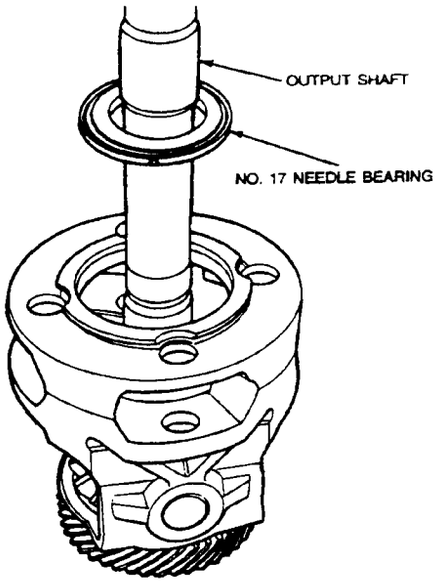

6. Using a drift, drive out differential pinion shaft roll pin.

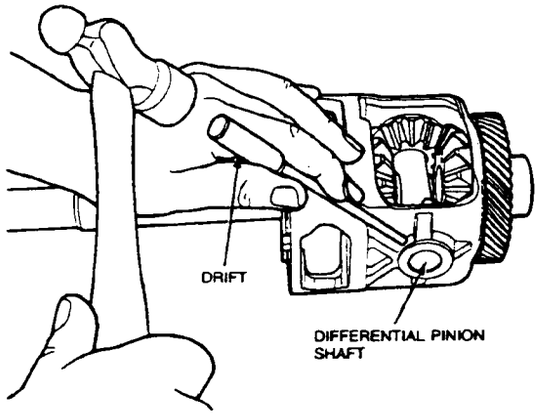

7. Tap out pinion shaft using a drift.

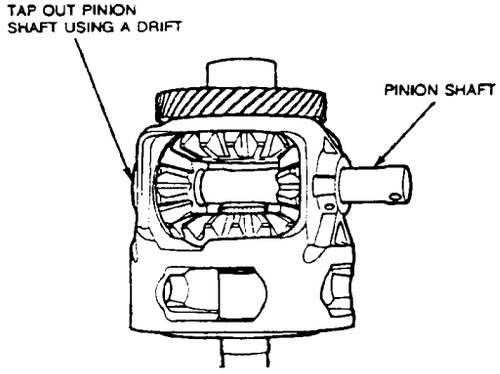

8. Remove pinion gears and thrust washers by rotating output shaft.

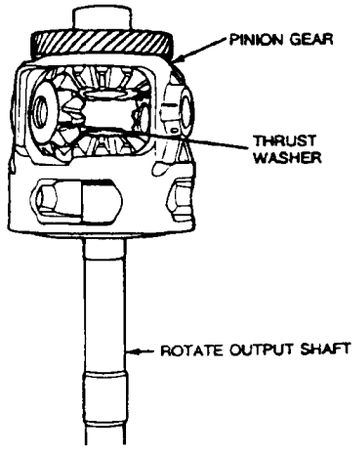

9. Remove RH side gear and thrust washer.

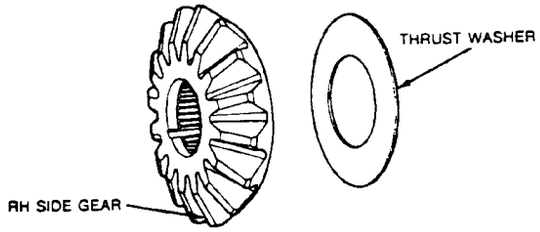

10. Push output shaft toward center of housing, and slide LH side gear upward to gain access to retaining ring.

11. Remove retaining ring and slide output shaft out of differential case. Remove pinion gear and thrust washer.

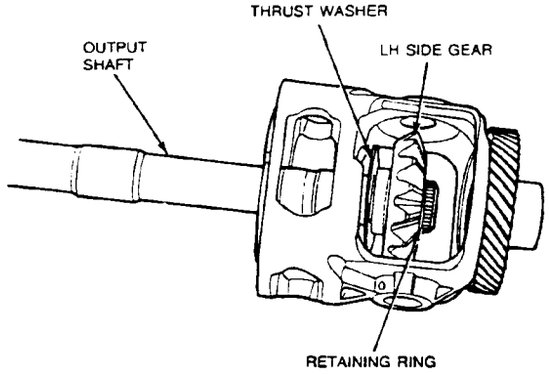

Assembly

1. With output shaft inside of differential case, slide thrust washer and LH side gear onto output shaft.
2. Install retaining ring and slide gear down over retaining ring.

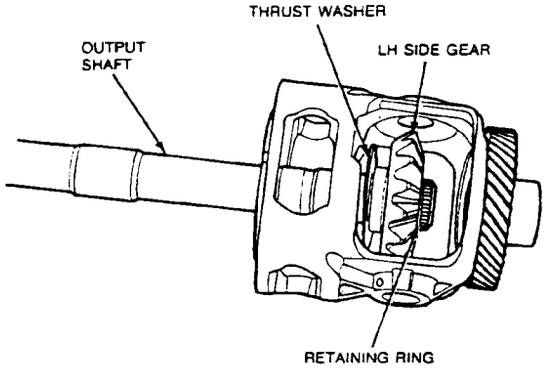

3. Install thrust washer and RH side gear into differential case.

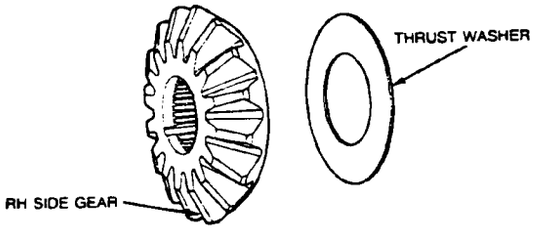

4. Install thrust washers on pinion gears being sure inner lips on washers are seated in recess in pinion gears.

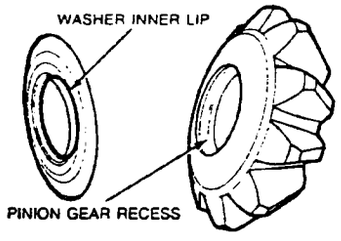

5. Position pinion gears on side gears being sure teeth on all gears are engaged and rotate output shaft.

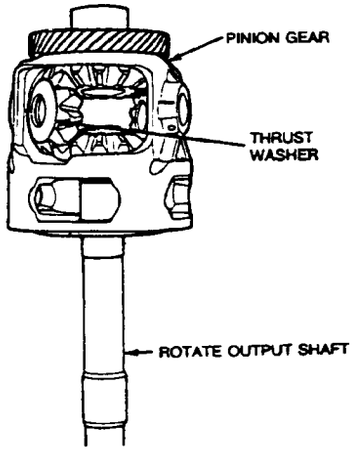

6. While rotating the output shaft, walk pinion gears into position.

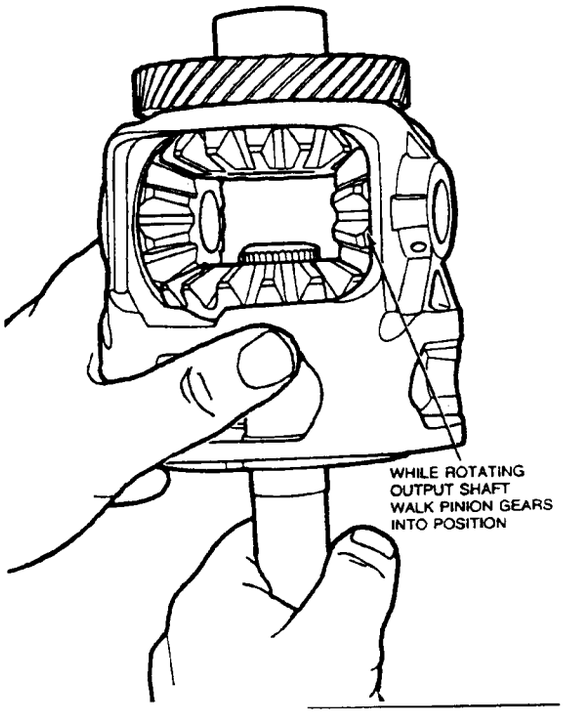

7. Tap pinion shaft through differential case and pinion gears, making sure to align retaining pin hole in shaft with hole in differential case.

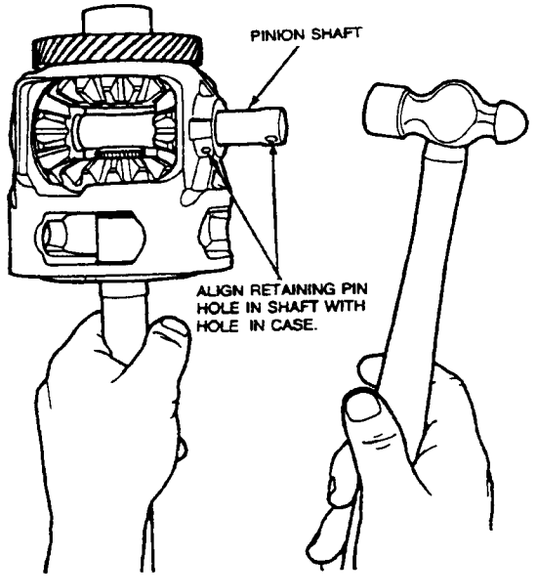

8. Using a drift, tap in differential pinion shaft roll pin.

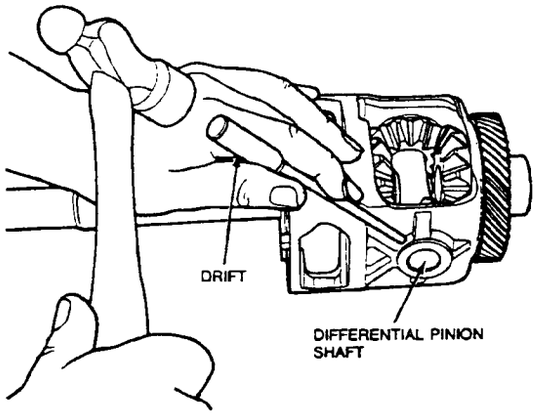

9. Install No. 17 needle bearing over output shaft and seat on planetary housing with positioning tabs facing up.

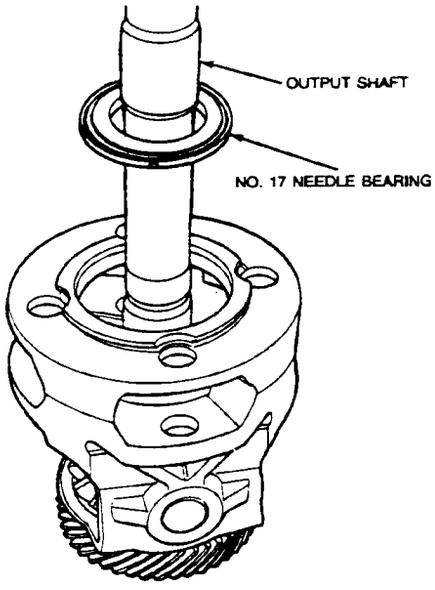

10. Install upper and lower pinion gear thrust washers onto pinion gear.

NOTE: It may be necessary to use a little grease to hold thrust washers, needle bearings and spacer in position. Install and align final drive pinion gears with differential case holes.

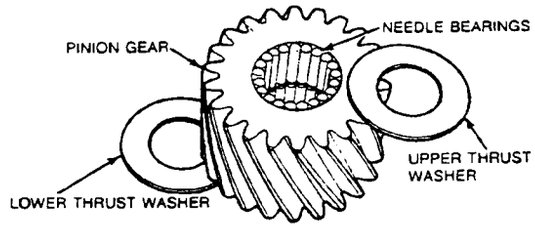

NOTE: Make sure all needle bearings, thrust washers and spacer are in position.

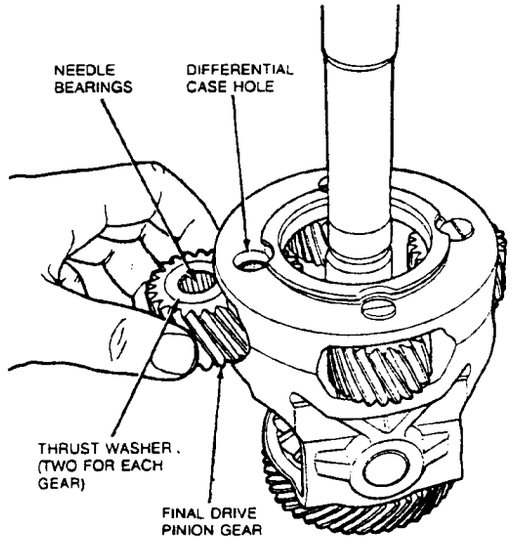

11. Push final drive pinion shafts through differential case and gears until lower step on shaft is level with differential case.

NOTE: Use care when installing pinion shafts to prevent disturbing needle bearings.

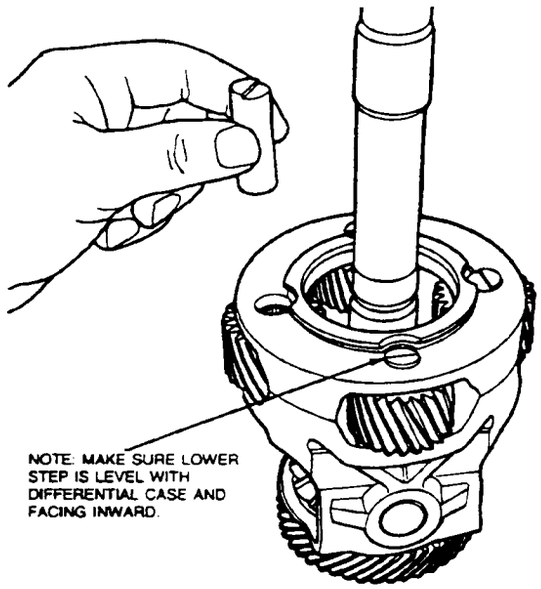

12. Install final drive pinion shaft retaining ring in differential case grooves.

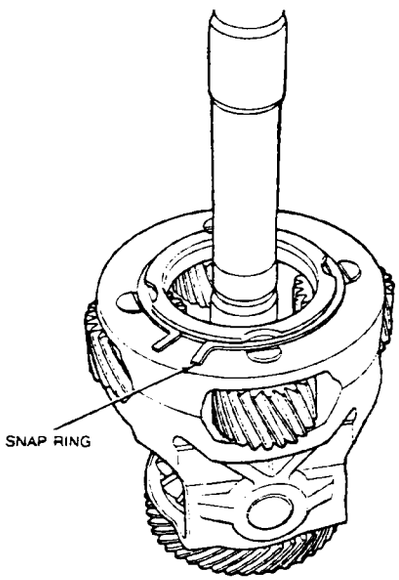

Low-Intermediate Servo

Disassembly

1. Remove three 8mm cover bolts.
2. Remove piston return spring.
3. Remove servo piston and rod from cover.
4. Remove piston rod retaining clips and remove rod and cushion spring.
5. Remove servo piston seal.
6. Remove seal and gasket from cover.

Assembly

1. Install front piston rod retaining clip on piston rod.
2. Install cushion spring and piston.
3. Compress assembly and install rear piston rod retaining clip.
4. Install servo piston seal.
5. Install cover seal and gasket.
6. Lubricate piston seals with petroleum jelly.
7. Install assembled piston components into servo cover.
8. Install piston return spring into cover.
9. Install assembled servo components into case.

   NOTE: Make sure return spring is correctly positioned in case.

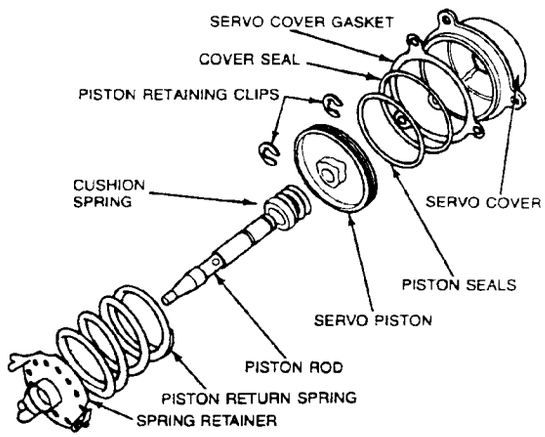

10. Install three 8mm cover bolts. Tighten to 9-12 N·m (7-9 lb-ft).

Overdrive Servo

Disassembly

1. Remove three 8mm cover bolts, and remove return spring and rod.
2. Remove servo piston from cover.
3. Remove rear piston rod retaining clip and remove washer.

4. Remove servo piston and seal.
5. Remove cushion spring.
6. Remove front piston rod retaining clip.
7. Remove cover seal.

Assembly

1. Install front piston rod retaining clip on piston rod.
2. Install cushion spring, piston and washer.
3. Compress assembly and install rear piston rod retaining clip.
4. Lubricate piston seal with petroleum jelly.
5. Install cover seal.
6. Install assembled servo components into case and install cover.

   NOTE: Make sure return spring is correctly positioned in case.
7. Install three 8mm cover bolts. Tighten to 9-12 N•m (7-9 lb-ft).

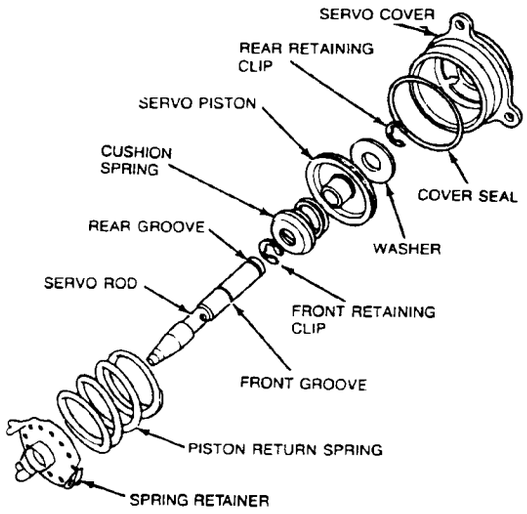

Speedometer Drive Gear Assembly

Disassembly

1. Remove two 8mm cover bolts and remove cover.
2. Remove seal and discard.
3. Remove the following components as an assembly:
   - Speedometer drive gear bearing
   - Speedometer drive gear assembly
4. Remove speedometer drive bearing and gear from governor shaft.

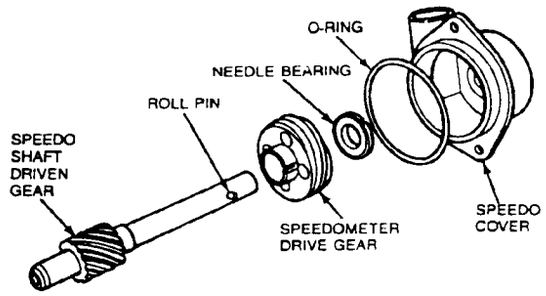

Assembly

1. Push speedometer drive gear onto governor shaft aligning slots in gear with shaft roll pin.
2. Install speedometer drive gear bearing on speedometer drive gear with outer race (black side) facing up.
3. Install new seal and cover.
4. Install two 8mm cover bolts. Tighten to 9-12 N•m (7-9 lb-ft).

Driven Sprocket Support

Disassembly

Remove driven sprocket support needle bearing using Stator and Driven Sprocket Bearing Remover T86P-70043-A and Impact Slide Hammer T58L-101-B or equivalent.

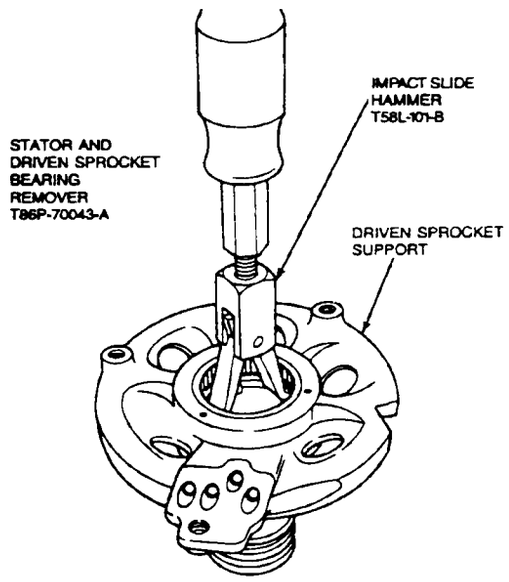

Assembly

Press driven sprocket support needle bearing using Stator and Driven Sprocket Bearing Replacer T86P-70043-B or equivalent.

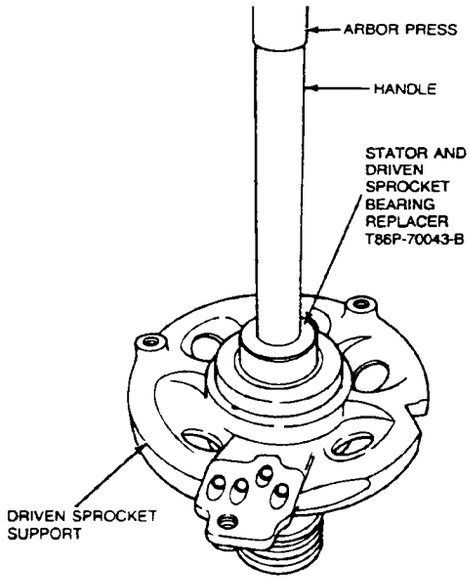

CLEANING AND INSPECTION

Transaxle

Clean the parts with suitable solvent and use moisture-free air to dry off all parts and clean out fluid passages.

The composition clutch plates, control valve body-to-screen gasket, bands and synthetic seals should not be cleaned in a vapor degreaser or with any type of detergent solution. To clean these parts, wipe them off with a lint-free cloth. New clutch plates or bands should be soaked in the specified transmission fluid for 15 minutes before being assembled.

Valve Body

1. Thoroughly clean all parts, except check balls, in clean solvent and blow dry with moisture-free compressed air.
2. Inspect all valve and plug bores for scores. Check all fluid passages for obstructions. Inspect all mating surfaces for burrs and scores. **If needed, use crocus cloth to polish valves and plugs. Avoid rounding the sharp edges of the valves and plugs with the crocus cloth.**
3. Inspect all springs for distortion. Check all valves and plugs for free movement in their respective bores. Valves and plugs, when dry, must fall from their own weight in their respective bores.
4. Roll manual valve on a flat surface to check for bent condition.

Servo

1. Inspect servo body for cracks and piston bore for scores.
2. Check fluid passages for obstructions.
3. Inspect band and struts for distortion. Inspect band ends for cracks.
4. Inspect servo spring for distortion.
5. Inspect band lining for excessive wear and bonding to metal band.
6. Replace damaged seals.

Forward, Direct, Intermediate and Reverse Clutches

1. Inspect clutch cylinder thrust surfaces, piston bore, and clutch plate serrations for scores or burrs. Minor scores or burrs may be removed with crocus cloth. Replace the clutch cylinder if it is badly scored or damaged.
2. Check fluid passage in clutch cylinder for obstructions. Clean out all fluid passages. Inspect clutch piston for scores and replace if necessary. Inspect check balls for freedom of movement and proper seating.
3. Check clutch release spring for distortion and cracks. Replace spring (including wave spring) if it is distorted or cracked.
4. Inspect composition clutch plates, steel clutch plates, and clutch pressure plate for worn or scored bearing surfaces. Replace all parts that are deeply scored or burned.
5. Check clutch plates for flatness and fit on clutch hub serrations. Discard any plate that does not slide freely on the serrations or that is not flat.
6. Check clutch hub thrust surfaces for scores and clutch hub splines for wear.

Output Shaft

1. Inspect output shaft bearing surfaces for scores. If excessive clearance or scores are found, replace shaft and inspect components.
2. Check splines on output shaft for wear and replace shaft if splines are excessively worn. Inspect all bushings.

One-Way Clutches

1. Inspect outer and inner races for scores or damaged surface areas where rollers or sprags contact races.
2. Inspect rollers, sprags and springs for excessive wear or damage.
3. Inspect spring and case for bent or damaged spring retainers.

Speedometer Drive Assembly

1. Inspect drive and driven gears. Replace if teeth are broken, chipped or excessively worn.

Case

Inspect the case for cracks and stripped threads. Inspect the gasket surfaces and mating surfaces for burrs. Check the vent for obstructions and check all fluid passages for obstructions and leakage.

Inspect the case bushing for scores. Check all parking linkage parts for wear or damage.

If the transaxle case thread is damaged, service kits may be purchased form local jobbers. To service a damaged thread, the following procedures should be carefully followed.

1. Drill out damaged threads, **using the same drill size as the thread O.D.** For example, use a 5/16-inch drill for a 5/16 x 18 thread.
2. Select proper special tap and tap the drilled hole. Tap is marked for size of thread being repaired. Thus, the special tap marked 5/16 x 18 will not cut the same thread as a standard 5/16 x 18 tap. It does cut a thread large enough to accommodate the insert, and after the insert is installed the original thread size (5/16 x 18) is restored.
3. Place insert on tool and adjust sleeve to length of insert being used. Press insert against face of tapped hole. Turn tool clockwise and wind insert into hole until insert is one-half turn below face.
4. Working through insert, bend insert tang straight up and down until it breaks off at notch.
5. Improperly installed inserts can be removed with extractor tool. Place extractor tool in insert so that blade rests against top coil one-quarter to one-half turn away from end of coil. Tap tool sharply with a hammer so that blade cuts into insert. Exert downward pressure on tool and turn it counterclockwise until insert is removed.

Planetary Carriers

Individual parts of the planet carriers are not serviceable except for the differential components.

1. Check pins and shafts in planet assemblies for loose fit and/or complete disengagement. Use a **new planet** assembly if either condition exists. Before installing a planet assembly, check shaft welds.
2. Inspect pinion gears for damaged or excessively worn teeth.
3. Check for free rotation of pinion gears.

Thrust Bearings

Wash thrust bearings thoroughly in cleaning solvent. Blow bearings dry with compressed air.

Ensure that bearings are clean and then lubricate with transmission fluid. Replace any bearings and races which show signs of pitting or roughness.

Stator to Impeller Interference Check

1. Position stator support assembly on a bench with spline end pointing up.
2. Mount a converter on stator support with splines on one-way clutch inner race engaging mating splines of stator support.
3. Hold stator support stationary, and try to rotate torque converter both clockwise and counterclockwise. Converter should rotate freely without any signs of interference or scraping within converter assembly.
4. If there is an indication of scraping, trailing edges of stator blades may be interfering with leading edges of impeller blades. In such cases, replace converter.

Converter and Oil Cooler

When internal wear or damage has occurred in the transaxle, metal particles, clutch plate material, or band material may have been carried into the converter and oil cooler. These contaminants are a major cause of recurring transaxle troubles and **MUST** be removed from the system before the transaxle is put back into service.

Whenever a transaxle has been disassembled to replace worn or damaged parts or because the valve body sticks due to foreign material, the converter and oil cooler **MUST** be cleaned by using a mechanically agitated cleaner, such as Rotunda Torque Converter and Oil Cooler Cleaner 014-00028 or equivalent.

The lack of a drain plug in the AXOD-E converter increases the amount of residual flushing solvent retained in the converter after cleaning. This retained solvent is not acceptable and a method of diluting it is required. The following procedure is to be used after removal of the AXOD-E torque converter from the cleaning equipment.

1. **Thoroughly drain**remaining solvent through hub.
2. Add 1.9 liters (2.0 quarts) of clean transmission fluid to converter.Agitate by hand.
3. **Thoroughly drain** solution through converter hub.

Transaxle Fluid Drain and Refill

Normal maintenance and lubrication requirements do not necessitate periodic automatic transaxle fluid changes. If a major service, such as a clutch band, bearing, etc., is required in the transaxle, it will have to be removed for service. **At this time the converter, transaxle cooler and cooler lines must be thoroughly flushed to remove any dirt.**

When used under continuous or severe conditions the transaxle and torque converter should be drained and refilled with fluid as specified.

CAUTION: Use of a fluid other than specified could result in transaxle malfunction and/or failure.

Refer to Vehicle Certification Label affixed to left front door lock face panel or door pillar for transaxle code.

When filling a dry transaxle and converter, refer to Specifications for capacity. Check the fluid level.

Procedures for partial drain and refill, due to in-vehicle service operation, are as follows:

1. Raise vehicle on a hoist or jackstands. Refer to Section 10-04.
2. Place a drain pan under transaxle.
3. Loosen pump and valve body cover bolts and drain.
4. Loosen lower pan retaining bolts and drain fluid from transaxle.
5. When fluid has drained to level of pan flange, remove rest of pan bolts working from the RH side and allow it to drop and drain slowly.
6. When all fluid has drained from transaxle, remove and thoroughly clean pan. Discard gasket.
7. Place a new gasket on pan and install pan on transaxle.
8. Fill transaxle to correct level.
9. Lower vehicle.

Oil Cooler Tube Leakage

When fluid leakage is found at the oil cooler, the cooler must be replaced. Refer to Section 27-03.

When one or more of the fluid cooler steel tubes must be replaced, each replacement tube must be fabricated from the same size steel tubing as the original line.

Using the old tube as a guide, bend the new tube as required. Add the necessary fittings and install the tube.

After the fittings have been tightened, add fluid as needed and check for fluid leaks.

Thrust Washer and Needle Bearing Location

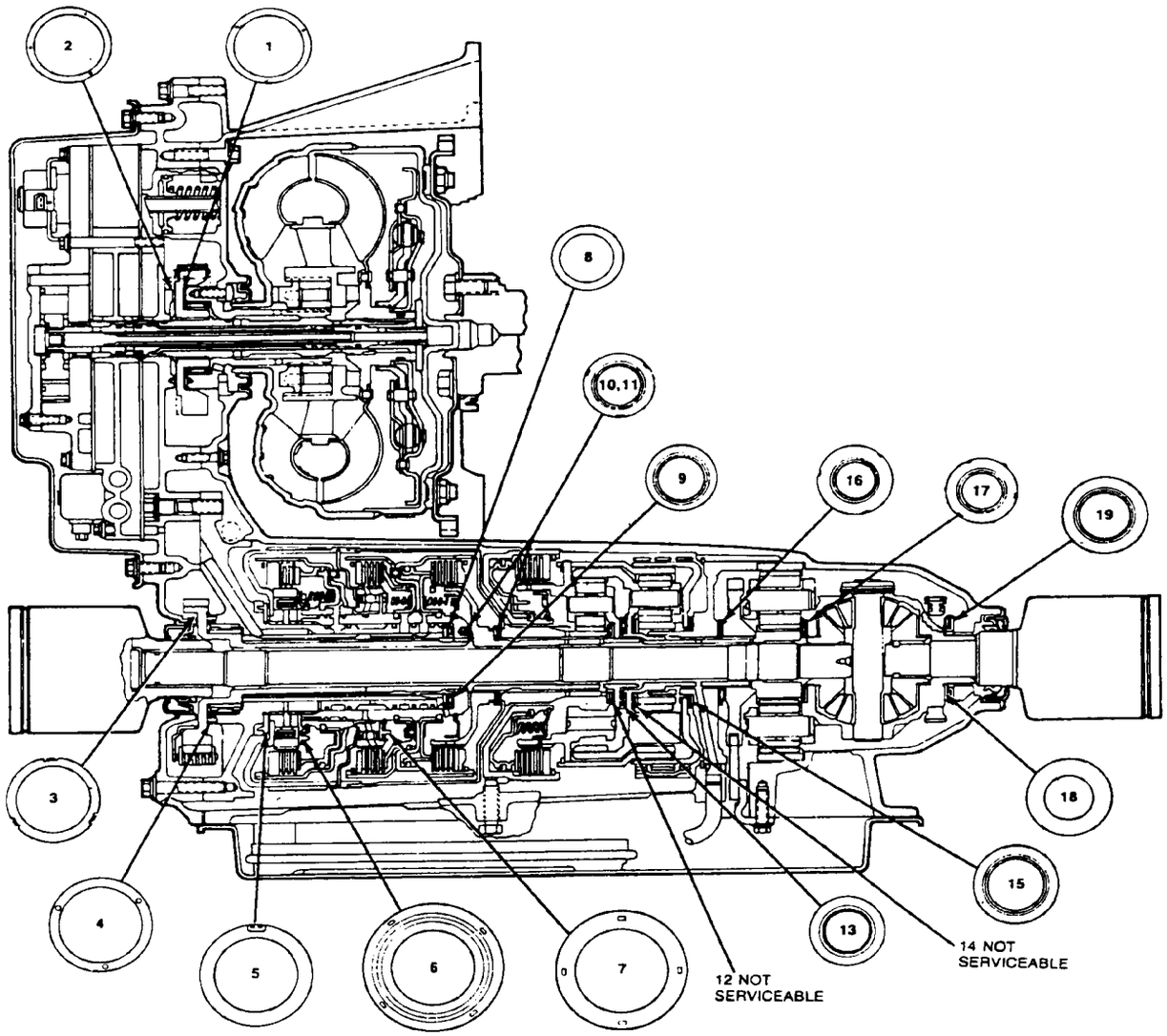

ITEM	PART NUMBER	DESCRIPTION
1.	7G019	WASHER THRUST (NYLON) (DRIVE SPROCKET/STATOR SUPPORT)
2.	7G019	WASHER THRUST (NYLON) (DRIVE SPROCKET/STATOR SUPPORT)
3.	7G096	WASHER THRUST (STEEL BACKED BRONZE) CASE COVER/DRIVEN SPROCKET)
4.	7G115	WASHER THRUST (NYLON) (DRIVEN SPROCKET/SUPPORT)
5.	7D014	WASHER THRUST (NYLON) (SELECTIVE) (SUPPORT/FORWARD CLUTCH)
6.	7D076	WASHER THRUST (NYLON) (FORWARD CLUTCH O.W.C. RACE)
7.	7G116	WASHER THRUST (NYLON) (DIRECT CLUTCH/DIRECT O.W.C.)
8.	7G273	WASHER THRUST (PHENOLIC) (SELECTIVE) (DRIVEN SPROCKET SUPPORT—REAR)
9.	7G128	BEARING ASSEMBLY (DIRECT CLUTCH HUB)
10.	7G239	BEARING ASSEMBLY (FRONT SUN GEAR)
11.	7G239	BEARING ASSEMBLY (FRONT SUN GEAR)
12.	7G104	NOT SERVICEABLE
13.	7G177	BEARING ASSEMBLY (PLANETARY THRUST—CENTER)
14.	7G105	NOT SERVICEABLE
15.	7G178	BEARING ASSEMBLY (REAR SUN GEAR)
16.	7G106	BEARING ASSEMBLY (FINAL DRIVE GEAR—FRONT)
17.	7G107	BEARING ASSEMBLY (FINAL DRIVE GEAR—REAR)
18.	7G103	WASHER THRUST (STEEL) (SELECTIVE) (DIFFERENTIAL CARRIER)
19.	7G112	BEARING ASSEMBLY (DIFFERENTIAL CARRIER)

SPECIFICATIONS

CLUTCH AND BAND APPLICATION CHART

Gear	Lo-Int Band	Overdrive Band	Forward Clutch	Intermediate Clutch	Direct Clutch	Reverse Clutch	Low One-Way Clutch	Direct One-Way Clutch
1st Gear Manual Low	Applied		Applied		Applied		Applied	Applied
1st Gear (Drive)	Applied		Applied				Applied	
2nd Gear (Drive)	Applied		Applied	Applied			Holding	
3rd Gear (Drive)				Applied	Applied			
4th Gear (Overdrive)		Applied		Applied	Applied			Holding
Reverse (R)			Applied			Applied	Applied	
Neutral (N)			Applied					
Park (P)			Applied					

TORQUE SPECIFICATIONS

Description	N-m	Lb-Ft	Description	N-m	Lb-Ft
Separator Plate to Main Control	9-12	7-9	TV Cable to Case	8-12	6-9
Separator Plate to Pump Body	9-12	7-9	Chain Cover to Case (10 mm)	9-12	7-9
Detent Spring to Chain Cover	9-12	7-9	Pump Body to Chain Cover	9-12	7-9
Dust Cover to Case	9-12	7-9	Oil Pan to Case (Lower Reservoir)	14-16	10-12
TV Control Lever to Chain Cover	9-12	7-9	Main Control Cover to Chain Cover (Upper Reservoir)	14-16	10-12
Solenoid to Main Control	9-12	7-9	Manual Lever to Manual Shaft	16-22	12-16
Low-Intermediate Servo Cover to Case	9-12	7-9	Park Abutment to Case	27-30	20-22
Overdrive Servo Cover to Case	9-12	7-9	Chain Cover to Case (13mm)	27-30	20-22
Pump Cover to Pump Body	9-12	7-9	Case to Chain Cover (13mm)	33-36	24.3-26.6
Filler Tube to Case	9-12	7-9	Chain Cover to Front Support (13mm)	27-30	20-22
Governor Cover to Case	9-12	7-9	Chain Cover to Front Support (7mm)	34-48	25-35
Case to Stator Support	9-12	7-9	Differential Brace to Case	34-48	25-35
Case to Chain Cover (10 mm)	9-12	7-9	Engine to Case/Case to Engine	55-68	41-50
Oil Pump Assy. to Main Control	9-12	7-9	Case to Reverse Clutch Screw	10-12	7-9
Neutral Start Switch to Case	9-12	7-9	Case to Reverse Clutch Nut	34-47	25-35
Valve Body/Solenoid to Chain Cover	9-12	7-9	Pressure Tap Plug for Chain Cover and Pump Body	8-12	6-9
Bracket Tubes to Case	9-12	7-9	Pressure Switch to Pump Body	8-12	6-9

TORQUE SPECIFICATIONS

Bolt	N-m	Lb-Ft
Transaxle to Engine	55-68	41-50
Control Arm to Knuckle	50-60	36-44
Stabilizer U-Clamp to Bracket	81-95	60-70
Stabilizer to Control Arm	133-169	98-125
Brake Hose Routing Clip	11	8
Tie Rod to Knuckle①	31-47	23-35
Manual Cable Bracket	14-27	10-20
Starter	41-54	30-40
Dust Cover	9-12	7-9
Torque Converter to Flywheel	31-53	23-39
Insulator to Bracket	75-90	55-70
Insulator Bracket to Frame	55-70	40-50
Insulator Mount to Transmission	34-45	25-33

①Tighten to minimum specified torque, continue tightening to nearest cotter pin slot.

FLUID CAPACITY

Type	Liters	Quarts
MERCON® Ford Specification E4AZ-19582-B	12.2	12.8

Description		N-m	Lb-Ft
Cooler Line Fittings at Radiator		11-16①	8-12
	Transaxle	24-31①	18-23
	Cooler Line Nut	16-24	12-18
Push Connector Fitting to Transaxle		24-31	18-23
Tube Nut to Connector		16-24	12-18
Threaded Connector to Oil Cooler		11-16	8-12

①1/4 inch x 18 Straight Pipe Fitting

AXOD - E
1993 - UP WIRE HARNESS VIEW

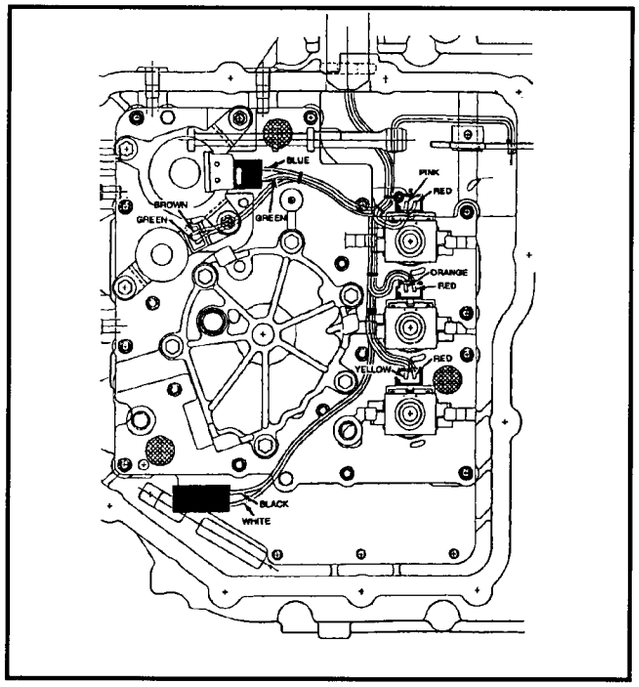

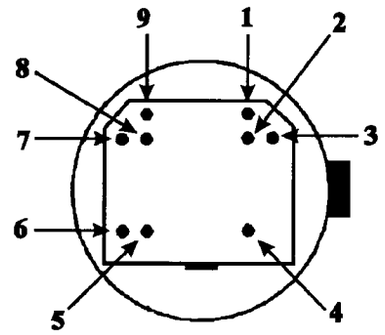

CONNECTOR TOP VIEW

1. EPC GROUND (BLUE)
2. EPC / MCCC POWER (GREEN)
3. SS3 GROUND (YELLOW)
4. MCCC GROUND (BROWN)
5. SS1, SS2, SS3 POWER (RED)
6. SS1 GROUND (ORANGE)
7. TOT - (BLACK)
8. SS2 GROUND (PINK)
9. TOT + (WHITE)

AXOD - E
1991 - 1992 WIRE HARNESS VIEW

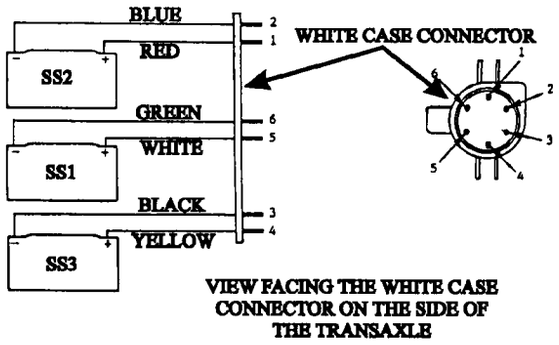

1. SS2 POWER (RED)
2. SS2 GROUND (BLUE)
3. SS3 GROUND (BLACK)
4. SS3 POWER (YELLOW)
5. SS1 POWER (WHITE)
6. SS1 GROUND (YELLOW)

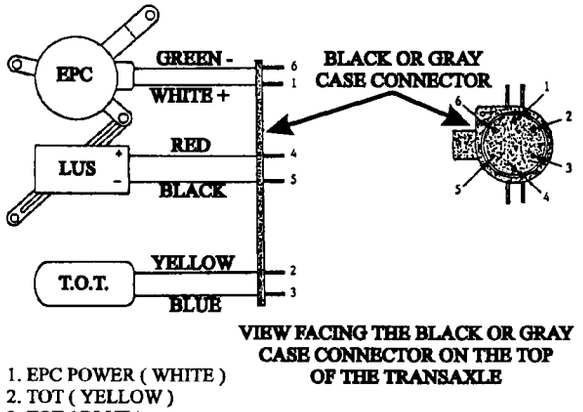

1. EPC POWER (WHITE)
2. TOT (YELLOW)
3. TOT (BLUE)
4. LUS- MLUS POWER (RED)
5. LUS- MLUS GROUND (BLACK)
6. EPC GROUND (GREEN)

AXOD - E
VALVE BODY IDENTIFICAYION

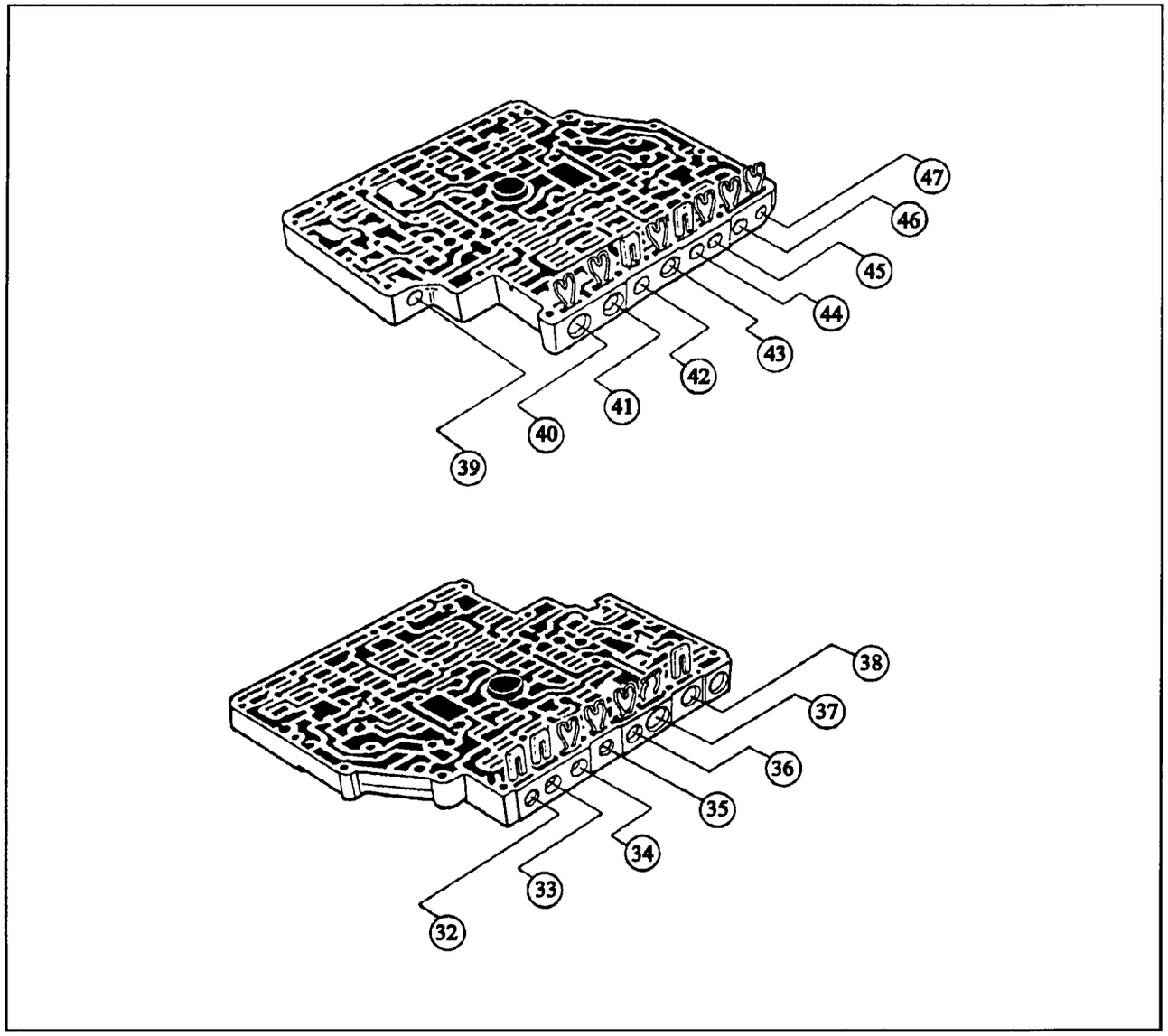

On this page the valve body bores have been assigned numbers. The valves and springs have been drawn to show the valves and springs in their **proper** locations. Each valve is also shown properly oriented and properly identified, as shown on the following pages.

AXOD - E
VALVE BODY BORE NUMBERS AND VALVE IDENTIFICATION

BORE NUMBER	VALVE NUMBER	DESCRIPTION
32	1	PRESSURE FAILSAFE VALVE
33	2	BACKOUT VALVE (FOUND IN EARLY 1991 ONLY)
33	3	BACKOUT VALVE (LATE 1991 TO PRESENT)
34	4	ACCUMULATOR REGULATOR VALVE PLUNGER
34	5	ACCUMULATOR REGULATOR VALVE
35	6	1 - 2 CAPACITY MODULATOR VALVE
36	7	CONVERTER CLUTCH CONTROL VALVE PLUNGER
36	8	CONVERTER CLUTCH CONTROL VALVE
37	9	MAIN REGULATOR BOOST VALVE SLEEVE
37	10	MAIN REGULATOR BOOST VALVE
37	11	MAIN REGULATOR VALVE (NOTE DIRECTION OF SPRING SEAT)
38	12	CONVERTER CLUTCH REGULATOR VALVE
38	13	SHIFT SOLENIOD REGULATOR VALVE
39	14	MANUAL VALVE
40	15	2 - 3 SHIFT VALVE
41	16	1 - 2 SHIFT VALVE
42	17	INTERMEDIATE CLUTCH SHUTTLE VALVE
43	18	3 - 4 SHIFT VALVE
44	19	FORWARD CLUTCH CONTROL VALVE
45	20	PULL - IN CONTROL VALVE
45	21	3 - 2 CONTROL VALVE
46	22	NEUTRAL / DRIVE ENGAGEMENT CONTROL VALVE
47	23	2 - 3 SERVO REGULATOR VALVE

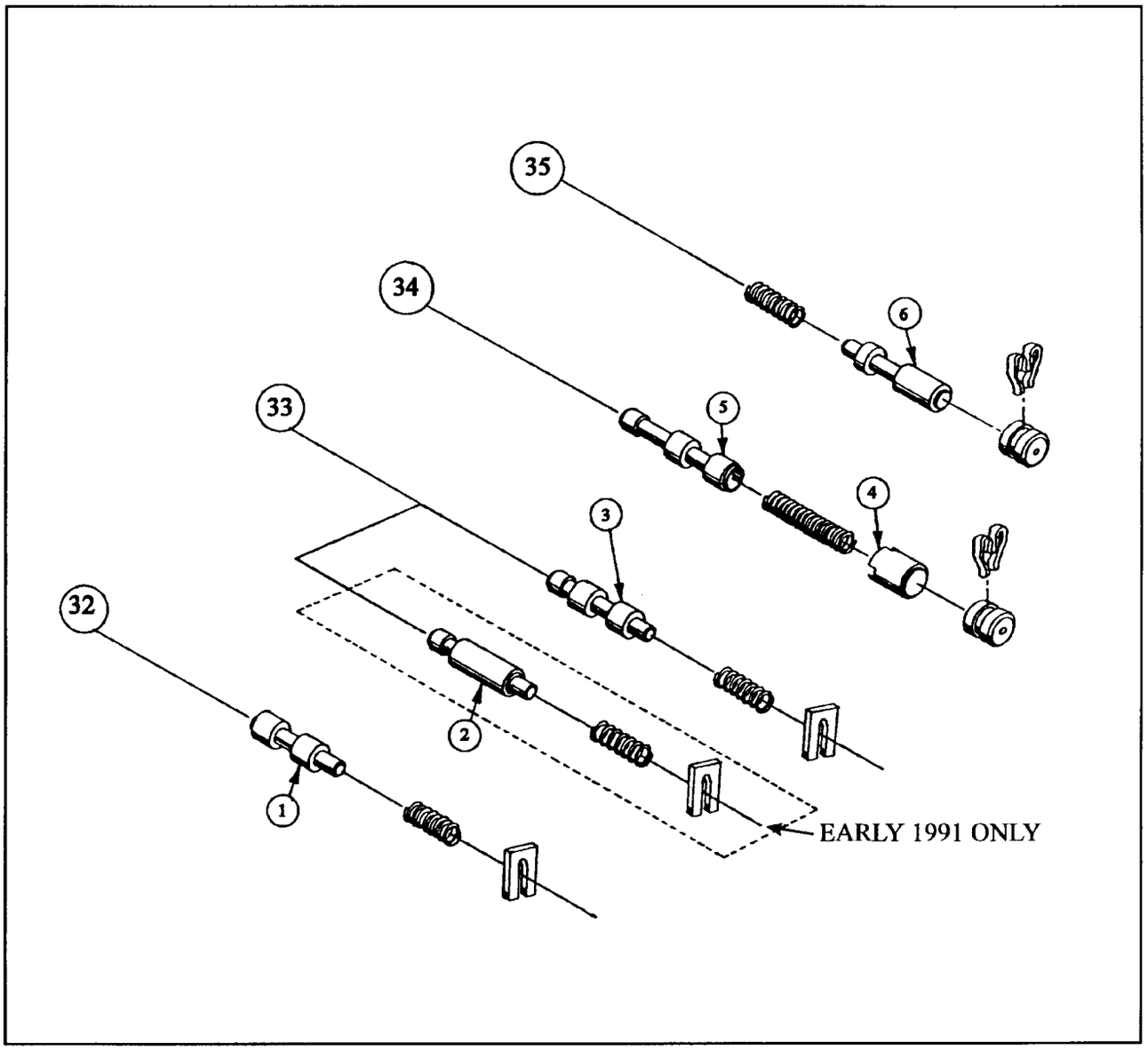

1. PRESSURE FAILSAFE VALVE
2. BACKOUT VALVE (EARLY 1991)
3. BACKOUT VALVE (CURRENT)
4. ACCUMULATOR REGULATOR VALVE PLUNGER
5. ACCUMULATOR REGULATOR VALVE
6. 1 - 2 CAPACITY MODULATOR VALVE

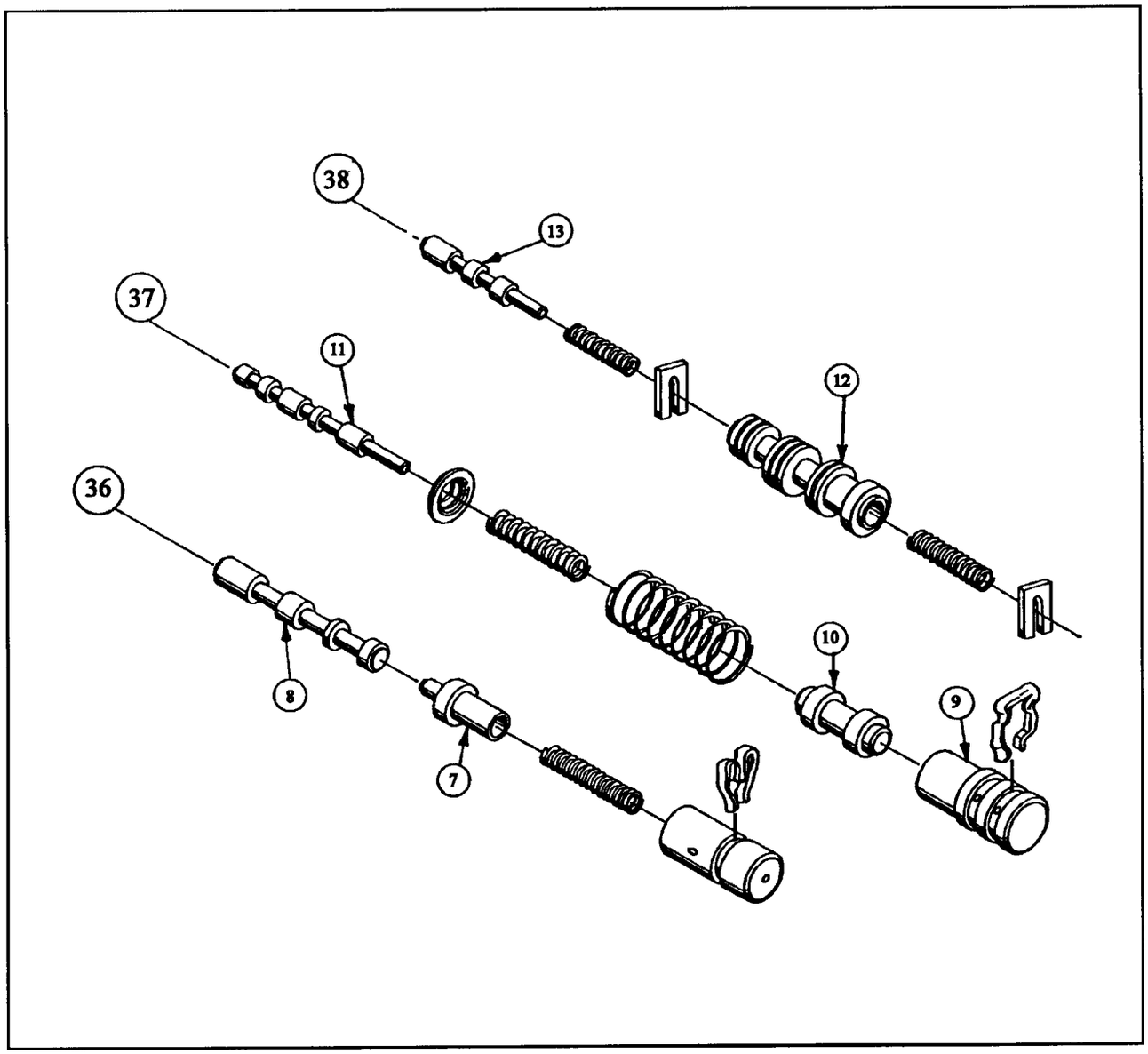

7.CONVERTER CLUTCH CONTROL VALVE PLUNGER
8. CONVERTER CLUTCH CONTROL VALVE
9. MAIN REGULATOR BOOST VALVE SLEEVE
10. MAIN REGULATOR BOOST VALVE
11. MAIN REGULATOR VALVE
12. CONVERTER CLUTCH REGULATOR VALVE
13. SHIFT SOLENIOD REGULATOR VALVE

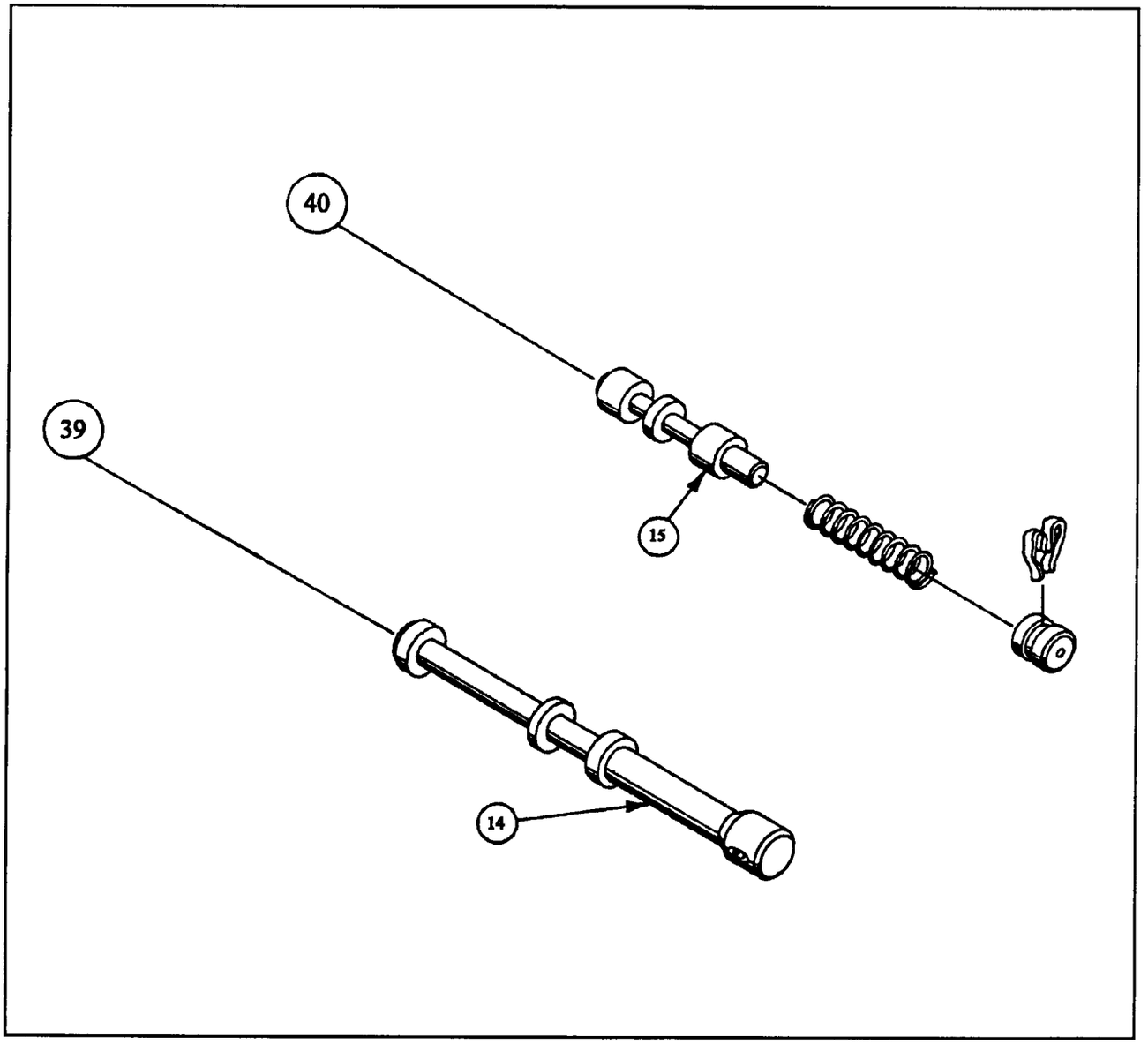

14. MANUAL VALVE
15. 2 - 3 SHIFT VALVE

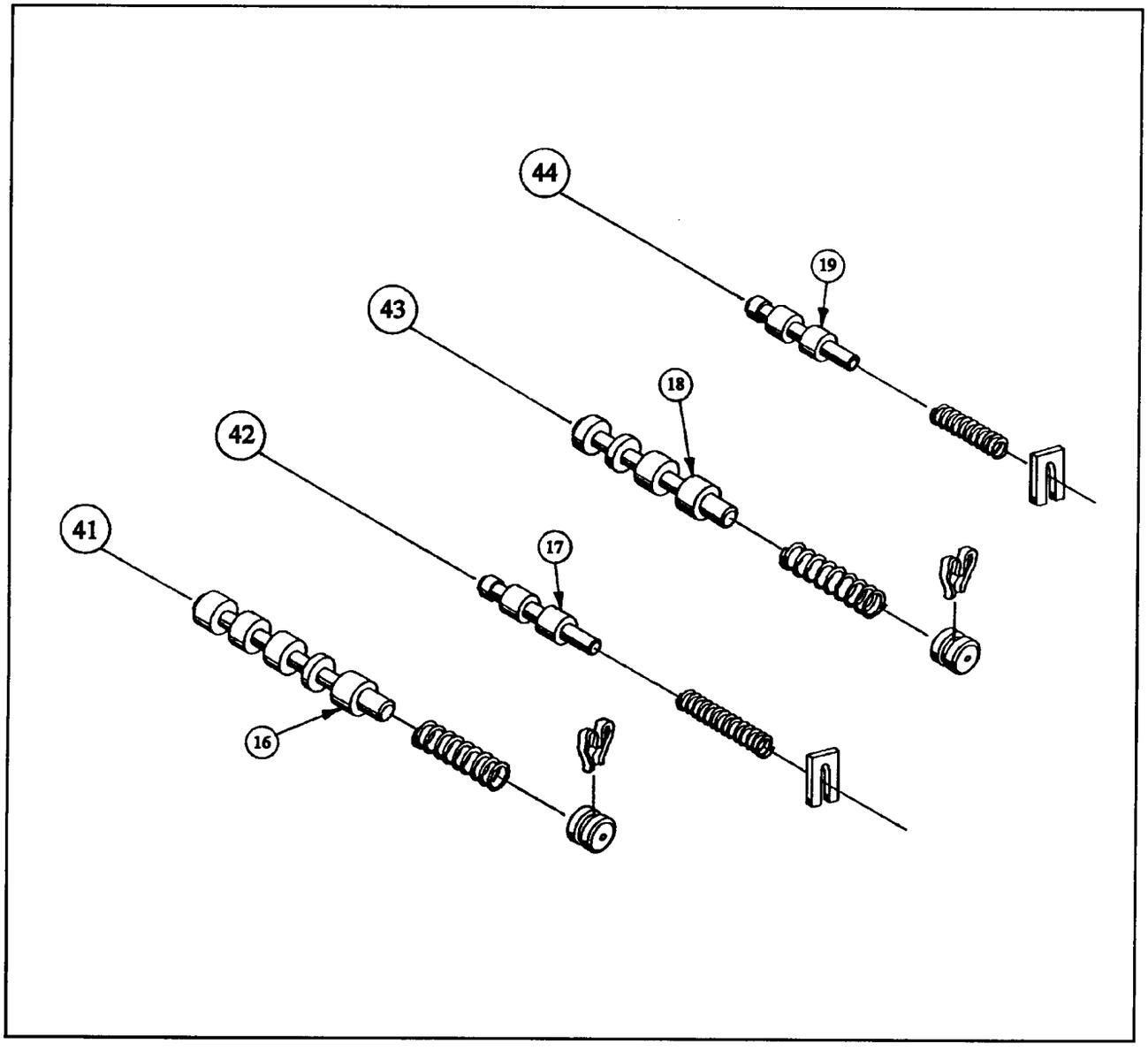

16. 1 - 2 SHIFT VALVE
17. INTERMEDIATE CLUTCH SHUTTLE VALVE
18. 3 - 4 SHIFT VALVE
19. FORWARD CLUTCH CONTROL VALVE

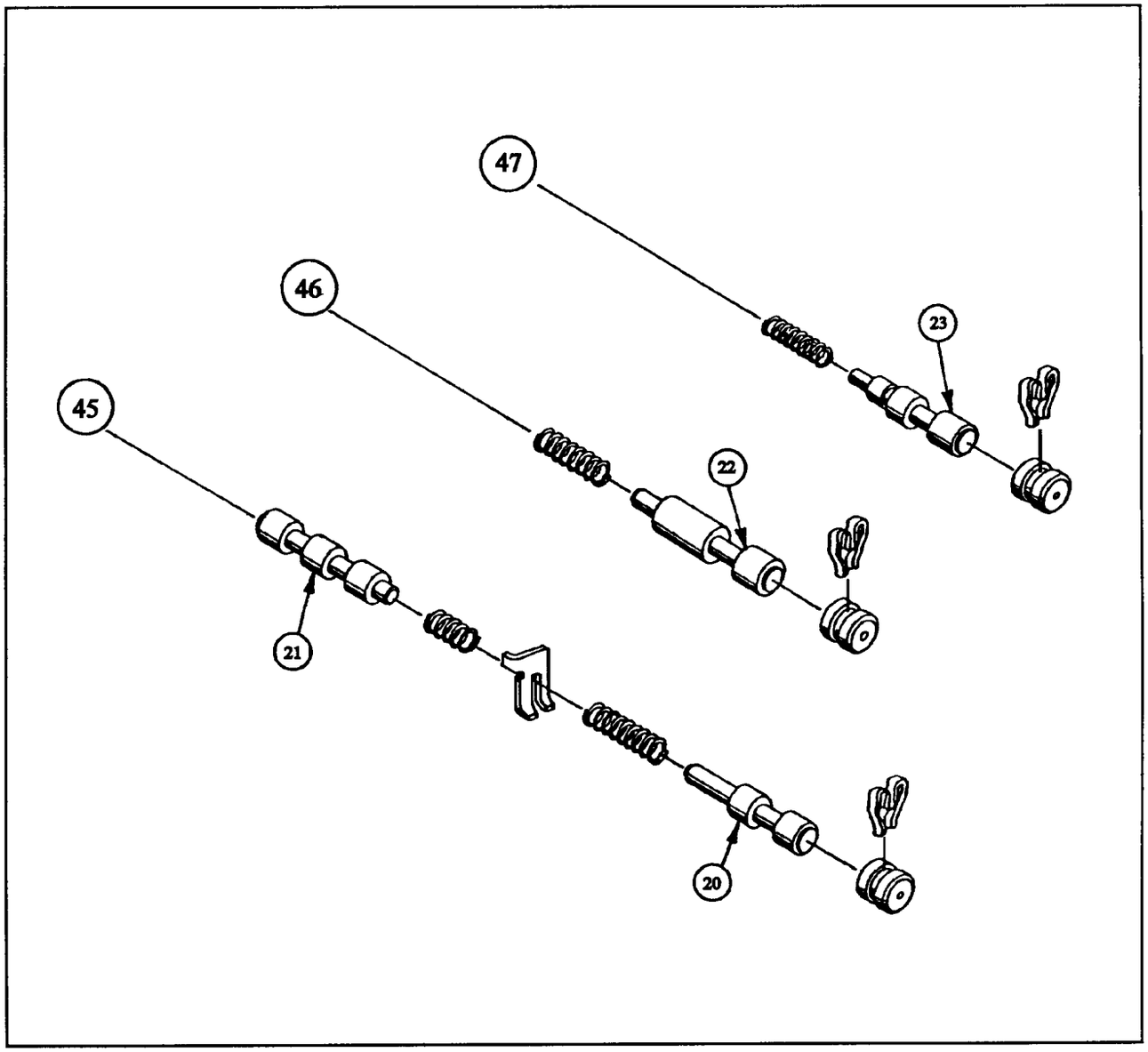

20. PULL - IN CONTROL VALVE
21. 3 - 2 CONTROL VALVE
22. NEUTRAL / DRIVE ENGAGEMENT CONTROL VALVE
23. 2 - 3 SERVO REGULATOR VALVE